LIEBHERR

Crawler crane with telescopic boom

LTR 1220

ab Muli 010

Operating instructions

BAL No.: 24201-02-02

Serial No.	
Date	

ORIGINAL OPERATING MANUAL

The operating manual is part of the crane!

It must always be available within reach!

The regulations for crane operation must be observed!

Liebherr-Werk Ehingen GmbH
Postfach 1361
D-89582 Ehingen / Donau
+49 (0) 7391 502–0
+49 (0) 7391 502–3399
info.lwe@liebherr.com
www.liebherr.com

Preface

General

This crane was built according to the state of technology and recognized safety technical regulations. Despite that, dangers to body and life for the user and / or third persons or damage to the crane and / or other material assets can occur.

This crane may only be used:
- in impeccable technical condition.
- for destined use.
- by trained personnel, which acts in a safety and danger conscious way.
- when no safety relevant problems are present.
- when no modifications were made on the crane.

Any problems, which could affect safety must be fixed immediately.

Modifications on the crane may only be made with written approval by Liebherr-Werk Ehingen GmbH.

Data recording device

This crane is equipped with a data recording device. Among others, the following data is recorded:
- Date and time of day
- Entered configuration of the crane
- Actual load
- Percentage of utilization of the crane
- Working radius
- Main boom angle, luffing jib angle
- Total telescopic boom length, length of each telescopic section
- Every actuation of bypass devices

The recorded data can be read with a respective software.

Safety and warning notes

Safety and warning notes are directed to all persons who work with the crane.

The terms **DANGER**, **WARNING**, **CAUTION** and **NOTICE** used in the crane documentation are intended to point out certain rules of conduct to all persons working with the crane.

Warning signs	Signal word	Explanation
	DANGER	Designates a dangerous situation which will lead to death or serious injury if it is not prevented [1)]
	WARNING	Designates a dangerous situation, which can lead to death or serious injury if it is not prevented. [1)]
	CAUTION	Designates a dangerous situation, which can lead to slight or medium-grade injuries if it is not prevented. [1)]
	NOTICE	Designates a dangerous situation, which can lead to property damage if it is not prevented.

[1)] This could also result in property damage.

LWE/ab Muli 010/24201-02-02/en

copyright © Liebherr-Werk Ehingen GmbH 2016

Additional notes

The term **Note** is used in the crane documentation to make all persons working with the crane aware of useful information and tips.

Sign	Signal word	Explanation
	Note	Designates useful information and tips.

Crane documentation

The crane documentation is comprised of:
- all supplied documents on paper and in digital form.
- all supplied programs and applications.
- all subsequently supplied information, updates and addenda for the crane documentation.

The crane documentation:
- makes it possible for you to operate the crane safely.
- supports you to utilize the permissible application possibilities of the crane.
- provides you with information about the functionality of important components and systems.

Note
Terminology in the crane documentation.
Certain expressions are used in the crane documentation.
▶ In order to avoid misunderstandings, the same expressions should always be used.

Translations from the German version of the crane documentation: The crane documentation has been translated to be best of one's knowledge. Liebherr-Werk Ehingen GmbH assumes no liability for translation errors. The German version of the crane documentation is solely applicable for factual accuracy. If you find any errors or if any misunderstandings arise when reading the crane documentation, please contact Liebherr-Werk Ehingen GmbH immediately.

WARNING
Danger of accident due to incorrect operation of the crane!
Incorrect operation of the crane can lead to accidents!
Personnel can be killed or seriously injured!
This could result in property damage!
▶ Only authorized and trained expert personnel are permitted to work on the crane.
▶ The crane documentation is part of the crane and must be accessible on the crane.
▶ The crane documentation and on-site regulations and specifications (such as accident prevention regulations) must be observed.

Using the crane documentation:
- **makes it easier** to become familiar with the crane.
- **avoids** problems due to improper operation.

Observing the crane documentation:
- **increases** reliability in use.
- **extends** the service life of the crane.
- **minimizes** repair costs and downtime.

Place the crane documentation accessible in the driver's cab or in the crane cab.

LWE/ab Muli 010/24201-02-02/en

copyright © Liebherr-Werk Ehingen GmbH 2016

WARNING
Outdated version of crane documentation!
If subsequently supplied information, updates and addenda to the crane documentation are not observed and added, there is a danger of accidents!
Personnel can be killed or seriously injured!
This could result in property damage!
- ▶ Observe and add all subsequently supplied information, updates and addenda for the crane documentation.
- ▶ Make sure that all affected persons always know and understand the latest version of the crane documentation.

WARNING
Crane documentation is not understood!
If parts of the crane documentation are not understood and the tasks are carried out on or with the crane, then there is a danger of accidents!
Personnel can be killed or seriously injured!
This could result in property damage!
- ▶ Clear up open questions regarding the crane documentation with Liebherr Service before carrying out the respective task.

This documentation may not be reproduced or duplicated, distributed or used for purposes of competition, neither in part nor in excerpts. All rights are expressly reserved in accordance with copyright laws.

All accident prevention guidelines, operating instructions, load charts etc. are based on destined use of the crane.

LWE/ab Muli 010/24201-02-02/en

copyright © Liebherr-Werk Ehingen GmbH 2016

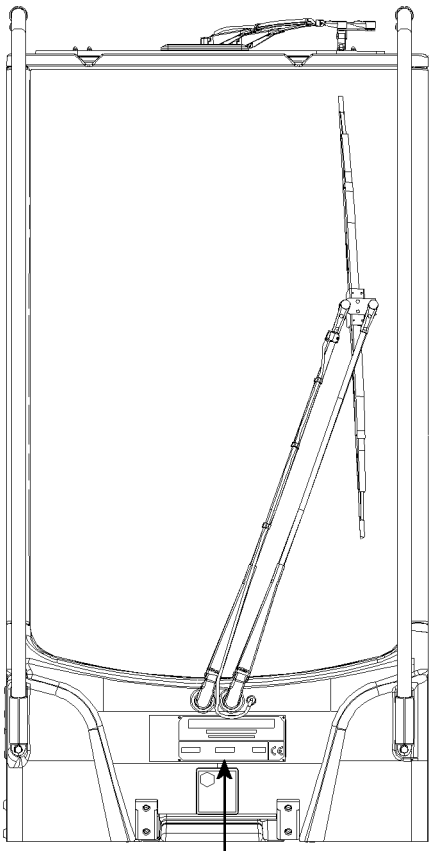

1

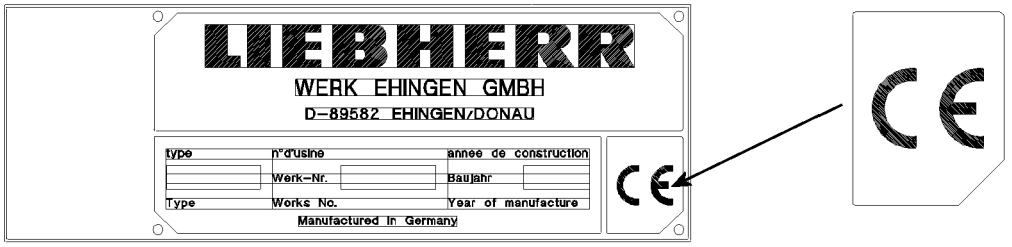

2

Fig.110001

LWE/ab Muli 010/24201-02-02/en

copyright © Liebherr-Werk Ehingen GmbH 2016

CE marking

The CE marking is a mark according to EU laws:
- Cranes with CE-marking according to the European machinery directive 2006/42/EC and the EN 13000! Data tag Crane with CE-marking, see illustration **1**.
- Cranes which are operated outside the respective area of application do not require a CE marking. Data tag Crane without CE marking, see illustration **2**.
- It is prohibited to market and operate cranes without CE marking, which do not meet the product-specific regulations valid in Europe, when a CE marking is specified for the country.
- It is prohibited to operate cranes with a tipping load utilization of 85 % which are programmed according to ASME B30.5 within the European Union or in countries which permit a lower stationary stability utilization (for example ISO 4305)! The national regulations apply. These cranes may not have a CE marking!

Destined use

The destined use of the crane consists solely in vertical lifting and lowering of free and non-adhered loads, whose weight and center of gravity are known.

To do so, a hook or hook block approved by Liebherr must be reeved on the hoist rope and it may only be operated within the permissible crane configurations.

Driving with the crane, with or without an attached load is only permissible if a corresponding driving or load chart is available. The set up configurations intended for it and the safety conditions must be observed according to the corresponding crane documentation.

Any other use or any other exceeding utilization is **not** destined use.

Destined use also includes the adherence of the required safety guidelines, conditions, prerequisites, set up conditions and working steps in the crane documentation (for example: Operating instructions, load charts, erection and take down charts, job planner).

The manufacturer is **not** liable for damages, which are caused by non-destined use or improper use of the crane. Any associated risk it is carried solely by the owner, the operator and the user of the crane.

Non-destined use

Non-destined use is:
- Working outside the permissible set up configurations according to the load chart.
- Working outside the permissible boom radii and slewing ranges according to the load chart.
- Selecting load charts, which do not correspond to the actual set up configuration.
- Selection of a set up configuration via code or via manual entry, which does not correspond to the actual set up configuration.
- Working with bypassed / deactivated safety devices, for example bypassed load moment limitation or with bypassed hoist limit switch.
- Increasing the radius of the lifted load after a LMB shut off, for example by diagonally pulling the load.
- Using the support pressure display as a safety function against tipping over.
- Use of equipment parts which are not approved for the crane.
- Using the crane at sports and recreational events, especially for "Bungee" jumps and / or "Dinner in the sky".
- Driving on a public road in non-permissible driving condition (axle load, dimension).
- Driving with the equipment in place in a non-permissible driving condition.
- Pushing, pulling or lifting loads with the leveling regulation, the sliding beams or the support cylinders.
- Pushing, pulling or lifting loads by actuating the slewing gear, the luffing gear or the telescoping gear.
- Ripping stuck objects loose with the crane.
- Utilizing the crane for a longer period of time for material handling tasks.
- Releasing the crane suddenly (grapple or dumping operation).

LWE/ab Muli 010/24201-02-02/en

copyright © Liebherr-Werk Ehingen GmbH 2016

- Utilizing the crane when the weight of the load, which is suspended on the crane is changed, for example by filling a container suspended on the load hook, except:
- • The load moment limiter was checked before for function with a known load.
  • The crane cab is occupied.
  • The crane is operational.
  • The container size is selected in such a way that an overload of the crane with full load is eliminated within the valid used load chart.

The crane may **not** be used for:
- Attaching a stuck load for which the weight and center of gravity are not known and which is released only by flame cutting, for example.
- Letting persons drive along outside the driver's cab.
- Transporting personnel in the crane cab while driving.
- Transporting personnel with the lifting equipment and on the load.
- Transporting of persons with work baskets (cherry pickers), if the national regulations of the responsible work safety organization are not observed.
- Transporting loads on the chassis.
- Two hook operation without auxiliary equipment.
- Extended material handling operation.
- Crane operation on a barge if the conditions are not determined and the written release by **Liebherr Werk Ehingen GmbH** is not present.

The crane documentation must be read and used by all persons who are involved in use, operation, assembly and maintenance of the crane.

Safety systems

Special attention must be paid to the safety systems built into the crane. The safety systems must constantly be checked for functionality. The crane may not be operated if the safety systems are not working or not working correctly.

Note
Your motto must always be:
▶ **Safety first!**

The crane has been built in accordance with the applicable crane operation and driving regulations and has been approved by the relevant authorities.

Equipment and spare parts

WARNING
Danger to life if original equipment parts are **not** used!
If the crane is operated with equipment parts, which are **not** original, then the crane can fail and cause fatal accidents!
Crane components can be damaged!
▶ Operate the crane only with original equipment parts!
▶ Crane operation with equipment parts, which do **not** belong to the crane is prohibited!
▶ If there is any doubt about the origin of equipment parts, contact Liebherr Service!

WARNING
The crane permit and the manufacturer's warranty will become void!
If any original installed parts are modified, manipulated or replaced (e.g. removal of parts, installation of non-original Liebherr parts), both the crane permit and the manufacturer's warranty will become void.
▶ Leave installed original parts unchanged!
▶ Do not remove installed original parts!
▶ Use only Original Liebherr spare parts!
▶ If there is any doubt about the origin of spare parts, contact Liebherr Service!

LWE/ab Muli 010/24201-02-02/en

copyright © Liebherr-Werk Ehingen GmbH 2016

For ordering equipment and spare parts, always keep the crane number handy and provide it.

Definition of directional data for mobile cranes

Driving forwards: Driving with the driver's cab on the front.

Driving in reverse: Driving with the taillights of the crane chassis on the front.

Front, **rear**, **right**, **left** in the **driver's cab** refer to the crane chassis. The driver's cab is always in the front.

Front, **rear**, **right**, **left** in the **crane operator's cab** refer to the superstructure. Front is always in direction of the placed down boom.

Definition of directional data for crawler cranes

Driving forwards: Driving forward from the view of the crane operator seated in the crane cab. Turntable in 0° or 180° position.

Driving in reverse: Driving backward from the view of the crane operator seated in the crane cab. Turntable in 0° or 180° position.

Front, **rear**, **right**, **left** always orient themselves on the **crawler track** from the position of the chain tension devices. The chain tension devices on the crawler track are always on the front.

Front, **rear**, **right**, **left** refer to the direction of view of the crane operator seated in the **crane cab**. Front is always in direction of the placed down boom.

Optional equipment and functions

The equipment marked with ***** and the functions are optionally available and are **not** part of the standard crane (optional equipment).

Conversion chart

Note

▶ If the crane is used in countries where US-units are customary, you can use the conversion factors in this chart for conversion of metric measuring units into US-units!

	Unit of Measure	Multiply by	To obtain
Length	millimeter (mm)	0.03937	inch (in)
	millimeter (mm)	0.00328084	foot (ft)
	meter (m)	39.37	inch (in)
	meter (m)	3.28084	foot (ft)
	meter (m)	1.09361	yard (yd)
	kilometer (km)	0.62137	mile (mi)
Area	square centimeter (cm^2)	0.155	square inch (in^2)
	square meter (m^2)	10.7639	square foot (ft^2)
	square meter (m^2)	1.196	square yard (yd^2)
	square kilometer (km^2)	0.3861	square mile (mi^2)
Volume	cubic centimeter (cm^3)	0.06102	cubic inch (in^3)
	cubic meter (m^3)	35.3147	cubic foot (ft^3)
	cubic meter (m^3)	1.308	cubic yard (yd^3)
	liter (L)	61.024	cubic inch (in^3)

LWE/ab Muli 010/24201-02-02/en

copyright © Liebherr-Werk Ehingen GmbH 2016

	Unit of Measure	Multiply by	To obtain
	liter (L)	0.035	cubic foot (ft^3)
	liter (L)	0.264	gallon (U.S.) (gal)
Weight	gram (g)	0.03527	ounce (oz)
	kilogram (kg)	2.20462	pound (lb)
	metric ton (t)	2204.62262	pound (lb)
	metric ton (t)	1.102	short tons (U.S.)
Mass divided	kilogram per meter (kg/m)	0.055998	pound per inch (lb/in)
by length	kilogram per meter (kg/m)	0.67197	pound per foot (lb/ft)
Force	newton (N)	0.2248	pound-force (lbf)
	kilonewton (kN)	224.809	pound-force (lbf)
	kilonewton (kN)	0.2248	kip (1 kip = 1000 lbf)
Torque	newton meter (N·m)	8.85075	pound-force inch (lbf·in)
	newton meter (N·m)	0.73756	pound-force foot (lbf·in)
Power	horsepower (metric)	0.73549	kilowatt (kW)
	horsepower (metric)	0.98632	horsepower (U.K.)
	kilowatt (kW)	1.34102	horsepower (U.K.)
Pressure	kilopascal (kPa)	0.01	bar (bar)
	kilopascal (kPa)	0.1450377	pound-force per square inch (psi)
	bar (bar)	14.50377	pound-force per square inch (psi)
	newton per square centimeter (N/cm^2)	1.450377	pound-force per square inch (psi)
	newton per square meter (N/m^2)	0.0001450377	pound-force per square inch (psi)
Speed	meter per second (m/s)	39.37	inch per second (in/s)
	meter per second (m/s)	3.28084	foot per second (ft/s)
	kilometer per hour (km/h)	0.62137	mile per hour (mi/h)
	liter per minute (l/min)	0.26417	gallon per minute (gal/min)
Temperature	degree Celsius (°C)	([°C] · 1.8) + 32	degree Fahrenheit (°F)
	kelvin (K)	([K] · 1.8) - 459.67	degree Fahrenheit (°F)

Conversion chart version 1

LWE/ab Muli 010/24201-02-02/en

copyright © Liebherr-Werk Ehingen GmbH 2016

Contents

1 Description of crane

1.01 Terminology 1
- 1 Crane components 3
- 2 Auxiliary boom 7

1.02 Product description 1
- 1 Crawler travel gear 3
- 2 Crane superstructure 3
- 3 Auxiliary equipment 5

1.03 Technical data 1
- 1 Dimensions 3
- 2 Maximum surface pressure 3
- 3 Workplace-related emission value 3
- 4 Vibrations 3
- 5 Speeds 3
- 6 Ropes 4
- 7 Weights 4
- 8 Lifting heights 12

2 Safety

2.03 Job planning 1
- 1 Planning Crane operation 3

2.04 General safety technical guidelines 1
- 1 Danger zone of crane 3
- 2 Traffic endangerment and environmental damage 3
- 3 Endangering air traffic 3
- 4 Movement on the crane 4
- 5 Emergency exit 4
- 6 Personal protective equipment 7
- 7 Securing persons to prevent them from falling 12
- 8 Rescuing the assembly personnel 14
- 9 Crane cab with retractable / extendable step 15
- 10 Crane cab with incline adjustment 16
- 11 Safety bar 17
- 12 Closing the windows 18
- 13 Rigging and fastening points 19
- 14 Heated crane components 20
- 15 Crane operator responsibilities 20
- 16 Selecting the operating site 22
- 17 Slopes and ditches 26
- 18 Permissible ground pressures 29
- 19 Support 31
- 20 Aligning the crane 33
- 21 Checking the safety measures 34

LWE/ab Muli 010/24201-02-02/en

copyright © Liebherr-Werk Ehingen GmbH 2016

22	Safety guidelines in case of external power supply	35
23	Grounding	35
24	Working in the vicinity of transmitters	37
25	Crane operation in case of thunderstorms	38
26	Wind influences	39
27	Lifting a load with two cranes	45
28	Working ranges overlap	47
29	Hand signals for guidance	47
30	Crane operation with a load	56
31	Lifting of personnel	59
32	Securing personnel on shut off crane	60
33	Welding work on the load	62
34	Travel and crane operation	63

2.04.10 Ladders		1
1	Safety guidelines	3
2	Safety signs	3
3	Ladder inspection	7
4	User guidelines	7
5	Ladder access	8

2.05 Signs on the crane		1
1	Signs	3

2.05.10 Labeling of load lifting equipment		1
1	Identifications on the hook block or load hooks	3
2	Identifications on single hook or double hook	4
3	Identifications on auxiliary weights	5

2.06 Antifall guards on the crane		1
1	Safety guidelines	3
2	Preparing a ladder	5
3	Retaining pipes on the crane superstructure	6
4	Hook points on the crane superstructure	7
5	Hook points on the telescopic boom	8
6	Hook points on the folding jib, the folding jib extension and the telescope extension	11
7	Platforms on the crane chassis	13

2.07 Access to the crane		1
1	Components on the crane	3
2	Ascent and descent on the crane chassis	5
3	Walking and stepping surfaces	13

2.08 Working in low temperatures		1
1	Working in low temperatures	3
2	Working in ambient temperatures up to -40 °C	3
3	Working in ambient temperatures below -40 °C	9

3 Crane assembly

3.01 Crawler carrier assembly		1
1	Assembling the crawler carrier	3
2	Disassembling the crawler carriers	53

LWE/ab Muli 010/24201-02-02/en

copyright © Liebherr-Werk Ehingen GmbH 2016

3.01.20 Installing the cross carrier on the crawler center section 1
1 Component description 3
2 Disassembly of cross carrier with bracket 5
3 Assembly of cross carrier with bracket 8
4 Disassembly Cross carrier with installed extension cylinder 11
5 Assembly Cross carrier with installed extension cylinder 14

3.03 Central ballast 1
1 Central ballast combinations 3
2 Central ballast during operation 3
3 Installing the central ballast 5
4 Disassembling the central ballast 15

3.80 Transport of crane and crane components 1
1 Transporting the crane 5
2 Securing the crane properly on the transport vehicle 9
3 Transporting the crane by rail 11

4 Operation of crane superstructure

4.01 Operating and control instruments on the crane superstructure 1
1 Operating and control instruments 3
2 Operating elements - instrument panel - roof 8
3 Operating elements on control consoles 11
4 Operating elements on the operating and control unit (BKE) 45

4.02 LICCON computer system 1
1 General 2
2 System start of the LICCON computer system 4
3 Operating elements of the LICCON computer system 5
4 The set up program 7
5 The Crane operation program 13
6 The Telescoping program 54
7 The Working range limitation program* 63
8 Speed reduction master switch 67
9 Track width monitoring without shut off of crane movement 71
10 Track width monitoring with shut off of crane movement* 73
11 ECO-Mode 76
12 Power-Save mode and Stand-by mode in the LICCON computer system 80

4.03 Crane start up and taking the crane out of service 1
1 Checks before start up 3
2 Work station - Crane operator's cab 9
3 Hydraulic oil preheating* 25
4 Starting and stopping the engine 29
5 LICCON computer system after engine start 37

4.03.50 Adjustment of track width 1
1 Adjustment of track width 3
2 Adjusting the track width 11

4.04 Safety equipment 1
1 General 3

LWE/ab Muli 010/24201-02-02/en

copyright © Liebherr-Werk Ehingen GmbH 2016

2	Quick test Crane geometry	3
3	Quick test Overload protection	3
4	LICCON computer system	3
5	Safety devices on the crane	9

4.05 Crane operation		1
1	General	3
2	LICCON computer system	9
3	Luffing	11
4	Lifting / lowering	17
5	Turning	23
6	Telescoping	35

4.06 Rope reeving		1
1	Wire ropes and rope end connections	3
2	Hoist rope lug*	3
3	Moveable back pulley*	7
4	Reeving the hoist rope	8
5	Reeving the hook block in and out	13
6	Attaching and removing the load hook*	16
7	Attaching / removing the hoist limit switch weight	19
8	Assembling / disassembling the wedge lock	21
9	Auxiliary block* on telescopic boom	23
10	Rope reeving	24

4.07 Counterweight		1
1	Overview of counterweight	3
2	Counterweight combinations	5
3	Fastening the counterweight plates and receptacle plate	7
4	Assembly of counterweight	11
5	Disassembly of counterweight	23
6	Operating element Bluetooth™ Terminal	33

4.08 Working with a load		1
1	Safety technical instructions for working with a load	3
2	Checks before starting to work with the crane	3
3	Crane movement - Telescoping	4
4	Taking on a load	7
5	Crane operation	13

4.10 Driving from the crane operator's cab		1
1	Prerequisites for driving the crane (crawler operation)	3
2	Displays for center of gravity, surface pressure and incline in the LICCON monitor	7
3	Preparing for driving the crane	13
4	Driving the crane: Load chart available	15
5	Driving the crane: No load chart is available	17
6	Crawler crane in crawler operation	20

4.12 Two hook operation		1
1	Auxiliary boom	3
2	Hook operation	7
3	Two hook operation monitored / Two hook operation not monitored	9
4	Safety guidelines	10

LWE/ab Muli 010/24201-02-02/en

copyright © Liebherr-Werk Ehingen GmbH 2016

5	Boom nose on telescopic boom	11
6	Auxiliary jib on telescopic boom	13
7	Folding jib	14
8	Fixed lattice jib	15
9	Boom nose on fixed lattice jib	17
10	Auxiliary jib on fixed lattice jib	18
11	Luffing lattice jib	19
12	Boom nose on luffing lattice jib	20
13	Auxiliary jib on luffing lattice jib	21
14	Lifting a joint load	23

4.20 Procedure for shut off of crane movements 1

1	General	3
2	Instructions to resume the crane movement	19

5 Equipment

5.01 Safety technical notes for assembly and disassembly 1

1	Checking the retaining elements	3
2	Rope pulleys	3
3	Checking the ropes	3
4	Control measures	4
5	Dangerous conditions without shut off	7
6	Transporting components	7
7	Pneumatic springs for assembly support of components	7
8	Manual rope winches for assembly support of components	8
9	Weights	8
10	Guy rods	8
11	Auxiliary guying	9
12	Bypassing the overload protection	9
13	Bypassing the hoist top shut off	11
14	Assembly / disassembly	12
15	Erection / take down	57

5.02 Folding jib - TK 1

1	General	3
2	Assembling the folding jib	13
3	Reeving the hoist rope	43
4	Changing over mechanical folding jib from 0° to 22.5° or 45°	45
5	Hydraulic connections	57
6	Electrical connections	63
7	Erection	71
8	Adjusting the folding jib angle hydraulically*	73
9	Changing over mechanical folding jib from 22.5° or 45° to 0°	75
10	Unreeving the hoist rope	83
11	Removing the folding jib	85

5.09 Hoist gear 2 1

1	General	3
2	Assembly winch 2	5
3	Assembly of winch 2 with auxiliary crane	9
4	Disassembly winch 2	11

copyright © Liebherr-Werk Ehingen GmbH 2016

	5 Disassembly of winch 2 with auxiliary crane	17
5.10 Boom nose - telescopic boom		1
	1 General	3
	2 Assembly	5
	3 Disassembly	11
5.12 Auxiliary boom		1
	1 General	3
	2 Installing the auxiliary boom	5
	3 Erection	25
	4 Unreeving the hoist rope	27
	5 Disassembly of the auxiliary boom	29
5.19 Hook blocks		1
	1 Procedure in case of slack rope	3
	2 Hook block overview	5
	3 Transporting the hook block / load hook	7
	4 Installing the single blocks	9
	5 Removing the single blocks	13
5.25 Telescopic boom extension		1
	1 General	3
	2 Assembly	5
	3 Establishing the electrical / hydraulic connections	7
	4 Erection	7
	5 Disassembly	9
5.31 Bluetooth Terminal (BTT)		1
	1 Display / operating element BTT	3
	2 Start menu of BTT	12
	3 Settings and condition displays on the BTT	15
	4 Orienting the BTT to the crane	17
	5 Crawler travel gear menu	19
	6 Menu Engine operation	27
	7 Menu Support	37
	8 Menu Assembly functions	47
	9 Menu Test system	61
	10 Operation BTT	63
	11 Measures in case of problems	65

6 Additional equipment

6.02 Heater / engine preheating / Air conditioning system Crane operator’s cab		1
	1 Climate control systems	3
	2 Safety guidelines	3
	3 Climate control	4
	4 Climate control system*	11
	5 Auxiliary heater*	12
	6 Maintenance Heater	19
	7 Maintenance Auxiliary heater*	20
6.05 Emergency take-down		1

LWE/ab Muli 010/24201-02-02/en

copyright © Liebherr-Werk Ehingen GmbH 2016

1 Emergency control 3

7 Service and maintenance

7.01 Maintenance and service - General 1
1 Technical safety instructions 3
2 Warranty and coverage 7
3 Liebherr Service 7
4 Oil and lubricant analysis 8
5 Cleaning 9
6 Disposal 10

7.02 Maintenance intervals Crawler chassis 1
1 Maintenance and inspection schedule 3

7.03 Maintanance intervals - Crane superstructure 1
1 Maintenance and inspection schedule 3

7.03.50 Maintenance intervals - Crane boom 1
1 Maintenance and inspection schedule 3

7.04 Maintenance guidelines - Crane chassis 1
1 Servicing the travel gear 3
2 Crawler travel gear 9
3 Servicing the central lubrication system of the crawler carrier 21
4 Hydraulic hose lines 27
5 Ladders 28

7.05 Maintenance guidelines - Crane superstructure 1
1 Diesel engine 3
2 Cooling system 6
3 Air filter system 8
4 Fuel system 9
5 Urea system* 15
6 Exhaust system 17
7 Pump distributor gear 18
8 Central lubrication system 20
9 Slewing ring connection 24
10 Slewing gear(s) 26
11 Hoist gear(s) 31
12 Auxiliary heater* 33
13 Ventilation 38
14 Hydraulic system 38
15 Hydraulic hose lines 43
16 Compressed air system* 43
17 Electrical system 44
18 Ladders 48

7.05.50 Maintenance guidelines - Crane boom 1
1 Telescopic boom 3
2 Rope pulleys and guide pulleys 6
3 Crane ropes 7

LWE/ab Muli 010/24201-02-02/en

copyright © Liebherr-Werk Ehingen GmbH 2016

7.06 Fill quantities, lubrication schedule 1
1 Fill quantities 3
2 Lubrication schedule 4

7.07 Service fluids and lubricants 1
1 Specified service items and lubricants for Liebherr cranes 3

8 Inspections of cranes

8.01 Periodic crane inspections 1
1 General 3
2 Inspection of carrying crane structures, especially steel structures 4
3 Inspection of the rope feed mechanism in the telescopic boom 78
4 Inspection of locking system of telescopic boom 80
5 Inspection of safety ropes and anchor points 82
6 Inspection of load handling equipment and assembly aids 84
7 Inspection of fastening equipment 85
8 Inspection of membrane accumulator 85
9 Inspection of relapse cylinders 85
10 Inspection of rope pulleys 86
11 Inspection of carrier rollers 87
12 Inspection of extension conditions of sliding beams 88
13 Inspecting the function of the overload protection 88
14 Inspecting the roller slewing ring connection 88
15 Inspection of the mounting of the load bearing equipment 88
16 Inspection of the tele extension with eccentric, illustration 1 90
17 Inspection of change over pulleys, illustration 2 90
18 Inspection of the oil and fuel reservoirs 90

8.03 Inspection of winches 1
1 Inspecting the hoist and retracting winches 3
2 Inspection of the auxiliary reeving winch, recovery winch and spare wheel winch 5
3 Monitoring the winches 5

8.04 Inspection of crane wire ropes 1
1 Importance of inspection 3
2 Personal protective equipment 3
3 Qualification Inspection personnel 3
4 Unscheduled inspection 3
5 Intervals 3
6 Areas 4
7 Documentation of inspection results 5
8 Wire ropes and rope end connections 5
9 Degree of severity 7
10 Abbreviations Rope diameter 7
11 Distortions and mechanical damage 7
12 Removal criteria Overview 7
13 Checking for broken strands 8
14 Determining the number of broken wires 9
15 Checking of rope diameter 13
16 Checking for corrosion 16
17 Corkscrew-like distortion 18

LWE/ab Muli 010/24201-02-02/en

copyright © Liebherr-Werk Ehingen GmbH 2016

18	Basket formation	19
19	Protruding, distorted insert or strand	20
20	Loop formation	21
21	Kinking or rope loops pulled closed	22
22	Buckles	23
23	Effects of heat, arcs	24
24	Combined degree of severity	24
25	Flattenings	24
26	Current checklist	27

8.05 Inspection of load hooks 1

1	Safety guidelines	3
2	Inspection intervals	3
3	Inspecting and monitoring the load hook	3

8.06 Inspection of hydraulic hose lines 1

1	Safety guidelines	3
2	Inspection intervals	3
3	Checking the end of the service life	3
4	Inspecting the hydraulic hose lines for damage	4
5	Inspecting the hydraulic hose lines for leaks	5
6	Documenting the inspection	5
7	Replacing hydraulic hose lines	5

8.17 Inspection of ladders 1

1	Safety guidelines	3
2	Inspection intervals	3
3	Inspecting ladders	3
4	Inspection sheet and check list	3

8.90 Inspection chart for cranes 1

1	Inspection chart for recurring inspections of Liebherr cranes	3

90 Attachment

90.01 Foreword to attachment 1

1	Foreword	3

90.05 Update confirmation 1

1	Change confirmation form	3
2	Update confirmation	3
3	Customer information	4

LWE/ab Muli 010/24201-02-02/en

copyright © Liebherr-Werk Ehingen GmbH 2016

copyright © Liebherr-Werk Ehingen GmbH 2016

LIEBHERR

LWE/ab Muli 010/24201-02-02/en

1 Description of crane

copyright © Liebherr-Werk Ehingen GmbH 2016

copyright © Liebherr-Werk Ehingen GmbH 2016

1.01 Terminology

1	Crane components	3
2	Auxiliary boom	7

LWE/ab Muli 010/24201-02-02/en

copyright © Liebherr-Werk Ehingen GmbH 2016

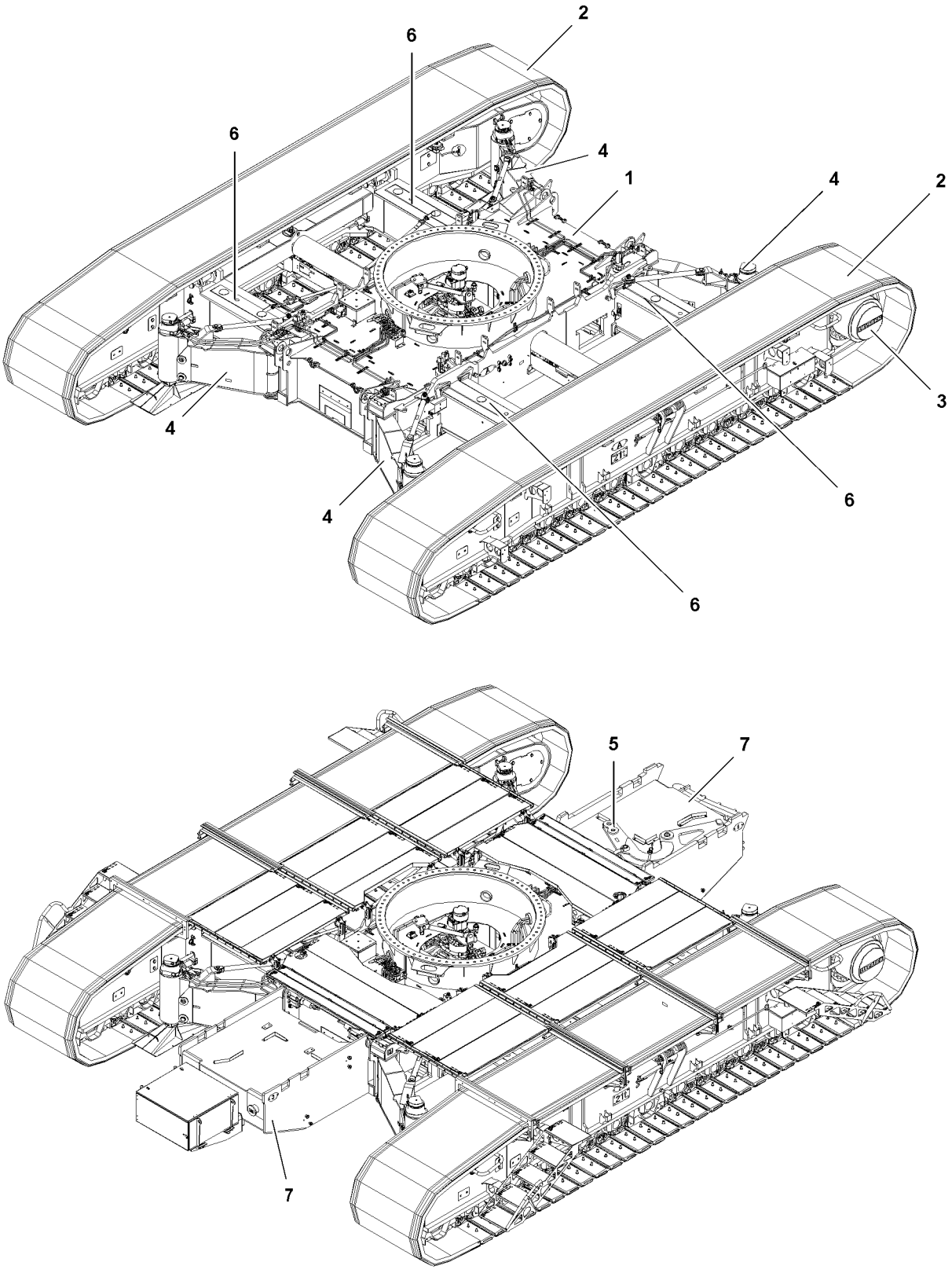

LWE/ab Muli 010/24201-02-02/en

Fig.116848

copyright © Liebherr-Werk Ehingen GmbH 2016

1 Crane components

1.1 Crawler track

1 Crawler center section
2 Crawler carrier
3 Travel gear
4 Hydraulic assembly support*
5 Assembly device*
6 Beams for track adjustment
7 Central ballast

LWE/ab Muli 010/24201-02-02/en

copyright © Liebherr-Werk Ehingen GmbH 2016

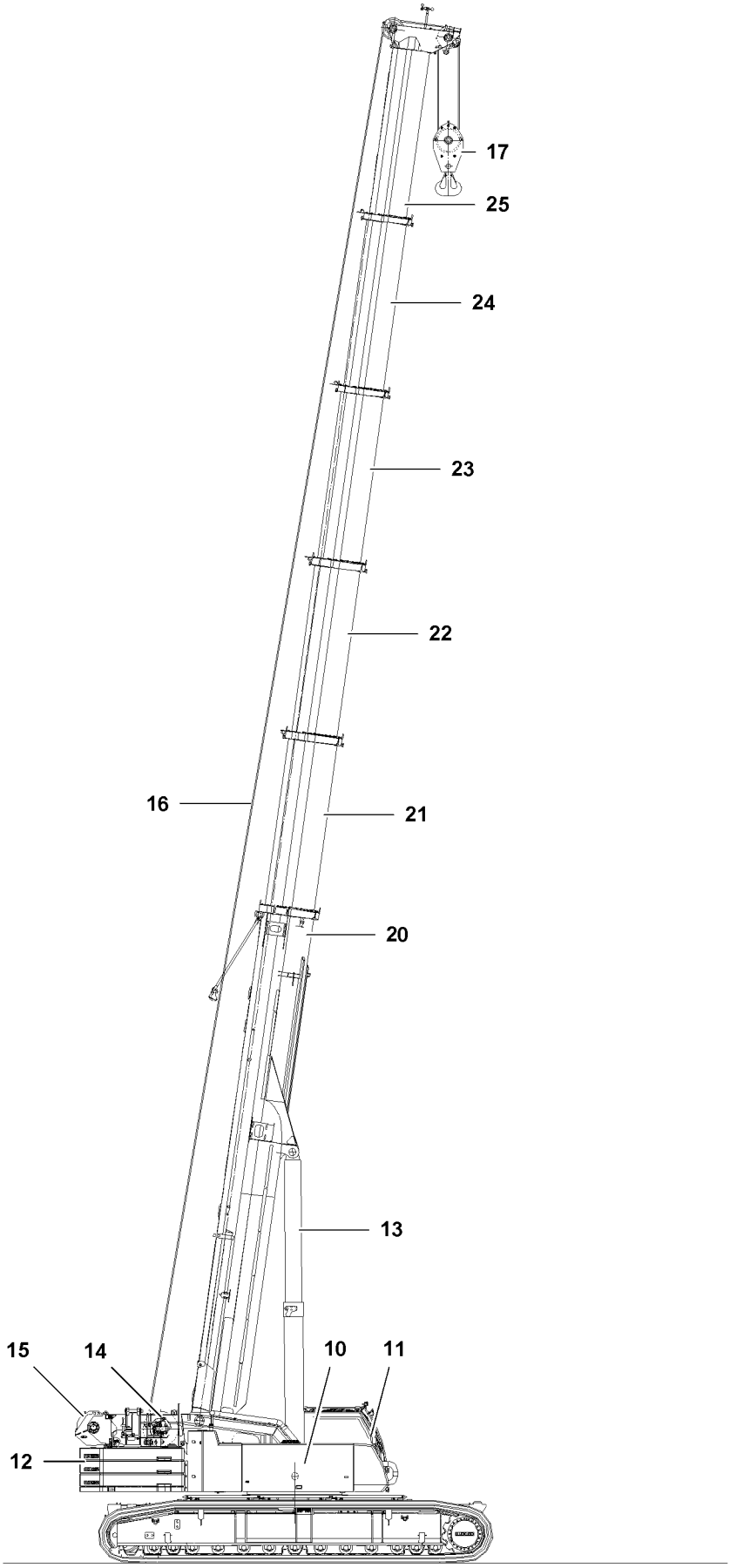

Fig.116849

LWE/ab Muli 010/24201-02-02/en

copyright © Liebherr-Werk Ehingen GmbH 2016

1.2 Crane superstructure

10 Crane engine
11 Crane operator's cab
12 Counterweight
13 Luffing cylinders
- For telescopic boom adjustment

14 Winch 1
15 Winch 2*
16 Hoist rope*
17 Hook block*

1.3 Telescopic boom (T)

20 Pivot section
21 Telescopic section 1
22 Telescopic section 2
23 Telescopic section 3
24 Telescopic section 4
25 Telescopic section 5

LWE/ab Muli 010/24201-02-02/en

copyright © Liebherr-Werk Ehingen GmbH 2016

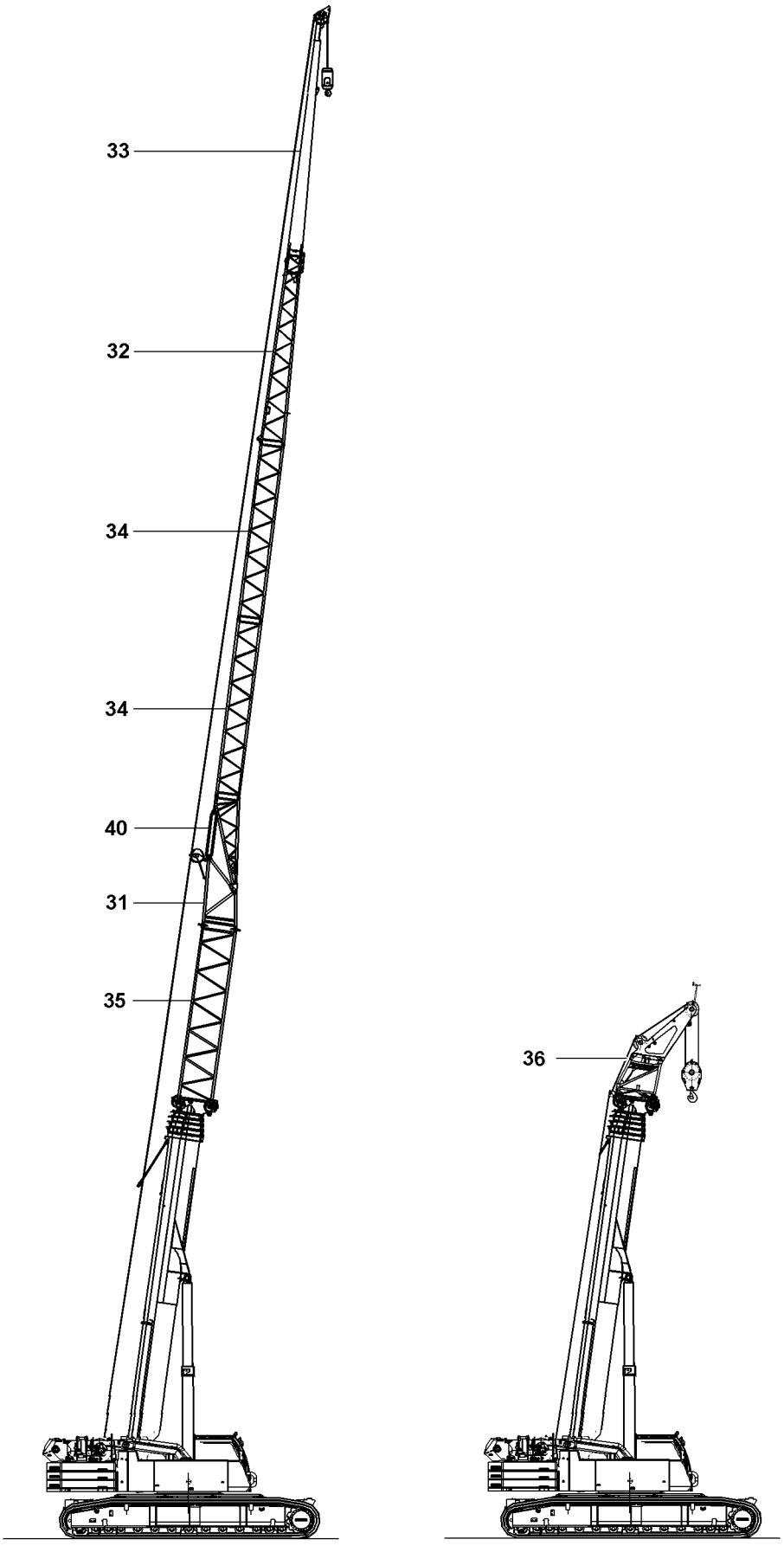

Fig.117322

LWE/ab Muli 010/24201-02-02/en

copyright © Liebherr-Werk Ehingen GmbH 2016

2 Auxiliary boom

2.1 Folding jib (TK)*

31 Adapter
32 Pivot section
33 End section
34 Intermediate section

2.2 Folding jib with extension (TVK)*

31 Adapter
32 Pivot section
33 End section
34 Intermediate section
35 Extension

2.3 Hydraulically adjustable folding jib (TNZK)*

31 Adapter
32 Pivot section
33 End section
34 Intermediate section
40 Control cylinder

2.4 Hydraulically adjustable folding jib with extension (TVNZK)*

31 Adapter
32 Pivot section
33 End section
34 Intermediate section
35 Extension
40 Control cylinder

2.5 Auxiliary boom (THK)*

36 Auxiliary boom

LWE/ab Muli 010/24201-02-02/en

copyright © Liebherr-Werk Ehingen GmbH 2016

Empty page!

copyright © Liebherr-Werk Ehingen GmbH 2016

1.02 Product description

1	Crawler travel gear	3
2	Crane superstructure	3
3	Auxiliary equipment	5

LWE/ab Muli 010/24201-02-02/en

copyright © Liebherr-Werk Ehingen GmbH 2016

LWE/ab Muli 010/24201-02-02/en

Fig.195219

copyright © Liebherr-Werk Ehingen GmbH 2016

1 Crawler travel gear

1.1 Frame

Torsion resistant box construction, consisting of crawler center section, two cross carriers and two crawler carriers. The crawler carriers can be removed from the telescoping beams. Hydraulic track width adjustment Hydraulic assembly support

1.2 Hydraulic track width adjustment

The track width adjustment is made via two independent, hydraulic cylinders.

1.3 Tracks

Crawler tracks with 1000 mm wide double grouser track pads.

1.4 Travel drive

Per crawler carrier, a hydraulic travel drive consisting of an axial piston motor, planetary gear with spring-loaded hydraulically-releasable travel brake. The crawler chains can be controlled synchronously as well as independently and counterrotating.

Travel speed: 0 -2.3 km/hr

1.5 Central ballast

20.0 t , hook ballast at 10.0 t , mounting on the crawler center section.

2 Crane superstructure

2.1 Frame

In-house manufactured, weight-optimized and distortion-resistant welded structure made from high-strength, close-grained structural steel. A 3-row slewing ring connection is used as the connecting element to the crawler travel gear, providing unlimited rotation.

2.2 Engine

4-cylinder diesel, made by Liebherr, water cooled

Fully electronic engine management

Engine type, see also separate Operating instructions for the Diesel engine.

2.2.1 Engine type D 944 A7-04 with exhaust aftertreatment system SCR

Performance: 230 KW at 1900 rpm
Maximum torque: 1445 Nm at 1350 rpm

LWE/ab Muli 010/24201-02-02/en

copyright © Liebherr-Werk Ehingen GmbH 2016

2.2.2 Engine type D 944 A7-03 without exhaust aftertreatment system

Performance: 129 KW at 1800 rpm
Maximum torque: 1231 Nm at 1350 rpm

2.3 Crane drive

Diesel hydraulic with 5 axial piston variable displacement pumps with servo control and power regulation.

One each axial piston variable displacement pump for auxiliary users, for replenishing pressure and for fan drive.

One gear pump to supply the hydraulic oil cooler.

2.4 Control

Electronic control system from LICCON-system (PLC control). Two 4–way manual control levers, self-centering. Infinitely variable control of all crane movements by adjusting the hydraulic pumps, additional speed control when adjusting the diesel engine rpm.

2.5 Hoist gear

Axial piston variable displacement motor.

Liebherr rope winch with integrated planetary gear and spring-loaded retaining brake.

2.6 Luffing gear

One differential cylinder with safety check valves.

2.7 Slewing gear

Axial piston fixed displacement motor, planetary gear, spring-loaded retaining brake.

2.8 Crane operator's cab

Corrosion resistant steel cab, large field of visibility, safety glass, comfort design

The crane operator's cab can be tilted back by 20° to improve visibility.

2.9 Safety equipment

LICCON2 overload protection system, hoist limitation, safety valves to prevent pipe and hose breakage, test system for service tasks.

2.10 Telescopic boom

Dent and distortion-resistant design made from high-strength, close-grained structural steel with oval boom profile, one pivot section and five telescopic sections. All telescopic sections are hydraulically extendable, independent of each other. Rapid-cycle telescoping system „Telematik“.

Boom length: 13.3 m to 60.0 m

LWE/ab Muli 010/24201-02-02/en

copyright © Liebherr-Werk Ehingen GmbH 2016

2.11 Counterweight

Maximum 70.0 t counterweight*

2.12 Electrical system

Modern data bus technology

3 Auxiliary equipment

3.1 Folding jib

12.2 m to 22.0 m long and can be installed below 0°, 22.5° or 45° to the telescopic boom.
Hydraulic cylinder for stepless adjustment of folding jib from 0° to 45°.

3.2 Auxiliary jib

3.4 m

3.3 Telescopic boom extension

7 m long lattice section, as a result a 7 m higher pivot point for the folding jib.

3.4 Intermediate section

Two 7 m long lattice sections to extend the folding jib.

3.5 Winch 2

For 2-hook operation or for operation with folding jib if the main hoist rope is to remain reeved.

3.6 Auxiliary counterweight

Two additional ballast plates with a weight of 10.0 t for a total counterweight of 70.0 t.

LWE/ab Muli 010/24201-02-02/en

copyright © Liebherr-Werk Ehingen GmbH 2016

Empty page!

copyright © Liebherr-Werk Ehingen GmbH 2016

1.03 Technical data

1	Dimensions	3
2	Maximum surface pressure	3
3	Workplace-related emission value	3
4	Vibrations	3
5	Speeds	3
6	Ropes	4
7	Weights	4
8	Lifting heights	12

LWE/ab Muli 010/24201-02-02/en

copyright © Liebherr-Werk Ehingen GmbH 2016

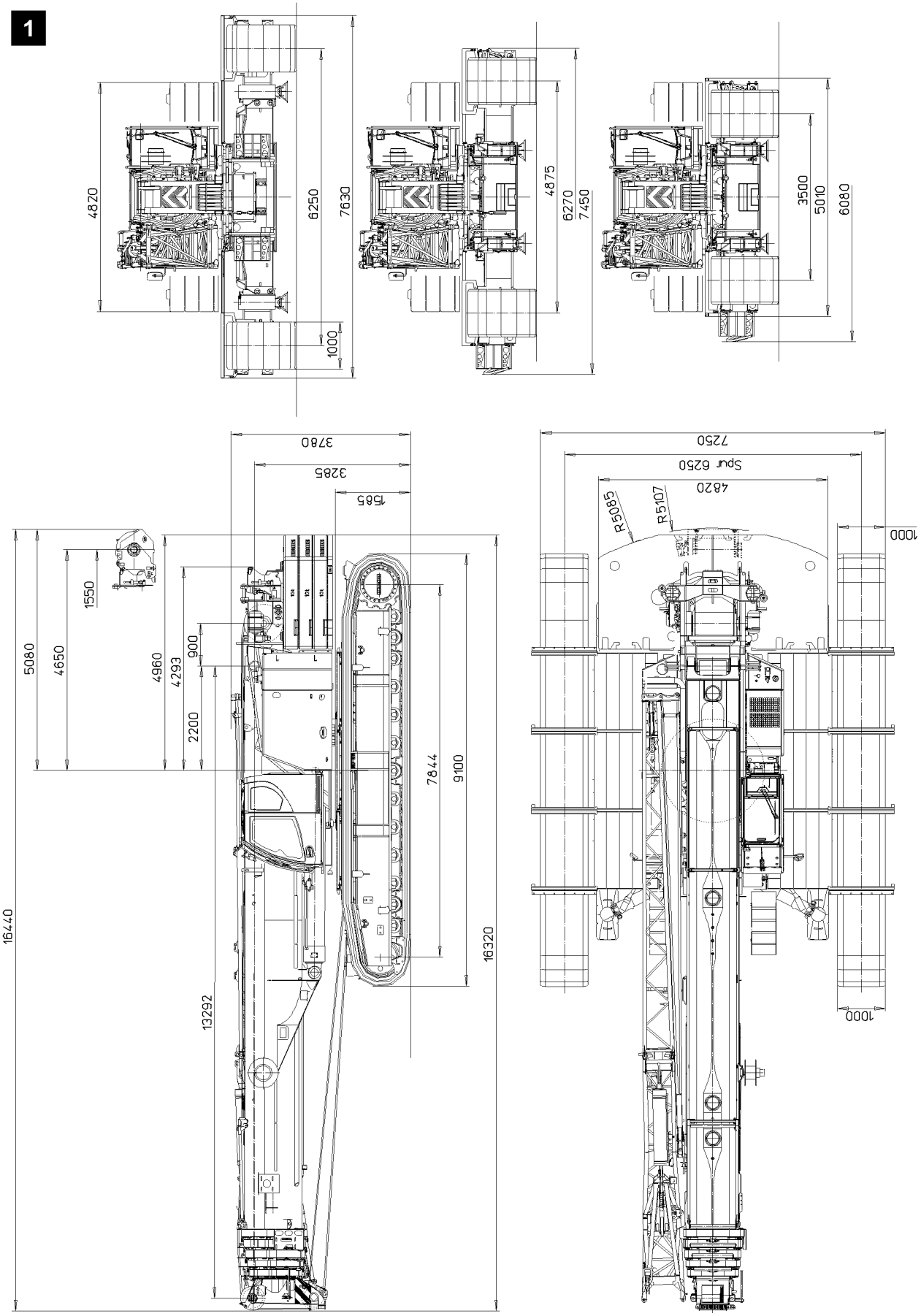

Fig.116835

LWE/ab Muli 010/24201-02-02/en

copyright © Liebherr-Werk Ehingen GmbH 2016

1 Dimensions

See illustration **1**.

2 Maximum surface pressure

	2–grouser pads 1.0 m	2–grouser pads 1.2 m *
Maximum surface pressure at nominal load	750 kN/m²	620 kN/m²

3 Workplace-related emission value

A-rated sound pressure level at 3/4 of the nominal engine rpm	Stationary noise L_{pA}
Crane operator's cab (2006/42/EC; EN 13000)	73 dB(A)

4 Vibrations

Vibrations transferred to the operator	Value
Total vibration value to which the upper body limbs are exposed	Not more than 2.5 m/s²
Effective value of weighted acceleration to which the entire body is exposed to	Not more than 0.5 m/s²

5 Speeds

5.1 Travel speeds

Crane data	Value
Travel speeds	0 km/h to 2.3 km/h
Maximum permitted gradeability	47 %
Total propelling force	1130 kN

LWE/ab Muli 010/24201-02-02/en

copyright © Liebherr-Werk Ehingen GmbH 2016

5.2 Crane speeds

Drives	Infinitely variable
Hoist gear 1	0 m/min – 130 m/min for single strand
Hoist gear 2	0 m/min – 130 m/min for single strand
Slewing gear	0 rpm – 1.5 rpm
Luffing gear	Approx 50 sec. 0.9 ° to 82 ° boom position
Telescoping	Approx. 420s for boom length 13.3 m – 60 m

6 Ropes

Components	Rope diameter	Rope category number RCN
Hoist rope 1	23 mm	See Rope certificate
Hoist rope 2	23 mm	See Rope certificate

7 Weights

7.1 Crawler crane

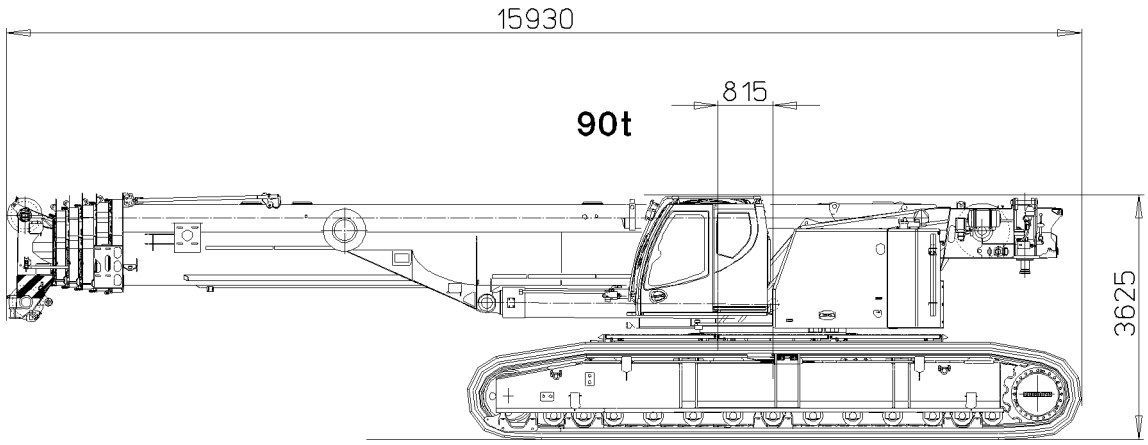

Fig.116840: Crawler crane

Component	Weight	Width
Crawler, complete, 2-grouser 1000 mm	90 t	5010 mm
Crawler center section		
Hydraulic support		
Cross carrier		

LWE/ab Muli 010/24201-02-02/en

copyright © Liebherr-Werk Ehingen GmbH 2016

Component	Weight	Width
Superstructure		
Telescopic boom 60 m		
Narrow track		

7.2 Crawler center section

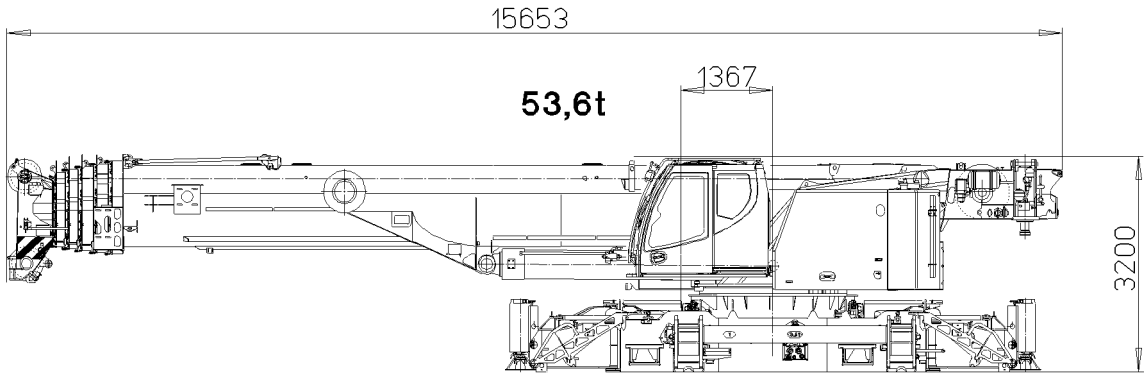

Fig.116841: Crawler center section

Component	Weight	Width
Crawler center section	53.6 t	3000 mm
Hydraulic support		
Cross carrier		
Superstructure		
Telescopic boom 60 m		

copyright © Liebherr-Werk Ehingen GmbH 2016

7.3 Crawler center section

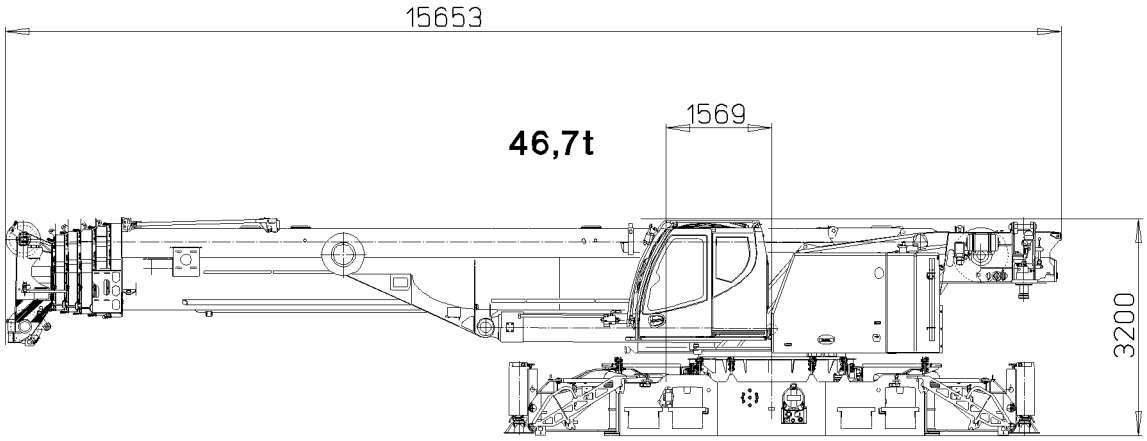

Fig.116842: Crawler center section

Component	Weight	Width
Crawler center section	46.7 t	3000 mm
Hydraulic support		
Superstructure		
Telescopic boom 60 m		

7.4 Crawler, complete, 2-grouser pads 1000 mm

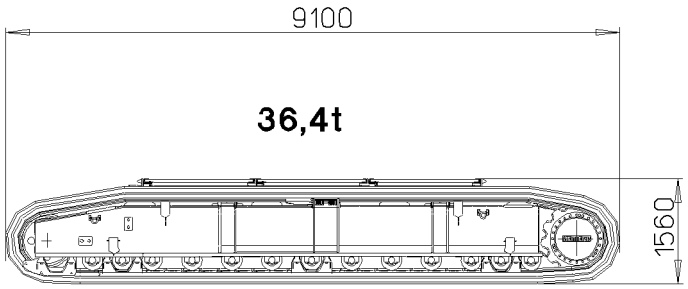

Fig.116843: Crawler, complete, 2-grouser 1000 mm

Component	Weight	Width
Crawler, complete, 2-grouser 1000 mm	36.4 t	1000 mm

LWE/ab Muli 010/24201-02-02/en

copyright © Liebherr-Werk Ehingen GmbH 2016

7.5 Receptacle plate

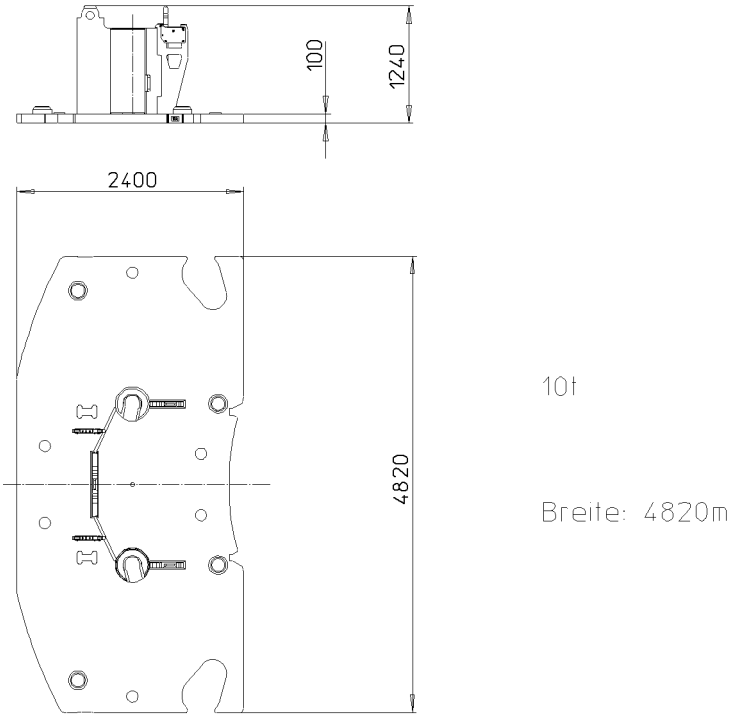

Fig.116836: Receptacle plate

Component	Weight
Receptacle plate	11.0 t

copyright © Liebherr-Werk Ehingen GmbH 2016

7.6 Ballast plate

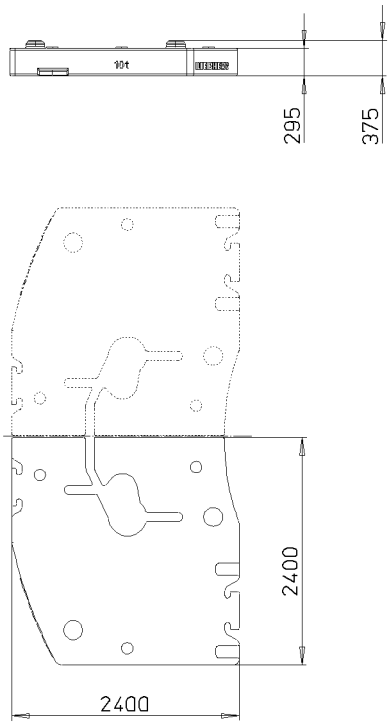

Fig.116837: Counterweight plate

Component	Weight
Counterweight plate 5 t	10.0 t

7.7 Central ballast 10 t

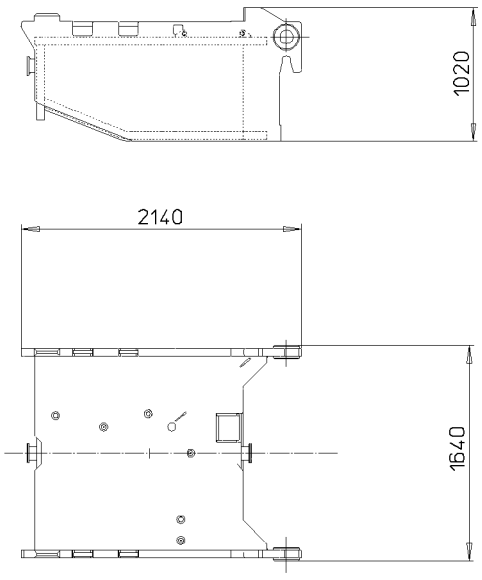

Fig.116839: Central ballast 10 t

LWE/ab Muli 010/24201-02-02/en

copyright © Liebherr-Werk Ehingen GmbH 2016

Component	Weight
Central ballast 10 t	10.0 t

7.8 Hoist gear 2 with rope

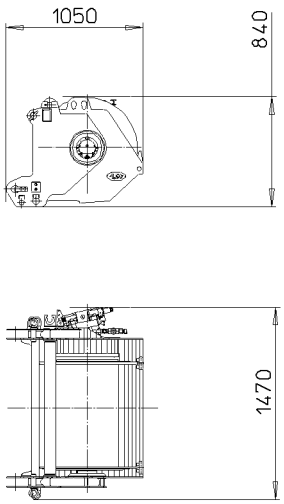

Fig.116838: Hoist gear 2 with rope

Component	Weight
Hoist gear 2 with rope	1.90 t

7.9 Tele extension 7 m

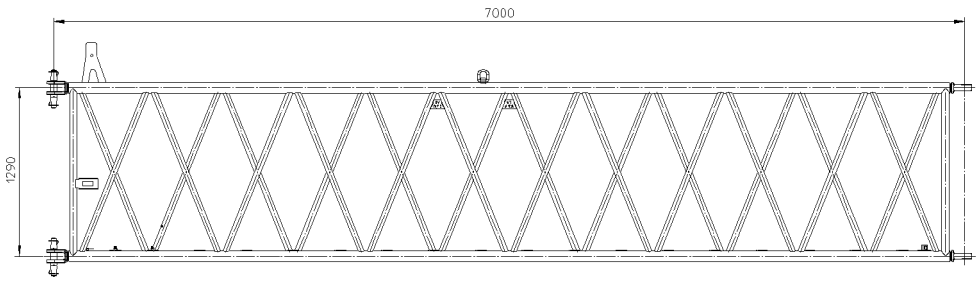

Fig.116847: NA-intermediate section 7 m

Component	Weight	Width
Tele extension 7 m	0.7 t	0.82 m

LWE/ab Muli 010/24201-02-02/en

copyright © Liebherr-Werk Ehingen GmbH 2016

7.10 Special auxiliary boom

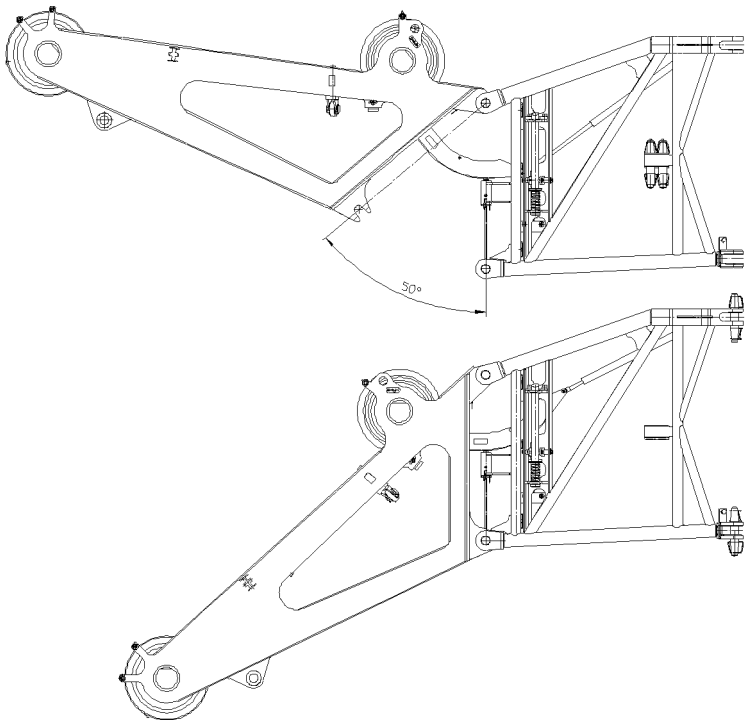

Fig.116844: Special auxiliary boom

Component	Weight	Width
Special auxiliary boom	0.750 t	0.82 m

7.11 Load hook

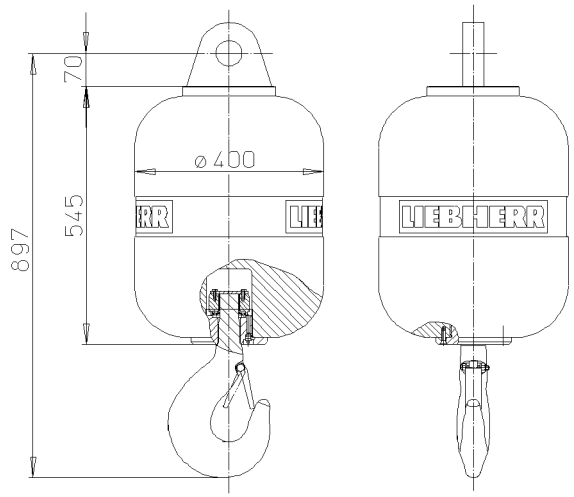

Fig.116845: Load hook

LWE/ab Muli 010/24201-02-02/en

copyright © Liebherr-Werk Ehingen GmbH 2016

Component	Weight	Width
Load hook	0.5 t	0.4 m

7.12 Hook blocks

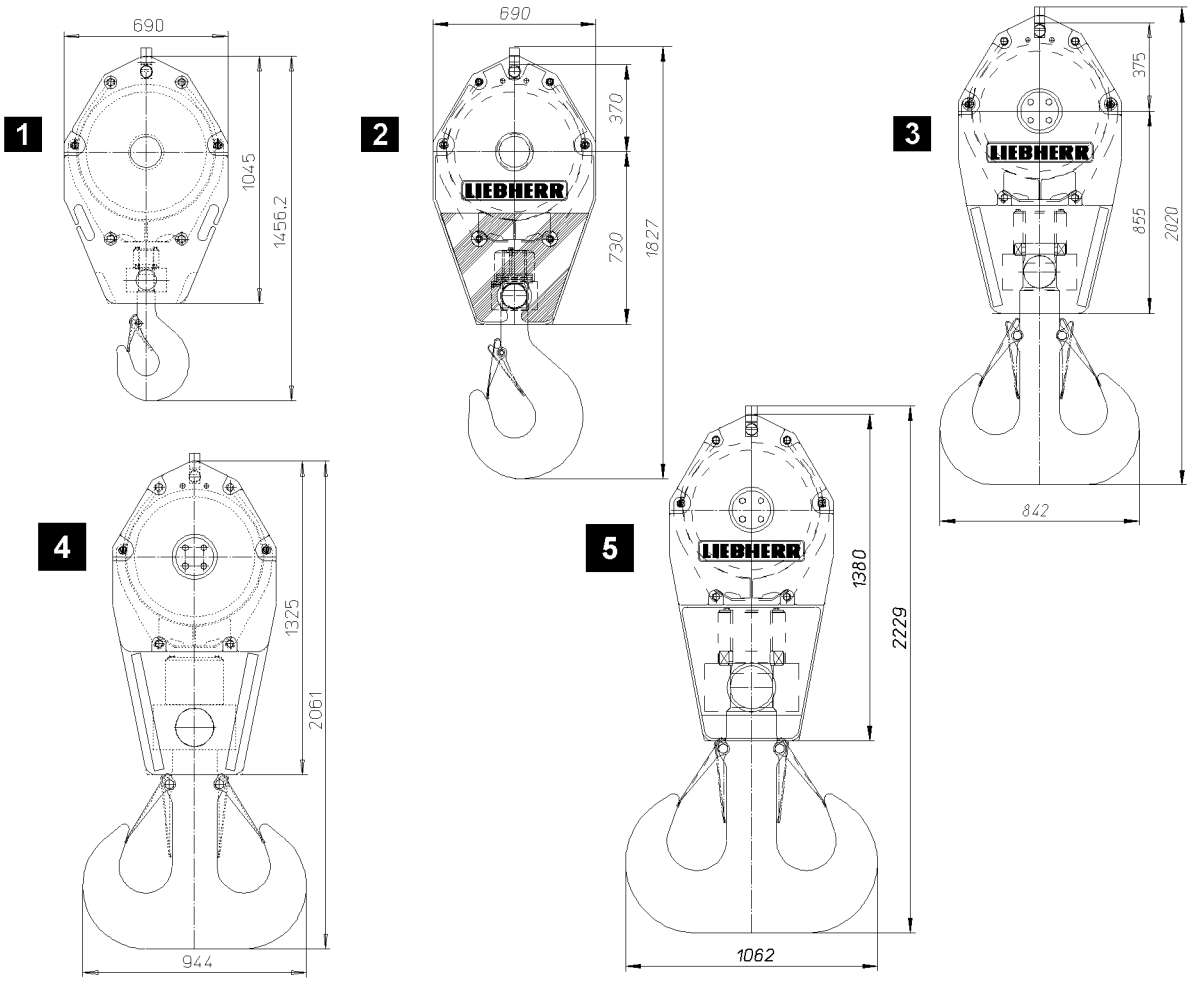

Fig.116846: Hook blocks

No.	Component	Weight	Width
1	Hook block, 1-pulley	0.87 t	0.340 m
2	Hook block, 3-pulley	1.45 t	0.503 m
3	Hook block, 7-pulley	1.50 t	0.707 m
4	Hook block, 9-pulley	2.00 t	0.900 m
5	Hook block, 12-pulley	3.40 t	1.209 m

LWE/ab Muli 010/24201-02-02/en

copyright © Liebherr-Werk Ehingen GmbH 2016

8 Lifting heights

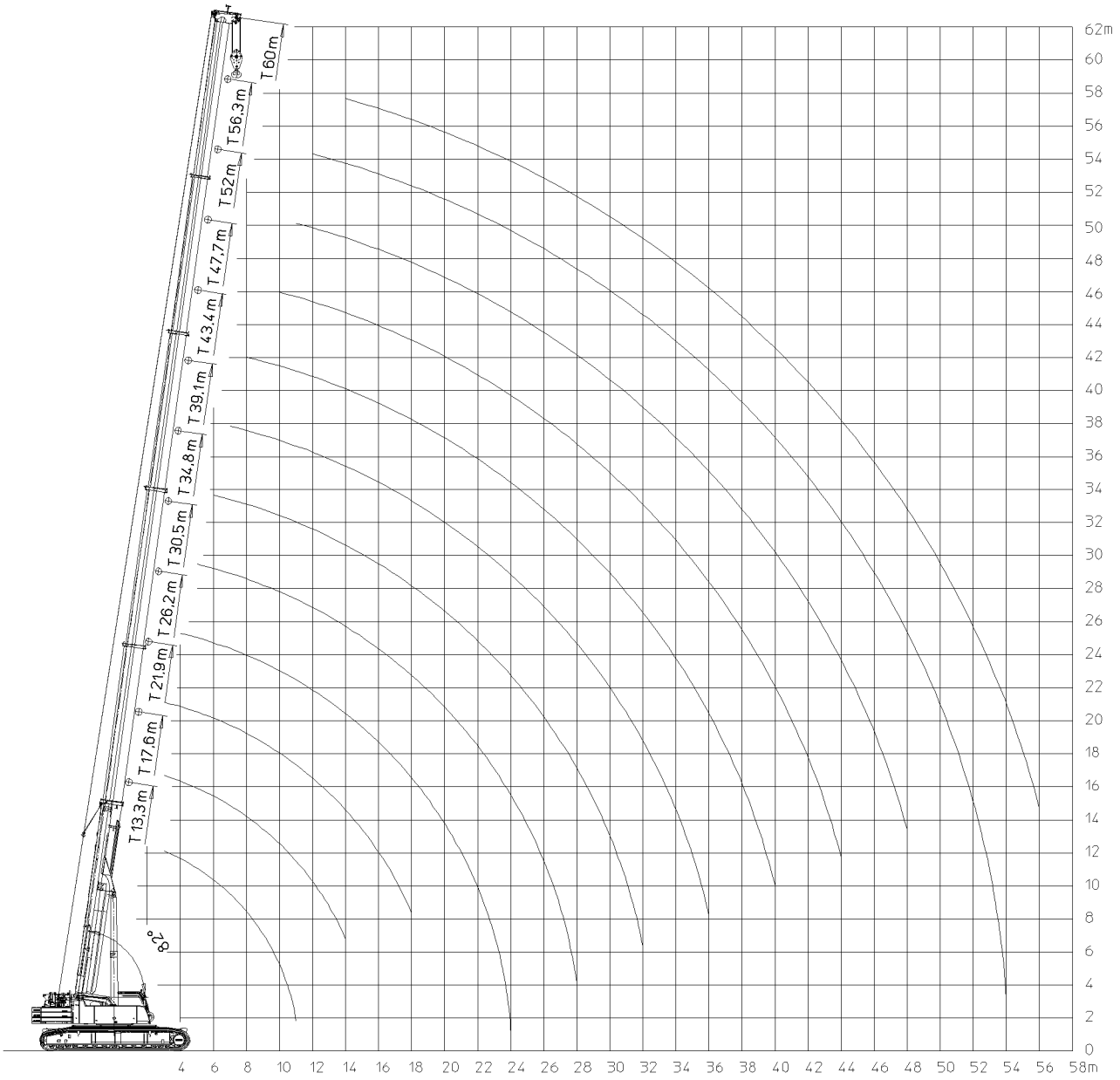

Fig.116832: Telescopic boom (T)

LWE/ab Muli 010/24201-02-02/en

copyright © Liebherr-Werk Ehingen GmbH 2016

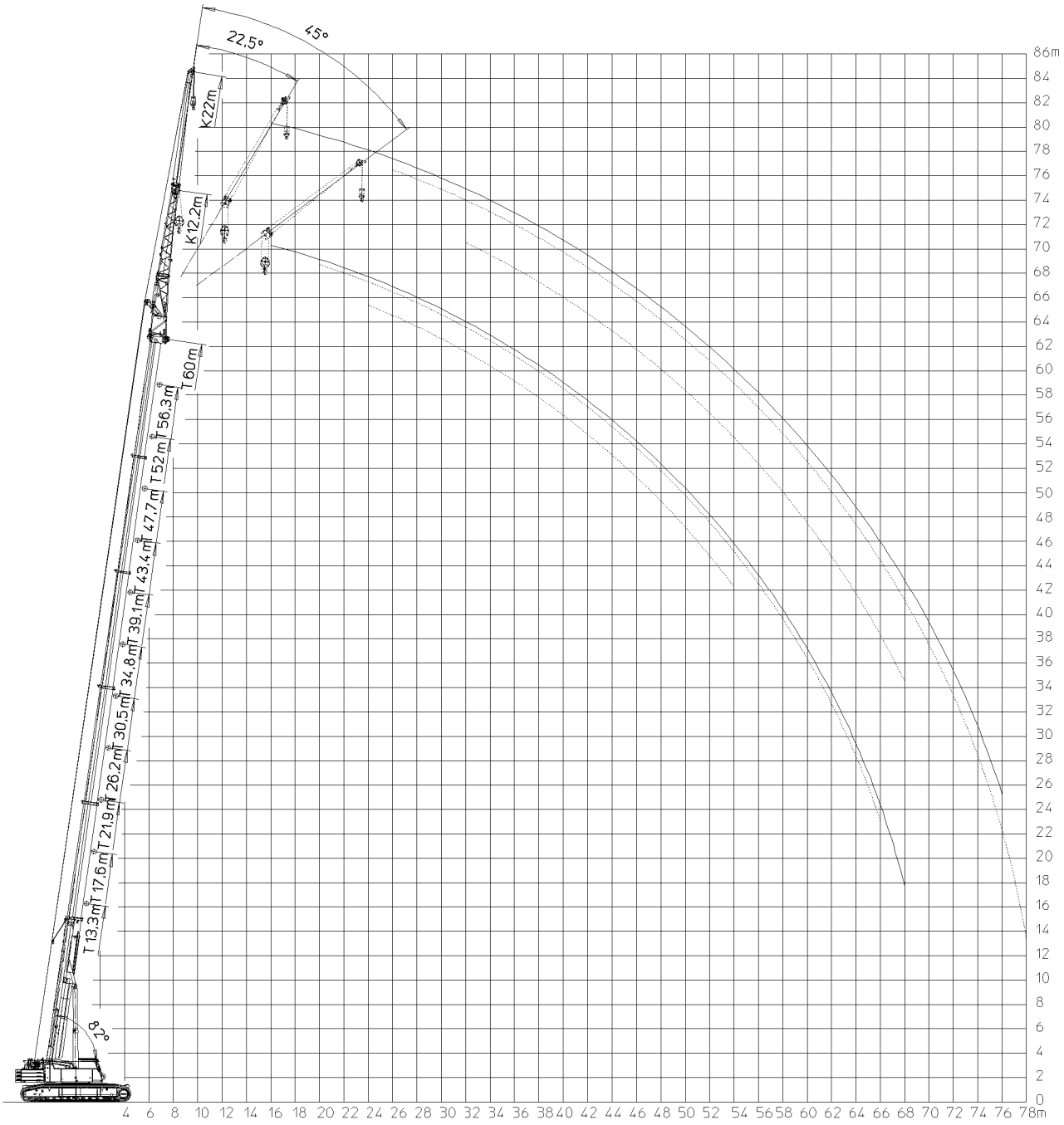

Fig.116833: Telescopic boom with folding jib (TK)

copyright © Liebherr-Werk Ehingen GmbH 2016

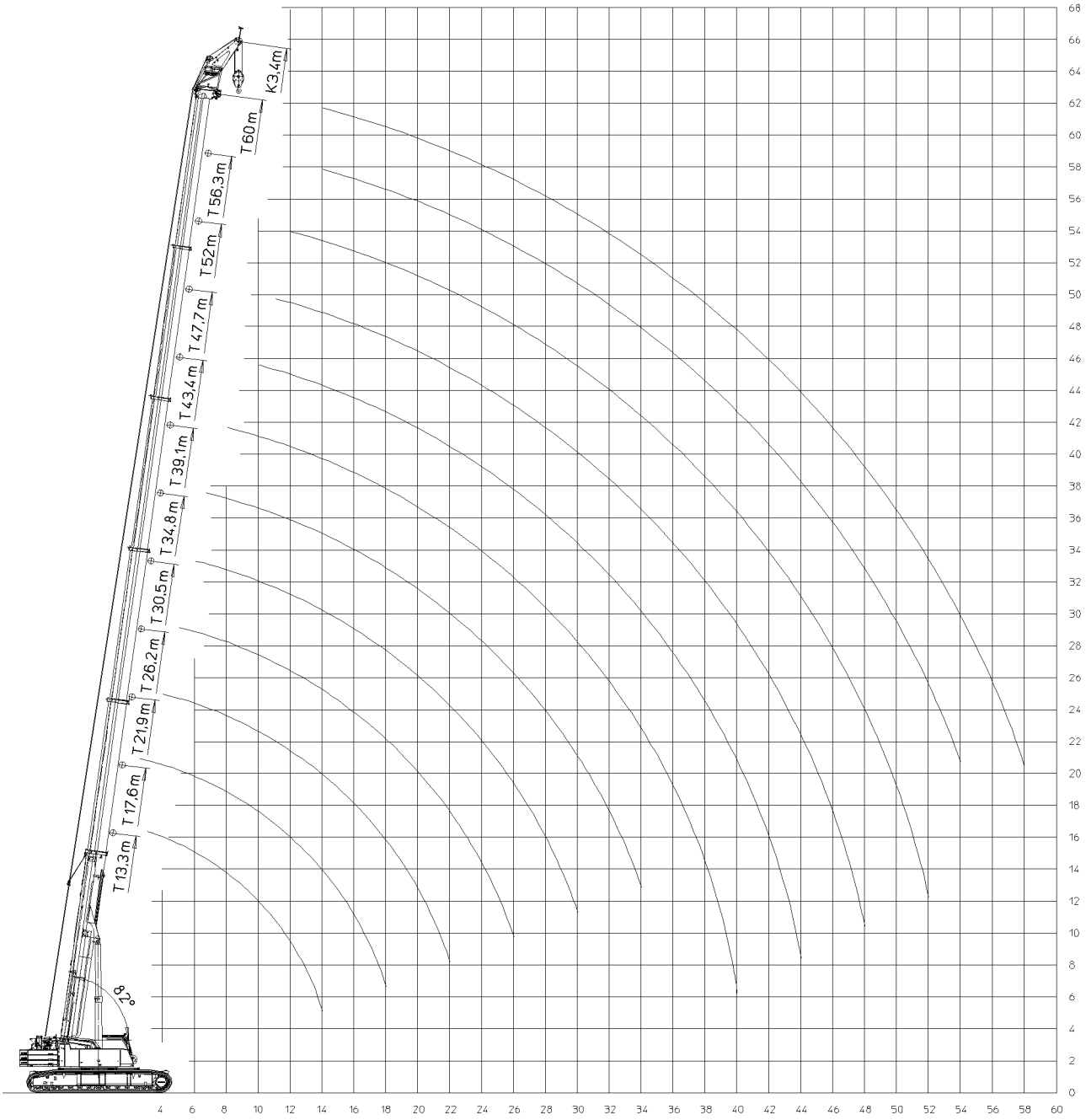

Fig.116834: Telescopic boom with auxiliary boom (THK)

LWE/ab Muli 010/24201-02-02/en

copyright © Liebherr-Werk Ehingen GmbH 2016

2 Safety

copyright © Liebherr-Werk Ehingen GmbH 2016

copyright © Liebherr-Werk Ehingen GmbH 2016

2.03 Job planning

1 Planning Crane operation 3

LWE/ab Muli 010/24201-02-02/en

copyright © Liebherr-Werk Ehingen GmbH 2016

LWE/ab Muli 010/24201-02-02/en

Fig.195219

copyright © Liebherr-Werk Ehingen GmbH 2016

1 Planning Crane operation

In addition to a perfectly working crane and a well-trained crew, the **planning for crane operation** is an important principle for safe crane operation.

WARNING
Missing information!
Death, severe bodily injuries, property damage.
▶ Obtain the required information and adhere to it.

Obtain the following information before crane operation and adhere to it:
- Type of crane operation
- National laws and regulations
- Height and width clearance measurements
- When mobile crane: Job site, distance and travel route
- Space prerequisites at the job site
- Electrical transmission lines with voltage data
- Movement restrictions caused by buildings
- Weight and dimensions of the load(s) to be lifted
- Geometric form and air resistance coefficient of the load(s) to be lifted
- Required lifting height and boom projection
- Ground bearing capacity at the job site
- Required space for the assembly and disassembly of the crane
- Weather data and weather forecasts

Assemble the equipment for crane operation:
- Hook block / load hook
- Auxiliary boom
- Fastening equipment
- Counterweight
- Base materials for support plates

LWE/ab Muli 010/24201-02-02/en

copyright © Liebherr-Werk Ehingen GmbH 2016

Empty page!

copyright © Liebherr-Werk Ehingen GmbH 2016

2.04 General safety technical guidelines

1	Danger zone of crane	3
2	Traffic endangerment and environmental damage	3
3	Endangering air traffic	3
4	Movement on the crane	4
5	Emergency exit	4
6	Personal protective equipment	7
7	Securing persons to prevent them from falling	12
8	Rescuing the assembly personnel	14
9	Crane cab with retractable / extendable step	15
10	Crane cab with incline adjustment	16
11	Safety bar	17
12	Closing the windows	18
13	Rigging and fastening points	19
14	Heated crane components	20
15	Crane operator responsibilities	20
16	Selecting the operating site	22
17	Slopes and ditches	26
18	Permissible ground pressures	29
19	Support	31
20	Aligning the crane	33
21	Checking the safety measures	34
22	Safety guidelines in case of external power supply	35
23	Grounding	35
24	Working in the vicinity of transmitters	37
25	Crane operation in case of thunderstorms	38
26	Wind influences	39
27	Lifting a load with two cranes	45
28	Working ranges overlap	47
29	Hand signals for guidance	47
30	Crane operation with a load	56
31	Lifting of personnel	59
32	Securing personnel on shut off crane	60
33	Welding work on the load	62
34	Travel and crane operation	63

LWE/ab Muli 010/24201-02-02/en

copyright © Liebherr-Werk Ehingen GmbH 2016

LWE/ab Muli 010/24201-02-02/en

Fig.195219

copyright © Liebherr-Werk Ehingen GmbH 2016

Note

▶ The illustrations in this chapter are only examples. The illustrations may differ depending on the crane model.

1 Danger zone of crane

The danger zone of the crane is made up of the areas which are accessed during crane operation by the load or by movements of the crane or the crane components.

WARNING

Do not stay in danger zone!
Personnel within the danger zone can be hit by falling loads or components.
Personnel in the danger zone can be caught by moving crane components or loads.
Fatal or severe injuries can be the result.

▶ Warn any personnel within the danger zone with the warning device of the crane.
▶ After the warning is issued, wait and ensure that no personnel remains within the danger zone.
▶ If required, block off the danger zone with a safety distance.

2 Traffic endangerment and environmental damage

WARNING

Danger of slipping and skidding!
If the roadway becomes contaminated due to technical defects, open tank covers or leaking hydraulic oil, then this would pose a severe traffic endangerment.
Fatal accidents can result.

▶ Remove oil immediately and thoroughly.

3 Endangering air traffic

When working with crane, heights are reached which could endanger air traffic. This applies especially to areas near airports.

WARNING

Endangering air traffic!
If no protective measures are taken, this can result in endangerment to air traffic.

▶ Get the approval from agency responsible for air traffic.
▶ Install the airplane warning light on the boom head and turn it on.
▶ If the airplane warning lights is operated for a longer period of time, with the engine turned off, then the battery can be discharged and as the result the airplane warning light turns off. To prevent the battery from discharging, an external electrical power supply must be established.

LWE/ab Muli 010/24201-02-02/en

copyright © Liebherr-Werk Ehingen GmbH 2016

4 Movement on the crane

WARNING
Danger of slipping and falling!
The traction of steps, walkways and hand rails changes due to effects of the weather, such as wetness, ice, snow, frost and dirt.
Personnel can be severely injured or killed.
The crane can be damaged.

- ▶ Step on the walkways and steps only by taking the present conditions into account, such as icing in winter or dirt.
- ▶ Step or place a load only on the approved walkways and steps.
- ▶ Observe the signage.
- ▶ Replace damaged safety signs (warning signs) immediately.

5 Emergency exit

5.1 Emergency exit - driver's cab

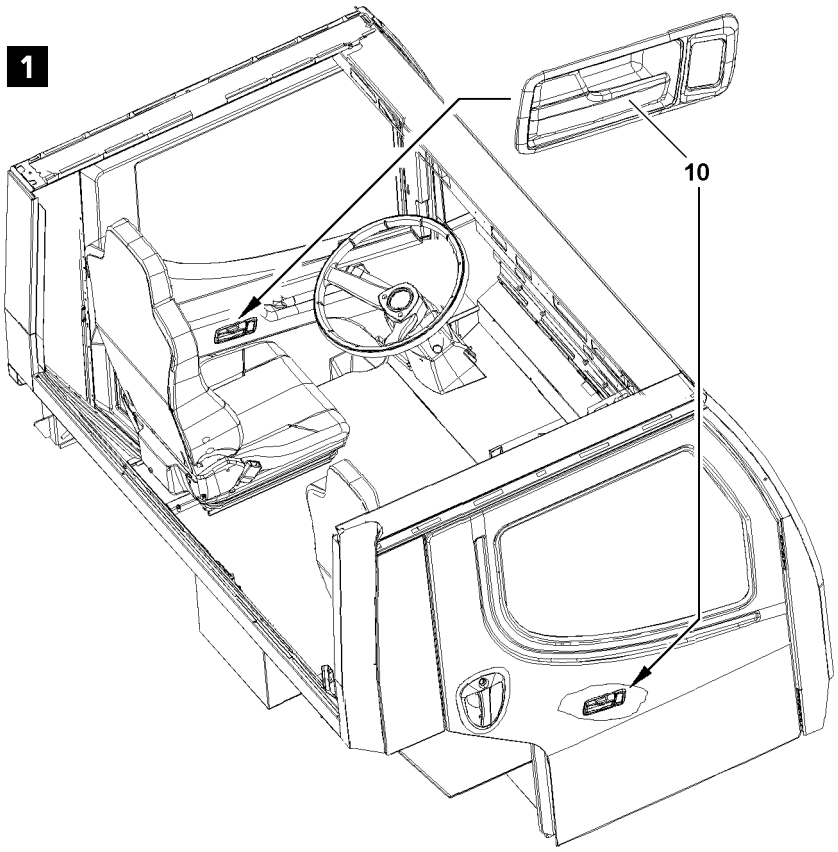

Fig.120932: Example for emergency exit - driver's cab

The driver's cab can be exited through the „left driver's door“ or the „right passenger door“, see illustration **1**.

Note

- ▶ Exit the driver's cab through the „left driver's door“ or the „right passenger door“, see illustration **1**: Pull and open the door handle **10** on the „left driver's door“ or the „right passenger door“.

LWE/ab Muli 010/24201-02-02/en

copyright © Liebherr-Werk Ehingen GmbH 2016

5.2 Emergency exist crane cab

WARNING
Danger of falling!
If the crane driver cannot leave the crane cab through the door or if the crane cab is tilted, then there is a danger of falling during the emergency exit.
Death or severe injuries.
▶ Exit carefully in an emergency.

During the emergency exit there is an increase danger of accidents:
▶ Accept third-party assistance.

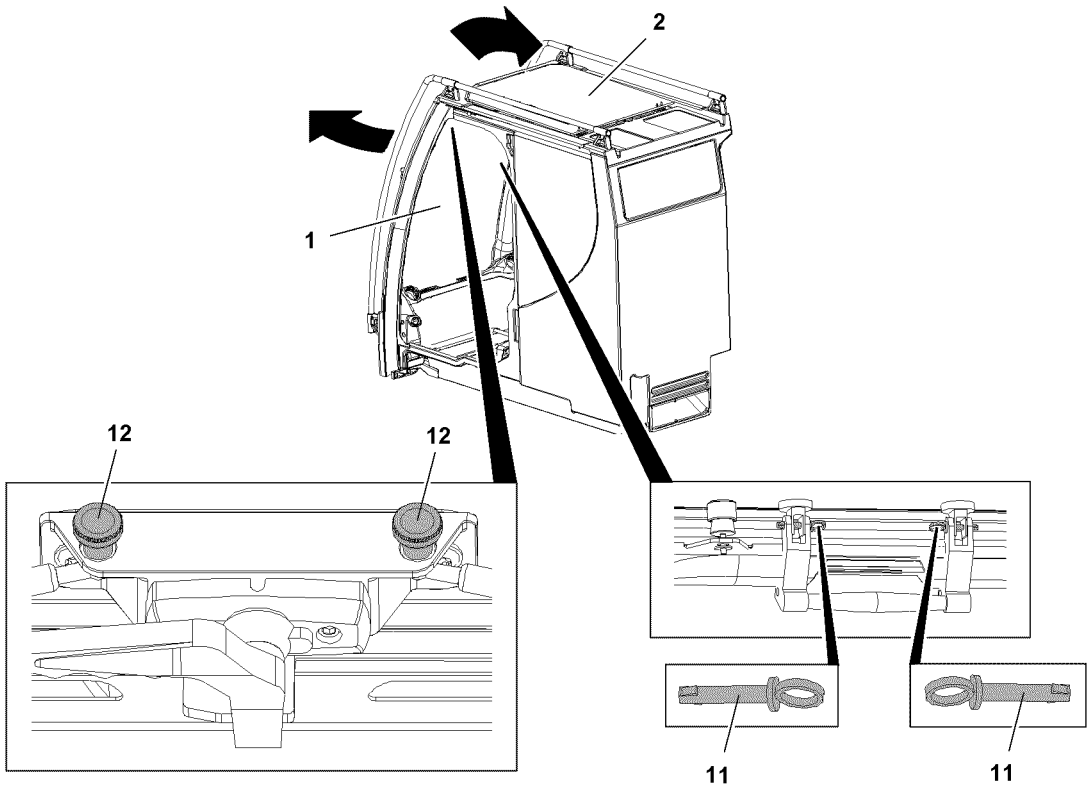

Fig.121111: Examples for emergency exit from the crane cab

If the emergency exit through the door is not possible, then the crane cab can be exited through additional openings.

The following openings are possible:
– **1** Front window
– **2** Roof window

5.2.1 Emergency exit through front window

– Unlock all turn handles.
– Open the front window **1**.
– Leave the crane cab through the front window **1**.

5.2.2 Emergency exit through the roof window

There are two ways to unlock the roof window **2** for the emergency exit:
– Unpin both pins **11**.
– Release both thumbscrews **12**.

– Unlock all turn handles.

copyright © Liebherr-Werk Ehingen GmbH 2016

- Unlock the roof window **2** for the emergency exit.
- Open the roof window **2**.
- Leave the crane cab through the roof window **2**.

5.2.3 Emergency exit with EMERGENCY hammer*

Certain crane types carry an EMERGENCY hammer* in the crane cab.

- Knock the window out with the EMERGENCY hammer* or a suitable object.
- Leave the crane cab.

LWE/ab Muli 010/24201-02-02/en

copyright © Liebherr-Werk Ehingen GmbH 2016

6 Personal protective equipment

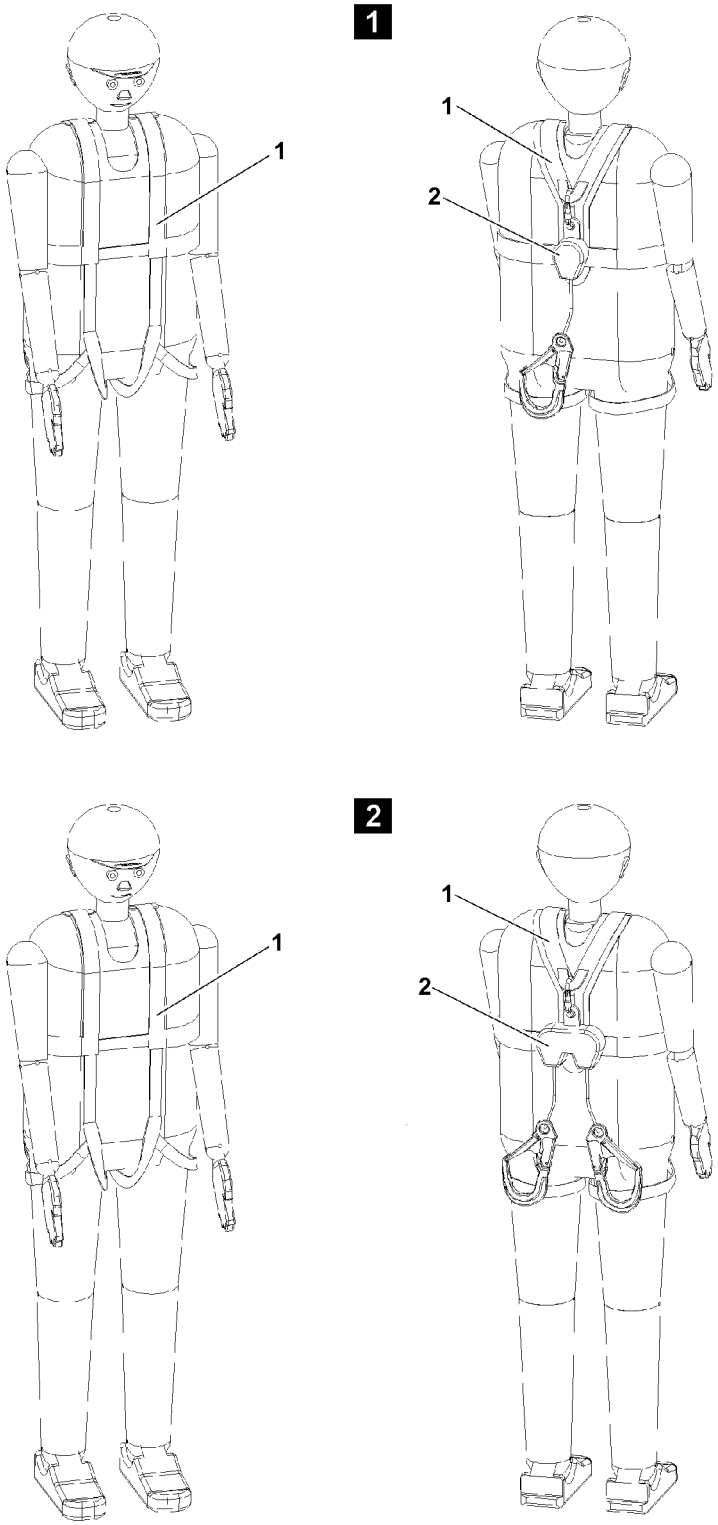

Fig.121161: Examples for safety harness and height safety equipment

LWE/ab Muli 010/24201-02-02/en

copyright © Liebherr-Werk Ehingen GmbH 2016

WARNING
Danger of falling!
If personal protective equipment is not worn during assembly or maintenance work, then the assembly personnel can be killed or severely injured.
- ▶ Observe and adhere the operating instructions and maintenance instructions of the manufacturer for the personal protective equipment.
- ▶ Ensure through regular inspections that the product identification is not damaged.
- ▶ The crane operator must make personal protective equipment available for the assembly personnel.
- ▶ The crane operator must ensure that the personal protective equipment is worn by the assembly personnel.
- ▶ The assembly personnel is obligated to carry the personal protective equipment and to wear it.
- ▶ Check personal protective equipment before use for damage and completeness.
- ▶ Replace defective or damaged personal protective equipment with functioning protective equipment.

WARNING
Impermissible fall arrest system!
If a fall arrest system is used, which was not obtained via Liebherr-Werk Ehingen GmbH, there is a danger of falling. Another fall arrest system is **NOT** designed for the crane structure.
Personnel can be severely injured or killed.
- ▶ Utilize exclusively fall arrest systems from Liebherr-Werk Ehingen GmbH.

The personal protective equipment includes the following equipment:
- – Supplied fall arrest systems (safety harness **1** and height rescue equipment **2**).
- – Head protection with chin strap: Protection from falling parts at assembly and disassembly. Hitting the head during assembly and disassembly work
- – Non-skid and slip resistance safety gloves
  As a rule, when working with ropes, penetration safe safety gloves must be used.
- – Safety shoes: Protection from falling parts at assembly and disassembly.
- – Warning apparel

WARNING
Danger of fatal injury!
Even personal protective equipment does not provide 100 % protection.
A helmet can protect against small falling objects, but not against falling loads.
Personnel can be killed or seriously injured.
- ▶ Always remain alert.
- ▶ Always be safety conscious.
- ▶ Standing under suspended loads is prohibited.

WARNING
Danger of accident!
If the following measures are not carried out, personnel can be killed or severely injured.
- ▶ A plan for rescue actions, taking all possible emergencies into account, must be on hand.
- ▶ The following points can endanger the safe function of the personal protective equipment: For example extreme temperatures, routing of connecting devices, routing over or around sharp edges, chemical influences, electrical effects, cuts, abrasion, climatic influences or swing movements during falls.
- ▶ For that reason, safety preparations must be made.

WARNING
Important for the safety of the user.
- ▶ If the personal protective equipment is sold to another country, then the purchaser must make the manufacturer's operating instructions as well as the inspection and maintenance documents available in the language of the user country.

LWE/ab Muli 010/24201-02-02/en

copyright © Liebherr-Werk Ehingen GmbH 2016

6.1 Identification of protective equipment

Every personal protective equipment or other equipment must be marked clearly and permanently in the language of the user country.

If the identification is no longer legible, then the personal protective equipment must be handed to an expert for inspection.

LWE/ab Muli 010/24201-02-02/en

copyright © Liebherr-Werk Ehingen GmbH 2016

6.2 Supplied fall arrest system (safety harness and height safety equipment)

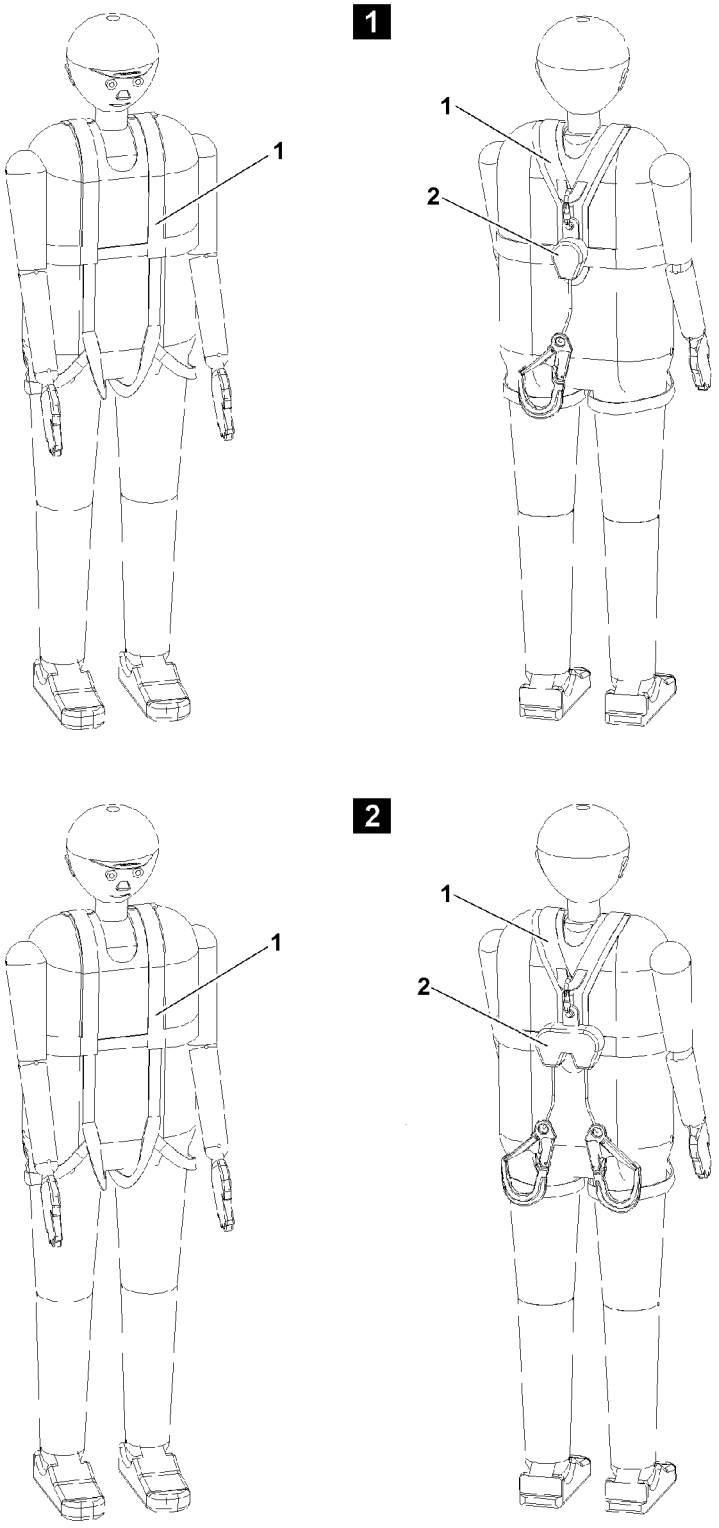

Fig.121161: Examples for safety harness and height safety equipment

The supplied fall arrest system, consisting of safety harness **1** and height safety device **2** must be worn where no other fall protection equipment, such as railings, can be installed for technical reasons.

LWE/ab Muli 010/24201-02-02/en

copyright © Liebherr-Werk Ehingen GmbH 2016

In these cases, marked fastening and hook points for the fall arrest systems are provided on the components.

Height rescue system, see section "Saving the assembly personnel".

Note

▶ For cranes, which do not include the fall arrest system and the height rescue system as part of the scope of delivery can purchase the fall arrest system, consisting of safety harness **1** and height rescue equipment **2** as well as the height rescue system at the Liebherr-Werk Ehingen GmbH.

Part of the category „Aids for working aloft“ are, for example:
- Lifting platforms
- Scaffolding
- Auxiliary cranes
- Ladders

WARNING

Danger of falling.

If the fall arrest system is not worn during assembly or maintenance work, then the assembly personnel can fall down and be killed or severely injured.

▶ All work aloft, where there is a danger of falling must be carried out with suitable aids.
▶ If fall protection equipment is available, then the fall protection equipment must be used, see Crane operating instructions, chapter 2.06.
▶ If aids are not available and work cannot be carried out from the ground, then the assembly personnel must secure themselves with the supplied fall arrest system to prevent falling.
▶ The supplied fall arrest system must be fastened on the fastening and hook points as well as on the safety ropes. For safety points, see Crane operating instructions, chapter 2.06.
▶ The assembly personnel must be instructed in practice on how to wear the supplied fall arrest system (safety harness **1** and height safety equipment **2**). Annual practice instructions and drills must be carried out.
▶ The supplied fall arrest system must be used.
▶ The fall arrest system consists of a safety harness **1**, approved according to **EN 361** and a height safety equipment **2**, approved according to **EN 360** (for horizontal application and sharp edges).
▶ The supplied fall arrest system may not be changed in its configuration. Extending or shortening the fall arrest rope is prohibited.
▶ The fall absorber is integrated in the height safety device **2**. The utilization of an additional fall absorber is prohibited.
▶ The supplied fall arrest system is effective from a height of 2.5 m.
▶ The fall space must be free of obstacles.
▶ Solely the intended safety points designed for this purpose on the crane may be used.
▶ The operating instructions of the manufacturer for the supplied fall arrest systems (safety harnesses **1** and height safety equipment **2**) must be observed and adhered to.
▶ Only step on the aids, ladders and catwalks with clean shoes.
▶ Keep aids, ladders and catwalks free of heavy dirt.
▶ Keep aids, ladders and catwalks free of snow and ice.
▶ The safety harness **1** and the height safety equipment **2** must be inspected annually by authorized and trained expert personnel and the results must be documented in the inspection log book.
▶ After every fall, the safety harness **1** and the height safety equipment **2** must be removed and inspected by an authorized and trained expert and the results must be documented in the inspection log book.
▶ The results must be documented in the inspection log book.
▶ Only after written release by expert personnel may be fall arrest system be reused.

6.3 Use of single strand height safety equipment

Height safety equipment with a belt strap, see illustration **1**, is intended for all cranes which have no catwalks with safety ropes. Use the supplied height safety equipment with extendable belt strap and snap hook (**EN 362 Class A**) with link.

LWE/ab Muli 010/24201-02-02/en

copyright © Liebherr-Werk Ehingen GmbH 2016

6.4 Use of double strand height safety equipment

Height safety equipment with two belt straps, see illustration **2**, is intended for cranes with catwalks, which are equipped with two ropes as fastening device on the left and right hand side of the catwalk. For example lattice sections, lattice booms, possibly telescopic booms or assembly units. Use the supplied height safety equipment with two extendable belt straps and snap hooks (**EN 362 Class A**) with links.

WARNING
Danger of falling.
- ▶ If two safety ropes are installed on the booms, lattice sections and other components, then the height safety equipment with two belt straps must always be used and one belt strap per safety rope must be hooked.

6.5 Documentation Fall arrest systems and Height rescue system

Note
- ▶ The documentation of the fall arrest systems (safety harnesses and height safety equipment) and the height rescue system must be carried out according to the operating instructions of the respective manufacturer.
- ▶ The crane operator, who employs the user, is responsible for the creation of documentation and entry of the required data.

7 Securing persons to prevent them from falling

WARNING
Danger of falling.
- ▶ Wear the supplied fall arrest systems (safety harnesses and height safety equipment) correctly.
- ▶ When accessing a ladder, do not hold any objects in your hands.
- ▶ When accessing a ladder, adhere to the 3-point support. See Crane operating instructions, chapter 2.04.10.

7.1 Working on the telescopic boom head and / or auxiliary boom

Reeve the hoist rope in or out on the pulley head:
- – For ladder work, use the supplied ladder. For fastening and hook points, see Crane operating instructions, chapter 2.06.
- – For cranes, which carry a ladder along **with** hook device:
  Use the hook device to secure the ladder.
- – For cranes, which carry a ladder along **without** hook device:
  Use the rigging belt to secure the ladder.
- – When ascending, the assembly personnel must ensure a 3-point support.
- – If there is a danger of falling, the assembly personnel must hook themselves with the snap hooks of the fall arrest system on the fastening points and secure themselves against falling.

LWE/ab Muli 010/24201-02-02/en

copyright © Liebherr-Werk Ehingen GmbH 2016

7.2 Walking on the telescopic boom

WARNING
Danger of falling.
The assembly personnel can fall down by slipping on the telescopic boom and be killed or severely injured.
- ▶ The telescopic boom may only be accessed if the assembly personnel is protected with suitable safety measures to prevent them from falling.
- ▶ If safety ropes are present on the telescopic boom, then the assembly personnel must hook themselves with the supplied fall arrest system on the safety ropes of the telescopic boom on the left and right with both snap hooks and secure themselves against falling.
- ▶ Without safety measures, it is **strictly** prohibited to step on the telescopic boom.

Assembly of the hoist rope or the TY-guying:
- During assembly, the assembly personnel must hook themselves on the fastening devices on the left and right with both snap hooks of the fall arrest system and secure themselves against falling.

7.3 Access to lattice sections or booms

Climbing the ladder:
- When ascending, the assembly personnel must ensure a 3-point support.

Changing from ladder to catwalk **without** transition aid:
- From a transition height above 1.8 m: **Before** transitioning, the assembly personnel must hook at least one snap hook of the fall arrest system on a safety rope and secure themselves against falling.

Changing from ladder to catwalk **with** transition aid:
- **After** transitioning, the assembly personnel must hook at least one snap hook of the fall arrest system on a safety rope and secure themselves against falling.

7.4 Walking on lattice sections or booms

Walking on catwalks:
- When walking on catwalks, the assembly personnel must hook themselves on the safety ropes on the left and right with both snap hooks of the fall arrest system and secure themselves against falling.
- When changing the fall arrest system over to a new lattice section, the assembly personnel must be hooked with at least one snap hook of the fall arrest system one safety device.

7.5 Working on lattice sections or booms

Pinning, unpinning the lattice sections of pull rods:
- During pinning, unpinning of lattice sections or pull rods, the assembly personnel must hook themselves on the safety ropes on the left and right with both snap hooks of the fall arrest system and secure themselves against falling.

Attaching the lattice sections:
- When attaching the lattice sections, the assembly personnel must hook themselves on the safety ropes on the left and right with both snap hooks of the fall arrest system and secure themselves against falling.

7.6 Descending from lattice sections or booms

Accessing the ladder **without** transition aid:
- From a transition height above 1.8 m: **Before** stepping on the ladder, the assembly personnel must hook at least one snap hook of the fall arrest system on a safety rope and secure themselves against falling.
- When stepping on the ladder, the assembly personnel must ensure a 3-point support.

LWE/ab Muli 010/24201-02-02/en

copyright © Liebherr-Werk Ehingen GmbH 2016

– The snap hook of the fall arrest system may only be unhooked after standing safely on the ladder (3-point support).

Accessing the ladder **with** transition aid:
– When stepping on the ladder, the assembly personnel must ensure a 3-point support.

Climbing down the ladder:
– When descending, the assembly personnel must ensure a 3-point support.

8 Rescuing the assembly personnel

The height rescue system, consisting of the rappelling rescue device, is an evacuation and rescue device. It is used to lift the fallen person to be able to unhook him from the height safety equipment and to lower him by rope.

WARNING
Danger of falling.
▶ The assembly personnel must be instructed and trained properly in the correct handling of the height rescue system. Annual practice instructions and drills must be carried out.
▶ The supplied height rescue system must be kept available.
▶ The operating instructions of the manufacturer for the height rescue system must be observed and adhered to.
▶ The height rescue system must be inspected annually by authorized and trained expert personnel and documented in the inspection log book.

8.1 First aid measures after rescue

WARNING
Mortal danger.
▶ After the rescue, the patient must be positioned with the upper body raised (in seated or squatting position).
▶ Immediate flat position or even shock position can be fatal.

LWE/ab Muli 010/24201-02-02/en

copyright © Liebherr-Werk Ehingen GmbH 2016

9 Crane cab with retractable / extendable step

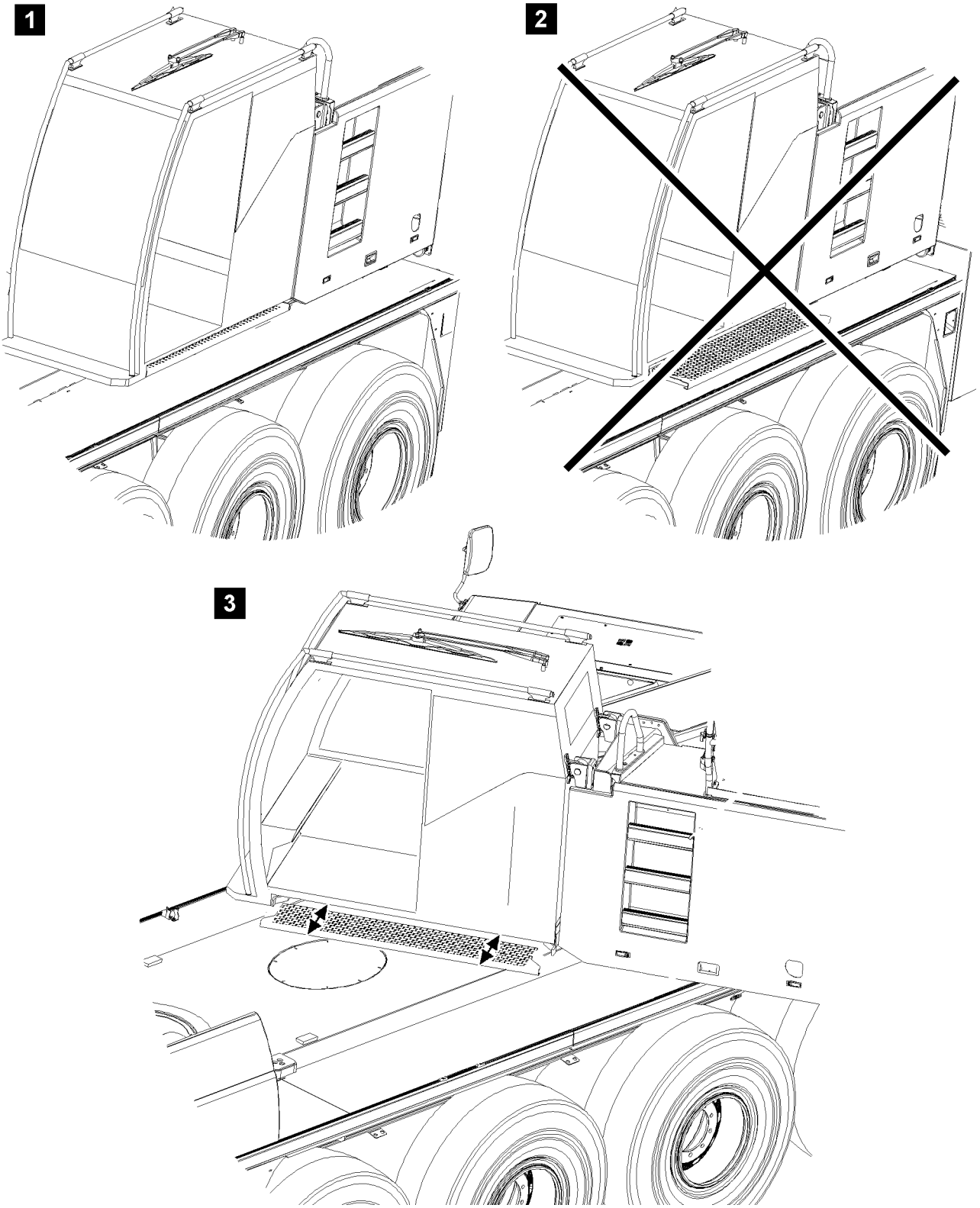

Fig.121159: Example for crane cab with retractable / extendable step

LWE/ab Muli 010/24201-02-02/en

copyright © Liebherr-Werk Ehingen GmbH 2016

9.1 Entering / exiting of crane superstructure alignment length axis crane chassis

See illustration **1**

Before entering the crane cab or existing from the crane cab, the following prerequisites must be met:
- The crane superstructure is aligned in length axis of the crane chassis.
- The step under the crane cab is retracted.
- The crane cab with incline adjustment is in 0° position.
- Folding ladders are folded into the ascent and descent position.

Note
▶ When all folding ladders are folded into the ascent and descent position, then a safe descent is possible from every position. See Crane operating instructions, chapter 2.07.

WARNING
Danger of falling.
If the crane superstructure is aligned in length axis of the crane chassis and the step can **not** be moved in, then there is a danger of falling when entering / exiting. See illustration **2**.
Personnel can be severely injured or killed.
▶ Set up a suitable access, such as a ladder or platform, to ensure safe entry into the crane cab.
▶ When exiting the crane cab in position crane superstructure in length axis crane chassis, always move the step in completely.

9.2 Entering / exiting a swung crane superstructure

See illustration **3**

Before entering the crane cab or existing from the crane cab, the following prerequisites must be met:
- The crane superstructure is swung to the point where a safe access to walkable surfaces of the crane chassis is ensured.
- For the crane cab with incline adjustment, the crane cab is in 0° position.
- All folding ladders are folded into the ascent and descent position.

Note
▶ Use extendable step.
▶ The extended step allows comfortable entry into the crane cab as well as safe exit from the crane to the crane chassis.
▶ When all folding ladders are folded into the ascent and descent position, then a safe descent is possible from every position. See Crane operating instructions, chapter 2.07.

10 Crane cab with incline adjustment

WARNING
Danger of falling.
If the crane cab cannot be swung from an inclined position (for example 20° position) to the 0° position, for example due to a problem, then utmost caution must be used when entering / exiting the crane cab.
There is a danger of falling. Personnel can be severely injured or killed.
▶ For safety reasons, we recommend to take advantage of outside help.
▶ If necessary, have platforms or other suitable entry aids set up to ensure safe exit from the crane cab.

LWE/ab Muli 010/24201-02-02/en

copyright © Liebherr-Werk Ehingen GmbH 2016

WARNING
Danger of accident.
If the door of the crane cab is opened in inclined position, then the door can move back suddenly.
Hands can be crushed or injured.
▶ When the crane cab is in inclined position, open the door carefully.

11 Safety bar

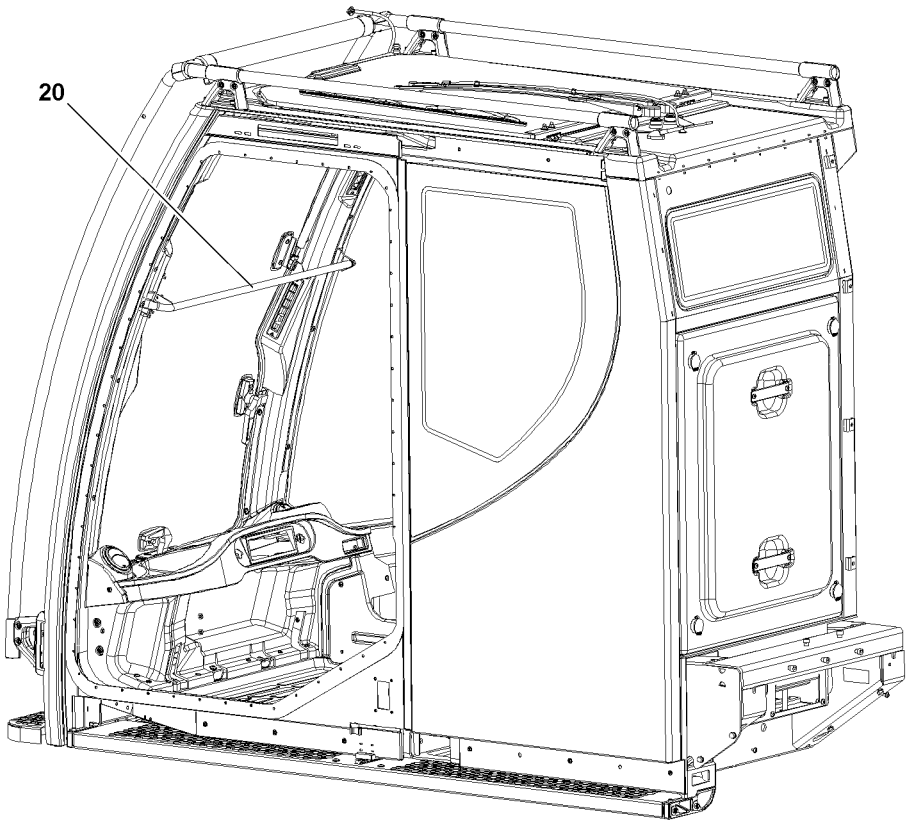

Fig.121158: Example for crane cab with safety bar

Note
▶ The safety bar **20** is installed to protect the crane operator from a danger of falling when the front windshield is open.
▶ Do not use the safety bar **20** as a handle.

copyright © Liebherr-Werk Ehingen GmbH 2016

12 Closing the windows

WARNING
Danger of crushing.
Never close the windows carelessly or uncontrolled. Significant crushing injuries can occur.
- ▶ During closing, watch the windows as it moves up.
- ▶ Make sure that no personnel or objects are wedged in.

LWE/ab Muli 010/24201-02-02/en

copyright © Liebherr-Werk Ehingen GmbH 2016

13 Rigging and fastening points

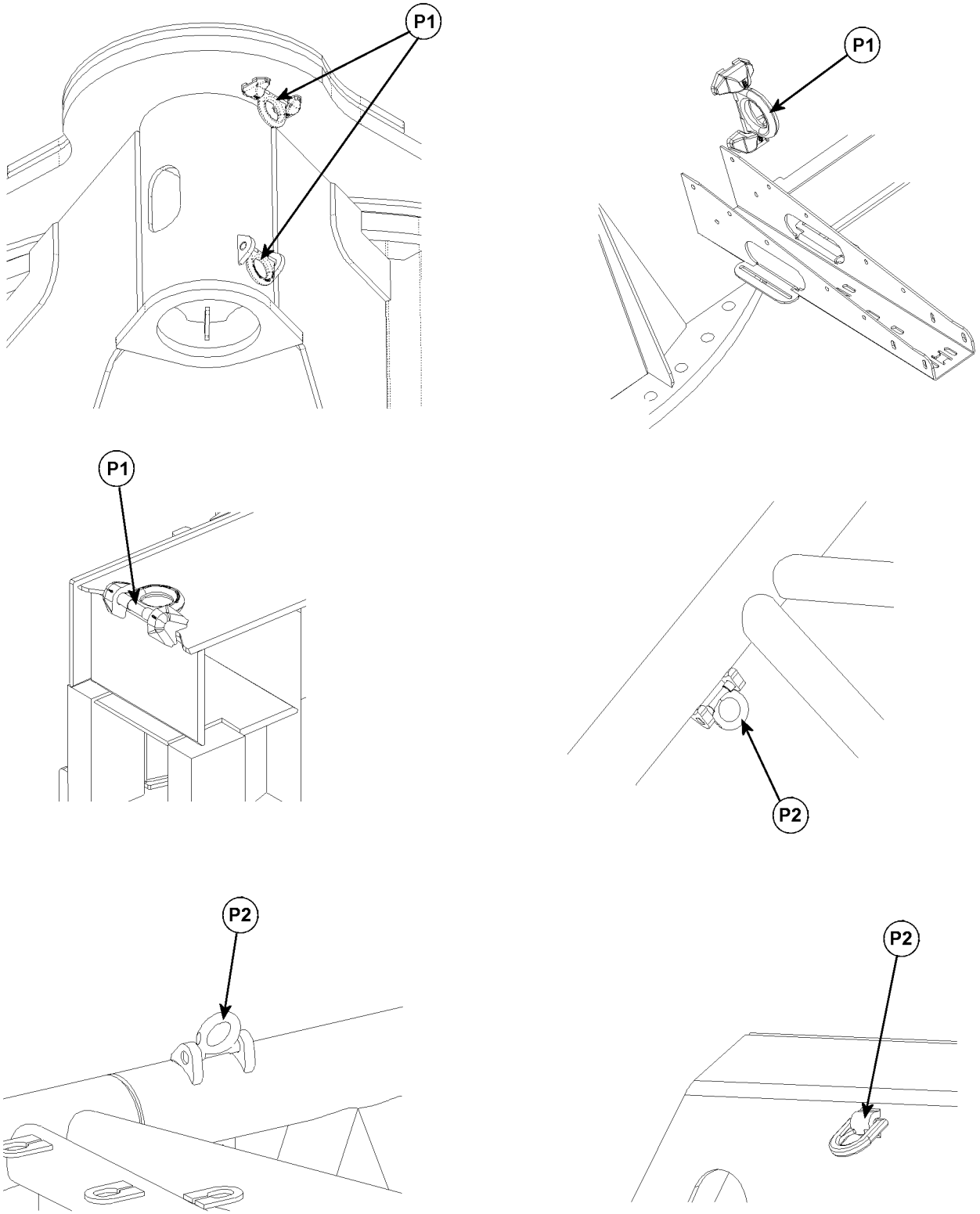

Fig.121160: Examples for rigging and fastening points

P1 Rigging points **P2** Fastening points

Before every operation and at regular intervals, check the rigging points **P1** and the fastening points **P2** for cracks of the welding seam, significant corrosion, wear and distortion.

copyright © Liebherr-Werk Ehingen GmbH 2016

The inspection criteria are:
- Completeness of rigging points **P1** and fastening points **P2**.
- Distortion of carrying parts.
- Mechanical damage such as severe nicks.
- Changes in diameter due to wear.
- Significant corrosion (pitting)
- Cracks on carrying parts.
- Cracks or other damage on the welding seam.

WARNING
Danger of accident.
When using rigging and fastening points which are not operationally safe, severe personal and property damage can occur.
- ▶ Have rigging and fastening points, which are not operationally safe replaced with new rigging and fastening points by authorized and trained expert personnel.
- ▶ When hooking and unhooking the rigging and fastening equipment, handle carefully to avoid crushing, sheering, catch and impact points.
- ▶ Eliminate damage of rigging and fastening equipment due to sharp edged stress loads.

14 Heated crane components

WARNING
Danger of burns.
You can get severely burnt on the surfaces of hot components.
This applies especially to exhaust systems, the engines and the respective gears in the crane chassis and in the crane superstructure.
- ▶ Let the components cool off before touching them.
- ▶ Proceed with special caution near heated crane components.

15 Crane operator responsibilities

15.1 General

The crane operator's primary responsibility is to use and operate the crane in a manner that is safe for both himself and others.

The following important safety guidelines will help you achieve this.

Many crane accidents are caused by incorrect crane operation.

WARNING
Danger due to operating error.
- ▶ In your interest and in the interest of others, make sure that you know your crane. Also learn to recognize all dangers connected with the work to be carried out.

Operating errors, which are made again and again while operating or driving a crane are especially careless while working, in particular:
- Slewing too quickly
- Stopping the load too quickly
- Pulling the load at an angle
- Allowing slack rope formation
- Overloading the crane
- Driving too fast with a load and / or equipment on an uneven roadway
- Attaching the load incorrectly
- Unsuitable operation; especially angular pulling, breaking away stuck loads

LWE/ab Muli 010/24201-02-02/en

copyright © Liebherr-Werk Ehingen GmbH 2016

– Wind action on suspended loads
– Mistakes when driving on a road, for example:
  • Overspeeding the engine when driving downhill
  • Driving with turned on differential lock
– Crashing into bridges, roofs or high voltage wires due to insufficient headroom
– Inadequate support; support base, support under the support plates
– Mistakes during assembly or disassembly of booms

In many cases, crane damage is caused by improper maintenance:
– Insufficient oil, grease or antifreeze
– Contamination
– Broken cable wires, defective tires, worn parts
– Emergency limit switch or load torque limiter (LMB) not operating properly
– Brake and clutch failure
– Hydraulic defects; for example cracked hoses
– Loose bolts

15.2 Working on the crane superstructure or boom

WARNING
Danger of falling.
When working on the crane superstructure or boom, personnel must be secured with appropriate safety measures to prevent them from falling. If this is not observed, working personnel can fall and be killed or severely injured.
▶ For all work on the crane where there is a danger of falling, suitable safety measures must be taken.
▶ The crane superstructure or the boom may not be accessed without suitable aids.
▶ Suitable aids are, for example: Lifting platforms, scaffoldings, ladders, assembly platforms, auxiliary crane.
▶ If railing are present on the crane superstructure, then they must be swung into operating position and secured for all work, see Crane operating instructions, chapter 2.06.
▶ Only step on such aids with clean shoes.
▶ Keep aids clean and free of snow and ice.
▶ If the work cannot be carried out with such aids nor from the ground, then the assembly personnel must secure themselves with supplied fall arrest systems to avoid falling, see section „Personal protective equipment“.
▶ It is prohibited to step on the driver's cab or crane cab roof and specially marked surfaces, see Crane operating instructions, chapter 2.05.

15.3 Obligations of the crane operator

1. Before starting to work, the crane operator must check the brake function and the emergency shut off devices. He must monitor the condition of the crane for obvious defects. On wireless controlled cranes, he must check the assignment of control unit and crane.
2. The crane operator must cease crane operation in case of problems endangering the safety.
3. The crane operator must report all defects on the crane to the appropriate supervisor, also to his replacement in case of crane change.
4. The crane operator must make sure that:
   • All control devices are set to neutral or idle position before release of the energy supply to the drive components.
   • The control devices are set to neutral or idle position and the energy supply is shut off before leaving the control platform.
   • When taking down the control unit for wireless control, the control unit is secured to prevent unauthorized operation.
5. The crane operator must ensure that cranes subjected to wind are not operated past the limits which were set by the crane manufacturer, and that the boom is taken down at least when the critical wind speeds for the crane are reached and at the end of the work.

LWE/ab Muli 010/24201-02-02/en

copyright © Liebherr-Werk Ehingen GmbH 2016

6. The crane operator must monitor the load during all crane movements or the load handling equipment when moving the crane without a load, if they could cause a dangerous situation. If observation is not possible, then the crane operator may move the crane only with the aid of a guide.
7. The crane operator must give warning signs when necessary.
8. The crane operator may not move loads over personnel.
9. Any loads attached by hand may only be moved by the crane operator after he received a clear sign from the person who attached the load, the guide or any other responsible party which was assigned to that task by the contractor. If signals must be used to communicate with the crane operator, then these signals must be agreed upon before use between the responsible party and the crane operator. If the crane operator determines that the loads are not properly attached, then he may not move these loads.
10. As long as a load is suspended on the crane, the crane operator must keep the control devices within reach. This does not apply for towing of vehicles with towing cranes.
11. The crane operator may not run up to end positions operationally, if they are limited by the emergency limit switches.
12. After a load torque limiter was triggered, the crane operator may not take on an overload by pulling in / raising the boom.
13. The crane operator may **not** bypass the overload protection to increase the hoisting power of the crane.

16 Selecting the operating site

In the following illustrations 1 to 3 the possible situations are shown as an example.

It is very important to choose an appropriate placement location in order to minimize safety risks.

LWE/ab Muli 010/24201-02-02/en

copyright © Liebherr-Werk Ehingen GmbH 2016

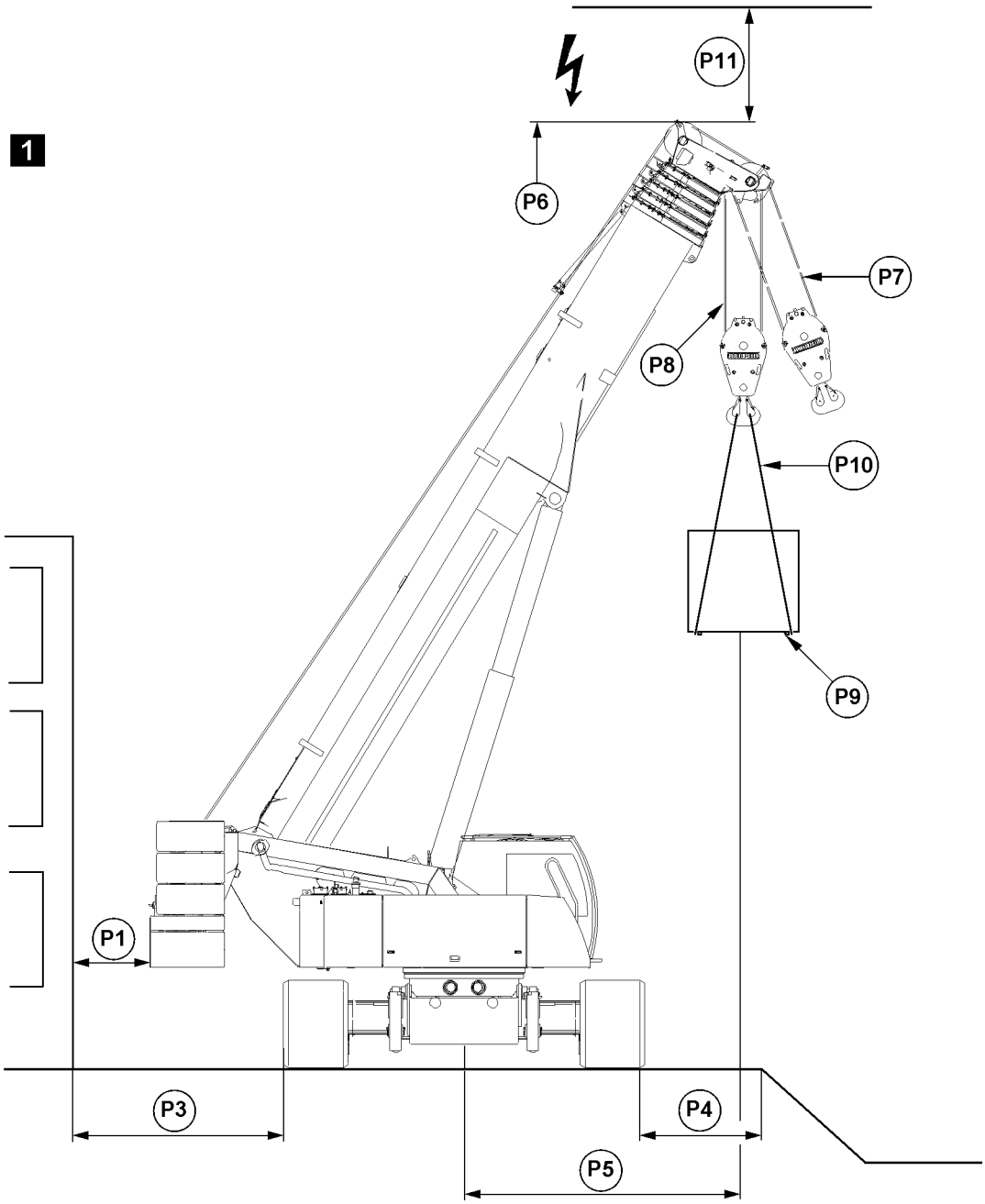

Fig.121166: Example for crawler crane with telescopic boom

copyright © Liebherr-Werk Ehingen GmbH 2016

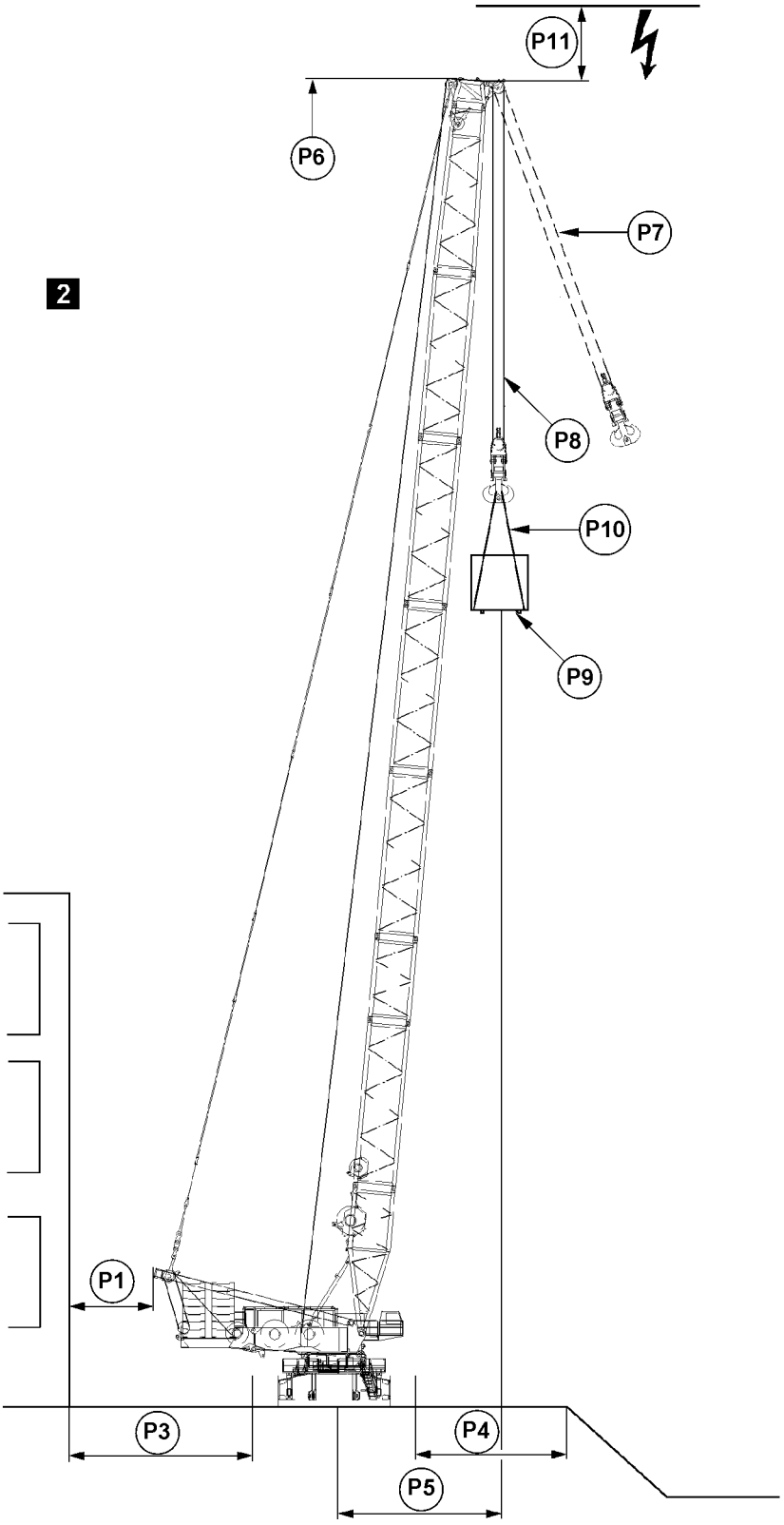

Fig.121167: Example for crawler crane with lattice mast boom

LWE/ab Muli 010/24201-02-02/en

copyright © Liebherr-Werk Ehingen GmbH 2016

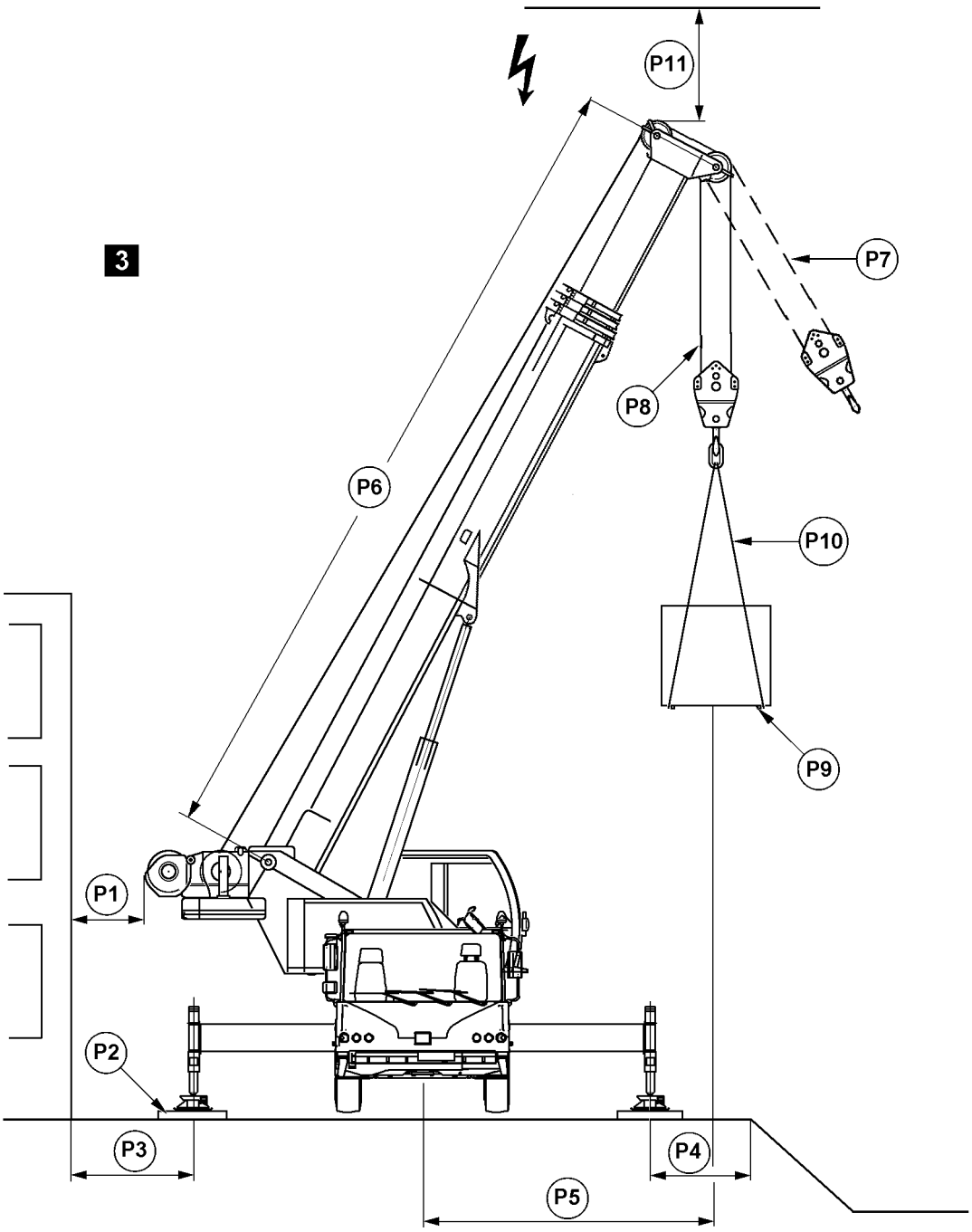

Fig.121168: Example for mobile cranes

DANGER
Danger of accidents due to ground with **insufficient** load bearing capacity.
If the crane is supported or driven on ground with **insufficient** load bearing capacity, then the crane can topple over and kill personnel.
- ▶ Only support or drive the crane on ground with sufficient load bearing capacity.
- ▶ Act responsibly when planning and selecting the crane location and route.
- ▶ Observe the following points.

LWE/ab Muli 010/24201-02-02/en

copyright © Liebherr-Werk Ehingen GmbH 2016

Sign	When selecting the placement location for the crane, observe and adhere to the following:
P1	Select the placement location in such a way that crane movements can be carried out without collision and that the supports can be extended to the support base specified in the load charts. Make sure that no personnel is injured or killed. Always keep a safety distance of 0.5 m. If this is not possible, block the danger zone off.
P2	When crane support is required: Support the crane correctly and support the support plates large enough according to the load bearing capacity of the ground and the placement location.
P3	Keep a safety distance to basements or similar.
P4	Keep a safety distance to slopes or similar.
P5	Keep the radius to as low as possible.
P6	Select the correct boom length to the load case.
P7	Angular pull is prohibited.
P8	Select the correct reeving of the hoist rope to the load case.
P9	Bear in mind the weight and the wind exposure surface of the load.
P10	Select fastening equipment according to the weight of the load, the type of attachment and the incline angle.
P11	Keep sufficient distance to electrical overhead wiring.

17 Slopes and ditches

In the following illustrations 4 and 5 the possible situations are shown as an example.

The crane may not be set up too close to slopes or excavations. Maintain adequate safety distance **A** and safety distance **B** in accordance with the type of soil.

LWE/ab Muli 010/24201-02-02/en

copyright © Liebherr-Werk Ehingen GmbH 2016

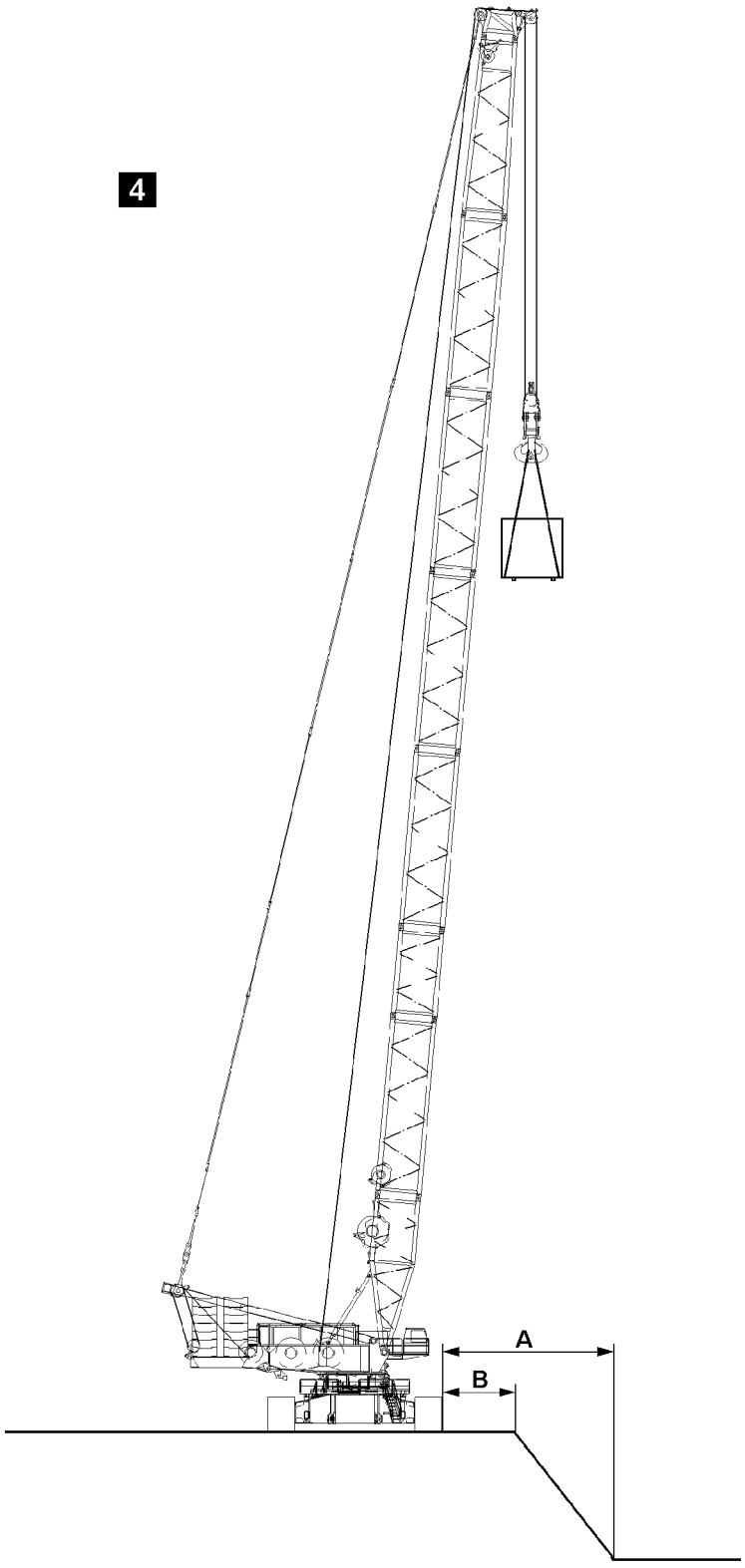

Fig.121162: Example for crawler cranes

A Distance to bottom of excavation

B Distance to excavation

LWE/ab Muli 010/24201-02-02/en

copyright © Liebherr-Werk Ehingen GmbH 2016

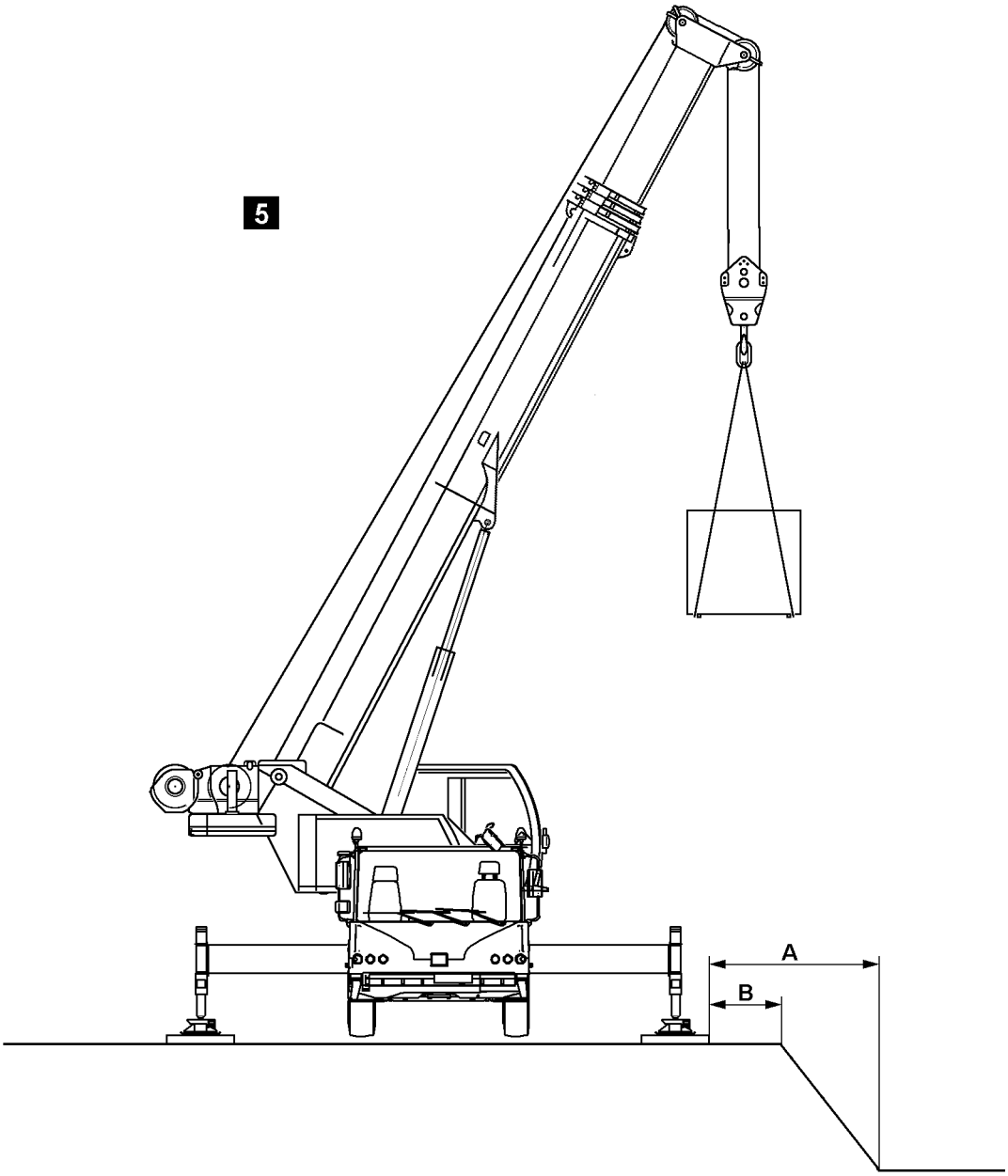

Fig.121163: Example for mobile cranes

A Distance to bottom of excavation

B Distance to excavation

WARNING
Toppling crane.
The edge of the slope or excavation can break in if safety distance **A** or safety distance **B** is too small.
If the edge of the slope or excavation break in, the crane can topple over and kill personnel.
▶ Always maintain the required safety distance **A** and safety distance **B**.

LWE/ab Muli 010/24201-02-02/en

copyright © Liebherr-Werk Ehingen GmbH 2016

18 Permissible ground pressures

Permissible ground pressures		
Soil type		[N/cm²]
1.	Organic ground:	
	Peat, sludge, muck	0
2.	Uncompacted fill:	
	Construction debris	0 to 10
3.	Non-cohesive ground:	
	Sand, gravel, rocks and mix	20
4.	Cohesive soil:	
	a) Clayed silt, mixed with topsoil	12
	b) Silt, consisting of poor clay and coarse clay	13
	c) Plastic clay, consisting of potter's clay and fill	
	Stiff	9
	Semi-solid	14
	Solid	20
	d) Mixed granular ground, clay to sand, gravel and rocky areas	
	Stiff	15
	Semi-solid	22
	Solid	33
5.	Rock in evenly solid condition:	
	a) Brittle, with traces of decomposition	150
	b) Not brittle	400

If there is any doubt about the load bearing capability of the ground at the site, soil tests should be carried out by specialists using, for example, a penetrometer.

Note

▶ Consider that the support force, due to the counterweight, can be higher without a load than with a load.

18.1 Permitted ground pressure for crawler cranes

In crane operation, significant forces are transferred to the ground. The ground must be able to safely withstand the pressure. If the crawler area is inadequate, then the crawlers must be supported from below according to the load bearing capacity of the ground.

WARNING

Toppling crane.

If the crane is not properly supported, the crane can topple over and fatally injure personnel.

▶ The foundation support must be large enough for the ground conditions and constructed from solid materials, such as wood or steel plates.

LWE/ab Muli 010/24201-02-02/en

copyright © Liebherr-Werk Ehingen GmbH 2016

18.2 Permitted ground pressure for mobile cranes

When the crane is supported, the support cylinders transmit significant forces to the ground.

In any case, the ground must be able to safely withstand this pressure. If the support pad area is inadequate, the support pads must be supported from below according to the load bearing capacity of the ground.

The required support area can be calculated from the load bearing capability of the ground and the crane support force.

WARNING
Toppling crane.
If the crane is not properly supported, the crane can topple over and fatally injure personnel.
- ▶ Only strong materials may be used for the support pad bases; for example properly dimensioned wooden timbers.
- ▶ In order to ensure that pressure is evenly distributed across the base surface, the support pads shall be positioned at the center of the base.

Note
- ▶ The following are general calculation examples. The values are used only to explain the calculation steps. The crane specific values are in chapter 1.03 of the crane operating instructions.

Example: Calculation of specific support pressure	
Maximum support force according to crane operating instructions, chapter 1.03 for example: 720 kN	720000 N
Surface of square support plate with 550 mm side length according to chapter 1.03, for example: 302500 mm^2	3025 cm^2
80 % as carrying surface of support plate: 302500 mm^2 x 0.8 = 242000 mm^2	2420 cm^2
Specific support pressure = Support force / surface support plate	720000 N / 2420 cm^2 = 297.52 N/cm^2
Specific support pressure:	**298 N/cm^2**

The value of the specific support pressure is far higher than the permissible ground pressure for all types of granular soil. If this crane is utilized on bedrock, type of ground gravel, permissible ground pressure 20 N/cm^2 , then the support surface must be increased.

Example: Calculation of required support surface	
Maximum support force according to crane operating instructions, chapter 1.03 for example: 720 kN	720000 N
Permissible ground pressure, for example: 20 N/cm^2	20 N/cm^2
Required support surface = Support force / permissible ground pressure	720000 N / 20 N/cm^2 = 36000 cm^2
Required support surface:	36000 cm^2 = **3.6 m^2**

The surface of the support for each support plate must be at least **3.6 m^2**.

The height of the support must be selected depending on the load distribution angle.

Note
- ▶ The corresponding support forces can be determined with the crane job planner.

LWE/ab Muli 010/24201-02-02/en

copyright © Liebherr-Werk Ehingen GmbH 2016

18.3 LICCON job planner

The calculation of support forces and ground pressures of tracks with the LICCON job planner are based on idealized assumptions.

Side deformations of the boom system due to wind, inclined position and elastic compliancy of the steel structure are not taken into account in the LICCON job planner.

These influences can lead to an increase of support forces or increase of ground pressures of the tracks.

19 Support

19.1 Supporting the crane

DANGER
Toppling crane.
When actuating the supports with attached load and / or at loaded derrick ballast guying, the incline and the force conditions of the entire boom system change.
There is **no** shut off by the LICCON overload system.
The crane can topple over.
Personnel can be severely injured or killed.
- ▶ When a load is suspended it is prohibited to actuate the support.
- ▶ When the derrick ballast guying is loaded it is prohibited to actuate the support.

It is absolutely essential that the crane be supported exactly in accordance with the load charts to ensure safe crane operation.

The match of the sliding beams placement surfaces must be observed to ensure proper force transfer between the sliding beams.

The crane may only be supported in these extension conditions.

WARNING
Toppling crane.
If only the sliding beams on the load side are extended, then the crane can topple over and kill personnel.
- ▶ Move all 4 sliding beams and support cylinders out according to the data in the load chart and pin.
- ▶ In intermediate positions between the support bases, do **not** support.
- ▶ Pin the sliding beams to support base according to the load chart.
- ▶ Fully insert and secure the pins.

WARNING
Danger of toppling the crane due to incorrect extension of the sliding beams.
The load suspended on the hook causes tension and deformation of the hoist rope and telescopic boom. The same applies for operation with lattice jib and guy ropes. If the load is dropped from the fastening ropes or if the fastening or hoist rope breaks in this situation, a sudden relief occurs. The boom snaps back quickly. This can cause the crane to topple over.
Despite previous assumption, it might become necessary to swing the load to the opposite side. This can cause the crane to topple over.
The boom and / or counterweight momentum may cause the crane to topple when slewing from the longitudinal vehicle direction.
- ▶ Move all 4 sliding beams and support cylinders out according to the data in the load chart.

LWE/ab Muli 010/24201-02-02/en

copyright © Liebherr-Werk Ehingen GmbH 2016

19.2 Supporting the crane with *variable support*

When supporting the crane with *variable support* special measures are required. These measures are described in detail in the Crane operating instructions, chapter 6.26.

LWE/ab Muli 010/24201-02-02/en

copyright © Liebherr-Werk Ehingen GmbH 2016

20 Aligning the crane

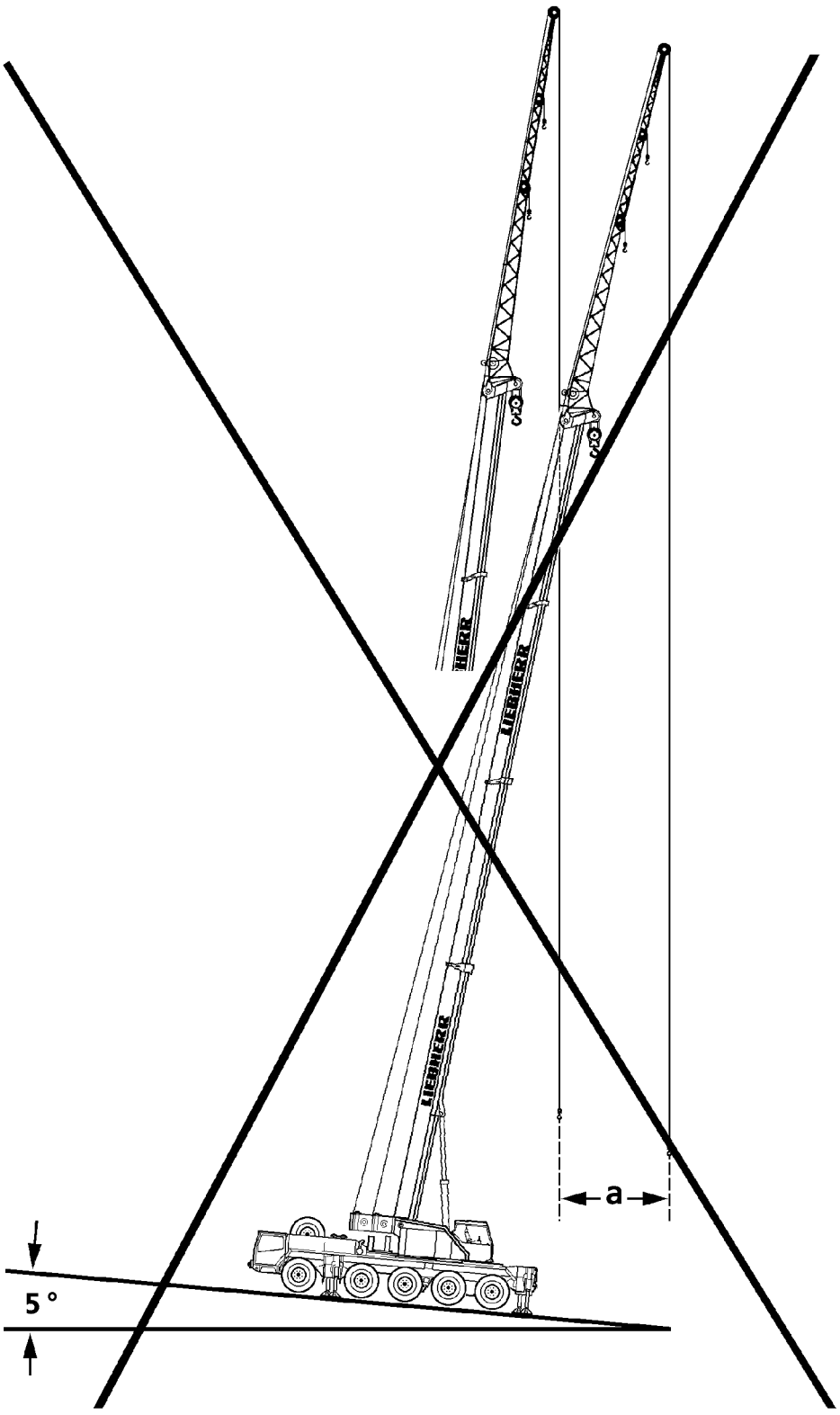

*Fig.121164: Example for **non-permissible** incline position*

In addition to the proper foundation for the supports, the horizontal alignment of the crane is of utmost importance for safe crane operation.

LWE/ab Muli 010/24201-02-02/en

copyright © Liebherr-Werk Ehingen GmbH 2016

DANGER
The crane can topple over due to the incline position.
If the crane is positioned at an incline, and if the boom is turned towards the slope, then the radius is increased as a result.
It is possible that the slewing gear can no longer hold the crane superstructure and, in extreme cases, the crane can topple over.
Personnel can be severely injured or killed.
▶ Align the crane horizontally before starting crane operation.

If the horizontal alignment of the crane has to be readjusted:
▶ Set the load down on the ground before readjusting the crane.

For cranes on crawlers, readjustment is **not** possible:
▶ If possible, use load charts for limited terrain incline.

Example: At a boom length of 50 m , an incline of the crane by only 5° at a radius of 10 m causes an increase of the radius of a = 4 m.

21 Checking the safety measures

- The placement location has been selected so that the crane may be operated with minimum boom projection.
- The load bearing capacity of the ground is adequate.
- There is sufficient distance to excavations and slopes.
- There are no live transmission wires within the working range of the crane.
- There are no obstacles that will hinder required crane movements.
- The crane is horizontally aligned.
- When crane support is required:
  - All four sliding beams and support cylinders have been extended according to the support base given in the load chart.
  - The sliding beams have been secured with pins to prevent them from moving.
  - The support plates are pinned and secured in operating position.
- On mobile cranes:
  - The axle suspension is blocked.
  - The axles are relieved, which means the tires do not touch the ground.

LWE/ab Muli 010/24201-02-02/en

copyright © Liebherr-Werk Ehingen GmbH 2016

22 Safety guidelines in case of external power supply

Fig.197720

A potential hazard exists when supplying a crane with an external power supply from a low voltage distribution system (100 V AC to 400 V AC).

A special electrical hazard it present when a protective conductor is interrupted (caused by the mechanical stress on flexible supply lines or the service connection), loose terminal connections, high wire or contact resistance, mixed up conductors, defective or missing protective equipment (FI / fault interrupters) in combination with a body contact on the crane.

WARNING
Danger of fatal injury if the body conducts current.
Water and / or defective devices can cause hazardous stray voltages when touched. The person touching the crane is subject to lethal currents.
▶ The external supply cable must be in good working order.

Make sure that the external flexible supply cable is in good working order.

Where applicable, we recommend the use of a power isolating transformer.

23 Grounding

23.1 Grounding the crane

WARNING
Danger of fatal injury due to electric shock.
There is a danger of electrical shock, if the crane is not properly grounded.
▶ Properly ground the crane.
▶ Make sure that there is a potential equalization between the crane and the ground.

The crane must be grounded before operation:
– Near transmitters (radio and TV transmitters, radio stations, etc.)

copyright © Liebherr-Werk Ehingen GmbH 2016

- Near high frequency switching stations
- In case of severe possibility of thunderstorms or potential thunderstorms

The crane can become electrostatically charged, especially if the crane is equipped with synthetic support mats or if the support mats are placed on insulating materials (such as wooden planks).

23.2 Grounding the load

WARNING
Danger of fatal injury due to electric shock.
There is a risk of electrical shock, if the load is not properly grounded.
▶ Properly ground the load.
▶ Make sure that there is a potential equalization between the load and the ground.

The load must be grounded before operation:
- Near transmitters (radio and TV transmitters, radio stations, etc.)
- Near high frequency switching stations
- In case of severe possibility of thunderstorms or potential thunderstorms

The load can become electrostatically charged, even if the crane is grounded. This applies in particular if a hook block with pulleys made of synthetic material and non-conductive fastening equipment (for example plastic or manila ropes) are used.

LWE/ab Muli 010/24201-02-02/en

copyright © Liebherr-Werk Ehingen GmbH 2016

24 Working in the vicinity of transmitters

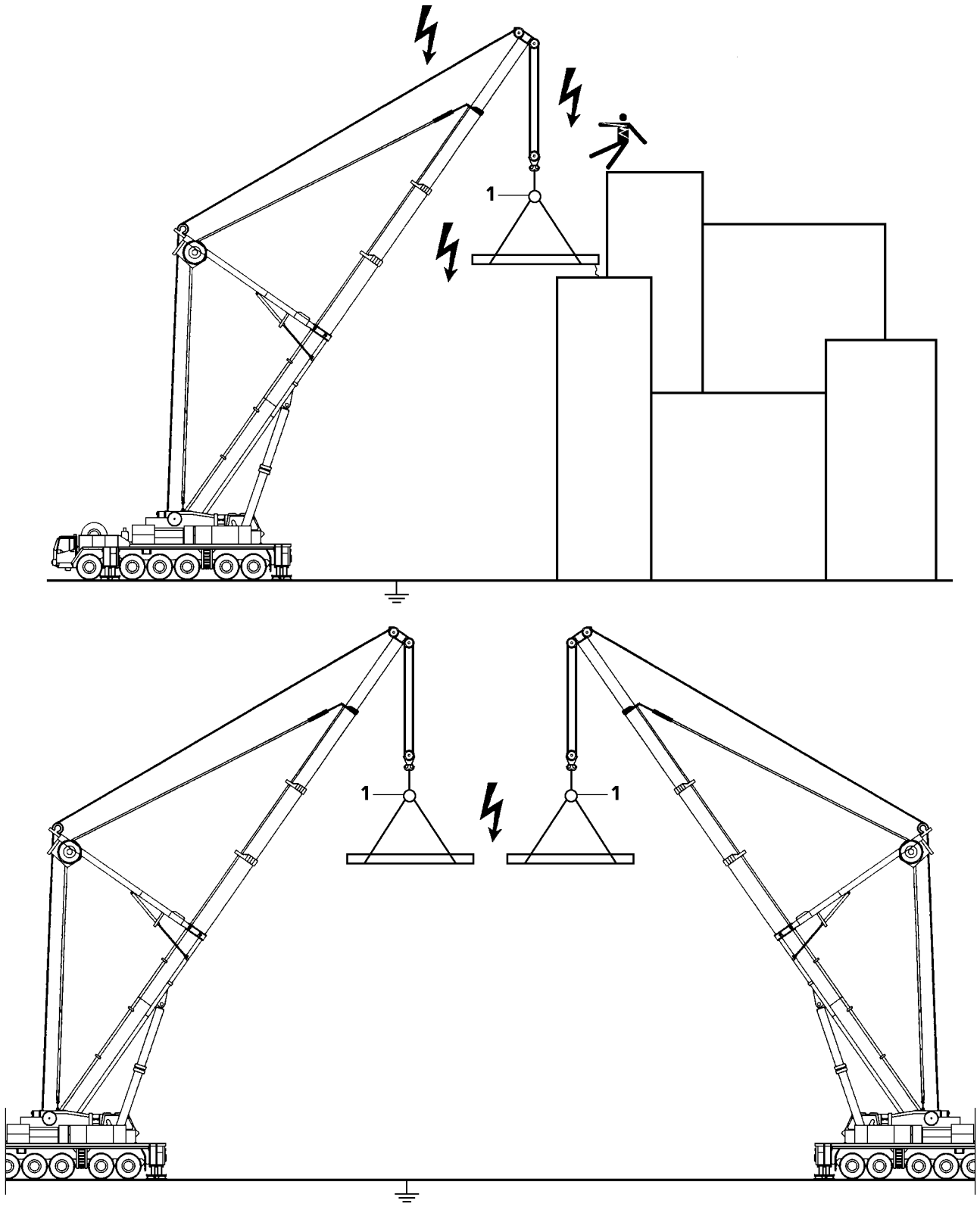

Fig.121165: Example for electrostatic charge

Strong electromagnetic fields are likely to be present if the construction site is close to a transmitter.

These electromagnetic fields can pose direct or indirect danger to persons or objects, for example:

- Effect on human organs due to temperature increase.

copyright © Liebherr-Werk Ehingen GmbH 2016

- Danger of burns or inflammation due to temperature increase
- Spark or electric arc formation

DANGER
Danger due to electromagnetic fields.
▶ Before operating a crane in the vicinity of transmitters, be sure to consult with Liebherr-Werk Ehingen GmbH.
▶ Also consult a high frequency specialist.

High frequency (HF) radiation from a transmitter requires supplementary work safety protection and special environmental specifications for crane operators and personnel:

1. Each crane must be „fully“ grounded. Check visually or with a simple continuity tester to ensure that ladder, crane cab and rope pulleys are grounded.
2. All personnel working on the crane or with large metal objects must protect themselves from burns by wearing non-conductive synthetic gloves and suitable clothing while working.
3. There is no need to panic if you feel your hand warm up. Always work under the assumption that the respective workpiece, structural steel member or support is „hot“.
4. The temperature of objects affected by high frequency radiation depends on their „size“. Cranes, carriers and coverings, for example, are „hotter“.
5. Contact with other crane loads is not permitted when operating the crane (arcing). Since defects caused by burns considerably reduce rope carrying capacity, any such occurrences must be reported immediately to the foreman so that the ropes can be inspected.
6. An insulator **1** is required at all times between the crane load hook and fastening equipment. It is strictly prohibited to remove this insulator **1**.
7. Do not touch the ropes above the insulator **1**.
8. Loads that are attached to the crane may not be touched by any unprotected parts of the body after the load has been lifted or set down.
9. Do not work with a bare upper torso or in short pants, this is prohibited.
10. To minimize absorption of high-frequency radiation, larger loads should be transported horizontally if possible.
11. Loads must be grounded, or additional insulation used (rubber material between the object and gloves) when manual work is required.
12. Use a suitable measuring instrument to check the „temperature“ of the workpiece.
    For example, if 500 V can be measured on a workpiece at a distance of 1 cm to 2 cm , then the workpiece may not be touched with bare hands.
    The greater the distance, the higher is the voltage on the object:
    At 10 cm distance, approx. 600 V are present, at 30 cm distance approx. 2000 V are present.
13. When refueling the crane, it must be ensured that no sparks are created within a radius of 6 m , neither by handling larger metallic parts nor by other work.
14. To avoid secondary accidents, use personal protective equipment when working on components that are high off the ground.
15. Any accidents and unexpected events must immediately be reported to the local construction supervisor and the safety engineer.

25 Crane operation in case of thunderstorms

In weather conditions, which can include lightning:
- Stop work on the crane.
- If possible, place the load down.
- If possible, telescope the boom in or put it down and bring it into a safe condition.

If this is not possible, the crane cab must remain occupied by the crane operator to keep the crane and the load always under control.

WARNING
Danger of accidents due to lightning strikes.
▶ Make sure that there are no persons near the immediate area of the crane.

LWE/ab Muli 010/24201-02-02/en

copyright © Liebherr-Werk Ehingen GmbH 2016

26 Wind influences

Note

▶ The wind speeds are valid for a 360° wind direction for a 3-second wind gust at the highest point of the crane.

WARNING

Disregard of permissible wind speeds.
If the permissible wind speeds are disregarded, the crane can topple over. Personnel can be severely injured or killed.

▶ It is prohibited to erect the crane to measure the wind speed.
▶ Observe the permissible wind speeds depending on the assembly / crane conditions and act accordingly, see following chart.

Assembly / crane conditions	Reference for permissible wind speed
Erection and take down of various boom configurations	Wind speed charts and / or Erection and take down charts.
Crane operation	Load chart manual
When the permissible wind speed according to the load charts is exceeded in crane operation, then **crane operation is prohibited.**	Wind speed charts
Interruption of crane operation when crane remains equipped	Wind speed charts
Crane out of operation, when crane remains equipped	Wind speed charts

Note

No wind speed charts available.

For a set up configuration for which no wind speed charts are available:
▶ Observe and adhere the maximum wind speeds of the load charts.

WARNING

Increase of support force and exceedance of permissible ground pressure.
The wind load on the crane boom has **not** been taken into account for the planning of crane operation with the LICCON job planner.
As a result, the actual values of the support forces and the ground pressure can be significantly higher than the values determined with the LICCON job planner.
The wind affecting the crane and the load, the elastic distortion of the crane structure, incline position as well as wind exposure surface (A_w) per ton of hoist load larger than 1.2 m^2/t can significantly increase the support force.
The ground pressure is increased.
▶ Do not exceed the permissible ground pressure.

Note

▶ The determining factor for all crane work in the actual wind speed at the job site of the crane.
▶ The current wind speed can be checked at the nearest weather bureau.
▶ Be aware that the wind speed on the boom jib is higher than near the ground.
▶ Always observe the national valid regulations.

LWE/ab Muli 010/24201-02-02/en

copyright © Liebherr-Werk Ehingen GmbH 2016

26.1 Wind speed charts for *variable support*

For *variable support*: Observe and adhere to the wind speed charts according to the support base for the smallest extension length of the sliding beams.

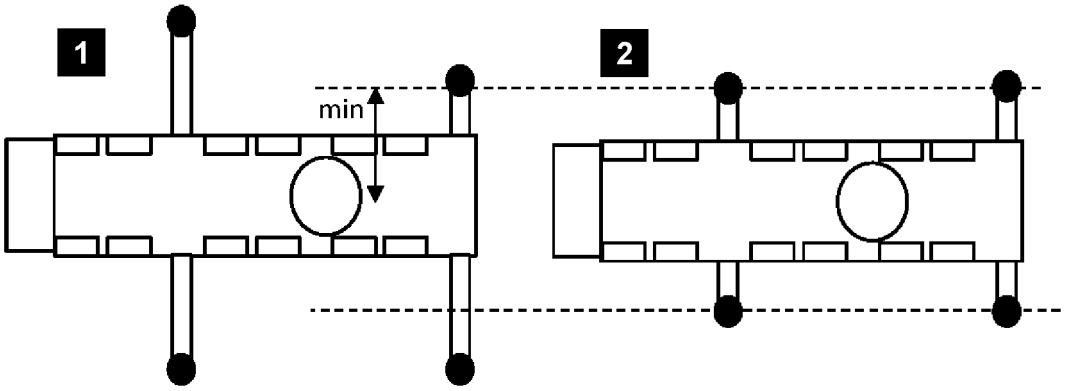

Fig.121577: Example for the selection of wind speed charts for variable support

Example for the selection of wind speed charts for *variable support*
- The crane is supported with *variable support* according to illustration **1**.
- Select wind speed charts according to the support base in illustration **2**.

Note
No wind speed charts available.

If the smallest extension length of a sliding beam is less than those of the wind speed charts on hand:
▶ Observe and adhere the maximum wind speeds of the load charts.

26.2 Wind speed, wind gust speed and wind direction

The depiction of the wind is made by statement of wind speed (wind force), wind gust speed and wind direction.

High above the ground, the wind is less influenced by the surface condition of the ground. In the lower layers of the atmosphere, the wind speed is reduced by the ground friction. One differentiates between roughness of terrain, influence of obstacles and influence of terrain contours. Vegetation, buildings etc have great influence on the wind speed, wind gust speed and wind direction.

The site selection is thus especially important for wind measurement.

The wind speed, wind gust speed and wind direction are subject to significant time and local fluctuations. For that reason it is important to have reliable information regarding the expected wind speed, wind gust speed and wind direction during a load lift and to carry out exact wind measurements.

For mobile cranes, always assume a wind load of 360°. The determining factor is the „3 second gust speed“ on the highest point of the boom.

26.3 Measurement of wind speed

The anemometer installed on the crane boom measures the wind speed on the tip of the boom and shows the current wind speed in the crane cab.

The function of the anemometer must be checked every time before erection of the boom by manually actuating the shell start for easy movement and proper function.

Before lifting a load, especially with large wind exposure surface, the wind speed and the wind direction expected during the lift must be known. Information can be obtained for example at the local weather bureau. The determining factor is the „3 second gust speed“ on the highest point of the boom.

LWE/ab Muli 010/24201-02-02/en

copyright © Liebherr-Werk Ehingen GmbH 2016

WARNING
Overload of crane.
The acoustic wind warning is only issued if the standard wind exposure surface in the load chart is exceeded (wind surface per ton load: 1 m^2 , drag: 1.2) given wind speed.
If the permissible wind speed must be reduced for loads due to large wind exposure surfaces, no acoustic wind warning is issued.
There is no shut off of crane movement.

- ▶ The wind exposure surface and the wind resistance coefficient for the load to be lifted must be known.
- ▶ The maximum permissible wind speed specified in the load chart must be reduced for large wind exposure surfaces as described in the load chart manual chapter "Wind influences during crane operation".

For safe determination of wind speed, the crane must be turned before application by 360°. The highest measured value while doing so must be compared with the „maximum permissible wind speed“ for the load according to the load chart. Thus the possibility that the result of the measurement is distorted due to nearby buildings, cranes or components is eliminated.

In gusty wind conditions, the probability of sudden high wind speed increases. In gusty wind conditions no large surface loads may be lifted.

Note

- ▶ If in doubt and in case of questions for further information and / or training in the area of „Wind influences in crane operation“ contact the Customer Service at Liebherr-Werk Ehingen GmbH.

26.4 Conversion chart for wind force

Note

- ▶ The influence of the wind on the surrounding is described clearly in the Beaufort scale to provide an orientation for the crane operator.
- ▶ The wind force of the Beaufort scale refers to the wind speed determined over 10 minutes at a height of 10 m.

Wind force		Wind speed		Effect of the wind
Beaufort number	Description	[m/s]	[km/h]	Inland
0	Calm	0 to 0.2	1	Calm, smoke rises vertically
1	Slight air movement (draft)	0.3 to 1.5	1 to 5	Wind direction is shown only by observing the trail of smoke, not by the wind sock
2	Light breeze	1.6 to 3.3	6 to 11	Wind can be felt on the face, the leaves rustle, wind sock moves slightly
3	Gentle breeze	3.4 to 5.4	12 to 19	Leaves and small twigs in constant motion Wind extends a flag
4	Moderate breeze	5.5 to 7.9	20 to 28	Swirls up dust and loose paper, moves twigs and thin branches
5	Fresh breeze	8.0 to 10.7	29 to 38	Small deciduous trees begin to sway, whitecaps form at sea
6	Strong breeze	10.8 to 13.8	39 to 49	Thicker branches move; telephone lines begin to whistle, umbrellas are difficult to use
7	Near gale	13.9 to 17.1	50 to 61	Entire trees swaying; difficult to walk into wind

LWE/ab Muli 010/24201-02-02/en

copyright © Liebherr-Werk Ehingen GmbH 2016

Wind force		Wind speed		Effect of the wind
Beaufort number	Description	[m/s]	[km/h]	Inland
8	Gale force wind	17.2 to 20.7	62 to 74	Breaks branches off trees, impedes walking in open areas considerably
9	Gale	20.8 to 24.4	75 to 88	Minor damage to property (chimney caps and roofing tile are blown off)
10	Severe storm	24.5 to 28.4	89 to 102	Trees are uprooted, significant damage to property
11	Violent storm	28.5 to 32.6	103 to 117	Extensive, widespread storm damage
12	Hurricane	32.7 and more	118 and more	Major destruction

Beaufort scale

26.5 Height dependent wind speeds according to EN 13000:2010

Note

- The maximum permissible wind speed (v_{max}) and the maximum permissible wind speed according to the load chart (v_{max_TAB}) always refers to the 3 second wind gust speed, which is present in the maximum height of the crane.
- Instead of the 3 second wind gust speed, weather information services often report a wind speed (v_m), which is averaged within a time period of 10 minutes (so-called 10 minute average). It refers to the wind force on the Beaufort scale, normally to the medium value of the wind speed, which is determined within a time from of 10 minutes at a height of 10 m above ground or above sea level.
- The determining factor for the calculation of the 3 second wind gust speed in maximum height of the crane is significantly higher than the medium value of the wind speed, which is determined over a time of 10 minutes at a height of 10 m above ground.

Note

- The following chart shows the 3-second wind gust speed depending on the height and the Beaufort number and / or the wind speed determined over a time of 10 minutes at a height of 10 m.
- With the aid of this chart the 3-second wind gust speed for a certain height can be determined.

Beaufort number	3	4	5[a]	5	6	7[a]	7	8	9	10
v_m [m/s[b]]	5.4	7.9	**10.1**	10.7	13.8	**14.3**	17.1	20.7	24.4	28.4
z [m]	v(z) [m/s]									
10	7.6	11.1	**14.1**	15.0	19.3	**20.0**	23.9	29.0	34.2	39.8
20	8.1	11.9	**15.2**	16.1	20.7	**21.5**	25.7	31.1	36.6	42.7
30	8.5	12.4	**15.8**	16.8	21.6	**22.4**	26.8	32.4	38.2	44.5
40	8.7	12.8	**16.3**	17.3	22.3	**23.1**	27.6	33.4	39.4	45.8
50	8.9	13.1	**16.7**	17.7	22.8	**23.6**	28.3	34.2	40.3	46.9
60	9.1	13.3	**17.0**	18.0	23.3	**24.1**	28.8	34.9	41.1	47.9
70	9.3	13.5	**17.3**	18.3	23.6	**24.5**	29.3	35.5	41.8	48.7
80	9.4	13.7	**17.6**	18.6	24.0	**24.8**	29.7	36.0	42.4	49.4
90	9.5	13.9	**17.8**	18.8	24.3	**25.1**	30.1	36.4	42.9	50.0
100	9.6	14.1	**18.0**	19.1	24.6	**25.4**	30.4	36.9	43.4	50.6

LWE/ab Muli 010/24201-02-02/en

copyright © Liebherr-Werk Ehingen GmbH 2016

Beaufort number	3	4	5[a]	5	6	7[a]	7	8	9	10
110	9.7	14.2	**18.2**	19.2	24.8	**25.7**	30.8	37.2	43.9	51.1
120	9.8	14.3	**18.3**	19.4	25.1	**25.9**	31.1	37.6	44.3	51.6
130	9.9	14.5	**18.5**	19.6	25.3	**26.2**	31.3	37.9	44.7	52.0
140	10.0	14.6	**18.7**	19.8	25.5	**26.4**	31.6	38.2	45.1	52.5
150	10.0	14.7	**18.8**	19.9	25.7	**26.6**	31.8	38.5	45.4	52.9
160	10.1	14.8	**18.9**	20.1	25.9	**26.8**	32.1	38.8	45.7	53.2
170	10.2	14.9	**19.1**	20.2	26.0	**27.0**	32.3	39.1	46.0	53.6
180	10.3	15.0	**19.2**	20.3	26.2	**27.1**	32.5	39.3	46.3	53.9
190	10.3	15.1	**19.3**	20.4	26.4	**27.3**	32.7	39.5	46.6	54.2
200	10.4	15.2	**19.4**	20.6	26.5	**27.4**	32.8	39.8	46.9	54.6

[a] Wind stages for the crane in operation:

1 light	v_m = 10.1 m/s	at z = 10 m	v(z) = 14.1 m/s	q(z) = 125 N/m²
2 normal	v_m = 14.3 m/s	at z = 10 m	v(z) = 20.0 m/s	q(z) = 250 N/m²

[b] Upper limit of Beaufort scale

3-second wind gust speed depending on the height and the Beaufort number and / or the wind speed determined over a time of 10 minutes at a height of 10 m.

Sign	Unit	Definition
v_m	[m/s]	Wind speed determined over a time of 10 minutes at a height of 10 m
z	[m]	Height above level ground
v(z)	[m/s]	Speed effective at height z, decisive for the calculation of a 3 second gust
q(z)	[N/m²]	At a height z effective quasi-static back pressure, determined from v(z)

Symbol

26.6 Wind influences during erection and take down

WARNING
Toppling crane.
If a boom or a boom system is erected or taken down and the expected wind speeds are larger than the maximum permissible wind speeds according to the wind speed chart, then the crane can topple over and fatally injure personnel.

- ▶ If wind speeds are expected which are larger than the maximum permissible wind speeds for erection, then erection of the boom or erection of the boom system is prohibited.
- ▶ If wind speeds are expected, which are larger than the maximum permissible wind speeds for take down, then the boom or the boom system must be taken down immediately.

copyright © Liebherr-Werk Ehingen GmbH 2016

WARNING
Wind speed higher than permissible.
When the permissible wind speed for „Crane out of operation“ is higher than the permissible wind speed for take down: Take down of the boom is not permissible in case of unexpected increase of wind speed.
Toppling crane. Death, severe injury, property damage.
- ▶ If wind speeds are expected which are higher than the maximum permissible wind speeds for "Crane out of operation", then take the equipment and the boom down.
- ▶ Always take the boom down for safety reasons if weather conditions are unclear, see Erection and take down charts.
- ▶ Observe the permissible wind speeds for take down.

26.7 Wind influences in crane operation

WARNING
Toppling crane.
Unforeseeable factors, such as sudden wind gusts on the crane and the load cannot be exactly predicted in advance.
- ▶ The size and shape of the load has a signifiant influence on the permissible wind speed during crane operation.
- ▶ Carry out a professional job planning with authorized and trained expert personnel. All environmental conditions, such as weather forecast and wind speeds must be taken into account.
- ▶ The authorized and trained expert personnel must have sufficient knowledge in the area of „Wind influences in crane operation“.

Note
- ▶ Calculation examples are included in the load charts. If you need further information, contact Liebherr-Werk Ehingen GmbH.

Depending on crane application, for example:
1. Lifting of large surfaced loads.
2. Working with long boom combinations.
3. Erection and take down of boom combinations.

The crane operator must check with appropriate information sources about the expected wind speeds, at:
1. The start of crane operation.
2. Interruption of crane operation.
3. Resumption of crane operation

WARNING
Toppling crane.
If the crane is operated at wind speeds which are larger than the maximum permissible wind speeds according to the load chart, then the crane can topple over and kill personnel.
- ▶ If wind speeds are expected which are larger than the maximum permissible wind speeds for the equipped crane, then the attachments and the boom must be taken down.
- ▶ If wind speeds are expected which are larger than the maximum permissible winds speeds for crane operation, then it is prohibited to lift a load.

LWE/ab Muli 010/24201-02-02/en

copyright © Liebherr-Werk Ehingen GmbH 2016

26.8 Wind influences for „Crane out of operation“

WARNING
Toppling crane. Death, severe injury, property damage.
If the crane is taken out of operation in set up condition and the expected wind speeds are higher than the maximum permissible wind speeds according to the wind chart, then the crane can topple over and fatally injure personnel.
- ▶ If wind speeds are expected which are higher than the maximum permissible wind speeds for „Crane out of operation“, then take the equipment and the boom down.
- ▶ Always take the boom down for safety reasons if weather conditions are unclear, see Erection and take down charts.
- ▶ Observe the permissible wind speeds for take down.

27 Lifting a load with two cranes

Before lifting a load with two cranes, the crane operator or a representative of the operator must determine the work sequence and assign a responsible supervisory person for the operation. The responsible supervisory person must monitor the operation and remain in constant contact with the crane operator.

WARNING
Overload and toppling the cranes.
If the load is not lifted or lowered exactly evenly by both cranes, then the center of gravity changes.
The cranes can be overloaded and topple over.
Personnel can be killed or seriously injured.
- ▶ Make sure that the cranes are horizontally aligned.
- ▶ Observe the national valid standards, regulations and accident prevention guidelines.
- ▶ Determine the utilization degree of the cranes in operation, depending on the complexity of the load lift.
- ▶ Plan for sufficient safety reserves.
- ▶ Avoid side load on the boom.
- ▶ Carry out crane movements synchronously and slowly.

Note
- ▶ The total weight and the center of gravity of the load must be known exactly.
- ▶ Carry out the job planning in detail and with care.
- ▶ Avoid fastening points below the center of gravity of the load.

When the operational conditions or the work to be carried out require:
- ▶ Set up an assembly plan and operating instructions for the operation.

In the drawing is shown how the center of gravity for the load changes if the load is lifted or lowered unevenly. Already a slight incline of the load can cause the crane to be overloaded.

If the load on crane 2 **(F_1)** is lowered, the load on crane 2 **(F_1)** increases. Crane 1 can thereby be overloaded.

LWE/ab Muli 010/24201-02-02/en

copyright © Liebherr-Werk Ehingen GmbH 2016

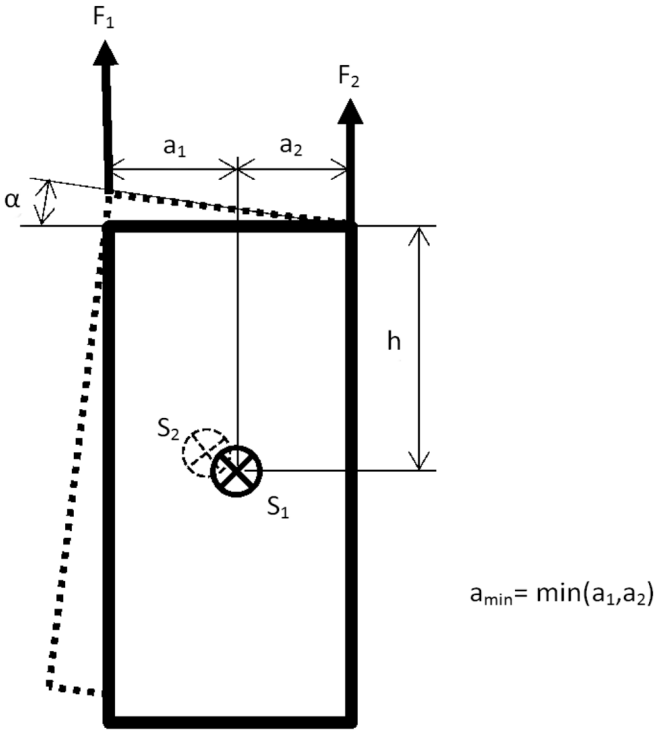

Fig.124126: Geometric conditions

F_1	Load on crane 1	**F_2**	Load on crane 2
S_1	Center of gravity of load	**S_2**	Center of gravity of load at incline position
h	Vertical distance between center of gravity of load and fastening points	**α**	Angle of load at incline position
a_1	Horizontal distance between center of gravity of load and fastening point crane 1	**a_2**	Horizontal distance between center of gravity of load and fastening point crane 2
a_{min}	Smallest horizontal distance between center of gravity of load and fastening point (minimum from a_1 and a_2)		

The following chart shows the dependence of the ratio of h/a_{min} at a maximum permissible incline position of the load of 3° in reference to the permissible load utilization of cranes in percentages.

LWE/ab Muli 010/24201-02-02/en

copyright © Liebherr-Werk Ehingen GmbH 2016

Fig.124127: Maximum permissible load utilization

x Ratio of h to a_{min}

y Maximum permissible load utilization in percentages, if α is smaller or equal to 3°

Example: A ratio h to a_{min} of 6, when retaining the incline position of the load of maximum 3° results in a maximum permissible load utilization of both cranes of approx. 76 % each.

28 Working ranges overlap

WARNING
Danger of collision.
If the working ranges of several cranes overlap, there is a danger of collision.
Personnel can be injured or killed.
Significant property damage can result.
- ▶ The contractor or his representative must determine the work sequence in detail in advance.
- ▶ The contractor or his representative must ensure flawless communication between crane operators.
- ▶ The crane operators must ensure through calm operating mode, that no collisions occur due to uncontrolled movements. The crane operators must have been trained and instructed accordingly.

If the communication between the crane operators is not ensured by sound or visual connection, then suitable measures must be taken, such as using radio communication, guides or similar.

Note
- ▶ If guides are used, then the signals must be agreed upon between them and the crane operators, see section „Hand signals for guidance“.

29 Hand signals for guidance

For all crane movements, the crane operator must always keep the load as well as the crane hook or load handling equipment when the crane is not loaded, in his field of vision.

copyright © Liebherr-Werk Ehingen GmbH 2016

WARNING
Danger of accident if standing under suspended load.
- ▶ Always keep loads in sight.
- ▶ Standing under suspended loads is prohibited.

If this is not possible, the crane operator may only operate the crane if he is signed by an assigned guide.

The operator may be guided by hand signals or a two-way radio. It must be ensured that there are no misunderstandings.

WARNING
Danger of accident caused by misunderstood hand signals.
- ▶ Hand signals must be mutually agreed upon and clearly executed.
- ▶ In any case, **national regulations** must be observed.

29.1 Hand signals

29.1.1 Starting operation, follow my instructions

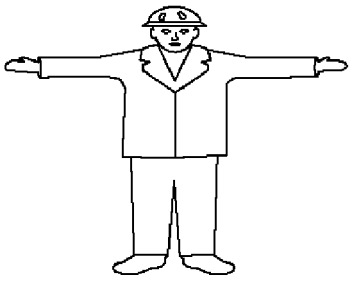

Fig.111700: Start operation, follow my instructions

Both arms stretched out horizontally with hands open and palms directed to the front.

29.1.2 Stop (normal stop)

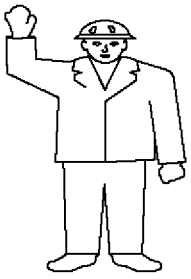

Fig.111701: Stop (normal stop)

Lift one arm overhead with open hand and palm directed to the front.

LWE/ab Muli 010/24201-02-02/en

copyright © Liebherr-Werk Ehingen GmbH 2016

29.1.3 Emergency stop (quick stop)

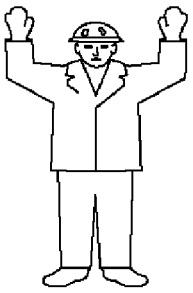

Fig.111702: Emergency stop (quick stop)

Lift both arms overhead with open hands and palms directed to the front.

29.1.4 End operation, no longer follow my instructions

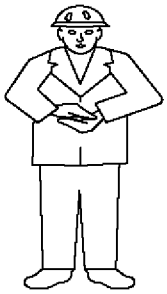

Fig.111703: End operation, no longer follow my instructions

Fold hands together at chest height in front of body.

29.1.5 Inching gear or very slow movement

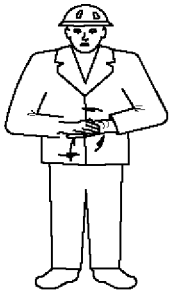

Fig.111704: Inching gear or very slow movement

Rub palms together in circular motion. After this sign, all other applicable hand signals apply.

copyright © Liebherr-Werk Ehingen GmbH 2016

29.2 Vertical movements

29.2.1 Showing the vertical distance

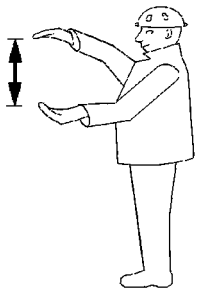

Fig.121364: Show the vertical distance

Both arms stretched out in front of the body one on top of the other, with opposing palms.

29.2.2 Lifting / lowering a load with even speed

Fig.111706: Lift / lower a load with even speed

Lift one arm overhead with closed hand and index finger pointing upward, with small horizontal circular movements with forearm.

29.2.3 Lifting slowly

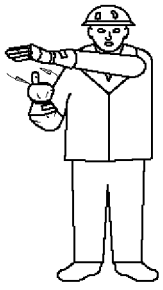

Fig.121365: Lift slowly

Give lift signal with one hand, the other palm is not moving and positioned over the hand, which gives the signal.

LWE/ab Muli 010/24201-02-02/en

copyright © Liebherr-Werk Ehingen GmbH 2016

29.2.4 Lowering the load while stationary

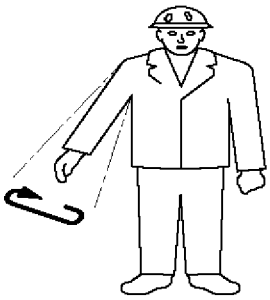

Fig.111708: Lower the load while stationary

Point one arm away from the body, downward, with hand closed and index finger pointing down. Make small circular movements with forearm.

29.2.5 Lowering slowly

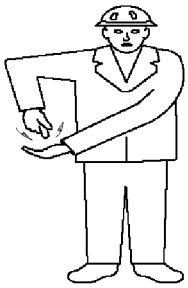

Fig.121366: Lower slowly

Give lowering signal with one hand, do not move the other palm and hold it under the hand, pointing to the hand which gives the signal.

29.3 Horizontal movements

29.3.1 Moving / swinging in specified direction

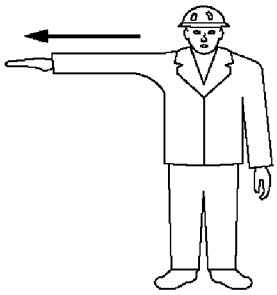

Fig.111710: Move / swing in specified direction

Hold stretched out arm horizontally into the desired direction, with the hand open and the palm pointing down.

copyright © Liebherr-Werk Ehingen GmbH 2016

29.3.2 Moving away from me

Fig.111711: Move away from me

Stretch out both arms simultaneously with forearms in front, with both hands open and the palms pointing down. Move the forearms repeatedly between the horizontal and vertical position up and down.

29.3.3 Moving toward me

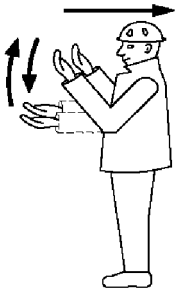

Fig.111712: Move toward me

Stretch out both arms simultaneously with forearms vertically, with both hands open and the palms pointing to the rear. Move the forearms repeatedly up and down.

29.3.4 Moving both track chains

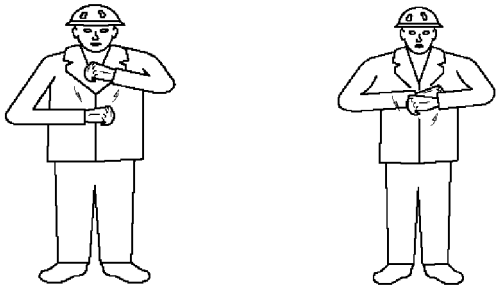

Fig.121367: Move both track chains

Turn both fists around each other in front of the body in direction of the movement (forward or reverse).

LWE/ab Muli 010/24201-02-02/en

copyright © Liebherr-Werk Ehingen GmbH 2016

29.3.5 Moving one track chain

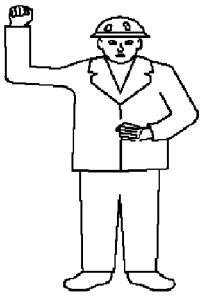

Fig.111714: Move one track chain

Lift one fist to show blockage of chain on one side. Turn the other fist vertically in front of the body to signal movement of the opposite chain.

29.3.6 Showing the horizontal distance

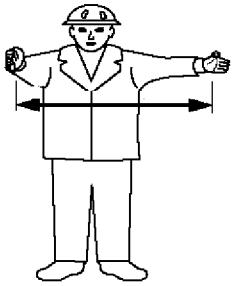

Fig.121380: Show the horizontal distance

Keep both arms stretched out horizontally in front of the body with the palms opposite each other.

29.3.7 Transfer (between two cranes or two hooks)

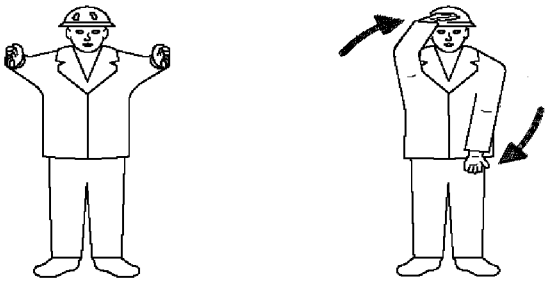

Fig.121368: Transfer (between two cranes or two hooks)

Hold both arms stretched out to the front, parallel and horizontally and turn by 90° in direction of the transfer.

WARNING
Danger of toppling the crane.
▶ Make sure that the load carrying capacity of the individual crane and hook is sufficient even if the transfer of the load is suddenly asymmetric.

copyright © Liebherr-Werk Ehingen GmbH 2016

29.4 Machine related movements

29.4.1 Lifting with main winch

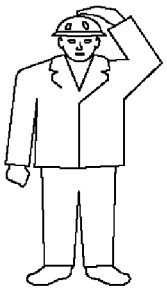

Fig.111719: Lift with main winch

Place on hand on your head and hold the other arm on the side of the body.

After this signal all other hand signals apply only for the main winch.

Note

▶ If two or more main winches are present, then the signaller can show the number of the crane by pointing to it or signal with one finger.

29.4.2 Lifting with auxiliary winch

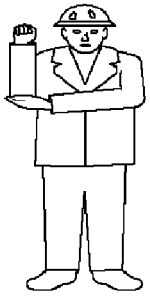

Fig.111720: Lift with auxiliary winch

Hold one forearm vertically with closed hand and touch the elbow of this arm with the other hand.

After this signal all other hand signals apply only for the auxiliary winch.

29.4.3 Lifting the boom

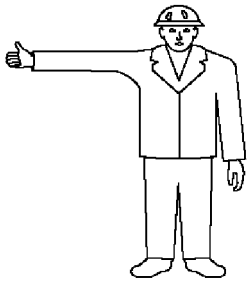

Fig.111721: Lift the boom

Hold one arm horizontally with thumb directed upward.

LWE/ab Muli 010/24201-02-02/en

copyright © Liebherr-Werk Ehingen GmbH 2016

29.4.4 Lowering the boom

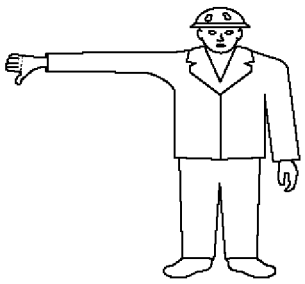

Fig.111722: Lower the boom

Hold one arm horizontally with thumb directed downward.

29.4.5 Extending the boom

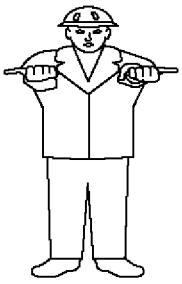

Fig.111723: Extend the boom

Hold both hands (with closed fists) stretched out to the front, with both thumbs directed away from each other.

29.4.6 Retracting the boom

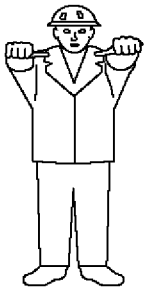

Fig.111724: Retract the boom

Hold both hands (with closed fists) stretched out to the front, with both thumbs directed toward each other.

LWE/ab Muli 010/24201-02-02/en

copyright © Liebherr-Werk Ehingen GmbH 2016

29.4.7 Lifting the boom and lower the load at the same time

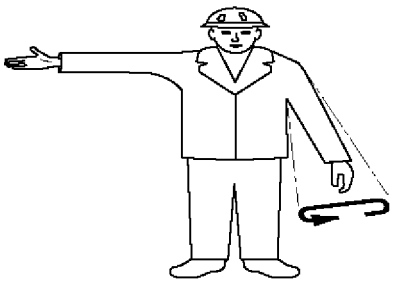

Fig.111725: Lift the boom and lower the load at the same time

Hold one arm stretched out horizontally with thumb directed upward and stretch the other arm downward and away from the body, make small flat circles with the forearm.

29.4.8 Lowering the boom and lift the load at the same time

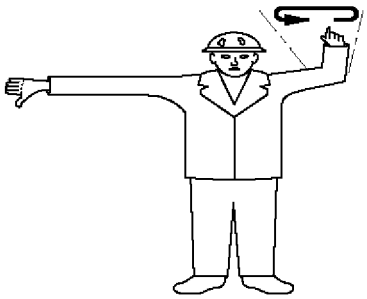

Fig.111726: Lower the boom and lift the load at the same time

Hold one arm stretched out with thumb pointing down, stretch the other forearm upward and make small flat circles.

30 Crane operation with a load

WARNING
Toppling crane.
If the crane is in condition which is **not** operationally safe, the crane can topple over or crane components can fall down.
Personnel can be severely injured or killed.

- ▶ Before starting to work, the crane operator must ensure that the crane is in operationally safe condition.
- ▶ If safe crane operation cannot be ensured by the crane operator, then crane operation is prohibited until an operationally safe condition for the crane is established.
- ▶ Safety devices, for example: Load moment limiter, hoist limit switch, brakes must be fully functioning, otherwise crane operation is prohibited.

Make sure that the following prerequisites are met:

- The load torque limiter must be adjusted according to the current set up configuration of the crane.
- The loads given in the load chart may not be exceeded.
- The crane may never be subjected with a load which exceeds those specified in the load charts.
- The weight, center of gravity and dimensions of the load to be lifted must be known.
- Load carriers, load lifting and fastening equipment must be in accordance with specified requirements.

LWE/ab Muli 010/24201-02-02/en

copyright © Liebherr-Werk Ehingen GmbH 2016

Note

▶ Make sure that the weight of the hook block and the weight of the fastening equipment is subtracted from the load given in the load chart, see the following chart.

Example:		
Maximum permissible load according to chart		30.000 t
Weight of the hook block	350 kg	- 0.350 t
Weight of the fastening rope	50 kg	- 0.050 t
Actual load capacity of the crane		**= 29.600 t**

The weight of the load to be lifted, in this example, may not exceed **29.6 t.**

30.1 Counterweight and / or ballast

The type of counterweight and / or ballast required depends on the weight of the load to be lifted and the radius required for crane operation. The deciding factor for the selection of the counterweight and / or ballast is the data in the corresponding load chart.

WARNING

Toppling crane.

If the counterweight and / or ballast is not installed according to the load chart, then the crane can topple over and fatally injure personnel.

▶ Install the counterweight and / or ballast according to the load chart.

30.2 Hoist gear, hoist rope

The lifting capability of the crane depends on the pull force of the hoist gear and the number of possible hoist rope reevings. When using a single strand, the crane can only lift a load that is pulled by the hoist gear.

If the load to be lifted is heavier than the pull force if the hoist gear, then the hoist rope must be reeved as needed according to the principle of a pulley between the pulley head on the boom and the hook block.

When reeving, carefully observe the load chart specifications and the operating instructions.

WARNING

Breaking hoist rope.

If the maximum pull force of the hoist gear is exceeded, the hoist rope can break or the hoist gear can be damaged.

The load can fall and kill personnel.

▶ Observe the maximum tensile force of the hoist gear.

30.3 Crane operation

DANGER

There is a high risk of accidents should the following points not be observed.

▶ Observe the following points.

Great danger of accidents exists if:

1. The load torque limiter is not set to the current set up configuration of the crane and is therefore not able to provide proper protection.
2. The load torque limiter is defective or taken out of operation.
3. The hoist limit switches are defective or not functioning.

copyright © Liebherr-Werk Ehingen GmbH 2016

4. For crawler cranes and mobile cranes with luffing lattice jib:
   The angle sensor and the force test brackets are not functioning.
5. For mobile cranes and crawler cranes with support:
   The sliding beams of the hydraulic supports are not extended to the dimensions specified in the load chart.
6. On crawler cranes:
   The crawlers are not supported with stable base material sufficiently large for the ground conditions.
7. For mobile cranes and crawler cranes with support:
   The support plates are not supported with stable base materials sufficiently large for the ground conditions.
8. If the load is pulled at an angle.
   Angular pulling to the side is particularly dangerous, because the boom has only minimal lateral resistance momentum.
   Angular pull is prohibited.
9. Load attached during disassembly is too heavy and is freely suspended on the crane after release.
10. The load hook is used to break away stuck loads.
    Even if the weight of a stuck load does not exceed the permissible load capacity, the crane can topple over backwards if the load is suddenly released due to the tension of the boom, which can cause it to jerk back violently.
11. When working when the wind is excessively strong.
    Comply with the load chart specifications.
12. The crane is not aligned horizontally and the load is swung toward the slope.
13. If improper crane movements cause the suspended load to swing like a pendulum.
14. The loads and radii specified in the load charts are exceeded.
15. When working in the vicinity of electricity transmission lines:
    - The electricity transmission lines were not turned off by expert electricians
    - **or** the danger zone was not covered or blocked off.

WARNING
Danger of current transfer.
If electricity transmission lines are not shut off nor covered nor blocked off, then there is an increased danger due to current transfer.
▶ Adhere to the safety distance according to the following chart.

If the crane becomes electrified despite having taken all necessary precautions, proceed as follows:
▶ Remain calm!
▶ Do not leave the crane cab.
▶ Warn people outside: Stay in place and do not touch the crane.
▶ Move the crane away from the danger zone.

Nominal voltage	Safety clearance	
Up to 50 kV	4 m	10 ft
More than 50 kV to 200 kV	5 m	15 ft
More than 200 kV to 350 kV	7 m	20 ft
More than 350 kV to 500 kV	8 m	25 ft
More than 500 kV to 750 kV	11 m	35 ft
More than 750 kV to 1000 kV	14 m	45 ft
More than 1000 kV	Determination by power supplier or authorized electrician	Determination by power supplier or authorized electrician

Safety distance to electrical power lines depending on the nominal voltage

LWE/ab Muli 010/24201-02-02/en

copyright © Liebherr-Werk Ehingen GmbH 2016

31 Lifting of personnel

31.1 Destined use

- The destined use of the crane is **lifting of loads**.
- **Lifting of personnel** is **not** considered to be destined use of the crane.

Note

▶ These instructions do **not** apply for work platforms, which are attached on the crane boom and are used to lift personnel. This subject is governed by international standards for mobile aerial work platforms.

WARNING

Non-designated use of the crane.

Personnel can be severely injured or killed.

▶ The crane is **not** intended to lift personnel.

▶ The crane may **not** be used for recreational purposes and exhibitions, such as lifting personnel for shows, bungee jumping or Dinner in the sky.

▶ The crane may **not** be used for lifting of devices with personnel on them or under the device, such as lifting of tents.

▶ Exception: If lifting of personnel for special work situations is the least dangerous possibility to carry out the work, then personnel may be lifted or brought into a suspended position when using lifting cages (cherry pickers).

31.2 Prerequisites for lifting of personnel

Make sure that the following prerequisites are met:

- Lifting personnel with cranes is permissible by national and local laws in the country where this crane application is carried out.

DANGER

Lifting of personnel.

Accidents which occur when lifting personnel often result in severe injuries or even death.

▶ This exceptional application is within the scope of responsibility of the user and is only permitted if the requirements and instructions in the next sections are observed and adhered to.

▶ The company, the supervisor, the crane operator and auxiliary personnel must proceed especially carefully and safety conscious.

▶ Before the lifting procedure, a meeting must be held with all associated personnel.

▶ The following warning notes and safety regulations must be strictly observed.

31.2.1 Legal prerequisites

Make sure that the following prerequisites are met:

- Special arrangements were made for the use of the lifting cage (cherry picker) according to the requirements of national laws.
- If required by national laws: The use of the crane to lift personnel was reported to the state agency for occupational health and safety. The lifting procedure may possibly require a special permit.
- Before the implementation of the lifting procedure with the aid of a work-specific risk analysis for the possibility of rescuing personnel in emergencies was defined.
- To rescue personnel in emergencies, precautionary measures must be present on the crane, if they are required by national laws.
- The measures for safe operation near power lines, depending on the conditions on the job site and the national laws / national regulations were observed and adhered to.

LWE/ab Muli 010/24201-02-02/en

copyright © Liebherr-Werk Ehingen GmbH 2016

31.2.2 Prerequisites for crane equipment and accessories

Make sure that the following prerequisites are met:
- The hoist gear to lift personnel must also be able to be moved in emergency operation.
- Before lifting personnel, the crane was inspected. No damage was found.
- The lifting cage (cherry picker) is utilized according to national laws and / or standards and according to intended purpose.
- Before lifting personnel, the lifting cage (cherry picker) was carefully inspected. No damage was found.
- Every emergency rescue device was inspected and its operational readiness was determined, if required by national laws.
- Any hooks in use must be equipped with a latch, which prevents the hook mouth to open. According to national laws, the latch must be manually closable or lockable or must automatically close via a spring.

31.2.3 Inspection before operation

Make sure that the following inspections are made before use of the lifting cage (cherry picker):
- On every new construction site and after every modification or repair: To ensure the operating safety of the lifting cage (cherry picker) and the lifting equipment, a test with 125 % of the nominal load carrying capacity of the lifting cage (cherry picker) without personnel must be carried out. During the test, the lifting cage (cherry picker) may only be lifted just above the ground.
- A test lift with loaded lifting cage (cherry picker) without personnel must be carried out. The weight in the lifting cage (cherry picker) for the test lift must be at least as large as the weight of the personnel and the weight with the work equipment carried along. For this test lift, the course of all planned movements of the lifting procedure must be simulated.
- This test lift must be carried out for every location on a construction site, where personnel must be carried.

31.2.4 Prerequisites for operation with lifting cage (cherry picker)

Make sure that the following prerequisites are met for operation with lifting cage (cherry picker):
- The personnel and technical prerequisites for safe use and operation of the emergency control of the crane are present.
- The emergency control for emergency rescue of the person in the lifting cage is functioning.
- The rope pull is limited to 50 % of the maximum rope pull.
- The crane is utilized only to 50 % of its maximum load capacity of the valid load chart.

32 Securing personnel on shut off crane

32.1 Terms and abbreviations

- PSAgA: Personal protective equipment to prevent falling
- HSG: Height safety device

32.2 Destined use

Cranes are **not** designed to protect personnel against falling.

When the following prerequisites are met, the personnel protection may be permissible:
- A justified individual care is present.
- A project-specific written risk assessment and work procedure for the precise case by the employer is on hand.
- Specific safety measures are strictly adhered to.
- The crane is intended by the manufacturer for personnel protection.

Limitations for movement and operation:
- Moving the secured person on the crane **from** job site and **to** job site is impermissible.

LWE/ab Muli 010/24201-02-02/en

copyright © Liebherr-Werk Ehingen GmbH 2016

– Moving the secured person on the crane **from** job site and **to** job site is permissible only in case of a rescue operation.
– Operation of the crane by the secured person is impermissible.

32.3 Prerequisites

WARNING
Prerequisites for personnel protection are **not** met.
Danger of accident. Death, severe bodily injuries.
▶ Carry out the personnel protection on the shut off crane only when **all** prerequisites in this section have been met.

Make sure that the following prerequisites are met:
– The country-specific, legal regulations are being observed.
– The written risk assessment shows:
  • Technical protective measures with at least the same protective effect are **not** available.
  • The normal fastening devices can **not** be used.
  • Personnel protection on the shut off crane is the safest and most useful method to carry out this work.
– Last transport and personnel protection occur independent of each other:
  • Do **not** carry out personnel protection at the same time as load transport. Simultaneous personnel movement is impermissible.
  • Riding along on the load is impermissible.
– Determination of fastening points and rescue plan for the precise case is on hand from the employer.

32.3.1 Personnel and qualification

Make sure that the following prerequisites for personnel and qualification are met:
– The crane operator is suited and competent to operate the crane.
– Person, which is secured, must be trained in handling the PSAgA.
– The following persons are present on the job site and separately instructed:
  • a supervisor
  • the crane operator
  • required number of rescue staff according to the rescue plan
– Access protection, fall protection on the shut off crane is made in accordance with the project-specific risk assessment on hand and the measures to be taken.
– The supervisor monitors the safe execution of work. He may **not** take part in the work.
– An effective communication must be ensured between crane operator and the secured person.

32.3.2 PSAgA, rescue equipment and tools

Make sure that the following prerequisites and measures are met:
– Use only HSG (height safety device) according to EN 360 in connection with a body harness according to EN 361 to secure the person.
– Connecting device is suited for the occurring stress on the edges, see Manufacturer's documentation or device identification.
– Recurring inspections have been made. There are **no** visible defects present.
– At least 1 m connecting device of the maximum possible extension length of the HSG (height safety device) must remain in the housing.
– Fasten the HSG (height safety device) with two separate connecting devices (for example Securing on crane hook and on crane pulley block).
– Position the crane in such a way that the HSG (height safety device) is at least 5 m and plumb **over** the person, which is being secured.
– Do **not** exceed the maximum permissible deflection of the HSG (height safety device)
– Keep the required space **underneath** the person, which is being secured.
– All required objects (tools, building material) for the work are secured to prevent them from falling.

LWE/ab Muli 010/24201-02-02/en

copyright © Liebherr-Werk Ehingen GmbH 2016

32.3.3 Crane

Make sure that the following prerequisites are met:
- The maintenance intervals and recurring crane inspections of have been adhered to. There are **no** visible defects present.
- The load on the crane hook in any possible position is at least 600 kg , see Load chart (take the crane pulley block into account).
- Ensure sufficient load capacity: For the load cases catching, pendular fall and possible diagonal pull adhere to the manufacturer's instructions.
- The crane is secured against movements and inadvertent movement (remote control is deactivated, crane control is activated).
- Only for aligning loads in the end position: Carry out a minimum of crane movements with the least possible speed.
- The overload protection is active.
- Auxiliary booms are **not** used.

32.4 Fastening device

Make sure that the following prerequisites are met:
- The crane hook is equipped with the hook safety.
- On the carrying device two connecting devices separated from each other can be fastened.
- HSG (height safety device) is redundantly fastened.
- Suitable fastening devices according to EN 795 Type B are on hand:
  - Round sling or fastening rope with steel core
  - Belt loop
- Textile components must be protected against greases, oils and other aggressive substances.
- Use only steel carabiners according to EN 362 with Tri-Lock function.

32.5 Rescue

A person in an accident must be lifted or lowered with the aid of the crane.

Carry out the following measures to ensure a safe rescue operation:
- Determine the rescue plan and rescue chain at the preparation of the mission.
- Ensure the rescue of a person involved in an accident immediately with locally available means and trained personnel.
- Have the rescue mission coordinated by another person, with visual and voice contact to the crane operator, ground personnel as well as to the person, which is rescued.

32.6 Additional risks

Make sure that the following risks are taken into account:
- Wind effect and environmental influences
- Crushing and shearing points
- Endangerment by additional cranes, for example material transport

33 Welding work on the load

Note
▶ The load must also be grounded.

In case of welding work on the load, the screw clamp of the welding unit must be attached on the work piece to avoid current flow via hoist rope, crane superstructure or crane chassis.

LWE/ab Muli 010/24201-02-02/en

copyright © Liebherr-Werk Ehingen GmbH 2016

34 Travel and crane operation

34.1 Before starting to work

Before driving the crane and before starting to work with the crane:

- ▶ Close all doors.
- ▶ Keep the doors closed during travel and crane operation.

34.2 During crane operation

WARNING
Defective crane.
Death, severe bodily injuries, property damage.

If an erroneous function of a crane movement is recognized during crane operation:
- ▶ Telescope the boom in completely and place it down, find the source of the problem and remedy it.

34.3 Interrupting crane operation

WARNING
Impermissible weather conditions.
If the crane is exposed to impermissible weather conditions during interruption of crane operation, situations can occur which could bring the crane into an unsafe condition.
Toppling crane, death, severe bodily injuries, property damage.
- ▶ Get the weather forecast for the entire period during which the crane is set up.

If the predicted wind speeds are above the permissible values:
- ▶ Place the boom and equipment down in time before impermissible wind speeds occur. See Crane operating instructions, wind speed charts and Erection and take down charts.

When wind conditions are present, which are above the permissible values of the wind speed chart and the boom can no longer be taken down:
- ▶ Make sure that there is no danger for persons, crane and surrounding area. Secure the crane and surrounding area of the crane far enough against access. Warn persons in the surrounding area and bring them in safety.

A weather forecast includes information about:
- Changing weather conditions
- Wind
- Ice
- Precipitation
- Flooding
- Lightning

WARNING
Defective crane.
Death, severe bodily injuries, property damage.

If a crane movement occurs during the interruption of crane operation:
- ▶ Make sure, when an unintentional crane movement occurs, for example as a result of leakage, no danger for persons, crane and surrounding is created.

Leakages can occur all on pressurized hydraulic cylinders, for example on the following cylinders:
- Support cylinder
- Luffing cylinder
- Telescoping cylinder
- Control cylinder

LWE/ab Muli 010/24201-02-02/en

copyright © Liebherr-Werk Ehingen GmbH 2016

Note

▶ Movements can occur on hydraulic cylinders also as a result of changing oil temperature.

WARNING

Crane is unsupervised.

Situations during interruption of crane operation may occur which could cause the crane to become unsafe if left unsupervised.

Toppling crane, death, severe bodily injuries, property damage.

▶ Always watch the crane and keep it under control.

If the crane is in set up condition:

▶ Do **not** leave the crane.

If the crane can **not** be constantly kept under control:

▶ Place the equipment down and telescope the boom in and place it down.

▶ The boom on the crane may only be placed down if the predicted wind speeds according to the wind speed charts are less than the maximum permissible wind speeds during assembly and disassembly.

WARNING

Set up crane is unsupervised.

Situations during interruption of crane operation may occur which could cause the crane to become unsafe if left unsupervised.

Toppling crane, death, severe bodily injuries, property damage.

▶ Before the crane is unsupervised: Establish an emergency plan.

Note

▶ An emergency plan includes information how the crane is brought into a safe condition if an unforeseen event occurs.

LWE/ab Muli 010/24201-02-02/en

copyright © Liebherr-Werk Ehingen GmbH 2016

WARNING
Set up crane is unsupervised.
If the set up crane is left during interruption of crane operation, situations may occur which could cause the crane to become unsafe.
Toppling crane, death, severe bodily injuries, property damage.

If possible:
▶ Place the equipment down and secure it.

If possible:
▶ Telescope the boom in and secure it.

If possible:
▶ Place the boom down and secure it.

For mobile crane:
▶ Lift the axles to the maximum position and block the hydraulic suspension.
▶ Place the suspended ballast down on the ground.
▶ Place the load fully on the ground and unhook from the crane hook.
▶ Remove the fastening ropes from the hook.

When the hook block remains installed:
▶ Lift the hook block into the highest position.
▶ Make sure that the hook block does not touch other crane parts or obstacles.
▶ If possible, turn the engines off.
▶ Set all control levers into neutral position or into a locked position.
▶ Turn all secondary systems off, except systems, which are required for restart.
▶ Establish the energy supply and functionality of safety devices.
▶ Close off all control devices, which are not in use.
▶ Disconnect all control devices, which are connected with cables, if possible, and secure them to prevent unauthorized use.
▶ Secure control devices without cables to prevent unauthorized use.
▶ Make sure that the batteries in control devices without cables are charged.
▶ Secure all keys to prevent unauthorized access.

If the construction site has limited space:
▶ The decision not to take the boom down while the crane is unsupervised can only be made by an authorized and qualified crane operator, who is familiar with the construction site.

If crane operation with a set up crane is interrupted:
▶ Make sure measures are initiated in time by trained, qualified personnel to bring the crane into a safe condition if anything happens.
▶ Make sure that no danger can occur for persons, crane and its surroundings should something unforeseen happen.

When the boom can **not** be placed down:
▶ Telescope the telescopic boom in as far as possible and erect the boom as far as possible.

When **no** park position is described:
▶ Bring the crane into a position, which was determined by an expert, who has knowledge about the job site, conditions, limitations, safety regulations and the expected weather conditions.
▶ Make sure that access to the crane and operation for unauthorized personnel is excluded: Close the driver's cab, crane cab and windows.
▶ Make sure that all measures were taken to keep the crane in a safe condition if something happens.

Incidents are for example:
– Vandalism
– The ground giving way due to severe rain
– Melting ice under the supports
– Storm and thunderstorm
– Storm and wind
– Lightning
– Flooding

LWE/ab Muli 010/24201-02-02/en

copyright © Liebherr-Werk Ehingen GmbH 2016

- Landslides
- Washouts
- For mobile cranes and crawler cranes with support:
  Slippage of support cylinders (leakage, temperature changes)
- For cranes with telescopic booms:
  Slippage of luffing cylinders (leakage, temperature changes)

Make sure that the following prerequisites are met:
- **No** load on hook
- The fastening ropes on the hook were removed.
- The hook block is in the highest position.
- The driver's cab and the crane cab are locked.
- The predicted wind speeds during the time frame of the interruption of crane operation are within the permissible range.
- The crane poses no traffic obstacle.

34.4 Resuming crane operation

Before resuming crane operation, the crane operator is obligated, among others, but not exclusively, to inspect the crane condition, the safety devices, as well as the environmental conditions.

WARNING
Danger of accident.

When the crane operator leaves the crane cab:
▶ Before resuming work, check the operating mode setting and reset, if necessary.

▶ Check operating mode settings and reset, if necessary.

34.5 Ending crane operation

Before the crane operator may leave the crane, the following prerequisites must be met:

▶ Place the load fully on the ground and unhook from the crane hook.
▶ On crane with telescopic boom: Telescope the telescopic boom all the way in and place the boom down.
▶ On crane with lattice mast boom: Set down the lattice mast boom and disassemble if necessary.
▶ Bring the control lever (master switch) to 0-position.
▶ Apply the parking brake on the crane chassis.
▶ Turn the engine off and pull the ignition key.
▶ Turn the battery master switch off and remove the switch cam.
▶ Lock the crane cab.
▶ Secure the crane to prevent unauthorized use.
▶ For mobile crane: Make sure that the driver's cab is **not** occupied. Lock the driver's cab. Secure the crane to prevent it from rolling off unintentionally, see section „Parking the vehicle“.
▶ Make sure that no danger can occur for persons, crane and its surroundings should something unforeseen happen.

LWE/ab Muli 010/24201-02-02/en

copyright © Liebherr-Werk Ehingen GmbH 2016

34.6 Turning / driving in reverse

WARNING
Danger of accidents when turning or driving in reverse.
When turning or driving in reverse, personnel can be overlooked and killed.
Objects can be severely damaged.
- ▶ When turning or driving in reverse, the driver must act in such a way that he does not endanger other traffic participants.
- ▶ The driver may only drive in reverse or reset when persons or devices are **not** endangered. If this can **not** be ensured, then he must use a guide.
- ▶ An acoustical back up warning device will never replace the guide.
- ▶ Make sure that there are no persons or objects behind the vehicle when driving in reverse.
- ▶ Make sure that no personnel is injured or killed.
- ▶ Make sure that no objects are damaged.
- ▶ Driving in reverse is only permissible at slow driving speed (maneuvering speed).
- ▶ Adhere to the national regulations.

34.7 Parking the mobile crane

Make sure that the following prerequisites are met:
- – The mobile crane is standing on load bearing, level and tractive ground.
- – Parking brake is applied.

WARNING
Parking brake is **not** applied.
The mobile crane can roll off, death, property damage.
- ▶ Park the mobile crane exclusively with applied parking brake.

- ▶ Turn the ignition off and pull out the ignition key.
- ▶ Turn the battery master switch off and remove the switch cam.

WARNING
Downhill or uphill slope is too large.
The mobile crane can roll off, death, property damage.
- ▶ Park the mobile crane at an downhill or uphill slope of no more than maximum 18 %.

Under the following conditions the mobile crane must be additionally secured with wheel chocks to prevent it from rolling off:
- – The mobile crane is parked on a slope or an incline.
- – The mobile crane is defective, particularly when the brake system is defective.

WARNING
Wheel chocks incorrectly placed.
The mobile crane can roll off, death, property damage.
- ▶ So that the wheel chocks have an immediate braking action and hold the mobile crane in park position: Place all wheel chocks tightly directly under the wheel.
- ▶ Place all specified wheel chocks.
- ▶ All wheel chocks must counteract the downhill slope force.

If necessary:
- ▶ Place wheel chocks.

LWE/ab Muli 010/24201-02-02/en

copyright © Liebherr-Werk Ehingen GmbH 2016

Empty page!

copyright © Liebherr-Werk Ehingen GmbH 2016

2.04.10 Ladders

1	Safety guidelines	3
2	Safety signs	3
3	Ladder inspection	7
4	User guidelines	7
5	Ladder access	8

LWE/ab Muli 010/24201-02-02/en

copyright © Liebherr-Werk Ehingen GmbH 2016

LWE/ab Muli 010/24201-02-02/en

Fig.195219

copyright © Liebherr-Werk Ehingen GmbH 2016

1 Safety guidelines

The ladders have been built according to the present level of technology and recognized safety technical regulations. Despite that, during their use dangers to life and physical condition of the user and / or third parties can occur.

The ladders may exclusively be used in a flawless technical condition and according to their missions as well as with constant awareness of safety and dangers.

Changes on the structure may exclusively be made with written approval of the manufacturer.

The ladders are exclusively designated for the entry and exit of personnel.

Any other use is not as intended and therefore prohibited.

The manufacturer is **not** liable for damages, which are caused by unintended use or improper usage.

WARNING
Danger of falling!
If the following safety guidelines are not observed, personnel can fall down and be killed or severely injured.

- ▶ Observe and adhere to the installation and safety guidelines for ladders.
- ▶ Observe and adhere to the safety signs on the ladders.
- ▶ Install and secure the ladders properly.
- ▶ Use ladders exclusively if you are healthy enough to do this.
- ▶ Climb up / down the ladder with the 3-point support.
- ▶ Use the rungs as handles.
- ▶ Step into the rungs deep enough.
- ▶ Do not use damaged ladders and replace them immediately.
- ▶ Repair the ladder exclusively through authorized service facilities.

2 Safety signs

Note

- ▶ All safety signs on the ladders must be complete and always legible.
- ▶ Observe and adhere to the manufacturer's operating instructions.

Sign	Explanation
	Read the operating instructions.
	Maximum number of users on one ladder.
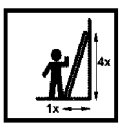	Correct set up angle 65° to 75°.

LWE/ab Muli 010/24201-02-02/en

copyright © Liebherr-Werk Ehingen GmbH 2016

Sign	Explanation
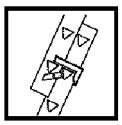	Before use: Engage the lift out safety.
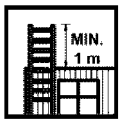	Ladder overhang above the exit level.
	Secure the upper / lower end of the ladder.
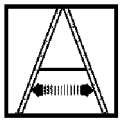	Before use: Tension the safety struts on stepladders.
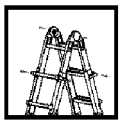	Before use: Engage the locking pin joints and pull pin locks.
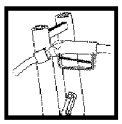	To open / close the tank cover and to ascent / descent: Insert the nozzle into the retainer.
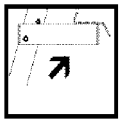	Fold the platform out before setting up the ladder.
	Before use: Check the ladder for damage.
	Check the legs of the ladder.
	Maximum load.

LWE/ab Muli 010/24201-02-02/en

copyright © Liebherr-Werk Ehingen GmbH 2016

Sign	Explanation
	Do not use the three uppermost rungs of an extension ladders as rungs to stand on.
	Do not use the four uppermost rungs / steps of a stepladder without a platform to stand on.
	Do not use the two uppermost rungs of a stepladder with integrated extension ladder as rungs to stand on.
	If hinged ladders are used as stepladders: Spread the ladder legs to the stop.
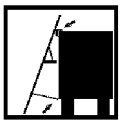	Place the upper placement angle flat. Hold the belt on tension.
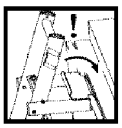	Hook the hook on the platform of the refueling ladder on the vehicle.
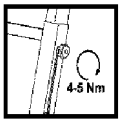	Tighten the star knob on the beam extension tightly.
	Do **not** use a damaged ladder.
	Preclude any contaminants on the ground.
	Make sure the upper end of the ladder is placed correctly. Place the ladder only on safe surfaces.

copyright © Liebherr-Werk Ehingen GmbH 2016

Sign	Explanation
	Only one person may climb up / down on any accessible leg of the ladder.
	Avoid leaning out to the side. The body's center of gravity should be between the ladder beams.
	Face the ladder when climbing up / down the ladder.
	Use the ladder only with suitable shoes.
	Do not use a stepladder as a leaning (extension) ladder.
	Do **not** use the inner section of multi-part hinged ladders without outer sections as a stepladder.
	Crushing danger.
	Set the ladder up on horizontal and solid ground.
	Set the ladder up on solid ground.
	Use the ladder in the correct set up direction.

LWE/ab Muli 010/24201-02-02/en

copyright © Liebherr-Werk Ehingen GmbH 2016

Sign	Explanation
	Do not carry along bulky objects or objects over 10 kg.
	It is not permitted to step off the ladder to the side.
	During transport, pay attention to danger due to power lines.
	Do not use the ladder as a walkway.
	Do not transport snow and ice shovels over the ladder. Use hooks!
	Danger due to shearing point.

3 Ladder inspection

Make sure that the following conditions are met:
- All ladders are inspected at lease every 12 months. See Crane operating instructions, chapter 8.17.
- The inspection may be made exclusively by authorized and trained expert personnel.

4 User guidelines

Make sure that the following prerequisites are met before using the ladder:
- A risk evaluation had been made.
  The national legal regulations have been taken into account.
- Use are able to use a ladder as far as your health is concerned.
- The ladder is suited for the respective application.
- The ladder is complete and not damaged (visual inspection).
- The ladder is free of contaminants, such as:
  - Ice
  - Snow

LWE/ab Muli 010/24201-02-02/en

copyright © Liebherr-Werk Ehingen GmbH 2016

  - Frost
  - Wet paint
  - Lubricants
- The legs of the ladders are not worn.
- Screws and connections have been checked for tight seating.
- The base is:
  - Level
  - Horizontal
  - Slip-resistant
  - Unmoveable

Before setting the ladder up:
- Secure the locking devices of the ladder.
- Tension the spreaders of the stepladder.
- Do **not** set up the ladder from above.
- Do **not** set the ladder on braces or steps.

When using the ladder:
- Make sure that no children are playing on the ladders.
- Set the ladder up in the correct set up angle.
- Subject the ladder with no more than maximum 150 kg.
- Use the ladder exclusively as described in section „Ladder access“.
- Do **not** use the ladder outside in strong wind.
- Do **not** subject the ladder excessively to loads in side assembly work.
- Face the ladder when climbing up or down the ladder.
- Step on the ladder with suitable shoes.
- Do not use the ladder as a walkway.
- Secure the ladder to prevent it from being knocked over inadvertently.
- For leaning (extension) ladders: Do not step on the uppermost three steps / rungs, in reference to the ladder placement point.
- For stepladders: Do not step on the uppermost two steps / rungs.
- For working on a ladder: Grip with one hand.
  If this is not possible: Take additional safety measures, such as: Use a WORK POSITIONING SYSTEM (WPS).

For repair, maintenance and storage of a ladder:
- Have repairs and maintenance made by expert personnel according to the manufacturer’s instructions.
- Store the ladders according to the manufacturer’s instructions.

Before transporting the ladders:
- Lock and secure the ladders in their provided transport retainers.

5 Ladder access

Wearing the personal protection equipment to prevent falling and the ladder safeguard depend on the type of work, among others.

5.1 Ladder safeguards

The ladder can be secured to prevent it from sliding away to the side by:
- Restraint device, for example: Tether or side stops on structure
- Friction lock, for example: Rubber caps or plastic caps on the end of the ladder beam at direct placement on a surface

The ladder can be secured to prevent it from tipping to the rear by:
- the correct placement angle

LWE/ab Muli 010/24201-02-02/en

copyright © Liebherr-Werk Ehingen GmbH 2016

5.2 3-point support

A 3-point support is ensured when:
- Two hands have a safe hold and one leg is standing safely.
- Two legs are standing safely and one hand has a safe hold.
- Two legs are standing safely in straddle position on a stepladder which can be accessed from both sides, on the third respective rungs / steps from the top. The user locks the ladder with the knees.
- Two legs are standing safely and at the same time, the body is leaned on higher rungs / steps of the leaning (extension) ladder. The center of gravity of the body must always be between the two ladder beams.
- A WORK POSITIONING SYSTEM (WPS) is used.

5.3 Light and / or heavy work

The following lists various light and heavy work

Examples for light work:
- Installing / removing retaining pins or spring retainers
- Fastening components, disengaging fastening equipment
- Pushing the transition aid out / in
- Establishing / disconnecting electrical or hydraulic connection between components
- Actuating the hand pump for the folding jib
- Reeving the auxiliary winch in / out
- Setting up / taking down foldable railings
- Carrying out maintenance and inspection work
- Refueling the crane chassis and / or crane superstructure

Examples for heavy work:
- Knocking the connector pins in / out
- Installing / removing the wind warning
- Reeving the hoist rope in / out
- Installing / removing the connector pin with assembly aid (hydraulic cylinder or mechanical assembly tool)
- Installing / removing the rope lock

LWE/ab Muli 010/24201-02-02/en

copyright © Liebherr-Werk Ehingen GmbH 2016

5.4 Types of ladders

5.4.1 Stepladder

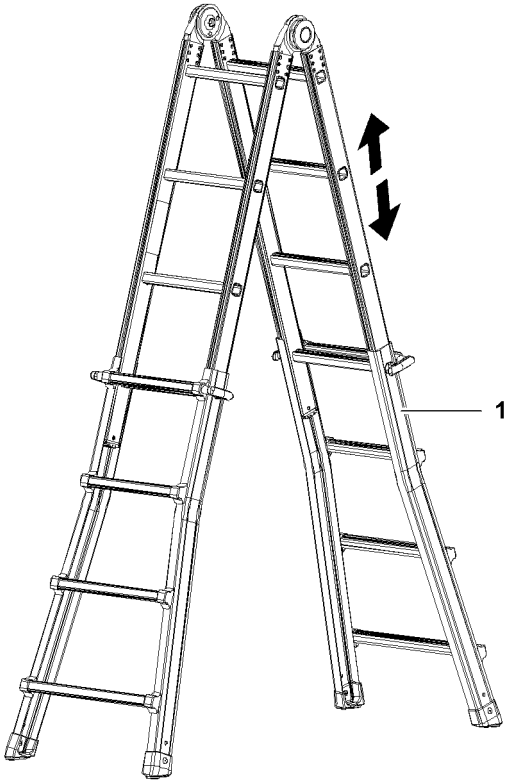

Fig.121175: Examples for stepladders

WARNING
Danger of falling when transitioning from a stepladder **1** to other components!
Personnel can fall down and be killed or severely injured.
▶ Do **not** transition from a stepladder **1** to other components.

WARNING
Danger of falling!
Personnel can fall down and be killed or severely injured.
▶ When using stepladders **1**, adhere to the 3-point support.
▶ Adhere to the prerequisites and conditions for the use of stepladders **1**.

Prerequisites for the use of stepladders **1**:
– Make sure that the weight of the tool carried along is not more than 10 kg.

Access	Work
Maximum rise to the third rung / step from the top	Maximum rise to the third rung / step from the top
3-point support required	3-point support required
	Rise to 1 m: Personal protective equipment to prevent falling not required

LWE/ab Muli 010/24201-02-02/en

copyright © Liebherr-Werk Ehingen GmbH 2016

Access	Work
	Rise above 1 m to 7 m **Light work**: Personal protective equipment to prevent falling not required
	Rise above 1 m to 7 m **Heavy work**: Personal protective equipment to prevent falling required

*Conditions for access and work on stepladders **1***

5.4.2 Leaning (extension) ladder

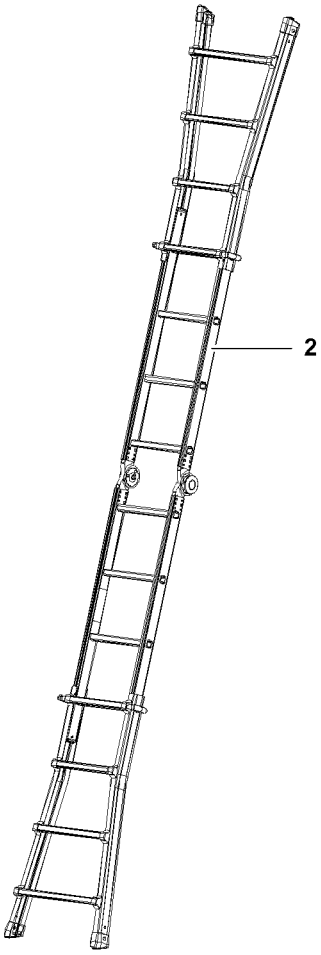

Fig.121176: Example for leaning (extension) ladders

WARNING
Danger of falling!
Personnel can fall down and be killed or severely injured.
▶ When using leaning (extension) ladders **2**, adhere to the 3-point support.
▶ Adhere to the prerequisites and conditions for the use of leaning (extension) ladders **2**.

Prerequisites for the use of leaning (extension) ladders **2**:
– Make sure that the leaning (extension) ladder **2** is positioned onto a level placement surface.

copyright © Liebherr-Werk Ehingen GmbH 2016

- Make sure that the leaning (extension) ladder **2** is placed in an incline angle of 65° to 75° (approx. 1:4) to the horizontal.
- Make sure that the ladder overhang when leaning it on components is selected in such a way that the leaning (extension) ladder **2** is safely placed when subjected to a load / flex due to ascending persons.
- Make sure that the weight of the tool carried along is not more than 10 kg.

Access	Work
Maximum rise to the fourth rung / step from the top, in reference to the placement point	Maximum rise to the fourth rung / step from the top, in reference to the placement point
3-point support required	3-point support required
	Rise to 1 m: Ladder safeguard not required Personal protective equipment to prevent falling not required
	Rise above 1 m to 7 m **Light work**: Ladder safeguard required Personal protective equipment to prevent falling not required
	Rise above 1 m to 7 m **Heavy work**: Ladder safeguard and protection to prevent it from tipping to the rear required Personal protective equipment to prevent falling required

*Conditions for access and work on leaning (extension) ladders **2***

LWE/ab Muli 010/24201-02-02/en

copyright © Liebherr-Werk Ehingen GmbH 2016

5.4.3 Leaning (extension) ladder with transition

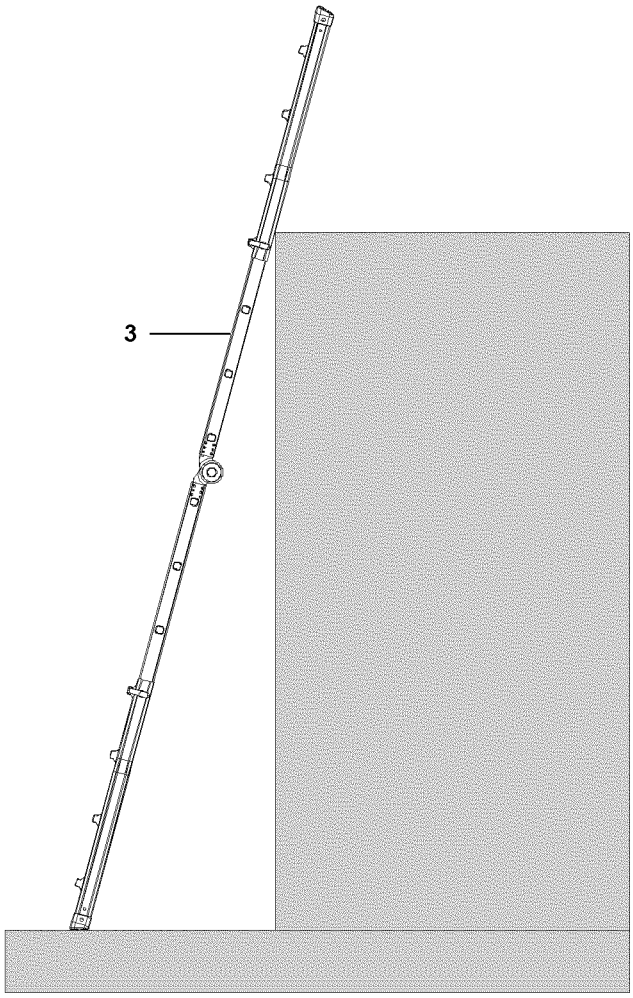

Fig.121177: Examples for leaning (extension) ladders with transition

WARNING
Danger of falling!
Personnel can fall down and be killed or severely injured.
- ▶ When transitioning, adhere to the 3-point support.
- ▶ Adhere to the prerequisites and conditions for the use of leaning (extension) ladders with transition **3**.

Prerequisites for the use of leaning (extension) ladders with transition **3**:
- – Make sure that the leaning (extension) ladder with transition **3** is positioned onto a level placement surface.
- – Make sure that the leaning (extension) ladder with transition **3** is placed in an incline angle of 65° to 75° (approx. 1:4) to the horizontal.
- – Make sure, for transitioning to higher work locations, when no other safehold possibilities are available, that the ladders beams of the leaning (extension) ladder go past the placement location by at least 1 m.
- – Make sure that the transition area is slip-resistant.
- – Make sure that the ladder position can be recognized from above.
- – Make sure that the ladder overhang when leaning it on components is selected in such a way that the leaning (extension) ladder is safely placed when subjected to a load / flex due to ascending persons.
- – Make sure that the weight of the tool carried along is not more than 10 kg.

LWE/ab Muli 010/24201-02-02/en

copyright © Liebherr-Werk Ehingen GmbH 2016

Access	Transition
Maximum rise to a rung / step below the placement edge	Maximum rise to a rung / step below the placement edge
3-point support required	3-point support required
Personal protective equipment to prevent falling not required	Personal protective equipment to prevent falling not required
	Rise to 1 m: Ladder safeguard not required
	Rise above 1 m to 7 m Ladder safeguard required

*Conditions for access and transition to leaning (extension) ladders with transition **3***

5.4.4 Vertical ladder with transition aid

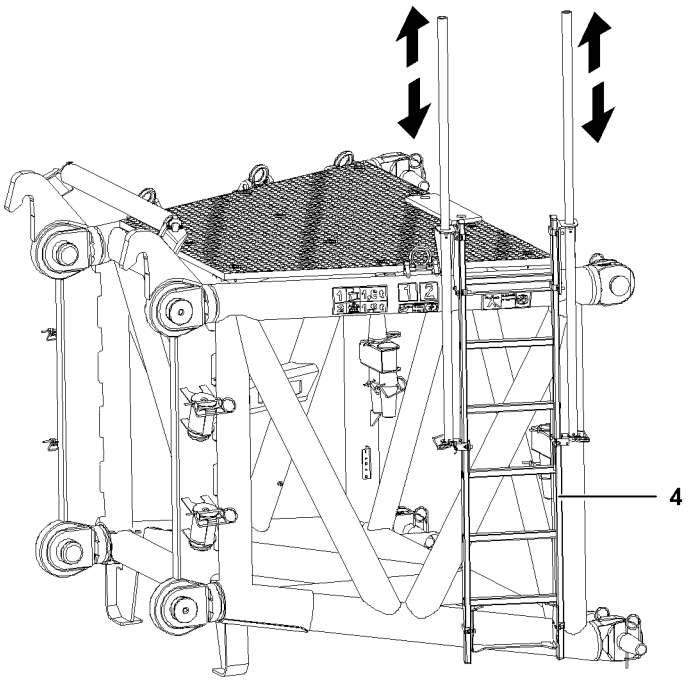

Fig.121178: Example for vertical ladder with transition aid

WARNING
Danger of falling!
Personnel can fall down and be killed or severely injured.

When using vertical ladders with transition aid **4**:
▶ Adhere to the 3-point support.

Before transitioning:
▶ Hook the personal protective equipment to prevent falling on a suitable location (for example: uppermost rung, safety rope or separate hook point).
▶ Adhere to the prerequisites and conditions for the use of vertical ladders with transition aid **4**.

LWE/ab Muli 010/24201-02-02/en

copyright © Liebherr-Werk Ehingen GmbH 2016

Prerequisites for the use of vertical ladders with transition aid **4**:
- Make sure, a centered grip reachable from the transition edge and a possibility to support oneself with the second hand is present for transitioning.
- Make sure that the transition area is slip-resistant.
- Make sure that the ladder position can be recognized from above.
- Make sure that the weight of the tool carried along is not more than 10 kg.

Access	Work
3-point support required	3-point support required
If necessary: use a WORK POSITIONING SYSTEM (WPS) in a suitable hook point	If necessary: use a WORK POSITIONING SYSTEM (WPS) in a suitable hook point

*Conditions for access and work on vertical ladders with transition aid **4***

Access	Transition
3-point support required	3-point support required
Rise to 5 m: Personal protective equipment to prevent falling not required	Rise to 1.8 m: without transition aid: Personal protective equipment to prevent falling not required
Rise above 5 m: Fall arrest system with moving along fall arrest device or back protection required	Rise above 1.8 m: without transition aid: Personal protective equipment to prevent falling required

*Conditions for access and transition to vertical ladders with / without transition aid **4***

5.4.5 Platform ladder

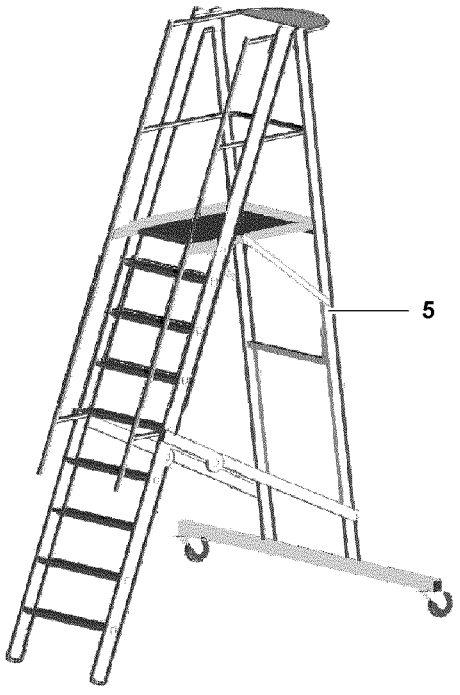

Fig.121179: Example for platform ladder

LWE/ab Muli 010/24201-02-02/en

copyright © Liebherr-Werk Ehingen GmbH 2016

WARNING
Danger of falling when transitioning from a platform ladder **5** to other components!
Personnel can fall down and be killed or severely injured.
▶ Do **not** transition from a platform ladder **5** to other components.

WARNING
Danger of falling!
Personnel can fall down and be killed or severely injured.

For use of platform ladders **5**:
▶ Adhere to the 3-point support.
▶ Adhere to the prerequisite and conditions for the use of platform ladders **5**.

Prerequisite for the use of platform ladders **5**:
– Make sure that the weight of the tool carried along is not more than 10 kg.

Access	Working on the ladder	Working on the platform
Maximum rise to platform height	Maximum rise to platform height	Maximum height: Platform height
3-point support required	3-point support required	3-point support required
	Rise to 1 m: Personal protective equipment to prevent falling not required	
	Rise above 1 m to 7 m **Light work**: Personal protective equipment to prevent falling not required	Platform height **Light work**: Personal protective equipment to prevent falling not required
	Rise above 1 m to 7 m **Heavy work**: Personal protective equipment to prevent falling required	Platform height **Heavy work**: Personal protective equipment to prevent falling required

*Conditions for access and work on platform ladders **5***

LWE/ab Muli 010/24201-02-02/en

copyright © Liebherr-Werk Ehingen GmbH 2016

2.05 Signs on the crane

1 Signs 3

LWE/ab Muli 010/24201-02-02/en

copyright © Liebherr-Werk Ehingen GmbH 2016

LWE/ab Muli 010/24201-02-02/en

Fig.195219

copyright © Liebherr-Werk Ehingen GmbH 2016

1 Signs

1.1 7725039 – Warning of high voltage

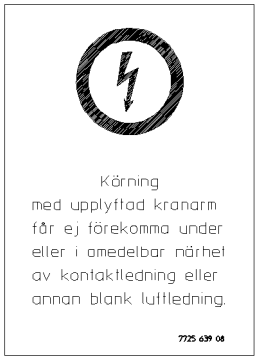

Fig.116269: Warning of high voltage

Note
▶ Only for certain countries.

1.2 772564008 – Swing range

Fig.116270: Swing range

Note
▶ Only for certain countries.

copyright © Liebherr-Werk Ehingen GmbH 2016

1.3 772580408 – Limitation of maximum travel speed

Fig.106035: Limitation of maximum travel speed

Note
- ▶ Only for certain countries.

1.4 Notice sign regarding vehicle height

	Notice sign regarding vehicle height
970610408	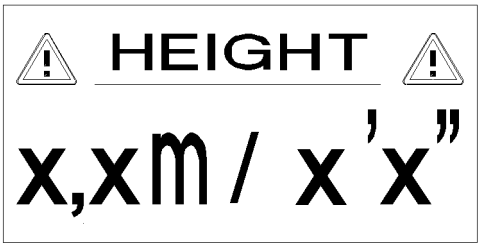
970629508	
970596108	
970608708	
979459108	

Notice sign regarding vehicle height

Note
- ▶ Only for certain countries.
- ▶ Vehicle height x.x m (x.x ft)

LWE/ab Muli 010/24201-02-02/en

copyright © Liebherr-Werk Ehingen GmbH 2016

1.5 Note for assembly aid

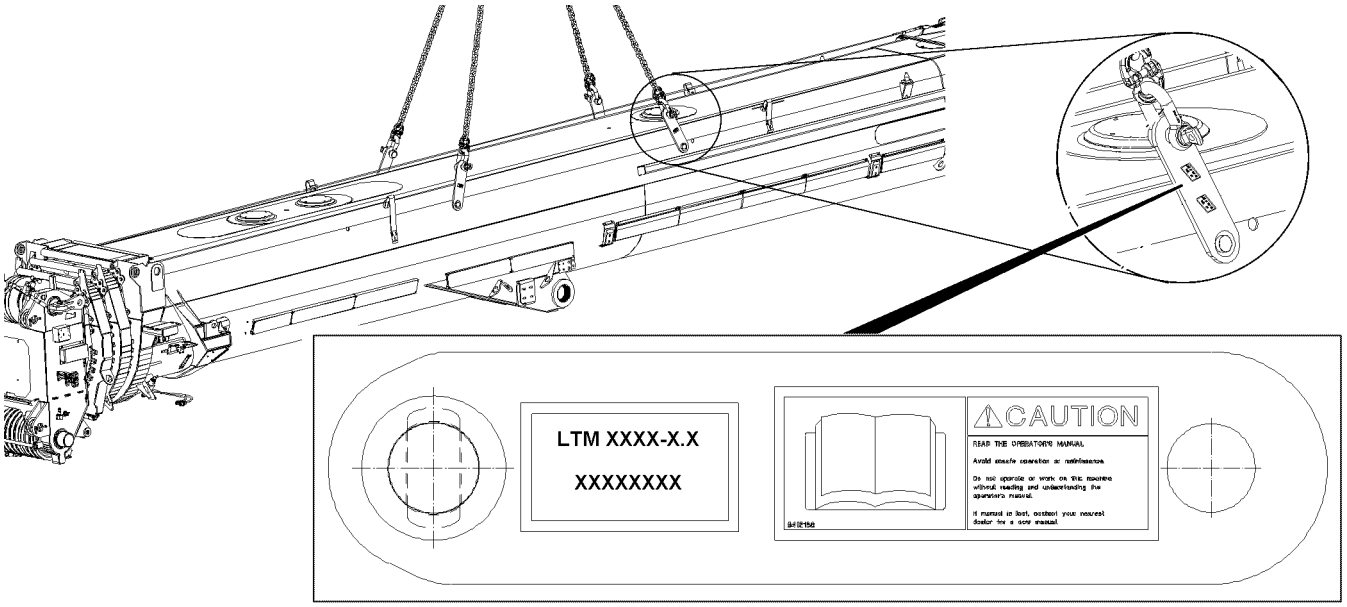

Fig.122741

Id. No.	Mobile crane
966713608	LTM 1750–9.1
968483508	LTM 1500–8.1
962961708	LTM 11200-9.1, LTM 1400-7.1, LTM 1350-6.1, LTM 1300-6.2,
	LTM 1250-6.1, LTM 1250–5.1, LTM 1220-5.2, LTM 1200-5.1,
	LTM 1160-5.2, LTM 1160-5.1, LTM 1130-5.1, LTM 1100-4.2,
	LTM 1095-5.1, LTM 1090-4.1,
	LTR 11200, LTR 1220, LTR 1100

Note for assembly aid

WARNING
Incorrect assembly aids!
Falling telescopic boom, death, property damage.

To assemble and disassemble the telescopic boom:
▶ Use solely the assembly aid which belong to the crane.

1.6 9412158 – Read operating instructions

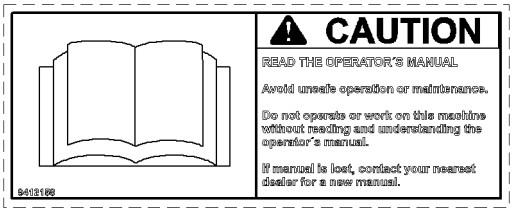

Fig.106048: Read the operating instructions

copyright © Liebherr-Werk Ehingen GmbH 2016

WARNING
Danger of accident due to non-observance of operating instructions!
If the operating instructions are not read or understood, then this can lead to unsafe operation and improper maintenance.
Accidents with bodily injuries and property damage can result.
- ▶ The crane may only be operated if the contents of the operating instructions have been read and understood.
- ▶ Replace lost or incomplete operating instructions immediately.

1.7 97004046 – Safety harness, maximum two persons

Fig.115119: Safety harness, maximum two persons

DANGER
Danger of accidents due to overloaded safety ropes!
If safety ropes are used by more than two persons, then the safety ropes can be overloaded and fail in case of an accident.
Personnel can be severely injured or killed.
- ▶ Safety ropes are designed to secure a maximum of two persons against falling, one on the right and one on the left.

1.8 97017585 – Falling telescopic boom during disassembly / assembly

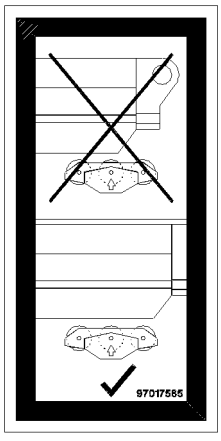

Fig.118467: Falling telescopic boom during disassembly / assembly

WARNING
Fatal accidents due to falling telescopic boom!
- ▶ Make sure that all pulleys are touching and carrying during the assembly and disassembly of the telescopic boom.

LWE/ab Muli 010/24201-02-02/en

copyright © Liebherr-Werk Ehingen GmbH 2016

1.9 97018351 – Falling telescopic boom during transport!

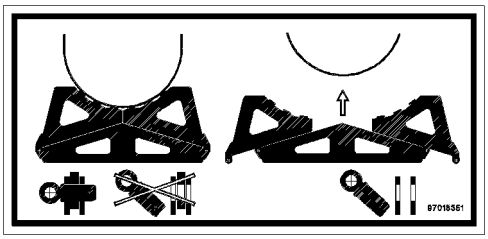

Fig.118466: Falling telescopic boom during transport

WARNING
Fatal accidents due to falling telescopic boom during transport!
▶ Make sure that the transport bracket on the left and right is pinned and secured.

1.10 97018564 – Falling telescopic boom during transport!

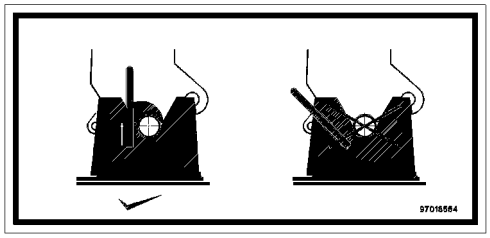

Fig.118533: Falling telescopic boom during transport

WARNING
Fatal accidents due to falling telescopic boom during transport!
▶ Make sure that the telescopic boom is locked in the head receptacle.

1.11 97027147 – Overloading of combi box is prohibited

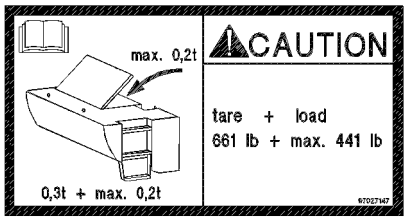

Fig.113829: Overloading of combi box is prohibited

WARNING
Danger of overload!
If the combi box is subjected to a load of more than 0.2 t , the combi box can be damaged!
▶ The own weight of the combi box is 0.3 t and may be loaded with a maximum payload of 0.2 t.
▶ Do not subject the combi box to a weight of more than 0.2 t.

copyright © Liebherr-Werk Ehingen GmbH 2016

1.12 97036733 – Fastening point

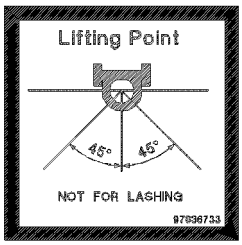

Fig.121184: Fastening point

WARNING
Damage of fastening points!
- ▶ Use the fastening point solely to lift the load.
- ▶ Observe the maximum permissible fastening angle.

Note
- ▶ Notice sign Fastening points and fastening angle.

1.13 Suspended load fastening point

	Suspended load fastening point
97038434	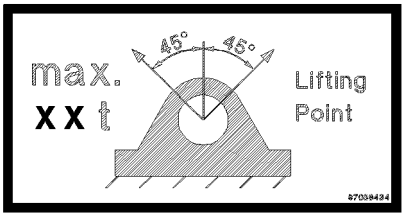 *Fastening point*
97037482	
97039068	

WARNING
Mortal danger if the load falls down!
If the maximum suspended load or the maximum fastening angle is exceeded, the load can fall down and kill personnel.
- ▶ Observe the maximum permissible suspended load and fastening angle.

LWE/ab Muli 010/24201-02-02/en

copyright © Liebherr-Werk Ehingen GmbH 2016

1.14 Suspended load fastening point

	Suspended load fastening point
97037221	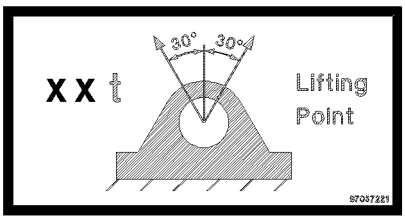 *Fastening point*
97037223	

WARNING
Mortal danger if the load falls down!
If the maximum suspended load or the maximum fastening angle is exceeded, the load can fall down and kill personnel.
▶ Observe the maximum permissible suspended load and fastening angle.

1.15 Suspended load fastening point

	Suspended load fastening point
97037219	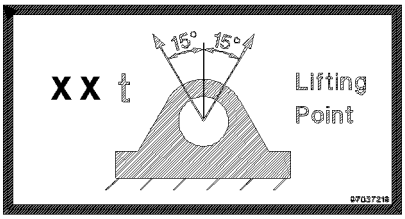 *Fastening point*

WARNING
Mortal danger if the load falls down!
If the maximum suspended load or the maximum fastening angle is exceeded, the load can fall down and kill personnel.
▶ Observe the maximum permissible suspended load and fastening angle.

LWE/ab Muli 010/24201-02-02/en

copyright © Liebherr-Werk Ehingen GmbH 2016

1.16 97037625 – Suspended load Fastening points / rigging points

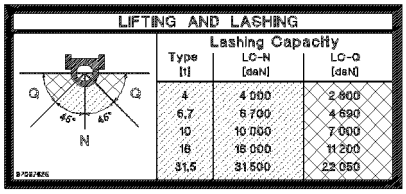

Fig.119988: Fastening points / rigging points

Note
▶ Notice sign for fastening points and rigging points.

1.17 97036735 – Fastening point for lattice section

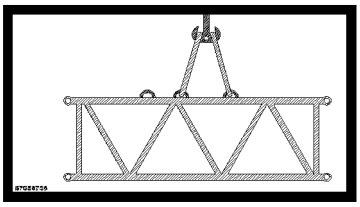

Fig.116266: Fastening point for lattice section

Note
▶ Notice sign for fastening points for lattice section.

1.18 97036736 – Fastening point for lattice sections

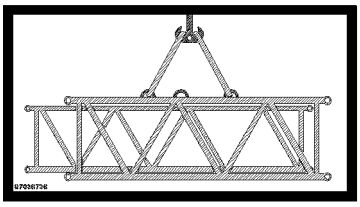

Fig.116267: Fastening point for lattice section

Note
▶ Notice sign for fastening points for lattice sections.

LWE/ab Muli 010/24201-02-02/en

copyright © Liebherr-Werk Ehingen GmbH 2016

1.19 97038442 – Fastening point for lattice section

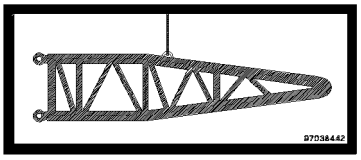

Fig.116288: Fastening point for lattice section

Note
▶ Notice sign for fastening point for lattice section.

1.20 97038452 – Fastening point for lattice sections

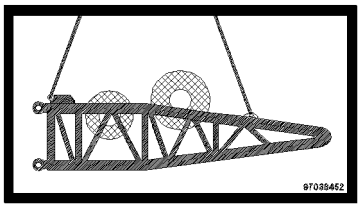

Fig.116289: Fastening point for lattice section

Note
▶ Notice sign for fastening points for lattice sections.

1.21 97038454 – Fastening point for lattice sections

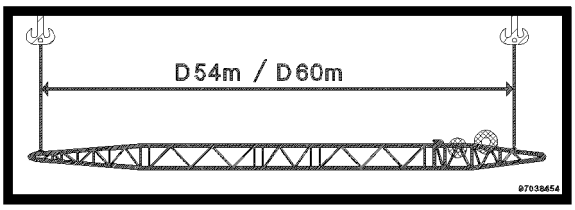

Fig.116290: Fastening point for lattice section

Note
▶ Notice sign for fastening points for lattice sections.

copyright © Liebherr-Werk Ehingen GmbH 2016

1.22 97037871 – Fastening points for lattice sections

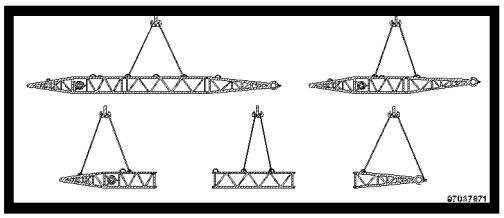

Fig.116292: Fastening points Lattice sections

Note
▶ Notice sign for fastening points for lattice sections.

1.23 97057767 – Fastening points for lattice sections

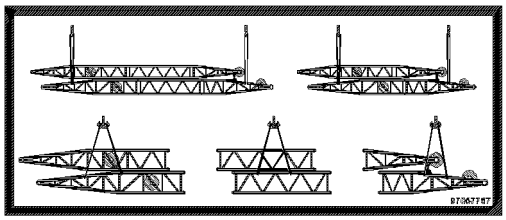

Fig.121181: Fastening points Lattice sections

Note
▶ Notice sign for fastening points for lattice sections.

1.24 97057524 – Fastening point for assembly of lattice sections

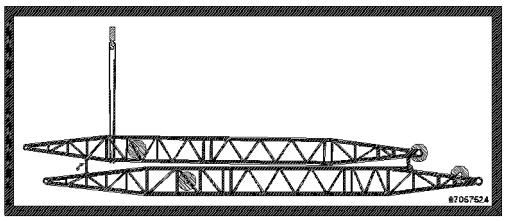

Fig.121182: Fastening point for assembly of lattice sections

Note
▶ Notice sign Fastening points for assembly of lattice sections.

LWE/ab Muli 010/24201-02-02/en

copyright © Liebherr-Werk Ehingen GmbH 2016

1.25 97057097 – Fastening point to turn the component

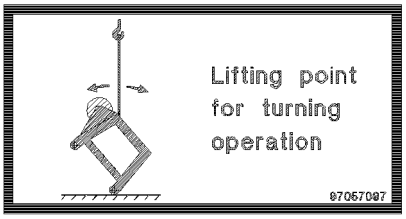

Fig.119987: Fastening point to turn the component

Note
▶ Notice sign for fastening point to turn the component.

1.26 97039035 – Suspended load Assembly unit

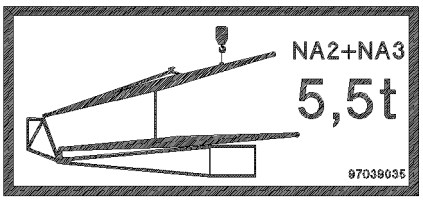

Fig.117348: Suspended load Assembly unit

Note
▶ Notice the suspended load.

1.27 97003109 – Access of step ladder

Fig.109032: Access of step ladder

WARNING
Danger of falling!
If the step ladder is accessed before it is completely folded out, the assembly personnel can fall and be fatally injured.
▶ Before stepping on the step ladder, fold the lowest step out.

copyright © Liebherr-Werk Ehingen GmbH 2016

1.28 97003110 – Fold the step ladder in and out

Fig.109033: Fold the step ladder in and out

WARNING
Danger of falling!
When folding the step ladder in or out or when driving the crane, no persons may remain on the step ladder or within the entire danger zone! Persons can fall from the step ladder or be killed as the step ladder folds in or out.
▶ Fold the step ladder in and out only if there are no persons within the danger zone.

1.29 97006167 – Identification of support base

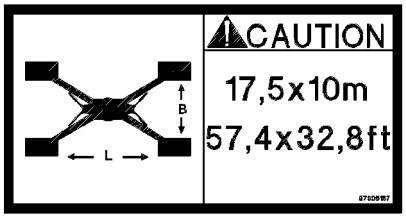

Fig.116285: Identification of support base

Note
▶ The support beams are swung out / extended to a support base of 17.50 m x 10.0 m ; (57.4 ft x 32.8 ft).

1.30 97006167 – Identification of support base

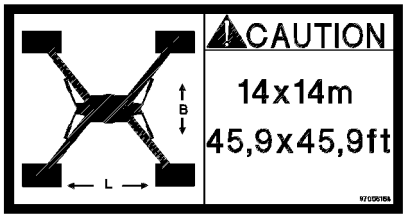

Fig.116286: Identification of support base

Note
▶ The support beams are swung out / extended to a support base of 14.0 m x 14.0 m ; (45.9 ft x 45.9 ft).

LWE/ab Muli 010/24201-02-02/en

copyright © Liebherr-Werk Ehingen GmbH 2016

1.31 97008514 – Warning of head injuries

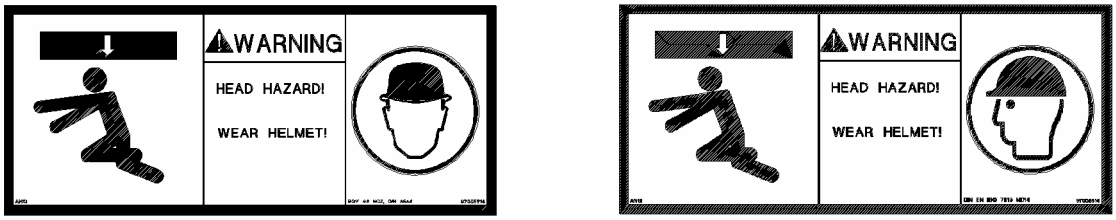

Fig.110550: Warning of head injuries

WARNING
Head injuries!
Due to falling parts, personnel can be killed or severely injured.
Hitting the head can cause injuries.
▶ Protect your head with a hard hat.
▶ Always remain aware of your surroundings and behave in a safe manner.

1.32 97009799 – Data logger

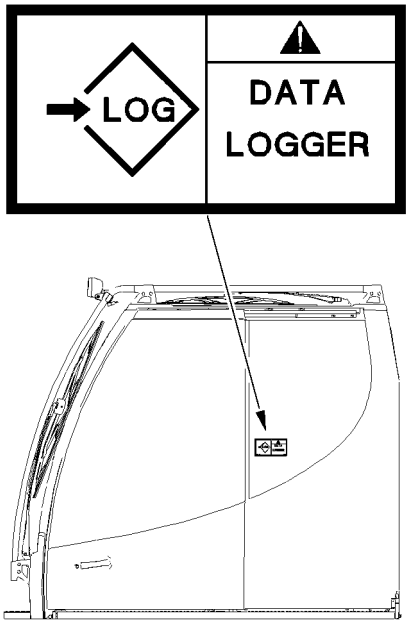

Fig.116261: Data logger

Note
▶ Notice sign for data logger.

copyright © Liebherr-Werk Ehingen GmbH 2016

1.33 97012949 – Maximum load

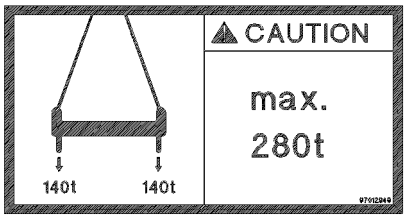

Fig.116263: Maximum load

CAUTION
Property damage due to overload!
If the cross bar is subjected to a higher load than permissible, damage can occur.
▶ Do not overload the cross bar.

1.34 97012095 – Maximum load

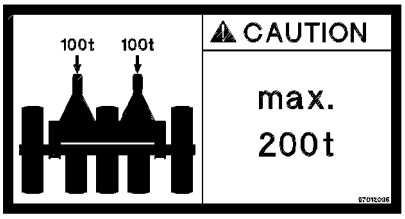

Fig.116265: Maximum load

CAUTION
Property damage due to overload!
If the pulley cart is subjected to a higher load than permissible, damage can occur.
▶ Do not overload the pulley cart.

1.35 97011689 – Warning of crushing danger

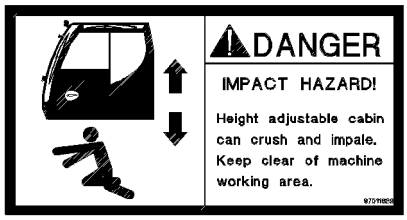

Fig.111047: Warning of crushing danger

DANGER
Danger of fatal injury!
▶ It is prohibited to remain within the danger zone of the cab.
▶ Keep away from the movement range of the cab.

LWE/ab Muli 010/24201-02-02/en

copyright © Liebherr-Werk Ehingen GmbH 2016

1.36 97011690 – Overload of cab is prohibited

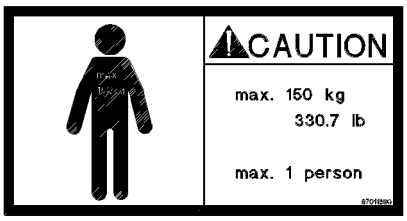

Fig.111048: Overload of cab is prohibited

WARNING
Danger of overload!
If the cab is subjected to a load of more than 150 kg then the cab or the telescoping arm can be damaged!
- ▶ Only one person at a time may remain in the cab!
- ▶ Do not subject the cab to a weight of more than 150 kg.

1.37 97016304 – Notice sign for refueling

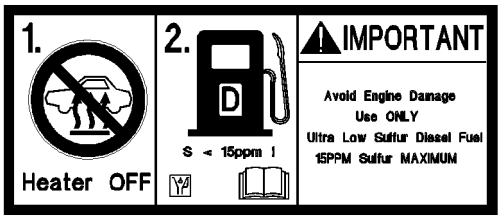

Fig.113766: Notice sign for refueling

WARNING
Danger of fire and explosion!
- ▶ Turn the auxiliary heater* off approx. 3 min before refueling the fuel tank.
- ▶ Before refueling the fuel tank, turn the engine off.

NOTICE
Property damage to the engine!
If incorrect fuel is added, the engine can be severely damaged.
- ▶ Refuel with fuel according to the Engine manufacturer's operating instructions.

1.38 97016392 – Crushing danger for feet

Fig.112474: Crushing danger for feet

copyright © Liebherr-Werk Ehingen GmbH 2016

WARNING
Crushing danger for feet!
Feet can be caught or crushed.
▶ Keep feet away.

1.39 97012737 – Danger of accident

Fig.111748: Danger of accident

WARNING
Danger of accident!
▶ For driving, the windshield must be closed.

1.40 97023034 – Disassembly

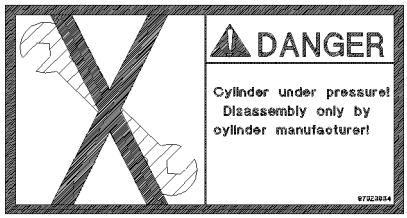

Fig.116264: Disassembly

DANGER
Mortal danger due to repair!
Cylinder is pressurized.
Disassembly of the cylinder can result in death or serious injuries.
▶ The cylinder may only be removed by the manufacturer.

1.41 97036732 – Access via 3-point support

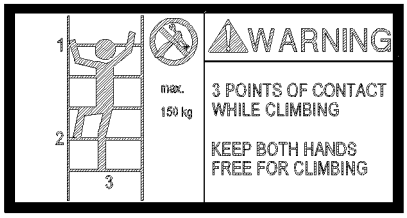

Fig.115172: Access via 3-point support

LWE/ab Muli 010/24201-02-02/en

copyright © Liebherr-Werk Ehingen GmbH 2016

DANGER
Access via 3-point support!
While climbing up and down via a ladder, the assembly personnel can fall down and be injured severely.
▶ When climbing up and down, a 3-point support must be ensured.
▶ Use ladders only up to a weight of 150 kg.
▶ When climbing up and down, hands must be free.

A 3-point support is ensured when:
– two legs are standing safely and one hand has a safe hold.
– two hands have a safe hold and one leg is standing safely.

1.42 97003112 – Maximum suspended load

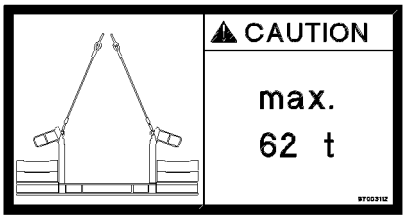

Fig.116282: Maximum suspended load

WARNING
Maximum suspended load!
If the maximum suspended load of 62 t is exceeded, the load can fall down and kill personnel.
▶ Observe the maximum permissible suspended load.

1.43 97036917 – Maximum suspended load

	Suspended load fastening point
97047630	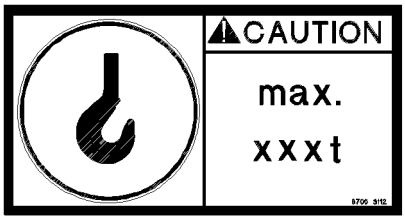
97036917	
97047630	

WARNING
Mortal danger if the load falls down!
If the maximum suspended load is exceeded, the load can fall down and kill personnel.
▶ Observe the maximum permissible suspended load.

copyright © Liebherr-Werk Ehingen GmbH 2016

1.44 97037383 – Notice sign for urea

Fig.115173: Notice sign for urea

CAUTION
Property damage due to incorrect service items!
When refilling urea and the urea which is specified by the engine manufacturer is not used, then damage can occur.
- ▶ Refill **exclusively** urea.
- ▶ See engine manufacturer's operating instructions.

1.45 97037952 – Warning of fatal electric shock

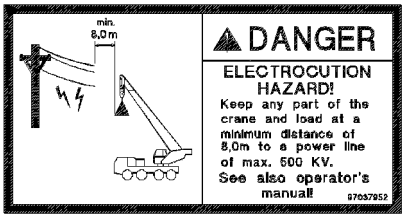

Fig.116280: Warning of fatal electric shock

DANGER
Danger of fatal injury due to electric shock!
If the boom or the hoist rope is under electric current, then death or severe injuries can occur if anyone touches the crane, the vehicle or the load.
- ▶ Keep a minimum distance of 8.0 m to current carrying parts.

1.46 97042730 – Falling luffing cylinder

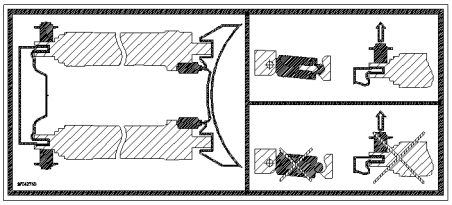

Fig.118465: Falling luffing cylinder

WARNING
Mortal danger if the luffing cylinders fall down!
- ▶ Make sure, before unpinning the luffing cylinder, that the erection cylinders are place don both luffing cylinders.

copyright © Liebherr-Werk Ehingen GmbH 2016

1.47 97047810 – Pin brackets

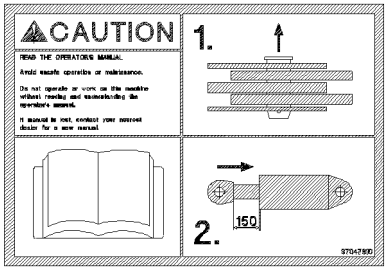

Fig.121709: Pin brackets

NOTICE
Damage of brackets due to collision!
▶ Make sure, before pinning and unpinning, that the hydraulic cylinder is set to a distance of 150 mm.

1.48 97042797 – Warning of overload of components

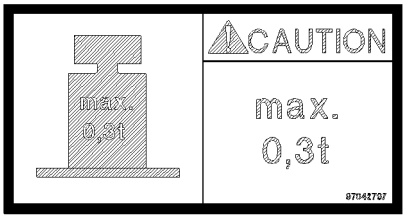

Fig.117347: Warning of overload of components

DANGER
Danger of falling due to overload!
If a component, such as a sliding beam platform, is subjected to a weight of more than 0.3 t , then the sliding beam platform can break.
Personnel can fall down and be severely injured or killed.
▶ Subject the component (sliding beam platform) to no more than maximum 0.3 t.

1.49 97041305 – Warning of overload of components

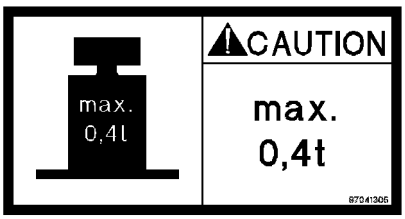

Fig.116792: Warning of overload of components

DANGER
Danger of falling due to overload!
If a component, such as a sliding beam platform, is subjected to a weight of more than 0.4 t , then the sliding beam platform can break.
Personnel can fall down and be severely injured or killed.
▶ Subject the component (sliding beam platform) to no more than maximum 0.4 t.

copyright © Liebherr-Werk Ehingen GmbH 2016

1.50 97070905 – Removing the auxiliary jib (boom nose)

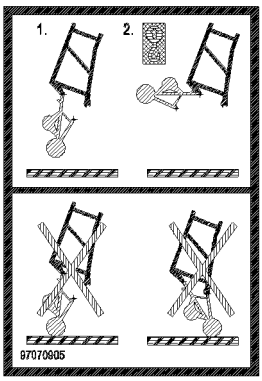

Fig.122645: Remove the auxiliary jib (boom nose)

NOTICE
Property damage

Before placing the N-head down:
▶ Remove the auxiliary jib (boom nose).

1.51 Warranted maximum sound power level

	Notice sign for Warranted maximum sound power level
975809508	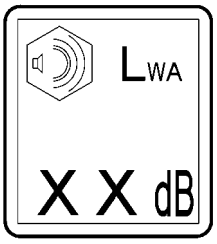 *Maximum sound power level*
971693308	
971693408	
971693508	
971693608	

1.52 977055908 – Fastening point for swingable sliding beam

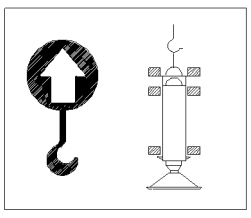

Fig.106894: Fastening point for swingable sliding beam

LWE/ab Muli 010/24201-02-02/en

copyright © Liebherr-Werk Ehingen GmbH 2016

1.53 971494208 – Limitation of maximum travel speed

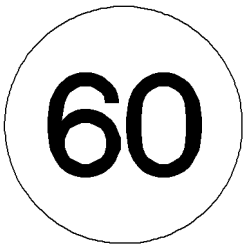

Fig.106034: Limitation of maximum travel speed

Note
▶ Only for certain countries.

1.54 971539808 – Warning notice for unpinning the auxiliary boom on the pulley head

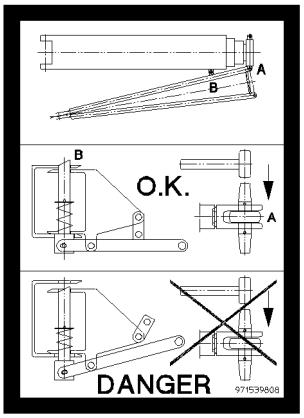

Fig.106040: Warning notice for unpinning the auxiliary boom on the pulley head

DANGER
Danger of fatal injury!
If the auxiliary boom is not locked correctly to the pivot section, it can fall down.
Personnel can be severely injured or killed.
▶ Unpinning the auxiliary boom on the pulley head is prohibited.

copyright © Liebherr-Werk Ehingen GmbH 2016

1.55 971539908 – Warning notice for unlocking the auxiliary boom

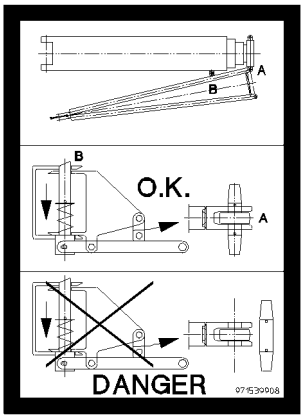

Fig.106041: Warning notice for unlocking the auxiliary boom

DANGER
Danger of fatal injury!
If the auxiliary boom is not locked correctly to the pulley head, it can fall down.
Personnel can be severely injured or killed.
▶ Unpinning the auxiliary boom on the pivot section is prohibited.

1.56 978673908 – Warning of suspended load

Fig.106026: Warning of suspended load

DANGER
Danger of fatal injury under suspended load!
▶ Standing under a suspended load is prohibited.
▶ Keep away from the working range of the machine.

1.57 978674008 – Access for unauthorized personnel prohibited

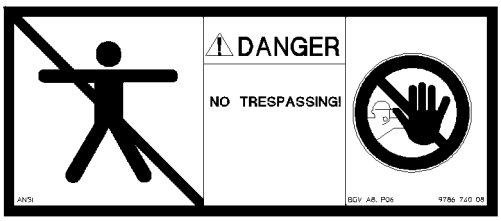

Fig.106037: Access for unauthorized personnel prohibited

LWE/ab Muli 010/24201-02-02/en

copyright © Liebherr-Werk Ehingen GmbH 2016

DANGER
Danger of fatal injury!
If the crane or the working area is accessed by unauthorized personnel, life threatening injuries can occur as a result.
▶ It is prohibited for unauthorized personnel to enter the crane or the working area.

1.58 97039753 – Danger of stumbling

Fig.117346: Danger of stumbling

WARNING
Danger of stumbling!
▶ Move carefully.

1.59 978674108 – Warning of crushing danger

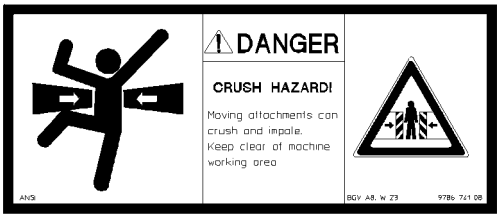

Fig.106027: Danger of crushing

DANGER
Mortal danger when remaining in areas with crushing danger!
▶ It is prohibited for anyone to remain in areas where there is a crushing danger.
▶ Keep away from the working range of the machine.

1.60 97016911 – Risk of collision

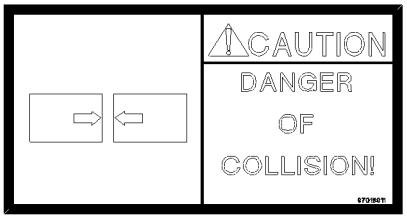

Fig.117344: Risk of collision

copyright © Liebherr-Werk Ehingen GmbH 2016

NOTICE
Danger of collision!
▶ Avoid a collision.

1.61 978674308 – Radio remote control

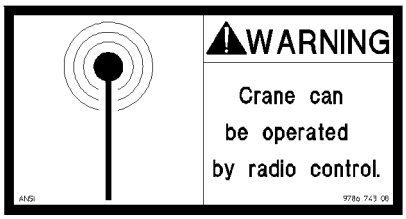

Fig.106047: Radio remote control

WARNING
Danger of injury due to crane operation with radio remote control!
▶ The crane can be operated with radio remote control!
▶ During crane operation, it is prohibited for anyone to remain in the danger zone!

1.62 978674408 – Danger of burning hands

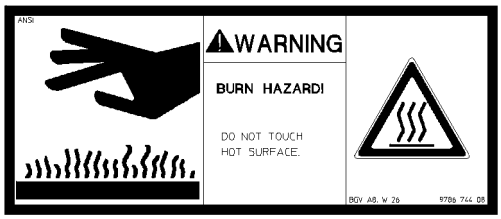

Fig.106028: Danger of burning hands

WARNING
Danger of burns when touching hot surfaces!
▶ Do not touch hot surfaces.

1.63 978674508 – Warning of rotating parts

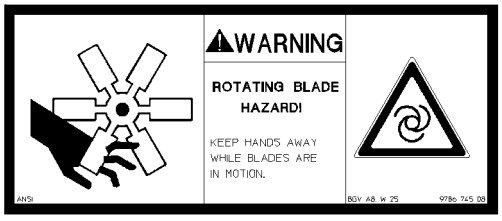

Fig.106029: Warning of rotating parts

WARNING
Rotating parts!
The rotating fan blade can cause finger and hand injuries.
▶ Keep your hands away from the rotating fan blade.

LWE/ab Muli 010/24201-02-02/en

copyright © Liebherr-Werk Ehingen GmbH 2016

1.64 978674608 - Crushing danger for hands

Fig.106030: Crushing danger for hands

WARNING
Danger of injuries for hands!
Hands can be caught, trapped or crushed within the danger zone.
▶ Keep hands away from the danger zone!

1.65 978674808 – Personal protective equipment

Fig.123900: Personal protective equipment

DANGER
Danger of falling!
▶ Use the personal protective equipment.

1.66 978674908 – Walking on the area is prohibited

Fig.106038: Walking on the area is prohibited

WARNING
Danger of accident!
If the prohibited area is accessed, accidents can occur.
Personnel can be severely injured or killed.
▶ Do not access the prohibited area.

copyright © Liebherr-Werk Ehingen GmbH 2016

1.67 978675008 – Access prohibited

Fig.106039: Access prohibited

WARNING
Danger of falling!
If the crane is accessed by unauthorized personnel, life threatening injuries can occur.
▶ Do not get on the crane.

1.68 978687408 – Rigging point

Fig.112475: Rigging point

WARNING
Rigging point!
▶ Use the rigging point **solely** for rigging.
▶ Lifting on the rigging point is prohibited.

1.69 97036734 – Rigging point

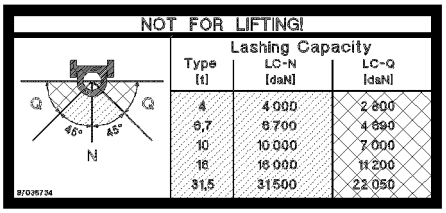

Fig.116287: Rigging point

WARNING
Rigging point!
▶ Use the rigging point **solely** for rigging.
▶ Lifting on the rigging point is **prohibited**.

LWE/ab Muli 010/24201-02-02/en

copyright © Liebherr-Werk Ehingen GmbH 2016

1.70 978867108 – Warning of fatal electric shock

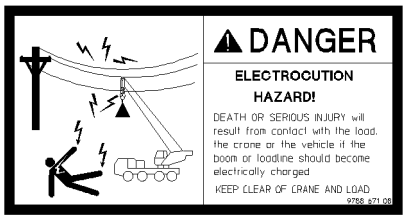

Fig.106814: Warning of fatal electric shock

DANGER
Danger of fatal injury due to electric shock!
If the boom or the hoist rope is under electric current, then death or severe injuries can occur if anyone touches the crane, the vehicle or the load.
▶ Keep away from the crane and the load.

1.71 979383308 – Notice sign for oil change

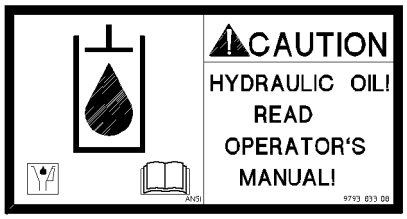

Fig.113827: Notice sign for oil change

CAUTION
Property damage through oil change!
If the oil specified in the operating instructions is not used during the oil change, it can lead to damage.
▶ See Crane operating instructions, chapter 7.07.

1.72 979561108 – Counterweight

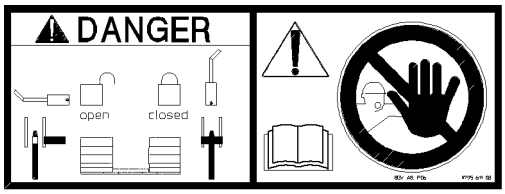

Fig.109026: Counterweight

WARNING
Counterweight can fall down!
If the auxiliary crane is removed on the counterweight before the counterweight is locked on both sides with the turntable, then the counterweight will fall down and can fatally injure assembly personnel.
▶ Do not remove the auxiliary crane until the counterweight is locked and secured on both sides with the turntable. See Crane operating instructions, chapter 4.07.

copyright © Liebherr-Werk Ehingen GmbH 2016

1.73 97001802 – Falling platform

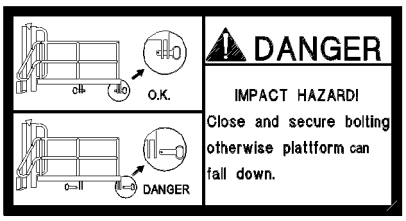

Fig.117345: Falling platform

WARNING
The platform can fall down!
▶ Pin and secure the platform in assembly / disassembly position.

1.74 973974408 - Transport weights of the components

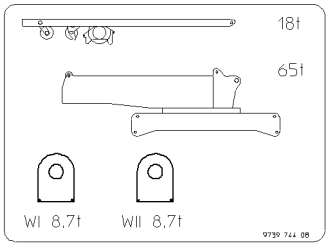

Fig.112440: Transport weights of components

1.75 973974608 - Transport weights of the components

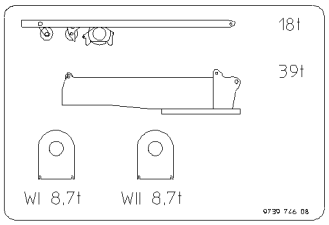

Fig.112441: Transport weights of components

1.76 97011336 - Transport weights of the components

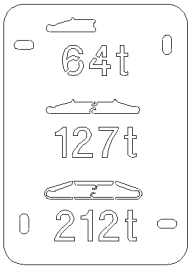

Fig.116271: Transport weights of components

copyright © Liebherr-Werk Ehingen GmbH 2016

1.77 Identification of sliding beam

	Identification of sliding beam
978675108	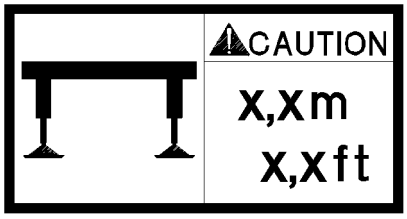 *Identification of sliding beam*
978675208	
978772808	
978772908	
978809308	
978809408	
978809508	
978818408	
978818508	
978875908	
978902608	
978903108	
97029203	
978903208	
979126008	
979126108	
979210508	
979210608	
979210608	
979210708	
979309108	
979309208	
97019140	
97003224	
979410808	

Identification of sliding beam

Note

▶ Extend the sliding beams to a support width of X.X m (X.X ft).

copyright © Liebherr-Werk Ehingen GmbH 2016

1.78 Identification Track width retracted

	Identification Track width retracted
97009840	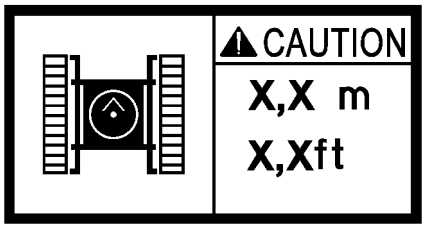 *Identification of track width*
97009841	
97017044	
97017045	
97017046	

Identification of track width

Note
▶ Track width retracted to x.xx m (x.x ft)

1.79 976624808 – Fasten the load

Fig.116283: Fastening the load

WARNING
Fastening the load is prohibited!
If the load is lifted on this point, the load can fall down and kill personnel.
▶ Lifting the load on unmarked locations is prohibited.

copyright © Liebherr-Werk Ehingen GmbH 2016

1.80 Notice Weight sliding beams

	Weight of sliding beams
979932008	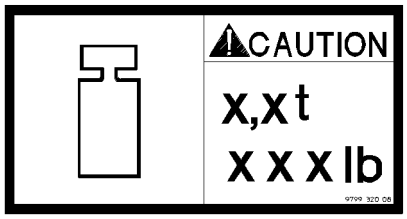 *Weight of sliding beams*
979932108	
979932708	
979932808	

Note

▶ Pay attention to the weight of the sliding beams.

1.81 97047566 – Center of gravity Counterweight

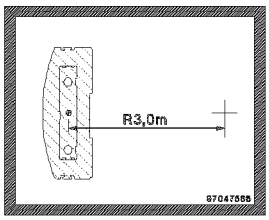

Fig.118491: Notice sign: Distance between center of gravity of counterweight and center of rotation

Note

▶ Noted on this notice sign is the distance between the center of rotation and the center of gravity of the counterweight.

copyright © Liebherr-Werk Ehingen GmbH 2016

1.82 97047566 – Center of gravity Counterweight

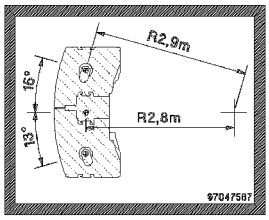

Fig.118492: Notice sign: Distance between center of gravity of counterweight and center of rotation

Note

▶ Noted on this notice sign is the distance between the center of rotation and the center of gravity of the counterweight.

1.83 97047566 – Center of gravity Counterweight

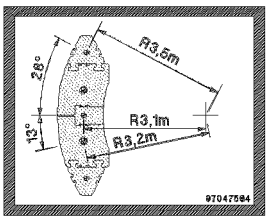

Fig.118493: Notice sign: Distance between center of gravity of counterweight and center of rotation

Note

▶ Noted on this notice sign is the distance between the center of rotation and the center of gravity of the counterweight.

1.84 97047566 – Center of gravity Counterweight

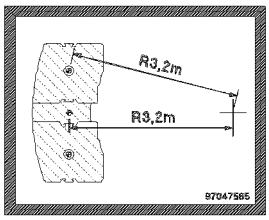

Fig.118494: Notice sign: Distance between center of gravity of counterweight and center of rotation

LWE/ab Muli 010/24201-02-02/en

copyright © Liebherr-Werk Ehingen GmbH 2016

Note

▶ Noted on this notice sign is the distance between the center of rotation and the center of gravity of the counterweight.

1.85 97047566 – Center of gravity Counterweight

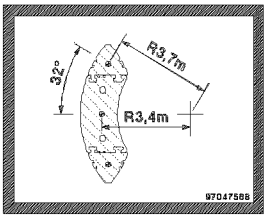

Fig.118495: Notice sign: Distance between center of gravity of counterweight and center of rotation

Note

▶ Noted on this notice sign is the distance between the center of rotation and the center of gravity of the counterweight.

1.86 97047566 – Center of gravity Counterweight

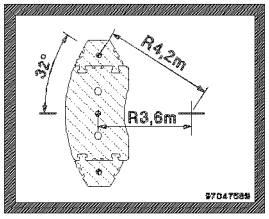

Fig.118496: Notice sign: Distance between center of gravity of counterweight and center of rotation

Note

▶ Noted on this notice sign is the distance between the center of rotation and the center of gravity of the counterweight.

copyright © Liebherr-Werk Ehingen GmbH 2016

Empty page!

copyright © Liebherr-Werk Ehingen GmbH 2016

2.05.10 Labeling of load lifting equipment

1	Identifications on the hook block or load hooks	3
2	Identifications on single hook or double hook	4
3	Identifications on auxiliary weights	5

LWE/ab Muli 010/24201-02-02/en

copyright © Liebherr-Werk Ehingen GmbH 2016

LWE/ab Muli 010/24201-02-02/en

Fig.195219

copyright © Liebherr-Werk Ehingen GmbH 2016

1 Identifications on the hook block or load hooks

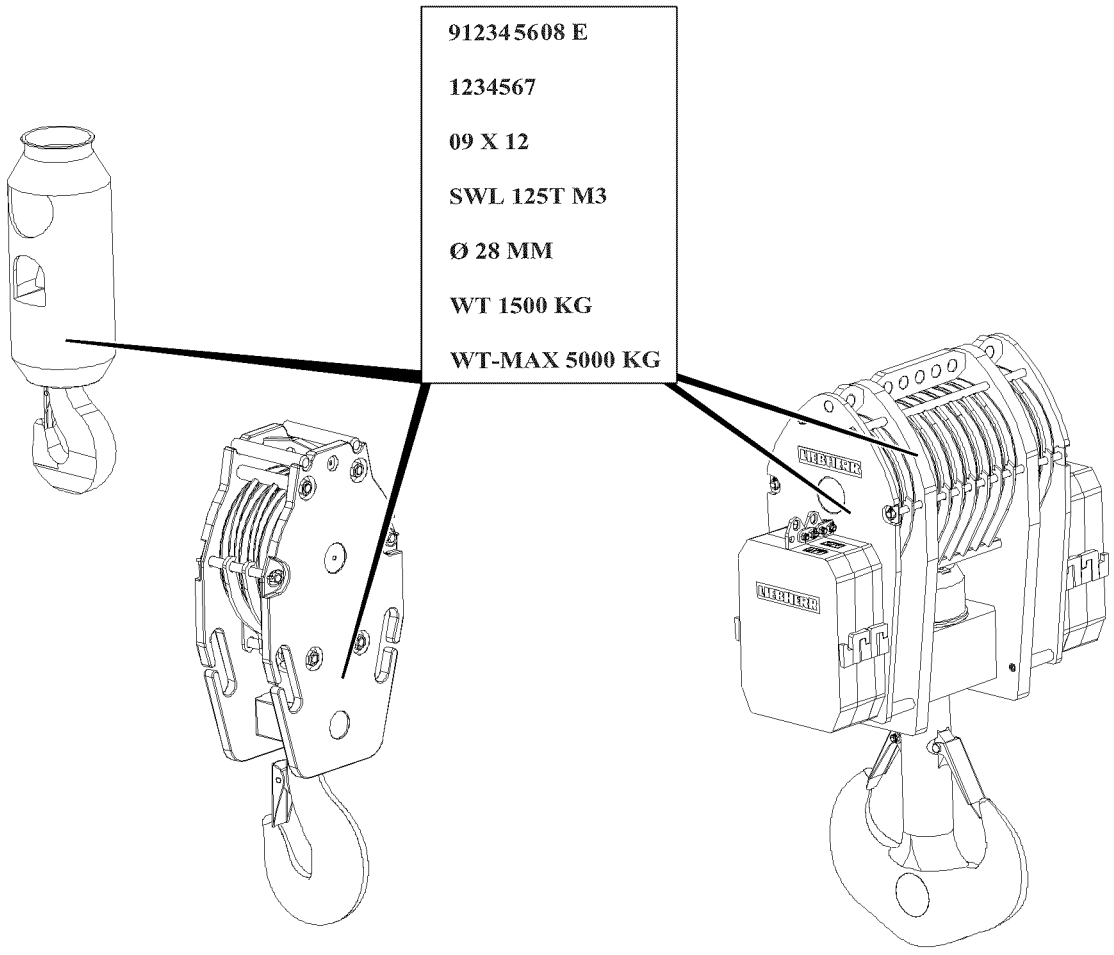

Fig.118509

Note

- For the load hooks and hook blocks approved for this crane type refer to the load chart.
- The hook blocks shown are examples only and can deviate from the existing hook block.

Punch mark area	Explanation
912345608 E	Liebherr Id. No. „E = entschärft (deburred)“
123456	Series or factory test number
09 X 12	Month of construction / supplier marks / year of construction
SWL 125T M3	SWL (Safe Working Load) = Load carrying capacity for power train group M3
Ø 28 mm	Hoist rope diameter
WT 1500 Kg	WT (Weight Tara) = Own weight (without auxiliary weights)

copyright © Liebherr-Werk Ehingen GmbH 2016

Punch mark area	Explanation
WT-MAX 5000 Kg	WT-Max = Maximum permissible own weight of lower pulley block and total number of progressively installed auxiliary weights
	Limits the number of installed auxiliary weights
	Determination via addition of assembled own weights (number of auxiliary weights + hook block)

Identifications on the hook block or load hooks

2 Identifications on single hook or double hook

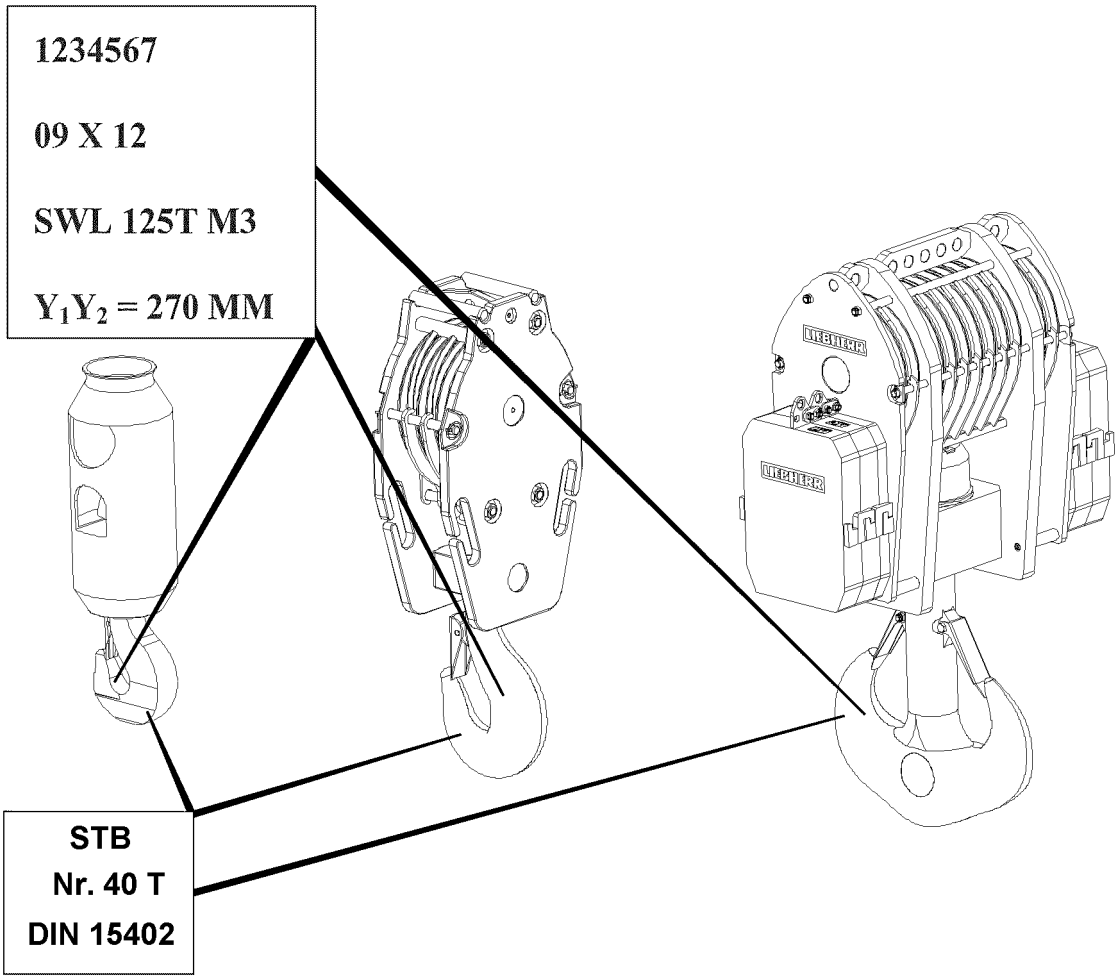

Fig.118510

Punch mark area	Explanation
STB	Hook manufacturer
40–T	Hook number + strength class according to DIN 15 400
DIN	Hook shape according to DIN 15 401 /DIN 15 402
123456	Series or factory test number
09 X 12	Month of construction / supplier marks / year of construction

LWE/ab Muli 010/24201-02-02/en

copyright © Liebherr-Werk Ehingen GmbH 2016

Punch mark area	Explanation
SWL 125T M3	SWL (Safe Working Load) = Load carrying capacity for power train group M3
Y1Y2 = 270 mm	Dimension Y or dimension Y1 and dimension Y2 according to DIN (= Test dimensions for recurrent tests)

Identifications on single hook or double hook

3 Identifications on auxiliary weights

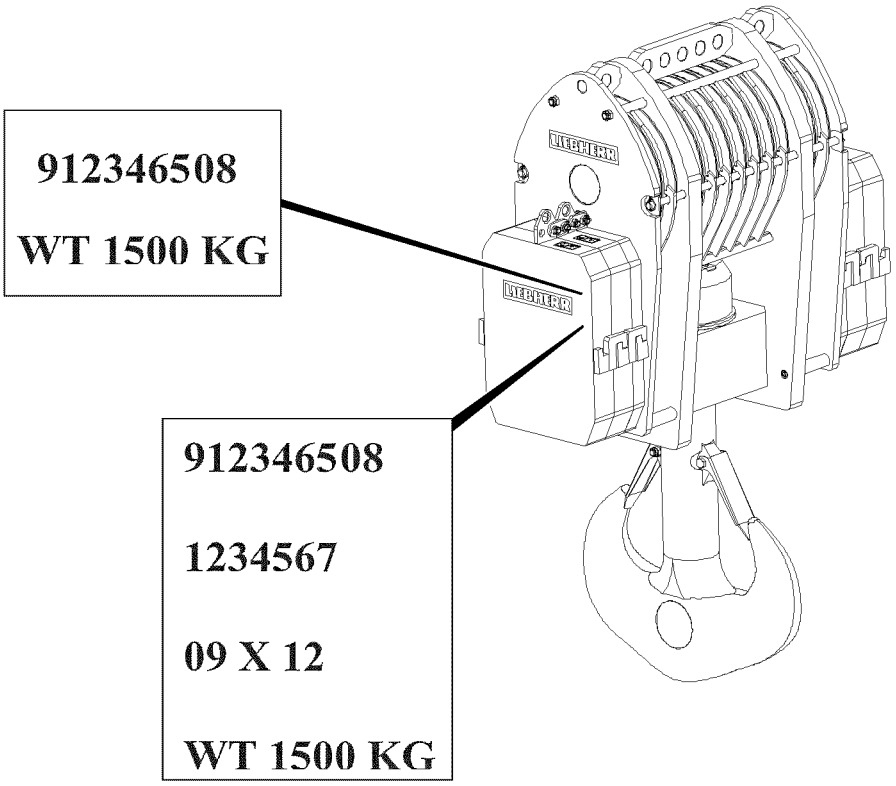

Fig.118511

Note

▶ The own weight of the individual auxiliary weight is noted on the side on the respective auxiliary weight.

LWE/ab Muli 010/24201-02-02/en

copyright © Liebherr-Werk Ehingen GmbH 2016

3.1 Identifications on auxiliary weights at delivery

Punch mark area	Explanation
912346508	Liebherr Id. No.
WT 1500 Kg	WT (Weight Tara) = Own weight of individual auxiliary weight

Identifications of auxiliary weights at delivery

3.2 Identifications on auxiliary weights for reorder

Punch mark area	Explanation
912346508	Liebherr Id. No.
123456	Series or factory test number
09 X 12	Month of construction / supplier marks / year of construction
WT 1500 Kg	WT (Weight Tara) = Own weight of individual auxiliary weight

Identifications of auxiliary weights at reorder

LWE/ab Muli 010/24201-02-02/en

copyright © Liebherr-Werk Ehingen GmbH 2016

2.06 Antifall guards on the crane

1	Safety guidelines	3
2	Preparing a ladder	5
3	Retaining pipes on the crane superstructure	6
4	Hook points on the crane superstructure	7
5	Hook points on the telescopic boom	8
6	Hook points on the folding jib, the folding jib extension and the telescope extension	11
7	Platforms on the crane chassis	13

LWE/ab Muli 010/24201-02-02/en

copyright © Liebherr-Werk Ehingen GmbH 2016

LWE/ab Muli 010/24201-02-02/en

Fig.195219

copyright © Liebherr-Werk Ehingen GmbH 2016

1 Safety guidelines

WARNING
Danger of falling!
Death or severe injuries.
- ▶ The assembly personnel must secure themselves to prevent falling.
- ▶ Move cautionary and anticipatorily on the crane or on components.
- ▶ Cary out all work, where there is a danger of falling with suitable aids.

If aids are not available and work cannot be carried out on the ground:
- ▶ Secure assembly personnel with supplied fall arrest system to prevent falling.
- ▶ Attach the fastening system on the hook points as well as on the safety ropes.
- ▶ Step on the aids, ladders and catwalks with clean shoes.
- ▶ Keep aids, ladders and catwalks free of heavy dirt, snow and ice.

NOTICE
Hook points can be ripped off!
- ▶ Do **not** fasten loads or objects on the hook points.

Fig.121114

1.1 Sign Hook points

The sign **3** marks the hook points, where assembly personnel must hook in with a fall arrest system to secure themselves against falling.

copyright © Liebherr-Werk Ehingen GmbH 2016

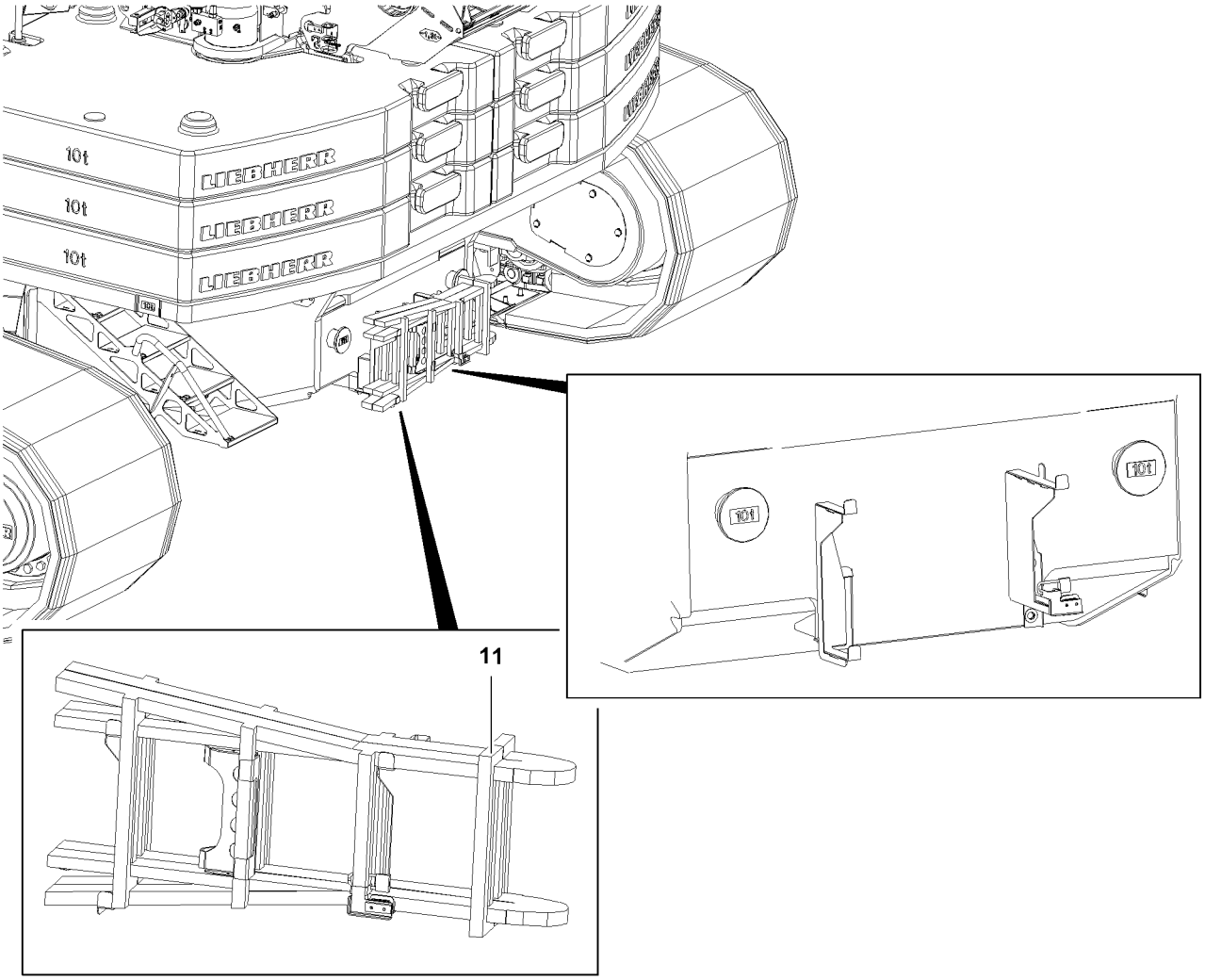

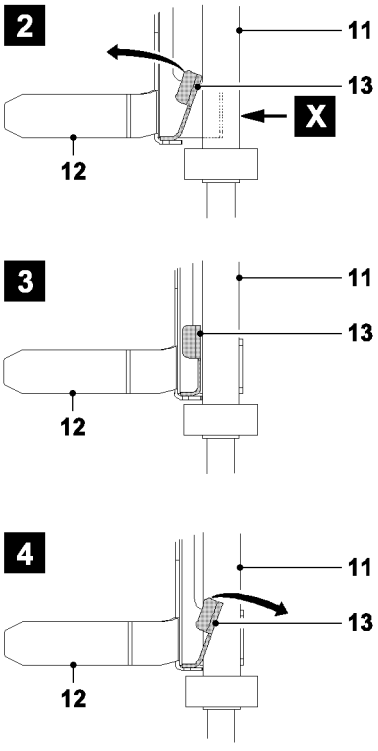

Fig.117374

LWE/ab Muli 010/24201-02-02/en

copyright © Liebherr-Werk Ehingen GmbH 2016

2 Preparing a ladder

Note

- ▶ For assembly work and disassembly work on the telescopic boom, the folding jib and the folding jib extension, the supplied ladder **11** with hook device **12** must be used.
- ▶ The ladder **11** is carried along on the central ballast.

WARNING

Danger of accident!

If the following notes are not observed, the ladder can tip and the assembly personnel can fall from the ladder and sustain life-threatening injuries.

- ▶ Replace damaged ladders immediately.
- ▶ Use solely the supplied ladder **11**.
- ▶ The hook device **12** on the ladder serves as protection from falling over. For all assembly work and disassembly work on the folding jib, folding jib extension and telescopic boom, the ladder with hook device **12** must be used.
- ▶ The ladder must be set up stable and safely accessible.
- ▶ For safe handling of ladder, observe the safety guidelines on the ladder.

2.1 Installing the hook device on the ladder

Before using the ladder as a leaning ladder, the hook device **12** must be installed on a rung.

- ▶ Push the ladder with the required rung against the locking plates **13** on the hook device **12** (point **X**), see illustration **1**, illustration **2**.

Result:

- – The locking plates **13** spring in direction of the arrow and release the receptacle on the hook device **12** for the rung, see illustration **3**.

- ▶ Push the hook device **12** „upward“.

Result:

- – The locking plates **13** spring (arrow) „back“ into their original position by themselves and secure the rung, see illustration **4**.

LWE/ab Muli 010/24201-02-02/en

copyright © Liebherr-Werk Ehingen GmbH 2016

3 Retaining pipes on the crane superstructure

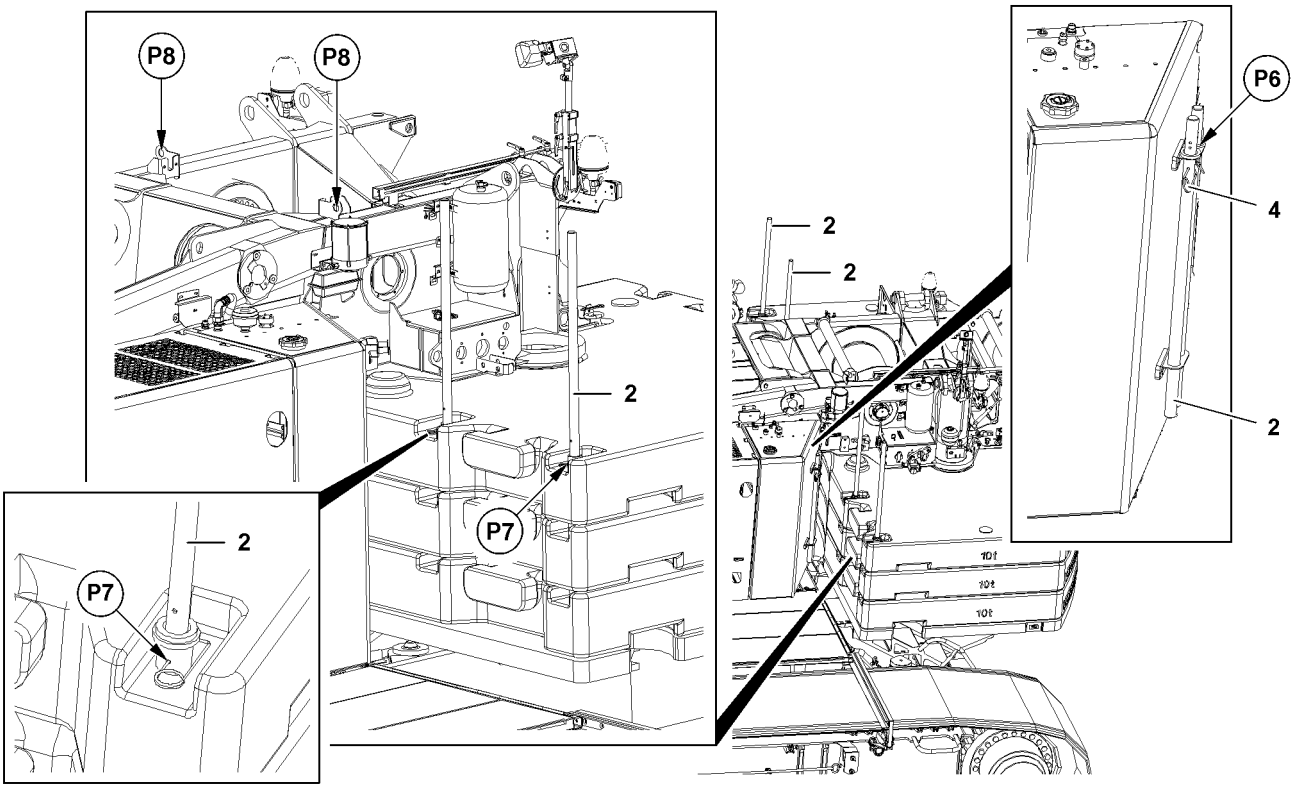

Fig.123719

WARNING
When working aloft, there is a danger of falling!
If the following notes are not observed, the assembly personnel could fall and suffer life-threatening injuries.

- ▶ Assembly personnel must wear approved catch system and protection equipment before performing any assembly work and disassembly work and maintenance work on the crane superstructure.
- ▶ The assembly personnel must hook themselves on the hook points **P8** with an approved fall arrest system to prevent them from falling.

NOTICE
Danger of damage!

- ▶ Never hang loads or objects on the hook points **P8**.

Make sure that the following prerequisite is met:

– The chassis platform is installed.

3.1 Installing the retaining pipes in working position

- ▶ Remove the retaining pipes **2** in transport position **P6**.
- ▶ Install the retaining pipes **2** on the working position **P7** and secure with spring retainer **4**.

3.2 Installing the retaining pipes in transport position

- ▶ Remove the retaining pipes **2** and install in transport position **P6**.
- ▶ Secure the retaining pipes **2** in transport position **P6** with spring retainer **4**.

LWE/ab Muli 010/24201-02-02/en

copyright © Liebherr-Werk Ehingen GmbH 2016

4 Hook points on the crane superstructure

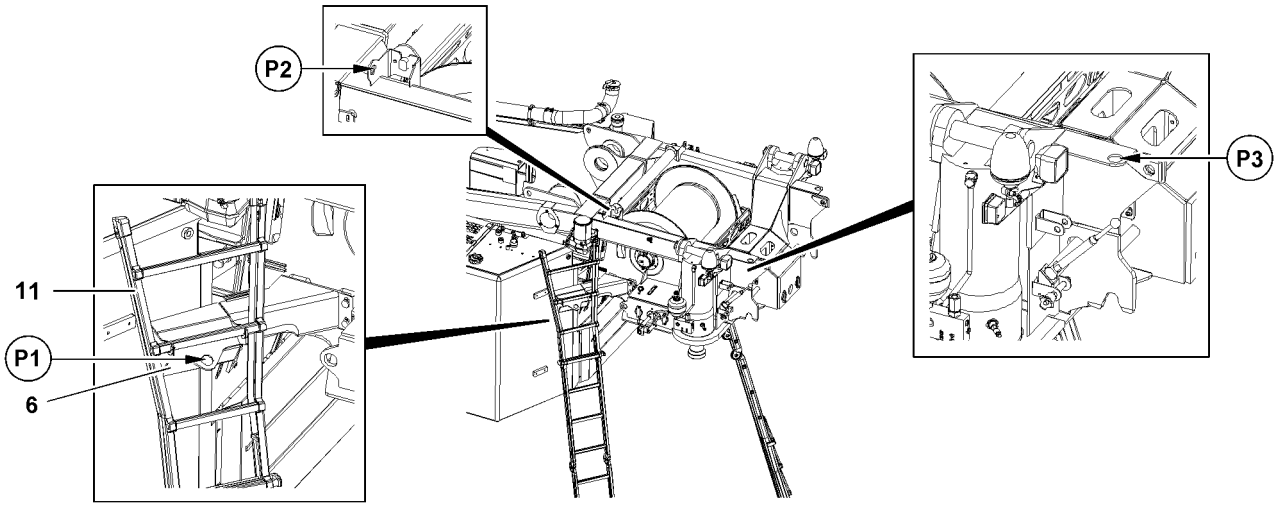

Fig.123981

Hook point **P1**, hook point **P2** and hook point **P3** are installed on the crane superstructure.

WARNING
Danger of falling!
During assembly and disassembly, assembly personnel must be secured with appropriate aids to prevent them from falling. If this is not observed, assembly personnel could fall and suffer life-threatening or fatal injuries.

- ▶ All work, where there is a danger of falling must be carried out with suitable aids (for example: lifting platforms, scaffoldings, ladders, auxiliary crane).
- ▶ If aids are not available and work cannot be carried out from the ground, then the assembly personnel must secure themselves with the supplied fall arrest system to prevent falling, see Crane operating instructions, chapter 2.04.
- ▶ For assembly work, disassembly work and maintenance work on the rear of the crane superstructure, hang ladder **11** on plate **6**.
- ▶ Use solely the supplied ladder **11**.
- ▶ For safe handling of ladder, observe the safety guidelines on the ladder.
- ▶ Step on the ladder solely with „clean shoes“.
- ▶ Keep the ladder clean and free of snow and ice.
- ▶ The assembly personnel must secure themselves on hook point **P1**, on hook point **P2** or on hook point **P3** with the supplied fall arrest system to prevent them from falling.

WARNING
Danger of damage!

- ▶ Do **not** fasten loads or objects on hook point **P1**, hook point **P2** and hook point **P3**.

- ▶ Only wear approved fall arrest system and protective equipment.
- ▶ Clean dirty shoes.
- ▶ Hang ladder **11** in plate **6** and set it up stable.
- ▶ Hang fall arrest systems on hook point **P1** or hook point **P2** or hook point **P3**.

copyright © Liebherr-Werk Ehingen GmbH 2016

5 Hook points on the telescopic boom

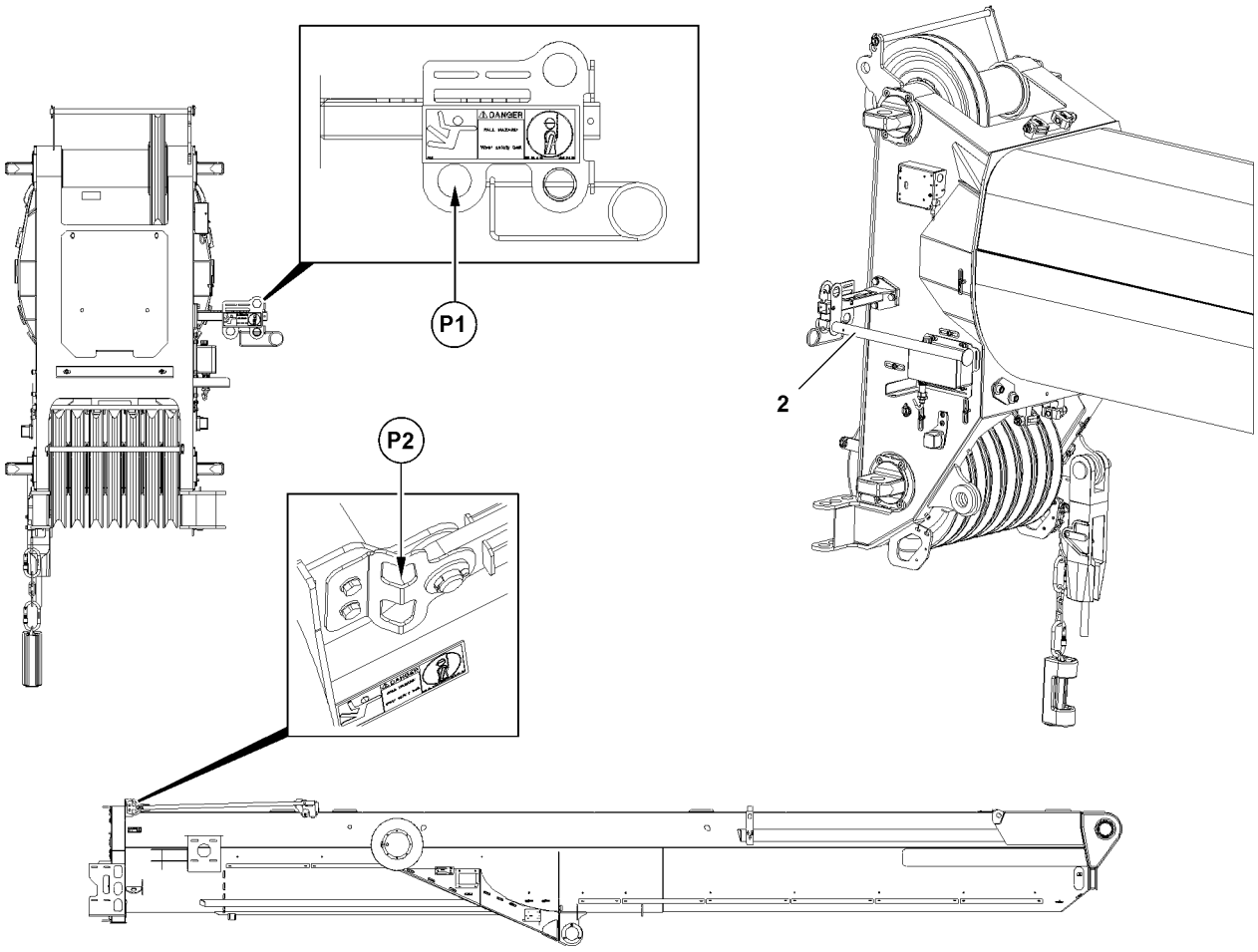

Fig.123720

Hook point **P1** and hook point **P2** are installed on the telescopic boom.

DANGER
When working aloft, there is a danger of falling!
If the following notes are not observed, the assembly personnel could fall and suffer life-threatening injuries.

- ▶ Before any assembly work, disassembly work and maintenance work on the crane superstructure and the telescopic boom, the assembly personnel must wear the approved safety harnesses and protective equipment.
- ▶ For assembly work and disassembly work, the ladder **with hook device** is hooked on pipe **2**, see also section „Installing the hook device on the ladder“.
- ▶ The assembly personnel must secure itself with approved safety harnesses on hook point **P1** or hook point **P2** to prevent falling.

DANGER
Danger of damage!

- ▶ Do **not** fasten loads or objects on hook point **P1** or hook point **P2**.

LWE/ab Muli 010/24201-02-02/en

copyright © Liebherr-Werk Ehingen GmbH 2016

Empty page!

LWE/ab Muli 010/24201-02-02/en

copyright © Liebherr-Werk Ehingen GmbH 2016

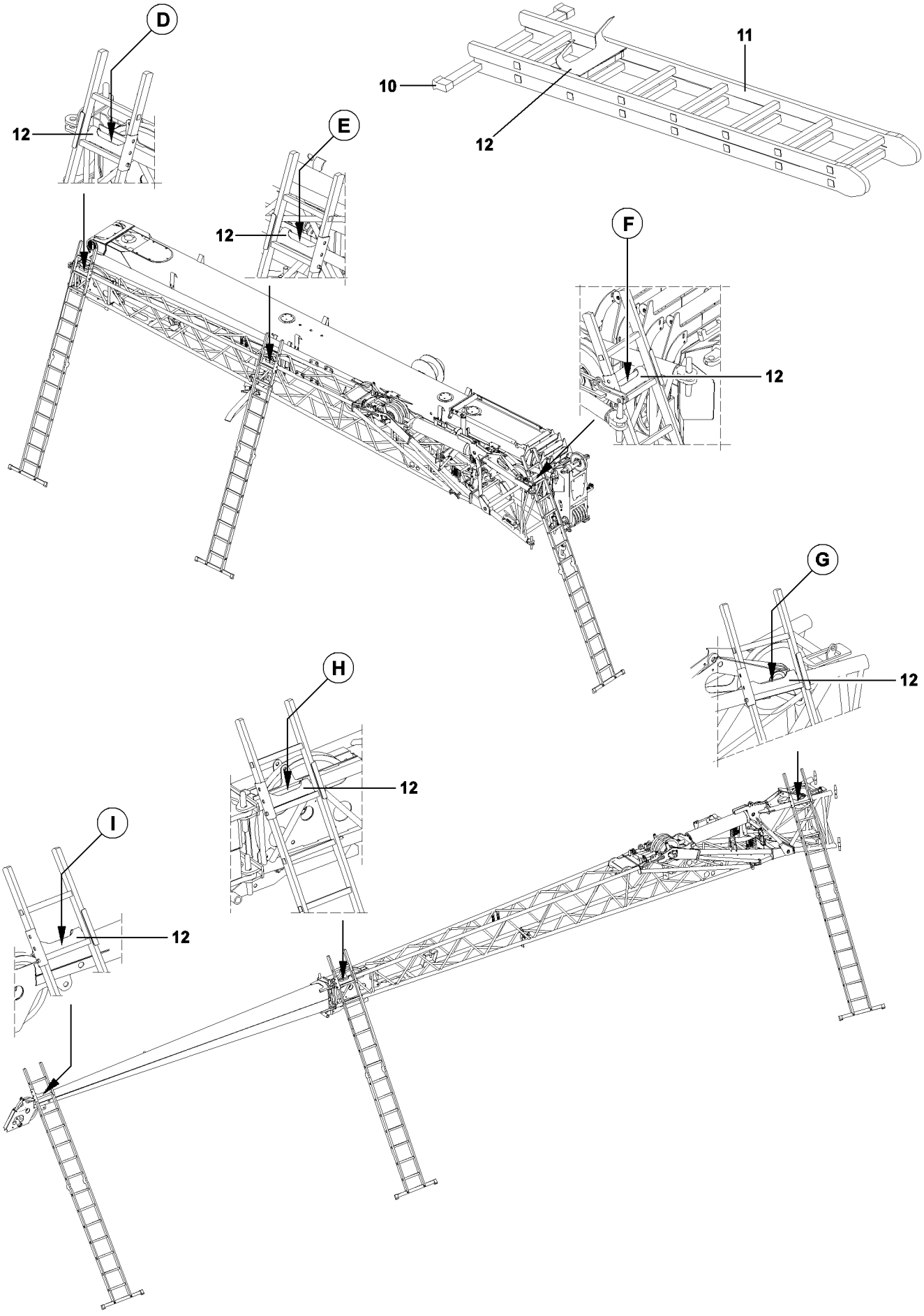

Fig.102242

LWE/ab Muli 010/24201-02-02/en

copyright © Liebherr-Werk Ehingen GmbH 2016

6 Hook points on the folding jib, the folding jib extension and the telescope extension

WARNING
When working aloft, there is a danger of falling!
If the following notes are not observed, the ladder can tip and the assembly personnel can fall from the ladder and sustain life-threatening injuries.

- ▶ For all assembly work and disassembly work on the folding jib, the telescope extension and the folding jib extension, use the ladder **11** with cross brace **10** and hook device **12**, see section „Assembling the hook device on the ladder“.
- ▶ Hang the ladder with hook device **12** on the corresponding hook point and set it up stable.
- ▶ The ladder may not be used as a hang ladder. The ladder must be supported on the ground.
- ▶ For safe handling of ladder, observe the safety guidelines on the ladder.
- ▶ Step on the ladder solely with „clean shoes“.
- ▶ Assembly personnel must hook themselves onto the folding jib with approved an fall arrest system **3**, for example on the struts of the folding jib, the telescope extension and the folding jib extension and secure themselves to prevent them from falling.

For assembly work and disassembly work on the folding jib and the folding jib extension, use the following hook points for the ladder:

- **D** Hook point
- **E** Hook point
- **F** Hook point
- **G** Hook point
- **H** Hook point
- **I** Hook point

LWE/ab Muli 010/24201-02-02/en

copyright © Liebherr-Werk Ehingen GmbH 2016

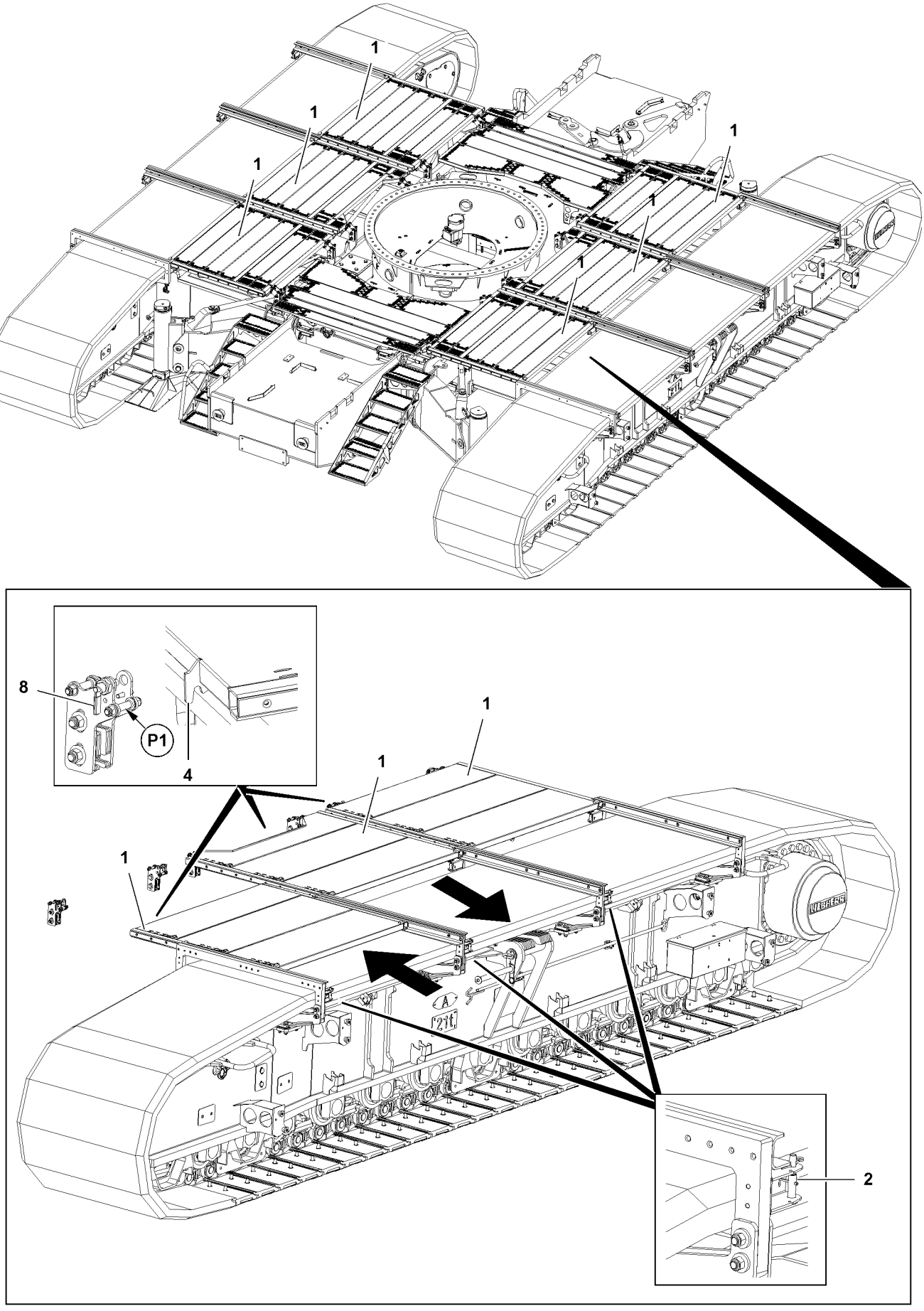

Fig.117380

LWE/ab Muli 010/24201-02-02/en

copyright © Liebherr-Werk Ehingen GmbH 2016

7 Platforms on the crane chassis

WARNING
When working aloft, there is a danger of falling!
▶ Properly assemble and secure all fall protection equipment, such as platforms, catwalks, ladders and railings on the crane chassis.

WARNING
Danger of falling due to overload!
If the chassis platform is subjected to a weight of more than 0.3 t , then the chassis platform can break.
Personnel can fall and be fatally injured.
▶ Do not subject the chassis platform with a weight of more than 0.3 t.

Note
▶ The chassis platforms are transported together with the crawler carriers.

7.1 Installing the chassis platform

Make sure that the following prerequisite is met:
– The engine is turned off.

CAUTION
Danger of crushing hands!
When sliding the platforms, hands can be crushed.
▶ Move platforms especially careful.

▶ Release and unpin all retaining pins **2**.
▶ Slide the platforms **1** to the crawler center section and hang it with the hooks **4** in the retainers **P1**.
▶ Secure the platforms **1** with latches **8**.

7.2 Removing the chassis platform

Make sure that the following prerequisite is met:
– The engine is turned off.

CAUTION
Danger of crushing hands!
When sliding the platforms, hands can be crushed.
▶ Move platforms especially careful.

▶ Release the latches **8**.
▶ Slide all platforms **1** to the crawler travel gear.
▶ Pin and secure all platforms **1** with retaining pins **2** in transport position.

LWE/ab Muli 010/24201-02-02/en

copyright © Liebherr-Werk Ehingen GmbH 2016

Empty page!

copyright © Liebherr-Werk Ehingen GmbH 2016

2.07 Access to the crane

1	Components on the crane	3
2	Ascent and descent on the crane chassis	5
3	Walking and stepping surfaces	13

LWE/ab Muli 010/24201-02-02/en

copyright © Liebherr-Werk Ehingen GmbH 2016

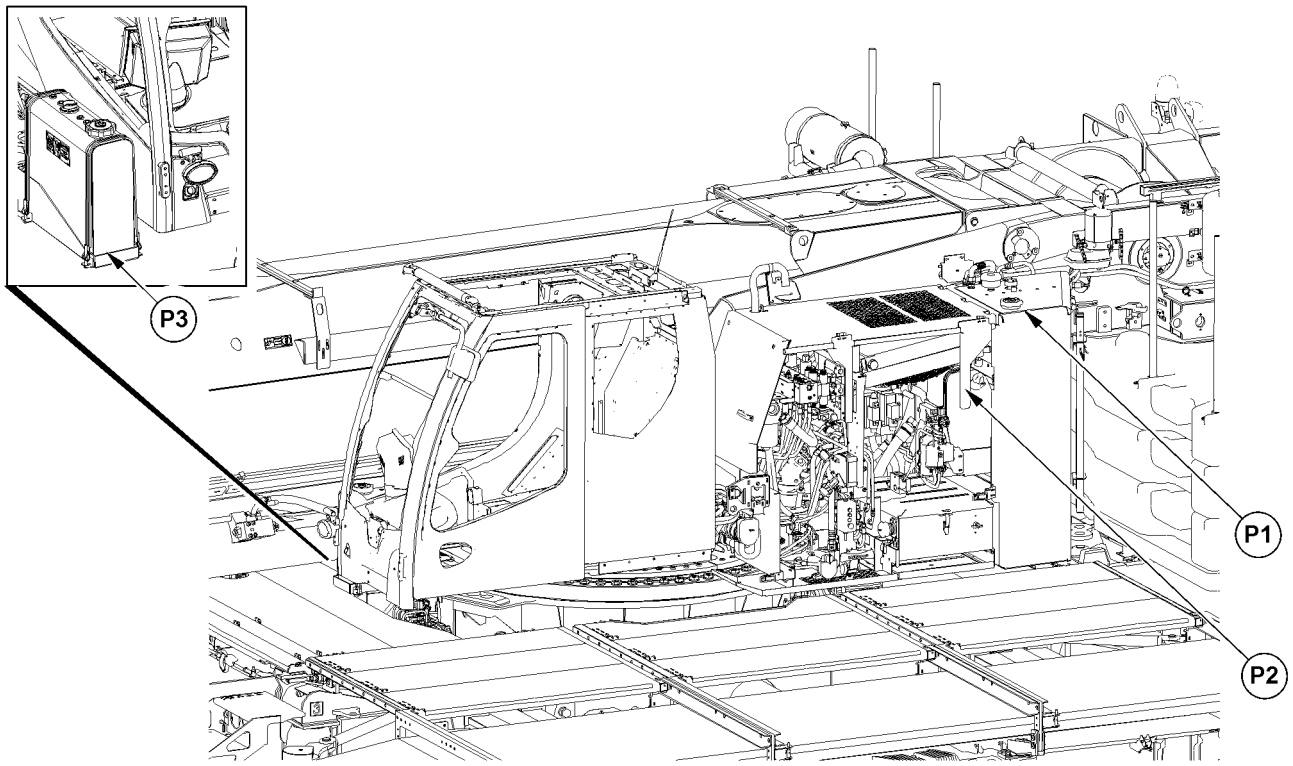

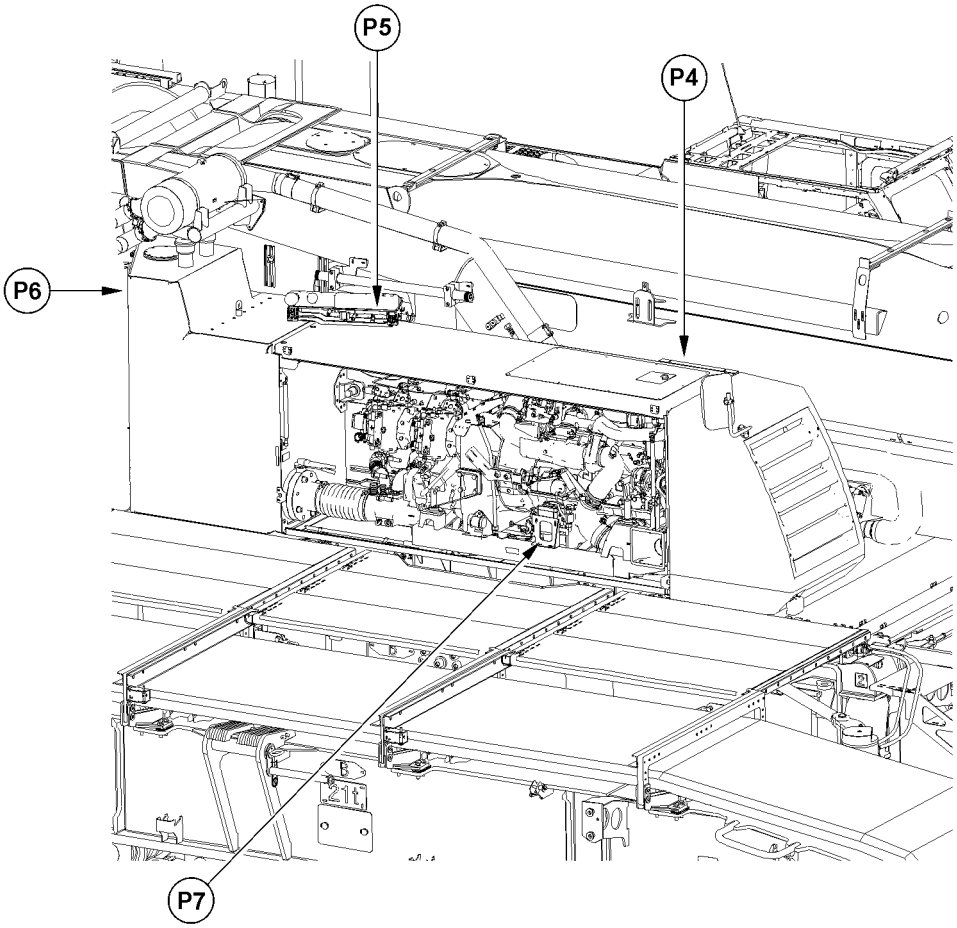

Fig.117376

LWE/ab Muli 010/24201-02-02/en

copyright © Liebherr-Werk Ehingen GmbH 2016

1 Components on the crane

1.1 Adding service fluids

1.1.1 Refueling

The fuel tanks are installed on both sides on the crane chassis at position **P1**.

▶ Refueling, see Crane operating instructions, chapter 7.05.

1.1.2 Adding Urea solution

The urea tank is installed on the crane chassis at position **P2**.

▶ Adding urea solution, see Crane operating instructions, chapter 7.05.

1.1.3 Refueling fuel*

The fuel tank is installed on the crane chassis at position **P3**.

▶ Refueling fuel, see Crane operating instructions, chapter 7.05.

1.2 Checking components on the crane superstructure

1.2.1 Checking the engine oil level

Note

▶ The oil level on the Diesel engine can be checked comfortably on the display unit in the driver's cab. See Crane operating instructions, chapter 7.04.

The dipstick for the Diesel engine is at position **P4**.

▶ Check the oil level on the Diesel engine, see Crane operator's instructions, chapter 7.05 and separate operating instructions of the engine manufacturer.

1.2.2 Checking the coolant level in the expansion tank

The expansion tank is installed on the crane chassis at position **P5**.

▶ Check the coolant level, see Crane operating instructions, chapter 7.05.

1.2.3 Checking the oil level and filter on the hydraulic oil tank

The hydraulic oil tank with the filters is installed on the crane chassis at position **P6**.

▶ Check the oil level and filter, see Crane operating instructions, chapter 7.05.

1.2.4 Checking the fuel preliminary filter

The fuel preliminary filter is installed on the crane chassis at position **P7**.

▶ Check the fuel preliminary filter, see Crane operating instructions, chapter 7.05.

LWE/ab Muli 010/24201-02-02/en

copyright © Liebherr-Werk Ehingen GmbH 2016

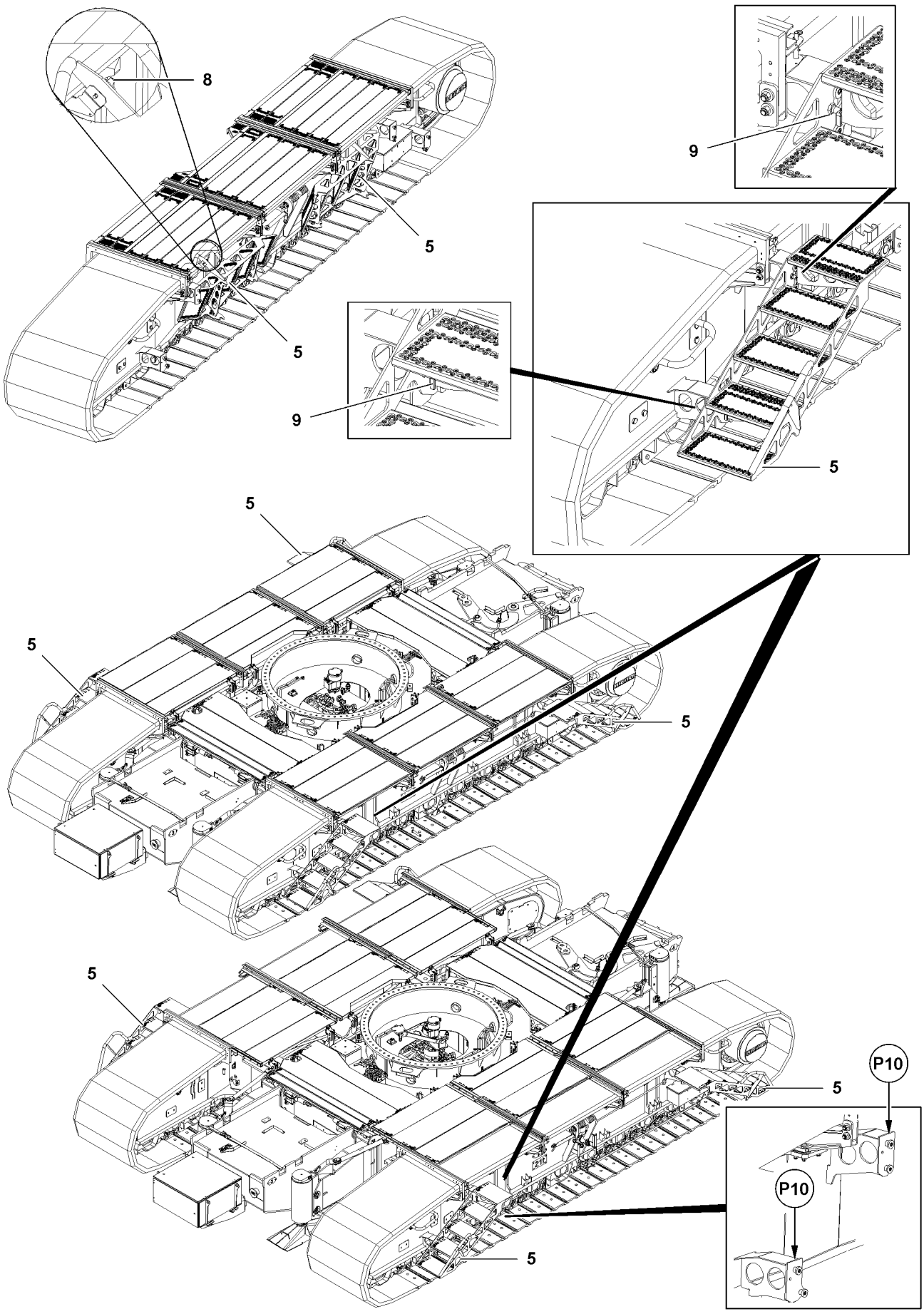

Fig.117378

LWE/ab Muli 010/24201-02-02/en

copyright © Liebherr-Werk Ehingen GmbH 2016

2 Ascent and descent on the crane chassis

WARNING
Danger of falling!
If the following guidelines are not observed, assembly personnel can fall down and be killed or severely injured!
- ▶ Ladders, walking and stepping surfaces are free of objects and obstacles!
- ▶ Step on ladders, walking and stepping surfaces only with sufficiently clear height!
- ▶ Step on ladders, walking and stepping surfaces only with clean shoes!
- ▶ Keep ladders, walking and stepping surfaces free of heavy dirt, snow and ice!
- ▶ The danger zone is free of personnel and objects during folding and swinging of the folding ladder!
- ▶ When accessing the ladder, do not hold any objects in your hands!
- ▶ Stepping on ladders by persons weighing more than 150 kg is prohibited!
- ▶ Do not use handles as rigging points!
- ▶ Subject the handles with no more than maximum 100 kg !
- ▶ Do not step on damaged ladders, walking and stepping surfaces and replace them immediately!

Note
- ▶ The steps are carried along in transport position on the crawler carrier.

Step installation			
Track	**Width (mm)**	**Extension condition**	**Installation of steps**
Retracted	3500 mm	0 % / 0 %	Crawler carrier
Reduced	4900 mm	50 % / 50 %	Crawler carrier
Wide	6300 mm	100 % / 100 %	Central ballast
Asymmetrical	4900 mm	0 % / 100 %	Crawler carrier / central ballast
		100 % / 0 %	Central ballast / crawler carrier

NOTICE
Damage to steps!
Before changing the track of the crane from wide to reduced or narrow, the steps must be installed on the crawler carrier.
- ▶ Install the steps on the crawler carrier.

LWE/ab Muli 010/24201-02-02/en

copyright © Liebherr-Werk Ehingen GmbH 2016

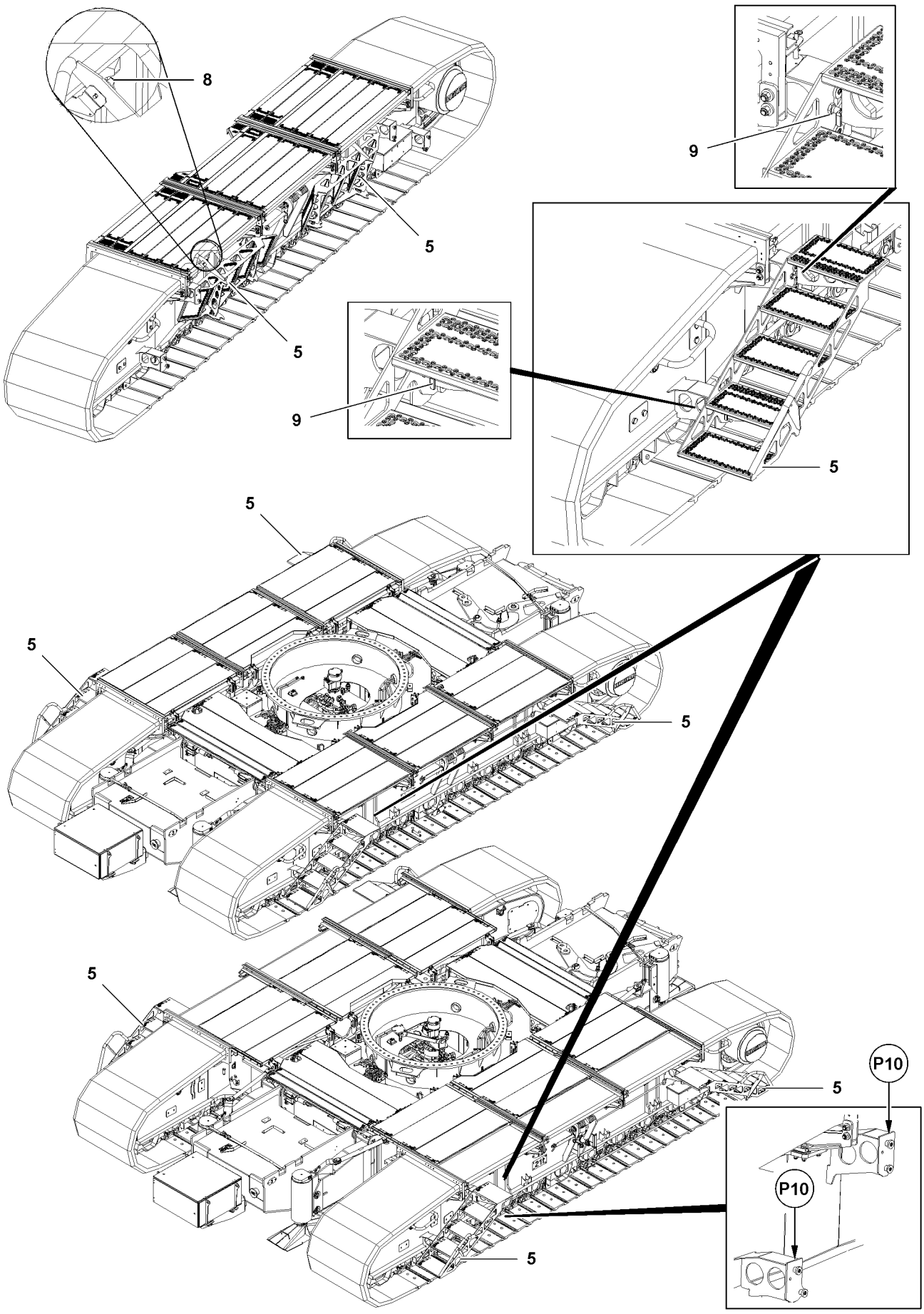

Fig.117378

LWE/ab Muli 010/24201-02-02/en

copyright © Liebherr-Werk Ehingen GmbH 2016

2.1 Installing the steps in ascent or descent position at a track of 4.9 m (50 %) (reduced) and track of 3.5 m (0 %) (retracted)

CAUTION
Danger of crushing!
During assembly and disassembly of the steps **5** fingers and hands can be crushed!
▶ Do not reach into the retainers!

▶ Unpin the ball locking pin **8** and remove the steps **5** from park position.
▶ Hang the steps **5** at position **P10** on the crawler carrier.
▶ Secure the steps **5** in operating position: Lock the latch **9**.

LWE/ab Muli 010/24201-02-02/en

copyright © Liebherr-Werk Ehingen GmbH 2016

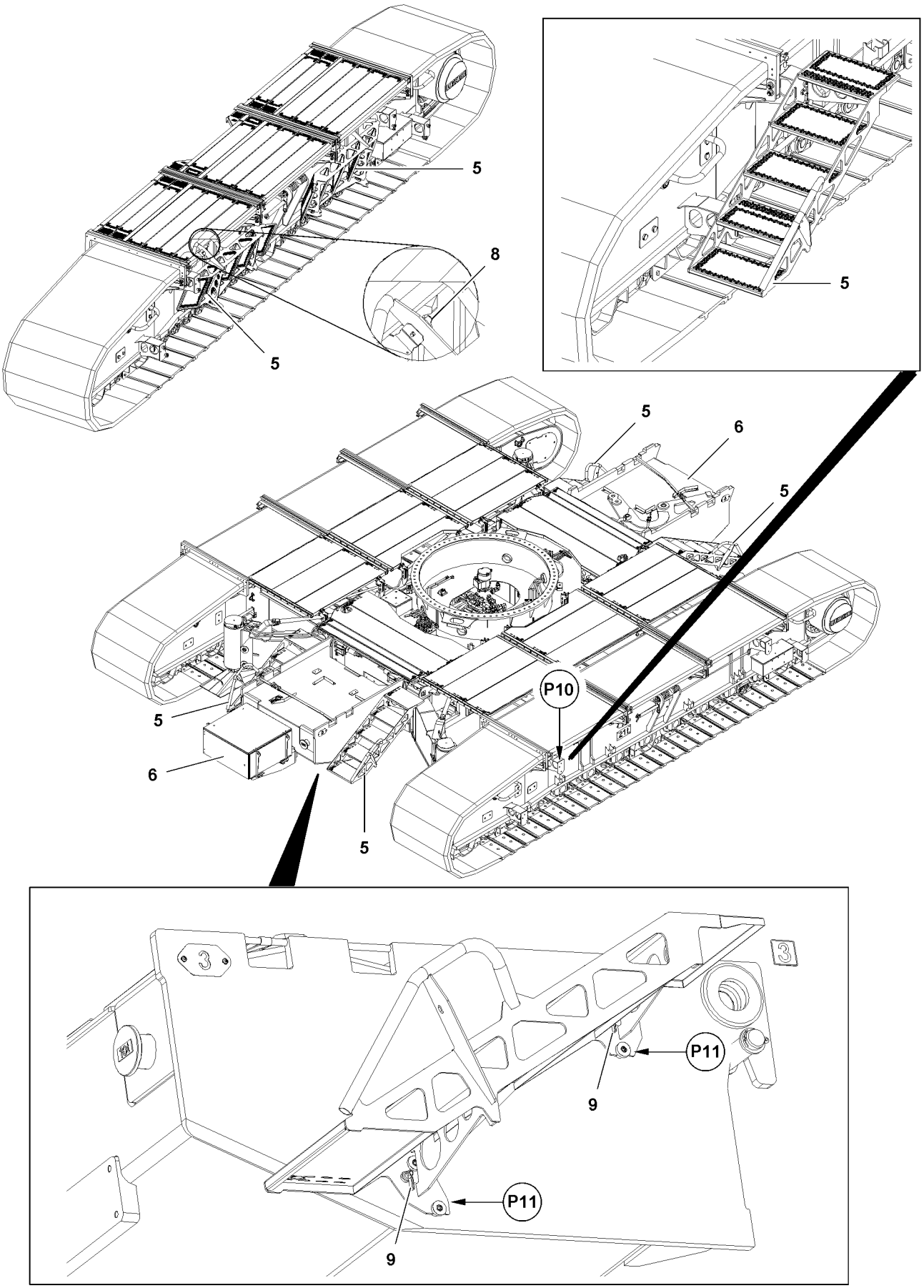

Fig.117379

LWE/ab Muli 010/24201-02-02/en

copyright © Liebherr-Werk Ehingen GmbH 2016

2.2 Installing the steps in ascent and descent position at a track of 6.3 m (100 %) (wide)

Make sure that the following prerequisites are met:
- The crawler carrier is completely moved out.
- The support beams are swung out.

CAUTION
Danger of crushing!
During assembly and disassembly of the steps **5** fingers and hands can be crushed!
▶ Do not reach into the retainers!

▶ Unpin the ball locking pin **8** and remove the steps **5** from park position.
▶ Hang the steps **5** at position **P11** on the central ballast **6**.
▶ Secure the steps **5** in operating position: Lock the latch **9**.

2.3 Installing the steps in ascent and descent position at an asymmetric track of 4.9 m (0 % / 100 %) (retracted / wide)

Make sure that the following prerequisites are met:
- The crawler carrier is completely moved out on one side.
- The support beams are swung out.

CAUTION
Danger of crushing!
During assembly and disassembly of the steps **5** fingers and hands can be crushed!
▶ Do not reach into the retainers!

▶ Unpin the ball locking pin **8** and remove the steps **5** from park position.
▶ Hang the steps **5** at position **P11** on the central ballast **6**.
▶ Secure the steps **5** in operating position: Lock the latch **9**.
▶ Unpin the ball locking pin **8** and remove the steps **5** from park position.
▶ Hang the steps **5** at position **P10** on the crawler carrier.
▶ Secure the steps **5** in operating position: Lock the latch **9**.

LWE/ab Muli 010/24201-02-02/en

copyright © Liebherr-Werk Ehingen GmbH 2016

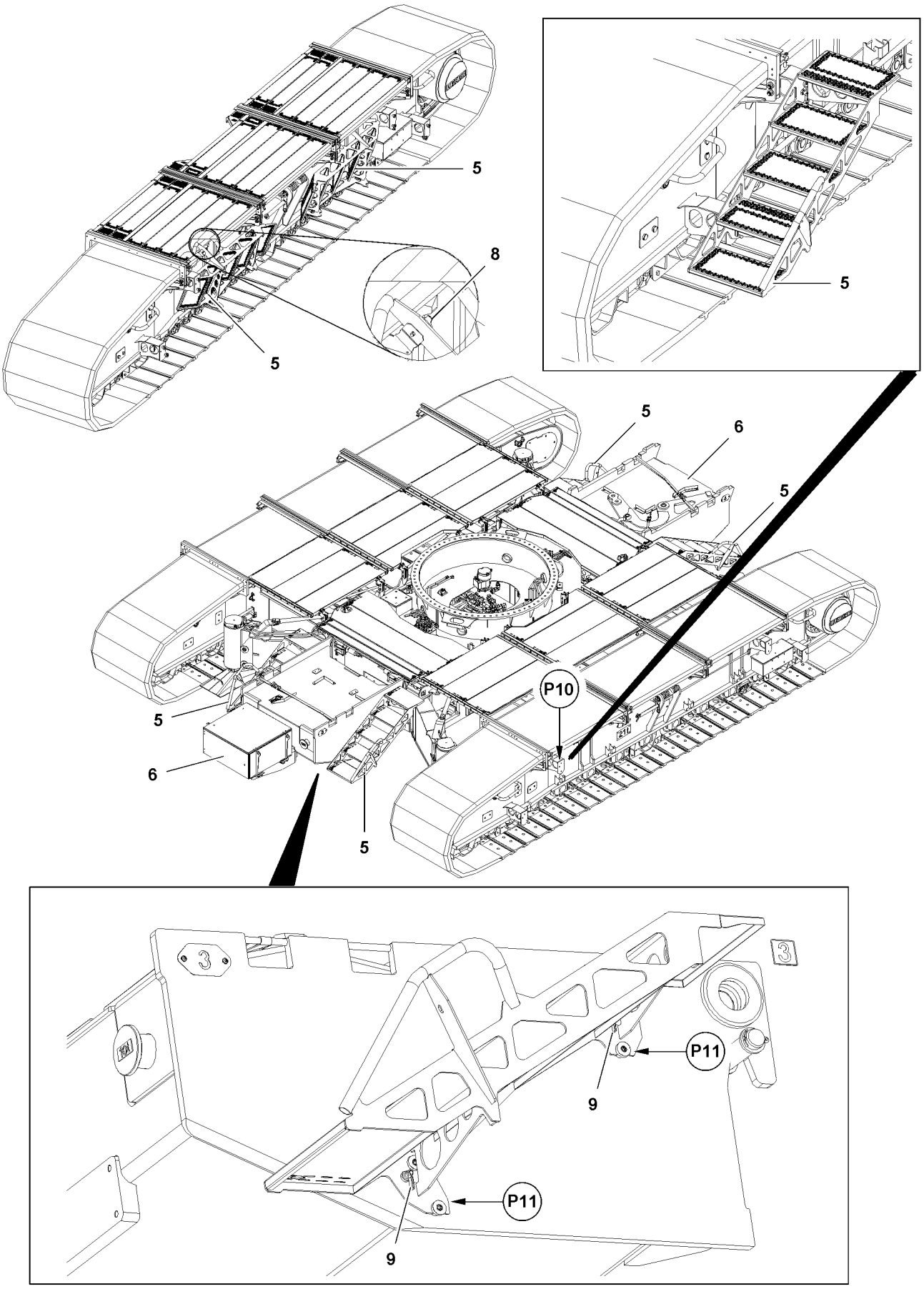

Fig.117379

LWE/ab Muli 010/24201-02-02/en

copyright © Liebherr-Werk Ehingen GmbH 2016

2.4 Installing the steps in transport position

CAUTION
Danger of crushing!
During assembly and disassembly of the steps **5** fingers and hands can be crushed!
▶ Do not reach into the retainers!

▶ Release the latches **9**.
▶ Take the steps **5** off from operating position.
▶ Install the steps **5** in transport position.
▶ Secure the steps **5**: Insert the ball locking pin **8**.

LWE/ab Muli 010/24201-02-02/en

copyright © Liebherr-Werk Ehingen GmbH 2016

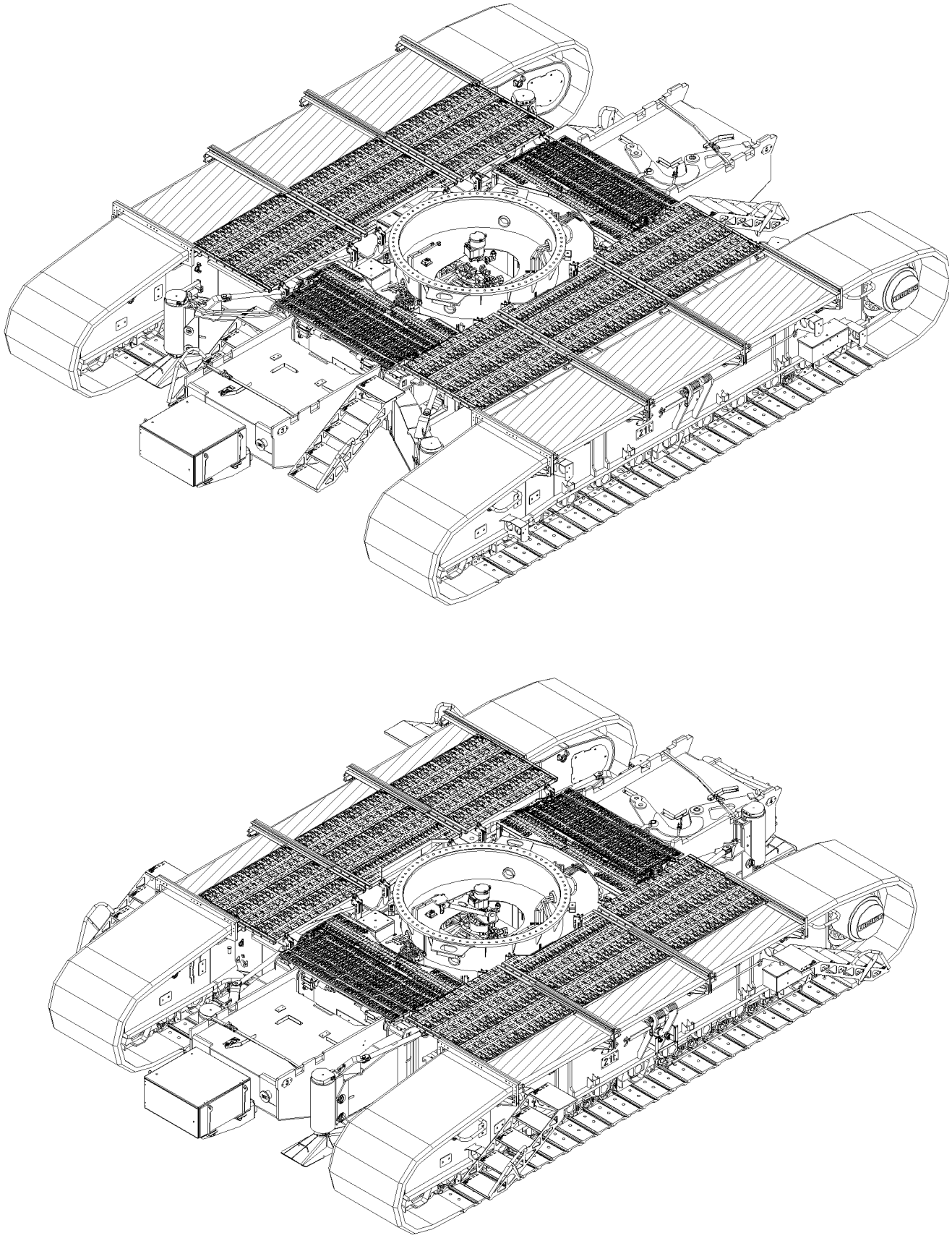

Fig.118011

LWE/ab Muli 010/24201-02-02/en

copyright © Liebherr-Werk Ehingen GmbH 2016

3 Walking and stepping surfaces

WARNING
Danger of falling!
If the following guidelines are not observed, assembly personnel can fall down and be killed or severely injured!
- ▶ Ladders, walking and stepping surfaces are free of objects and obstacles.
- ▶ Do not set down any loads on the walking and stepping surfaces.
- ▶ Step on ladders, walking and stepping surfaces only with sufficiently clear height.
- ▶ Do not trip over attachment parts.
- ▶ Step on ladders, walking and stepping surfaces only with clean shoes.
- ▶ Keep ladders, walking and stepping surfaces free of heavy dirt, snow and ice.
- ▶ Used only by persons, observe the maximum point load of 3000 N on the walking and stepping surfaces.
- ▶ It is prohibited to step on the roof of the driver's cab.

3.1 Accessible walking and stepping surfaces Crane chassis

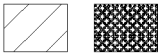

Fig.117610

Note
- ▶ The accessible walking and stepping surfaces are marked with these cross hatches.

3.2 Non-accessible surfaces

WARNING
Danger of falling!
If the surfaces are accessed, which are **not** approved for access, personnel can slip and fall down!
Personnel can be killed or injured!
When accessing surfaces, which are **not** approved for access, crane components can be damaged!
- ▶ Only step on accessible walking and stepping surfaces.
- ▶ Access to surfaces, which are **not** approved for access is prohibited.
- ▶ Stepping on surfaces with an incline of more than 5° is prohibited.

Fig.114702

Note
- ▶ The walking and stepping surfaces which are **not** approved for access are marked with these cross hatches.

copyright © Liebherr-Werk Ehingen GmbH 2016

Empty page!

copyright © Liebherr-Werk Ehingen GmbH 2016

2.08 Working in low temperatures

1	Working in low temperatures	3
2	Working in ambient temperatures up to -40 °C	3
3	Working in ambient temperatures below -40 °C	9

LWE/ab Muli 010/24201-02-02/en

copyright © Liebherr-Werk Ehingen GmbH 2016

LWE/ab Muli 010/24201-02-02/en

Fig.195219

copyright © Liebherr-Werk Ehingen GmbH 2016

1 Working in low temperatures

1.1 Required auxiliary equipment*

Note

▶ For work in low temperatures, between -25 °C and -40 °C , or in temperatures below -40 °C , **Liebherr-Werk Ehingen GmbH** offers numerous auxiliary equipment*.

WARNING

Danger of accident when working in low temperatures!

When working in low temperatures **without** auxiliary equipment, damage can occur to crane components.

Personnel can be severely injured or killed.

▶ Make sure that the crane is equipped for application and for work in low temperatures.

▶ When working in low temperatures, always act anticipatorily, slowly and with utmost caution.

▶ Make sure that the following danger notices are observed and adhered to.

2 Working in ambient temperatures up to -40 °C

This section contains important notices for application of Liebherr cranes in ambient temperatures to -40 °C.

Valid for:

– Liebherr Lattice mast cranes
– Liebherr Telescopic cranes

WARNING

The crane can topple over!

Disregard of crane documentation can cause the crane to topple over!

Personnel can be severely injured or killed!

▶ Observe and adhere to the crane documentation.

▶ Make sure that you have read and understood the safety technical notices for crane operation, see Crane operating instructions, chapter 2.04.

▶ Make sure that you have read and understood the safety technical notices for assembly / disassembly, see Crane operating instructions, chapter 5.01.

▶ Make sure that you have read and understood the notices for maintenance, see Crane operating instructions, chapter 7.01.

2.1 Measures before crane operation

NOTICE

Danger of property damage!

Low temperatures, such as snow, frost and ice can impair crane operation and cause problems on the crane.

▶ Carry out the following measures before crane operation.

– Make sure that all winches and rope pulleys are free of snow, frost and ice.
– Make sure that all cable and hose drums are easily moveable.
– Make sure that all rope pulleys are easily moveable.
– Make sure that counterweight / ballast plates are installed smoothly.
– Make sure that the support plates are supported exclusively with suitable and sufficiently load bearing materials.
– Make sure that support plates are supported on one side of the crane with greased polyamide plates.

LWE/ab Muli 010/24201-02-02/en

copyright © Liebherr-Werk Ehingen GmbH 2016

– Make sure that the support cylinders for crane operation are extended only to maximum 50 %.

2.1.1 Preheating hydraulic cylinders / hydraulic system on lattice mast cranes

NOTICE
Damage to hydraulic cylinders!
▶ Always preheat hydraulic cylinders at ambient temperatures below -25 °C - before crane operation.

WARNING
Death due to hydraulically actuated crane components!
When hydraulic cylinders are „warmed up“, personnel can be severely injured or killed.
▶ Make sure that no persons or objects are within the danger zone.

Preheat the pull cylinders in the derrick ballast guying before crane operation.

WARNING
The crane can topple over!
If the following points are not observed, the crane can topple over.
Personnel can be severely injured or killed.
▶ Make sure that a valid set up configuration has been entered and confirmed in the LICCON computer system.
▶ Make sure that there is no load on the hook of the boom system.
▶ Observe and adhere to the load charts.
▶ For ballast trailer: Make sure that the ballast trailer guide is fully retracted.
▶ Make sure that the derrick radius and the derrick ballast radius are identical.
▶ Make sure that the derrick ballast is laying completely on the ground.
▶ Make sure that the derrick guy rods hang vertically.
▶ Make sure that the derrick guying is relieved.
▶ Make sure that the F1-actual force (test point 1) is in the permissible range, see Crane operating instructions, chapter 4.02.

▶ Remove the guy rods from the pull cylinders to the derrick ballast properly, see Crane operating instructions, chapter 5.35 and chapter 5.36.

When the guy rods are properly removed:
▶ Retract and extend the pull cylinders several times.

Preheat additional hydraulic cylinders:
▶ Retract and extend hydraulic cylinders several times over the entire stroke length.

2.1.2 Preheating hydraulic cylinders / hydraulic system on telescopic cranes

NOTICE
Damage to hydraulic cylinders!
▶ Always preheat hydraulic cylinders at ambient temperatures below -25 °C - before crane operation.

WARNING
Death due to hydraulically actuated crane components!
When hydraulic cylinders are „warmed up“, personnel can be severely injured or killed.
▶ Make sure that no persons or objects are within the danger zone.

Preheat the luffing cylinder before crane operation.

NOTICE
Damage to hydraulic components!
▶ Make sure that the hydraulic oil - before starting crane operation with a load - has a temperature of at least 20 °C.

LWE/ab Muli 010/24201-02-02/en

copyright © Liebherr-Werk Ehingen GmbH 2016

Make sure that the following prerequisites are met:
- The crane is properly supported and horizontally aligned.
- The telescopic boom is fully telescoped in.
- There is no load on the hook.

▶ Luff the telescoped in telescopic boom up and down several times.

Preheat additional hydraulic cylinders:

▶ Retract and extend hydraulic cylinders several times over the entire stroke length.

2.1.3 Reducing hoist ropes - rope / strand pull

Note

▶ When using hoist ropes in temperature ranges between -25 °C and -40 °C , **Liebherr-Werk Ehingen GmbH** recommends to reduce the rope / strand pull of the hoist ropes for crane application.

NOTICE

Rope damage due to insufficient weight of the hook block!

▶ Observe and adhere to the „minimum required hook block weight“ in the load chart.

▶ Increase the rope reeving specified in the load chart.

Result:

- The rope / strand pull of the hoist rope is reduced.

2.1.4 Increasing the hook block - hook block weight

Note

▶ The calculation of the minimum required hook block weight is described in the load chart!

▶ Depending on the temperature range in which the crane is used, increase the minimum required hook block weight, see the following chart overview.

▶ Observe the permissible hook block weights for erection and take down of the boom systems in the erection and take down charts.

Crane application in ambient temperatures	Increase of minimum required hook block weight
To -30 °C	By 10 %
To -40 °C	By 15 %

2.2 Measures for crane operation

Crane structures and crane components are subjected to special stress in low temperature application. For that reason, crane operation in low temperatures require anticipatory working procedures, adapted to the weather conditions from the crane operator.

WARNING

Breakage of crane components!

Sudden jerky initiation or slow down of crane movements can lead to breakage of crane components. Personnel can be severely injured or killed.

▶ Initiate and slow down crane movements sensitively and with utmost caution.

▶ Initiate crane movements with utmost caution and at the lowest speed.

2.2.1 Interruption of crane operation.

In areas with ambient temperatures to -40 °C , **Liebherr-Werk Ehingen GmbH** recommends to leave the engine / the engines of crane running during the entire time of the interruption.

LWE/ab Muli 010/24201-02-02/en

copyright © Liebherr-Werk Ehingen GmbH 2016

Possible interruptions of crane work:
- Break times
- Shut down of crane over night

WARNING
An equipped crane with running engine / engines is unattended!
If an equipped crane with running engine / engines is turned off, the crane operator is obligated to carry out special measures.
If the following measures are not observed and adhered to by the crane operator, then the crane can topple over.
Personnel can be severely injured or killed.
▶ Make sure that the measures for interruption of crane work are adhered to, see Crane operating instructions, chapter 2.04.
▶ Make sure that the following measures are additionally observed.
▶ The crane operator bears the full responsibility for observance of all measures.

- If predicted wind speeds are higher than the maximum permissible wind speeds, see wind speed chart:
  - Place the boom down according to the erection and take down charts in time.
- Make sure that no movements can be carried out on the crane:
  - Respective electrical fuses in the control cabinet may only be removed after consultation with the **Service Department of Liebherr-Werk Ehingen GmbH**.
- Make sure that access to the crane and operation for unauthorized personnel is excluded:
  - Lock the driver's cab after leaving.
  - Pull the key of the driver's cab and store it safely.
  - Lock the crane operator's cab after leaving.
  - Pull the key of the crane operator's cab and store it safely.
- Make sure that the fill levels of Diesel fuel, engine oil and urea are regularly checked by an authorized person. Top off the fill levels if necessary.
- Make sure that the crane is checked in regular intervals by an authorized person for safe crane condition.

2.2.2 Driving two-engine cranes in low temperature application

If two engine cranes are driven in areas with ambient temperatures to -40 °C , **Liebherr-Werk Ehingen GmbH** recommends to let the engine in the crane superstructure idle while driving. This requires special measures on the crane to prevent engine damage on the superstructure engine when driving on uphill or downhill gradients up to maximum 25 %.

NOTICE
Engine damage!
If the oil level on the superstructure engine is insufficient, the engine can be damaged when driving on uphill / downhill gradients up to 25 %.
▶ Make sure that the fill levels of Diesel fuel, engine oil and urea on the crane superstructure are regularly checked by an authorized person. Top off the fill levels if necessary.
▶ Make sure that the oil level is adjusted before driving the crane, with the crane in horizontal position, according the following chart.
▶ Observe and adhere to the following chart.

Engine in crane superstructure	Fill level engine oil
Four cylinder engine	To the max mark
Six cylinder engine	To the max mark + 2.5 l

LWE/ab Muli 010/24201-02-02/en

copyright © Liebherr-Werk Ehingen GmbH 2016

2.2.3 Crane utilization lattice mast cranes

On lattice mast cranes with pull cylinders in the derrick ballast guying, the maximum derrick ballast must be reduced in low temperature application to -40 °C.

WARNING
The crane can topple over!
Personnel can be severely injured or killed.
▶ Make sure that the crane is not overloaded with reduced derrick ballast.

▶ Reduce the maximum derrick ballast between -30 °C and -40 °C by 15 %.

2.2.4 Crane utilization telescopic cranes

For telescopic cranes, the crane utilization must be reduced in low temperature application between -30 °C and -40 °C.

▶ Reduce the crane utilization between -30 °C and -40 °C by 15 %.

2.3 Measures and notices for maintenance

2.3.1 Load bearing crane structures

Note
▶ Check load bearing crane structures for damage according to the Crane operating instructions.

2.3.2 Lubrication and service items

Note
▶ Use lubrication and service items according to the lube chart / service fill.

2.3.3 Rope pulleys and hydraulic cylinders

Note
▶ Check rope pulleys and hydraulic cylinders for damage according to the Crane operating instructions.

2.3.4 Pretension pressures of pressure accumulators

Note
▶ Check the pretension pressures of pressure accumulators according to the crane operating instructions.
▶ In low temperature application to -40 °C , reduce the maintenance intervals.

LWE/ab Muli 010/24201-02-02/en

copyright © Liebherr-Werk Ehingen GmbH 2016

LWE/ab Muli 010/24201-02-02/en

Fig.195219

copyright © Liebherr-Werk Ehingen GmbH 2016

3 Working in ambient temperatures below -40 °C

The regulations and notices for the ambient temperatures up to -40 °C apply.

WARNING
The crane can topple over!
Disregard of crane documentation can cause the crane to topple over!
Personnel can be severely injured or killed!
- ▶ Observe and adhere to the crane documentation.
- ▶ Make sure that you have read and understood the safety technical notices for crane operation, see Crane operating instructions, chapter 2.04.
- ▶ Make sure that you have read and understood the safety technical notices for assembly / disassembly, see Crane operating instructions, chapter 5.01.
- ▶ Make sure that you have read and understood the notices for maintenance, see Crane operating instructions, chapter 7.01.
- ▶ Make sure that the additional measures for crane application in ambient temperatures below -40 °C are observed and adhered to.

3.1 Measures before crane operation

- ▶ Cover exposed hose drums to protect them from ice, frost and snow.

Before operation:

- ▶ Remove snow from winches, boom, hose and cable drums, including inlet and outlet.

NOTICE
Discharging batteries!
During the preheating of the Diesel engine, the batteries can discharge and be damaged as a result.
- ▶ Make sure that the batteries are fully charged before using the preheating.
- ▶ Make sure that the batteries are not discharged.
- ▶ We recommend to ensure the engine preheating via an external power supply, see Crane operating instructions, chapter 2.04.

- ▶ Preheat the Diesel engine until it can be started.
- ▶ Turn the preheater(s) off as soon as the Diesel engine has reached operating temperature.
- ▶ Preheat the hydraulic system for the crane chassis and the hydraulic system for the crane superstructure for at least 30 minutes.
- ▶ Preheat the driver's cab and the crane operator's cab at the same time with the hydraulic systems for crane chassis and crane superstructure for at least 10 minutes.

3.2 Measures for crane operation

WARNING
The crane can topple over!
The following listed property damage can cause the crane to topple over as a result.
- ▶ Make sure that the following listed property damage is prevented by appropriate measures.

NOTICE
Damage to the hydraulic system / hydraulic cylinders!
If the cold hydraulic system is actuated with high pressures, damage can occur on hydraulic cylinders, pressure accumulators and the entire hydraulic system.

Before the hydraulic system is actuated with the pressures:
- ▶ Make sure that the preheating of the hydraulic system is completed.

LWE/ab Muli 010/24201-02-02/en

copyright © Liebherr-Werk Ehingen GmbH 2016

NOTICE
Damage of crane components!

After ending crane operation:
▶ Protect winches, hose and cable drums from moisture and freezing.

3.3 Measures and notices for maintenance

3.3.1 Lubrication and service items

Note
▶ Use lubrication and service items according to the lube chart / service fill.

LWE/ab Muli 010/24201-02-02/en

copyright © Liebherr-Werk Ehingen GmbH 2016

3 Crane assembly

copyright © Liebherr-Werk Ehingen GmbH 2016

copyright © Liebherr-Werk Ehingen GmbH 2016

3.01 Crawler carrier assembly

1	Assembling the crawler carrier	3
2	Disassembling the crawler carriers	53

LWE/ab Muli 010/24201-02-02/en

copyright © Liebherr-Werk Ehingen GmbH 2016

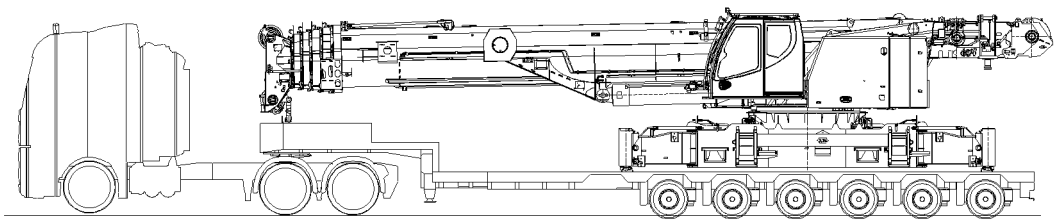

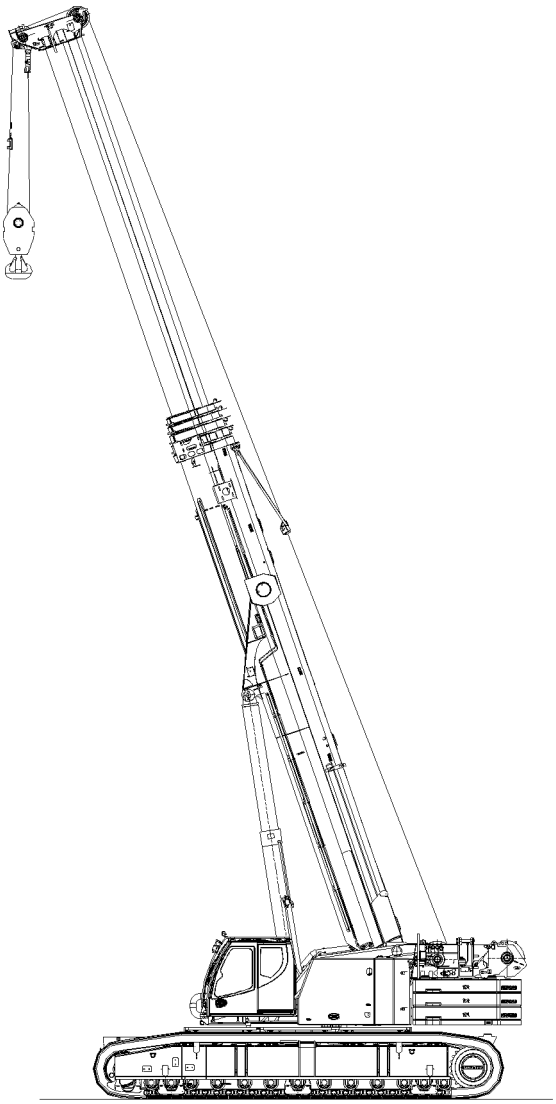

LWE/ab Muli 010/24201-02-02/en

Fig.116874

copyright © Liebherr-Werk Ehingen GmbH 2016

1 Assembling the crawler carrier

DANGER
Crane movement in **unsupported** status!
If the crane superstructure is turned or the boom erected, then the crane can tip over and severely or fatally injure personnel.
- ▶ Do not turn the crane superstructure when as the crane is resting on the transport vehicle.
- ▶ Do not turn erect the boom when as the crane is resting on the transport vehicle.
- ▶ Before carrying out crane movements, support the crane with the assembly support and align it horizontally.
- ▶ Adhere to the sequence of the assembly steps in this chapter.

WARNING
Danger of falling!
During assembly / disassembly, inspection and maintenance work, personnel must be secured with appropriate aids to prevent them from falling! If this is not observed, assembly personnel could fall and suffer life-threatening or fatal injuries!
- ▶ The assembly personnel must always move carefully and anticipatory on the crane, the crane components or lattice sections!
- ▶ All work aloft, where there is a danger of falling must be carried out with suitable aids!
- ▶ If fall protection equipment is available, then it must be used!
- ▶ If aids are not available and work cannot be carried out from the ground, then the assembly personnel must secure themselves with the permissible fall arrest system to prevent falling, see Crane operating instructions, chapter 2.04!
- ▶ The fall arrest system must be attached on the fastening and hook points as well as on the safety ropes!
- ▶ Only step on the aids, ladders and catwalks with clean shoes!
- ▶ Keep aids, ladders and catwalks free of heavy dirt, snow and ice!

WARNING
Danger of impact / crushing!
When installing / removing counterweight components with the auxiliary crane, crane components can start to swing back and forth!
When lifting / lowering and positioning crane components, there is an increased danger of impacts / crushing!
Personnel can be caught and severely injured or killed!
- ▶ Make sure that personnel cannot be caught by components!
- ▶ When working in danger zones: Use aids to protect limbs!
- ▶ Guide components with suitable aids to minimize oscillation!

WARNING
Improper support!
If the crane is not properly supported from below, it can sink into the ground and cause it to topple over!
- ▶ The support must take on the weight of the crane safely!
- ▶ Use stable materials such as wood, steel plates or concrete slabs of a suitable size for support, depending on the ground conditions!

Note
- ▶ Disassemble the transport devices and remove the transport retainers, see Crane operating instructions, chapter 3.80.

LWE/ab Muli 010/24201-02-02/en

copyright © Liebherr-Werk Ehingen GmbH 2016

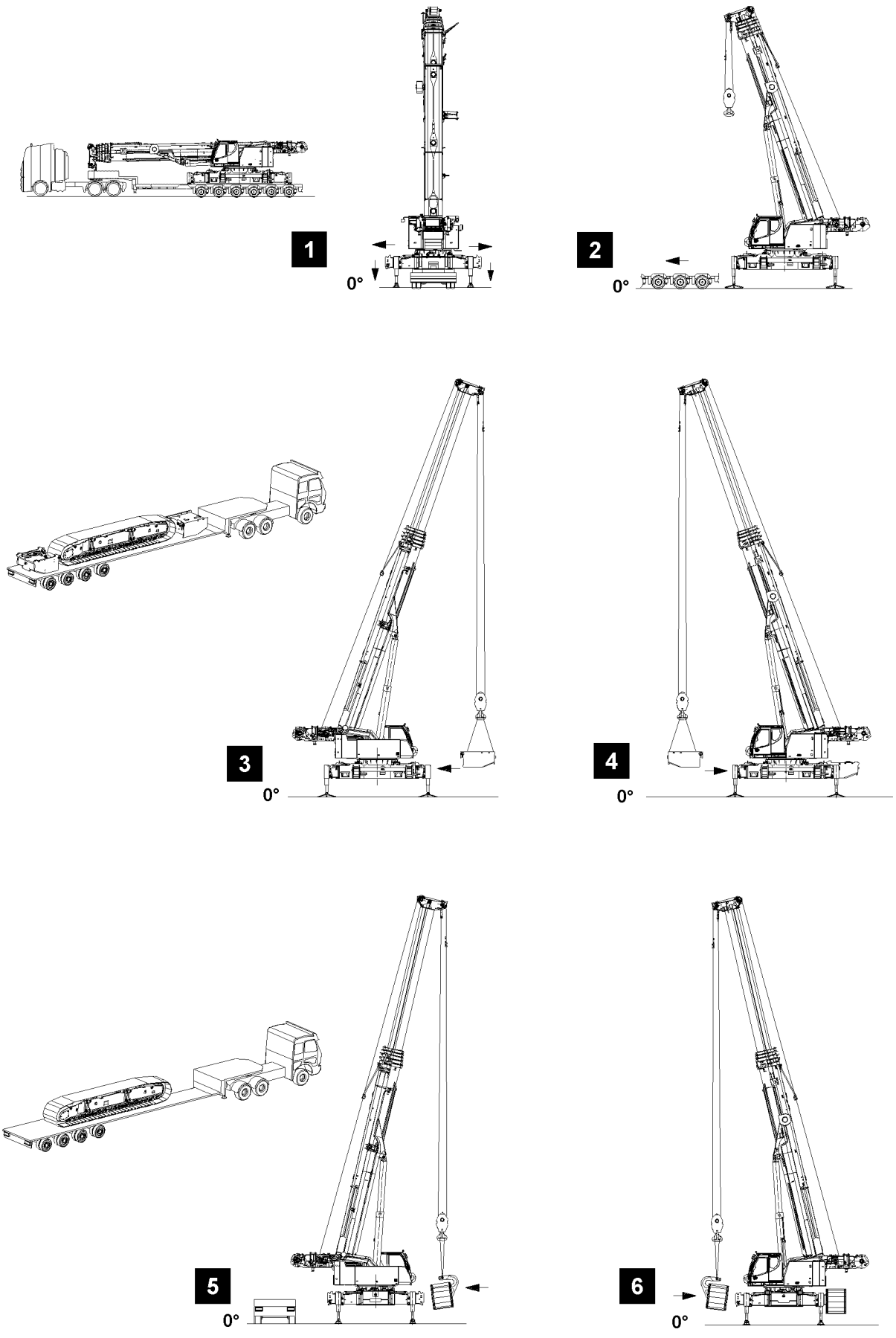

Fig.116872

LWE/ab Muli 010/24201-02-02/en

copyright © Liebherr-Werk Ehingen GmbH 2016

1.1 Short description - „Assembling the crane“

Note
- ▶ The short description of the assembly procedure is exclusively intended as an overview!
- ▶ The complete assembly description must be read and understood!

Supporting the crane

- ▶ Move the cross carriers out, see illustration **1**.
- ▶ Swing the brackets out, see illustration **1**.
- ▶ Fasten the support plates on the support cylinders.
- ▶ Support the crane and level the crane.
- ▶ Luff the telescopic boom up, see illustration **2**.
- ▶ Remove the transport vehicle, see illustration **2**.

Installing the central ballast

Note
- ▶ Install the central ballast, see Crane operating instructions, chapter 3.03!

- ▶ Install the central ballast on the rear, see illustration **3**.
- ▶ Install the central ballast on the front, see illustration **4**.

Install the crawler carrier „A“

Note
- ▶ Pay attention to the identification on the crawler carrier and the cross carrier at assembly!

- ▶ Fasten the assembly device on the crane.
- ▶ Pin the assembly device with the crawler carrier „A“.
- ▶ Hang the crawler carrier „A“ on the cross carrier „A“, see illustration **5**.
- ▶ Pin and secure the crawler carrier „A“ with the cross carrier „A“, see illustration **5**.
- ▶ Remove the assembly device.

Install the crawler carrier„B“

- ▶ Pin the assembly device with the crawler carrier „B“.
- ▶ Hang the crawler carrier „B“ on the cross carrier „B“, see illustration **6**.
- ▶ Pin and secure the crawler carrier „B“ with the cross carrier „B“, see illustration **6**.
- ▶ Remove the assembly device.

Operating the travel gear

- ▶ Establish the hydraulic connections.
- ▶ Test the travel gear.

LWE/ab Muli 010/24201-02-02/en

copyright © Liebherr-Werk Ehingen GmbH 2016

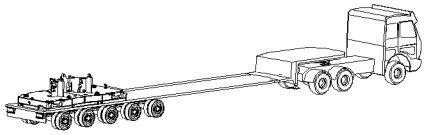

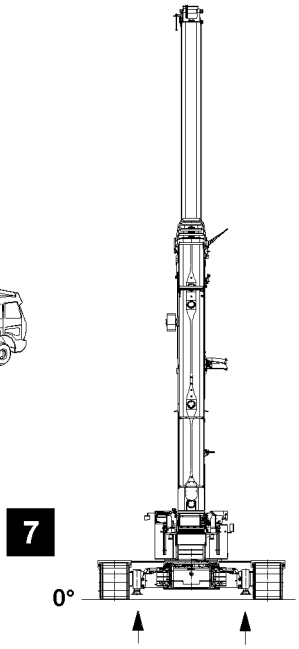

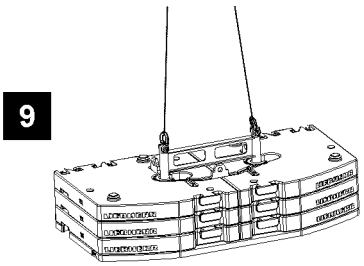

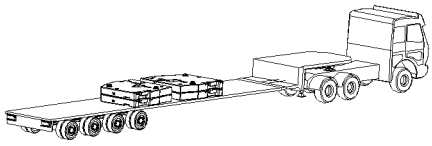

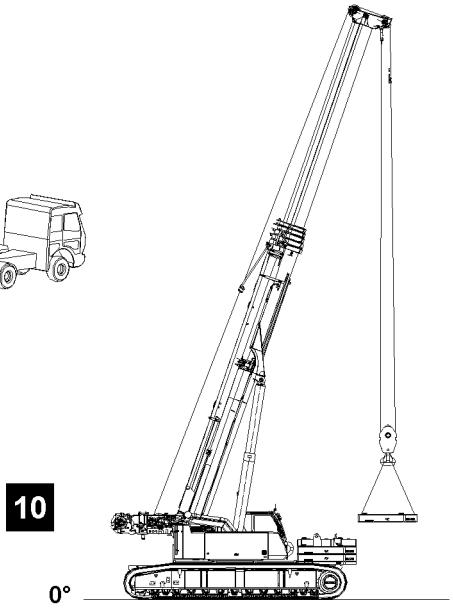

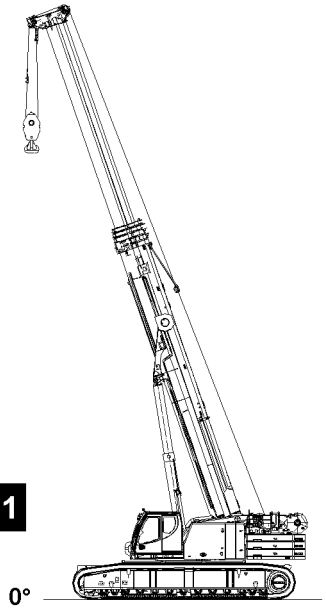

LWE/ab Muli 010/24201-02-02/en

Fig.116873

copyright © Liebherr-Werk Ehingen GmbH 2016

Retracting the support cylinders

▶ Retract the support cylinders completely, see illustration **7**.

Installing the walking platforms

Note
▶ Install the walking platforms, see Crane operating instructions, chapter 2.06!

▶ Install the walking platforms, see illustration **7**.

Installing the counterweight

Note
▶ Install the counterweight, see Crane operating instructions, chapter 4.07!

▶ Place the ballast base plate down.
▶ Stack the counterweight plates 10 t on the counterweight stack, see illustration **10**.
▶ Turn the turntable and position it over the counterweight, see illustration **11**.
▶ Connect and secure the counterweight with the turntable, see illustration **11**.

LWE/ab Muli 010/24201-02-02/en

copyright © Liebherr-Werk Ehingen GmbH 2016

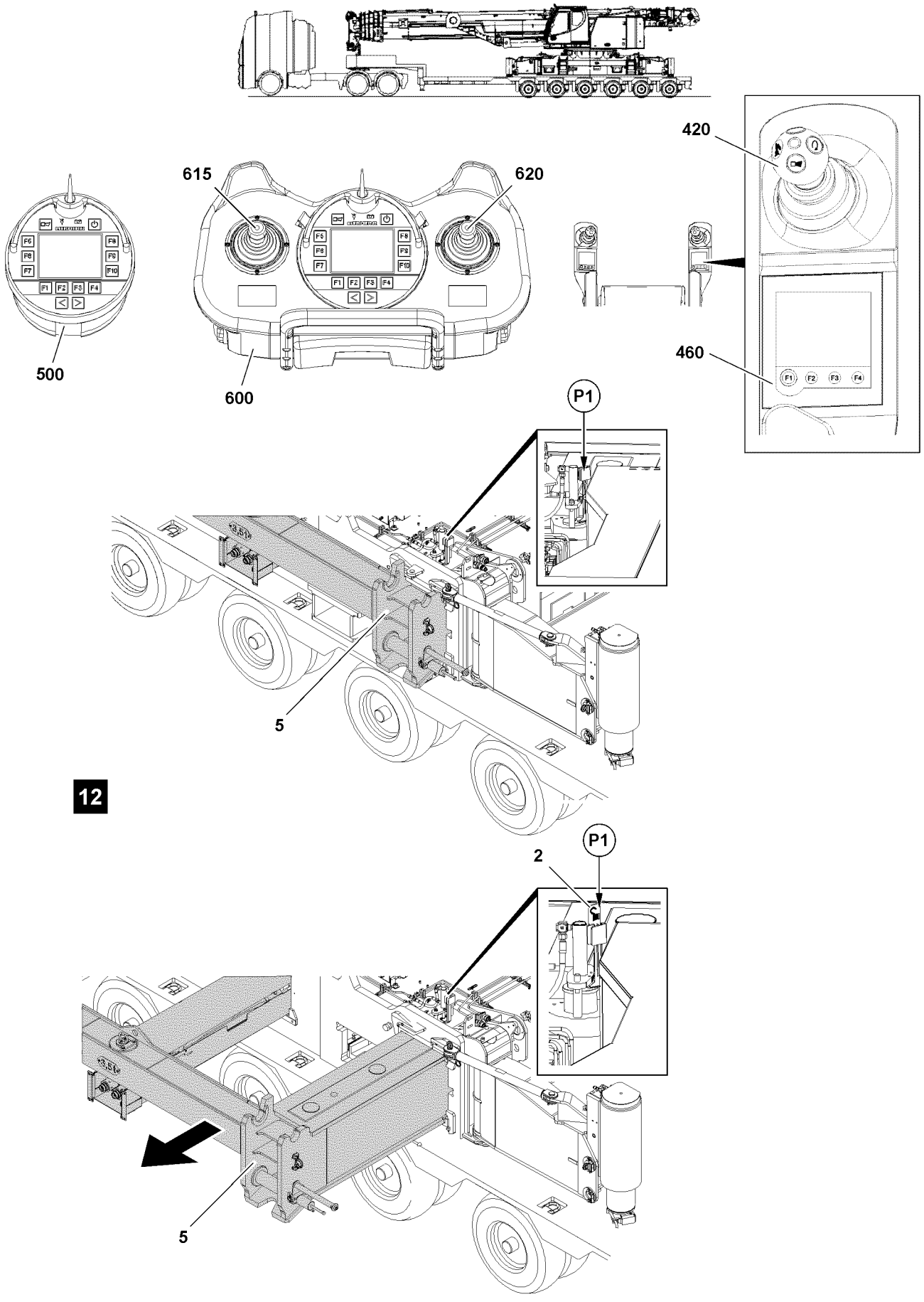

Fig.116891

LWE/ab Muli 010/24201-02-02/en

copyright © Liebherr-Werk Ehingen GmbH 2016

1.2 Extending the cross carriers

Make sure that the following prerequisite is met:
– No personnel is within the danger zone.

Note
▶ The extension conditions of the cross carrier is displayed as percentage on the display on the Bluetooth™ Terminal (BTT), the radio remote control (BTT-E) and on the LICCON monitor!
▶ The cross carriers are only pinned on extension conditions of 0 %; 50 %; 100 %.
▶ The extension conditions of the cross carriers / crawler carriers are specified in the load chart.
▶ The pin points of the cross carriers are marked in percentages with tags on the cross carriers.

1.2.1 Extending the cross carrier with the BlueTooth™Terminal

Make sure that the following prerequisite is met:
– On the display of the BTT, the menu overview is visible.

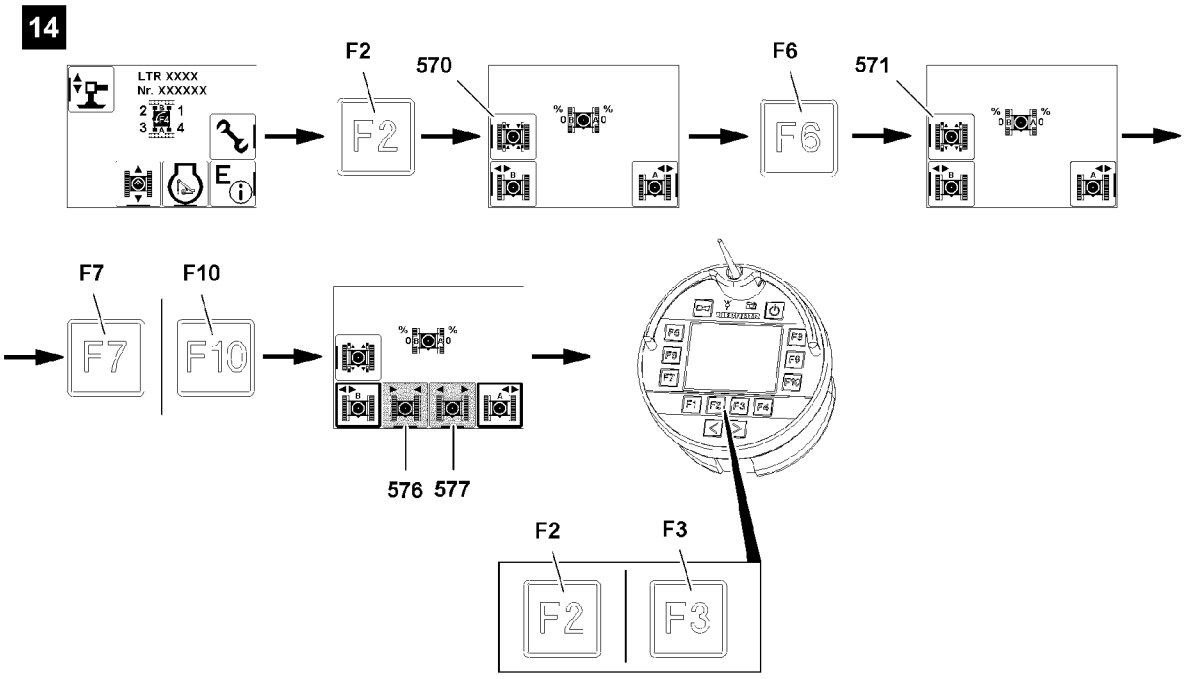

Fig.116896

Unpinning the cross carrier

▶ Call up the „Crawler travel gear“ menu: Press the function key **F2**, see illustration **14**.

Result:

– Functions „Track width adjustment“ are visible.

When icon „Pin the cross carrier“ **570** is visible:
▶ Activate „Unpin the cross carrier“: Press the function key **F6**.

Result:

– Icon „Unpin the cross carrier“ **571** appears.

copyright © Liebherr-Werk Ehingen GmbH 2016

Selecting the cross carrier

Before you retract or extend the cross carrier, select one of the cross carriers or both cross carriers:
– **F7** Function key
– **F10** Function key

In this and the following sections is described how both cross carriers are extended together. Alternatively you can also select and extend the cross carriers individually.

Depending on which cross carriers are selected, different icons for „retract crawler carrier“ and „extend crawler carrier“ appear, see Crane operating instructions, chapter 5.31.

▶ Select both cross carriers: Press function key **F7** and function key **F10**, see illustration **14**.

Result:

– Icon „Retract crawler carrier“ **576** is visible.
– Icon „Extend crawler carrier“ **577** is visible.

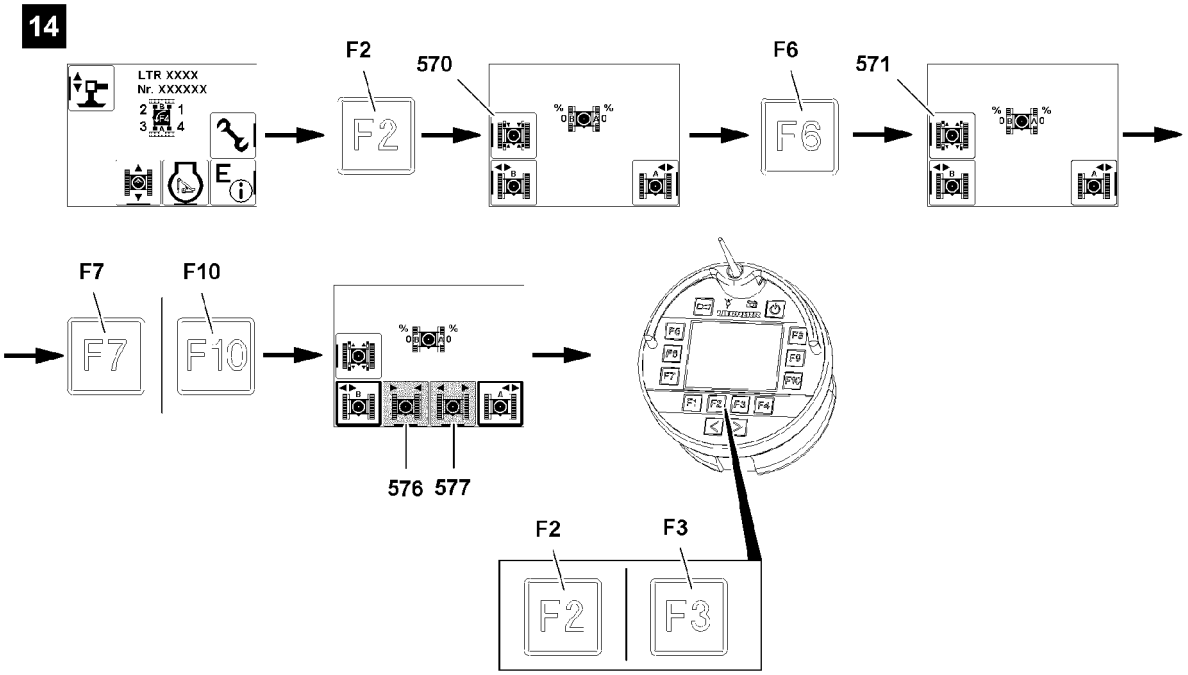

Fig.116896

Extending the cross carriers

To unpin the cross carriers on points **P1**, you have extend the cross carriers, see illustration **12**.

You can check on points **P1** if the pins are completely pinned or unpinned:
– The pins are unpinned: Tags **2** are visible.
– The pins are pinned: Tags **2** are **not** visible.

WARNING
Crushing danger due to movement of cross carriers!
▶ Make sure that no personnel is within the danger zone of the cross carriers during „track width adjustment“.
▶ Differentiation of the cross carriers, see Crane operating instructions, chapter 5.31.

When „retracting the cross carrier“:
▶ Press the function key **F2**.

LWE/ab Muli 010/24201-02-02/en

copyright © Liebherr-Werk Ehingen GmbH 2016

When „extending the cross carrier“:
▶ Press the function key **F3**.

Result:

– The pins are unpinned.

Problem remedy
Pins are not unpinned!
The pin is stuck: The position of the cross carriers prevents the pins from unpinning.
▶ Extend and retract the cross carriers again: Press the function keys until the pins are completely unpinned.

▶ Make sure that the pins are completely unpinned on points **P1**, see illustration **12**.

Result:

– The pins are unpinned.
– The cross carriers extend.

Pinning the cross carriers

Before the cross carriers reach the 100 % extension status:
▶ Activate „Pin the cross carrier“: Press the function key **F6**.

Result:

– Icon „pin the cross carrier“ **570** is visible.
– The pins are pinned.

Problem remedy
The pins are not pinned!
The pin is stuck: The position of the cross carriers prevents the pins from pinning.
▶ Extend and retract the cross carriers again: Press the function keys until the pins are completely pinned.

▶ Make sure that the pins are completely pinned on points **P1**, see illustration **12**.

Result:

– The pins are pinned.
– The cross carriers are extended and secured at 100 %.

LWE/ab Muli 010/24201-02-02/en

copyright © Liebherr-Werk Ehingen GmbH 2016

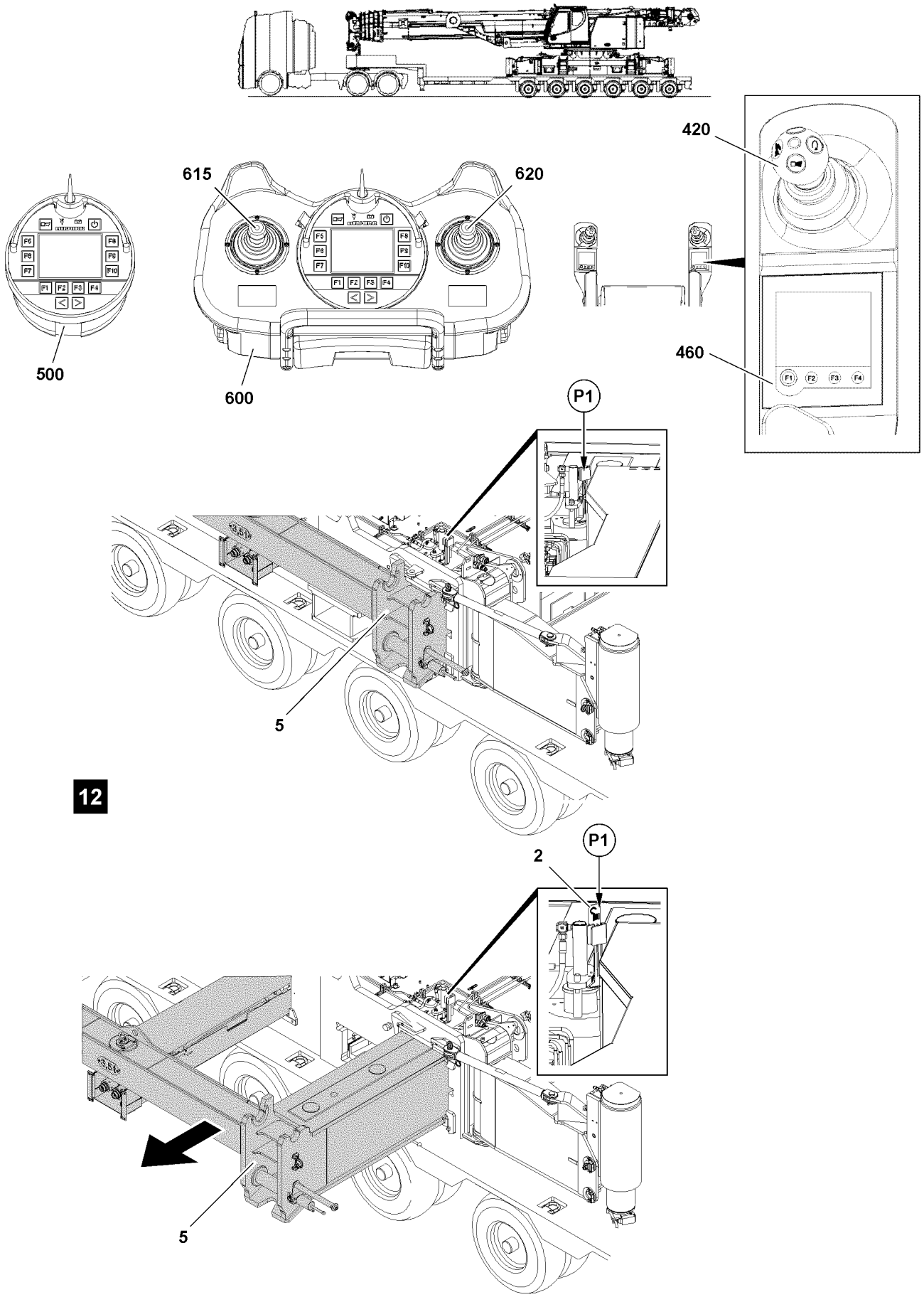

Fig.116891

LWE/ab Muli 010/24201-02-02/en

copyright © Liebherr-Werk Ehingen GmbH 2016

1.2.2 Extending the cross carriers from the crane operator's cab

Make sure that the following prerequisite is met:
– On the TE1 the „Master switch configuration“ menu is visible.

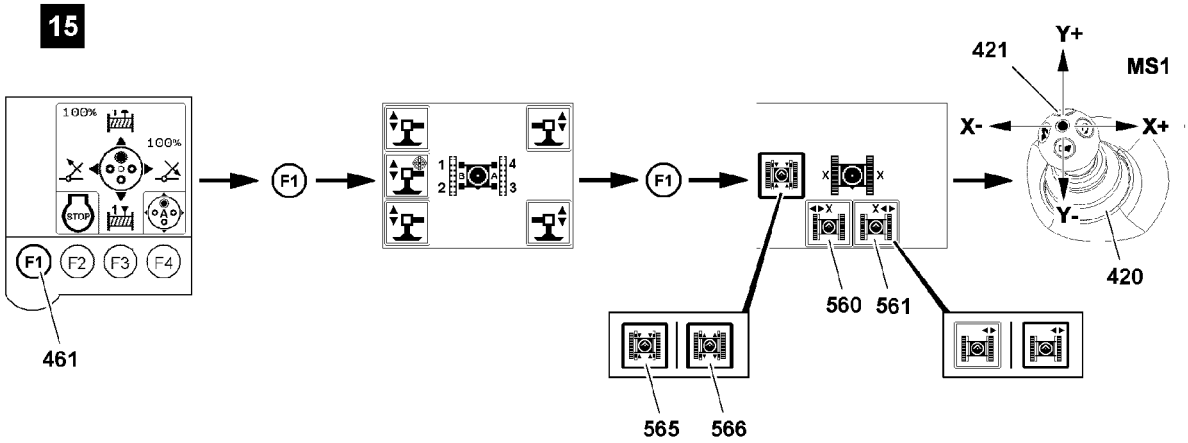

Fig.116897

Unpinning the cross carrier

▶ Press the function key F1 **461**, see illustration **15**.

Result:

– The „Support“ menu appears.

▶ Press function key F1 **461**.

Result:

– The „Track width adjustment“ menu appears.

When icon **565** „Pin the cross carrier“ is visible:
▶ Activate „Unpin the cross carrier“: Select the icon **565** („touch“).

Result:

– Icon „unpin cross carrier“ **566** is visible.

Selecting the cross carrier

Before you retract or extend the cross carrier, select one of the cross carriers or both cross carriers:
– **560** Icon
– **561** Icon

In this and the following sections is described how both cross carriers are extended together. Alternatively you can also select and extend the cross carriers individually.

▶ Pay attention to cross carrier assignment.
▶ Select both cross carriers: Select the icon **560** and icon **561** („touch“).

Result:

– Selected icons with filled out frames: Cross carriers are selected.

copyright © Liebherr-Werk Ehingen GmbH 2016

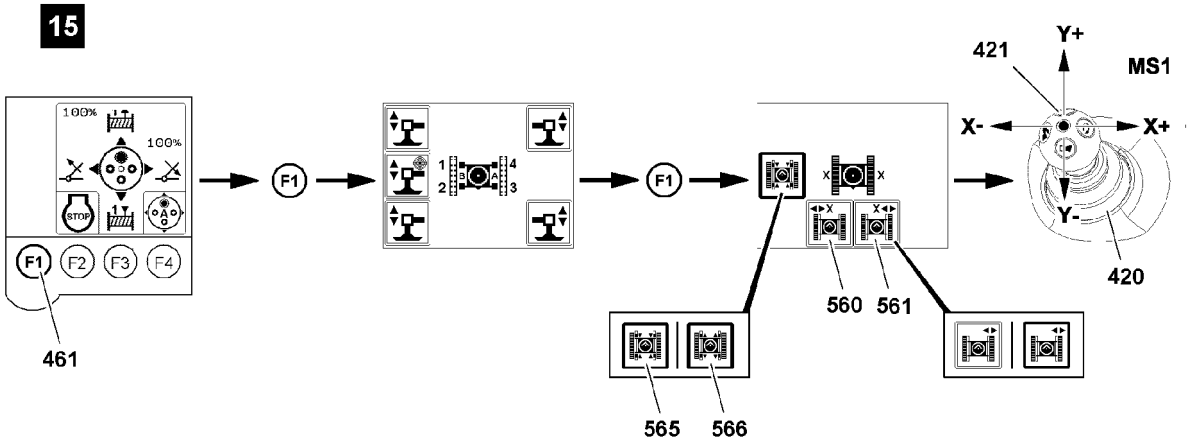

Fig.116897

Extending the cross carriers

To unpin the cross carriers on points **P1**, you have to retract or extend the cross carriers, see illustration **12**:

You can check on points **P1** if the pins are completely pinned or unpinned:
– The pins are unpinned: Tags **2** are visible.
– The pins are pinned: Tags **2** are **not** visible.

WARNING
Crushing danger due to movement of cross carriers!
▶ Make sure that no personnel is within the danger zone of the cross carriers during „track width adjustment“.
▶ Differentiation of the cross carriers, see Crane operating instructions, chapter 4.01.

To initiate a movement, you have to release master switch MS1 **420** with the button **421**.

▶ Press the button **421** and hold.

When „retracting the cross carrier“:
▶ Move master switch MS1 **420** in direction X-.

When „extending the cross carrier“:
▶ Move master switch MS1 **420** in direction X+.

Result:

– The pins are unpinned.

Problem remedy
Pins are not unpinned!
The pin is stuck: The position of the cross carriers prevents the pins from unpinning.
▶ Extend and retract the cross carriers again: Move master switch MS1 **420** in direction X+ or X- until the pins are completely unpinned.

▶ Make sure that the pins are completely unpinned on points **P1**, see illustration **12**.

Result:

– The pins are unpinned.
– The cross carriers extend.

Pinning the cross carriers

Before the cross carrier reaches the 100 % extension status:
▶ Activate „Pin the cross carrier“: Select icon **566** („touch“), see illustration **15**.

LWE/ab Muli 010/24201-02-02/en

copyright © Liebherr-Werk Ehingen GmbH 2016

Result:

– Icon **565** „pin cross carrier“ is visible.
– The pins are pinned.

Problem remedy
The pins are not pinned!
The pin is stuck: The position of the cross carriers prevents the pins from pinning.
▶ Extend and retract the cross carriers again: Move master switch MS1 **420** in direction X+ or X- until the pins are completely pinned.

▶ Make sure that the pins are completely pinned on points **P1**, see illustration **12**.

Result:

– The pins are pinned.
– The cross carriers are extended and secured at 100 %.

LWE/ab Muli 010/24201-02-02/en

copyright © Liebherr-Werk Ehingen GmbH 2016

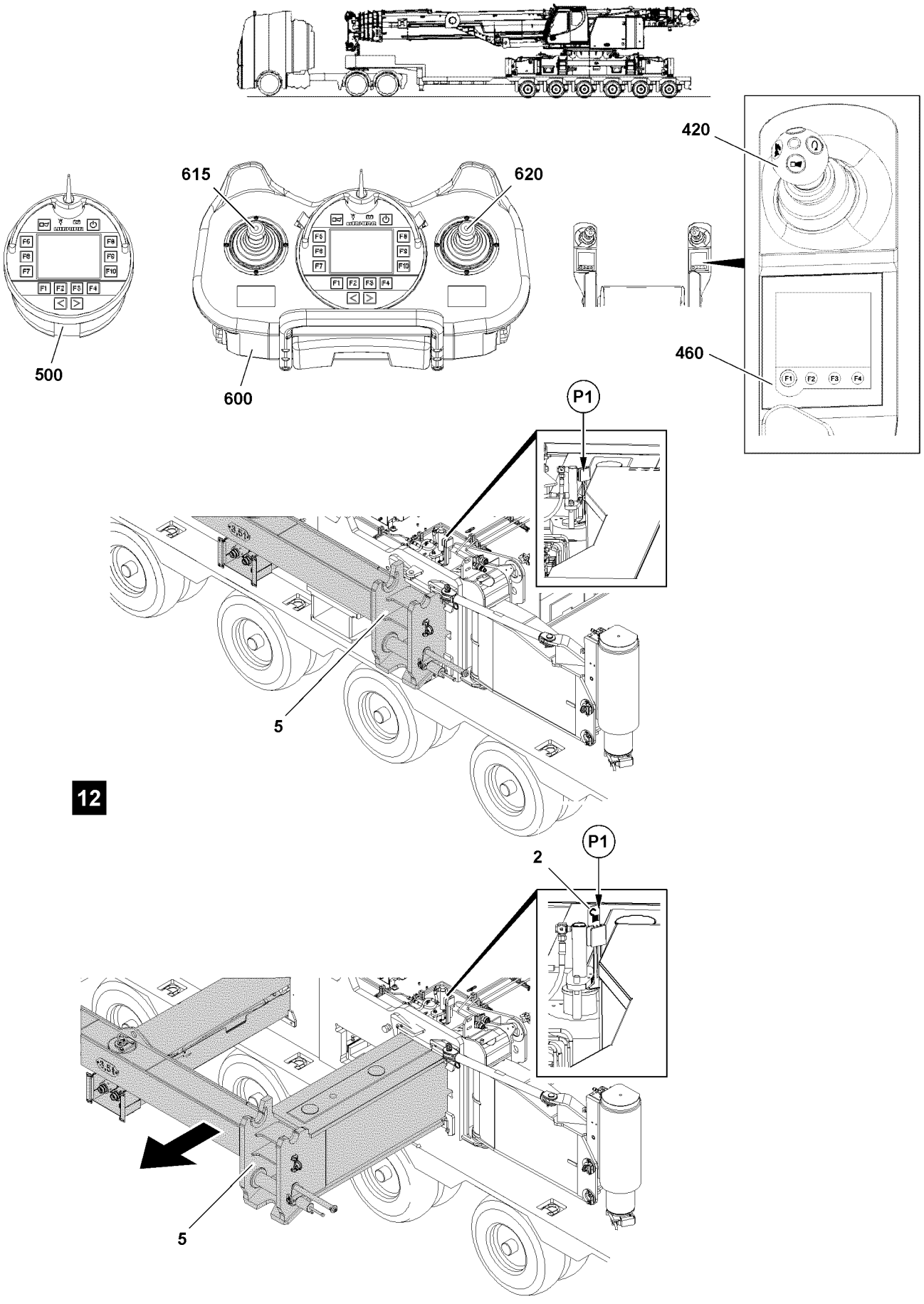

Fig.116891

LWE/ab Muli 010/24201-02-02/en

copyright © Liebherr-Werk Ehingen GmbH 2016

1.2.3 Extending the cross carriers with the radio remote control*

Make sure that the following prerequisite is met:
– On the display of the BTT-E, the menu overview is visible.

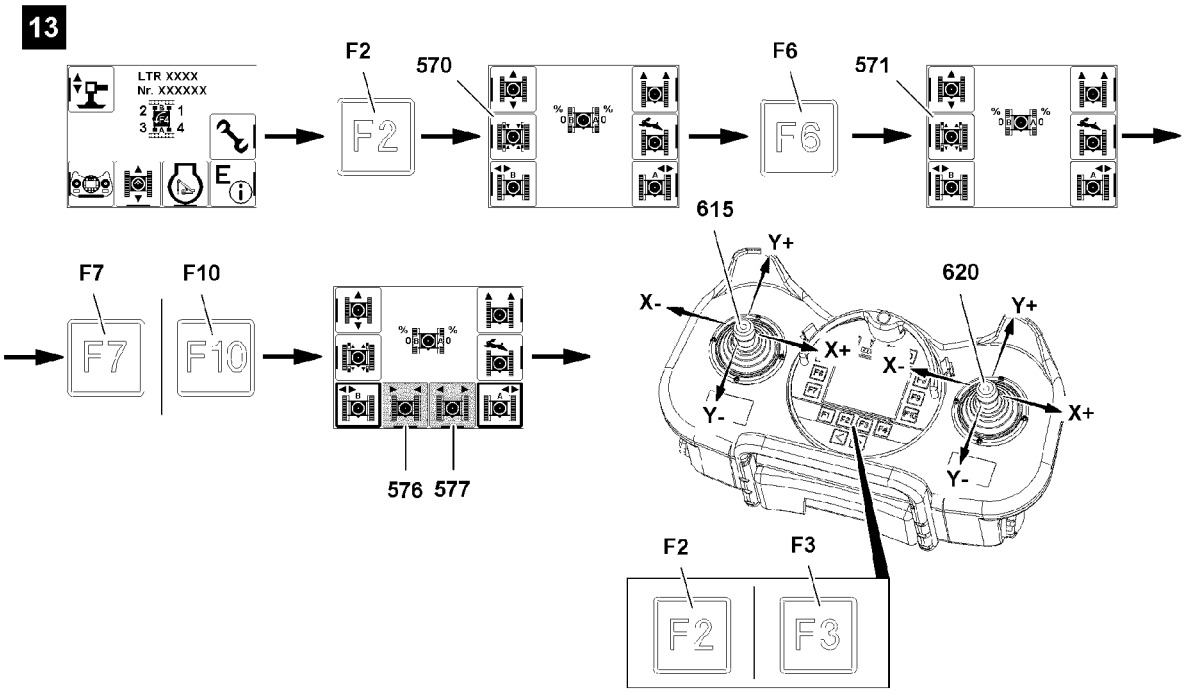

Fig.116893

Unpinning the cross carrier

▶ Call up the „Crawler travel gear“ menu: Press the function key **F2**, see illustration **13**.

Result:

– Functions „Track width adjustment“ are visible.

When icon „Pin the cross carrier“ **570** is visible:
▶ Activate „Unpin the cross carrier“: Press the function key **F6**.

Result:

– Icon „Unpin the cross carrier“ **571** appears.

Selecting the cross carrier

Before you retract or extend the cross carrier, select one of the cross carriers or both cross carriers:
– **F7** Function key
– **F10** Function key

In this and the following sections is described how both cross carriers are extended together. Alternatively you can also select and extend the cross carriers individually.

Depending on which cross carriers are selected, different icons for „retract crawler carrier“ and „extend crawler carrier“ appear, see Crane operating instructions, chapter 6.08.

▶ Select both cross carriers: Press function key **F7** and function key **F10**, see illustration **13**.

Result:

– Icon „Retract crawler carrier“ **576** is visible.
– Icon „Extend crawler carrier“ **577** is visible.

LWE/ab Muli 010/24201-02-02/en

copyright © Liebherr-Werk Ehingen GmbH 2016

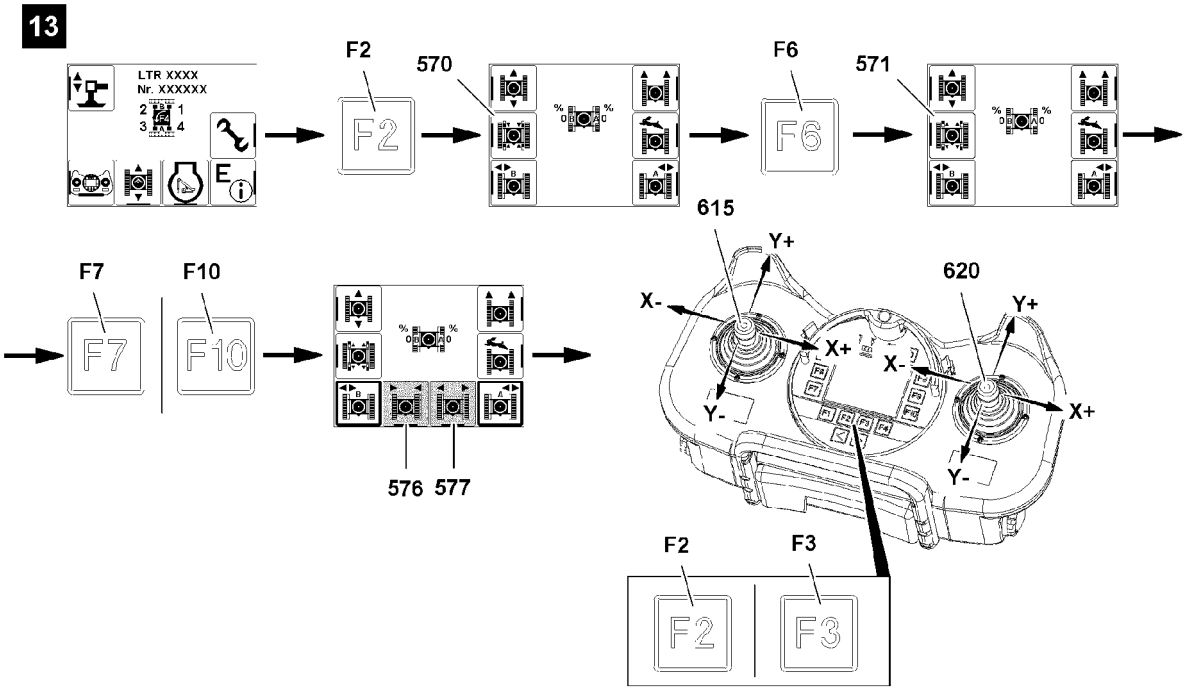

Fig.116893

Extending the cross carriers

To unpin the cross carriers on points **P1**, you have extend the cross carriers, see illustration **12**.

You can check on points **P1** if the pins are completely pinned or unpinned:
– The pins are unpinned: Tags **2** are visible.
– The pins are pinned: Tags **2** are **not** visible.

WARNING
Crushing danger due to movement of cross carriers!
▶ Make sure that no personnel is within the danger zone of the cross carriers during „track width adjustment“.
▶ Differentiation of the cross carriers, see Crane operating instructions, chapter 6.08.

When both cross carriers are selected, then the operation is assigned to the following manual control levers on the BTT-E:
– Manual control lever **615** or manual control lever **620**

When „retracting the cross carrier“:
▶ Deflect the manual control lever in direction X-.
or
Press the function key **F2**.

When „extending the cross carrier“:
▶ Deflect the manual control lever in direction X+.
or
Press the function key **F3**.

Result:

– The pins are unpinned.

LWE/ab Muli 010/24201-02-02/en

copyright © Liebherr-Werk Ehingen GmbH 2016

Problem remedy
Pins are not unpinned!
The pin is stuck: The position of the cross carriers prevents the pins from unpinning.
▶ Extend and retract the cross carriers again: Deflect the manual control levers on the BTT-E in direction X+ or X- or press function keys until the pins are completely unpinned.

▶ Make sure that the pins are completely unpinned on points **P1**, see illustration **12**.

Result:

– The pins are unpinned.
– The cross carriers extend.

Pinning the cross carriers

Before the cross carriers reach the 100 % extension status:
▶ Activate „Pin the cross carrier“: Press the function key **F6**.

Result:

– Icon „pin the cross carrier“ **570** is visible.
– The pins are pinned.

Problem remedy
The pins are not pinned!
The pin is stuck: The position of the cross carriers prevents the pins from pinning.
▶ Extend and retract the cross carriers again: Deflect the manual control levers on the BTT-E in direction X+ or X- or press function keys until the pins are completely pinned.

▶ Make sure that the pins are completely pinned on points **P1**, see illustration **12**.

Result:

– The pins are pinned.
– The cross carriers are extended and secured at 100 %.

LWE/ab Muli 010/24201-02-02/en

copyright © Liebherr-Werk Ehingen GmbH 2016

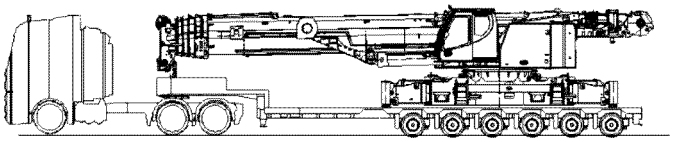

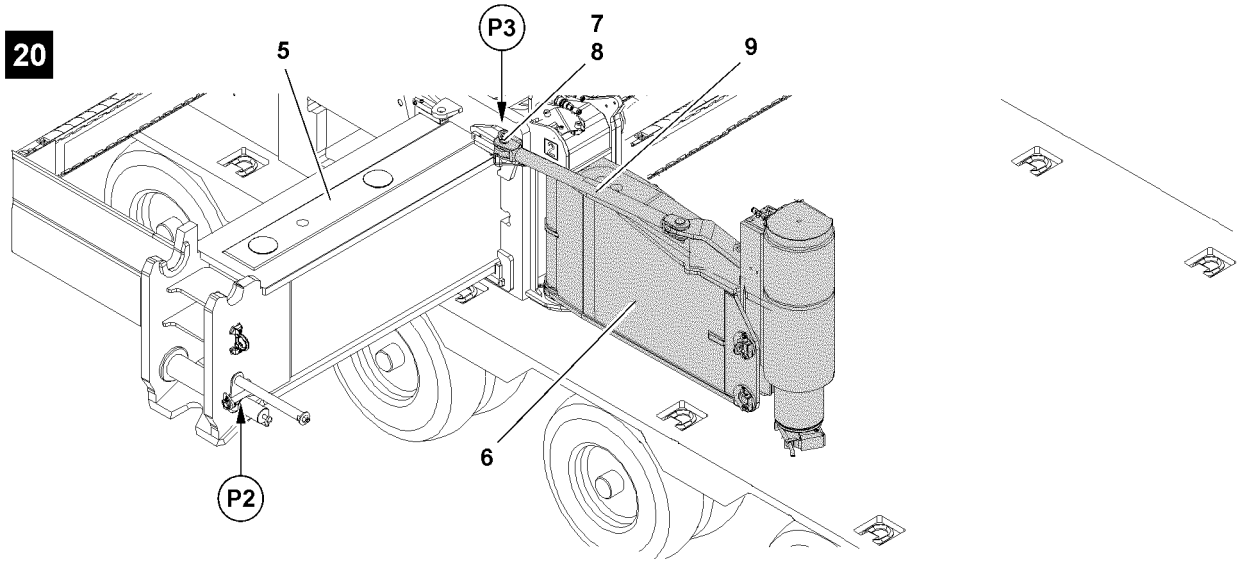

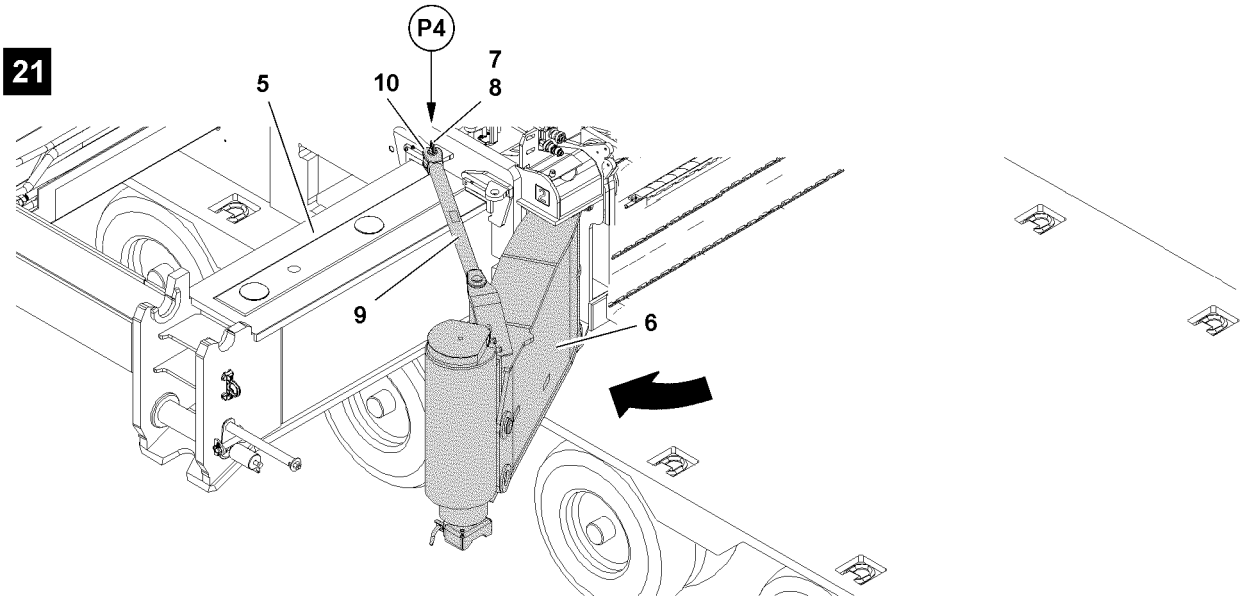

LWE/ab Muli 010/24201-02-02/en

Fig.116875

copyright © Liebherr-Werk Ehingen GmbH 2016

1.3 Swinging the folding brackets out

Make sure that the following prerequisite is met:
– Both cross carriers **5** are 100 % extended and pinned.

NOTICE
Damage to the pin pulling device!
If the cross carriers **5** are not extended when swinging the folding brackets **6**, then the pin pulling devices will be damaged at point **P2** when swinging the folding brackets!
▶ Make sure that the cross carriers **5** are extended before swinging the folding brackets **6**!
▶ Make sure that no persons or objects are within the danger zone when swinging the folding brackets **6**!

▶ Remove the spring retainer **7** at point **P3**, see illustration **20**.
▶ Unpin the pin **8** at point **P3**, see illustration **20**.
▶ Remove the rod **9** from the connection.

Result:

– The folding bracket **6** is released.

▶ Swing the folding bracket **6** out until the connection fork **10** of the rod can be pinned at point **P4**, see illustration **21**.

When the bores align at point **P4**:
▶ Insert the pin **8** at point **P4**, see illustration **21**.
▶ Insert the spring retainer **7** at point **P4**, see illustration **21**.

Result:

– The folding bracket **6** is secured.

▶ Swinging all folding brackets out

LWE/ab Muli 010/24201-02-02/en

copyright © Liebherr-Werk Ehingen GmbH 2016

22

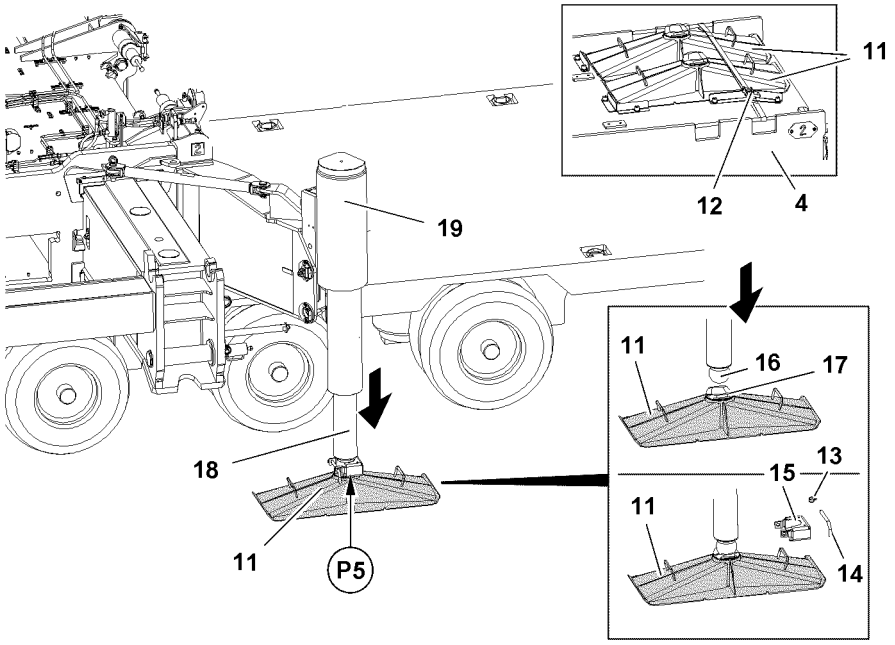

23

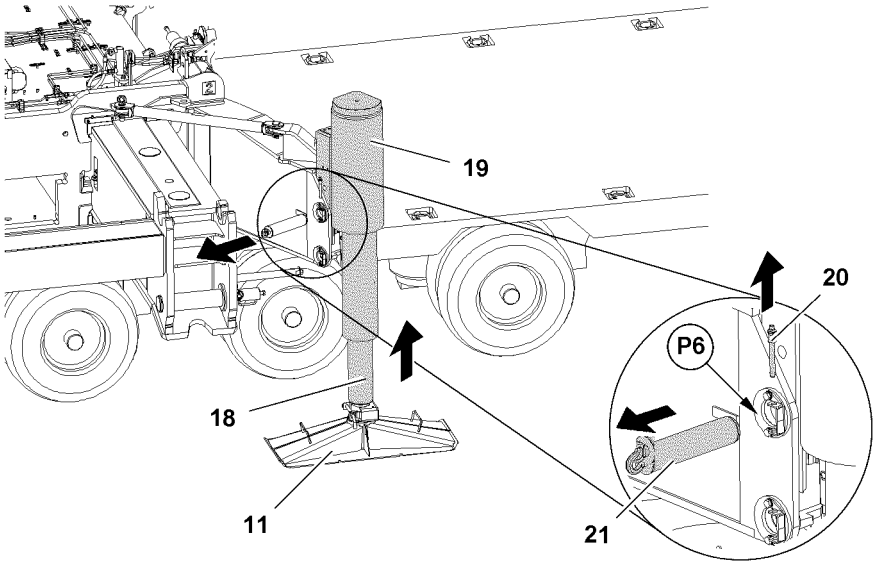

24

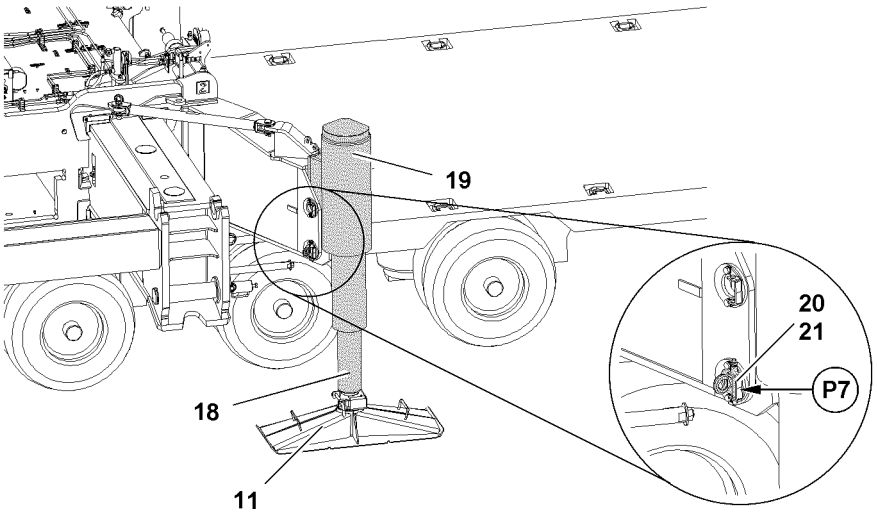

Fig.116876

LWE/ab Muli 010/24201-02-02/en

copyright © Liebherr-Werk Ehingen GmbH 2016

1.4 Installing the support plates

1.4.1 Preparing the support plates for assembly

Note

- ▶ The support plates **11** are positioned for transport on the central ballast **4**!
- ▶ The weight of the support plate is 50 kg !
- ▶ For safety reasons, assemble the support plates **11** always with two persons!

- ▶ Remove the transport belts **12**, see illustration **22**.
- ▶ Remove the support plates **11** from the transport receptacle.

DANGER

The crane can topple over!

The crane can topple and fatally injure personnel if the support plates **11** are not properly supported.

- ▶ Make sure that the support plates are positioned on load bearing and horizontal ground.
- ▶ Only use suitable materials for support!
- ▶ Place the support bases under the center of the support plates!
- ▶ Support all support plates **11** with the same materials!
- ▶ Observe the track width of the flat bed trailer! The support material may not project into the driving track.

- ▶ Place stable materials such as wood, steel plates or concrete slabs of a suitable size under the support plates **11**, depending on the ground conditions.
- ▶ Place the support plates **11** under the support cylinder **19** and align them lengthwise to the transport vehicle.
- ▶ Remove the safety locking pin **13** at point **P5** and unpin the pin **14**, see illustration **22**.
- ▶ Pull out the retainer **15** from the ball head **16**, see illustration **22**.

LWE/ab Muli 010/24201-02-02/en

copyright © Liebherr-Werk Ehingen GmbH 2016

22

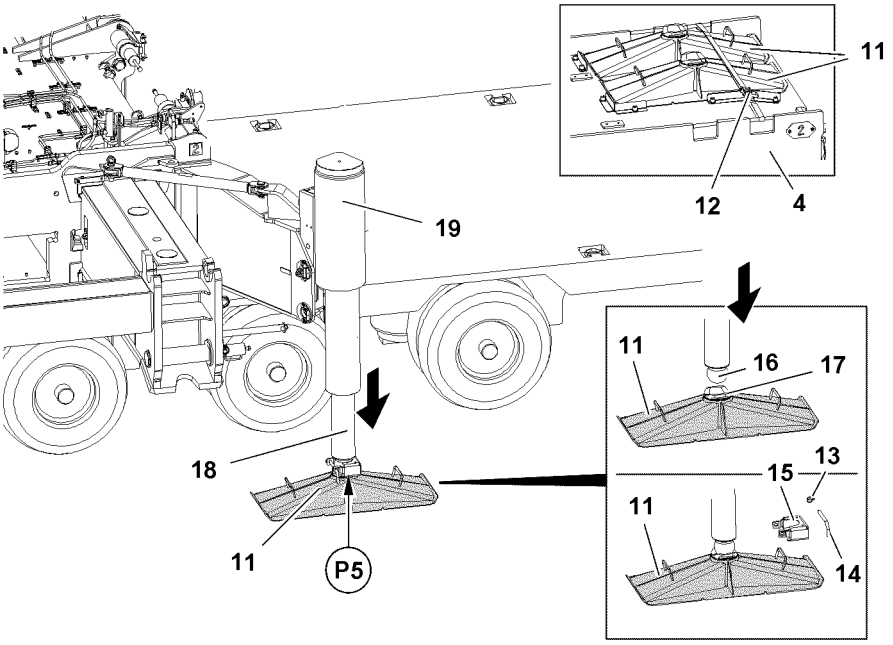

23

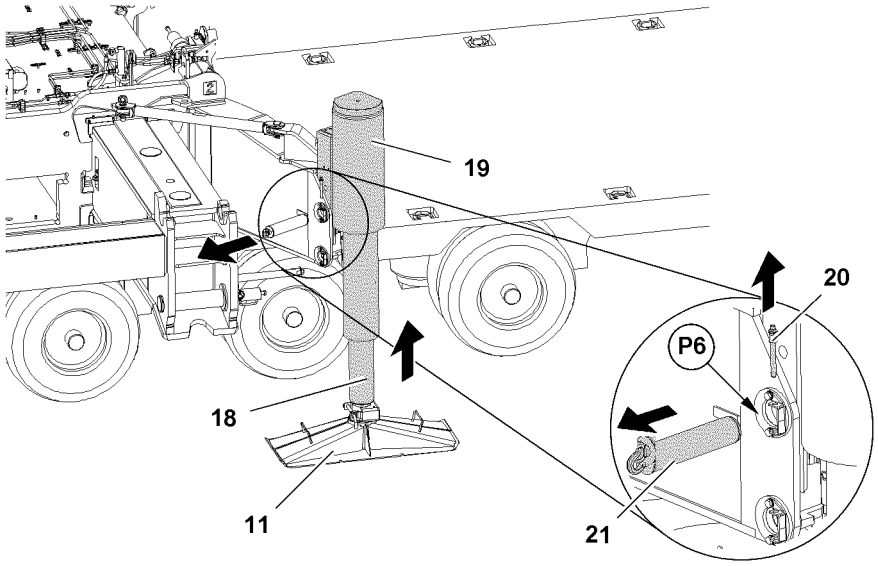

24

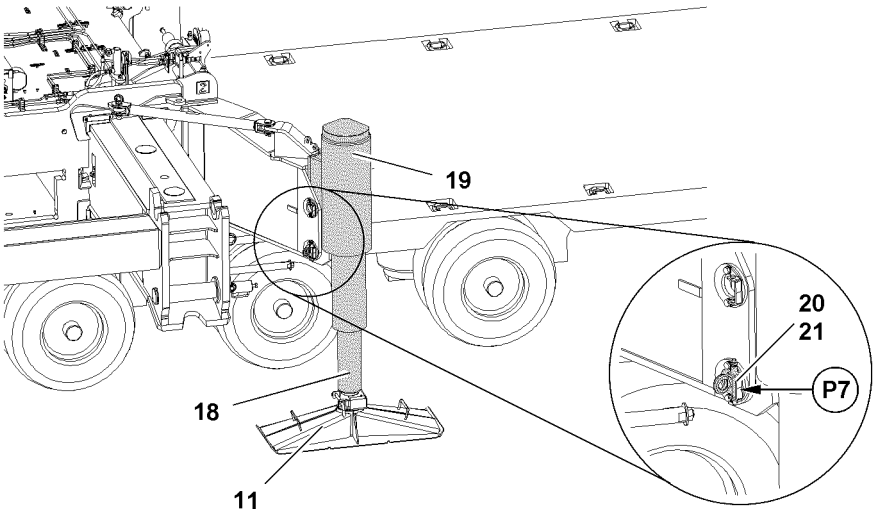

Fig.116876

LWE/ab Muli 010/24201-02-02/en

copyright © Liebherr-Werk Ehingen GmbH 2016

1.4.2 Extending the piston rod with the BlueTooth™Terminal

Make sure that the following prerequisite is met:
– On the display of the BTT, the menu overview is visible.

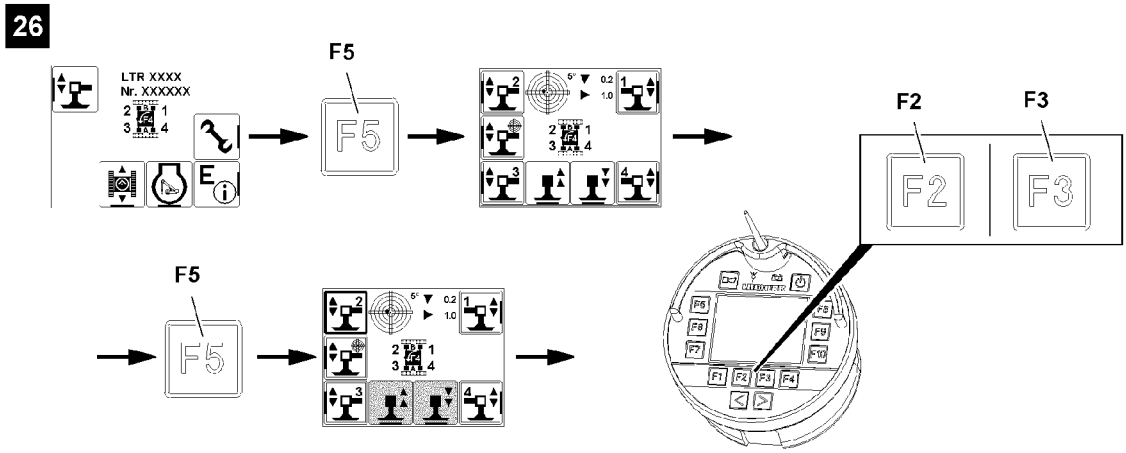

Fig.116899

▶ Press the function key **F5**, see illustration **26**.

Result:

– The „Support“ menu is visible.

The support cylinders are marked with numbers depending on the alignment of the BTT.

Support cylinders are selected with function keys:
– **F5** Function key
– **F7** Function key
– **F8** Function key
– **F10** Function key

▶ Select support cylinder: Press the function key.

Result:

– Selected icons are visible with filled out frames: Support cylinders are selected.
– Support cylinders are ready for extension and retraction.

When „retracting the support cylinders“:
▶ Press the function key **F2**.

Result:

– Piston rod **18** retracts.

When „extending the support cylinders“:
▶ Press the function key **F3**.

Result:

– Piston rod **18** extends.

copyright © Liebherr-Werk Ehingen GmbH 2016

22

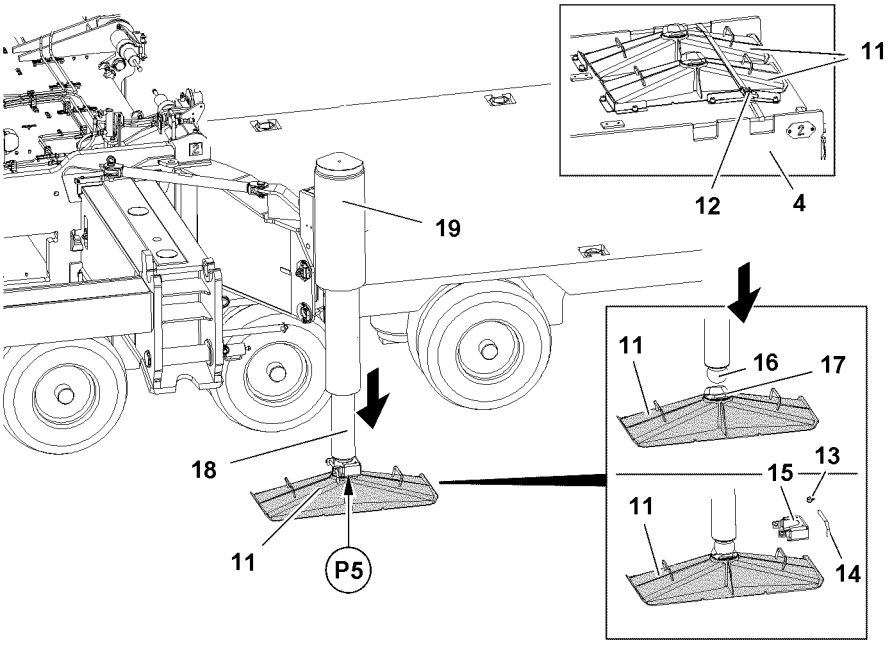

23

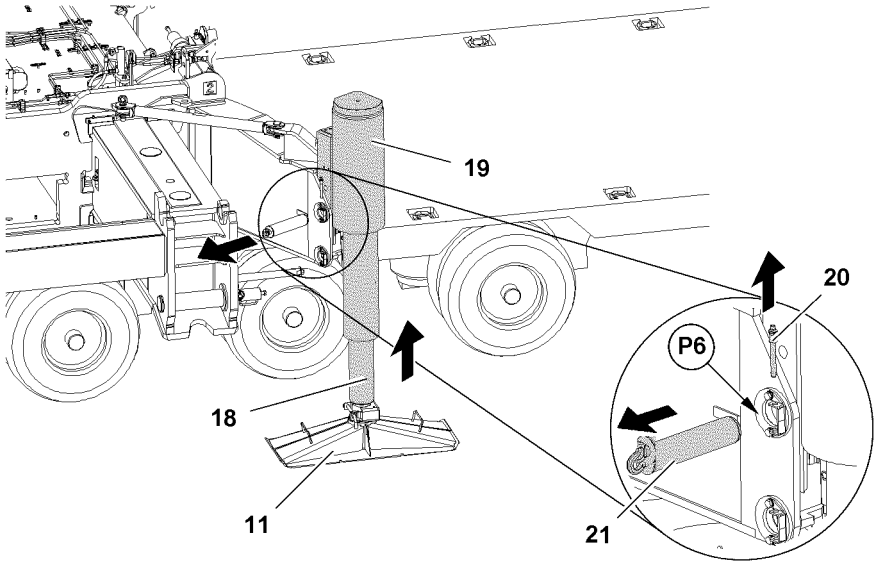

24

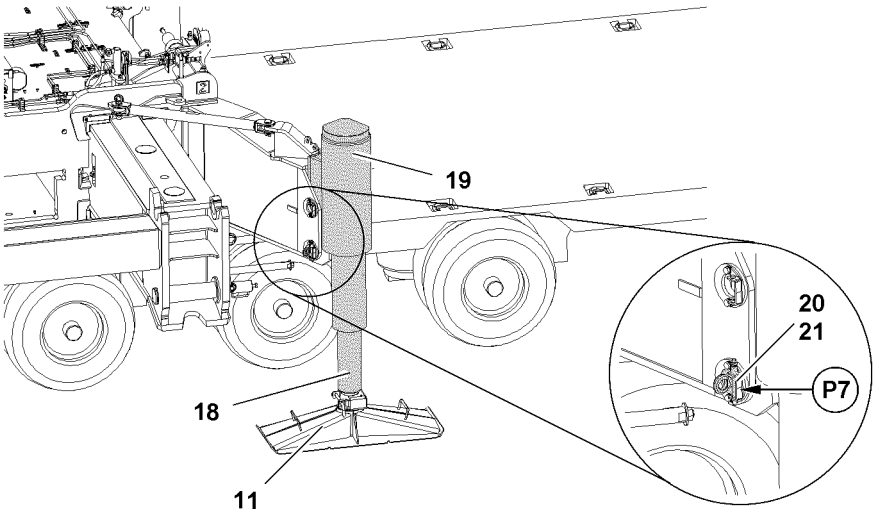

Fig.116876

LWE/ab Muli 010/24201-02-02/en

copyright © Liebherr-Werk Ehingen GmbH 2016

1.4.3 Extending the piston rod from the crane operator's cab

Make sure that the following prerequisite is met:
– The „master switch assignment“ is visible on the touch display right (TE1).

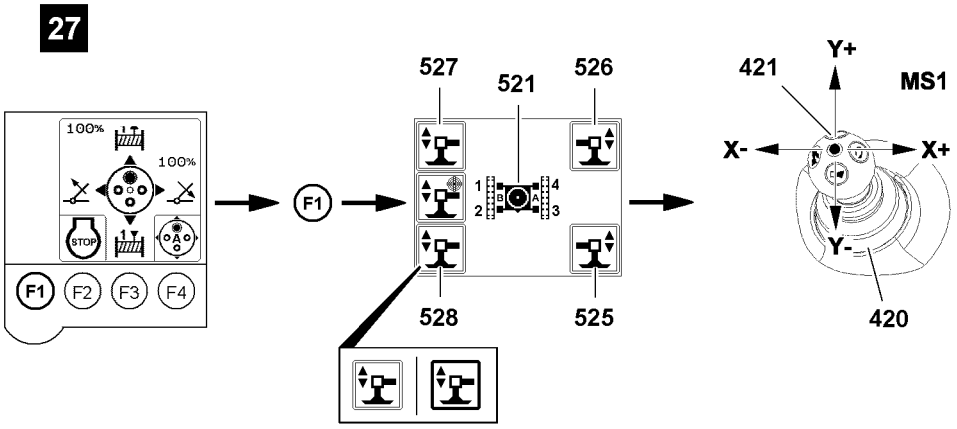

Fig.116900

▶ Press the function key **F1**, see illustration **27**.

Result:

– The „Support“ menu is visible.

The support cylinders are marked with numbers depending on the alignment of the turntable, see icon **521**.

Support cylinders are selected via touch functions:
– **525** Icon
– **526** Icon
– **527** Icon
– **528** Icon

▶ Select support cylinder: Select the icon („touch“).

Result:

– Selected icons are visible with filled out frames: Support cylinders are selected.
– Support cylinders are ready for extension and retraction.

When „retracting the support cylinders“:
▶ Deflect the manual control lever **421** in direction Y+.

Result:

– Piston rod **18** retracts.

When „extending the support cylinders“:
▶ Deflect the manual control lever **421** in direction Y-.

Result:

– Piston rod **18** extends.

copyright © Liebherr-Werk Ehingen GmbH 2016

22

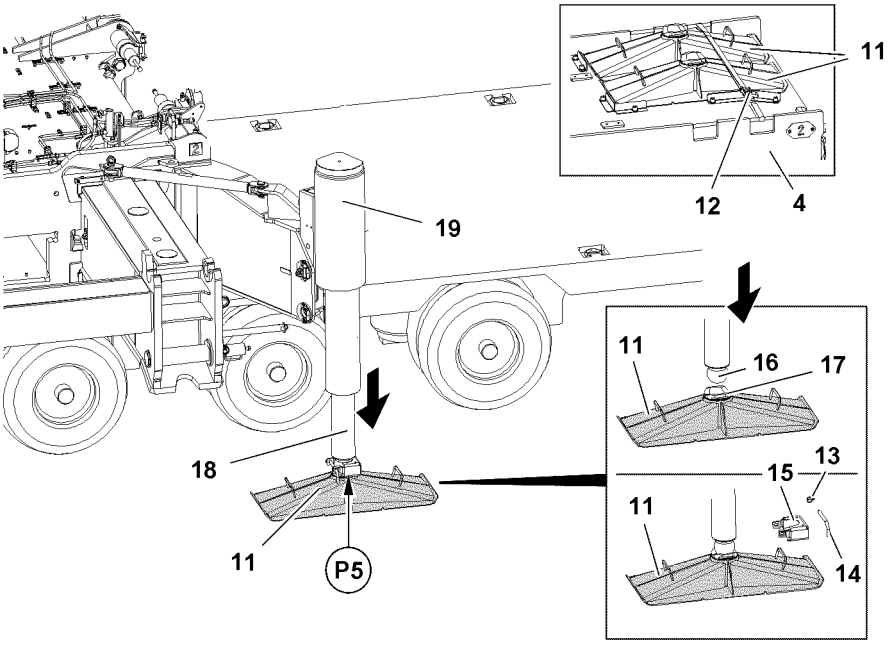

23

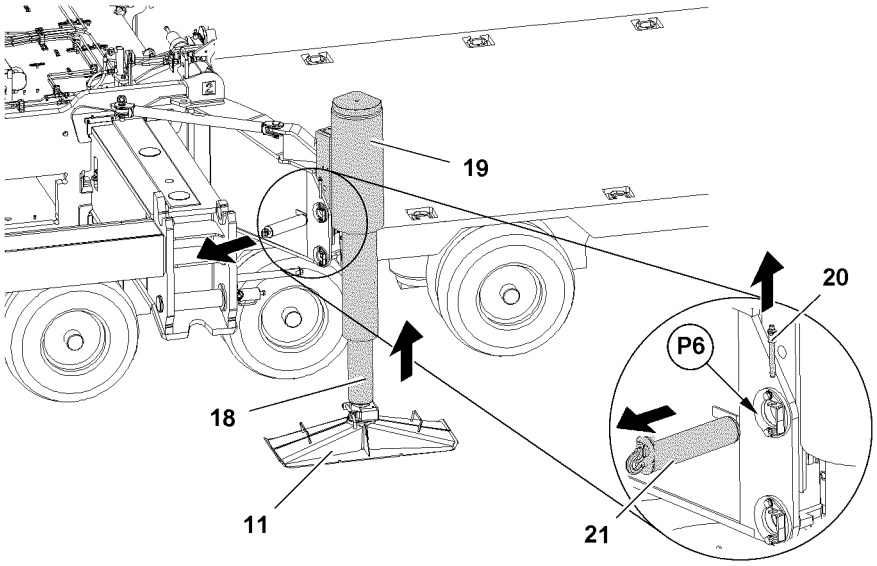

24

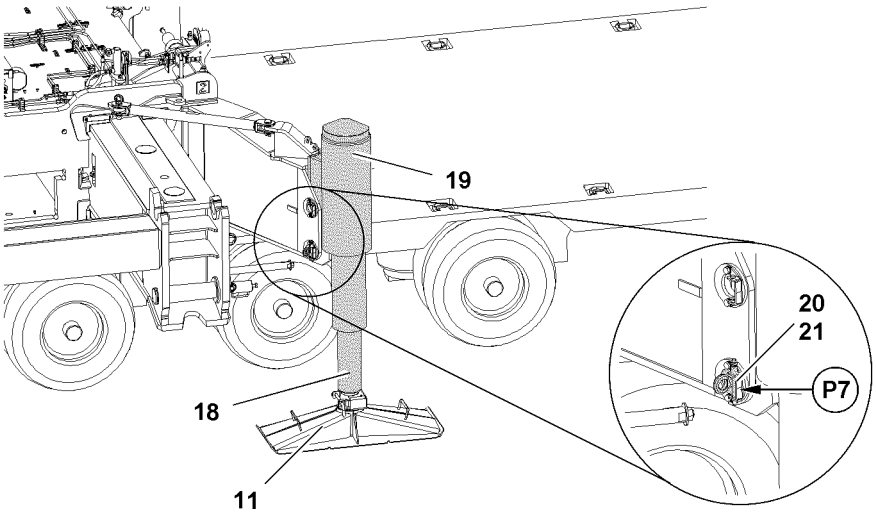

Fig.116876

LWE/ab Muli 010/24201-02-02/en

copyright © Liebherr-Werk Ehingen GmbH 2016

1.4.4 Extending the piston rod with the radio remote control*

Make sure that the following prerequisite is met:
– On the display of the BTT-E, the menu overview is visible.

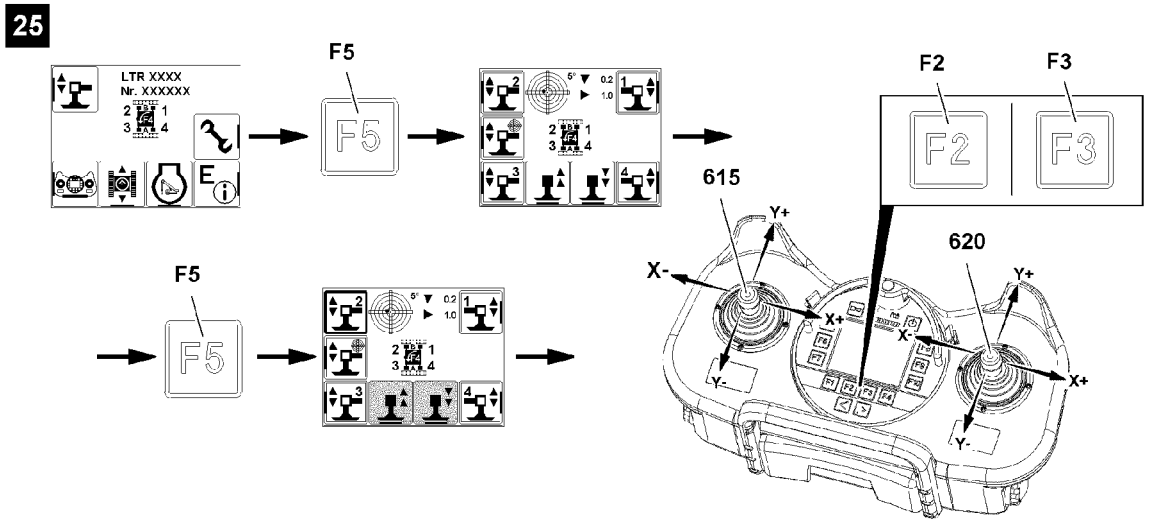

Fig.116898

▶ Press the function key **F5**, see illustration **25**.

Result:

– The „Support“ menu is visible.

The support cylinders are marked with numbers depending on the alignment of the radio remote control.

Support cylinders are selected with function keys:
– **F5** Function key
– **F7** Function key
– **F8** Function key
– **F10** Function key

▶ Select support cylinder: Press the function key.

Result:

– Selected icons are visible with filled out frames: Support cylinders are selected.
– Support cylinders are ready for extension and retraction.

The support cylinders can be extended or retracted with both manual control levers.

When „retracting the support cylinders“:
▶ Deflect the manual control lever in direction Y+.
or
Press the function key **F2**.

Result:

– Piston rod **18** retracts.

When „extending the support cylinders“:
▶ Deflect the manual control lever in direction Y-.
or
Press the function key **F3**.

LWE/ab Muli 010/24201-02-02/en

copyright © Liebherr-Werk Ehingen GmbH 2016

Result:

– Piston rod **18** extends.

LWE/ab Muli 010/24201-02-02/en

copyright © Liebherr-Werk Ehingen GmbH 2016

Empty page!

LWE/ab Muli 010/24201-02-02/en

copyright © Liebherr-Werk Ehingen GmbH 2016

22

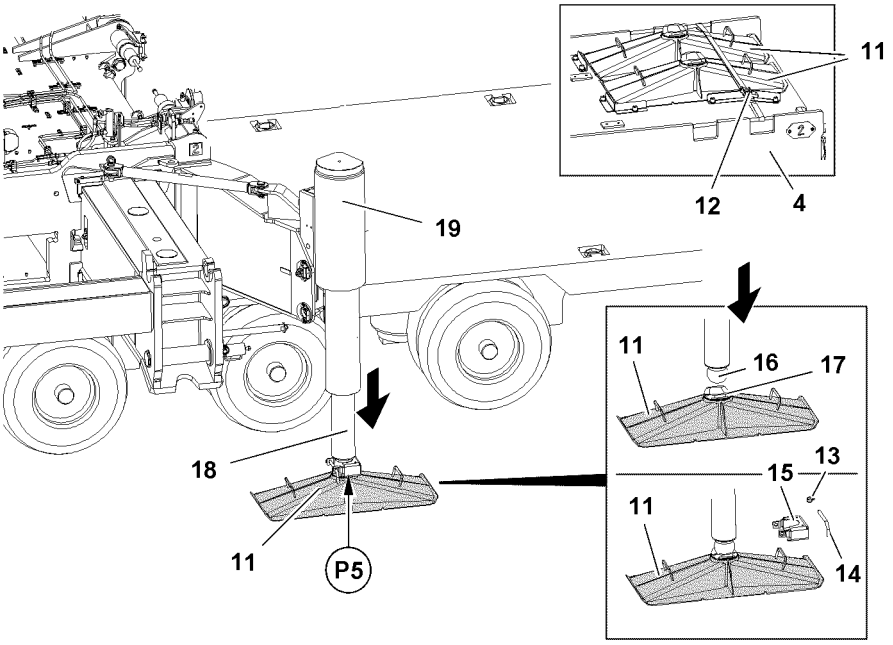

23

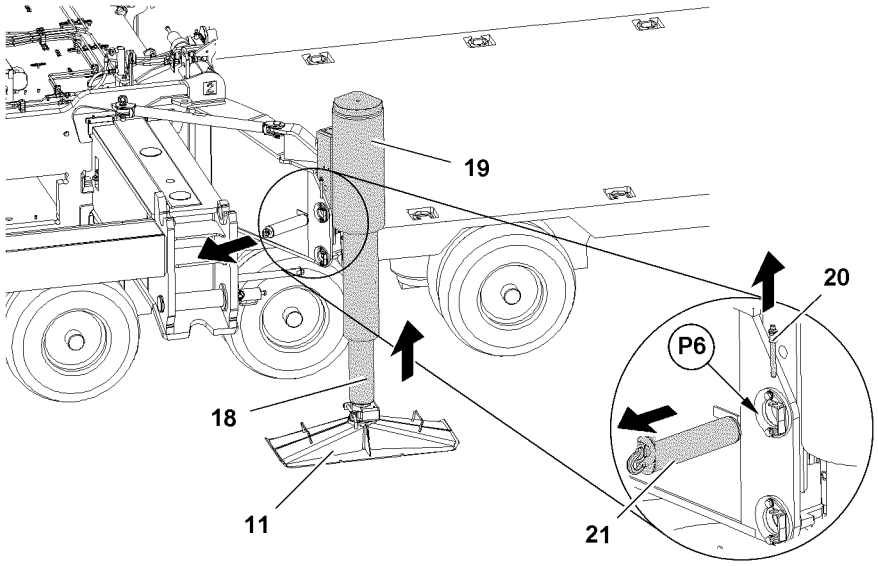

24

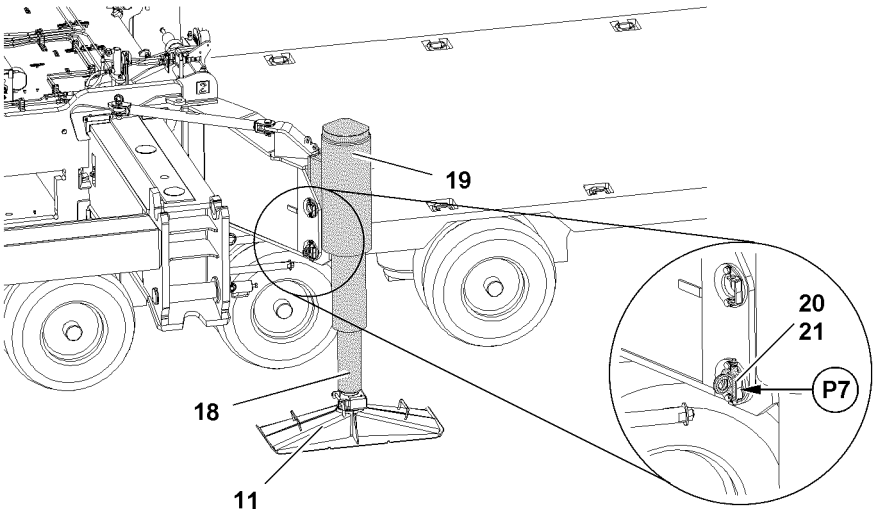

Fig.116876

LWE/ab Muli 010/24201-02-02/en

copyright © Liebherr-Werk Ehingen GmbH 2016

1.5 Positioning the support cylinders in operating position

Make sure that the following prerequisites are met:
- All support plates **11** are pinned on support cylinders **19** and secured.
- The support cylinders **19** are extended to the ground.

1.5.1 Unpinning the support cylinders

▶ Release the pin **21**: Unpin locking ball pin **20**, see illustration **23**.
▶ Unpin the pin **21** at point **P6**, see illustration **23**.
▶ Retract the piston rod **18** until it can be pinned at point **P7**.
▶ Position all support cylinders in operating position.

1.5.2 Retracting the support cylinders

Note
▶ Retract support cylinders with BTT-E, BTT and TE1, see section „Installing the support plates“.

▶ Retract the support cylinders until the pin bores align at point **P7**.

1.5.3 Pinning the support cylinders

When the bores align at point **P7**:
▶ Insert the pin **21** at point **P7**, see illustration **24**.
▶ Secure the pin **21**: Insert the ball locking pin **20**.

Result:

– The support cylinder **19** is pinned and secured in operating position.

LWE/ab Muli 010/24201-02-02/en

copyright © Liebherr-Werk Ehingen GmbH 2016

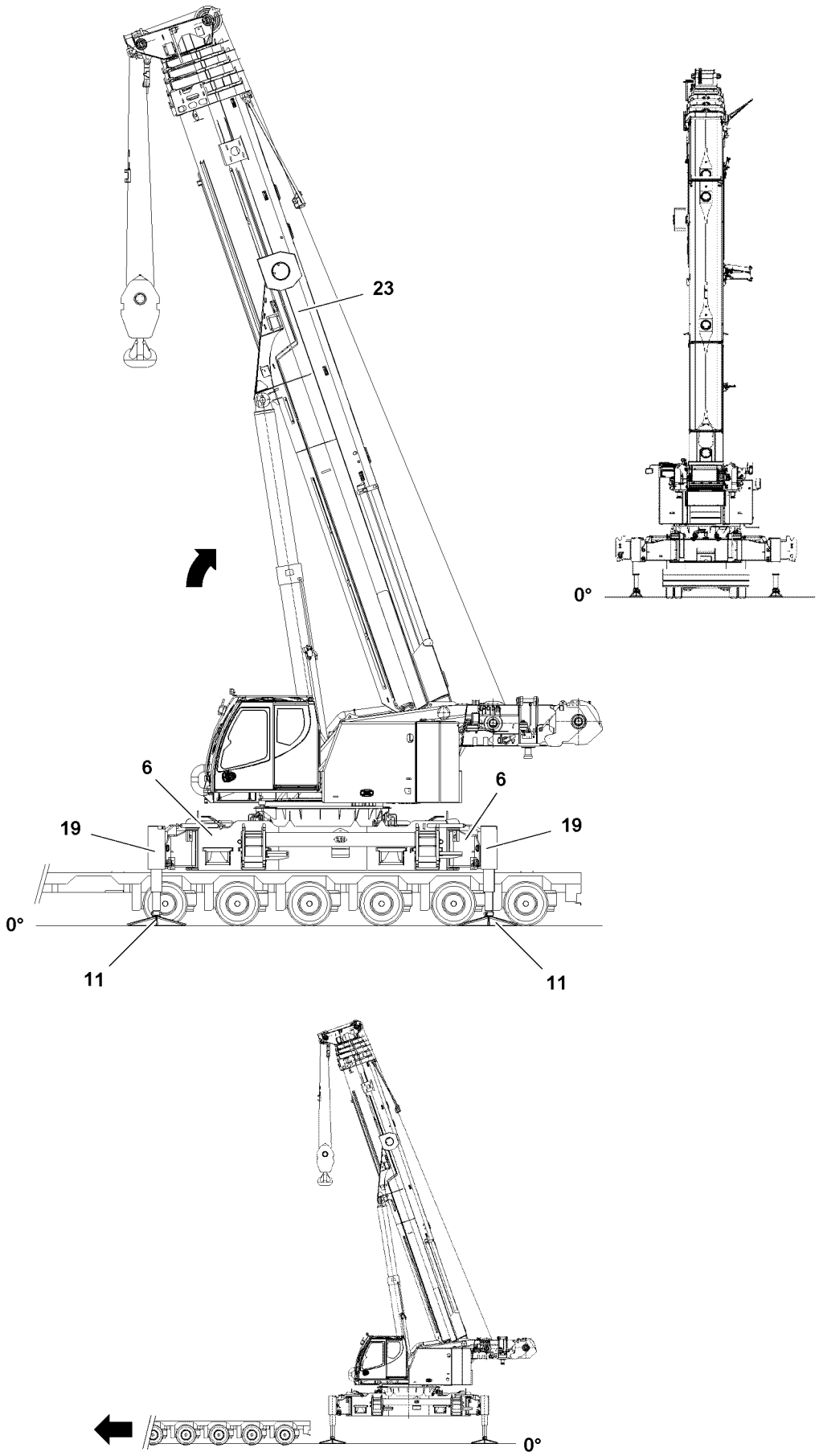

Fig.116877

LWE/ab Muli 010/24201-02-02/en

copyright © Liebherr-Werk Ehingen GmbH 2016

1.6 Supporting the crane

WARNING
Assembly support monitoring!
The assembly support is not monitored by the control!
The crane operator is obligated to check the assembly support before further assembly steps!
▶ Make sure that all folding brackets are swung and secured with rods!
▶ Make sure that all support plates are supported!

WARNING
The crane can tip over!
If the crane is not aligned horizontally, it can tip over!
Personnel can be severely injured or killed!
▶ Make sure that the crane is horizontally aligned!

Note
▶ The crane can be supported manually or automatically!
▶ At manual support, the support cylinders can be extended individually or all four simultaneously!

WARNING
The crane can tip over!
When the automatic support is operated the crane is aligned automatically in horizontal direction!
▶ Make sure that the alignment is within the permitted tolerance and that all four support plates are touching the ground!

WARNING
The crane can topple over!
At assembly / disassembly of the crawler carriers, if the values of the load chart are not adhered to, the crane can topple over at assembly / disassembly!
Personnel can be severely injured or killed!
This could result in high property damage!
▶ Observe and adhere to the values in the load chart for assembly / disassembly of the crawler carrier.

Make sure that the following prerequisites are met:
– No personnel is within the danger zone.
– The engine is running.
– All folding brackets **6** are folded out (no electronic monitoring).
– All support cylinders **19** are extended.
– All support plates **11** are supported.
– The LICCON overload protection is set:
  • Support base 4.4 m on supports
  • Central ballast 0 t
  • Counterweight 0 t
  • Without auxiliary boom / accessory
  • Slewing range

LWE/ab Muli 010/24201-02-02/en

copyright © Liebherr-Werk Ehingen GmbH 2016

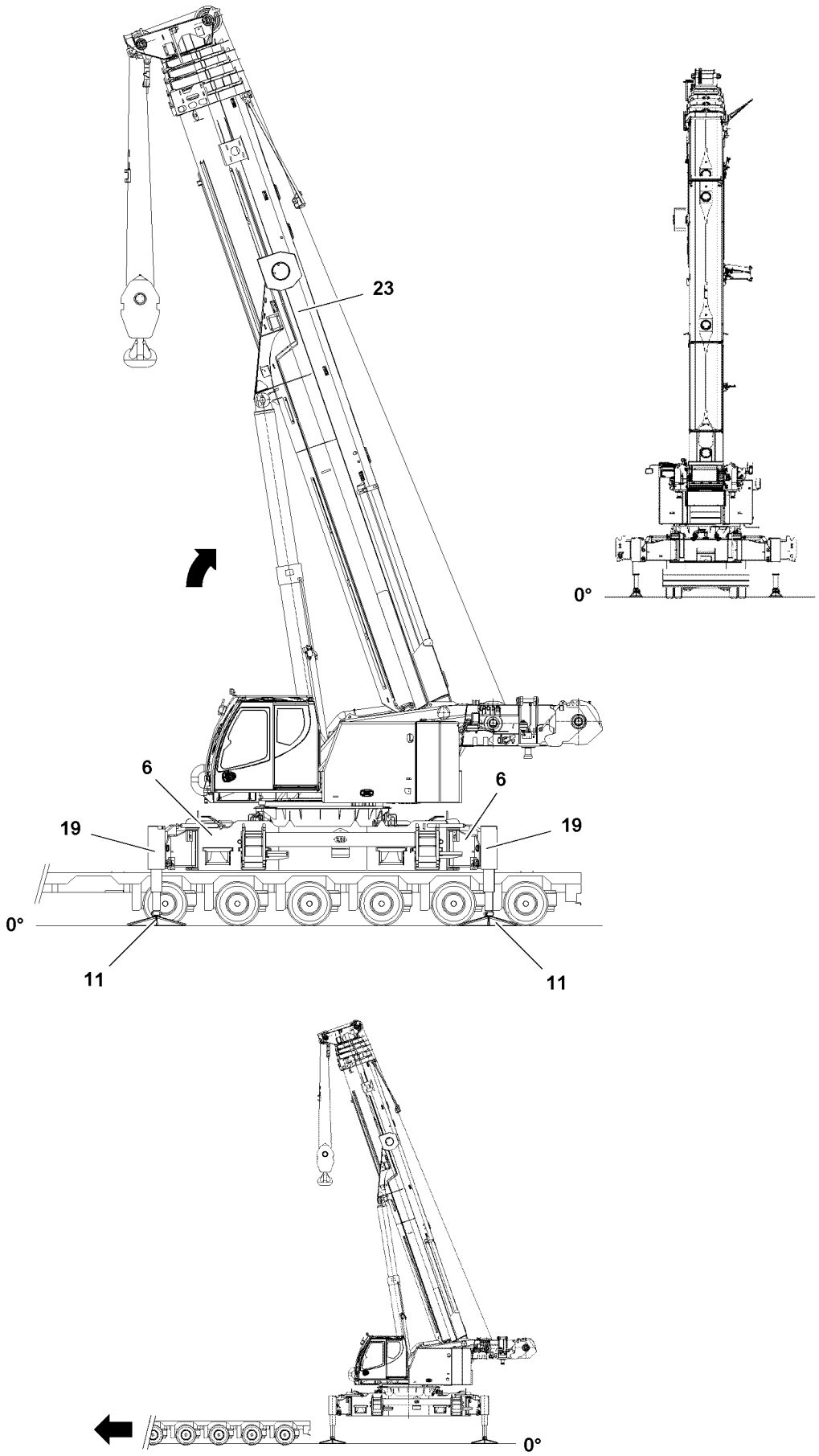

Fig.116877

LWE/ab Muli 010/24201-02-02/en

copyright © Liebherr-Werk Ehingen GmbH 2016

1.6.1 Supporting the crane with the Bluetooth™ Terminal

Make sure that the following prerequisite is met:
– On the display of the BTT, the menu overview is visible.

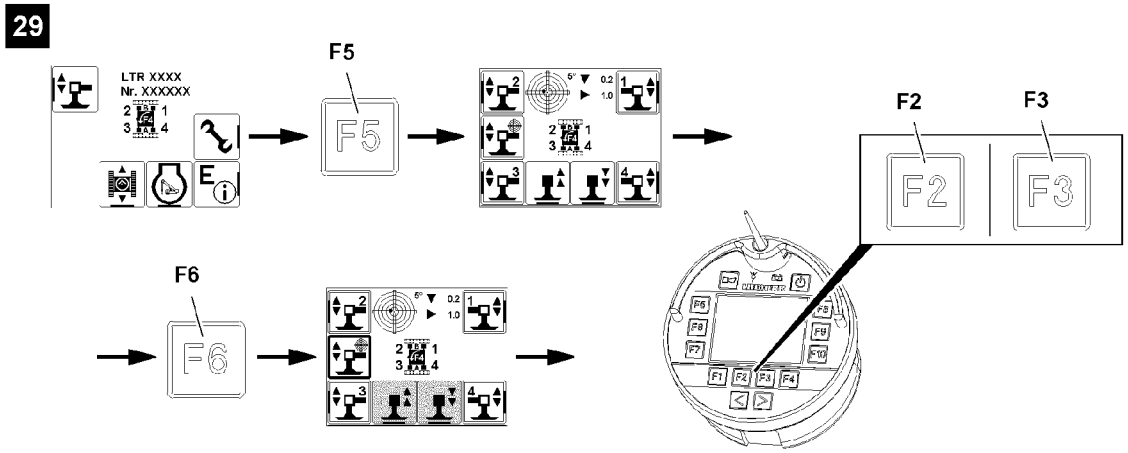

Fig.116904

▶ Press the function key **F5**, see illustration **29**.

Result:

– The „Support“ menu is visible.

The support cylinders are marked with numbers depending on the alignment of the radio remote control.

The support automatic extends or retracts all support cylinders simultaneously and levels the crane during the support procedure automatically.

▶ Select the support automatic: Press the function key **F6**.

Result:

– Selected icon is visible with filled out frame: The support automatic is selected.
– Support cylinders are ready for extension and retraction.

When „retracting the support cylinders“:
▶ Press the function key **F2**.

Result:

– The support cylinders **19** retract simultaneously.
– The crane is horizontally aligned.

When „extending the support cylinders“:
▶ Press the function key **F3**.

Result:

– The support cylinders **19** extend simultaneously.
– The crane is horizontally aligned.

LWE/ab Muli 010/24201-02-02/en

copyright © Liebherr-Werk Ehingen GmbH 2016

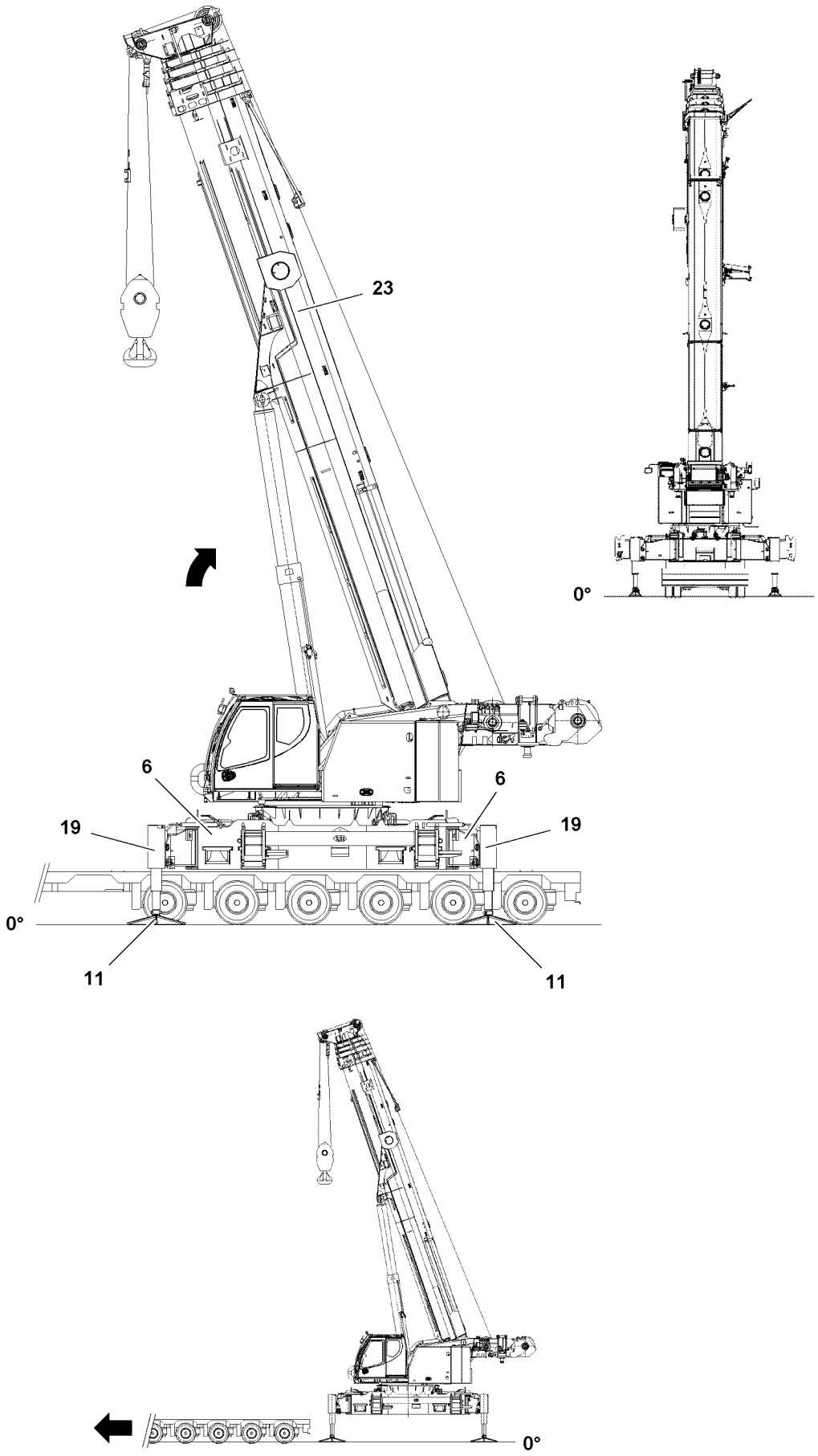

Fig.116877

LWE/ab Muli 010/24201-02-02/en

copyright © Liebherr-Werk Ehingen GmbH 2016

1.6.2 Supporting the crane from the crane operator's cab

Make sure that the following prerequisite is met:
– The „master switch assignment“ is visible on the touch display right (TE1).

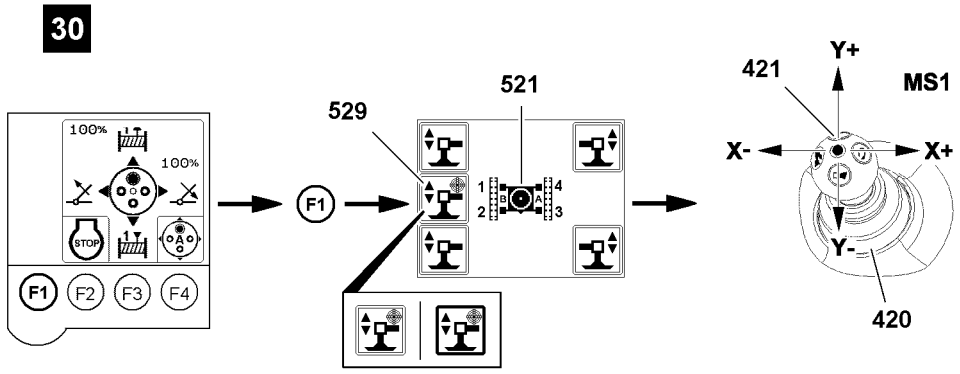

Fig.116905

▶ Press the function key **F1**, see illustration **30**.

Result:

– The „Support“ menu is visible.

The support cylinders are marked with numbers depending on the alignment of the turntable, see icon **521**.

The support automatic extends or retracts all support cylinders simultaneously and levels the crane during the support procedure automatically.

▶ Select the support automatic: Select the icon **529** („touch“).

Result:

– Selected icon is visible with filled out frame: The support automatic is selected.
– Support cylinders are ready for extension and retraction.

When „retracting the support cylinders“:
▶ Deflect the manual control lever **421** in direction Y+.

Result:

– The support cylinders **19** retract simultaneously.
– The crane is horizontally aligned.

When „extending the support cylinders“:
▶ Deflect the manual control lever **421** in direction Y-.

Result:

– The support cylinders **19** extend simultaneously.
– The crane is horizontally aligned.

copyright © Liebherr-Werk Ehingen GmbH 2016

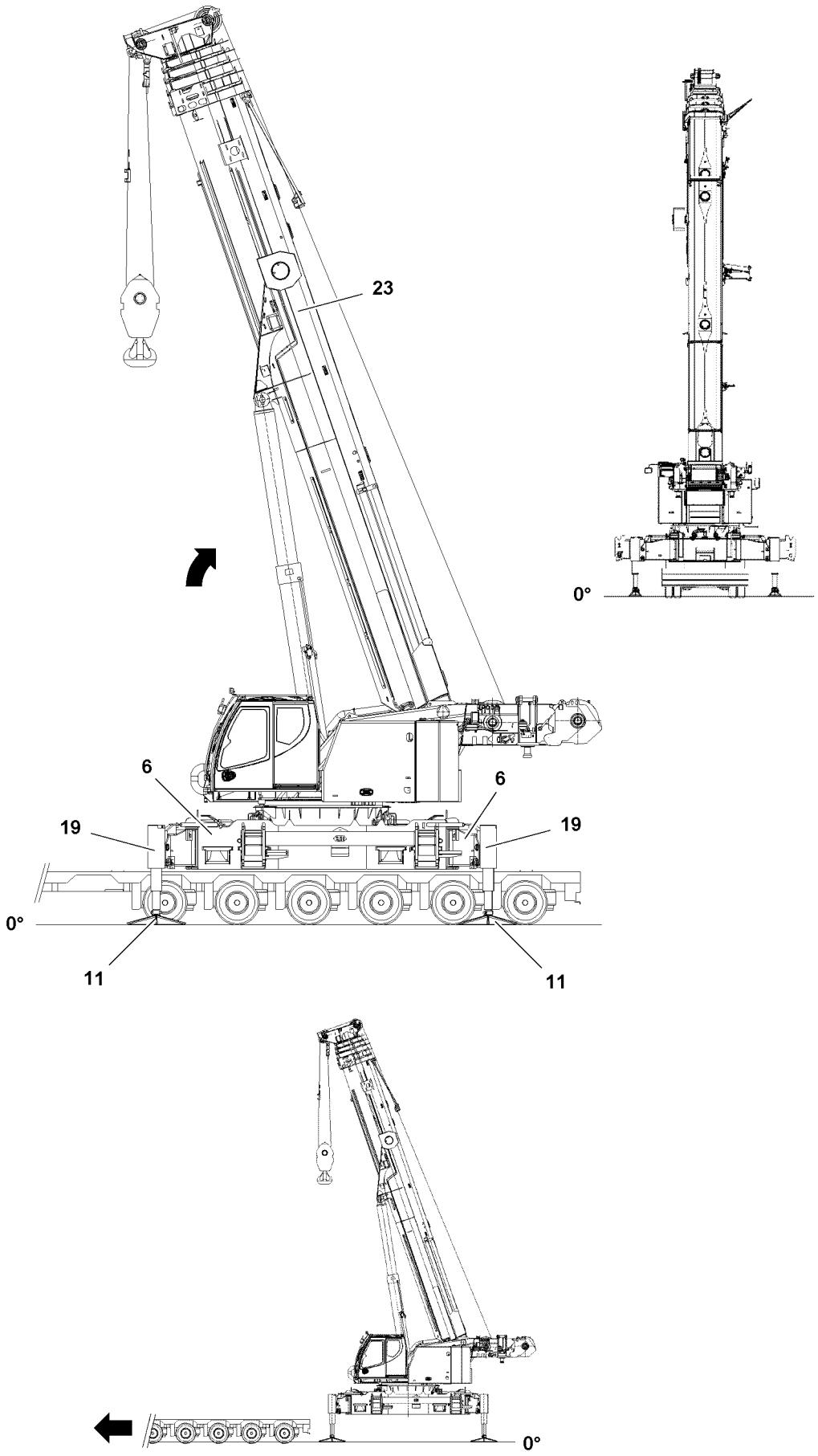

Fig.116877

LWE/ab Muli 010/24201-02-02/en

copyright © Liebherr-Werk Ehingen GmbH 2016

1.6.3 Supporting the crane with the radio remote control*

Make sure that the following prerequisite is met:
– On the display of the BTT-E, the menu overview is visible.

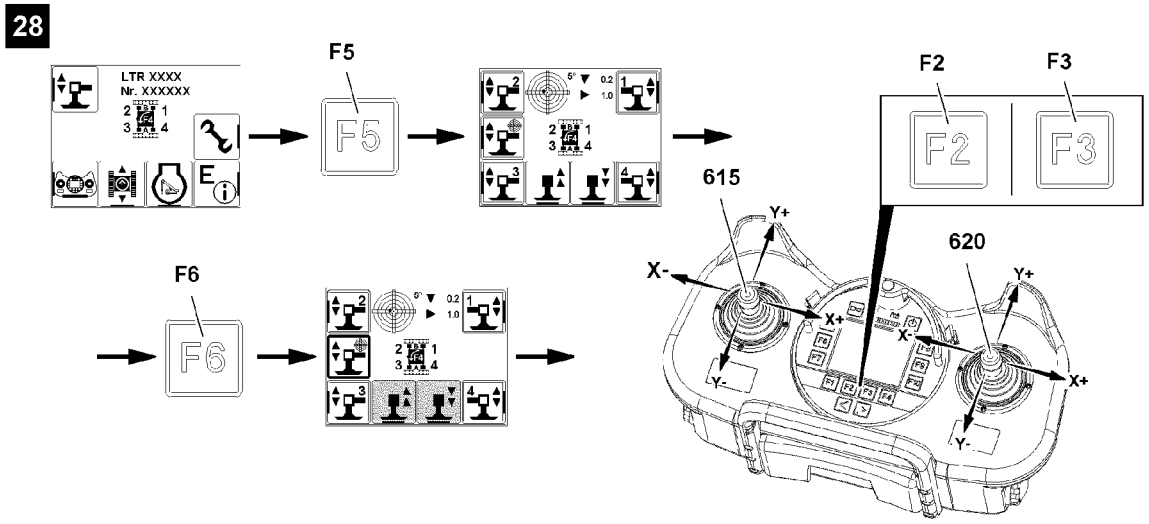

Fig.116903

▶ Press the function key **F5**, see illustration **28**.

Result:

– The „Support“ menu is visible.

The support cylinders are marked with numbers depending on the alignment of the radio remote control.

The support automatic extends or retracts all support cylinders simultaneously and levels the crane during the support procedure automatically.

▶ Select the support automatic: Press the function key **F6**.

Result:

– Selected icon is visible with filled out frame: The support automatic is selected.
– Support cylinders are ready for extension and retraction.

When „retracting the support cylinders“:
▶ Press the function key **F2**.

Result:

– The support cylinders **19** retract simultaneously.
– The crane is horizontally aligned.

When „extending the support cylinders“:
▶ Press the function key **F3**.

Result:

– The support cylinders **19** extend simultaneously.
– The crane is horizontally aligned.

LWE/ab Muli 010/24201-02-02/en

copyright © Liebherr-Werk Ehingen GmbH 2016

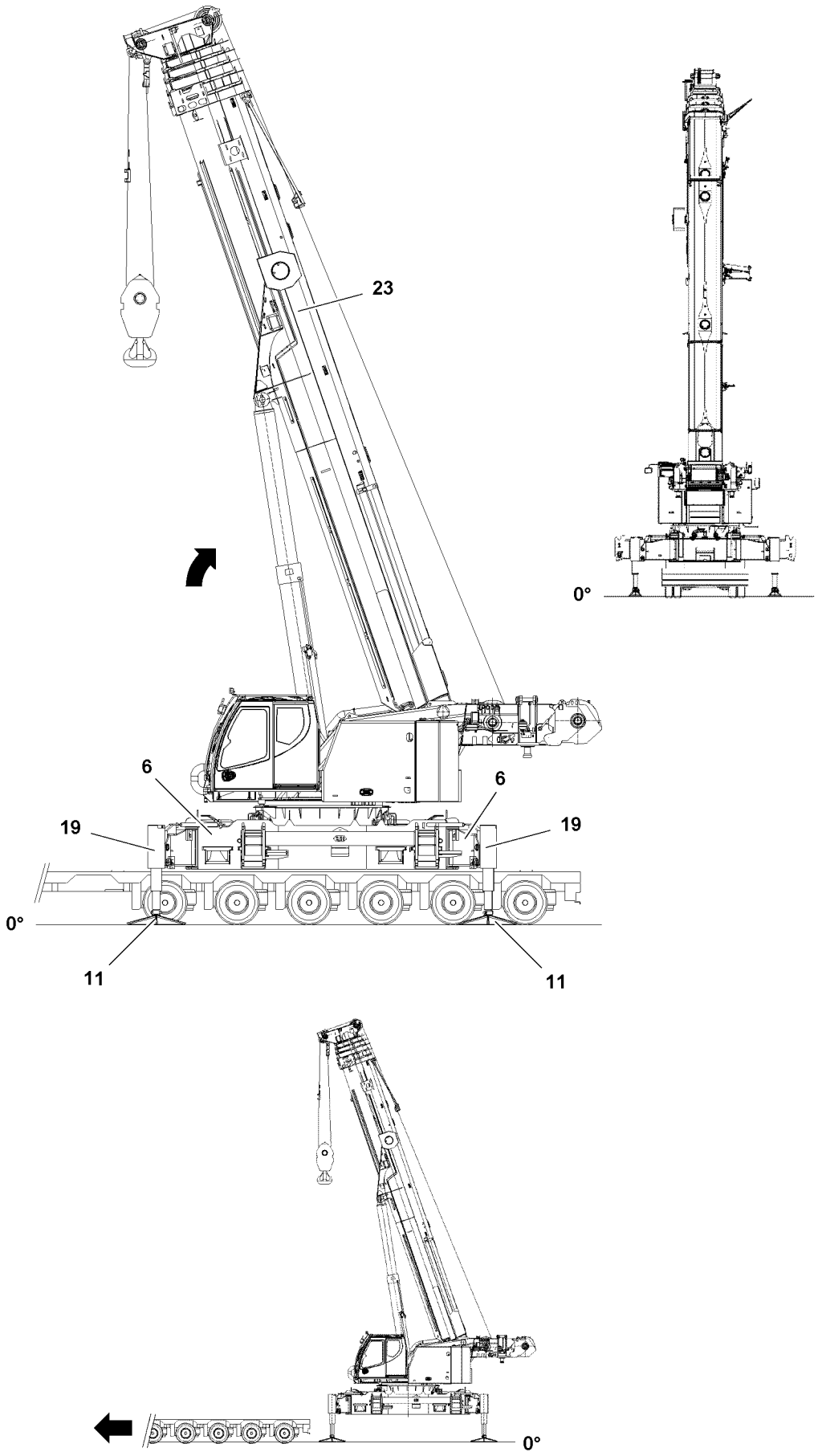

Fig.116877

LWE/ab Muli 010/24201-02-02/en

copyright © Liebherr-Werk Ehingen GmbH 2016

1.7 Driving the transport vehicle out

Make sure that the following prerequisite is met:
- The crane is horizontally aligned.
- The crane is supported high enough so that the transport vehicle can drive out from under the crane.

▶ Erect telescopic boom.
▶ Drive the transport vehicle out from under the crane.

LWE/ab Muli 010/24201-02-02/en

copyright © Liebherr-Werk Ehingen GmbH 2016

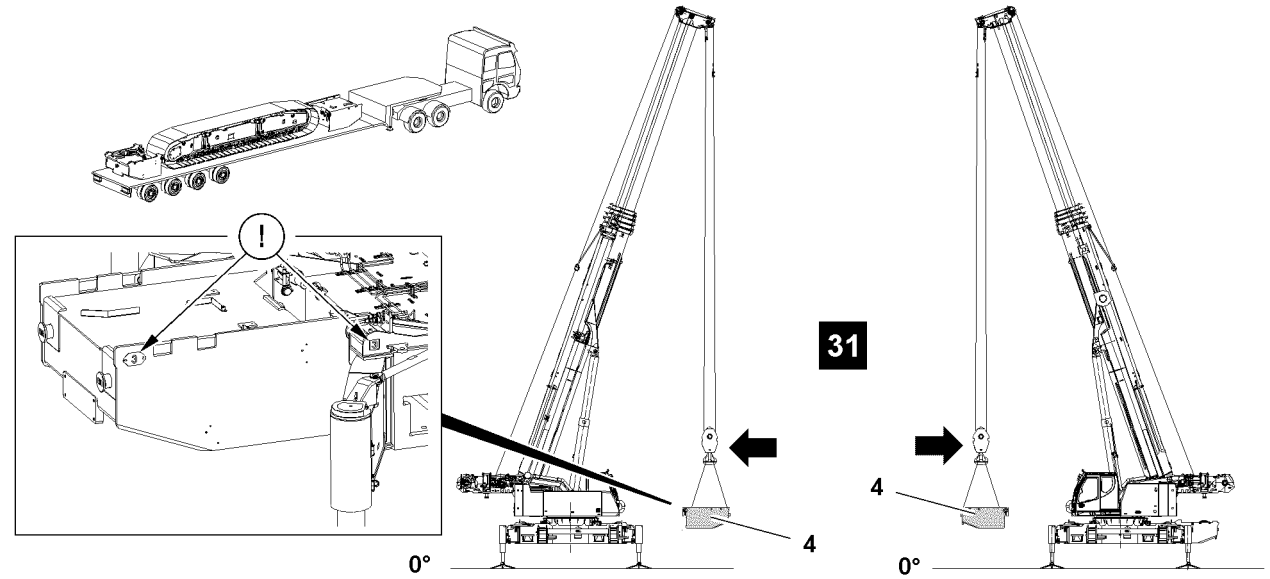

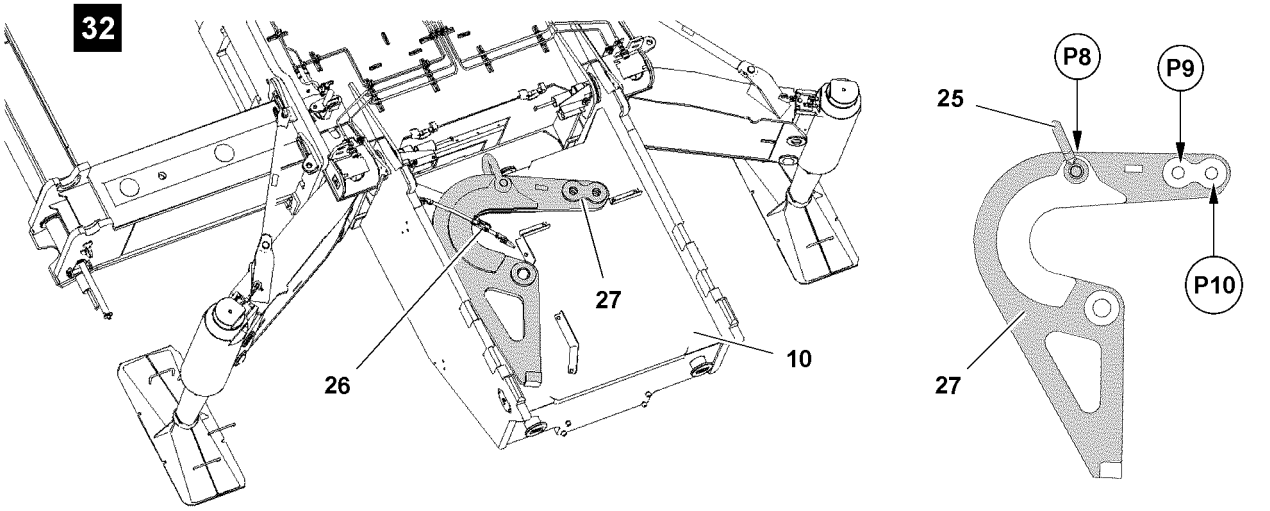

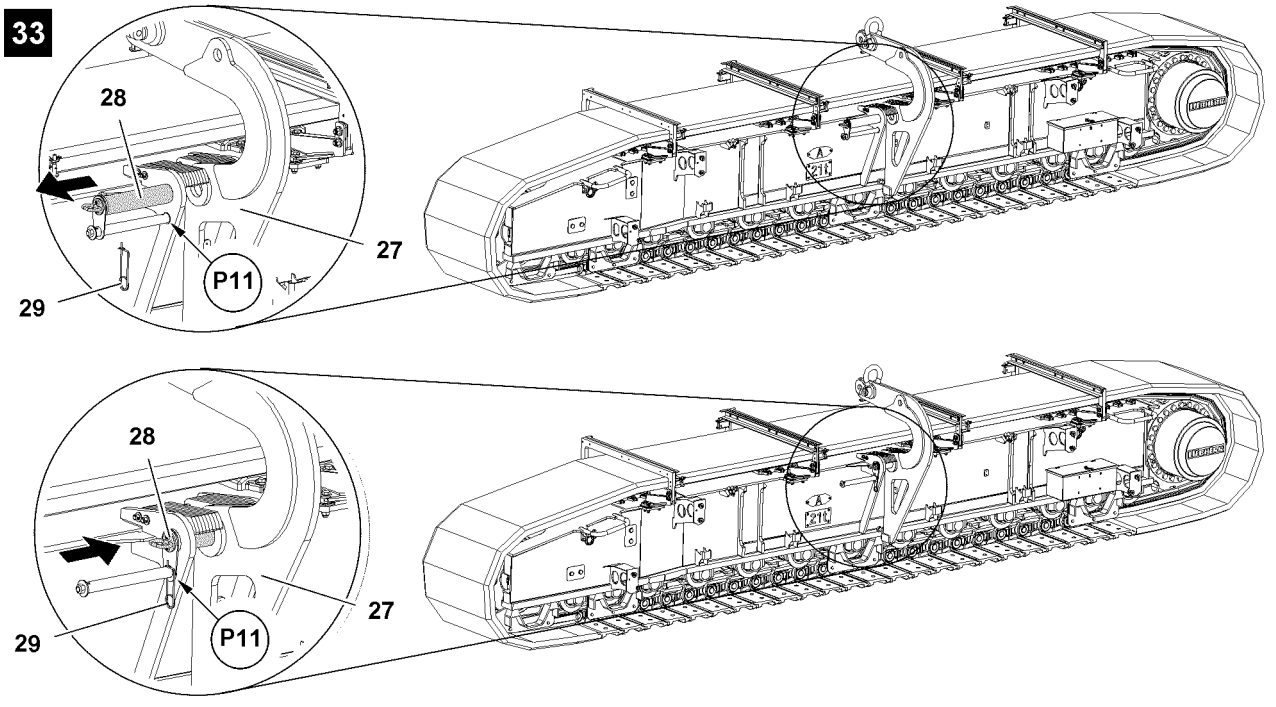

Fig.116878

LWE/ab Muli 010/24201-02-02/en

copyright © Liebherr-Werk Ehingen GmbH 2016

1.8 Installing the central ballast

Note
▶ Install the central ballast **4**, see Crane operating instructions, chapter 3.03!

▶ Install the central ballast **4**, see illustration **31**.

1.9 Assembling the crawler carrier

Make sure that the following prerequisites are met:
– No personnel is within the danger zone.
– All support cylinders are positioned in operating position.
– The central ballast is installed.
– Drive the crawler carriers are close as possible lengthwise to the crane.
– The LICCON overload protection is set:

- Support base 4.4 m on supports
- Central ballast 20 t
- Counterweight 0 t
- Without auxiliary boom / accessory
- Slewing range

Note
▶ For operation crane superstructure, see Crane operating instructions, chapter 4.01!

1.9.1 Preparing the assembly device

▶ Release the transport belt **26**, see illustration **32**.
▶ Fasten the crane at point **P8** on the shackle **25**.
▶ Lift the assembly device **27** with the crane and place it on the ground.
▶ Remove the shackle **25** at point **P8**, see illustration **32**.

Fastening point	Application
P8	Transport
P9	Assembly with incline
P10	Assembly 90°

▶ Fasten the crane at point **P9** on the shackle and lift the assembly device **27**.

1.9.2 Pinning the assembly device with the crawler carrier

▶ Remove the spring retainer **29** at point **P11** and unpin the pin **28**, see illustration **33**.
▶ Swing the assembly device **27** to the pin location.

Note
▶ The position in which the crawler carrier remains balanced when lifting is set by the Liebherr-Werk!

▶ Insert the pin **28** at point **P11** and secure with spring retainer **29**, see illustration **33**.

Result:

– The assembly device **27** is pinned and secured with the crawler carrier.

LWE/ab Muli 010/24201-02-02/en

copyright © Liebherr-Werk Ehingen GmbH 2016

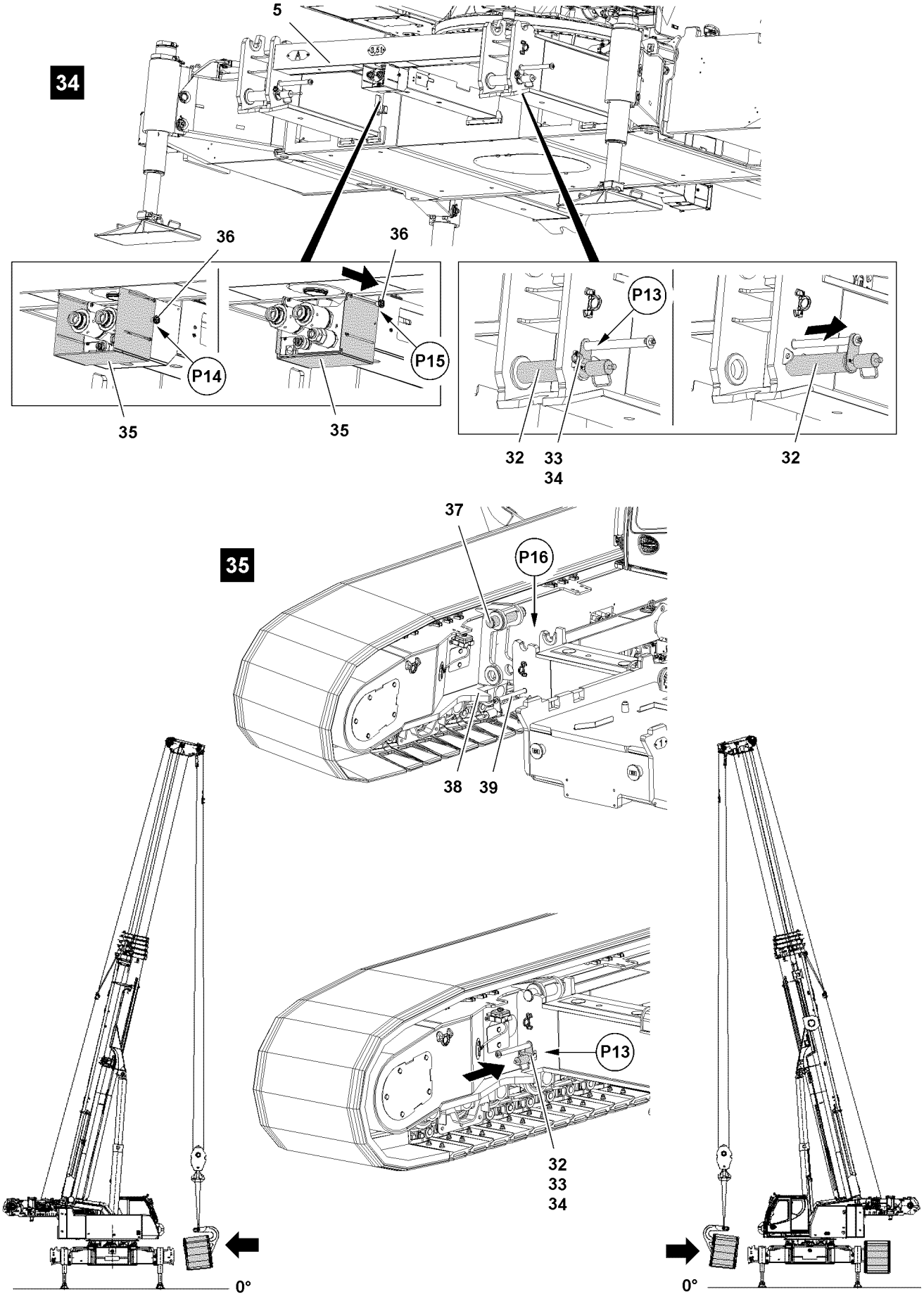

Fig.116879

LWE/ab Muli 010/24201-02-02/en

copyright © Liebherr-Werk Ehingen GmbH 2016

1.9.3 Preparing the pin pulling device

NOTICE
Damage to the pin pulling device!
If the pins **32** are not unpinned at assembly of the cross carrier **5** then there is the danger that the pin pulling devices will be damaged!
▶ Make sure that the pins **32** on the cross carrier **5** are unpinned!

▶ Remove the safety locking pins **34** on both sides at point **P13**, see illustration **34**.
▶ Unpin the pins **33** on both sides at point **P13**, see illustration **34**.
▶ Unpin the pins **32** on both sides with the mechanical pin pulling device to the stop, see illustration **34**.

1.9.4 Sliding the protective plate on the cross carrier into assembly position

▶ Push the pin and pull the ball locking pins **36** out at point **P14** on both sides, see illustration **34**.
▶ Slide the protective plate **35**, see illustration **34**.
▶ Push the pin and insert the ball locking pins **36** at point **P15** on both sides, see illustration **34**.

1.9.5 Pinning the crawler carrier

Make sure that the following prerequisites are met:
– The assembly device is pinned and secured on the crawler carrier.
– The pins **32** on the cross carrier are unpinned.
– The protective plates **35** are in assembly position.

▶ Lift the crawler carrier „A“ and drive away the transport vehicle.

Note
▶ Pay attention to the identification on the crawler carrier and the cross carrier at assembly!

NOTICE
Damage to the pin pulling device!
To avoid damage on the pin pulling device **39** by the guide **38** on the crawler carrier, move the crawler carrier „A“ in to just over the edge of the cross carrier „A“!
▶ Do not move the crawler carrier „A“ in too high!
▶ The crawler carrier assembly must be carried out exclusively with a guide!
▶ Make sure that the guide is constantly in acoustic and visual contact with the crane operator!

▶ Lower the crawler carrier „A“ with the pin **37** at point **P16** on the receptacles of the cross carrier „A“, see illustration **35**.
▶ Swing the crawler carrier „A“ to the stop.
▶ Pin the pins **32** on both sides at point **P13** with the mechanical pin pulling device to the stop, see illustration **35**.
▶ Insert the pins **33** on both sides at point **P13** and secure with safety locking pin **34**, see illustration **35**.

Result:

– Crawler carrier „A“ is pinned and secured.

Note
▶ The assembly of the crawler carrier „B“ is identical with the assembly of the crawler carrier „A“!

▶ Assemble the crawler carrier „B“.
▶ Unpin the assembly device and place it again in transport position on the central ballast.
▶ Secure the assembly device with the transport belt.

LWE/ab Muli 010/24201-02-02/en

copyright © Liebherr-Werk Ehingen GmbH 2016

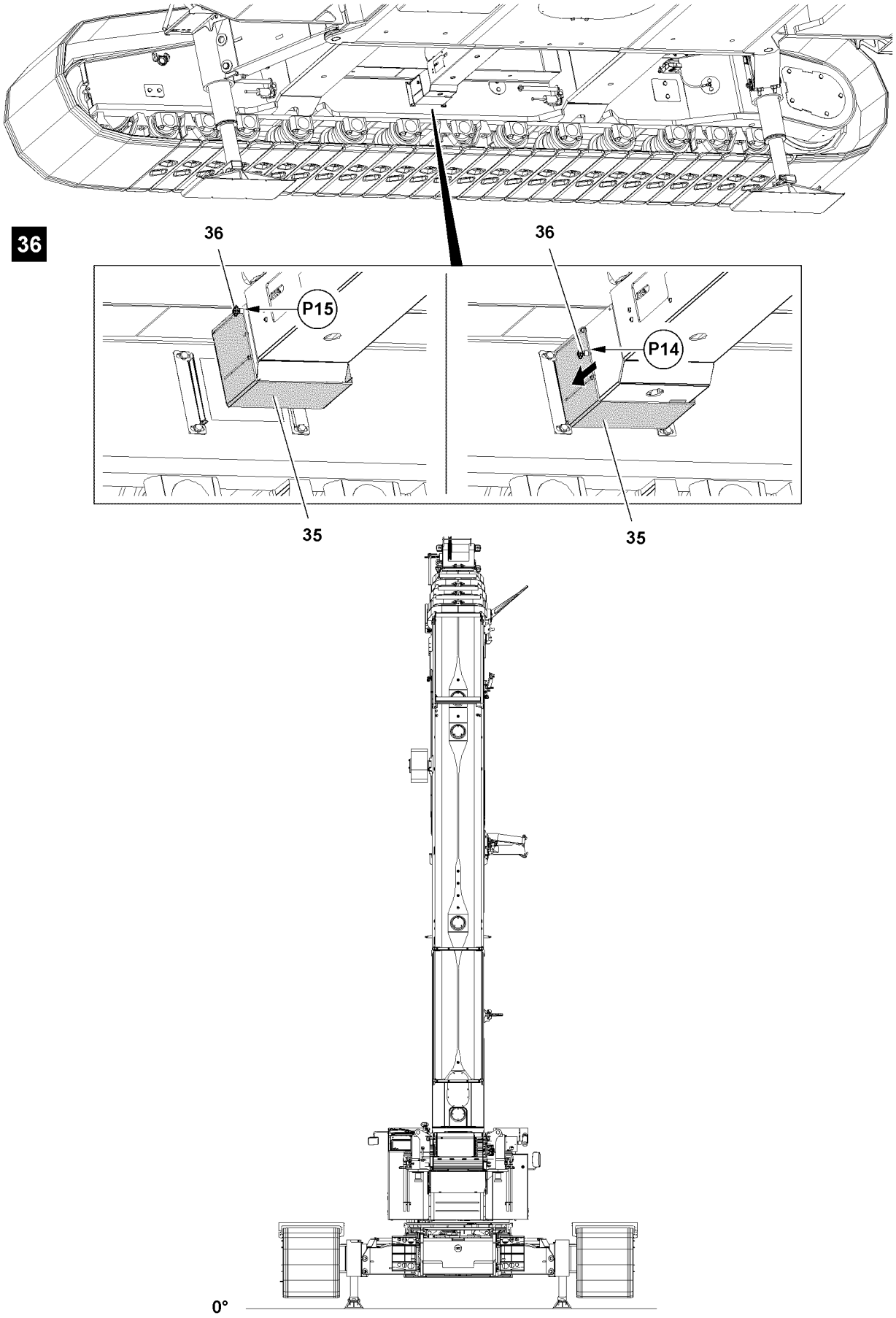

Fig.116880

LWE/ab Muli 010/24201-02-02/en

copyright © Liebherr-Werk Ehingen GmbH 2016

1.10 Establishing the connection to the crawler carrier

Make sure that the following prerequisite is met:
– The crawler carrier is installed, pinned and secured.

1.10.1 Establishing the hydraulic connections to the crawler carrier

The hydraulic connections of the crawler carrier are made with quick couplings.

When connecting hydraulic lines with quick couplings, make sure that the coupling procedure is carried out correctly.

WARNING
Pressure in the hydraulic lines!
If the pressure supply is not interrupted before connecting / releasing the hydraulic lines, the hydraulic oil can escape with high pressure!
Personnel can be severely injured or killed!
▶ Release the pressure in the hydraulic system before connecting / disconnecting: Interrupt the pressure supply and wait for a short time!

WARNING
Loss of pressure or leakage!
Incorrectly coupled or self-loosening quick-release couplings (particularly return lines) can result in serious accidents due to component failure!
▶ Check that the quick couplings have been properly connected before using the crane!

▶ Connect the coupling components (sleeve and connector) and screw together with the hand-tightened nut.
▶ Tighten the hydraulic coupling by hand. Rotate the hand-tightened nut until it reaches a tangible, fixed stop position.
▶ Establish the hydraulic connections to the crawler carrier.

1.10.2 Establishing the electrical connections to the crawler carrier

▶ Establish the electrical connections to the crawler carrier, see separate electrical wiring diagram.

1.10.3 Establishing the connections of the central lubrication system to the crawler carrier

▶ Establish the connections of the central lubrication system to the crawler carrier.

1.10.4 Sliding the protective plate on the cross carrier into operating position

▶ Push the pin and pull the ball locking pins **36** out at point **P15** on both sides, see illustration **36**.
▶ Slide the protective plate **35**, see illustration **36**.
▶ Push the pin and insert the ball locking pins **36** at point **P14** on both sides, see illustration **36**.

LWE/ab Muli 010/24201-02-02/en

copyright © Liebherr-Werk Ehingen GmbH 2016

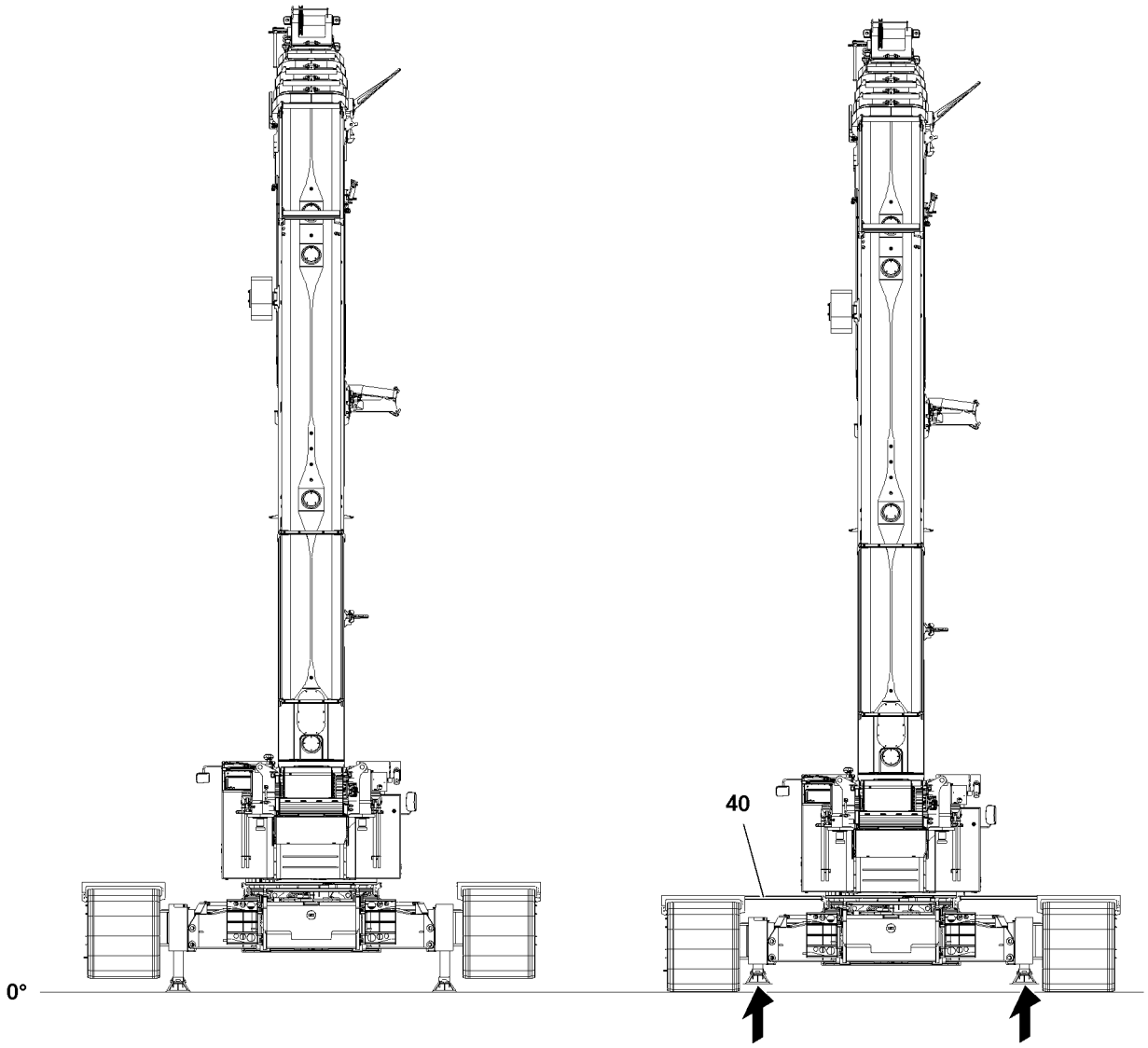

LWE/ab Muli 010/24201-02-02/en

Fig.116881

copyright © Liebherr-Werk Ehingen GmbH 2016

1.11 Lowering the crane

Make sure that the following prerequisites are met:
- The crawler carriers are pinned and secured.
- The crawler carriers have been checked and tested for function.

WARNING
Danger of crushing!
When lowering the crane, there is an increased danger of accidents due to crushing!
Personnel can be severely injured or killed!
▶ Make sure that there are no persons within the danger zone!

Note
▶ Retract support cylinders with BTT-E, BTT and TE1, see section „Supporting the crane“.

▶ Lower the crane.

WARNING
Danger of falling!
▶ For further assembly steps, install the walking platforms **40** immediately.

▶ Install the walking platforms **40**, see Crane operating instructions, chapter 2.06.

LWE/ab Muli 010/24201-02-02/en

copyright © Liebherr-Werk Ehingen GmbH 2016

LWE/ab Muli 010/24201-02-02/en

Fig.195219

copyright © Liebherr-Werk Ehingen GmbH 2016

2 Disassembling the crawler carriers

DANGER
Crane movement in **unsupported** status!
If the crane superstructure is turned or the boom erected, then the crane can tip over and severely or fatally injure personnel.
- ▶ Do not turn the crane superstructure when as the crane is resting on the transport vehicle.
- ▶ Do not turn erect the boom when as the crane is resting on the transport vehicle.
- ▶ Before carrying out crane movements, support the crane with the assembly support and align it horizontally.
- ▶ Adhere to the sequence of the assembly steps in this chapter.

WARNING
Danger of falling!
During assembly / disassembly, inspection and maintenance work, personnel must be secured with appropriate aids to prevent them from falling! If this is not observed, assembly personnel could fall and suffer life-threatening or fatal injuries!
- ▶ The assembly personnel must always move carefully and anticipatory on the crane, the crane components or lattice sections!
- ▶ All work aloft, where there is a danger of falling must be carried out with suitable aids!
- ▶ If fall protection equipment is available, then it must be used!
- ▶ If aids are not available and work cannot be carried out from the ground, then the assembly personnel must secure themselves with the permissible fall arrest system to prevent falling, see Crane operating instructions, chapter 2.04!
- ▶ The fall arrest system must be attached on the fastening and hook points as well as on the safety ropes!
- ▶ Only step on the aids, ladders and catwalks with clean shoes!
- ▶ Keep aids, ladders and catwalks free of heavy dirt, snow and ice!

WARNING
Danger of impact / crushing!
When installing / removing counterweight components with the auxiliary crane, crane components can start to swing back and forth!
When lifting / lowering and positioning crane components, there is an increased danger of impacts / crushing!
Personnel can be caught and severely injured or killed!
- ▶ Make sure that personnel cannot be caught by components!
- ▶ When working in danger zones: Use aids to protect limbs!
- ▶ Guide components with suitable aids to minimize oscillation!

WARNING
Improper support!
If the crane is not properly supported from below, it can sink into the ground and cause it to topple over!
- ▶ The support must take on the weight of the crane safely!
- ▶ Use stable materials such as wood, steel plates or concrete slabs of a suitable size for support, depending on the ground conditions!

LWE/ab Muli 010/24201-02-02/en

copyright © Liebherr-Werk Ehingen GmbH 2016

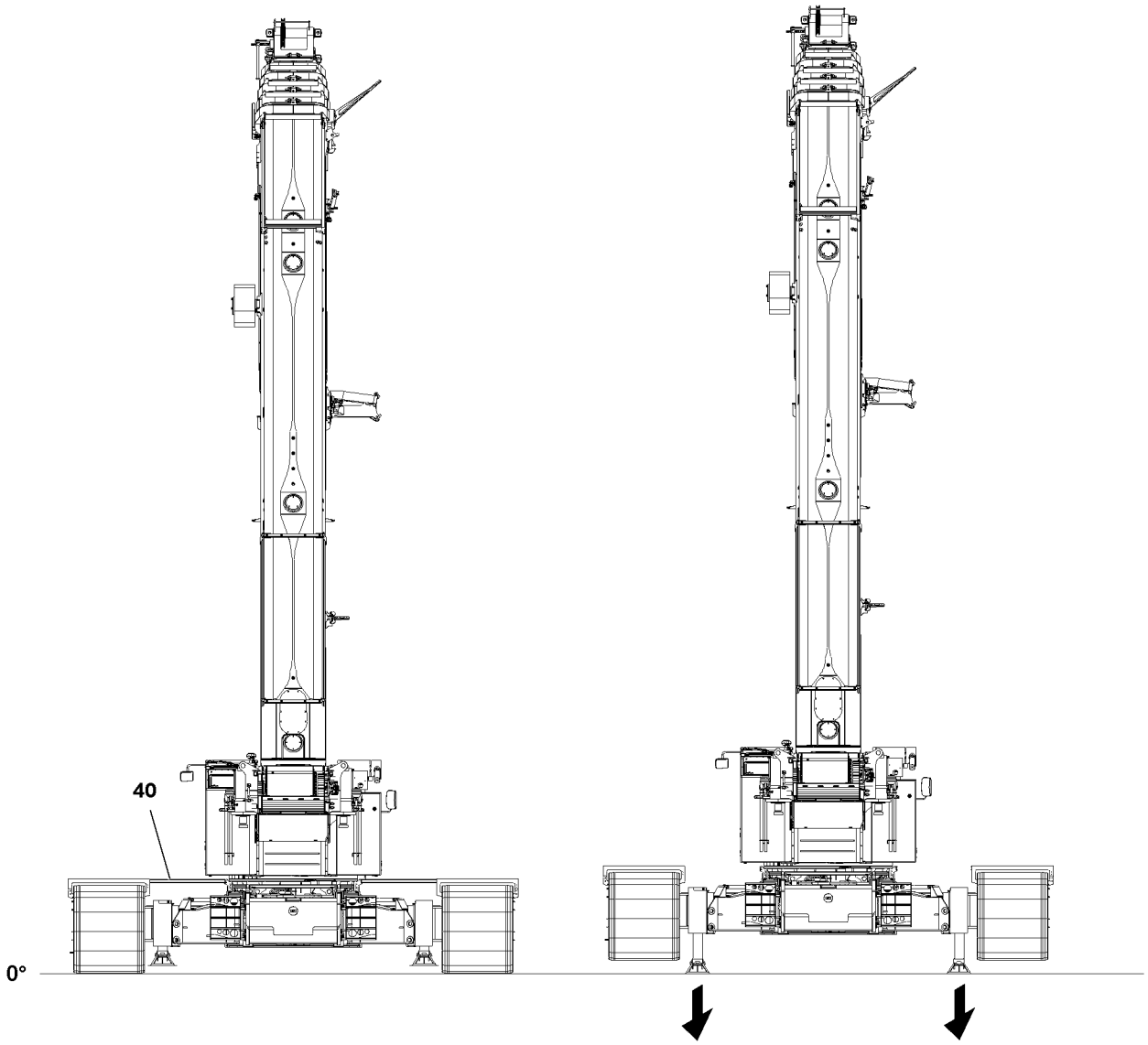

LWE/ab Muli 010/24201-02-02/en

Fig.116882

copyright © Liebherr-Werk Ehingen GmbH 2016

2.1 Supporting the crane

WARNING
The crane can tip over!
If the crane is not aligned horizontally, it can tip over!
Personnel can be severely injured or killed!
▶ Make sure that the crane is horizontally aligned!

Note
▶ The crane can be supported manually or automatically!
▶ At manual support, the support cylinders can be extended individually or all four simultaneously!

WARNING
Assembly support monitoring!
The assembly support is not monitored by the control!
The crane operator is obligated to check the assembly support before further disassembly steps!
▶ Make sure that all folding brackets are swung and secured with rods!
▶ Make sure that the support plates are positioned on load bearing and horizontal ground!
▶ Make sure that all support plates are supported!

WARNING
The crane can tip over!
When the automatic support is operated the crane is aligned automatically in horizontal direction!
▶ Make sure that the alignment is within the permitted tolerance and that all four support plates are touching the ground!

WARNING
The crane can topple over!
At assembly / disassembly of the crawler carriers, if the values of the load chart are not adhered to, the crane can topple over at assembly / disassembly!
Personnel can be severely injured or killed!
This could result in high property damage!
▶ Observe and adhere to the values in the load chart for assembly / disassembly of the crawler carrier.

Make sure that the following prerequisites are met:
– The set up location is level and has sufficient load bearing capacity.
– The telescopic boom is fully telescoped in.
– The crawlers are extended on wide track (100 %).
– Machines with fastening bitts: Fastening bitts are extended into operating position
– The counterweight on the turntable has been removed.
– The walking platforms **40** have been removed on the turntable.
– No personnel is within the danger zone.
– The engine is running.
– All folding brackets are folded out (no electronic monitoring).
– All support plates are supported.
– The LICCON overload protection is set:
  • Support base 4.4 m on supports
  • Central ballast 20 t
  • Counterweight 0 t
  • Without auxiliary boom / accessory
  • Slewing range

LWE/ab Muli 010/24201-02-02/en

copyright © Liebherr-Werk Ehingen GmbH 2016

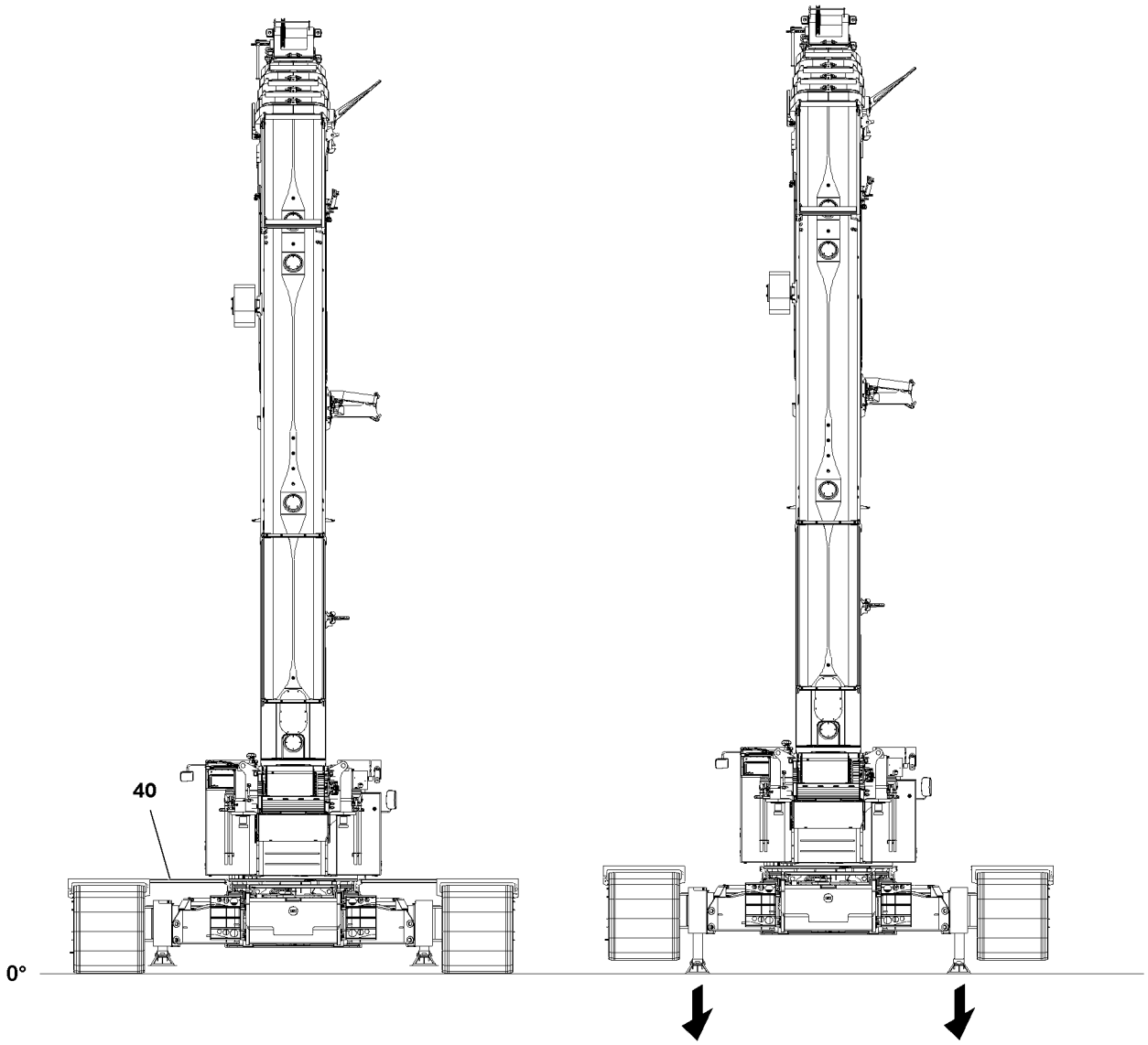

LWE/ab Muli 010/24201-02-02/en

Fig.116882

copyright © Liebherr-Werk Ehingen GmbH 2016

2.1.1 Supporting the crane with the Bluetooth™ Terminal

Make sure that the following prerequisite is met:
– On the display of the BTT, the menu overview is visible.

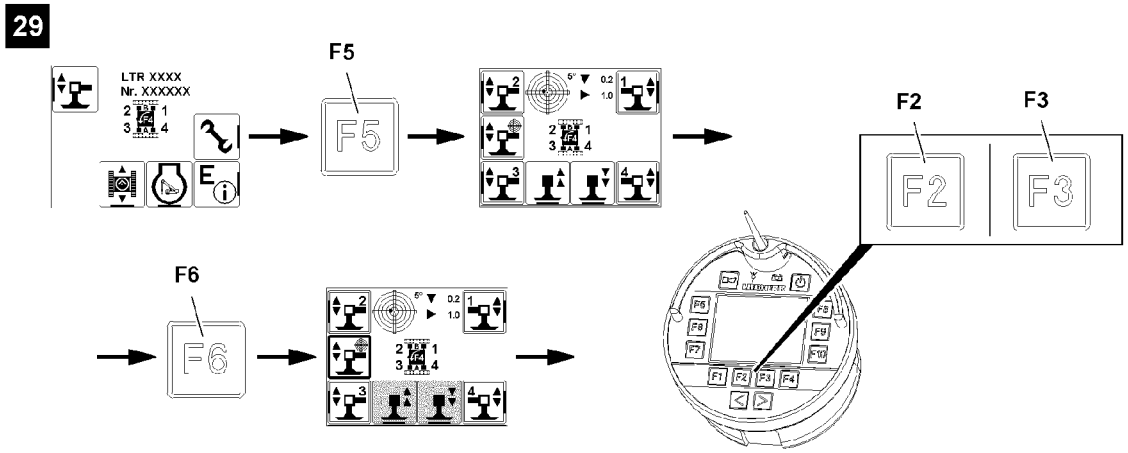

Fig.116904

▶ Press the function key **F5**, see illustration **29**.

Result:

– The „Support“ menu is visible.

The support cylinders are marked with numbers depending on the alignment of the radio remote control.

The support automatic extends or retracts all support cylinders simultaneously and levels the crane during the support procedure automatically.

▶ Select the support automatic: Press the function key **F6**.

Result:

– Selected icon is visible with filled out frame: The support automatic is selected.
– Support cylinders are ready for extension and retraction.

When „retracting the support cylinders“:
▶ Press the function key **F2**.

Result:

– The support cylinders retract simultaneously.
– The crane is horizontally aligned.

When „extending the support cylinders“:
▶ Press the function key **F3**.

Result:

– The support cylinders extend simultaneously.
– The crane is horizontally aligned.

LWE/ab Muli 010/24201-02-02/en

copyright © Liebherr-Werk Ehingen GmbH 2016

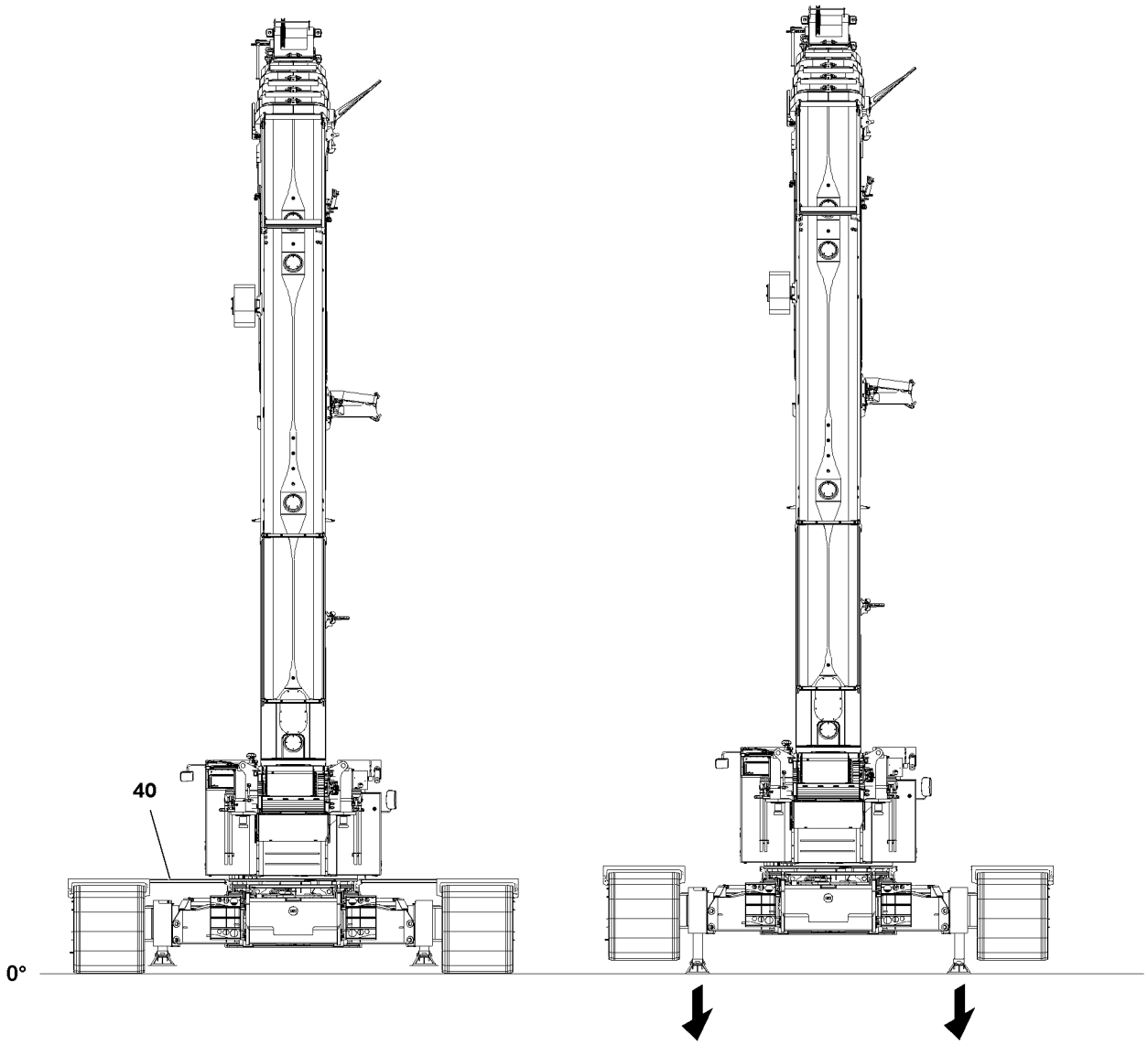

LWE/ab Muli 010/24201-02-02/en

Fig.116882

copyright © Liebherr-Werk Ehingen GmbH 2016

2.1.2 Supporting the crane from the crane operator's cab

Make sure that the following prerequisite is met:
– The „master switch assignment“ is visible on the touch display right (TE1).

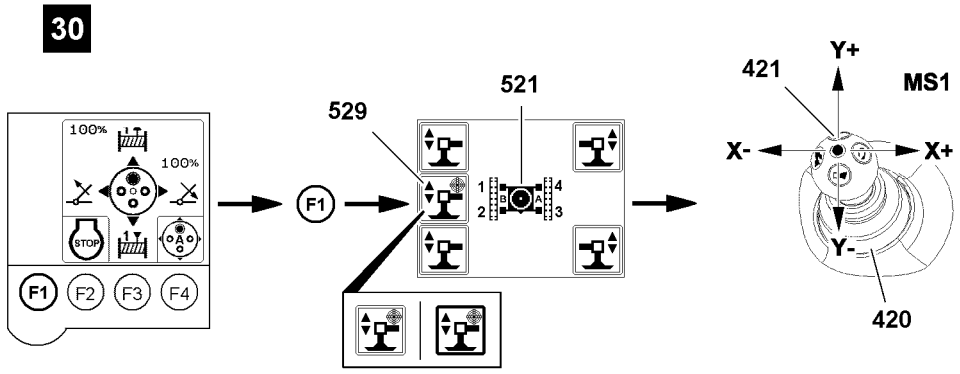

Fig.116905

▶ Press the function key **F1**, see illustration **30**.

Result:

– The „Support“ menu is visible.

The support cylinders are marked with numbers depending on the alignment of the turntable, see icon **521**.

The support automatic extends or retracts all support cylinders simultaneously and levels the crane during the support procedure automatically.

▶ Select the support automatic: Select the icon **529** („touch“).

Result:

– Selected icon is visible with filled out frame: The support automatic is selected.
– Support cylinders are ready for extension and retraction.

When „retracting the support cylinders“:
▶ Deflect the manual control lever **421** in direction Y+.

Result:

– The support cylinders retract simultaneously.
– The crane is horizontally aligned.

When „extending the support cylinders“:
▶ Deflect the manual control lever **421** in direction Y-.

Result:

– The support cylinders extend simultaneously.
– The crane is horizontally aligned.

copyright © Liebherr-Werk Ehingen GmbH 2016

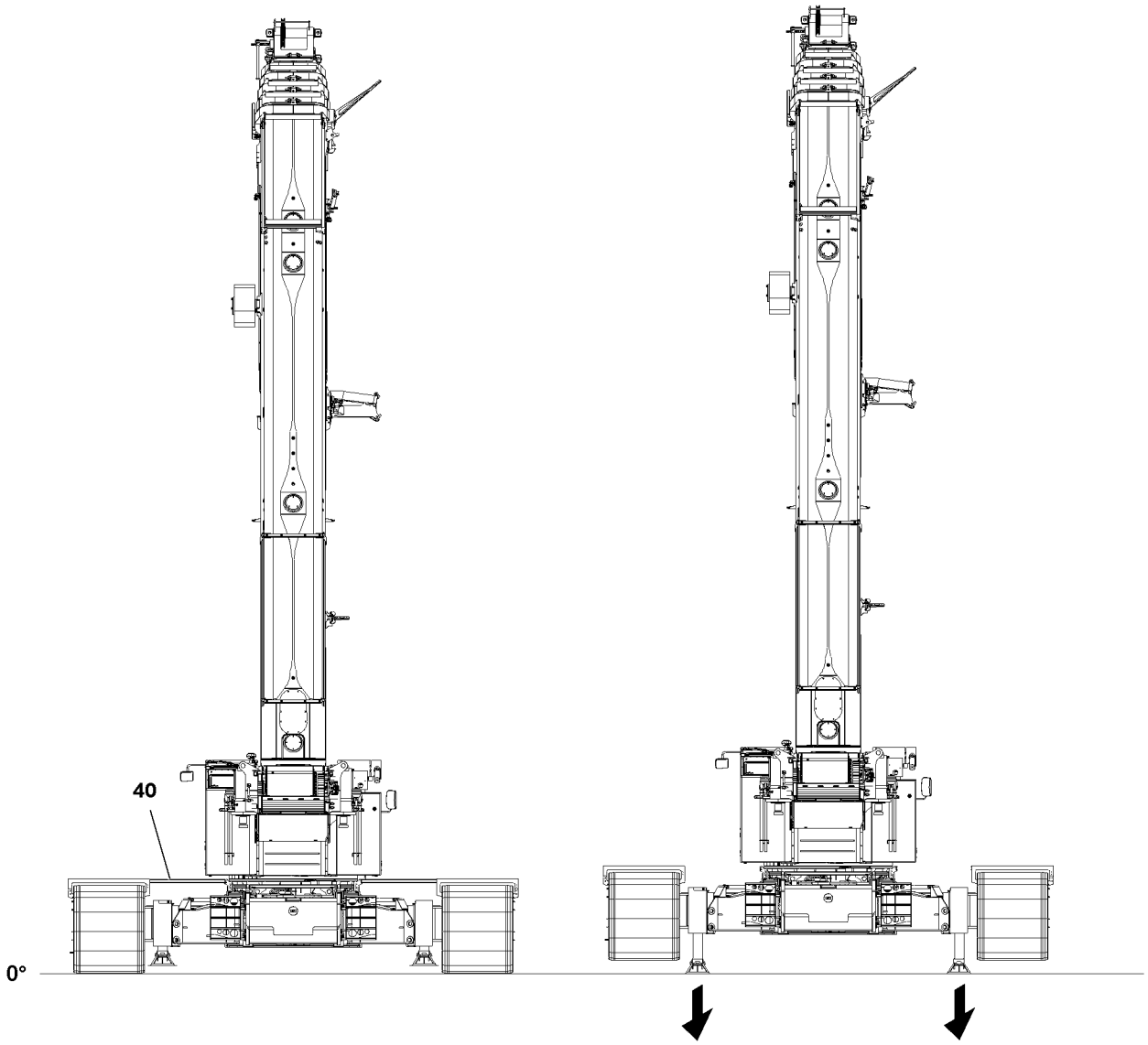

LWE/ab Muli 010/24201-02-02/en

Fig.116882

copyright © Liebherr-Werk Ehingen GmbH 2016

2.1.3 Supporting the crane with the radio remote control*

Make sure that the following prerequisite is met:
– On the display of the BTT-E, the menu overview is visible.

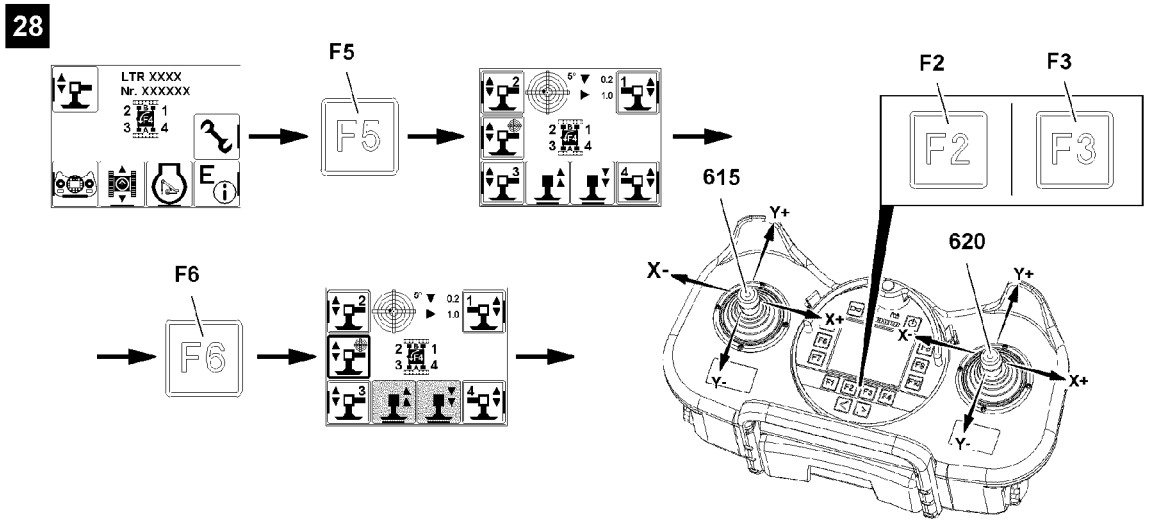

Fig.116903

▶ Press the function key **F5**, see illustration **28**.

Result:

– The „Support“ menu is visible.

The support cylinders are marked with numbers depending on the alignment of the radio remote control.

The support automatic extends or retracts all support cylinders simultaneously and levels the crane during the support procedure automatically.

▶ Select the support automatic: Press the function key **F6**.

Result:

– Selected icon is visible with filled out frame: The support automatic is selected.
– Support cylinders are ready for extension and retraction.

When „retracting the support cylinders“:
▶ Press the function key **F2**.

Result:

– The support cylinders retract simultaneously.
– The crane is horizontally aligned.

When „extending the support cylinders“:
▶ Press the function key **F3**.

Result:

– The support cylinders extend simultaneously.
– The crane is horizontally aligned.

copyright © Liebherr-Werk Ehingen GmbH 2016

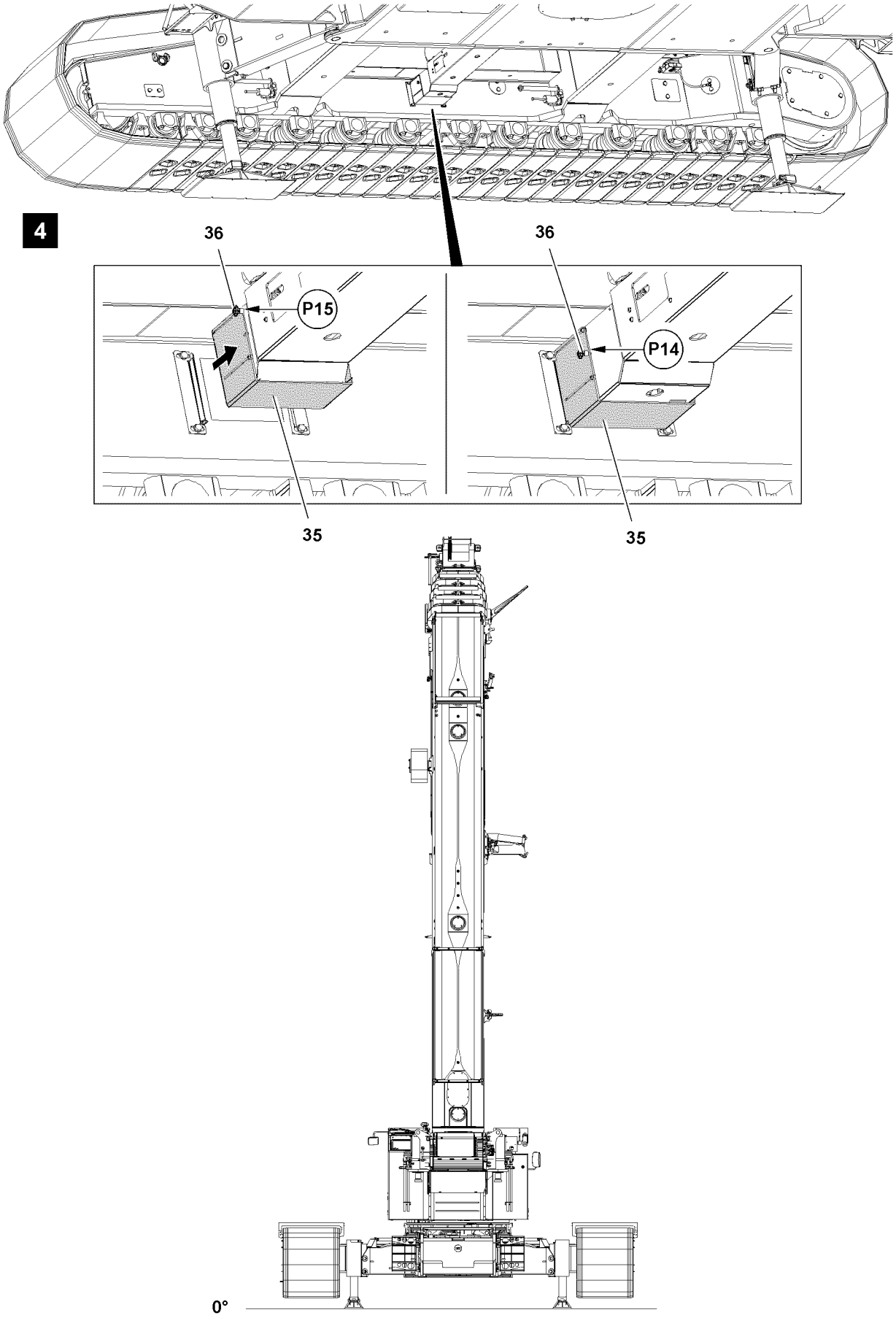

Fig.116901

LWE/ab Muli 010/24201-02-02/en

copyright © Liebherr-Werk Ehingen GmbH 2016

2.2 Disconnecting the connections to the crawler carrier

Make sure that the following prerequisite is met:
– The crane is supported.

2.2.1 Sliding the protective plate on the cross carrier into assembly position

▶ Push the pin and pull the ball locking pins **36** out at point **P14** on both sides, see illustration **4**.
▶ Slide the protective plate **35**, see illustration **4**.
▶ Push the pin and insert the ball locking pins **36** at point **P15** on both sides, see illustration **4**.

2.2.2 Disconnecting the hydraulic connections to the crawler carrier

The hydraulic connections of the crawler carrier are made with quick couplings.

When disconnecting hydraulic lines with quick couplings, make sure that the coupling procedure is carried out correctly.

WARNING
Pressure in the hydraulic lines!
If the pressure supply is not interrupted before connecting / releasing the hydraulic lines, the hydraulic oil can escape with high pressure!
Personnel can be severely injured or killed!
▶ Release the pressure in the hydraulic system before connecting / disconnecting: Interrupt the pressure supply and wait for a short time!

▶ Release the hydraulic coupling by hand.
▶ Disconnect the hydraulic connections to the crawler carrier.
▶ Protect hydraulic connections with caps from contamination.

2.2.3 Disconnecting the electrical connections to the crawler carrier

▶ Disconnect the electrical connections to the crawler carrier, see separate electrical wiring diagram.

2.2.4 Disconnecting the connections of the central lubrication system to the crawler carrier

▶ Disconnect the connections of the central lubrication system to the crawler carrier.
▶ Protect the connections of the central lubrication system with caps from contamination.

LWE/ab Muli 010/24201-02-02/en

copyright © Liebherr-Werk Ehingen GmbH 2016

5

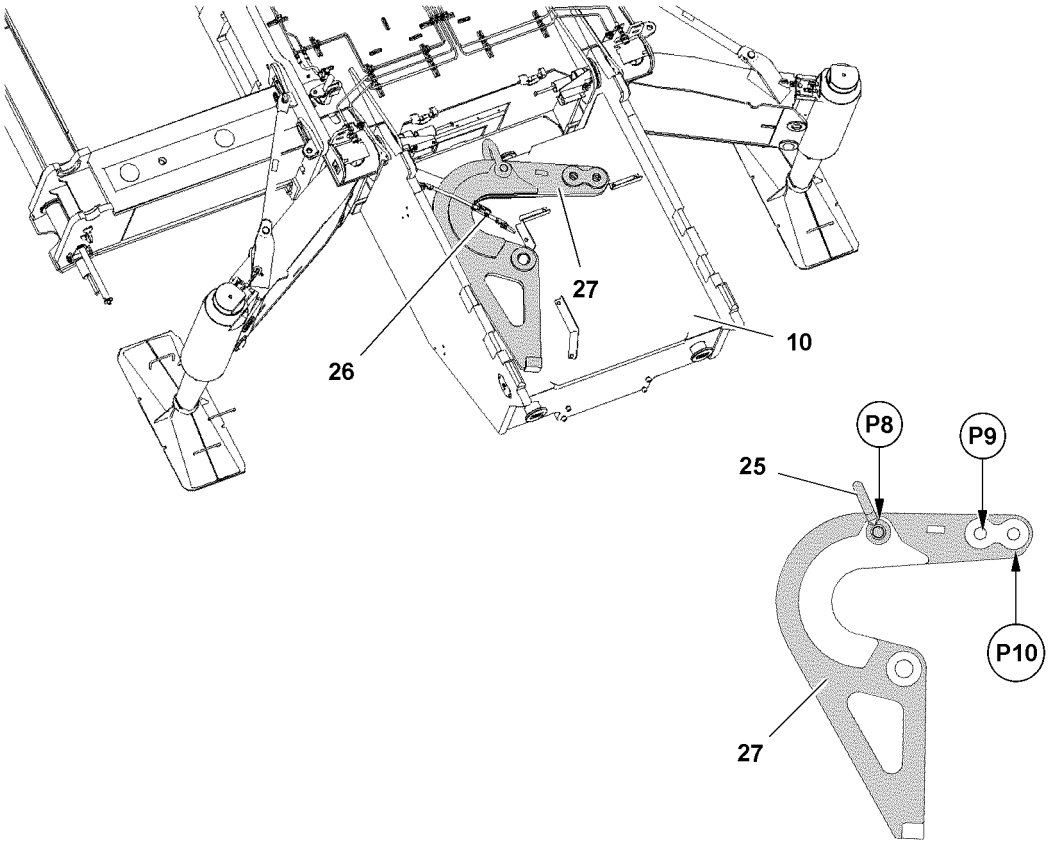

6

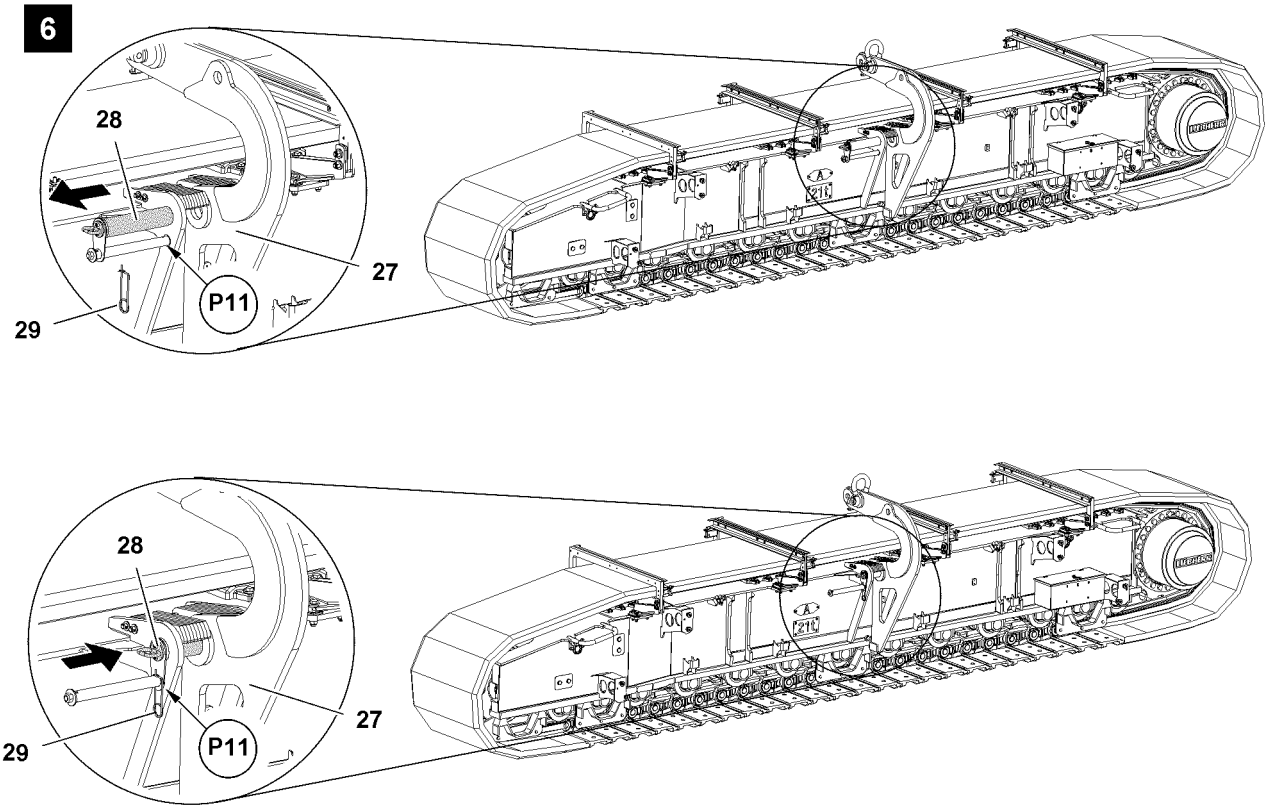

Fig.116883

LWE/ab Muli 010/24201-02-02/en

copyright © Liebherr-Werk Ehingen GmbH 2016

2.3 Disassembling the crawler carriers

2.3.1 Preparing the assembly device

- ▶ Release the transport belt **26**, see illustration **5**.
- ▶ Fasten the crane at point **P8** on the shackle **25**.
- ▶ Lift the assembly device **27** with the crane and place it on the ground.
- ▶ Remove the shackle **25** at point **P8**, see illustration **5**.

Note

▶ For operation crane superstructure, see Crane operating instructions, chapter 4.00!

Fastening point	Application
P8	Transport
P9	Assembly with incline
P10	Assembly 90°

- ▶ Fasten the crane at point **P9** on the shackle and lift the assembly device **27**.

2.3.2 Pinning the assembly device with the crawler carrier

- ▶ Remove the spring retainer **29** at point **P11** and unpin the pin **28**, see illustration **6**.
- ▶ Swing the assembly device **27** to the pin location.

Note

▶ The position in which the crawler carrier remains balanced when lifting is set by the Liebherr-Werk!

- ▶ Insert the pin **28** at point **P11** and secure with spring retainer **29**, see illustration **6**.

Result:

– The assembly device **27** is pinned and secured.

LWE/ab Muli 010/24201-02-02/en

copyright © Liebherr-Werk Ehingen GmbH 2016

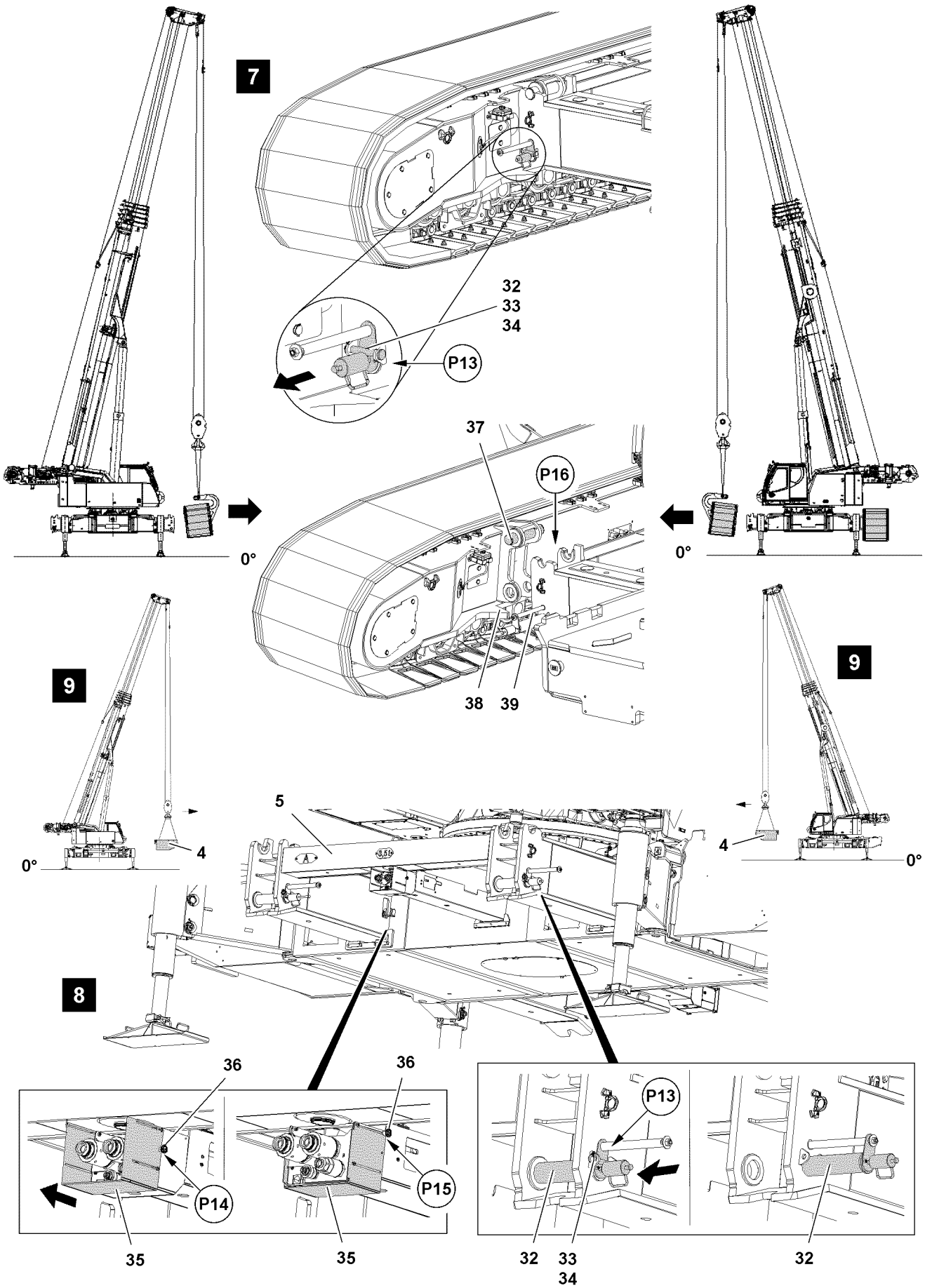

Fig.116884

LWE/ab Muli 010/24201-02-02/en

copyright © Liebherr-Werk Ehingen GmbH 2016

2.3.3 Unpinning the crawler carrier

Make sure that the following prerequisites are met:
- Machines with fastening bitts: Fastening bitts are extended into operating position
- The assembly device is pinned and secured on the crawler carrier.

▶ Remove the safety locking pin **34** on both sides at point **P13** and unpin the pin **33**, see illustration **7**.
▶ Unpin the pins **32** on both sides at point **P13** with the mechanical pin pulling device to the stop, see illustration **7**.

WARNING
Swinging crawler carriers!
During the lifting procedure, due to the offset center of gravity, the crawler carrier swings away from the cross carrier!
▶ Make sure that there are no persons within the danger zone!

NOTICE
Damage to the pin pulling device!
To avoid damage on the pin pulling device by the guide **38** on the crawler carrier, move the crawler carrier „A“ out to just over the edge of the cross carrier „A“!
▶ Do not move the crawler carrier „A“ out too high!
▶ The crawler carrier assembly must be carried out exclusively with a guide!
▶ Make sure that the guide is constantly in acoustic and visual contact with the crane operator!

▶ Disengage the crawler carrier „A“ with the crane slowly from the receptacles at point **P16** of the cross carrier „A“, see illustration **7**.
▶ Place the crawler carrier „A“ with the crane on the transport vehicle.

When the crawler carrier „A“ has been removed:
▶ Pin the pins **32** on both sides at point **P13** with the mechanical pin pulling device again to the stop, see illustration **8**.
▶ Insert the pins **33** on both sides at point **P13** and secure with safety locking pin **34**, see illustration **8**.
▶ Slide the protective plate **35**, see illustration **8**.

Note
▶ The disassembly of the crawler carrier „B“ is identical with the disassembly of the crawler carrier „A“!

▶ Unpin the crawler carrier „B“ and place it with the crane on the transport vehicle.
▶ Unpin the assembly device and place it again in transport position on the central ballast.
▶ Secure the assembly device with the transport belt.

2.4 Disassembling the central ballast

Note
▶ Disassemble the central ballast, see Crane operating instructions, chapter 3.03!

▶ Disassemble the central ballast, see illustration **9**.

LWE/ab Muli 010/24201-02-02/en

copyright © Liebherr-Werk Ehingen GmbH 2016

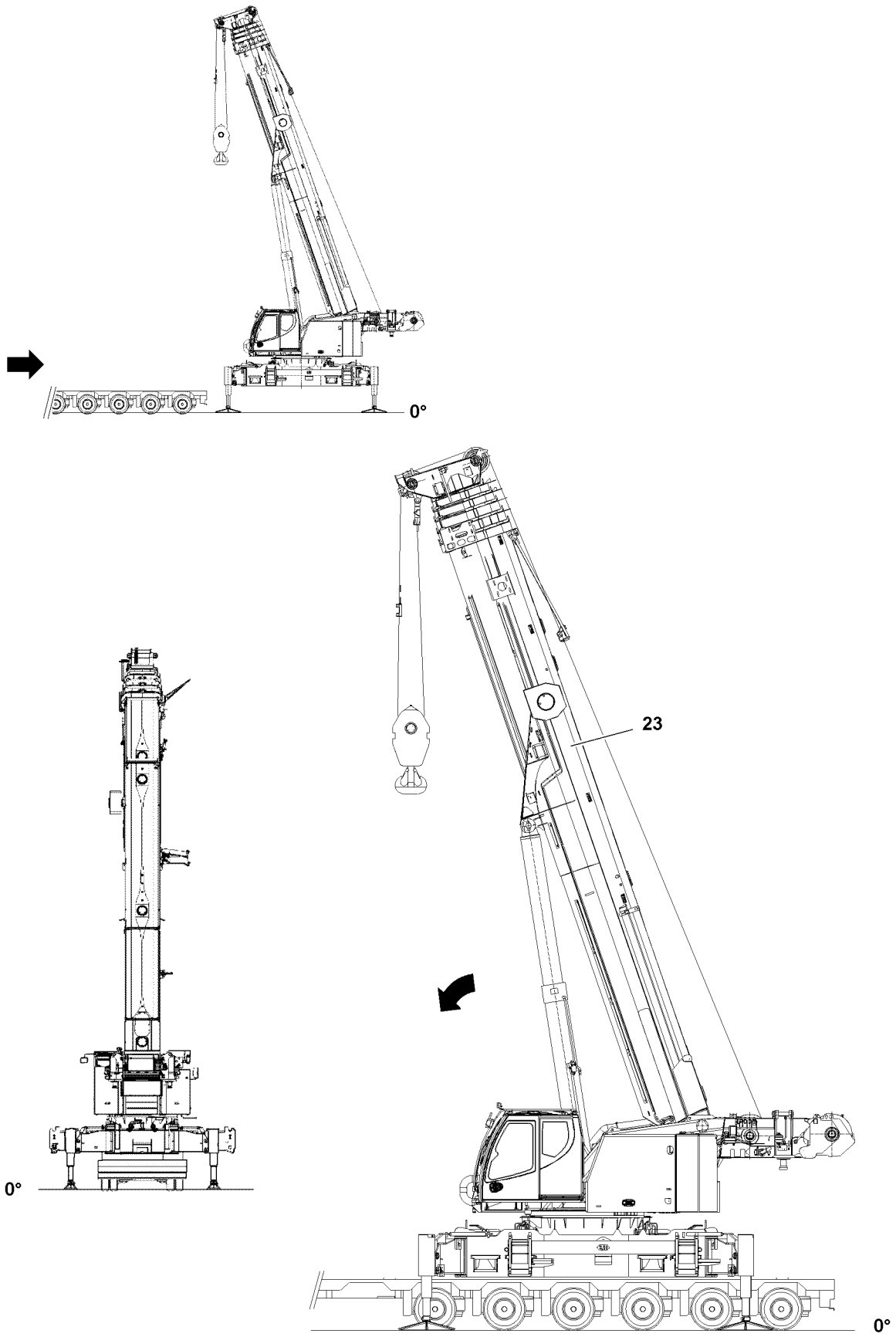

LWE/ab Muli 010/24201-02-02/en

Fig.116885

copyright © Liebherr-Werk Ehingen GmbH 2016

2.5 Loading the crane onto the transport vehicle

2.5.1 Moving the transport vehicle in

Make sure that the following prerequisite is met:
– The crane is supported at a sufficient height to enable the transport vehicle to drive under the crane.

DANGER
The crane can topple over!
When driving in, the transport vehicle may be caught on a support cylinder and cause the crane to topple over!
▶ Driving the transport vehicle in may exclusively be carried out with a guide.
▶ Make sure that the guide is constantly in acoustic and visual contact with the transport vehicle operator.
▶ Make sure that the transport vehicle does not scrape on a support cylinder when moving it in.

▶ Move the transport vehicle in, see illustration.
▶ Align the telescopic boom **23** lengthwise to the transport vehicle and place it down.

2.5.2 Lowering the crane

Make sure that the following prerequisites are met:
– The crawler carriers have been removed.
– The central ballast has been removed.
– The transport vehicle has been moved in.
– The boom has been placed down.
– Wooden planks have been placed on the transport vehicle for the support.

WARNING
Danger of crushing!
When lowering the crane, there is an increased danger of accidents due to crushing!
Personnel can be severely injured or killed!
▶ Make sure that there are no persons within the danger zone!

Note
▶ Retract support cylinders with BTT-E, BTT and TE1, see section „Supporting the crane“.

▶ Lower the crane.

LWE/ab Muli 010/24201-02-02/en

copyright © Liebherr-Werk Ehingen GmbH 2016

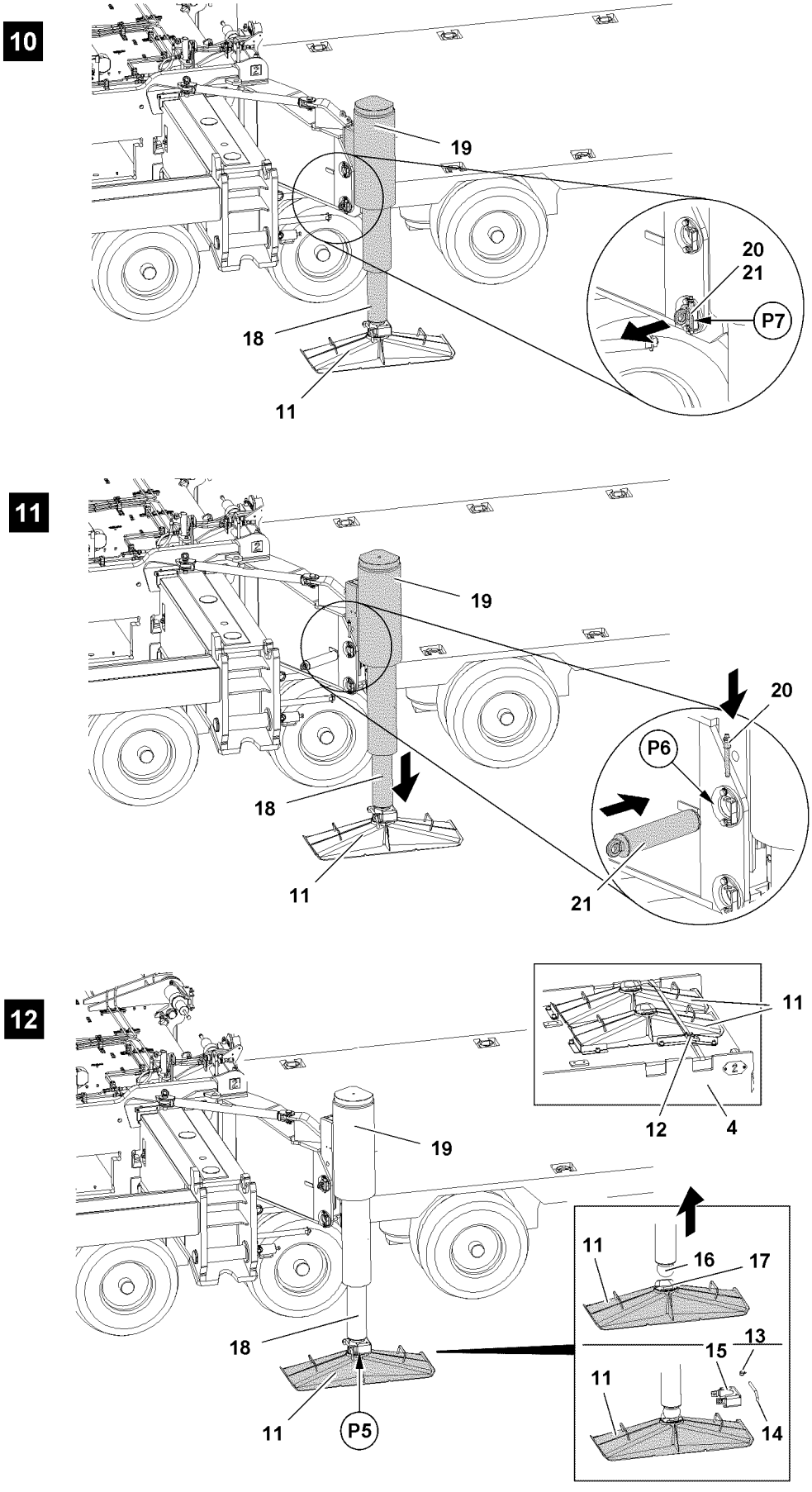

Fig.116886

LWE/ab Muli 010/24201-02-02/en

copyright © Liebherr-Werk Ehingen GmbH 2016

2.5.3 Positioning the support cylinders in transport position

Make sure that the following prerequisite is met:
– The crane is laying completely on the transport vehicle.

Unpinning the support cylinders

▶ Release the pin **21**: Unpin the ball locking pin **20** on point **P7**, see illustration **10**.
▶ Unpin the pin **21**.

Extending the piston rod with the BlueTooth™Terminal

Make sure that the following prerequisite is met:
– On the display of the BTT, the menu overview is visible.

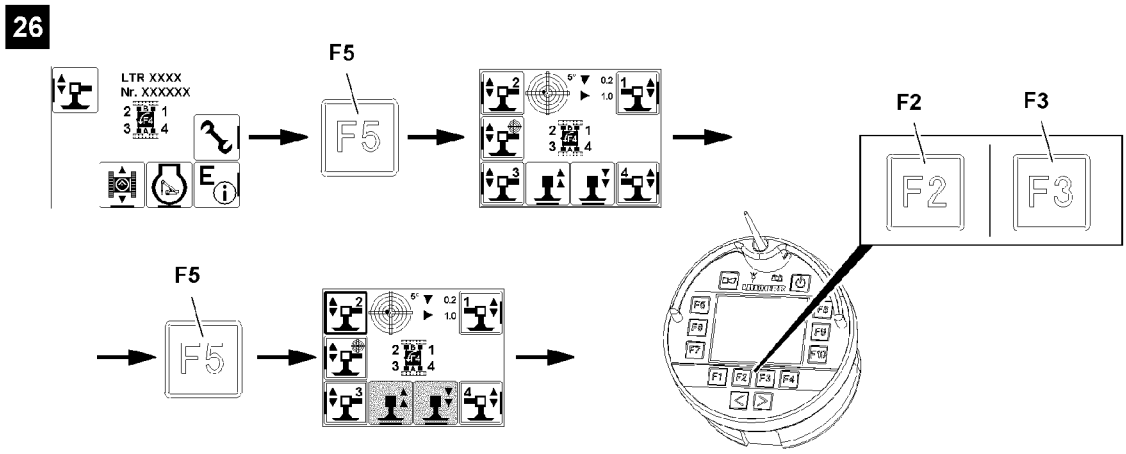

Fig.116899

▶ Press the function key **F5**.

Result:

– The „Support“ menu is visible.

The support cylinders are marked with numbers depending on the alignment of the radio remote control.

Support cylinders are selected with function keys:
– **F5** Function key
– **F7** Function key
– **F8** Function key
– **F10** Function key

▶ Select support cylinder: Press the function key.

Result:

– Selected icons are visible with filled out frames: Support cylinders are selected.
– Support cylinders are ready for extension and retraction.

The piston rods **18** extend until the support cylinder can be pinned on point **P6**, see illustration **11**.

When „retracting the support cylinders“:
▶ Press the function key **F2**.

Result:

– Piston rod **18** retracts.

LWE/ab Muli 010/24201-02-02/en

copyright © Liebherr-Werk Ehingen GmbH 2016

When „extending the support cylinders“:
▶ Press the function key **F3**.

Result:

– Piston rod **18** extends.

LWE/ab Muli 010/24201-02-02/en

copyright © Liebherr-Werk Ehingen GmbH 2016

Empty page!

LWE/ab Muli 010/24201-02-02/en

copyright © Liebherr-Werk Ehingen GmbH 2016

22

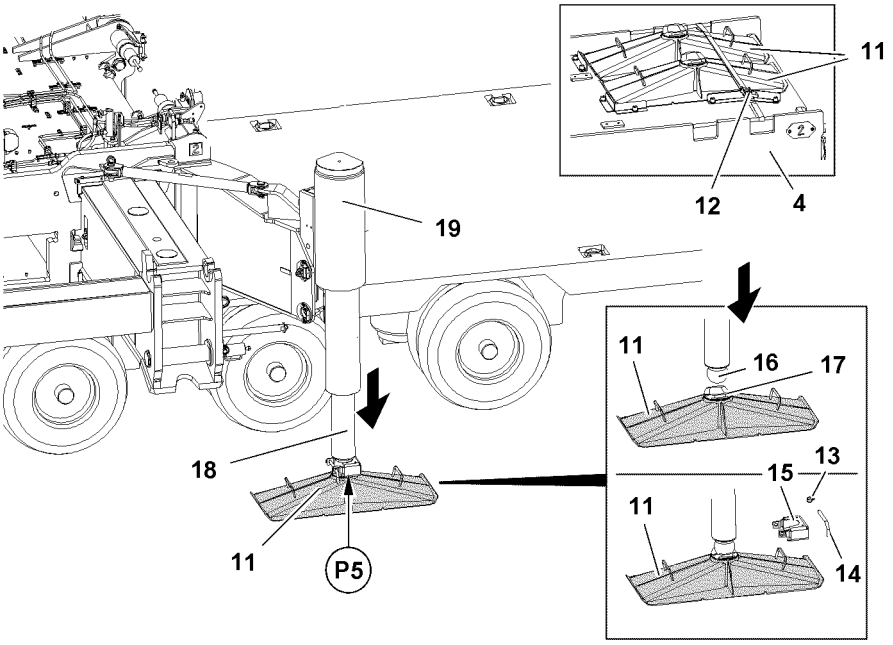

23

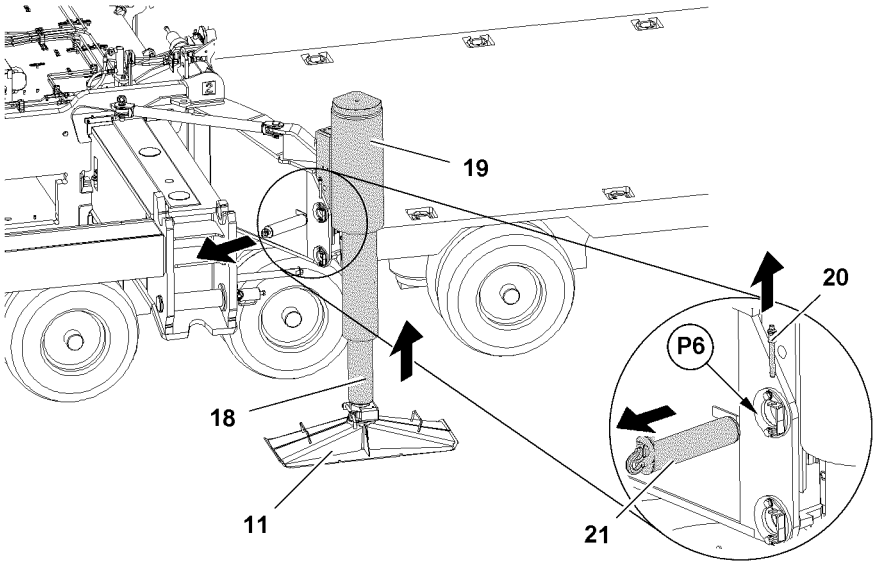

24

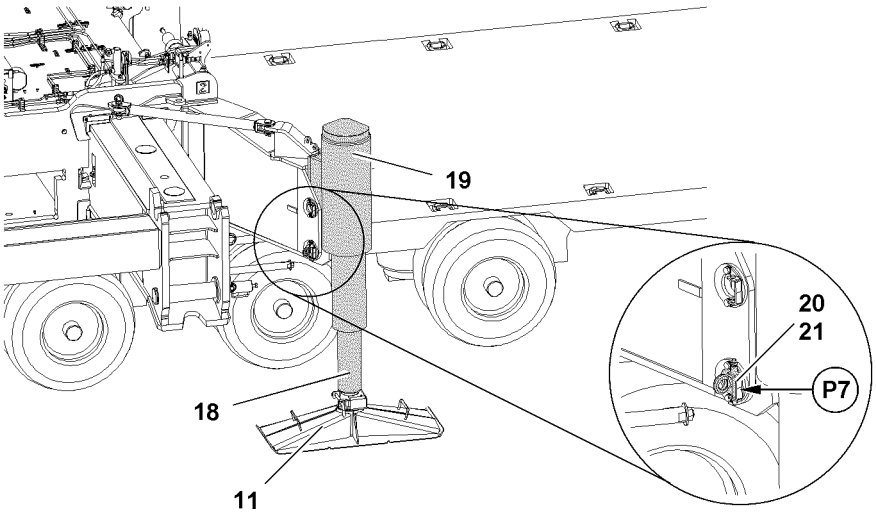

Fig.116876

LWE/ab Muli 010/24201-02-02/en

copyright © Liebherr-Werk Ehingen GmbH 2016

Extending the piston rod from the crane operator's cab

Make sure that the following prerequisite is met:
– The „master switch assignment“ is visible on the touch display right (TE1).

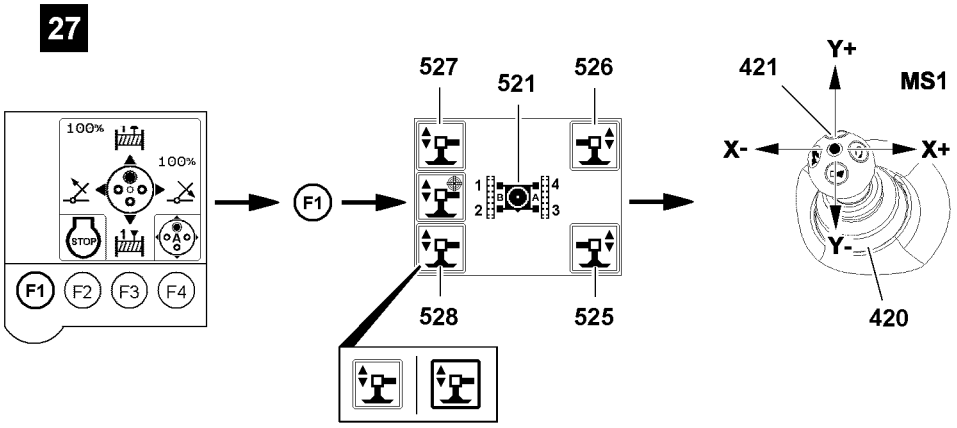

Fig.116900

▶ Press the function key **F1**.

Result:

– The „Support“ menu is visible.

The support cylinders are marked with numbers depending on the alignment of the turntable, see icon **521**.

Support cylinders are selected via touch functions:
– **525** Icon
– **526** Icon
– **527** Icon
– **528** Icon

▶ Select support cylinder: Select the icon („touch“).

Result:

– Selected icons are visible with filled out frames: Support cylinders are selected.
– Support cylinders are ready for extension and retraction.

The piston rods **18** extend until the support cylinder can be pinned on point **P6**, see illustration **11**.

When „retracting the support cylinders“:
▶ Deflect the manual control lever **421** in direction Y+.

Result:

– Piston rod **18** retracts.

When „extending the support cylinders“:
▶ Deflect the manual control lever **421** in direction Y-.

Result:

– Piston rod **18** extends.

copyright © Liebherr-Werk Ehingen GmbH 2016

22

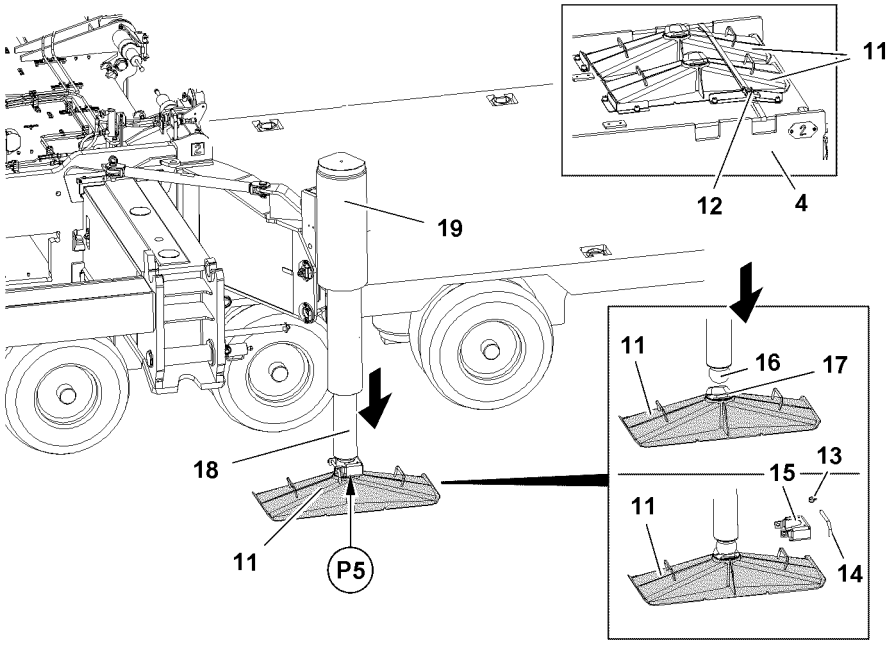

23

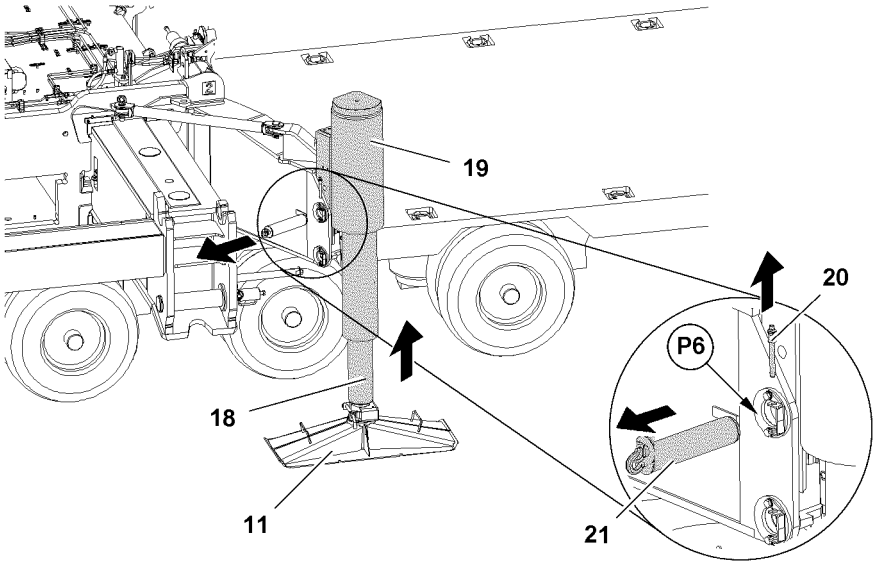

24

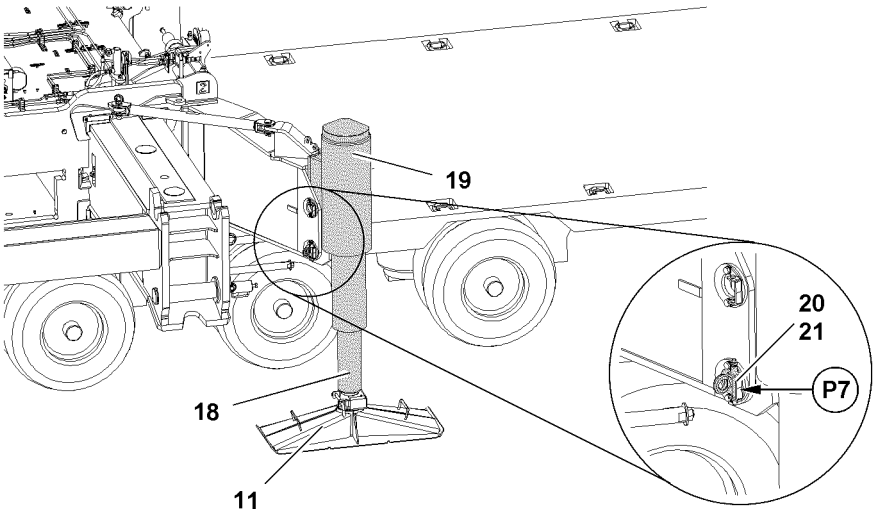

Fig.116876

LWE/ab Muli 010/24201-02-02/en

copyright © Liebherr-Werk Ehingen GmbH 2016

Extending the piston rod with the radio remote control*

Make sure that the following prerequisite is met:
– On the display of the BTT-E, the menu overview is visible.

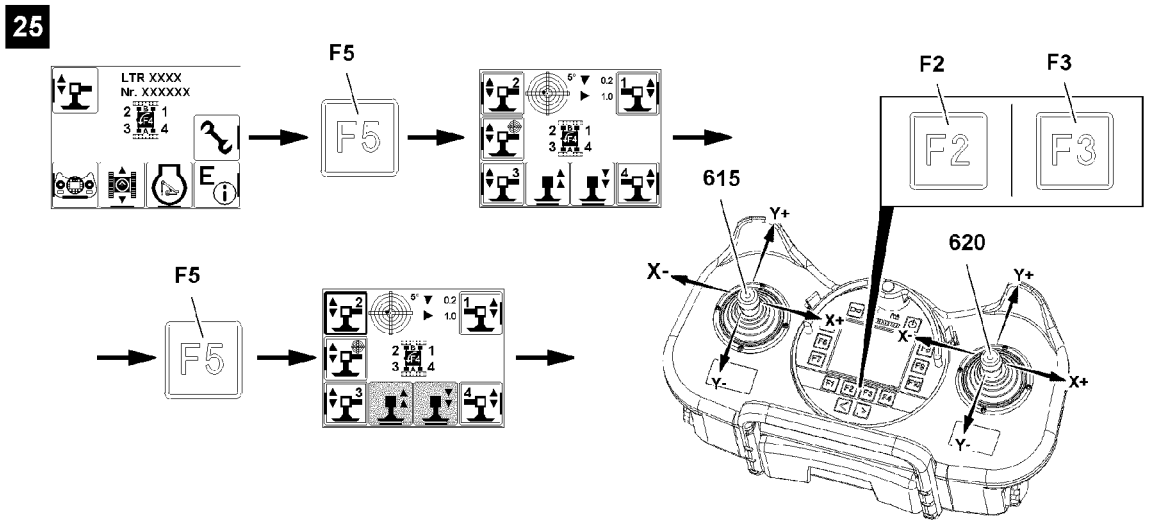

Fig.116898

▶ Press the function key **F5**.

Result:

– The „Support“ menu is visible.

The support cylinders are marked with numbers depending on the alignment of the radio remote control.

Support cylinders are selected with function keys:
– **F5** Function key
– **F7** Function key
– **F8** Function key
– **F10** Function key

▶ Select support cylinder: Press the function key.

Result:

– Selected icons are visible with filled out frames: Support cylinders are selected.
– Support cylinders are ready for extension and retraction.

The piston rods **18** extend until the support cylinder can be pinned on point **P6**, see illustration **11**.

The support cylinders can be extended or retracted with both manual control levers.

When „retracting the support cylinders“:
▶ Deflect the manual control lever in direction Y+.
or
Press the function key **F2**.

Result:

– Piston rod **18** retracts.

When „extending the support cylinders“:
▶ Deflect the manual control lever in direction Y-.
or
Press the function key **F3**.

copyright © Liebherr-Werk Ehingen GmbH 2016

Result:

– Piston rod **18** extends.

Pinning the support cylinders

– The pin bores align on point **P6**, see illustration **11**.

▶ Insert the pin **21** on point **P6**, see illustration **11**.
▶ Secure the pin **21**: Pin the ball locking pin **20** on point **P7**, see illustration **10**.

LWE/ab Muli 010/24201-02-02/en

copyright © Liebherr-Werk Ehingen GmbH 2016

Empty page!

LWE/ab Muli 010/24201-02-02/en

copyright © Liebherr-Werk Ehingen GmbH 2016

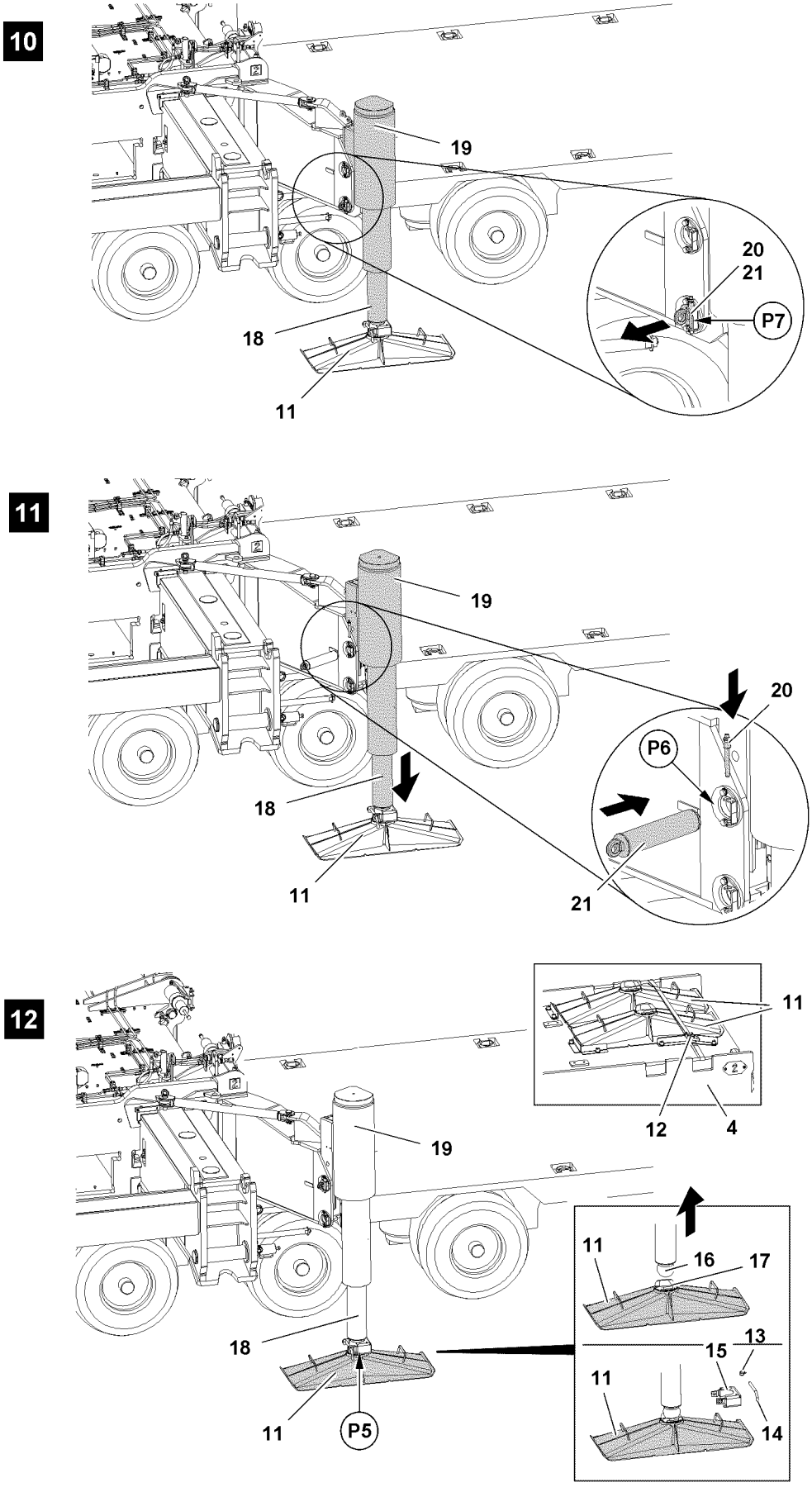

Fig.116886

LWE/ab Muli 010/24201-02-02/en

copyright © Liebherr-Werk Ehingen GmbH 2016

2.5.4 Removing the support plates

Make sure that the following prerequisite is met:
– The support cylinders **19** are in transport position.

Note
▶ The support plates **11** are positioned for transport on the central ballast **4**!
▶ The weight of the support plate is 50 kg !
▶ For safety reasons, disassemble the support plates **11** always with two persons!

▶ Remove the safety locking pin **13** at point **P5** and unpin the pin **14**, see illustration **12**.
▶ Pull out the retainer **15** from the ball head **16**, see illustration **12**.

Note
▶ Retract the support cylinder with the BTT-E, the BTT and the TE1, see section „Positioning the support cylinders in transport position“!

▶ Retract the support cylinders.
▶ Pull the retainer **15** again on the ball head **16**, see illustration **12**.
▶ Insert the pin **14** at point **P5** and secure with safety locking pin **13**.
▶ Place the support plate **11** in transport position on the central ballast.
▶ Secure the support plate **11** in transport position with the transport belts **12**, see illustration **12**.
▶ Remove all support plates.

LWE/ab Muli 010/24201-02-02/en

copyright © Liebherr-Werk Ehingen GmbH 2016

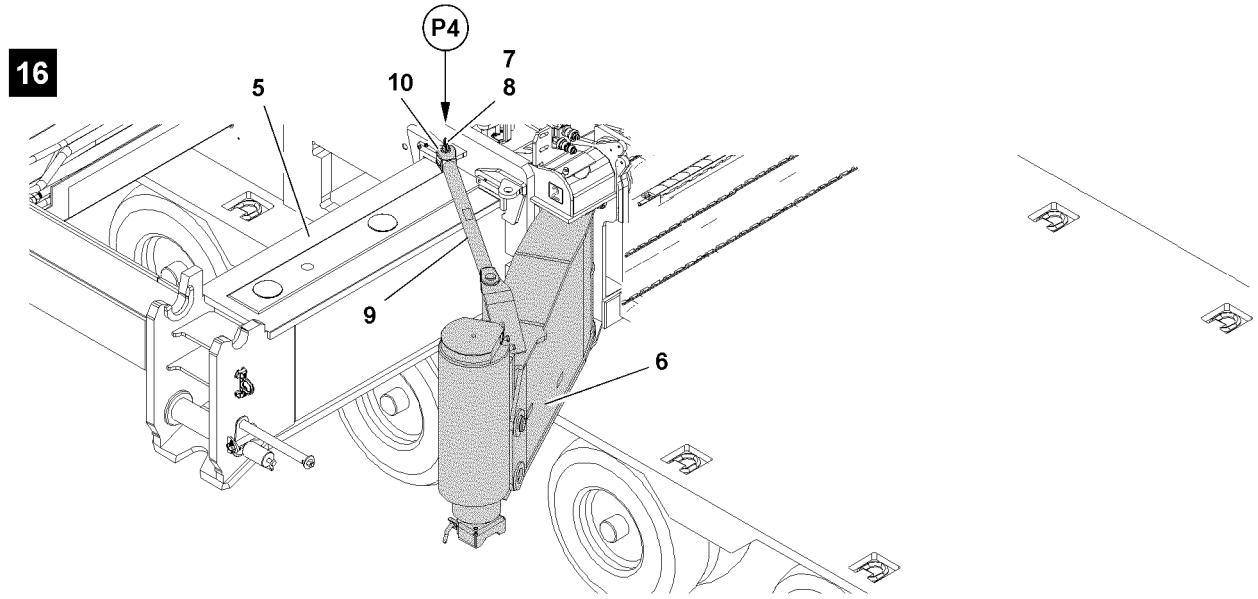

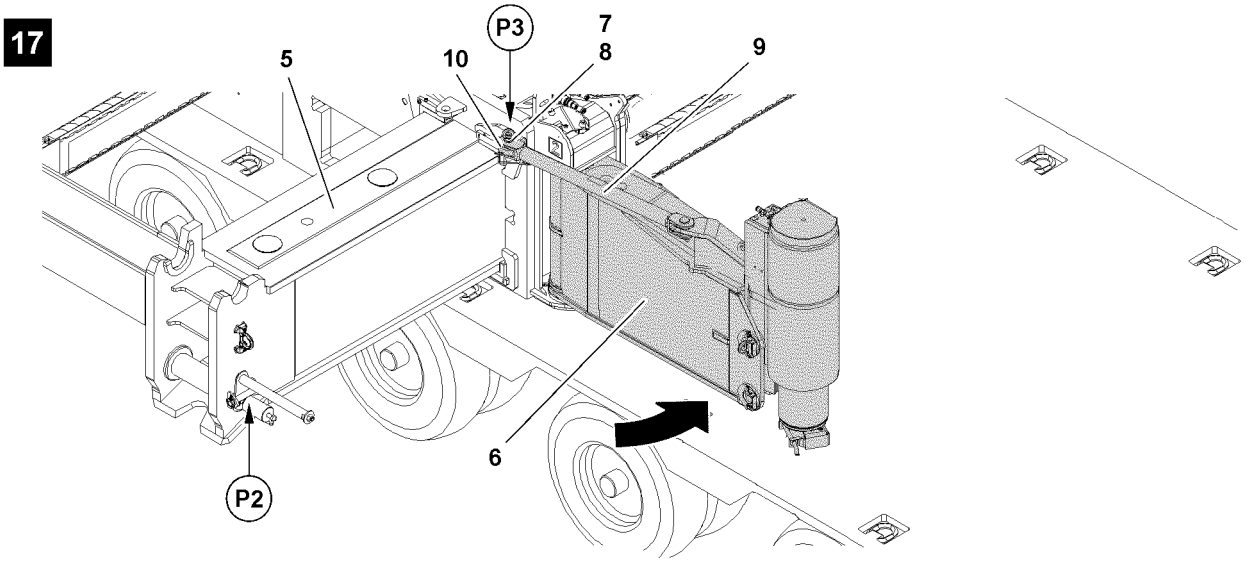

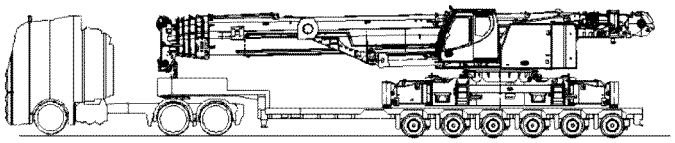

LWE/ab Muli 010/24201-02-02/en

Fig.116887

copyright © Liebherr-Werk Ehingen GmbH 2016

2.5.5 Swinging the folding brackets in

Make sure that the following prerequisite is met:
– The support plates **11** are removed.

DANGER
Danger of crushing!
▶ Make sure that no persons or objects are within the danger zone when swinging the folding brackets **6**!

▶ Remove the spring retainer **7** at point **P4**, see illustration **16**.
▶ Unpin the pin **8** at point **P4**, see illustration **16**.
▶ Remove the rod **9** from the connection.

Result:

– The folding bracket **6** is released.

▶ Swing the folding bracket **6** in until the connection fork **10** of the rod can be pinned at point **P3**.

When the bores align at point **P3**:
▶ Insert the pin **8** at point **P3**, see illustration **17**.
▶ Insert the spring retainer **7** at point **P3**, see illustration **17**.

Result:

– The folding bracket **6** is secured.

▶ Swing all folding brackets in.

LWE/ab Muli 010/24201-02-02/en

copyright © Liebherr-Werk Ehingen GmbH 2016

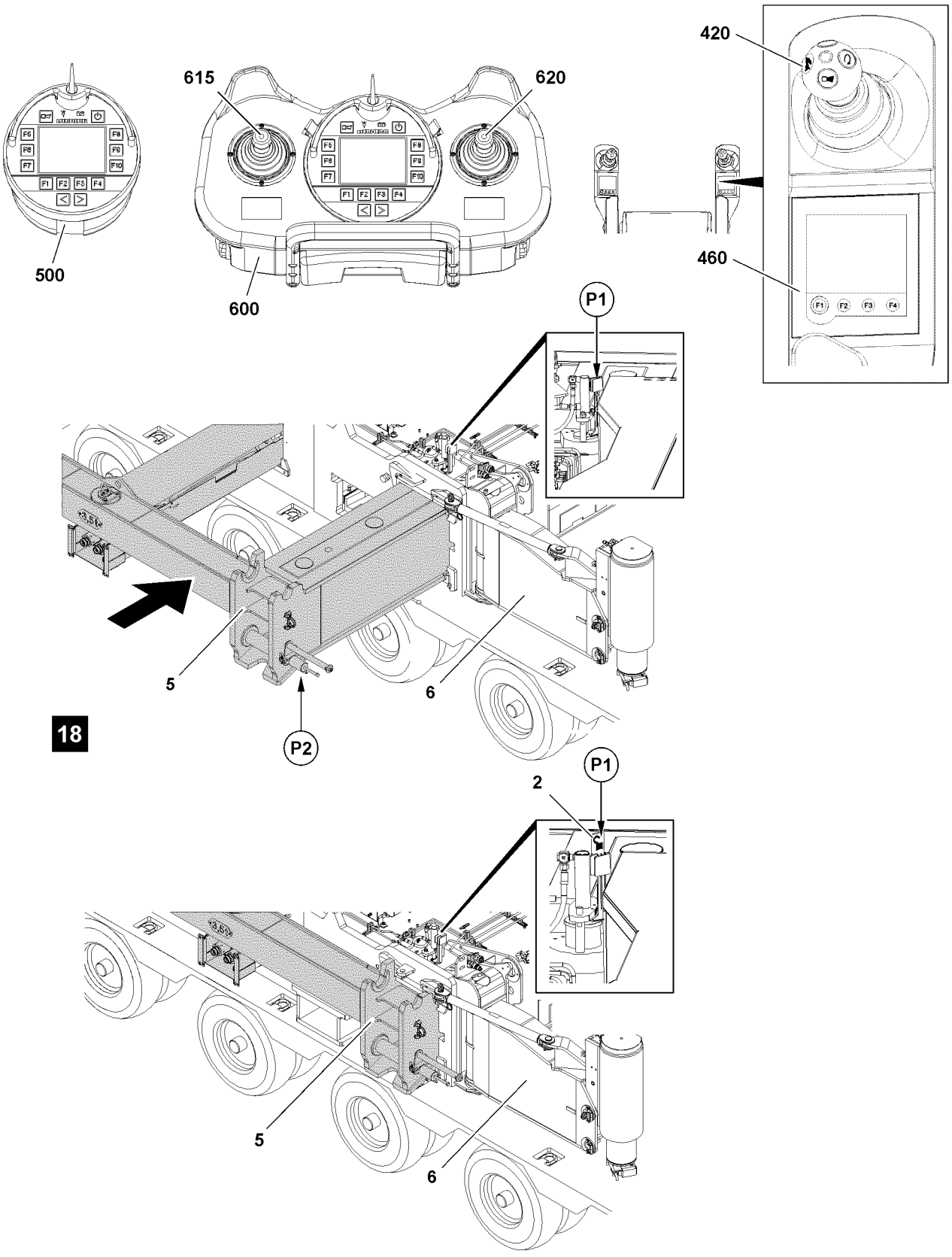

Fig.116892

LWE/ab Muli 010/24201-02-02/en

copyright © Liebherr-Werk Ehingen GmbH 2016

2.6 Retracting the cross carriers

WARNING
Danger of crushing!
▶ Make sure that no persons are between the crane and the cross carrier during the entire retraction procedure!

NOTICE
Damage to the pin pulling device!
If the folding brackets **6** are not swung in before retracting the cross carrier, then the pin pulling device will be damaged at point **P2** when retracting the cross carrier!
▶ Make sure that the folding brackets **6** are swung into transport position before retracting the cross carrier **5**!

Note
▶ The extension conditions of the cross carrier is displayed as percentage on the display on the Bluetooth™ Terminal (BTT), the radio remote control (BTT-E) and on the LICCON monitor!
▶ The cross carriers are only pinned on extension conditions of 0 %; 50 %; 100 %.
▶ The pin points of the cross carriers are marked in percentages with tags on the cross carriers.

Make sure that the following prerequisites are met:
– No personnel is within the danger zone.
– The folding brackets are swung in.

copyright © Liebherr-Werk Ehingen GmbH 2016

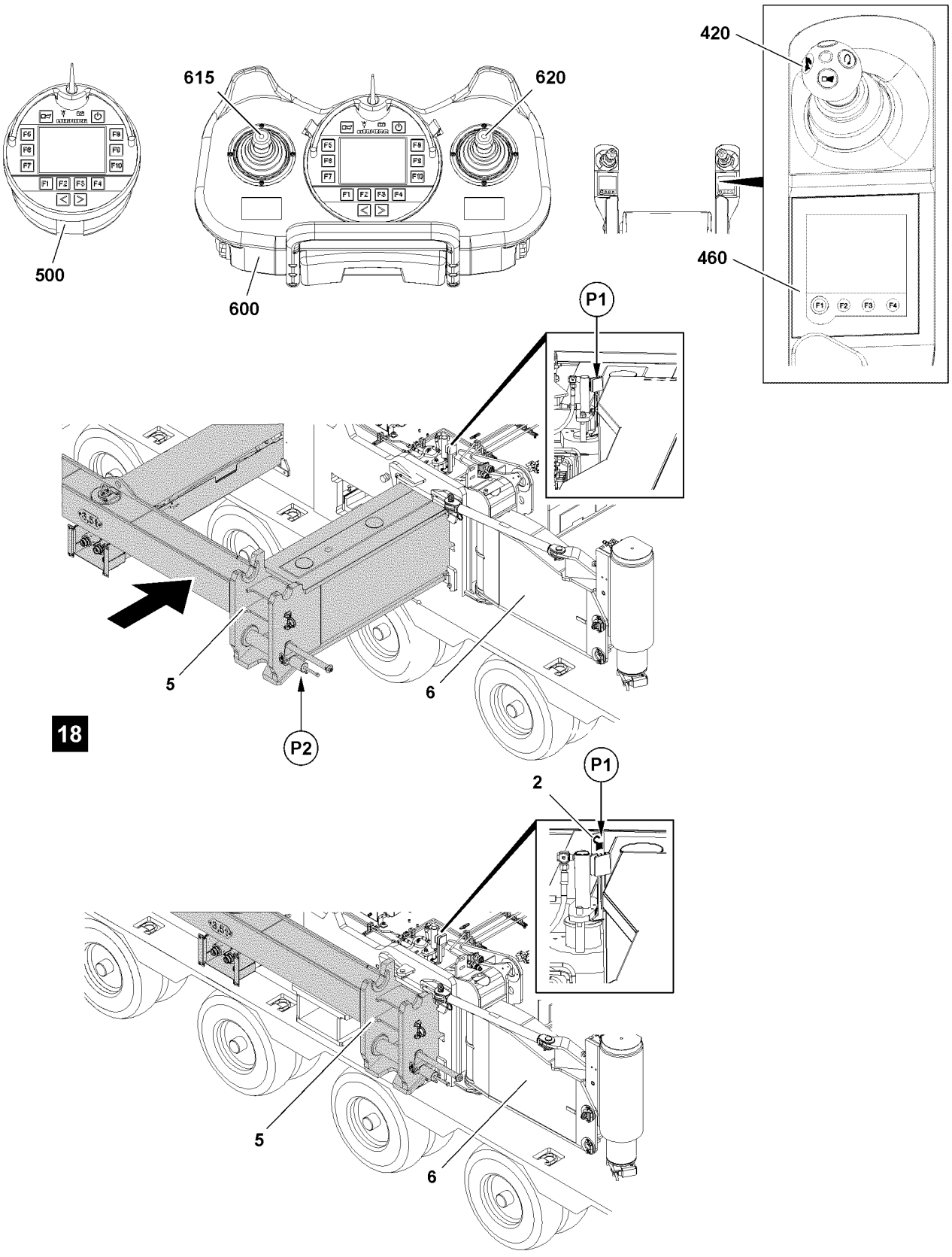

Fig.116892

LWE/ab Muli 010/24201-02-02/en

copyright © Liebherr-Werk Ehingen GmbH 2016

2.6.1 Retracting the cross carrier with the BlueTooth™Terminal

Make sure that the following prerequisite is met:
– On the display of the BTT, the menu overview is visible.

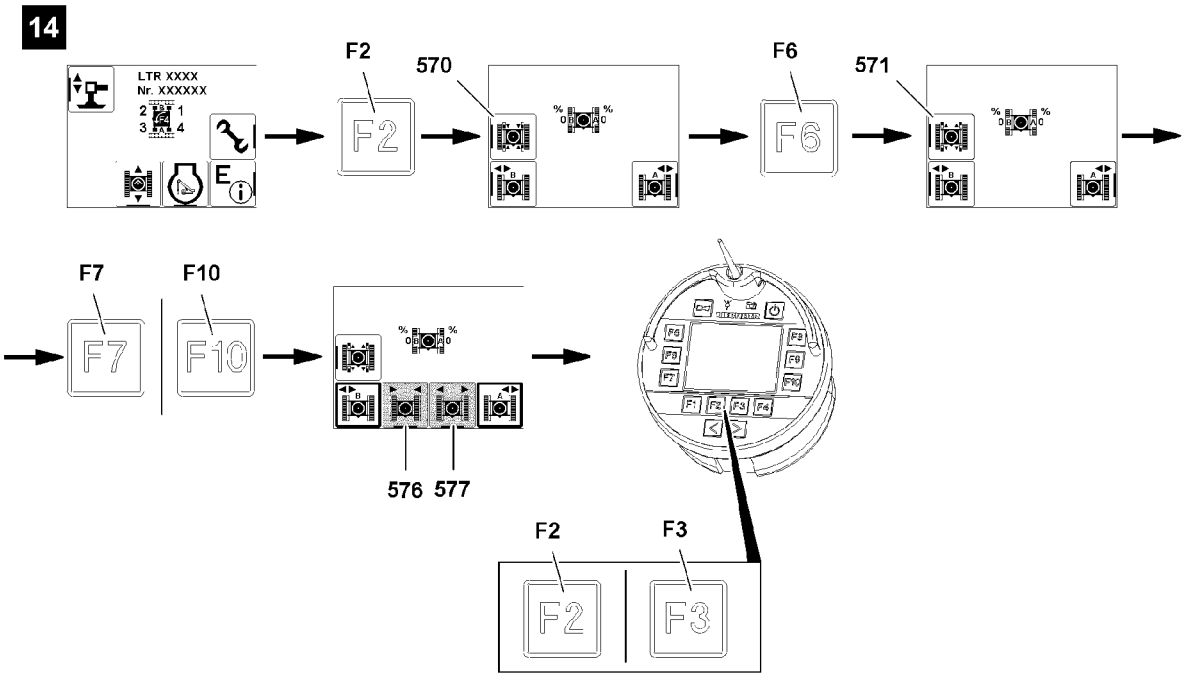

Fig.116896

Unpinning the cross carrier

▶ Call up the „Crawler travel gear“ menu: Press the function key **F2**, see illustration **14**.

Result:

– Functions „Track width adjustment“ are visible.

When icon „Pin the cross carrier“ **570** is visible:
▶ Activate „Unpin the cross carrier“: Press the function key **F6**.

Result:

– Icon „Unpin the cross carrier“ **571** appears.

Selecting the cross carrier

Before you retract or extend the cross carrier, select one of the cross carriers or both cross carriers:
– **F7** Function key
– **F10** Function key

In this and the following sections is described how both cross carriers are retracted together. Alternatively you can also select and retract the cross carriers individually.

Depending on which cross carriers are selected, different icons for „retract crawler carrier“ and „extend crawler carrier“ appear, see Crane operating instructions, chapter 5.31.

▶ Select both cross carriers: Press function key **F7** and function key **F10**, see illustration **14**.

Result:

– Icon „Extend crawler carrier“ **577** is visible.
– Icon „Retract crawler carrier“ **576** is visible.

LWE/ab Muli 010/24201-02-02/en

copyright © Liebherr-Werk Ehingen GmbH 2016

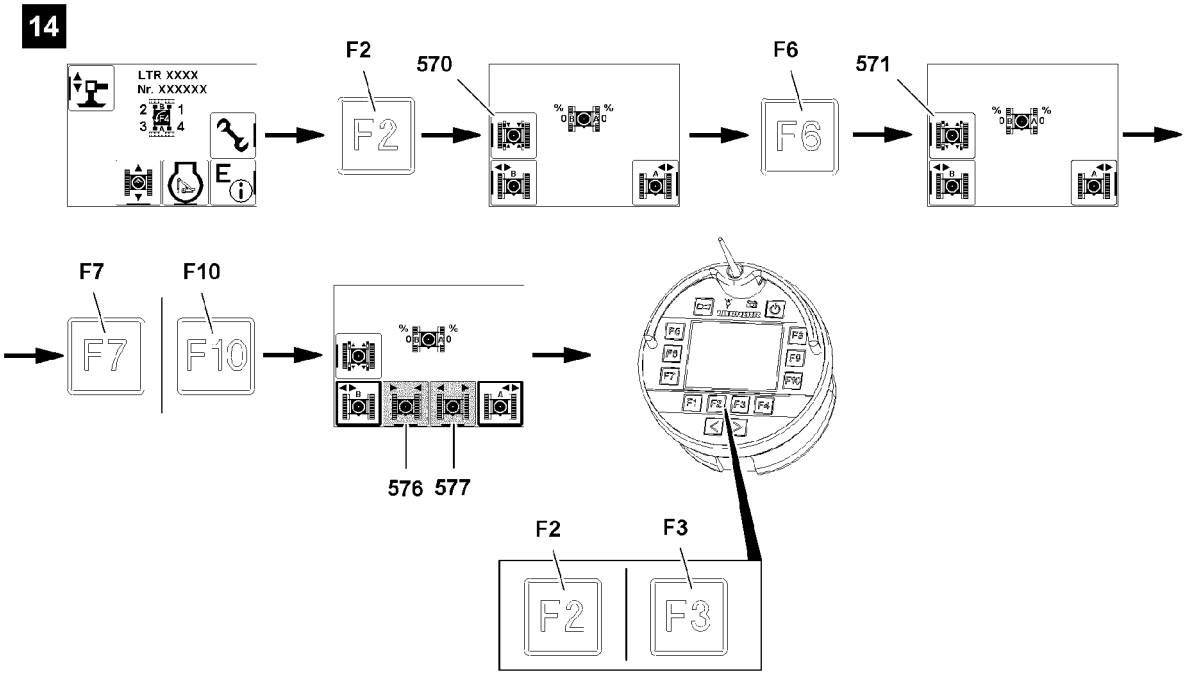

Fig.116896

Retracting the cross carriers

To unpin the cross carriers on points **P1**, you have to retract or extend the cross carriers, see illustration **18**.

You can check on points **P1** if the pins are completely pinned or unpinned:
– The pins are unpinned: Tags **2** are visible.
– The pins are pinned: Tags **2** are **not** visible.

WARNING
Crushing danger due to movement of cross carriers!
▶ Make sure that no personnel is within the danger zone of the cross carriers during „track width adjustment“.
▶ Differentiation of the cross carriers, see Crane operating instructions, chapter 5.31.

When „extending the cross carrier“:
▶ Press the function key **F3**.

When „retracting the cross carrier“:
▶ Press the function key **F2**.

Result:

– The pins are unpinned.

Problem remedy
Pins are not unpinned!
The pin is stuck: The position of the cross carriers prevents the pins from unpinning.
▶ Extend and retract the cross carriers again: Press the function keys until the pins are completely unpinned.

▶ Make sure that the pins are completely unpinned on points **P1**, see illustration **18**.

Result:

– The pins are unpinned.

LWE/ab Muli 010/24201-02-02/en

copyright © Liebherr-Werk Ehingen GmbH 2016

– The cross carriers retract.

Pinning the cross carriers

Before the cross carriers reach the 0% extension status:
▶ Activate „Pin the cross carrier“: Press the function key **F6**.

Result:

– Icon „pin the cross carrier“ **570** is visible.
– The pins are pinned.

Problem remedy
The pins are not pinned!
The pin is stuck: The position of the cross carriers prevents the pins from pinning.
▶ Extend and retract the cross carriers again: Press the function keys until the pins are completely pinned.

▶ Make sure that the pins are completely pinned on points **P1**, see illustration **18**.

Result:

– The pins are pinned.
– The cross carriers are retracted and secured at 0 %.

copyright © Liebherr-Werk Ehingen GmbH 2016

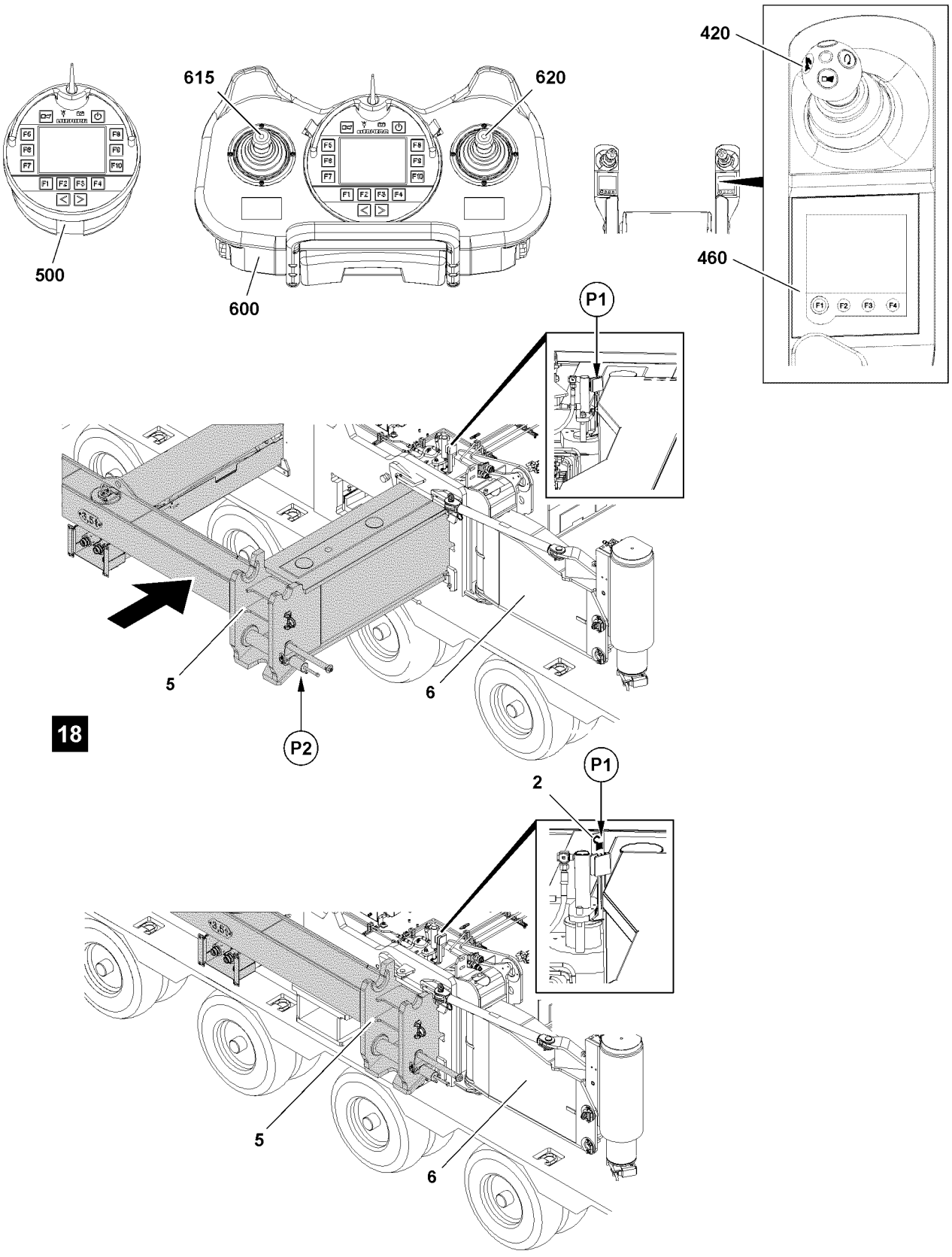

Fig.116892

LWE/ab Muli 010/24201-02-02/en

copyright © Liebherr-Werk Ehingen GmbH 2016

2.6.2 Extending the cross carriers from the crane operator's cab

Make sure that the following prerequisite is met:
– On the TE1 the „Master switch configuration“ menu is visible.

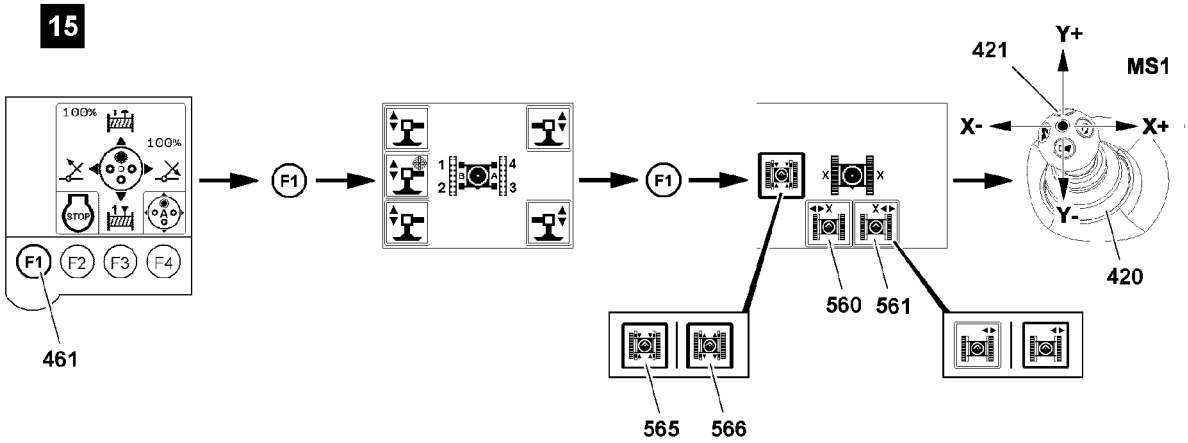

Fig.116897

Unpinning the cross carrier

▶ Press the function key F1 **461**, see illustration **15**.

Result:

– The „Support“ menu appears.

▶ Press function key F1 **461**.

Result:

– The „Track width adjustment“ menu appears.

When icon **565** „Pin the cross carrier“ is visible:
▶ Activate „Unpin the cross carrier“: Select the icon **565** („touch“).

Result:

– Icon „unpin cross carrier“ **566** is visible.

Selecting the cross carrier

Before you retract or extend the cross carrier, select one of the cross carriers or both cross carriers:
– **560** Icon
– **561** Icon

In this and the following sections is described how both cross carriers are retracted together. Alternatively you can also select and retract the cross carriers individually.

▶ Pay attention to cross carrier assignment.
▶ Select both cross carriers: Select the icon **560** and icon **561** („touch“).

Result:

– Selected icons with filled out frames: Cross carriers are selected.

LWE/ab Muli 010/24201-02-02/en

copyright © Liebherr-Werk Ehingen GmbH 2016

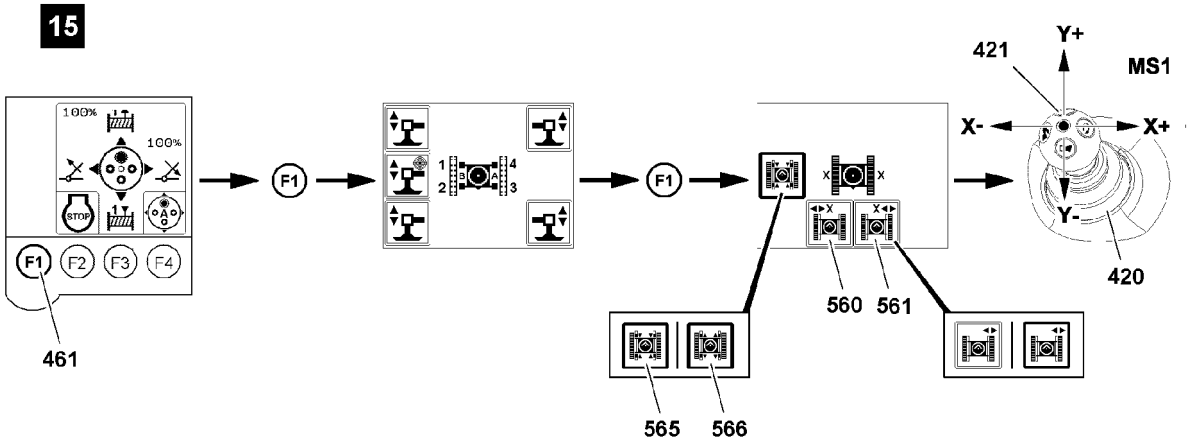

Fig.116897

Retracting the cross carriers

To unpin the cross carriers on points **P1**, you have to retract or extend the cross carriers, see illustration **18**:

You can check on points **P1** if the pins are completely pinned or unpinned:
– The pins are unpinned: Tags **2** are visible.
– The pins are pinned: Tags **2** are **not** visible.

WARNING
Crushing danger due to movement of cross carriers!
▶ Make sure that no personnel is within the danger zone of the cross carriers during „track width adjustment“.
▶ Differentiation of the cross carriers, see Crane operating instructions, chapter 4.01.

To initiate a movement, you have to release master switch MS1 **420** with the button **421**.

▶ Press the button **421** and hold.

When „extending the cross carrier“:
▶ Move master switch MS1 **420** in direction X+.

When „retracting the cross carrier“:
▶ Move master switch MS1 **420** in direction X-.

Result:

– The pins are unpinned.

Problem remedy
Pins are not unpinned!
The pin is stuck: The position of the cross carriers prevents the pins from unpinning.
▶ Extend and retract the cross carriers again: Move master switch MS1 **420** in direction X+ or X- until the pins are completely unpinned.

▶ Make sure that the pins are completely unpinned on points **P1**, see illustration **18**.

Result:

– The pins are unpinned.
– The cross carriers retract.

Pinning the cross carriers

Before the cross carrier reaches the 0% extension status:
▶ Activate „Pin the cross carrier“: Select icon **566** („touch“), see illustration **15**.

LWE/ab Muli 010/24201-02-02/en

copyright © Liebherr-Werk Ehingen GmbH 2016

Result:

– Icon **565** „pin cross carrier“ is visible.
– The pins are pinned.

Problem remedy
The pins are not pinned!
The pin is stuck: The position of the cross carriers prevents the pins from pinning.
▶ Extend and retract the cross carriers again: Move master switch MS1 **420** in direction X+ or X- until the pins are completely pinned.

▶ Make sure that the pins are completely pinned on points **P1**, see illustration **18**.

Result:

– The pins are pinned.
– The cross carriers are retracted and secured at 0 %.

LWE/ab Muli 010/24201-02-02/en

copyright © Liebherr-Werk Ehingen GmbH 2016

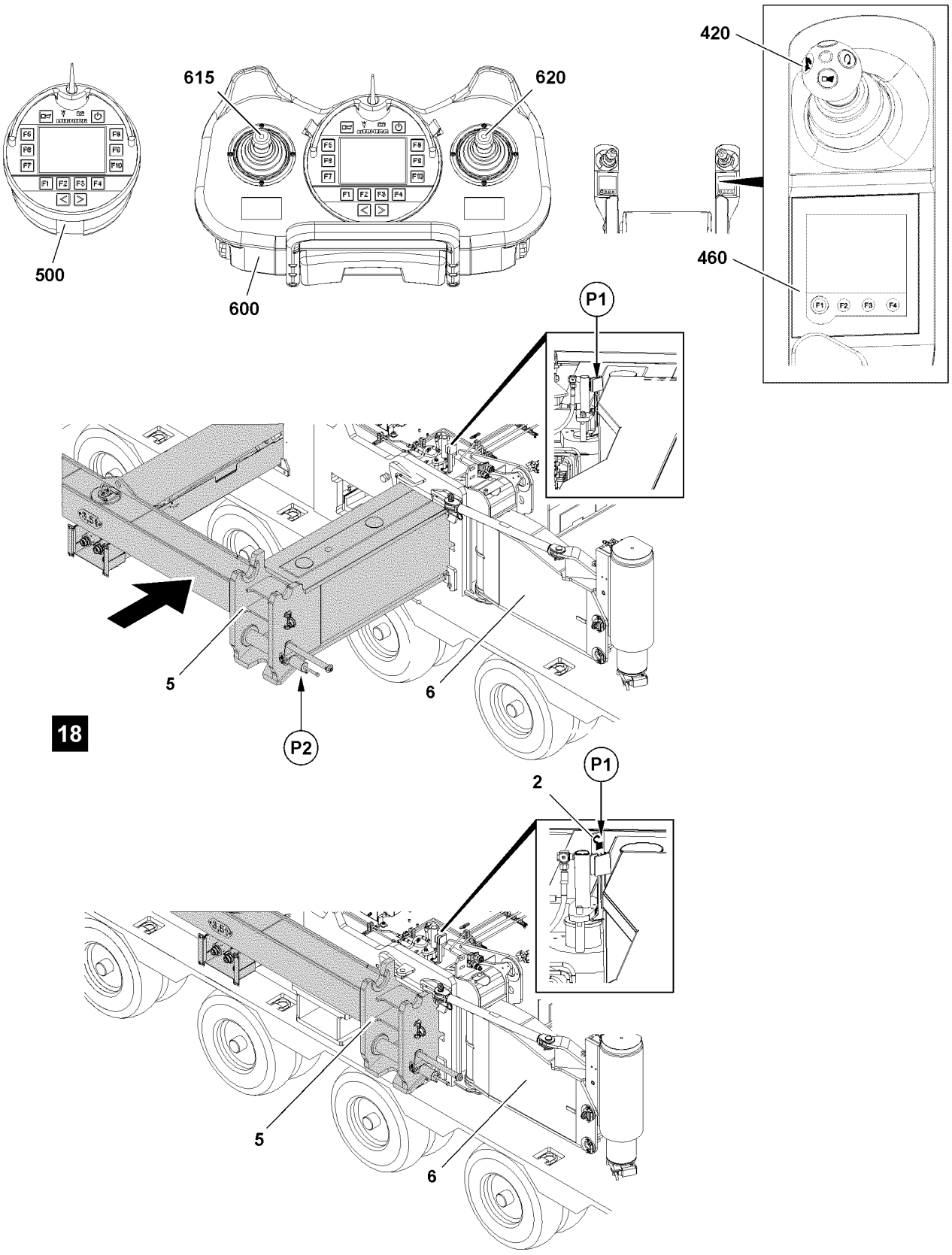

Fig.116892

LWE/ab Muli 010/24201-02-02/en

copyright © Liebherr-Werk Ehingen GmbH 2016

2.6.3 Retracting the cross carriers with the radio remote control*

Make sure that the following prerequisite is met:
– On the display of the BTT-E, the menu overview is visible.

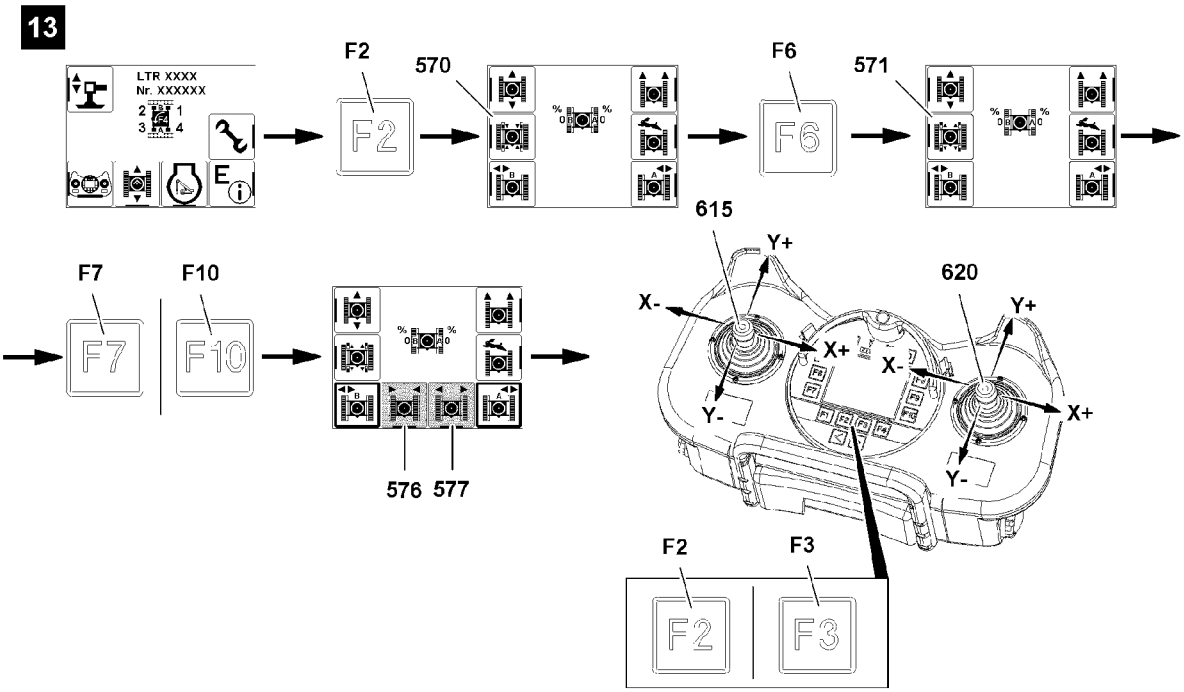

Fig.116893

Unpinning the cross carrier

▶ Call up the „Crawler travel gear“ menu: Press the function key **F2**, see illustration **13**.

Result:

– Functions „Track width adjustment“ are visible.

When icon „Pin the cross carrier“ **570** is visible:
▶ Activate „Unpin the cross carrier“: Press the function key **F6**.

Result:

– Icon „Unpin the cross carrier“ **571** appears.

Selecting the cross carrier

Before you retract or extend the cross carrier, select one of the cross carriers or both cross carriers:
– **F7** Function key
– **F10** Function key

In this and the following sections is described how both cross carriers are retracted together. Alternatively you can also select and retract the cross carriers individually.

Depending on which cross carriers are selected, different icons for „retract crawler carrier“ and „extend crawler carrier“ appear, see Crane operating instructions, chapter 6.08.

▶ Select both cross carriers: Press function key **F7** and function key **F10**, see illustration **13**.

Result:

– Icon „Extend crawler carrier“ **577** is visible.
– Icon „Retract crawler carrier“ **576** is visible.

LWE/ab Muli 010/24201-02-02/en

copyright © Liebherr-Werk Ehingen GmbH 2016

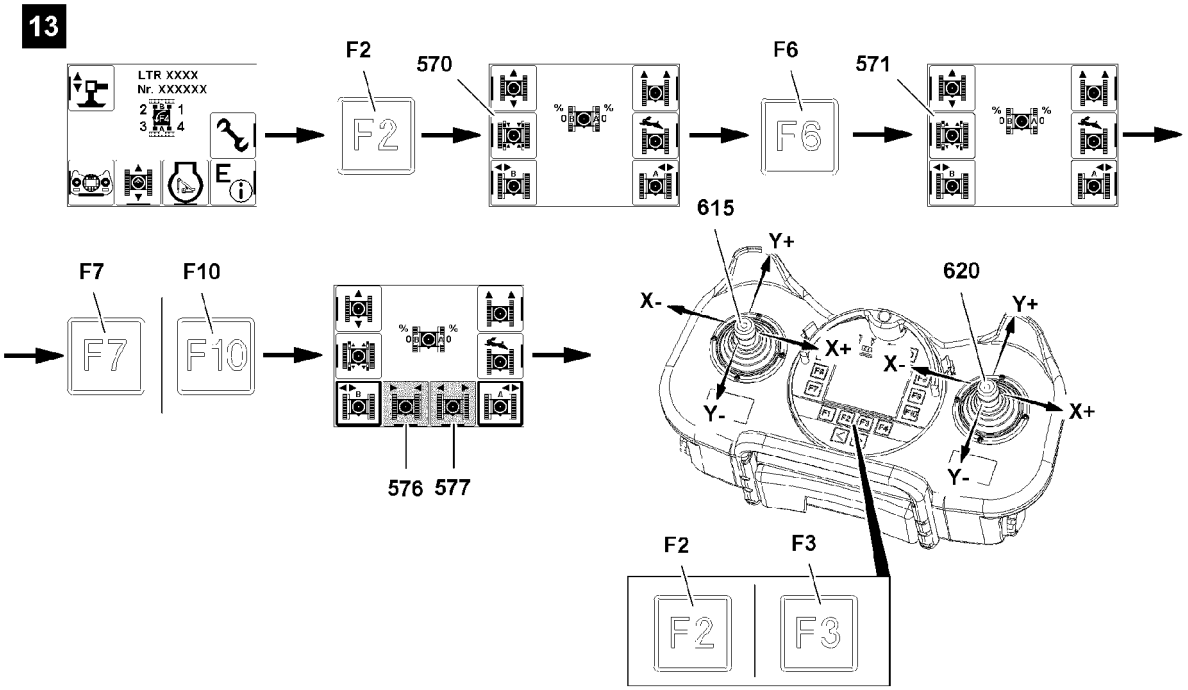

Fig.116893

Retracting the cross carriers

To unpin the cross carriers on points **P1**, you have extend the cross carriers, see illustration **18**.

You can check on points **P1** if the pins are completely pinned or unpinned:
– The pins are unpinned: Tags **2** are visible.
– The pins are pinned: Tags **2** are **not** visible.

WARNING
Crushing danger due to movement of cross carriers!
▶ Make sure that no personnel is within the danger zone of the cross carriers during „track width adjustment“.
▶ Differentiation of the cross carriers, see Crane operating instructions, chapter 6.08.

When both cross carriers are selected, then the operation is assigned to the following manual control levers on the BTT-E:
– Manual control lever **615** or manual control lever **620**

When „extending the cross carrier“:
▶ Deflect the manual control lever in direction X+.
or
Press the function key **F3**.

When „retracting the cross carrier“:
▶ Deflect the manual control lever in direction X-.
or
Press the function key **F2**.

Result:

– The pins are unpinned.

LWE/ab Muli 010/24201-02-02/en

copyright © Liebherr-Werk Ehingen GmbH 2016

Problem remedy
Pins are not unpinned!
The pin is stuck: The position of the cross carriers prevents the pins from unpinning.
▶ Extend and retract the cross carriers again: Deflect the manual control levers on the BTT-E in direction X+ or X- or press function keys until the pins are completely unpinned.

▶ Make sure that the pins are completely unpinned on points **P1**, see illustration **18**.

Result:

– The pins are unpinned.
– The cross carriers retract.

Pinning the cross carriers

Before the cross carriers reach the 0% extension status:
▶ Activate „Pin the cross carrier“: Press the function key **F6**.

Result:

– Icon „pin the cross carrier“ **570** is visible.
– The pins are pinned.

Problem remedy
The pins are not pinned!
The pin is stuck: The position of the cross carriers prevents the pins from pinning.
▶ Extend and retract the cross carriers again: Deflect the manual control levers on the BTT-E in direction X+ or X- or press function keys until the pins are completely pinned.

▶ Make sure that the pins are completely pinned on points **P1**, see illustration **18**.

Result:

– The pins are pinned.
– The cross carriers are retracted and secured at 0 %.

LWE/ab Muli 010/24201-02-02/en

copyright © Liebherr-Werk Ehingen GmbH 2016

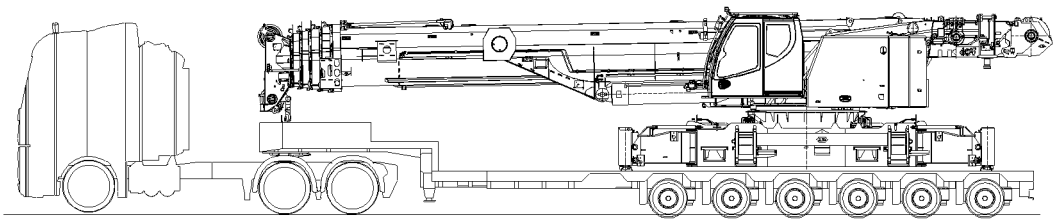

LWE/ab Muli 010/24201-02-02/en

Fig.116888

copyright © Liebherr-Werk Ehingen GmbH 2016

2.7 Rigging the crane on the transport vehicle

Make sure that the following prerequisites are met:
- The folding brackets are pinned in transport position.
- The cross carriers are retracted in transport position.
- The crane has been placed on the transport vehicle.

▶ Lock the crane superstructure with the crane chassis.

Note

▶ The telescopic boom must be supported on the transport vehicle to ensure the stability of the crane!

▶ Luff the telescopic boom down and place it on the support.

▶ Fasten the hook block to the crawler center section and lightly tension the hoist rope.

WARNING

Falling crane if insufficiently secured!

▶ The crane must be rigged and secured sufficiently to survive a strong braking maneuver!

▶ Rig and secure the crane properly on the transport vehicle, see Crane operating instructions, chapter 3.80.

LWE/ab Muli 010/24201-02-02/en

copyright © Liebherr-Werk Ehingen GmbH 2016

Empty page!

copyright © Liebherr-Werk Ehingen GmbH 2016

3.01.20 Installing the cross carrier on the crawler center section

1	Component description	3
2	Disassembly of cross carrier with bracket	5
3	Assembly of cross carrier with bracket	8
4	Disassembly Cross carrier with installed extension cylinder	11
5	Assembly Cross carrier with installed extension cylinder	14

LWE/ab Muli 010/24201-02-02/en

copyright © Liebherr-Werk Ehingen GmbH 2016

LWE/ab Muli 010/24201-02-02/en

Fig.195219

copyright © Liebherr-Werk Ehingen GmbH 2016

1 Component description

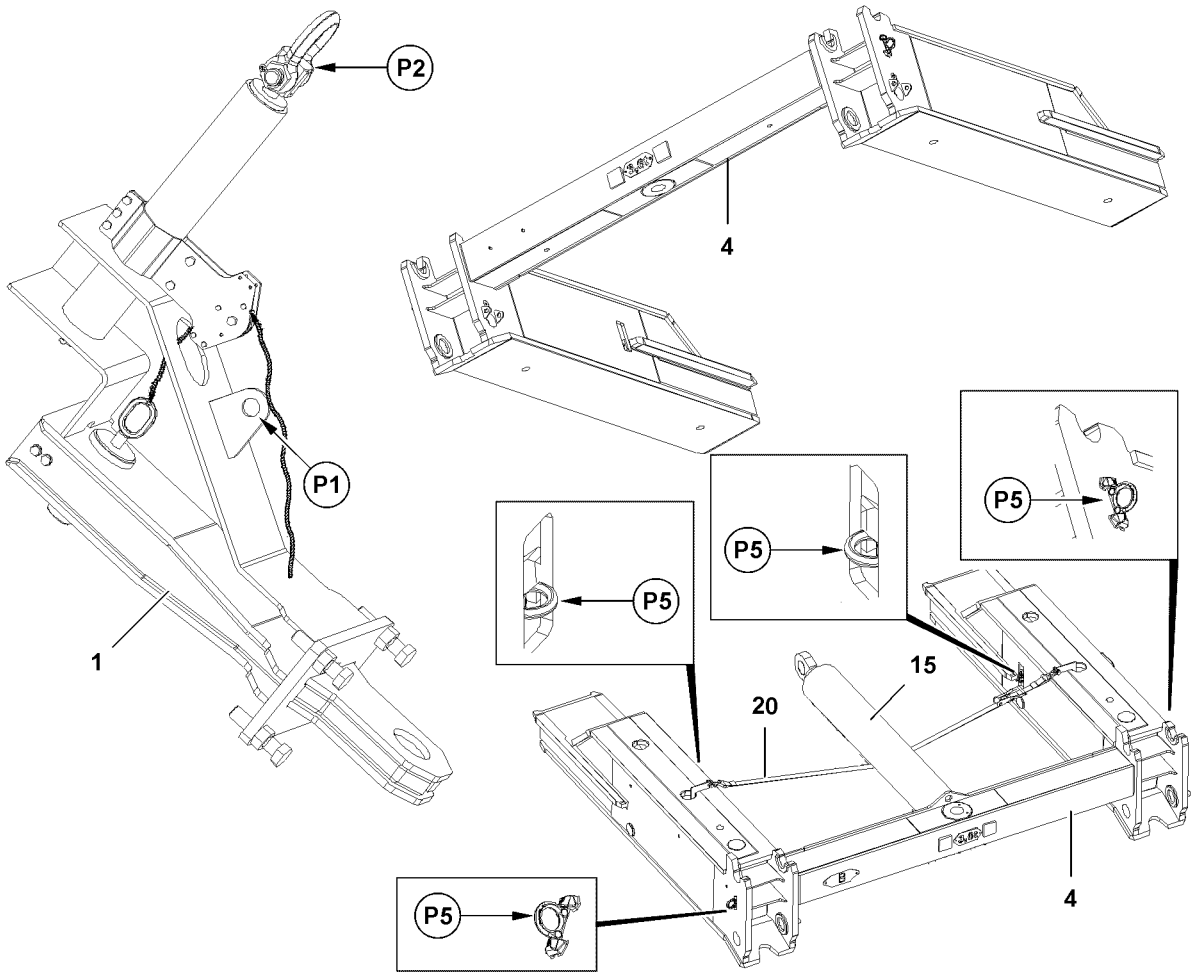

Fig.119526

With the bracket **1**, the cross carriers **4** can be disassembled or assembled without auxiliary crane.

With the tension belt **20**, the cross carriers **4** with extension cylinder **15** can be disassembled or assembled without auxiliary crane.

1.1 Weight

Description	Weight
Assembly bracket crawler carrier	0.2 t
Cross carrier	3.6 t
Cross carrier with extension cylinder	4.2 t

LWE/ab Muli 010/24201-02-02/en

copyright © Liebherr-Werk Ehingen GmbH 2016

1.2 Fastening points

Description	Load
Fastening point P1 (center of gravity bracket)	0.5 t
Fastening point P2 (center of gravity cross carrier / bracket)	4.0 t
Fastening points P5 (cross carrier / extension cylinder)	4.2 t

To lift the bracket **1** a fastening point **P1** is installed.

For the assembly / disassembly of the cross carriers **4** with bracket **1** the fastening point **P2** is installed.

For the assembly / disassembly of the cross carriers **4** with bracket **15** the fastening point **P5** is installed.

Note

- For the assembly and disassembly of the cross carriers **2** the fastening point **P2** for the bracket **1** must be used.
- For the assembly and disassembly of the cross carriers **4** with extension cylinders **15** the fastening points **P5** must be used.

LWE/ab Muli 010/24201-02-02/en

copyright © Liebherr-Werk Ehingen GmbH 2016

2 Disassembly of cross carrier with bracket

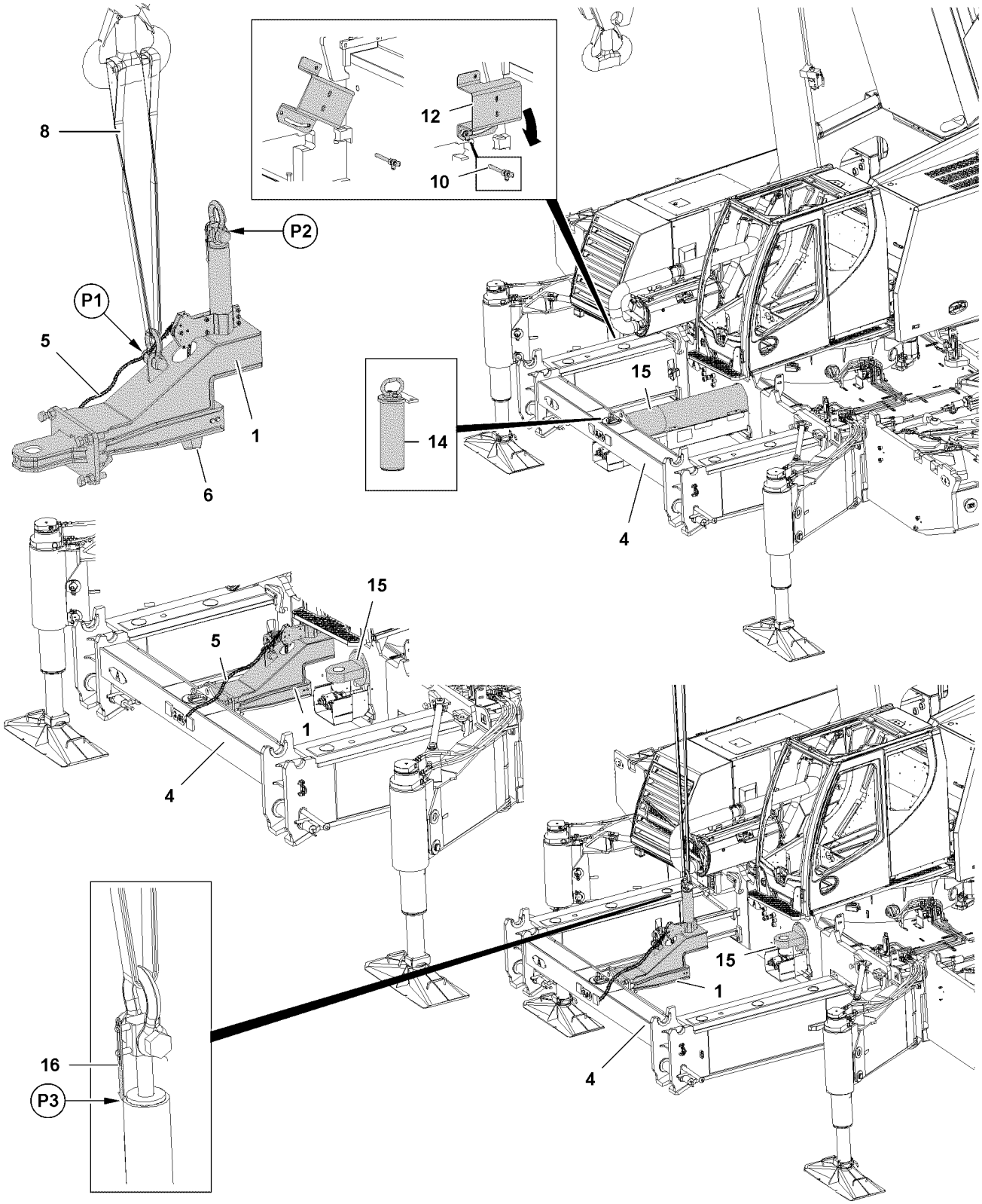

Fig.119527

LWE/ab Muli 010/24201-02-02/en

copyright © Liebherr-Werk Ehingen GmbH 2016

WARNING
Danger of falling!
During assembly and disassembly, personnel must be secured with appropriate aids to prevent them from falling! If this is not observed, assembly personnel could fall and suffer fatal injuries!
- ▶ All work aloft, where there is a danger of falling must be carried out with suitable aids!
- ▶ If fall arrest equipment is available, then it must be used, see Crane operating instructions, chapter 2.06!
- ▶ If aids are not available and work cannot be carried out from the ground, then the assembly personnel must secure themselves with the supplied fall arrest system to prevent falling, see Crane operating instructions, chapter 2.04!
- ▶ The supplied fall arrest system must be fastened on the fastening and hook points as well as on the retaining ropes. For safety points, see Crane operating instructions, chapter 2.06!
- ▶ Only step on the aids, ladders and catwalks with clean shoes!
- ▶ Keep aids, ladders and catwalks free of heavy dirt, snow and ice!

WARNING
The crane can topple over!
At assembly / disassembly of the crawler carriers, if the values of the load chart are not adhered to, the crane can topple over at assembly / disassembly!
Personnel can be severely injured or killed!
This could result in high property damage!
- ▶ Observe and adhere to the values in the load chart for assembly / disassembly of the crawler carrier.

Make sure that the following prerequisites are met:
- – The crane is properly supported and horizontally aligned.
- – The central ballast 20.0 t is completely installed.
- – The cross carriers are fully moved out and pinned.
- – The crawler carriers are removed.
- – The LICCON overload protection is set:
  - Support base 4.4 m on supports
  - Central ballast 20 t
  - Counterweight 0 t
  - Without auxiliary boom / accessory
  - Slewing range

2.1 Removing the cross carrier

- ▶ Unpin the ball locking pin **10** and swing the sensor **12** for the track width monitoring into assembly position.
- ▶ Insert the ball locking pin **10** in assembly position.
- ▶ Open the screws and unpin the pins **14**.
- ▶ Move the extension cylinder **15** in completely.

Note
- ▶ **For a detailed description of the actuation of the extension cylinders with the Bluetooth™ Terminal (BTT) refer to the Crane operating instructions, chapter 5.31.**

- ▶ Fasten the bracket **1** on point **P1** on the crane.

DANGER
Danger of fatal accident if the bracket falls down!
- ▶ Detach the crane only after the bracket **1** is pinned with the cross carrier **4**!

- ▶ Lift the bracket **1** and pin with the cross carrier **4**.
- ▶ Insert and secure pin **14**.

LWE/ab Muli 010/24201-02-02/en

copyright © Liebherr-Werk Ehingen GmbH 2016

WARNING
Crushing danger due to movement of extension cylinder!
- ▶ Make sure that no personnel is within the danger zone of the cross carriers when moving the extension cylinder out.
- ▶ With the auxiliary rope **5** unpin the pin **6**.

- ▶ Pull the auxiliary rope **5** and unpin the pin **6**.

Note
- ▶ **For a detailed description of the actuation of the extension cylinders with the Bluetooth™ Terminal (BTT) refer to the Crane operating instructions, chapter 5.31.**

- ▶ Move the extension cylinder **15** out and connect with bracket **1**.
- ▶ Release the auxiliary rope **5** and insert the pin **6**.
- ▶ Unhook the fastening rope **8** of the bracket **1** at point **P1** and fasten at point **P2**.
- ▶ Tension the fastening rope **8** of the bracket **1** until the tip of the arrow **16** with the collar is at the same height as point **P3**.

WARNING
Crushing danger due to movement of cross carriers!
- ▶ Make sure that no personnel is within the danger zone of the cross carriers during „track width adjustment“.

Note
- ▶ **For a detailed description of the actuation of the extension cylinders with the Bluetooth™ Terminal (BTT) refer to the Crane operating instructions, chapter 5.31.**

- ▶ Unpin the cross carrier **4** and slide out with the extension cylinder **15** all the way.

When the cross carrier **4** is suspended freely:
- ▶ Unpin the pin **6** with the auxiliary rope **5**.
- ▶ Move the extension cylinder **15** in completely.
- ▶ Place the cross carrier **4** on the transport vehicle.
- ▶ Unhook the fastening rope **8** of the bracket **1** at point **P2** and fasten at point **P1**.
- ▶ Unpin the pin **14** on the cross carrier **4**.
- ▶ Lift the bracket **1**.

LWE/ab Muli 010/24201-02-02/en

copyright © Liebherr-Werk Ehingen GmbH 2016

3 Assembly of cross carrier with bracket

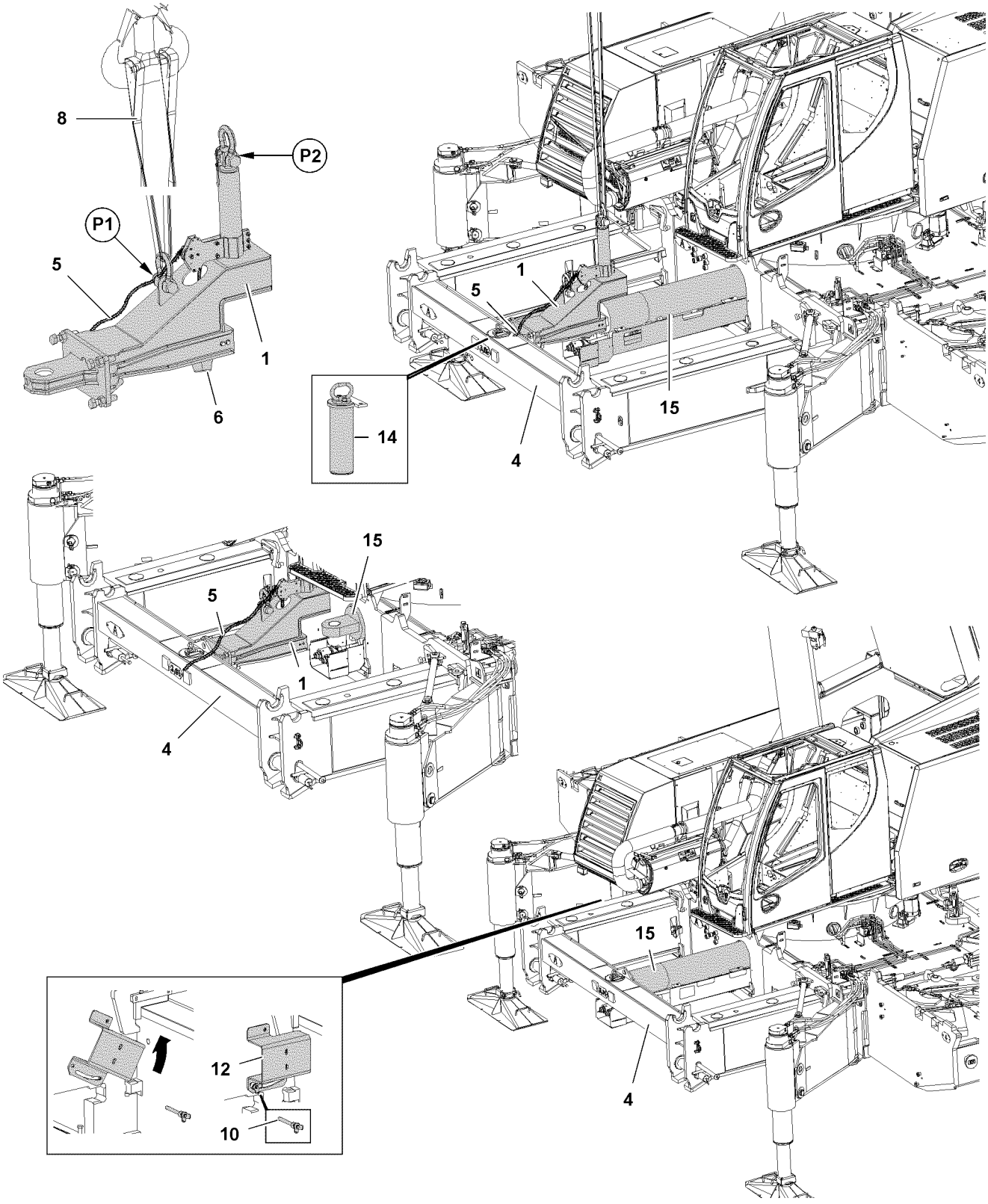

Fig.119528

LWE/ab Muli 010/24201-02-02/en

copyright © Liebherr-Werk Ehingen GmbH 2016

WARNING
Danger of falling!
During assembly and disassembly, personnel must be secured with appropriate aids to prevent them from falling! If this is not observed, assembly personnel could fall and suffer fatal injuries!
- ▶ All work aloft, where there is a danger of falling must be carried out with suitable aids!
- ▶ If fall arrest equipment is available, then it must be used, see Crane operating instructions, chapter 2.06!
- ▶ If aids are not available and work cannot be carried out from the ground, then the assembly personnel must secure themselves with the supplied fall arrest system to prevent falling, see Crane operating instructions, chapter 2.04!
- ▶ The fall arrest system must be fastened on the fastening and hook points as well as on the safety ropes. For safety points, see Crane operating instructions, chapter 2.06!
- ▶ Only step on the aids, ladders and catwalks with clean shoes!
- ▶ Keep aids, ladders and catwalks free of heavy dirt, snow and ice!

Make sure that the following prerequisites are met:
- The crane is properly supported and horizontally aligned.
- The cross carriers are fully moved out and pinned.
- The central ballast 20.0 t is completely installed.
- The crawler carriers are removed.
- The LICCON overload protection is set:
  - Support base 4.4 m on supports
  - Central ballast 20 t
  - Counterweight 0 t
  - Without auxiliary boom / accessory
  - Slewing range

3.1 Installing the cross carrier

- ▶ Unpin the pin **14** on the cross carrier **4**.
- ▶ Fasten the bracket **1** on point **P1** on the crane.
- ▶ Lift the bracket **1** and pin with the cross carrier **4**.
- ▶ Insert and secure pin **14**.
- ▶ Unhook the fastening rope **8** of the bracket **1** at point **P1** and fasten at point **P2**.

WARNING
Crushing danger due to movement of extension cylinder!
- ▶ Make sure that no personnel is within the danger zone of the cross carriers when moving the extension cylinder out.

- ▶ Move the extension cylinder **15** out completely.

Note
- ▶ **For a detailed description of the actuation of the extension cylinders with the Bluetooth™ Terminal (BTT) refer to the Crane operating instructions, chapter 5.31.**

- ▶ Lift the cross carrier **4** with the bracket **1**.
- ▶ Pin the bracket **1** with the cross carrier **4** with the extension cylinder **15**.
- ▶ Pull the auxiliary rope **5**.
- ▶ Release the auxiliary rope **5** and insert the pin **6**.

DANGER
Danger of fatal accident if the bracket falls down!
- ▶ Detach the crane only after the bracket **1** is pinned with the cross carrier **4**!

- ▶ Slide the cross carrier **4** into the crane chassis and move the extension cylinder **15** in.

LWE/ab Muli 010/24201-02-02/en

copyright © Liebherr-Werk Ehingen GmbH 2016

Note

▶ **For a detailed description of the actuation of the extension cylinders with the Bluetooth™ Terminal (BTT) refer to the Crane operating instructions, chapter 5.31.**

▶ Move the extension cylinder **15** in.
▶ Unhook the fastening rope **8** of the bracket **1** at point **P2** and fasten at point **P1**.

WARNING

Crushing danger due to movement of extension cylinder!

▶ Make sure that no personnel is within the danger zone of the cross carriers when moving the extension cylinder out.
▶ With the auxiliary rope **5** unpin the pin **6**.

▶ Pull the auxiliary rope **5** and unpin the pin **6**.

Note

▶ **For a detailed description of the actuation of the extension cylinders with the Bluetooth™ Terminal (BTT) refer to the Crane operating instructions, chapter 5.31.**

▶ Move the extension cylinder **15** in completely.
▶ Open the screws and unpin the pins **14**.
▶ Lift the bracket **1** and place down.
▶ Unpin the ball locking pin **10** and swing the sensor **12** for the track width monitoring into operating position.
▶ Insert the ball locking pin **10** in operating position.

LWE/ab Muli 010/24201-02-02/en

copyright © Liebherr-Werk Ehingen GmbH 2016

4 Disassembly Cross carrier with installed extension cylinder

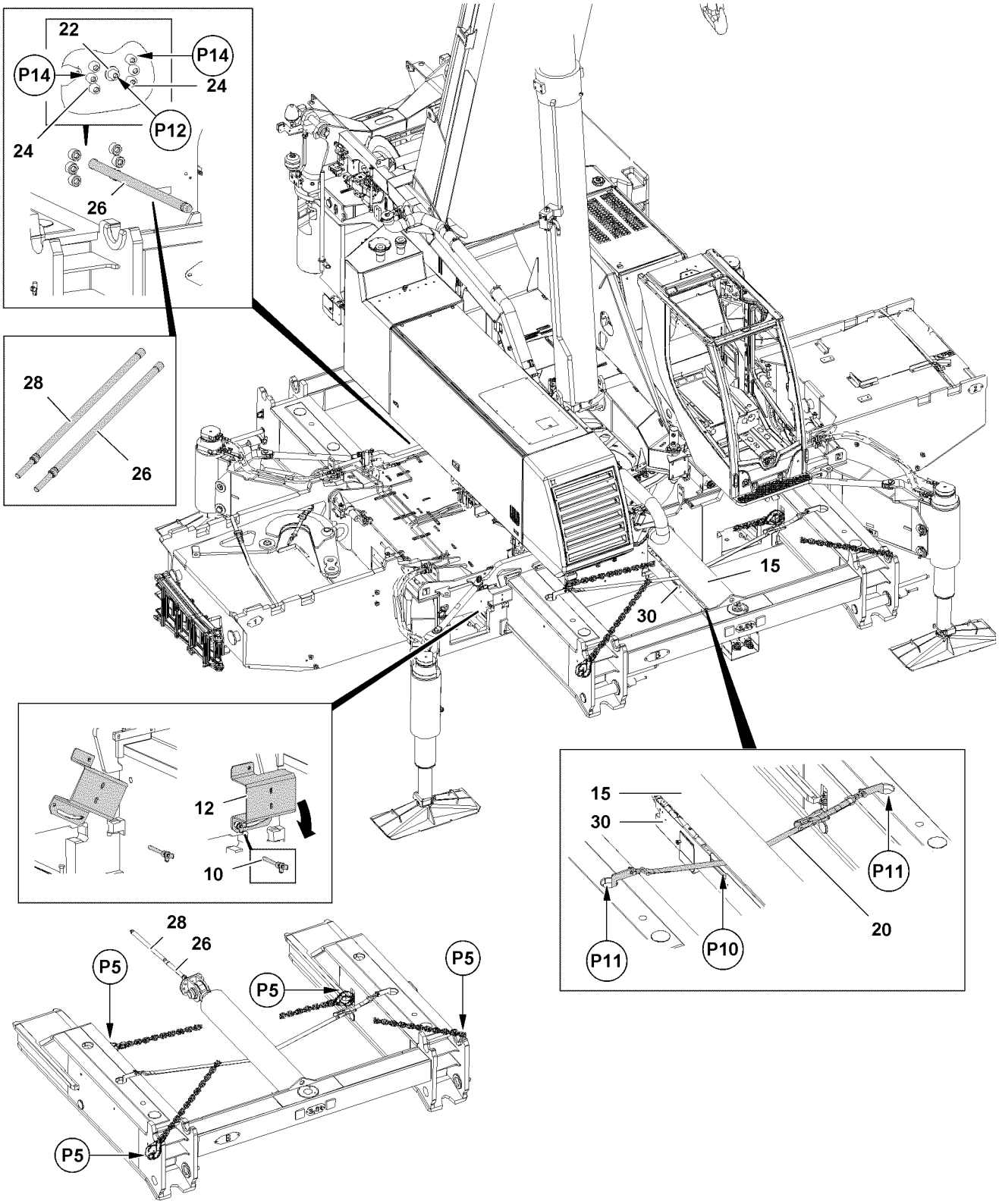

Fig.119529

LWE/ab Muli 010/24201-02-02/en

copyright © Liebherr-Werk Ehingen GmbH 2016

WARNING
Danger of falling!
During assembly and disassembly, personnel must be secured with appropriate aids to prevent them from falling! If this is not observed, assembly personnel could fall and suffer fatal injuries!
- ▶ All work aloft, where there is a danger of falling must be carried out with suitable aids!
- ▶ If fall arrest equipment is available, then it must be used, see Crane operating instructions, chapter 2.06!
- ▶ If aids are not available and work cannot be carried out from the ground, then the assembly personnel must secure themselves with the supplied fall arrest system to prevent falling, see Crane operating instructions, chapter 2.04!
- ▶ The supplied fall arrest system must be fastened on the fastening and hook points as well as on the retaining ropes. For safety points, see Crane operating instructions, chapter 2.06!
- ▶ Only step on the aids, ladders and catwalks with clean shoes!
- ▶ Keep aids, ladders and catwalks free of heavy dirt, snow and ice!

WARNING
The crane can topple over!
At assembly / disassembly of the crawler carriers, if the values of the load chart are not adhered to, the crane can topple over at assembly / disassembly!
Personnel can be severely injured or killed!
This could result in high property damage!
- ▶ Observe and adhere to the values in the load chart for assembly / disassembly of the crawler carrier.

Make sure that the following prerequisites are met:
- – The crane is properly supported and horizontally aligned.
- – The central ballast 20.0 t is completely installed.
- – The cross carriers are fully moved out and pinned.
- – The crawler carriers are removed.
- – The LICCON overload protection is set:
  - Support base 4.4 m on supports
  - Central ballast 0 t
  - Counterweight 0 t
  - Without auxiliary boom / accessory
  - Slewing range

4.1 Disassembling the cross carrier with installed extension cylinder

- ▶ Unpin the ball locking pin **10** and swing the sensor **12** for the track width monitoring into assembly position.
- ▶ Insert the ball locking pin **10** in assembly position.
- ▶ Pull the tension belt **20** through under the extension cylinder **15** at point **P10**.
- ▶ Hook the tension belt **20** at point **P11**.
- ▶ Tension the tension belt **20** until the tension belt **20** is touching on the extension cylinder **15**.
- ▶ Fasten the cross carrier **4** with installed extension cylinder **15** on points **P5** on the crane.
- ▶ Lightly tighten the hoist rope.

DANGER
Mortal danger if the cross carrier with installed extension cylinder falls down!
- ▶ Detach the crane only after the cross carrier **4** with extension cylinder has been safely placed down!

- ▶ Release and remove the screw **22** on position **P12**.
- ▶ Screw the threaded rod **26** in at position **P12**.
- ▶ Release and remove all screws **24**.
- ▶ Move the extension cylinder **15** in until the threaded rod **28** can be screwed in.

LWE/ab Muli 010/24201-02-02/en

copyright © Liebherr-Werk Ehingen GmbH 2016

Note

- **For a detailed description of the actuation of the extension cylinders with the Bluetooth™ Terminal (BTT) refer to the Crane operating instructions, chapter 5.31.**

- Screw the threaded rod **28** in.
- Move the extension cylinder **15** in completely.

The engine must be turned off before connecting and disconnecting hydraulic lines.

- Remove the cylinder guard **30** and place it in the crawler center section.
- Release the hydraulic connection for the extension cylinder **15**.
- Unpin the cross carrier **4**.

Note

- **For a detailed description of the actuation of the extension cylinders with the Bluetooth™ Terminal (BTT) refer to the Crane operating instructions, chapter 5.31.**

- Pull the cross carrier **4** with the extension cylinder **15** from the guide and place down.
- Remove the threaded rod **26** and threaded rod **28**.
- Unhook the fastening chain on the cross carrier **4**.

LWE/ab Muli 010/24201-02-02/en

copyright © Liebherr-Werk Ehingen GmbH 2016

5 Assembly Cross carrier with installed extension cylinder

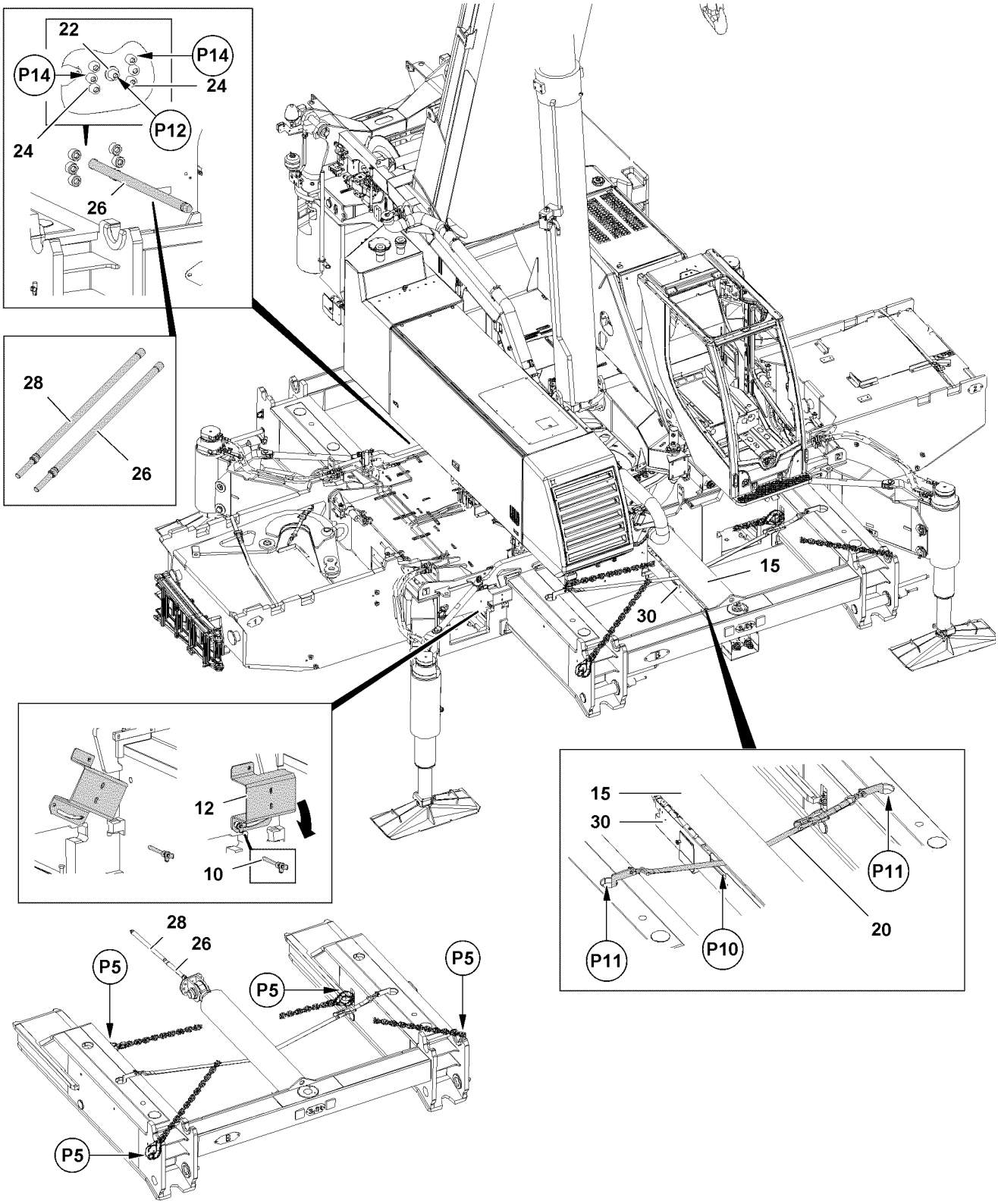

Fig.119529

LWE/ab Muli 010/24201-02-02/en

copyright © Liebherr-Werk Ehingen GmbH 2016

WARNING
Danger of falling!
During assembly and disassembly, personnel must be secured with appropriate aids to prevent them from falling! If this is not observed, assembly personnel could fall and suffer fatal injuries!
- ▶ All work aloft, where there is a danger of falling must be carried out with suitable aids!
- ▶ If fall arrest equipment is available, then it must be used, see Crane operating instructions, chapter 2.06!
- ▶ If aids are not available and work cannot be carried out from the ground, then the assembly personnel must secure themselves with the supplied fall arrest system to prevent falling, see Crane operating instructions, chapter 2.04!
- ▶ The supplied fall arrest system must be fastened on the fastening and hook points as well as on the retaining ropes. For safety points, see Crane operating instructions, chapter 2.06!
- ▶ Only step on the aids, ladders and catwalks with clean shoes!
- ▶ Keep aids, ladders and catwalks free of heavy dirt, snow and ice!

WARNING
The crane can topple over!
At assembly / disassembly of the crawler carriers, if the values of the load chart are not adhered to, the crane can topple over at assembly / disassembly!
Personnel can be severely injured or killed!
This could result in high property damage!
- ▶ Observe and adhere to the values in the load chart for assembly / disassembly of the crawler carrier.

Make sure that the following prerequisites are met:
- – The crane is properly supported and horizontally aligned.
- – The central ballast 20.0 t is completely installed.
- – The cross carriers are fully moved out and pinned.
- – The crawler carriers are removed.
- – The LICCON overload protection is set:
  - Support base 4.4 m on supports
  - Central ballast 0 t
  - Counterweight 0 t
  - Without auxiliary boom / accessory
  - Slewing range

5.1 Assembling the cross carrier with installed extension cylinder

- ▶ Install the threaded rod **26** and threaded rod **28**.
- ▶ Fasten the cross carrier **4** with installed extension cylinder **15** on points **P5** on the crane.

NOTICE
Damage of threaded rods!
- ▶ Carefully move the threaded rods in bore **P30**.

- ▶ Slide the cross carrier **4** with extension cylinder **15** and threaded rods carefully into the guides.
- ▶ Pin the cross carrier **4** at „wide“ track.

Note
- ▶ **For a detailed description of the actuation of the extension cylinders with the Bluetooth™ Terminal (BTT) refer to the Crane operating instructions, chapter 5.31.**

- ▶ Unhook the fastening chain on the cross carrier **4**.

The engine must be turned off before connecting and disconnecting hydraulic lines.

- ▶ Connect the hydraulic connection for the extension cylinder **15**.
- ▶ Release the tension belt **20**, unhook on point **P11** and remove.
- ▶ Remove the cylinder guard **30** from the crawler center section and install.

copyright © Liebherr-Werk Ehingen GmbH 2016

▶ Move the extension cylinder **15** out carefully.

Note

▶ **For a detailed description of the actuation of the extension cylinders with the Bluetooth™ Terminal (BTT) refer to the Crane operating instructions, chapter 5.31.**

When the threaded rod **28** is completely visible on position **P12**:

▶ Remove the threaded rod **28**.
▶ Move the extension cylinder **15** out carefully.
▶ Install all screws **24** at position **P14**.
▶ Remove the threaded rod **26** at position **P12**.
▶ Install all screw **22** at position **P12**.
▶ Unpin the ball locking pin **10** and swing the sensor **12** for the track width monitoring into operating position.
▶ Insert the ball locking pin **10** in operating position.

LWE/ab Muli 010/24201-02-02/en

copyright © Liebherr-Werk Ehingen GmbH 2016

3.03 Central ballast

1	Central ballast combinations	3
2	Central ballast during operation	3
3	Installing the central ballast	5
4	Disassembling the central ballast	15

LWE/ab Muli 010/24201-02-02/en

copyright © Liebherr-Werk Ehingen GmbH 2016

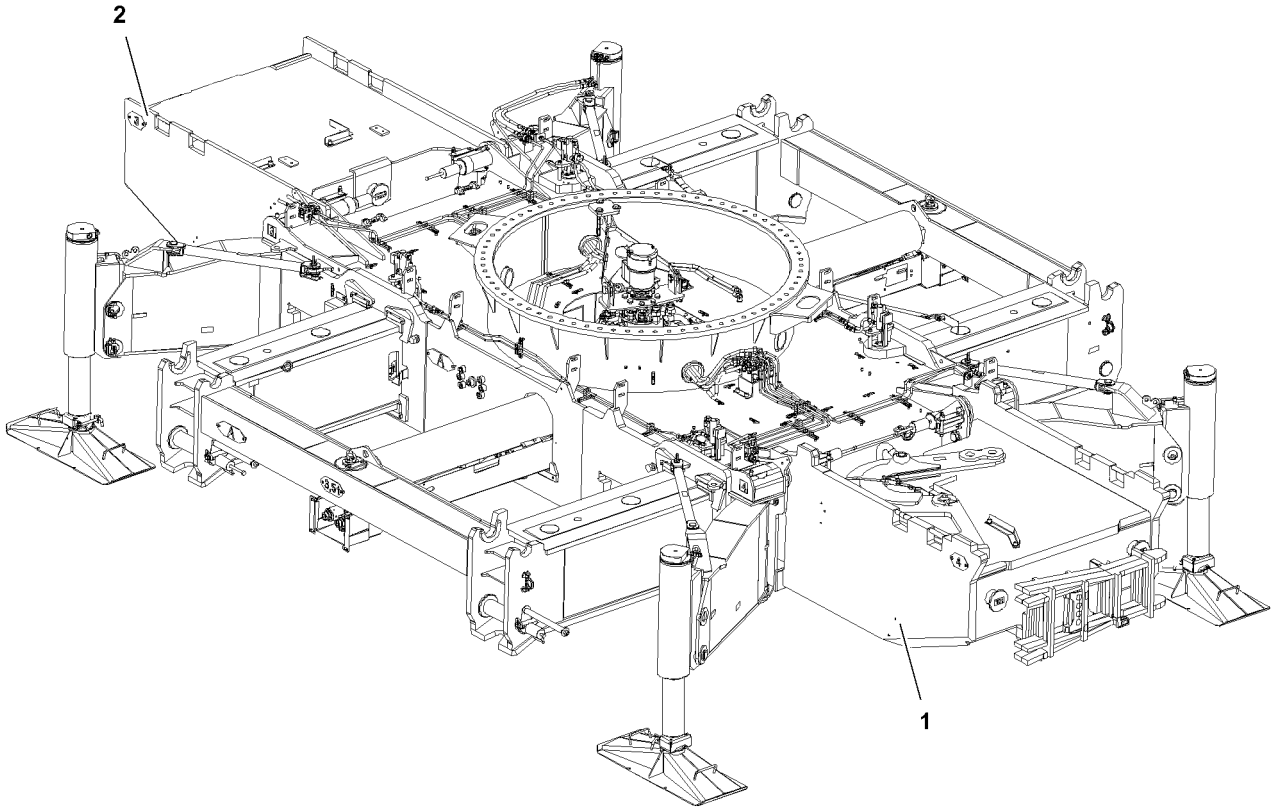

LWE/ab Muli 010/24201-02-02/en

Fig.117547

copyright © Liebherr-Werk Ehingen GmbH 2016

1 Central ballast combinations

The central ballast is composed of:
- **1** Central ballast block, rear
- **2** Central ballast block, front

WARNING
The crane can topple over!
The crane can topple over if another central ballast combination is used than specified in the charts!
Personnel can be severely injured or killed!
▶ For crane operation, only use central ballast combinations, which are specified in the following charts!

Central ballast	Combination	Individual weight
0.0 t	Without central ballast	0.0 t

Central ballast	Combination	Individual weight
20.0 t	Central ballast block, front **2**	10.0 t
	Central ballast block, rear **1**	10.0 t

2 Central ballast during operation

WARNING
Falling central ballast!
If the central ballast blocks are not properly installed, then they can fall down and cause severe accidents!
Personnel can be severely injured or killed!
▶ Before operation, make sure that the central ballast bock **1** and central ballast block **2** are installed properly!

LWE/ab Muli 010/24201-02-02/en

copyright © Liebherr-Werk Ehingen GmbH 2016

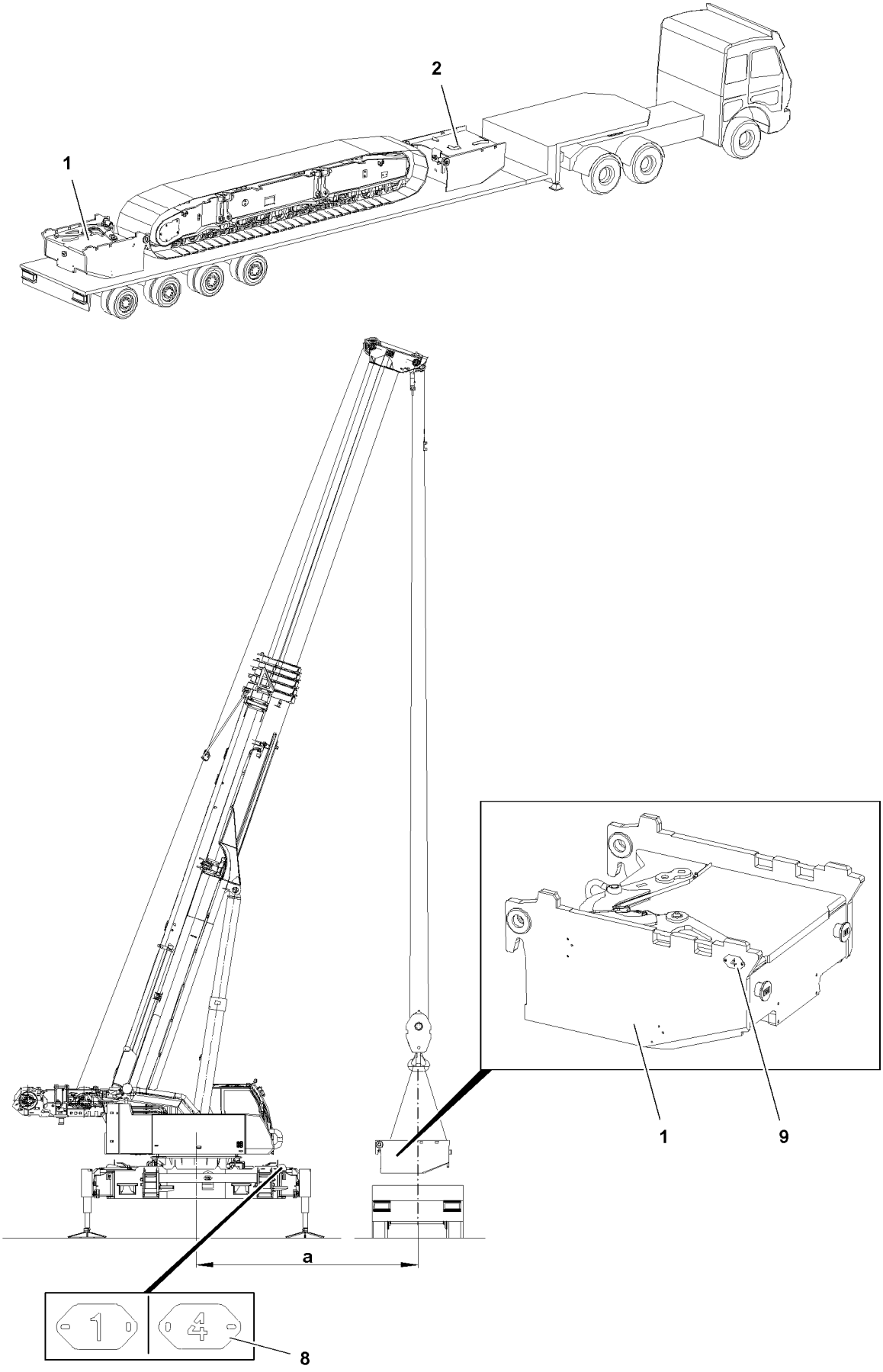

Fig.117541

LWE/ab Muli 010/24201-02-02/en

copyright © Liebherr-Werk Ehingen GmbH 2016

3 Installing the central ballast

WARNING
Danger of falling!
During assembly and disassembly, personnel must be secured with appropriate aids to prevent them from falling! If this is not observed, assembly personnel can fall and suffer life-threatening or fatal injuries!
- ▶ Any work, where there is a danger of falling, must be carried out with suitable aids (for example: lifting platforms, scaffoldings, ladders, auxiliary crane)!
- ▶ If the work can neither be carried out with such aids nor from the ground, then the assembly personnel must secure themselves with approved catch systems to avoid falling, see chapter 2.04 of the operating instruction!
- ▶ If railings are present on the crane components, then they must be brought into the corresponding position and secured for assembly / disassembly work!
- ▶ Step on aids and fall protection equipment only with clean shoes!
- ▶ Keep aids and fall protection equipment clean and free from snow and ice!
- ▶ During all assembly and disassembly work, maintenance work and inspections, travel or crane operation is prohibited!

WARNING
Danger of impact / crushing!
When installing / removing counterweight components with the auxiliary crane, crane components can start to swing back and forth!
When lifting / lowering and positioning crane components, there is an increased danger of impacts / crushing!
Personnel can be caught and severely injured or killed!
- ▶ Make sure that personnel cannot be caught by crane components!
- ▶ When working in danger zones: Use aids to protect limbs!
- ▶ Guide crane components with suitable aids to minimize oscillation!

WARNING
Falling crane components!
At assembly, the crane components can fall down!
Personnel can be severely injured or killed!
- ▶ Make sure that no persons or objects are within the danger zone!

WARNING
The crane can topple over!
If the central ballast is installed / removed, the set up configuration of the crane changes.
If changes are made on the central ballast, no central ballast may be taken into account as set up configuration of the crane when doing so.
- ▶ Make sure that the LICCON overload protection is set to a set up configuration without central ballast when making changes on the central ballast.
- ▶ Observe and adhere to the values in the load chart for installation of the central ballast.
- ▶ Lift or place down the central ballast block in permissible spacing **a**, see load chart.

Note
- ▶ When the crane is **not** supported: Support the crane, see Crane operating instructions, chapter 3.01.

Make sure that the following prerequisites are met:
- – The crane is horizontally aligned.
- – The crane is positioned on a level and load-bearing surface.
- – The crane is supported on base 6 .0 m x 4.4 m.
- – The support cylinders are extended.
- – The LICCON overload protection is set:

copyright © Liebherr-Werk Ehingen GmbH 2016

- Support base 4.4 m on supports
- Central ballast 0 t
- Counterweight 0 t
- Without auxiliary boom / accessory
- Slewing range

– Crane is operational.

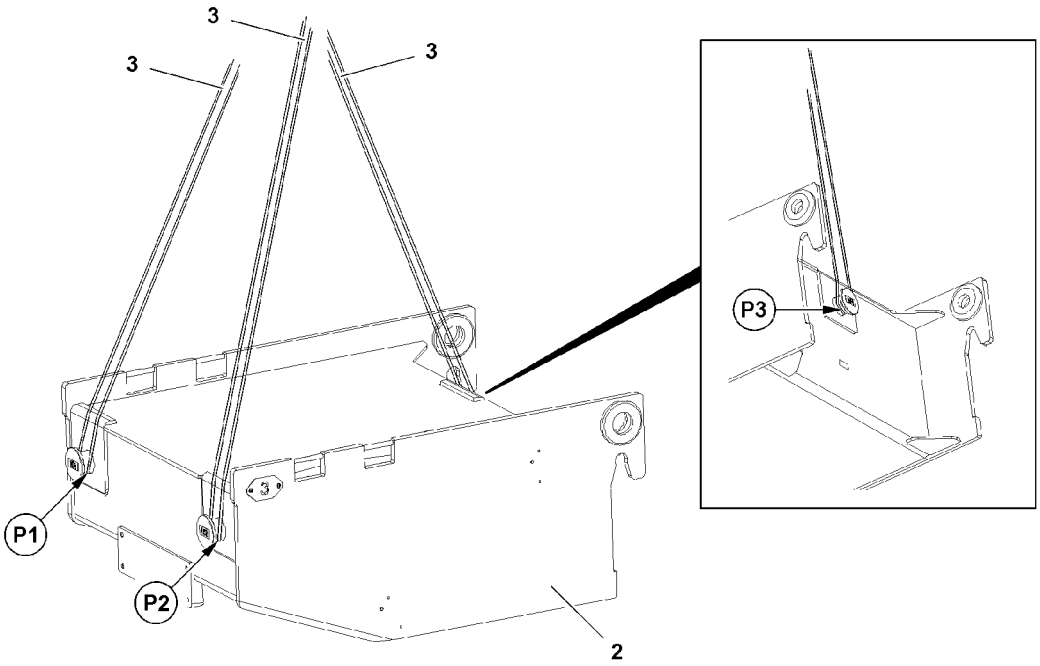

Fig.117543: Fastening points central ballast block

3.1 Checking the central ballast blocks

WARNING
Damaged central ballast block!
If a damaged / dirty central ballast block is used, then the tight seating and the operational safety are no longer ensured!
▶ Do not use a damaged central ballast block!
▶ Replace / repair a damaged central ballast block!
▶ Clean the fastening points of the central ballast before installation!

▶ Before assembly / disassembly of the central ballast blocks, carry out a visual inspection for damage or foreign matter.

3.2 Fastening the central ballast blocks

WARNING
Improperly fastened central ballast block!
An improperly fastened central ballast block can slip and fall down when lifting or swinging it!
Personnel can be severely injured or killed!
▶ Before lifting, make sure that the central ballast block is properly fastened!
▶ Use only approved and suitable fastening equipment **3**!
▶ Always keep sufficient distance to the suspended central ballast block!
▶ Standing under a raised central ballast block is **prohibited**!
▶ Carefully initiate all crane movements with attached central ballast block extremely sensitively and initiate slow down with utmost caution!

LWE/ab Muli 010/24201-02-02/en

copyright © Liebherr-Werk Ehingen GmbH 2016

WARNING
Swinging central ballast block!
If the fastening equipment is not positioned in the center over the fastening points of the central ballast block **2**, then the central ballast block **2** can start to swing after lifting and fall down!
This could result in serious accidents!
Personnel can be severely injured or killed!
▶ Make sure that the fastening equipment **3** is centered over the fastening points of the central ballast block **2**!

Note
▶ The central ballast blocks are marked with numbers.
▶ Make sure that the numbers on the central ballast block match the numbers on the pin points on the crawler center section.

▶ Fasten the central ballast block **2** on point **P1**, point **P2** and point **P3**, see illustration.

LWE/ab Muli 010/24201-02-02/en

copyright © Liebherr-Werk Ehingen GmbH 2016

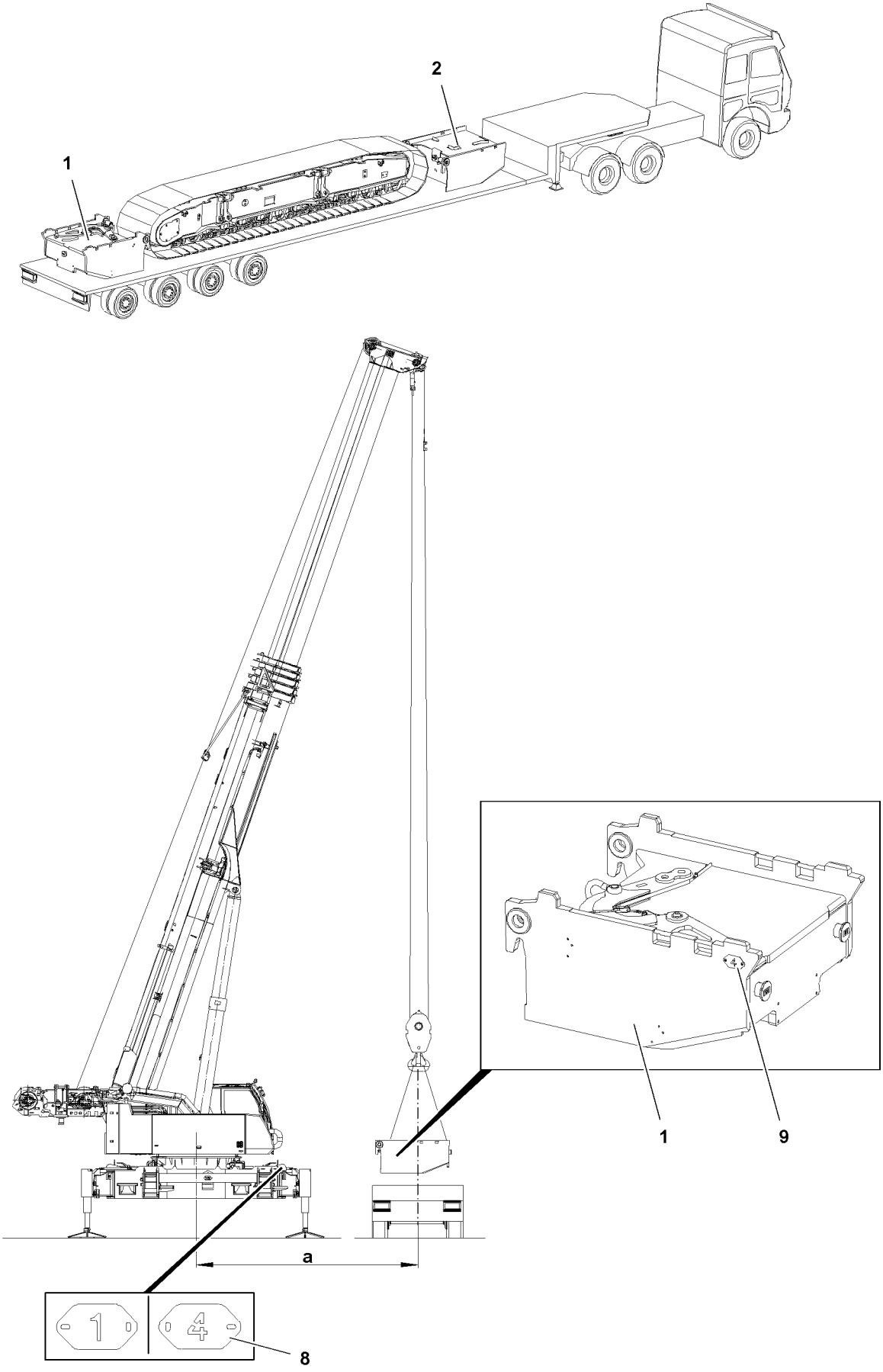

Fig.117541

LWE/ab Muli 010/24201-02-02/en

copyright © Liebherr-Werk Ehingen GmbH 2016

3.3 Installing the central ballast block on the rear

Note

- ▶ „Rear“ on the central ballast block and on the crawler center section is marked with the number **1** and number **4**.
- ▶ The numbers on the central ballast block **1** and crawler center section **5** must be identical at assembly.
- ▶ Positions of numbers, see tag **8** and tag **9**.

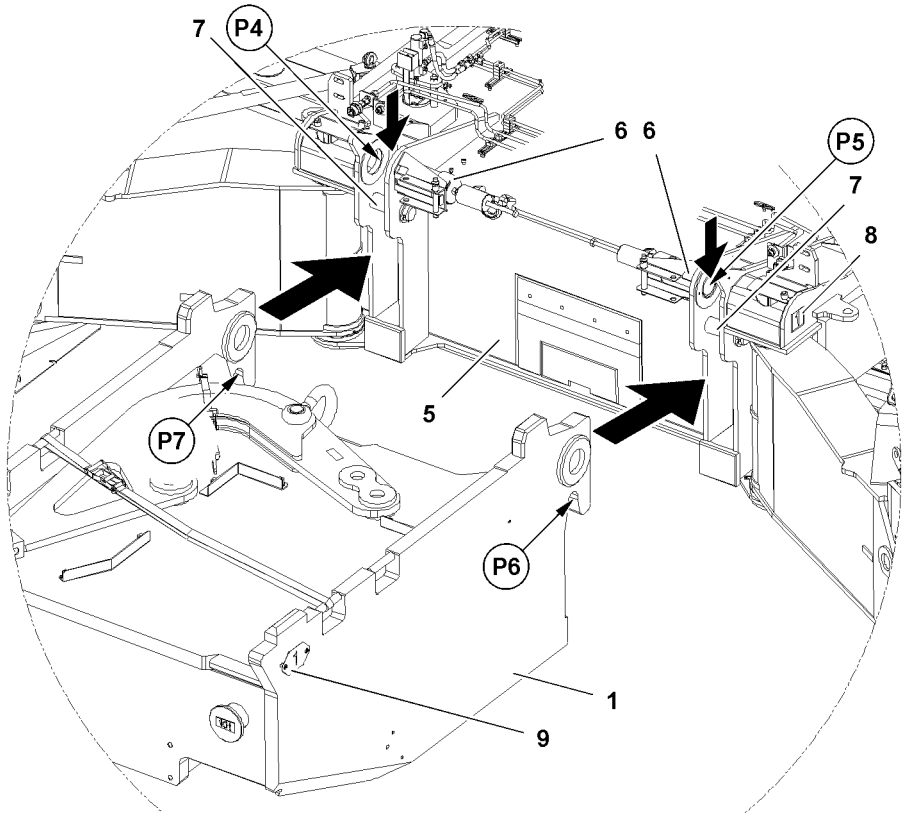

Fig.117545: Central ballast block, rear: Hook and pin points

- ▶ Make sure that the numbers on the central ballast block match the numbers on the pin points on the crawler center section.
- ▶ Fasten the central ballast block **1**.
- ▶ Lift the central ballast block **1**, pay attention to the load torque indicator.
- ▶ Make sure that the pins **6** on point **P4** and on point **P5** are unpinned.
- ▶ Swing the central ballast block **1** in and hang on point **P6** and an point **P7** from top on pin **7**.
- ▶ Lower the central ballast block **1** until the pin bores on point **P4** and on point **P5** align.

LWE/ab Muli 010/24201-02-02/en

copyright © Liebherr-Werk Ehingen GmbH 2016

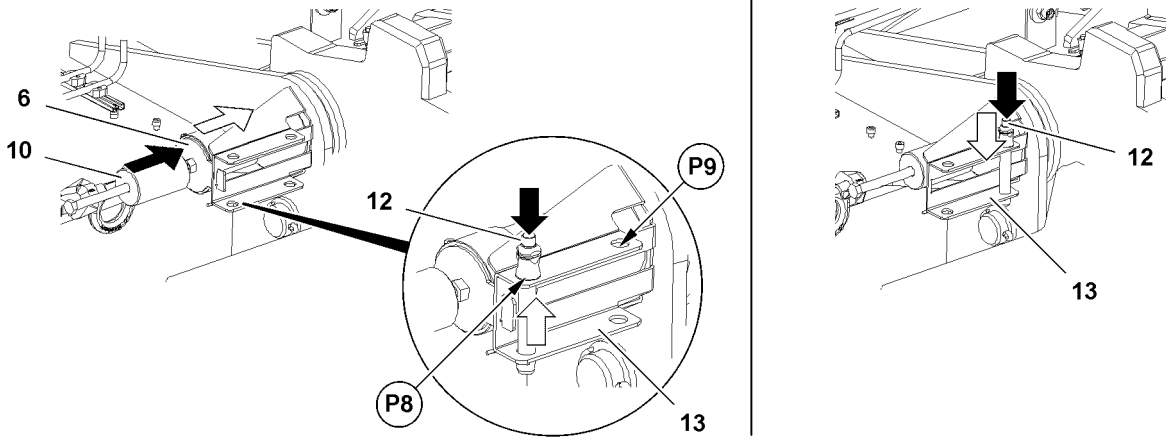

Fig.117546: Release, pin and secure the pin.

- ▶ Release the pin **6**: Actuate the ball locking pin **12** and unpin from the retainer **13** on point **P8**.
- ▶ Insert the pin **6**: Insert the pin **6** with the mechanical pin pulling device **10** to the stop.
- ▶ Secure the pin **6**: Actuate the ball locking pin **12** and insert on point **P9** in the retainer **13**.
- ▶ Remove the fastening equipment.

LWE/ab Muli 010/24201-02-02/en

copyright © Liebherr-Werk Ehingen GmbH 2016

Empty page!

LWE/ab Muli 010/24201-02-02/en

copyright © Liebherr-Werk Ehingen GmbH 2016

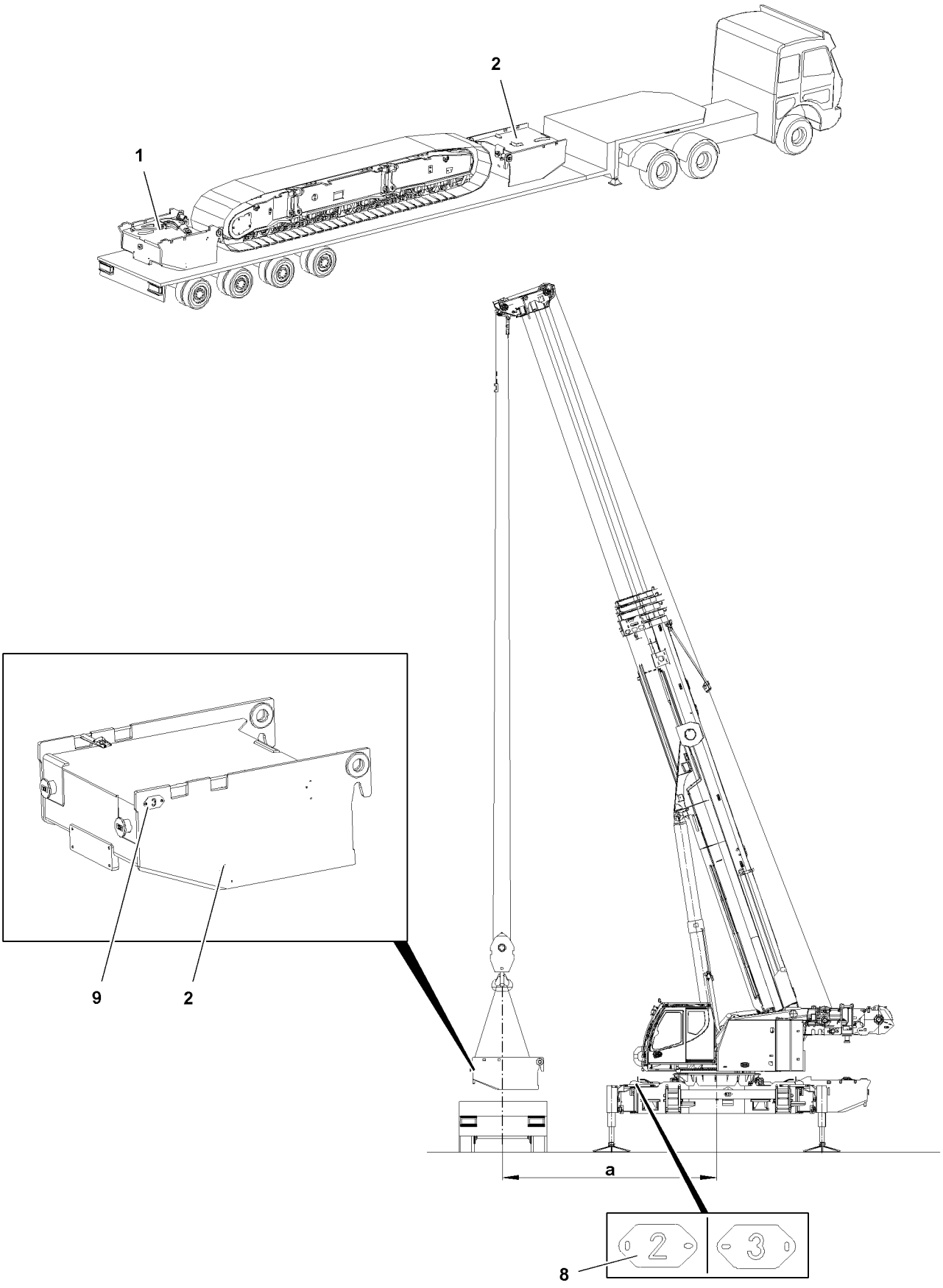

Fig.117544

LWE/ab Muli 010/24201-02-02/en

copyright © Liebherr-Werk Ehingen GmbH 2016

3.4 Installing the central ballast block on the front

Note

- ▶ „Front“ on the central ballast block **2** and on the crawler center section is marked with the number **2** and number **3**.
- ▶ The numbers on the central ballast block **2** and on the crawler center section **5** must be identical at assembly.
- ▶ Positions of numbers, see tag **8** and tag **9**.

- ▶ Fasten the central ballast block **2**.
- ▶ Lift the central ballast block **2**, pay attention to the load torque indicator.
- ▶ Make sure that the pins are unpinned on the pin points on the crawler center section.
- ▶ Hang the central ballast block **2** the same way on the crawler center section and described in section „Installing the central ballast block on the rear“.
- ▶ Lower the crawler center section until the pin bores align.

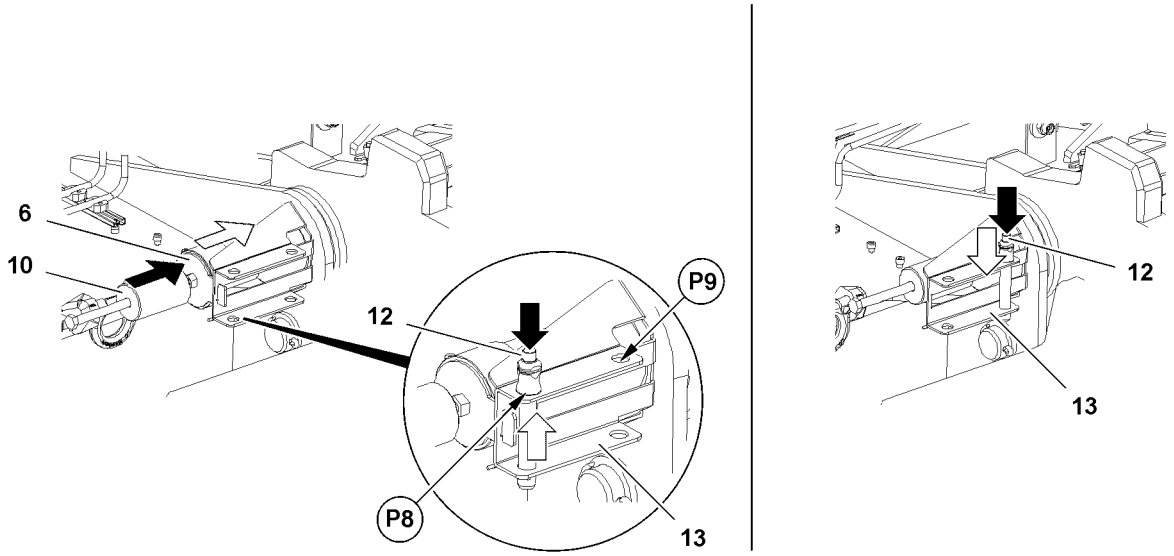

Fig.117546: Release, pin and secure the pin.

- ▶ Release the pin **6**: Actuate the ball locking pin **12** and unpin on point **P8** from the retainer **13**.
- ▶ Insert the pin **6**: Insert the pin **6** with the mechanical pin pulling device **10** to the stop.
- ▶ Secure the pin **6**: Actuate the ball locking pin **12** and insert on point **P9** in the retainer **13**.
- ▶ Remove the fastening equipment.

Result:

– The central ballast blocks are installed.

3.5 Assembling the crawler carrier

Note

- ▶ Assemble the crawler carrier, see Crane operating instructions, chapter 3.01.

copyright © Liebherr-Werk Ehingen GmbH 2016

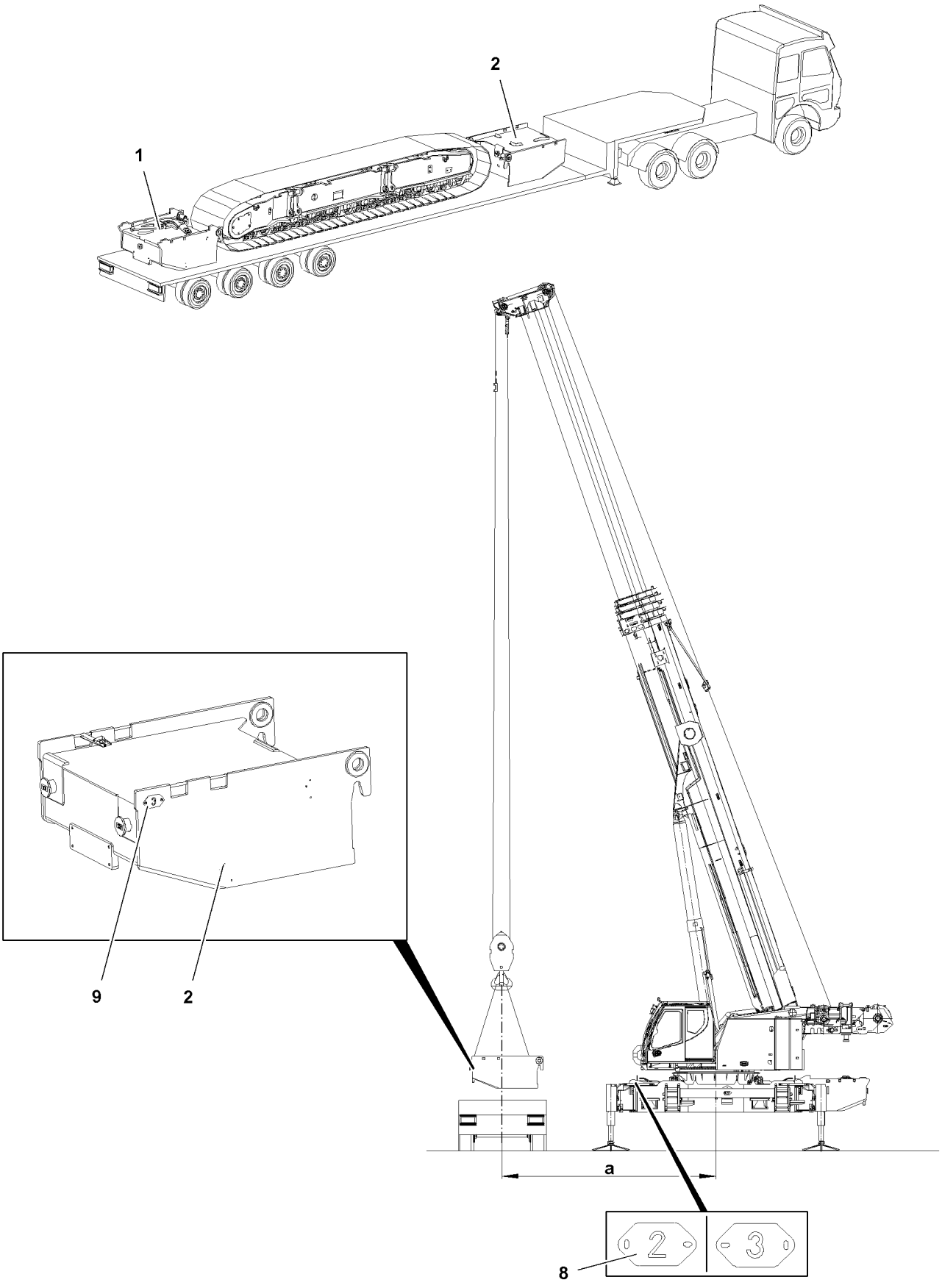

Fig.117544

LWE/ab Muli 010/24201-02-02/en

copyright © Liebherr-Werk Ehingen GmbH 2016

4 Disassembling the central ballast

WARNING
Danger of falling!
During assembly and disassembly, personnel must be secured with appropriate aids to prevent them from falling! If this is not observed, assembly personnel can fall and suffer life-threatening or fatal injuries!
- ▶ Any work, where there is a danger of falling, must be carried out with suitable aids (for example: lifting platforms, scaffoldings, ladders, auxiliary crane)!
- ▶ If the work can neither be carried out with such aids nor from the ground, then the assembly personnel must secure themselves with approved catch systems to avoid falling, see chapter 2.04 of the operating instruction!
- ▶ If railings are present on the crane components, then they must be brought into the corresponding position and secured for assembly / disassembly work!
- ▶ Step on aids and fall protection equipment only with clean shoes!
- ▶ Keep aids and fall protection equipment clean and free from snow and ice!
- ▶ During all assembly and disassembly work, maintenance work and inspections, travel or crane operation is prohibited!

WARNING
Danger of impact / crushing!
When installing / removing counterweight components with the auxiliary crane, crane components can start to swing back and forth!
When lifting / lowering and positioning crane components, there is an increased danger of impacts / crushing!
Personnel can be caught and severely injured or killed!
- ▶ Make sure that personnel cannot be caught by crane components!
- ▶ When working in danger zones: Use aids to protect limbs!
- ▶ Guide crane components with suitable aids to minimize oscillation!

WARNING
Falling crane components!
At assembly, the crane components can fall down!
Personnel can be severely injured or killed!
- ▶ Make sure that no persons or objects are within the danger zone!

WARNING
The crane can topple over!
If the central ballast is installed / removed, the set up configuration of the crane changes.
If changes are made on the central ballast, no central ballast may be taken into account as set up configuration of the crane when doing so.
- ▶ Make sure that the LICCON overload protection is set to a set up configuration without central ballast when making changes on the central ballast.
- ▶ Observe and adhere to the values in the load chart for installation of the central ballast.
- ▶ Lift or place down the central ballast block in permissible spacing **a**, see load chart.

Note
- ▶ When the crawler carriers are **not** removed: Disassemble the crawler carrier, see Crane operating instructions, chapter 3.01.

Make sure that the following prerequisites are met:
- – The crawler carriers are removed.
- – The crane is aligned in horizontal direction.
- – The crane is positioned on a level and load-bearing surface.
- – The crane is supported on base 6 .0 m x 4.4 m.
- – The support cylinders are extended.

LWE/ab Muli 010/24201-02-02/en

copyright © Liebherr-Werk Ehingen GmbH 2016

– The LICCON overload protection is set:
  - Support base 4.4 m on supports
  - Central ballast 0 t
  - Counterweight 0 t
  - Without auxiliary boom / accessory
  - Slewing range
– The crane is operational.

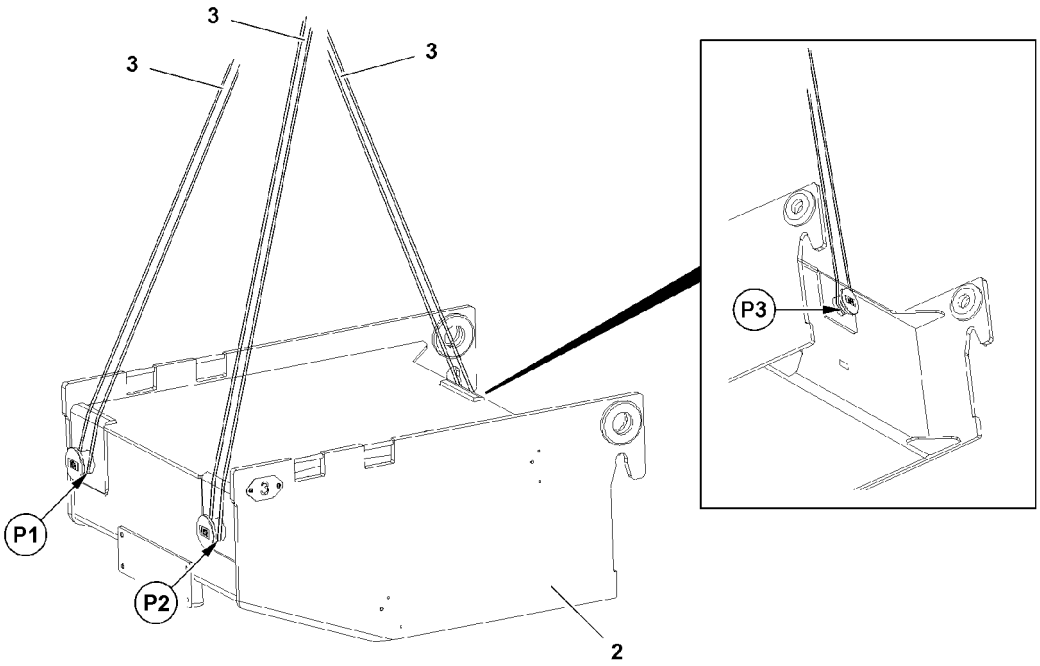

Fig.117543: Fastening points central ballast block

4.1 Fastening the central ballast blocks

WARNING
Improperly fastened central ballast block!
An improperly fastened central ballast block can slip and fall down when lifting or swinging it!
Personnel can be severely injured or killed!
▶ Before lifting, make sure that the central ballast block is properly fastened!
▶ Use only approved and suitable fastening equipment **3**!
▶ Always keep sufficient distance to the suspended central ballast block!
▶ Standing under a raised central ballast block is **prohibited**!
▶ Carefully initiate all crane movements with attached central ballast block extremely sensitively and initiate slow down with utmost caution!

WARNING
Swinging central ballast block!
If the fastening equipment is not positioned in the center over the fastening points of the central ballast block **2**, then the central ballast block **2** can start to swing after lifting and fall down!
This could result in serious accidents!
Personnel can be severely injured or killed!
▶ Make sure that the fastening equipment **3** is centered over the fastening points of the central ballast block **2**!

LWE/ab Muli 010/24201-02-02/en

copyright © Liebherr-Werk Ehingen GmbH 2016

Note

- The central ballast blocks are marked with numbers.
- Make sure that the numbers on the central ballast block match the numbers on the pin points on the crawler center section.

- Fasten the central ballast block **2** on point **P1**, point **P2** and point **P3**, see illustration.

LWE/ab Muli 010/24201-02-02/en

copyright © Liebherr-Werk Ehingen GmbH 2016

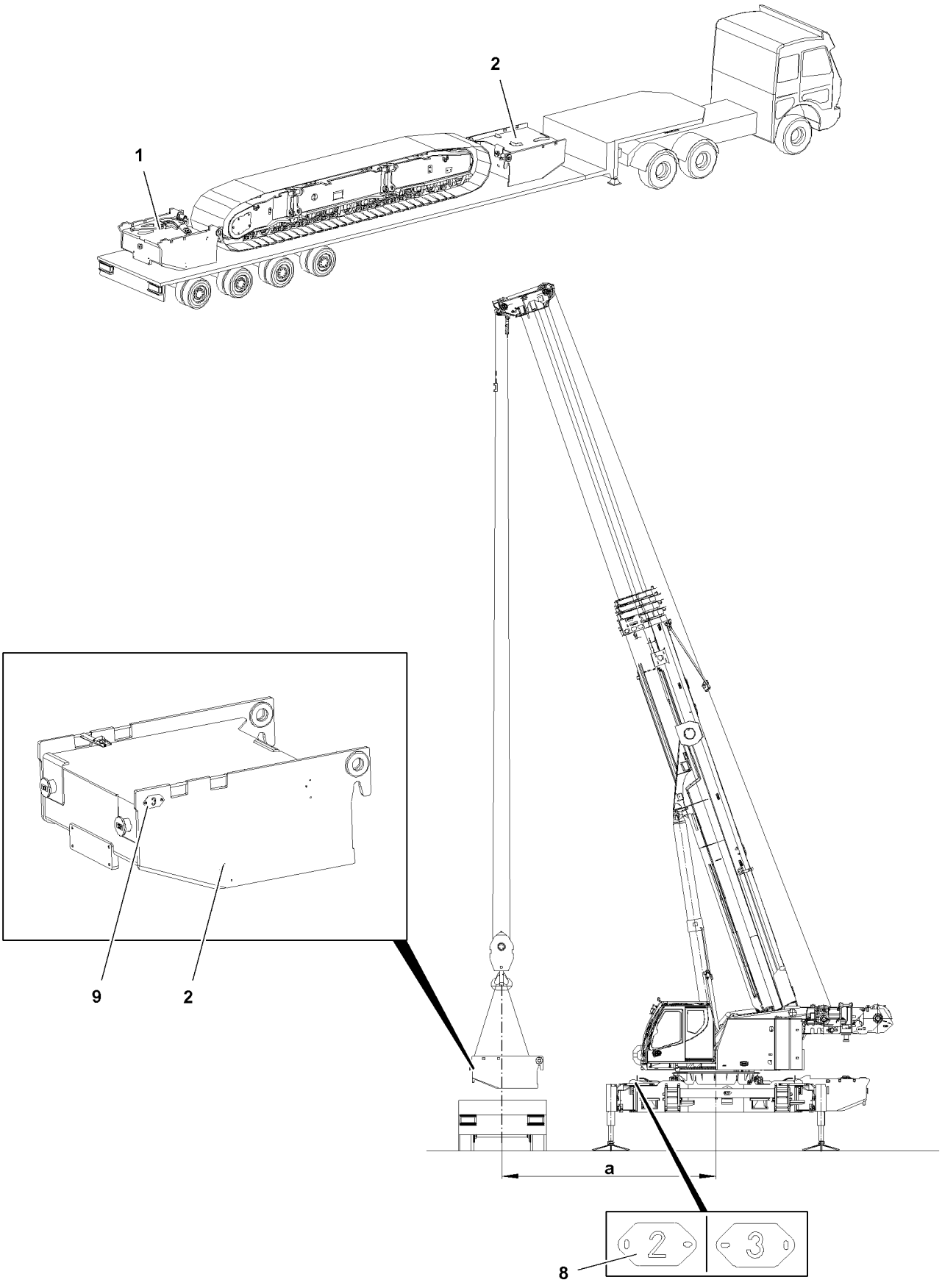

Fig.117544

LWE/ab Muli 010/24201-02-02/en

copyright © Liebherr-Werk Ehingen GmbH 2016

4.2 Removing the central ballast block on the front

Note

- „Front“ on the central ballast block and on the crawler center section is marked with the number **2** and number **3**.
- Positions of numbers, see tag **8** and tag **9**.

- Fasten the central ballast block **2**.
- Lift the central ballast block **2** until the fastening equipment is tensioned.

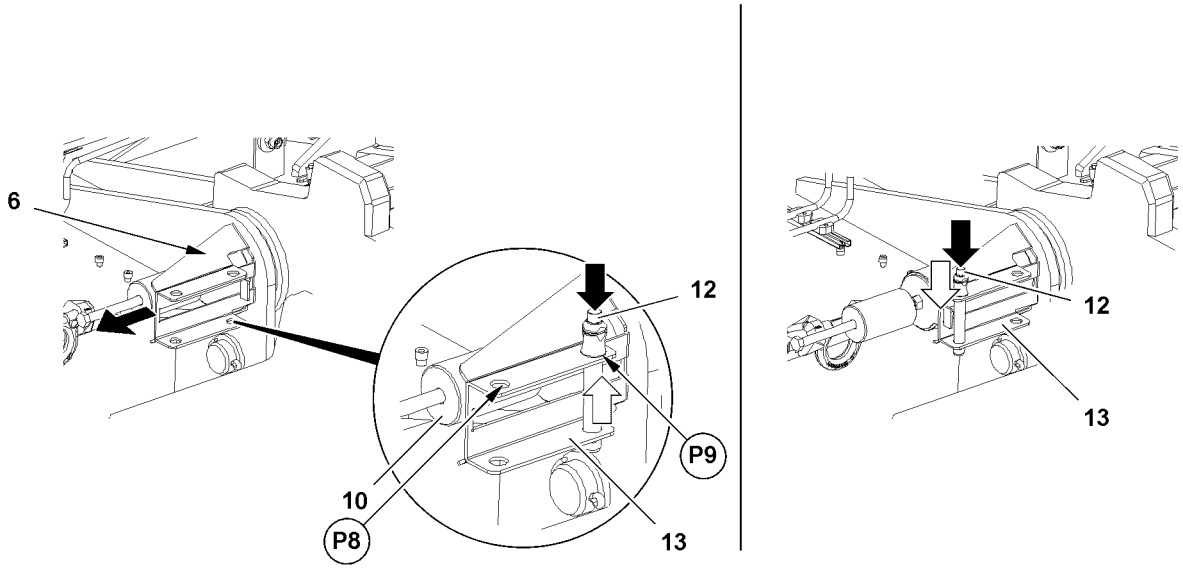

Fig.117549: Release, unpin and secure the pin.

- Release the pin **6**: Actuate the ball locking pin **12** and unpin on point **P9** from the retainer **13**.
- Unpin the pin **6**: Unpin the pin **6** with the mechanical pin pulling device **10**.
- Secure the pin **6**: Actuate the ball locking pin **12** and insert on point **P8** in the retainer **13**.

LWE/ab Muli 010/24201-02-02/en

copyright © Liebherr-Werk Ehingen GmbH 2016

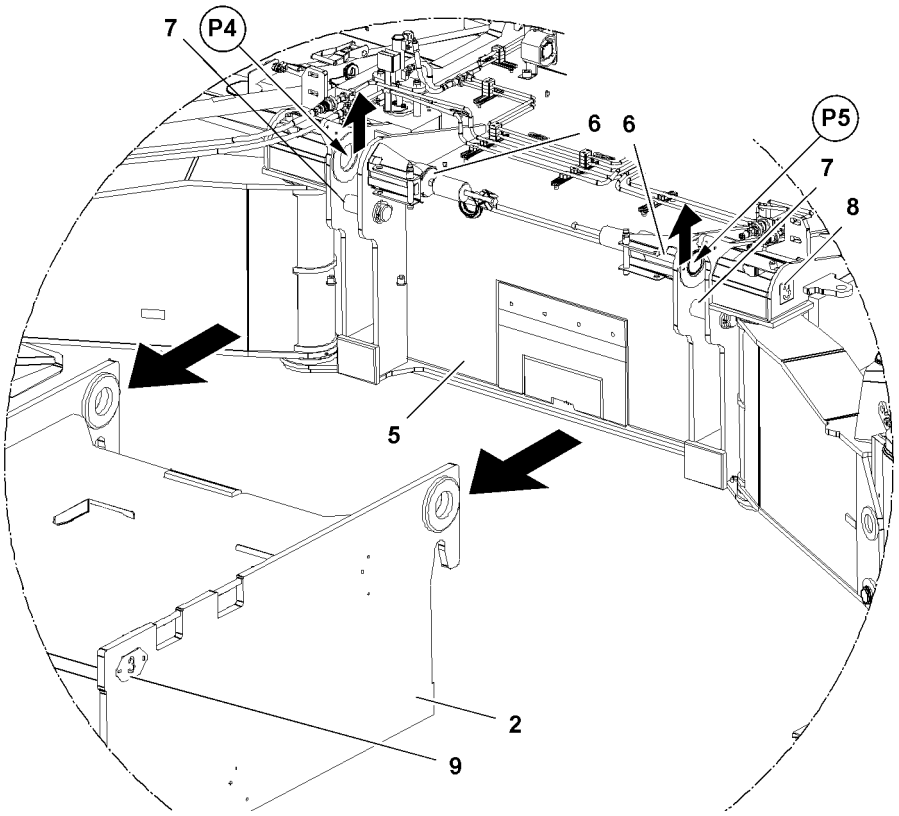

Fig.117822: Central ballast block, rear: Hook and unpin points

- ▶ Make sure that the pins **6** on point **P4** and on point **P5** are unpinned.
- ▶ Lift the central ballast block **2** until the central ballast block **2** is completely unhooked on pin **7**.
- ▶ Swing the central ballast block **2** out and place it on the transport vehicle.
- ▶ Remove the fastening equipment.

LWE/ab Muli 010/24201-02-02/en

copyright © Liebherr-Werk Ehingen GmbH 2016

Empty page!

LWE/ab Muli 010/24201-02-02/en

copyright © Liebherr-Werk Ehingen GmbH 2016

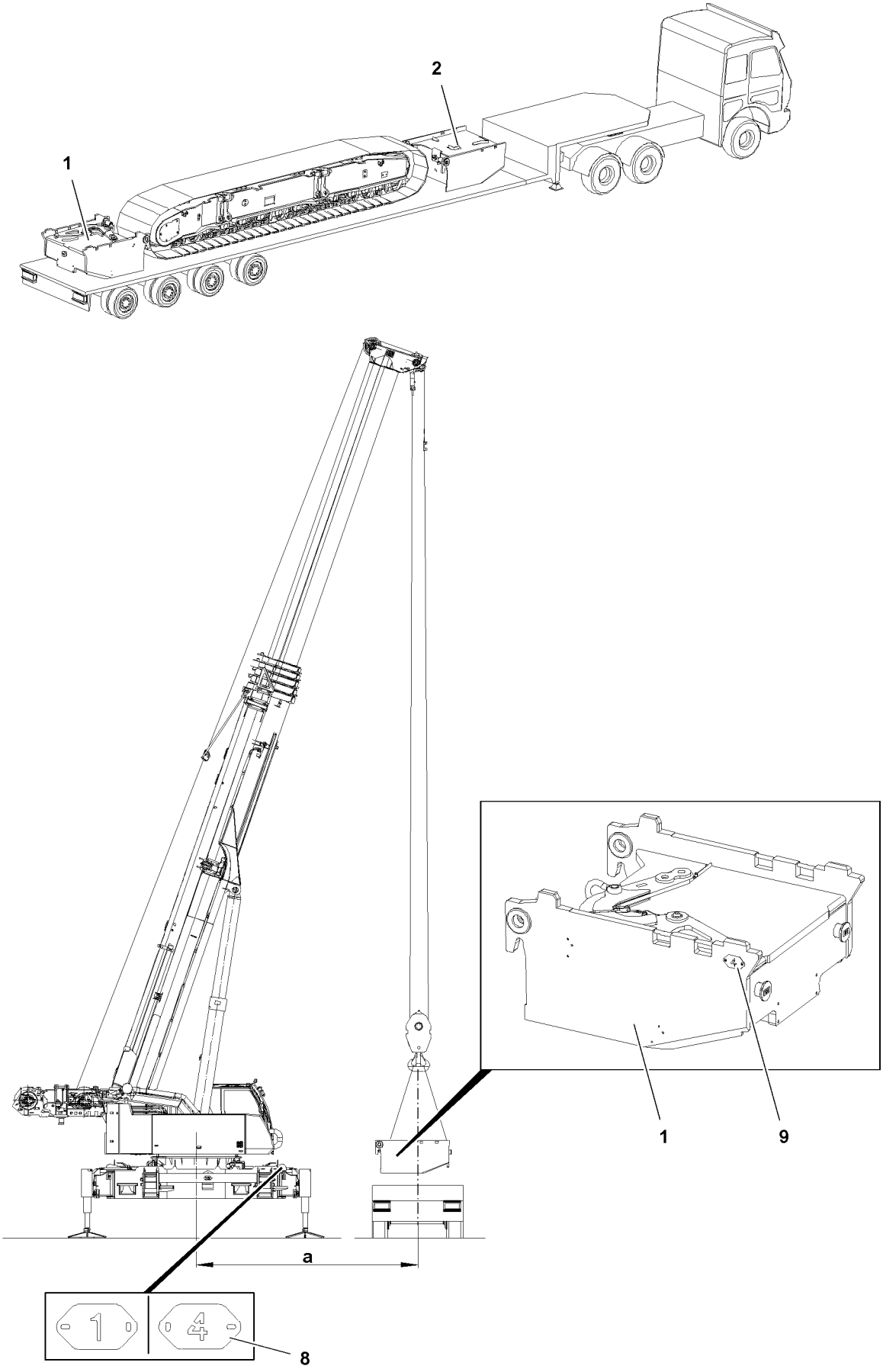

Fig.117541

LWE/ab Muli 010/24201-02-02/en

copyright © Liebherr-Werk Ehingen GmbH 2016

4.3 Removing the central ballast block on the rear

Note

- ▶ „Rear“ on the central ballast block and on the crawler center section is marked with the number **1** and number **4**.
- ▶ Positions of numbers, see tag **8** and tag **9**.

- ▶ Fasten the central ballast block **1**.
- ▶ Lift the central ballast block **1** until the fastening equipment is tensioned.

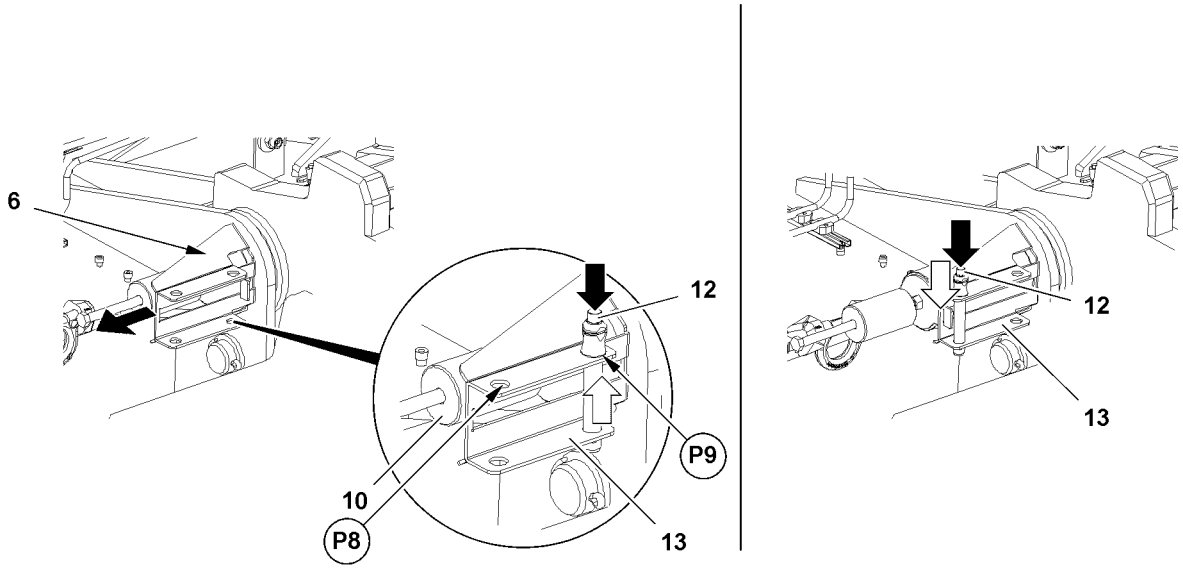

Fig.117549: Release, unpin and secure the pin.

- ▶ Release the pin **6**: Actuate the ball locking pin **12** and unpin on point **P9** from the retainer **13**.
- ▶ Unpin the pin **6**: Unpin the pin **6** with the mechanical pin pulling device **10**.
- ▶ Secure the pin **6**: Actuate the ball locking pin **12** and insert on point **P8** in the retainer **13**.
- ▶ Make sure that the pins on the pinning devices are unpinned.
- ▶ Unhook the central ballast block the same way on the crawler center section and described in section „Removing the central ballast block on the front“.
- ▶ Lift the central ballast block and unhook on the crawler center section.
- ▶ Swing the central ballast block out and place it on the transport vehicle.
- ▶ Remove the fastening equipment.

Result:

– The central ballast blocks are removed.

4.4 Loading the crane onto the transport vehicle

Note

- ▶ Load the crane on the transport vehicle, see Crane operating instructions, chapter 3.01.

copyright © Liebherr-Werk Ehingen GmbH 2016

Empty page!

copyright © Liebherr-Werk Ehingen GmbH 2016

3.80 Transport of crane and crane components

1	Transporting the crane	5
2	Securing the crane properly on the transport vehicle	9
3	Transporting the crane by rail	11

LWE/ab Muli 010/24201-02-02/en

copyright © Liebherr-Werk Ehingen GmbH 2016

LWE/ab Muli 010/24201-02-02/en

Fig.195219

copyright © Liebherr-Werk Ehingen GmbH 2016

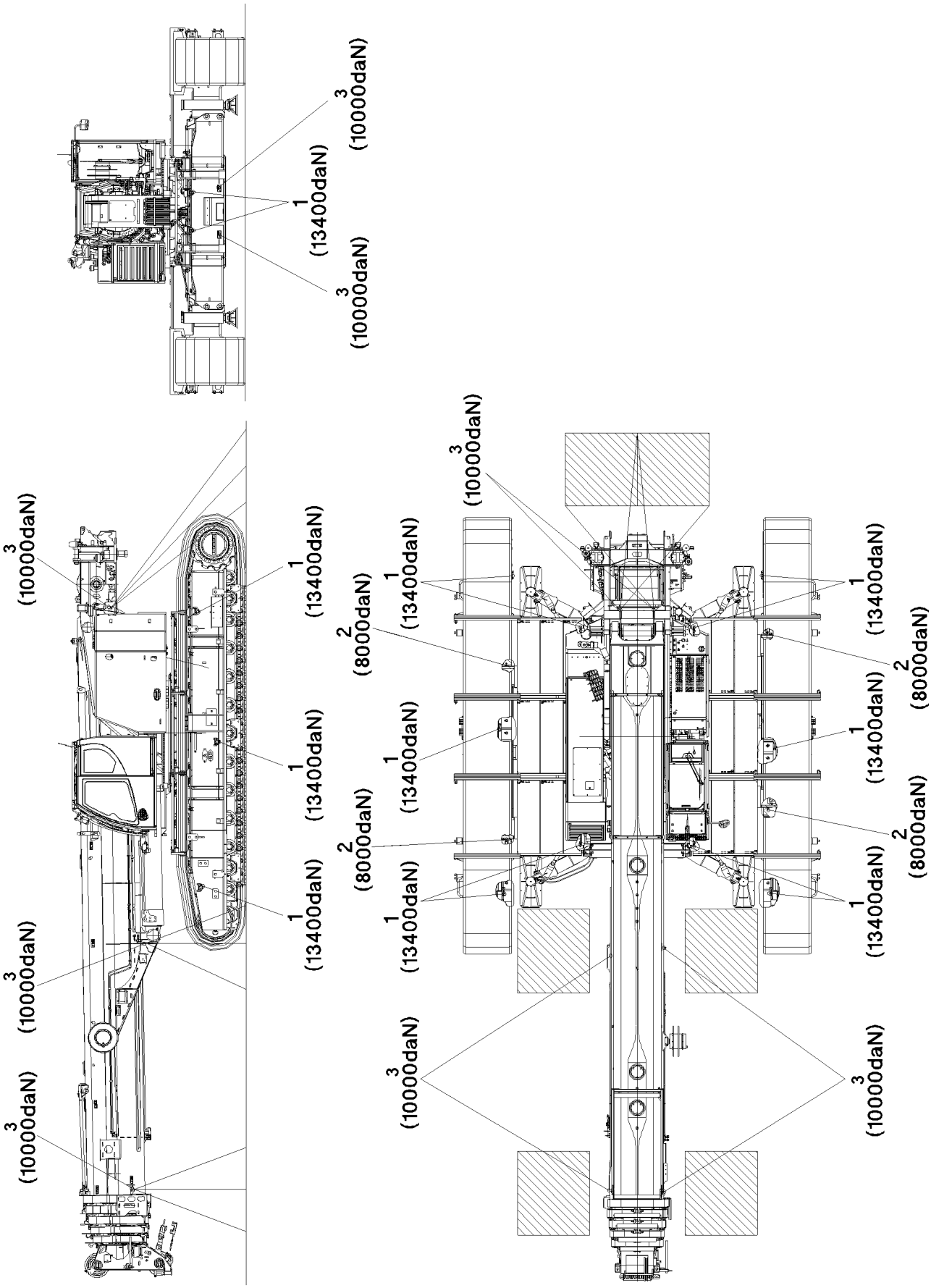

Fig.118513

copyright © Liebherr-Werk Ehingen GmbH 2016

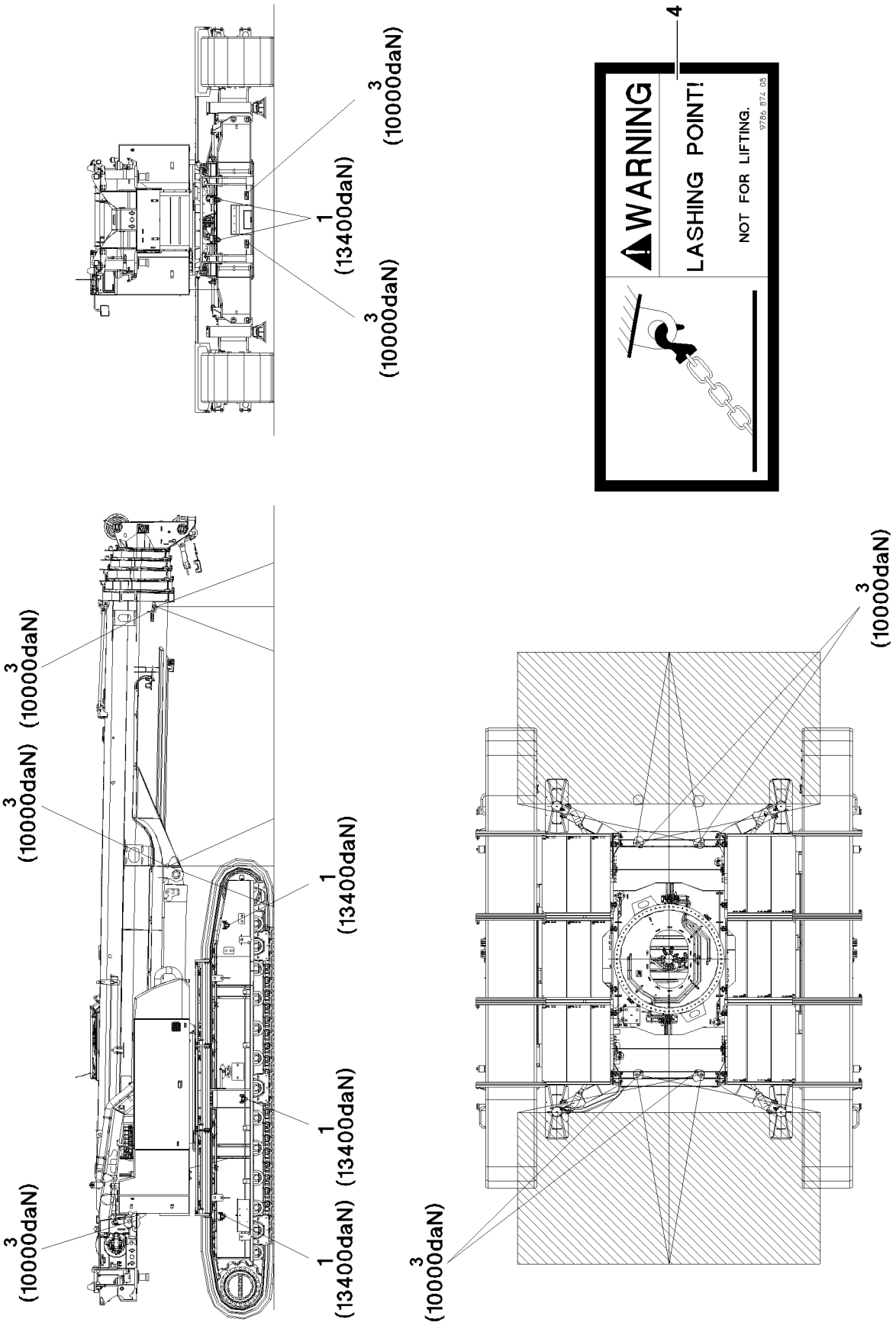

Fig.118514

LWE/ab Muli 010/24201-02-02/en

copyright © Liebherr-Werk Ehingen GmbH 2016

1 Transporting the crane

1.1 Checking the rigging points

Before every operation and at regular intervals, check the rigging points for cracks of the welding seam, significant corrosion, wear and distortion.

The inspection criteria are:
- Completeness of rigging point.
- Distortion of carrying parts.
- Mechanical damage such as severe nicks.
- Changes in diameter due to wear.
- Significant corrosion (pitting).
- Cracks on carrying parts.
- Cracks or other damage on the welding seam.

WARNING
Danger of accident!
When using rigging points which are not operationally safe, severe personnel damage and property damage can occur!
- ▶ Have rigging points which are not operationally safe replaced with new rigging points by authorized and trained expert personnel!
- ▶ When hooking and unhooking the rigging (such as rigging chain), handle carefully to avoid crushing, sheering, catch and impact points!
- ▶ Avoid damage on rigging equipment due to sharp-edged exposure!

1.2 Transporting the crane safely

Observe the following notes for safe crane transport:
- Use a suitable transport vehicle for the transport.
- Before transport, clean the tracks to obtain the best possible friction to the transport surface.
- When driving on the transport vehicle, check the easy movement of the crane with the aid of a guide to avoid hitting too hard.
- Make sure that the transport location is level and horizontal.
- Rig and secure the crane on the provided rigging eyehooks **1**, rigging eyehooks **2** and rigging points **3**.
- Close the crane cab and all cover doors.

NOTICE
Damage to crane!
The rigging eyehooks **1**, the rigging eyehooks **2** and the rigging points **3** may only be used to rig the crane. The rigging eyehooks **1**, the rigging eyehooks **2** and the rigging points **3** may not be used to lift the crane and to lift loads.
- ▶ Use the rigging eyehooks **1**, the rigging eyehooks **2** and the rigging points **3** only to rig the crane.

- Secure the crane on the rigging eyehooks **1** (13400 daN maximum nominal load) according to the illustration, permissible load and valid regulations for loading and load retention.
  Use suitable rigging with sufficient capacity.
- Secure the crane on the rigging eyehooks **2** (8000 daN maximum nominal load) according to the illustration, permissible load and valid regulations for loading and load retention.
  Use suitable rigging with sufficient capacity.
- Secure the telescopic boom on the marked rigging points **3** (10000 daN maximum nominal load) by taking the specified rigging area according to the illustration, permissible load and valid regulations for loading and load retention into account.

Permissible tension surface on the ground for the rigging points **3**.

LWE/ab Muli 010/24201-02-02/en

copyright © Liebherr-Werk Ehingen GmbH 2016

– Use suitable rigging with sufficient capacity.

1.3 Securing the crane

DANGER
The crane can topple over!
If the crane is not properly secured on the transport location, then the crane can topple over uncontrolled!
Personnel can be killed or injured!

- ▶ Secure the crane to prevent it from toppling!
- ▶ Use tension belts or tension chains according to the illustration, permissible load and the valid regulations for loading and load retention.
- ▶ Attach tension belts or tension chains on the rigging eyehooks **1** and rigging points **3** according to the illustration!
- ▶ Observe angles, radii and tension surfaces according to the illustration!

The rigging points **3** are marked with the sign **4**.

- ▶ Secure the crane with tension belts or tension chains on the rigging eyehooks **1** and rigging eyehooks **2**.
- ▶ Secure the telescopic boom with tension belts or tension chains by observing the marked tension area on the rigging points **3**.
- ▶ Attach the tension belts or tension chains on the transport vehicle.

LWE/ab Muli 010/24201-02-02/en

copyright © Liebherr-Werk Ehingen GmbH 2016

Empty page!

LWE/ab Muli 010/24201-02-02/en

copyright © Liebherr-Werk Ehingen GmbH 2016

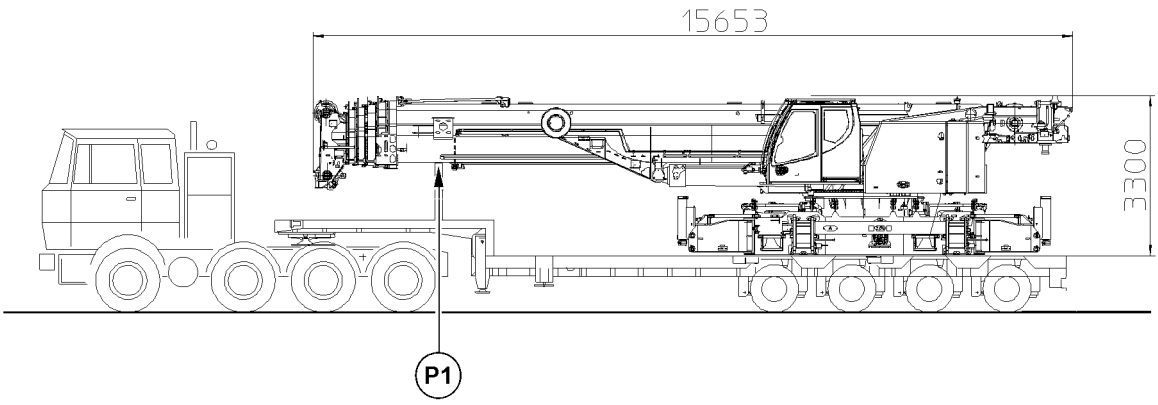

LWE/ab Muli 010/24201-02-02/en

Fig.118515

copyright © Liebherr-Werk Ehingen GmbH 2016

2 Securing the crane properly on the transport vehicle

2.1 Weight of crane

The crane consists for transport of the following components:

– Crane with cross carriers and hydraulic support

Component	Weight
Crane with cross carriers and hydraulic support	55.4 t
Total weight	**55.4 t**

2.2 Rigging and securing the crane

Make sure that the following prerequisites are met:
– The counterweight has been removed.
– The crawler carriers are removed.
– The central ballast has been removed.
– The hoist gear II has been removed.
– The folding jib has been removed.
– The hook block has been removed.
– The support plates are removed.
– The crane superstructure is locked with the crane chassis.
– The telescopic boom is luffed down and has been set down on the support.
– The crane is on the transport vehicle.

WARNING
The counterweight can fall down!
If the counterweight remains installed on the turntable while transporting the crane, the counterweight receptacles can fail and the counterweight can fall down!
Personnel can be killed!
Significant property damage can result!
▶ Transporting the crane with an installed counterweight is prohibited!
▶ Only transport crane with disassembled counterweight!

WARNING
The crane can topple over!
The telescopic boom must be supported on the transport vehicle to ensure the stability of the crane.
▶ Support the telescopic boom properly on point **P1**.

WARNING
Falling crane if insufficiently secured!
▶ The crane must be rigged and secured sufficiently to survive a strong braking maneuver!

▶ Properly rig and secure the crane on the transport vehicle.

LWE/ab Muli 010/24201-02-02/en

copyright © Liebherr-Werk Ehingen GmbH 2016

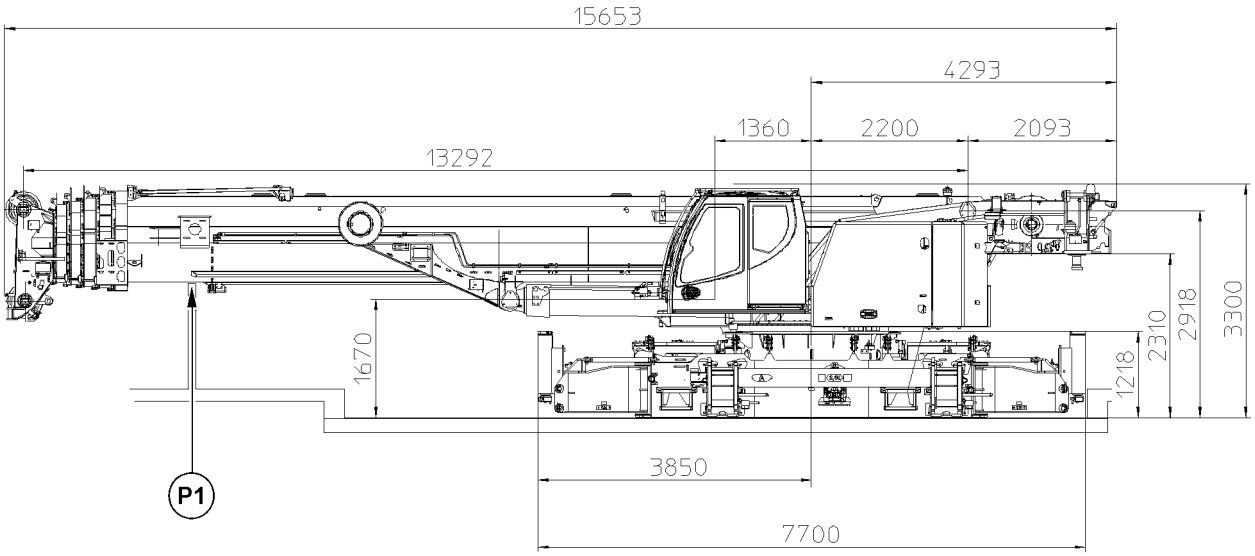

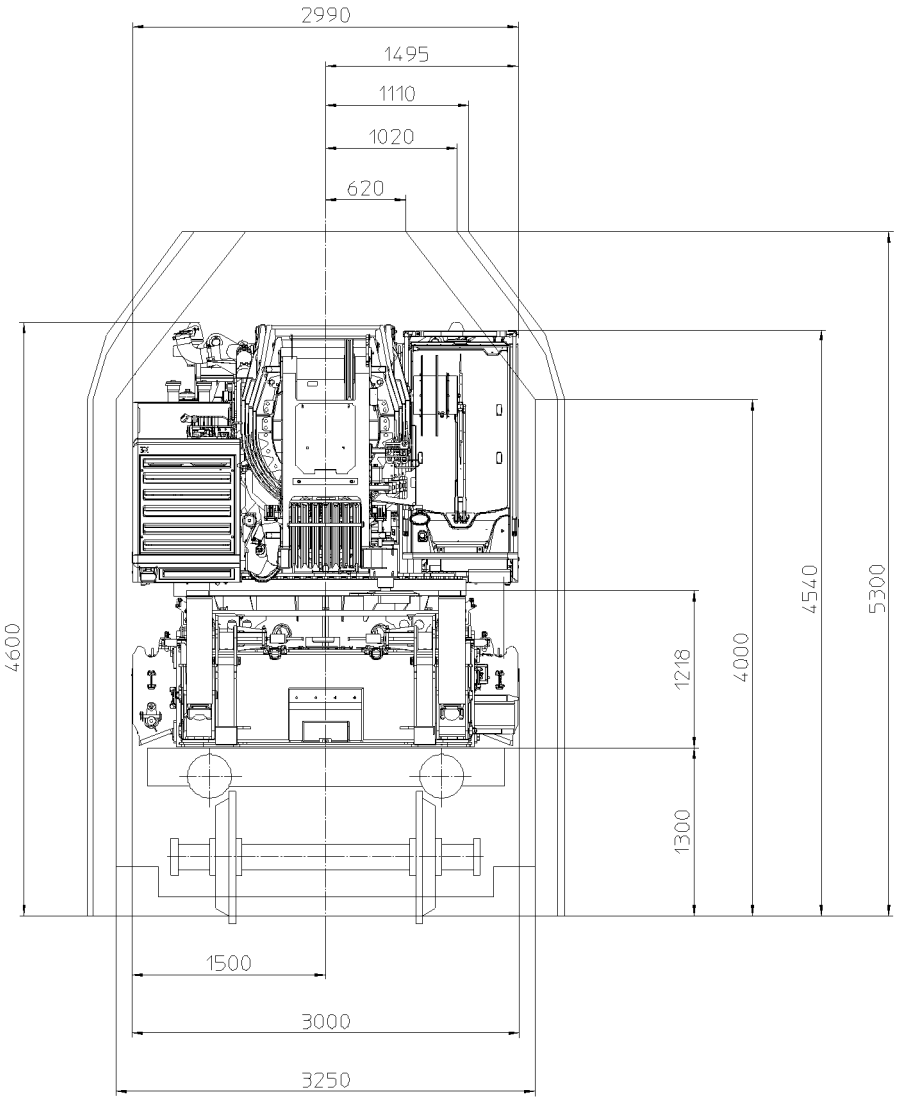

LWE/ab Muli 010/24201-02-02/en

Fig.118516

copyright © Liebherr-Werk Ehingen GmbH 2016

3 Transporting the crane by rail

3.1 Transport condition

WARNING
Damage of crane due to collision!
If the crane is transported by rail, then the crane dimensions must be observed.
▶ Check the loading dimensions.
▶ Observe and adhere national permissible transport heights.

WARNING
The counterweight can fall down!
If the counterweight remains installed on the turntable while transporting the crane, the counterweight receptacles can fail and the counterweight can fall down.
Personnel can be killed.
Significant property damage can result.
▶ Transporting the crane with an installed counterweight is prohibited.
▶ Transport crane only when the counterweight is removed.

The crane consists for transport of the following components:

– Crane with cross carriers and hydraulic support

Component	Weight
Crane with cross carriers and hydraulic support	55.4 t
Total weight	**55.4 t**

LWE/ab Muli 010/24201-02-02/en

copyright © Liebherr-Werk Ehingen GmbH 2016

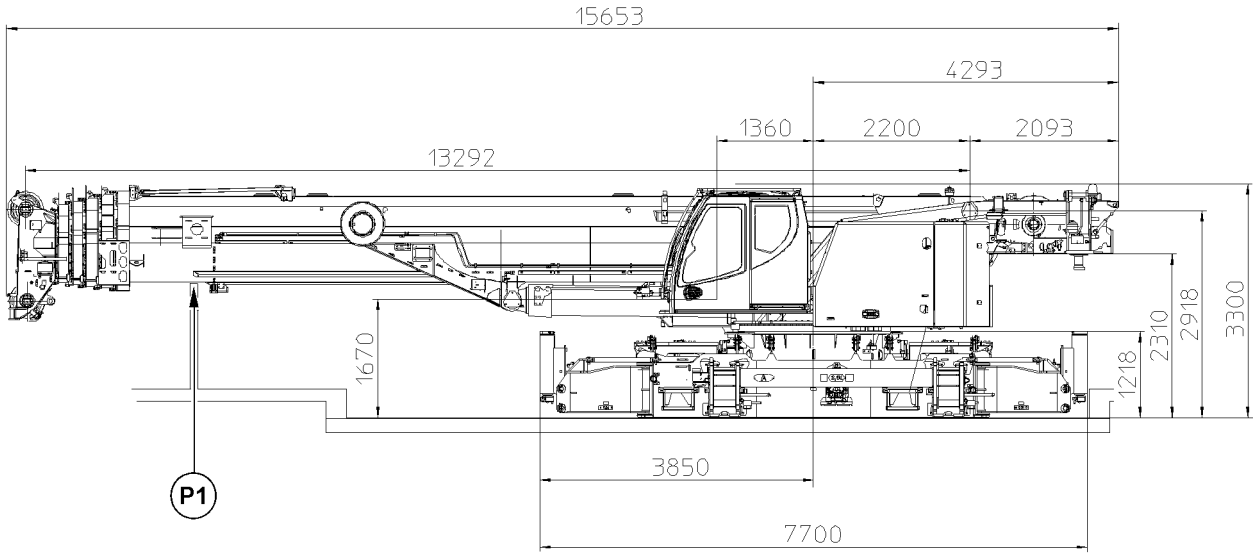

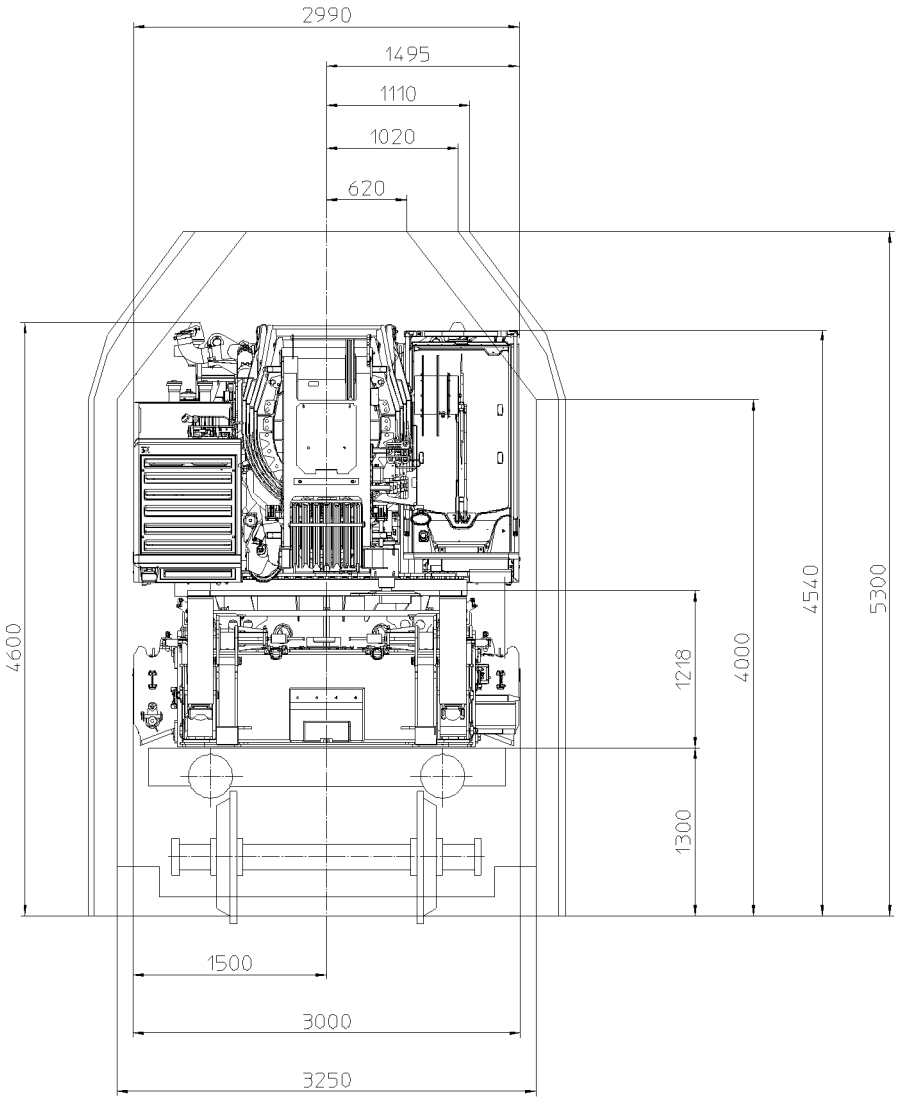

LWE/ab Muli 010/24201-02-02/en

Fig.118516

copyright © Liebherr-Werk Ehingen GmbH 2016

3.2 Rigging and securing the crane

Make sure that the following prerequisites are met:
- The counterweight has been removed.
- The crawler carriers are removed.
- The central ballast has been removed.
- The hoist gear II has been removed.
- The folding jib has been removed.
- The hook block has been removed.
- The support plates are removed.
- The crane superstructure is locked with the crane chassis.
- The telescopic boom is luffed down and has been set down on the support.
- The crane is on the transport vehicle.

WARNING
The crane can topple over!
The telescopic boom must be supported on the transport vehicle to ensure the stability of the crane.
▶ Support the telescopic boom properly on point **P1**.

WARNING
Falling crane if insufficiently secured!
▶ The crane must be rigged and secured sufficiently to survive a strong braking maneuver!

▶ Properly rig and secure the crane on the transport vehicle.

LWE/ab Muli 010/24201-02-02/en

copyright © Liebherr-Werk Ehingen GmbH 2016

Empty page!

copyright © Liebherr-Werk Ehingen GmbH 2016

4 Operation of crane superstructure

LWE/ab Muli 010/24201-02-02/en

copyright © Liebherr-Werk Ehingen GmbH 2016

copyright © Liebherr-Werk Ehingen GmbH 2016

4.01 Operating and control instruments on the crane superstructure

1	Operating and control instruments	3
2	Operating elements - instrument panel - roof	8
3	Operating elements on control consoles	11
4	Operating elements on the operating and control unit (BKE)	45

LWE/ab Muli 010/24201-02-02/en

copyright © Liebherr-Werk Ehingen GmbH 2016

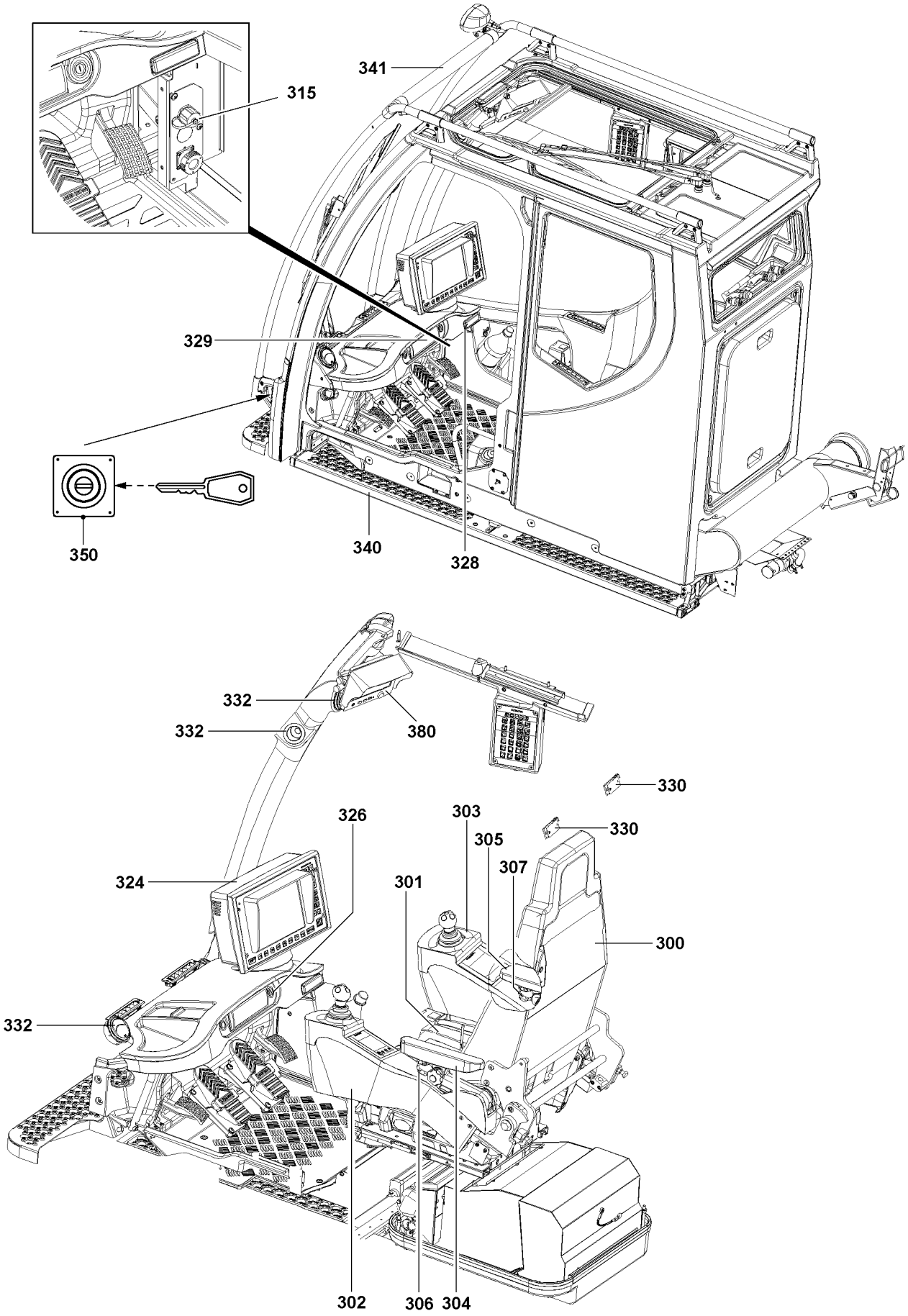

Fig.123704

LWE/ab Muli 010/24201-02-02/en

copyright © Liebherr-Werk Ehingen GmbH 2016

1 Operating and control instruments

1.1 Operating elements on control platform

300 Crane operator's seat

301 Seat contact button

302 Left console
- Master switch 2 (MS2)
- Touch display

303 Right console
- Master switch 1 (MS1)
- Touch display

304 Left armrest

305 Right armrest

306 Left notch lever

307 Right notch lever

1.1.1 Operating elements for seat adjustment

Note

▶ For a detailed description of the seat adjustment controls, see Crane operator's instructions, chapter 4.03.

LWE/ab Muli 010/24201-02-02/en

copyright © Liebherr-Werk Ehingen GmbH 2016

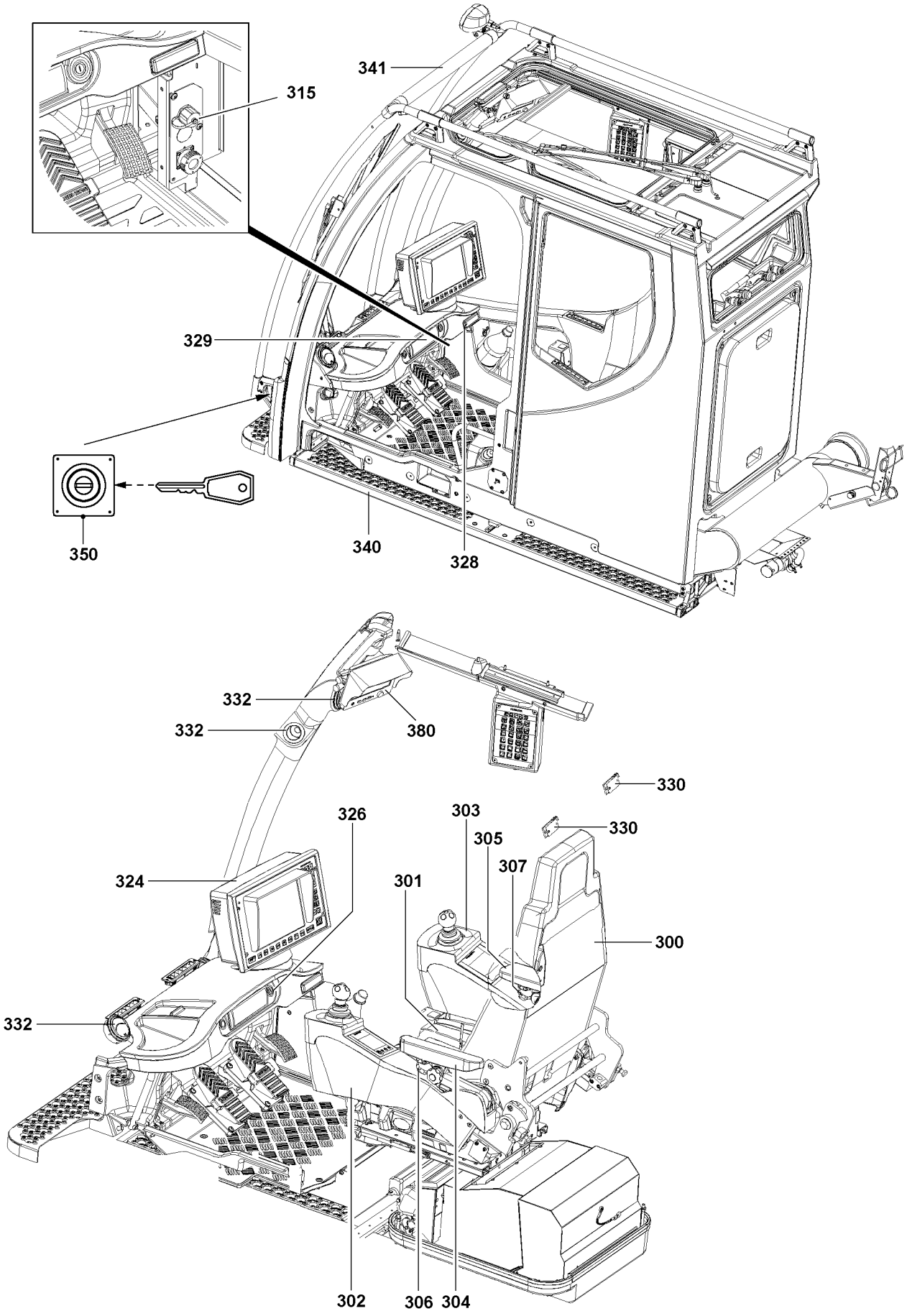

Fig.123704

LWE/ab Muli 010/24201-02-02/en

copyright © Liebherr-Werk Ehingen GmbH 2016

1.2 Operating elements, General

324 LICCON monitor
- Display of crane data required for **Crane operation**, see Crane operating instructions, chapter 4.02

380 TFT monitor
- Camera monitoring

326 Ignition switch

Position:
- 0 = Ignition key can be pulled off
- 1 = Ignition on
- 2 = Start the engine

315 Ethernet interface

327 Cigarette lighter

328 Drink holder

329 Radio

330 LED interior lights
- Located above the crane operator's seat
- Dimmable

332 Outlet nozzles
- For heat / ventilation / Climate control system*****

333 Reservoir
- Window washer fluid

340 Step
- **Note:**
  Refer to section „Operating elements on the operating and control unit (BKE)“.

341 Warning light rod
- LICCON utilization display:
  - Green:
    „**Safe range**“
  - Yellow:
    Above a utilization of 90 %, the **„Safe range“** is exceeded.
  - Red:
    Above a utilization of 100 %, the **„DANGER ZONE“** is reached!
    Note:
    Once 100 % utilization is reached, the red warning light lights up and an **„LMB-Stop“** occurs.

350 EMERGENCY STOP switch
- Crane operator's cab (external)

LWE/ab Muli 010/24201-02-02/en

copyright © Liebherr-Werk Ehingen GmbH 2016

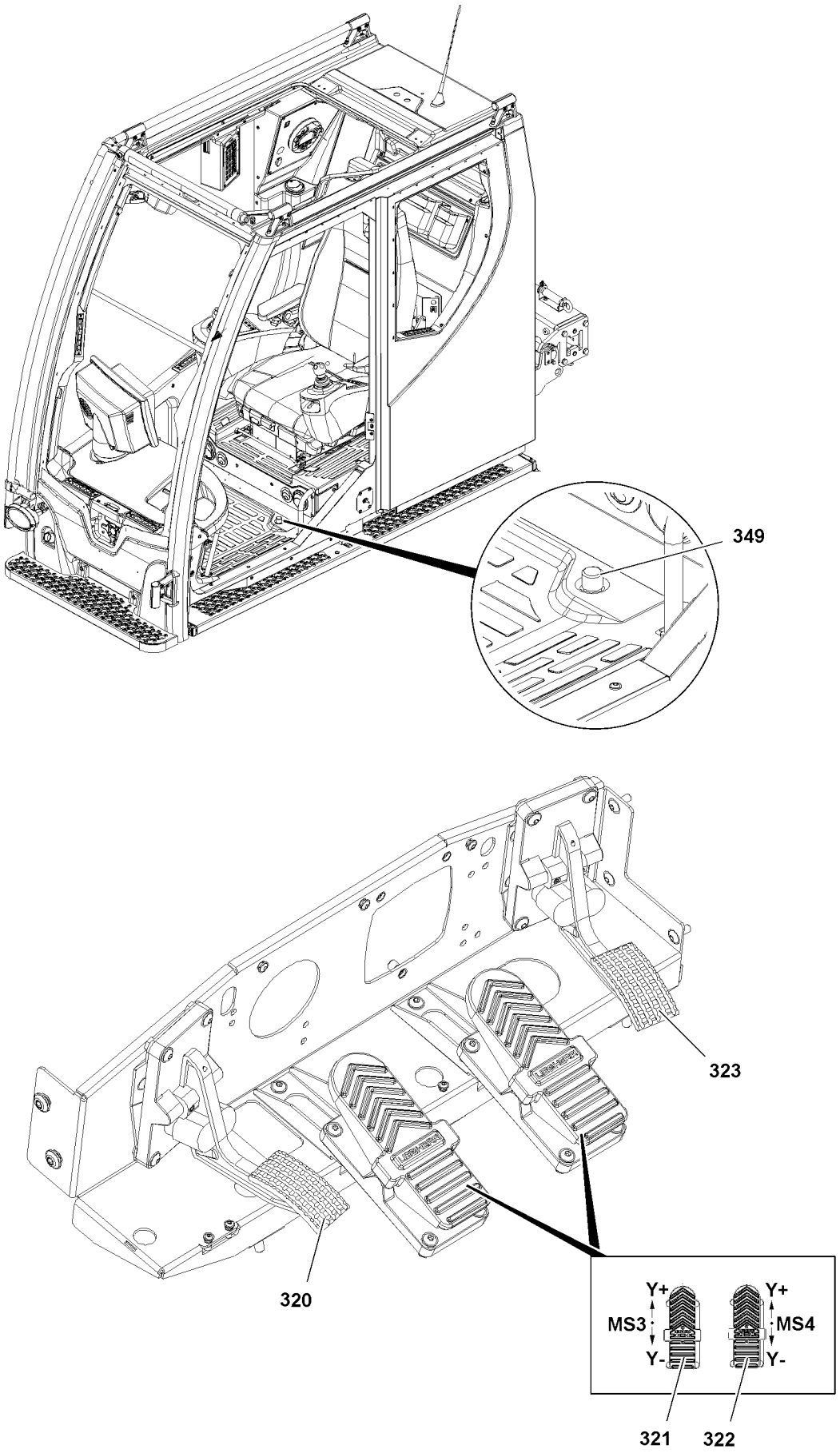

Fig.117626

LWE/ab Muli 010/24201-02-02/en

copyright © Liebherr-Werk Ehingen GmbH 2016

1.3 Operating elements pedals

320 Pedal
- Slewing gear brake

321 Foot rocker left (MS 3)

Drive left track:
Move the foot rocker **321** in direction Y+ (forward): The left track drives forward.
Move the foot rocker **321** in direction Y- (backward): The left track drives backward.

Telescoping*:
Move the foot rocker **321** in direction Y+ (forward): The telescopic boom is telescoped out.
Move the foot rocker **321** in direction Y- (backward): The telescopic boom is telescoped in.

322 Foot rocker right (MS 4)

Drive right track:
Move the foot rocker **322** in direction Y+ (forward): The right track drives forward.
Move the foot rocker **322** in direction Y- (backward): The right track drives backward.

323 Pedal
- Engine regulation

349 Foot button
- Slewing gear change over to freewheeling

1.4 Operating elements LMB emergency operation

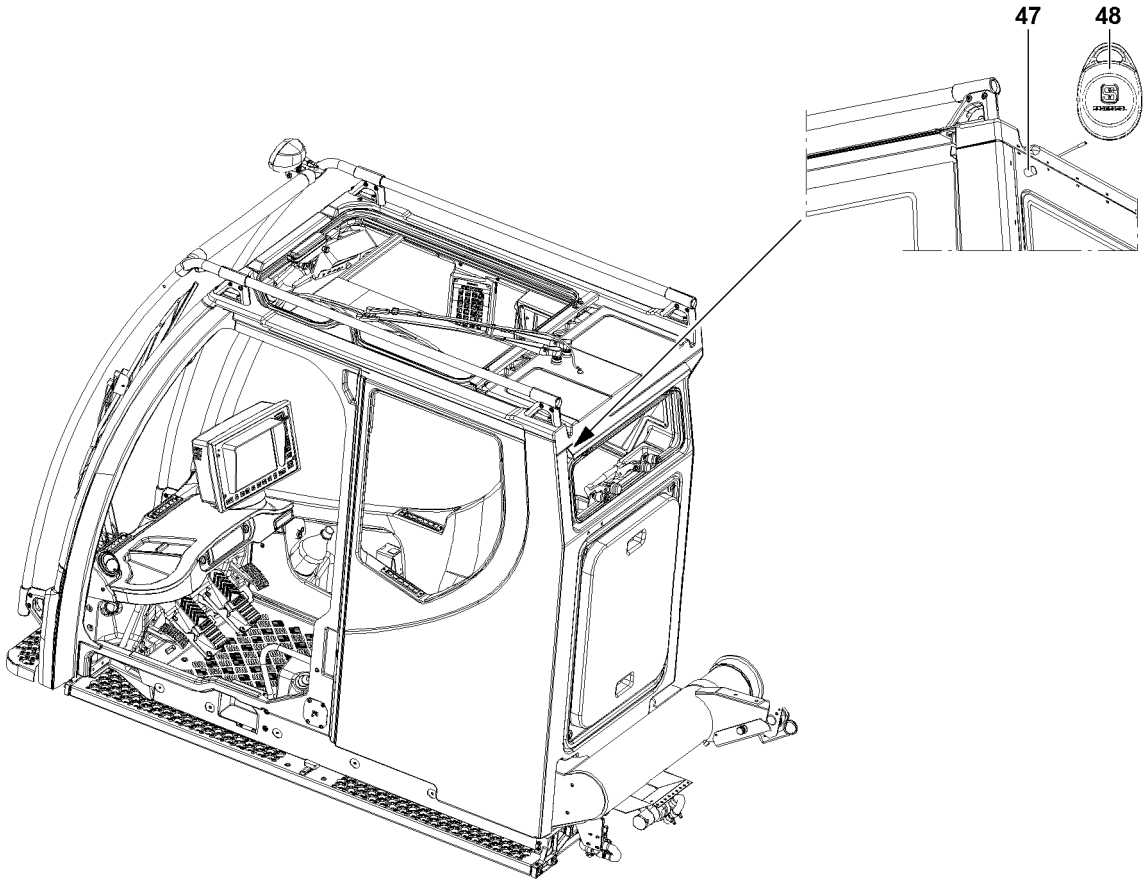

Fig.123716: Operating elements LMB emergency operation

LWE/ab Muli 010/24201-02-02/en

copyright © Liebherr-Werk Ehingen GmbH 2016

WARNING
Increased danger of accident during emergency operation of the LICCON overload protection!
In emergency operation, the crane movements are no longer monitored by the LICCON overload protection!

- ▶ If emergency operation of the LICCON overload protection is required, observe Crane operating instructions, chapter 7.15!
- ▶ The emergency operation may only be activated by persons who are aware of the consequences of their actions!
- ▶ A shut off by the LICCON overload protection may not be circumvented by the emergency operation!
- ▶ If normal „crane operation“ is possible, then the emergency operation may not be activated!
- ▶ All crane movements must be carried out with extreme caution and anticipatorily!

1.4.1 LMB emergency operation for crane control „EN 13000:2010 active“

Applies only apply for cranes with crane control „EN 13000:2010 active“.

The emergency operation for the LICCON overload protection is activated by the sensor **47** via the transponder **48**.

47 Sensor
48 Transponder

2 Operating elements - instrument panel - roof

2.1 Operating elements, General

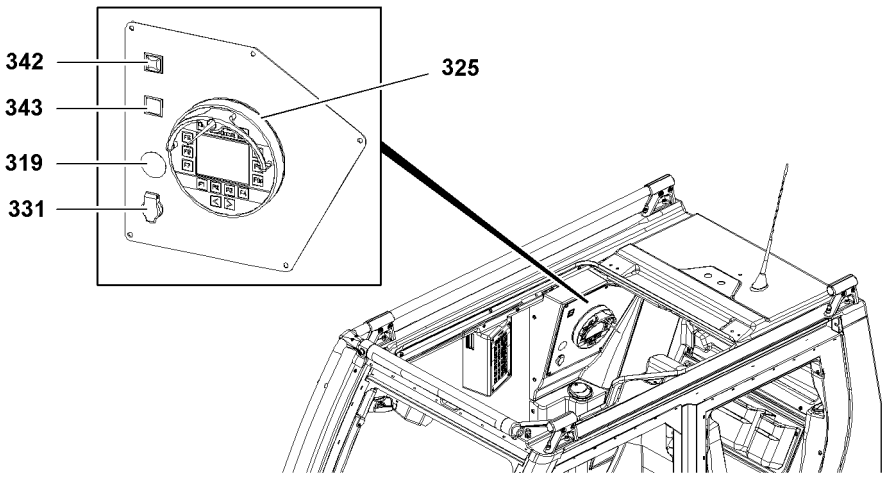

Fig.123713: Instrument panel Roof

319 Integrated socket 12 V
331 Integrated socket 24 V
325 Charging cradle
Bluetooth™ Terminal (BTT)
Note:
For a detailed description of the „Bluetooth™ Terminal“, see Crane operating instructions, chapter 5.31.

LWE/ab Muli 010/24201-02-02/en

copyright © Liebherr-Werk Ehingen GmbH 2016

2.2 Control elements

Position	Indicator light	LED condition	Description
342	Request engine stop	Red blinking	Remedy the problem.

2.3 Operating elements

Position	Button	Function	LED	Description
343	Changeover Camera	–	Lights up	Change over by pressing the button.

LWE/ab Muli 010/24201-02-02/en

copyright © Liebherr-Werk Ehingen GmbH 2016

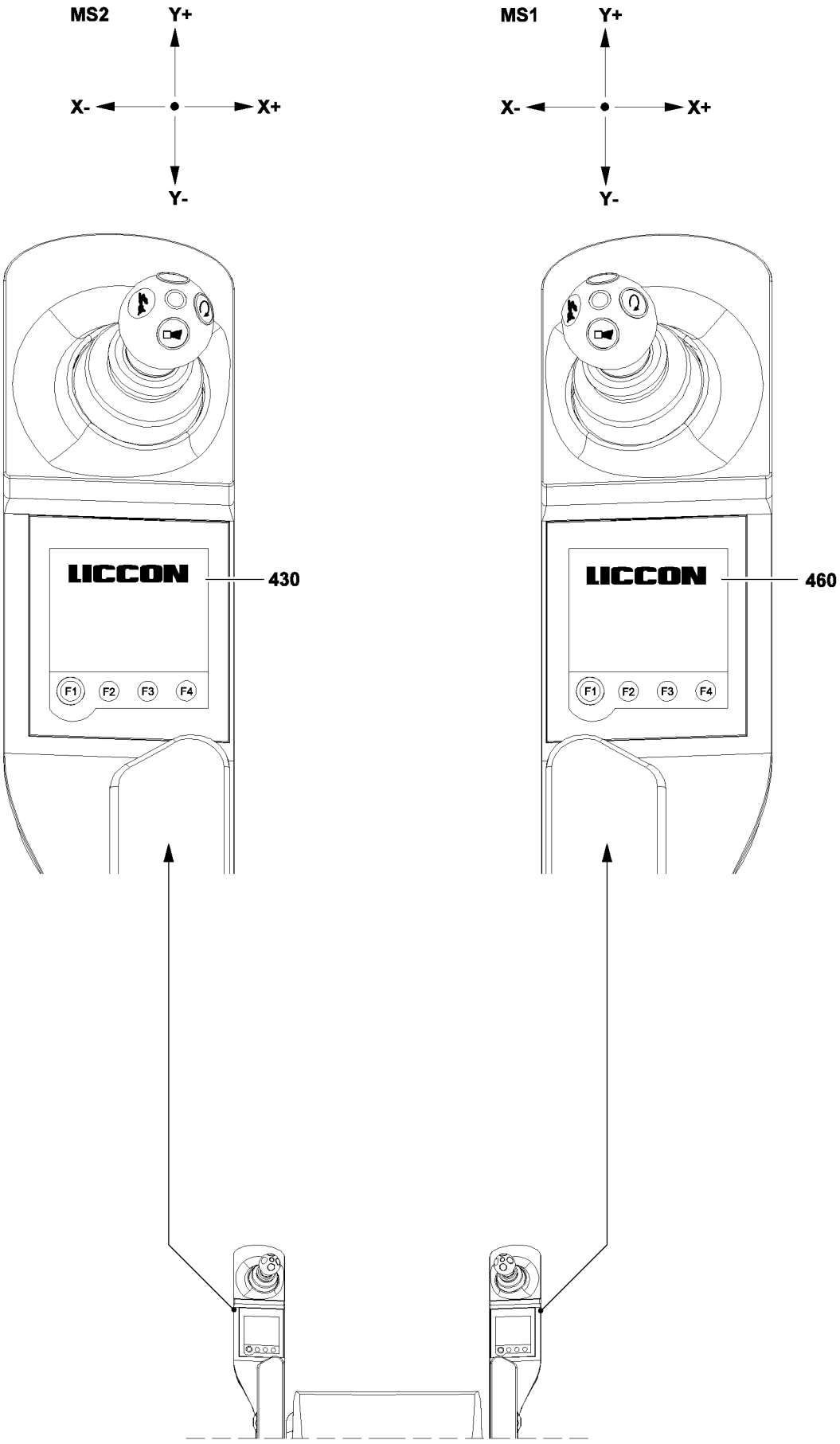

Fig.105575

LWE/ab Muli 010/24201-02-02/en

copyright © Liebherr-Werk Ehingen GmbH 2016

3 Operating elements on control consoles

3.1 The Touch displays

The touch displays are combined display and operating elements. The touch displays are operated using the row of function keys „F1“ to „F4“ and by direct „touch“ (fingertip) on the corresponding display icons.

Note

- ▶ The illustrations or icons in the touch displays are only examples.
- ▶ They may differ from the crane!
- ▶ If the function key **F1** is continuously pressed, the system shifts continuously between the existing menu points.

Via the left touch display **430** and the right touch display **460**, you can call up various menus. Various crane functions can be selected or preselected, turned on or off, or directly activated in these menus.

Note

- ▶ In low temperatures it is possible that the touch displays initially change to the menu items delayed and that the touch functions remain deactivated for that time.
- ▶ Wait a few minutes after ignition „ON“ until the menu items are shown on the touch display.

F Function keys
- The function of individual function keys depends on the menu and can vary, depending on the menu selected. Therefore the individual menus will now be described in more detail. The icons on the touch display above the row of function keys with a single border indicate the functions that will be triggered by activating the function keys below them.

460 Right touch display
- Menu „Master switch configuration“
- Menu „Support“
- Menu „Track width adjustment“

430 Left touch display
- Menu „Master switch configuration“
- Menu „Working floodlight“
- Menu „Climate control settings“
- Menu „Hydraulic oil preheating / telescopic boom disassembly“

LWE/ab Muli 010/24201-02-02/en

copyright © Liebherr-Werk Ehingen GmbH 2016

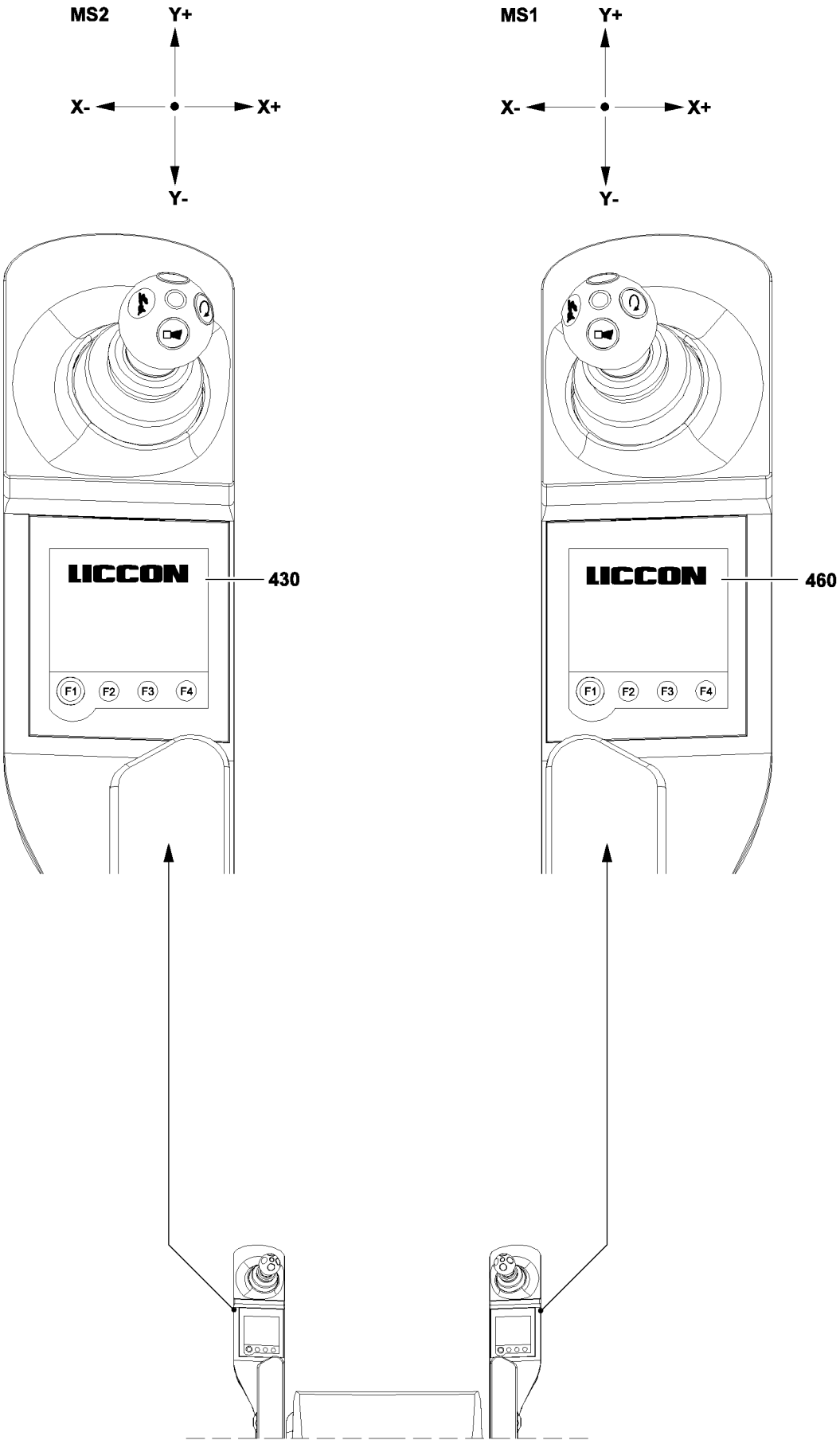

Fig.105575

LWE/ab Muli 010/24201-02-02/en

copyright © Liebherr-Werk Ehingen GmbH 2016

Touch functions

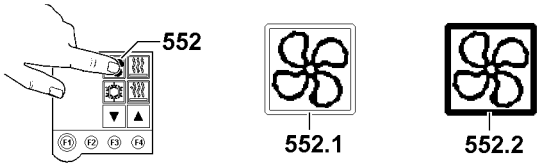

Fig.114231

Note
Select / deselect icons in the touch display.
Touch functions are identified by the double border (empty frame) of the touch display icons. The function in the icon is selected / deselected with the press of a finger („touch)“ on the icon.
Example on „Fan / blower“ icon **552**:

- ▶ „Fan / blower“ icon **552.1**: Fan / blower deselected (not active), double border (empty frame) is visible.
- ▶ „Fan / blower“ icon **552.2**: Fan / blower selected (active), double border is filled (frame filled).

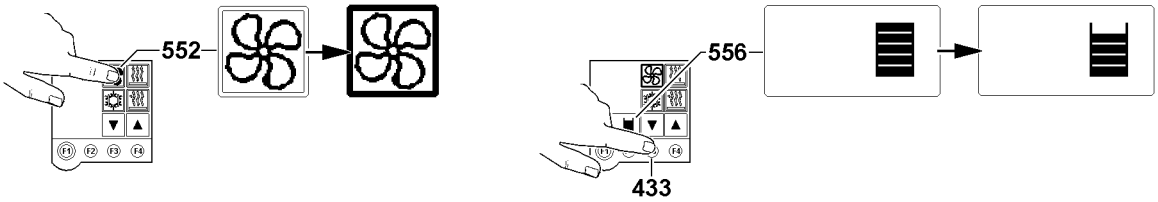

Fig.114230

Note
Actuate the function via the touch display.
As an example, the blower stage of the heater is reduced:

- ▶ Select the „Fan / blower“ icon **552** in the touch display by „touching“: The double frame area is filled out, the function „Fan / blower“ is now active.
- ▶ Press function key F3 **433**: The blower stage is reduced, the status display **556** is updated accordingly.

3.1.1 Starting up the LICCON Computer system and the touch displays

After turn on and correct boot up of the LICCON computer system, a static crane screen appears briefly on the left touch display **430** and the right touch display **460**. From here the system automatically switches to the master switch assignment for the relevant master switch, MS1 (right) or MS2 (left).

The touch display always displays the master switch assignment that was set or „active“ before the LICCON computer system was turned off.

copyright © Liebherr-Werk Ehingen GmbH 2016

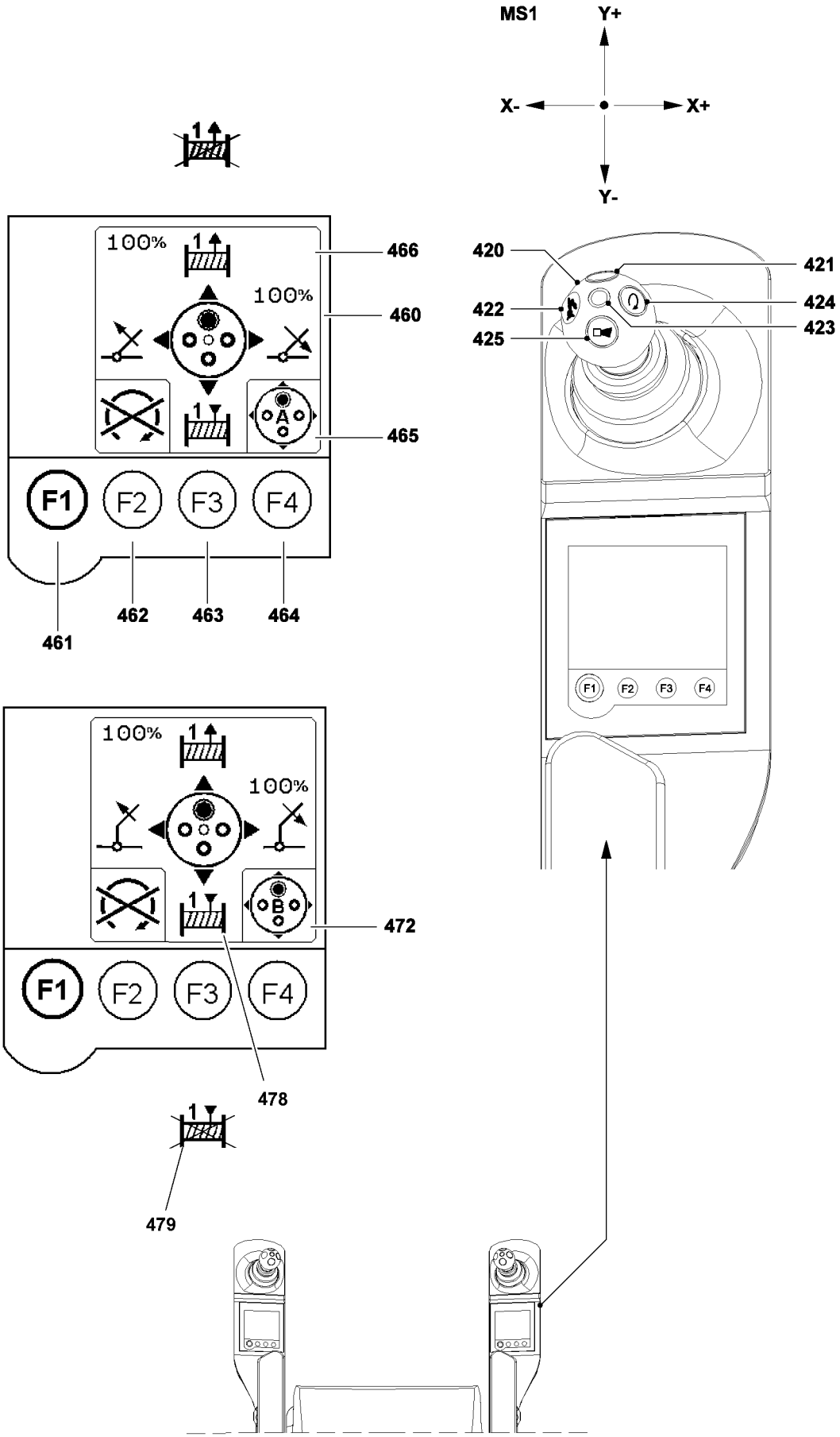

Fig.123705

LWE/ab Muli 010/24201-02-02/en

copyright © Liebherr-Werk Ehingen GmbH 2016

3.2 Master switch assignment for machines with one winch

3.2.1 The „Master switch configuration“ menu (right touch display)

The function key line

461 Function key F1
- Change to next menu

462 Function key F2
- Engine STOP

463 Function key F3
- Winch changeover - Winch 1
  Activate / deactivate the winch
  Conditions:
  Neutral position master switch 1 **420** (MS1) right.
  Danger of accident!
  Never activate / deactivate winch 1 while a crane movement is being actuated.
  The winch status (winch activated / deactivated) can be seen on the touch display:
  - **478** Winch 1 released
  - **479** Winch 1 blocked

464 Function key F4
- Change master switch assignment from „A“ to „B“
  Conditions:
  Neutral position master switch 1 **420** (MS1) right.
  An operating mode or configuration with auxiliary boom must be selected and displayed on the LICCON computer system.
  Note
  If no configuration with auxiliary boom has been set and confirmed, the „luffing auxiliary boom“ master switch assignment is **not** available.

LWE/ab Muli 010/24201-02-02/en

copyright © Liebherr-Werk Ehingen GmbH 2016

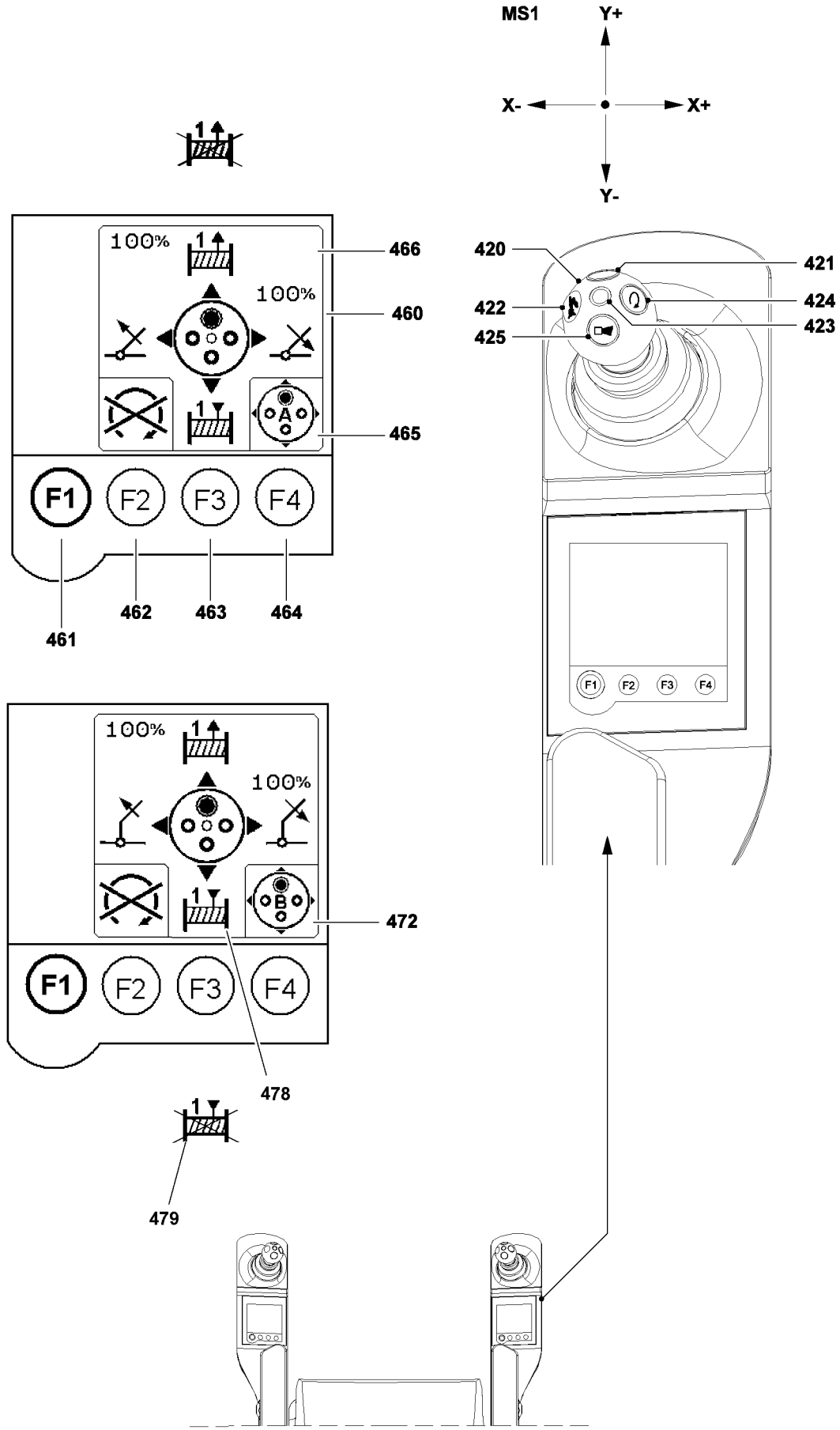

Fig.123705

LWE/ab Muli 010/24201-02-02/en

copyright © Liebherr-Werk Ehingen GmbH 2016

Right master switch assignment

420 Master switch - right (MS 1)

Hoist gear 1:
- Move the master switch **420** in direction Y+ (forward): Winch 1 spools out and the load is lowered.
- Move the master switch **420** in direction Y- (backward): Winch 1 spools up and the load is raised.

Luffing gear - telescopic boom: Master switch assignment „A“ **465** is active:
- Move the master switch **420** in direction X+ (toward the right): Luff the telescopic boom down
- Move the master switch **420** in direction X- (toward the left): Luff the telescopic boom up

Luffing the auxiliary boom*: Master switch configuration „B“ **472** is active:
- Move the master switch **420** in direction X+ (toward the right): Luff the auxiliary boom down
- Move the master switch **420** in direction X- (toward the left): Luff the auxiliary boom up

421 Button
- Bypass of seat contact button. **Or** if the seat contact button is actuated: Activation of vibration sensor **423**

422 Button
- Adding rapid mode for the hoist gear(s) and luffing up

423 Vibration sensor
- Winch turn sensor, (vibrator) winch 1

424 Button
- Lock of engine regulation of superstructure engine
  Note:
  Pressing the button **424** will lock the engine regulation in the current position.

425 Button
- Horn

LWE/ab Muli 010/24201-02-02/en

copyright © Liebherr-Werk Ehingen GmbH 2016

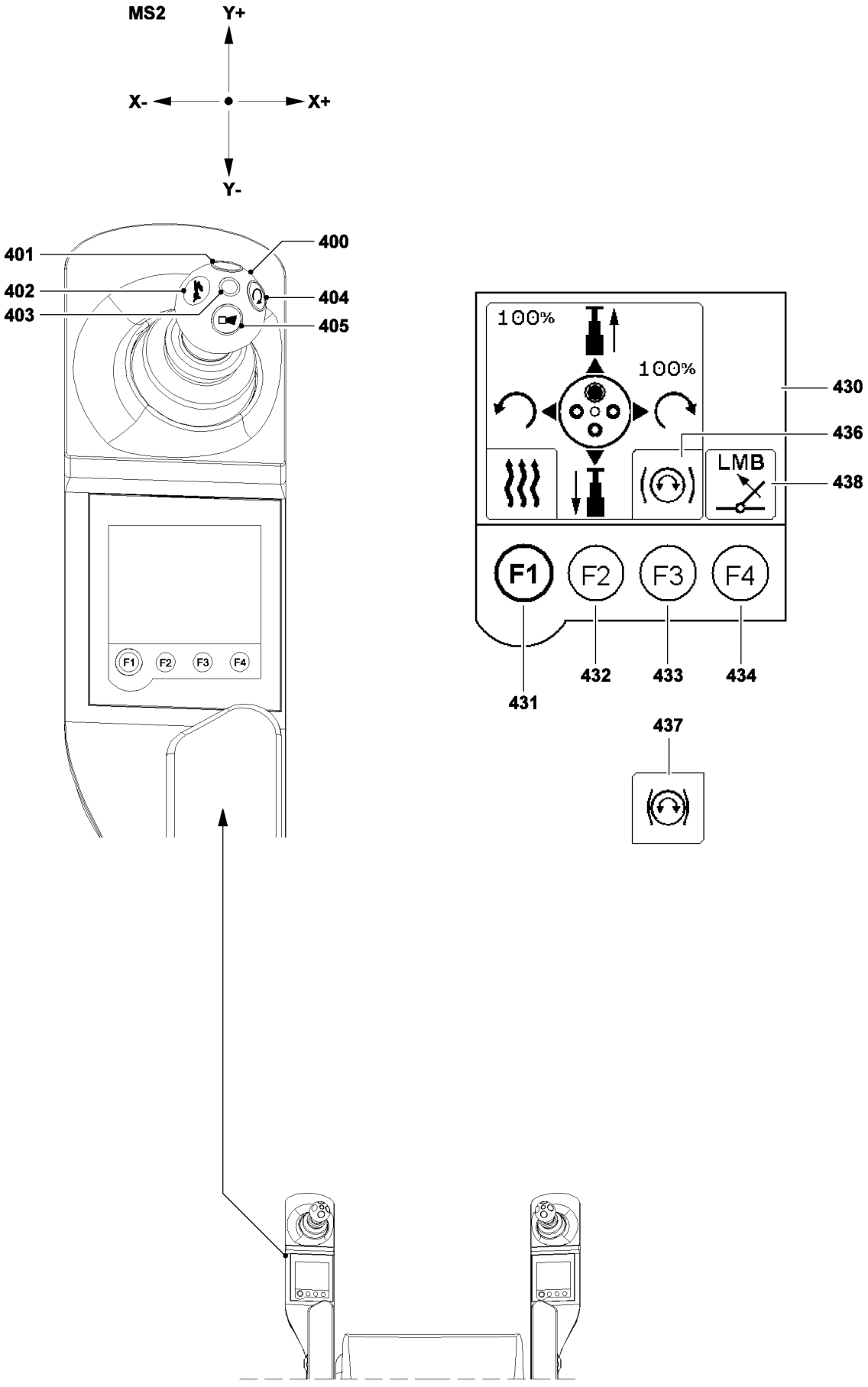

Fig.123706

LWE/ab Muli 010/24201-02-02/en

copyright © Liebherr-Werk Ehingen GmbH 2016

3.2.2 The „Master switch configuration“ menu (left touch display)

The function key line

431 Function key F1
- Switch to the *climate control* menu

432 Function key F2
- **No** function

433 Function key F3
- Release / apply the slewing gear brake
  - **436** Slewing gear brake released
  - **437** Slewing gear brake applied

434 Function key F4 (touching)
- Exceeding the overload protection (icon **438**), used to luff in with suspended load
  Danger:
  The exceedance may only be carried out if the overload was caused by luffing down at freely suspended load and the crane operator is absolutely certain that luffing up the load will take it out of the overload range.

Left master switch assignment:

400 Master switch left (MS 2)

Telescoping gear
- Move the master switch **400** in direction Y+ (forward): Telescope out
- Move the master switch **400** in direction Y- (backward): Telescope in

Slewing gear:
- Move the master switch **400** in direction X+ (toward the right): Superstructure turns to the right.
- Move the master switch **400** in direction X- (toward the left): Superstructure turns to the left.

401 Button
- Bypass of seat contact button. **Or** if the seat contact button is actuated: Activation of vibration sensor **403**

402 Button
- Activation of the rapid gear for winch(es) and luffing up.

403 Vibration sensor
- Winch turn sensor, (vibrator) winch 1 or winch 2 **or** turn sensor, (vibrator) slewing gear

404 Button
- Lock of engine regulation of superstructure engine
  Note:
  Pressing the button **404** will lock the engine regulation in the current position.
- The idling speed can be increased up to the maximum rpm.
  - Can be „overridden“ with the engine regulation (gas pedal)
  - At continued actuation of the engine regulation (gas pedal), the current rpm is taken over
  - By pressing the button **404** with the engine regulation (gas pedal) **not actuated**, the manual throttle is cancelled
  - At locked engine rpm, a **„+“** appears in the „dynamic utilization bar display“ (crane operation)

405 Button
- Horn

copyright © Liebherr-Werk Ehingen GmbH 2016

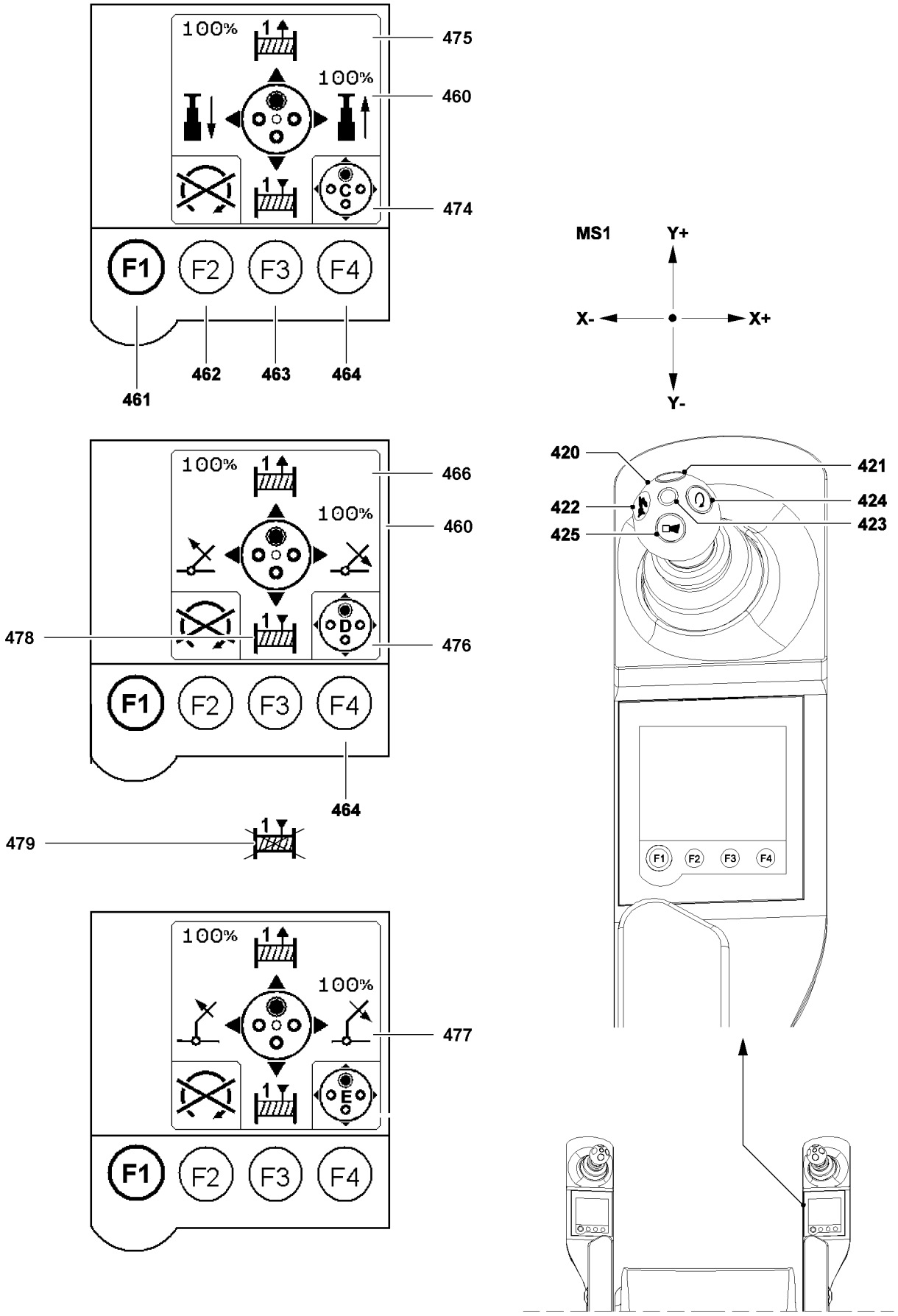

Fig.123707

LWE/ab Muli 010/24201-02-02/en

copyright © Liebherr-Werk Ehingen GmbH 2016

3.3 Master switch assignment for machines with two winches

Note
Change of master switch assignment!
The assignment of the master switches to the respective units on the crane can change, depending on the set up status and winch application!
▶ **Check the assignment before actuating the master switch on the TE!**

Note
▶ For the master switch assignment „A“ and „B“ refer to section „Master switch assignment for machines with one winch“.

3.3.1 The „Master switch configuration“ menu (right touch display)

The function key line

461 Function key F1
- Change to next menu

462 Function key F2
- Engine STOP
  Note:
  After „Engine STOP“, the engine can be restarted by turning the ignition switch to „position 2“, also see Crane operating instructions, chapter 4.02.

463 Function key F3
- Winch changeover - Winch 1
  Activate / deactivate the winch
  Conditions:
  Neutral position master switch 1 **420** (MS1) right.
  Crane driving speed = 0 km/h
  Danger of accident!
  Never activate / deactivate winch 1 while a crane movement is being actuated.
  Note:
  The winch status (winch activated / deactivated) can be seen on the touch display:
  - **478** Winch 1 released
  - **479** Winch 1 blocked

464 Function key F4
- Change master switch assignment from „C“ to „D“ or „E“.
  Conditions:
  Neutral position master switch 1 **420** (MS1) right.
  For master switch assignment **E**, an operating mode or configuration with auxiliary boom must be selected and confirmed on the LICCON computer system.
  Note
  If no configuration with auxiliary boom has been set and confirmed, the „luffing auxiliary boom“ master switch assignment is **not** available.

LWE/ab Muli 010/24201-02-02/en

copyright © Liebherr-Werk Ehingen GmbH 2016

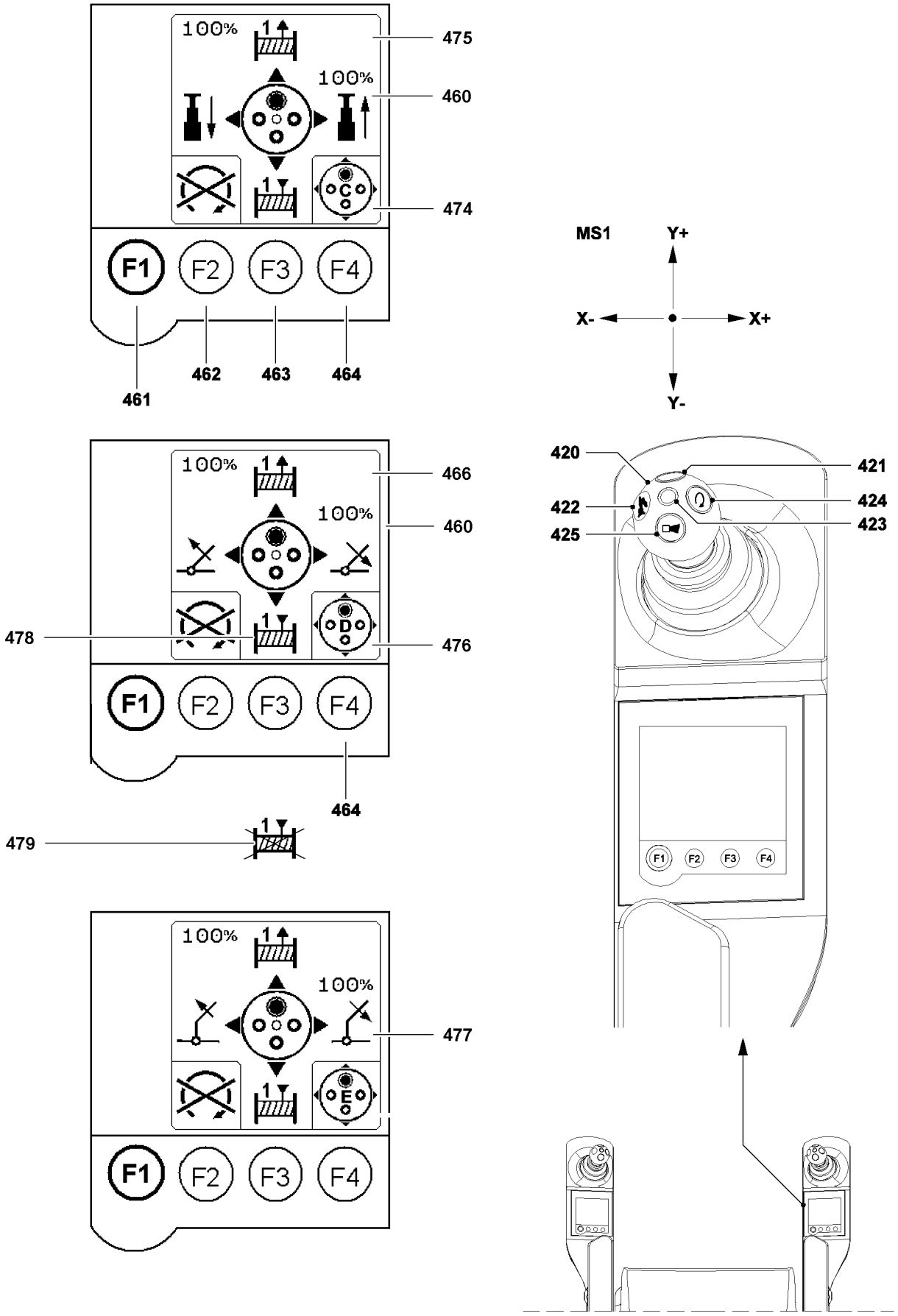

Fig.123707

LWE/ab Muli 010/24201-02-02/en

copyright © Liebherr-Werk Ehingen GmbH 2016

Touch functions in the travel operation and Master switch configuration menu

Note

- ▶ To switch between the master switch configurations for one and two winch systems, press function key „F4“ **464** for longer than 3 s (continuous actuation) in the „Travel operation and master switch configuration“ menu on the right touch display.
- ▶ When the changeover has taken place, a short acoustic signal is heard.

Right master switch assignment

420 Master switch - right (MS 1)

Hoist gear 1:
- Move the master switch **420** in direction Y+ (forward): Winch 1 spools out and the load is lowered.
- Move the master switch **420** in direction Y- (backward): Winch 1 spools up and the load is raised.

Telescoping gear: Master switch assignment „C“ **474** is active:
- Move the master switch **420** in direction X+ (toward the right): Telescope the telescopic boom out
- Move the master switch **420** in direction X- (toward the left): Telescope the telescopic boom in

Luffing gear - telescopic boom: Master switch assignment „D“ **476** is active:
- Move the master switch **420** in direction X+ (toward the right): Luff the telescopic boom down
- Move the master switch **420** in direction X- (toward the left): Luff the telescopic boom up

Luffing the auxiliary boom*: Master switch assignment „E“ **477** is active:
- Move the master switch **420** in direction X+ (toward the right): Luff the auxiliary boom down
- Move the master switch **420** in direction X- (toward the left): Luff the auxiliary boom up

421 Button
- Bypass of seat contact button. **Or** if the seat contact button is actuated: Activation of vibration sensor **423**

422 Button
- Adding rapid mode for the hoist gear(s) and luffing up

423 Vibration sensor
- Winch turn sensor, (vibrator) winch 1

424 Button
- Lock of engine regulation of superstructure engine
  Note:
  Pressing the button **424** will lock the engine regulation in the current position.

425 Button
- Horn

LWE/ab Muli 010/24201-02-02/en

copyright © Liebherr-Werk Ehingen GmbH 2016

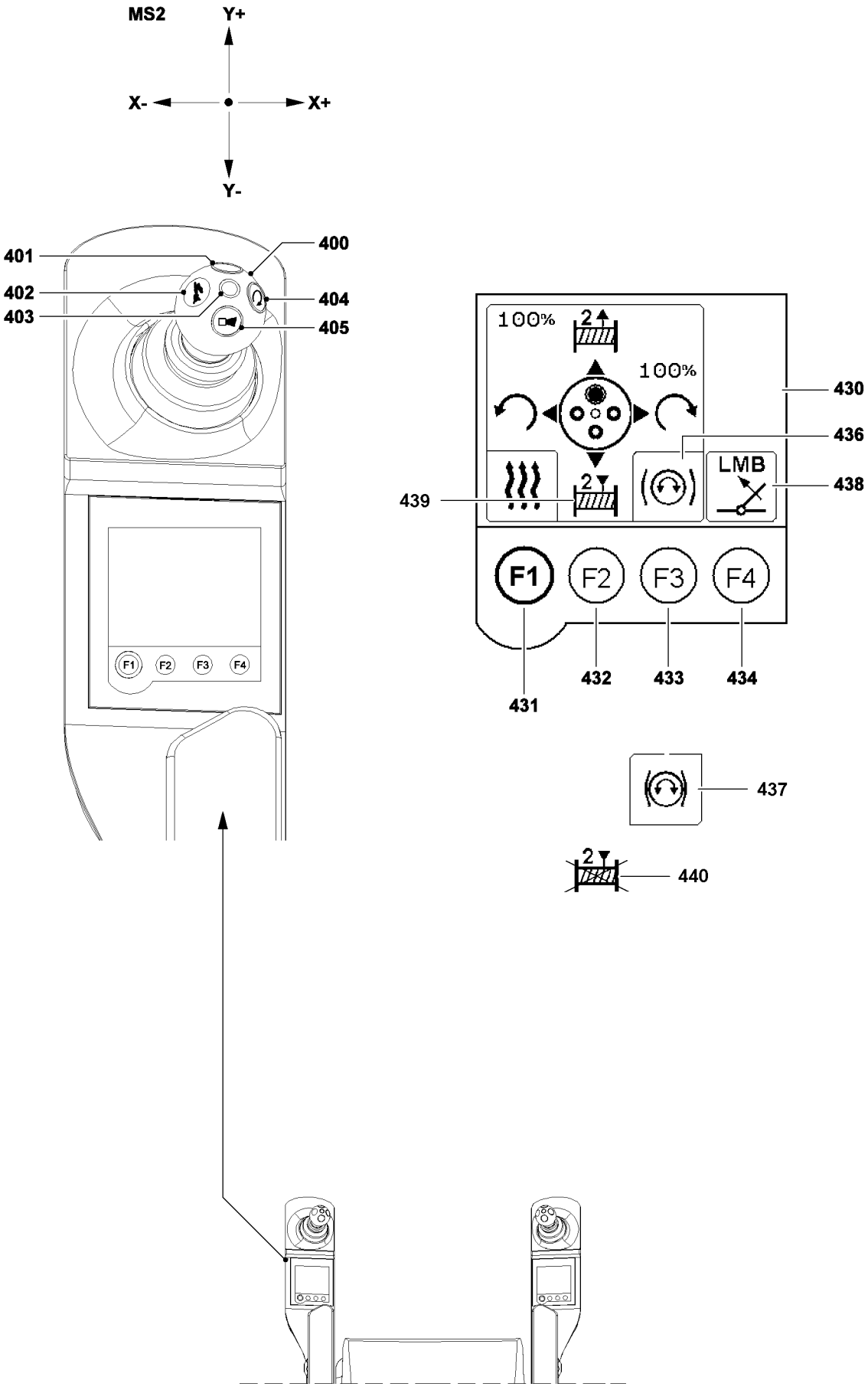

Fig.123708

LWE/ab Muli 010/24201-02-02/en

copyright © Liebherr-Werk Ehingen GmbH 2016

3.3.2 The „Master switch configuration“ menu (left touch display)

The function key line

431 Function key F1
- Switch to the *climate control* menu

432 Function key F2
- Winch changeover - Winch 2
  Activate / deactivate the winch
  Conditions:
  Neutral position master switch 2 **400** (MS2) right
  Crane driving speed = 0 km/h
  Danger of accident!
  Never activate / deactivate winch 2 while a crane movement is being actuated.
  Note:
  The winch status (winch activated / deactivated) can be seen on the touch display:
  - **439** Winch 2 released
  - **440** Winch 2 blocked

433 Function key F3
- Open / close slewing gear brake (with freely rotating slewing gear)
  - **436** Slewing gear brake released
  - **437** Slewing gear brake applied

434 Function key F4 (touching)
- Exceeding the overload protection (icon **438**), used to luff in with suspended load
  Danger:
  The exceedance may only be carried out if the overload was caused by luffing down at freely suspended load and the crane operator is absolutely certain that luffing up the load will take it out of the overload range.

LWE/ab Muli 010/24201-02-02/en

copyright © Liebherr-Werk Ehingen GmbH 2016

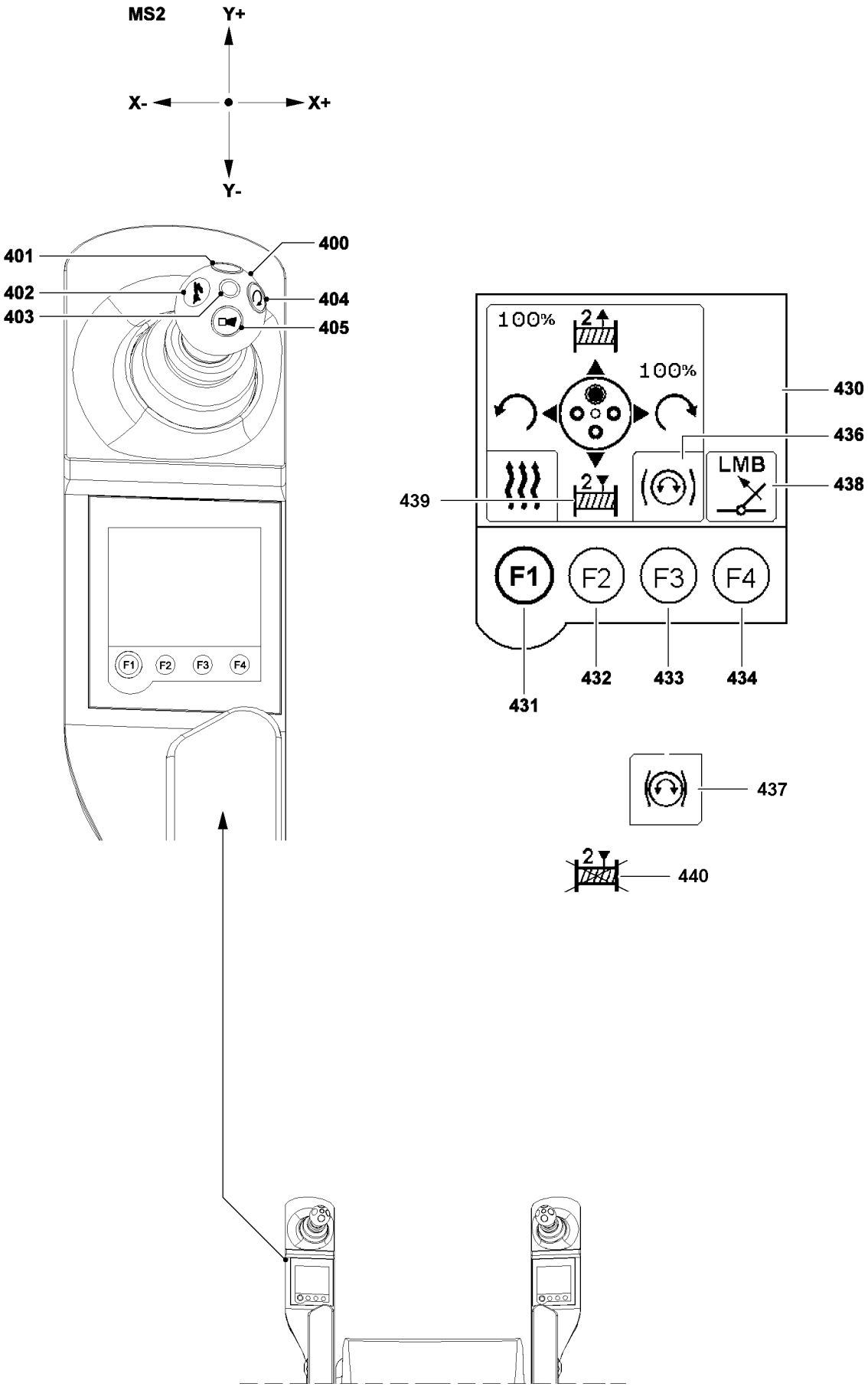

Fig.123708

LWE/ab Muli 010/24201-02-02/en

copyright © Liebherr-Werk Ehingen GmbH 2016

Left master switch assignment:

400 Master switch left (MS 2)

Hoist gear 2:
- Move the master switch **400** in direction Y+ (forward): Winch 2 spools out and the load is lowered
- Move the master switch **400** in direction Y- (backward): Winch 2 spools up and the load is raised

Slewing gear:
- Move the master switch **400** in direction X+ (toward the right): Slewing gear turns to the right
- Move the master switch **400** in direction X- (toward the left): Slewing gear turns to the left

401 Button
- Bypass of seat contact button. **Or** if the seat contact button is actuated: Activation of vibration sensor **403**

402 Button
- Activation of the rapid gear for winch(es) and luffing up.

403 Vibration sensor
- Winch turn sensor, (vibrator) winch 1 or winch 2 **or** turn sensor, (vibrator) slewing gear

404 Button
- Lock of engine regulation of superstructure engine
  Note:
  Pressing the button **404** will lock the engine regulation in the current position.
  The idling speed can be increased up to the maximum rpm.
- Can be „overridden“ with the engine regulation (gas pedal)
- At continued actuation of the engine regulation (gas pedal), the current rpm is taken over
- By pressing the button **404** with the engine regulation (gas pedal) **not actuated**, the manual throttle is cancelled
- If the engine rpm is locked, the „dynamic engine rpm display“ (travel operation) and the „dynamic load utilization bar display“ (crane operation) contain a **„+“**

405 Button
- Horn

LWE/ab Muli 010/24201-02-02/en

copyright © Liebherr-Werk Ehingen GmbH 2016

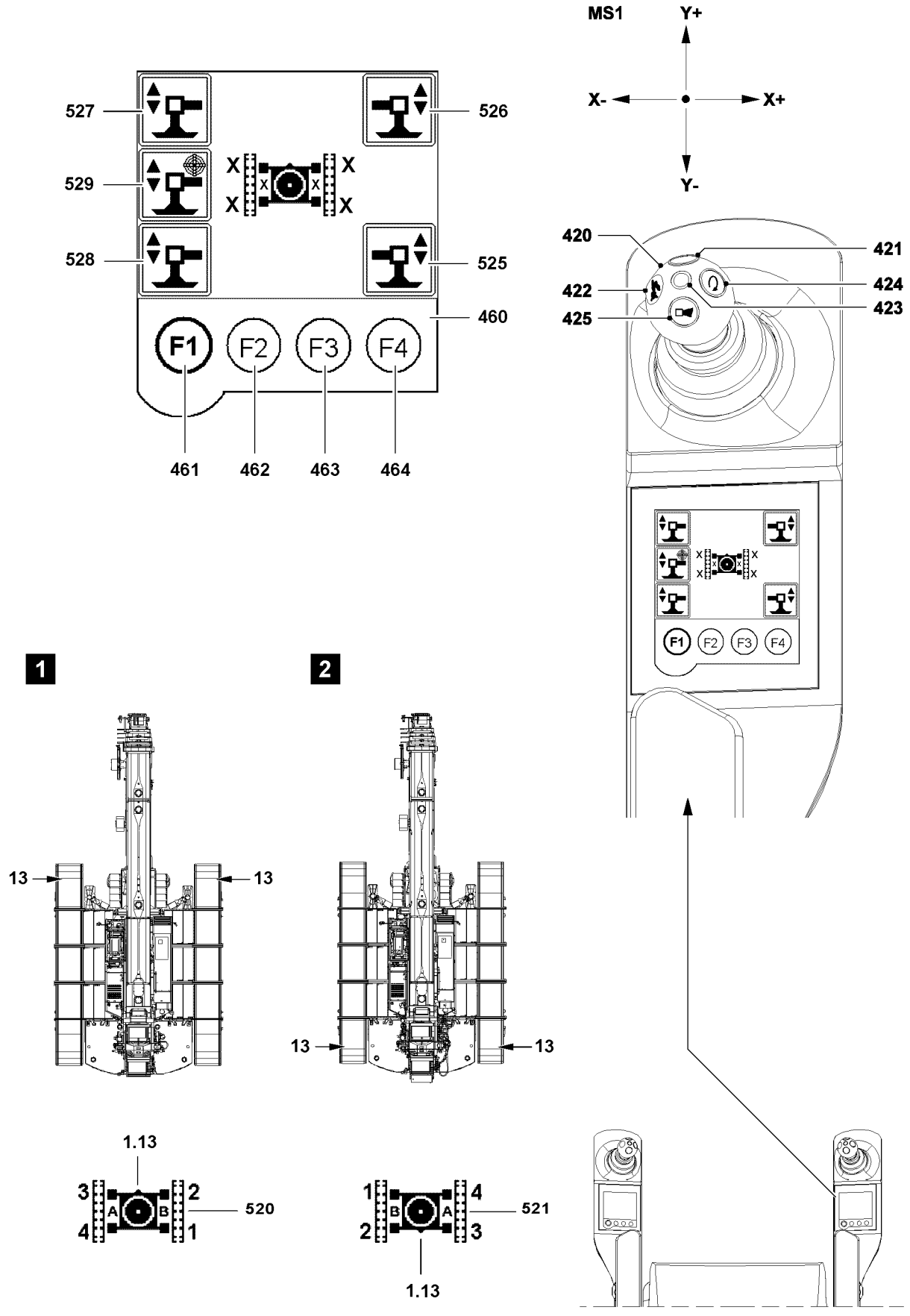

Fig.117631

LWE/ab Muli 010/24201-02-02/en

copyright © Liebherr-Werk Ehingen GmbH 2016

3.4 The menus (operating functions)

3.4.1 The „Support“ menu (right touch display)

Note
Assignment of working direction, support cylinder and crawler carrier!
Illustration **1** and illustration **2** show the assignment.

- ▶ Rear and front on the crawler track can be determined by the chain tension device **13** (chain tension side). The chain tension device **13** is on the front on the crawler track.
- ▶ In the „Support“ menu the assignment of the support cylinders and the crawler carriers on the touch display depends on the working direction of the crane. If the working direction of the crane is changed by turning the turntable from working direction „forward“ to working direction „backward“, then the crane icon **520** changes to crane icon **521** - or vice versa.
- ▶ Crane icon **520**, turntable turned „to the front“: The triangle **1.3** shows the front on the crane chassis; assignment of the support cylinders and the crawler carriers as seen by the crane operator in the crane operator's cab.
- ▶ Crane icon **521**, turntable turned „to the rear“: The triangle **1.3** shows the front on the crane chassis; assignment of the support cylinders and the crawler carriers as seen by the crane operator in the crane operator's cab.

The function key line

461 Function key F1
- Change to next menu

462 Function key F2
- **No** function

463 Function key F3
- **No** function

464 Function key F4
- **No** function

Touch functions in the Support menu

525 Support cylinder
- Select support

526 Support cylinder
- Select support

527 Support cylinder
- Select support

528 Support cylinder
- Select support

529 Automatic support
- Select automatic mode

Right master switch assignment

420 Master switch - right (MS 1)

Manual support:
- Move the master switch **420** in direction Y+ (forward): The selected support cylinders extend.
- Move the master switch **420** in direction Y- (backward): The selected support cylinders retract.

Automatic support:
- Move the master switch **420** in direction Y+ (to the right): The support cylinders extend (the crane is raised) until the crane is aligned horizontally.
- Move the master switch **420** in direction Y- (to the left): The support cylinders retract (the crane is lowered) until the crane is aligned horizontally.

421 Button
- Release of master switch **420**, to retract / extend the support cylinders

LWE/ab Muli 010/24201-02-02/en

copyright © Liebherr-Werk Ehingen GmbH 2016

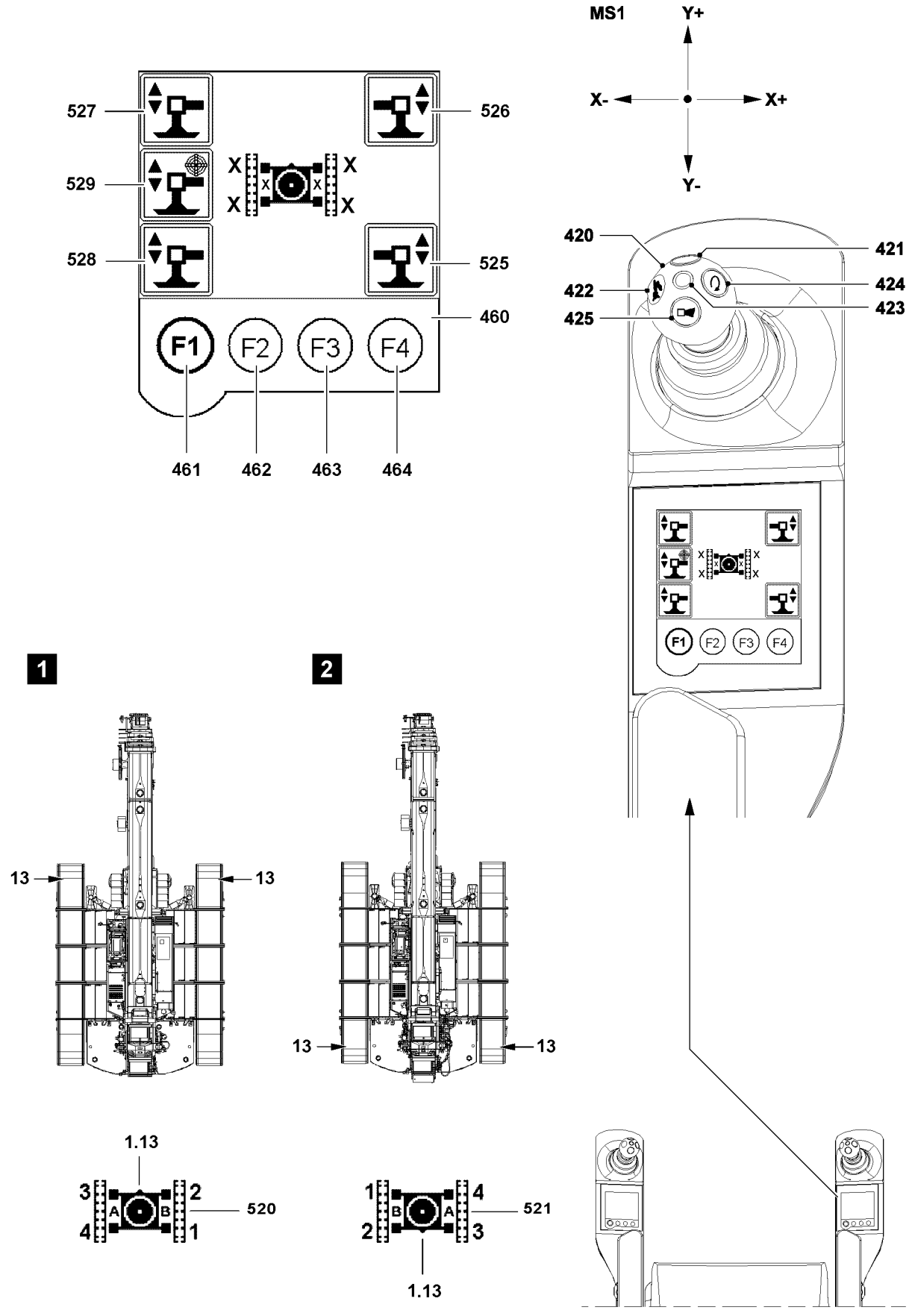

Fig.117631

LWE/ab Muli 010/24201-02-02/en

copyright © Liebherr-Werk Ehingen GmbH 2016

Support cylinder

In the „Support“ menu, the following functions depend on the deflection of the master switch:
- Extension / retraction speed of the support cylinders
- Manual support
- Automatic support

Two extension / retraction speeds of the support cylinder are available:

Master switch deflection < 80 % = slow

Master switch deflection ≥ 80 % = fast

Note
- ▶ Release support movement: Press the button **421** (bypass seat contact) and hold it.
- ▶ Retract or extend the support cylinders: Deflect the master switch (MS1) **420** in direction Y+ or Y-.

Note

If the master switch deflection is changed from Y+ or Y- to X+ or X- when the selected support cylinders are being retracted or extended, the current movement is shut off.
- ▶ Move the right master switch (MS1) **420** to the neutral position.
- ▶ Now you can extend / retract the support cylinders to the required position with the master switch.

Supporting manually

0 -4 supports can be selected on the touch-display („touch“) simultaneously and „extended / retracted“ with the master switch (MS1). When a support cylinder is selected, the automatic support **529** selection is cancelled.

Note
- ▶ The extension / retraction of the support cylinders is „coupled“ to the Y+ and Y- deflection direction of the right master switch (MS1) **420**.
- ▶ Moving the MS1 in direction Y+ extends the support cylinder / the support cylinders.
- ▶ Moving the MS1 in direction Y- retracts the support cylinder / the support cylinders.

LWE/ab Muli 010/24201-02-02/en

copyright © Liebherr-Werk Ehingen GmbH 2016

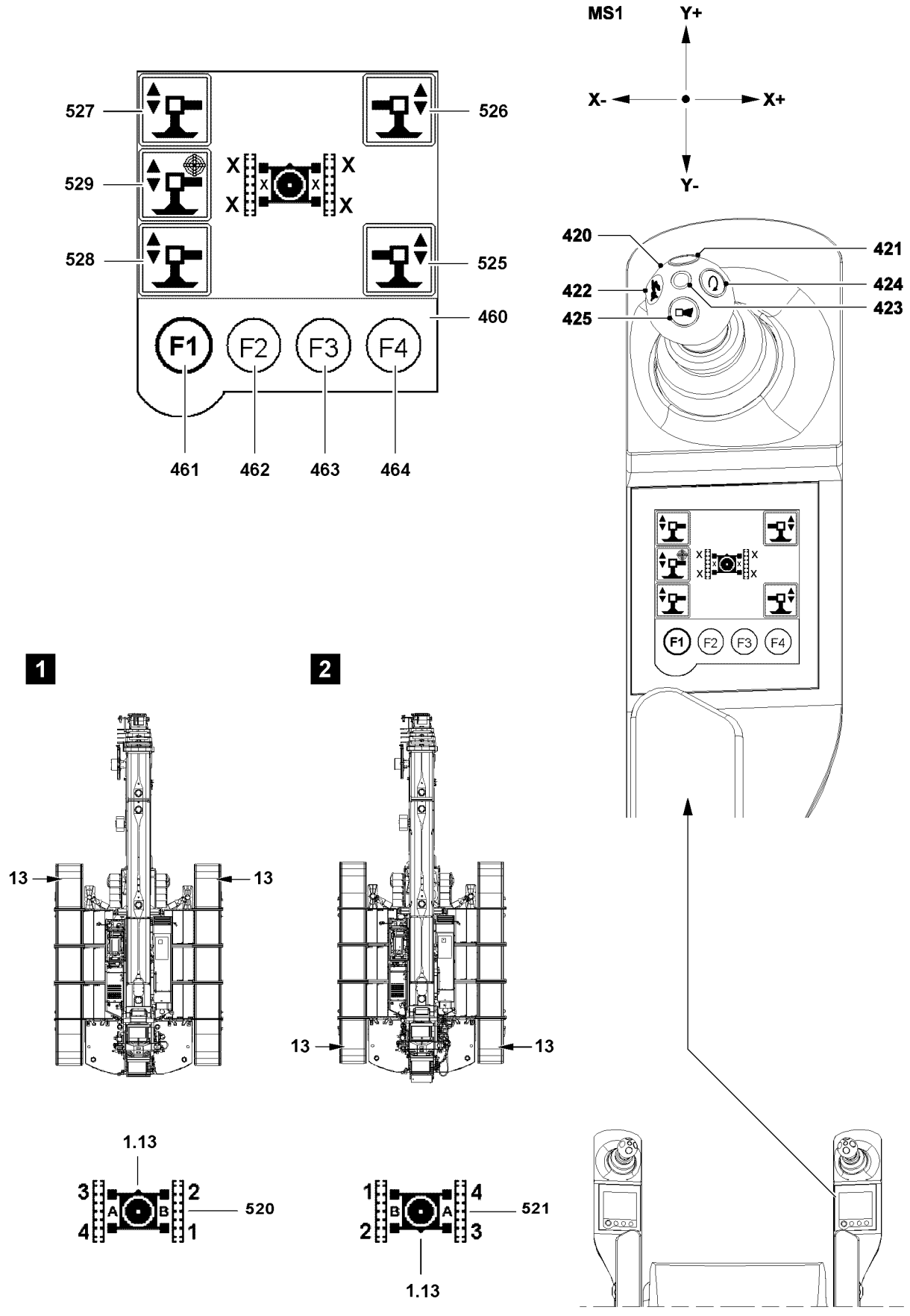

Fig.117631

LWE/ab Muli 010/24201-02-02/en

copyright © Liebherr-Werk Ehingen GmbH 2016

Automatic support

By selecting („touch“) the automatic support **529** cancels all manual support function selections.

Note

- ▶ The extension / retraction of the support cylinders is „coupled“ to the Y+ and Y- deflection direction of the master switch (MS1) **420**.
- ▶ Moving the MS1 in direction Y+ levels the crane by extending the support cylinders.
- ▶ Moving the MS1 in direction Y- levels the crane by retracting the support cylinders.

If the automatic support **529** has been selected, the support function is carried out via the master switch deflection. The automatic support function automatically levels the crane during the support procedure.

LWE/ab Muli 010/24201-02-02/en

copyright © Liebherr-Werk Ehingen GmbH 2016

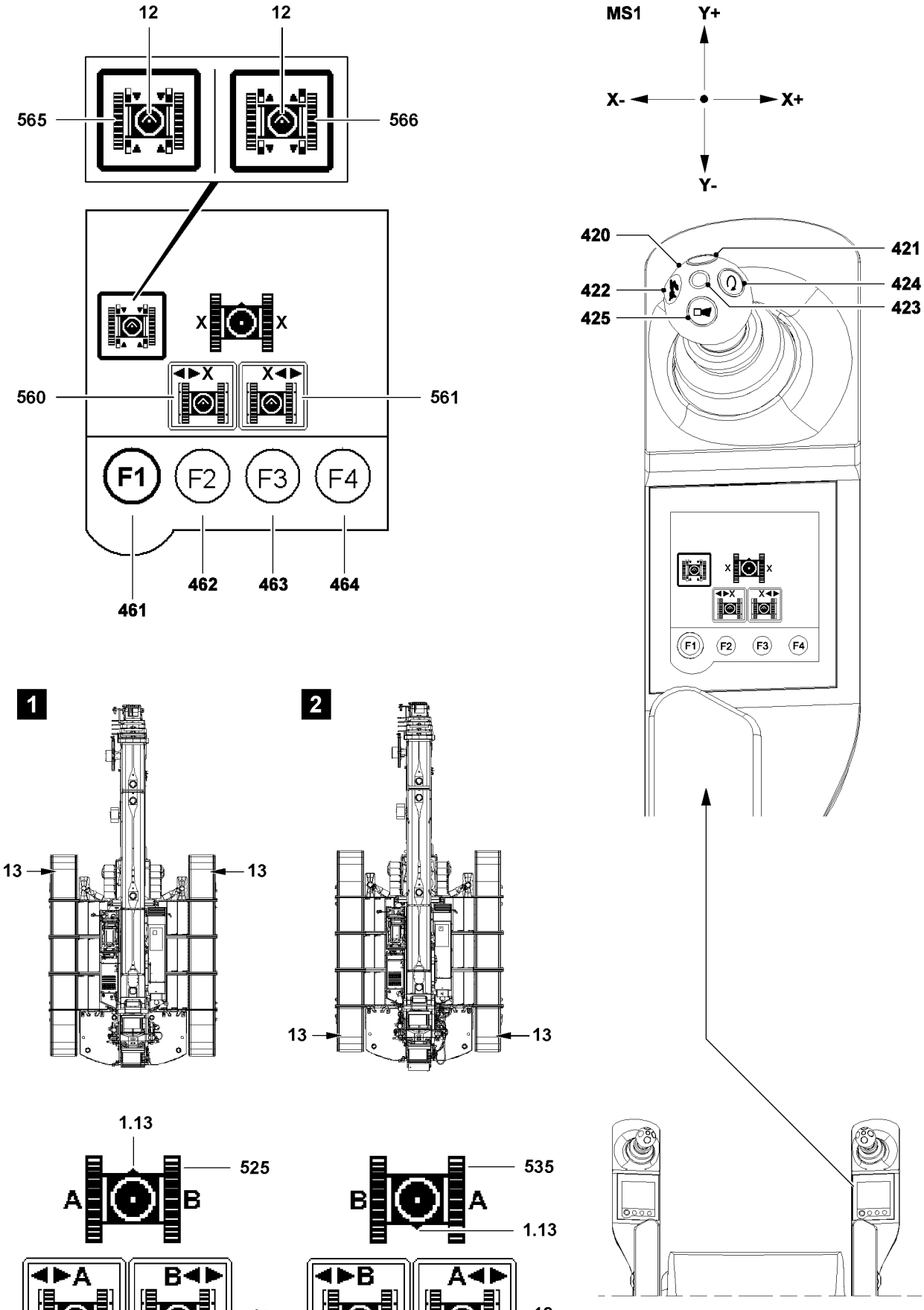

Fig.117634

LWE/ab Muli 010/24201-02-02/en

copyright © Liebherr-Werk Ehingen GmbH 2016

3.4.2 The „Track width adjustment“ menu (right touch display)

In the „Track width adjustment“ menu, the crane operator has the possibility to extend the track width of the tracks to a larger track width or retract them to a smaller track width.

Note
Assignment of working direction and crawler carrier!
Illustration **1** and illustration **2** show the assignment.

- ▶ Rear and front on the crawler track can be determined by the chain tension device **13** (chain tension side). The chain tension device **13** is on the front on the crawler track.
- ▶ In the „Track width adjustment“ menu the assignment of the crawler carriers on the touch display depends on the working direction of the crane. If the working direction of the crane is changed by turning the turntable from working direction „forward“ to working direction „backward“, then the crane icon **525** changes to crane icon **535** - or vice versa.
- ▶ Arrow **12** shows the direction of view of the crane operator in the crane operator's cab: icon **560**, icon **561**, icon **565** and icon **566**.
- ▶ Crane icon **525**, turntable turned „to the front“: The triangle **1.3** shows the front on the crane chassis; assignment of the crawler carriers as seen by the crane operator in the crane operator's cab.
- ▶ Crane icon **535**, turntable turned „to the rear“: The triangle **1.3** shows the front on the crane chassis; assignment of the crawler carriers as seen by the crane operator in the crane operator's cab.

The function key line

461 Function key F1
- Change to next menu

462 Function key F2
- **No** function

463 Function key F3
- **No** function

464 Function key F4
- **No** function

Touch functions in the Track width adjustment menu

565 „Pin“ the Track width adjustment
- Icon **565** selected: Pin the cross carrier.
  Note:
  If icon **565** is selected („touch“), then Icon **566** appears.

566 „Unpin“ the Track width adjustment
- Icon **566** selected: Unpin the cross carrier.
  Note:
  When changing to the „Track width adjustment“ menu after system start, then the icon **565** is automatically selected.
  When changing to the „Track width adjustment“ menu during operation, then the last active icon is selected.

560 Track „left“
- Select / deselect the „left“ track

561 Track „right“
- Select / deselect the „right“ track

Right master switch assignment

420 Master switch - right (MS 1)
- Move the master switch **420** in direction X+ (toward the right): The selected crawler carriers extend.
- Move the master switch **420** in direction X- (toward the left): The selected crawler carriers retract.

421 Button
- Release of master switch **420** to retract / extend the crawler carriers.

LWE/ab Muli 010/24201-02-02/en

copyright © Liebherr-Werk Ehingen GmbH 2016

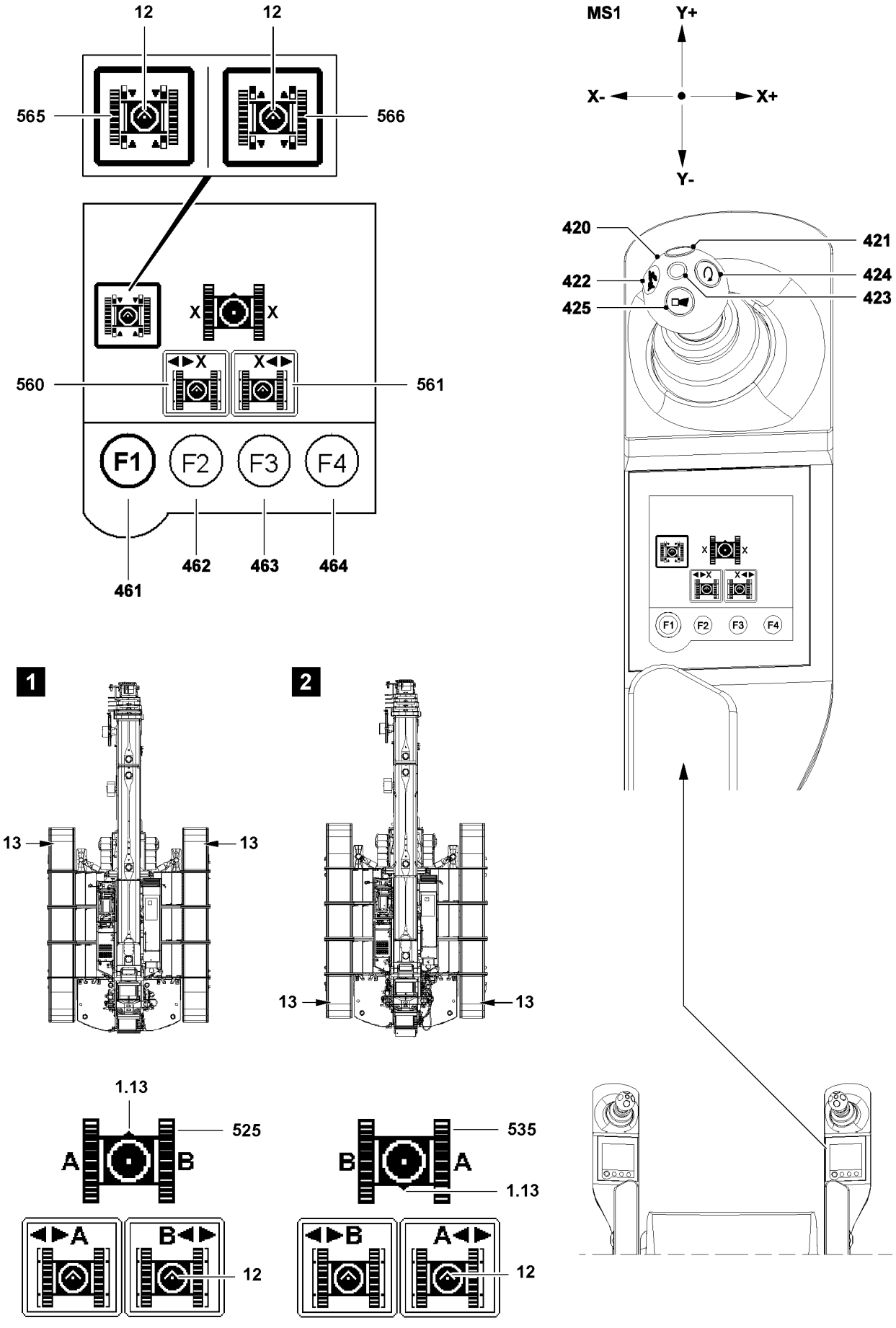

Fig.117634

LWE/ab Muli 010/24201-02-02/en

copyright © Liebherr-Werk Ehingen GmbH 2016

Pinning / unpinning the cross carriers

Note
- ▶ The cross carriers are only pinned on extension conditions of 0 %; 50 %; 100 %.
- ▶ Asymmetric track width adjustment is reached by pinning on extension conditions of 0 % and 100 %, see Crane operating instructions, chapter 4.03.50

To automatically pin the cross carriers, you have to „pin“ the track adjustment, touch function **565** before the pin points at 0 % or 50 % or 100 % are reached.

To be able to extend the crawler carriers, you have to select „unpin“ the track adjustment, touch function **566**.

The cross carrier is automatically unpinned as soon as a crawler carrier is extended / retracted.

Extending / retracting the crawler carriers

Note
- ▶ The „left“ **or** „right“ track **or** the „left“ and the „right“ track can be selected on the touch display and can be extended or retracted with the master switch 1 **420**.
- ▶ The extension / retraction of the tracks is „coupled“ to the X+ and X- deflection direction of master switch (MS1) **420**.
- ▶ Release support movement: Press the button **421** (bypass seat contact) and hold it.
- ▶ Retract or extend the crawler carriers: Deflect the master switch (MS1) **420** in direction X+ or X-.

Note
- ▶ Adjustment of track width, see Crane operating instructions, chapter 4.03.50.

LWE/ab Muli 010/24201-02-02/en

copyright © Liebherr-Werk Ehingen GmbH 2016

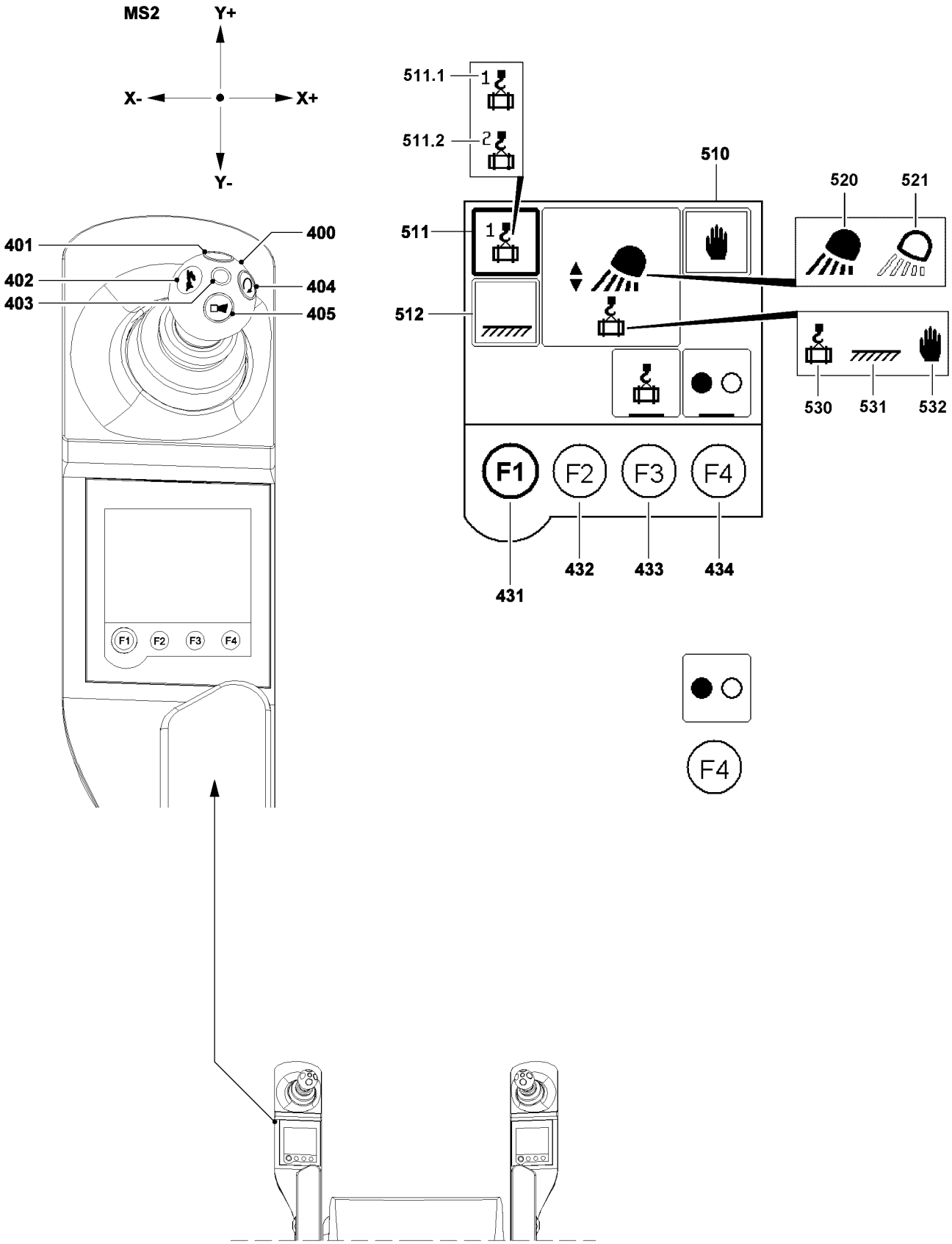

Fig.121279

LWE/ab Muli 010/24201-02-02/en

copyright © Liebherr-Werk Ehingen GmbH 2016

3.4.3 The „Working floodlight“* menu (left touch display)

In the „Working floodlight“***** menu the crane operator has the opportunity to manually align the working floodlight to suit the current load or the planned working range. In crane operation, the previously aligned working floodlight changes its position according to the movement direction of the load (load-following) or the working range (fixed to working range).

Note

- ▶ The Working floodlight menu***** is only available if the floodlight is installed and connected.
- ▶ „Touching“ the desired floodlight function does not directly activate this function, instead it only **selects the function**.
- ▶ Only if a floodlight function has been selected, can function key F4 **434** be used to turn it on or off.

The function key line

431 Function key F1
- Change to next menu

432 Function key F2
- **No** function

433 Function key F3
- Load position preselection for 2-hook operation
  - When selecting the main boom, the icon **511.1** appears
  - When selecting the auxiliary boom, the icon **511.2** appears

434 Function key F4
- Turn the working floodlight on / off

Touch functions

510 Working floodlight
- Select „Manually“

511 Working floodlight
- Select „Load following“

512 Working floodlight
- Select „Fixed to working range“

Icons

520 Working floodlight
- Turned on

521 Working floodlight
- Turned off

530 Working floodlight
- „Load following“ selected

531 Working floodlight
- „Fixed to working range“ selected

531 Working floodlight
- „Manually“ selected

Note

- ▶ Before the required operating mode of the working floodlight is selected, the „starting position“ of the working floodlight must be manually selected in „Working floodlight manual“ operating mode by moving the Master switch 2 **400** (MS2) left in direction Y+ or Y-.

copyright © Liebherr-Werk Ehingen GmbH 2016

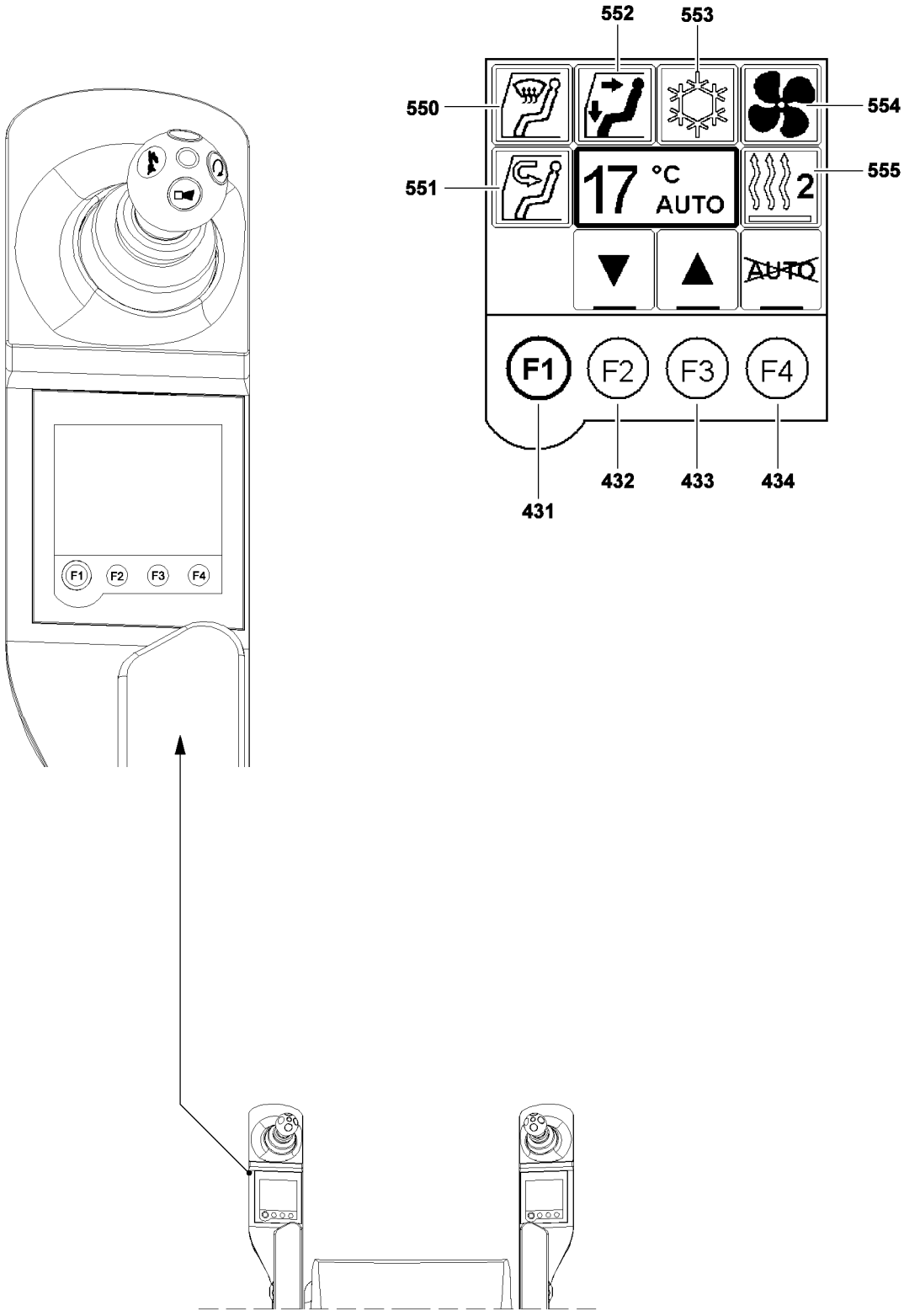

Fig.118762

LWE/ab Muli 010/24201-02-02/en

copyright © Liebherr-Werk Ehingen GmbH 2016

3.4.4 The „climate control“ menu (left touch display)

Note

▶ For a detailed description, see Crane operating instructions, chapter 6.02.

The function key line

431 Function key F1
- Change to next menu

432 Function key F2
- Turn selected function off
- Increase air distribution in the floorboard area
- Reduce fan power

433 Function key F3
- Turn selected function on
- Increase air distribution in the window area
- Increase fan power

434 Function key F4
- Switch between automatic and manual operation
- For operation with timer: Confirm function

Touch functions

Note

▶ The respective function is selected with the press of a finger (touch) on the icon. The selected icon is bordered in black.

▶ A turned on function is shown in color.

▶ Only one icon (function) can be activated at the same time.

550 Icon
- Select / deselect defrost the windshield

551 Icon
- Select / deselect recirculating air

552 Icon
- Select / deselect air distribution

553 Icon
- Select / deselect climate control system

554 Icon
- Select / deselect fan stage

555 Icon
- Select / deselect auxiliary heater

LWE/ab Muli 010/24201-02-02/en

copyright © Liebherr-Werk Ehingen GmbH 2016

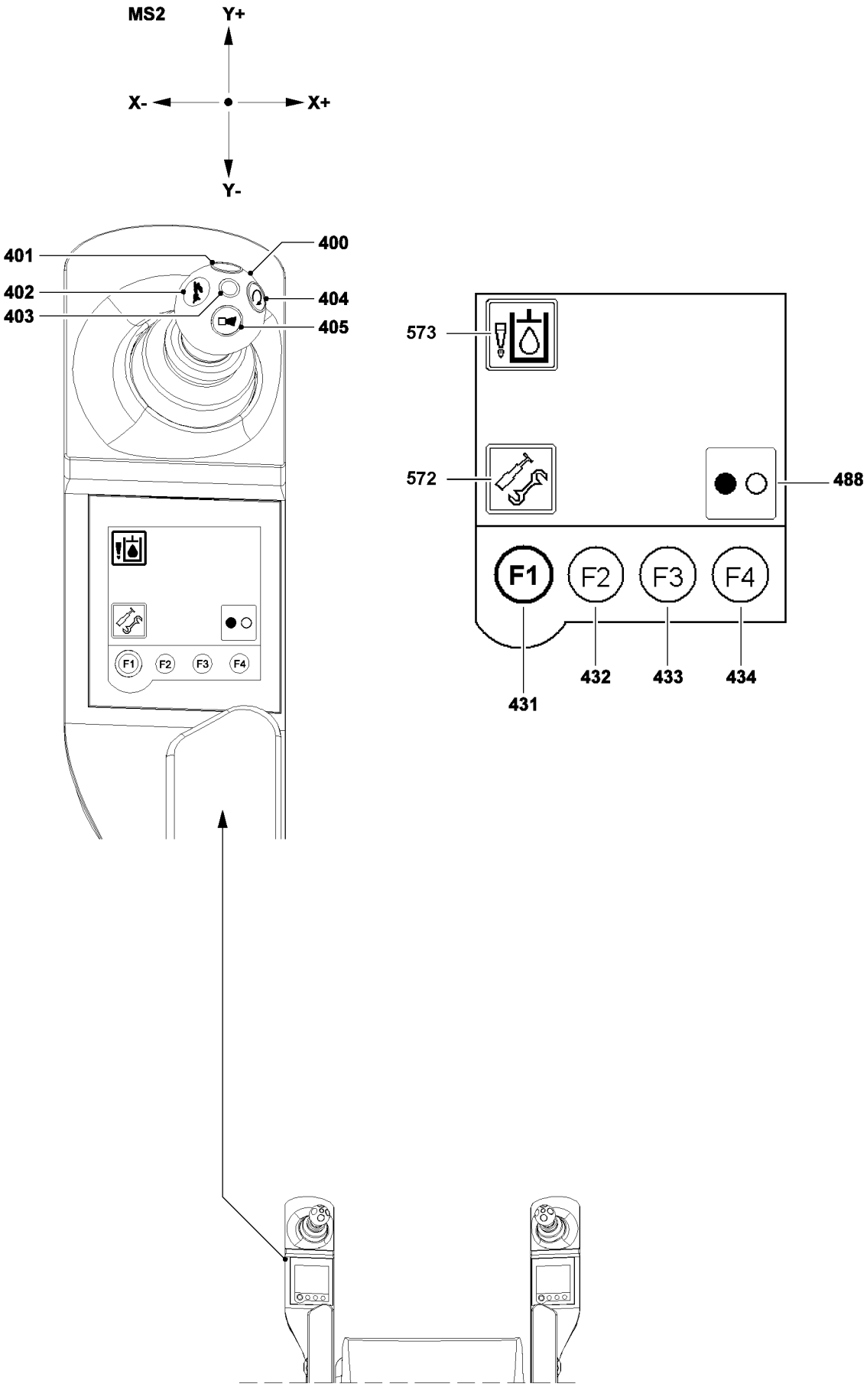

Fig.117818

LWE/ab Muli 010/24201-02-02/en

copyright © Liebherr-Werk Ehingen GmbH 2016

3.4.5 The menu „Hydraulic oil preheating / telescopic boom disassembly“* (left touch display)

The function key line

431 Function key F1
- Change to next menu

432 Function key F2
- **No** function

433 Function key F3
- **No** function

434 Function key F4
- Turn hydraulic oil preheating on / off
  Turn telescopic boom disassembly on / off

Touch functions

572 Telescopic boom disassembly
- Select / deselect telescopic boom disassembly

573 Hydraulic oil preheating
- Select / deselect hydraulic oil preheating

LWE/ab Muli 010/24201-02-02/en

copyright © Liebherr-Werk Ehingen GmbH 2016

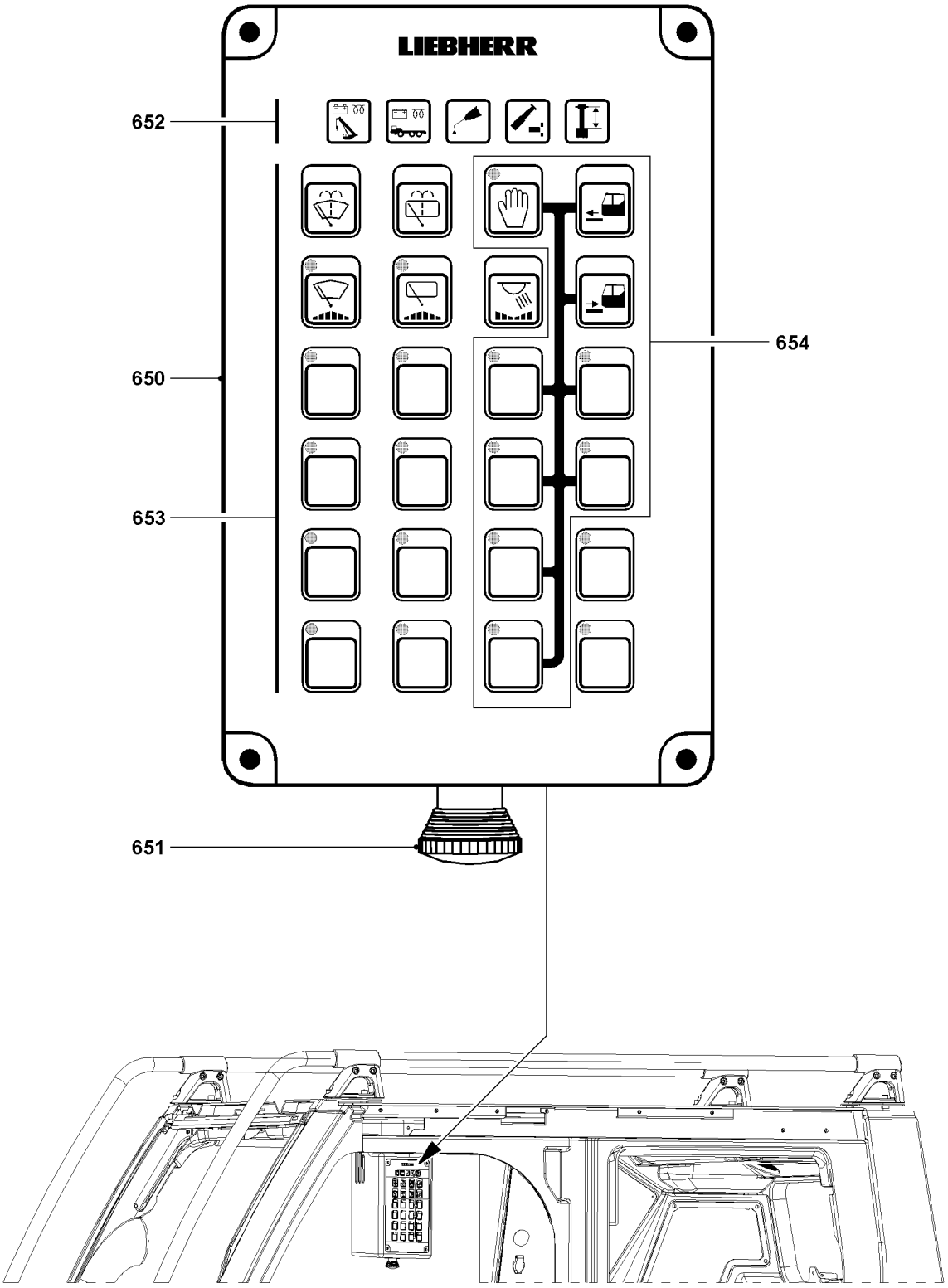

LWE/ab Muli 010/24201-02-02/en

Fig.117632

copyright © Liebherr-Werk Ehingen GmbH 2016

4 Operating elements on the operating and control unit (BKE)

4.1 Operating console

Note
▶ The indicator lights as well as the operating buttons are described in detail in the following sections.

650 Operating console
- Housing with indicator lights and buttons

651 EMERGENCY OFF switch*
- Impact switch

652 Indicator lights on the BKE

653 Operating buttons on the BKE
- Standard assignment

654 Operating buttons on the BKE for release control
- Standard assignment

4.2 Indicator lights on the BKE „652“

Position	Indicator light	LED condition	Description
660	Engine monitoring superstructure	Yellow:	Engine preheat active
		Yellow blinking (slow)	Engine ready to start
		Yellow blinking (fast)	Engine preheating Error / problem
		Off:	Engine is running (after engine has been started)
		Red:	Engine is running, alternator does not charge
661	Engine monitoring chassis	**Note:**	Indicator light **not** assigned!
662	Central lubrication system	Yellow + red (orange)	Functional readiness (is shown after engine start for 1.5 s)
		Yellow:	Lubrication active
		Red:	Error / problem
		Off:	Central lubrication not active
663	Pinning tele / cylinder	Yellow	Unpin cylinder
		Green	Tele unpinned
664	Cylinder in position	Yellow	Gripper in position

LWE/ab Muli 010/24201-02-02/en

copyright © Liebherr-Werk Ehingen GmbH 2016

4.3 Operating buttons on the BKE „653“

Note

▶ With the LEDs in the operating buttons, the operating conditions and problems can be recognized quickly and reliably by the crane driver.

Position	Button	Function	LED	Description
670		„On“	–	Clean the window: By pressing and holding the button „Front“ or „Roof“
	Window washer system, front		**Note:**	After releasing the button „Front“ or „Roof“, three additional wipe movements are carried out before the wiper blades return to their original position.
671		„Off“	–	By releasing the button „Front“ or „Roof“
	Window washer system, roof			
672			**Note:**	There are three different wipe stages.
	Windshield wiper, front			1. Wiper „On“: Continuous operation 2. Intermittent 1: Wipe with long pauses 3. Intermittent 2: Wipe with short pauses 4. Wiper „Off“
673				
	Window wiper, roof			Every time the button „Front“ or „Roof“ is pressed, the wipe stages change incrementally.
		„On“	Lights up	By pressing the button „Front“ or „Roof“
		„Off“	Off	By pressing the button „Front“ or „Roof“ longer than one second until a „beep“ sounds **or** By pressing the button „Front“ or „Roof“ until the LED is off **or** Ignition „Off“
674			**Note**:	The interior lighting can also be turned on when the ignition is „off“, by pressing the button longer than 1 s.
	Interior light cab	„On“ (100 %)	–	By opening the door **or** By pressing the button
		Dim	–	There are three different dimmer stages:

LWE/ab Muli 010/24201-02-02/en

copyright © Liebherr-Werk Ehingen GmbH 2016

Position	Button	Function	LED	Description
				1. 75 % 2. 50 % 3. 25 % 4. „Interior light Off“ When the interior light is turned on: Each time the button is pressed, the brightness is reduced incrementally.
		„Off“	–	By pressing the button for longer than one second **or** By pressing the button until the light turns „Off“ **or** If the following conditions are present simultaneously for longer than 30 s: - The driver's seat is not occupied - The door is closed - The engine is „Off“
679	 Airplane warning	**Note**: The airplane warning can also be actuated when the ignition is „Off“, by pressing the button longer than 1 s.		
		„Off“	Off	By pressing the button
		„On“	Lights up	By pressing the button
		„On“	Blinks	Error / problem
680	 Crawler operation	„Off“	Off	By pressing the button
		„On“	Lights up	Crawler operation is turned on
		„On“	Blinks	Error / problem
681	 Rapid gear „crawlers“	„Off“	Off	By pressing the button
		„On“	Lights up	Rapid gear for crawler operation is turned on
		„On“	Blinks	Error / problem
682	 Floodlight on front of turntable	„Off“	Off	By pressing the button
		„On“	Lights up	By pressing the button
		„On“	Blinks	Error / problem
683		„Off“	Off	By pressing the button

copyright © Liebherr-Werk Ehingen GmbH 2016

Position	Button	Function	LED	Description
	Floodlight on rear of turntable	„On“	Lights up	By pressing the button
		„On“	Blinks	Error / problem
684		„Off“	Off	Button **not** assigned, **no function**!
	Floodlight 2 on front of turntable	„On“	Lights up	Button **not** assigned, **no function**!
		„On“	Blinks	Error / problem
685		„Off“	Off	By pressing the button
	Boom floodlights	„On“	Lights up	By pressing the button
		„On“	Blinks	Error / problem
686		„Off“	Off	By pressing the button
	Low beam	„On“	Lights up	Button **not** assigned, **no function**!
		„On“	Blinks	Transmission error to chassis
687		„Off“	Off	By pressing the button
	Parking lights	„On“	Lights up	Button **not** assigned, **no function**!
		„On“	Blinks	Transmission error to chassis
688		„Off“	Off	By pressing the button
	Floodlight camera*****	„On“	Lights up	By pressing the button
		„On“	Blinks	Error / problem
695		„Off“	Off	By pressing the button
	Crawler „Parallel control“	„On“	Lights up	Parallel control for crawler operation is turned on
		„On“	Blinks	Error / problem

LWE/ab Muli 010/24201-02-02/en

copyright © Liebherr-Werk Ehingen GmbH 2016

4.4 Operating buttons on the BKE for release control „654“

Note

- ▶ The following functions require the activation of the „release button“.
- ▶ The „release button“ is active for 30 s. If an operating button is pressed during this time, the release time is reset to 30 s. The release stops after 30 s.
- ▶ A function is triggered by activation of the „release button“ and then pressing the corresponding operating button.
- ▶ For the listed key combinations, hold the corresponding operating button until the desired end position is reached.

Position	Key combination	Function	LED	Function
675	Release button		**Note**:	After pressing the release button, the functions, which require a release can be activated. The release is indicated if the green LED on the release button lights up.
		„On“	Lights up	Press the release button
		„Off“	Off	By pressing the button **or** as long as no button is pressed, which requires a release: Automatically after 30 s
675+676	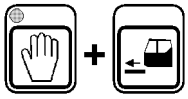 Extend the step	„On“		Activate „release button“ and press „Extend step“ button
675+677	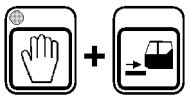 Retract the step	„On“		Activate „release button“ and press „Retract step“ button
675+688	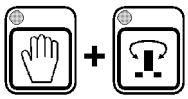 Unpin the turntable lock	„Off“	Off	Function inactive
		„On“	Blinks slowly	The unpinning procedure „runs“
		„On“	Blinks fast	Error / problem
		„On“	Lights up	The „top“ end position has been reached, an acoustic signal will sound when the end position is reached
675+689	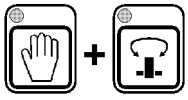 Pin the turntable lock	„Off“	Off	Function inactive
		„On“	Blinks slowly	The pinning procedure „is running“
		„On“	Blinks fast	Error / problem
		„On“	Lights up	The „bottom“ end position has been reached, an acoustic signal will sound when the end position is reached

copyright © Liebherr-Werk Ehingen GmbH 2016

Position	Key combination	Function	LED	Function
675+690	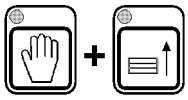 Raise the counterweight	„Off“	Off	Function inactive
		„On“	Blinks slowly	The counterweight is raised
		„On“	Blinks fast	Error / problem
		„On“	Lights up	The „top“ end position has been reached, an acoustic signal will sound when the end position is reached
675+691	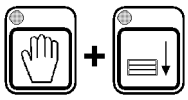 Lower the counter-weight	„Off“	Off	Function inactive
		„On“	Blinks slowly	The counterweight is lowered
		„On“	Blinks fast	Error / problem
		„On“	Lights up	The „bottom“ end position has been reached, an acoustic signal will sound when the end position is reached
675+692	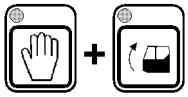 Raise the cab	„Off“	Off	Function inactive
		„On“	Blinks	Error / problem
		„On“	Lights up	The cab is raised
675+693	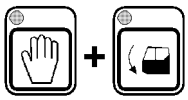 Lower the cab	„Off“	Off	Function inactive
		„On“	Blinks	Error / problem
		„On“	Lights up	The cab is lowered

LWE/ab Muli 010/24201-02-02/en

copyright © Liebherr-Werk Ehingen GmbH 2016

4.02 LICCON computer system

1	General	2
2	System start of the LICCON computer system	4
3	Operating elements of the LICCON computer system	5
4	The set up program	7
5	The Crane operation program	13
6	The Telescoping program	54
7	The Working range limitation program*	63
8	Speed reduction master switch	67
9	Track width monitoring without shut off of crane movement	71
10	Track width monitoring with shut off of crane movement*	73
11	ECO-Mode	76
12	Power-Save mode and Stand-by mode in the LICCON computer system	80

LWE/ab Muli 010/24201-02-02/en

copyright © Liebherr-Werk Ehingen GmbH 2016

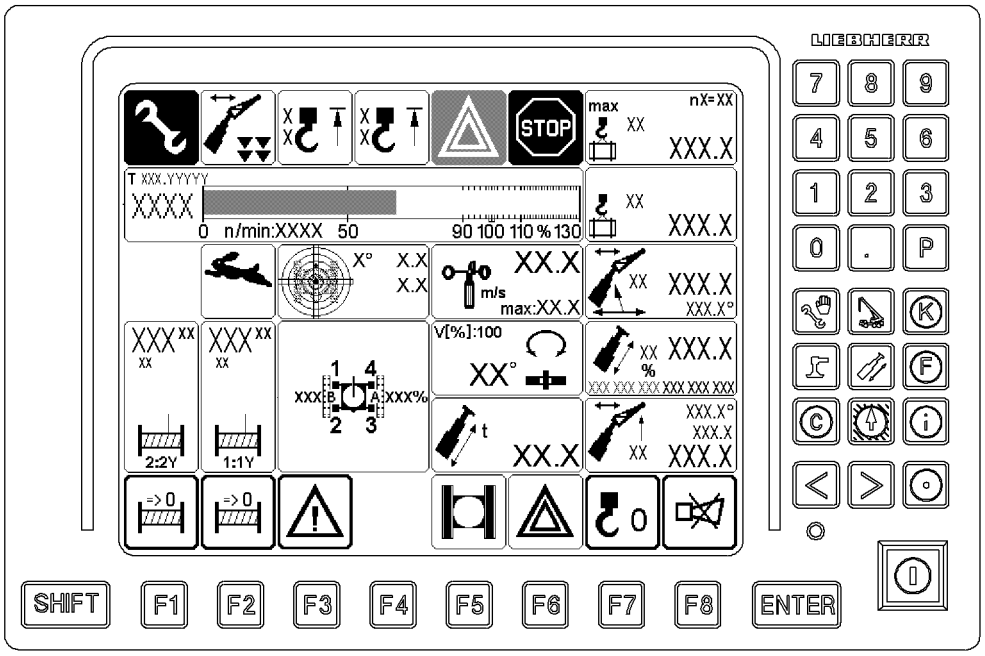

Fig.122533: Exemplary illustration of displays in a LICCON computer system program

1 General

Note

- ▶ The illustrations and monitor illustrations in this chapter are only examples.
- ▶ The numerical values in the individual icons and charts do not have to necessarily match the crane exactly.
- ▶ Numbers and letters can be replaced by place holders.
- ▶ The display and assignment of the icons can deviate, depending on the set up configuration, operating status and configuration of the crane.
- ▶ In addition, many of the illustrations show the maximum configuration of the LICCON monitor with icons.
- ▶ In crane operation, an identical display will **not** appear on the LICCON monitor.

The LICCON computer system is a computer system for controlling and monitoring mobile and crawler cranes. In addition to the use of overload protection and load capacity display there are a number of application programs that can be used for controlling and monitoring the crane movements.

The electrical and electronic components are linked via data bus transmission technology (Liebherr System Bus = LSB).

1.1 Overload protection

The overload protection includes limiters and displays (for example load capacity displays), which also alert to danger conditions via acoustic and optical warning signals.

The computer controlled part of the overload protection is called the LICCON overload protection. The LICCON overload protection is set by entering the set up configuration into the LICCON computer system.

The LICCON overload protection works, among others, on the principle of comparing the current and actual load with the maximum load according to the load chart and reeving.

LWE/ab Muli 010/24201-02-02/en

copyright © Liebherr-Werk Ehingen GmbH 2016

1.1.1 Acoustic and optical warning signals

The crane is equipped with acoustical and optical warning device to warn crane operator, auxiliary personnel and any person nearby.

Overview of acoustic / optical warnings, see Crane operating instructions, chapter 4.20.

1.1.2 Actual load

The actual load is determined by recording changing dimensions, the set up configuration and situational influences.

The **load on the crane** results from the load momentum, boom momentum as well as environmental and mechanical influences. The occurring momentums and forces are measured and processed by the LICCON computer system.

The **load momentum** results from load and radius. The load includes load, fastening equipment and hook block / load hook. The radius is calculated with aid of the angle sensor information (boom angle) and the length of the boom system. This also takes into account the boom flexation due to its own weight and the weight of the load.

The **boom momentum** is calculated from the length of the boom system, the crane data (boom weights) and angle sensor information (boom angle).

Environmental and mechanical influences are recorded, determined and taken into account individually.

1.1.3 Maximum load according to load chart and reeving

The crane data such as load charts (also called load capacity charts), boom weights and geometry data are stored in the central data memory of the LICCON computer system.

The *maximum load according to the load chart and reeving* is constantly determined, based on the load charts, for the set reeving, the calculated radius and additional influences.

1.1.4 Comparison

The actual load and the *maximum load according to the loading chart and reeving* are compared. When they approach the specified limit, an advance warning is issued by the overload protection. If this limit is exceeded, the overload protection turns the load moment increasing crane movements off.

1.2 Error messages

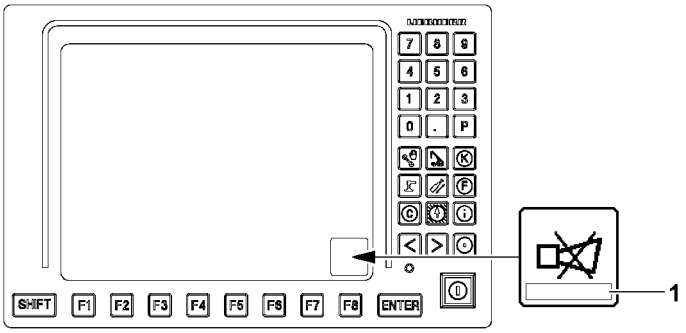

Fig.121805: Display location Error message

The LICCON computer system monitors the crane permanently for operating and system errors.

If an operating error or system error occurs, an error code is generated and issued as an error message. Error messages **1** appear on a fixed display location in the *horn* icon of the LICCON monitor.

LWE/ab Muli 010/24201-02-02/en

copyright © Liebherr-Werk Ehingen GmbH 2016

Note
- ▶ Always pay attention to error messages **1**.
- ▶ For procedure in case of error messages, see Diagnostics manual and the respective chapter in the Crane operating instructions.

2 System start of the LICCON computer system

There are two operating modes for the LICCON computer system:
- LICCON computer system in normal mode (crane engine turned on).
- LICCON computer system in stand-by mode (crane engine turned off).

Starting in normal mode:
- System start of LICCON computer system in connection with a started crane engine.

Starting in stand-by mode:
- See section „Power-Save and Stand-by mode in the LICCON computer system“

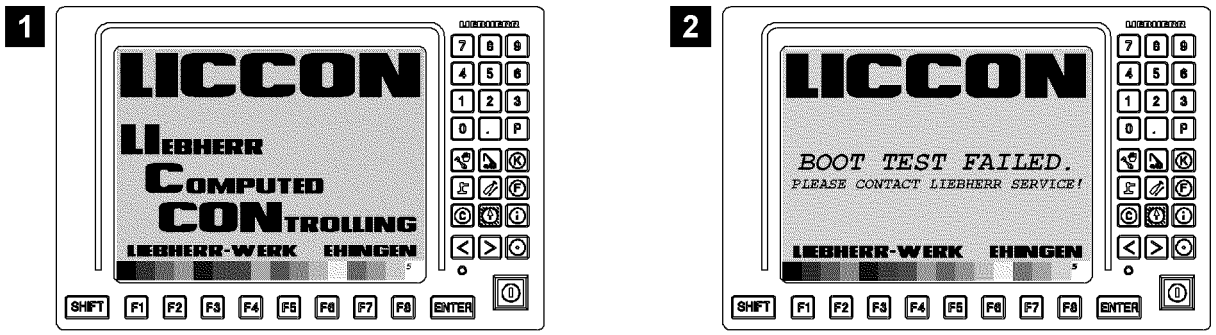

Fig.121801: Self test / Abort self test

All the components of the LICCON computer system run through a self-test after turning the computer on.

During the self test, the start screen on the LICCON computer system appears in the LICCON monitor, see illustration **1**.

Note
Error during the system start of the LICCON computer system.
If an error is found during the system start of the LICCON computer system, then the system start procedure is interrupted, see illustration **2**.
- ▶ Consult Liebherr Service if an error occurs during system start.

LWE/ab Muli 010/24201-02-02/en

copyright © Liebherr-Werk Ehingen GmbH 2016

2.1 LICCON monitor at system start

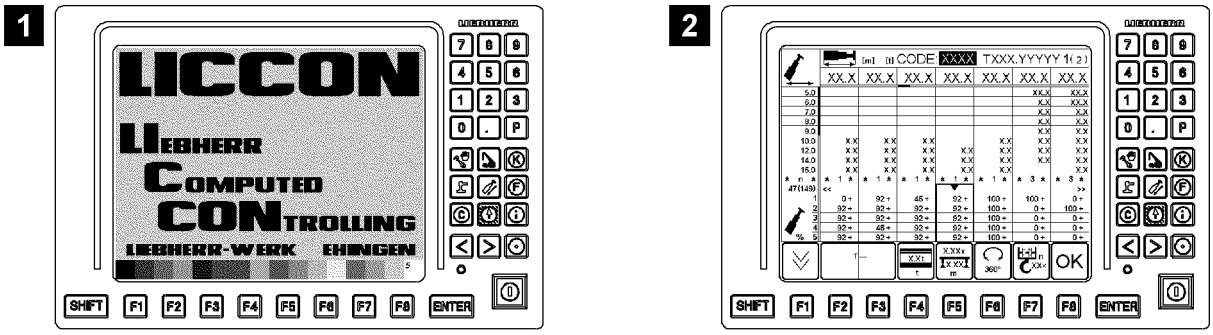

Fig.121802: Self test / set up screen after completed self test

During the self test, the start screen appears, see illustration **1**.

After successful starting procedure, an illustration of the crane type appears on the LICCON monitor for a few seconds.

When the last set set up configuration appears (see example illustration **2**), then system start on the LICCON monitor is completed.

The existing set up configuration or a newly entered set up configuration must be confirmed, see section „The set up program“. Subsequently one can work with the other programs.

3 Operating elements of the LICCON computer system

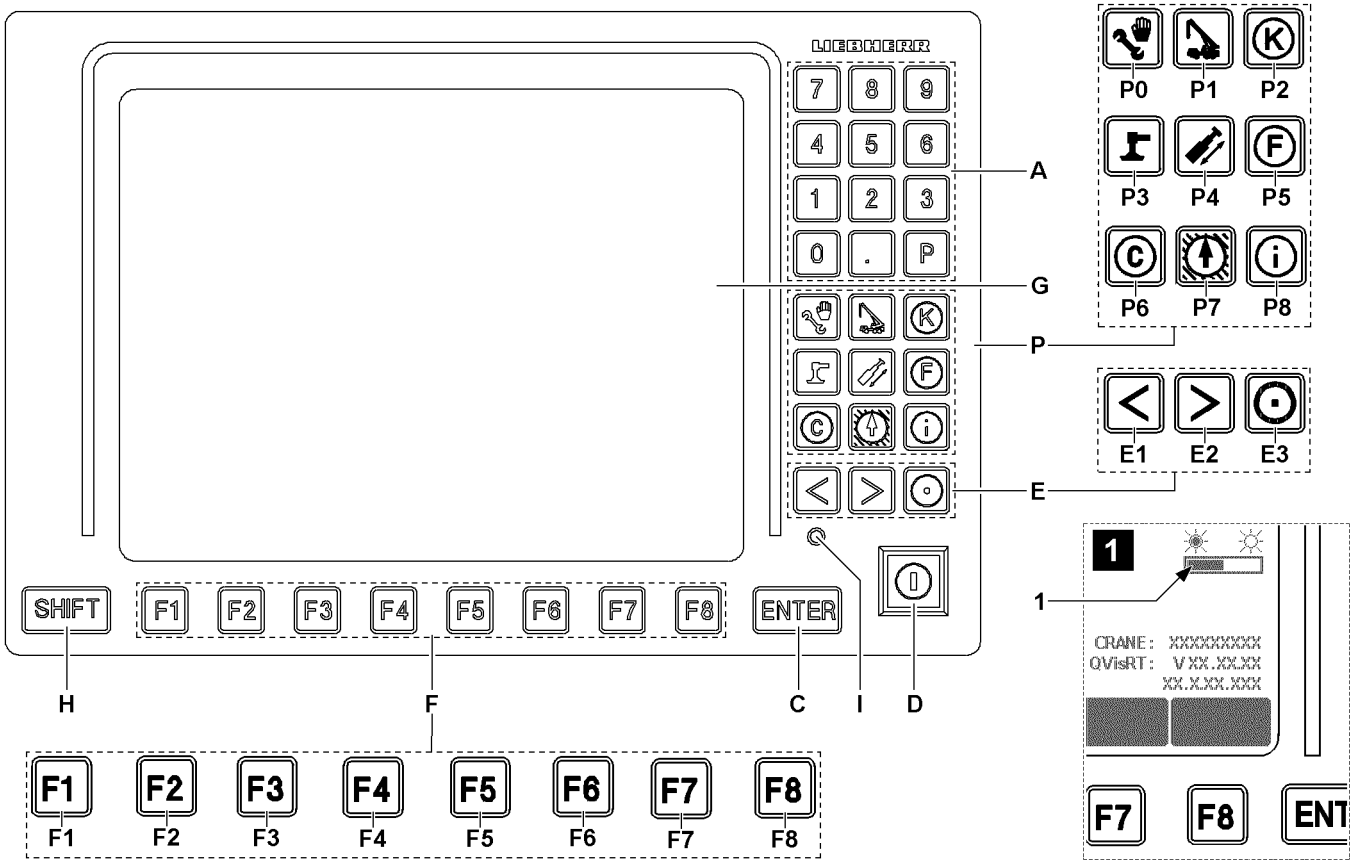

Fig.121803: Operating elements LICCON computer system

LWE/ab Muli 010/24201-02-02/en

copyright © Liebherr-Werk Ehingen GmbH 2016

A Keypad
- Function is program dependent

P Program keys
- Selection of the individual LICCON programs

P0 Set up
- Call up the set up program

P1 Crane operation
- Call up the crane operation program

P2 -
- Program key not assigned.

P3 -
- Program key not assigned.

P4 Telescoping
- Call up the Telescoping program
  Note: Only for crane types with telescoping system TELEMATIK.

P5 Job planner*
- Call up the Job Planner* program
  Note: Only available for certain crane types:

P6 -
- Program key not assigned.

P7 Working range limitation*
- Call up the Working range limitation* program

P8 Test system
- Call up the BSE Test system program
- **Note:** Description Programm BSE test system, see Diagnostics manual.

C Button **ENTER**
- Confirmation of changes in running program

D Set up key

Has the following function only in certain programs:
- Zero position (not actuated):
  Normal operation
- Touching:
  Special functions LICCON overload protection released, see section „Special functions LICCON overload protection“
  Special function TELEMATIK-Emergency operation* released, see section „Special function TELEMATIK emergency operation“

E Special function keys
- Functions of the special function keys are program-dependent and are further explained in the description of the individual LICCON programs.
- **Monitor brightness adjustment:**
  - Press **E3** (hold down) and **E1**: 6-stage night design.
  - Press **E3** (hold down) and **E2**: Brightness setting in 7 stages.
    The brightness adjustment can be made from all available programs (for example: Set up, Crane operation).

Note
Automatic brightness adjustment of the LICCON monitor
The brightness of the LICCON monitor can be matched to the existing light conditions automatically or manually.
The current brightness setting of the LICCON monitor can be seen via the bar display **1** in the starting screen of the BSE test system program (illustration **1**).
▶ In brightness setting *medium brightness* the automatic brightness adjustment is **activated.**
▶ In brightness setting *lowest brightness* the automatic brightness adjustment is **inactive.**
▶ In brightness setting *highest brightness* the automatic brightness adjustment is **inactive.**

LWE/ab Muli 010/24201-02-02/en

copyright © Liebherr-Werk Ehingen GmbH 2016

F Function keys
- The function keys should always be viewed in conjunction with the function key icon line displayed on the display **G**.

G Display
- In the display appears a program-dependent operating screen

H **SHIFT** key
- Second-level key assignments, for example Supervisory function

I LED display
- Indicator light for the supply voltage of the monitor

4 The set up program

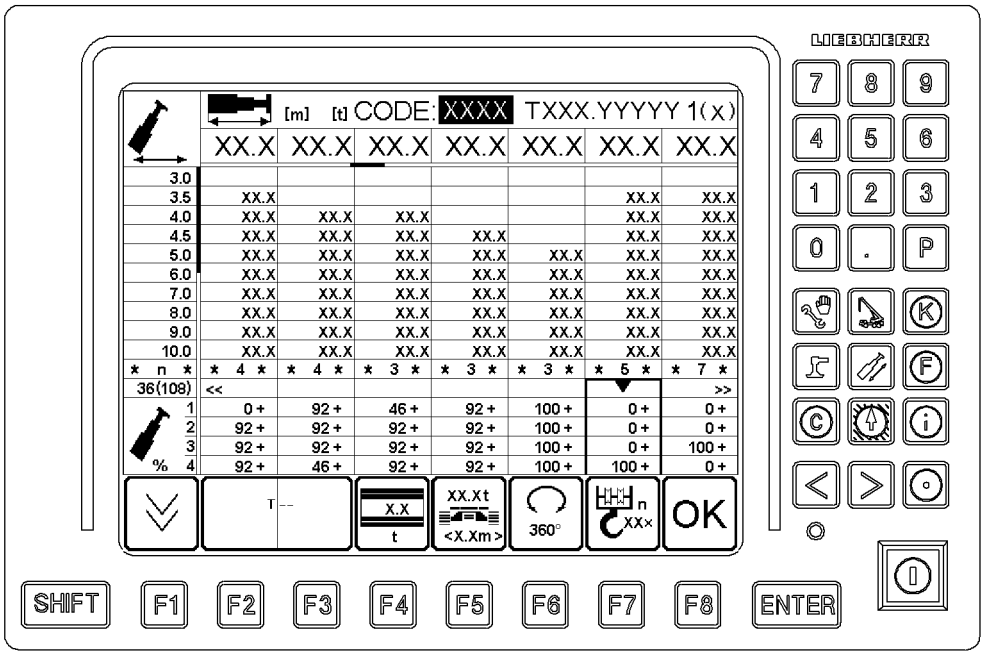

Fig.122537: Exemplary illustration of display in the Set up program

After turning the LICCON computer system on and after correct boot up, the Set up program appears automatically.

Note
Adjustment and display of set up configuration and reeving.
▶ Normally, after booting up the LICCON computer system, the most recently used set up configuration and the reeving used at that time will be automatically set and displayed.

You can see the programmed load charts in the Configuration program.

You can set the desired operating mode and the desired equipment configuration for the crane in the Configuration program to be able to operate the crane.

4.1 Setting the operating mode and set up configuration

The crane operator can select the operating mode and the set up configuration using the function keys or by entering a short code.

4.1.1 Setting the operating mode and set up configuration via the function keys

The function keys are explained in section „Function key line (Set up)“ in this chapter.

copyright © Liebherr-Werk Ehingen GmbH 2016

▶ Select the respective function keys.
▶ Press the **ENTER** key to confirm and accept the settings.

Result:

– The data of the selected load chart can be viewed.

4.1.2 Setting the operating mode and set up configuration with the short code

The function keys are explained in section „Function key line (Set up)“ in this chapter.

▶ Enter the short code with the keypad on the LICCON monitor.
▶ Press the **ENTER** key to confirm and accept the settings.

Result:

– The data of the selected load chart can be viewed.

4.2 Display areas in the Set up program

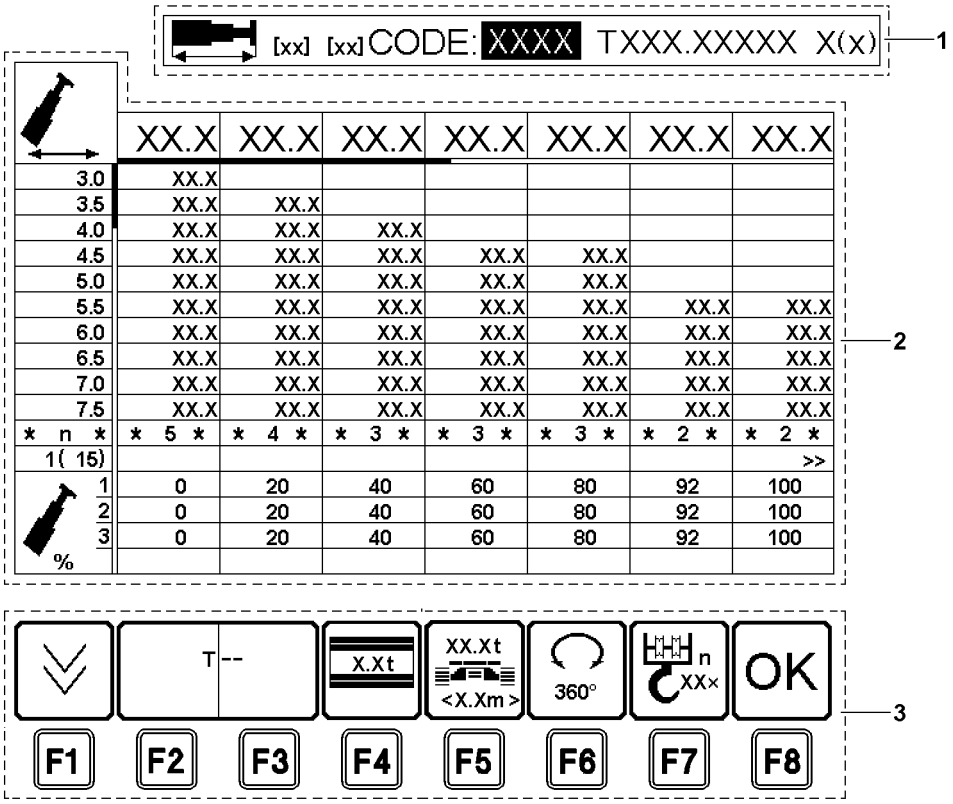

Fig.122534: Display areas in the Set up program

The monitor is divided into three areas in the Set up program:
– **1** General information line
– **2** Display area of load chart values
– **3** Function key line (Set up)

LWE/ab Muli 010/24201-02-02/en

copyright © Liebherr-Werk Ehingen GmbH 2016

4.2.1 General information line

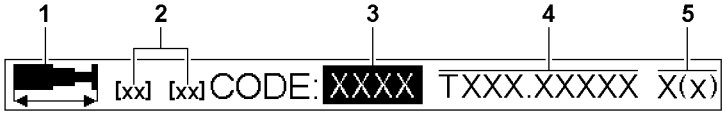

Fig.121819: General information line

1 *Telescopic boom length* icon
- **Note:** The icon is identical in all operating modes.

2 Abbreviations
- For the programmed length units (LE) and weight units (GE)
  Possible length units are [m] and [ft]
  Possible weight units are [t] and [lbs]

3 4-digit short code
- Stands next to the word **CODE**
- Each short code uniquely identifies a crane configuration. The valid set up configuration and their associated short code numbers for the crane can be found in the load chart manual of the crane.
- If, via the function key line:
  - an invalid set up configuration is selected, then the „CODE 0000“ is shown in white on red background.
  - a valid set up configuration is selected, then the short code is shown in white on blue background. The values in the load capacity field is only filled in after pressing the **ENTER** key.

4 Organization number
- For internal Liebherr load chart administration

5 Page counter
- In front of the parenthesis is the number of the displayed page of this load chart
- The total number of pages in this load chart is in parentheses

4.2.2 Function key line (Set up)

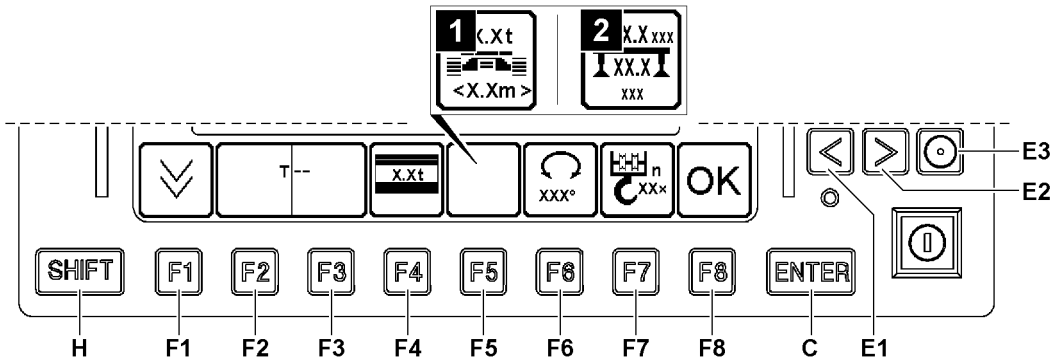

Fig.122535: Function key line in the Set up program

The function key line consists of function keys **F1** to **F8** and the icon line above it. The function keys correspond to the various function key icons above them.

Various functions are indicated by the function key icons, or they may refer to changes of operating mode and crane configuration.

Depending on the crane type and set up configuration, fewer function key icons may be present.

Not all function keys have icons / functions assigned to them. This depends on the program selection.

Pressing a function key can change the appearance of the icon above, its meaning, or its textual content.

LWE/ab Muli 010/24201-02-02/en

copyright © Liebherr-Werk Ehingen GmbH 2016

Note

- ▶ By simultaneously pressing the special function key **E3** and the function key **F3** it is possible to switch by groups through the accessories. This allows quicker access to the operating mode required for crane application.
- ▶ See also description „**E3** and **F3**“ as well as „**E3** and **SHIFT** and **F3**“.

F1 Vertical paging

- Depending on the size of the monitor, up to 10 load chart lines can be displayed at once. If a chart consists of more than 10 lines, then the display is spread over several pages.
- Press the button to show the next page of the load chart - the page counter counts up one page.
- The function key icons always show the functions which are activated by pressing the button.
- The function is called up after pressing a button. In addition, the icon above it can change its display, its meaning or its text.

SHIFT and **F1**

- Press the button to show the previous page of the load chart - the page counter counts down one page.

F2 Main geometry condition

- Options for setting the different main geometry conditions of the crane (if available). The types are described by abbreviations and length data in the icon.
  Example: „T“ for telescopic boom

SHIFT and **F2**

- Previous main geometry condition (if present)

F3 Accessories

- Options for selecting the different accessory geometry conditions of the crane (if available). The types are described using abbreviations, angle and length data in the icon.
  Example: „TK“ for Crane operation with mechanically adjustable folding jib
- **Note:** Pressing the function key **F2** and / or the function key **F3** deletes all operating mode and configuration dependent data from the monitor and sets the short code in the general information line to a new value. The „CODE 0000“ is displayed in white on red background if the set set up configuration for function keys **F4**, **F5** and / or **F6** does not exist or has not been programmed. For the existing set up configuration, the short code, more than 0, appears in white on blue background.
- **Operating mode dependent data:**
  - Icons
  - Length units and weight units
  - Load chart organization number
  - Telescopic boom lengths
  - Percentage extension condition of telescopic sections, with status indicator if applicable
- **Set up dependent data:**
  - Radius values in length units
  - Load values in weight units

SHIFT and **F3**

- Previous accessory geometry condition

E3 and **F3**

- Select the accessories in groups forward („K*****“, „HK*****“) by pressing key combination **E3** (hold down) and then pressing function key **F3**
  Note: After actuation, the first accessory configuration for the next accessory group is set.

E3 and **SHIFT** and **F3**

- The accessories can be selected in groups in reverse („HK*****“, „K*****“) by pressing key combination **E3** and **SHIFT** (holding down both) and then pressing function key **F3**.
  Note: After actuation, the first accessory configuration for the previous accessory group is set.

LWE/ab Muli 010/24201-02-02/en

copyright © Liebherr-Werk Ehingen GmbH 2016

F4 Counterweight
- Adjustment option for the current counterweight, which must be on the superstructure in order to achieve the values in the current chart. When pressing a key, the following icon appears with additional text in the counterweight icon.

SHIFT and **F4**
- Set the previous counterweight

F5 Set up configuration Crane chassis
- When working with the present load chart, then the set up configuration of the crane chassis must match.
- Crawler travel gear, illustration **1**: Setting possibility for the extension status of the cross carriers, the track width of the crawler and the current central ballast.
- Support (only for crane types with extra load charts on support), illustration **2**: Setting possibility for the support width and the current central ballast.

SHIFT and **F5**
- Previous set up configuration Crane chassis

F6 Slewing range - Superstructure
- Adjustment option for slewing range

Example:
- 360° slewing range: Unlimited rotation is possible.
- 0° slewing range: Toward the rear (locked).

SHIFT and **F6**
- Set the previous slewing range

F7 Hoist rope reeving
- Adjustment possibility for the number of hoist rope strands, which are reeved to reach a certain load capacity on the boom.
  The displayed number of hoist rope strands (reeving) in the icon will be increased with every keystroke by one counter, up to a fixed maximum value for the respective operating mode. After that the counter restarts from a fixed minimum value.
  If the set value is still within the minimum and maximum values when switching to another operating mode within that range, it remains valid. Otherwise it will be set to the minimum value for the new operating mode.
  Note: For certain operating modes, for example THKH the hoist rope reeving is specified and cannot be otherwise set.

SHIFT and **F7**
- Reduce the reeving number by 1

WARNING
Danger of accident due to incorrectly entered set up configuration!
The following prerequisites must be met before pressing the function key *OK* **F8**:
- ▶ The set up configuration setting must be completed, i.e. a valid short code is displayed and load capacity values are in the chart field.
- ▶ The external conditions for this set up configuration, if specified, must be fulfilled (e.g. locking the superstructure, hoist rope reeving).
- ▶ The crawler carriers must be extended to the specified track width in the selected load chart.
- ▶ If these prerequisites are met, then the function key *OK* **F8** confirms that the selected set up configuration and the selected reeving are correct and transfers the parameters to the Crane operation program.

F8 Function key *OK*
- Accept the selected set up configuration and automatic change over in the operating screen.
  Note: Make sure, after switching to the operating screen, that the selected set up configuration (short code) and the hoist rope reeving(s) have been accepted.

  If the active set up configuration is to be changed:
- The utilization bar must be blue.

copyright © Liebherr-Werk Ehingen GmbH 2016

- The crane may not be utilized too much (20 % utilization or less, load not heavier than 0.5 t).

4.2.3 Operating elements in the Set up program

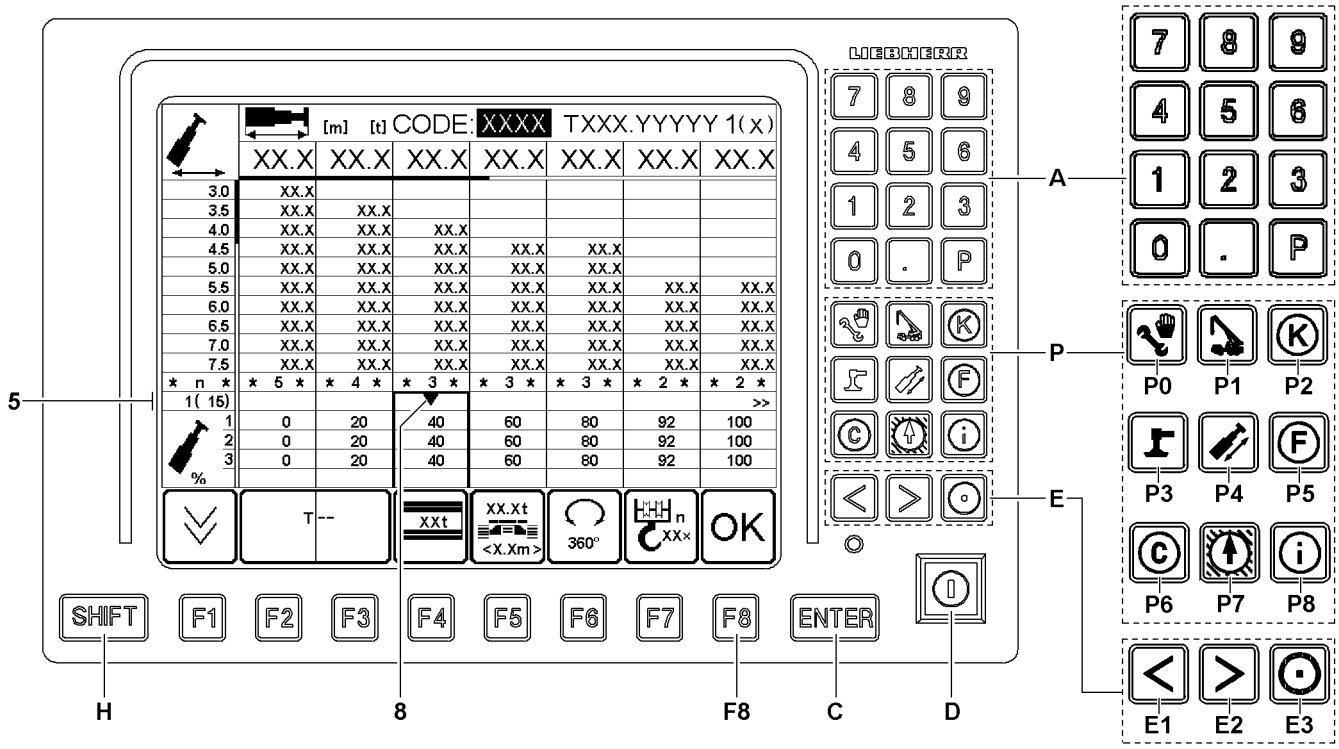

Fig.122536: Operating elements in the Set up program

A Numeric keypad
- The keys **0** to **9** on the keypad can be used to enter the short code directly into the LICCON monitor. During entry, the short code is displayed in green.
- The key **P** and the key **.** have no function in the Set up program.
- **Note**: Pressing the keypad deletes all operating mode and set up configuration dependent data from the display.

P Program keys
- Selection among the individual programs. The settings in the set up program are discarded and the set up configuration and reeving, which were last confirmed with the function key *OK* **F8** are continued to be used.

C Button **ENTER**
- Confirmation of input both for short codes as well as for any change in the set up configuration via the function keys
  - **ENTER** after entering the short code searches for the short code in the programmed load charts. If the relevant load chart has been programmed, it is displayed in full. If the relevant load chart has **not** been programmed, the short code is displayed in white on red background and an acoustic signal from the LICCON monitor is heard.
  - **ENTER** after a changing the operating mode with the function key **F2** and / or the function key **F3** displays the load chart (if the chart exists) with the short code on the LICCON monitor.
  - **ENTER** after a change in the set up configuration with the function key **F4**, the function key **F5** and the function key **F6** displays this load chart (if the chart exists) with the short code on the LICCON monitor.
- **Note:** If no load chart is defined or available for the changed operating mode, then, after pressing the **ENTER** key, the first available set up configuration in this operating mode with the appropriate load chart and short code will be displayed in the set up screen.

LWE/ab Muli 010/24201-02-02/en

copyright © Liebherr-Werk Ehingen GmbH 2016

D Set up key
- Has no function in the Set up program

E Horizontal paging
- The key **E1** and key **E2** only have a function if this is indicated in the line *special displays* **5**.
  If a load chart consists of more than 7 columns, the first display of the set up configuration only shows columns the first seven columns in this line.
  - With the key **E1**, the cursor **8** can be moved to the left.
  - With the key **E2**, the cursor **8** can be moved to the right.

  The double arrow at the right edge of the line points to additional columns in either direction. If the cursor **8** (movement mark) is moved to an edge marked with arrows, then, for example, when pressing the key **E2** again, the chart columns are moved by 3 columns to the left.
- **Note:** By pressing key **E1** or key **E2** twice in quick succession, you can page to the left or right by 7 load chart columns (equals the display area of the LICCON monitor).

H **SHIFT** key
- **SHIFT** (hold down) and **E1**: Jump to first column in load chart.
- **SHIFT** (hold down) and **E2**: Jump to last column in load chart.

5 The Crane operation program

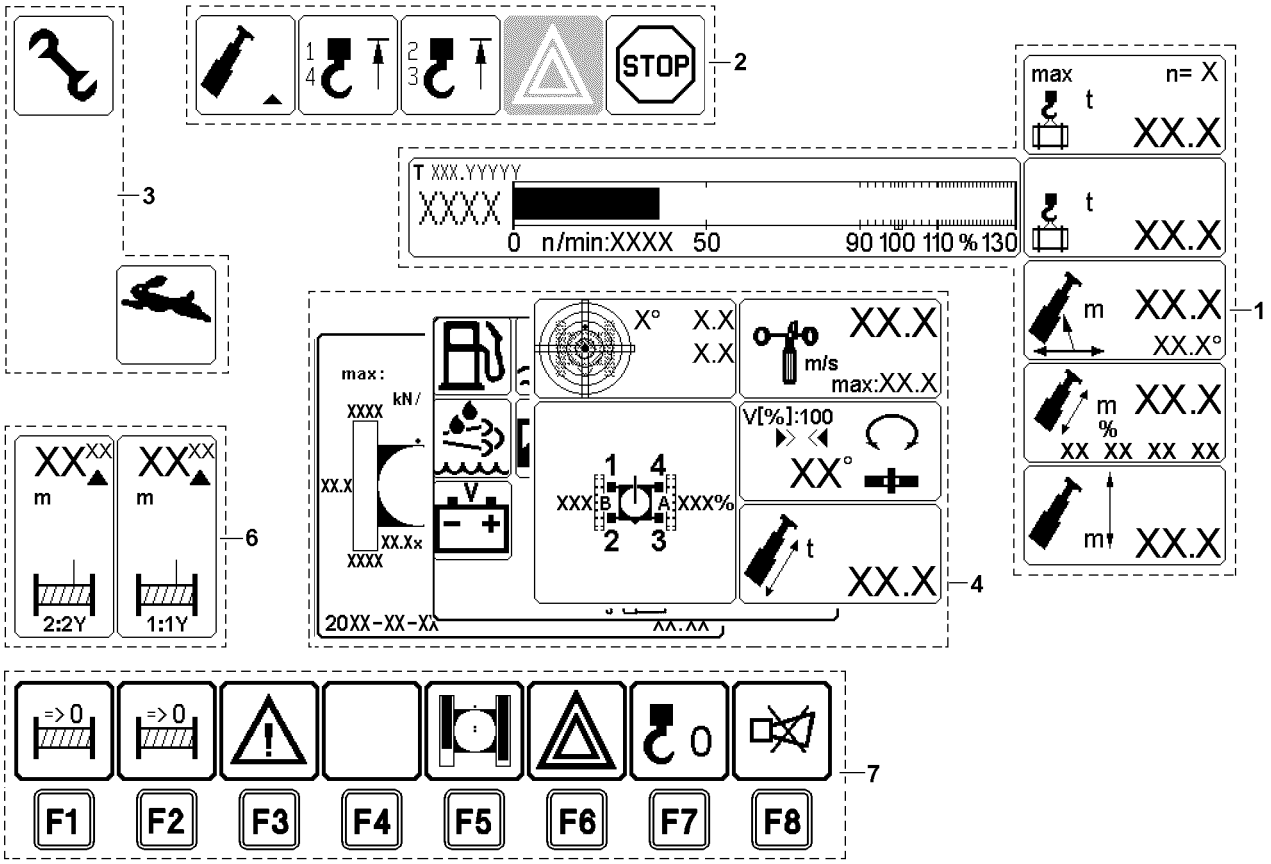

Fig.122528: Exemplary illustration of displays in the Crane operation program

The LICCON program Crane operation assists the crane driver by displaying clearly on the monitor the data needed for operating the crane. An acoustic signal accompanies all critical displays. Depending on the equipment, a range of other icons may also be turned on as additional displays, either as required by the crane operator or automatically in the event of a problem.

copyright © Liebherr-Werk Ehingen GmbH 2016

It also alerts the crane operator to imminent overload conditions. In the event of overload and many error conditions, which could be hazardous, the system shuts off.

The monitor is divided into seven areas in the Crane operation program:
- **1** Crane geometry and load information
- **2** Alarm functions
- **3** Special functions
- **4** Monitoring functions
  - Monitoring functions during crane operation
  - Monitoring of surface pressure and center of gravity
  - Monitored auxiliary functions
- **6** Winch display
- **7** Function key line (crane operation)

Note
- ▶ The monitor illustrations in this chapter are only examples. The display values in the individual icons and charts do not have to necessarily match the crane exactly. The configuration of the LICCON monitor with icons is only descriptive.
- ▶ An identical icon display will **not** appear during crane operation.

5.1 Crane geometry and load information

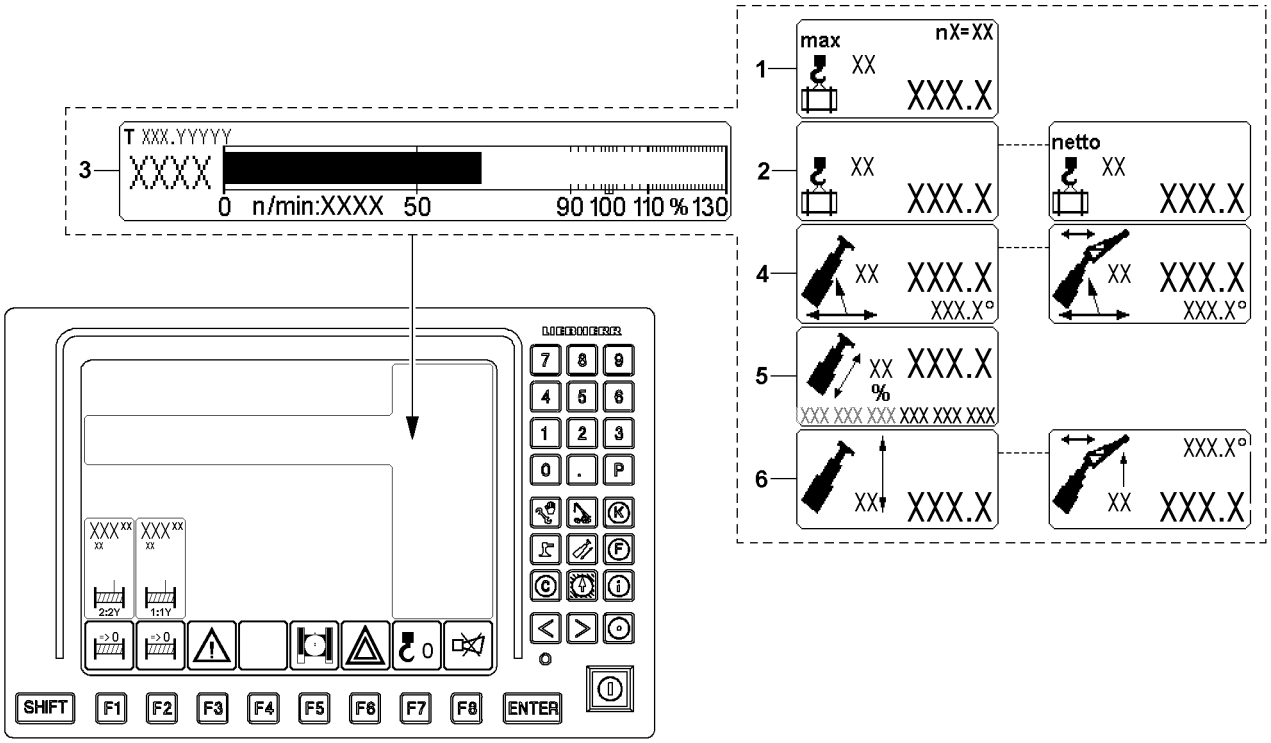

Fig.123733: Crane geometry and load information

Note
- ▶ The crane illustrations in this section are only examples and are generalized.
- ▶ They may differ from the crane type and equipment.

The information regarding crane geometry and load involves six icons:

1 Maximum load

2 Actual load / net load
- **Note:** The actual load display can be changed over to the net load display.

LWE/ab Muli 010/24201-02-02/en

copyright © Liebherr-Werk Ehingen GmbH 2016

3 Bar diagram Utilization

4 Radius
- **Note:** For crane types with auxiliary boom* the illustration of the icon can change depending on the set up configuration.

5 Boom length

6 Pulley head height
- **Note:** For crane types with auxiliary boom* the illustration of the icon can change depending on the set up configuration.

Note

▶ A question mark („?“) is shown instead of values when no load chart value can be accessed.
Example: The crane is not in the range of the load chart.

▶ A question mark („?“) is shown instead of values if the value cannot be calculated / determined.
Example: A sensor error can be present - pay attention to error messages.

5.1.1 Maximum load

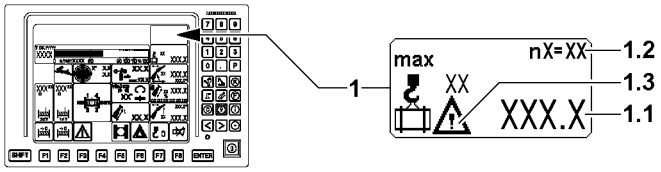

Fig.122529: Display Maximum load

1 *Maximum load* icon
- With text for measurement unit

1.1 Maximum load
- Maximum load according to load chart
- In [t] or [lbs]

1.2 Reeving
- Reeving according to settings from the Set up program

1.3 Warning icon*
- **Note**: Appears exclusively for crane types with respective crane configuration.
- The warning icon **1.3** is shown when:
  - The maximum wind speed is exceeded.
  - The track width does not correspond to the set up nominal status*.
  - The permissible crane incline is exceeded.

WARNING

Danger of accident!

▶ If the warning icon **1.3** appears on the LICCON monitor, crane operation is prohibited.

▶ Initiate measures to counteract the warning message and to bring the crane into a safe operating condition.

5.1.2 Actual load (current load) / net load

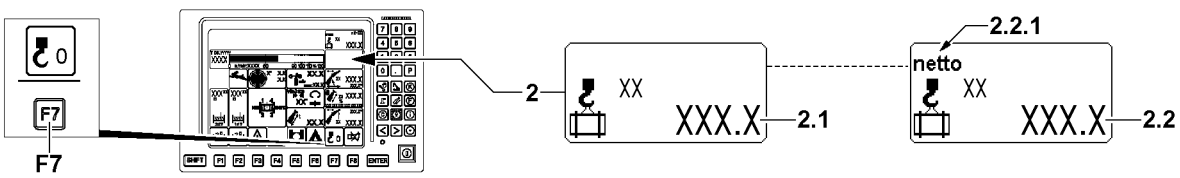

Fig.122530: Display Actual load / net load

copyright © Liebherr-Werk Ehingen GmbH 2016

2 *Actual load / net load* icon
- With text for MU [t] or [lbs]

2.1 Actual load display
- Actual load display = load in [t] or [lbs] that is currently suspended from the boom
- Display of the calculated total load including the weights of the load carrying, the load handling and / or the fastening equipment.

2.2 Net load
- Net load display = the actual load display **2.1** can be changed at any time to net load **2.2** (tared) by pressing the function key **F7**.
- After pressing the function key **F7** the display value is set to zero and the word net **2.2.1** is shown.
- As long as net load is set, the icon above the function key **F7** is shown in red.
- If the taring is cancelled, the word net **2.2.1** disappears from the icon and the gross load value is displayed.

  The change to net load is cancelled by each of the following actions:
  - By pressing the function key **F7** again.
  - By telescoping the boom by more than three LE (LE= 1 decimeter or 1/10 ft)
  - By luffing by more than ±4°.
- **Note**: This makes it possible to eliminate the weights of the load handling, take up and / or fastening equipment in the display value. The maximum load is not increased / matched.

WARNING
Incorrectly determined weight of the load!
Due to operating errors or tolerances, deviations can occur for the displayed values in the *Actual load / net load* icon **2**.
- ▶ The actual load display / net load display is no calibrated weighing device.
- ▶ Always observe the actual weight of the load in connection with the load charts and the set up configuration of the crane.

5.1.3 Bar diagram Utilization (dynamic utilization bar display)

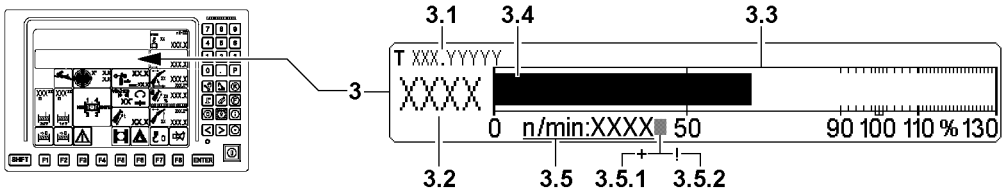

Fig.122531: Bar diagram Utilization

3 *Bar diagram Utilization* icon

3.1 Chart name
- Note to the set chart name (chart number) with associated operating mode

3.2 Short code
- Identifies the selected set up configuration

3.3 Utilization scale
- Marking from a utilization of 90 %: **Advance warning**
- Marking at a utilization of 100 %: LMB-STOP, **Shut off selected crane movements**

3.4 Utilization bar of crane
- Current utilization of crane according to load chart and reeving
- Displayed as bar diagram
- Appears in blue, green, yellow and red, depending on the situation
- Utilization bar **3.4** blue: Utilization in permissible range, set up change of crane in this utilization is permissible
- Utilization bar **3.4** green: Utilization in permissible range

LWE/ab Muli 010/24201-02-02/en

copyright © Liebherr-Werk Ehingen GmbH 2016

- Utilization bar **3.4** yellow: **Advance warning!** Utilization just before impermissible range
- Utilization bar **3.4** red: **Warning!** Utilization in impermissible range

Utilization of crane according to load chart and reeving		
Current utilization of the crane	=	Actual load / Maximum load

Note

▶ The set up configuration of the crane may only be changed if the utilization bar **3.4** is blue or if there is no load on the hook (load hook / hook block).

3.5 Engine speed
- In revolutions per minute [rpm]
- **NOTICE:**
  If the display is in red, an error is present.
- **Note:** Question marks („?“) instead of a numeric value appear if there is an error in the rpm recording.
  Then the rpm specified by the control for the diesel engine is set for the output regulation of the drives.
  The rpm specified by the control is shown blinking.
  An error message is issued.

3.5.1 Engine rpm lock
- The engine rpm can be locked on the master switch. If the engine rpm has been locked, the „**+**“ sign appears behind the rpm display.

3.5.2 Limitation Engine rpm ECO-Mode
- The engine rpm can be limited in ECO Mode, see section „ECO Mode“. If the engine rpm is limited, the „**!**“ sign appears behind the rpm display.

5.1.4 Radius

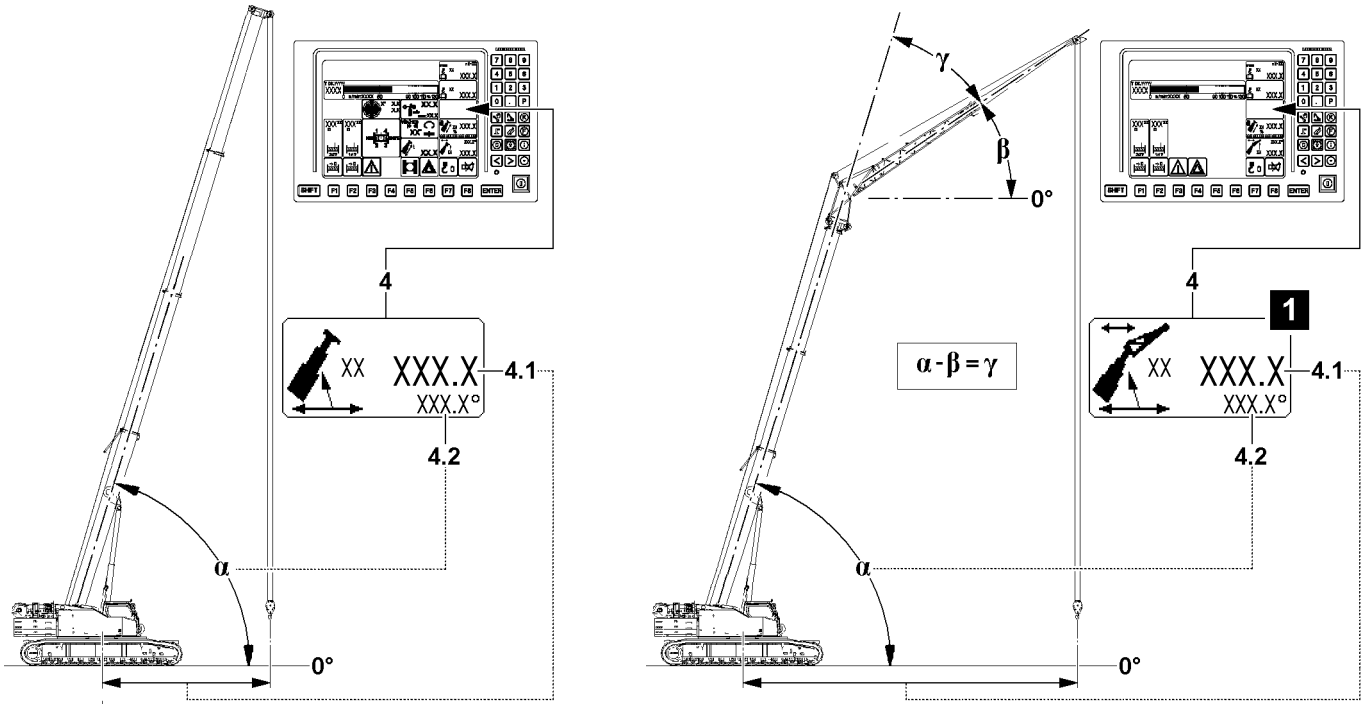

Fig.122526: Boom radius display

LWE/ab Muli 010/24201-02-02/en

copyright © Liebherr-Werk Ehingen GmbH 2016

Note

▶ For crane types with auxiliary boom* the illustration of the icon can change depending on the set up configuration, see example illustration **1**.

4 *Boom radius* icon

4.1 Radius
- In [m] or [ft]
  Denotes the horizontal distance of the load hook from the center of rotation of the crane superstructure. This also takes into account the boom flexation due to its own weight and the suspended weight of the load.

4.2 Main boom angle
- In [°]
- Displayed is the angle of the main boom to the horizontal (angle **α**)

5.1.5 Main boom length

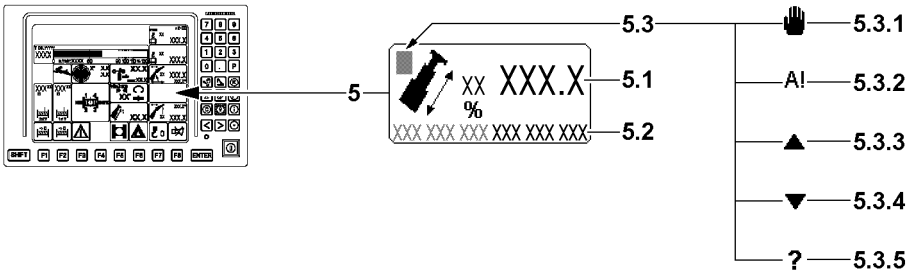

Fig.122532: Main boom length display

5 *Main boom length* icon

5.1 Length of main boom
- In [m] or [ft]

5.2 Extension conditions of individual telescopic sections
- In [%]
- The extension conditions of telescope 1, telescope 2 etc. are shown from the left to the right.
  Note: Depending on the crane type, up to seven extension conditions can be displayed

5.3 TELEMATIK
- **Note**: Only for crane types with telescoping system TELEMATIK
- **5.3.1** Manual telescoping active
- **5.3.2** Preselected telescoping target reached
- **5.3.3** Arrow pointing up: Request telescope out
- **5.3.4** Arrow pointing down: Request telescope in
- **5.3.5** Error in system, observe error message

Note

▶ In the icon *boom length* **5** all required information is shown to allow an experienced crane operator to telescope the telescopic boom to the desired length.

▶ For a detailed description for telescoping, see Chapter 4.05.

LWE/ab Muli 010/24201-02-02/en

copyright © Liebherr-Werk Ehingen GmbH 2016

5.1.6 Pulley head height

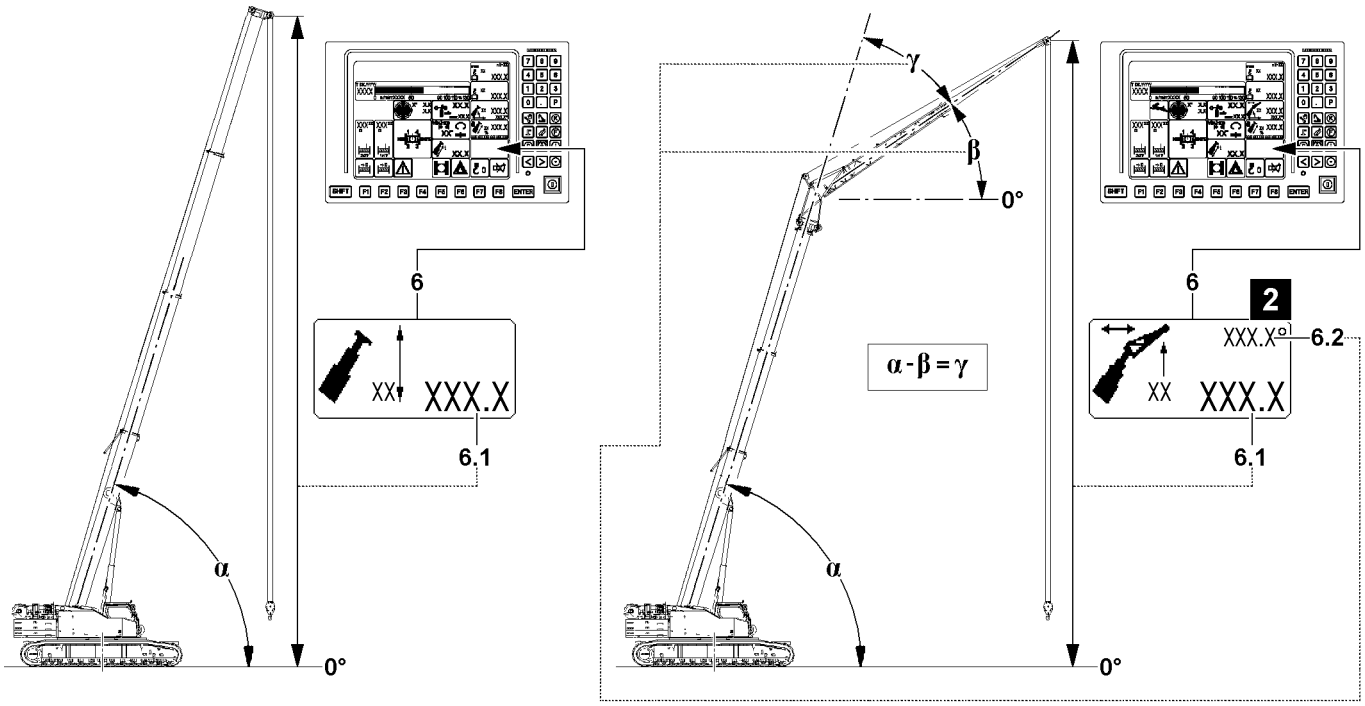

Fig.122527: Boom head height display

Note

▶ For crane types with auxiliary boom* the illustration of the icon can change depending on the set up configuration, see example illustration **2**.

6 *Pulley head height* icon

6.1 Pulley head height
- In [m] or [ft]
- Identifies the vertical distance from the crane base to the selected pulley head axle, for which the displayed maximum load applies.

6.2 Angle Auxiliary boom / accessory
- In [°]

Note

▶ Depending on the set up configuration and the load chart, a differentiation is made between an absolute angle display or a relative angle display. Position of angle, see example Illustration **2**.

β Absolute angle auxiliary boom / accessory
- The angle of the auxiliary boom / accessory to the horizontal in [°]
- Display absolute angle: For operating modes with load chart for specified angles of the main boom.

  or

γ Relative angle auxiliary boom / accessory
- Angle between the main boom and the auxiliary boom / accessory in [°]
- Display Relative angle: For operating modes with load chart for specified angles of the auxiliary boom / accessory.

LWE/ab Muli 010/24201-02-02/en

copyright © Liebherr-Werk Ehingen GmbH 2016

5.2 Alarm functions

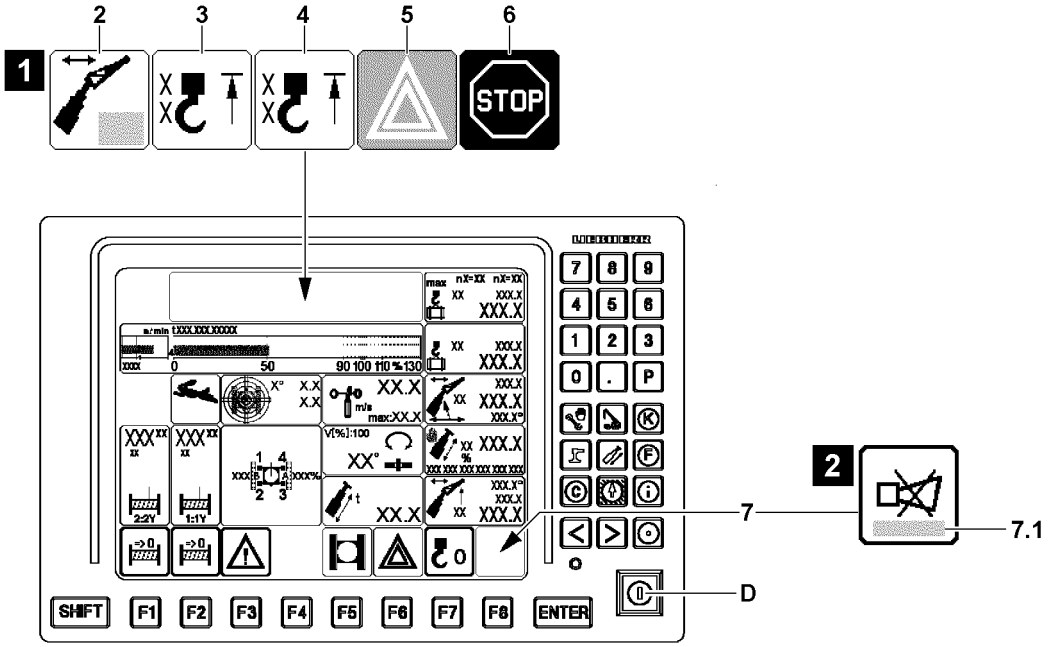

Fig.123723: Exemplary illustration of alarm functions

NOTICE
Triggered alarm function!
If an alarm function is triggered (for example an advance warning occurrence or shut off of crane movement), the cause must be determined.
▶ Always pay attention to triggered alarm functions.

The limit ranges of the crane movements are monitored. When the limit ranges are reached, the crane operator is warned by the alarm functions.

The alarm functions are shown by the LICCON monitor via:

- Icons, shown optically, see illustration **1**.
- A warning sound is acoustically reported.

If a warning occurs, an error message **7.1** is issued in the *horn* icon **7**, see illustration **2**.

The alarm functions include:

2 Boom limitation
- See section „Boom limitations“

3 Hoist limit switch
- Hoist limit switch of first load position
- See section „Hoist limit switch“.

4 Hoist limit switch
- Hoist limit switch of second load position*
- See section „Hoist limit switch“.

5 Occurrence of an advance warning
- See section „Occurrence of advance warning“

6 Shut off of crane movement
- See section „Shut off of crane movement“

as well as

7 Acoustic warnings
- See paragraph „Acoustic warnings on the LICCON monitor“.

LWE/ab Muli 010/24201-02-02/en

copyright © Liebherr-Werk Ehingen GmbH 2016

5.2.1 Boom limitations

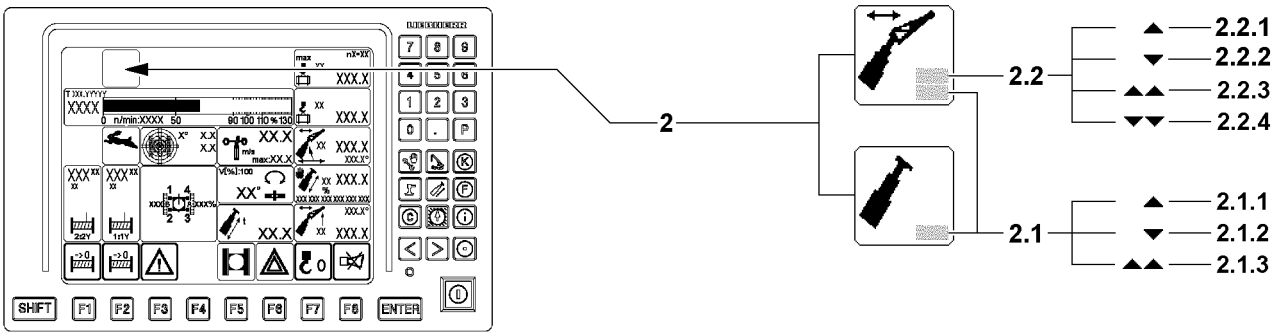

Fig.123724: Exemplary illustration of boom limitations

Limit signs main boom

Note

- The *Boom limitation* icon **2** can change in different operating modes, but it is shown always at the same position in the LICCON monitor.
- The field **2.1** refers to the main boom.
- The field **2.2** refers to the auxiliary boom / accessory.

2.1 *Boom limitation Main boom* icon

- The luffing range of the main boom is limited both upward and downward.
- This icon appears if an end position determined by the load chart is reached when luffing the boom or when luffing the boom is disabled by a proximity switch.

Position	Icon	Description
2.1.1	▲	The shut off *Luffing up the main boom* is made by running against the upper load chart limit. **Note:** Luffing down the main boom is still possible.
2.1.2	▼	The shut off *Luffing down the main boom* is made by running against the lower load chart limit. **Note:** Luffing up the main boom is still possible.

WARNING
Alarm function deactivated!
When the set up key **D** is actuated, there is no shut off of crane movement via position **2.1.1** and position **2.1.2**.

- Observe chapter 4.20.

Position	Icon	Description
2.1.3	▲▲	The shut off *Luffing up the main boom* is made by triggering the proximity switch (boom steep). **Note:** Luffing down the main boom is still possible.

copyright © Liebherr-Werk Ehingen GmbH 2016

Limit sign auxiliary boom / accessory

Note

- ▶ The *Boom limitation* icon **2** can change in different operating modes, but it is shown always at the same position in the LICCON monitor.
- ▶ The field **2.1** refers to the limitation sign main boom.
- ▶ The field **2.2** refers to the limitation signs auxiliary boom / accessory.

2.2 *Boom limitation auxiliary boom / accessory* icon

- The luffing range of the auxiliary boom / accessory is limited both upward and downward.
- This icon appears if an end position determined by the load chart is reached when luffing the auxiliary boom / accessory or when luffing is disabled by a limit switch.

Position	Icon	Description
2.2.1	▲	The shut off *Luffing up the auxiliary boom / accessory* is triggered by running against the upper load chart limit. **Note:** Luffing the auxiliary boom / accessories down remains possible.
2.2.2	▼	The shut off *Luffing down the auxiliary boom / accessory* is triggered by running against the lower load chart limit. **Note:** Luffing the auxiliary boom / accessory up remains possible.

WARNING
Alarm function deactivated!
When the set up key **D** is actuated, there is no shut off of crane movement via position **2.2.1** and position **2.2.2**.
▶ Observe chapter 4.20.

Position	Icon	Description
2.2.3	▲▲	The shut off *Luffing up the auxiliary boom / accessory* occurred by running against a proximity switch (*Jib on top block* or *Jib on top flap*). **Note:** Luffing the auxiliary boom / accessories down remains possible.
2.2.4	▼▼	The shut off *Luffing down the auxiliary boom / accessory* is triggered by running against one of the block limit switches (*jib bottom*). **Note:** Luffing the auxiliary boom / accessory up remains possible.

Failure of sensor / limit switch

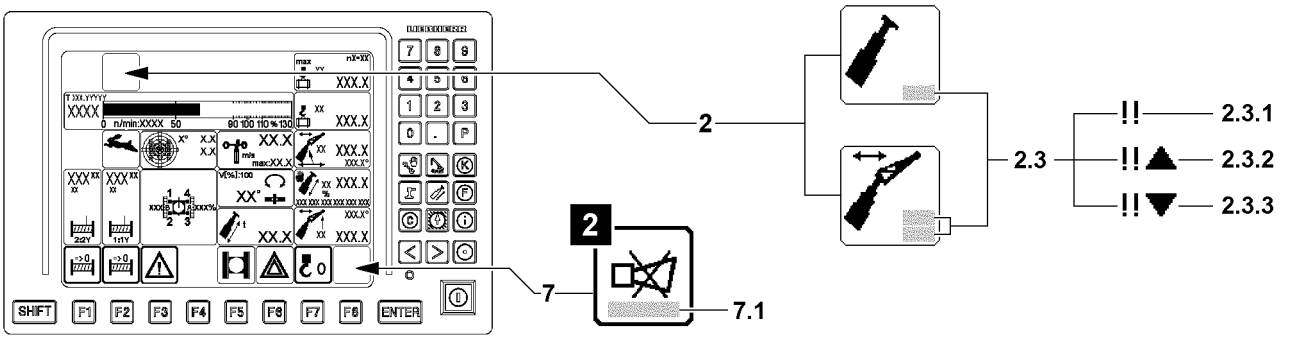

Fig.123725: Exemplary illustration of failure of sensor / limit switch

LWE/ab Muli 010/24201-02-02/en

copyright © Liebherr-Werk Ehingen GmbH 2016

NOTICE
Failure of sensor / limit switch!
Depending on the classification of the sensor / limit switch, the crane can continue to be operated with limitation or is shut off by the control.
An error message **7.1** is issued in the *Horn* icon **7**, see illustration **2**.
The error message shows defective sensors / limit switches, see Diagnostics manual.
- ▶ The error must be remedied immediately.
- ▶ Crane movements after a failure of a sensor / limit switch must be carried out anticipatorily and with extreme caution.

Position	Icon	Description
2.3.1	!!	On the auxiliary boom / accessory, at least one associated sensor / limit switch is defective / missing. If an alarm function occurs at the same time, then the icon can be shown differently, see position **2.3.1**, position **2.3.2** or position **2.3.3**.
2.3.2	!!▲	
2.3.3	!!▼	**Note:** Not every failure of a sensor / limit switch on the boom is shown in the *Boom limitation* icon **2**. Observe the error message in the *Horn* icon **7**.

Note
- ▶ Depending on the classification of the sensor / limit switch, the respective crane movement is shut off in case of a failure **unbypassably**. An emergency operating mode may be required for subsequent steps.
- ▶ When deflecting the master switch, an operating error message is issued in the *Horn* icon **7**. The operating error message shows defective sensors / limit switches.
- ▶ If the error cannot be remedied by yourself, contact Liebherr Service.

5.2.2 Hoist limit switch

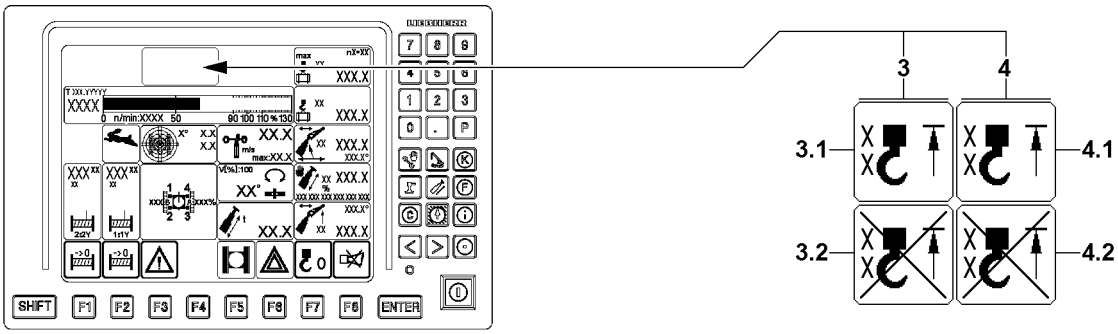

Fig.123726: Exemplary illustration of hoist limit switch triggered / bypassed

In order to prevent the crane from being operated without hoist limit switches (HES), the minimum hoist limit switch configuration is continuously monitored to ensure it is present. If a hoist limit switch required for a particular operating mode is not plugged in, therefore not active on the LSB bus system, corresponding crane movements can be disabled and an operating error message is also issued.

The identification of the triggered hoist limit switch HES1 to HES6 appears in the respective icon.

3 *Hoist top* icon
- *Hoist top* icon **3** for the first load position
  Note: Appears only when a hoist limit switch is active for the first load position on the LSB bus system.

copyright © Liebherr-Werk Ehingen GmbH 2016

3.1 *Hoist top triggered* icon
- The *Hoist top triggered* icon **3.1** appears when:
  - The hook block is pulled against the hoist limit switch.
  - The minimum weight on the hoist limit switch is not attached (for example on placed down boom).
  - The hoist limit switch is not active, although it must be present on the bus.
  - The hoist limit switch has an internal error.
- **Note:** Spool up hoist winches is turned off.
  Additional crane movements can be turned off.

3.2 *Hoist top bypassed* icon
- The *hoist top bypassed* icon **3.2** appears if the hoist limit switch is bypassed, see section „Special functions“.

4 *Hoist top* icon
- *Hoist top* icon **4** for the second load position
  Note: Appears only when a hoist limit switch is active for the second load position on the LSB bus system.

4.1 *Hoist top triggered* icon
- The *Hoist top triggered* icon **4.1** appears when:
  - The hook block is pulled against the hoist limit switch.
  - The minimum weight on the hoist limit switch is not attached (for example on placed down boom).
  - The hoist limit switch is not active, although it must be present on the bus.
  - The hoist limit switch has an internal error.
- **Note:** Spool up hoist winches is turned off.
  Additional crane movements can be turned off.

4.2 *Hoist top bypassed* icon
- The *hoist top bypassed* icon **4.2** appears if the hoist limit switch is bypassed, see section „Special functions“.

5.2.3 Occurrence of an advance warning

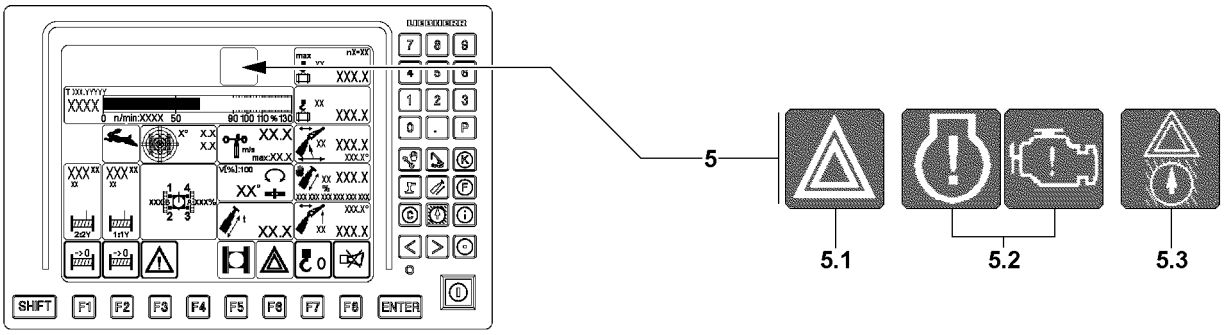

Fig.123727: Exemplary illustration of possible advance warnings

5 *Advance warning* icon

5.1 Advance warning
- The current utilization of the crane results from the actual load and the maximum load.
- The *Advance warning* icon appears if:
  - The current utilization of the crane exceeds the programmed limit (standard value **90 percent**) for the advance warning.

5.2 Advance warning engine monitoring
- Appears if an advance warning for one or more monitoring functions in the engine monitoring occurs.
- **NOTICE:** If the Advance warning engine monitoring **5.2** appears, the monitoring functions must be checked.
- **Note**: Only present for certain crane types.

LWE/ab Muli 010/24201-02-02/en

copyright © Liebherr-Werk Ehingen GmbH 2016

5.3 Advance warning Working range limitation
- Appears if an advance warning occurs via the Working range limitation program*
- **Note**: Only present for certain crane types.

WARNING
Non-observance of advance warnings!
If advance warnings are not observed, then it can result in a sudden shut off of the crane movement.
A sudden shut off of the crane movement can result in high stress and strain for crane and load.
High stress and strain for crane and load can cause accidents.
- ▶ Operate the crane in such a way that there is no shut off of crane movements by the crane control.
- ▶ Pay attention to advance warnings and approach a possible shut off of crane movements extremely cautiously.

NOTICE
Shut off engine monitoring!
Outside of the crane operation program, the engine monitoring is turned off.
When the engine monitoring is turned off, problems and warning occurrences are not recognized.
This could result in crane failure.
- ▶ If work is not carried out in the crane operation program, then turn the crane engine off and operate the LICCON computer system in stand-by mode, see section „Power-Save mode and Stand-by mode on the LICCON computer system“.
- ▶ If work has to be carried out for a longer period outside of the crane operation program, with the engine running, then switch regularly into the engine monitoring screen.

5.2.4 Shut off of crane movement

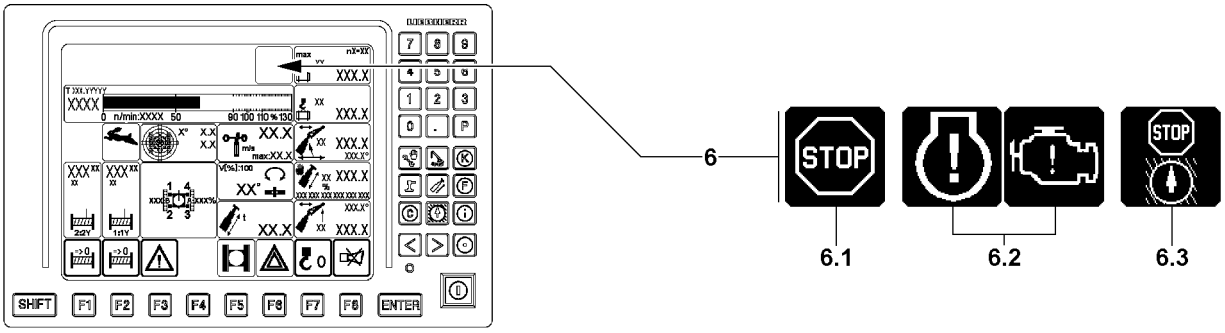

Fig.123728: Exemplary illustration of possible shut offs

6 Icon *STOP*

6.1 Icon *LMB-STOP*
- The *LMB-STOP* icon appears when the crane movement is turned off via the overload protection

Possible causes:
- **Utilization of the crane**: The *LMB-STOP* icon appears when the current utilization of the crane exceeds the programmed limit for the overload protection (Standard **100 percent**).
- **Sensor error**: The *LMB-STOP* icon appears when a sensor which is required to monitor the load chart has an error.
- **No load chart**: The *LMB-STOP* icon appears if no load chart is available.

copyright © Liebherr-Werk Ehingen GmbH 2016

WARNING
Crane movements at *LMB-STOP*!
If the *LMB-STOP* icon **6.1** appears, not all crane movements are necessarily turned off. In certain circumstances, load moment decreasing crane movements are still possible.
▶ Always determine the exact cause for the *LMB-STOP* **6.1** first.
▶ Carry out any crane movements which are still possible with extreme caution.

6.2 EngineSTOP
- Appears if a STOP occurrence in the engine monitoring occurs.

6.3 Working rangeSTOP
- Appears when the Working range limitation program* turns the crane movement off.

WARNING
Shut off of crane movement!
A sudden shut off of the crane movement can result in high stress and strain for crane and load.
High stress and strain for crane and load can cause accidents.
▶ Operate the crane in such a way if possible that there is no shut off of crane movements by the crane control.
▶ Monitor the display instruments constantly.
▶ If not otherwise possible, approach a possible shut off of crane movements extremely cautiously.

NOTICE
Shut off engine monitoring!
Outside of the crane operation program, the engine monitoring is turned off.
When the engine monitoring is turned off, problems and warning occurrences are not recognized.
This could result in crane failure.
▶ If work is not carried out in the crane operation program, then turn the crane engine off and operate the LICCON computer system in stand-by mode, see section „Power-Save mode and Stand-by mode on the LICCON computer system“.
▶ If work has to be carried out for a longer period outside of the crane operation program, with the engine running, then switch regularly into the engine monitoring screen.

5.2.5 Acoustic warnings on the LICCON monitor

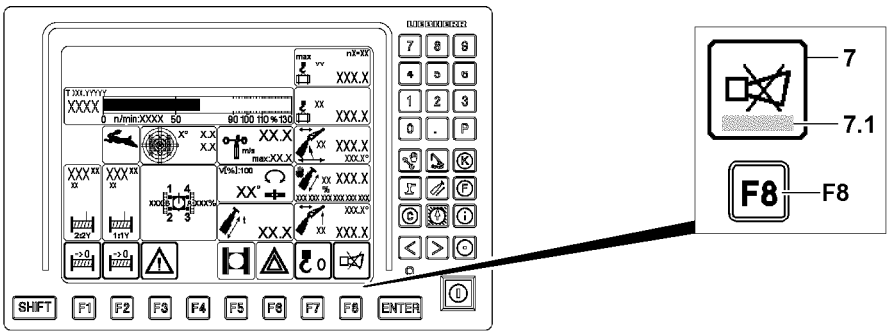

Fig.123729: Acoustic warnings on the LICCON monitor

Acoustic warnings on the LICCON monitor are indicated by a warning sound.

The warning sound is divided into two categories:
– Warning sound *Horn* is a beeping sound of a duration of approximately 0.5 seconds, which is repeated in a second cycle.
– Warning sound *Short horn* is a beeping sound of a duration of approximately 0.1 seconds, which is repeated in a second cycle.

7 *Horn* icon
- When the *horn* icon is shown in the LICCON monitor, any acoustic signals which will occur can be shut off by pressing the function key **F8**.

LWE/ab Muli 010/24201-02-02/en

copyright © Liebherr-Werk Ehingen GmbH 2016

- If an error message is shown in the *Horn* icon **7** in field **7.1**, then the present error can be determined through it. Pressing the function key **F8** twice automatically changes to the error determination screen of the BSE test system. The error is displayed there in documentary form.

Warning sound *Horn*

1. Sounds in addition to the visual display of an error message in field **7.1** in case of operational errors are found, which lead to a shut off of a crane movement.
   Operational errors are:
   - Overload
   - Boom outside of the angle / radius range of the load chart
   - Extension condition of telescopes not in accordance with the load chart
2. In case of application errors with error number (LICCON-Error-Code - LEC). For example sensor errors, which occur due to insufficient sensor signals or a defective sensor.
   The following sensors are monitored:
   - Length sensors
   - Angle sensors
   - Pressure sensors
   - Pull test brackets (force test boxes)
   - Inductive sensors
   - Hoist limit switch
   - Wind sensor
   - Battery voltage

Warning sound *Short horn*

Sounds in addition to the visual display of error messages without an error number and which do not lead directly to crane movement shut off by the LICCON overload protection.
Monitored error messages are:
- Maximum permissible wind speed exceeded (only for activated wind sensor*****).
- Support force exceeded / fallen below (only in activated support force monitoring*****)
- Crane utilization value for Advance warning (90 %) reached or exceeded

Priority acoustic signal

– The warning sound *Horn* has higher priority than the *Short horn* warning sound, which means the *Horn* warning sound takes preference over the *Short horn* warning sound.

Turning the warning sound off

– The warning sound can be turned off by pressing the function key **F8**.
– The *Horn* warning sound as well as the *Short horn* warning sound immediately become active again if a new error occurs.

5.3 Special functions

With the special functions the special cases for the operation of the LICCON overload protection (special cases for the overload protection EN 13000:2010) can be operated, see Crane operating instructions, chapter 4.20.

LWE/ab Muli 010/24201-02-02/en

copyright © Liebherr-Werk Ehingen GmbH 2016

5.3.1 Special functions LICCON overload protection

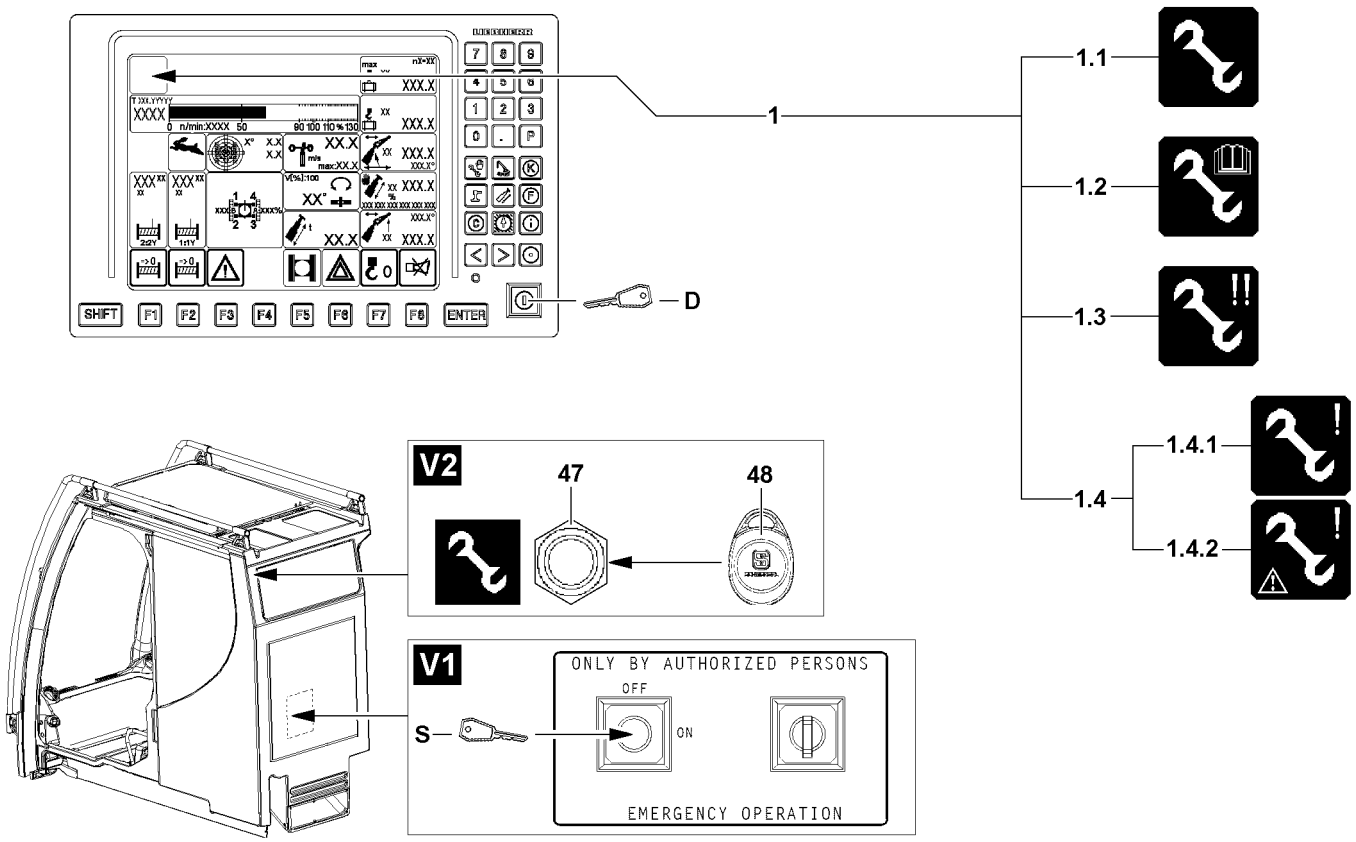

Fig.123730: Exemplary illustration of displays Special function LICCON overload protection with operating elements

If the shut off limits of the LICCON overload protection are exceeded, the LICCON overload protection shuts the crane movements off.

These shut off limits can be exceeded by the set up key **D** in the *right touching* position. To do so, chapter 4.20 in the Crane operating instructions must be observed.

WARNING
Danger of accident due to function *Exceedance of shut off limits of the LICCON overload protection*!
If the shut off limits of the LICCON overload protection are exceeded, there is no additional protection against crane overload.
Due to erroneous operation or deliberate misuse, the crane could collapse, the boom can break off or the crane can topple over.
Personnel can be severely injured or killed.

- ▶ The function *Exceeding the shut off limits of the LICCON overload protection* is only permissible in emergencies and for assembly purposes.
- ▶ The set up key **D** may only be actuated when the specifications of the crane documentation in this regard are adhered to.
- ▶ The set up key **D** may only be actuated by persons who are aware of the effects of their acts regarding the function *Exceedance of shut off limits of the LICCON overload protection*.
- ▶ The function *Exceeding the shut off limits of the LICCON overload protection* requires the presence of an authorized person and must be performed with utmost caution.
- ▶ Crane operation with activated function *Exceeding the shut off limits of the LICCON overload protection* is prohibited.

LWE/ab Muli 010/24201-02-02/en

copyright © Liebherr-Werk Ehingen GmbH 2016

Note
Double function set up key
If the crane control *EN 13000:2010 not active* is programmed, the shut offs are deactivated by the LICCON overload protection when the set up key **D** is pressed.
▶ If the crane control *EN 13000:2010 not active* is programmed, when actuating the set up key **D**, the function *Emergency operation LICCON overload protection* is automatically also released.

Before pressing the set up key **D** make sure that:
– Conditions and specifications to use the set up key **D** are known to the crane operator, were understood and adhered to, see also Crane operating instructions, chapter 4.20.

Note
▶ The various *Assembly* icons **1** are shown on the same position in the LICCON monitor, depending on the situation. Two variations of the icon **1** cannot appear simultaneously.

Note
▶ The actuation of the set up key **D** is recorded in the data logger.
▶ The actuation of the key button **S** is recorded in the data logger.
▶ The application of the transponder **48** on the sensor **47** is recorded in the data logger.

Exceeding the shut off limits of the LICCON overload protection

1.1 Assembly
- The icon appears when a special case for operation of the LICCON overload protection was activated, for example the shut off limits of the LICCON overload protection were bypassed by the set up key **D**.

No load chart is available

1.2 Assembly - no load chart
- The icon appears when the shut off limits of the LICCON overload protection are bypassed via the set up key **D and** no load chart is available.
- The crane may solely be operated according to the specifications in the crane documentation.
- **Note:** By actuating the set up key **D**, all erection / take down procedures can be carried out within the erection / take down charts, for which no load charts are available.

Emergency operation LICCON overload protection (EN 13000:2010 active)

WARNING
Increased danger of accident during emergency operation of the LICCON overload protection!
In emergency operation, the crane movements are no longer monitored by the LICCON overload protection.
▶ The emergency operation may only be activated by persons who are aware of the consequences of their actions.
▶ A shut off by the LICCON overload protection may not be circumvented by the emergency operation.
▶ If normal crane operation is possible, then the emergency operation may not be activated.
▶ All crane movements must be carried out with extreme caution and anticipatorily.

1.3 Emergency operation activated
- The icon appears:
  - when the emergency operation of the LICCON overload protection is activated via the key button **S** or by actuation of the transponder **48** on the sensor **47**.

LWE/ab Muli 010/24201-02-02/en

copyright © Liebherr-Werk Ehingen GmbH 2016

Note
Activating emergency operation
▶ If emergency operation of the LICCON overload protection is activated via the key button **S** or by actuation of the transponder **48** on the sensor **47** depends on the crane type. Observe the Crane operating instructions, chapter 4.01.

Emergency operation LICCON overload protection (EN 13000:2010 not active)

Note
If the crane control *EN 13000:2010 not active* is programmed, then the function *Emergency operation of the LICCON overload protection* is activated by the set up key **D**.
▶ If the emergency operation LICCON overload protection is needed, press the set up key **D**.

1.3 LMB-Emergency operation activated
- Icon appears:
  - When the LMB-emergency operation is activated via the set up key **D**.
  - **Note:** Depending on the reason for the LMB emergency operation, the icon for no load chart available **1.2** can also appear.

Additional emergency operating modes

WARNING
Erroneous operation of the crane!
If one of the icons for additional emergency operating modes **1.4** appears, then there is a high danger of accidents due to erroneous operation of the crane.
Safety devices could be deactivated.
Personnel can be killed or injured.
This could result in property damage.
▶ Deactivate additional operating modes **1.4** again or contact Liebherr Service and coordinate further procedure.

1.4 Additional emergency operating modes
- Icon **1.4.1** or icon **1.4.2** appears if additional emergency operating modes were activated.

5.3.2 Bypass of hoist limit switch

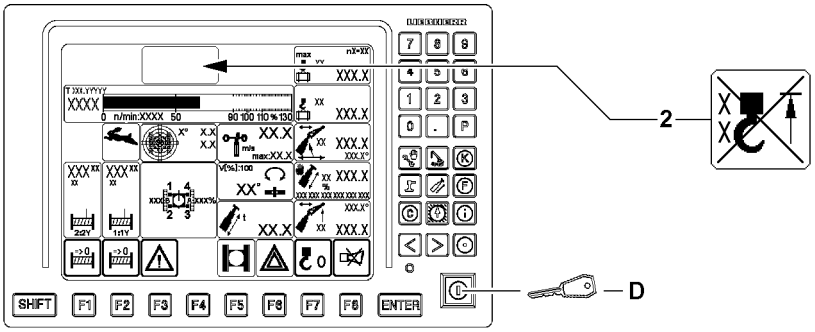

Fig.123731: Bypass of hoist limit switch

If the hook block contacts the hoist limit switch weight during its upward movement, the hoist limit switch is triggered. The crane movements *Spool up winches*, *Luff telescopic boom down* and Telescope telescopic boom out are shut off. This shut off can be bypassed by the set up key **D** in the *right touching* position. To do so, chapter 4.20 in the Crane operating instructions must be observed.

2 *Hoist top bypassed* icon
- The icon appears when the hoist limit switch is bypassed by pressing the set up key **D**.

LWE/ab Muli 010/24201-02-02/en

copyright © Liebherr-Werk Ehingen GmbH 2016

Note: All hoist limit switches are always bypassed together.

5.3.3 Fast mode (Rapid gear)

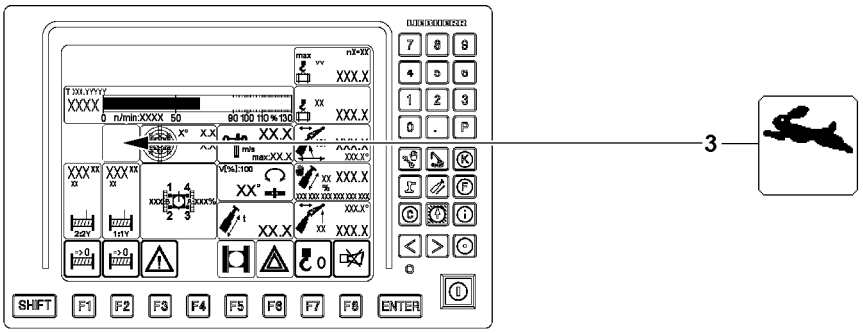

Fig.123732: Rapid gear engaged

3 *Rapid gear* icon
- The icon appears if the rapid gear is enabled during a crane movement.
- This is possible, for example, for the following crane movements:
  - Lift / lower hoist gears
  - Luff the boom up

5.4 Monitoring functions during crane operation

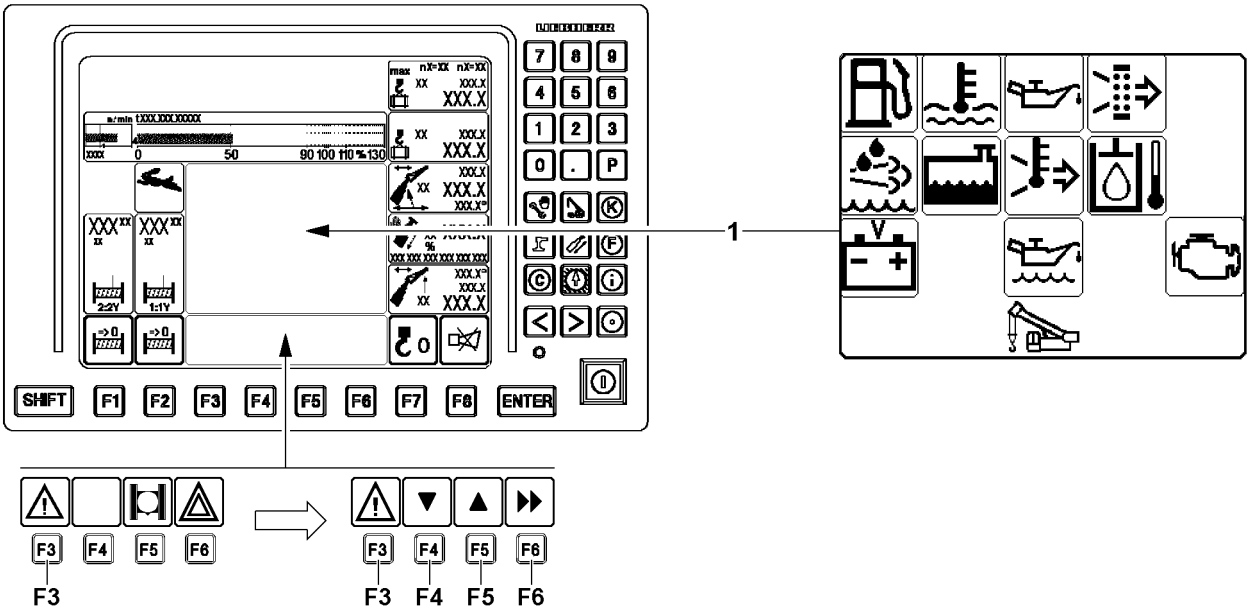

Fig.122509: Monitoring functions during crane operation

The monitoring functions **1** are always active and can be displayed in the monitoring field, if necessary. Due to the color of the icon over the function key **F3** the crane operator is automatically alerted in case of a warning occurrence.

The monitoring field has its fixed place on the LICCON monitor and can be hidden or assigned with other functions.

By pressing the function key **F3**, the monitoring functions **1** can be displayed / not displayed in the monitoring field.

LWE/ab Muli 010/24201-02-02/en

copyright © Liebherr-Werk Ehingen GmbH 2016

NOTICE
Danger of severe engine damage!
If the monitoring functions report a problem and / or warning occurrence, then you must react immediately and remedy the problem.
▶ React to problems and / or warning occurrences immediately and remedy the problem.
▶ If necessary, stop crane operation and turn the engine off.

NOTICE
Shut off engine monitoring!
Outside of the crane operation program, the monitoring functions are turned off.
When the engine monitoring is turned off, problems and warning occurrences are not recognized.
This could result in crane failure.
▶ If work is not carried out in the crane operation program, then turn the crane engine off and operate the LICCON computer system in stand-by mode, see section „Power-Save mode and Stand-by mode on the LICCON computer system“.
▶ If work has to be carried out for a longer period outside of the crane operation program, with the engine running, then switch continuously into the engine monitoring screen and check the display values.
▶ Register changes in the display values mindfully and proceed anticipatorily, for example, refuel in time.

Color key Warning icon above function key **F3**:
– Warning icon green: All monitoring functions are ok.
– Warning icon yellow: Advance warning for one or several monitoring functions.
– Warning icon red: Warning for one or several monitoring functions.

5.4.1 Calling up the monitoring functions

If a warning event occurs in one or more monitoring functions in the monitoring field, this is indicated by the color of the warning icon in the function key line. The warning icon is displayed statically and in the color of the monitoring function that triggered the warning event.

▶ Press the function key **F3** until the desired page of the monitoring functions **1** is called up.

Result:

– The assignment of the function key **F4** to function key **F6** changes.
– The monitoring functions are shown on the LICCON monitor.

For the colors for the icons of the monitoring function **1**, see the following section „Overview of icons for monitoring functions“:
– Green: Monitored function ok
– Yellow: Advance warning for the monitored function
– Red: : Warning for the monitored function

Call up the individual control displays one after the other:

▶ Press function key **F4** or function key **F5**.

Result:

– The individual control displays appear, see the following section „Overview of individual control displays“.

Mask the monitoring functions **1**:

▶ Press the function key **F6**.

5.4.2 Overview of icons for monitoring functions

In the monitoring field **1** the following monitoring functions can appear.

LWE/ab Muli 010/24201-02-02/en

copyright © Liebherr-Werk Ehingen GmbH 2016

Note
The scope of the monitoring functions depends on the crane type and crane configuration.
▶ Not all crane types have all listed monitoring functions.

	Fuel reserve
Green:	Fuel reserve **more** or equal to 5 %
Yellow:	Fuel reserve approx. 3 % - 4 %
Red:	Fuel reserve **less** than 3 % **NOTICE!** Add fuel immediately.

	Coolant temperature
Green:	Coolant temperature OK
Red:	Coolant temperature **too high** **NOTICE!** Immediately bring the crane to a standstill, turn the engine off and remedy the problem. Pay attention to error message.

/	**Engine oil pressure**
Green:	Engine oil pressure OK (engine on)
Red:	Engine oil pressure too low (engine on) **NOTICE!** Immediately bring the crane to a standstill, turn the engine off and remedy the problem. Pay attention to error message.

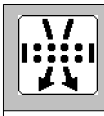 /	**Air filter Engine**
Green:	Air filter OK (engine on)
Yellow	Air filter dirty (engine on) **NOTICE!** Immediately bring the crane to a standstill, turn the engine off and remedy the problem. Pay attention to error message.

DANGER
Danger of accident!
If the pressure in one brake circuit is too low there is a risk that the braking power will drop considerably or the brake system will fail altogether.
▶ If the air pressure supply in one of the brake circuits drops into the red area, the crane must be stopped immediately and the cause of the problem remedied.

copyright © Liebherr-Werk Ehingen GmbH 2016

	Charge control indicator (alternator)
Green:	Charge control OK (engine on)
Red:	Charge control has a problem (engine on) **NOTICE!**: Immediately bring the crane to a standstill, turn the engine off and remedy the problem. Pay attention to error message.

	Urea tank / exhaust aftertreatment[1)]
Green:	Urea available
Yellow / red:	Urea level too low or erroneous function of exhaust aftertreatment system **NOTICE!** Add urea or remedy the erroneous function of the exhaust aftertreatment. Under some circumstances a power reduction or start block of the engine [2)] is triggered, pay attention to the error message.

1) Applies only for engines with SCR system.
2) The type and scope of a power reduction of the engine depends on the respectively valid national / regional regulations and the crane configuration. The engine can possibly not be started any longer (starting block).

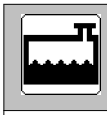	**Coolant level**
Green:	Coolant level OK
Red:	Insufficient coolant **NOTICE!**: Immediately bring the crane to a standstill, turn the engine off and remedy the problem. Pay attention to error message.

/	**Charge air temperature**
Green:	Charge air temperature OK
Red:	Charge air temperature too high **NOTICE!**: Immediately bring the crane to a standstill, turn the engine off and remedy the problem. Pay attention to error message.

	Hydraulic oil temperature
Green:	Hydraulic oil temperature OK
Red:	Hydraulic oil temperature too high **NOTICE!**: Immediately bring the crane to a standstill, turn the engine off and remedy the problem. Pay attention to error message.

LWE/ab Muli 010/24201-02-02/en

copyright © Liebherr-Werk Ehingen GmbH 2016

	Battery voltage
Green:	Battery voltage OK
Red:	On-board power supply over / undervoltage **NOTICE!**: Immediately bring the crane to a standstill, turn the engine off and remedy the problem. Pay attention to error message.

/	**Engine oil level**
Green:	Engine oil level OK.
Blue	The engine oil level can not be checked here on the display, call up the individual control display.
Red:	Engine oil level not OK. **NOTICE!**: Immediately bring the crane to a standstill, turn the engine off and remedy the problem. Call up individual control displays and adjust the engine oil according to the display - pay attention to error message.

	Hydraulic oil level
Green:	Hydraulic oil level ok
Red:	Hydraulic oil level too low **NOTICE!**: Immediately bring the crane to a standstill, turn the engine off and remedy the problem. Pay attention to error message.

	Exhaust aftertreatment[1)]
Green:	Exhaust aftertreatment OK.
Yellow / red:	Erroneous function Exhaust aftertreatment or Urea level too low **NOTICE!** Add urea or remedy the erroneous function of the exhaust aftertreatment. Under some circumstances a power reduction or start block of the engine [2)] is triggered, pay attention to the error message.

1) Applies only for engines with SCR system.
2) The type and scope of a power reduction of the engine depends on the respectively valid national / regional regulations and the crane configuration. The engine can possibly not be started any longer (starting block).

WARNING
Triggers power reduction or start block of engine!
If Urea level is too low or if there is a faulty function in the exhaust aftertreatment, then a power reduction or start block of the engine can be triggered.
The crane can come to a standstill and cause obstacles / blockades.
The crane operation and travel operation can be limited or disabled.
- ▶ Replenish the Urea level in time.
- ▶ Remedy the faulty function of the exhaust aftertreatment immediately.
- ▶ Observe any valid national / regional regulations and the crane configuration.

copyright © Liebherr-Werk Ehingen GmbH 2016

5.4.3 Overview of individual control displays

Note

- ▶ For some monitoring functions in the monitoring field, detailed individual control displays can be shown by shifting through with the function keys **F4** (sequence forward) or **F5** (sequence backward).
- ▶ The display values in the depicted individual indicator displays are replaced by place holders.

Individual control display Fuel reserve

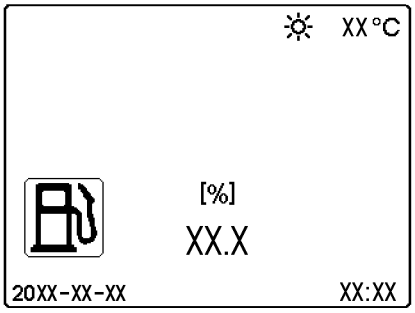

Fig.122510: Fuel reserve

Individual control display Coolant temperature

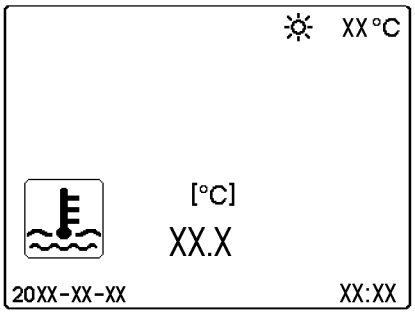

Fig.122511: Coolant temperature

Individual control display Engine oil pressure

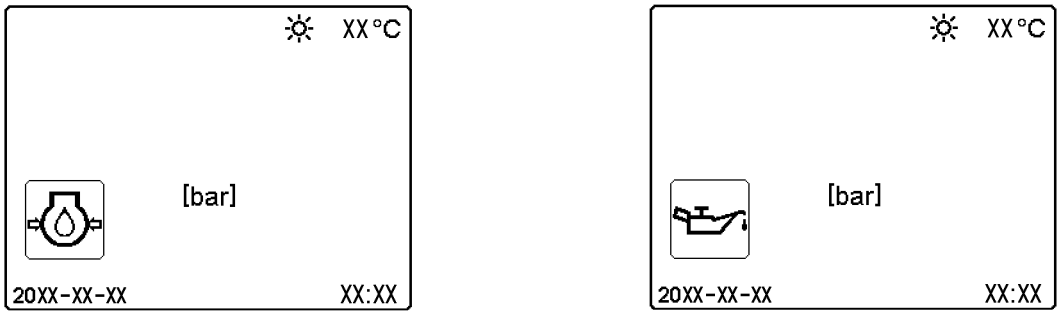

Fig.122512: Engine oil pressure (both variations)

LWE/ab Muli 010/24201-02-02/en

copyright © Liebherr-Werk Ehingen GmbH 2016

Individual control display Urea reserve

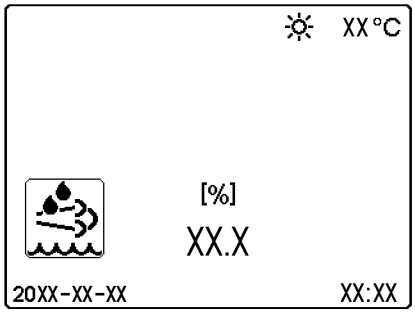

Fig.122513: Urea reserve

Note
▶ The individual control display for the urea reserve does not appear on all crane types.

Individual control display Charge air temperature

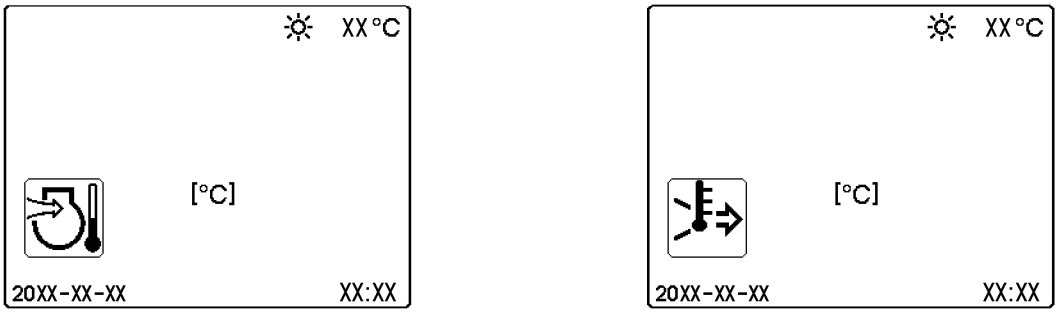

Fig.122514: Charge air temperature (both variations)

Individual control display Hydraulic oil temperature

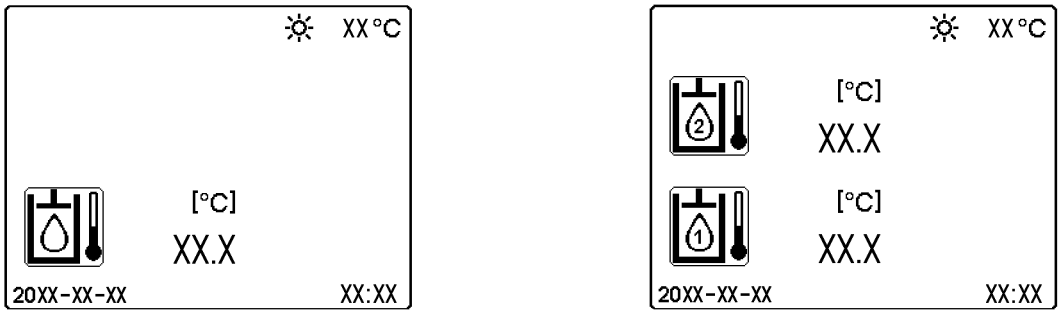

Fig.122515: Hydraulic oil temperature

Note
▶ The individual control display for the hydraulic oil temperature does not appear on all crane types.

copyright © Liebherr-Werk Ehingen GmbH 2016

Individual control display Battery voltage

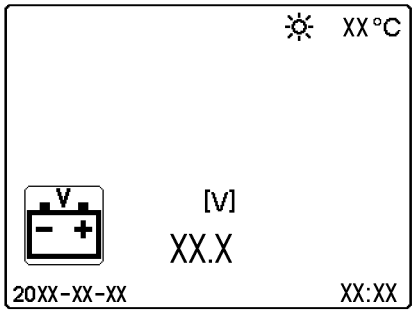

Fig.122516: Battery voltage

Individual control display Engine oil level

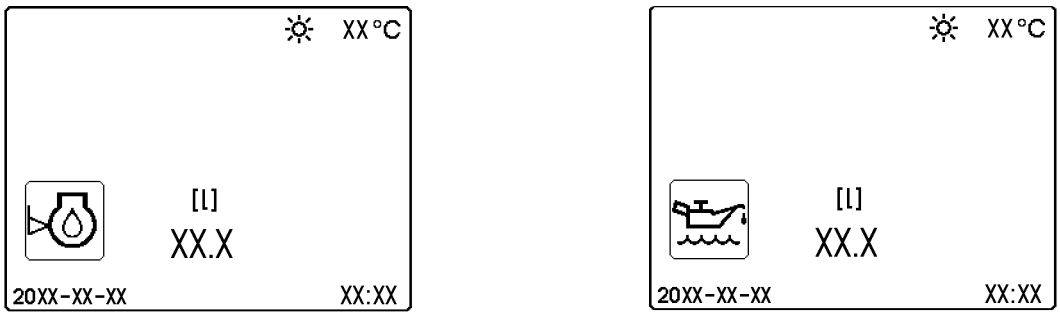

Fig.122517: Engine oil level number value over / underfilled (both variations)

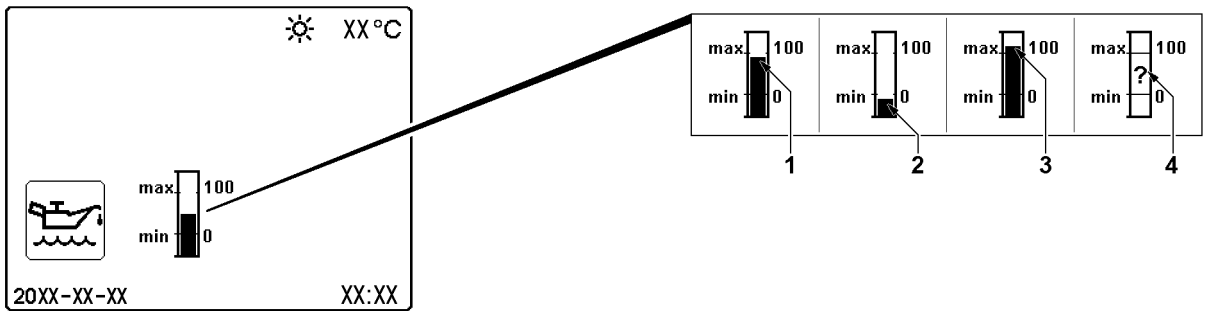

Fig.122518: Engine oil level Bar diagram

- At normal level, the bar **1** reaches a display between 0 and 100
- If underfilled, the bar **2** reaches a display under 0
- If overfilled, the bar **3** reaches a display above 100
- In case of incorrect test value, the question mark (?) **4** appears
  Note: When the engine is running, an erroneous test value appears, for checking the oil level, align the crane horizontally and turn the engine off.

Note

▶ The individual control display for the engine oil level does not appear on all crane types.

LWE/ab Muli 010/24201-02-02/en

copyright © Liebherr-Werk Ehingen GmbH 2016

Individual control display Hydraulic oil level

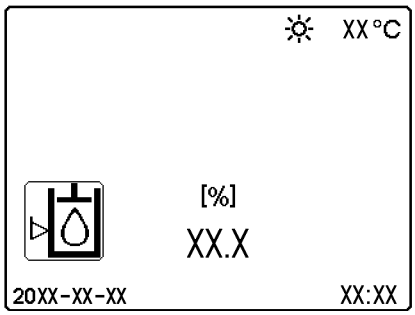

Fig.122519: Hydraulic oil level

Note
▶ The individual control display for the hydraulic oil level does not appear on all crane types.

5.4.4 Overview of function key assignment

Function key	Function / description
	By pressing the function key **F3** once, the monitoring functions are displayed. If the crane has two engines which are both turned on, then press the function key **F3** twice to show the monitoring functions for the second engine. Icon green: All monitoring functions are ok. Icon yellow: Advance warning for one or several monitoring functions. Icon red: Warning for one or several monitoring functions. **NOTICE!**: Always pay attention to advance warnings and warnings and act accordingly.

Function key	Function / description
	By pressing the function key **F4**, the individual control displays are called up one after the other in sequence from the beginning. **NOTICE!**: The individual control displays for the engine are always shown, which were currently displayed via function key **F3**.

Function key	Function / description
	By pressing the function key **F5**, the individual control displays are called up one after the other in sequence from behind.

copyright © Liebherr-Werk Ehingen GmbH 2016

Function key	Function / description
	Change back by one selection level by pressing the function key **F6**.

5.5 Monitoring of surface pressure and center of gravity

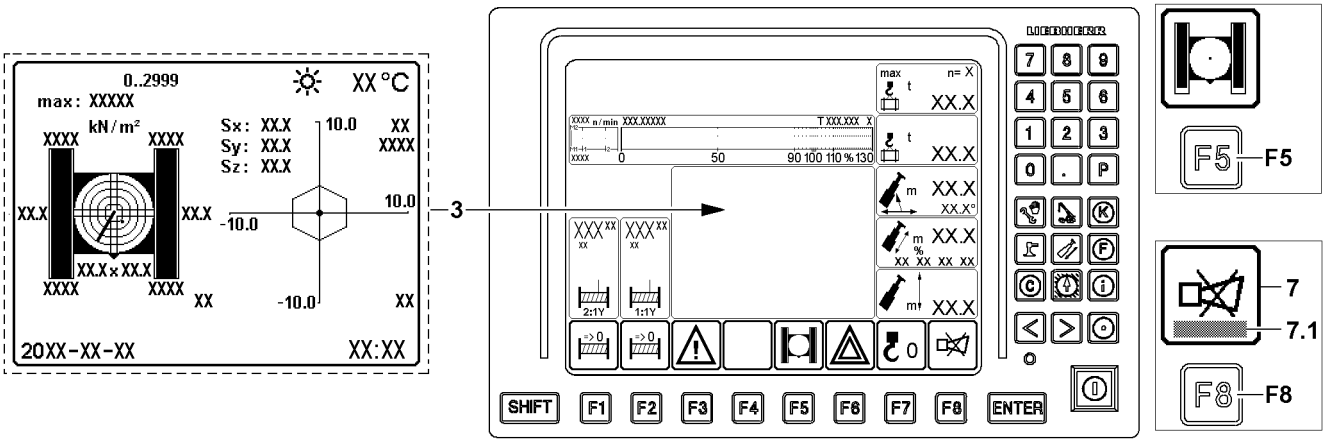

Fig.122538: Exemplary illustration of monitoring of surface pressure and center of gravity

WARNING
The crane can topple over!
When the programmed limit values are reached in the monitoring of surface pressure and center of gravity, there is no automatic shut off of crane movements.
The displayed values are calculated and are informative. Calculated values are below the tolerances and unpredictable influences, for example crane operation, surrounding and environmental influences.
Due to the resulting tolerance field of the values, the monitoring of surface pressure and center of gravity may not be used to determine the limit values of the crane.
If this is disregarded, then the crane can topple over.
Personnel can be severely injured or killed.
- ▶ Do not use the displayed values to determine the limit values of the crane and to utilize the crane to its tipping limit or until it sinks in.
- ▶ Make sure that all values are within the programmed limit values.

WARNING
Increased surface pressure!
The calculation of the values for the display of the surface pressure in the LICCON monitor are based on ideal assumptions.
- ▶ Side deformations of the boom system due to wind, inclined position and elastic resilience of the steel structure are not taken into account but they can lead to an increase of the surface pressure.

WARNING
Shifting of center of gravity!
The calculation of the values for the display of the center of gravity in the LICCON monitor are based on ideal assumptions.
- ▶ Side deformations of the boom system due to wind, inclined position and elastic resilience of the steel structure are not taken into account but they can lead to a shifting of the center of gravity.

LWE/ab Muli 010/24201-02-02/en

copyright © Liebherr-Werk Ehingen GmbH 2016

WARNING
The crane can topple over!
If the permissible incline of the crane is exceeded, the crane can topple over.
- ▶ Do not exceed the permissible incline from the load chart.
- ▶ Do not exceed the permissible incline for driving the crane, see Crane operating instructions, chapter 4.10.

The monitoring of surface pressure and center of gravity **3** is always active and can be displayed in the monitoring field, if necessary. Due to the color of the icon over the function key **F5** the crane operator is automatically alerted in case of a warning occurrence.

The monitoring field has its fixed place on the LICCON monitor and can be hidden or assigned with other functions.

By pressing the function key **F5**, the monitoring of surface pressure and center of gravity **3** is displayed in the monitoring field.

Note
Turned off monitoring of surface pressure and center of gravity.
- ▶ Outside of the crane operation program, the monitoring of surface pressure and center of gravity is turned off.
- ▶ When the monitoring of surface pressure and center of gravity is turned off, warning events are not recognized.

Color key Warning icon above function key **F5**.
- – Warning icon blue: Monitoring of surface pressure and center of gravity is ok.
- – Crawler carrier in warning icon red: Warning for monitoring of surface pressure and center of gravity.
  If a warning occurs, an error message **7.1** is issued in the *Horn* icon **7**.
  The error message **7.1** includes an acoustic signal through the LICCON monitor and an error description.
  Press the function key **F8** once: The acoustic signal is turned off.
  Press the function key **F8** twice: The error description for the error message **7.1** which occurred last is called up.

3 Display *Monitoring of surface pressure and center of gravity*
- The values are calculated depending on the set up configuration of the crane and the load.

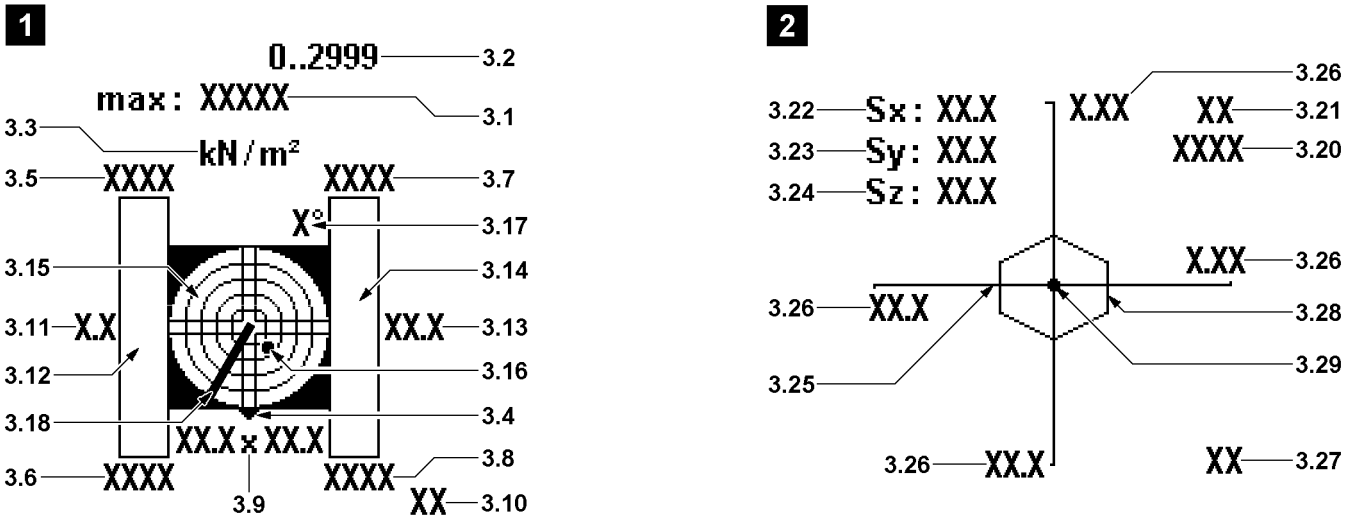

Fig.122539: Exemplary illustration of display of surface pressure and center of gravity

Display Surface pressure icon, illustration **1:**

3.1 Permissible surface pressure
- The value is entered by the crane operator via the keyboard.

LWE/ab Muli 010/24201-02-02/en

copyright © Liebherr-Werk Ehingen GmbH 2016

3.2 Input area
- Input area for the permissible surface pressure **3.1**.

3.3 Measuring unit for surface pressure
- Measuring unit for the pressure data in the *Surface pressure* icon (illustration **1**).

3.4 Direction specification
- The triangle symbolizes where the front of the crawler travel gear is in the illustration.
- **Note:** The front on the crawler travel gear is always on the side where the chain tension devices for the crawler carriers are located.

3.5 Surface pressure
- Calculated actual value of surface pressure on the travel gear, left rear.

3.6 Surface pressure
- Calculated actual value of surface pressure on the travel gear, left front.

3.7 Surface pressure
- Calculated actual value of surface pressure on the travel gear, right rear.

3.8 Surface pressure
- Calculated actual value of surface pressure on the travel gear, right front.

3.9 Track width / support base
- Display of equipped track width / support base

3.10 Measuring unit Length data
- Measuring unit for the measuring data in the *surface pressure* icon

3.11 Placement surface
- Calculated placement surface of crawler carrier right as value.

3.12 Placement surface
- Calculated placement surface of crawler carrier right as graphic.

3.13 Placement surface
- Calculated placement surface of crawler carrier left as value.

3.14 Placement surface
- Calculated placement surface of crawler carrier left as graphic.

3.15 Incline display
- The graphic display is in the form of a spirit level, with a moving dot **3.16** representing the air bubble.
- **Note**: Incline display with number values, see section „Monitored auxiliary functions“.

3.16 Dot
- The center of the dot **4.2** shows the incline.

3.17 Resolution of view
- This value describes the resolution of the graphic view. The resolution is matched automatically to the incline.

3.18 Boom direction
- Current boom direction of the crane, in reference to the displayed icon.

Display Center of gravity icon, illustration **2:**

3.20 Weight data
- Calculated total weight of the crane including load.

3.21 Weight unit
- Weight unit for the weight data **3.20** in the *center of gravity* icon (illustration **2**).

3.22 Center of gravity position
- Calculated center of gravity position in direction „Sx“

3.23 Center of gravity position
- Calculated center of gravity position in direction „Sy“

3.24 Center of gravity position
- Calculated center of gravity position in direction „Sz“

LWE/ab Muli 010/24201-02-02/en

copyright © Liebherr-Werk Ehingen GmbH 2016

3.25 Axis of coordinates
- The axis of coordinates **3.25** is aligned according to the direction of the *surface pressure* icon (illustration **1**) centered to the slewing ring on the placement surface of the crane.

3.26 Scale value
- Scale value on the axis of coordinates **3.25**

3.27 Measuring unit
- Measuring unit in the *center of gravity* (illustration **2**)

3.28 Core surface
- Calculated core surface of the crane according to the set up configuration, load and ground conditions.
- **Note:** The core surface is an important reference point for the center of gravity of the crane.

3.29 Center of gravity Sx/Sy
- Calculated center of gravity displayed graphically in direction Sx/Sy
- **Note:** The actual position is in direct relation to the values center of gravity position **3.22** and center of gravity position **3.23**

Note
Additional display values in the Display *Monitoring of surface pressure and center of gravity* **3**
▶ Date, time of day and ambient temperature are also displayed.

5.6 Monitored auxiliary functions

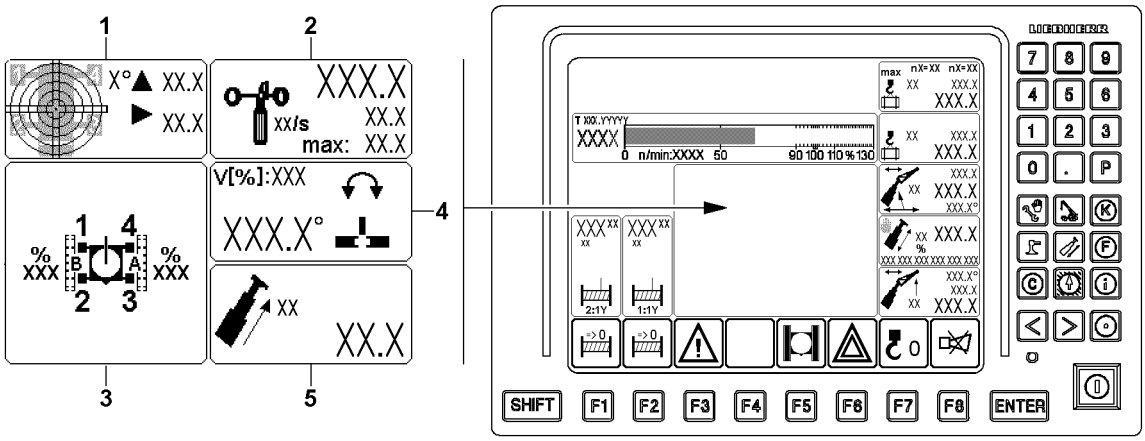

Fig.122521: Exemplary illustration of monitored auxiliary functions

There are several monitored auxiliary functions, which can be displayed when needed or automatically.

The monitoring of all auxiliary functions is always active during normal crane operation, only the icons may be hidden. The icons of the monitored auxiliary functions have their fixed place on the LICCON monitor.

Using the function key **F4**, you can show the icons for the monitored auxiliary functions.

Auxiliary functions:
1 Crane incline
2 Wind speed
3 Crawler travel gear
4 Slewing range
5 Telescopeable load

The display changed depending if the monitored auxiliary functions are turned on or off.

copyright © Liebherr-Werk Ehingen GmbH 2016

Monitored auxiliary functions turned off:
- No error:
  Icons are not shown.
- Error in one function:
  Icon with error message is shown.

Monitored auxiliary functions turned on:
- Optional icons (customer request) are displayed permanently.

5.6.1 Crane incline

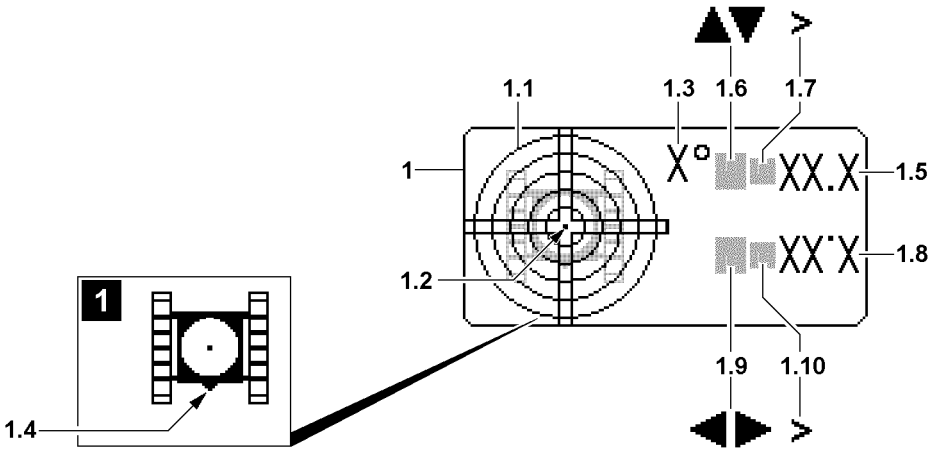

Fig.122522: Display Crane incline

WARNING
The crane can topple over!
The *larger than* icon shows that the crane is inclined further than can be shown.
The exact incline can then not be read.
▶ Do not exceed the permissible incline of the crane.

1 *Incline* icon
- Display of the incline of the crane to the horizontal in longitudinal and lateral direction. The display is graphic as well as numeric.
- The display is divided in a graphic section and a numeric section.
- The direction notes refer to the crawler travel gear.

Graphic part:

1.1 Graphic display
- The graphic display is in the form of a spirit level, with a moving dot **1.2** representing the air bubble.

1.2 Dot
- The dot **1.2** shows the incline position.

1.3 Resolution of view
- This value describes the resolution of the graphic view. The resolution is matched automatically to the incline.

1.4 Front side crawler travel gear
- To the graphic view **1.1** the overhead view of the imitated crawler travel gear is provided, see illustration **1**. The position of the front side crawler travel gear **1.4** provides the orientation aid in the sight gauge.

Numeric part:

1.5 Longitudinal direction
- Incline of crane in longitudinal direction in [°]

1.6 Direction arrow
- The direction arrow shows the direction of the incline

LWE/ab Muli 010/24201-02-02/en

copyright © Liebherr-Werk Ehingen GmbH 2016

1.7 Display range exceeded
- If the *larger than* icon appears, then the display range is exceeded.
- **Note:** The crane is inclined further than can be shown.

1.8 Lateral direction
- Incline of crane in lateral direction in [°]

1.9 Direction arrow
- The direction arrow shows the direction of the incline

1.10 Display range exceeded
- If the *larger than* icon appears, then the display range is exceeded.
- **Note:** The crane is inclined further than can be shown.

Note
Orientation of the crane in *Incline* icon **1**.
▶ Observe the position of the front side crawler travel gear **1.4**: On the front side of the crawler travel are the chain tension devices of the crawler carriers.

5.6.2 Wind speed

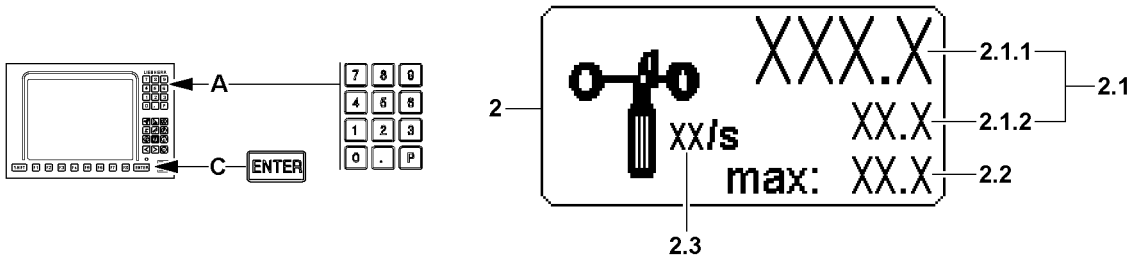

Fig.122523: Wind speed indicator

WARNING
Wind speed too high!
If the maximum permissible wind speed is exceeded with erected boom system, there is a danger of accidents.
Dangerous situations can arise, such as oscillating load or shaking crane.
The crane can topple over, personnel can be severely injured or killed.
▶ **The crane movements will not be shut off.**
▶ The boom system must be taken down in time before exceeding the maximum permissible wind speed of the crane.

WARNING
Crane operation without display value of wind speed!
If question marks („?“) appear in the *wind speed* icon **2** instead of display values, then a wind sensor which must be present is missing or there is an error in the wind sensor.
▶ Before starting to work with the crane, make sure that all wind sensors which must be present are present and functioning.
▶ Remedy the error immediately.
▶ If an error cannot be remedied, then it must be ensured that the wind speed is monitored otherwise.

2 *Wind speed* icon

2.1 *Current wind speed* icon
- **Note:** If a wind sensor is connected, then the wind speed appears at **2.1.1**.
  If two wind sensors are connected (example: Crane operation with auxiliary boom / accessory), then a second wind speed appears additionally at **2.1.2**.
- **2.1.1** Current wind speed WG1
- **2.1.2** Current wind speed WG2

LWE/ab Muli 010/24201-02-02/en

copyright © Liebherr-Werk Ehingen GmbH 2016

Note
- ▶ If several wind sensors are connected, the installation location of the wind sensor determines the corresponding display in the *Wind speed* icon **2**.
- ▶ The priority depends on the installation location of the wind sensor, from outside (auxiliary boom / accessory) to inside (main boom). The wind speed for the outside wind sensor is shown independent from the inside wind sensor.

2.2 Maximum permissible wind speed
- The value depends on the operating mode and the set up configuration
- If the current wind speed value exceeds the displayed maximum value, the maximum value starts to blink and an acoustic warning sounds.

Note
- ▶ If access to a load chart is not possible, then the maximum value starts to blink and an acoustic warning sounds.

2.3 Measuring unit icon
- [m/s] or [ft/s]
- On some crane types additionally: [km/h] or [mph]*****

Reducing the maximum permissible wind speed*

Note
- ▶ This function is not available for all crane types.

The value for the maximum permissible wind speed **2.2** can possibly be reduced.

Make sure that the following prerequisite is met:
- The *Wind speed* icon **2** is shown.

Reduce the wind speed:
1. Press the button**ENTER C**.
2. As soon as the value for the maximum permissible wind speed **2.2** is highlighted in blue, enter the new value via the keyboard **A**.
3. Press the button **ENTER C** again. The changed value for the maximum permissible wind speed **2.2** is shown in red.

Cancel reduce the wind speed:
1. Press the button**ENTER C**.
2. As soon as the value for the maximum permissible wind speed **2.2** is highlighted in blue, enter 0 (zero) as the new value via the keyboard **A**.
3. Press the button **ENTER C** again. The original value from the load chart is taken over again.

Note
- ▶ If you try to enter a value for the maximum permissible wind speed **2.2** which is too high, then the highest possible value is taken over.

LWE/ab Muli 010/24201-02-02/en

copyright © Liebherr-Werk Ehingen GmbH 2016

5.6.3 Crawler travel gear

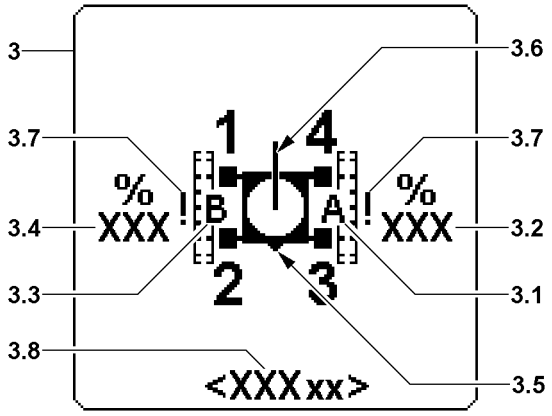

Fig.122520: Display crawler travel gear

3 *Crawler travel gear* icon

3.1 Crawler carrierA
- Marked crawler carrier A in the icon

3.2 Extension conditionA
- Extension condition of crawler carrier A in percentages

3.3 Crawler carrierB
- Marked crawler carrier B in the icon

3.4 Extension conditionB
- Extension condition of crawler carrier B in percentages

3.5 Front on crawler travel gear
- Shows where the front side of the crawler travel gear is in the icon.

3.6 Orientation of telescopic boom
- The bar shows the direction of the telescopic boom in reference to the crawler travel gear.
  In the example, the telescopic boom extends to the rear past the crawler travel gear.

3.7 Exclamation mark
- Appears if the track width monitoring is bypassed.

3.8 Track width / support base*
- **Note**: Only present for certain crane types
- Display of equipped track width / support base
- In [m] or [ft]

Note
▶ The large numbers 1 - 4 correspond to the numbering on the crawler travel gear.
▶ The letters A and B correspond to the signs on the crawler carriers.

LWE/ab Muli 010/24201-02-02/en

copyright © Liebherr-Werk Ehingen GmbH 2016

5.6.4 Slewing range

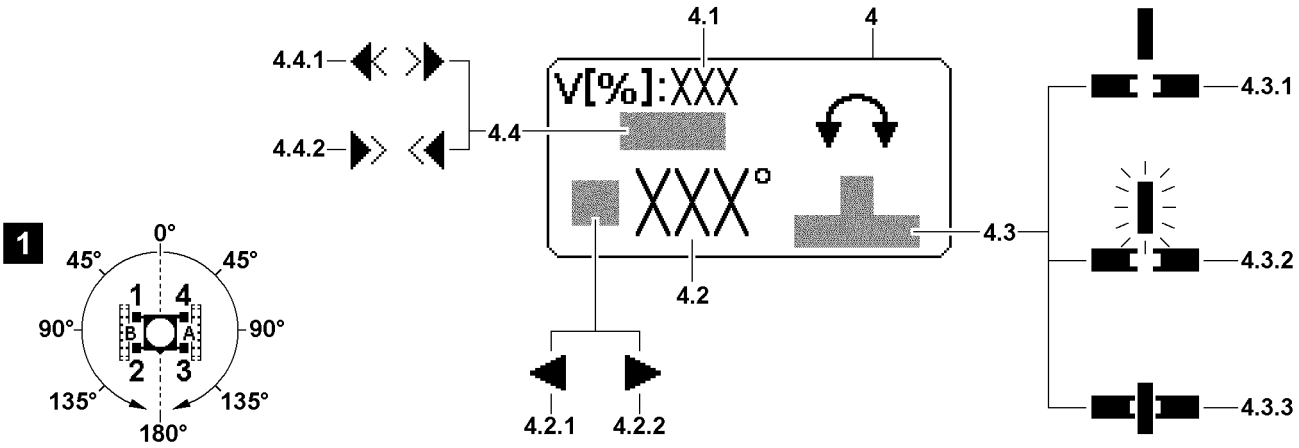

Fig.122524: Display Slewing range

4 *Slewing range* icon

WARNING
Danger of accident due to excessive rotation / slewing speed!
- ▶ Make the preselection of the maximum rotation speed according to the specifications in the load chart manual, see section „Speed reduction master switch“.
- ▶ The following applies: The longer the boom and / or the greater the load, the smaller the maximum rotation speed must be.
- ▶ **Never** deflect the master switch for the slewing gear to the stop with a long boom and / or great load.

4.1 Maximum slewing speed
- Maximum rotation speed *V* in [%]
- Marks the set maximum rotation speed of the slewing gear at fully deflected master switch.
  100 % correspond to the largest possible rotation speed of the slewing gear.
  This value can be infinitely preselected, see section „Speed reduction master switch“.

4.2 Slewing angle
- Slewing angle of the superstructure in relation to the working direction to the rear (0 [°])
  Increases on both sides to the maximum value of 180°, see illustration **1**
- The direction arrow in front of the value shows the direction of rotation of the superstructure.
- **4.2.1** (Arrow to the left): The superstructure is turned to the left from the zero point.
- **4.2.2** (Arrow to the right): The superstructure is turned to the right from the zero point.

4.3 Status of turntable pinning between turntable and crane travel gear

4.3.1 Lock is unpinned and static
- Locking pin on top: Turntable unpinned

4.3.2 Lock is unpinned and blinking
- Locking pin in intermediate position: Error

4.3.3 Lock is pinned and static
- Locking pin on the bottom, turntable pinned

Note
- ▶ The control of the turntable pinning is carried out on the operating and control unit (BKE), see chapter 4.01.

4.4 Operating mode of the slewing gear*
- **Note**: Only present for certain crane types:

LWE/ab Muli 010/24201-02-02/en

copyright © Liebherr-Werk Ehingen GmbH 2016

The operating mode of the slewing gear can only be set for crane types, which are not equipped with a foot button* for the freewheeling of the slewing gear. For description of the foot button* for the freewheeling of the slewing gear, see Crane operating instructions, chapter 4.01 and 4.05.

4.4.1 Flexible slewing gear *freely rotating / coasting*

4.4.2 Flexible slewing gear *fixed*

Note

▶ The operating modes of the slewing gear and their settings are described in section „Setting window Speed reduction master switch“.

5.6.5 Telescopeable load

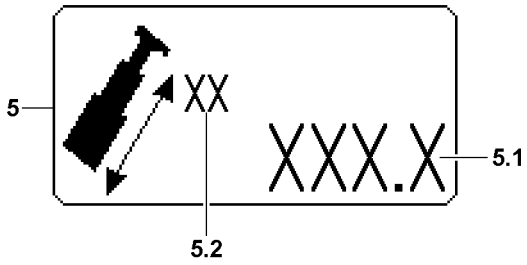

Fig.122525: Display Telescopeable load

5 *Telescopeable load* icon
- The maximum load with which the boom can be telescoped is shown in the icon.

5.1 Telescopeable load
- The maximum load with which the boom can be telescoped.
- If the current load on the hook is higher (display value in icon *Actual load* is higher), then the value is shown blinking.

Note

▶ The *Telescopeable load* icon **5** is automatically displayed with blinking value, when the telescopeable load **5.1** is smaller than the display value in the actual load display.

▶ The *Telescopeable load* icon **5** cannot be masked as long as the telescopeable load **5.1** is smaller than the display value in the actual load display.

5.2 Weight unit
- Weight unit of telescopeable load
- In [t] or [kips]

WARNING

Danger of accident if the telescopeable load is exceeded!
Exceeding the telescopeable load results in no shut offs of crane movements.

▶ Do not exceed the telescopeable load.

LWE/ab Muli 010/24201-02-02/en

copyright © Liebherr-Werk Ehingen GmbH 2016

5.7 Winch display

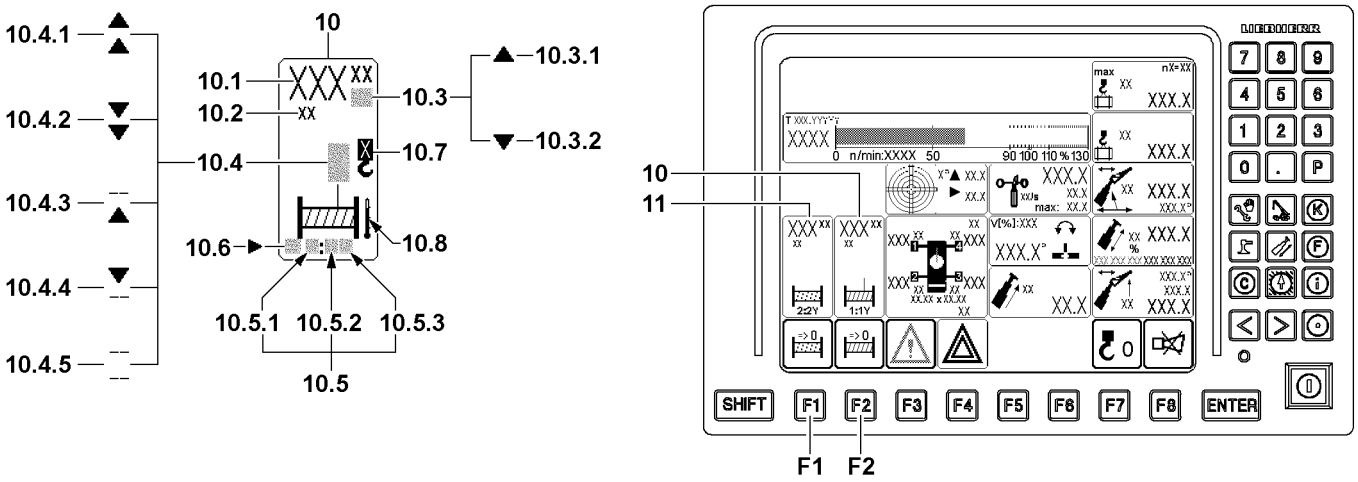

Fig.122431: Display for winch 1 and winch 2

The displays for winch 1 and winch 2 have a fixed space on the LICCON monitor.

The current position of each winch can be set as zero point:
- Hoist winch: The completed hook path is calculated with the reeving set in the Set up program. A prerequisite for a correct display is that the value entered matches the entered reeving and the actual number of rope strands between the boom head and the hook block.
- Control winch: Rope length of winch spooled out / up

F1 Function key
- Above the function key **F1** appears the icon *Reset winch display*. Pressing on the button sets the display of the rope measurement to zero. The path measurement begins here.

F2 Function key
- Above the function key **F2** appears the icon *Reset winch display*. Pressing on the button sets the display of the rope measurement to zero. The path measurement begins here.

10 Winch 1
- Icons for winch 1 (WI)

11 Winch 2
- Icons for winch 2 (WII)

Note

▶ The displays for winch 1 and winch 2 are identical and are explained on one icon element.

10.1 Rope measurement
- In [m] or [ft], see Measuring unit **10.2**
  From a zero point to be determined
- As hoist winch with the reeving setting made in the Set up program: Completed hook path. A prerequisite for a correct display is that the reeving value entered equals the actual number of rope strands between the boom head and the hook block
- The positions before the decimal point are displayed with a maximum of three large digits. The digits after the decimal point are displayed with small digits.

LWE/ab Muli 010/24201-02-02/en

copyright © Liebherr-Werk Ehingen GmbH 2016

Note
Display area winch displays.

- ▶ The *rope measurement* **10.1** display has only three positions before the comma, any positions before that are cut off. The crane operator must evaluate for himself if, for example 200 m rope are spooled up on a winch or 1200 m. **The display in both cases would be identical with 200 m.**
- ▶ The hook path calculation only works accurately if the load is suspended freely and is not luffed or telescoped during the lifting procedure. Not taken into account are flexation and rope expansion.
- ▶ The length display (hook path display) is only correct when the winch is calibrated.

10.2 Measuring unit
- Measuring unit of hook path display: [m] or [ft]

10.3 Direction of hook movement
- The arrows on the length value show the direction of the hook movement in relation to the zero point
- **10.3.1** (Arrow pointing up): Hook moves upward from the zero point.
- **10.3.2** (Arrow pointing down): Hook moves downward from the zero point.

10.4 Winch condition display
- There are five winch condition icons, all blinking
- **Note:** If no winch status symbol appears, the activated winch is inactive and is neither spooled up nor reeled off.

10.4.1 Spool out
- Winch is spooled out

10.4.2 Spool up
- Winch is spooled up

10.4.3 Spooled out
- Additional spooling out of the winch is blocked

10.4.4 Spooled up
- Additional spooling up of the winch is blocked

10.4.5 Winch deactivated
- Winch is deactivated or unplugged
- **Note:** Winch cannot be controlled.

10.5 Assignment of master switch
- **10.5.1** First digit
  - First digit: Winch number, every winch icon is permanently assigned to a winch
- **10.5.2** Second digit
  - Master switch number, according to the assigned master switch
  - ? : No master switch assigned
- **10.5.3** Letter
  - Actuation direction of the master switch, see illustration
  - ? : No actuation direction assigned

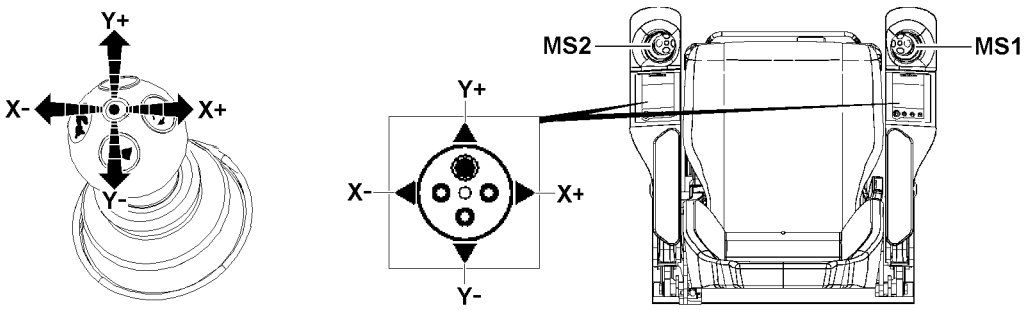

Fig.122441: Actuation directions Master switch

MS1 Master switch 1
MS2 Master switch 2
X+ To the right
X- To the left
Y+ To the front
Y- To the rear

LWE/ab Muli 010/24201-02-02/en

copyright © Liebherr-Werk Ehingen GmbH 2016

10.6 Vibration sensor
- If the vibration sensor for a winch is added on the master switch, then an arrow appears in this winch icon for the added vibration sensor.
- **Note:** The vibration sensor is added at the first actuated crane function.

Auxiliary information in winch icon (only for certain crane types):

10.7 Load position
- **Note:** Appears only on certain crane types when the winch is used as hoist winch.
- Load position which is assigned to the winch.

10.8 Winch is overheated
- **Note:** Only for certain crane types with temperature sensors in the winch.
- The icon appears, the temperature of the winch is too high.

WARNING
Overheated winch!
If a winch is operated further, even though the *Winch overheated* icon **10.8** appears, the winch can be severely damaged.
The winch can fail and accidents can result.
▶ Let the overheated winch cool off.

5.8 Function key line (crane operation)

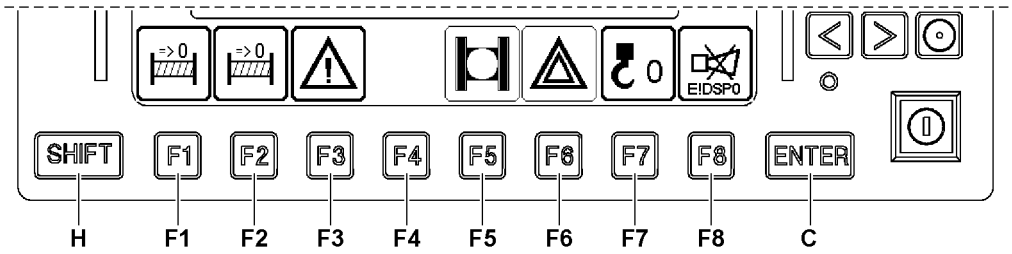

Fig.122540: Function key line in the Crane operation program

The function key line consists of function keys **F1** to **F8** and the icon line above it. The function keys correspond to the various function key icons above them.

The function key icons may trigger a function or they change their appearance upon the push of a key (function keys) and thereby their definition.

Depending on the crane type and set up configuration, fewer function key icons may be present.

Not all function keys have icons or functions assigned to them. This depends on the program selection.

Pressing a function key can change the appearance of the icon above, its meaning, or its textual content.

F1 Function key
- Set the current hook position as the zero point for the hook path display Winch 2*****
- Pressing the function key **F1** causes the *Reset winch display* icon to appear, i.e. the winch 2***** hook path display in the winch icon above is set to „000.00“ when the key is pressed. The path measurement begins here.

F2 Function key
- Set the current hook position as the zero point for the hook path display Winch 1
- Pressing the function key **F2** causes the *Reset winch display* icon to appear, i.e. the winch 1 hook path display in the winch icon above is set to „000.00“ when the key is pressed. The path measurement begins here.

F3 Function key
- Showing monitoring functions while operating the crane
- Using the function key **F3**, the displays *monitoring functions in crane operation* can be shown.

LWE/ab Muli 010/24201-02-02/en

copyright © Liebherr-Werk Ehingen GmbH 2016

Note

- The monitoring functions in crane operation are always active; however, they can be masked.
- If a warning event occurs, there is an acoustic warning (horn) and the displays *monitoring function in crane operation* are displayed on the LICCON monitor, even if they were previously masked.

F4 Function key
- Not assigned

F5 Function key
- Show or mask monitoring of surface pressure and center of gravity
- Using the function key **F5**, the monitoring of the surface pressure and center of gravity can be shown or mask.

F6 Function key
- Fading monitored auxiliary functions in or out
- The function key **F6** can be used to show or mask all monitored auxiliary functions in the crane on or off.

F7 Function key
- Taring Actual load display: The actual load display can be changed at any time to net load (tare) by pressing the function key **F7**.
- As long as net load is set, the icon above the function key **F7** is shown in red.
- For a detailed description of the actual load display, see section „Information regarding crane geometry and load“.
- The change to net load is cancelled by each of the following actions:
  1.By pressing the function key **F7** again.
  2.By telescoping the boom by more than 3 LE (dm or 1/10 ft.)
  3.By luffing by more than ±4°.

F8 Function key
- Shut off of acoustic warning / error diagnostics
- For detailed description of acoustic warnings on the LICCON monitor, see section „Acoustic warnings on LICCON monitor“

5.9 Operating elements in the Crane operation program

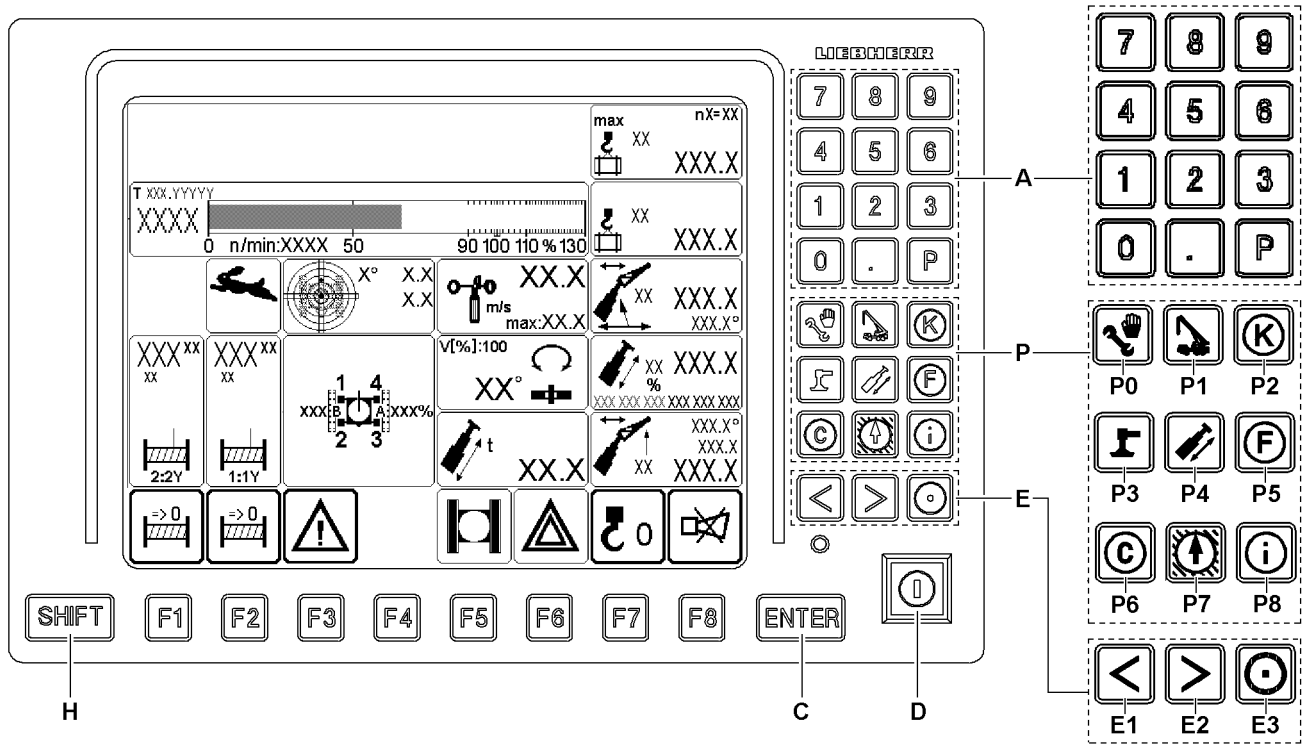

Fig.122541: Operating elements in the Crane operation program

LWE/ab Muli 010/24201-02-02/en

copyright © Liebherr-Werk Ehingen GmbH 2016

The following functions are assigned to the other operating elements of the display and operating unit of the LICCON computer system in the crane operation program.

A Numeric keypad
- For entry of numeric values (if required)

P Program keys
- The program keys are used to select individual programs. The program specific peculiarities must be observed, see respective sections of programs in this chapter.
  Note: Some programs can only be called up with the program key when no functions are activated via the set up key **D** at the same time.

C Button **ENTER**
- For confirmation of entry (if required)

D Set up key
- Zero position (not actuated):
  Normal operation
- Touching:
  Special functions LICCON overload protection released, see section „Special functions LICCON overload protection“

E Special function keys
- Monitor brightness adjustment (see section „Operating elements of the LICCON computer system“)

Note

▶ Additional functions of the special function keys **E** are program-dependent and are further explained in the description of the individual LICCON programs.

H **SHIFT** key
- Second level key assignments

6 The Telescoping program

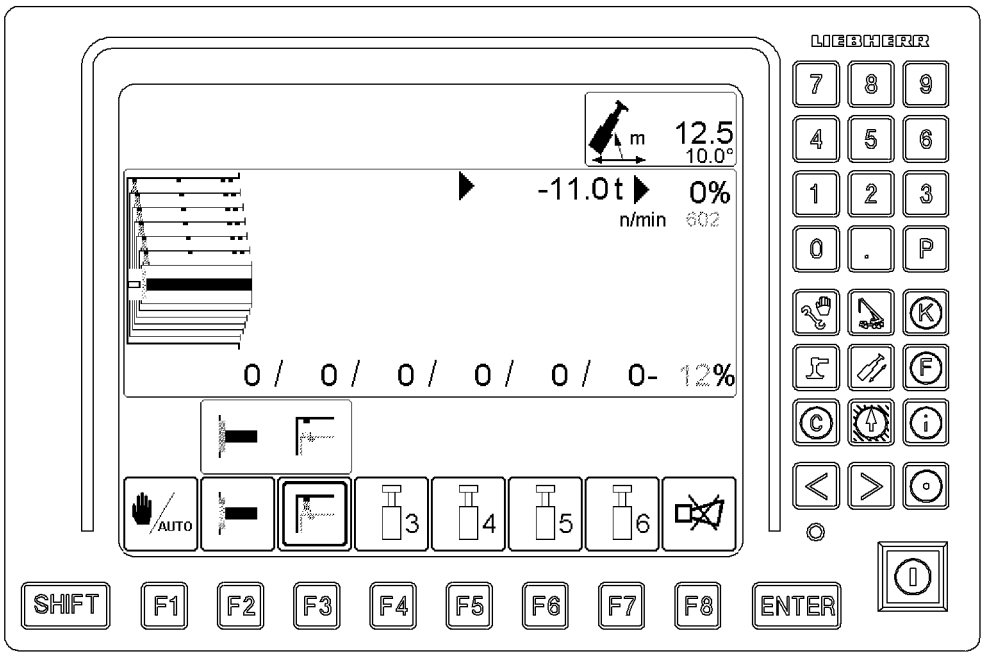

Fig.122469: Exemplary illustration of displays in the Telescoping program

LWE/ab Muli 010/24201-02-02/en

copyright © Liebherr-Werk Ehingen GmbH 2016

Note
▶ The Telescoping program is only available on crane types with telescoping system TELEMATIK.

6.1 Display areas in the Telescoping program

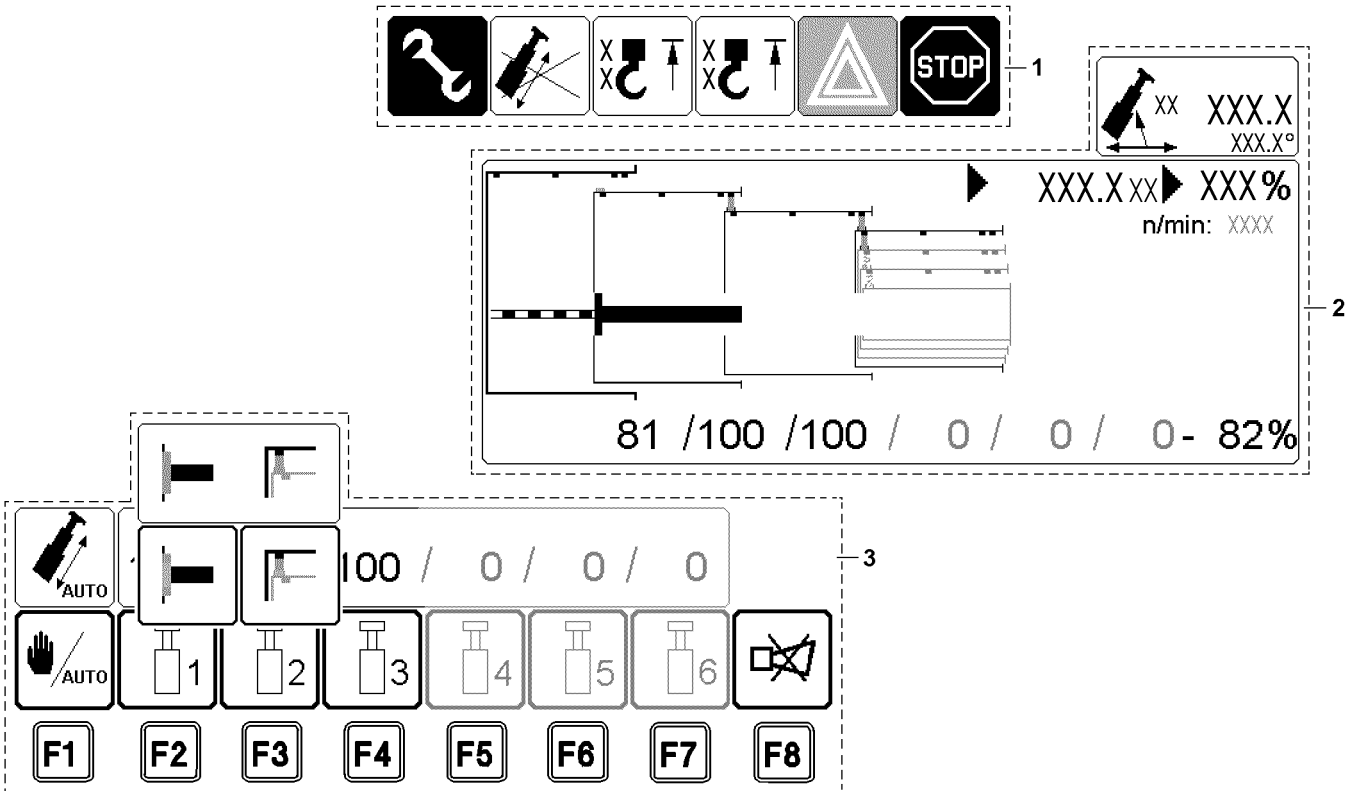

Fig.122461: Display areas in the Telescoping program

In the telescoping program, the following areas are shown:

1 Alarm functions
2 Telescoping screen
3 Function key line

Note
▶ For detailed description of the alarm functions **1**, see section „The Crane operation program“.

The telescoping screen **2** shows the crane operator in a dynamic view:
- The pin condition of the telescopic boom
- The position of the individual telescopes to each other
- The extension condition of telescoping cylinder

The function key line **3** consists of function keys F1 to F8 and the icon line above them.
- The function keys correspond to the various icons above them.
- The function key icons always show the functions which are activated by pressing the button.
- The function is called up after pressing a button. In addition, the icon above it can change its display, its meaning or its text.
- Not all function keys have icons assigned to them. This depends on the active program selection.

Note
▶ For a detailed description for the telescoping procedure, see Chapter 4.05.
▶ In the *Boom length* icon of the crane operating screen, information about the telescoping procedure is also shown, see section „The Crane operation program“.

copyright © Liebherr-Werk Ehingen GmbH 2016

6.2 Start the Telescoping program

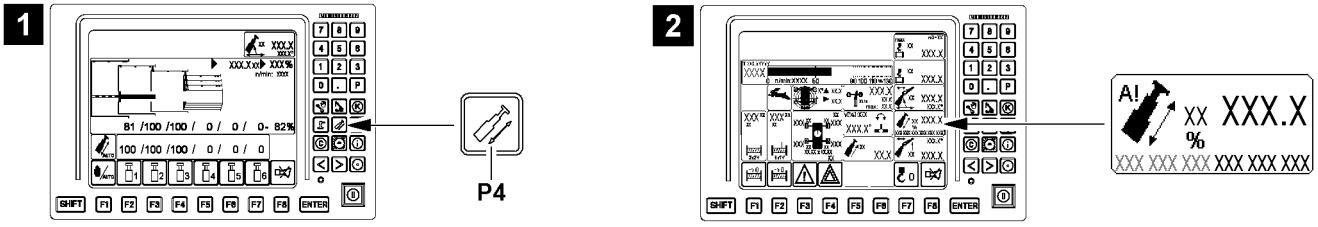

Fig.122462: Start the Telescoping program

▶ Press the program key **P4**, see illustration **1**.
or
Automatic start from the Crane operation program: When the telescoping target is reached (illustration **2**) deflect the respective master switch in direction telescope in / telescope out.

6.3 Operating interface

6.3.1 Alarm functions

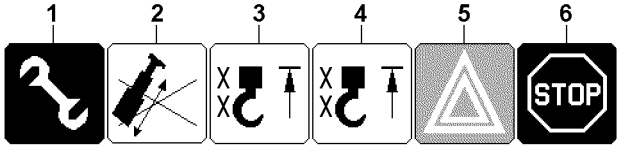

Fig.122463: Operating interface: Alarm functions

1 Assembly

The icon appears if:
- a special case was activated at the operation of the LICCON overload protection, see section „Special functions LICCON overload protection“
- TELEMATIK emergency operation was activated (only for certain crane types)

2 Telescoping procedure disabled
- Disabling further telescoping procedure due to expected exceeding of maximum load in unpinned condition
- **Note:** See section „Monitored auxiliary functions“

3 *Hoist top* icon
- The icon appears when the hoist limit switch for the first load position was triggered.

4 *Hoist top* icon
- The icon appears when the hoist limit switch for the second load position was triggered.

5 *Advance warning* icon
- The icon appears when an advance warning was triggered.

6 Icon *STOP*
- The icon appears when the crane movements were turned off by the LICCON computer system.

LWE/ab Muli 010/24201-02-02/en

copyright © Liebherr-Werk Ehingen GmbH 2016

6.3.2 Telescoping screen

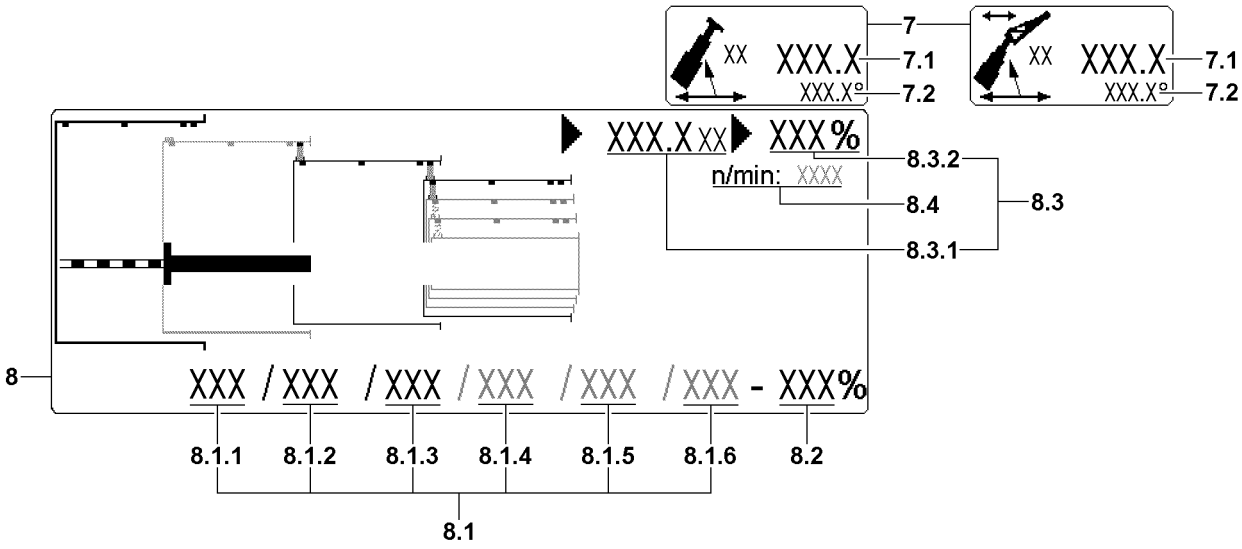

Fig.122464: Operating interface: Telescoping screen upper screen area

7 *Boom radius* icon

7.1 Radius
- Boom radius of the crane
- In [m] or [ft]

7.2 Main boom angle
- In [°]

8 View of telescopic boom
- Stylized illustration of the telescopic boom
- **Note**: The illustration refers to a telescopic boom with six telescopes, for crane types with other telescopic booms the illustration is adjusted.

8.1 Extension condition Telescope
- Current extension condition of the telescopes
- In [%]
- **8.1.1** Telescope 1 (T1)
- **8.1.2** Telescope 2 (T2)
- **8.1.3** Telescope 3 (T3)
- **8.1.4** Telescope 4 (T4)
  Note: Only for crane types with corresponding telescopic boom.
- **8.1.5** Telescope 5 (T5)
  Note: Only for crane types with corresponding telescopic boom.
- **8.1.6** Telescope 6 (T6)
  Note: Only for crane types with corresponding telescopic boom.

8.2 Extension condition of telescoping cylinder
- Current extension condition of telescoping cylinder
- In [%]

NOTICE
Damage to hydraulic pumps!
If the telescoping cylinder is not telescoped in before turning the superstructure engine off, then the hydraulic pumps can be damaged. This applies especially at low temperatures.
▶ Before turning the superstructure engine off, set the extension condition of the telescoping cylinder **8.2** to 0 % to 15 %, see Crane operating instructions, chapter 4.05.

8.3 Load display
- Display of actual load and utilization of crane in percentages

LWE/ab Muli 010/24201-02-02/en

copyright © Liebherr-Werk Ehingen GmbH 2016

8.3.1 Actual load
- Current load
- In [t] or [lbs]

8.3.2 Utilization of the crane
- Current utilization of the crane
- In [%]

8.3.3 Utilization bar
- Utilization bar blue / green: Utilization in permissible range
- Utilization bar yellow:
  Advance warning! - Utilization just before impermissible range
- Utilization bar red:
  Warning! - Utilization in impermissible range

8.4 Engine speed
- In revolutions per minute

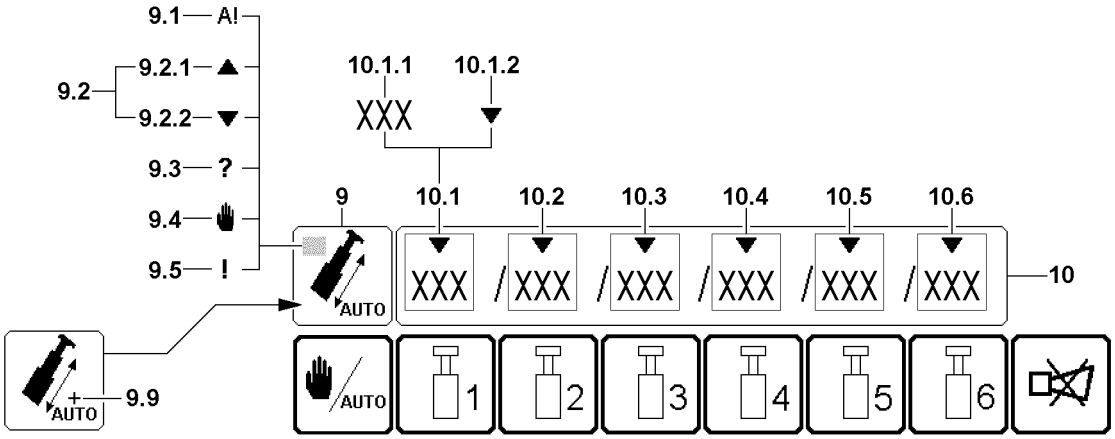

Fig.122465: Operating interface: Telescoping screen lower screen area

9 TELEMATIK
- Icon appears only in automatic operation telescoping
- **9.1** Preselected telescoping target reached
- **9.2** Direction specification telescoping
- **9.2.1** Arrow pointing up: Request telescope out
- **9.2.2** Arrow pointing down: Request telescope in
- **9.3** Error in system, observe error message
- **9.4** Manual telescoping
- **9.5** Control TELEMATIK emergency operation
  Note: Only for certain crane types.
- **9.9** Telescoping with automatic carrying along of auxiliary boom / accessory
  Note: Only for certain crane types.

10 Telescoping targets
- Selected telescoping targets of telescopes

10.1 Target selection Telescope 1
- **Note:** Valid as an example for all target selections for telescopes.
- **10.1.1** Telescoping target Telescope
- **10.1.2** Notification arrow: As a warning in the event of incorrect operation, target already reached or enter new target.

10.2 Target selection Telescope 2

10.3 Target selection Telescope 3

10.4 Target selection Telescope 4
Note: Only for crane types with corresponding telescopic boom.

10.5 Target selection Telescope 5
Note: Only for crane types with corresponding telescopic boom.

10.6 Target selection Telescope 6

LWE/ab Muli 010/24201-02-02/en

copyright © Liebherr-Werk Ehingen GmbH 2016

Note: Only for crane types with corresponding telescopic boom.

6.4 The function key line (Telescoping)

6.4.1 Function key line (telescoping): Automatic operation Telescoping

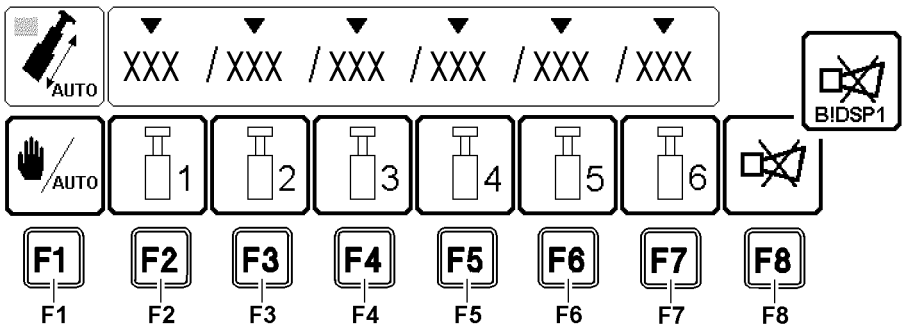

Fig.122466: Function key line in Telescoping program, automatic operation telescoping

F1 Function key

Change over between:
- Automatic operation Telescoping
- Automatic operation telescoping with carrying lattice jib along
  Note: Only for certain crane types
- Manual telescoping

F2 Function key
- Target selection Telescope 1

F3 Function key
- Target selection Telescope 2

F4 Function key
- Target selection Telescope 3

F5 Function key
- Target selection Telescope 4
  Note: Only assigned for crane types with telescope 4

F6 Function key
- Target selection Telescope 5
  Note: Only assigned for crane types with telescope 5

F7 Function key
- Target selection Telescope 6
  Note: Only assigned for crane types with telescope 6

F8 Function key
- Possibly shut off of acoustic warning and calling up of error messages:
  - Press the function key **F8** once: The acoustic signal is turned off.
  - Press the function key **F8** twice: The error description for the error message which occurred last is called up.
- **Note:** A new error turns the acoustic warning on again.

LWE/ab Muli 010/24201-02-02/en

copyright © Liebherr-Werk Ehingen GmbH 2016

6.4.2 Function key line (telescoping): Manual telescoping

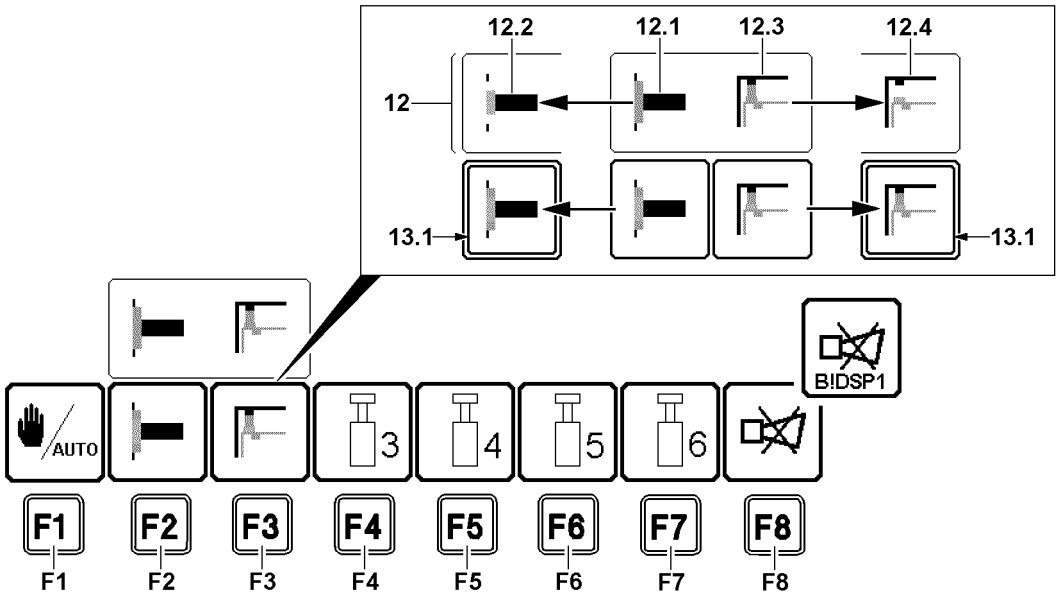

Fig.122467: Function key line in Telescoping program, manual telescoping

F1 Function key

Change over between:
- Manual telescoping
- Automatic operation Telescoping
- Automatic operation telescoping with carrying lattice jib along
  Note: Only for certain crane types

F2 Function key
- Telescoping cylinder unpin / pin
  Note: If the function is activated by pressing the function key **F2** then a red frame **13.1** appears

F3 Function key
- Telescope pinning unpin / pin
  Note: If the function is activated by pressing the function key **F3** then a red frame **13.1** appears

F4 Function key
- No function in manual telescoping

F5 Function key
- No function in manual telescoping

F6 Function key
- No function in manual telescoping

F7 Function key
- No function in manual telescoping

F8 Function key
- Possibly shut off of acoustic warning and calling up of error messages:
  - Press the function key **F8** once: The acoustic signal is turned off.
  - Press the function key **F8** twice: The error description for the error message which occurred last is called up.
- **Note:** A new error turns the acoustic warning on again.

12 Status icons *Manual telescoping*

Active process is shown in icon:
- **12.1** Telescoping cylinder pinned
- **12.2** Telescoping cylinder unpinned
- **12.3** Telescope pinning pinned

LWE/ab Muli 010/24201-02-02/en

copyright © Liebherr-Werk Ehingen GmbH 2016

- **12.4** Telescope pinning unpinned

6.5 Special function TELEMATIK Emergency operation

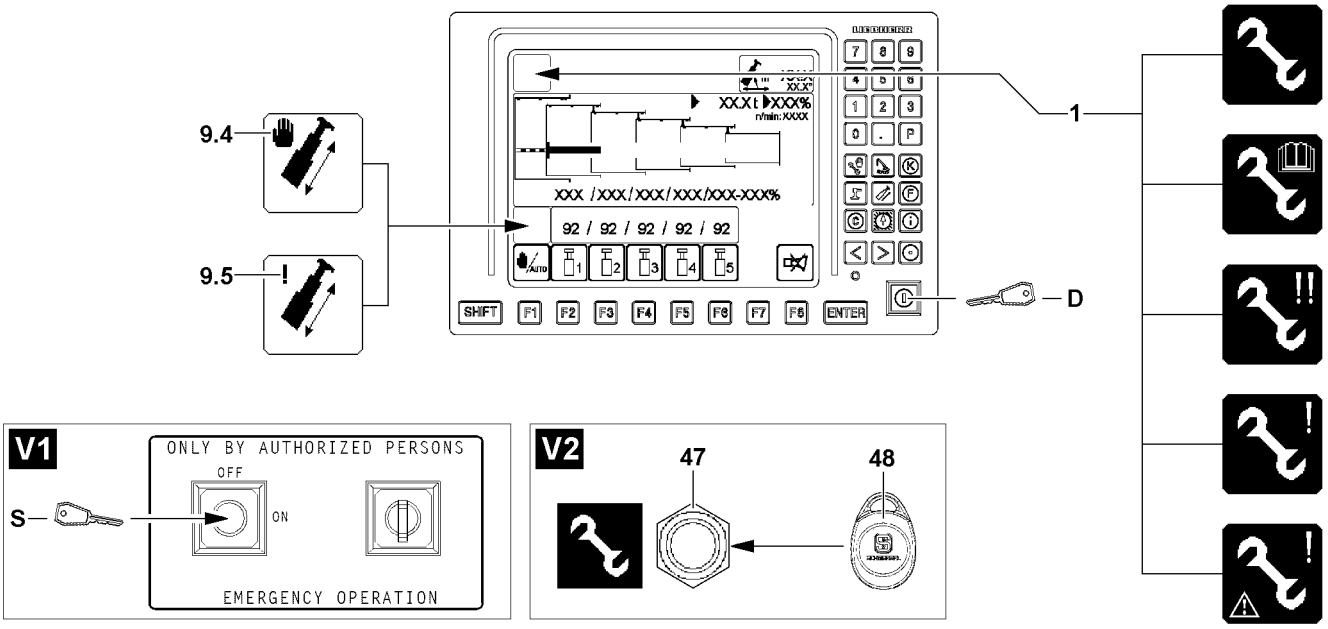

*Fig.122468: Special function TELEMATIK-Emergency operation**

Note

▶ Not present on all crane types.

WARNING

Shut off safety devices!
In TELEMATIK emergency operation the LICCON overload protection is totally deactivated.
The crane movements are no longer monitored by the LICCON overload protection.
Due to erroneous operation or deliberate misuse, the crane could collapse, the boom can break off or the crane can topple over.
Personnel can be severely injured or killed.

▶ The emergency operation may only be activated by persons who are aware of the consequences of their actions.
▶ A shut off by the LICCON overload protection may not be circumvented by the emergency operation.
▶ If normal crane operation is possible, then the emergency operation may not be activated.
▶ All crane movements must be carried out with extreme caution and anticipatorily.

In TELEMATIK emergency operation the opening of the tele pin is ensured.

The following shut offs are bypassed:
– Retract / extend telescoping cylinder is made possible with placed cylinder pin
– Maximum push out length of telescoping cylinder reached (extend cylinder possible)
– Collision with folding jib (telescoping out is made possible)

Make sure that the following prerequisites are met:
– An error in the TELEMATIK system is present.
– The Telescoping program is called up.
– Manual telescoping is called up.

6.5.1 TELEMATIK emergency operation (EN 13000:2010 not active).

TELEMATIK-Activate emergency operation:

LWE/ab Muli 010/24201-02-02/en

copyright © Liebherr-Werk Ehingen GmbH 2016

▶ Press the set up button **D**.

Result:

– Special function TELEMATIK emergency operation is activated.
– One of the *Assembly* icons **1** appears.
– The *Control TELEMATIK emergency operation* icon **9.5** appears.

Note
When the set up key **D** was actuated:
▶ If no crane movement occurs, then the special function TELEMATIK emergency operation is deactivated after ten seconds.
▶ The actuation of the set up key **D** is recorded in the data logger.

TELEMATIK-Emergency operation turn off:

▶ Press the set up button **D** again.

Result:

– Special function TELEMATIK emergency operation is turned off.
– The *Control TELEMATIK emergency operation* icon **9.5** turns off.

6.5.2 TELEMATIK emergency operation (EN 13000:2010 active)

TELEMATIK-Activate emergency operation:

Note
▶ Depending on the crane type, either the key button **S** (variation **V1**) or the sensor **47** with transponder **48** (variation **V2**) are present to activate the emergency operation on the crane, see Crane operating instructions, chapter 4.01.

Depending on the crane type:
▶ Actuate the key button **S**.
or
Place the transponder **48** on the sensor **47**.

Result:

– Special function TELEMATIK emergency operation is activated.
– One of the *Assembly* icons **1** appears.
– The *Control TELEMATIK emergency operation* icon **9.4** appears.

Note
When the key button **S** is actuated or the transponder **48** was placed on the sensor **47**:
▶ If no crane movement occurs, then the special function TELEMATIK emergency operation is deactivated after thirty minutes.
▶ The actuation of the key button **S** is recorded in the data logger.
▶ The application of the transponder **48** on the sensor **47** is recorded in the data logger.

TELEMATIK-Emergency operation turn off:

Depending on the crane type:
▶ Actuate the key button **S**.
or
Place the transponder **48** on the sensor **47**.

Result:

– Special function TELEMATIK emergency operation is turned off.
– The *Control TELEMATIK emergency operation* icon **9.4** turns off.

LWE/ab Muli 010/24201-02-02/en

copyright © Liebherr-Werk Ehingen GmbH 2016

7 The Working range limitation program*

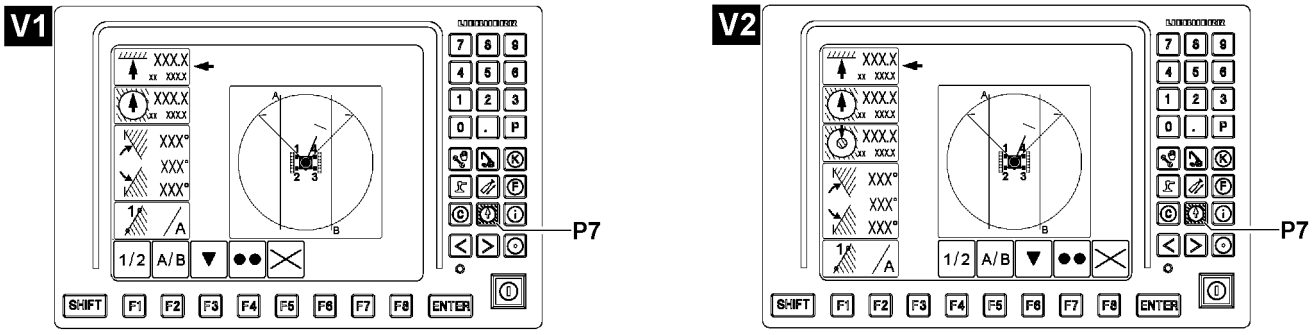

Fig.122542: Exemplary illustration of operating interfaces in the Working range limitation program

On the operating interface two variations are available of the Working range limitation program:
- **V1** Variation
- **V2** Variation

Note

▶ For a detailed description of working range limitation program, see Operating instructions for Working range limitation.

7.1 Call up the Working range limitation program

The working range limitation program runs in the background, crane movements are only shut off when the respective icon for the limitation is active (not crossed out).

▶ Press the program key **P7**.

copyright © Liebherr-Werk Ehingen GmbH 2016

7.2 Operating interface Working range limitation program

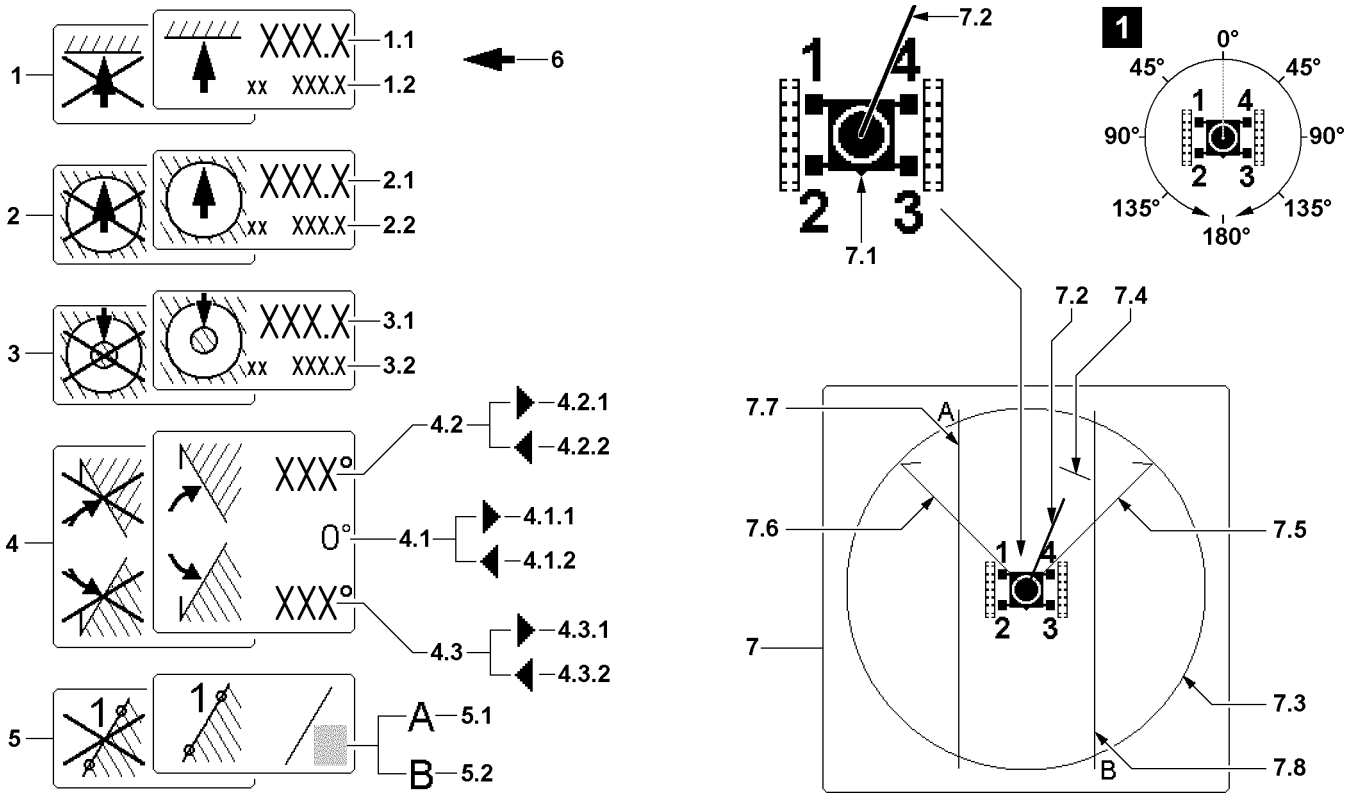

Fig.122543: Operating interface Working range limitation program

Note

▶ The limit function icons are shown crossed out if they are inactive.

1 Pulley head height
- Limitation of pulley head height
- Limits the height of the load pulley to a predetermined dimension

1.1 Limit value
- The limitation is made by reaching the limit value of the pulley head height

1.2 Actual value
- Current pulley head height

2 Working radius$_{max}$
- Limitation of maximum working radius (maximum radius)
- Limits the working radius of the load hook to a predetermined high dimension

2.1 Limit value
- The limitation is made by reaching the limit value for the maximum working radius

2.2 Actual value
- Current working radius

3 Working radius$_{min}$
- **Note**: Only present for certain crane types.
- Limitation of minimum working radius (minimum radius)
- Limits the working radius of the load hook to a predetermined minimum dimension

3.1 Limit value
- The limitation is made by reaching the limit value for the minimum working radius

3.2 Actual value
- Current working radius

4 Turning limitation
- Limitation of turning range

LWE/ab Muli 010/24201-02-02/en

copyright © Liebherr-Werk Ehingen GmbH 2016

- Limits the turning range of the turntable to a predetermined angle range.
- Consists of one each right limit angle **4.2** and one left limit angle **4.3**.

4.1 Slewing angle
- Current slewing angle of the turntable
- Main working direction of the crane = slewing angle 0°
  Slewing angle 0° is displayed when the turntable points exactly to the rear
- The slewing angle increases on both sides up to 180° when the turntable is turned. When turning past 180°, the display changes sides and the slewing angle starts to fall (for scale see illustration **1**).
- Arrow to the right **4.1.1**: Range *Turntable turned to the right*
- Arrow to the left **4.1.2**: Range *Turntable turned to the left*

4.2 Limit angle right
- The limitation is made by reaching this right limit angle
- Arrow to the right **4.2.1**: Limit angle is in range *Turntable turned to the right*
- Arrow to the left **4.2.2** Limit angle is in range *Turntable turned to the left*

4.3 Limit angle left
- The limitation is made by reaching this left limit angle
- Arrow to the right **4.3.1**: Limit angle is in range *Turntable turned to the right*
- Arrow to the left **4.3.2** Limit angle is in range *Turntable turned to the left*

5 Edge limitation
- Limitation of freely selectable edges (limitations)
- Consists of up to two edges („edge A **5.1**“ and „edge B **5.2**“), which do not have to run through the center of the slewing ring.

Note

▶ Due to the edge limitation it is possible to determine the working range limits, which allow a rotation of 360° compared to the slewing angle limitation. If necessary, the radius must be shorted for turning.

6 Function selector
- To select the limitation functions (Position **1** to **5**)

7 Graphic display
- Graphic display of programmed working range limits viewed from above.
  The crawler travel gear is shown in the center.
- The triangle **7.1** shows where the front is on the crawler travel gear.
- The green bar **7.2** shows the current direction and radius of the boom. The longer the green bar, the larger the radius of the crane.

7.3 Crane working radius
- Graphic illustration of the maximum working radius (maximum radius) of the crane under ideal conditions.
- **Note:** Setting cannot be changed in the program.

7.4 Working radius$_{max}$
- Graphic illustration of maximum working radius (maximum radius).
- Based on the limit value **2.1** from *Working radius$_{max}$* icon **2**
- **Note:** If the green bar **7.2** crosses the red line of the working radius$_{max}$ **7.4**, a shut off occurs.

7.5 Limit angle right
- Graphic illustration of the right limit angle.
- Based on the limit angle right **4.2** from *Turning limit* icon **4**
- **Note:** If the green bar **7.2** and the orange line of the limit angle right **7.5** are superimposed, a shut off occurs.

7.6 Limit angle left
- Graphic illustration of the left limit angle.
- Based on the limit angle left **4.3** from *Turning limit* icon **4**
- **Note:** If the green bar **7.2** and the red line of the limit angle left **7.6** are superimposed, a shut off occurs.

LWE/ab Muli 010/24201-02-02/en

copyright © Liebherr-Werk Ehingen GmbH 2016

7.7 Edge A
- Graphic illustration *Edge A*
- Based on the edge A **5.1** from *Edge limitation* icon **5**
- **Note:** If the green bar **7.2** crosses the red line of edge A **7.7**, a shut off occurs.

7.8 Edge B
- Graphic illustration *Edge B*
- Based on the edge B **5.2** from *Edge limitation* icon **5**
- **Note:** If the green bar **7.2** crosses the orange line of edge B **7.8**, a shut off occurs.

7.3 Function key line (working range limitation)

7.3.1 Function key line (working range limitation) for variation V1

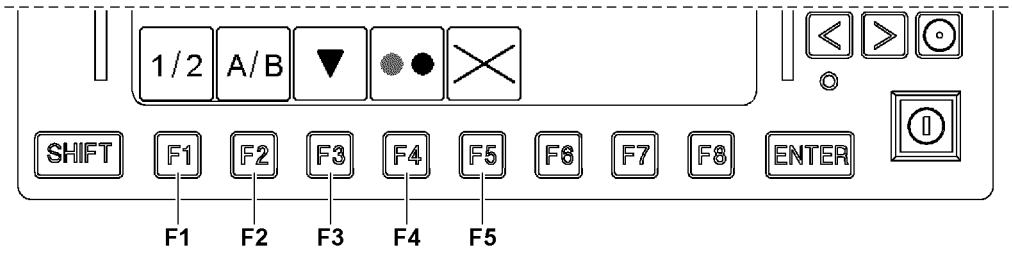

Fig.122437: Function key line in Working range limitation program, variation V1

F1 Function key
- Selection of point 1 or 2 of selected edge A (red) or B (orange)

F2 Function key
- Selection of edge A (red) or B (orange) that is being programmed

F3 Function key
- The function selector is moved down by one limit function

F4 Function key
- ON / OFF
  The limit function selected with the function selector changes its status. If previously active, it will now be inactive when the function key **F4** is pressed, and vice versa. An inactive limit function is identified by a crossed out icon. If the function selector shows a slewing limit to the left or the right, then both limits will always be switched.
  Note: For edge limitation, only the preselected edge will be switched. The edge that is not displayed can be active or inactive at the same time.

Note

▶ Limit functions can only be added via the function key **F4** when the boom is in the respective permissible range.

F5 Function key
- All limit functions become inactive

LWE/ab Muli 010/24201-02-02/en

copyright © Liebherr-Werk Ehingen GmbH 2016

7.3.2 Function key line (working range limitation) for variation V2

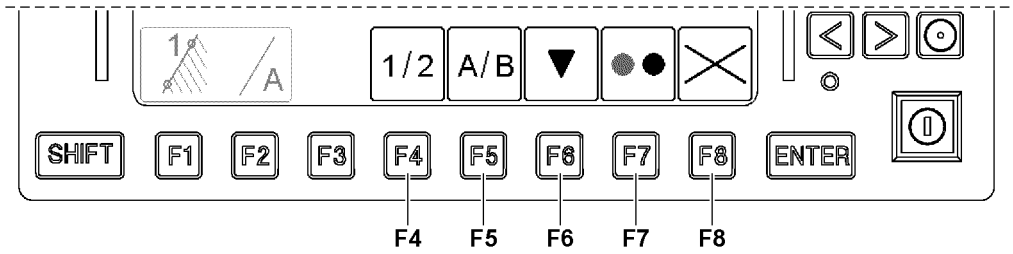

Fig.122436: Function key line in Working range limitation program, variation V2

F4 Function key
- Selection of point 1 or 2 of selected edge A (red) or B (orange)

F5 Function key
- Selection of edge A (red) or B (orange) that is being programmed

F6 Function key
- The function selector is moved down by one limit function

F7 Function key
- ON / OFF
  The limit function selected with the function selector changes its status. If previously active, it will now be inactive when the function key **F7** is pressed, and vice versa. An inactive limit function is identified by a crossed out icon. If the function selector shows a slewing limit to the left or the right, then both limits will always be switched.
  Note: For edge limitation, only the preselected edge will be switched. The edge that is not displayed can be active or inactive at the same time.

Note

▶ Limit functions can only be added via the function key **F7** when the boom is in the respective permissible range.

F8 Function key
- All limit functions become inactive

7.4 Occurrence of a shut off in the working range limitation

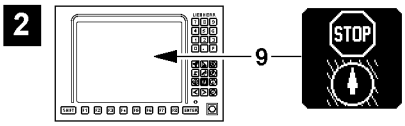

Fig.122438: Occurrence of a shut off in the working range limitation

If the programmed working range limitation is actuated, then this condition is shown in the crane operating screen by a *STOP* icon **9**, see illustration **2**.

8 Speed reduction master switch

The speed reduction of master switches is made in the settings window. The speeds of the displayed crane movements / crane functions can be limited steplessly to the desired value.

Speed reduction of master switches is the speed of the crane function reduced to the speed set in the settings window.

LWE/ab Muli 010/24201-02-02/en

copyright © Liebherr-Werk Ehingen GmbH 2016

WARNING
Danger of accident!
- ▶ Make the selection of the rotation speed according to the specifications in the load chart manual.
- ▶ The following applies: The longer the boom and / or the greater the load, the smaller the set maximum rotation speed must be.
- ▶ **Never** deflect the master switch for the slewing gear to the stop with a long boom and / or great load.

WARNING
Deactivated speed reduction of master switches!
When the rapid gear is engaged, the speed reductions of the master switches can be ineffective / limited.
Too high a crane speed can cause accidents.
- ▶ Turn the rapid gear off when a speed reduction of the master switches is necessary.

8.1 Operating elements at speed reduction of master switches

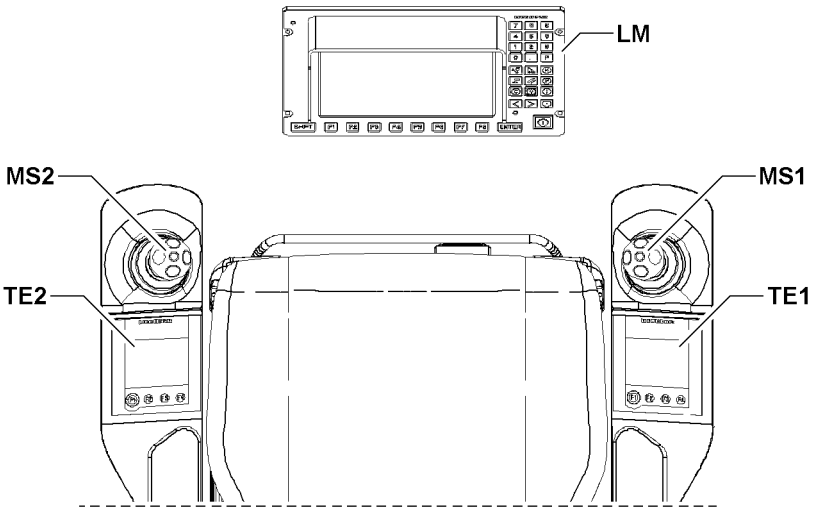

Fig.122445: Operating elements at speed reduction of master switches

LM LICCON monitor
MS1 Master switch 1
TE1 Touch display 1
MS2 Master switch 2
TE2 Touch display 2

LWE/ab Muli 010/24201-02-02/en

copyright © Liebherr-Werk Ehingen GmbH 2016

8.2 User platform in settings window for speed reduction of master switches

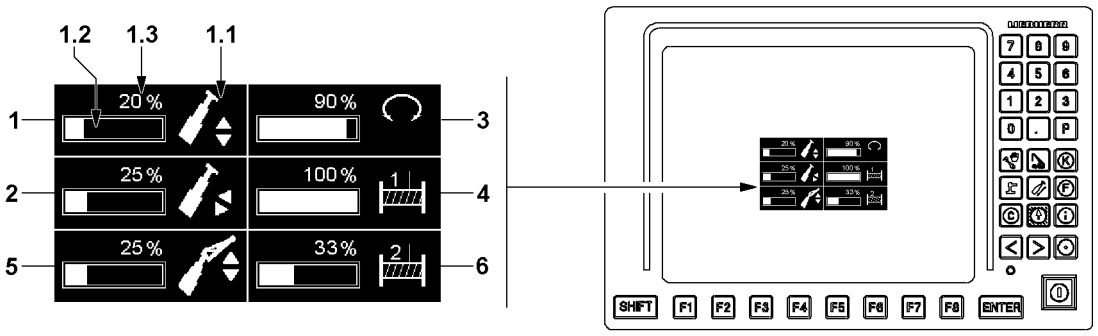

Fig.122446: User platform in settings window for speed reduction of master switches

Note

▶ The set up of the individual settings windows is always the same. The set up is explained via the first settings window (luffing).

1 Settings window Luffing **1**

1.1 *Assignment* icon
- Icon of assigned crane movement / crane function

1.2 Bar display
- Graphic illustration of current speed reduction

1.3 Display value
- Numeric display of current speed reduction in [%]

2 Settings window Telescoping **2**

3 Settings window Slewing gear **3**

4 Settings window winch 1 **4**
- **Note:** Appears only when the winch is active.

5 Settings window Auxiliary boom **5**
- Display field for auxiliary boom
- **Note:** Appears only when an auxiliary boom is installed and entered in the Set up program.

6 Settings window Winch 2
- Display field for winch 2
- **Note:** Appears only if winch 2 is installed and active.

LWE/ab Muli 010/24201-02-02/en

copyright © Liebherr-Werk Ehingen GmbH 2016

8.3 Processing the speed reduction

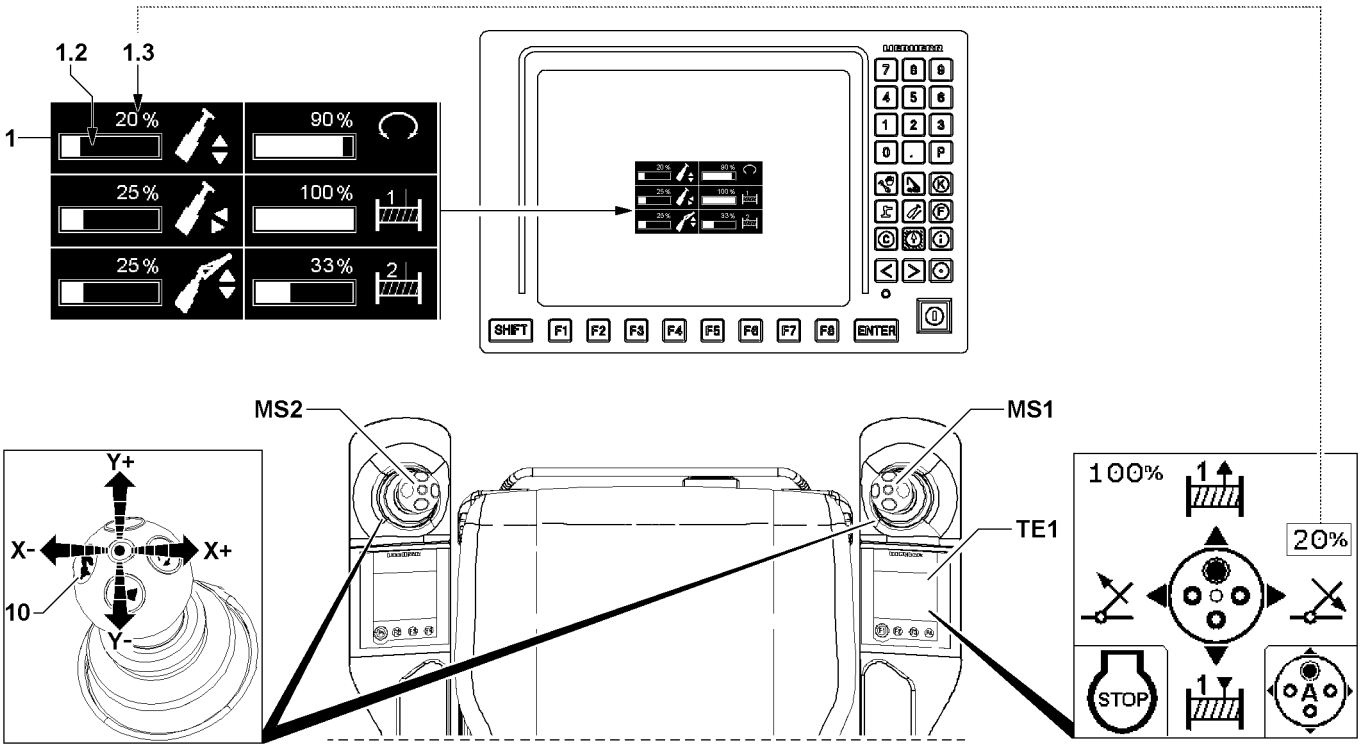

Fig.122447: Example Processing the speed reduction

The procedure in the settings window *Speed reduction master switch* is identical for all crane functions.

Using the example Setting crane movement *Luffing*, the individual steps are explained.

Note
Only the settings for the displayed crane movements / crane functions can be carried out.
▶ If necessary, activate required crane movements / crane functions before calling up the settings windows.

8.3.1 Displaying the settings windows

▶ Press the button **10** on master switch **MS1** or master switch **MS2** for at least two seconds.

Result:

– The settings window for the speed reduction of the master switches is shown.

Note
The settings window is automatically hidden after ten seconds if during that time there is no access to the speed reduction of a crane function.
▶ Continue in time with the next steps.

8.3.2 Procedure

The speed reduction is always set via the master switch which controls the crane movement.

Note
▶ If the master switch is deflected lightly, the value is slowly increased / reduced.
▶ If the master switch is deflected strongly, the value is quickly increased / reduced.

LWE/ab Muli 010/24201-02-02/en

copyright © Liebherr-Werk Ehingen GmbH 2016

Example: Set the crane movement *Luffing*. The crane movement is carried out via the master switch **MS1**.

Reducing the value of the speed reduction:
▶ Move the master switch **MS1** in direction X- (to the left).

Result:

– The bar in the bar display **1.2** gets shorter.
– The display value **1.3** is reduced.
– The speed for crane movement *luffing* is set to the new display value **1.3**.
– The new display value for the crane movement *luffing* is shown in the touch display **TE1**.

Increasing the value of the speed reduction:
▶ Move the master switch **MS1** in direction X+ (to the right).

Result:

– The bar in the bar display **1.2** gets longer.
– The display value **1.3** is increased.
– The speed for crane movement *luffing* is set to the new display value **1.3**.
– The new display value for the crane movement *luffing* is shown in the touch display **TE1**.

8.3.3 Closing the settings window

Make sure that the following prerequisite is met:
– All speed reductions are set.

▶ Press the button **10** on master switch **MS1** or master switch **MS2** for at least two seconds.
or
Wait ten seconds without further steps.

Result:

– The settings window for the speed reduction of the master switches closes.

9 Track width monitoring without shut off of crane movement

The track width monitoring monitors the extension conditions of the crawler carriers. The measured extension conditions are compared hereby with the specifications of the set load chart.

If the extension conditions of a crawler carrier are wrong or in case of a defect in the monitoring system, the track width monitoring issues an optical and acoustic warning. The track width monitoring does **not** shut the crane movements off.

Make sure that the following prerequisites are met:
– The crawler carriers are extended to the width required for crane operation.
– The crawler carriers are pinned and secured.
– The extension conditions for crawler carriers (support base), load chart and settings in the Set up program match.
– The crane operation screen is shown.

LWE/ab Muli 010/24201-02-02/en

copyright © Liebherr-Werk Ehingen GmbH 2016

9.1 Crawler carrier on incorrect position

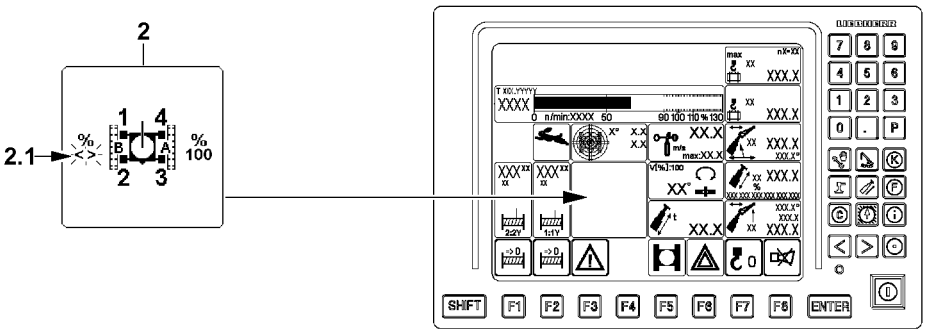

Fig.122544: Crawler carrier on incorrect position

Example for a crawler carrier on incorrect position:
– In the *Crawler travel gear* icon **2** either:
  • the incorrect extension condition **2.1** is shown blinking in red
  or
  • the sign *Intermediate position* **<>** appears blinking in red
– A signal tone sounds

WARNING
Crawler carrier on incorrect position!
Toppling crane, death, property damage.
▶ Before crane operation, set the crawler carrier on the correct position according to the load chart.

9.2 Defect at track width monitoring

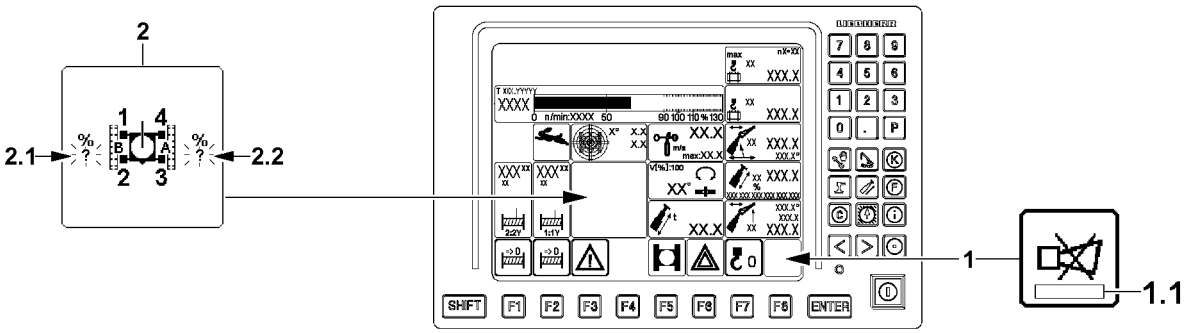

Fig.122545: Defect at track width monitoring

Example for a defect in the monitoring system of the track width monitoring:
– In the *Horn* icon **1** an error message **1.1** is issued.
– In the *Crawler travel gear* icon **2** red blinking question marks appear instead the of the values for the extension condition **2.1** / extension condition **2.2**.
– A signal tone sounds

WARNING
Defect in monitoring system of track width monitoring!
Toppling crane, death, property damage.
▶ Before crane operation, fix the track width monitoring.

LWE/ab Muli 010/24201-02-02/en

copyright © Liebherr-Werk Ehingen GmbH 2016

10 Track width monitoring with shut off of crane movement*

The track width monitoring monitors the extension conditions of the crawler carriers. The measured extension conditions are compared hereby with the specifications of the set load chart.

Optionally, the track width monitoring can be equipped with a shut off function. In cases of incorrect extension condition of the crawler carriers or a defect in the track width monitoring, the track width monitoring turns selected crane movements off.

The shut off of the crane movement can be bypassed. When the track width monitoring is bypassed, the crane operator bears the sole responsibility for the correct extension condition of the crawler carriers (support base) of the crane.

Make sure that the following prerequisites are met:
- The crawler carriers are extended to the width required for crane operation.
- The crawler carriers are pinned and secured.
- The extension condition (support base), load chart and settings in the Set up program match.
- The crane operation screen is shown.

10.1 Crawler carrier on incorrect position

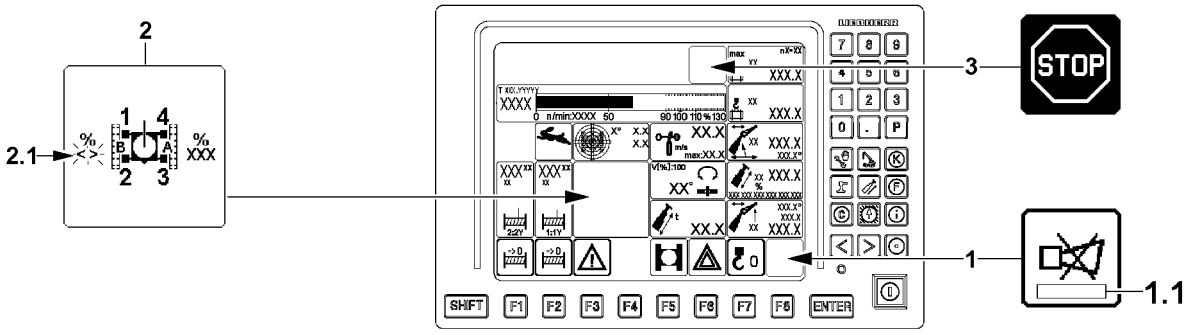

Fig.122546: Crawler carrier on incorrect position

Example for a crawler carrier on incorrect position:
- As soon as a crane movement is actuated, an error message **1.1** appears in the *Horn* icon **1**.
- In the *Crawler travel gear* icon **2**:
  - the incorrect extension condition **2.1** is shown blinking in red
    or
  - the sign *Intermediate position* **<>** appears blinking in red
- A signal tone sounds
- *LMB-STOP* icon **3** appears

WARNING
Crawler carrier on incorrect position!
Toppling crane, death, property damage.
▶ Before crane operation, set the crawler carrier on the correct position according to the load chart.

LWE/ab Muli 010/24201-02-02/en

copyright © Liebherr-Werk Ehingen GmbH 2016

10.2 Defect at track width monitoring

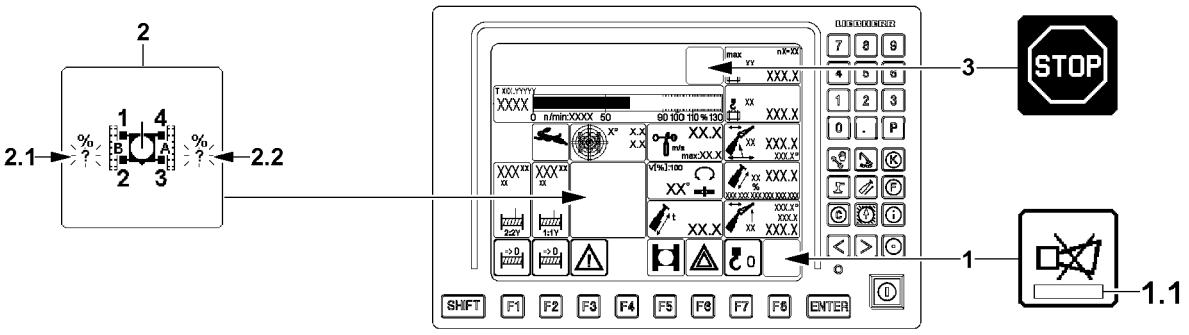

Fig.122547: Defect at track width monitoring

Example for a defect in the monitoring system of the track width monitoring:
- In the *Horn* icon **1** an error message **1.1** is issued.
- In the *Crawler travel gear* icon **2** red blinking question marks appear instead the of the values for the extension condition **2.1** / extension condition **2.2**.
- A signal tone sounds
- *LMB-STOP* icon **3** appears

WARNING
Defect in monitoring system of track width monitoring!
Toppling crane, death, property damage.
▶ Before crane operation, fix the track width monitoring.

10.3 Bypassing the track width monitoring

WARNING
Erroneous operation at bypassed track width monitoring!
Toppling crane, death, property damage.
▶ Before crane operation, fix the track width monitoring.
▶ Before crane operation, set the crawler carriers on the correct position according to the load chart.

A defect in the track width monitoring causes an *LMB-STOP* **3**, selected crane movements are turned off.

To be able to carry out crane movements in case of a defect in the track width monitoring, the track width monitoring can be bypassed.

LWE/ab Muli 010/24201-02-02/en

copyright © Liebherr-Werk Ehingen GmbH 2016

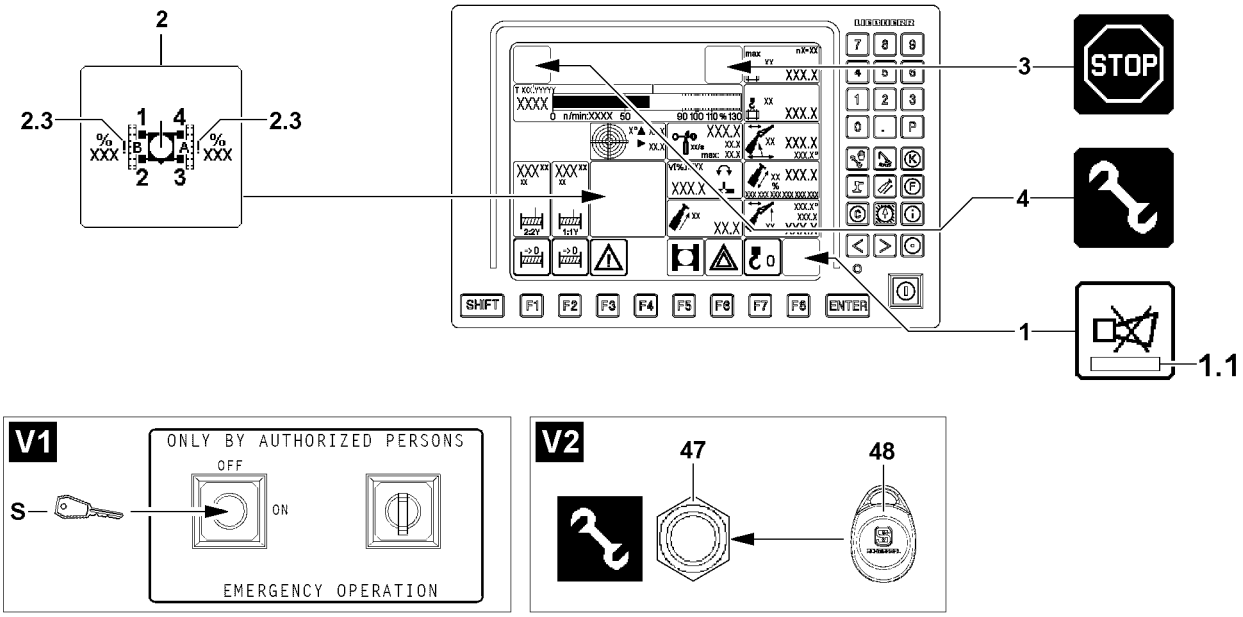

Fig.123721: Bypass the track width monitoring on crane with EN 13000:2010 active

On cranes with *EN 13000:2010 active* the crane driver has 30 minutes time after activation of the bypass to initiate a crane movement. After 30 minutes, the bypass is deactivated. To initiate after that another crane movement, the bypass must be activated again.

Note

▶ Depending on the crane type, either the key button **S** (variation **V1**) or a sensor **47** with transponder **48** (variation **V2**) are present on the crane, see Crane operating instructions, chapter 4.01.

On cranes with *EN 13000:2010* active:

▶ Activate the sensor **47** by actuating it with the transponder **48**.
or

If no sensor **47** is installed on the crane:
Actuate the key button **S**.

Result:

– In the *Crawler travel gear* icon **2** two *exclamation marks* **2.3** are shown.
– *Assembly* icon **4** appears.
– Crane movements with reduced speed are possible.
– The track width monitoring is bypassed.

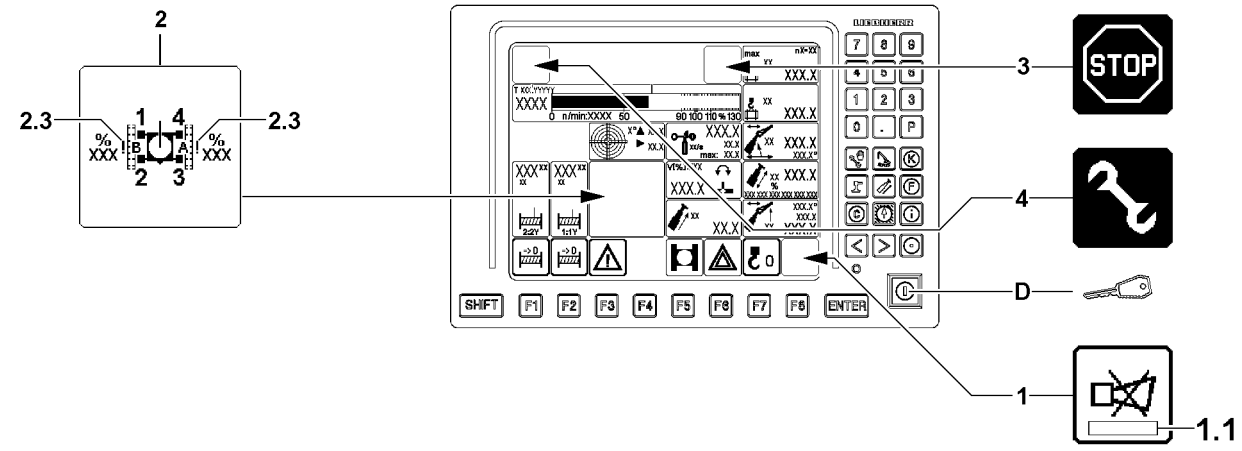

Fig.123722: Bypass the track width monitoring on crane with EN 13000:2010 not active

LWE/ab Muli 010/24201-02-02/en

copyright © Liebherr-Werk Ehingen GmbH 2016

On cranes with *EN 13000:2010 not active* the crane driver has 10 seconds time after activation of the bypass to initiate a crane movement. After 10 seconds, the bypass is deactivated. To initiate after that another crane movement, the bypass must be activated again.

On cranes with *EN 13000:2010* not active:
▶ Press the set up button **D**.

Result:

– In the *Crawler travel gear* icon **2** two *exclamation marks* **2.3** are shown.
– *Assembly* icon **4** appears.
– The track width monitoring is bypassed.

11 ECO-Mode

Note
▶ Only present for certain crane types.

In ECO-Mode the optimum engine rpm is calculated for the respective crane movement and the engine is regulated accordingly. Fuel consumption and noise emission are reduced.

11.1 Operating elements in ECO-Mode

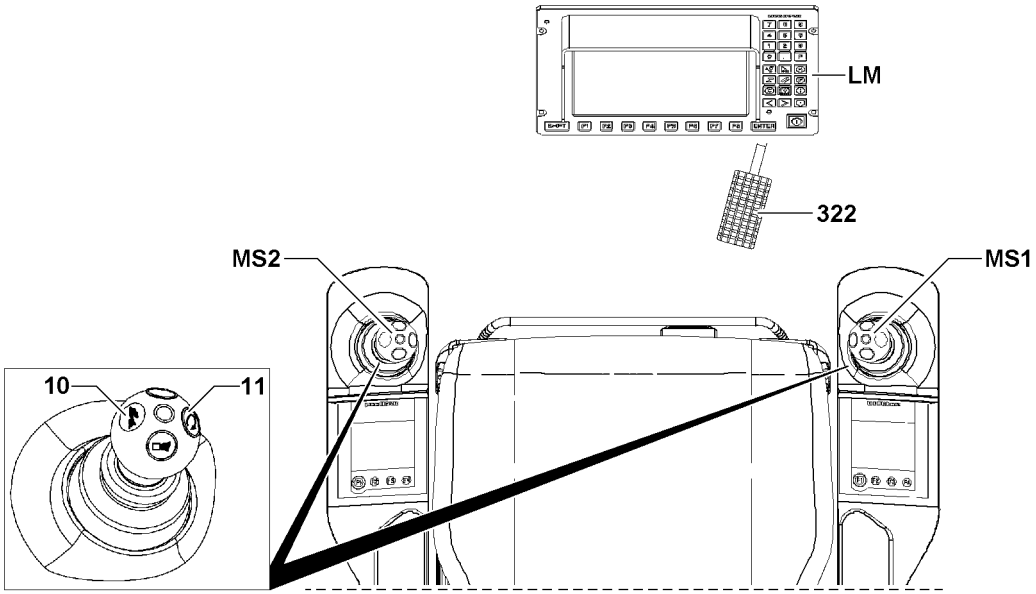

Fig.122450: Operating elements in ECO-Mode

MS1 Master switch 1
- Rapid gear **10** button
- Rpm lock **11** button

MS2 Master switch 2
- Rapid gear **10** button
- Rpm lock **11** button

322 Engine regulation

LM LICCON monitor

LWE/ab Muli 010/24201-02-02/en

copyright © Liebherr-Werk Ehingen GmbH 2016

11.2 Operating interface in ECO-Mode

11.2.1 Displays ECO mode in settings window

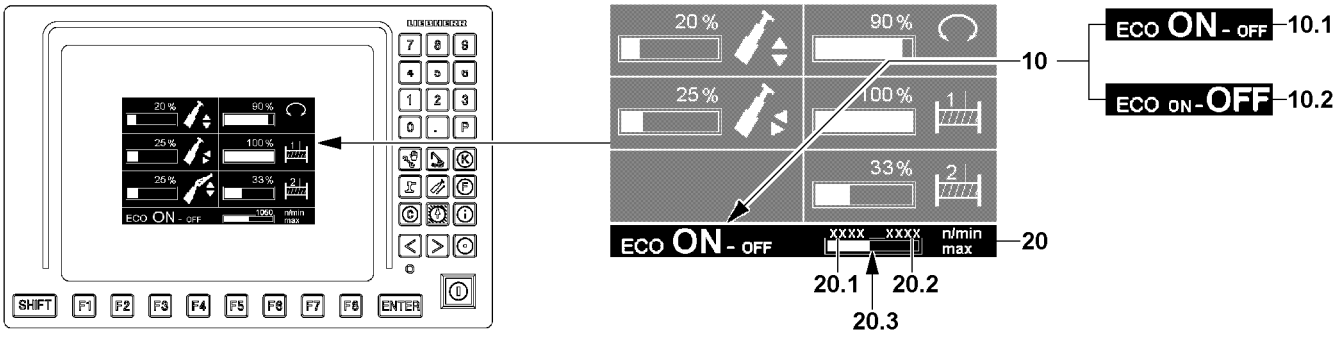

Fig.122449: Displays ECO mode in settings window

10 Status ECO-Mode

10.1 ECO-Mode ON
- ECO-Mode turned on

10.2 ECO-Mode OFF
- ECO-Mode turned off

20 Rpm settings ECO-Mode
- Information for current rpm settings

20.1 Engine speed
- Current rpm of the crane engine

20.2 Highest rpm
- Maximum possible rpm of crane engine in ECO-Mode

20.3 Bar diagram
- The bar diagram shows the ratio of the engine rpm **20.1** to the highest rpm **20.2**

11.2.2 Displays ECO mode in crane operating screen

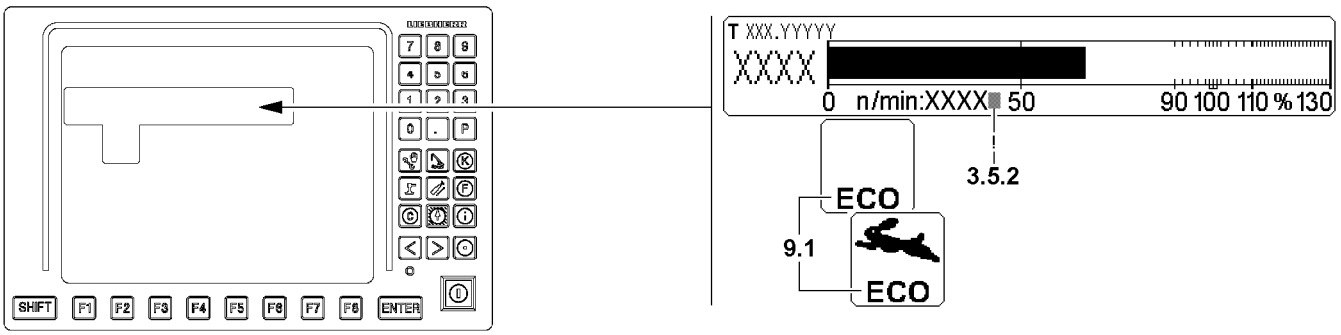

Fig.122451: Displays ECO mode in crane operating screen

9.1 Status display
- The status display is made in the *Rapid gear* icon:
  - The word ECO is *green*: ECO mode is turned on and active
  - The word ECO is *yellow*: ECO mode is turned on but inactive
  - No ECO word shown: ECO mode is turned off

3.5.2 Rpm limited
- If the „**!**“ appears behind the rpm display, then the engine rpm is limited in ECO mode

copyright © Liebherr-Werk Ehingen GmbH 2016

11.3 Operating the ECO-Mode

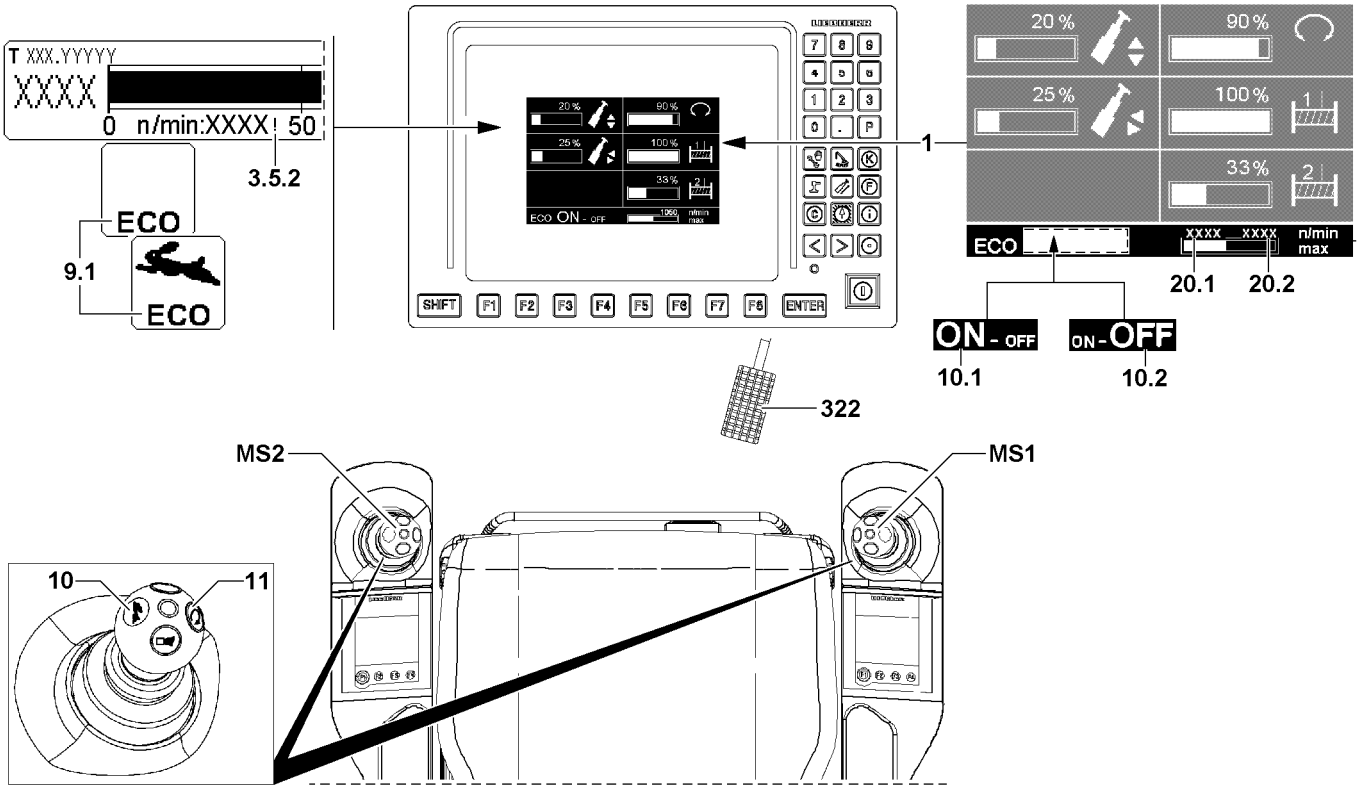

Fig.122452: Exemplary illustration for operating the ECO-Mode

11.3.1 Displaying the settings windows

Make sure that the following prerequisite is met:
- The Crane operation program is called up

▶ Press the rapid gear **10** button on master switch **MS1** or master switch **MS2** for at least two seconds.

Result:

– The settings window **1** is shown.

Note
The settings window **1** is turned off again after ten seconds if no subsequent step is carried out within this time frame.
▶ Continue in time with the next steps.

11.3.2 Turning ECO-Mode on

Make sure that the following prerequisites are met:
- The settings window **1** is shown.
- The master switches are not actuated.
- No auxiliary user is activated.
- The radio remote control is not activated.
- The engine regulation **322** is not actuated.

▶ Press the button rpm lock **11** on master switch **MS1** or master switch **MS2**.

Result:

– ECO-Mode **ON 10.1** appears in the settings window
– ECO-Mode is turned on and active

LWE/ab Muli 010/24201-02-02/en

copyright © Liebherr-Werk Ehingen GmbH 2016

– As soon as the settings window **1** is masked, the display ECO **9.1** appears in green

Note

- ▶ When master switch **MS1** and master switch **MS2** are in neutral position, then the engine rpm is automatically reduced when ECO-Mode is turned on.
- ▶ If master switch **MS1** or master switch **MS2** is deflected or an auxiliary user is added, then the engine rpm is automatically adjusted when ECO-Mode is turned on.
- ▶ The engine rpm can be increased by actuating the engine regulation **322** when ECO-Mode is turned on. The ECO mode is then still turned on but inactive - the display ECO **9.1** appears in yellow.
- ▶ As long as the display ECO **9.1** is in yellow, there is no adjustment of the engine rpm for the respective crane movement.
- ▶ In the following additional cases, the display ECO **9.1** also appears in yellow: Rpm lock active, idling speed is automatically reduced, rpm is specified with radio remote control.

11.3.3 Limiting Motordrehzahl im ECO-Mode

Make sure that the following prerequisites are met:
- The settings window **1** is shown.
- ECO mode is turned on.

▶ Activate the engine regulation **322**.

Result:

– The learning mode is activated:
– By the degree of actuation of the engine regulation **322** the value for the highest rpm **20.2** can be changed.
– The value for the engine rpm **20.1** is masked for the duration of the procedure

▶ Actuate the engine regulation **322** until the desired highest rpm **20.2** is reached.
▶ Press the button rpm lock **11** on master switch **MS1** or master switch **MS2**.

Result:

– The new value for the highest rpm **20.2** is taken over.

▶ Do no longer actuate the engine regulation **322**.

Result:

– The learning mode is deactivated.
– The value for the engine rpm **20.1** is shown again

Note

Limited engine rpm

- ▶ In the operating screen, behind the display of the engine rpm appears the icon **3.5.2** (exclamation mark), when the ECO mode with limited engine rpm is turned on.
- ▶ To reset the maximum engine rpm, the maximum engine regulation **322** must be actuated and saved as described above.

11.3.4 Turning ECO-Mode off

Make sure that the following prerequisites are met:
- ECO-Mode is turned on, see section „Turning ECO-Mode on“

▶ Press the rapid gear **10** button on master switch **MS1** or master switch **MS2** for at least two seconds.

Result:

– The settings window **1** is shown.

▶ Press the button rpm lock **11** on master switch **MS1** or master switch **MS2**.

copyright © Liebherr-Werk Ehingen GmbH 2016

Result:

– ECO-Mode **OFF 10.2** appears in the settings window
– ECO-Mode is turned off
– as soon as the settings window **1** is masked, the display ECO **9.1** turns off

12 Power-Save mode and Stand-by mode in the LIC-CON computer system

12.1 Power-Save mode

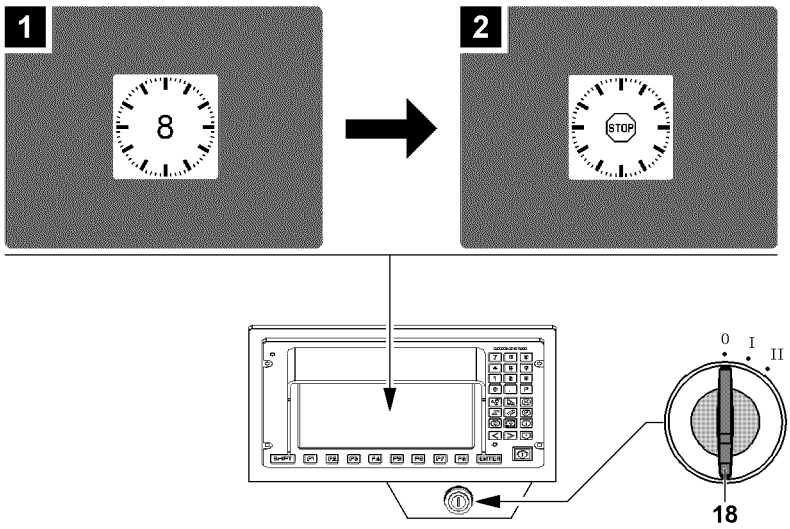

Fig.122440: Power-Save mode

If the crane engine - by turning the ignition switch **18** - is turned off to position 0 (ignition **OFF**), the LICCON computer system changes to Power-Save mode.

The Power-Save mode enables the crane driver - within eight seconds of turning the ignition off - to start the crane engine again without having to start the LICCON computer system again.

If the crane engine is not restarted within eight seconds, then the LICCON computer system turns off completely.

Note
▶ In the Power-Save mode, no crane movements are possible.

Procedure of Power-Save mode

▶ Turn the ignition switch **18** to position 0 (ignition **OFF**).

Result:

– The crane engine is turned off.
– The Power-Save mode is active.
– The clock with remaining run time of the Power-Save mode (approx. eight seconds) appears, illustration **1**.

Note
▶ After completion of the remaining run time, a clock appears briefly with an integrated *STOP* icon (illustration **2**), which displays the complete turning off of the LICCON computer system.

– Clock with integrated *STOP* icon appears for a few seconds, illustration **2**.
– All processes on the LICCON computer system are stopped.

LWE/ab Muli 010/24201-02-02/en

copyright © Liebherr-Werk Ehingen GmbH 2016

– The LICCON computer system is turned off completely.

Press any button in Power-Save mode once

Note
▶ Pressing a button in Power-Save mode once shortens the run time to five seconds.

▶ Press any button.

Result:

– The remaining run time is shortened to five seconds.

Press any button in Power-Save mode twice

▶ Press any button twice in succession.

Result:

– The remaining run time is set to zero.
– Clock with integrated *STOP* icon appears for a few seconds, illustration **2**.
– All processes on the LICCON computer system are stopped.
– The LICCON computer system is turned off completely, the LICCON monitor does not display anything.

12.2 Stand-by mode

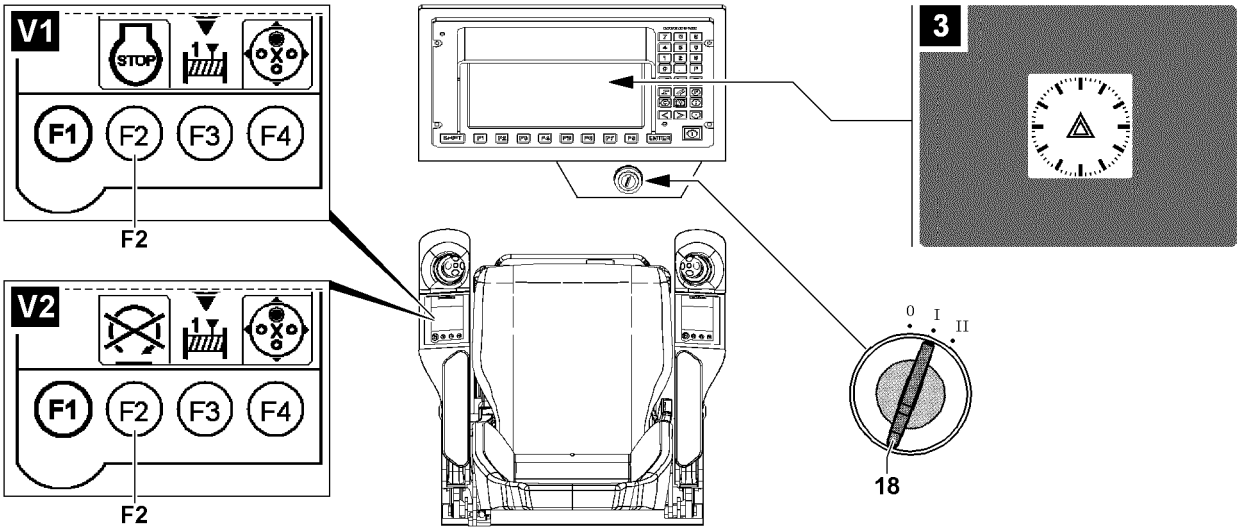

Fig.122439: Stand-by mode

After pressing the engine *STOP* key **F2** (depending on the crane type variation **V1** or variation **V2**) - the crane engine is turned off - on the LICCON monitor, the operating interface of the most recently active application program continues to be displayed for an additional ten minutes.

After ten minutes are over, the Stand-by mode is reached. The Stand-by mode is displayed on the screen by the *Stand-by clock with warning icon* (illustration **3**) on the LICCON monitor and by a repeated acoustic signal (rhythmic horn).

Note
▶ In the Stand-by mode, no crane movements are possible.

Initiate the Stand-by mode in the LICCON computer system:

▶ Press the engine *STOP* key **F2**.
▶ Leave the ignition key **18** in position „**I**“.

copyright © Liebherr-Werk Ehingen GmbH 2016

Result:

– The crane engine is turned off.
– The operating interface of the last active application program is shown further.
– The ten minute time frame starts to run down.

▶ Within the ten minute time frame, press **any key**.

Result:

– The ten minute time frame is reset and starts to run down again.

▶ Within the ten minute time frame, press **no key**.

Result:

– After the time is over, the **Stand-by mode** is reached.
– The display area on the LICCON monitor turns black.
– The stand-by clock with a warning icon is shown, illustration **3**.
– Every half a minute a repeating acoustic signal from the LICCON monitor sounds.

Note
▶ The Stand-by mode does not lead to any automatic turn off of the LICCON computer system.

Turn the LICCON computer system off from the Stand-by mode.

▶ Turn the ignition switch to position 0.

Result:

– The Power-Save mode becomes active for eight seconds, then the LICCON computer system is turned off by itself.

LWE/ab Muli 010/24201-02-02/en

copyright © Liebherr-Werk Ehingen GmbH 2016

4.03 Crane start up and taking the crane out of service

1	Checks before start up	3
2	Work station - Crane operator's cab	9
3	Hydraulic oil preheating*	25
4	Starting and stopping the engine	29
5	LICCON computer system after engine start	37

LWE/ab Muli 010/24201-02-02/en

copyright © Liebherr-Werk Ehingen GmbH 2016

LWE/ab Muli 010/24201-02-02/en

Fig.195219

copyright © Liebherr-Werk Ehingen GmbH 2016

1 Checks before start up

Various checks must be performed every time before operating the crane.

WARNING
Operating safety of the crane!
Defects on components, missing quantities or dirty filters affect the operating safety of the crane.
- ▶ If a defect on a component is found during the check, the defect must be remedied before operating the crane.
- ▶ If an item is low or lacking during an inspection, then it must be refilled or brought to normal status before operating the crane.
- ▶ If the inspection shows a very dirty filter, then it must be replaced before operating the crane.

WARNING
Heated crane components!
When the engine is running, crane components can heat up significantly! This applies especially to exhaust systems, the engines, the coolant circuit and the respective gears in the crane chassis and in the crane superstructure.
Touching heated crane components can cause severe injuries.
- ▶ Carry out the checks before starting the crane, when the crane components are cold.
- ▶ Let already heated components cool off before checking.
- ▶ Proceed with special caution near heated crane components.

Note
- ▶ For detailed description of fill quantities, service items and lubricants, see chapter 7.06 and chapter 7.07 in the Crane operating instructions.

1.1 Checking the crane condition

WARNING
Danger of accident due to falling parts!
Loose parts, such as pins, spring retainers or ice, which are on the boom or crane superstructure can fall down during crane operation and hit personnel!
Personnel can be killed or seriously injured!
- ▶ Before starting crane operation, make sure that there are no loose parts on the boom and crane superstructure!

- ▶ Check the crane for visible damage before starting crane operation.
- ▶ Carry out a function test of available safety devices.
- ▶ Make sure that the crane is standing on level, load bearing ground.
- ▶ Make sure that the crane is properly supported and horizontally aligned.
- ▶ Make sure that the gear ring of the rotary connection is clean and greased.
- ▶ Make sure that the air supply to the oil and water cooler is clear.
- ▶ Make sure that side covers are closed and locked.
- ▶ Make sure that no persons or objects are within the danger zone of the crane.
- ▶ Make sure that the cable / rope drum and the limit switches are free of snow and ice.
- ▶ Make sure that there are no loose parts on the boom and the crane superstructure.

1.2 Checking the monitoring functions

If a control value has reached the limit range, then the monitoring functions are called up in the LICCON computer system. In addition, individual control displays can be called up.

How individual control displays are shown on the LICCON monitor is described in detail in the Crane operating instructions, chapter 4.02.

Lubricants and service items must be replenished in time.

LWE/ab Muli 010/24201-02-02/en

copyright © Liebherr-Werk Ehingen GmbH 2016

Make sure that the following prerequisites are met:
- The ignition switch in the crane cab is in the position „I“.
- The engine is off.
- The LICCON computer system is in the „Crane operation“ program.

1.2.1 Checking the fuel reserve

WARNING
Danger of fire and explosion!
▶ Turn the auxiliary heater* off approx. 3 min before refueling the fuel tank.
▶ Before refueling the fuel tank, turn the engine off.

Note
If the fuel tank has been run dry, then the fuel system must be bled.
▶ Do **not** deplete the fuel tank.

▶ Call up individual control display.

Result:

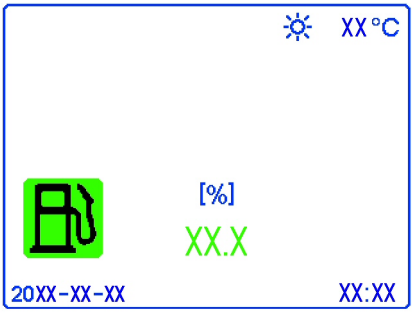

Fig.122222: Fuel reserve

On the LICCON monitor, the „fuel reserve“ is indicated in percentages.

▶ Check the fuel reserve and add fuel if necessary.

1.2.2 Checking the urea reserve

Note
▶ Valid only for engines which are equipped with an exhaust aftertreatment SCR system.

▶ Call up individual control display.

Result:

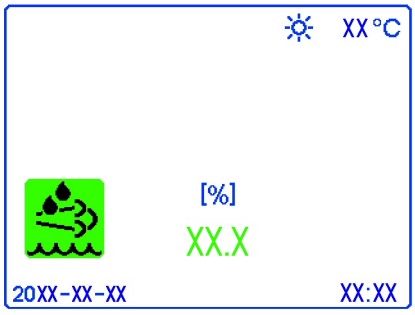

Fig.122223: Urea reserve

LWE/ab Muli 010/24201-02-02/en

copyright © Liebherr-Werk Ehingen GmbH 2016

On the LICCON monitor, the „urea reserve“ is indicated in liters.

▶ Check the urea reserve and add urea if necessary.

1.2.3 Checking the engine oil level

▶ Call up individual control display in the LICCON computer system.

Result:

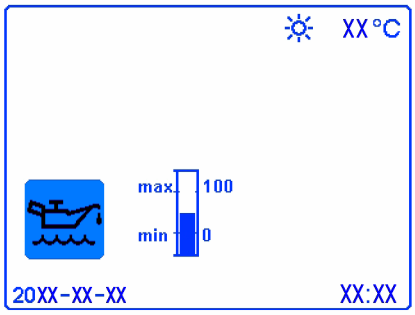

Fig.122224: Engine oil level

In the LICCON monitor the oil level is shown in the form of a bargraph in percentages [%].

Explanation of bargraph:
– Under *min*: Oil level too low.
– Between *min* and *max*: Oil level OK.
– Over *max*: Oil level overfilled.

▶ Check the oil level and add engine oil, if necessary.

1.3 Checking the oil level on the Diesel engine with the dipstick

For details on how to check the oil level and filter, see Crane operator's instructions, chapter 7.05 and operating instructions of the engine manufacturer.

Note
▶ Applies only for engines with installed dipstick.

▶ Check the engine oil level.
▶ Check the filter on the engine.

1.4 Checking the coolant level

WARNING
Cooling system is pressurized!
When the coolant reservoir is opened, hot coolant can escape explosively.
Severe scalding.

When the engine is warm:
▶ Do **not** open the cover of the coolant reservoir.
▶ To protect face, hands and arms from hot steam of hot coolant, cover the cap with a large rag when opening.

▶ Check the coolant level.

If the coolant level is too low:

▶ Add coolant, see Crane operating instructions, chapter 7.05.

LWE/ab Muli 010/24201-02-02/en

copyright © Liebherr-Werk Ehingen GmbH 2016

1.5 Checking the oil level and filter on the hydraulic tank

For detailed description of checking the oil level and filter, see Crane operating instructions, chapter 7.05.

- ▶ Check the oil level in the hydraulic tank.
- ▶ Check the filter on the hydraulic tank.

1.6 Checking the central lubrication system

The grease container must be filled at all times with sufficient lubricant.

- ▶ Check the grease container.

If the lubricant level is too low:

- ▶ Add lubricant, see Crane operating instructions, chapter 7.05.

1.7 Checking the window cleaning fluid

NOTICE
Frozen window cleaning fluid!
If the window cleaning fluid is not frost resistant, then the windshield washer system can freeze during the cold time of the year.
Failure of the windshield washer system is the result.
The windshield washer system can be damaged.

- ▶ Change the window cleaning fluid in time to a frost resistant type.

Before the start of the cold season:

- ▶ Empty the container for the window cleaning fluid and refill it with a commercially available, frost resistant window cleaning fluid.

LWE/ab Muli 010/24201-02-02/en

copyright © Liebherr-Werk Ehingen GmbH 2016

Empty page!

copyright © Liebherr-Werk Ehingen GmbH 2016

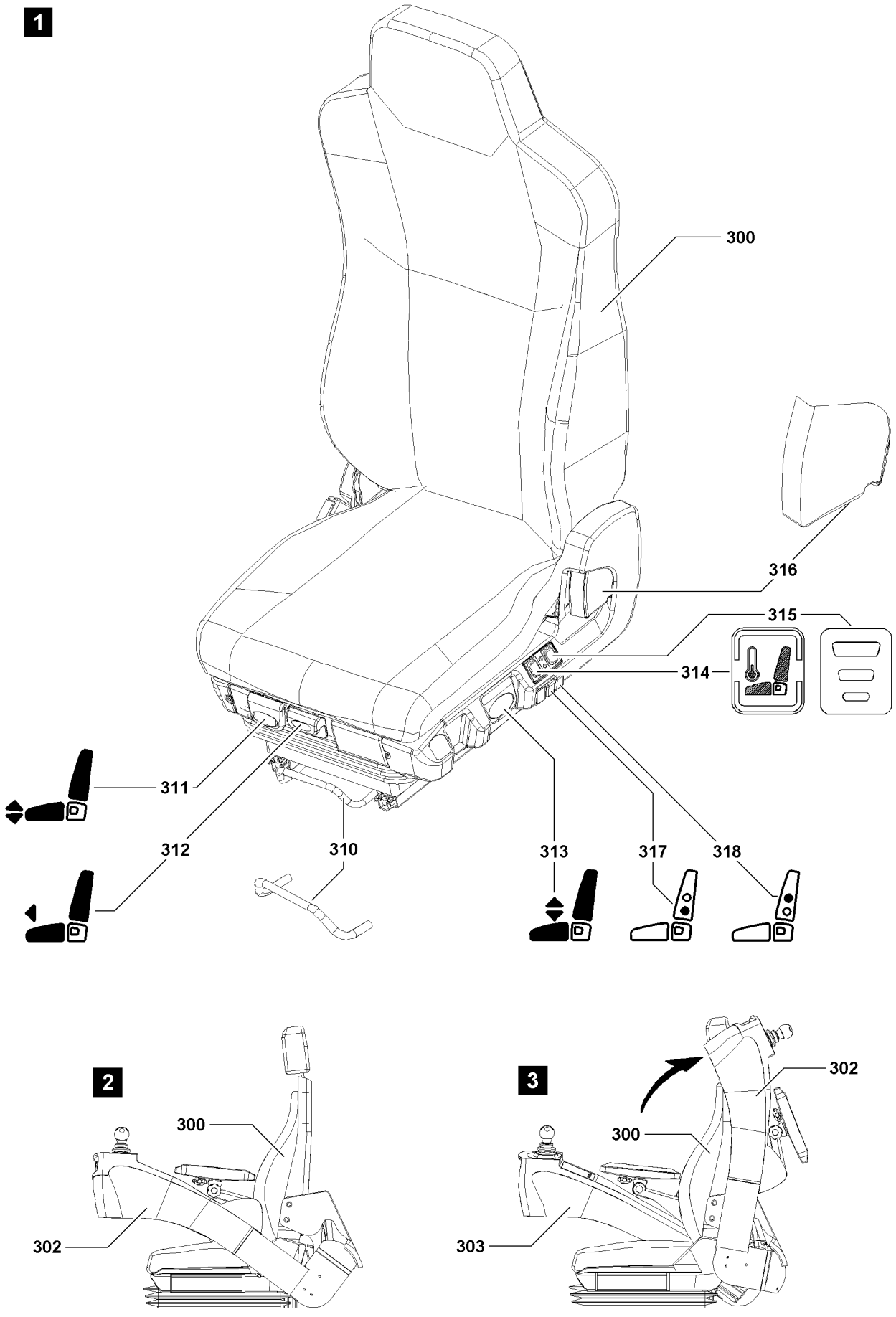

Fig.110462

LWE/ab Muli 010/24201-02-02/en

copyright © Liebherr-Werk Ehingen GmbH 2016

2 Work station - Crane operator's cab

2.1 Adjusting the crane operator's seat

WARNING
Danger of injury!
At inclined crane operator's cab and when the crane is standing on an incline, the crane operator's seat can move suddenly when adjusting it!
Limbs can be caught and injured!
▶ Carry out adjustments on the crane operator's seat only when the crane operator's cab is in horizontal position!

Adjusting the seat position

▶ With the bar **310** adjust the seat in horizontal direction by moving it back or forth.
▶ With the lever **311** adjust the seat incline.
▶ With the lever **312** adjust the position of the seat cushion.
▶ With the lever **313** adjust height of seat.
▶ With the lever **316** adjust the angle of the backrest.
▶ With the button **317** adjust the lumbar area support „on the bottom“.
▶ With the button **318** adjust the lumbar area support „on top“.

Turn the seat heater* / seat climate control* on

The seat heater or climate control is turned on / off with the switch* **314**.

There are three switch positions:
– Center position: Seat heater and seat climate control turned off.
– Pushed on top: Seat heater turned on (red light).
– Pushed on the bottom: Seat climate control turned on (blue light).

▶ Select the seat heater / seat climate control on with switch* **314**.
▶ Adjust the seat heater / seat climate control with switch* **315**.

LWE/ab Muli 010/24201-02-02/en

copyright © Liebherr-Werk Ehingen GmbH 2016

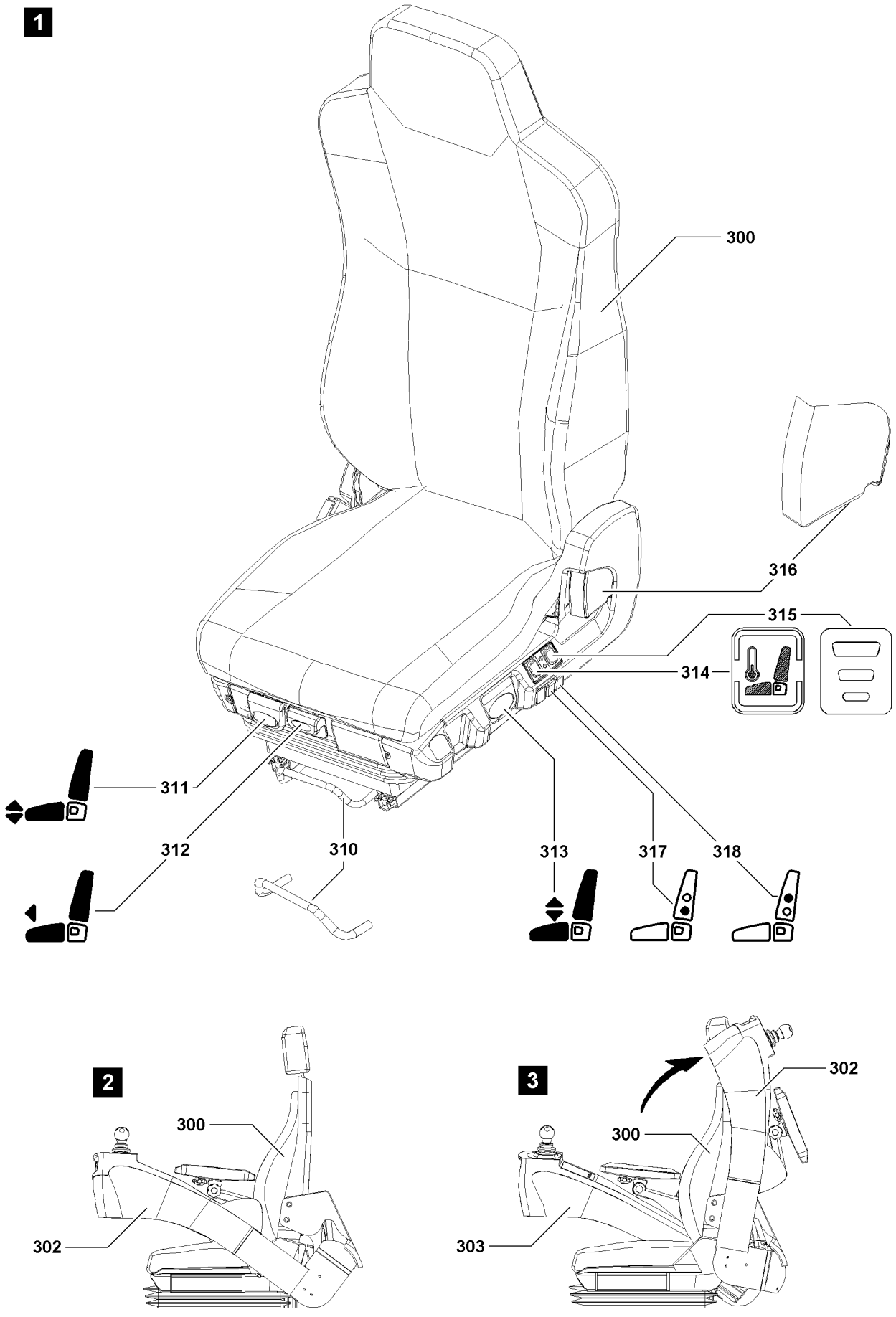

Fig.110462

LWE/ab Muli 010/24201-02-02/en

copyright © Liebherr-Werk Ehingen GmbH 2016

2.2 Adjusting the consoles

The control platform, with the consoles on the left and right hand side of the crane operator's seat **300** allows the crane operator to adjust the consoles to suit his body size optimally.

Two different console positions are possible:
- Crane operating position (both consoles down), see illustration **2**.
- Position Entering / exiting, see illustration **3**.

WARNING
Danger of accident!
A raised console (for example console **302** in entering / existing position), can swing down uncontrolled in case of jolting (for example due to sudden braking action)!
Injuries to persons and property damage can result!
- ▶ Driving the crane and crane operation with raised consoles is prohibited!
- ▶ Always bring the consoles into „Crane operating position“ immediately!
- ▶ Hold the consoles when swinging them until the respective end position is reached!

The consoles can be brought into another position by swinging them up.
- Move the console **302** (left) from „crane operating position“ to „enter / exit“ position by swinging it up (self-retaining).
- Move the console **303** (right) from „crane operating position“ to „Up“ position by swinging it up (not self-retaining).

Note
- ▶ If the consoles are swung down, the last set positions are used.

copyright © Liebherr-Werk Ehingen GmbH 2016

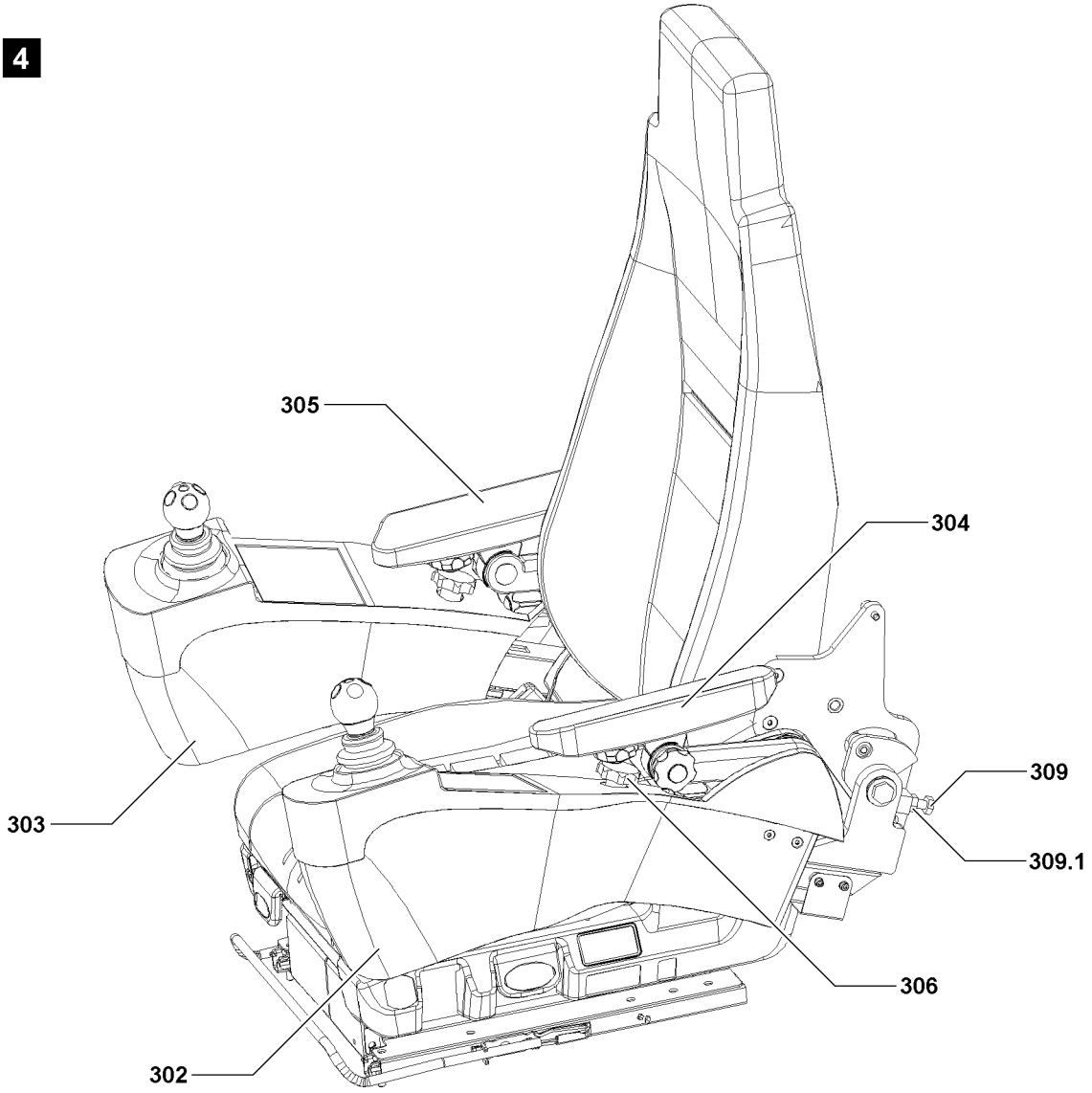

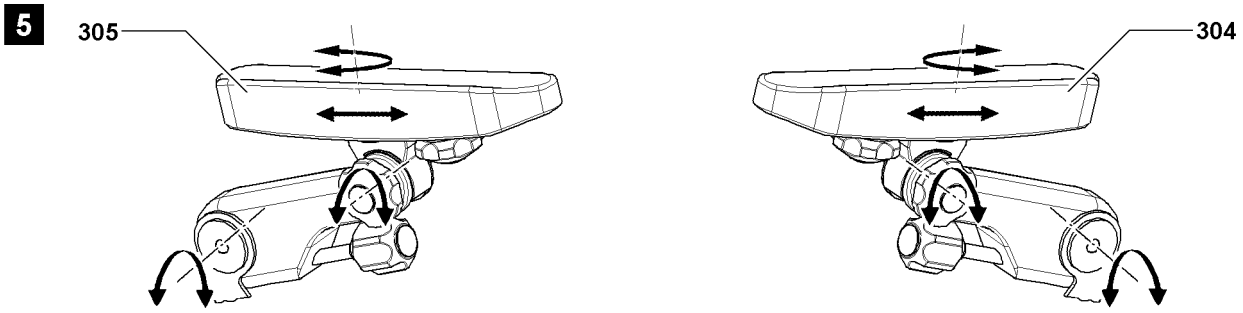

Fig.110463

LWE/ab Muli 010/24201-02-02/en

copyright © Liebherr-Werk Ehingen GmbH 2016

2.2.1 Adapting the consoles to the crane driver

Note

- ▶ The consoles can be adjusted individually to suit. Every crane operator can set his work place optimally to his body size!
- ▶ The left console **302** and the right console **303** can be adjusted independently of each other!

Note

- ▶ The consoles can be adjusted to suit the crane operator as described for the left console **302**, see illustration **4**!
- ▶ The procedure for the right console **303** is accordingly.

Adjusting the incline of the console

- ▶ Release the nut **309.1**.
- ▶ Adjust the stop screw **309** until the console **302** has reached the desired incline.
- ▶ Secure the stop screw **309** with nut **309.1**.

Move the console horizontally

- ▶ Fold the armrest **304** up.
- ▶ Pull the locking pin **306** until the console **302** can be moved.
- ▶ Adjust the horizontal position of the console **302** by moving it forward / backward.
- ▶ Release the locking pin **306** and let it engage.
- ▶ Fold the armrest **304** down.

Result:

– The console **302** is adjusted.

2.2.2 Armrests

The left arm rest **304** and the right arm rest **305** offer a multitude of adjustment possibilities, see illustration **5**.

Note

- ▶ To ensure fatigue free and concentrated work with the crane, the armrests should be adjusted in such a way that you can comfortably reach and operate the master switches.

- ▶ The left arm rest **304** and the right arm rest **305** can be adjusted with the adjustment screws, see illustration **5**.

LWE/ab Muli 010/24201-02-02/en

copyright © Liebherr-Werk Ehingen GmbH 2016

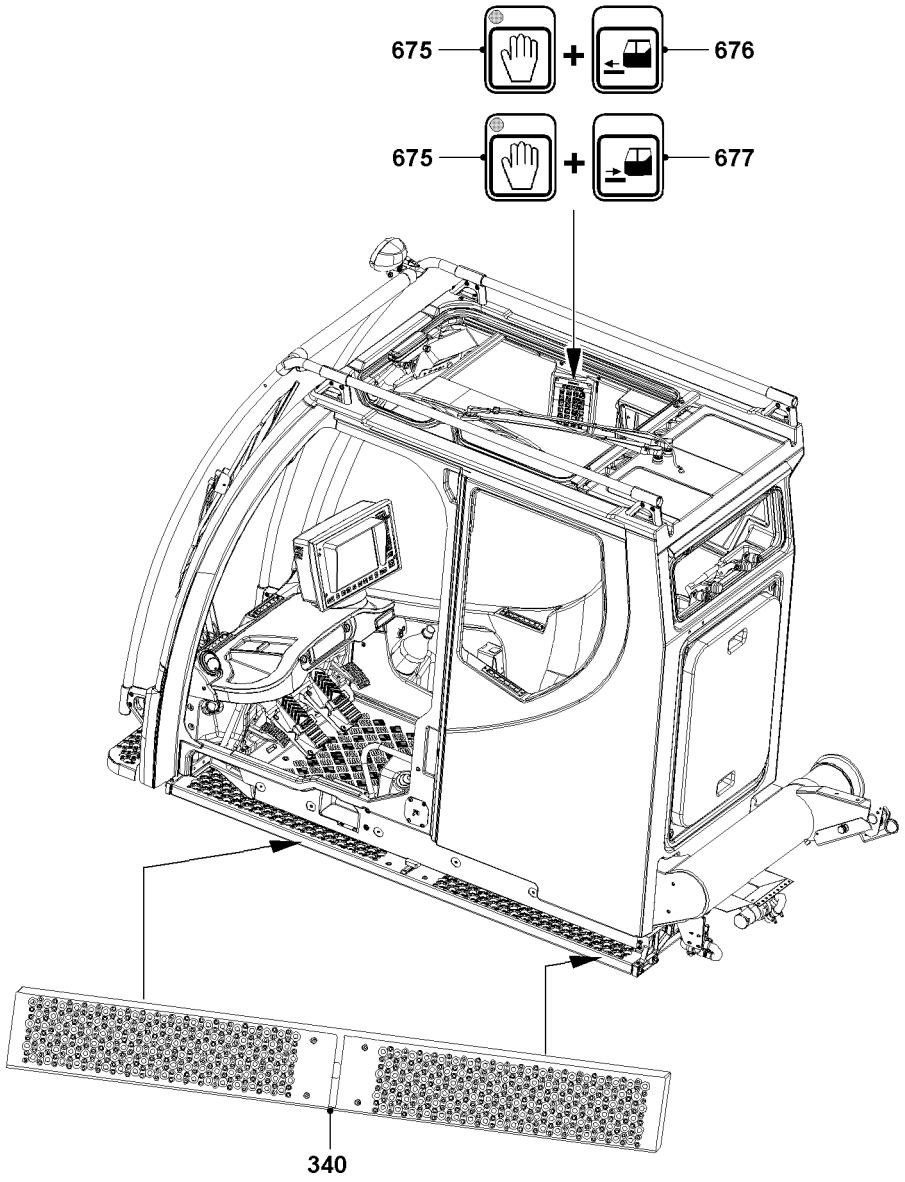

Fig.117470

LWE/ab Muli 010/24201-02-02/en

copyright © Liebherr-Werk Ehingen GmbH 2016

2.3 Step

In order to make it easier for the crane operator to enter and leave the crane operator's cab, the step **340** can be extended or retracted.

The step **340** latches in the end positions.

WARNING
Danger of falling!
If the step is not extended or retracted completely, personnel can fall down!
Personnel can be severely injured or killed!
- ▶ Always retract or extend the step completely!
- ▶ Access on the step only if it is completely extended!

NOTICE
Observe the safety notes!
- ▶ For crane operator's cab with retractable / extendable step, see Crane operating instructions, chapter 2.04.

2.3.1 Extend the step

- ▶ Activate the release button **675** and then actuate the control button **676** until the step **340** is fully extended.

2.3.2 Retract the step

- ▶ Activate the release button **675** and then actuate the control button **677** until the step **340** is fully retracted.

2.4 Adjusting the heater / ventilation

The climate control of the crane cab is described in the Crane operating instructions, chapter 6.02.

- ▶ Climatize the driver's cab.

LWE/ab Muli 010/24201-02-02/en

copyright © Liebherr-Werk Ehingen GmbH 2016

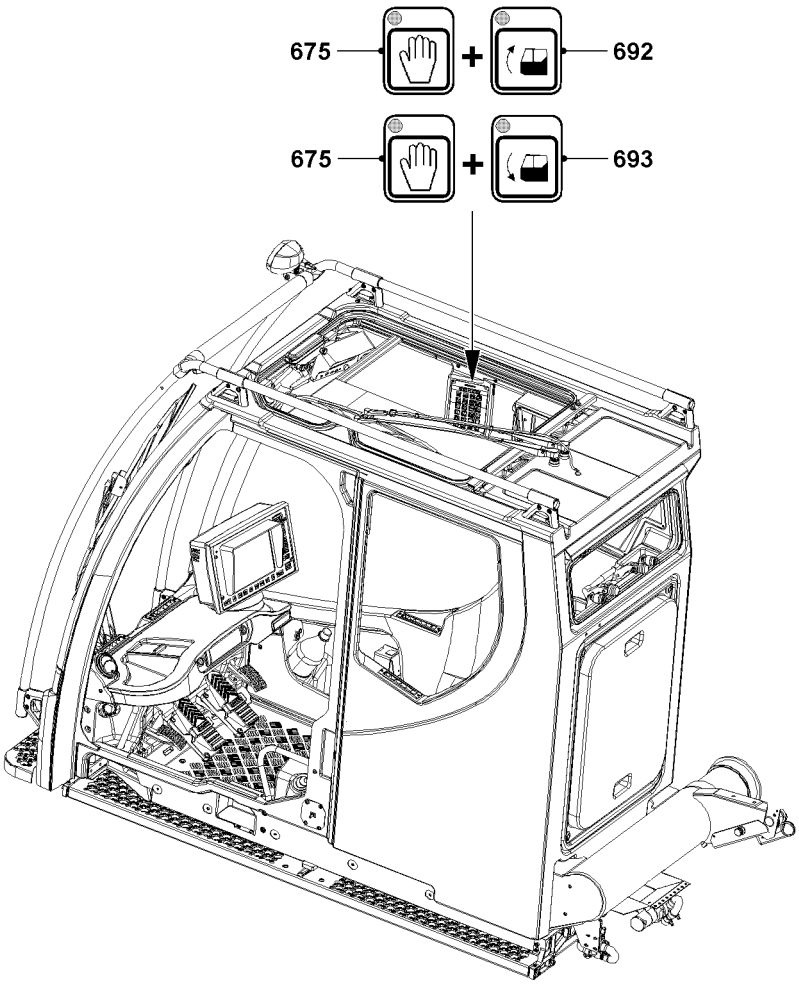

LWE/ab Muli 010/24201-02-02/en

Fig.110293

copyright © Liebherr-Werk Ehingen GmbH 2016

2.5 Tilting the crane cab*

To give the crane driver a better field of vision, the cab can be tilted upwards.

When you have finished working with the crane, always set the cab to horizontal position.

WARNING
Danger of accident!
When the door is opened and the crane operator's cab tilted, the door can move back suddenly!
Hands can be crushed or injured!
▶ When the crane operator's cab is tilted, open the door carefully!

WARNING
Danger of falling!
If there are persons on the step when the crane operator's cab is tilted, then they can fall down!
Personnel can be severely injured or killed!
▶ If the cab is tilted, it is prohibited to stand on the step!
▶ Before stepping on the step, set the cab to horizontal position.

2.5.1 Tilting the cab upward

Make sure that the following prerequisite is met:
– The crane engine is running.

▶ Activate the release key **675** and then press the control button **692** to the desired position.

Result:

– The cab swings upward.

2.5.2 Setting the cab to horizontal position

Make sure that the following prerequisite is met:
– The crane engine is running.

▶ Activate the release key **675** and then press the control button **693** to the desired position.

Result:

– The cab swings downward.

LWE/ab Muli 010/24201-02-02/en

copyright © Liebherr-Werk Ehingen GmbH 2016

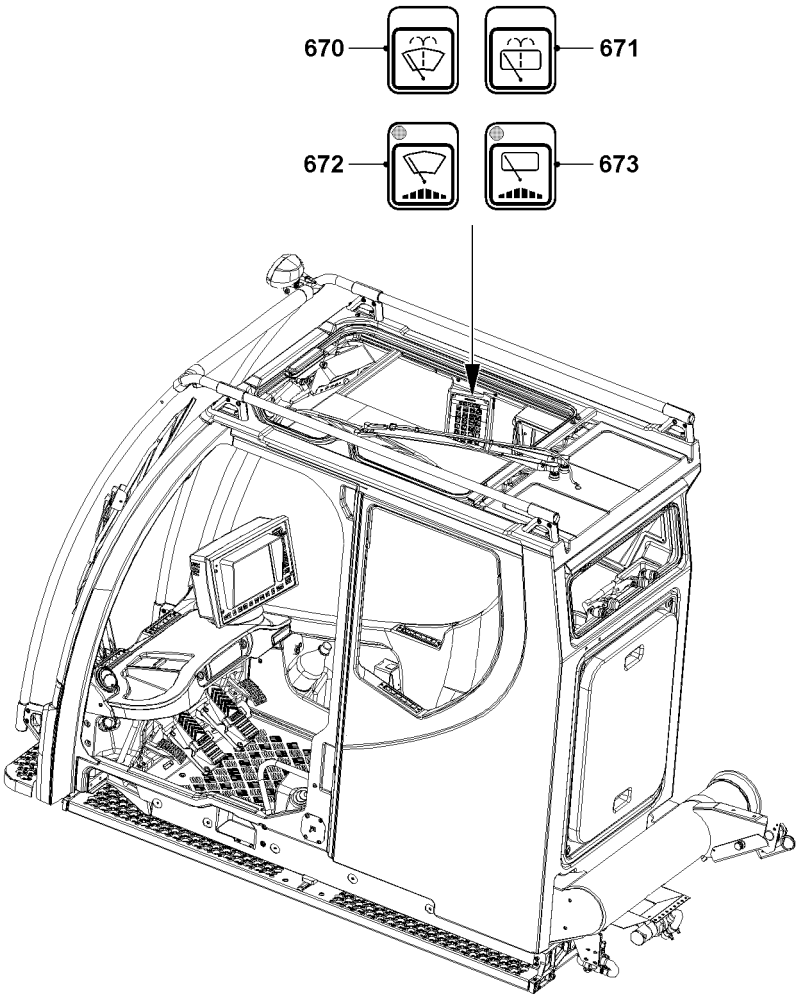

Fig.110294

LWE/ab Muli 010/24201-02-02/en

copyright © Liebherr-Werk Ehingen GmbH 2016

2.6 Operating the window wiper / window washer system

2.6.1 Operating the window wipers

The windshield wipers are turned on by pressing control button **672** (front window) and control button **673** (roof window). The following description refers to the operation of the windshield wipers for the front window. The operation of the roof window wipers is identical.

To activate the windshield wiper on the front window:
▶ Press the control button **672**.

Result:

– The windshield wiper runs continuously.
– The indicator light on control button **672** lights up.

If the windshield wiper is running continuously:
▶ Press the control button **672**.

Result:

– The windshield wiper is now running at a „long interval“.

If the windshield wiper is running at a „long interval“:
▶ Press the control button **672**.

Result:

– The windshield wiper is now running in „short interval“.

If the windshield wiper is running in „short interval“:
▶ Press the control button **672**.

Result:

– The windshield wiper is turned off.
– The indicator light on control button **672** turns off.

Note
▶ If the control button **672** is pressed longer than one second during „continuous“, „long interval“ or „short interval“ operation, then the windshield wiper is turned off.

▶ Press control button **672** for longer than 1 second.

Result:

– The windshield wiper is turned off; this is confirmed by a short beep, the indicator light on the control button **672** turns off.

LWE/ab Muli 010/24201-02-02/en

copyright © Liebherr-Werk Ehingen GmbH 2016

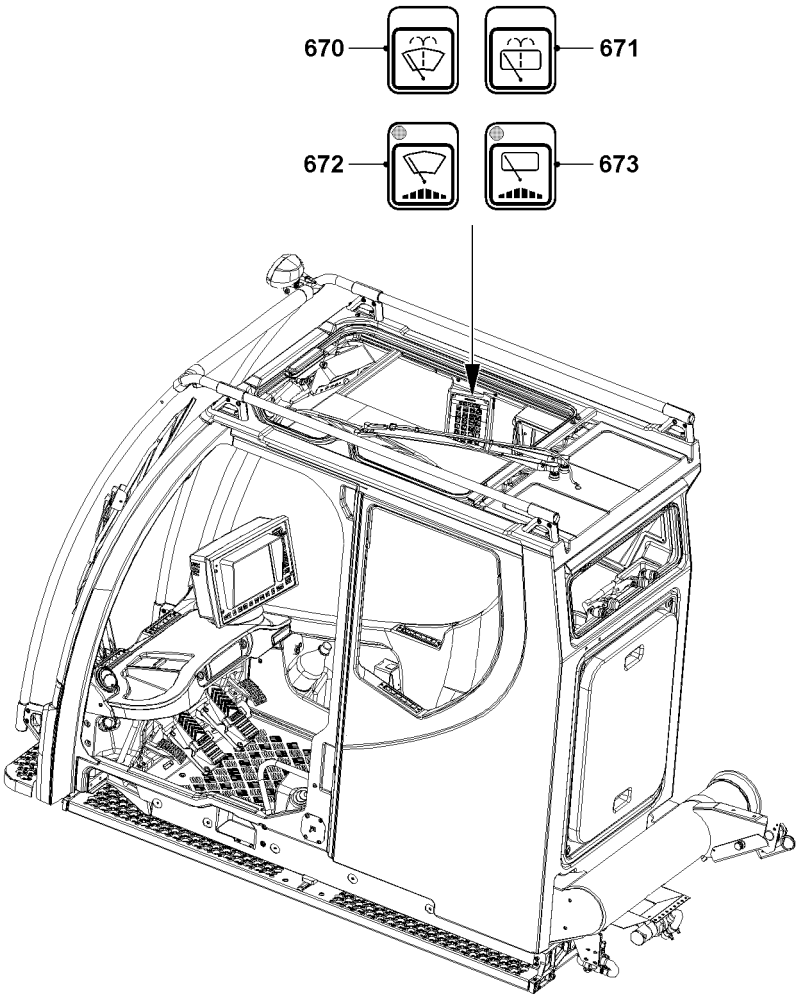

LWE/ab Muli 010/24201-02-02/en

Fig.110294

copyright © Liebherr-Werk Ehingen GmbH 2016

2.6.2 Operating the window washer system

Activate the windshield washer system to support the windshield wipers by pressing control button **670** (front window) and control button **671** (roof window). The following description refers to the operation of the windshield washer system for the front window. The operation of the windshield washer system for the roof window is identical.

Note

▶ Before the start of the cold season, fill the container for the window washer fluid with standard, freeze-proof window cleaning fluid.

To operate the windshield washer system for the front window:

▶ Press the control button **670**.

Result:

– The windshield wipers and water pump will run as long as control button **670** is pressed. After releasing control button **670**, the windshield wiper continues to run three times.

copyright © Liebherr-Werk Ehingen GmbH 2016

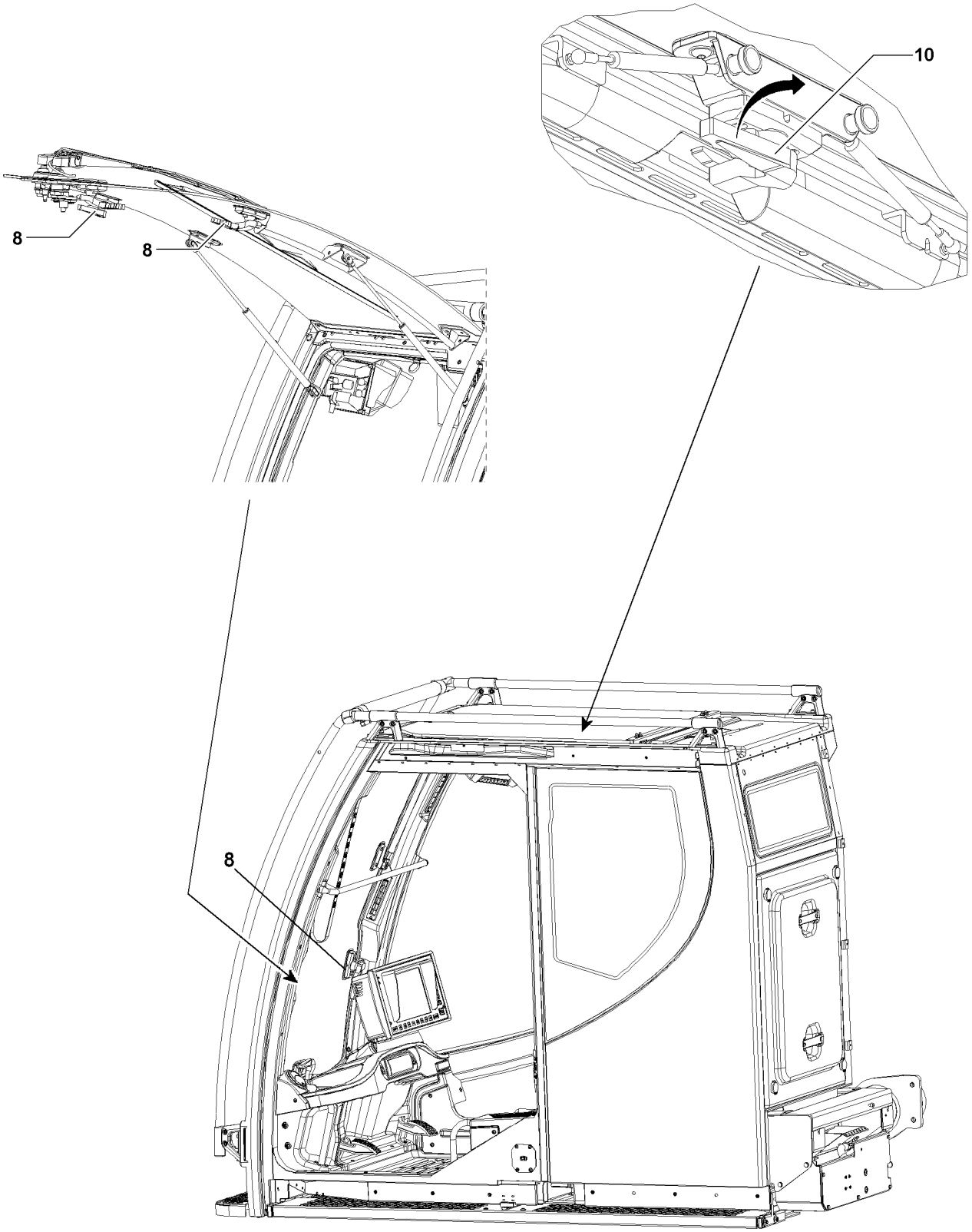

LWE/ab Muli 010/24201-02-02/en

Fig.113817

copyright © Liebherr-Werk Ehingen GmbH 2016

2.7 Opening / closing the front window of the crane operator's cab

WARNING
Danger of crushing!
Risk of trapping hands when closing the front or roof window.
▶ Watch your hands when closing the front or roof window.

NOTICE
Property damage!
If the crane is driven with open window or open crane door, the crane cab can be damaged!
▶ Before driving the crane, close all windows and the crane door!

2.7.1 Opening / closing the front window of the cab

A pair of nitrogen gas cylinders support the lifting movement of the front window.

Opening the front window:

▶ Unlock the rotary handle **8** on both sides and push on the front window from the inside.

Close the front window:

▶ Pull the front window closed and lock on both sides with the rotary handle **8**.

2.7.2 Opening / closing the roof window

Use the rotary handle **10** to open / close the roof window.

Open the roof window:

▶ Release the rotary handle **10** and push the roof window up.

Close the roof window:

▶ Pull the roof window closed and lock with the rotary handle **10**.

LWE/ab Muli 010/24201-02-02/en

copyright © Liebherr-Werk Ehingen GmbH 2016

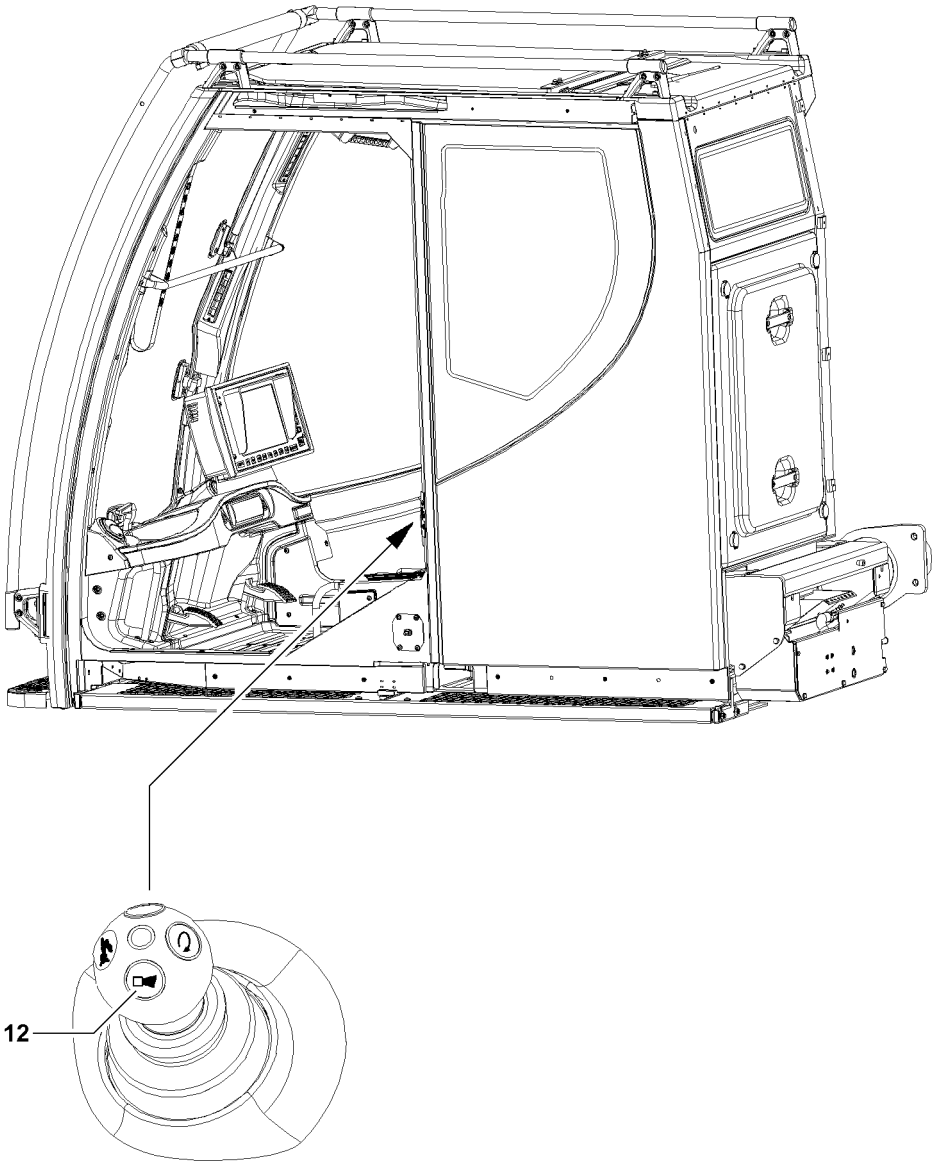

LWE/ab Muli 010/24201-02-02/en

Fig.113818

copyright © Liebherr-Werk Ehingen GmbH 2016

2.8 Checking the horn

WARNING
Impermissible use of horn!
If the horn is used outside of danger situations, then it can loose its warning effect!
If the horn looses its warning effect, then severe injuries can occur as a result!
▶ Do not use the horn unnecessarily!

Make sure that the following prerequisite is met:
– Any personnel in the vicinity has been notified that the horn is being checked for function.

Before starting to work, check that the horn is functioning:
▶ Press the button **12**.

Problem remedy
The horn does not sound?
The horn is not functioning.
▶ Repair the horn before starting crane operation.

After successful testing of the horn:

▶ Notify any personnel in the vicinity that the testing of the horn has been completed.

3 Hydraulic oil preheating*

The hydraulic oil can be preheated with the Hydraulic oil preheating*.

3.1 Displaying the hydraulic oil temperature

The current hydraulic oil temperature can be displayed on the individual control display *Hydraulic oil temperature*.

How individual control displays are shown on the LICCON monitor is described in detail in the Crane operating instructions, chapter 4.02.

Make sure that the following prerequisites are met:
– The crane engine is running

▶ Call up individual control display.

Result:

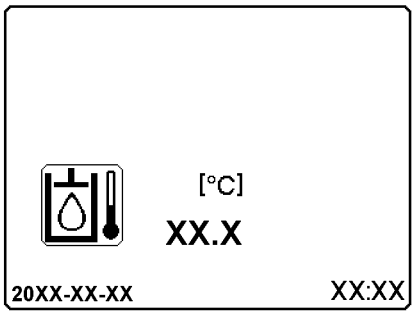

Fig.122549: Display Hydraulic oil temperature

On the LICCON monitor, the hydraulic oil temperature is shown in the form of a numerical display in [C °].

▶ Check the hydraulic oil temperature.

LWE/ab Muli 010/24201-02-02/en

copyright © Liebherr-Werk Ehingen GmbH 2016

3.2 Preheating the hydraulic components

At low ambient temperatures, the cylinders, valves, oil motors and hoses must be preheated.

▶ Actuate all hydraulic crane functions without a load for 15 min.

3.3 Turning the hydraulic oil preheating* on

Make sure that the following prerequisite is met:
– The crane engine is running.

Note
When the Hydraulic oil preheating* is turned on, various crane movements are turned off.
▶ If necessary, turn the Hydraulic oil preheating* off.

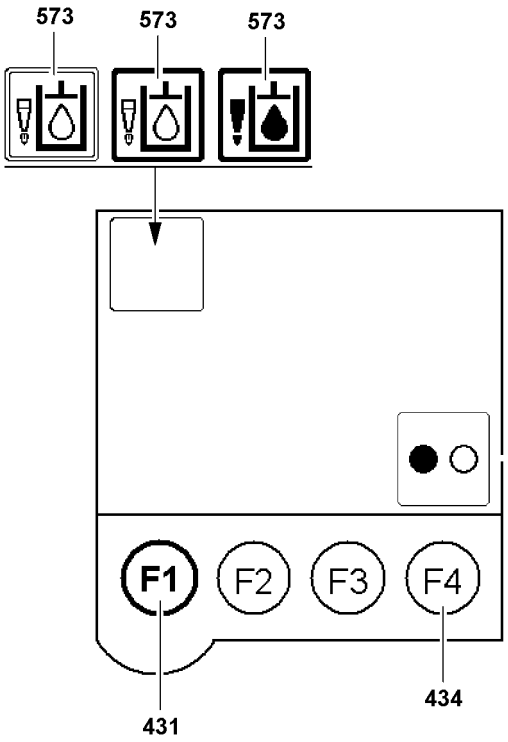

*Fig.122075: Menu Hydraulic oil preheating**

When the hydraulic oil temperature is above 25 °C:
▶ Do **not** turn the hydraulic oil preheating* on.
▶ Press the function key **431** on the left touch display until the „Hydraulic oil preheating“ menu appears.
▶ Select the „Hydraulic oil preheating“ **573** function by „touch“.

Result:

– The icon „Hydraulic oil preheating“ **573** is bordered in black, see illustration **1**.

▶ Press the function key **434**.

Result:

– The hydraulic oil preheating is turned on.
– Icon „Hydraulic oil preheating“ **574** appears.

When the hydraulic oil has reached operating temperature:
▶ Press the function key **434**.

LWE/ab Muli 010/24201-02-02/en

copyright © Liebherr-Werk Ehingen GmbH 2016

Result:

– The hydraulic oil preheating is turned off.
– „Hydraulic oil preheating“ icon **573** appears.

copyright © Liebherr-Werk Ehingen GmbH 2016

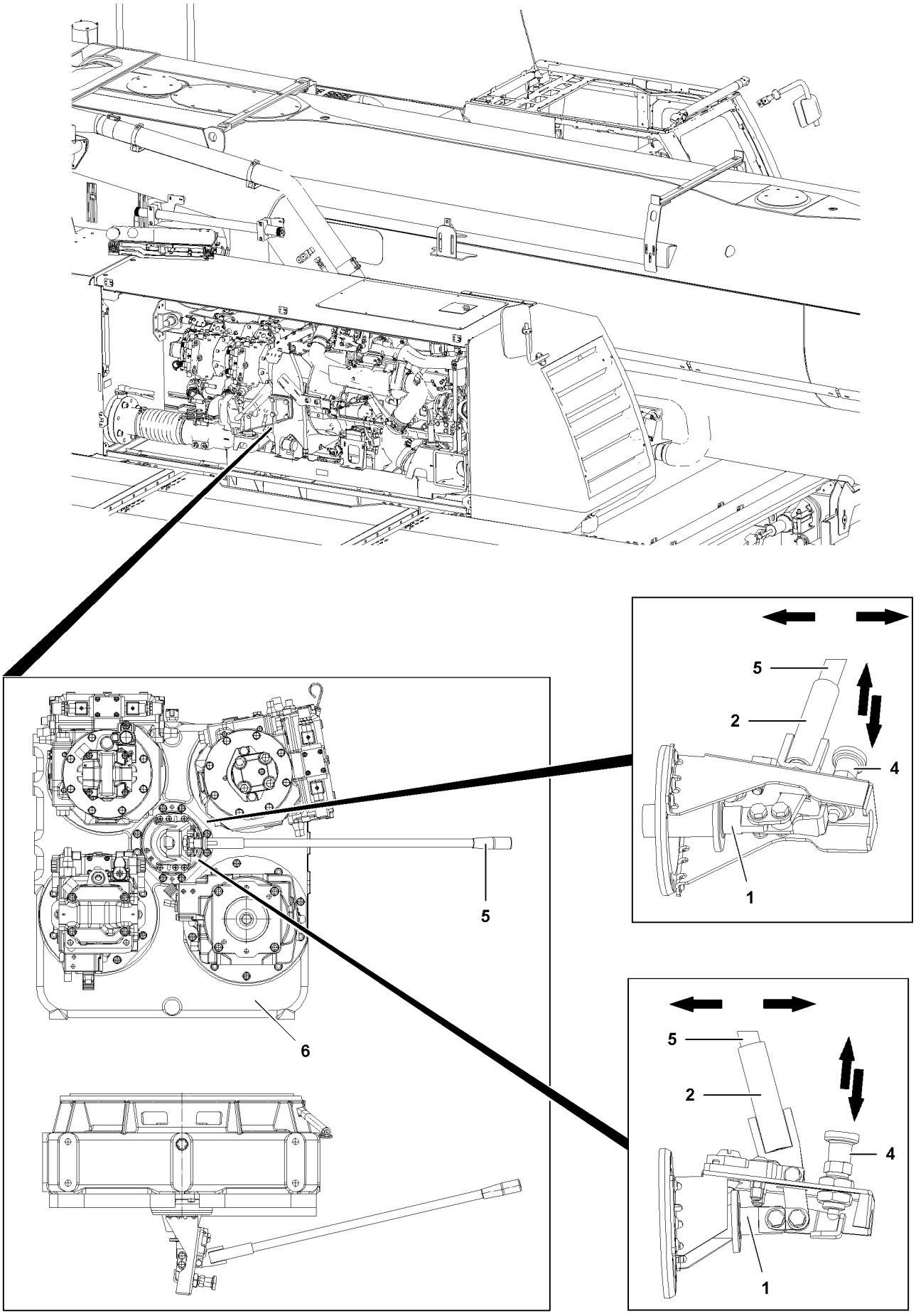

Fig.118023

LWE/ab Muli 010/24201-02-02/en

copyright © Liebherr-Werk Ehingen GmbH 2016

4 Starting and stopping the engine

The engine can only be subjected to a full load after the operating temperature has been reached.

4.1 Disengage / engage the coupling control on the pump distributor gear

Note

- ▶ In high application and at low ambient temperatures it may be necessary to disengage the coupling control **1** of the pump distributor gear **6** before starting the engine.
- ▶ The cold start behavior of the engine is thereby improved.

NOTICE

Danger of damaging the engine!
When the coupling control **1** is disengaged and the engine temperature is not constantly monitored, the engine can overheat.
This could result in high property damage.

- ▶ Monitor the engine temperature constantly while the engine is running.
- ▶ Make sure that the engine does not overheat.
- ▶ If there is any doubt, turn the engine off.

4.1.1 Disengage the coupling control

Make sure that the following prerequisite is met:

– The engine is turned off.

- ▶ Take the lever extension **5** from park position.
- ▶ Set the lever extension **5** on the linkage **2**.
- ▶ Release and turn the locking pin **4**.
- ▶ Actuate the linkage **2** with the lever extension **5** to the stop.

Result:

– The coupling control **1** is disengaged.
– The pumps on the pump distributor gear **6** are **not** driven at engine start.

- ▶ Secure the coupling control **1**: Engage the locking pin **4**.
- ▶ Remove the lever extension **5** and store it in park position.

WARNING

Danger of accident due to rotating parts!

- ▶ Make sure that there are no persons within the danger zone of the engine.

- ▶ Start the engine, see section „Starting the engine“.

Result:

▷ The engine is warmed up.

copyright © Liebherr-Werk Ehingen GmbH 2016

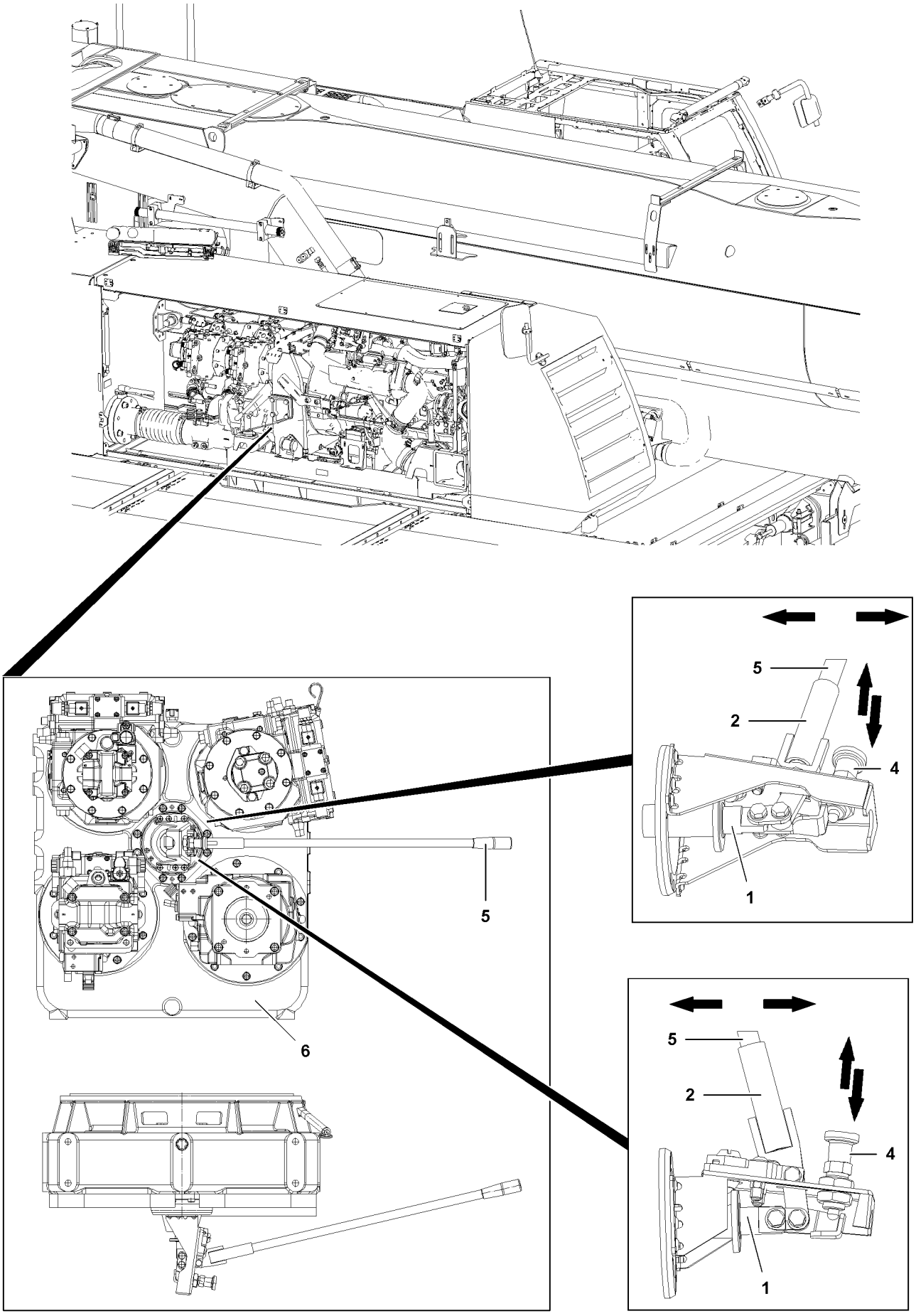

Fig.118023

LWE/ab Muli 010/24201-02-02/en

copyright © Liebherr-Werk Ehingen GmbH 2016

4.1.2 Engaging the coupling control

NOTICE
Property damage on the pump distributor gear!
▶ Make sure that the coupling control is engaged when the engine is at a standstill.

When the engine has reached operating temperature:
▶ Turn the engine off.

When the engine has come to a complete standstill:
▶ Release and turn the locking pin **4**.
▶ Engage the coupling control **1** with the lever extension **5**.

Problem remedy
The coupling control **1** cannot be engaged on the pump distributor gear **6**?
▶ Start the engine for a short time and turn it off again until the coupling control **1** can be engaged.

When the coupling control **1** is completely engaged:
▶ Secure the coupling control **1**: Engage the locking pin **4**.
▶ Remove the lever extension **5** and store it in park position.

Result:

– At engine start, the hydraulic pumps on the pump distributor gear **6** are driven.

4.2 Starting the engine from the crane operator's cab

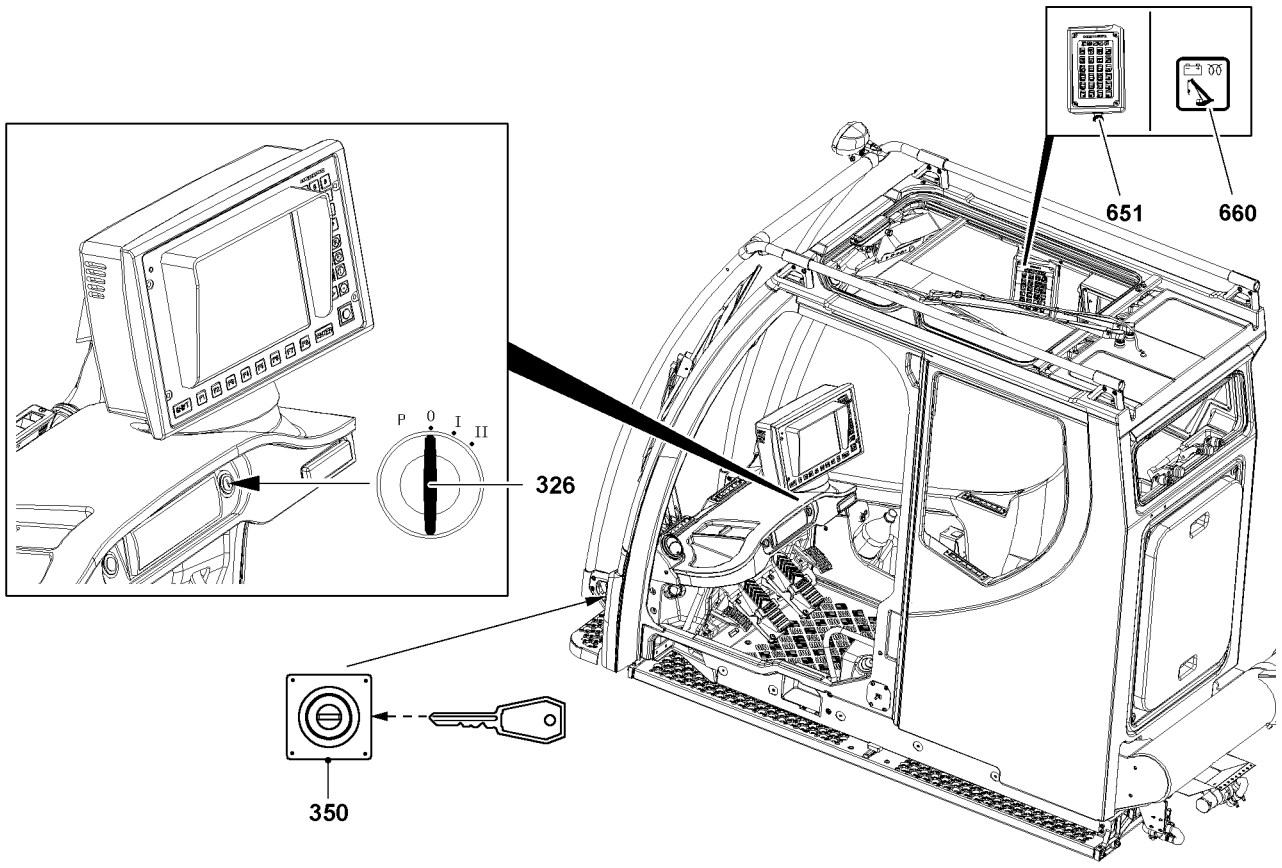

Fig.123691

▶ Turn the ignition switch **326** to position „I“.

LWE/ab Muli 010/24201-02-02/en

copyright © Liebherr-Werk Ehingen GmbH 2016

Result:

– The indicator light **660** lights up yellow.
Engine preheating is active.

NOTICE
Danger of property damage!
▶ Start the engine solely if the indicator light **660** blinks yellow (1 Hz).

When the indicator light **660** blinks yellow (1 Hz), the engine is ready to start:
▶ Turn the ignition switch **326** to position „II“.

Result:

– The engine starts.

4.3 Checking the instruments after starting the engine

As soon as a stable voltage is present with the engine running, the electric crane control and the LICCON computer system are turned on automatically. A self test of the LICCON computer system follows and after several seconds the set up configuration screen appears on the monitor.

4.3.1 Checking the instruments on LICCON monitor

Note
▶ The monitor illustrations in this chapter are only examples. The numerical values in the individual icons do not need to match exactly to the crane. In addition, many of the illustrations show the maximum configuration of the LICCON monitor with icons. In normal crane operation, an identical display will **not** appear on the LICCON monitor.

▶ Check the LICCON monitor for warning messages.

4.3.2 Monitoring functions

The monitoring functions are described in detail in the Crane operating instructions, chapter 4.02. Observe and adhere to the data in Crane operating instructions, chapter 4.02.

In the LICCON computer system the crane components and operating conditions are monitored. If a control value has reached the limit range, then the monitoring functions are called up automatically in the Crane operation program.

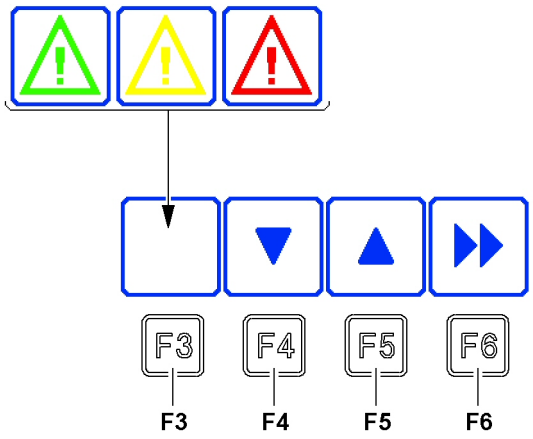

Fig.122079: Function keys

If an erroneous function or warning is present, then the warning icon over the function key **F3** is yellow or red.

LWE/ab Muli 010/24201-02-02/en

copyright © Liebherr-Werk Ehingen GmbH 2016

NOTICE
Erroneous function / warning!
Damage of components.
▶ End crane movement.
▶ Turn the engine off.
▶ Remedy the cause of the error.

Calling up the monitoring functions

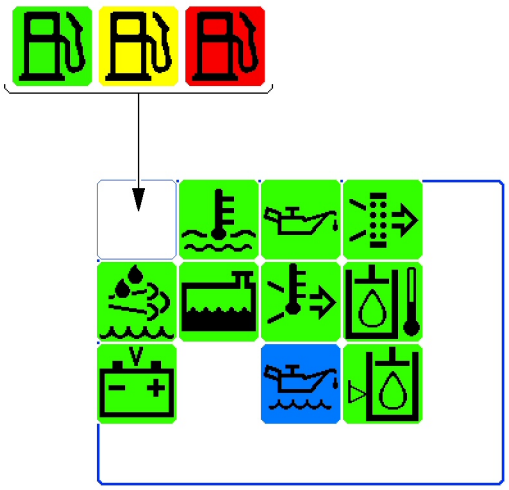

Fig.122550: Monitoring functions

Make sure that the following prerequisite is met:
– In the LICCON computer system the *Crane operation* program is active.

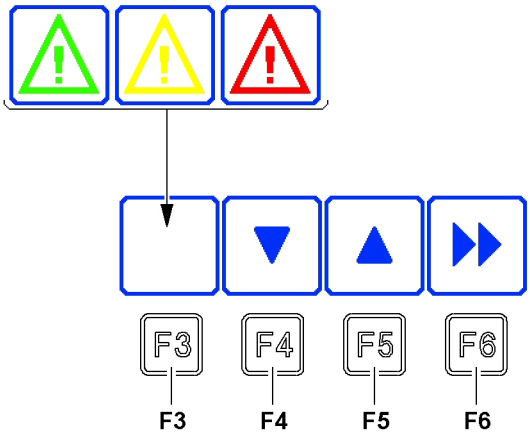

Fig.122079: Function keys

▶ Press the function key **F3**.

Result:

– The monitoring functions are called up.
– Erroneous functions are shown in yellow or red.

To mask the monitoring functions:
▶ Press function key **F3** again.

copyright © Liebherr-Werk Ehingen GmbH 2016

Calling up the individual control displays

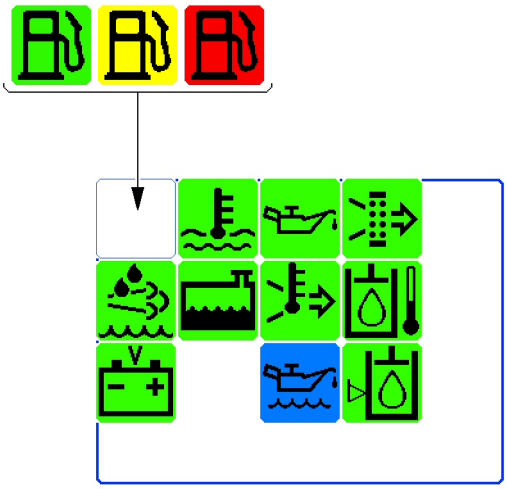

Fig.122550: Fuel reserve

For some monitoring functions individual control displays can be called up.

The individual control displays are described in detail in the Crane operating instructions, chapter 4.02.

Make sure that the following prerequisite is met:
– The monitoring functions are called up.

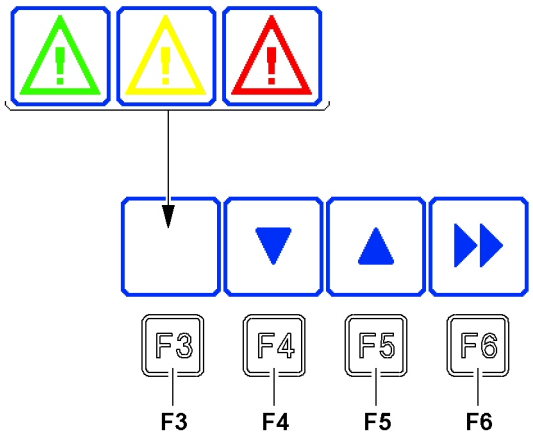

Fig.122079: Function keys

▶ Press function key **F4** or function key **F5**.

Result:

– The individual control display is shown.

By continuing to press the function key **F4** or function key **F5**, all additional individual control displays can be shown.

To mask the individual control displays:
▶ Press the function key **F6**.

Result:

– The monitoring field is shown again.

LWE/ab Muli 010/24201-02-02/en

copyright © Liebherr-Werk Ehingen GmbH 2016

4.4 Turning the engine off

4.4.1 Turning the engine off after operation

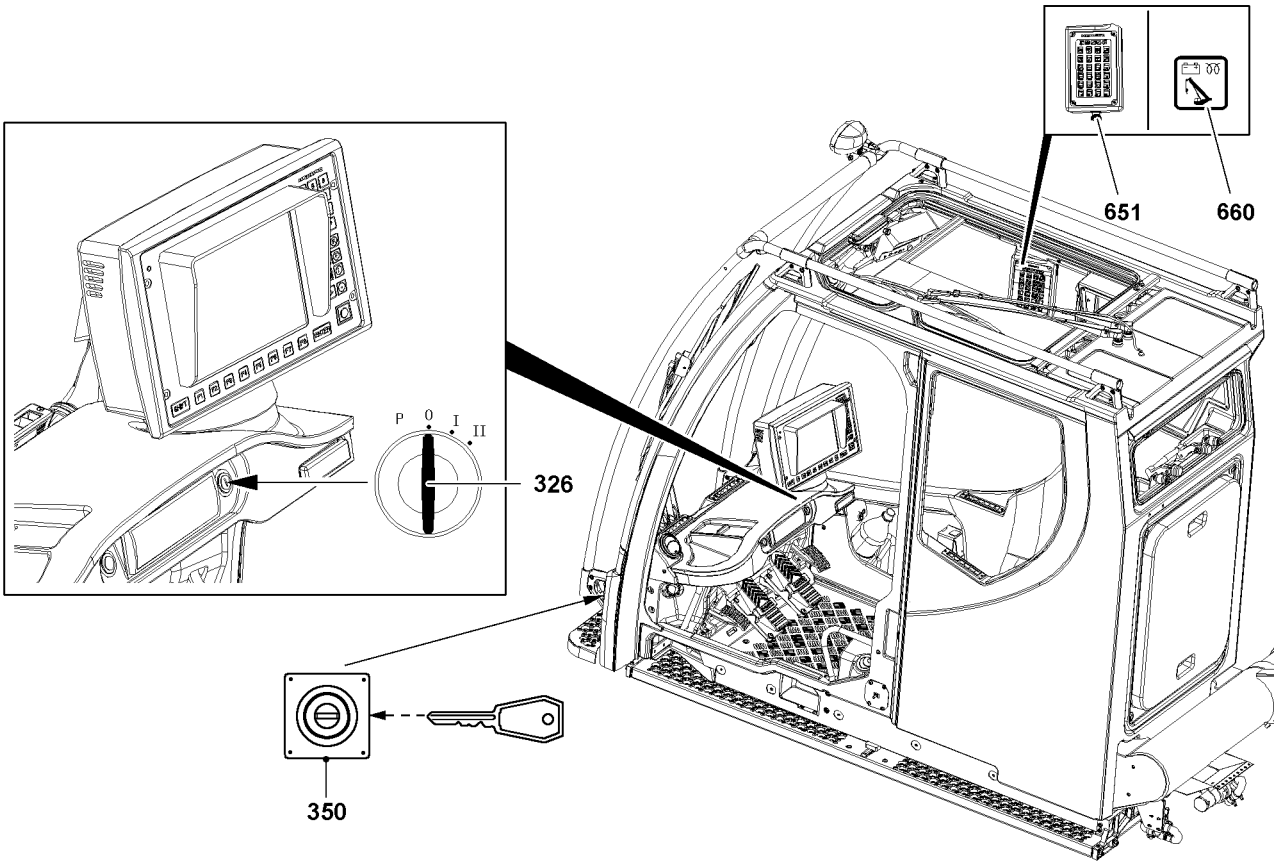

Fig.123691

If the crane has been operated at full engine output or with very high coolant temperatures (above 95 °C), let the engine run without a load for 1-2 minutes at low idle speed.

- ▶ Turn the ignition switch **326** back to the stop.
- ▶ Pull the ignition switch off and store in a safe place.

4.4.2 Turning the engine off in the event of danger

CAUTION
Operate the emergency off switch

- ▶ Only use the emergency off switch **350** or the emergency off switch **651** in case of serious emergency. Use of the emergency off switch **350** or the emergency off switch **651** in normal situations is prohibited!

- ▶ Press the emergency off switch **350**.
  or
  Press the emergency off switch **651**.

Result:

– The crane will be turned off immediately.

copyright © Liebherr-Werk Ehingen GmbH 2016

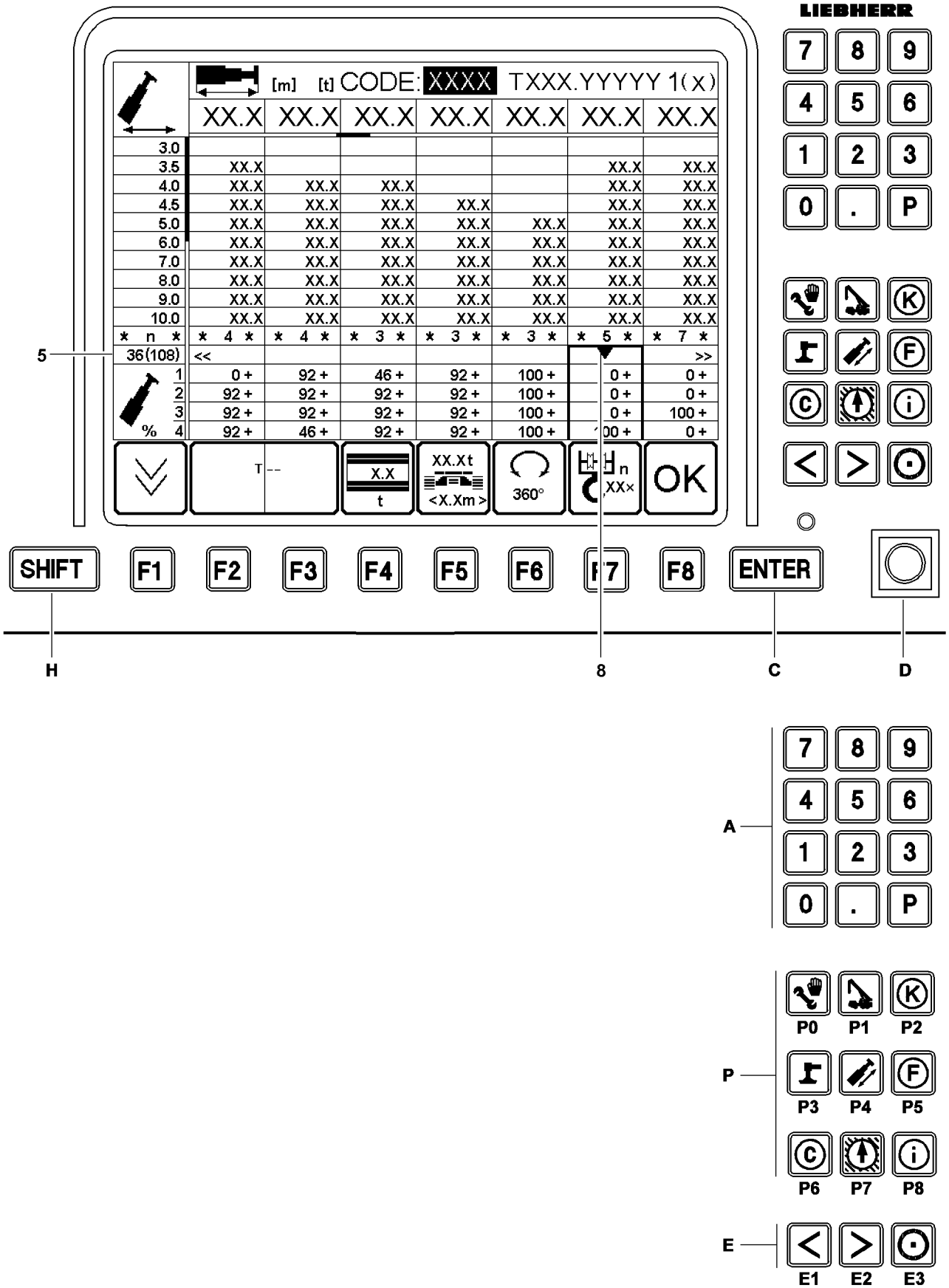

Fig.110332

LWE/ab Muli 010/24201-02-02/en

copyright © Liebherr-Werk Ehingen GmbH 2016

5 LICCON computer system after engine start

The LICCON computer system is only operational when the engine is running.

5.1 Waiting for the boot up phase

After being turned on, the LICCON computer system boots up and carries out a self test, see Crane operating instructions, chapter 4.02.

▶ Wait for the boot up phase.

Result:

– The set up screen appears on the LICCON monitor.
– Normally the previously selected set up configuration is displayed.

Problem remedy
The LICCON monitor does not show the most recently set set up configuration and reeving number? If there has been a data loss in the memory (cold start), then the first valid set up configuration appears in the set up screen. The reeving number is set to „0“.
▶ Set the set up configuration and reeving number again.

5.2 Taking over the previously selected set up configuration and hoist rope reeving

Check in the operating screen if the correct short code and the correct reeving number have been set.

If the settings on the operating screen are correct:
▶ Press function key „F8“ (O.K.).

Result:

– The „set up“ program is terminated and the adjusted parameters are accepted for the newly started „Crane operation“ program.

LWE/ab Muli 010/24201-02-02/en

copyright © Liebherr-Werk Ehingen GmbH 2016

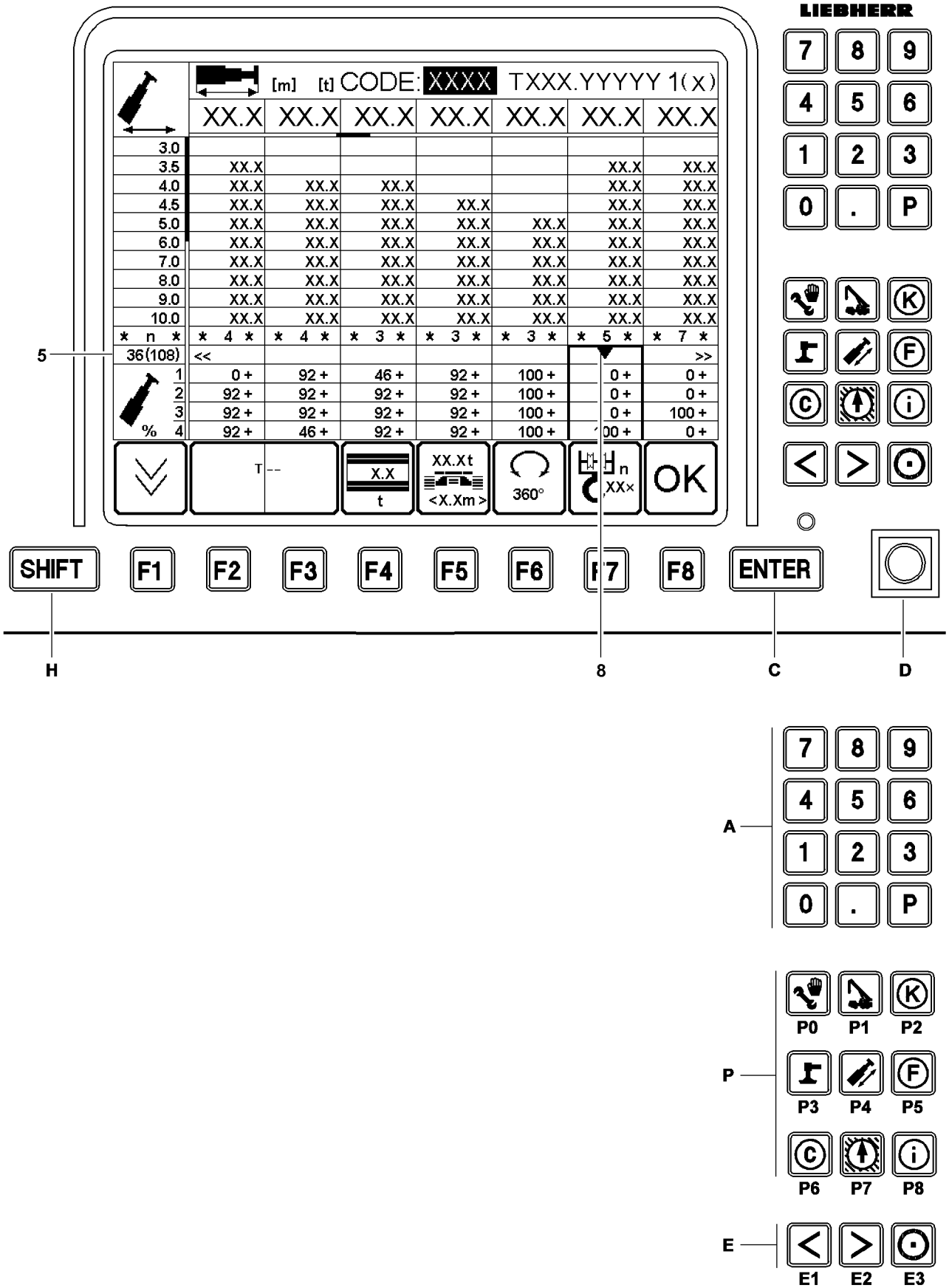

Fig.110332

LWE/ab Muli 010/24201-02-02/en

copyright © Liebherr-Werk Ehingen GmbH 2016

5.3 Setting a new set up configuration and new hoist rope reeving

The selected and displayed set up configuration can be changed with the function keys or by entering the short code.

5.3.1 Setting a new set up configuration with the function keys

- ▶ Press function key „F2“ until the desired main geometry status is selected.
- ▶ Press function key „F3“ until the desired accessory status is selected.
- ▶ Press function key „F4“ until the desired counterweight is selected.
- ▶ Press function key „F5“ until the desired support base is selected.
- ▶ Press function key „F6“ until the desired turning area of the crane superstructure is selected.
- ▶ Press the „Enter“ key.
- ▶ Check the set load chart.

5.3.2 Setting a new set up configuration with short code

The short code can be found in the load chart.

- ▶ Entering the 4-digit short code using the keypad **A**.
- ▶ Press the „Enter“ key.

Result:

– The data of the selected load chart can be viewed.
Note:
For a more detailed description of the „Set up“ program, see Crane operating instructions, chapter 4.02.

- ▶ Check the set load chart.

5.3.3 Setting a new hoist rope reeving

- ▶ Press function key „F7“ until the desired reeving number is selected.
or
Press function keys „SHIFT“ + „F7“ until the desired reeving number is selected.

5.3.4 Checking and accepting the new set up configuration and hoist rope reeving

Check in the operating screen if the correct short code and the correct reeving number have been set.

If the settings on the operating screen are correct:
- ▶ Press function key „F8“ (O.K.).

Result:

– The „set up“ program is terminated and the adjusted parameters are accepted for the newly started „Crane operation“ program.

LWE/ab Muli 010/24201-02-02/en

copyright © Liebherr-Werk Ehingen GmbH 2016

Empty page!

copyright © Liebherr-Werk Ehingen GmbH 2016

4.03.50 Adjustment of track width

1	Adjustment of track width	3
2	Adjusting the track width	11

LWE/ab Muli 010/24201-02-02/en

copyright © Liebherr-Werk Ehingen GmbH 2016

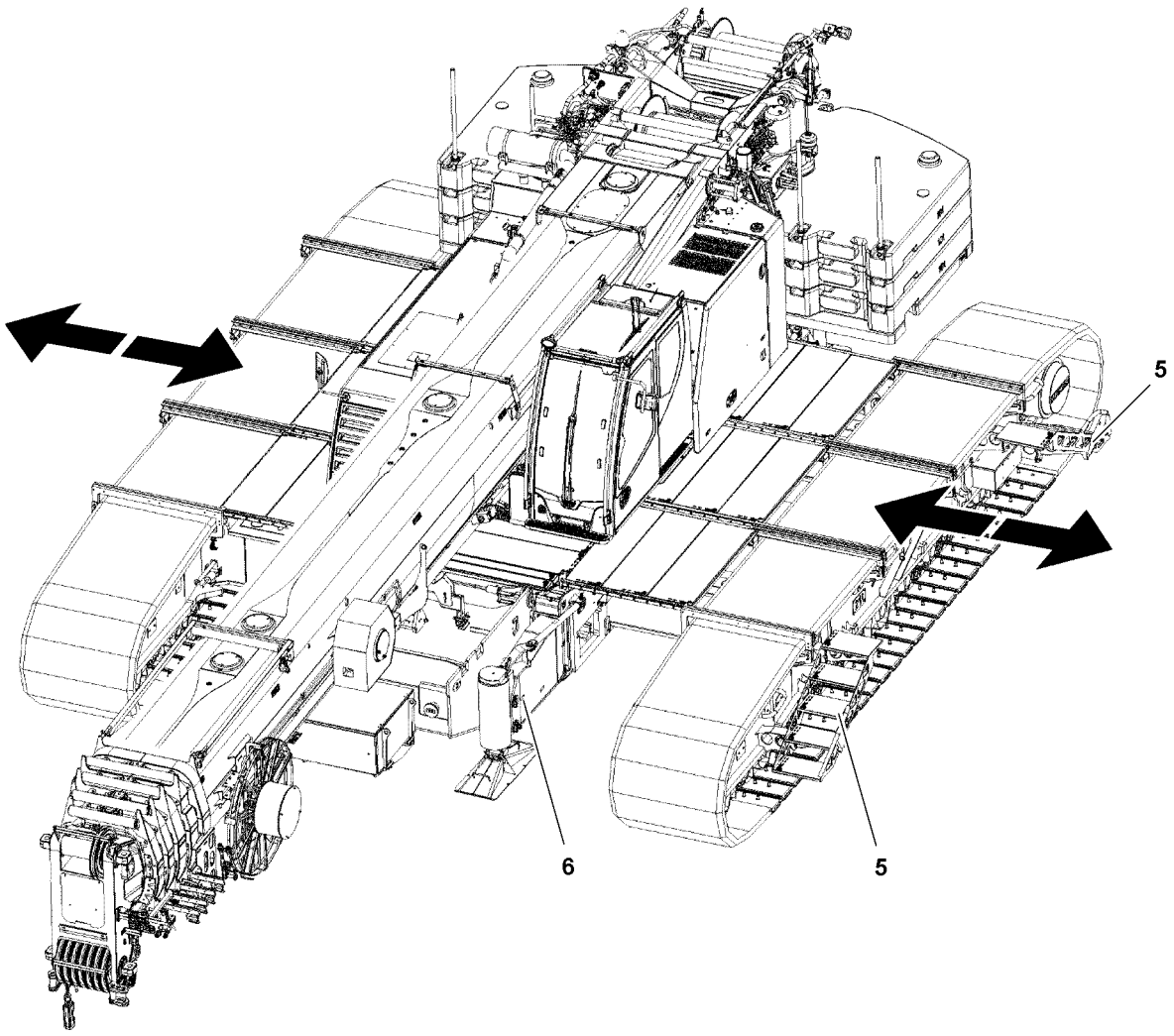

LWE/ab Muli 010/24201-02-02/en

Fig.116889

copyright © Liebherr-Werk Ehingen GmbH 2016

1 Adjustment of track width

DANGER
The crane can topple over!
The reduced or retracted track reduces the stability of the crawler crane. Due to operational errors during crane operation or driving, the crawler crane can topple over and fatally injure personnel.
- ▶ Crane operation and „driving the crawler with load“ is permitted for reduced or retracted track, if **extra load charts** are programmed for this case.
- ▶ Crane operation and „driving the crawler with load“ is strictly prohibited for reduced or retracted track, if **no extra load charts** are programmed for this case.

WARNING
Danger of accidents during track width adjustment!
When adjusting the track, the crawler carrier always moves with the lesser ground contact.
It is possible that the other crawler carrier is pushed away instead when extending a crawler carrier.
This can double the space requirement on one side.
Persons and objects standing too close can be caught by the crawler carrier.
In case of insufficient ground condition and ground contact, the crane can topple over.
- ▶ To extend the crawler on both sides, plan for the double sliding range as space requirement.
- ▶ In the adjustment range the ground condition and ground contact must be sufficient.

NOTICE
Danger of corrosion!
If the gliding surfaces of the track adjustment beams are not sufficiently greased, there is a danger of corrosion.
- ▶ If needed, clean and grease the gliding surfaces of the track adjustment beams, see Crane operating instructions, chapter 7.06.

NOTICE
Damage of cross carriers!
If the folding brackets **6** are not swung in before reducing the track width, then the cross carriers will be damaged during retraction.
- ▶ Make sure that the folding brackets **6** are swung in before reducing the track width, see Crane operating instructions, chapter 3.01.

NOTICE
Damage to steps!
Before changing the track of the crane from wide to reduced or narrow, the steps **5** must be installed on the crawler carrier.

When the steps are installed on the central ballast:
- ▶ Install the steps **5** on the crawler carrier, see Crane operating instructions, chapter 2.07.

Note
- ▶ The adjustment of the track width during travel is **not** possible with the Bluetooth™ Terminal (BTT) and radio remote control (BTT-E).
- ▶ The adjustment of the track width during travel is handled exclusively on the touch display (TE1) in the crane operator’s cab.

LWE/ab Muli 010/24201-02-02/en

copyright © Liebherr-Werk Ehingen GmbH 2016

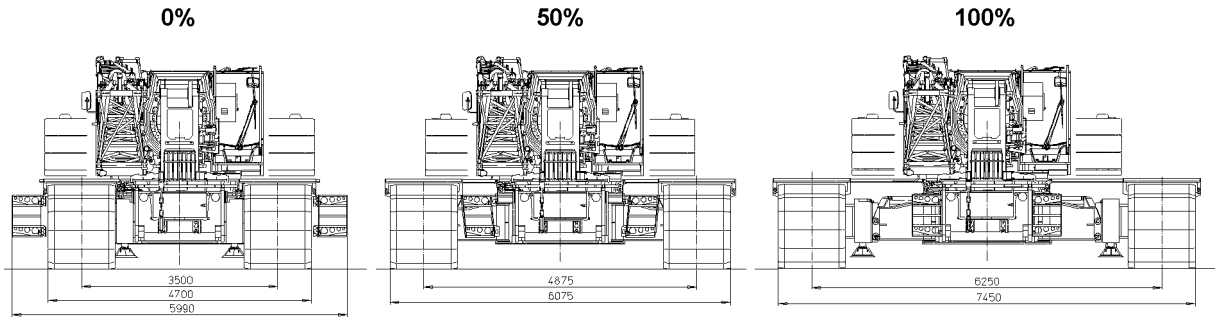

Fig.116890: Track width adjustment: Extension conditions of cross carriers

1.1 Track widths and extension conditions

Track width	Track width on LICCON monitor	Extension conditions BTT / LICCON monitor	
		Crawler carrier A	Crawler carrier B
Retracted	3.5 m	0 %	0 %
Reduced	4.9 m	50 %	50 %
Wide	6.3 m	100 %	100 %
Asymmetrical	4.9 m	0 %	100 %
		100 %	0 %

Definition of track width and extension conditions

Note

- The extension conditions of the cross carrier is displayed as percentage on the display on the Bluetooth™ Terminal (BTT), the radio remote control and on the LICCON monitor.
- The cross carriers are only pinned on extension conditions of 0 %; 50 %; 100 %.
- The extension conditions of the cross carriers / crawler carriers are specified in the load chart.
- Asymmetric extension condition: One crawler carrier is retracted, one crawler carrier is completely extended (wide).
- The pin points of the cross carriers are marked in percentages with tags on the cross carriers.

LWE/ab Muli 010/24201-02-02/en

copyright © Liebherr-Werk Ehingen GmbH 2016

1.2 Track adjustment by changing the center of gravity

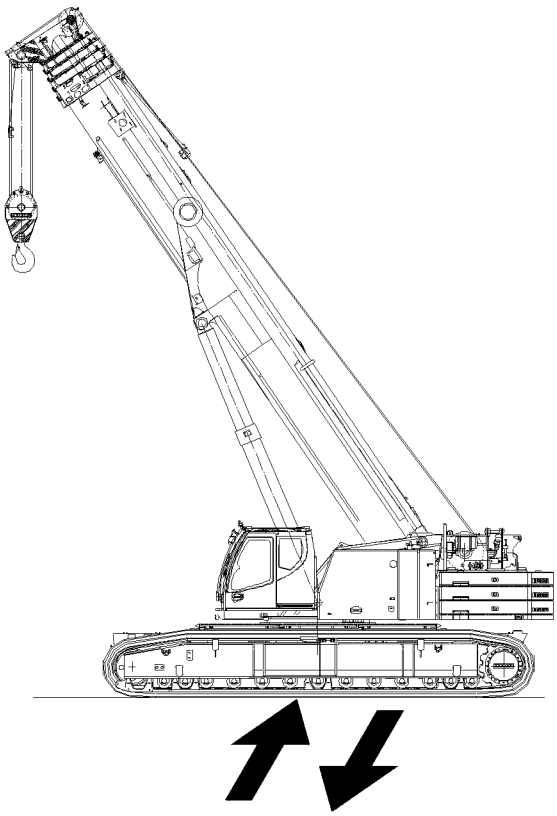

Fig.119299

For simpler track adjustment in set up status (with crawler carriers, central ballast and counterweight) the center of gravity of the crane can be set into the center. To do so, the telescopic boom without load must be lifted within the angle ranges specified in the load chart. The center of gravity of the crane is displayed in the LICCON monitor.

The following movement changes the center of gravity of the crane into the center:
- Luffing the boom up

Make sure that the following prerequisites are met:
- The crane is standing on the crawlers.
- The ground has a permissible incline, see load chart.
- The ground is of sufficient load bearing capacity.
- The ground is free of obstacles, such as rock edges or ground upheavals over the entire adjustment range.
- The central ballast is installed.
- The crane superstructure is standing parallel to the crane chassis in „ 0° or 180° position“.

WARNING
Toppling crane if load chart is not adhered to!
▶ Luff the crane up solely according to the information in the load chart!

▶ Luff the telescopic boom up.

copyright © Liebherr-Werk Ehingen GmbH 2016

1.3 Track adjustment by turning the crane superstructure

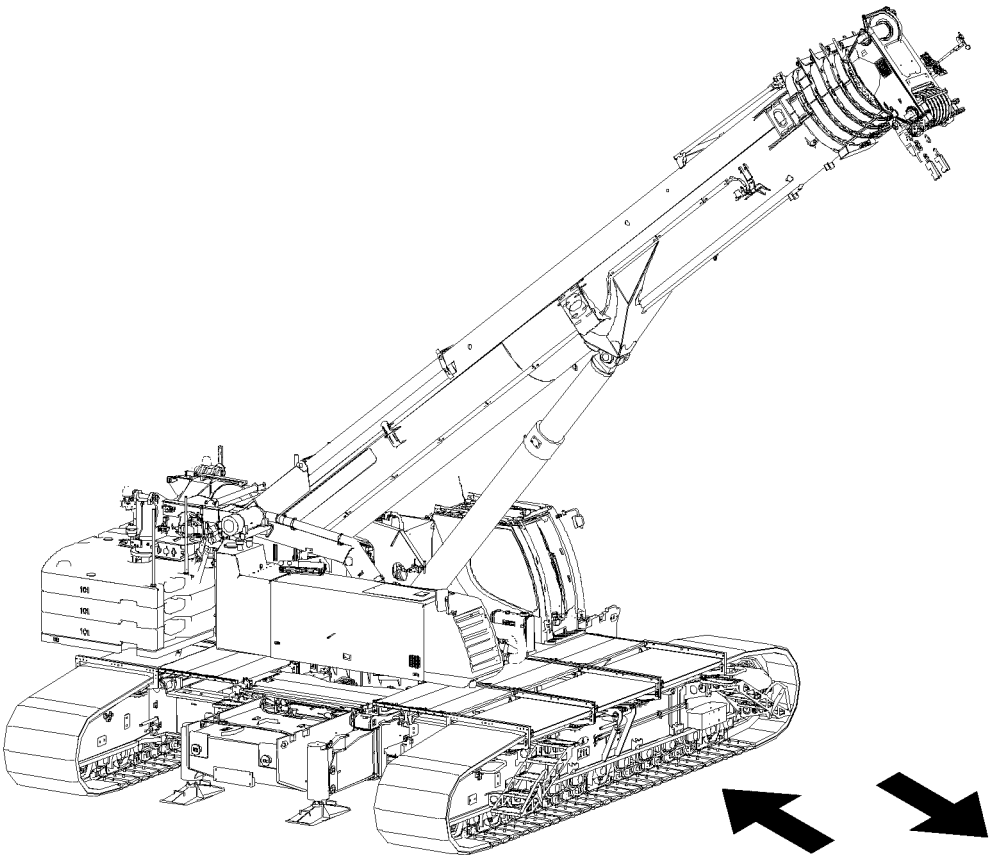

Fig.118946

The crawler carriers are relieved when the center of gravity is changed.

The following movements change the center of gravity of the crane:
- Luffing the boom up
- Turning the crane superstructure

WARNING
Toppling crane if load chart is not adhered to!
- ▶ For swinging, the 360° load chart with smaller track width must be selected by taking the installed counterweight and the incline of the terrain into account.
- ▶ Swing the crane up solely according to the information in the load chart!

Make sure that the following prerequisites are met:
- The crane is standing on the crawlers.
- The ground has a permissible incline, see load chart.
- The ground is of sufficient load bearing capacity.
- The ground is free of obstacles, such as rock edges or ground upheavals over the entire adjustment range.
- The central ballast is installed.

- ▶ Adjust the track width and the slewing range in the Set up program, see „Chart for track adjustment“.

LWE/ab Muli 010/24201-02-02/en

copyright © Liebherr-Werk Ehingen GmbH 2016

Chart for track adjustment					
Initial track width		**Target track width**		**Adjustment in Set up program**	
				360° Slewing range	
Retracted	3.5 m	Reduced	4.90 m	Set up condition retracted track	3.5 m
0 %	11.0 ft	50 %	16.0 ft		11.0 ft
Retracted	3.5 m	Wide	6.3 m	Set up condition retracted track	3.5 m
0 %	11.0 ft	100 %	21.0 ft		11.0 ft
Reduced	4.9 m	Wide	6.3 m	Set up condition reduced track	4.9 m
50 %	16.0 ft	100 %	21.0 ft		16.0 ft
Reduced	4.9 m	Retracted	2.6 m	Set up condition retracted track	3.5 m
50 %	16.0 ft	0 %	11.0 ft		11.0 ft
Wide	6.3 m	Reduced	4.90 m	Set up condition reduced track	4.9 m
100 %	21.0 ft	50 %	16.0 ft		16.0 ft
Wide	6.3 m	Retracted	3.5 m	Set up condition retracted track	3.5 m
100 %	21.0 ft	0 %	11.0 ft		11.0 ft

Chart for track adjustment

▶ Accept set up condition.

Problem remedy
Set up condition cannot be accepted!
▶ Change set up condition until the adjustment with the new track width can be confirmed.

Chart for asymmetric track adjustment					
Initial track width		**Target track width**		**Adjustment in Set up program**	
				360° Slewing range	
Crawler carrier A moved in Crawler carrier B moved in	3.5 m	Crawler carrier B moved out	4.90 m	Set up condition retracted track	3.5 m
0 %	11.0 ft	100 %	16.0 ft		11.0 ft
Crawler carrier B moved in Crawler carrier A moved in	3.5 m	Crawler carrier A moved out	4.9 m	Set up condition retracted track	3.5 m
0 %	11.0 ft	100 %	16.0 ft		11.0 ft

Chart for asymmetric track adjustment

▶ Accept set up condition.

copyright © Liebherr-Werk Ehingen GmbH 2016

Problem remedy
Set up condition cannot be accepted!
▶ Change set up condition until the adjustment with the new track width can be confirmed.

WARNING
Danger of accident due to obstacles when swinging and luffing up!
▶ Make sure that there are no obstacles within 360° of the slewing area of the crane.
▶ Make sure that the telescoped in boom cannot collide with obstacles when luffing it up.

▶ Luff the telescopic boom up until the steepest permissible position is reached.

Relieve the crawler carrier **A** by turning the counterweight over the crawler travel gear **B**.

▶ Turn the crane superstructure until the counterweight is positioned vertically over the crawler travel gear **B**.
▶ Extend or retract the crawler carrier **A**, see section „Adjusting the track width“.

Relieve the crawler carrier **B** by turning the counterweight over the crawler travel gear **A**.

▶ Turn the crane superstructure until the counterweight is positioned vertically over the crawler travel gear **A**.
▶ Extend or retract the crawler carrier **A**, see section „Adjusting the track width“.

LWE/ab Muli 010/24201-02-02/en

copyright © Liebherr-Werk Ehingen GmbH 2016

Empty page!

LWE/ab Muli 010/24201-02-02/en

copyright © Liebherr-Werk Ehingen GmbH 2016

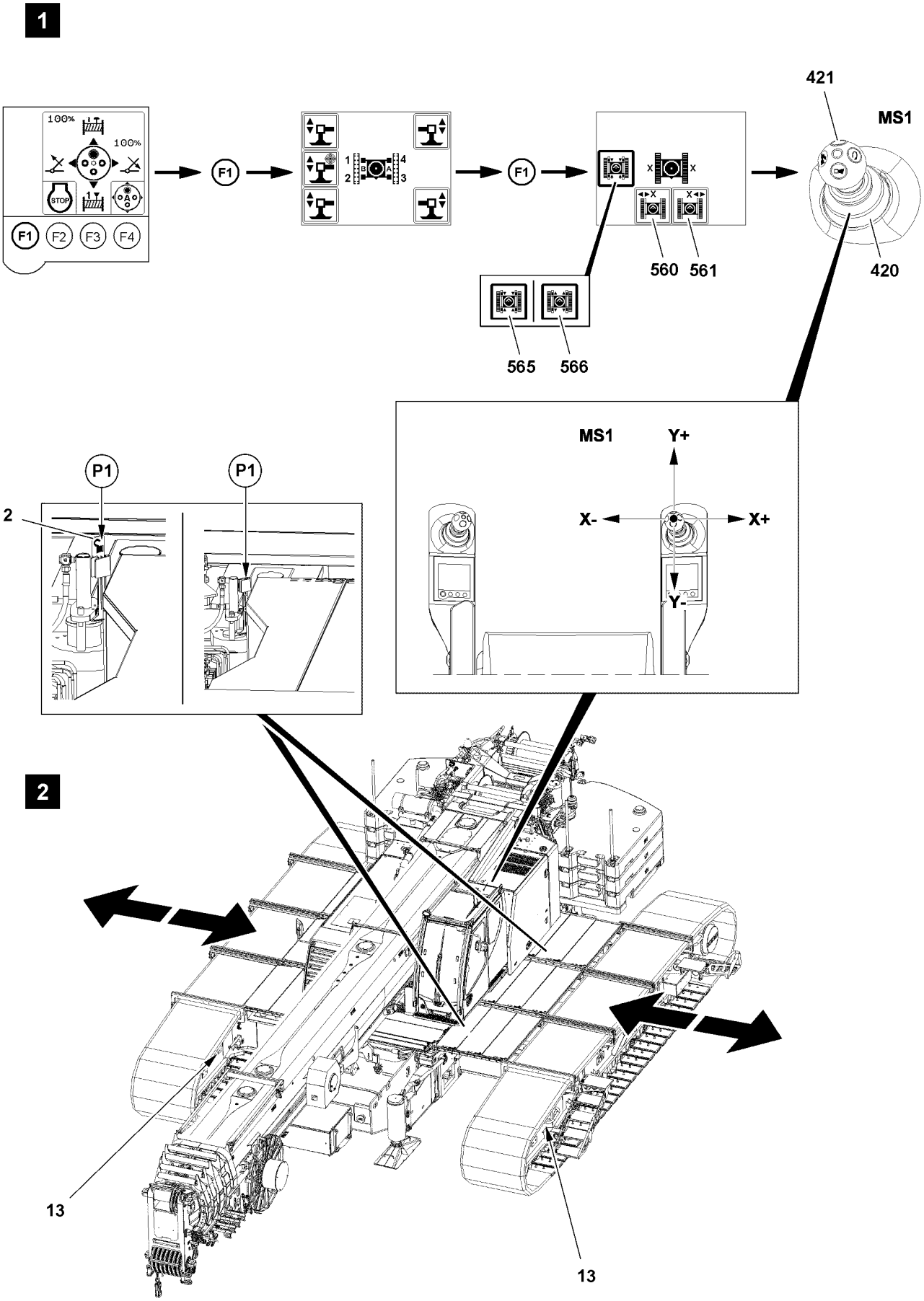

Fig.116914

LWE/ab Muli 010/24201-02-02/en

copyright © Liebherr-Werk Ehingen GmbH 2016

2 Adjusting the track width

2.1 Adjusting the track width from the crane operator's cab

This section describes the adjustment of the track width with:
- Master switch MS1 and touch display right (TE1) in the crane operator's cab

Note
▶ While driving the crane from the crane operator's cab, you can adjust the track width simultaneously, see Crane operating instructions, chapter 4.10.

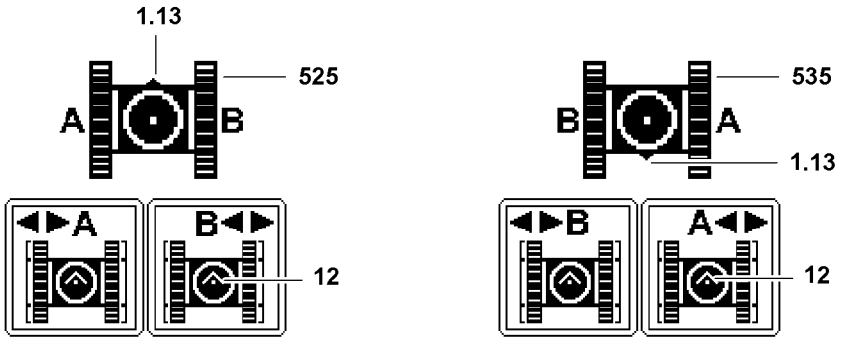

Fig.117820

Note
Assignment of working direction and crawler carrier!
▶ Rear and front on the crawler track can be determined by the chain tension device **13** (chain tension side). The chain tension device **13** is on the front on the crawler track.
▶ In the „Crawler travel gear" menu the assignment of the crawler carriers on the touch display depends on the working direction of the crane. If the working direction of the crane is changed by turning the turntable from working direction „forward" to working direction „backward", then the crane icon **525** changes to crane icon **535** - or vice versa.
▶ Arrow **12** shows the direction of view of the crane operator in the crane operator's cab: icon **560**, icon **561**, icon **565** and icon **566**.
▶ Crane icon **525**, turntable turned „to the front": The triangle **1.3** shows the front on the crane chassis; assignment of the crawler carriers as seen by the crane operator in the crane operator's cab.
▶ Crane icon **535**, turntable turned „to the rear": The triangle **1.3** shows the front on the crane chassis; assignment of the crawler carriers as seen by the crane operator in the crane operator's cab.

LWE/ab Muli 010/24201-02-02/en

copyright © Liebherr-Werk Ehingen GmbH 2016

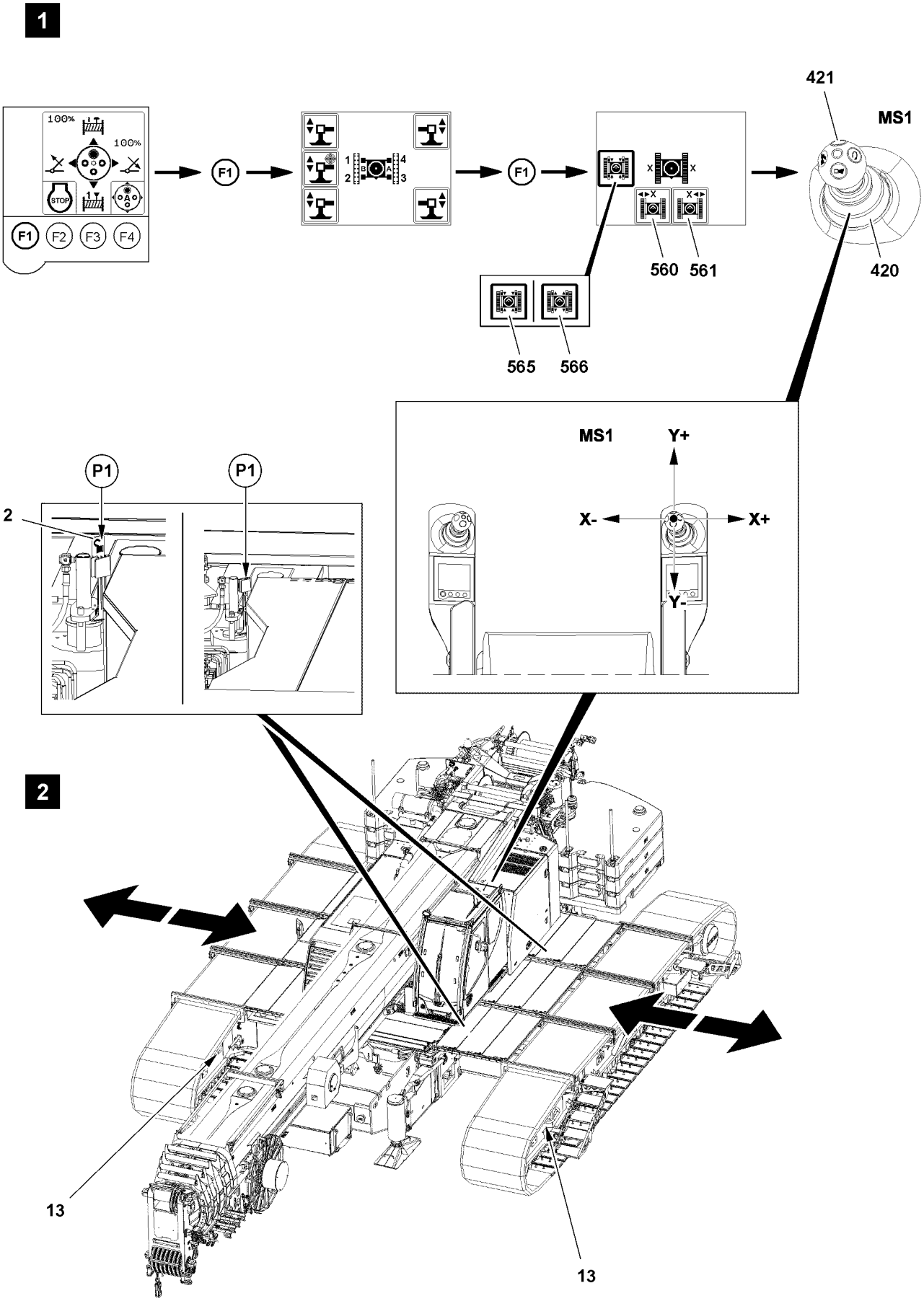

Fig.116914

LWE/ab Muli 010/24201-02-02/en

copyright © Liebherr-Werk Ehingen GmbH 2016

Note
Select / deselect icons in the touch display
Touch functions are identified by the double border (empty frame) of the touch display icons. The function in the icon is selected / deselected with the press of a finger („touch)“ on the icon.
Example on the „Left track“ icon **560**:
▶ „Left track“ icon **560.1**: Left track deselected (not active), double border (empty frame) is visible.
▶ „Left track“ icon **560.2**: Left track selected (active), double border is filled (frame filled).

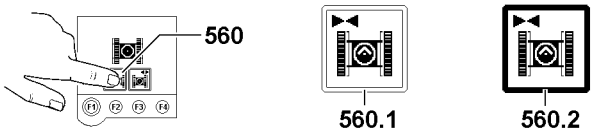

Fig.114229

Make sure that the following prerequisite is met:
– On the TE1 the „Master switch configuration“ menu is visible.

2.1.1 Unpinning the cross carrier

▶ Press the function key F1 **461**, see illustration **1**.

Result:

– The „Support“ menu appears.

▶ Press the function key F1 **461**, see illustration **1**.

Result:

– The „Track width adjustment“ menu appears.

When icon **565** „Pin the cross carrier“ is visible:
▶ Activate „Unpin the cross carrier“: Select icon **565** („touch“), see illustration **1**.

Result:

– Icon „unpin cross carrier“ **566** is visible.

2.1.2 Selecting the crawler carrier

Before you retract or extend the crawler carrier, select one of the crawler carriers or both crawler carriers:
– **560** Icon
– **561** Icon

▶ Pay attention to crawler carrier assignment.
▶ Select the crawler carrier: Select icons („touch“).

Result:

– Selected icon with filled out frame: Crawler carrier is selected.

2.1.3 Extending / retracting the crawler carriers

To unpin the cross carriers on points **P1**, you have to retract or extend the crawler carriers, see illustration **2**:

You can check on points **P1** if the pins are completely pinned or unpinned:
– The pins are unpinned: Tags **2** are visible.
– The pins are pinned: Tags **2** are **not** visible.

LWE/ab Muli 010/24201-02-02/en

copyright © Liebherr-Werk Ehingen GmbH 2016

WARNING
Crushing danger due to adjustment of crawler carriers!
▶ Make sure that no personnel is within the danger zone of the crawler carriers during „track width adjustment“.

To initiate a movement, you have to release master switch MS1 **420** with the button **421**.

▶ Press the button **421** and hold.

When „extending the crawler carrier“:
▶ Move master switch MS1 **420** in direction X+.

When „retracting the crawler carrier“:
▶ Move master switch MS1 **420** in direction X-.

Result:

– The pins are unpinned.

Problem remedy
Pins are not unpinned!
The pin is stuck: The position of the cross carrier prevents the pins from unpinning.
▶ Extend and retract the cross carrier again: Move master switch MS1 **420** in direction X+ or X- until the pins are completely unpinned.

▶ Make sure that the pins are completely unpinned on points **P1**, see illustration **2**.

Result:

– The pins are unpinned.
– The crawler carrier extends or retracts.

2.1.4 Pinning the cross carrier

Before the cross carrier reaches one of the extension conditions of 0 %, 50 %, 100 %:
▶ Activate „Pin the cross carrier“: Select icon **566** („touch“), see illustration **1**.

Result:

– Icon **565** „pin cross carrier“ is visible.
– The pins are pinned.

Problem remedy
The pins are not pinned!
The pin is stuck: The position of the cross carrier prevents the pins from pinning.
▶ Extend and retract the cross carrier again: Move master switch MS1 **420** in direction X+ or X- until the pins are completely pinned.

▶ Make sure that the pins are completely pinned on points **P1**, see illustration **2**.

Result:

– The pins are pinned.
– The crawler carrier is secured.

LWE/ab Muli 010/24201-02-02/en

copyright © Liebherr-Werk Ehingen GmbH 2016

Empty page!

LWE/ab Muli 010/24201-02-02/en

copyright © Liebherr-Werk Ehingen GmbH 2016

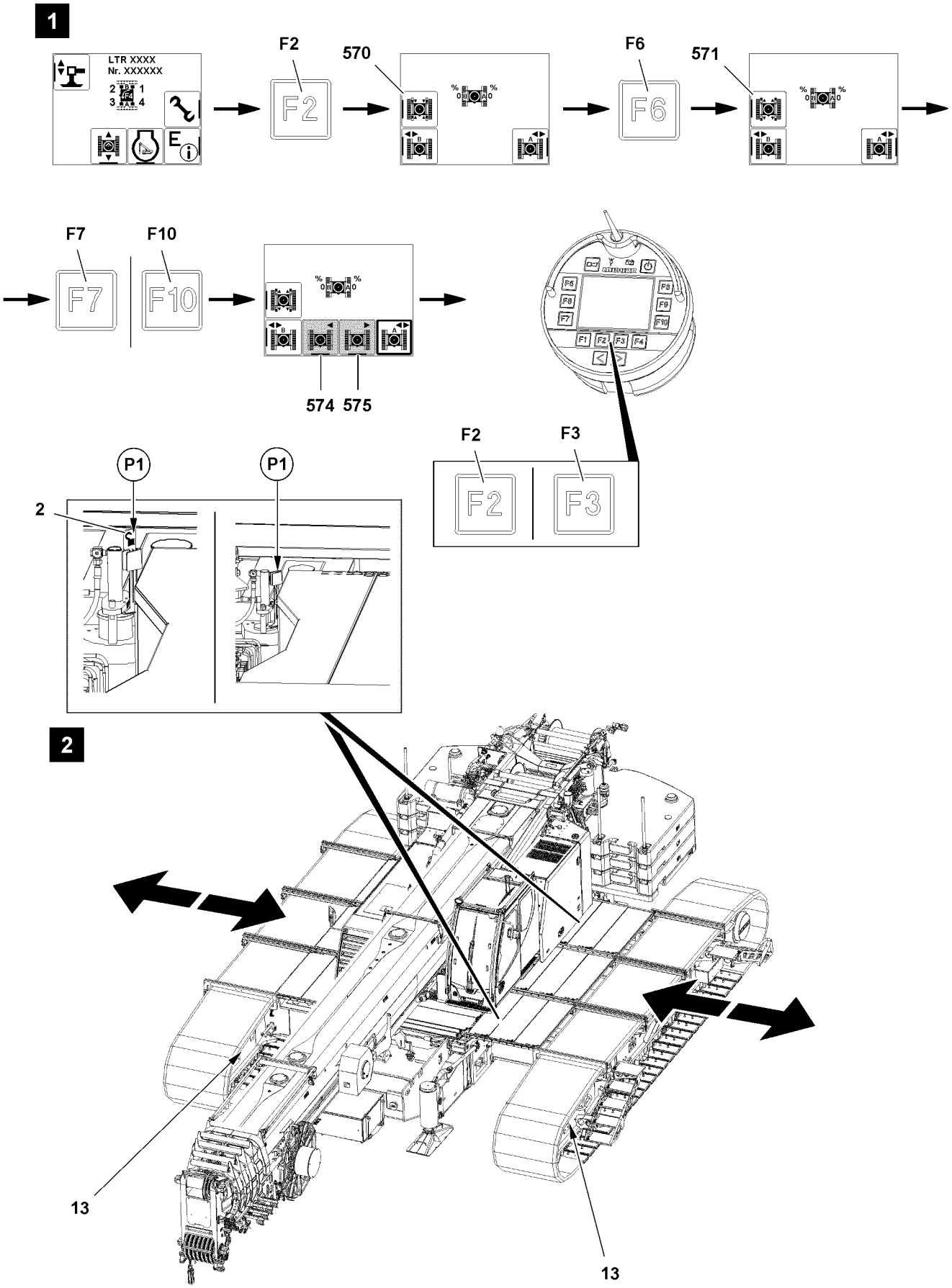

Fig.118097

LWE/ab Muli 010/24201-02-02/en

copyright © Liebherr-Werk Ehingen GmbH 2016

2.2 Adjusting the track width with the Bluetooth™ Terminal

This section describes the adjustment of the track width with:
- Bluetooth™ Terminal (BTT)

Note
▶ To be able to carry out the individual functions, the 2-Hand keypad on the rear of the BTT must be pressed simultaneously.

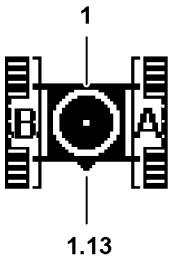

Fig.117819

Note
Assignment of working direction and crawler carrier!
▶ Rear and front on the crawler track can be determined by the chain tension device **13** (chain tension side). The chain tension device **13** is on the front on the crawler track.
▶ The illustration of the crane icon **1** is **independent** from the working direction. Triangle **1.3** shows front on crane chassis.
▶ Crawler carrier **B** is in view „front“ right.
▶ Crawler carrier **A** is in view „front“ left.

Make sure that the following prerequisites are met:
- On the display of the BTT, the menu overview is visible.
- The BTT is aligned to the crane according to the arrow **1.13** in the crane icon **1**.

LWE/ab Muli 010/24201-02-02/en

copyright © Liebherr-Werk Ehingen GmbH 2016

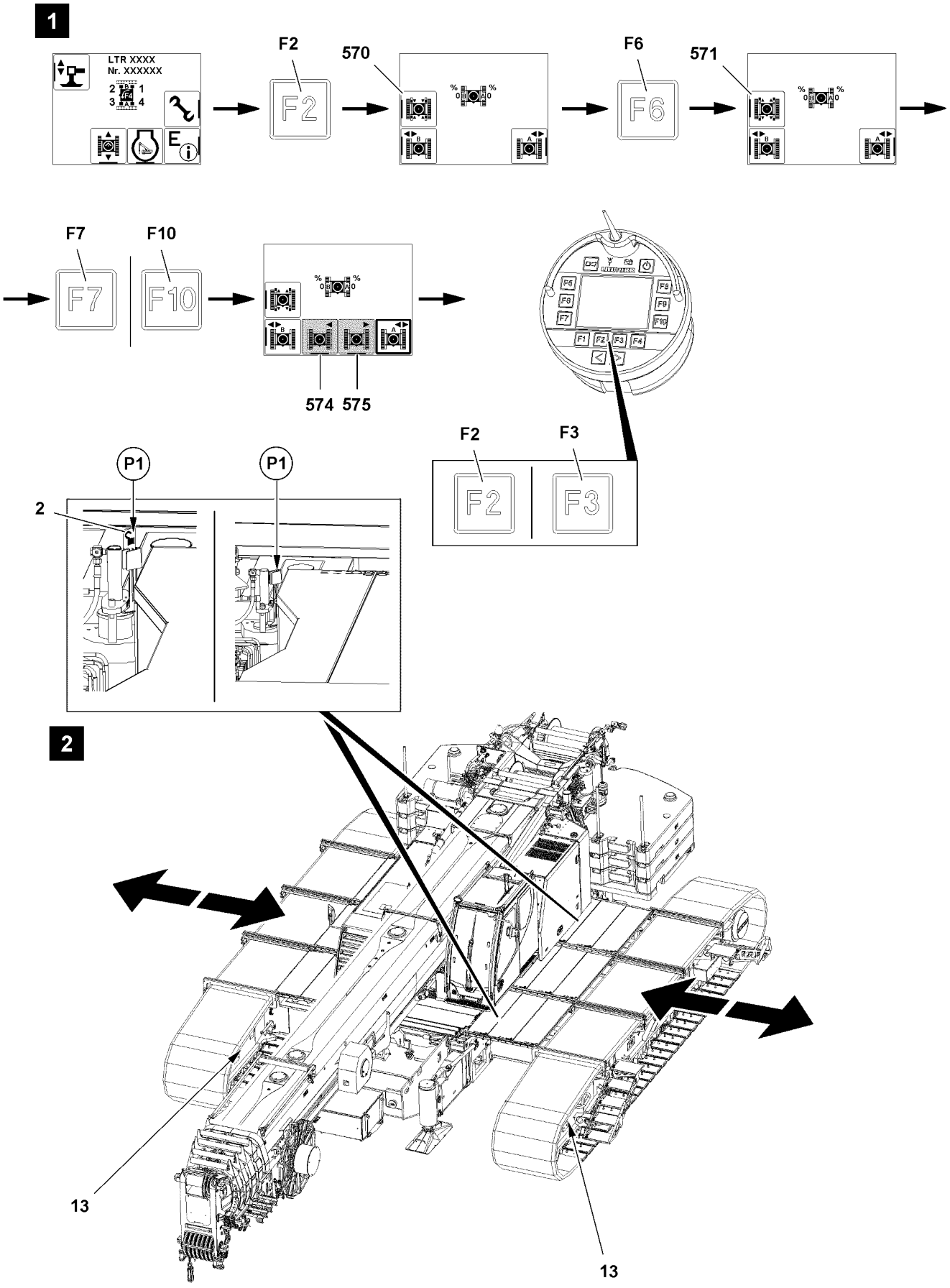

Fig.118097

LWE/ab Muli 010/24201-02-02/en

copyright © Liebherr-Werk Ehingen GmbH 2016

2.2.1 Unpinning the cross carrier

▶ Open „Crawler travel gear“ menu: Press the function key **F2**.

Result:

– Functions „Track width adjustment“ are visible.

When icon „Pin the cross carrier“ **570** is visible:
▶ Activate „Unpin the cross carrier“: Press the function key **F6**, see illustration **1**.

Result:

– Icon „Unpin the cross carrier“ **571** appears.

2.2.2 Selecting the crawler carrier

Before you retract or extend the crawler carrier, select one of the crawler carriers or both crawler carriers:
– **F7** Function key
– **F10** Function key

Depending on which crawler carriers are selected, different icons for „retract crawler carrier“ and „extend crawler carrier“ appear, see Crane operating instructions, chapter 5.31.

▶ Select the crawler carrier: Press the function keys, see illustration **1**.

Result:

– Crawler carrier **A** selected: Icon „retract crawler carrier“ **574** is visible on function key **F2**.
– Crawler carrier **A** selected: Icon „extend crawler carrier“ **575** is visible on function key **F3**.

2.2.3 Extending / retracting the crawler carriers

To unpin the cross carriers on points **P1**, you have to retract or extend the crawler carriers, see illustration **2**.

You can check on points **P1** if the pins are completely pinned or unpinned:
– The pins are unpinned: Tags **2** are visible.
– The pins are pinned: Tags **2** are **not** visible.

WARNING
Crushing danger due to adjustment of crawler carriers!
▶ Make sure that no personnel is within the danger zone of the crawler carriers during „track width adjustment“.

When „extending the crawler carrier“:
▶ Press the function key **F3**.

When „retracting the crawler carrier“:
▶ Press the function key **F2**.

Result:

– The pins are unpinned.

Problem remedy
Pins are not unpinned!
The pin is stuck: The position of the cross carrier prevents the pins from unpinning.
▶ Extend and retract the cross carrier again: Press the function keys until the pins are completely unpinned.

▶ Make sure that the pins are completely unpinned on points **P1**, see illustration **2**.

Result:

– The pins are unpinned.
– The crawler carrier extends or retracts.

LWE/ab Muli 010/24201-02-02/en

copyright © Liebherr-Werk Ehingen GmbH 2016

2.2.4 Pinning the cross carrier

Before the cross carrier reaches one of the extension conditions of 0 %, 50 %, 100 %:

▶ Activate „Pin the cross carrier“: Press the function key **F6**.

Result:

– Icon „pin the cross carrier“ **570** is visible.
– The pins are pinned.

Problem remedy

The pins are not pinned!

The pin is stuck: The position of the cross carrier prevents the pins from pinning.

▶ Extend and retract the cross carrier again: Press the function keys until the pins are completely pinned.

▶ Make sure that the pins are completely pinned on points **P1**, see illustration **2**.

Result:

– The pins are pinned.
– The crawler carrier is secured.

LWE/ab Muli 010/24201-02-02/en

copyright © Liebherr-Werk Ehingen GmbH 2016

Empty page!

LWE/ab Muli 010/24201-02-02/en

copyright © Liebherr-Werk Ehingen GmbH 2016

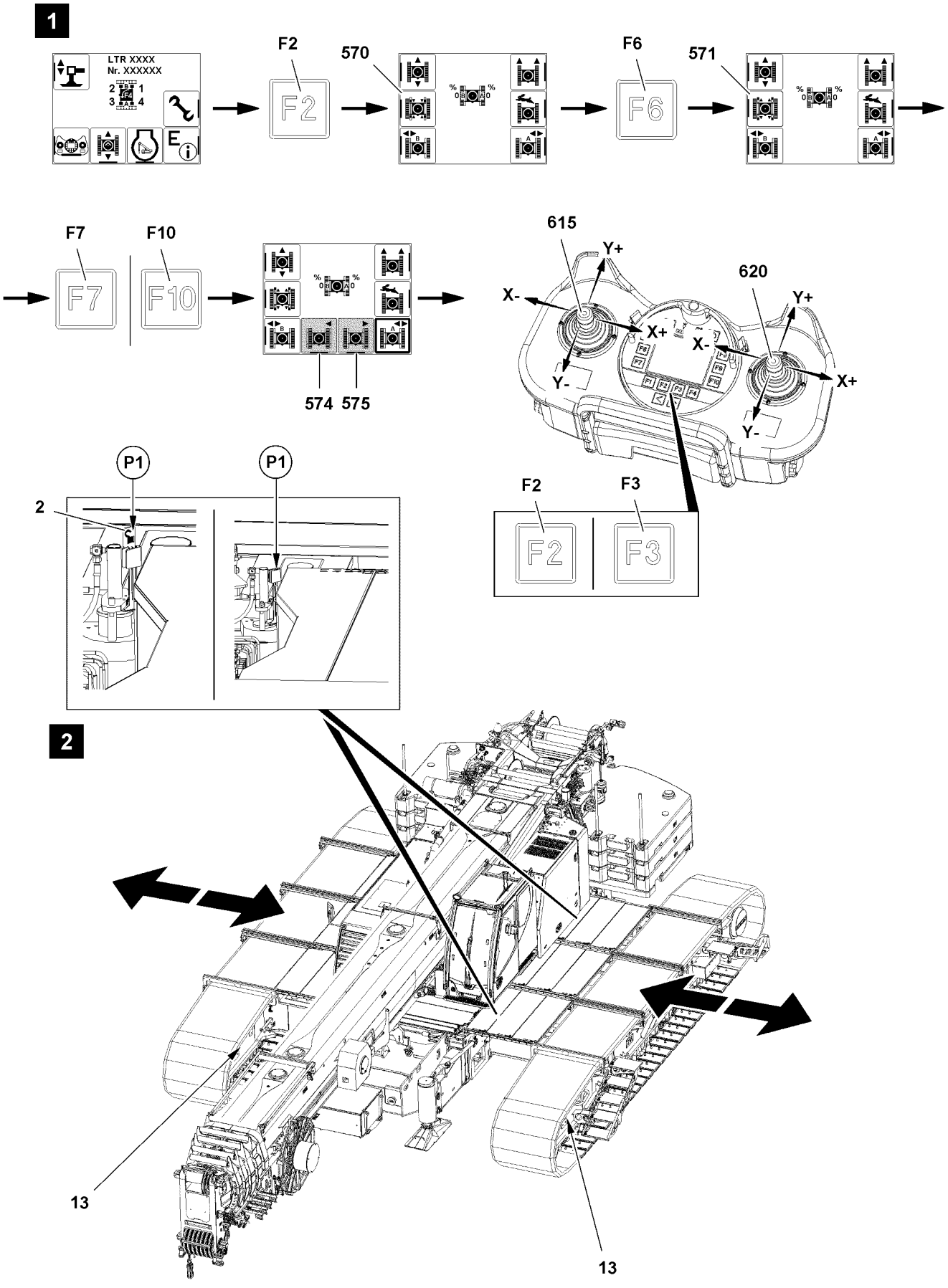

Fig.116913

LWE/ab Muli 010/24201-02-02/en

copyright © Liebherr-Werk Ehingen GmbH 2016

2.3 Adjusting the track width with the radio remote control*

This section describes the adjustment of the track width with:
- Radio remote control (BTT-E)

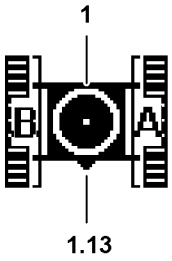

Fig.117819

Note
Assignment of working direction and crawler carrier!
- ▶ Rear and front on the crawler track can be determined by the chain tension device **13** (chain tension side). The chain tension device **13** is on the front on the crawler track.
- ▶ The illustration of the crane icon **1** is **independent** from the working direction. Triangle **1.3** shows front on crane chassis.
- ▶ Crawler carrier **B** is in view „front“ right
- ▶ Crawler carrier **A** is in view „front“ left.

Make sure that the following prerequisites are met:
- On the display of the BTT-E, the menu overview is visible.
- The BTT-E is aligned to the crane according to the arrow **1.13** in the crane icon **1**.

LWE/ab Muli 010/24201-02-02/en

copyright © Liebherr-Werk Ehingen GmbH 2016

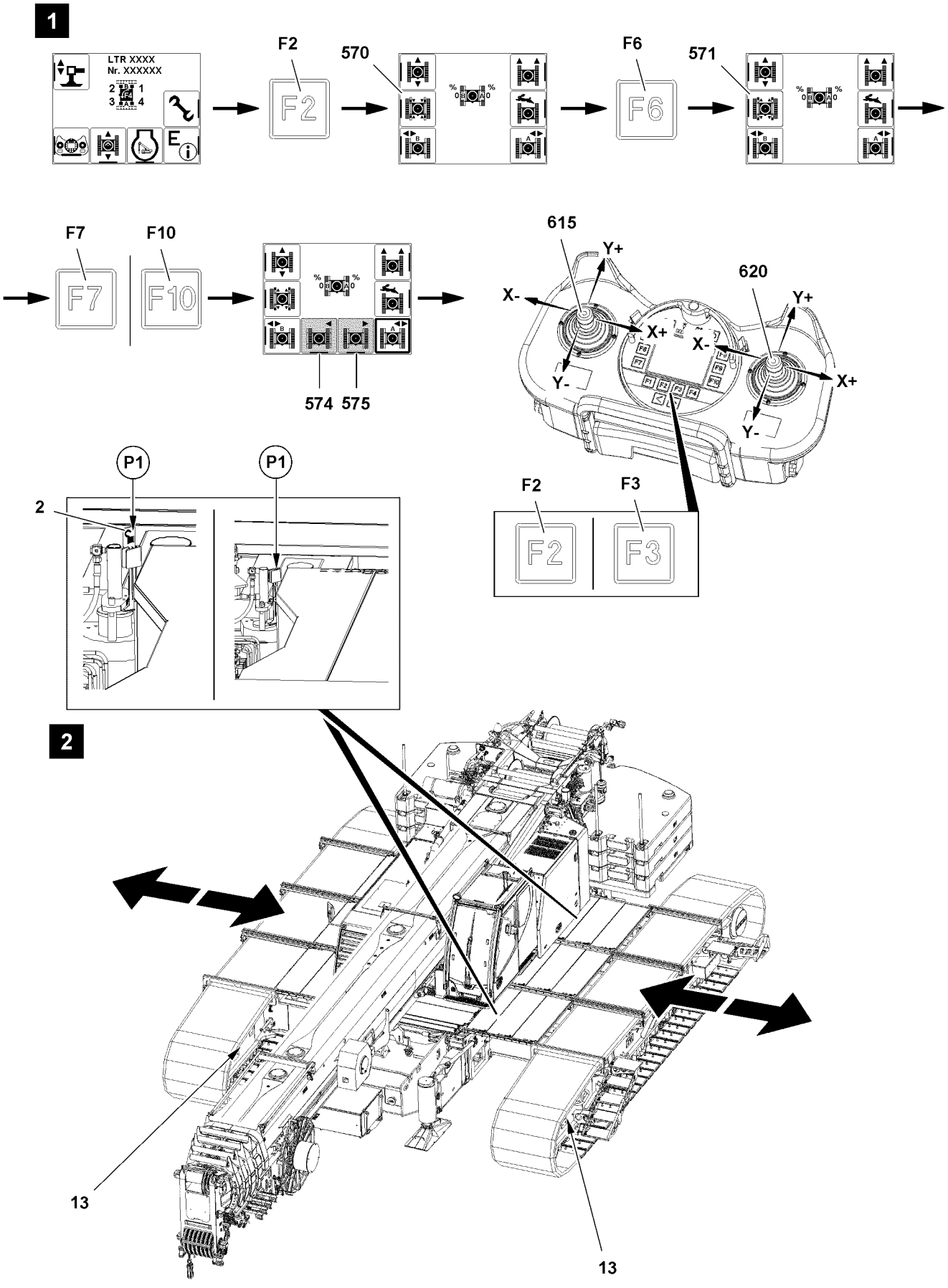

Fig.116913

LWE/ab Muli 010/24201-02-02/en

copyright © Liebherr-Werk Ehingen GmbH 2016

2.3.1 Unpinning the cross carrier

▶ Open „Crawler travel gear“ menu: Press the function key **F2**.

Result:

– Functions „Track width adjustment“ are visible.

When icon „Pin the cross carrier“ **570** is visible:
▶ Activate „Unpin the cross carrier“: Press the function key **F6**, see illustration **1**.

Result:

– Icon „Unpin the cross carrier“ **571** appears.

2.3.2 Selecting the crawler carrier

Before you retract or extend the crawler carrier, select one of the crawler carriers or both crawler carriers:
– **F7** Function key
– **F10** Function key

Depending on which crawler carriers are selected, different icons for „retract crawler carrier“ and „extend crawler carrier“ appear, see Crane operating instructions, chapter 6.08.

▶ Select the crawler carrier: Press the function keys, see illustration **1**.

Result:

– Icon „retract crawler carrier“ **574** is visible on function key **F2**.
– Icon „extend crawler carrier“ **575** is visible on function key **F3**.

2.3.3 Extending / retracting the crawler carriers

To unpin the cross carriers on points **P1**, you have to retract or extend the crawler carriers, see illustration **2**.

You can check on points **P1** if the pins are completely pinned or unpinned:
– The pins are unpinned: Tags **2** are visible.
– The pins are pinned: Tags **2** are **not** visible.

WARNING
Crushing danger due to adjustment of crawler carriers!
▶ Make sure that no personnel is within the danger zone of the crawler carriers during „track width adjustment“.

The operation of the following manual control levers on the BTT-E is assigned depending on the selected crawler carriers:
– Both crawler carriers are selected: Manual control lever **615** or manual control lever **620**
– Left crawler carrier is selected: Manual control lever **620**
– Right crawler carrier is selected: Manual control lever **615**

When „extending the crawler carrier“:
▶ Deflect the manual control lever in direction X+.
or
Press the function key **F3**.

When „retracting the crawler carrier“:
▶ Deflect the manual control lever in direction X-.
or
Press the function key **F2**.

Result:

– The pins are unpinned.

LWE/ab Muli 010/24201-02-02/en

copyright © Liebherr-Werk Ehingen GmbH 2016

Problem remedy
Pins are not unpinned!
The pin is stuck: The position of the cross carrier prevents the pins from unpinning.
▶ Extend and retract the cross carrier again: Deflect the manual control levers on the BTT-E in direction X+ or X- or press function keys until the pins are completely unpinned.

▶ Make sure that the pins are completely unpinned on points **P1**, see illustration **2**.

Result:

– The pins are unpinned.
– The crawler carrier extends or retracts.

2.3.4 Pinning the cross carrier

Before the cross carrier reaches one of the extension conditions of 0 %, 50 %, 100 %:
▶ Activate „Pin the cross carrier“: Press the function key **F6**.

Result:

– Icon „pin the cross carrier“ **570** is visible.
– The pins are pinned.

Problem remedy
The pins are not pinned!
The pin is stuck: The position of the cross carrier prevents the pins from pinning.
▶ Extend and retract the cross carrier again: Deflect the manual control levers on the BTT-E in direction X+ or X- or press function keys until the pins are completely pinned.

▶ Make sure that the pins are completely pinned on points **P1**, see illustration **2**.

Result:

– The pins are pinned.
– The crawler carrier is secured.

LWE/ab Muli 010/24201-02-02/en

copyright © Liebherr-Werk Ehingen GmbH 2016

4.04 Safety equipment

1	General	3
2	Quick test Crane geometry	3
3	Quick test Overload protection	3
4	LICCON computer system	3
5	Safety devices on the crane	9

LWE/ab Muli 010/24201-02-02/en

copyright © Liebherr-Werk Ehingen GmbH 2016

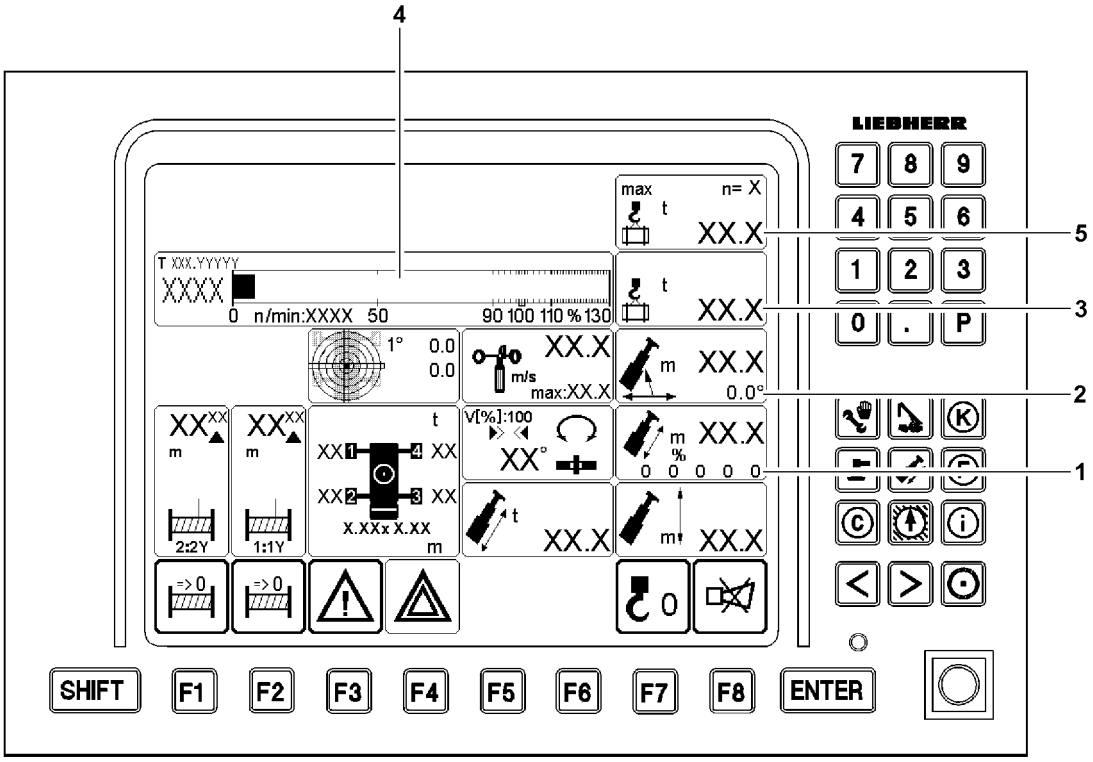

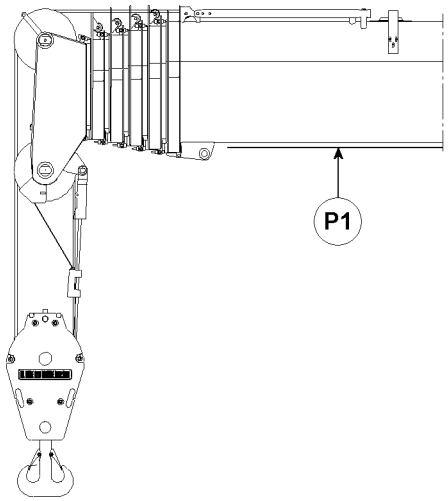

Fig.112697

LWE/ab Muli 010/24201-02-02/en

copyright © Liebherr-Werk Ehingen GmbH 2016

1 General

The crane operator is obligated before every crane operation to ensure that the warning and safety devices are functioning.

WARNING
Danger of accident due to defective warning and safety systems!
If the crane is operated with defective warning and safety devices, then there is a danger of accidents!
Personnel can be killed or seriously injured!
This could result in property damage!
▶ Make sure that all warning and safety devices are functioning.
▶ Make sure that the overload protection is functioning.

2 Quick test Crane geometry

Make sure that the following prerequisites are met:
– The crane is properly supported and horizontally aligned.
– There is no load on the hook.

Note
▶ The horizontal alignment of the telescopic boom can be checked with a spirit level on point **P1**.

When the telescopic boom is completely telescoped in and horizontally aligned, the LICCON computer system must show the following:
– Display Extension status telescopes **1**: all values on 0 %
– Display Telescopic boom angle **2**: 0°

3 Quick test Overload protection

Lift a known weight completely, such as the hook block or a counterweight plate and then set it down.

Make sure that the following prerequisite is met:
– The crane is properly supported and horizontally aligned.

The respective displayed values must be plausible:
– **3** Actual load display
– Utilization bar **4** (ratio of value Actual load display **3** to maximum load value **5**)

4 LICCON computer system

The LICCON computer system is a system for controlling and monitoring mobile cranes. In addition to the LICCON overload protection (Load torque limiter = LMB), there are a number of application programs that can be used for controlling and monitoring the crane movements. For a detailed description see Crane operating instructions, chapter 4.02 and chapter 4.20.

4.1 LICCON overload protection

The LICCON overload protection is programmed to **shut off** the crane movements if the permissible load moment is exceeded (LMB-STOP).

The LICCON overload protection may not be used as an operational shut off device for crane movements of any kind.

LWE/ab Muli 010/24201-02-02/en

copyright © Liebherr-Werk Ehingen GmbH 2016

An overload protection cannot detect all occurring conditions by itself. Careful and diligent crane operation by the crane operator is important.

The basis for the calculation of the utilization of the crane are:
- The currently data and values recorded by the crane control.
- The set up configuration entered by the crane operator.

Direct influence has, for example:
- Failure of a test device (for example: length sensor, angle sensor, pressure sensor).
- A set up configuration incorrectly entered by the crane operator.
- Environmental influences not considered (such as wind influence, ground with insufficient load bearing capability).
- Assembly and operating errors.

WARNING
Danger of accident due to assembly and operating errors!
Due to assembly and operating errors it is possible that the overload protection is not effective or shut off is delayed!
A set up configuration which deviates from the load chart cannot be detected by the overload protection!
Environmental influences which are not considered cannot be detected by the overload protection!
Dangerous situations and accidents can result!
Personnel can be killed or seriously injured!
This could result in property damage!
▶ Always assemble and operate the crane carefully!

WARNING
Operational utilization of the overload protection!
If the LICCON overload protection is utilized as an operational shut off device for crane movements, then there is a danger of accidents!
For example, crane movements can be shut off abruptly or uncontrolled!
The behavior of load and crane cannot be foreseen in such a case!
Personnel can be killed or seriously injured!
This could result in property damage!
▶ Do not use the LICCON overload protection as an operational shut off device for crane movements!

WARNING
Lifting of unknown loads!
The presence of the overload protection does not relieve the crane operator of his obligation for care and attention!
The crane may not only be operated according to the displays of the LICCON overload protection!
Lifting of loads with unknown weight and unknown properties can lead to accidents!
Personnel can be killed or seriously injured!
This could result in property damage!
▶ Before lifting a load, its weight and properties must be known to the crane operator!
▶ The crane operator must check with the load chart if the crane is able to carry out the work safely!

The LICCON computer system detects various values, which result in optical and acoustical warnings if exceeded:

Within the crane operator's cab:
- Acoustic warning „Horn / short horn“ on the LICCON monitor
- Optical warning „Blinking value / display“ on the LICCON monitor

Outside the crane operator's cab:
- Acoustic warning via the horn on the slewing platform
- Optical warning via the warning light on the slewing platform

All warnings, even those which do not lead to an immediate shut off must be noted by the crane operator and personnel within the danger zone.

LWE/ab Muli 010/24201-02-02/en

copyright © Liebherr-Werk Ehingen GmbH 2016

The overload protection can **not** detect (examples of cases):
- The hooking of the load or the load suspension equipment.
- Excessive retarding forces.
- Loads falling onto the rope.
- Angular pulling.
- Driving the crane on ground with large slope.
- Collapsing ground.

4.1.1 Failure of the overload protection

WARNING
Crane operation without overload protection!
If the LICCON overload protection is no longer functioning properly because of one or more errors, then there is a danger of accidents if crane operation is continued!
Due to operation of the crane with failed LICCON overload protection, the crane can be overloaded and collapse!
Personnel can be killed or seriously injured!
This could result in property damage!
- ▶ Crane operation without overload protection is prohibited!
- ▶ Do not take up crane operation again until the overload protection is functioning again!

A failed overload protection:
- Must be repaired before the crane can be operated again.
- May only be bypasses in emergency cases or emergency situations.

4.2 Bypass of overload protection

The overload protection can be bypassed in case of:
- Failure of the overload protection.
- In an emergency situation (according to EN 13000:2010).

4.2.1 Bypass of overload protection: Failure of the overload protection

Note
- ▶ Does **not** apply for cranes with CE-mark and configuration according to EN 13000:2010!

To bring the crane into safe condition after failure of a component required for the overload protection, it can be necessary that the overload protection has to be bypassed.

WARNING
Bypassed overload protection!
If the overload protection is bypassed, crane movements are no longer monitored!
The crane can be overloaded and collapse!
Personnel can be killed or seriously injured!
This could result in property damage!
- ▶ Only carry out crane movements within the range of the load chart as well as the erection / take down charts!

4.2.2 Bypass of overload protection: Failure of overload protection (according to EN 13000:2010)

To bring the crane into safe condition after failure of a component required for the overload protection, it can be necessary that the overload protection has to be bypassed.

With the specification that:
- The bypass is automatically reset at engine stop.
- The bypass is automatically reset after no later than 30 minutes.
- The bypass of the overload protection limits the working speed to no more than maximum 15 %.

LWE/ab Muli 010/24201-02-02/en

copyright © Liebherr-Werk Ehingen GmbH 2016

WARNING
Bypassed overload protection!
If the overload protection is bypassed, crane movements are no longer monitored!
The crane can be overloaded and collapse!
Personnel can be killed or seriously injured!
This could result in property damage!
▶ Only carry out crane movements within the range of the load chart as well as the erection / take down charts!

4.2.3 Bypass of overload protection: Emergency situation (according to EN 13000:2010)

In an emergency situation, a bypass of the overload protection may become necessary.

With the specification that:
– The bypass is automatically reset at engine stop.
– The bypass is automatically reset after no later than 30 minutes.
– The bypass of the overload protection limits the working speed to no more than maximum 15 %.

DANGER
Overload of crane!
After a bypass of the overload protection, the crane movements are no longer shut off in case of a danger of overload of the crane!
A bypass of the crane can result in severe damage or collapse!
Personnel can be killed or seriously injured!
This could result in property damage!
▶ Do not subject the crane to such a load that it collapses!
▶ Clear and secure the danger zone of the crane!

Note
▶ Location of bypass device, see Crane operating instructions, chapter 4.01 and chapter 4.02.

LWE/ab Muli 010/24201-02-02/en

copyright © Liebherr-Werk Ehingen GmbH 2016

Empty page!

LWE/ab Muli 010/24201-02-02/en

copyright © Liebherr-Werk Ehingen GmbH 2016

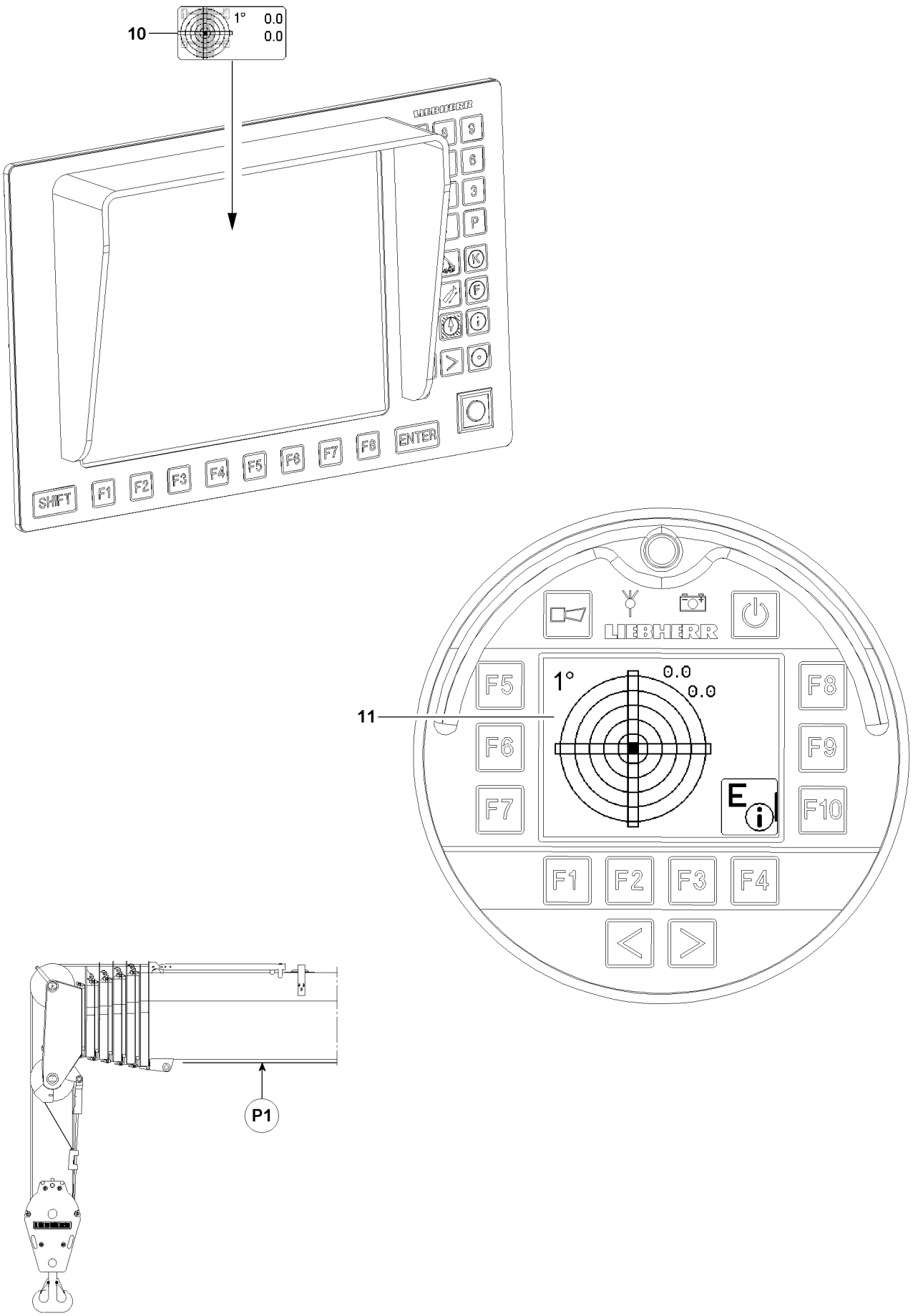

Fig.112699

LWE/ab Muli 010/24201-02-02/en

copyright © Liebherr-Werk Ehingen GmbH 2016

5 Safety devices on the crane

5.1 Leveling instruments

To ensure the working safety of the crane, the crane must be aligned horizontally on level ground with sufficient load bearing capacity. Alignment of the crane, see Crane operating instructions, chapter 3.05.

The current values are displayed continuously in the leveling instruments, see Crane operating instructions, chapter 4.02 and chapter 5.31.

The maximum permissible deviation from the horizontal position of the crane is ± 0.5 % (± 0.3°).

WARNING
The crane can topple over!
If the leveling instruments are defective, there is a danger that the crane is not horizontally aligned!
A crane which is not horizontally aligned can topple over!
Personnel can be killed or seriously injured!
This could result in property damage!
▶ It is imperative that the crane is aligned in horizontal direction!

5.1.1 Leveling instruments in the LICCON monitor

The incline of the crane is shown in the Incline icon **10** graphically as well as numerically, see Crane operating instructions, chapter 3.05 and 4.02.

5.1.2 Leveling instrument in the BTT

The incline of the crane is shown in the Incline display menu **11** graphically as well as numerically, see Crane operating instructions, chapter 3.05 and 5.31.

5.1.3 Quick test Leveling instrument

Make sure that the following prerequisites are met:
– The crane is properly supported and horizontally aligned.
– There is no load on the hook.

For horizontally aligned crane:
– The telescopic boom must be aligned horizontally at telescopic boom angle 0° over the entire slewing range of the turntable.

Note
▶ The horizontal alignment of the telescopic boom can be checked with a spirit level on point **P1**.

LWE/ab Muli 010/24201-02-02/en

copyright © Liebherr-Werk Ehingen GmbH 2016

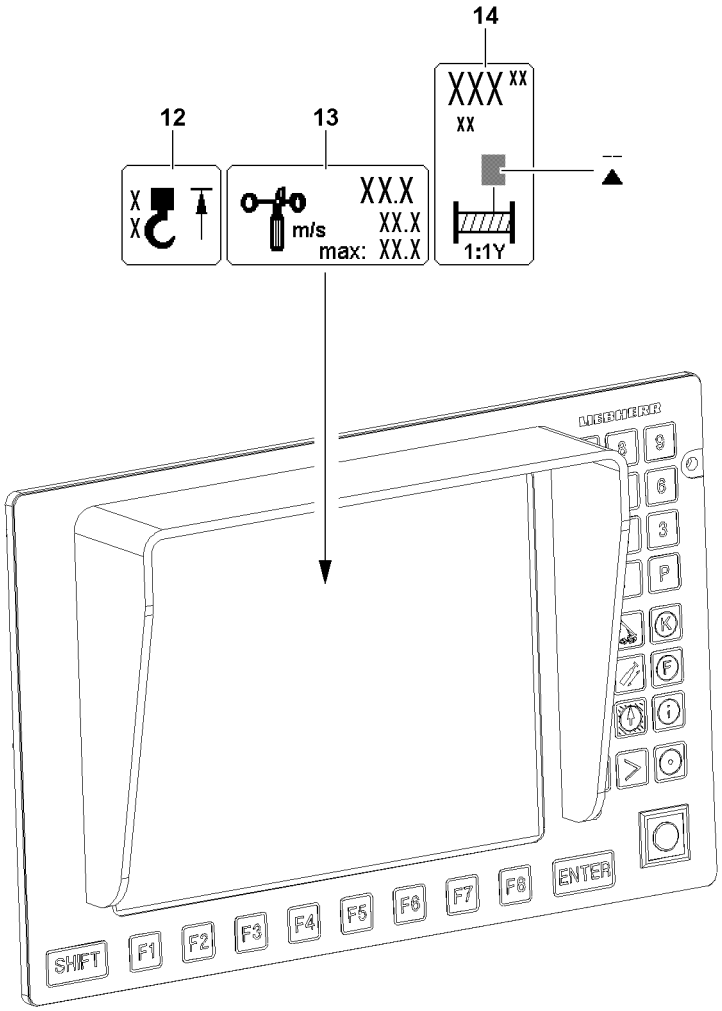

Fig.112700

LWE/ab Muli 010/24201-02-02/en

copyright © Liebherr-Werk Ehingen GmbH 2016

5.2 Acoustic and optical warning devices

Note

▶ Overview of acoustic and optical warnings, see Crane operating instructions, chapter 4.20.

– The acoustic and optical warning devices must be functioning and operational.
– Take care of any possible detriments in function, such as snow on the warning lights.

5.3 Hoist limit switch „Hoist top“

The hoist limit switch is intended to prevent the hook block from running against the boom head.

Before every crane application, the function of the hoist limit switch must be checked by running against the switch weight with the hook block.

For installation purposes and in emergency cases, the hoist limit switch can be bypassed, see Crane operating instructions, chapter 4.20.

WARNING

Falling load and property damage!
If the hoist limit switch is defective, there is the danger that the hook block or the load hook is pulled against the pulley head!
Falling load and property damage can result!
Personnel can be severely injured or killed!

▶ Crane operation without or with defective hoist limit switch is prohibited!
▶ Repair or replace a defective hoist limit switch!

The hoist limit switch must actuate when the hoist limit switch weight is lifted by the load hook / hook block:

– When the hoist limit switch is actuated, the icon **12** „Hoist top“ appears in the operating screen. The crane movements „Spool up winch“, „Luff telescopic boom down“ and „Telescope the telescopic boom out“ are shut off.

5.3.1 Quick test Hoist limit switch

When the hoist limit switch weight is lifted:

– The icon **12** „Hoist top“ must appear in the operating screen.
– The actuated crane movement must be shut off.

LWE/ab Muli 010/24201-02-02/en

copyright © Liebherr-Werk Ehingen GmbH 2016

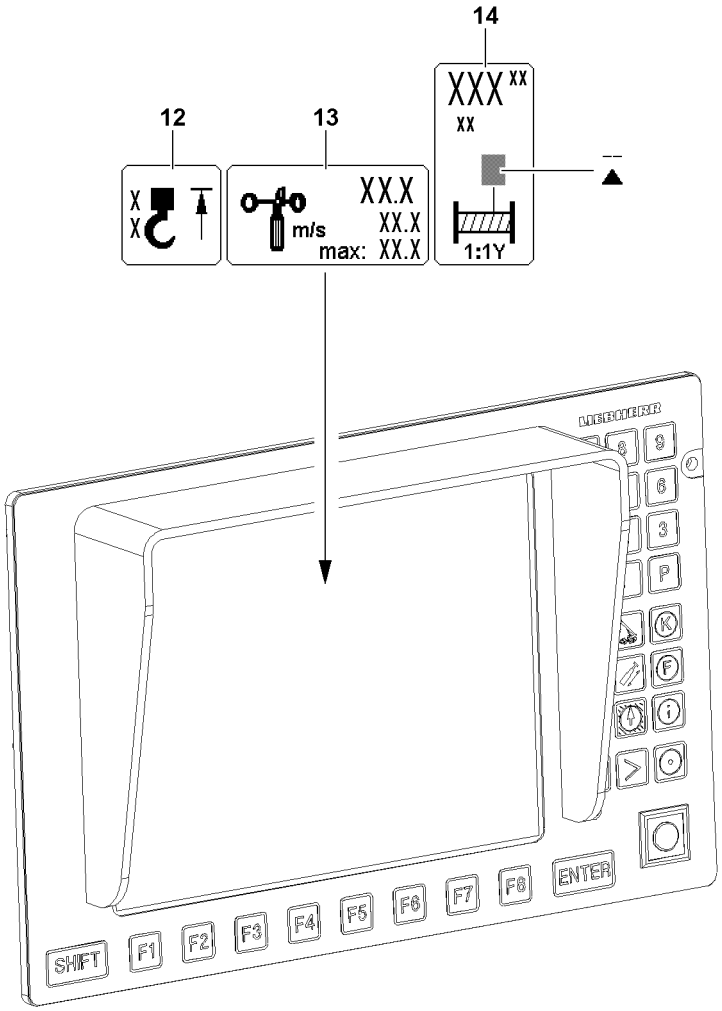

LWE/ab Muli 010/24201-02-02/en

Fig.112700

copyright © Liebherr-Werk Ehingen GmbH 2016

5.4 Wind speed sensor

The wind warning by the warning speed sensor appears in the operating screen of the LICCON computer system.

WARNING
The crane can topple over!
If the crane is operated with a defective wind speed sensor, then there is the danger that excessively high wind speeds are not recognized!
The crane can topple over!
Personnel can be killed or seriously injured!
This could result in property damage!
▶ Crane operation with a defective wind speed sensor is prohibited!
▶ Repair / replace a defective wind speed sensor!

If wind occurs, then the wind speed sensor must report it speed:
– If the actual wind speed value exceeds the displayed maximum value, the value in the icon **13** „Wind speed“ starts to blink and the acoustic alarm „Short horn“ sounds on the LICCON monitor. But there is **no shut off** of crane movements.

5.4.1 Quick test Wind speed sensor

When blowing in the cups:
– The wind speed sensor must start to move.
– An actual value must be shown in the icon **13** „Wind speed“.

5.5 Limit switch winch spooled out

The winch turn sensor is adjusted in the factory. If used properly, the winch turn sensor will not need readjustment.

Note
Minimum rope coils on the shut off point!
▶ For the winches, a minimum of 4 rope coils are set on the winch turn sensor.

WARNING
The load can fall off!
If the winch turn sensor does not turn off when four minimum rope coils are reached, then there is the danger that the rope lock is pulled out and the load falls down when the rope is spooled out further!
Falling load can cause the crane to sway and / or topple over!
Personnel can be severely injured or killed!
This could result in property damage!
▶ Crane operation with an incorrectly or non-adjusted winch is strictly prohibited!
▶ If the winch falls below the four minimum rope coils, have the winch turn sensor readjusted by **Liebherr Service**!

LWE/ab Muli 010/24201-02-02/en

copyright © Liebherr-Werk Ehingen GmbH 2016

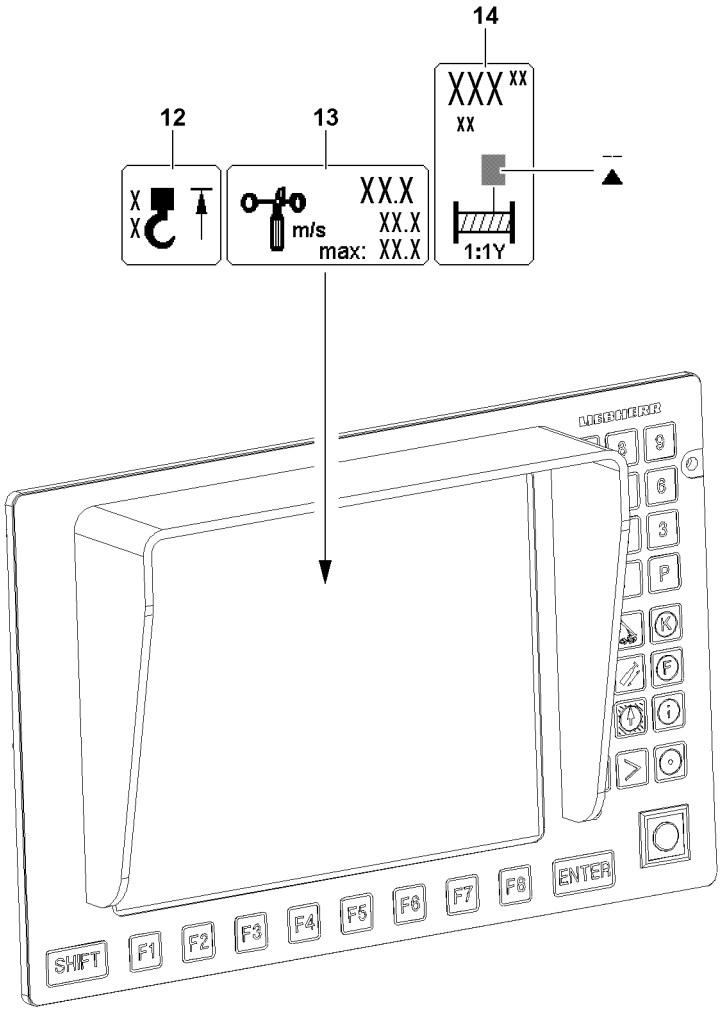

Fig.112700

LWE/ab Muli 010/24201-02-02/en

copyright © Liebherr-Werk Ehingen GmbH 2016

WARNING
The load can fall off!
If the rope is not spooled up or out properly, then the adjustment of the winch turn sensor is changed!
If the adjustment of the winch turn sensor has changed, there is a risk that the minimum rope coils are fallen below!
The load call fall down!
Falling load can cause the crane to sway and / or topple over!
Personnel can be severely injured or killed!
This could result in property damage!

- ▶ **Never** pull the end of rope underneath the winch by spooling up the rope winch!
- ▶ **Never** pull the rope from the „stationary“ winch!
- ▶ If you suspect that the winch turn sensor adjustment has changed: Check the shut off without a load on the hook!

The limit switch Winch spooled out must shut off when the minimum rope coils for the winch are reached:

- When the minimum rope coil for the winch is reached, then the display „Winch spooled out“ appears in the Winch icon **14**. The crane movement „Spool winch out“ is shut off.

5.5.1 Quick test Limit switch winch

When the minimum rope coil is reached:

- The display „Winch spooled out“ must appear in the Winch icon **14**.
- The crane movement „Spool winch out“ must be shut off.

LWE/ab Muli 010/24201-02-02/en

copyright © Liebherr-Werk Ehingen GmbH 2016

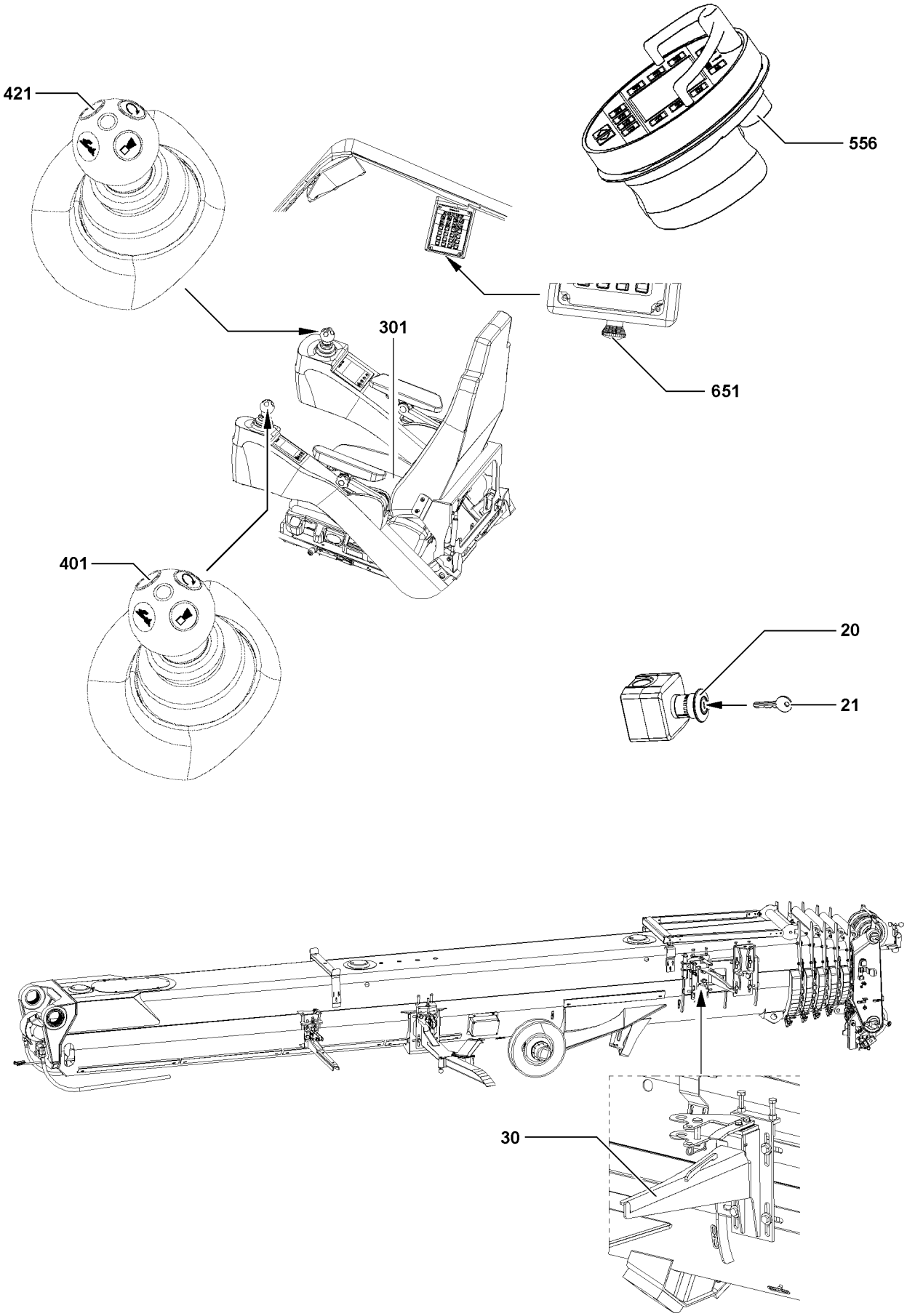

LWE/ab Muli 010/24201-02-02/en

Fig.112698

copyright © Liebherr-Werk Ehingen GmbH 2016

5.6 EMERGENCY STOP switch / EMERGENCY OFF switch

If an EMERGENCY STOP switch / EMERGENCY OFF switch is actuated, then every carried out movement can be stopped immediately.

WARNING
Defective EMERGENCY STOP switch / EMERGENCY OFF switch!
If the crane is operated with a defective EMERGENCY STOP switch / EMERGENCY OFF switch, then the movement cannot be stopped by actuating the EMERGENCY STOP switch!
This could result in accidents!
Personnel can be killed or seriously injured!
This could result in property damage!
- ▶ Crane operation with a defective EMERGENCY STOP switch / EMERGENCY OFF switch is prohibited!
- ▶ Repair or replace a defective EMERGENCY STOP switch / EMERGENCY OFF switch!

NOTICE
Operational actuation of the EMERGENCY STOP switch / EMERGENCY OFF switch
Actuation of the EMERGENCY STOP switch / EMERGENCY OFF switch causes the crane movement to shut off abruptly!
Abrupt shut off of the crane movement can cause the load to swing!
Swinging loads can cause accidents!
- ▶ Do not use the EMERGENCY STOP switch / EMERGENCY OFF switch operationally!
- ▶ Use the EMERGENCY STOP switch / EMERGENCY OFF switch only in emergency situations!

The EMERGENCY STOP switch / EMERGENCY OFF switch is available in three versions:
- After actuation of a switch of version*** 20**, the release is only obtained by an authorized person with key **21** and by subsequently turning the ignition „Off - On“ momentarily.
- After actuation of the switch **651**, the release is obtained by turning and unlocking the knob and subsequently turning the ignition „Off - On“ momentarily.
- After actuation of the switch **556**, the release is obtained by turning and unlocking the knob and subsequently turning the ignition „Off - On“ momentarily.

Note
- ▶ The switch **556** on the BTT is only activated when working with the BTT.

5.6.1 Quick test EMERGENCY STOP switch / EMERGENCY OFF switch

After actuation of the EMERGENCY STOP switch / EMERGENCY OFF switch:
- The crane movements must be shut off.
- No crane movements must be possible until the release was issued by turning and unlocking the knob and then turning the ignition „Off - On“ momentarily.

5.7 Control release

The control release can be made via three switches:
- **301** Seat contact button
- Button **401** Master switch MS1 (right control console)
- Button **421** Master switch MS2 (left control console)

The seat contact button **301** shuts down the crane control as soon as the crane operator gets up from the seat.

This prevents unintended crane movements by accidentally touching the master switch, for example when getting in or out of the cab.

The button **401** and button **421** bypass the seat contact button **301** if it becomes necessary for the operator to work standing up.

LWE/ab Muli 010/24201-02-02/en

copyright © Liebherr-Werk Ehingen GmbH 2016

5.8 Catch bar

Note
▶ Only for cranes with folding jib.

The catch bar **30** on the telescopic boom pivot section is a mechanical safety device!

WARNING
Danger of fatal injuries due to toppling folding jib!
Due to incorrectly installed, damaged or non-existing catch bar **30** on the telescopic boom pivot section, the folding jib can fall down - in case of an installation error!
Personnel can be hit and killed or seriously injured!
This could result in property damage!
▶ Before folding jib assembly make sure that the catch bar **30** has been installed properly on the telescopic boom pivot section and that it is not damaged!
▶ The catch bar **30** is a mechanical safety device. For that reason, it is prohibited to change the catch bar **30** and its installation in any way!

5.9 Hydraulic safety valves

A differentiation is made between three types:
– Pressure relief valves
  • Prevent pipe and hose bursts due to excessive pressure.
– Shut off valves
  • Control and secure the luffing cylinder and the support cylinders.
– Check valves
  • Control and secure the flow direction.

5.10 Limit switch Boom system

WARNING
Danger of toppling or destroying the crane!
If the crane movement is stopped by the block limit switches, then the load forces cannot be absorbed and calculated by the control!
The crane can be overloaded and topple over!
Personnel can be hit and killed or seriously injured!
This could result in property damage!
▶ Do **not** use the hoist limit switch as an operational shut off device!
▶ Do not actuate the block limit switches!

5.11 Limit switch Telescopic boom

On the telescopic boom, the limit switches monitor the „steepest position“ and the „lowest position“.

5.12 Limit switch Luffing accessories

Note
▶ Only for cranes with luffing accessories

For operation with luffing accessories (for example a luffing lattice jib) limit switches monitor the „steepest position“ and the „lowest position“.

LWE/ab Muli 010/24201-02-02/en

copyright © Liebherr-Werk Ehingen GmbH 2016

5.13 Gravity actuated relapse retainer

Note

▶ Only for cranes with luffing accessories

The gravity actuated relapse retainer (oscillation guard / flap / relapse support) prevent luffing accessory from tipping to the rear in „steepest position“.

WARNING

The crane can topple over!
If the gravity actuated relapse retainer (oscillation guard / flap / relapse support) is hard to move, then it will no longer function.
Shut off and limit functions can be set out of service!
The crane can be overloaded and topple over!
Personnel can be killed or seriously injured!
This could result in property damage!

▶ Before erecting the crane, check the relapse retainer for easy movement!
▶ Crane operation with hard to move relapse retainer is prohibited!

LWE/ab Muli 010/24201-02-02/en

copyright © Liebherr-Werk Ehingen GmbH 2016

Empty page!

copyright © Liebherr-Werk Ehingen GmbH 2016

4.05 Crane operation

1	General	3
2	LICCON computer system	9
3	Luffing	11
4	Lifting / lowering	17
5	Turning	23
6	Telescoping	35

LWE/ab Muli 010/24201-02-02/en

copyright © Liebherr-Werk Ehingen GmbH 2016

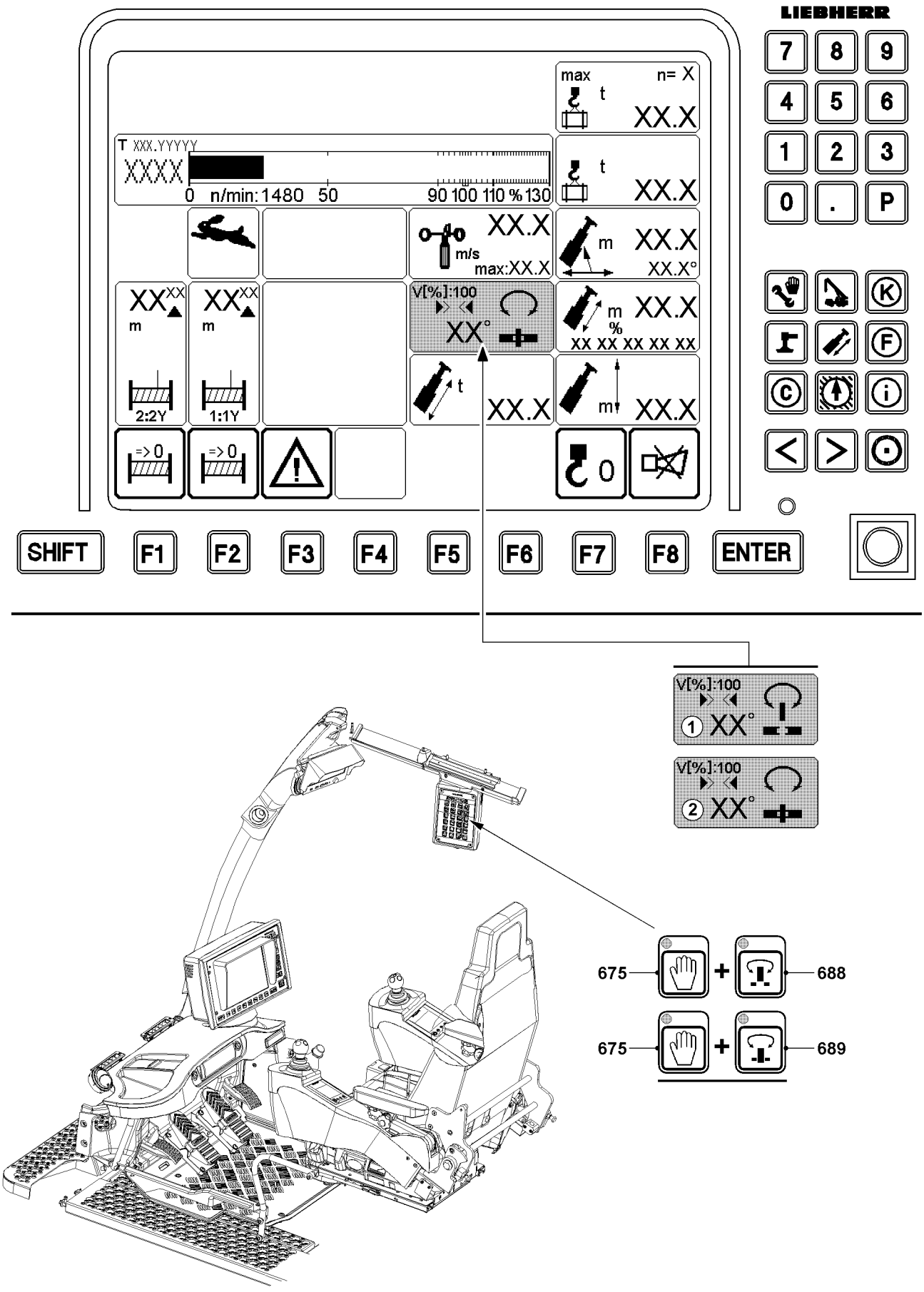

Fig.118304

LWE/ab Muli 010/24201-02-02/en

copyright © Liebherr-Werk Ehingen GmbH 2016

1 General

Make sure that the following prerequisites are met:
- The crane is supported and aligned in horizontal direction according to the data in the load chart.
- The step at the entry of the crane operator's cab is moved out.
- The counterweight is attached and secured according to the data in the load chart.
- The crane engine is running.
- The hook block is correctly reeved as shown in reeving plan.
- All safety devices have been set according to the data in the load chart.
- There are no persons or objects in the danger zone.

Note
- ▶ In order to protect the crane and reduce the danger of accidents always use the master switch slowly and sensitively.
- ▶ Ensure that there are no obstacles in the working range of the crane and that there are no persons within the danger zone.
- ▶ Give a short warning signal (horn) before starting a crane movement.

1.1 Crane superstructure

1.1.1 Locking the crane superstructure

When „driving in equipped condition“, mechanically lock the crane superstructure to the crane chassis.

Note
LICCON overload protection
- ▶ The release of LICCON overload protection is only issued when the crane superstructure is properly locked to the crane chassis.
- ▶ The locking / unlocking procedure the crane superstructure to the crane chassis is carried out with the operating and control unit (BKE) in the crane operator's cab, see Crane operating instructions, chapter 4.01.

When the crane superstructure is unlocked:
- ▶ Activate the 2-hand button **675** (hand key) and then press button **689** until the LED on the button **689** continuously lights up and an acoustic signal sounds.

Result:

- The locking mechanism for the crane superstructure is locked.
- The icon **2** appears on the LICCON monitor.

1.1.2 Unlocking the crane superstructure lock

When the crane superstructure is locked:
- ▶ Activate the 2-hand button **675** (hand key) and then press button **688** until the LED on the button **688** continuously lights up and an acoustic signal sounds.

Result:

- The locking mechanism for the crane superstructure is unlocked.
- The icon **1** appears on the LICCON monitor.

LWE/ab Muli 010/24201-02-02/en

copyright © Liebherr-Werk Ehingen GmbH 2016

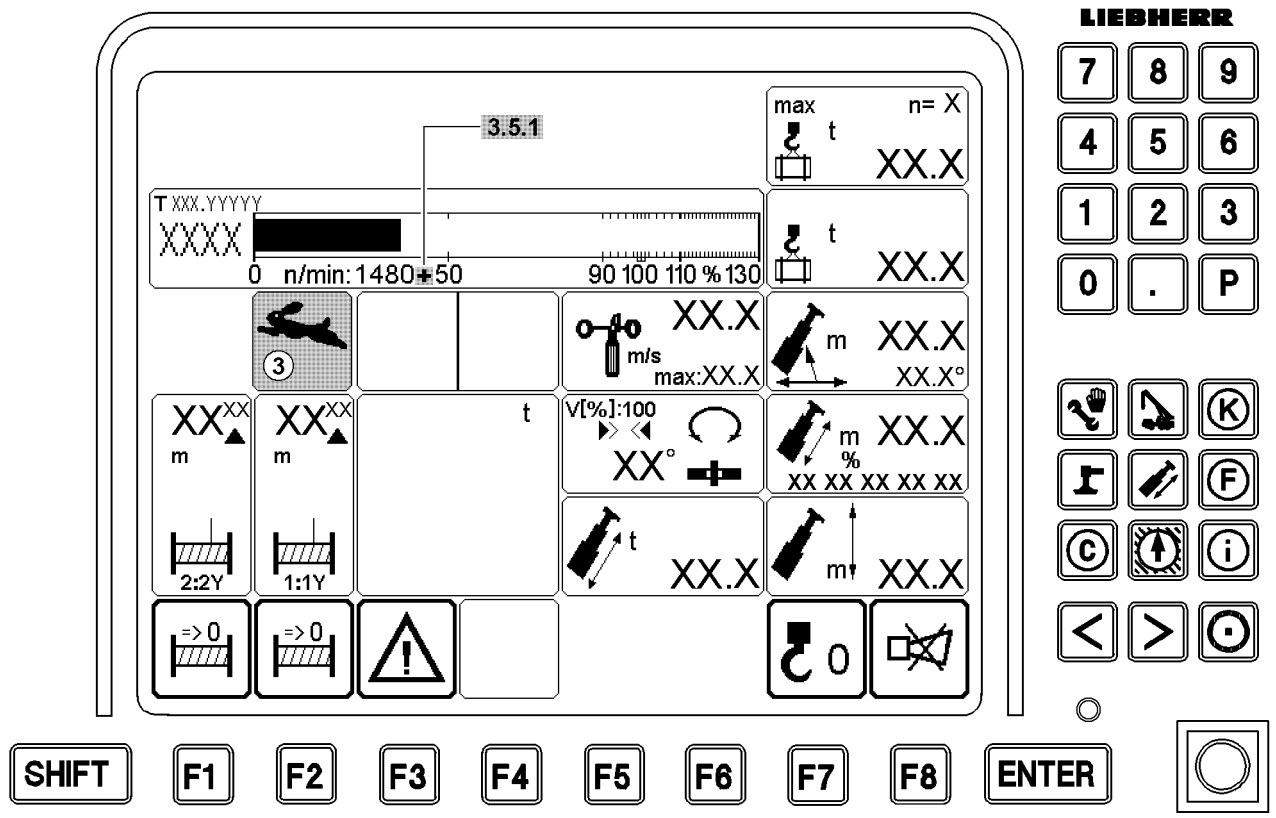

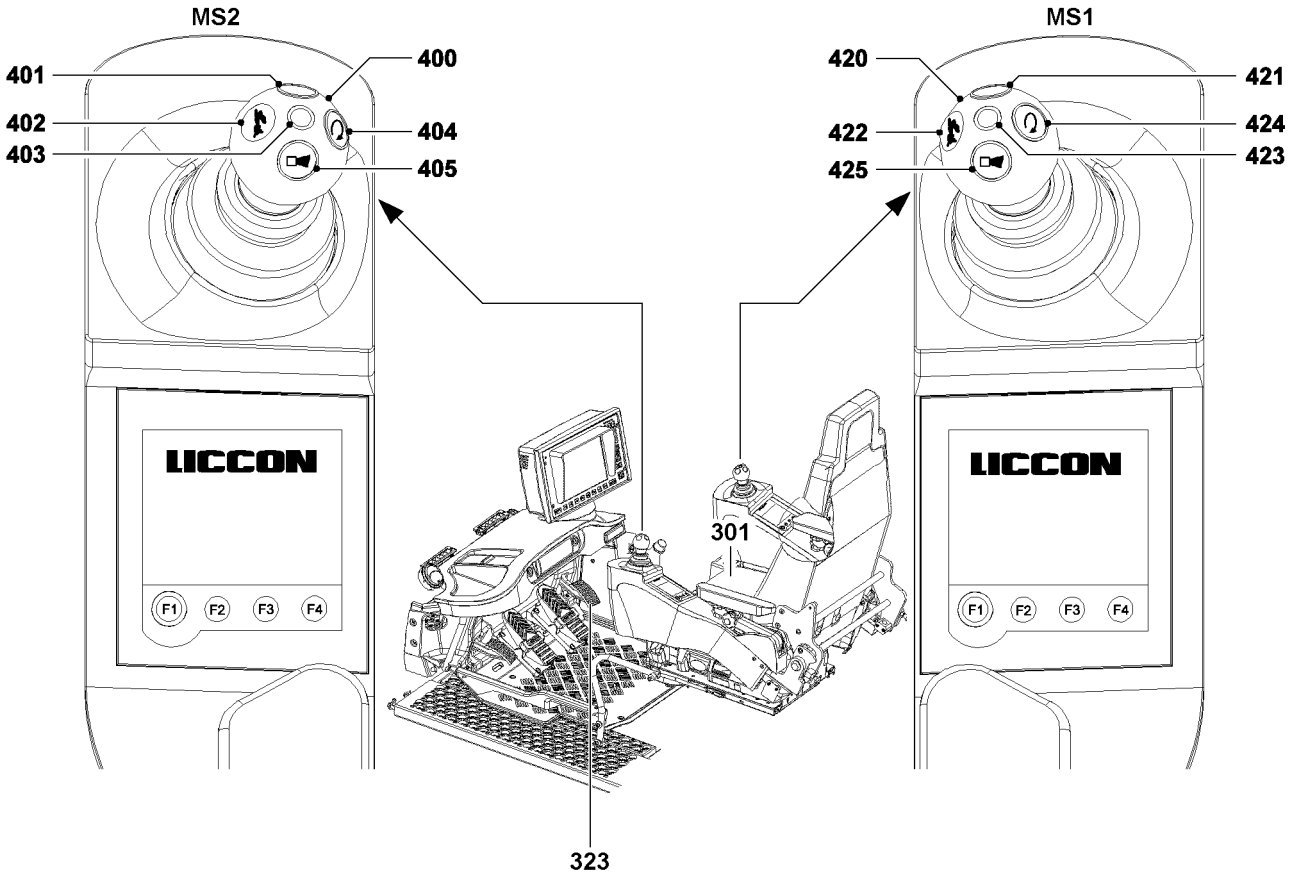

Fig.118305

LWE/ab Muli 010/24201-02-02/en

copyright © Liebherr-Werk Ehingen GmbH 2016

1.2 Engine speed

1.2.1 Locking the engine rpm

Locking the engine rpm relieves the crane operator if he needs to work for an extended period with constant rpm. The engine regulation can be locked in any position.

▶ Press the pedal **323** down for the engine regulation until the desired rpm is reached.
▶ Press the button **404**.
or
Press the button **424**.

Result:

– The engine rpm is locked.
– The icon „+“ **3.5.1** appears on the LICCON monitor.

1.2.2 Releasing the engine rpm lock

When the engine rpm is locked:
▶ Press the button **404**.
or
Press the button **424**.

Result:

– The engine rpm lock is revoked.
– The icon „**+**“ **3.5.1** turns off on the LICCON monitor.

1.3 Fast mode (Rapid gear)

1.3.1 Engaging the rapid gear

Using the button **402** or the button **422** will increase the speed of the crane movement for „luffing up“ and „lift / lower“.

DANGER
Danger of accidents with 1 to 3 strand reeving!
▶ Do **not** turn the rapid gear on if the crane is loaded to more than 50 % of its maximum permitted load carrying capacity for the respective radius.

▶ Press the button **402**.
or
Press the button **422**.

Result:

– The rapid gear is turned on.
– The icon **3** appears on the LICCON monitor.

LWE/ab Muli 010/24201-02-02/en

copyright © Liebherr-Werk Ehingen GmbH 2016

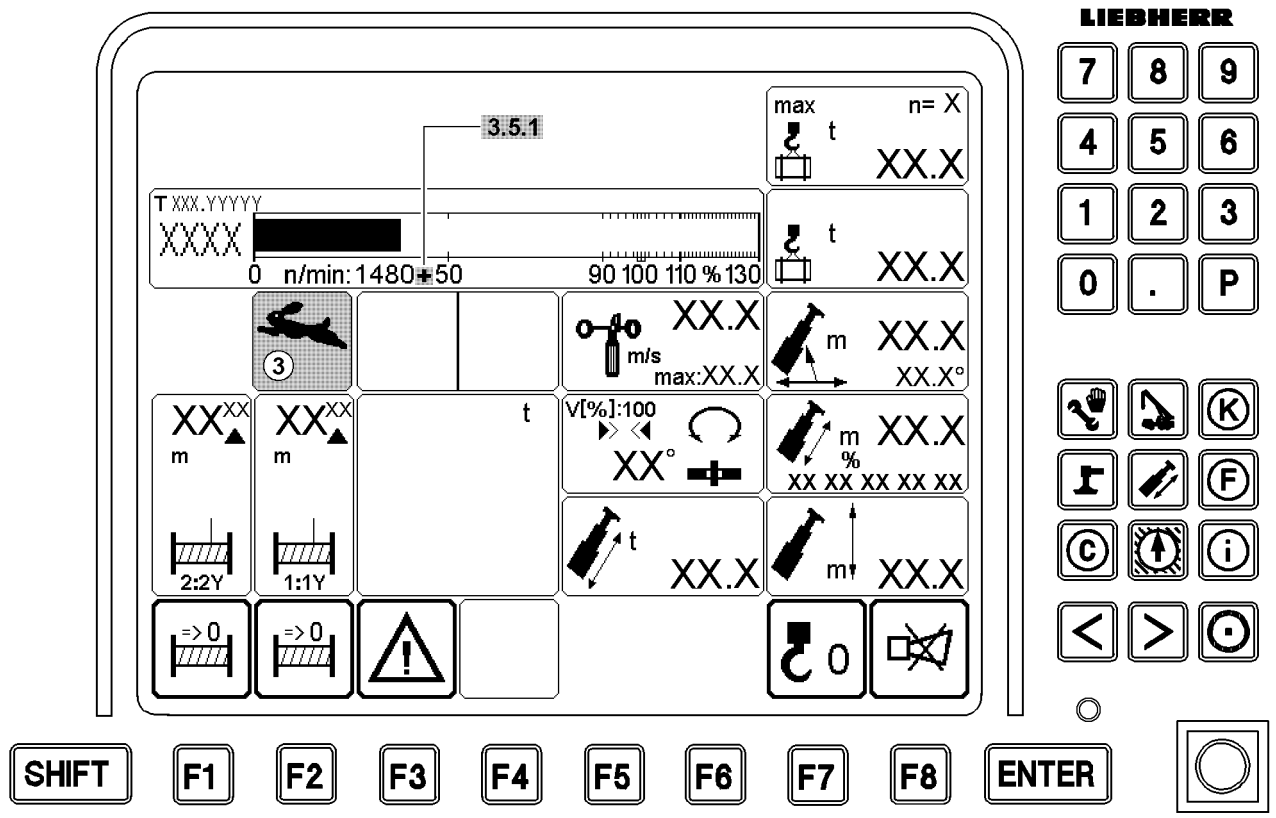

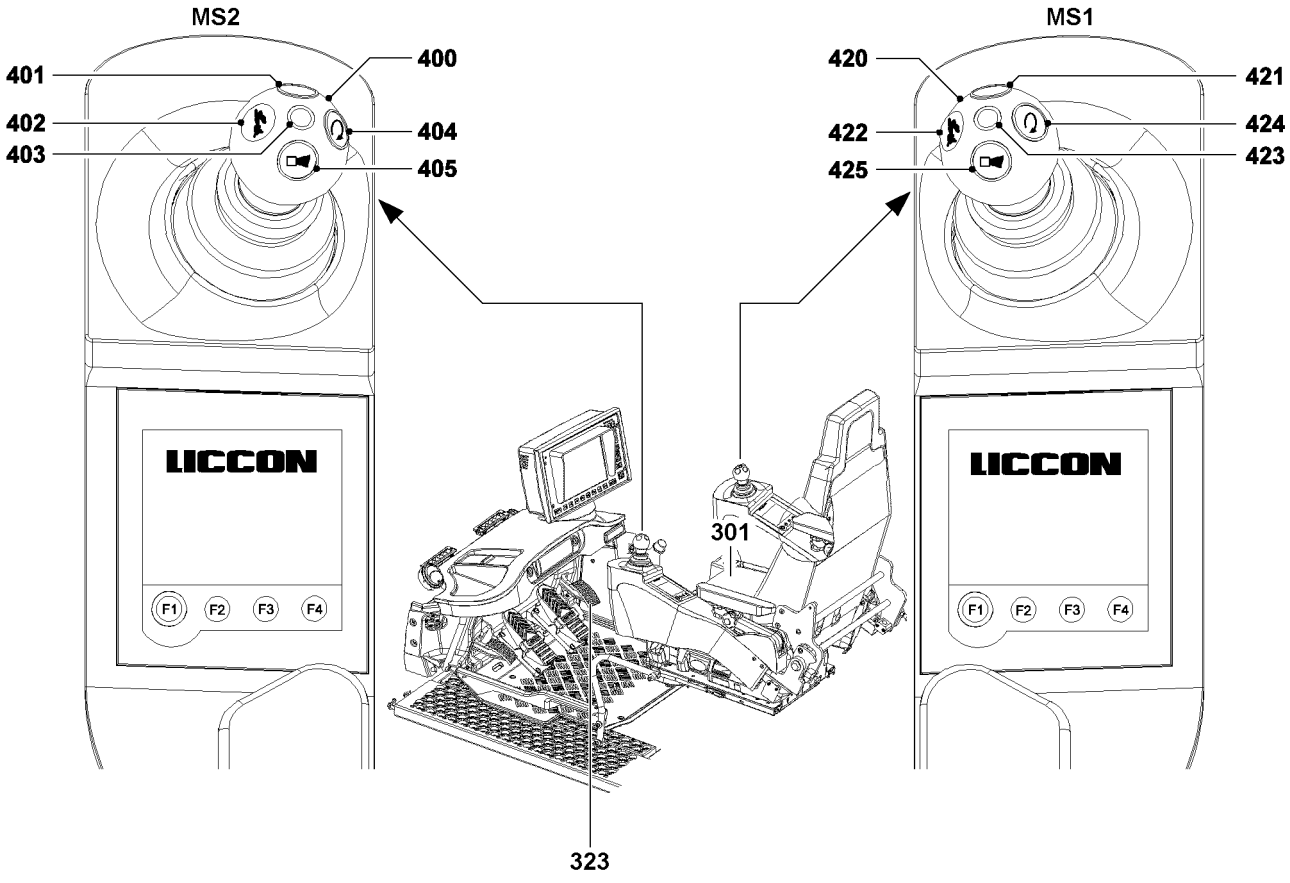

Fig.118305

LWE/ab Muli 010/24201-02-02/en

copyright © Liebherr-Werk Ehingen GmbH 2016

1.3.2 Turning the rapid gear off

When the rapid gear is turned on:

▶ Press the button **402**.
or
Press the button **422**.

Result:

– The rapid gear is turned off.
– The icon **3** turns off on the LICCON monitor.

1.4 Vibration sensor

By adding the vibration sensor, a crane movements can be detected by vibration of the master switch.

Make sure that the following prerequisite is met:
– The seat contact button **301** is actuated.

1.4.1 Winch 1

▶ Press the button **421**.

Result:

– The vibration sensor **423** is turned on.

When the vibration sensor **423** is turned on:
▶ Press the button **421**.

Result:

– The vibration sensor **423** is turned off.

1.4.2 Winch 2 or slewing gear

If winch 2 and the slewing gear are operated, the vibration sensor **403** will react to the first deflecting movement.

▶ Press the button **401**.

Result:

– The vibration sensor **403** is turned on.

When the vibration sensor **403** is turned on:
▶ Press the button **401**.

Result:

– The vibration sensor **403** is turned off.

LWE/ab Muli 010/24201-02-02/en

copyright © Liebherr-Werk Ehingen GmbH 2016

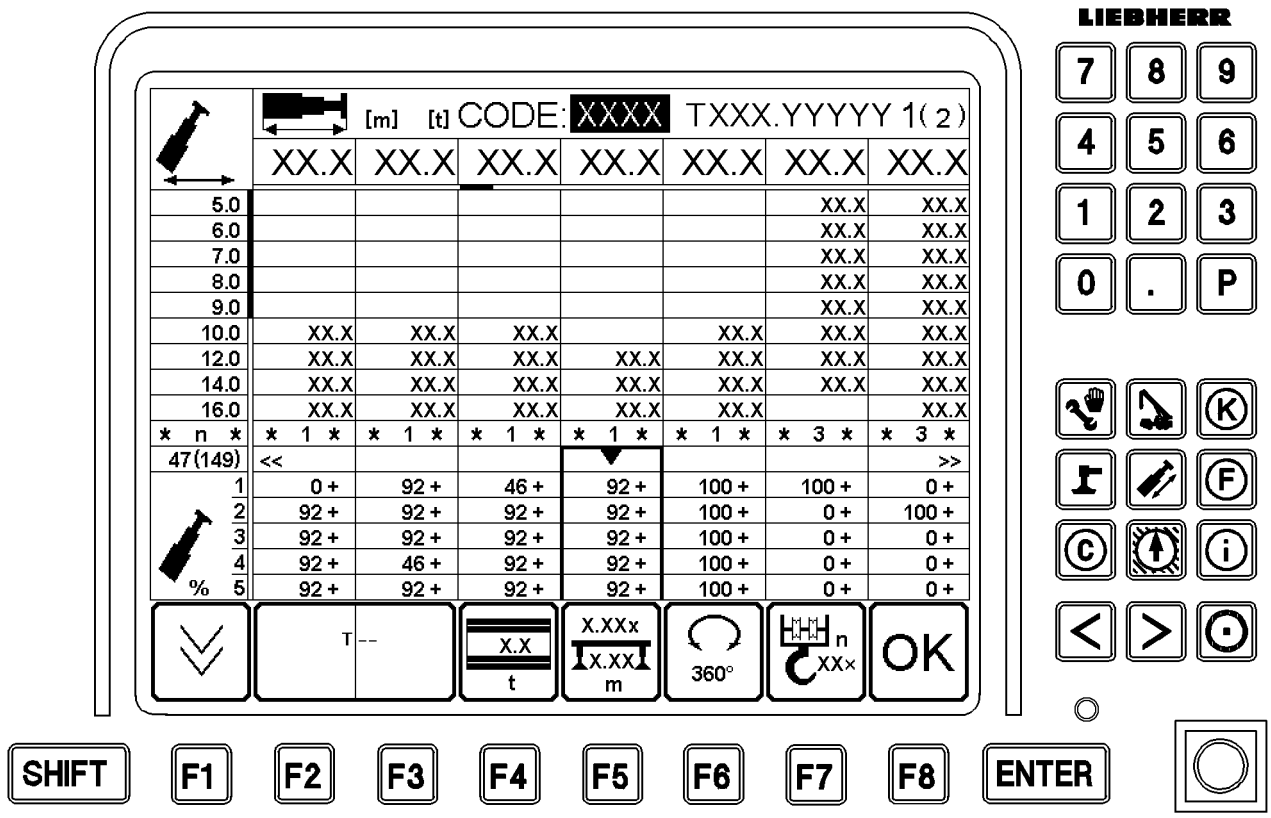

Fig.108829

LWE/ab Muli 010/24201-02-02/en

copyright © Liebherr-Werk Ehingen GmbH 2016

2 LICCON computer system

See Crane operating instructions, chapter 4.02.

2.1 The crane engine is running

Make sure that the following prerequisites are met:
- The batteries are charged by the alternator.
- A stable voltage is present.

The electric crane control system and the LICCON computer system are turned on automatically. A self test of the LICCON computer system follows.

▶ Await the self test.

Result:

– After a few seconds the set up screen appears on the monitor.

2.2 Stand-by mode

No crane movements are possible. See Crane operating instructions, chapter 4.02.

LWE/ab Muli 010/24201-02-02/en

copyright © Liebherr-Werk Ehingen GmbH 2016

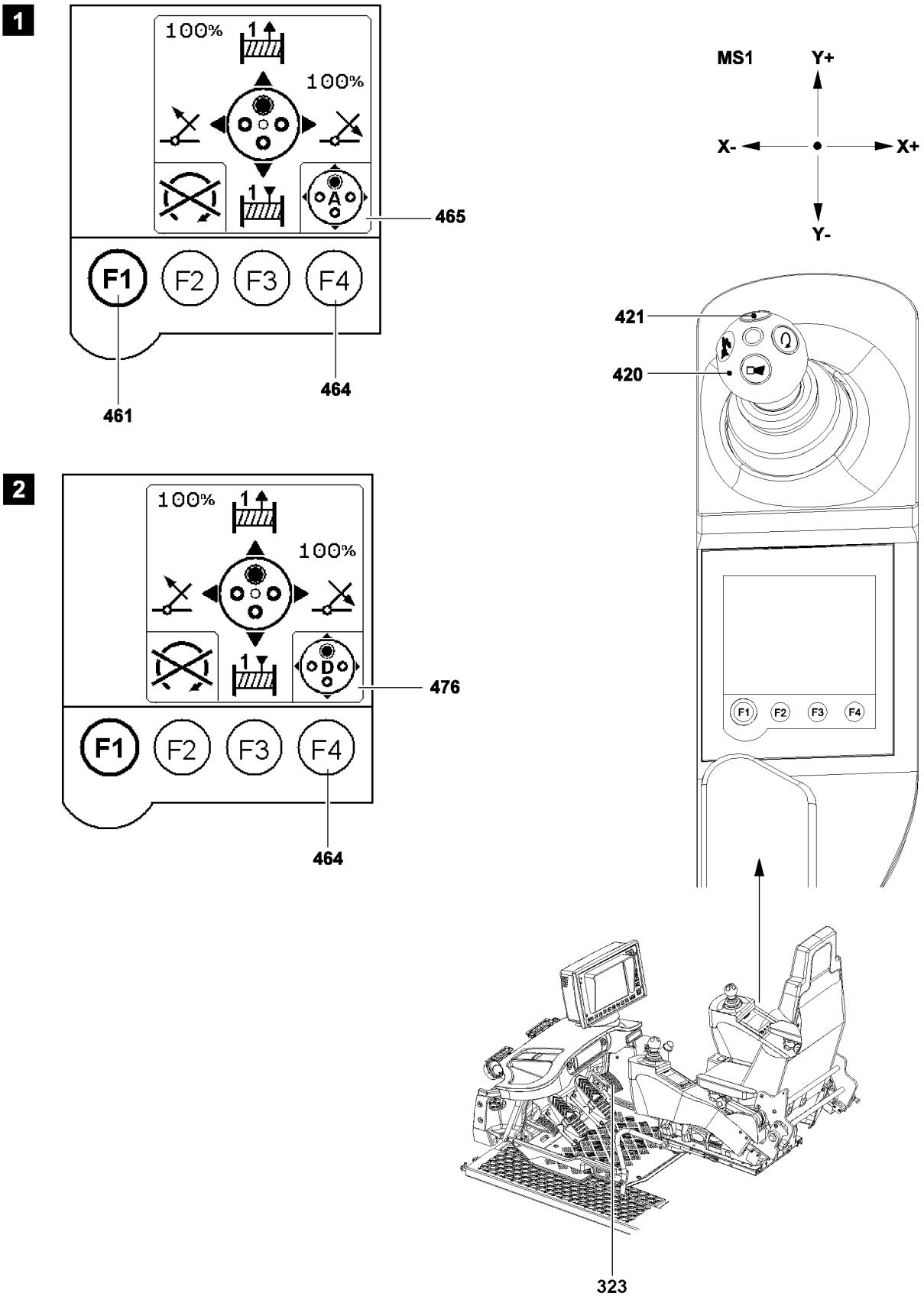

LWE/ab Muli 010/24201-02-02/en

Fig.123692

copyright © Liebherr-Werk Ehingen GmbH 2016

3 Luffing

Speed of crane movement „luffing“ is controlled by the deflection of master switch **420** and by the pedal **323** of the engine regulation.

NOTICE
Crane can be damaged or topple over!
▶ If an attempt to lift a load with the hoist gear causes the LICCON overload protection to turn off, then the load may not be lifted by luffing up the boom.

3.1 Luffing the telescopic boom

The maximum luffing speed of the telescopic boom can be preselected in the settings window „Speed reduction master switch“.

See Crane operating instructions, chapter 4.02.

3.1.1 Luffing the telescopic boom on cranes with one winch, illustration 1

Make sure that the following prerequisites are met:
– The master switch **420** is in the neutral position.
– The seat contact button is actuated.

▶ Press the function key **461** on the right touch display until the „Master switch assignment“ menu appears.
▶ Press the function key **464** until the master switch assignment **476** „**A**“ is active.
▶ Move the master switch **420** in direction X- and simultaneously hold down the button **421**.

Result:

– The telescopic boom is luffed up.

▶ Move the master switch **420** in direction X+ and simultaneously hold down the button **421**.

Result:

– The telescopic boom is luffed down.

LWE/ab Muli 010/24201-02-02/en

copyright © Liebherr-Werk Ehingen GmbH 2016

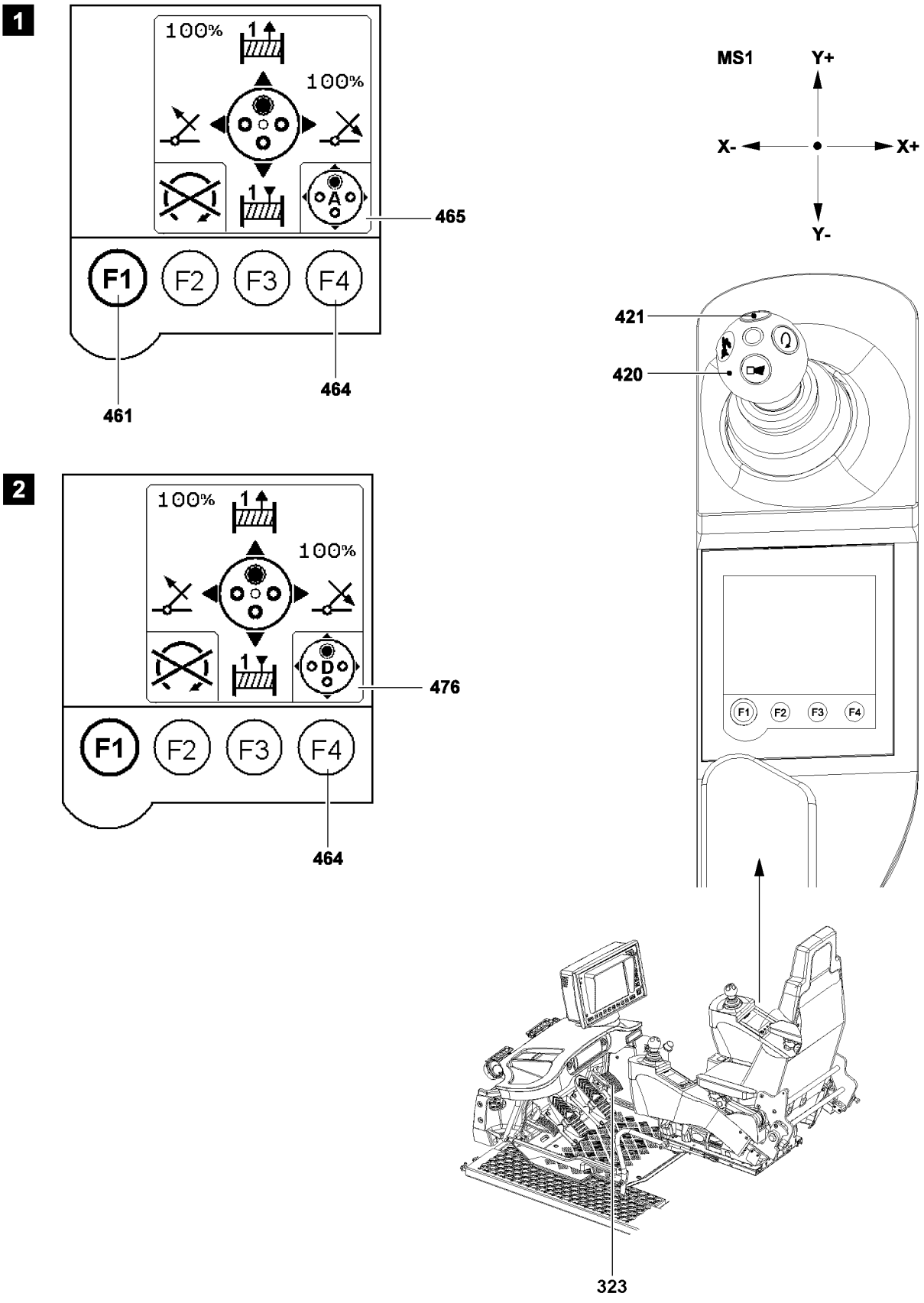

Fig.123692

LWE/ab Muli 010/24201-02-02/en

copyright © Liebherr-Werk Ehingen GmbH 2016

3.1.2 Luffing the telescopic boom on cranes with two winches, illustration 2

Make sure that the following prerequisites are met:
- The master switch **420** is in the neutral position.
- The seat contact button is actuated.

▶ Press the function key **461** on the right touch display until the „Master switch assignment“ menu appears.
▶ Press the function key **464** until the master switch assignment **476** „**D**“ is active.
▶ Move the master switch **420** in direction X- and simultaneously hold down the button **421**.

Result:

– The telescopic boom is luffed up.

▶ Move the master switch **420** in direction X+ and simultaneously hold down the button **421**.

Result:

– The telescopic boom is luffed down.

LWE/ab Muli 010/24201-02-02/en

copyright © Liebherr-Werk Ehingen GmbH 2016

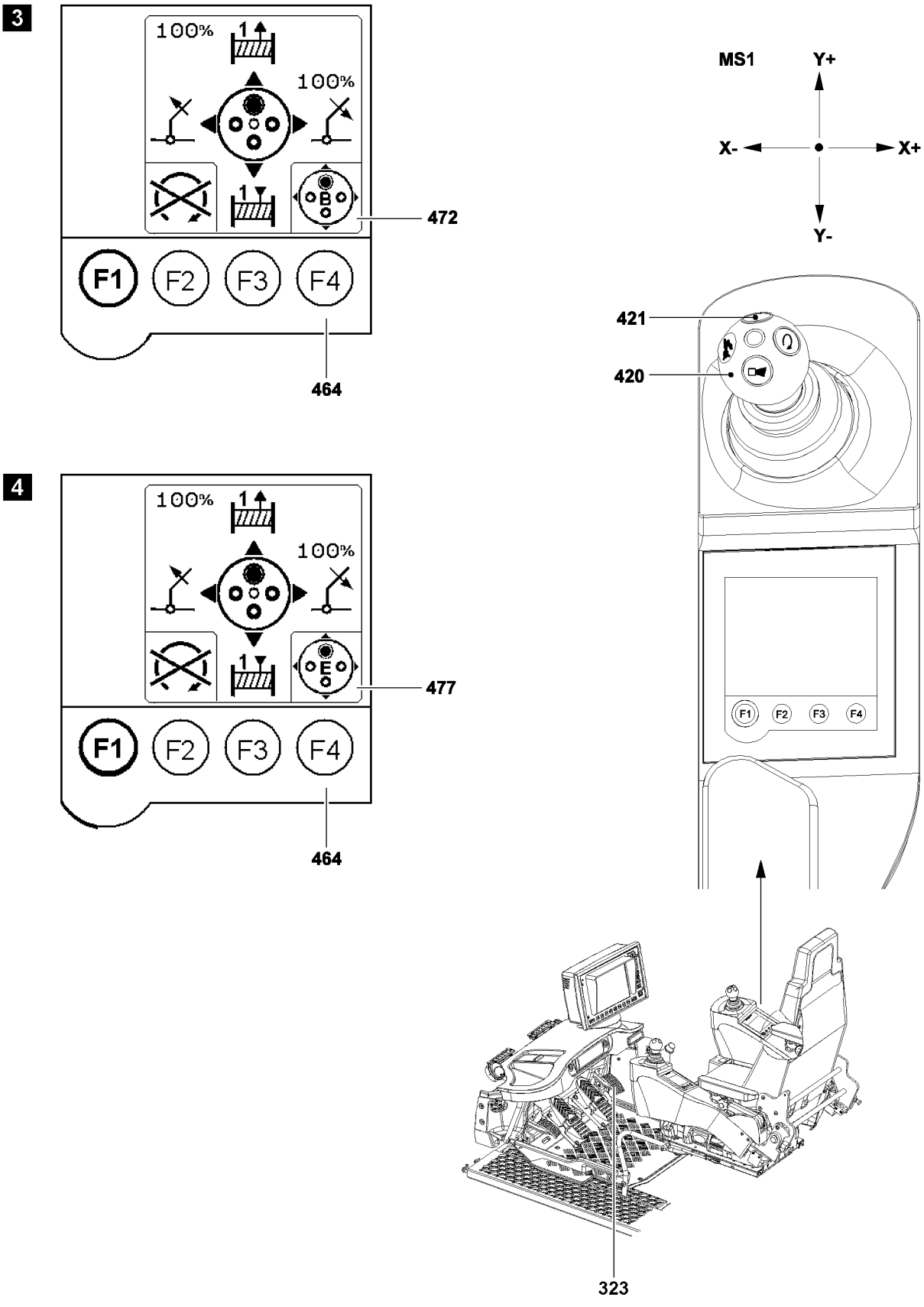

Fig.123693

LWE/ab Muli 010/24201-02-02/en

copyright © Liebherr-Werk Ehingen GmbH 2016

3.2 Luffing the hydraulic folding jib* on cranes with one winch, see illustration 3

Make sure that the following prerequisites are met:
- The master switch **420** is in the neutral position.
- The seat contact button is actuated.
- An operating mode or set up configuration **with** hydraulic folding jib***** has been set and confirmed on the LICCON computer system.

▶ Press button **461** on the right Touch display until the „Master switch configuration“ menu appears.
▶ Press button **464** until master switch configuration **472** „**B**“ is active.
▶ Move the master switch **420** in direction X- and simultaneously hold down the button **421**.

Result:

– The hydraulic folding jib***** is luffed up.

▶ Move master switch **420** in direction X+ and simultaneously hold down button **421**.

Result:

– The hydraulic folding jib***** is luffed down.

3.3 Luffing the hydraulic folding jib* on cranes with two winches, see illustration 4

Make sure that the following prerequisites are met:
- The master switch **420** is in the neutral position.
- An operating mode or set up configuration **with** hydraulic folding jib***** has been set and confirmed on the LICCON computer system.

▶ Press button **461** on the right Touch display until the „Master switch configuration“ menu appears.
▶ Press button **464** until master switch configuration **477** „**E**“ is active.
▶ Move the master switch **420** in direction X- and simultaneously hold down the button **421**.

Result:

– The hydraulic folding jib***** is luffed up.

▶ Move master switch **420** in direction X+ and simultaneously hold down button **421**.

Result:

– The hydraulic folding jib***** is luffed down.

LWE/ab Muli 010/24201-02-02/en

copyright © Liebherr-Werk Ehingen GmbH 2016

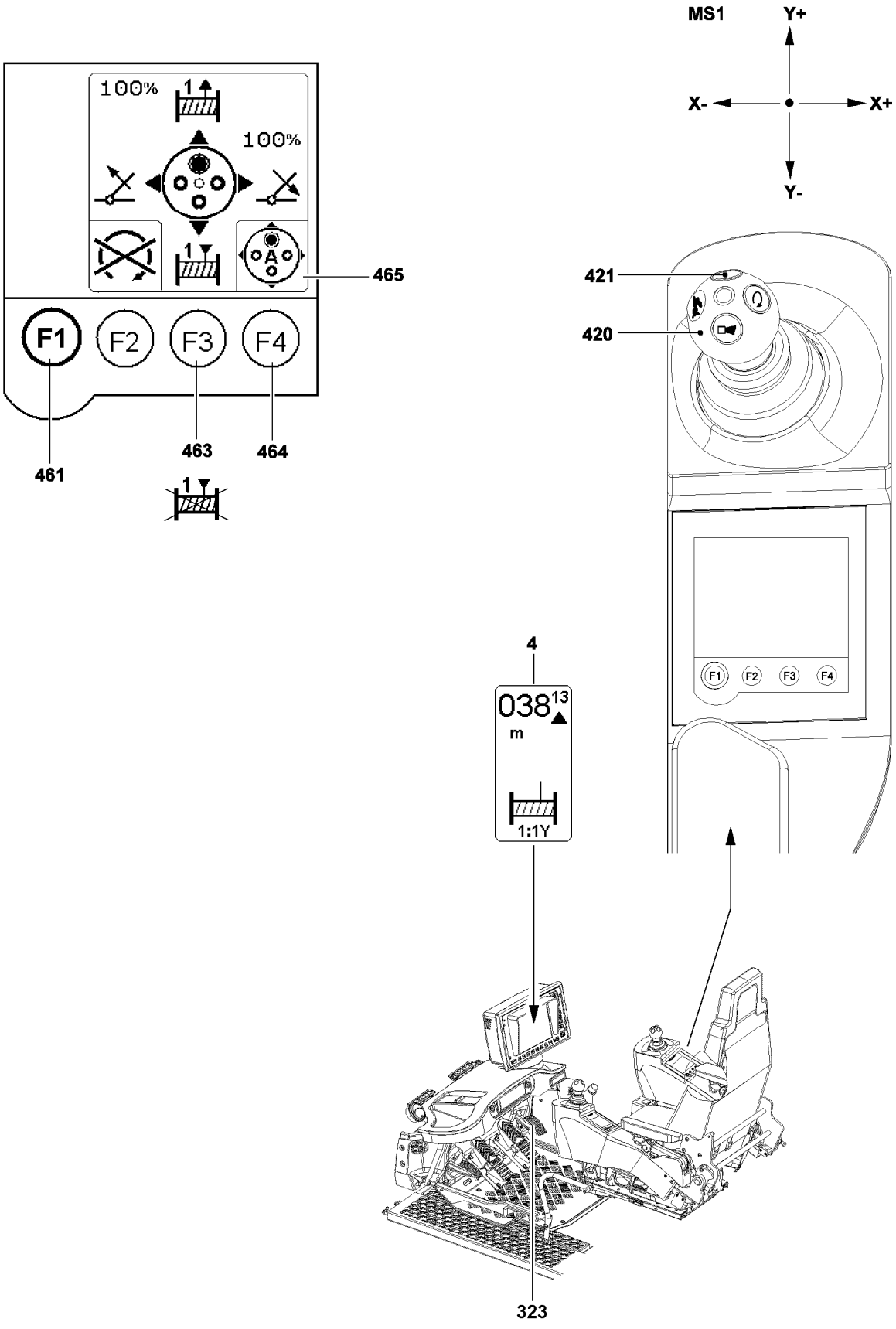

Fig.123694

LWE/ab Muli 010/24201-02-02/en

copyright © Liebherr-Werk Ehingen GmbH 2016

4 Lifting / lowering

NOTICE
Danger of damaging the hoist rope when spooling up and / or spooling out!
▶ Do not allow slack rope formation.

The speed of the crane movement „Lifting“ is controlled via the deflection of the respective master switch and via the pedal **323** of the engine regulation.

The maximum winch speed can be reduced or increased in the „Speed reduction master switch“ menu. It is also possible to deactivate or activate the individual winches.

See chapter 4.02.

4.1 Lifting / lowering on cranes with one winch

The winch icon **4** shows that winch 1 is turning, even when because of multiple reeving and low speed, no hook movement is visible.

Make sure that the following prerequisites are met:
– The master switch **420** is in the neutral position.
– The crane is at a standstill.
– The seat contact button is actuated.

▶ Press the function key **461** on the right touch display until the „Master switch assignment“ menu appears.

WARNING
Danger of accident!
▶ During the actuation of a crane movement, **never** deactivate / activate winch 1.

If winch 1 is deactivated:
▶ Press the function key **463** on the right touch display.

Result:

– Winch 1 is activated.
– The winch status is indicated on the right touch display and in the winch icon on the LICCON monitor.

▶ Move the master switch **420** in direction Y+ and simultaneously hold down the button **421**.

Result:

– Winch 1 spools out and the load is lowered.

▶ Move the master switch **420** in direction Y- and simultaneously hold down the button **421**.

Result:

– Winch 1 spools up and the load is lifted.

LWE/ab Muli 010/24201-02-02/en

copyright © Liebherr-Werk Ehingen GmbH 2016

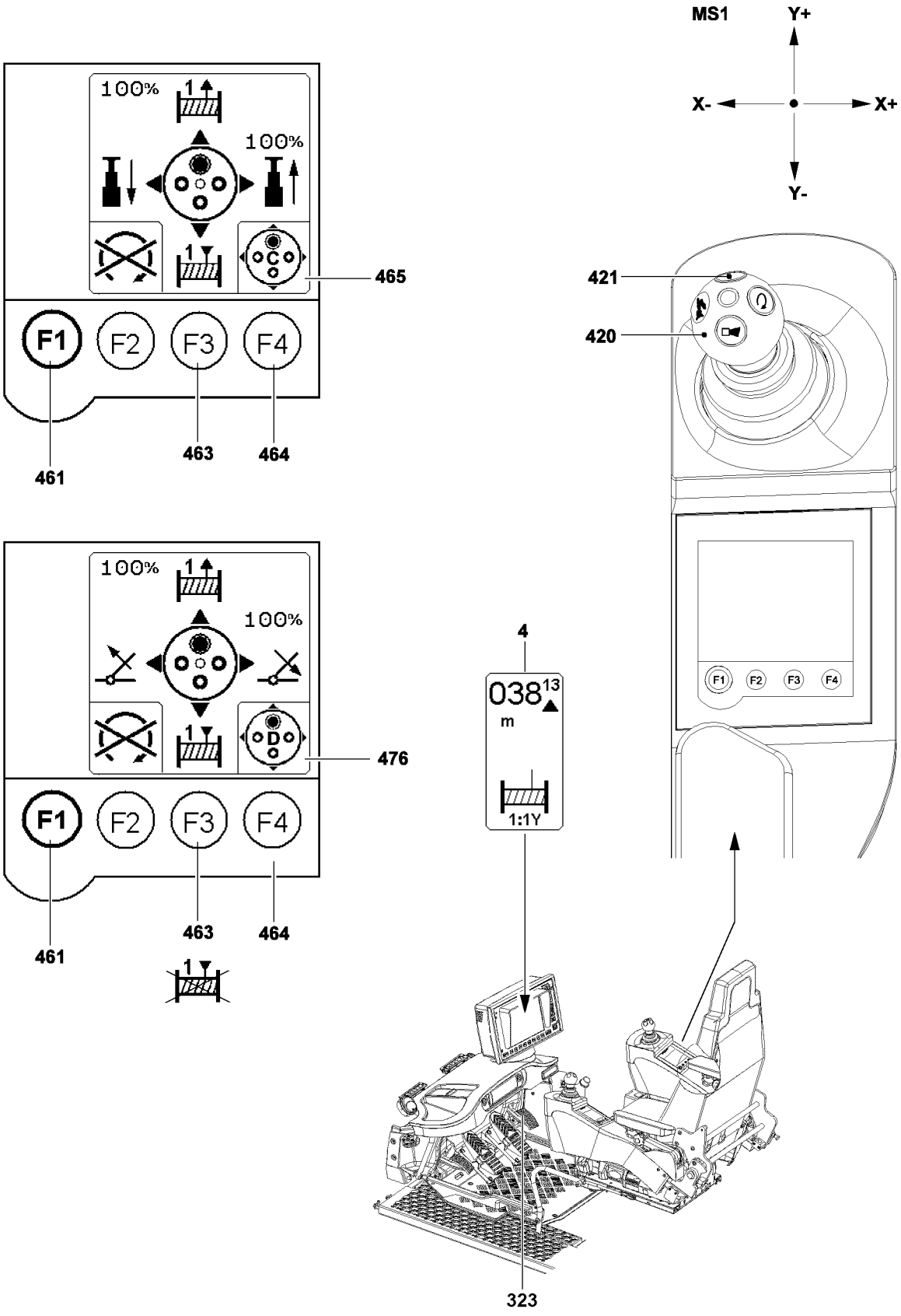

Fig.123695

LWE/ab Muli 010/24201-02-02/en

copyright © Liebherr-Werk Ehingen GmbH 2016

4.2 Lifting / lowering on cranes with two winches

4.2.1 Lifting / lowering winch 1

The winch icon **4** shows that winch 1 is turning, even when because of multiple reeving and low speed, no hook movement is visible.

Make sure that the following prerequisites are met:
- The master switch **420** is in the neutral position.
- The seat contact button is actuated.
- The crane is at a standstill.

▶ Press the function key **461** on the right touch display until the „Master switch assignment“ menu appears.
▶ Press the function key **464** until the master switch assignment **465** „**C**“ or master switch assignment **476** „**D**“ is active.

WARNING
Danger of accident!
▶ During the actuation of a crane movement, **never** deactivate / activate winch 1.

If winch 1 is deactivated:
▶ Press the function key **463** on the right touch display.

Result:

– Winch 1 is activated.
– The winch status is indicated on the right touch display and in the winch icon on the LICCON monitor.

▶ Move the master switch **420** in direction Y+ and simultaneously hold down the button **421**.

Result:

– Winch 1 spools out and the load is lowered.

▶ Move the master switch **420** in direction Y- and simultaneously hold down the button **421**.

Result:

– Winch 1 spools up and the load is raised.

LWE/ab Muli 010/24201-02-02/en

copyright © Liebherr-Werk Ehingen GmbH 2016

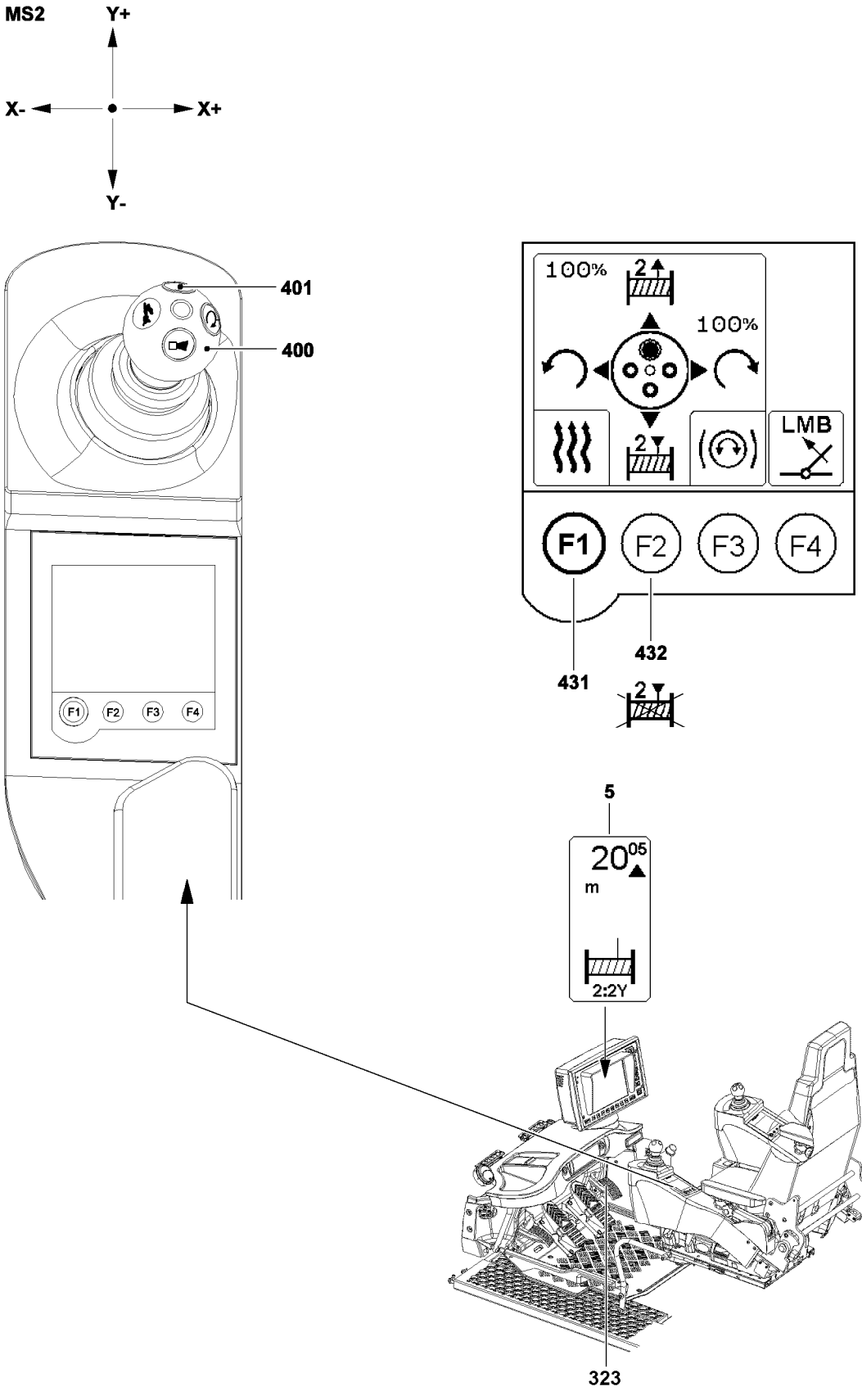

Fig.123696

LWE/ab Muli 010/24201-02-02/en

copyright © Liebherr-Werk Ehingen GmbH 2016

4.2.2 Lifting / lowering winch 2

The winch icon **5** shows that winch 2 is turning, even when because of multiple reeving and low speed, no hook movement is visible.

Make sure that the following prerequisites are met:
- The master switch **400** is in the neutral position.
- The seat contact button is actuated.
- The seat contact button is actuated.

▶ Press the function key **431** on the left touch display until the „Master switch configuration“ menu appears.

WARNING
Danger of accident!
▶ During the actuation of a crane movement, **never** deactivate / activate winch 2.

If winch 2 is deactivated:
▶ Press the function key **432** on the left touch display.

Result:

- Winch 2 is activated.
- The winch status is indicated on the left touch display and in the winch icon on the LICCON monitor.

▶ Move the master switch **400** in direction Y+ and simultaneously hold down the button **401**.

Result:

- Winch 2 spools out and the load is lowered.

▶ Move the master switch **400** in direction Y- and simultaneously hold down the button **401**.

Result:

- Winch 2 spools up and the load is raised.

LWE/ab Muli 010/24201-02-02/en

copyright © Liebherr-Werk Ehingen GmbH 2016

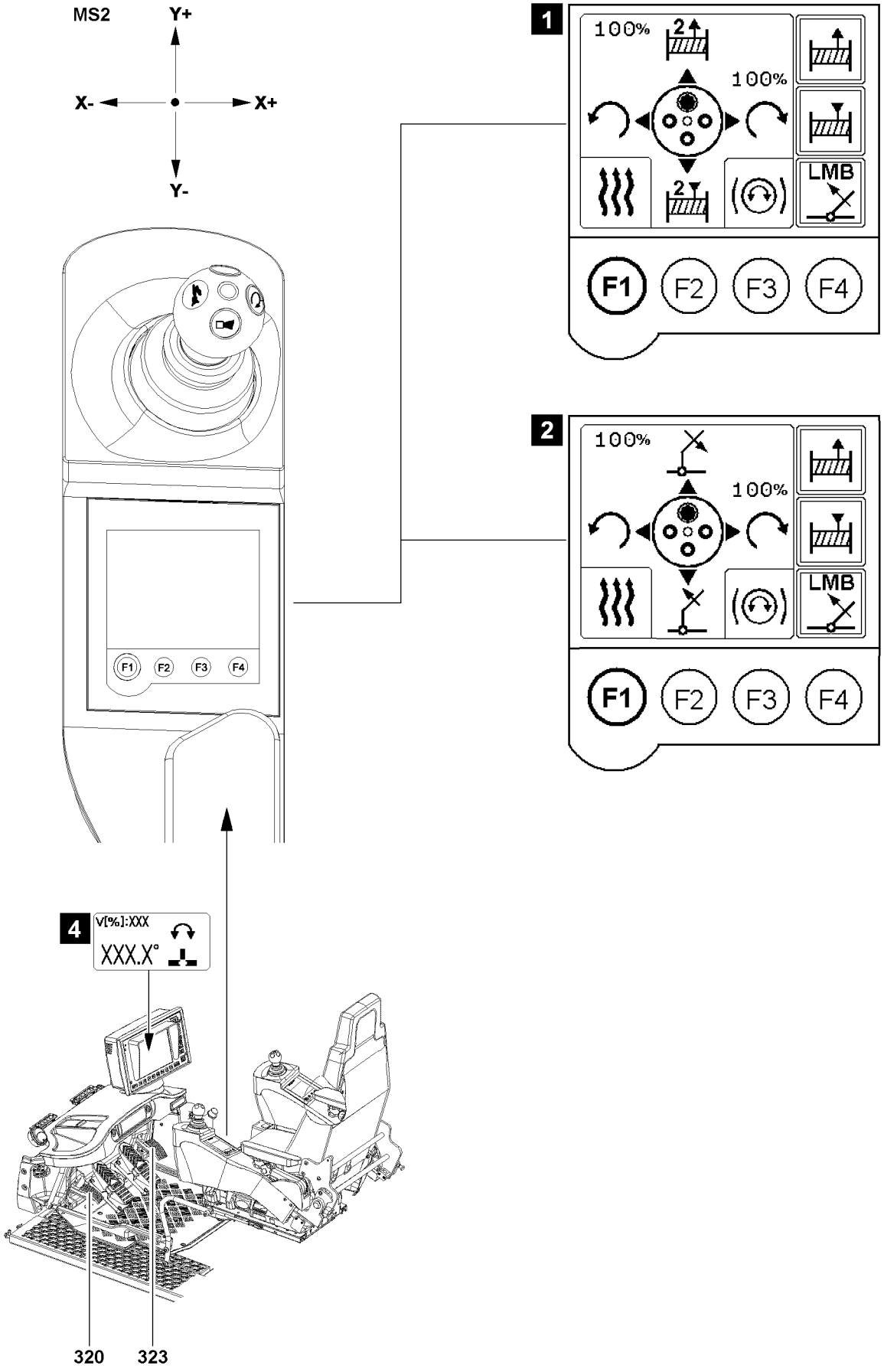

Fig.123697

LWE/ab Muli 010/24201-02-02/en

copyright © Liebherr-Werk Ehingen GmbH 2016

5 Turning

WARNING
Danger of fatal injury!
If there are any personnel on the crane chassis or in any other danger zone of the crane during the slewing movement of the crane superstructure, then there is a danger of accidents.
Personnel can be killed or seriously injured.
- ▶ It is prohibited for personnel to remain in the danger zone.
- ▶ Make sure that there are no obstacles within the working range of the crane.
- ▶ Give a short warning signal (horn) before starting a crane movement.
- ▶ When slewing with a load, initiate the turning movement very carefully, and apply the brakes.

5.1 Preselection of slewing speed

The load chart manual lists the maximum slewing speeds in percentages. The maximum permissible slewing speeds can be set on the LICCON monitor in the settings window „Speed reduction master switch“, see Crane operating instructions, chapter 4.02. Always move at slower speed with a longer boom and a heavier load.

WARNING
The crane can topple over!
If the following instructions are not observed, life threatening situations could arise even causing the crane to topple over.
- ▶ Set the slewing speed specified in the load chart manual and in the crane documentation.
- ▶ Observe additional specifications regarding the slewing speed from the crane documentation.
- ▶ Do **not** exceed the specified maximum speed.
- ▶ Initiate and slow down every turning movement extremely sensitively!

- ▶ Determine the maximum slewing speed according to the load chart manual and additional specifications in the crane documentation, depending on the situation.
- ▶ Make any settings in the setting window „Speed reduction Master switch“, see Crane operating instructions, chapter 4.02

LWE/ab Muli 010/24201-02-02/en

copyright © Liebherr-Werk Ehingen GmbH 2016

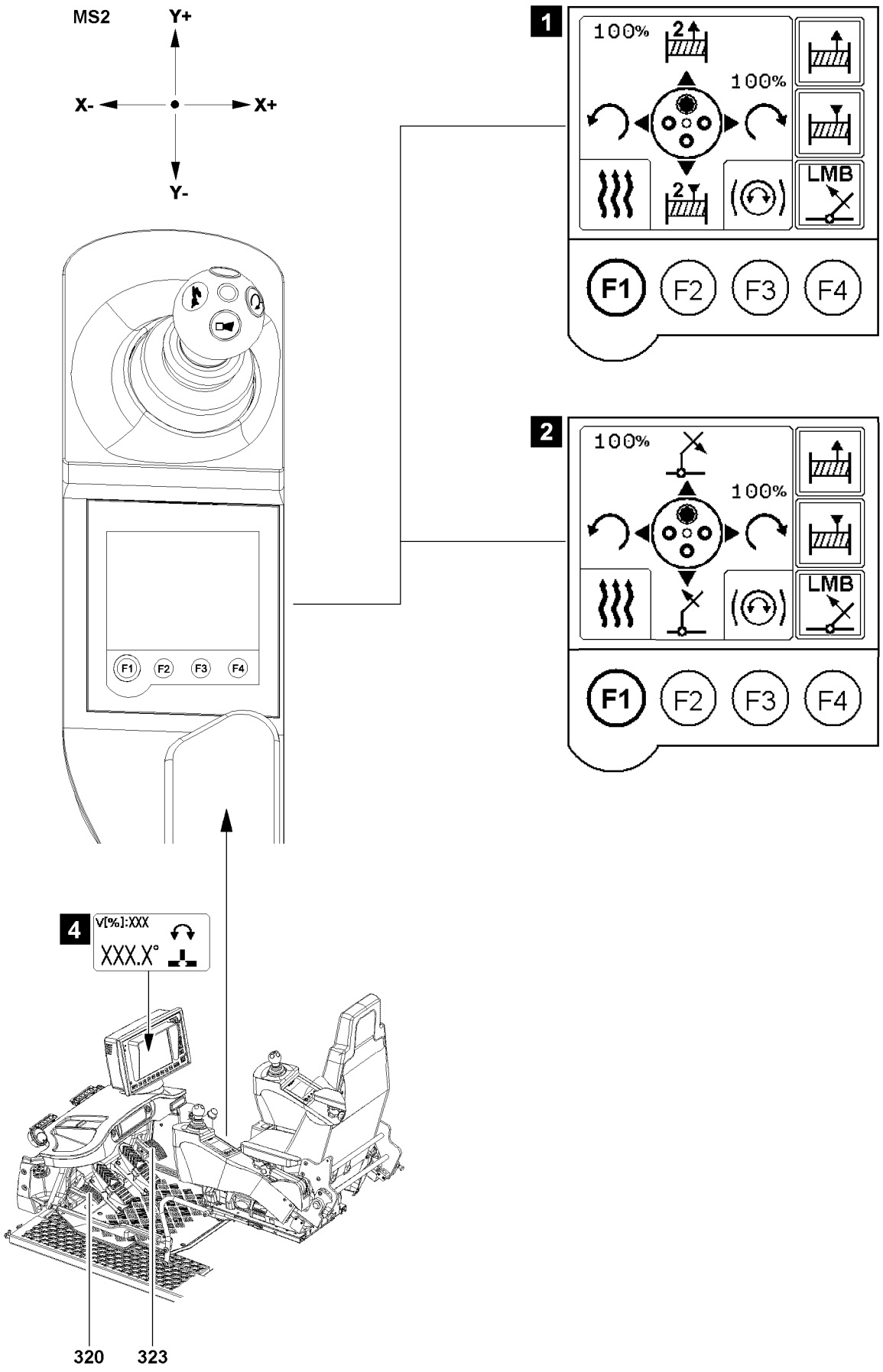

Fig.123697

LWE/ab Muli 010/24201-02-02/en

copyright © Liebherr-Werk Ehingen GmbH 2016

5.2 Turning the crane superstructure

Depending on the set up configuration of the crane, there are various master switch assignments to turn the crane superstructure, see illustration **1** or illustration **2**.

Depending on the set up configuration, not all master switch assignments are always available.

The crane superstructure is always turned with master switch **MS2** in direction of the X-axis.

Make sure that the following prerequisites are met:
- The desired master switch assignment to turn the crane superstructure is active, see illustration **1** or illustration **2**.
- The crane superstructure is **not** locked to the crane chassis.
- The seat contact button is actuated or bypassed, see section „Releasing the crane movement“.
- The crane engine is running.

▶ Deflect the master switch **MS2** in direction X+.

Result:

– The crane superstructure turns to the right.

▶ Deflect the master switch **MS2** in direction X-.

Result:

– The crane superstructure turns to the left.

Note

▶ In the Turning range icon (illustration **4**) the current position of the crane superstructure is always shown.

LWE/ab Muli 010/24201-02-02/en

copyright © Liebherr-Werk Ehingen GmbH 2016

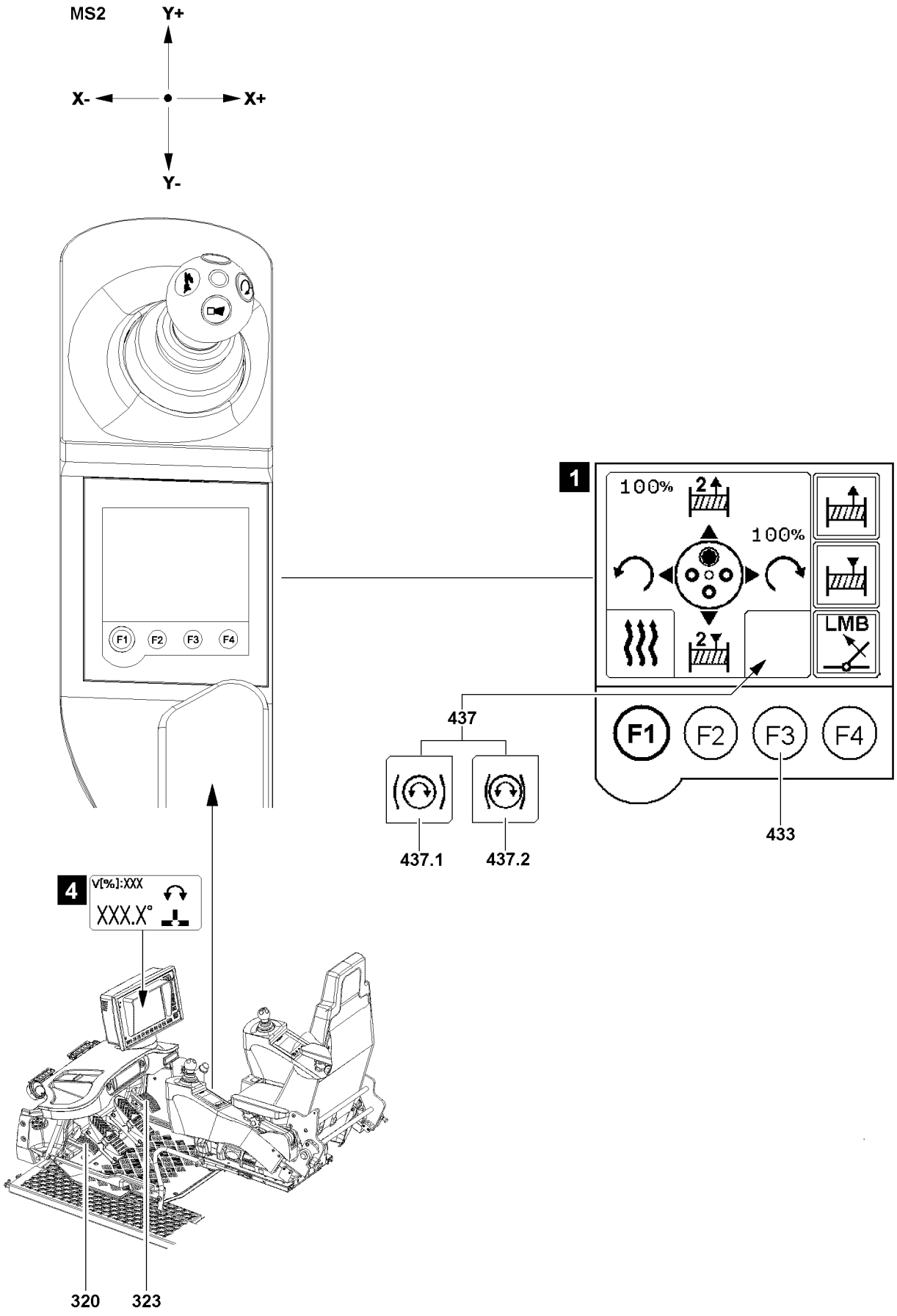

Fig.123698

LWE/ab Muli 010/24201-02-02/en

copyright © Liebherr-Werk Ehingen GmbH 2016

5.3 Slewing gear

There are two ways to brake the slewing gear:
- Slewing gear brake (left pedal)
  Use only for certain applications, see section „Slewing gear brake (pedal)“.
- Parking brake (left touch display)
  The slewing gear can be operated with the parking brake **released** or **applied**, see section „Parking brake slewing gear“.

Freewheeling slewing gear:
- To be able to position the boom easier over the load, the slewing gear can be switched to freewheeling (coasting), see section „Switching the slewing gear to freewheeling“.

5.4 Slewing gear brake (pedal)

CAUTION
Risk of damaging the slewing gear or the roller ring connection!
The slewing gear brake cannot brake the full turning momentum. Failure to comply with the following instructions could damage the slewing gear or roller ring connection.
- ▶ The pedal **320** may only be used at minimal rotation speeds, in other words with master switch **MS2** almost at the neutral position!
- ▶ Do not brake the turning movement of the crane by moving the master switch **MS2** back to the neutral position and / or by simultaneously applying the pedal **320**!

Use the pedal **320** only for the following situations:
- Starting the slewing movement in strong side wind
- Stopping the slewing movement in strong side wind

5.4.1 Starting the slewing movement in strong side wind

When turning against the wind in strong side wind and with a long boom system, then the superstructure will turn into the opposite direction due to leakage in the hydraulic motor.

This can be avoided as follows:

- ▶ Actuate the pedal **320** and deflect the master switch **MS2** into the desired turning direction.
- ▶ Slowly release the pedal **320** until the superstructure turns in the desired turning direction.

5.4.2 Stopping the slewing movement in strong side wind

- ▶ Slow down the crane with master switch **MS2** to minimum turning speed.
- ▶ Apply the pedal **320** carefully, until the crane has come to a standstill at the desired position.

copyright © Liebherr-Werk Ehingen GmbH 2016

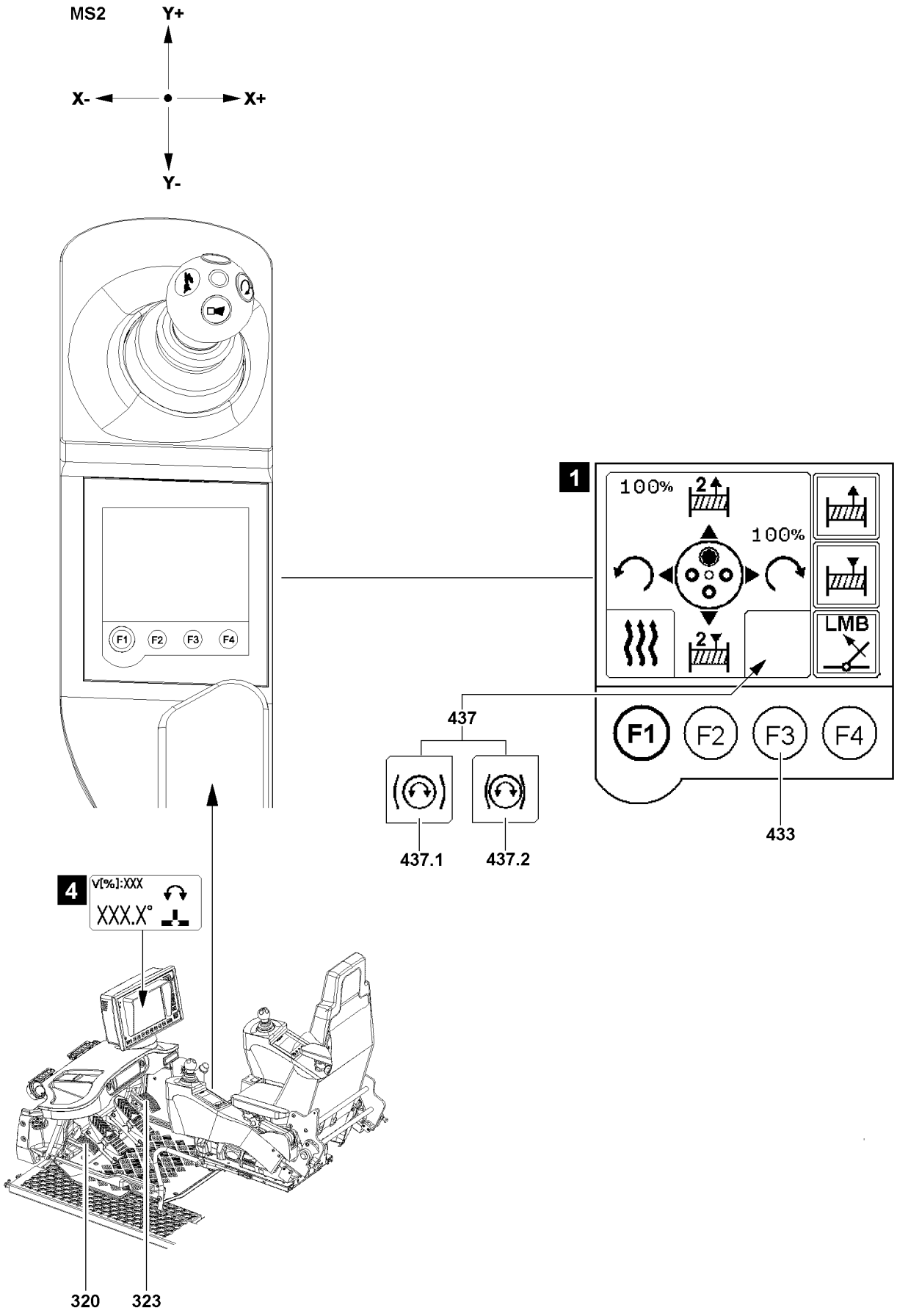

Fig.123698

LWE/ab Muli 010/24201-02-02/en

copyright © Liebherr-Werk Ehingen GmbH 2016

5.5 Parking brake Slewing gear

Note

- ▶ Once the parking brake is **released**, it **remains released**, regardless of whether the slewing gear is actuated using the master switch **MS2** or if it is not actuated. This is to prevent a sudden stop.
- ▶ If the parking brake is **engaged**, it is released as soon as the master switch **MS2** is deflected and the slewing gear is actuated. The parking brake is **applied** again as soon as the master switch **MS2** is in neutral position again.

NOTICE

Uncontrolled turning of the slewing gear!

As long as the parking brake of the slewing gear **is released**, the slewing gear can turn in an uncontrolled manner due to wind, incline position or diagonal pull!

- ▶ Apply the parking brake of the slewing gear if necessary.

The parking brake of the slewing gear can be applied or released with the function key **433** on the left touch display.

- – If the icon **437.1** appears, the parking brake is released.
- – If the icon **437.2** appears, the parking brake is applied.

The parking brake can **not** be released if:

- – The working range limitation is active.
- – A load chart with limited slewing range is selected.
- – The seat contact button is neither actuated nor bypassed, see section „Releasing the crane movement“.

LWE/ab Muli 010/24201-02-02/en

copyright © Liebherr-Werk Ehingen GmbH 2016

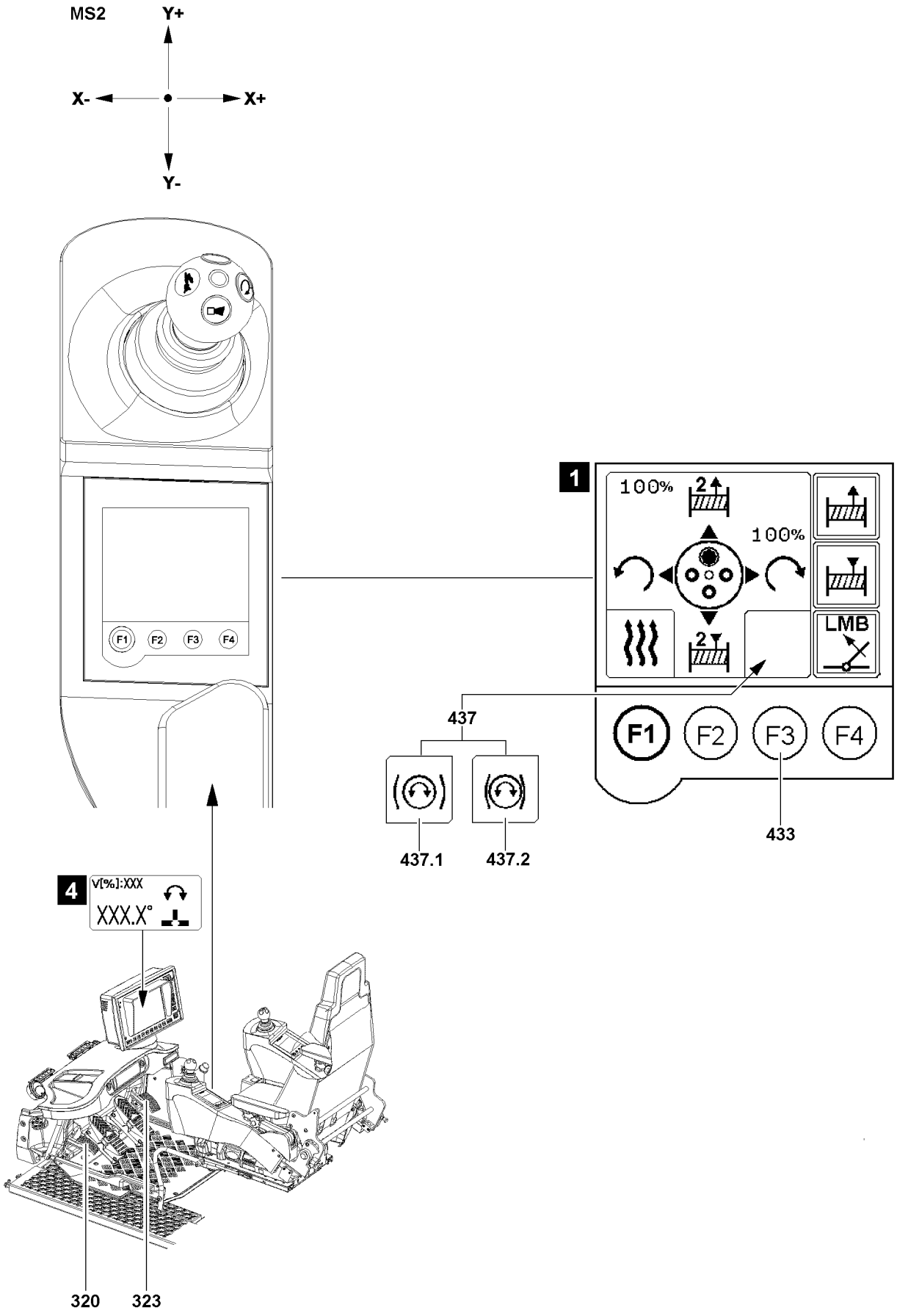

Fig.123698

LWE/ab Muli 010/24201-02-02/en

copyright © Liebherr-Werk Ehingen GmbH 2016

5.5.1 Releasing the parking brake

Make sure that the following prerequisites are met:
- The parking brake is **applied**.
- The icon **437.2** appears on the left touch display.
- The seat contact button is actuated or bypassed, see section „Releasing the crane movement“.
- The crane engine is running.

▶ Press the function key **433**.

Result:

– The parking brake is **released**.
– The icon **437.1** appears on the left touch display.

5.5.2 Applying the parking brake

Make sure that the following prerequisites are met:
- The parking brake is **released**.
- The icon **437.1** appears on the left touch display.

▶ Press the function key **433**.
or
Turn the engine off.
or
To cancel the release for the crane movement, see section „Releasing the crane movement“

Result:

– The parking brake is **applied**.
– The icon **437.2** appears on the left touch display.

Note
Automatic application of the parking brake
▶ If no crane movement is released (seat contact button neither actuated nor bypassed, see section „Releasing a crane movement“), then the parking brake is automatically applied.

copyright © Liebherr-Werk Ehingen GmbH 2016

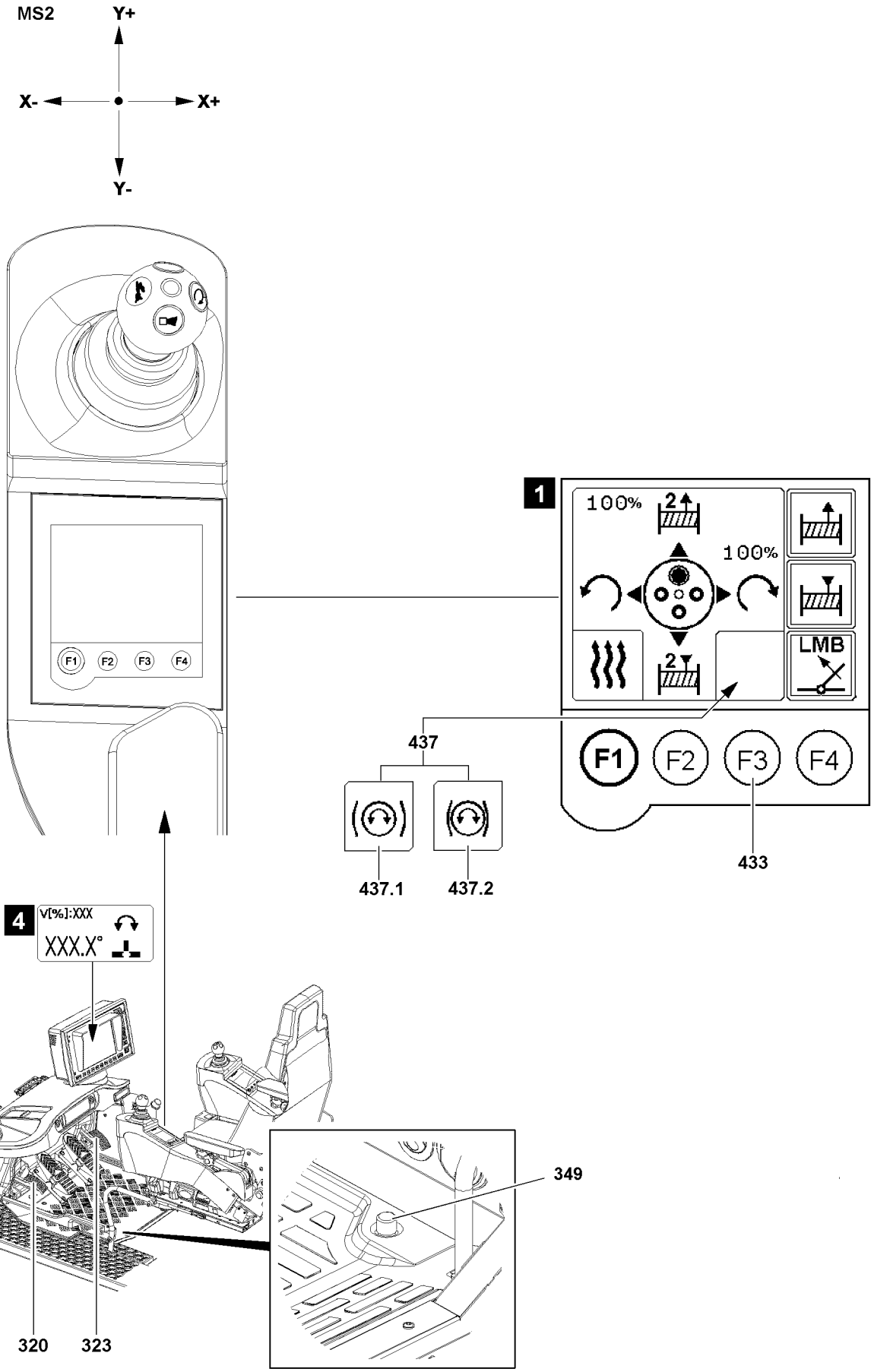

Fig.123712

LWE/ab Muli 010/24201-02-02/en

copyright © Liebherr-Werk Ehingen GmbH 2016

5.6 Switching the slewing gear to freewheeling

In order to position the boom over the load more easily, the slewing gear can be switched to freewheeling.

WARNING
Uncontrolled turning of the crane superstructure!
As long as slewing gear is switched to freewheeling, the crane superstructure can turn in an uncontrolled manner due to wind, incline position or diagonal pull.
▶ Add freewheeling of the slewing gear only when an uncontrolled rotation of the crane superstructure is impossible.

Make sure that the following prerequisites are met:
– The seat contact button is actuated or bypassed, see section „Releasing the crane movement“.
– The crane engine is running.
– The master switch **MS2** is not deflected.

The slewing gear **cannot** be switched to freewheeling if:
– A load chart with limited slewing range is selected.
– The working range limitation is active.

▶ Press the foot button **317**.

Result:

– The slewing gear is switched to freewheeling.

Note
The activation of freewheeling and actuation of the slewing movement via the master switch **MS2** are mutually exclusive!
▶ When the master switch **MS2** is deflected, then the slewing gear cannot be switched to freewheeling via the foot button **317**!
▶ When pressing the foot button **317**, the slewing movement can **not** be carried out by deflecting the master switch **MS2**!

LWE/ab Muli 010/24201-02-02/en

copyright © Liebherr-Werk Ehingen GmbH 2016

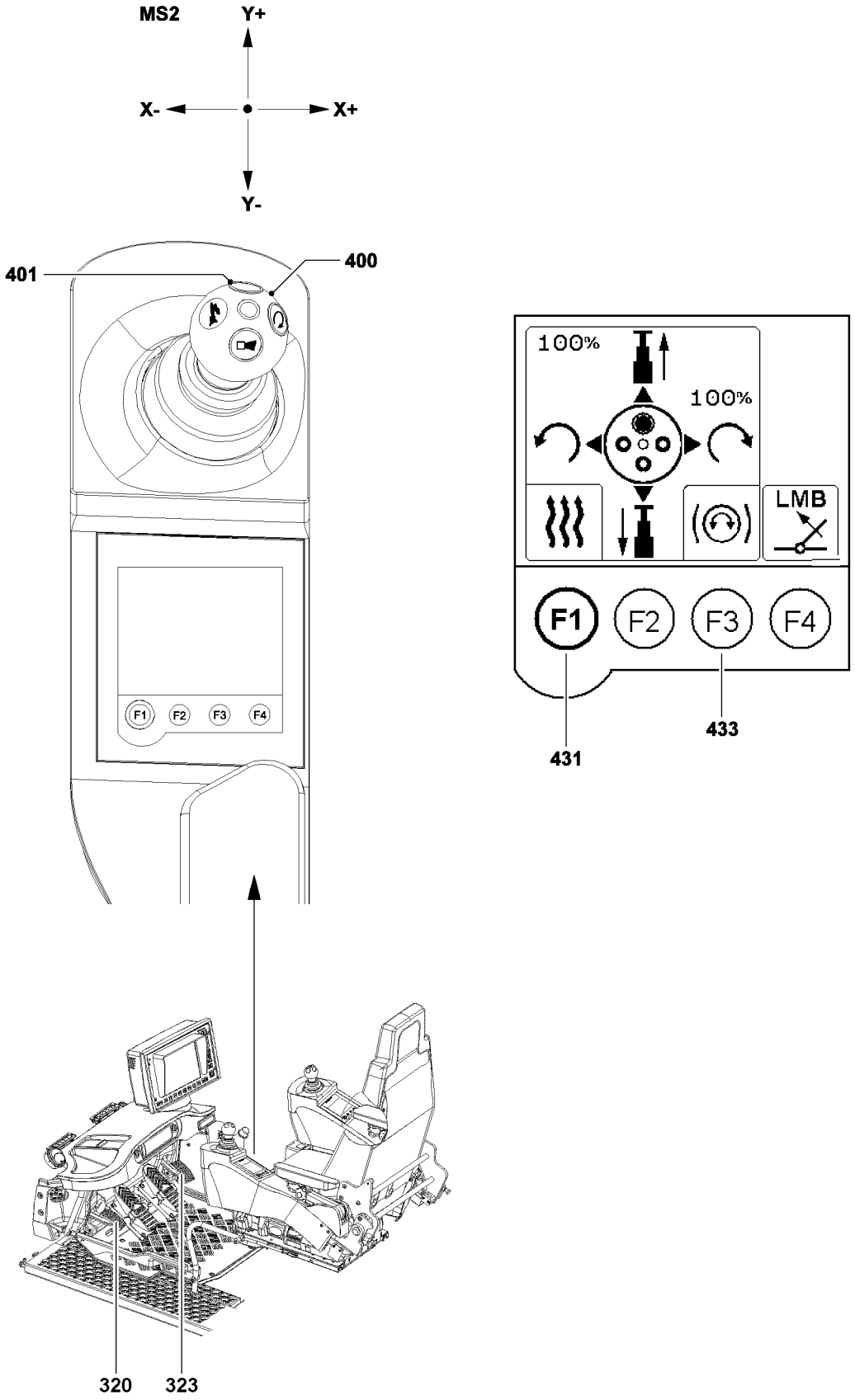

Fig.123699

LWE/ab Muli 010/24201-02-02/en

copyright © Liebherr-Werk Ehingen GmbH 2016

6 Telescoping

NOTICE
Damage of the push out mechanism on the telescopic boom!
If the following conditions are not observed, there is a danger that the telescopic boom is significantly distorted on the side during the telescoping procedure and that the telescoping cylinder can no longer move in the corresponding telescope, but hits against the end section on the front.
This can cause damage to the push out mechanism on the telescopic boom!
- ▶ If the telescopic boom is telescoped, especially with auxiliary boom or telescopic boom extension, then it must be ensured before the telescoping procedure that:
- ▶ The crane vehicle is supported and horizontally aligned.
- ▶ The telescopic boom is not significantly heated up on one side due to sun exposure.
- ▶ There is no strong side wind.

NOTICE
Telescoping has an effect on the hoist rope!
The telescoping procedure has a direct effect on the hoist rope!
- ▶ During the telescoping procedure via the crane movement lifting / lowering the hoist gear, make sure that the effect on the hoist rope is compensated for!

The telescopic boom can only be telescoped if:
- The crane is in telescoping mode
  or
- a load chart with telescopeable load is selected.

6.1 Control of crane movement „Telescoping“

6.1.1 „Telescoping“ on cranes with one winch

Make sure that the following prerequisites are met:
- The master switch **400** is in the neutral position.
- The seat contact button is actuated.

- ▶ Press function key F1 **431** on the left touch display until the „Master switch configuration“ menu appears.
- ▶ Move the master switch **400** in direction Y+ (forward).

Result:

- The telescopic boom is telescoped out.

- ▶ Move the master switch **400** in direction Y- (backward).

Result:

- The telescopic boom is telescoped in.

LWE/ab Muli 010/24201-02-02/en

copyright © Liebherr-Werk Ehingen GmbH 2016

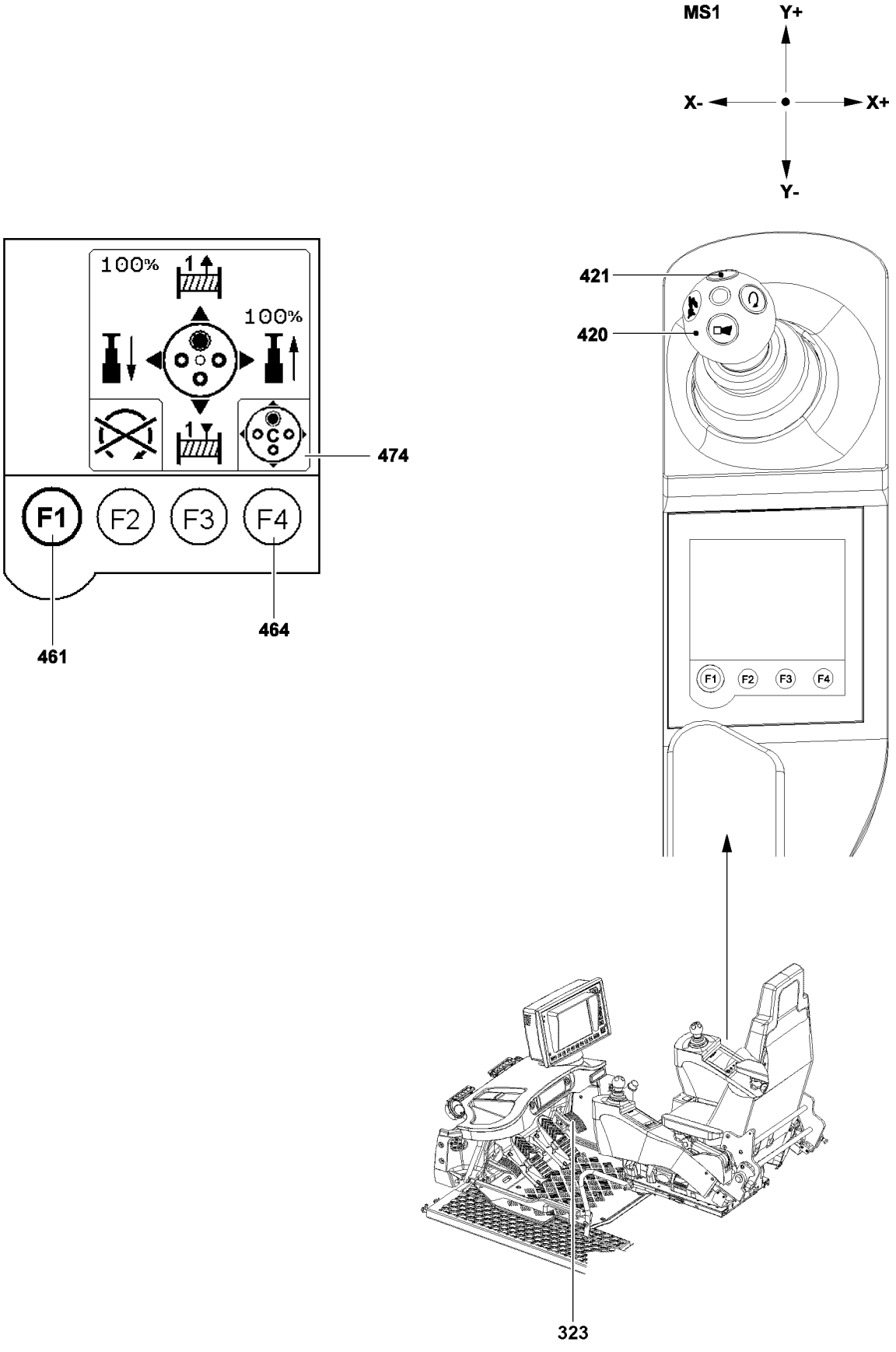

Fig.123701

LWE/ab Muli 010/24201-02-02/en

copyright © Liebherr-Werk Ehingen GmbH 2016

6.1.2 „Telescoping“ on cranes with two winches

Make sure that the following prerequisites are met:
- The master switch **420** is in the neutral position.
- The seat contact button is actuated.

▶ Press the function key F1 **461** on the right touch display until the „Master switch configuration“ menu appears.
▶ Press the function key F4 **464** until the master switch assignment **474** „**C**“ is active.
▶ Move the master switch **420** in direction X+ (to the right).

Result:

– The telescopic boom is telescoped out.

▶ Move the master switch **420** in direction X- (to the left).

Result:

– The telescopic boom is telescoped in.

LWE/ab Muli 010/24201-02-02/en

copyright © Liebherr-Werk Ehingen GmbH 2016

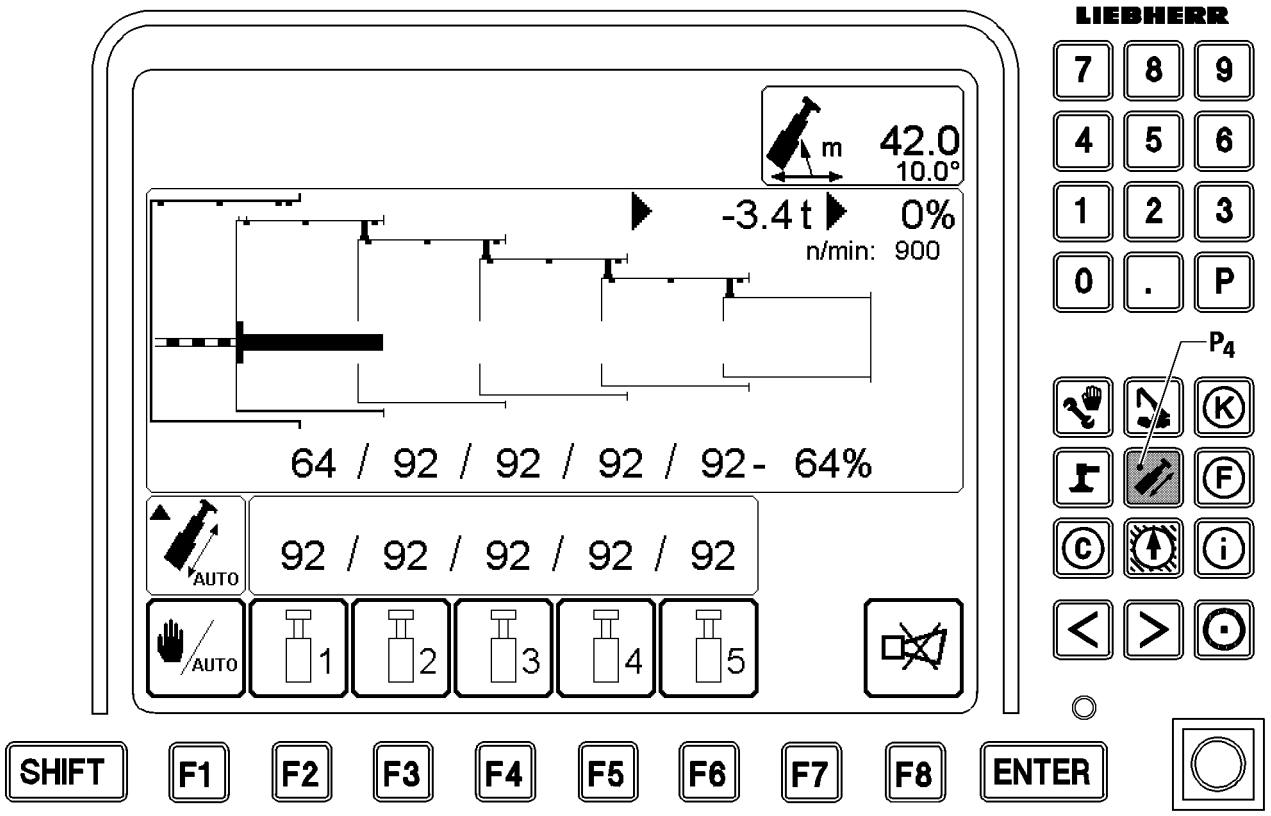

Fig.111778

LWE/ab Muli 010/24201-02-02/en

copyright © Liebherr-Werk Ehingen GmbH 2016

6.2 Function description of Telematik

The „Telematik“ automatic telescopic boom control system consists of:
- The double acting telescoping cylinder.
- The hydraulically operated gripper pinning.
- The hydraulically operated boom pinning.

The gripper and boom pinning is mechanically interlinked, which means a telescope section can only be unpinned when the gripper is locked simultaneously with this telescope section.

In the LICCON telescoping screen the crane operator can see, in dynamic graphics, the pinning state of the telescopic boom, the position of the individual telescopes in relation to each other and the extension status of the telescoping cylinder.

Due to the automatic telescoping procedure, the crane operator can easily telescope the telescoping boom, as he does not have to concern himself with the pinning or unpinning of the telescoping cylinder or the telescopes. The LICCON telescoping control system therefore makes very straightforward telescoping possible, only the desired telescoping target needs to be entered into the system.

The LICCON telescoping control system decides the sequence in which the individual telescopes will be moved in order to achieve the desired end state. After setting the desired telescoping targets, all telescoping movements, as well as locking and unlocking, are carried out fully automatically.

The following procedures are carried out by the system:
- Locking and unlocking of the telescoping cylinder.
- Pinning and unpinning of the telescopes.
- Sequence for the telescopes to be telescoped in order to achieve the desired end state.

This automatic process will however only be carried out as long as the master switch is operated.

The master switch determines the direction and the speed of the telescoping movement. In this way the crane operator has continuous control over the crane.

The direction of the cylinder movement is set by the LICCON computer system.

If the telescopic boom is lengthened, with the result that currently unreachable telescopes must be moved, then they must first be retracted until the last telescope to be moved is reached. In this case, in order to lengthen the telescopic boom (telescope out), telescoping in must first take place.

The LICCON computer system displays the direction in which the next telescoping must be done. The master switch must also be pressed to correspond to this direction setting. In this way the connection between the direction of movement of the appropriate master switch and the telescope continues.

In this way it is possible to move to a telescoping target automatically without an operating screen. It is therefore also not essential to keep watching the LICCON monitor all the time.

If the direction needs to be changed by the master switch, the telescopic boom remains stationary if the current direction is to be maintained. This also means that the master switch must be moved in the other direction. If there is no further movement in the other direction, this means that the telescoping target has been reached. This state is displayed visually on the operating screen. If the master switch is still being pressed, then after 3 to 5 seconds, the system switches to the telescoping screen.

LWE/ab Muli 010/24201-02-02/en

copyright © Liebherr-Werk Ehingen GmbH 2016

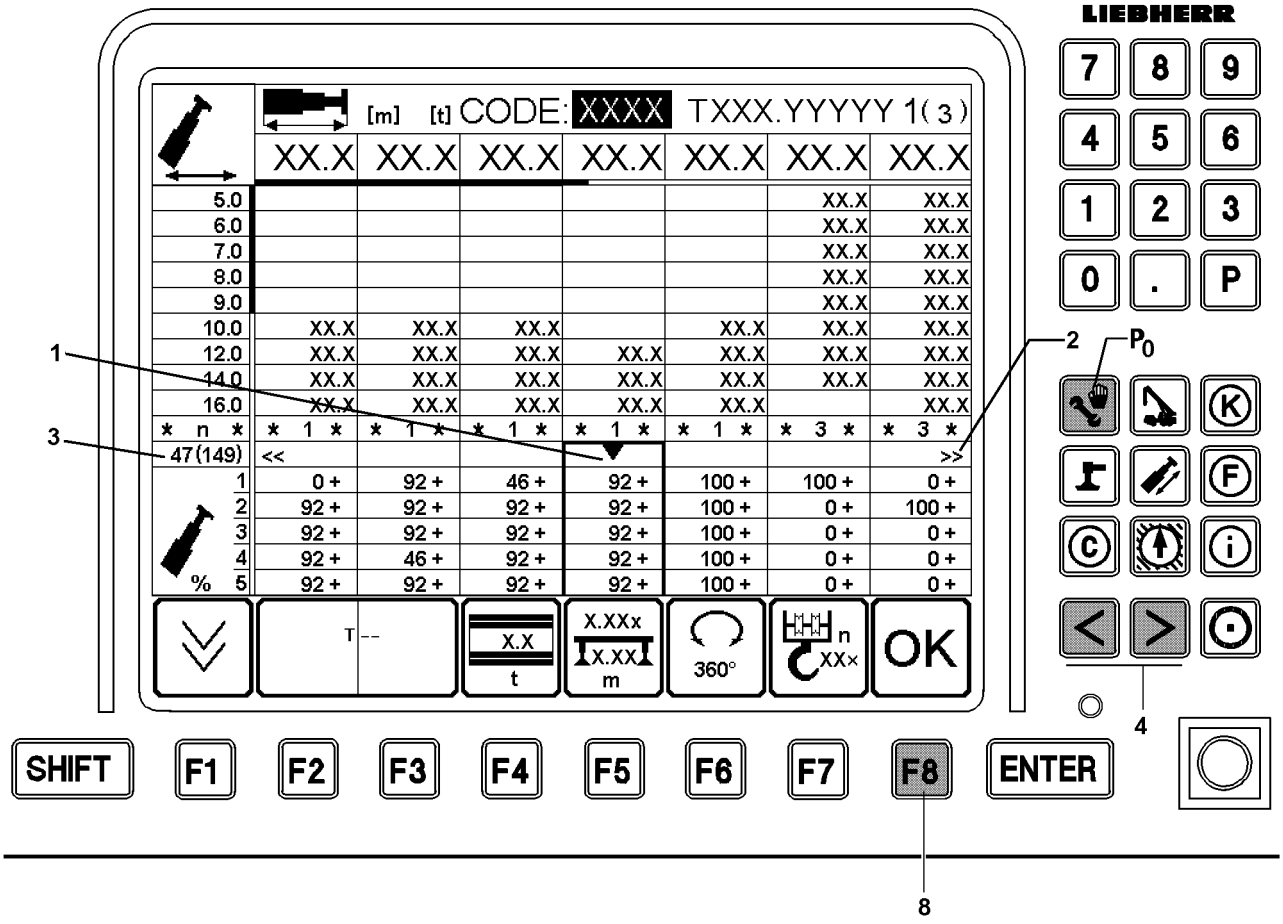

Fig.108831

LWE/ab Muli 010/24201-02-02/en

copyright © Liebherr-Werk Ehingen GmbH 2016

6.3 Automatic telescoping

There are two options for selecting the telescoping target:
1. Target selection via the set up screen
2. Target selection via the telescoping screen

6.3.1 Target selection via the set up screen

▶ Press the program key **P0**.

Result:

– The set up screen appears on the LICCON monitor.

▶ Using the arrow keys **4**, move the cursor **1** to the left or the right into the column corresponding to the desired telescopic boom length.

As supporting information, the currently selected column number **3** and the number of columns in this chart are shown. For example, 47(149) means 47 of 149 columns.

The status indicator (±) on the right next to the percentage extension condition value means:
– „+“ the corresponding telescopic section must be pinned.
– „-“ the corresponding telescopic section can be telescoped up to the percentage value of the extension status value under load (according to the load chart).

The double arrow **2** at the left and / or right edge of this line points to additional columns in either direction.

If the cursor **1** touches an edge marked with arrows, the next movement in this direction will display the next load chart column(s).

The cursor **1** itself will be set on the next column, if possible in the middle.

A change of the telescoping target is always possible.

If no cursor appears in the set up screen, this means that on the telescoping screen a boom configuration that is not supported in the charts was selected and perhaps even started!

▶ Press function key „F8“ **8**.

Result:

– The selected telescoping target will be activated.
– The selected column for the respective telescoping target will be marked in bold along the side.

LWE/ab Muli 010/24201-02-02/en

copyright © Liebherr-Werk Ehingen GmbH 2016

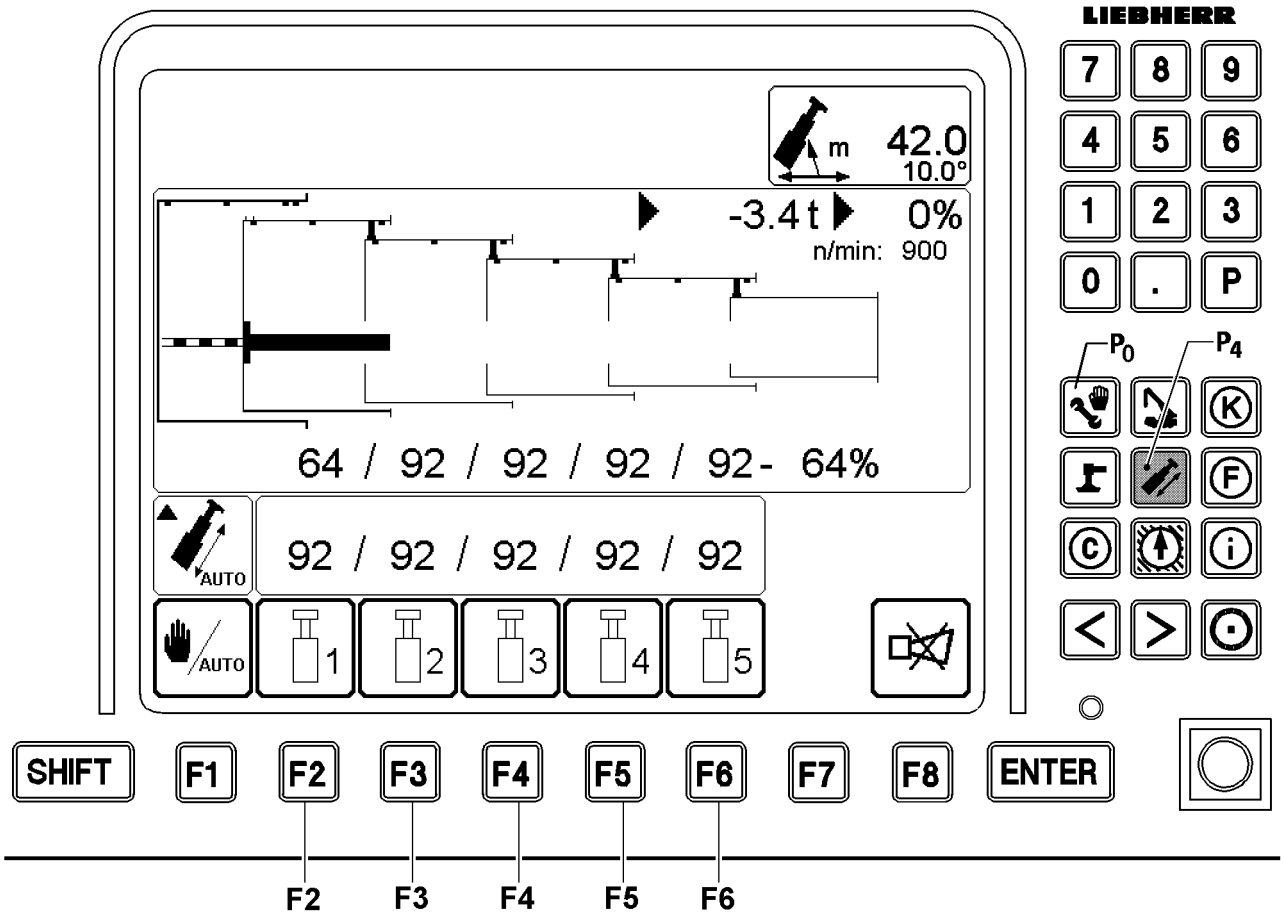

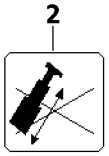

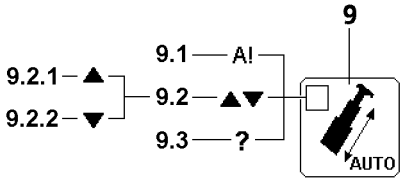

LWE/ab Muli 010/24201-02-02/en

Fig.111779

copyright © Liebherr-Werk Ehingen GmbH 2016

6.3.2 Target selection via the telescoping screen

▶ Press the program key **P4**.

Result:

– The telescoping screen appears on the LICCON monitor.

The selection of the telescoping target is achieved by pressing the function key assigned to the telescope concerned several times. After every button press, the intended extension status of the associated telescope changes to the next percentage value where there is a pin bore.

In contrast to the set up screen, the telescoping length is displayed immediately as a target, without further confirmation, as soon as the function key is pressed. No confirmation is required, as the assigned function keys do not have any other functions.

The appearance of a direction arrow **9.2** in the automatic symbol immediately after a change in the telescoping target can be interpreted as feedback.

If the icon **2** appears on the LICCON monitor, then:
– The telescopic sections cannot be unpinned.
– The unpinned load is exceeded.
– No load chart is available.

▶ Press the function key **F2**.

Result:

– The following appears on telescope 1: 0 %, 46 %, 92 %, or 100 %.

▶ Press the function key **F3**.

Result:

– The following appears on telescope 2: 0 %, 46 %, 92 %, or 100 %.

▶ Press the function key **F4**.

Result:

– The following appears on telescope 3: 0 %, 46 %, 92 %, or 100 %.

▶ Press the function key **F5**.

Result:

– The following appears on telescope 4: 0 %, 46 %, 92 %, or 100 %.

▶ Press the function key **F6**.

Result:

– The following appears on telescope 5: 0 %, 46 %, 92 %, or 100 %.

LWE/ab Muli 010/24201-02-02/en

copyright © Liebherr-Werk Ehingen GmbH 2016

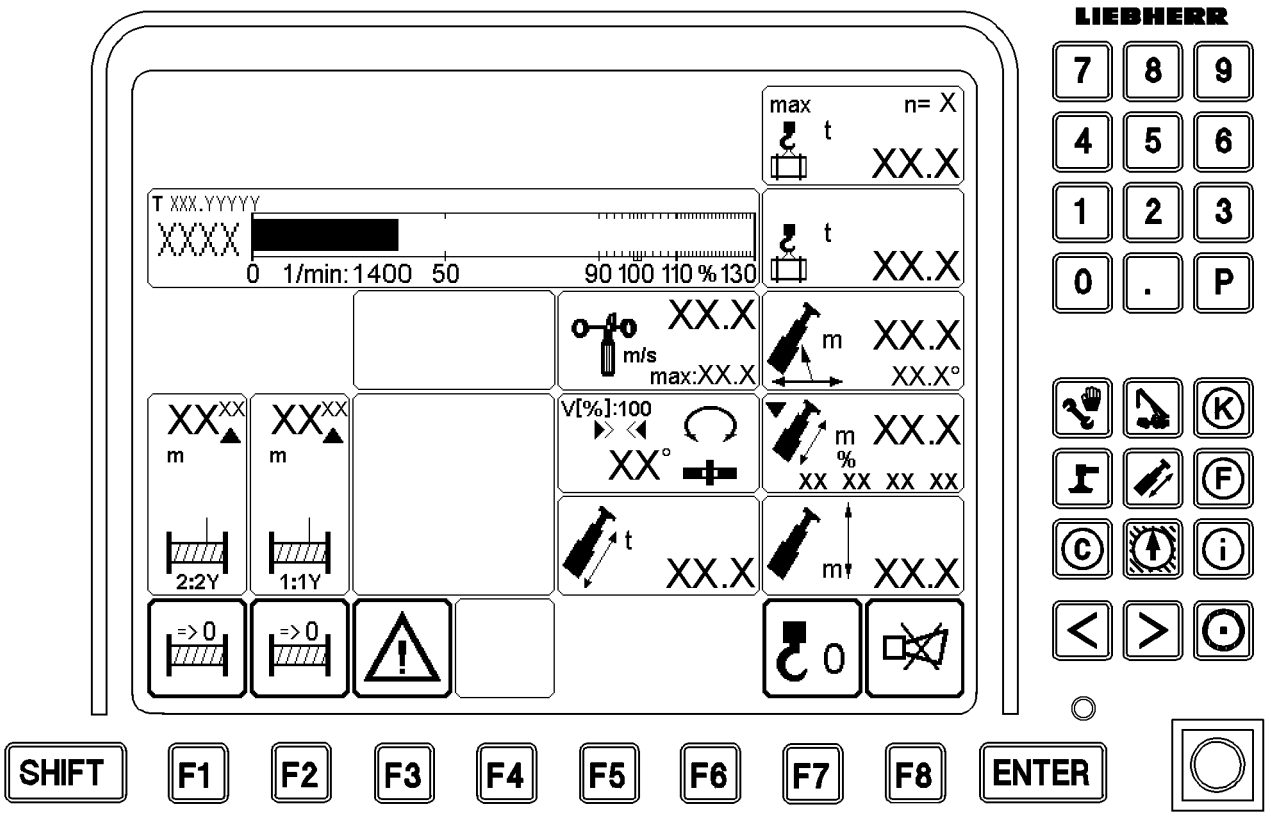

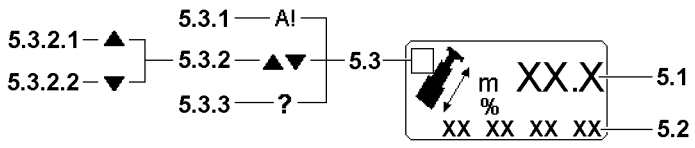

LWE/ab Muli 010/24201-02-02/en

Fig.118018

copyright © Liebherr-Werk Ehingen GmbH 2016

6.3.3 Telescoping to the selected target

NOTICE
Telescoping has an effect on the hoist rope!
The telescoping procedure has a direct effect on the hoist rope!
▶ During the telescoping procedure, via the crane movement lifting / lowering the hoist gear, make sure that hook remains in the correct position!

There are two options to telescope to the selected target:
1. Telescoping via the operating screen
2. Telescoping via the telescoping screen

Telescoping via the operating screen

The telescoping system is designed so that an experienced crane driver can telescope without the telescoping screen, in other words using just the operating screen.

The crane operator receives information about the direction in which the master switch must be moved from the arrow **5.3.2** in the icon **5**.

If the crane operator attempts further telescoping once the telescoping target has been reached, then there is an automatic changeover from the operating screen to the telescoping screen. If the master switch is still being deflected, then the markings on the set telescoping target blink. This means that the telescoping target has been reached.

Make sure that the following prerequisite is met:
– The seat contact button is actuated.

If the arrow **5.3.2.1** up appears in the icon **5**:
▶ Telescope the telescopic boom out.

If the arrow **5.3.2.2** down appears in the automatic icon **5**:
▶ Telescope the telescopic boom in.

Once the telescoping target is reached, icon A! **5.3.1** appears.

▶ Deflect the master switch for another 3 seconds or so until the telescope is resting on the pin.

Note
▶ Display Actual length Telescopic boom **5.1**.
▶ Display Actual extension status of telescopes **5.2** ascending from left to right (T1...T5) in percentages.
▶ If icon **5.3.3** appears, there is an error in the LICCON computer system.
▶ For detailed description, see Crane operating instructions, chapter 4.02.

copyright © Liebherr-Werk Ehingen GmbH 2016

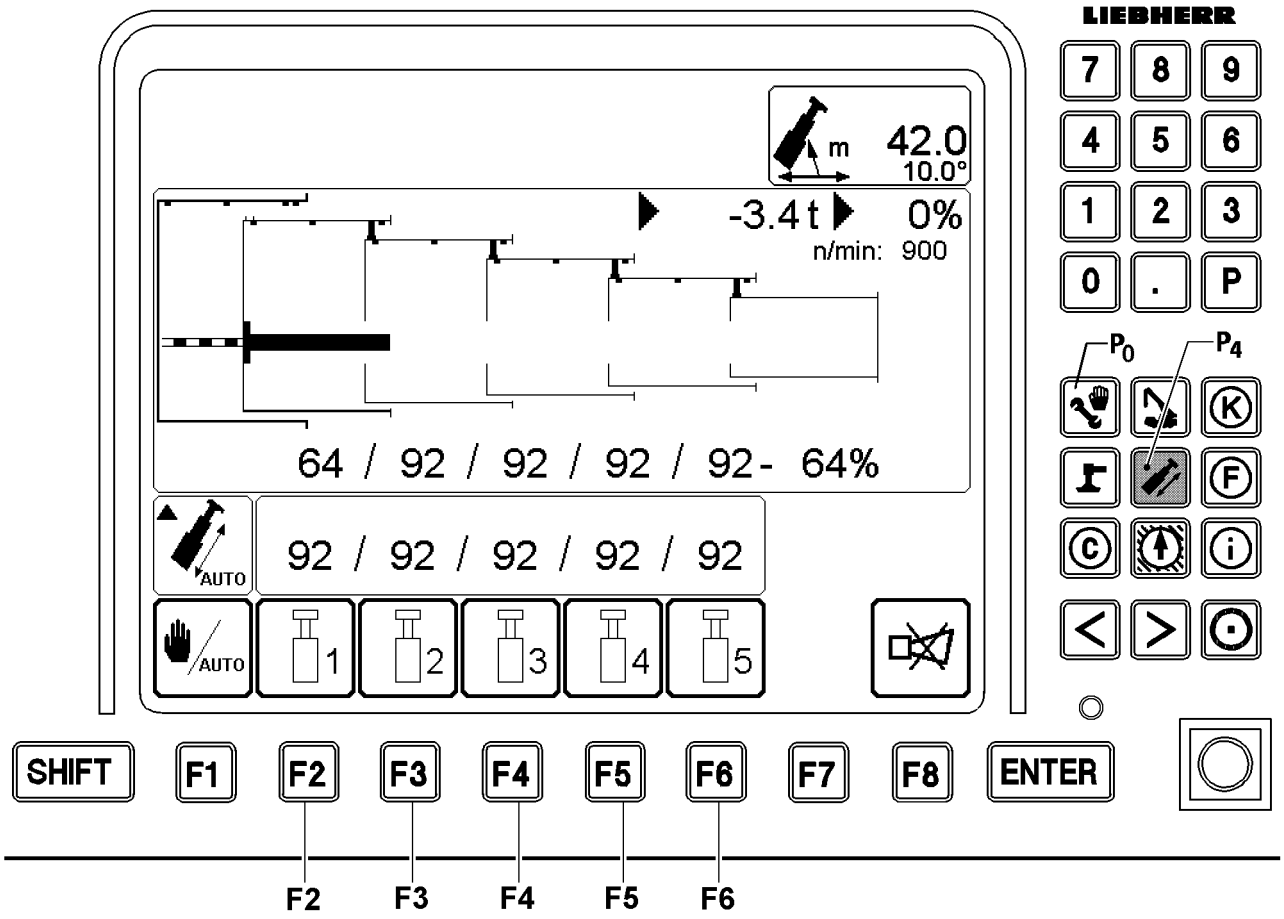

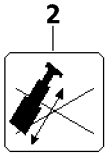

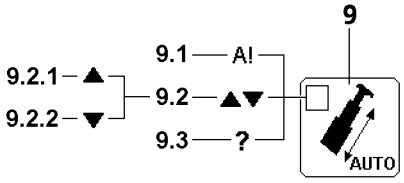

LWE/ab Muli 010/24201-02-02/en

Fig.111779

copyright © Liebherr-Werk Ehingen GmbH 2016

Telescoping via the telescoping screen

If the desired telescoping target is set, then the direction in which the master switch must be deflected is displayed on the operating screen and on the telescoping screen.

If the master switch is moved against the specified direction, the telescope remains stationary. The specified direction remains visible as an error criterion.

If the set telescoping target has been reached, then the telescopic boom remains stationary, regardless of any movements of the master switch, and the markings on the set telescoping target begin to blink. The target has thus been reached.

Make sure that the following prerequisite is met:
– The seat contact button is actuated.

If the arrow **9.2.1** up appears in the icon **9**:
▶ Telescope the telescopic boom out.

If the arrow **9.2.2** down appears in the automatic icon **9**:
▶ Telescope the telescopic boom in

Note
▶ When the icon **9.1** appears, the telescoping target is reached.
▶ If icon **9.3** appears, there is an error in the LICCON computer system.
▶ If icon **2** appears, the telescoping sections cannot be unpinned.
▶ For detailed description, see Crane operating instructions, chapter 4.02.

6.3.4 Aborting telescoping

Telescoping can be aborted at any time.

The pins, the telescoping cylinder and the telescopes remain where they were, in the last state they were in when the master switch was still being pressed.

If desired, a new telescoping target can be set. You can automatically telescope to this telescoping target.

▶ Press the program button **P0** and select a new target selection via the set up screen.
or

Set a new telescoping target:
Press the program button **P4** and enter a new target selection in the telescoping screen.

It is also possible to proceed manually by switching over to manual operation.

▶ Change to section „Manual telescoping“.

LWE/ab Muli 010/24201-02-02/en

copyright © Liebherr-Werk Ehingen GmbH 2016

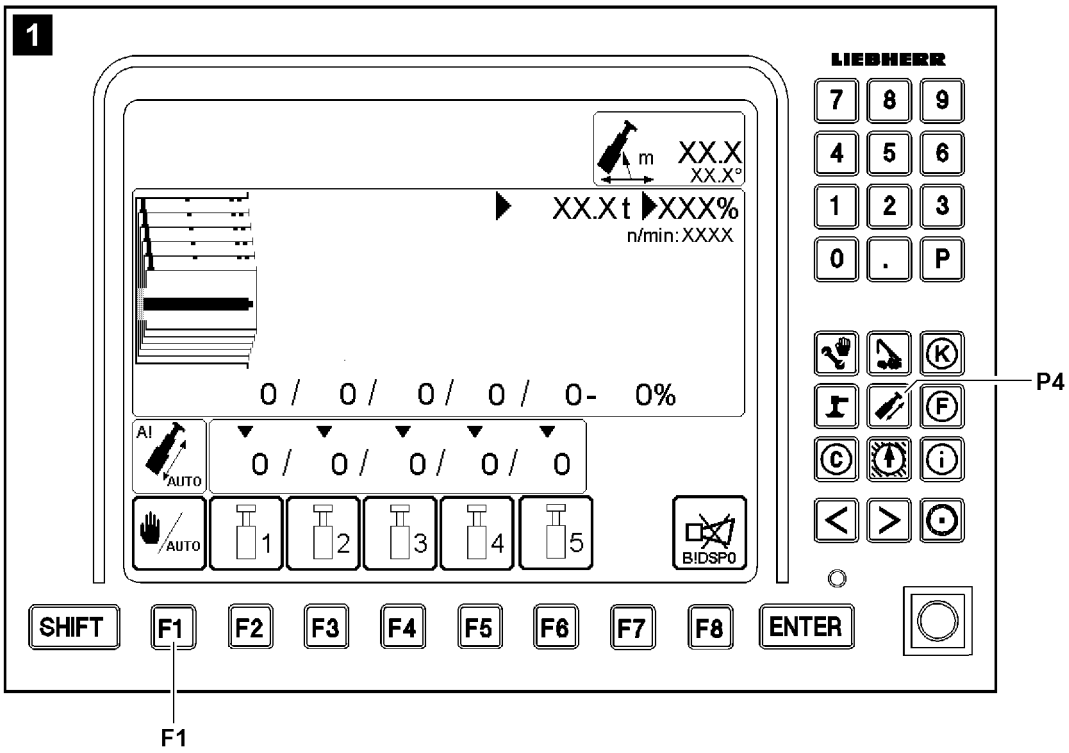

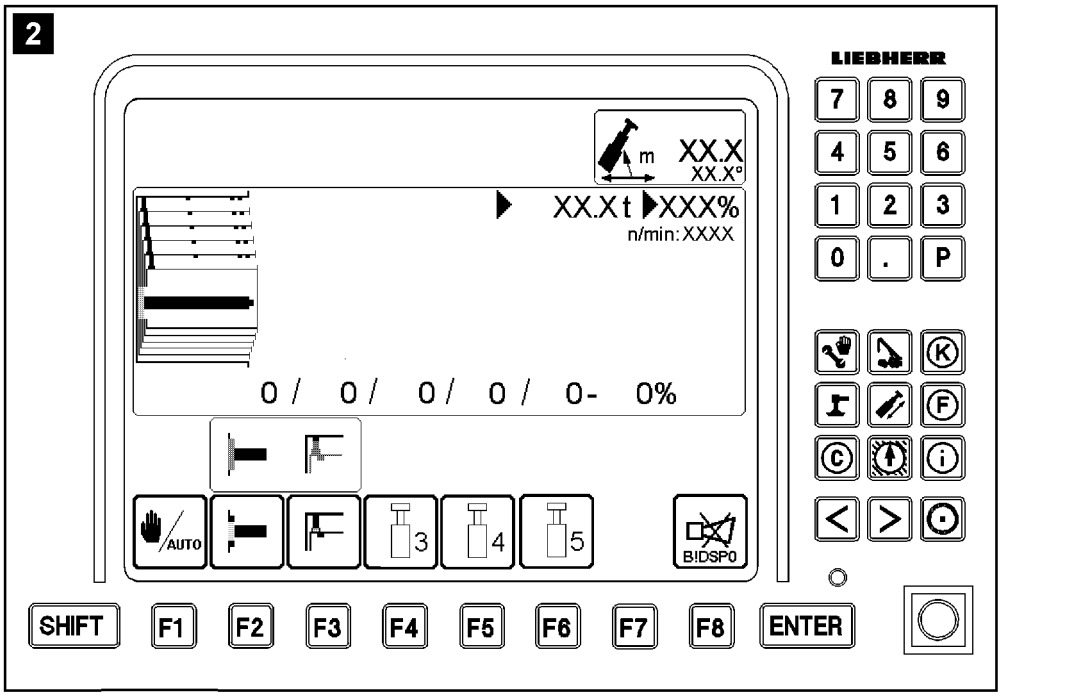

LWE/ab Muli 010/24201-02-02/en

Fig.112733

copyright © Liebherr-Werk Ehingen GmbH 2016

6.4 Manual telescoping

NOTICE
Damage to telescoping cylinder!
If the telescoping cylinder is not retracted before starting crane operation, then it can be damaged!
- ▶ After reaching the telescoping target and pinning the telescopic section, the telescoping cylinder must be retracted until the pins for the telescopic section pinning touch on the bores!
- ▶ For manual telescoping, move after pinning to stop (tension) to avoid any stress on the telescoping cylinder.

NOTICE
Telescoping has an effect on the hoist rope!
The telescoping procedure has a direct effect on the hoist rope!
- ▶ During the telescoping procedure, via the crane movement lifting / lowering the hoist gear, make sure that hook remains in the correct position!

Manual telescoping is regarded as an exception mode, as automatic mode makes it possible to reach any chosen extension state.

In manual telescoping, pinning and unpinning of the telescoping cylinder and telescoping must be carried out manually.

The marking on the telescoping screen will indicate in which telescope the pinning equipment of the telescoping cylinder is currently located.

The proximity to a telescope pin bore can be inferred on the telescoping screen to an accuracy of 1 %.

Note
- ▶ To get into manual telescoping mode, you have to switch to „manual telescoping“ in the „telescoping“ program.
- ▶ Manual telescoping is identical for all telescopes. As an example, manual telescoping of telescope 4 is described.

Make sure that the following prerequisite is met:
- The seat contact button is actuated.

6.4.1 Calling up manual telescoping

▶ Press the program key **P4**.

Result:

– The telescoping screen is called up, see illustration **1**.

▶ Press the function key **F1**.

Result:

– Manual telescoping is activated, see illustration **2**.

copyright © Liebherr-Werk Ehingen GmbH 2016

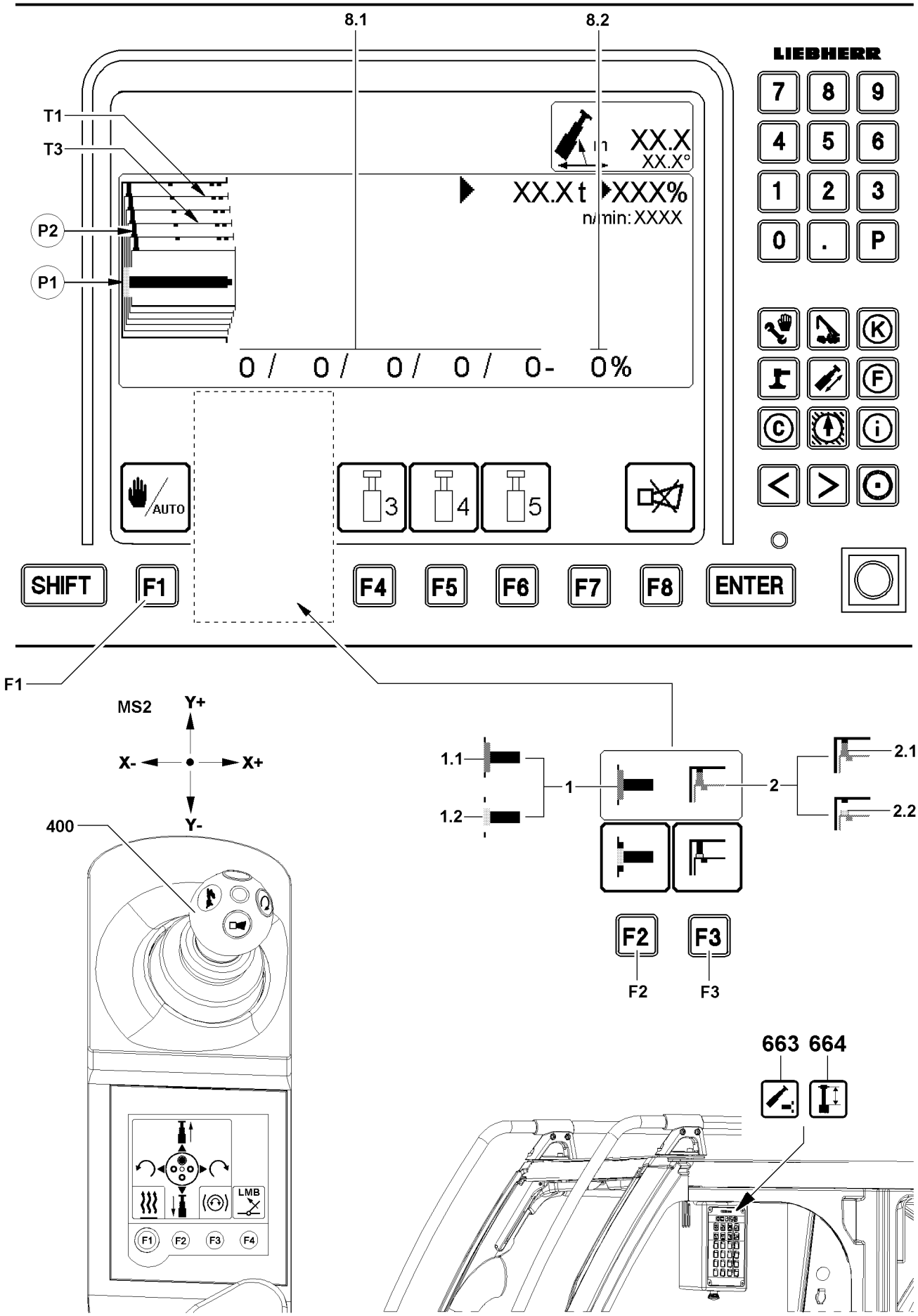

Fig.123702

LWE/ab Muli 010/24201-02-02/en

copyright © Liebherr-Werk Ehingen GmbH 2016

6.4.2 Manual telescoping on cranes with one winch

Note

▶ In this description is it assumed that all telescopes are retracted and telescope 1 **T1** is selected and pinned.

▶ As an example, the telescope 3 **T3** is to be extended and pinned.

– Manual telescoping is activated.
– The telescoping cylinder is pinned, gripper in icon **1.1** is „green“.
– The telescope 1 **T1** is pinned, pin in icon **2.1** is „green“.
– The indicator light **664** lights up „yellow“.

▶ Press the function key **F2**.

Result:

– The icon above the function key **F2** is bordered in „red“.
– The telescoping cylinder is unpinned, gripper in icon **1.2** is „yellow“.
– Display of gripper on point **P1** is „yellow“.
– The indicator light **663** and indicator light **664** light up „yellow“.

▶ Deflect the master switch **400** (MS2) in direction Y+ (to the front) and extend the telescoping cylinder until the telescope 3 **T3** on the LICCON monitor appears „green“.

Result:

– The telescope 3 **T3** is selected.
– The indicator light **663** and indicator light **664** light up „yellow“.

▶ Press the function key **F2**.

Result:

– The telescoping cylinder is pinned on telescope 3 **T3** and the gripper in icon **1.1** is „green“.
– Display of gripper on point **P1** is „green“.

Problem remedy

Display of gripper on point **P1** is „yellow“?
Gripper is not in position.

▶ Deflect the master switch **400** (MS2) carefully in direction Y- (to the rear) or in direction Y+ (to the front) until the display of the gripper on point **P1** is „green“.

LWE/ab Muli 010/24201-02-02/en

copyright © Liebherr-Werk Ehingen GmbH 2016

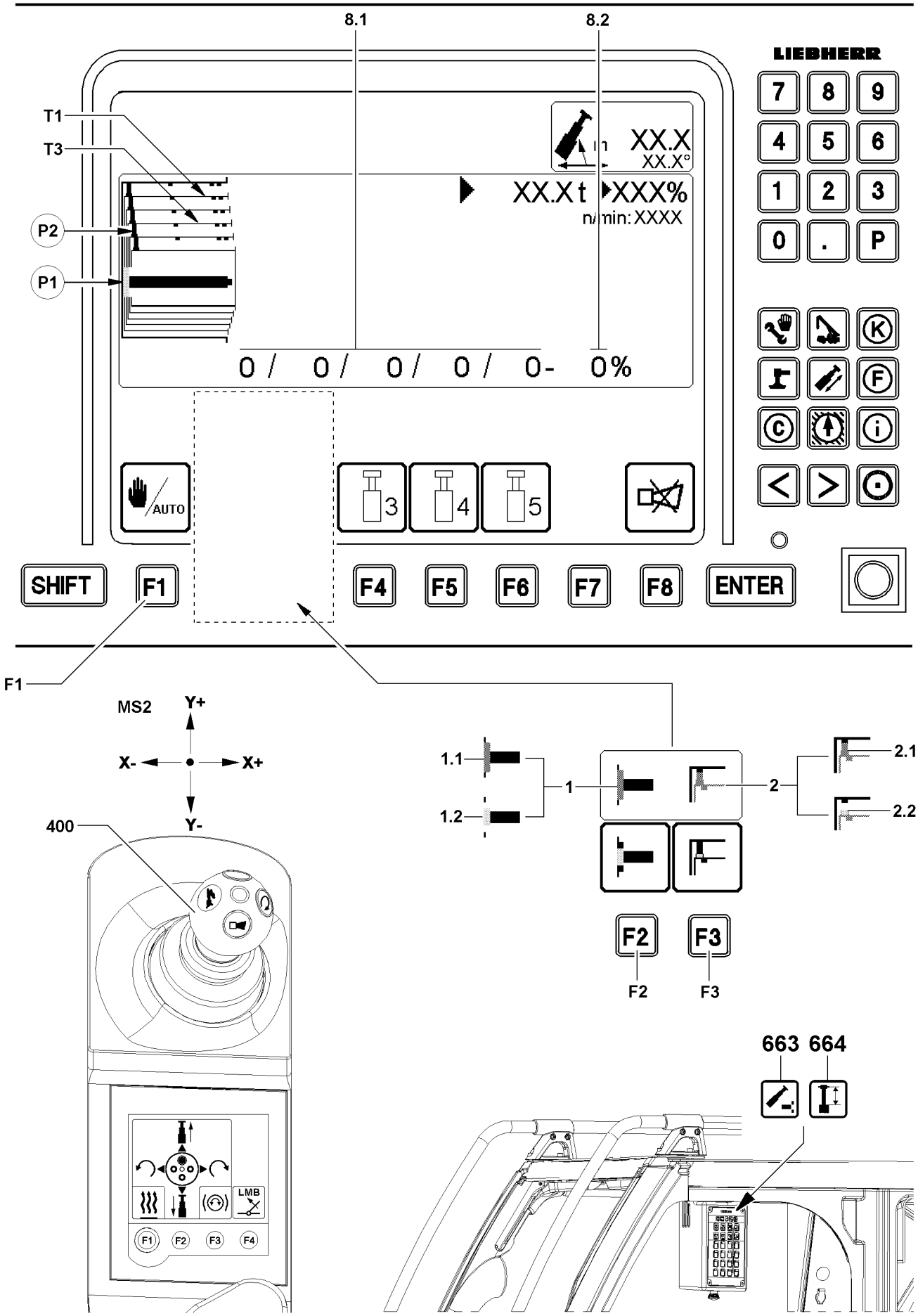

Fig.123702

LWE/ab Muli 010/24201-02-02/en

copyright © Liebherr-Werk Ehingen GmbH 2016

Before carrying out any other steps, make sure that the locking pin has latched in audibly.

▶ Press the function key **F3**.

Result:

– The icon above the function key **F3** is bordered in „red“.
– The telescope 3 **T3** is unpinned, pin in icon **2.2** is moved in and „yellow“.
– The indicator light **663** lights up „green“.

Problem remedy
Pin on point **P2** is moved out and „yellow“?
The pin is stuck.
▶ Deflect the master switch **400** (MS2) carefully in direction Y- (to the rear) or in direction Y+ (to the front) until the pin in icon **2.1** is moved in and is „yellow“.

NOTICE
Danger of damaging the tele lock!
▶ Lock the telescoping cylinder in the intended pin points.
▶ The locking pins must latch in audibly.

Note
▶ Display Extension status of telescopes **8.1** ascending from left to right (T1...T5) in percentages. Pin points are at 0 %, 42 %, 92 % and 100 %.
▶ Display Extension status Telescoping cylinder **8.2** in percentages.
▶ Pin points can also be accessed easily via the graphic illustration in the LICCON monitor.

▶ Deflect the master switch **400** (MS2) in direction Y+ (to the front) and telescope the telescope 3 **T3** out to the desired length.

Result:

– The indicator light **664** lights up „yellow“ when a pin point is reached.

Problem remedy
The indicator light **664** does not light up?
Pin point is not reached.
▶ Deflect the master switch **400** (MS2) in direction Y- (to the rear) or in direction Y+ (to the front) until the indicator light **664** lights up.

LWE/ab Muli 010/24201-02-02/en

copyright © Liebherr-Werk Ehingen GmbH 2016

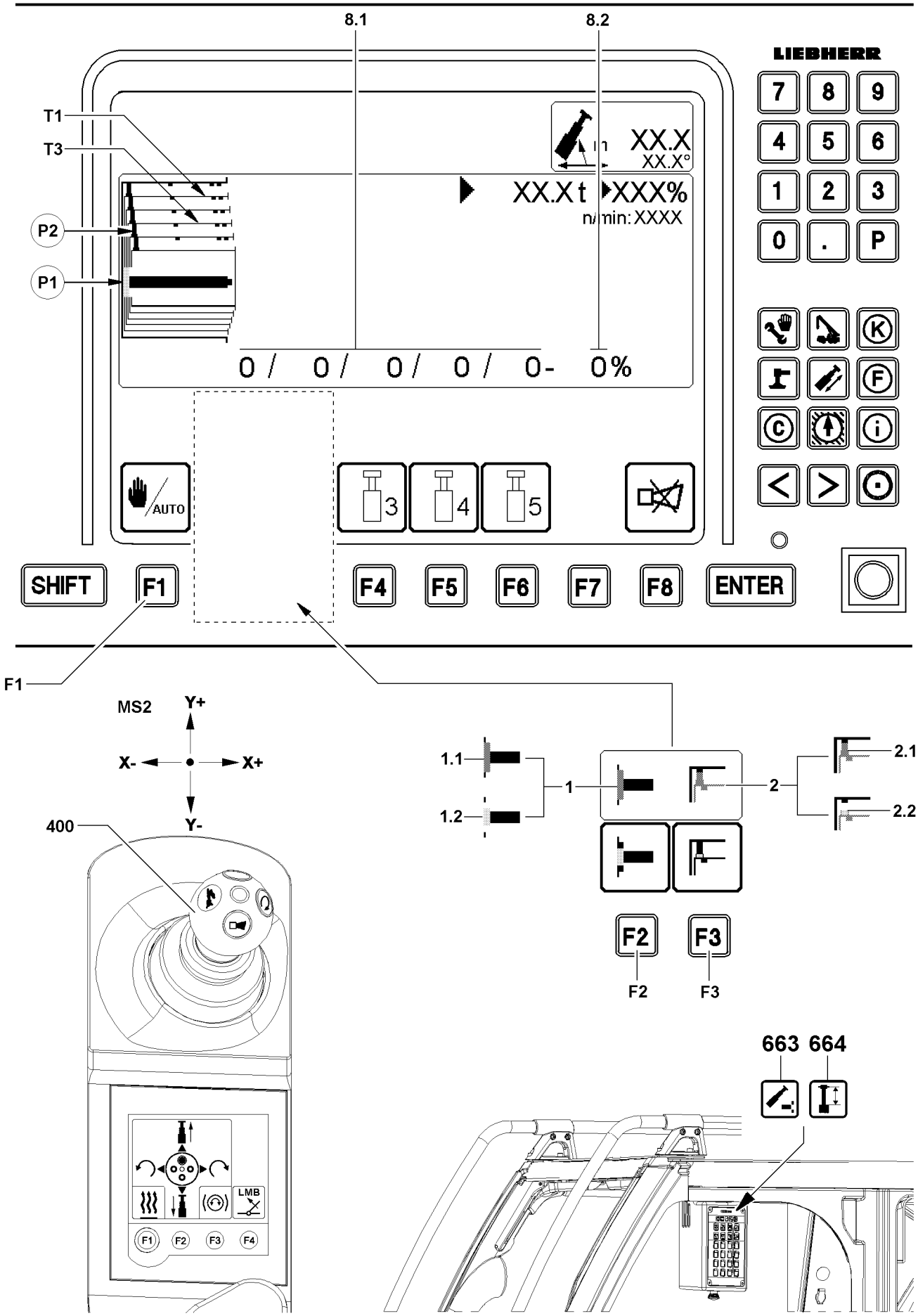

Fig.123702

LWE/ab Muli 010/24201-02-02/en

copyright © Liebherr-Werk Ehingen GmbH 2016

▶ Press the function key **F3**.

Result:

– The telescope 3 is pinned on the desired length.
– The icon **2.1** appears „green“.
– The indicator light **663** turns off.
– The indicator light **664** lights up „yellow“.

Problem remedy
Pin on point **P2** is moved out and „yellow“?
Pin is next to the pin point.
▶ Deflect the master switch **400** (MS2) in direction Y- (to the rear) or in direction Y+ (to the front) until the pin on point **P2** is moved out and is „green“.

Note
▶ All telescopic sections can be telescoped out as described above.
▶ The sequence for telescoping must always be adhered to.
▶ Example Telescope telescope 3 and telescope 4 out: Telescope telescope 4 out first and then telescope 3. Telescoping out in descending order.
▶ Example Telescope telescope 3 and telescope 4 in: Telescope telescope 3 in first and then telescope 4. Telescoping in in ascending order.

LWE/ab Muli 010/24201-02-02/en

copyright © Liebherr-Werk Ehingen GmbH 2016

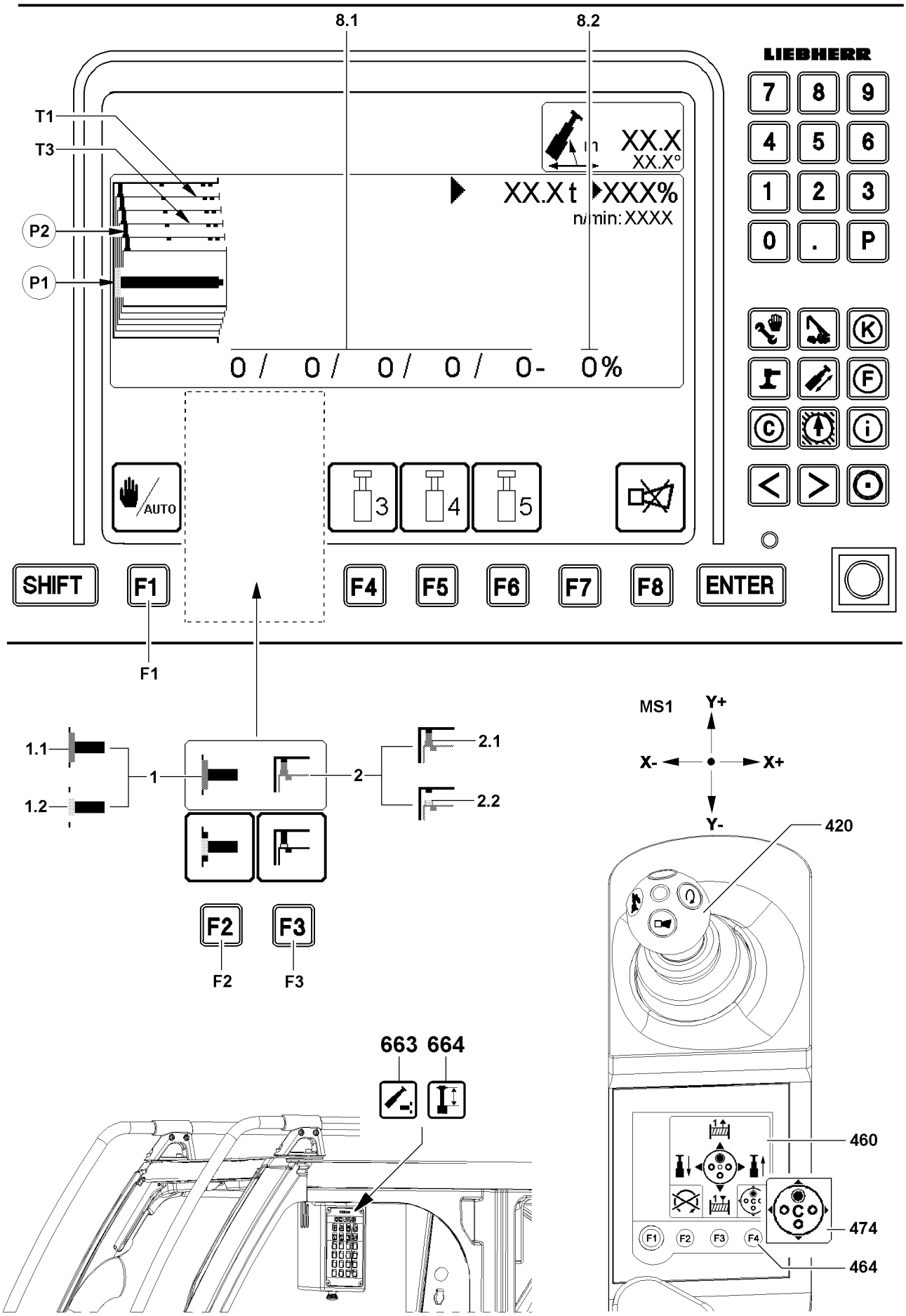

Fig.123703

LWE/ab Muli 010/24201-02-02/en

copyright © Liebherr-Werk Ehingen GmbH 2016

6.4.3 Manual telescoping on cranes with two winches

Note

- ▶ In this description is it assumed that all telescopes are retracted and telescope 1 **T1** is selected and pinned.
- ▶ As an example, the telescope 3 **T3** is to be extended and pinned.
- ▶ The master switch assignment can be selected via the function key **464**.

- Manual telescoping is activated.
- On the right touch display **460**, master switch assignment „C“ **474** is set.
- The telescoping cylinder is pinned, gripper in icon **1.1** is „green“.
- The telescope 1 **T1** is pinned, pin in icon **2.1** is „green“.
- The indicator light **664** lights up „yellow“.

▶ Press the function key **F2**.

Result:

– The icon above the function key **F2** is bordered in „red“.
– The telescoping cylinder is unpinned, gripper in icon **1.2** is „yellow“.
– Display of gripper on point **P1** is „yellow“.
– The indicator light **663** lights up „yellow“.
– The indicator light **664** lights up „yellow“.

▶ Deflect the master switch **420** (MS1) in direction X+ (to the right) and extend the telescoping cylinder until the telescope 3 **T3** on the LICCON monitor appears „green“.

Result:

– The telescope 3 **T3** is selected.
– The indicator light **663** and indicator light **664** light up „yellow“.

▶ Press the function key **F2**.

Result:

– The telescoping cylinder is pinned on telescope 3 **T3** and the gripper in icon **1.1** is „green“.
– Display of gripper on point **P1** is „green“.

Problem remedy

Display of gripper on point **P1** is „yellow“?
Gripper is not in position.

▶ Deflect the master switch **420** (MS1) carefully in direction X- (to the left) or in direction X+ (to the right) until the display of the gripper on point **P1** is „green“.

LWE/ab Muli 010/24201-02-02/en

copyright © Liebherr-Werk Ehingen GmbH 2016

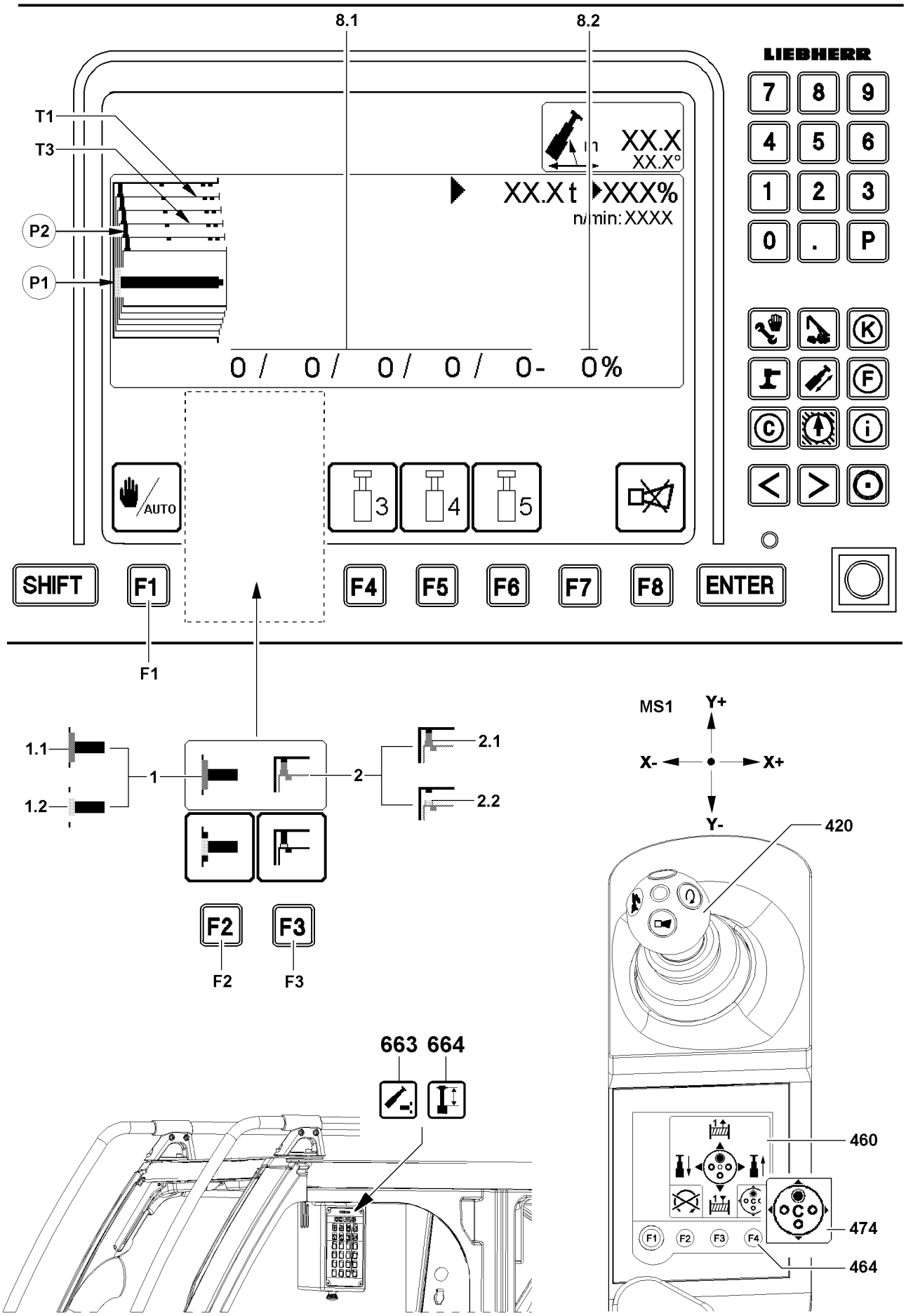

Fig.123703

LWE/ab Muli 010/24201-02-02/en

copyright © Liebherr-Werk Ehingen GmbH 2016

Before carrying out any other steps, make sure that the locking pin has latched in audibly.

▶ Press the function key **F3**.

Result:

– The icon above the function key **F3** is bordered in „red“.
– The telescope 3 **T3** is unpinned, pin in icon **2.2** is moved in and „yellow“.
– The indicator light **663** lights up „green“.

Problem remedy
Pin on point **P2** is moved out and „yellow“?
The pin is stuck.
▶ Deflect the master switch **420** (MS1) carefully in direction X- (to the left) or in direction X+ (to the right) until the pin in icon **2.1** is moved in and is „yellow“.

NOTICE
Danger of damaging the tele lock!
▶ Lock the telescoping cylinder in the intended pin points.
▶ The locking pins must latch in audibly.

Note
▶ Display Extension status of telescopes **8.1** ascending from left to right (T1...T5) in percentages. Pin points are at 0 %, 42 %, 92 % and 100 %.
▶ Display Extension status Telescoping cylinder **8.2** in percentages.
▶ Pin points can also be accessed easily via the graphic illustration in the LICCON monitor.

▶ Deflect the master switch **420** (MS1) carefully in direction X+ (to the right) and telescope the telescope 3 **T3** out to the desired length.

Result:

– The indicator light **664** lights up „yellow“ when a pin point is reached.

Problem remedy
The indicator light **664** does not light up?
Pin point is not reached.
▶ Deflect the master switch **420** (MS1) carefully in direction X- (to the left) or in direction X+ (to the right) until the indicator light **664** lights up.

LWE/ab Muli 010/24201-02-02/en

copyright © Liebherr-Werk Ehingen GmbH 2016

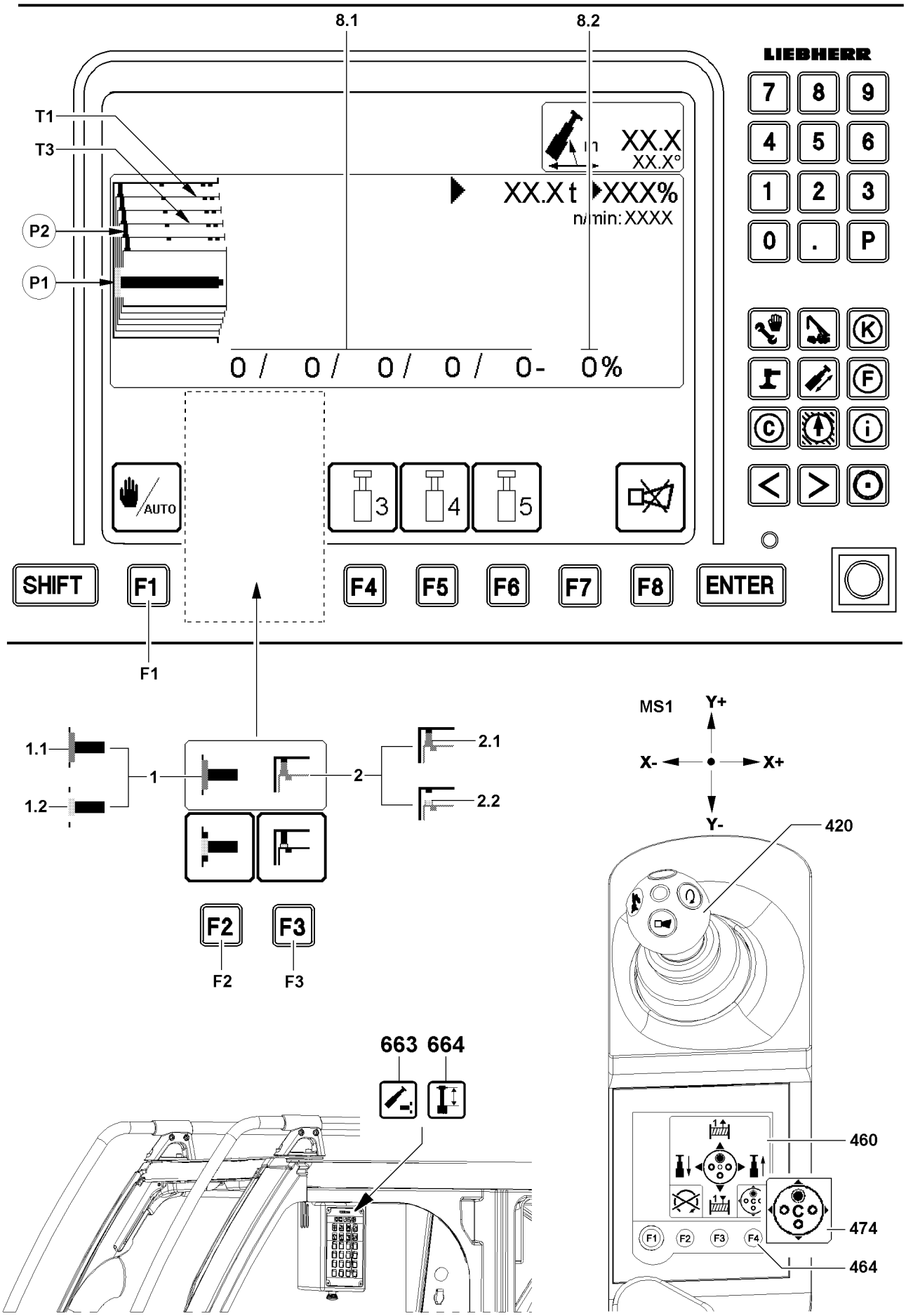

Fig.123703

LWE/ab Muli 010/24201-02-02/en

copyright © Liebherr-Werk Ehingen GmbH 2016

▶ Press the function key **F3**.

Result:

– The telescope 3 is pinned on the desired length.
– The icon **2.1** appears „green“.
– The indicator light **663** turns off.
– The indicator light **664** lights up „green“.

Problem remedy
Pin on point **P2** is moved out and „yellow“?
Pin is next to the pin point.
▶ Deflect the master switch **420** (MS1) carefully in direction X- (to the left) or in direction X+ (to the right) until the pin on point **P2** is moved out and is „green“.

Note
▶ All telescopic sections can be telescoped out as described above.
▶ The sequence for telescoping must always be adhered to.
▶ Example Telescope telescope 3 and telescope 4 out: Telescope telescope 4 out first and then telescope 3. Telescoping out in descending order.
▶ Example Telescope telescope 3 and telescope 4 in: Telescope telescope 3 in first and then telescope 4. Telescoping in in ascending order.

LWE/ab Muli 010/24201-02-02/en

copyright © Liebherr-Werk Ehingen GmbH 2016

Empty page!

copyright © Liebherr-Werk Ehingen GmbH 2016

4.06 Rope reeving

1	Wire ropes and rope end connections	3
2	Hoist rope lug*	3
3	Moveable back pulley*	7
4	Reeving the hoist rope	8
5	Reeving the hook block in and out	13
6	Attaching and removing the load hook*	16
7	Attaching / removing the hoist limit switch weight	19
8	Assembling / disassembling the wedge lock	21
9	Auxiliary block* on telescopic boom	23
10	Rope reeving	24

LWE/ab Muli 010/24201-02-02/en

copyright © Liebherr-Werk Ehingen GmbH 2016

LWE/ab Muli 010/24201-02-02/en

Fig.195219

copyright © Liebherr-Werk Ehingen GmbH 2016

1 Wire ropes and rope end connections

1.1 Wire ropes

Check if a **rotating resistant** or a **non-rotating** rope is required for the application. The selected type of rope then requires the corresponding rope end connections, see Crane operating instructions, chapter 8.04.

Note

▶ Correct choice and use of the wire rope and the rope end connections are a decisive precondition for proper and accident-free crane operation.

DANGER

Incorrect rope type!

Danger of severe injuries to personnel and property damage.

▶ **Never** use rotation-resistant ropes with a rotating rope end connection.

▶ **Never** install a twist compensator / swivel.

1.2 Rope end connections

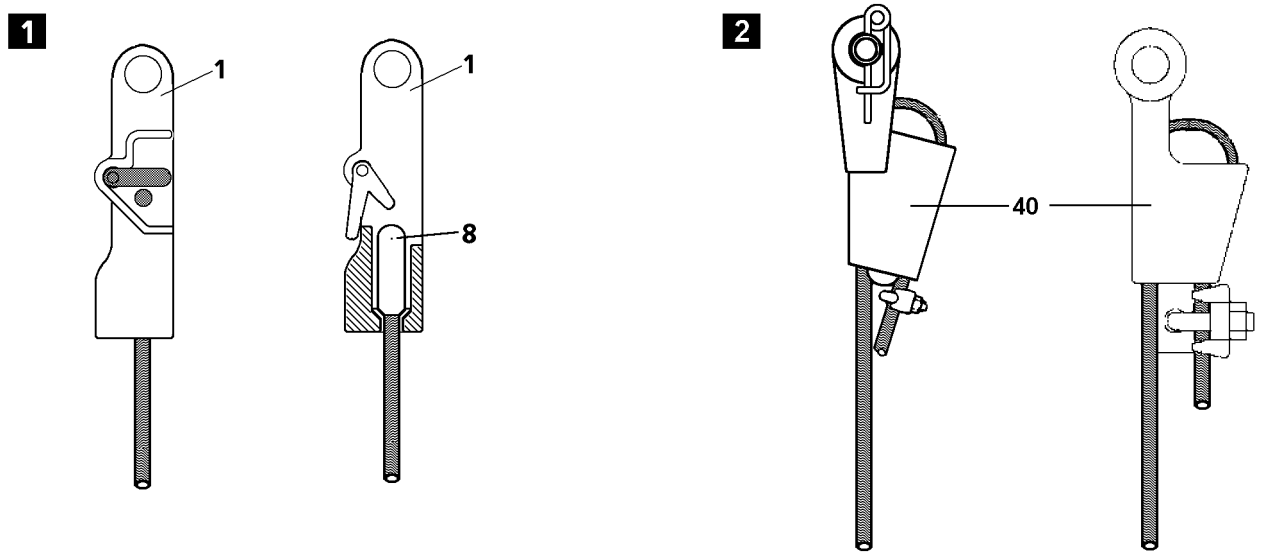

Fig.122724: Rope end connections

Rope end connections are grouped into:

- Rope end connections with rope clamp **8**
  For that, use a rope lock **1**, see illustration **1**
- Rope end connections without rope clamp
  For that, use a wedge lock **40**, see illustration **2**

2 Hoist rope lug*

If a hoist rope lug **30** is installed on the telescopic boom, then the hoist rope **31** is guided through the hoist rope lug **30**. Depending on the operating mode, the hoist rope **31** must be reeved through the hoist rope lug **30** or over the hoist rope lug **30**.

On the LTM 1400/1and LTM 1400-7.1 the hoist rope **31** must be reeved on the hoist rope lug **30** according to the Crane operating instructions, chapter 4.06.10.

LWE/ab Muli 010/24201-02-02/en

copyright © Liebherr-Werk Ehingen GmbH 2016

NOTICE
Incorrect reeving!
Damage of hoist rope.

On the LTM 1400/1 and LTM 1400-7.1:
▶ Reeve the hoist rope **31** on the hoist rope lug **30** according to the Crane operating instructions, chapter 4.06.10.

2.1 Hoist rope guide on telescopic boom

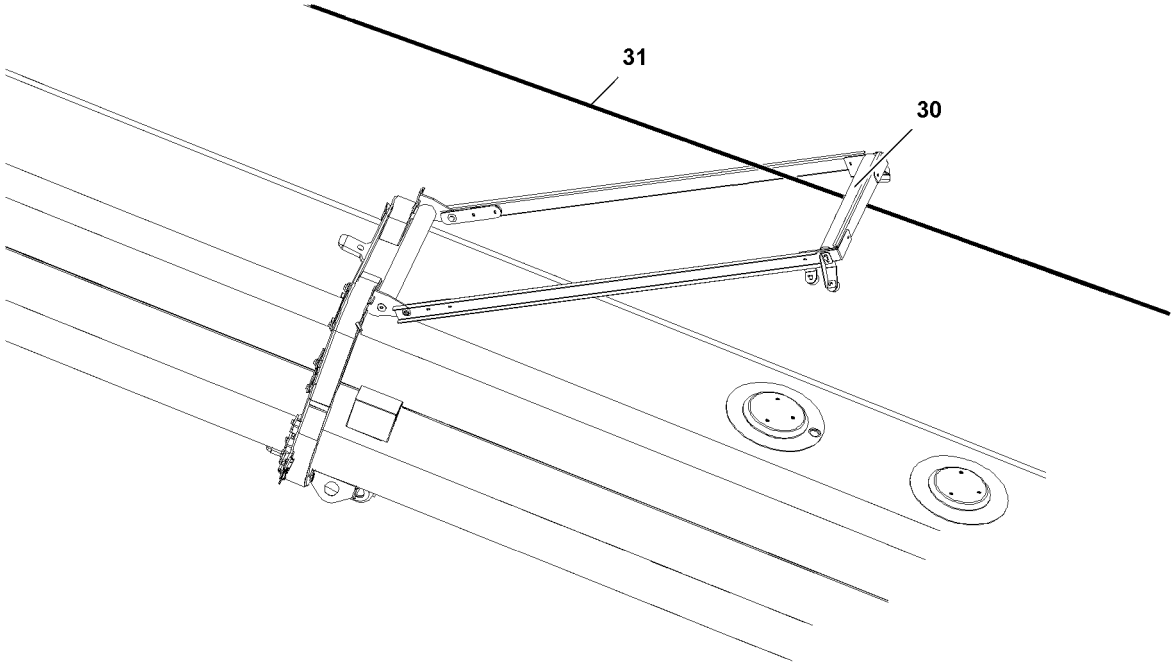

*Fig.121112: Hoist rope routing under the hoist rope lug **30***

When a hoist rope lug is installed on the telescopic boom:
▶ Reeve the hoist rope **31** under the hoist rope lug **30**.

copyright © Liebherr-Werk Ehingen GmbH 2016

2.2 Hoist rope routing Folding jib / fixed lattice jib

2.2.1 Hoist rope routing with one hoist rope

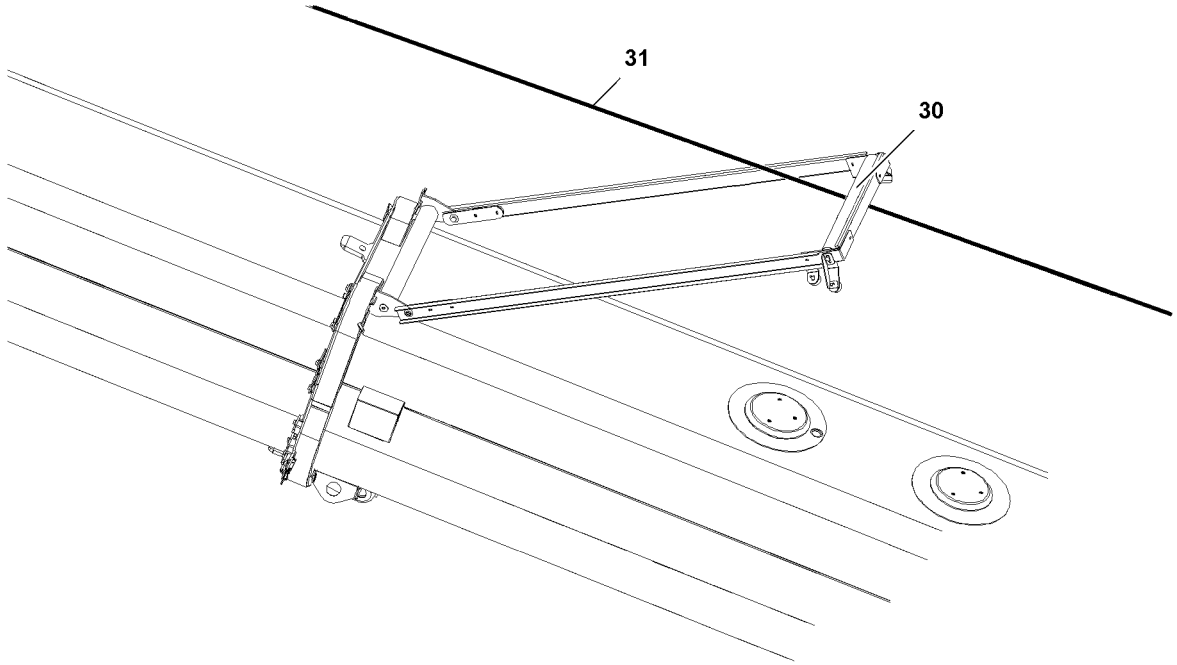

*Fig.122742: Hoist rope routing under the hoist rope lug **30***

When a hoist rope lug is installed on the telescopic boom:
▶ Reeve the hoist rope **31** under the hoist rope lug **30**.

2.2.2 Hoist rope routing with two hoist ropes

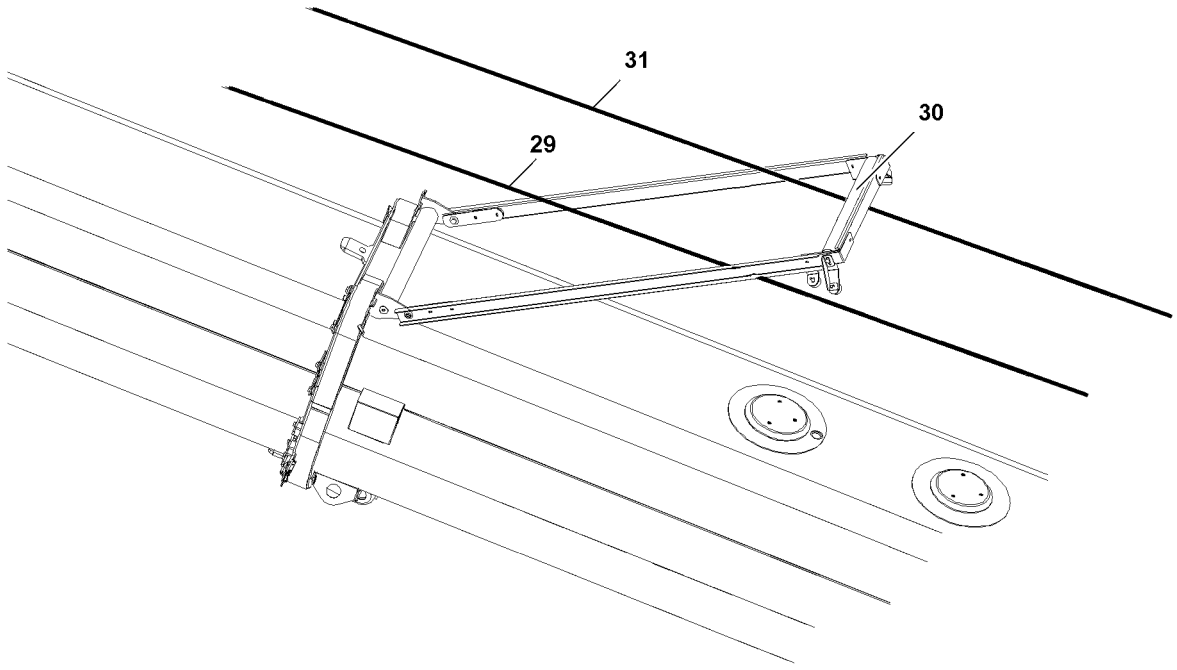

*Fig.122743: Hoist rope routing under the hoist rope lug **30***

LWE/ab Muli 010/24201-02-02/en

copyright © Liebherr-Werk Ehingen GmbH 2016

When a hoist rope lug is installed on the telescopic boom:
▶ Reeve the hoist rope **29** and hoist rope **31** under the hoist rope lug **30**.

2.3 Hoist rope routing for operation with luffing lattice jib

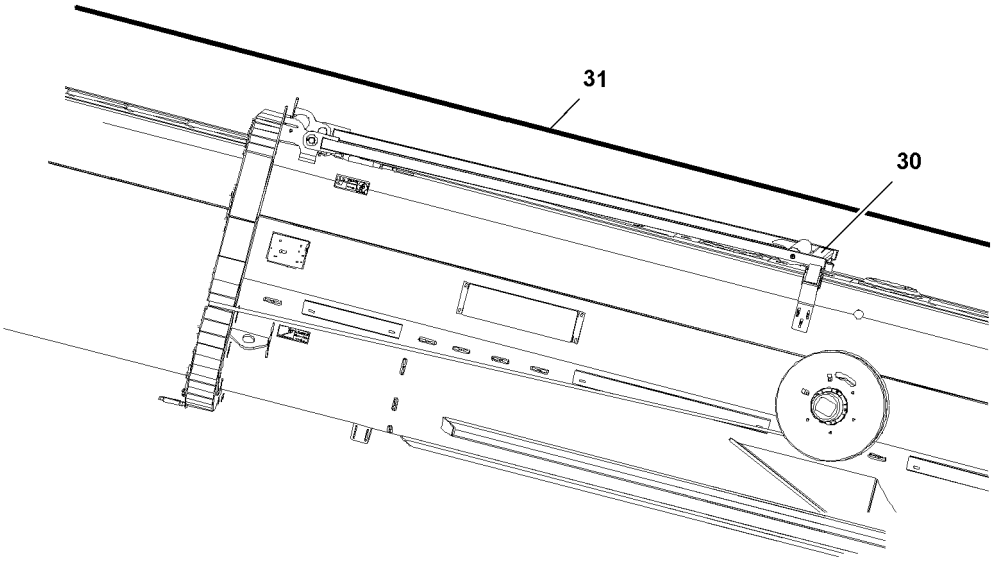

*Fig.121113: Hoist rope routing over the hoist rope lug **30***

For operation with luffing lattice jib:
▶ Reeve the hoist rope **31** over the hoist rope lug **30**.

copyright © Liebherr-Werk Ehingen GmbH 2016

3 Moveable back pulley*

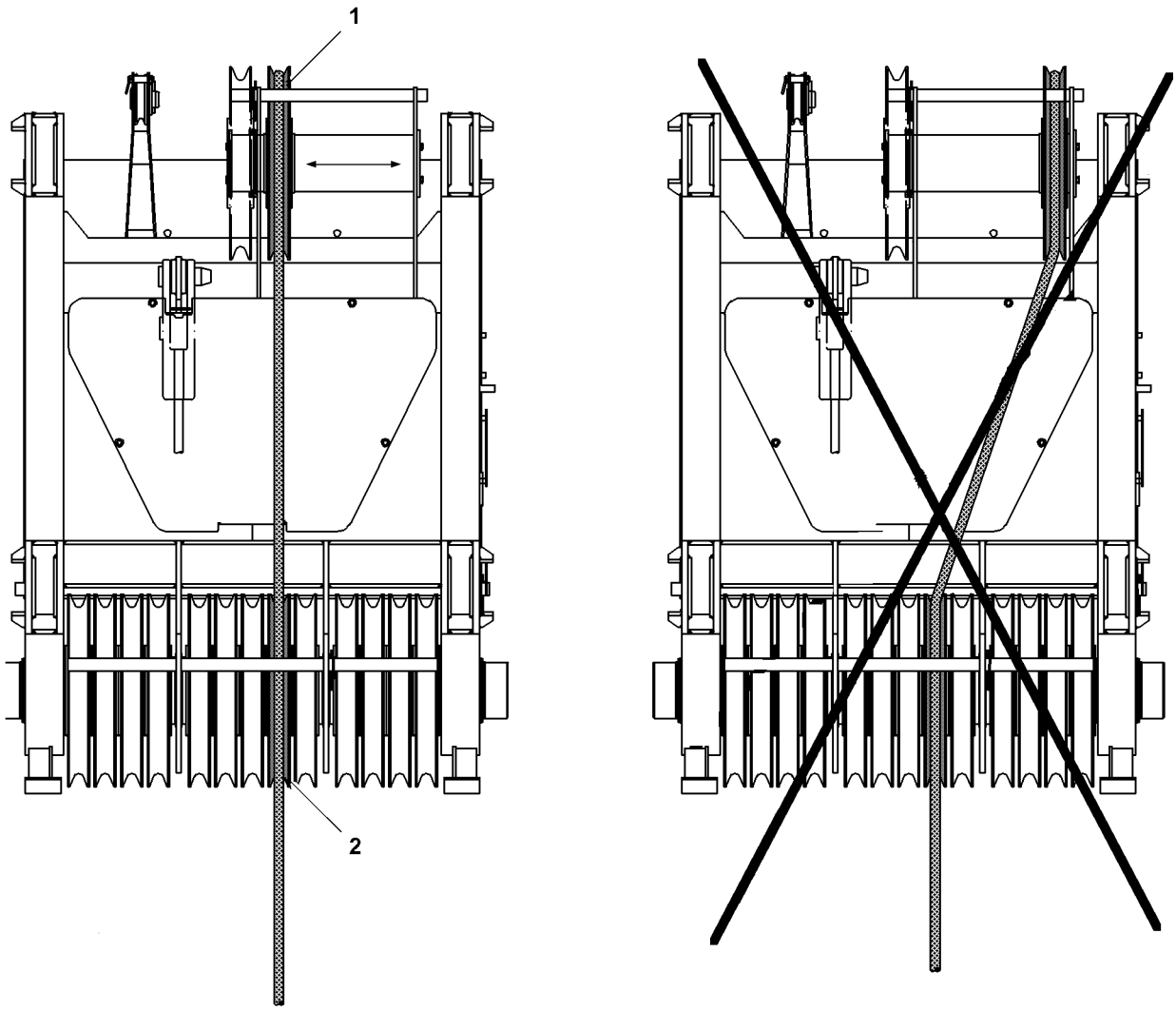

Fig.122732: Boom head with moveable back pulley

If a moveable back pulley **1** is installed on the crane, then it must be aligned before reeving.

3.1 Aligning the moveable back pulley

NOTICE
Angular pull of hoist rope!
Damage of moveable back pulley.

▶ Move the moveable back pulley **1** on the side in such a way that the moveable back pulley **1** aligns to the run-in pulley **2**.

▶ Align the moveable back pulley **1** to the run-in pulley **2**.

copyright © Liebherr-Werk Ehingen GmbH 2016

4 Reeving the hoist rope

WARNING
Slipping at assembly work!
Danger of falling.
Death, severe injury, property damage.

- ▶ The telescopic boom may only be accessed if the assembly personnel is protected with suitable safety measures to prevent them from falling.
- ▶ If retaining ropes are present on the telescopic boom, then the assembly personnel must hang an approved fall arrest system to the retaining ropes of the telescopic boom on the left and right with both snap hooks and secure themselves in case of falls.
- ▶ Without appropriate safety measures, it is **strictly** prohibited to step on the telescopic boom.
- ▶ If railings are present for the crane, then they must be brought into the corresponding position and secured for assembly / disassembly.
- ▶ Carry out all assembly work from a safe location.
- ▶ Observe the assembly guidelines in the Crane operating instructions, chapter 5.01.

Make sure that the following prerequisites are met:

- The crane is properly supported and horizontally aligned.
- The counterweight is installed according to the load chart.
- The LICCON overload protection has been set according to the load chart.
- The telescopic boom is fully telescoped in.
- The telescopic boom has been swung to the rear or the side.
- The telescopic boom is luffed down in 0° position.

LWE/ab Muli 010/24201-02-02/en

copyright © Liebherr-Werk Ehingen GmbH 2016

4.1 Reeving the hoist rope with the auxiliary reeving rope

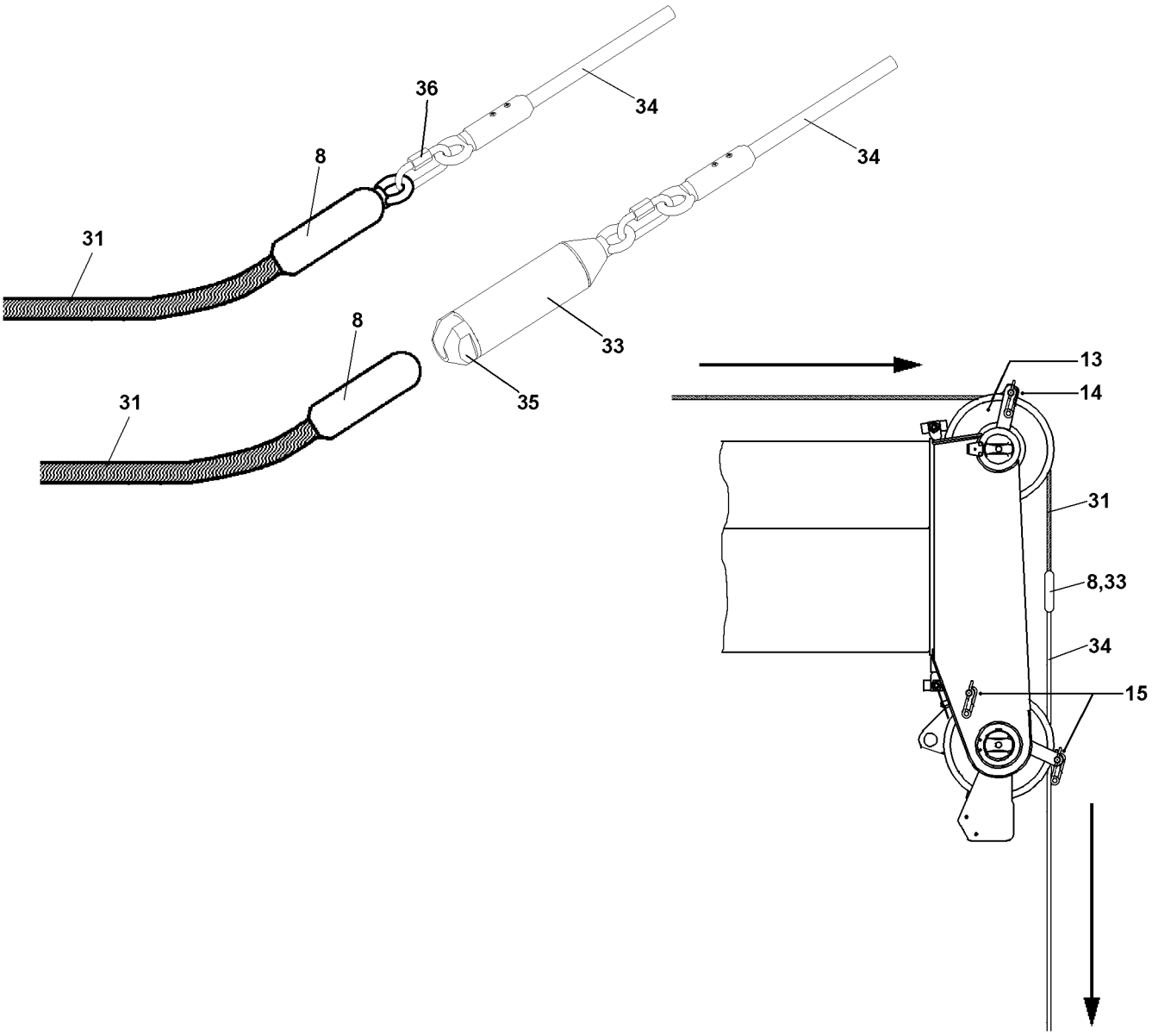

*Fig.122725: Reeving with auxiliary reeving rope **34***

- ▶ Wear the approved fall arrest system and protective equipment.
- ▶ Install the hook device on the ladder, see Crane operating instructions, Chapter 2.06.

WARNING
Ladder **not** properly hooked!
Danger of falling.
- ▶ Hang the ladder in such a way onto the hoist gear and on the telescopic boom that it cannot fall over.

If **no** railing is installed on the crane superstructure:
- ▶ Hang in the ladder on the hoist gear and set it up securely.

If a railing is installed on the crane superstructure:
- ▶ Set the railing on the crane superstructure into assembly / disassembly position and secure, see Crane operating instructions, chapter 2.06.
- ▶ Secure the assembly personnel from falling: Hook the assembly personnel with fall arrest system on the respective fastening points.

copyright © Liebherr-Werk Ehingen GmbH 2016

When **a** intake sleeve **33** is installed on the auxiliary reeving rope **34**:

▶ Connect the auxiliary reeving rope **34** with the hoist rope **31**: Slide the intake sleeve **33** onto the locking clamp **8** and close off with the sleeve plug **35**.

When **no** intake sleeve **33** is installed on the auxiliary reeving rope **34**:

▶ Connect the auxiliary reeving rope **34** with the hoist rope **31**: Open the chain lock **36**, connect it with the eyehook of the lock clamp **8** and close the chain lock **36**.
▶ Place the auxiliary reeving rope **34** forward over the pulley head.
▶ Hang in the ladder on the telescopic boom and set it up securely.
▶ Secure the assembly personnel from falling: Hook the assembly personnel with fall arrest system on the respective fastening points.
▶ Remove the rope retaining pipe **14** and rope retaining pipe **15** on the pulley head.
▶ Place the auxiliary reeving rope **34** over the upper rope pulley **13**.

NOTICE
Hoist rope tension too low!
Slack rope formation.

▶ Permit no slack rope on the hoist winch and the assembly winch.

▶ Slowly spool out the winch by deflecting the master switch and pull the auxiliary reeving rope **34** with the hoist rope **31** over the upper rope pulley **13**.
▶ Detach the auxiliary reeving rope **34** on the hoist rope **31** and reeve the hoist rope **31** into the hook block.
▶ Insert and secure the rope retaining pipe **14** and the rope retaining pipe **15** on the pulley head.

LWE/ab Muli 010/24201-02-02/en

copyright © Liebherr-Werk Ehingen GmbH 2016

4.2 Reeving in the hoist rope with the assembly winch*

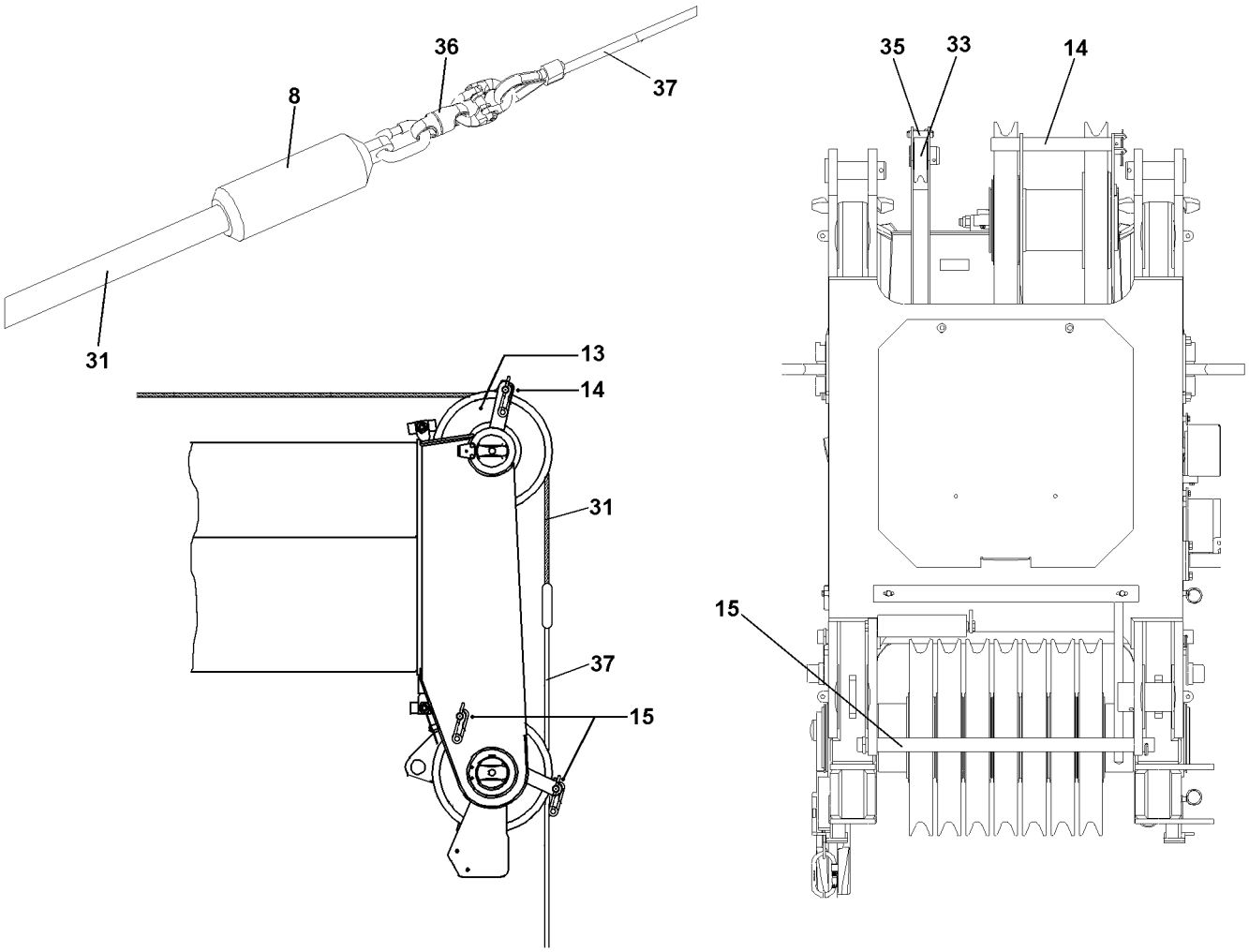

Fig.122731: Reeving with assembly winch

- ▶ Wear the approved fall arrest system and protective equipment.
- ▶ Install the hook device on the ladder, see Crane operating instructions, Chapter 2.06.

WARNING
Ladder **not** properly hooked!
Danger of falling.
- ▶ Hang the ladder in such a way onto the hoist gear and on the telescopic boom that it cannot fall over.

If **no** railing is installed on the crane superstructure:
- ▶ Hang in the ladder on the hoist gear and set it up securely.

If a railing is installed on the crane superstructure:
- ▶ Set the railing on the crane superstructure into assembly / disassembly position and secure, see Crane operating instructions, chapter 2.06.
- ▶ Switch the assembly winch to freewheel.
- ▶ Pull the auxiliary rope **37** forward to the change over pulley **33**.
- ▶ Remove the rope retaining pipe **35**, rope retaining pipe **14** and rope retaining pipe **15**.
- ▶ Place the auxiliary rope **37** over the change over pulley **33**.
- ▶ Pin the rope retaining pipe **35** and secure.
- ▶ Reeve in the auxiliary rope **37** in the reverse direction between the hook block and the pulley head.
- ▶ Connect the auxiliary rope **37** with the auxiliary reeving rope (hemp rope).

LWE/ab Muli 010/24201-02-02/en

copyright © Liebherr-Werk Ehingen GmbH 2016

- ▶ Bring the auxiliary rope **37** with the auxiliary reeving rope (hemp rope) over the rope pulley **13** upward.
- ▶ Release the auxiliary reeving rope (hemp rope) from the auxiliary rope **37**.
- ▶ Pull the auxiliary rope **37** to the rear to the hoist winch.
- ▶ Connect the auxiliary rope **37** with the hoist rope **31**: Open the connector link **36**, connect it with the eyehook of the lock clamp **8** and close the connector link **36**.
- ▶ Turn the freewheel off on the assembly winch.

NOTICE
Hoist rope tension too low!
Slack rope formation.
- ▶ Permit no slack rope on the hoist winch and the assembly winch.

- ▶ Reeve in the hoist rope **31**: Spool the hoist rope **31** from the hoist winch and simultaneously spool up the auxiliary rope **37** on the assembly winch.
- ▶ Remove the rope retaining pipe **35**.
- ▶ Release the auxiliary rope **37** from the hoist rope **31** and spool up.
- ▶ Pin and secure the rope retaining pipe **35**, the rope retaining pipe **14** and the rope retaining pipe **15**.

LWE/ab Muli 010/24201-02-02/en

copyright © Liebherr-Werk Ehingen GmbH 2016

5 Reeving the hook block in and out

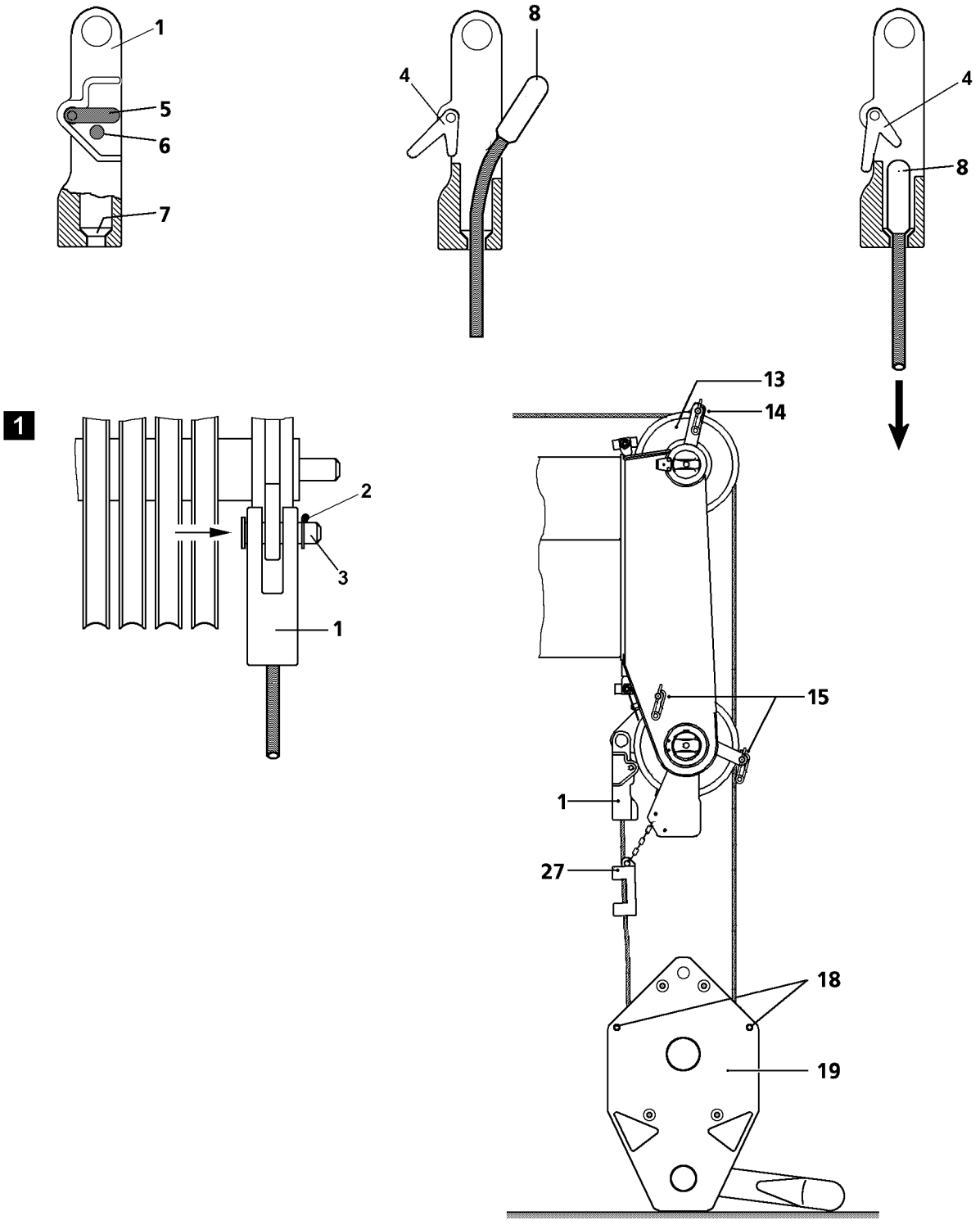

Fig.122726: Details Reeving Hook block

LWE/ab Muli 010/24201-02-02/en

copyright © Liebherr-Werk Ehingen GmbH 2016

5.1 Reeving in the hook block

5.1.1 Preparing the hook block

Make sure that the following prerequisites are met:
- The crane is aligned in horizontal direction.
- The hook block is set down on the ground properly.
- The boom is luffed down to the point where the pulley head is above the hook block.
- An assistant is present to guide the hoist rope.

NOTICE
Hook block incorrectly reeved!
Damage to the hoist rope.
- ▶ Always carry out the reeving of the hoist rope according to the reeving plan.
- ▶ The rope fixed point on the hook block is to be selected in such a way that the last strand runs parallel to the remaining rope strands, as much as possible.

- ▶ Set the required hook block under the boom head.
- ▶ At the hook block **19**, remove the spring retainers **18** for both rope retaining tubes and pull them both out.

WARNING
Slipping at assembly work!
Danger of falling.
Death, severe injuries, property damage.
- ▶ The telescopic boom may only be accessed if the assembly personnel is protected with suitable safety measures to prevent them from falling.
- ▶ If retaining ropes are present on the telescopic boom, then the assembly personnel must hang an approved fall arrest system to the retaining ropes of the telescopic boom on the left and right with both snap hooks and secure themselves in case of falls.
- ▶ Without appropriate safety measures, it is **strictly** prohibited to step on the telescopic boom.
- ▶ If railings are present for the crane, then they must be brought into the corresponding position and secured for assembly / disassembly.
- ▶ Carry out all assembly work from a safe location.
- ▶ Observe the assembly guidelines in the Crane operating instructions, chapter 5.01.

- ▶ Reeve the hook block.
- ▶ Insert the rope retaining pipes again and secure with spring retainers.

5.1.2 Hook the hoist rope on the rope lock

NOTICE
Hoist rope is incorrectly installed!
Damage to the hoist rope.
- ▶ Always insert the pins **3** from „inside to outside“ and secure from the outside, see fig. **1**.

- ▶ The rope lock **1** must be pinned in either at the pulley head or on the hook block and secured with linch pins **2**, depending on reeving.
- ▶ On the rope lock **1**, push the retaining pin **6** in.
- ▶ Swing the lever **5** „down“ and hold it in this position.

Result:

- The latch **4** will be swivelled „downward“.

- ▶ Attach the rope end with the locking clamp **8** in the rope lock **1** and pull „down“ firmly (in direction of arrow), until the locking clamp **8** is touching in the cone **7**.

LWE/ab Muli 010/24201-02-02/en

copyright © Liebherr-Werk Ehingen GmbH 2016

WARNING
Locking clamp is incorrectly installed!
Danger of accident.
Death, severe injuries, property damage.
▶ The locking clamp **8** must touch on the cone **7** after hanging it into the rope lock **1** and must be secured by the latch **4**.

▶ Release the lever **5**.

Result:

– The lever **5** returns to the initial position and is locked by the retaining pin **6**.

▶ Check the rope retainer. Visual check.

5.2 Unreeving the hook block

Make sure that the following prerequisites are met:
– The crane is properly supported and horizontally aligned.
– The counterweight is installed according to the load chart.
– The LICCON overload protection has been set according to the load chart.
– The telescopic boom is fully telescoped in.
– The telescopic boom has been swung to the rear or the side.
– The telescopic boom is luffed down in 0° position.
– The ground is level and of sufficient load bearing capacity.

5.2.1 Lowering the hook block

WARNING
Crushing of hands!
When unreeving the hook block, it can topple over.
Death, severe injury, property damage.
▶ Use the handles in the safe area of the hook block.
▶ Make sure the hook block is safely positioned.

▶ Lower the hook block and set it on the ground.
▶ Remove the hoist limit switch weight.

5.2.2 Detaching the hoist rope

▶ On the rope lock **1**, push the retaining pin **6** in.
▶ Swing the lever **5** „down“ and hold it in this position.

Result:

– The latch **4** will be swivelled downward.
– The locking clamp **8** is released.

▶ Push the hoist rope up and detach the locking clamp **8**.
▶ Release and unpin the rope retaining pipe on the hook block.
▶ Unreeve the hoist rope from the hook block and the pulley head.
▶ Insert the rope retaining pipes again and secure with spring retainers.

LWE/ab Muli 010/24201-02-02/en

copyright © Liebherr-Werk Ehingen GmbH 2016

6 Attaching and removing the load hook*

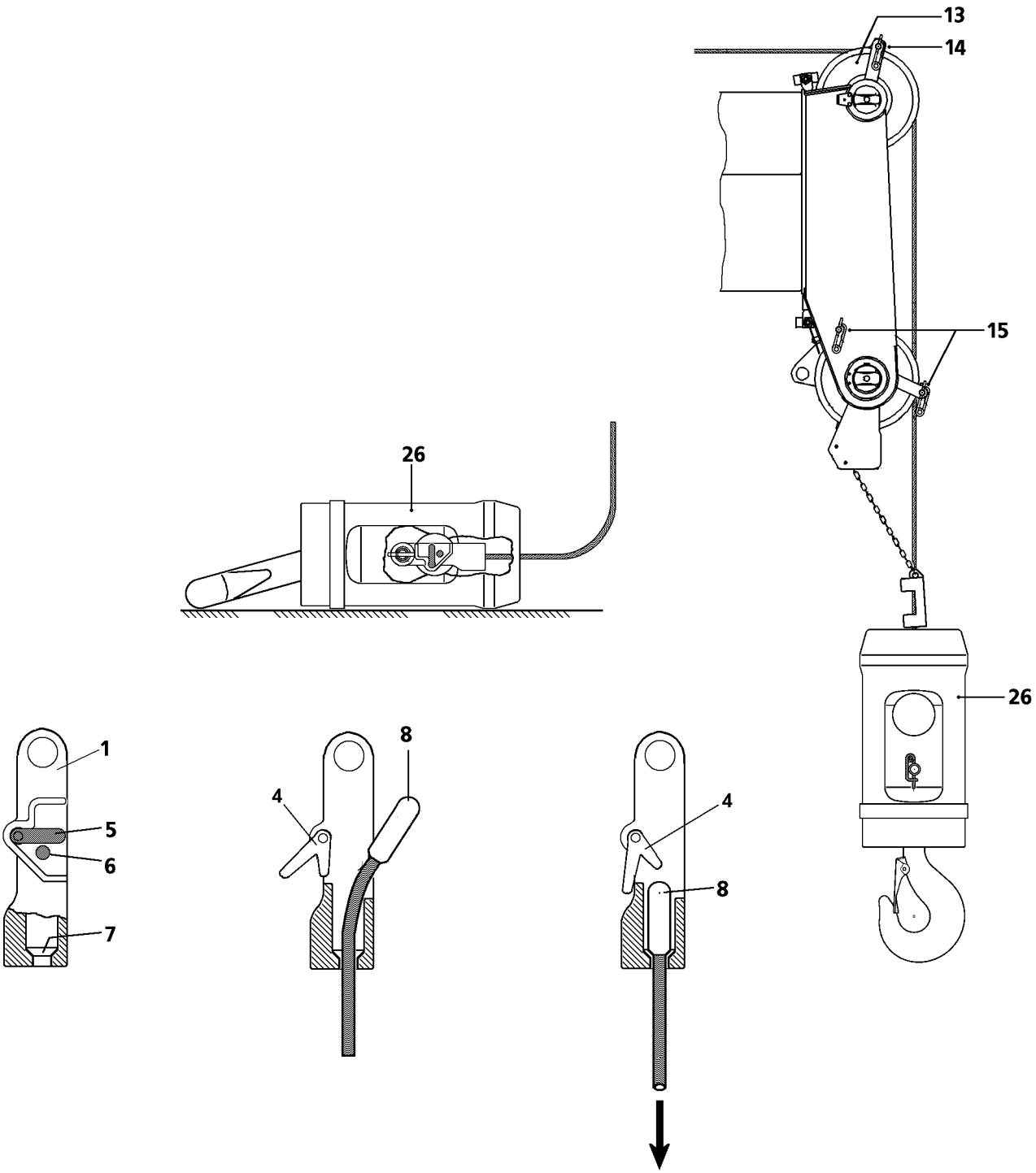

Fig.122727: Fastening load hook

6.1 Fastening the load hook*

6.1.1 Assembling the load hook*

▶ Place the load hook under the pulley head of the boom.

LWE/ab Muli 010/24201-02-02/en

copyright © Liebherr-Werk Ehingen GmbH 2016

▶ Release and unpin the rope retaining pipes on the back pulley and on the pulley head.

WARNING
Slipping at assembly work!
Danger of falling.
Death, severe injuries, property damage.
▶ The telescopic boom may only be accessed if the assembly personnel is protected with suitable safety measures to prevent them from falling.
▶ If retaining ropes are present on the telescopic boom, then the assembly personnel must hang an approved fall arrest system to the retaining ropes of the telescopic boom on the left and right with both snap hooks and secure themselves in case of falls.
▶ Without appropriate safety measures, it is **strictly** prohibited to step on the telescopic boom.
▶ If railings are present for the crane, then they must be brought into the corresponding position and secured for assembly / disassembly.
▶ Carry out all assembly work from a safe location.
▶ Observe the assembly guidelines in the Crane operating instructions, chapter 5.01.

▶ Place the hoist rope over the back pulley on the boom head.
▶ Insert the rope retaining pipes again and secure with spring retainers.
▶ Pin the rope lock **1** in the load hook **26** and secure with spring retainers.

6.1.2 Fastening the hoist rope

▶ On the rope lock **1**, push the retaining pin **6** in.
▶ Swing the lever **5** „down“ and hold it in this position.

Result:

– The latch **4** will be swivelled „downward“.

▶ Attach the rope end with the locking clamp **8** in the rope lock and pull the rope firmly „downward“ (in direction of arrow), until the locking clamp **8** is placed in the cone **7**.

WARNING
Locking clamp is incorrectly fastened!
Damage to locking clamp.
Death, severe injuries, property damage
▶ The locking clamp **8** must touch on the cone **7** after hanging it into the rope lock **1** and must be secured by the latch **4**.

▶ Release the lever **5**.

Result:

– The lever **5** returns to the initial position and is locked by the retaining pin **6**.

6.2 Removing the load hook*

Make sure that the following prerequisites are met:
– The crane is properly supported and horizontally aligned.
– The counterweight is installed according to the load chart.
– The LICCON overload protection has been set according to the load chart.
– The telescopic boom is fully telescoped in.
– The telescopic boom has been swung to the rear or the side.
– The telescopic boom is luffed down in 0° position.
– The ground is level and of sufficient load bearing capacity.

LWE/ab Muli 010/24201-02-02/en

copyright © Liebherr-Werk Ehingen GmbH 2016

6.2.1 Lowering the load hook

WARNING
Crushing of hands!
When unreeving the hook block, it can topple over.
Death, severe injury, property damage.
- ▶ Use the handles in the safe area of the hook block.
- ▶ Make sure the hook block is safely positioned.

- ▶ Place the load hook **26** on the ground.
- ▶ Remove the hoist limit switch weight.

6.2.2 Detaching the hoist rope

- ▶ Push the retaining pin **6** into the rope lock **1**, move the lever **5** sideways and hold it in this position.

Result:

– The latch **4** is moved to the side and the locking clamp **8** is released.

- ▶ Push the hoist rope in the direction of the load hook and detach the locking clamp **8**.
- ▶ Remove the rope retaining pipes on the pulley head and on the back pulley.
- ▶ Lift the hoist rope from the rope pulleys.
- ▶ Insert the rope retaining pipes again and secure with spring retainers.

LWE/ab Muli 010/24201-02-02/en

copyright © Liebherr-Werk Ehingen GmbH 2016

7 Attaching / removing the hoist limit switch weight

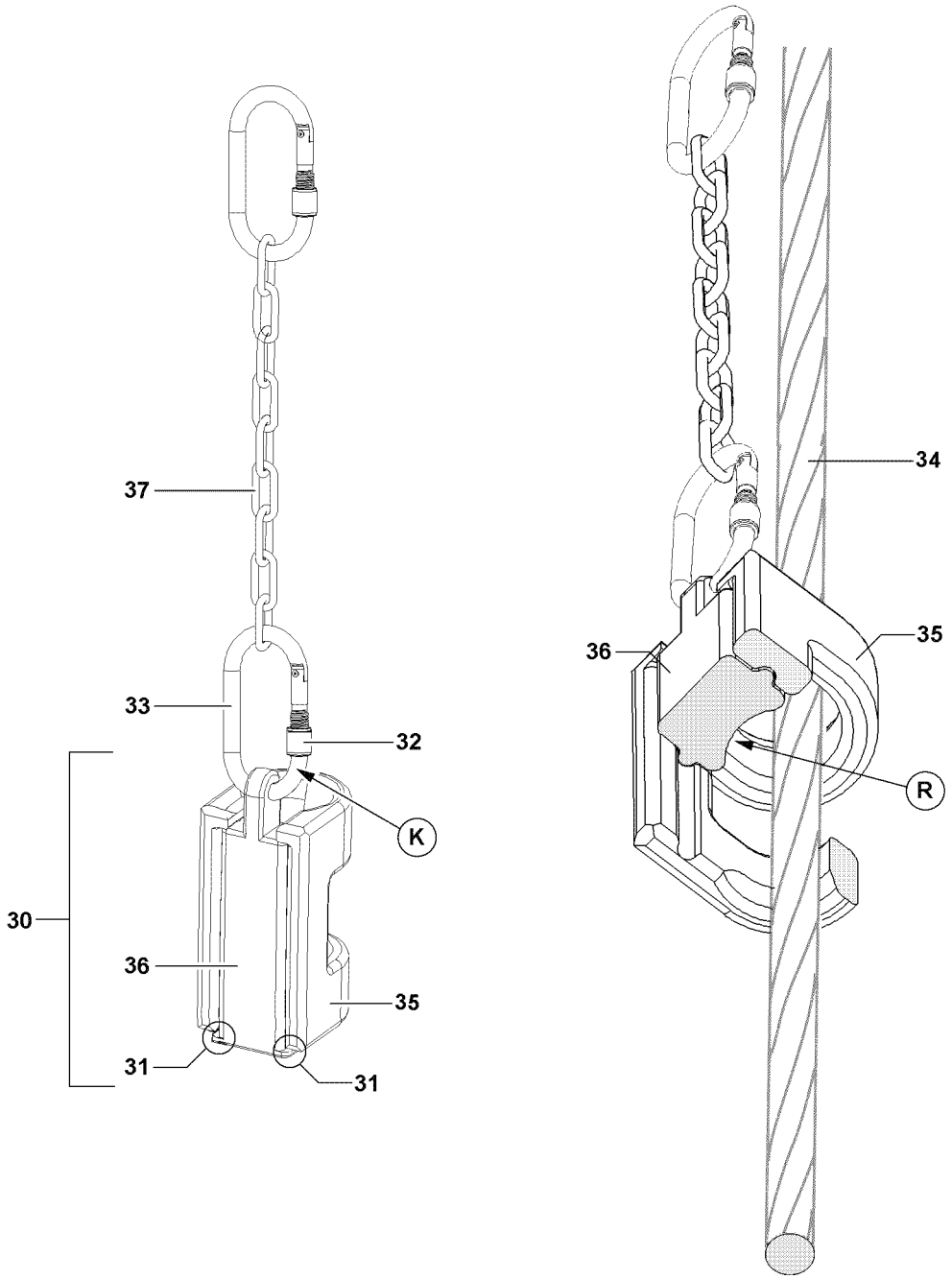

Fig.122728: Details Hoist limit switch weight

7.1 Attaching the hoist limit switch weight

The hoist limit switch weight **30** consists of two parts, which are pushed into each other:
- The weight **35**
- The carrier section **36**

▶ Loosen and open the screw retainer **32**.

LWE/ab Muli 010/24201-02-02/en

copyright © Liebherr-Werk Ehingen GmbH 2016

WARNING
Hoist limit switch weight is incorrectly installed!
Hoist limit switch weight can fall down. Death, severe injuries.
- ▶ Do not replace the snap hook **33** with other parts, such as a shackle or similar.
- ▶ When detaching or attaching the hoist limit switch weight **30** make sure that the weight **35** and the carrier section **36** do not fall down.
- ▶ Make sure that the curvature **R** of the carrier section **36** points to the hoist rope **34**.
- ▶ Make sure that the noses **31** of the carrier section **36** is placed on the weight **35**.
- ▶ Make sure that the screw retainer **32** can be turned to be closed from top to bottom, point **K**.

The attachment of the hoist limit switch weight **30** depends on the position of the rope fixed point.

Rope fixed point on the pulley head:
– In the event of multiple hoist rope reeving, the hoist limit switch weight **30** must always be laid around the „stationary rope strand“, in other words around the rope strand that leads directly to the cable lock.

Rope fixed point on hook block:
– The hoist limit switch weight **30** is laid around the outer strand which shows the least diagonal pull, i.e. the one with the smallest angle between the hanging hoist limit switch weight and the hoist rope.

Note
- ▶ The chain **37** must be attached in full length during crane operation and may not be shortened.

- ▶ Push the weight **35** with one hand on the hoist rope **34** and hold.
- ▶ With the other hand, guide the carrier section **36** behind the hoist rope **34** and under the weight **35**. The curvature **R** of the carrier section **36** must point to the hoist rope **34**.
- ▶ Push the weight **35** on the carrier section **36**.
- ▶ Hang in the hoist limit switch weight **30** with the carrier section **36** in the snap hook **33**.

The snap hook **33** must be secured with the screw retainer **32**.

- ▶ Close the screw retainer **32** on the snap hook **33**.

7.2 Removing the hoist limit switch weight

WARNING
Hoist limit switch weight is incorrectly installed!
Hoist limit switch weight can fall down. Death, severe injuries.
- ▶ When detaching or attaching the hoist limit switch weight **30** make sure that the weight **35** and the carrier section **36** do not fall down.
- ▶ It is prohibited to remain within the danger zone.

- ▶ Release and open the screw retainer **32** on the snap hook **33**.
- ▶ Detach the hoist limit switch weight **30** from the snap hook **33**.
- ▶ Hold the weight **35** with one hand and with the other hand, push the carrier section **36** from the weight **35**.
- ▶ Store the weight **35** and carrier section **36** safely.

LWE/ab Muli 010/24201-02-02/en

copyright © Liebherr-Werk Ehingen GmbH 2016

8 Assembling / disassembling the wedge lock

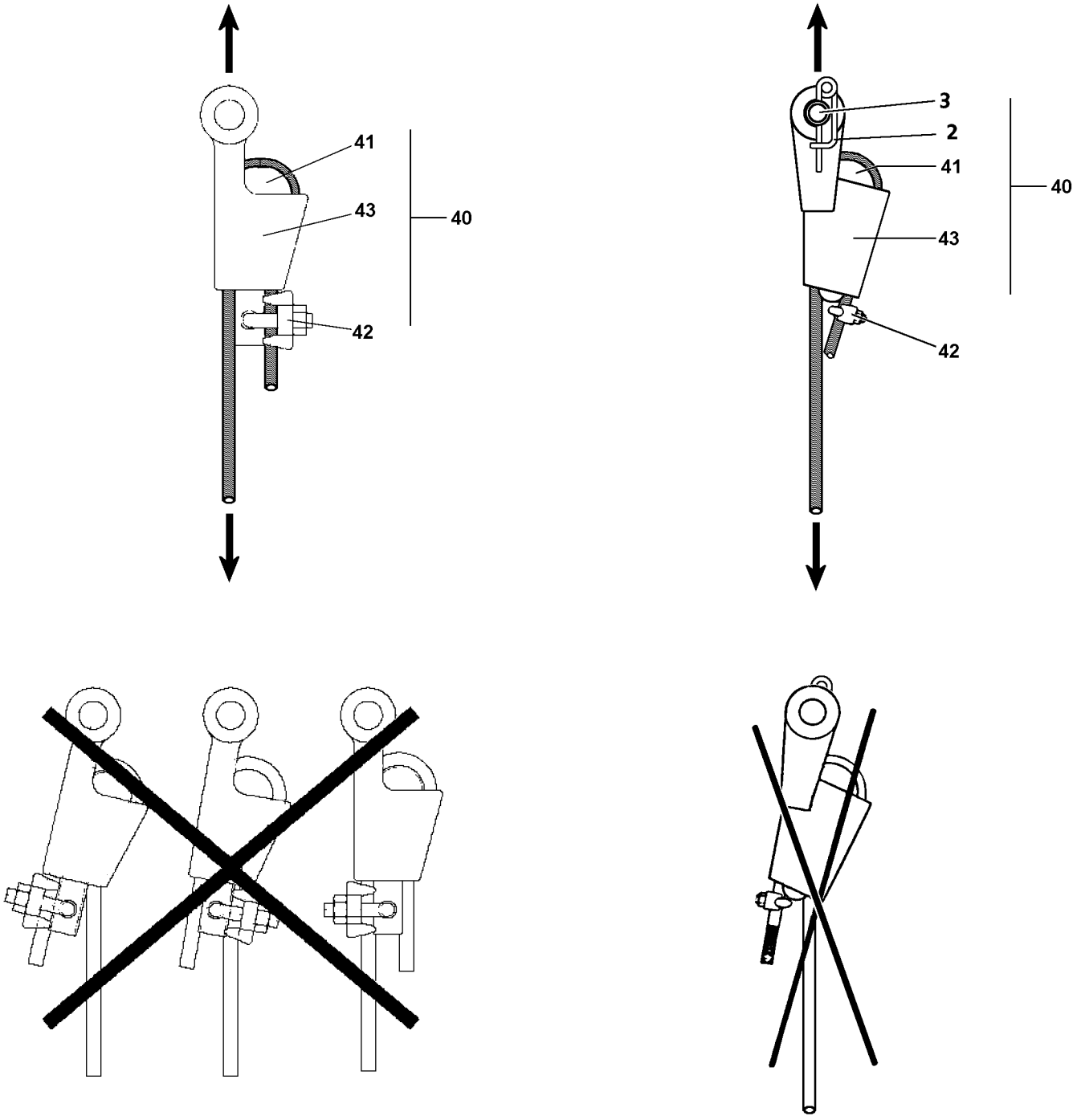

Fig.122729: Wedge lock

Make sure that the following prerequisites are met:
- The rope clamp is cut off on the hoist rope.
- The hook block or the load hook are ready for assembly.

LWE/ab Muli 010/24201-02-02/en

copyright © Liebherr-Werk Ehingen GmbH 2016

8.1 Installing the wedge lock

WARNING
Wedge lock is incorrectly installed!
Hook block or load can fall down. Death, severe injuries, property damage.
- ▶ Use only a wedge lock **40** approved by Liebherr-Werk Ehingen.
- ▶ Install the wedge lock **40** correctly.
- ▶ Place the hoist rope with the wedge **41** into the housing **43** in such a way that the rope strand runs in the pull axle of the wedge lock **40**.
- ▶ The dead end of the rope must be secured by the clamp **42** to prevent it from being pulled through.
- ▶ It is prohibited for personnel to remain in the danger zone.

- ▶ Take a matching wedge lock **40** from the tool box.
- ▶ Place the hoist rope with the wedge **41** into the housing **43**.
- ▶ If possible, assemble the clamp **42** through the wedge **41** on the dead end of the rope.

NOTICE
Damage to the hoist rope!
If the pin **3** has been assembled incorrectly, the hoist rope may rub against the pin **3** or on the linch pin **2**.
- ▶ Always insert the pins **3** from „inside to outside“ and secure from the outside.

- ▶ Pin and secure the wedge lock **40** on the fixed point of the pulley head or on the fixed point of the hook block or on the load hook, depending on the reeving plan.

8.2 Removing the wedge lock

- ▶ Unpin the wedge lock **40** on the fixed point.
- ▶ Remove the clamp **42** and pull the hoist rope with the wedge from the housing.
- ▶ Store the wedge lock **40**.

LWE/ab Muli 010/24201-02-02/en

copyright © Liebherr-Werk Ehingen GmbH 2016

9 Auxiliary block* on telescopic boom

9.1 Crane operation with auxiliary block*

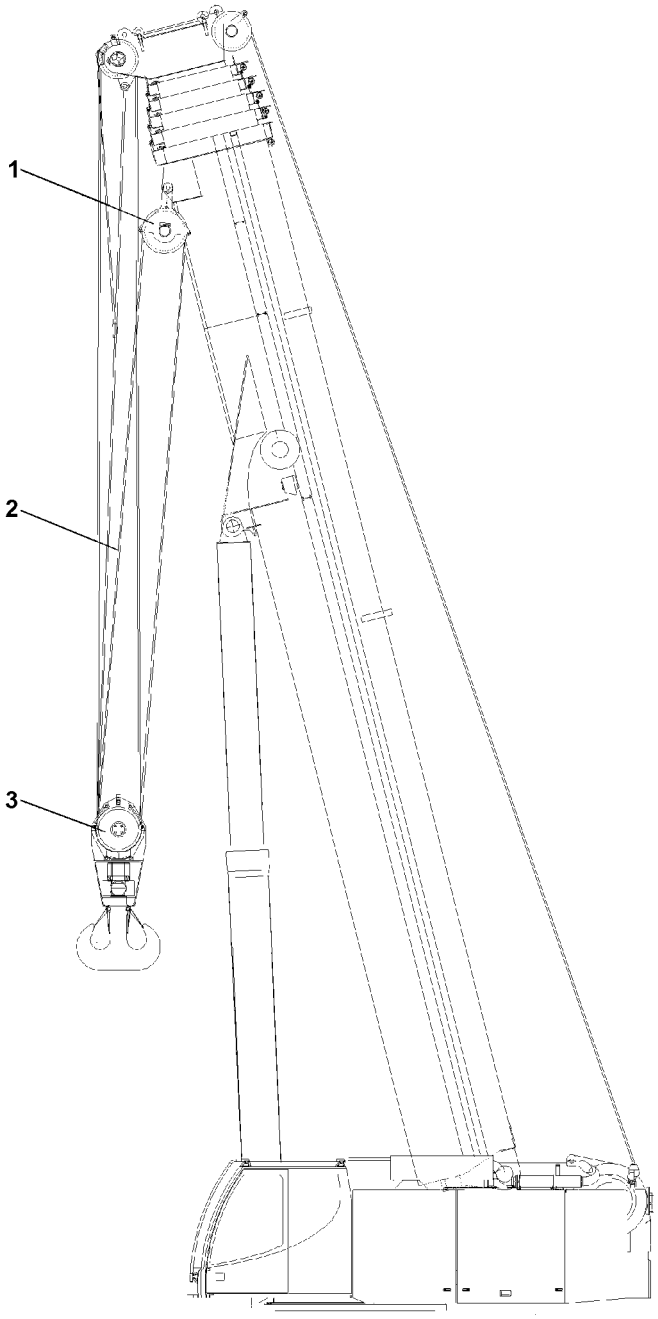

*Fig.122730: Telescopic boom with auxiliary block **1***

Make sure that the following prerequisites are met:
- The TY guying has been disassembled (if present).
- The working floodlights on the telescopic boom have been disassembled.

Note

▶ For crane operation with auxiliary block **1** on the telescopic boom, move only to the radius ranges, which are present in the load chart.

LWE/ab Muli 010/24201-02-02/en

copyright © Liebherr-Werk Ehingen GmbH 2016

NOTICE
Hoist limit switch chain too short!
Damage of hook block, auxiliary block or hoist rope.
- ▶ Before crane operation with auxiliary block **1**, assemble the longer hoist limit switch chain.
- ▶ Before crane operation with auxiliary block **1**, remove the rope protection pipes on the hook block **3**.
- ▶ When the hook block **3** is on the ground, ensure that the hoist rope **2** remains in the pulleys.
- ▶ For operation with auxiliary block **1**, do **not** telescope the telescopic boom out and run only the radii ranges, which are specified in the load chart.

- ▶ Carry out crane operation with auxiliary block **1** carefully.

10 Rope reeving

Note
- ▶ See separate reeving plans.

copyright © Liebherr-Werk Ehingen GmbH 2016

4.07 Counterweight

1	Overview of counterweight	3
2	Counterweight combinations	5
3	Fastening the counterweight plates and receptacle plate	7
4	Assembly of counterweight	11
5	Disassembly of counterweight	23
6	Operating element Bluetooth™ Terminal	33

LWE/ab Muli 010/24201-02-02/en

copyright © Liebherr-Werk Ehingen GmbH 2016

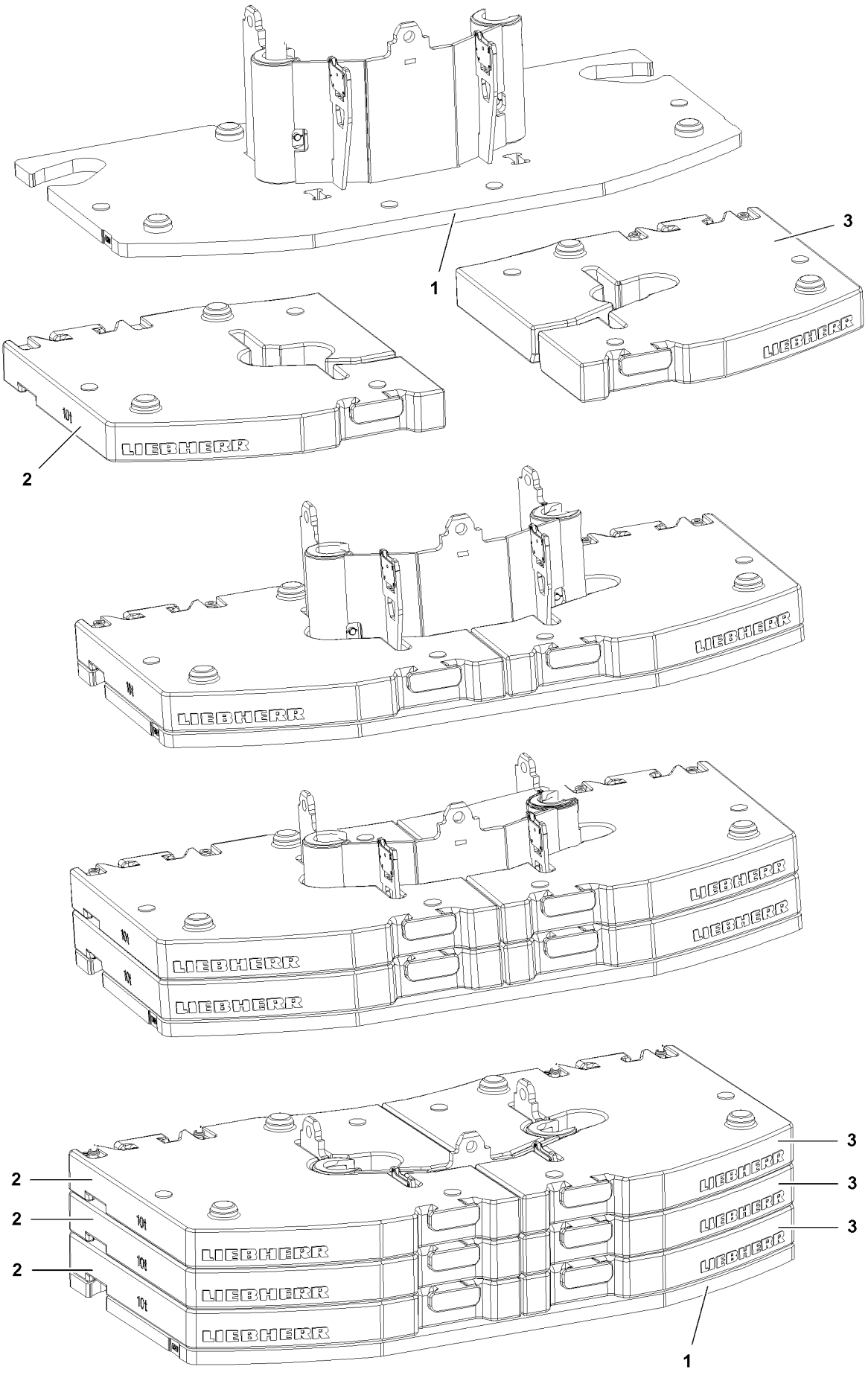

Fig.117323

LWE/ab Muli 010/24201-02-02/en

copyright © Liebherr-Werk Ehingen GmbH 2016

1 Overview of counterweight

The counterweight consists of:
- **1** Receptacle plate
- **2** Counterweight plate
- **3** Counterweight plate

Note
- ▶ The counterweight plates are marked with their respective own weights.
- ▶ The counterweight plate **2** is present three times identically.
- ▶ The counterweight plate **3** is present three times identically.

LWE/ab Muli 010/24201-02-02/en

copyright © Liebherr-Werk Ehingen GmbH 2016

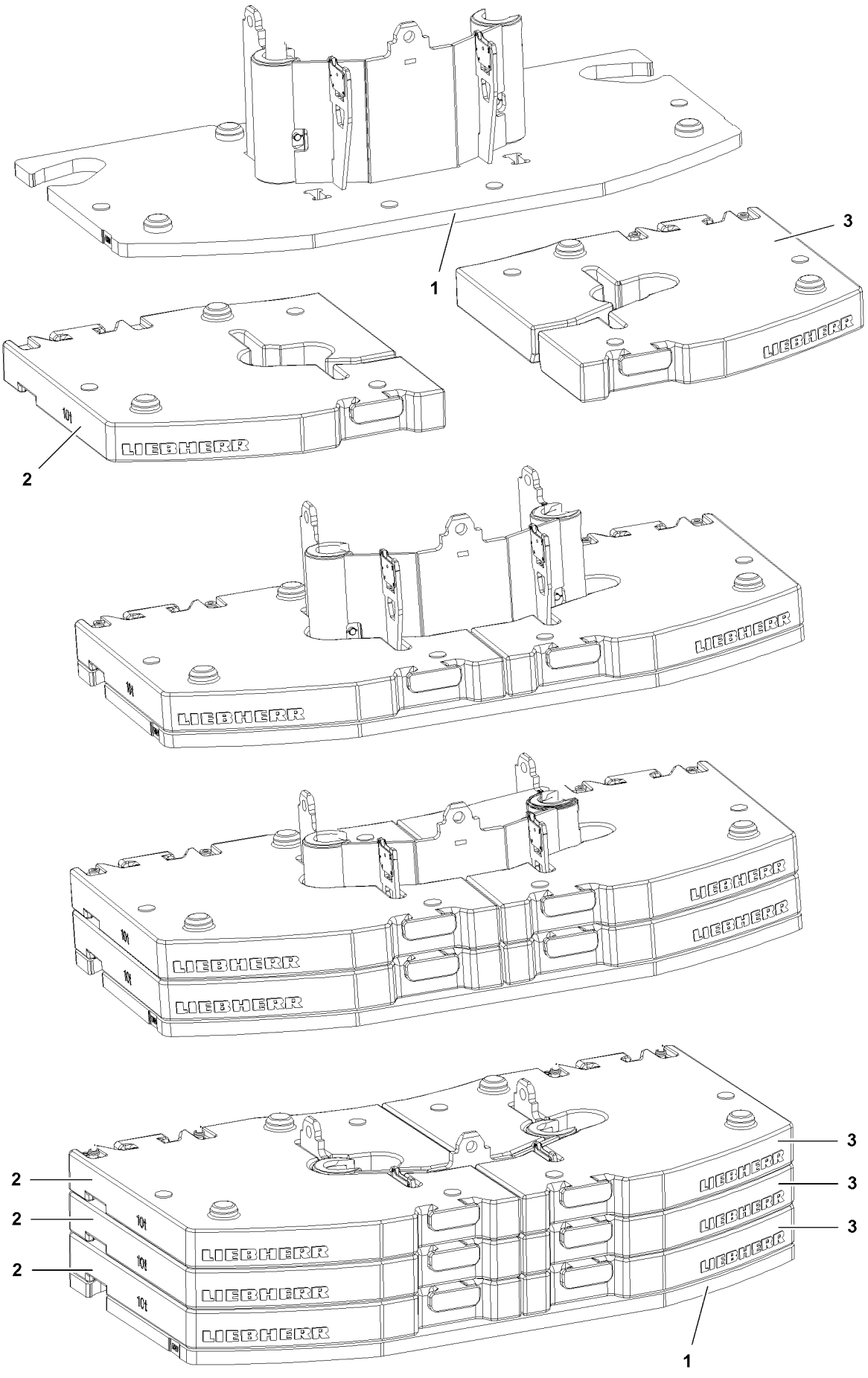

Fig.117323

LWE/ab Muli 010/24201-02-02/en

copyright © Liebherr-Werk Ehingen GmbH 2016

2 Counterweight combinations

WARNING
The crane can topple over!
If any other counterweight combination than the one noted in the charts is used, the crane can topple over!
▶ Counterweight combinations specified in the following charts must be used!

Counterweight	Combination	Individual weight
0.0 t	No receptacle plate, no counterweight	0.0 t

Counterweight	Combination	Individual weight
10.0 t	Receptacle plate **1**	10.0 t

Counterweight	Combination	Individual weight
30.0 t	Receptacle plate **1**	10.0 t
	1 x counterweight plate **2**	10.0 t
	1 x counterweight plate **3**	10.0 t

Counterweight	Combination	Individual weight
50.0 t	Receptacle plate **1**	10.0 t
	2 x counterweight plate **2**	10.0 t
	2 x counterweight plate **3**	10.0 t

Counterweight	Combination	Individual weight
70.0 t	Receptacle plate **1**	10.0 t
	3 x counterweight plate **2**	10.0 t
	3 x counterweight plate **3**	10.0 t

LWE/ab Muli 010/24201-02-02/en

copyright © Liebherr-Werk Ehingen GmbH 2016

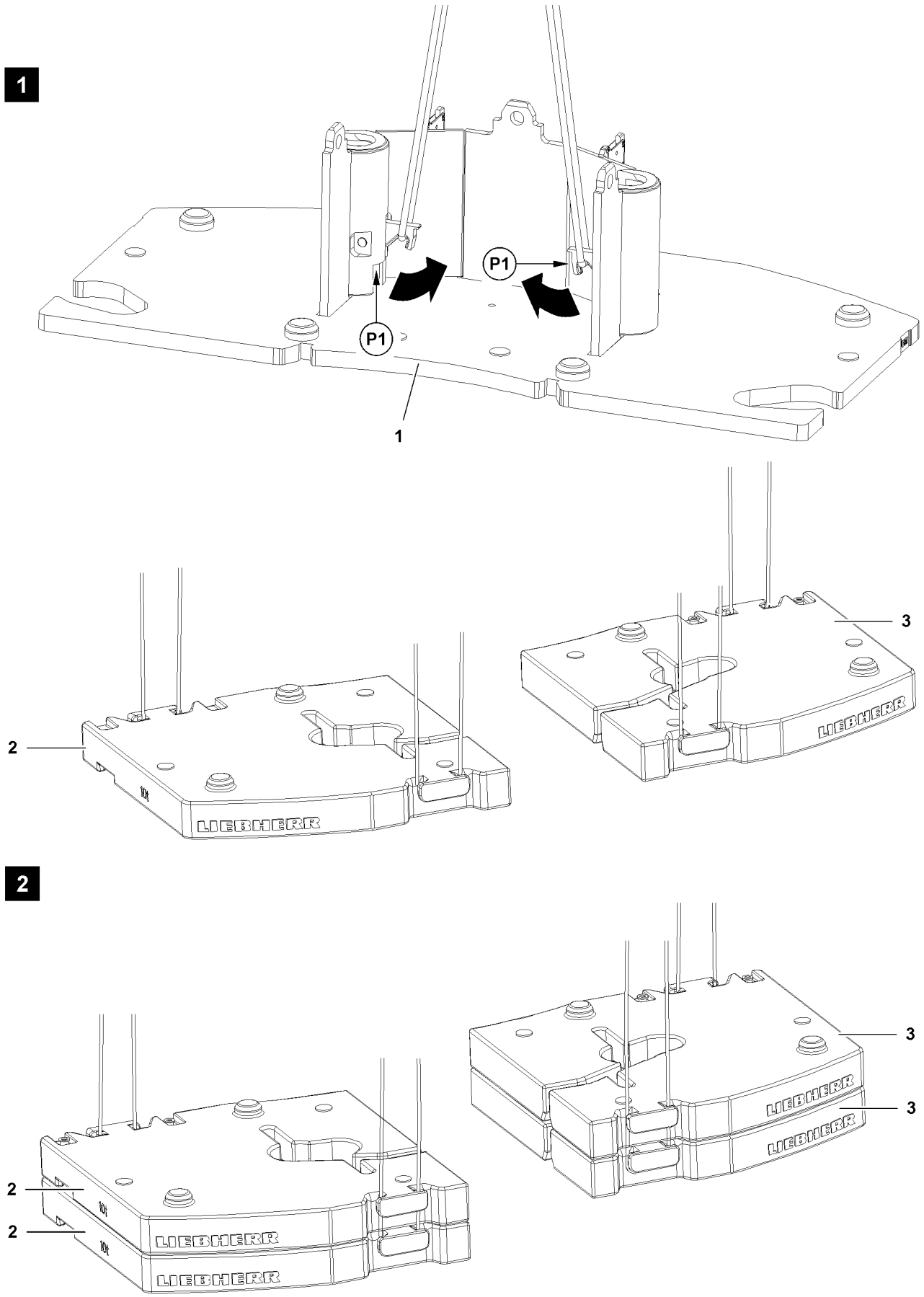

Fig.117324

LWE/ab Muli 010/24201-02-02/en

copyright © Liebherr-Werk Ehingen GmbH 2016

3 Fastening the counterweight plates and receptacle plate

WARNING
Improperly fastened crane components!
Improperly fastened crane components can slip and fall down when lifting or swinging them.
Personnel can be severely injured or killed.
- ▶ Before lifting, make sure that the crane components are properly fastened.
- ▶ Use only approved and suitable fastening equipment.
- ▶ Always keep sufficient distance to suspended crane components.
- ▶ Standing under raised crane components is **prohibited**.
- ▶ Carefully initiate all crane movements with attached crane components extremely sensitively and initiate slow down with utmost caution.

3.1 Fastening the counterweight plate

Fold the fastening points out on point **P1**.

Fasten the receptacle plate on the fastening points, see illustration **1**.

3.2 Fastening counterweight plates

WARNING
Property damage due to overload!
- ▶ Lift a maximum of two form-fit stacked counterweight plates as an assembly.

Fasten the counterweight plates on the fastening points, see illustration **2**.

LWE/ab Muli 010/24201-02-02/en

copyright © Liebherr-Werk Ehingen GmbH 2016

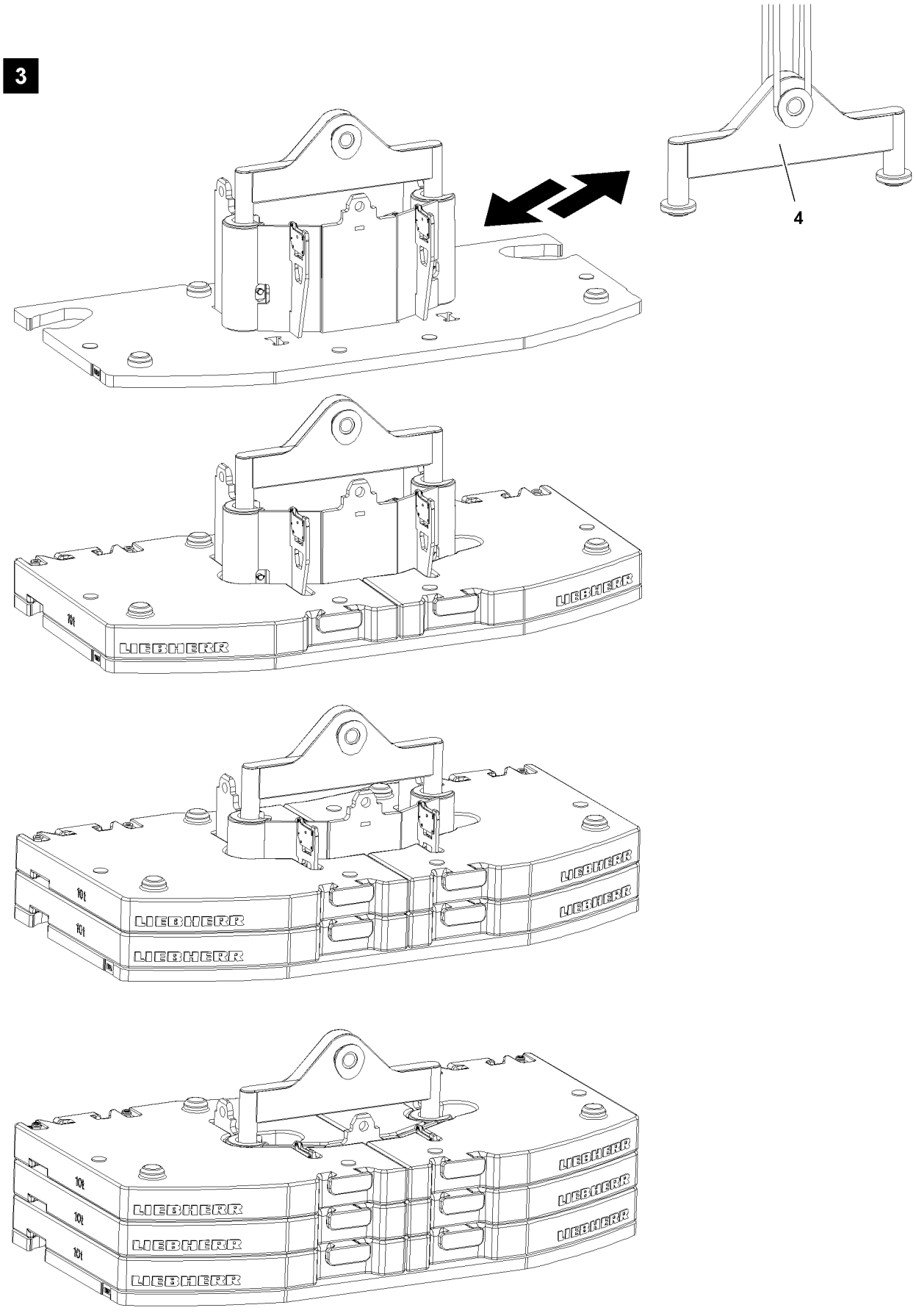

Fig.117325

LWE/ab Muli 010/24201-02-02/en

copyright © Liebherr-Werk Ehingen GmbH 2016

3.3 Fastening the counterweight with cross beam

Note

▶ The counterweight stack can be fastened as an assembly with the cross beam **4**, see illustration **3**.

WARNING

Improperly fastened crane components!

Improperly fastened crane components can slip and fall down when lifting or swinging them!

Personnel can be severely injured or killed!

- ▶ Before lifting, make sure that the crane components are properly fastened!
- ▶ Use only approved and suitable fastening equipment!
- ▶ Always keep sufficient distance to suspended crane components!
- ▶ Standing under raised crane components is **prohibited**!
- ▶ Carefully initiate all crane movements with attached crane components extremely sensitively and initiate slow down with utmost caution!
- ▶ Lift only form-fit and symmetrically stacked counterweight plates as an assembly!

LWE/ab Muli 010/24201-02-02/en

copyright © Liebherr-Werk Ehingen GmbH 2016

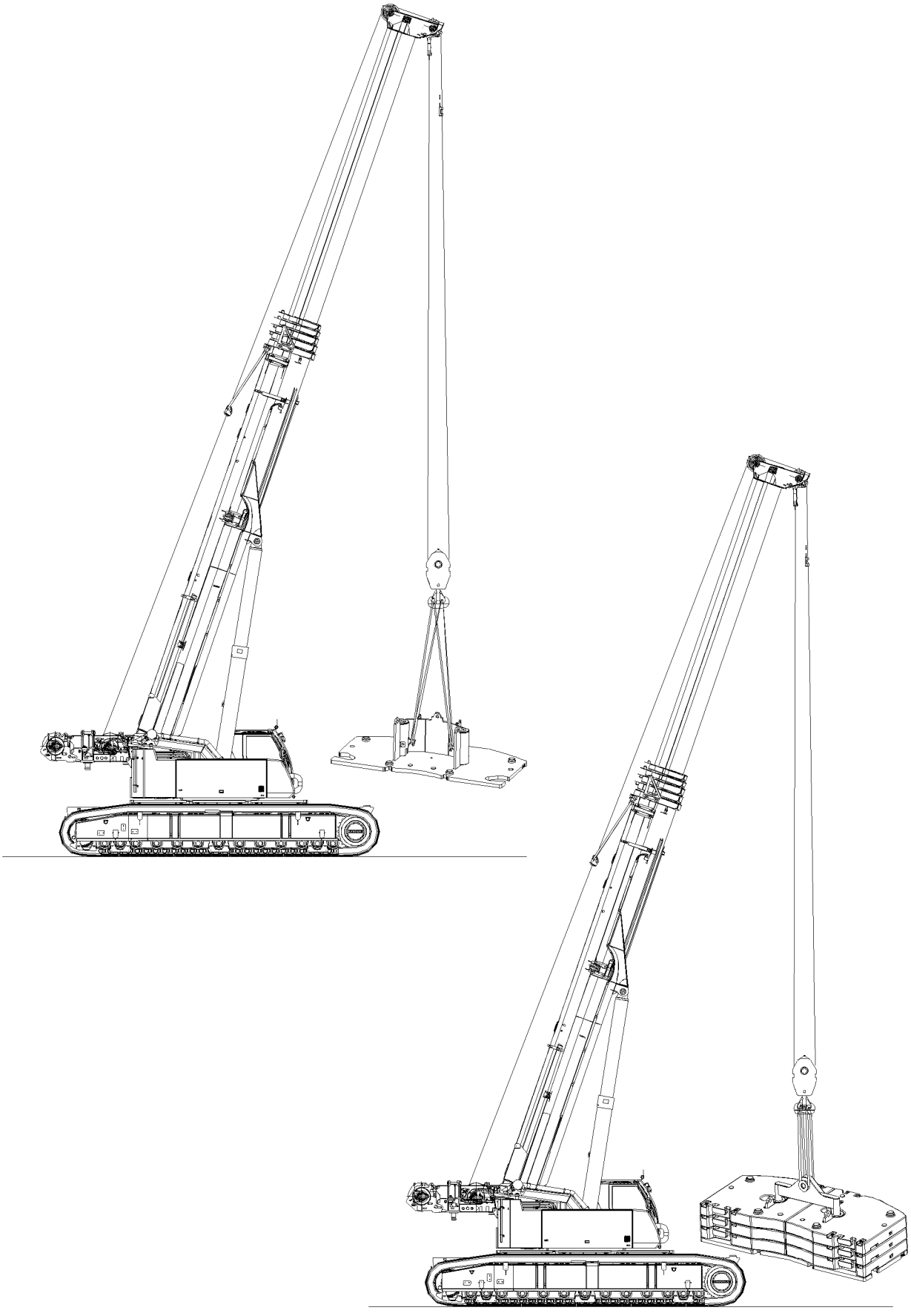

Fig.117329

LWE/ab Muli 010/24201-02-02/en

copyright © Liebherr-Werk Ehingen GmbH 2016

4 Assembly of counterweight

WARNING
Danger of falling!
During assembly and disassembly, personnel must be secured with appropriate aids to prevent them from falling! If this is not observed, assembly personnel can fall and suffer life-threatening or fatal injuries!

- ▶ Any work, where there is a danger of falling, must be carried out with suitable aids (for example: lifting platforms, scaffoldings, ladders, auxiliary crane)!
- ▶ If the work can neither be carried out with such aids nor from the ground, then the assembly personnel must secure themselves with approved catch systems to avoid falling, see chapter 2.04 of the operating instruction!
- ▶ If railings are present on the crane components, then they must be brought into the corresponding position and secured for assembly / disassembly work!
- ▶ Step on aids and fall protection equipment only with clean shoes!
- ▶ Keep aids and fall protection equipment clean and free from snow and ice!
- ▶ During all assembly and disassembly work, maintenance work and inspections, travel or crane operation is prohibited!

WARNING
Danger of accident!
During assembly or disassembly of the counterweight, personnel can be injured or killed!
Objects can be damaged!

- ▶ During the assembly or disassembly of the counterweight, no personnel may remain within the danger zone!
- ▶ During the assembly or disassembly of the counterweight, no objects may remain within the danger zone!

WARNING
Damaged counterweight!
If a damaged / dirty counterweight is used, then the tight seating and the operational safety are no longer ensured.

- ▶ Do not use a damaged counterweight.
- ▶ Replace / repair a damaged counterweight.
- ▶ Clean a dirty counterweight.
- ▶ Keep the placement / installation surfaces of the counterweight clean.

WARNING
Falling counterweight!
If the counterweight is not properly ballasted / installed, then it can fall down and cause severe accidents.
Personnel can be severely injured or killed.

- ▶ Before operation, make sure that the counterweight is properly ballasted / installed.

LWE/ab Muli 010/24201-02-02/en

copyright © Liebherr-Werk Ehingen GmbH 2016

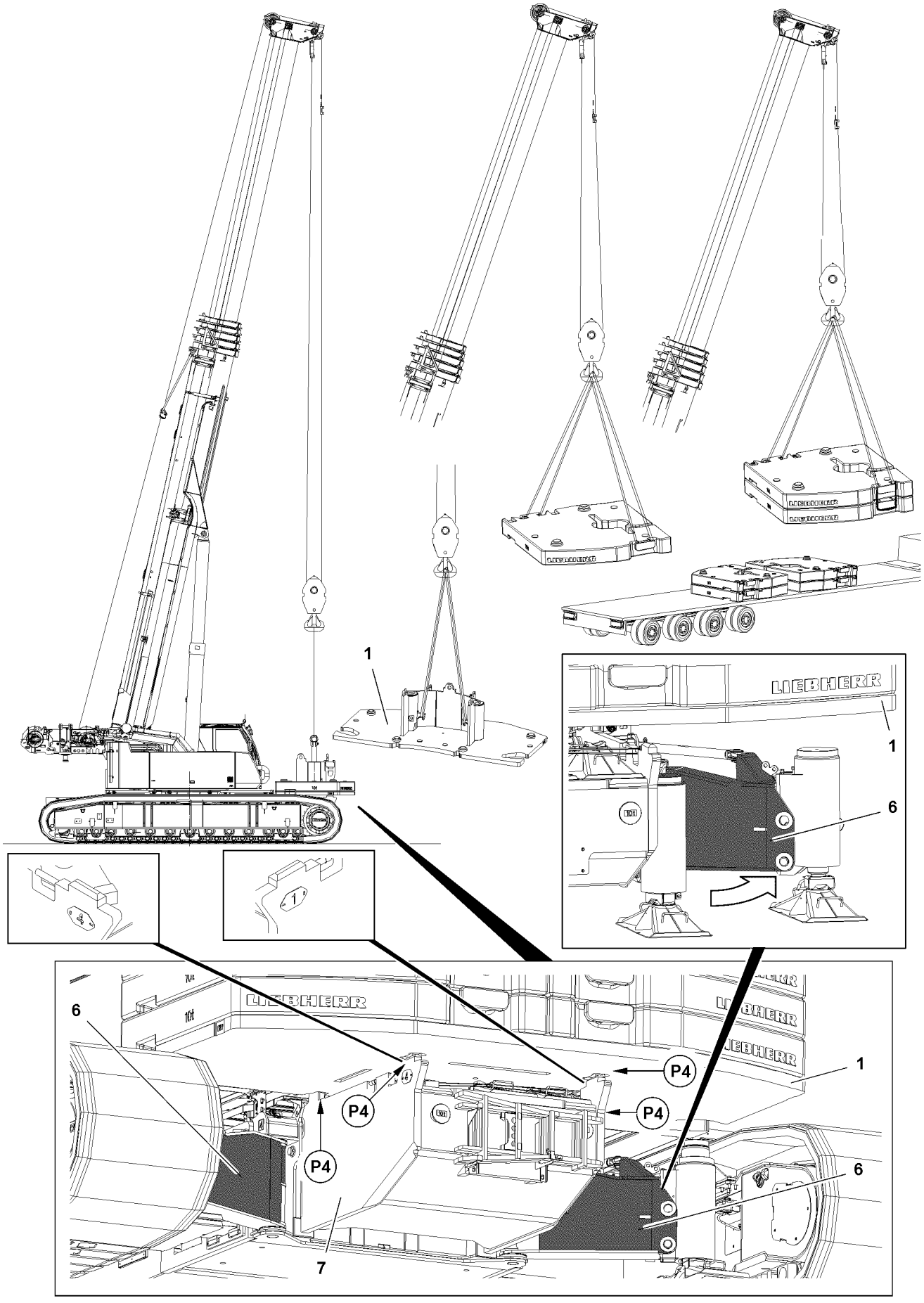

Fig.117326

LWE/ab Muli 010/24201-02-02/en

copyright © Liebherr-Werk Ehingen GmbH 2016

4.1 Placing the counterweight down with the crane

Make sure that the following prerequisites are met:
- The crane is positioned on a level and load-bearing surface.
- The crane is aligned in horizontal direction.
- The central ballast blocks **7** are installed on the front and rear, see Crane operating instructions, chapter 3.03.
- The crane with installed crawler carriers is operational as assembly crane.
- The support cylinders are completely retracted.
- The transport vehicle with the counterweight plates is in the immediate vicinity of the crane.
- No support plates and the assembly device are placed on the central ballast.
- The fall protection equipment is installed.
- The LICCON overload protection is set:
  - Crawler operation with track width
  - Central ballast 20 t
  - Counterweight 0 t
  - Without auxiliary boom / accessory
  - Slewing range

The receptacle plate acts as a carrier plate for the counterweight plates and must always be placed onto the central ballast first.

4.1.1 Placing the receptacle plate on the central ballast

DANGER
Danger of fatal accident due to toppling the crane!

If the counterweight is not placed on the central ballast block 1/4 **7**, the crane will topple over.
▶ Make sure that the receptacle plate and the counterweight plates are placed on the central ballast block 1/4 **7**.

NOTICE
Damage of receptacle plate due to collision!
If the support cylinders are pinned in the uppermost position, then the support cylinders can collide with the base plate.
▶ Swing both folding beam brackets **6** out and secure.

▶ Fasten the receptacle plate **1** with fastening ropes on the crane.
▶ Place the receptacle plate in the centerings **P4** of the central ballast block 1/4 **7**.

LWE/ab Muli 010/24201-02-02/en

copyright © Liebherr-Werk Ehingen GmbH 2016

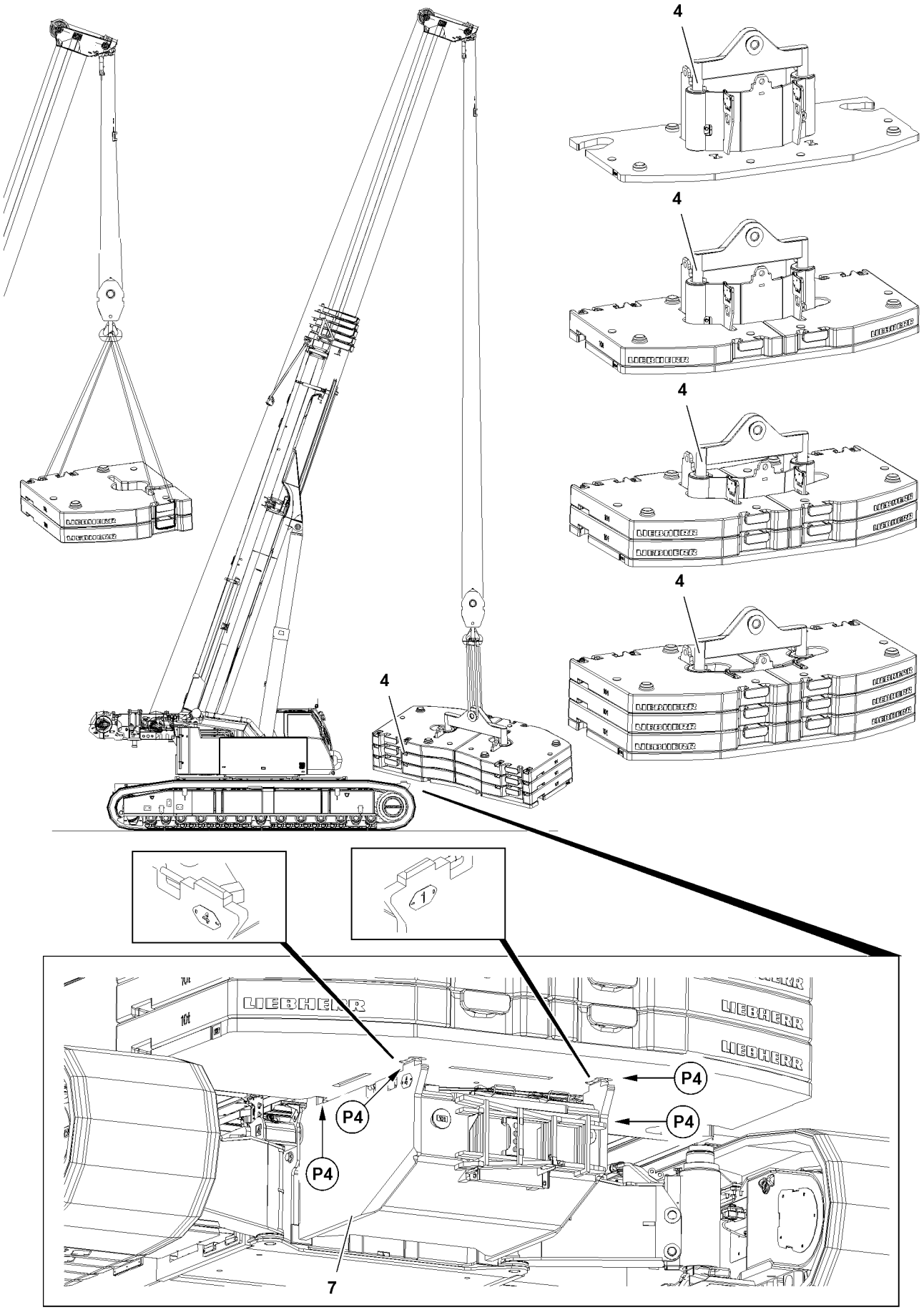

Fig.117331

LWE/ab Muli 010/24201-02-02/en

copyright © Liebherr-Werk Ehingen GmbH 2016

4.1.2 Placing the counterweight plates on the central ballast

WARNING
Property damage due to overload!
▶ Lift a maximum of two form-fit stacked counterweight plates as an assembly.

WARNING
The crane can topple over!
If the counterweights are asymmetrically placed on the receptacle plate **1** or if the counterweight is asymmetrically installed, then the crane can topple over and kill personnel!
▶ Place counterweights alternately on the left and right on the receptacle plate only up to a difference of 10 t.
▶ Attach the counterweight symmetrically.

▶ Attach the counterweight plates on the crane.
▶ Place the counterweight plates to match on the centering cone of the counterweight receptacle.

4.2 Placing the counterweight as an assembly with the cross beam on the central ballast

WARNING
Toppling crane if asymmetrically placed!
▶ Install the counterweight symmetrically.

NOTICE
Damage of receptacle plate due to collision!
If the support cylinders are pinned in the uppermost position, then the support cylinders can collide with the base plate.
▶ Swing both folding beam brackets **6** out and secure.

▶ Attach the counterweight with the cross beam **4** on the crane.
▶ Place the counterweight with the cross beam **4** in the centering **P4** of the central ballast.

4.3 Installing the hoist gear 2*

When hoist gear 2 is to be installed, see Crane operating instructions, chapter 5.09.

LWE/ab Muli 010/24201-02-02/en

copyright © Liebherr-Werk Ehingen GmbH 2016

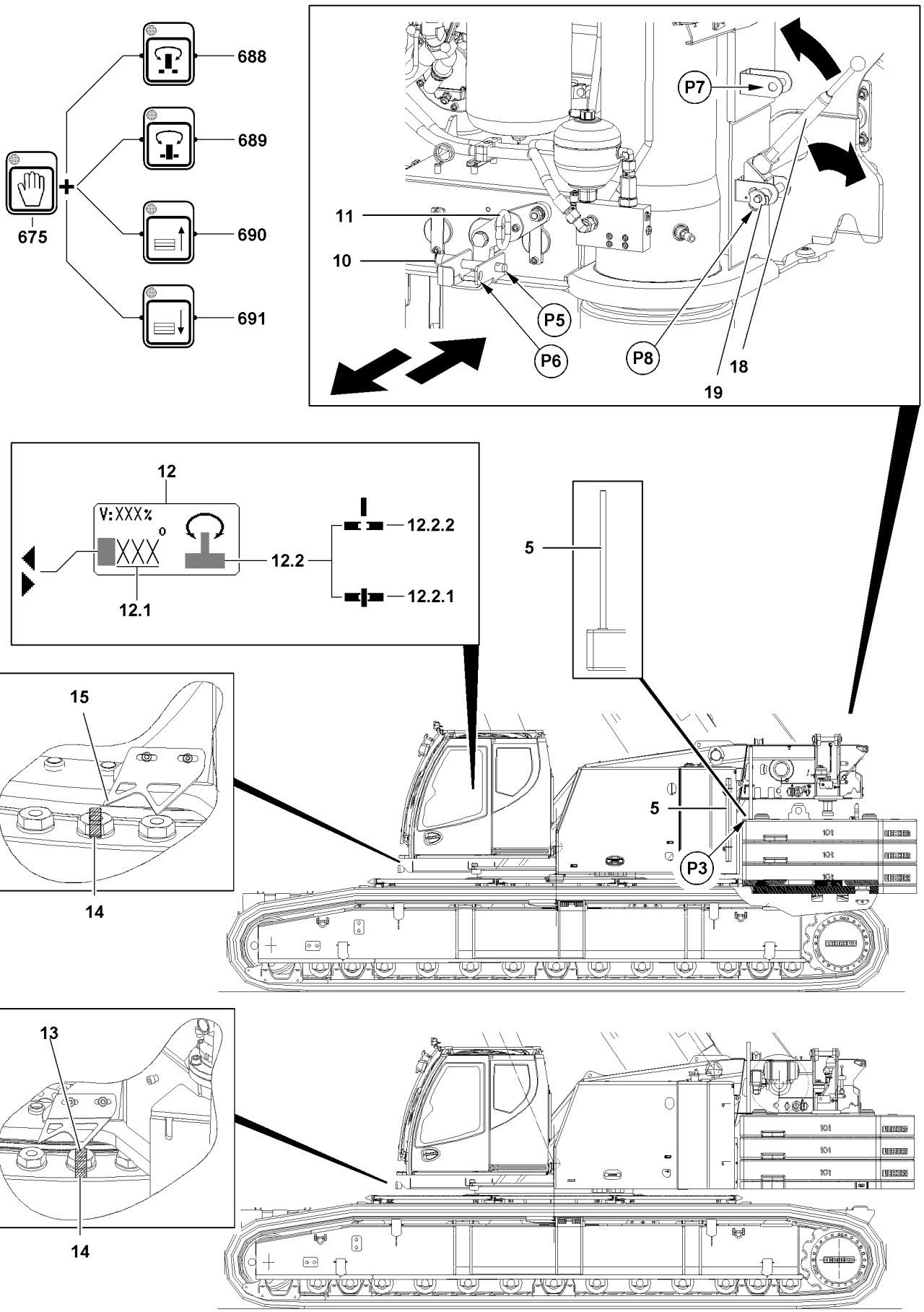

Fig.117327

LWE/ab Muli 010/24201-02-02/en

copyright © Liebherr-Werk Ehingen GmbH 2016

4.4 Taking up the counterweight with the ballasting device

4.4.1 Unpinning the ballasting device

NOTICE
Damage to the ballasting system!
If the ballasting device is not unpinned before moving the ballasting cylinders out, then the ballasting device can be damaged!
▶ Unpin the ballasting device before moving the ballasting cylinders out!

▶ Release the grip pins: Unpin the ball locking pins **10**.
▶ Unpin the grip pins **11** to the stop.
▶ Secure the grip pins **11**: Insert the ball locking pin **10** on position **P6**.
▶ Release the hand lever **18**: Unpin the ball locking pin **19** on point **P7**.
▶ Pull hand lever **18** downwards.
▶ Insert the ball locking pin **19** in park position **P8**.

4.4.2 Ballasting the counterweight plates

WARNING
Danger of accident!
▶ As long as the crane superstructure is **not** locked, no movement (lift / lower counterweight) may be carried out!

WARNING
Ballasting cylinders not moved in!
If the ballasting cylinders are not fully moved in, they can collide with the counterweight when the crane superstructure is turned and cause significant property damage on the crane. The counterweight can fall down and hit personnel!
Personnel can be severely injured or killed!
▶ Make sure that the ballasting cylinders are fully moved in before turning the crane superstructure!

The crane operating screen is called up on the LICCON monitor:
▶ Turn the crane superstructure to the right until the small pointer **15** on the slewing ring aligns with the marked screw **14**, see illustration **1**.

– The ballasting cylinders are now located over the entry ports of the counterweight.
– Shown on the LICCON monitor, in the Slewing range icon **12** is a value **12.1** from 176° to 177°.

copyright © Liebherr-Werk Ehingen GmbH 2016

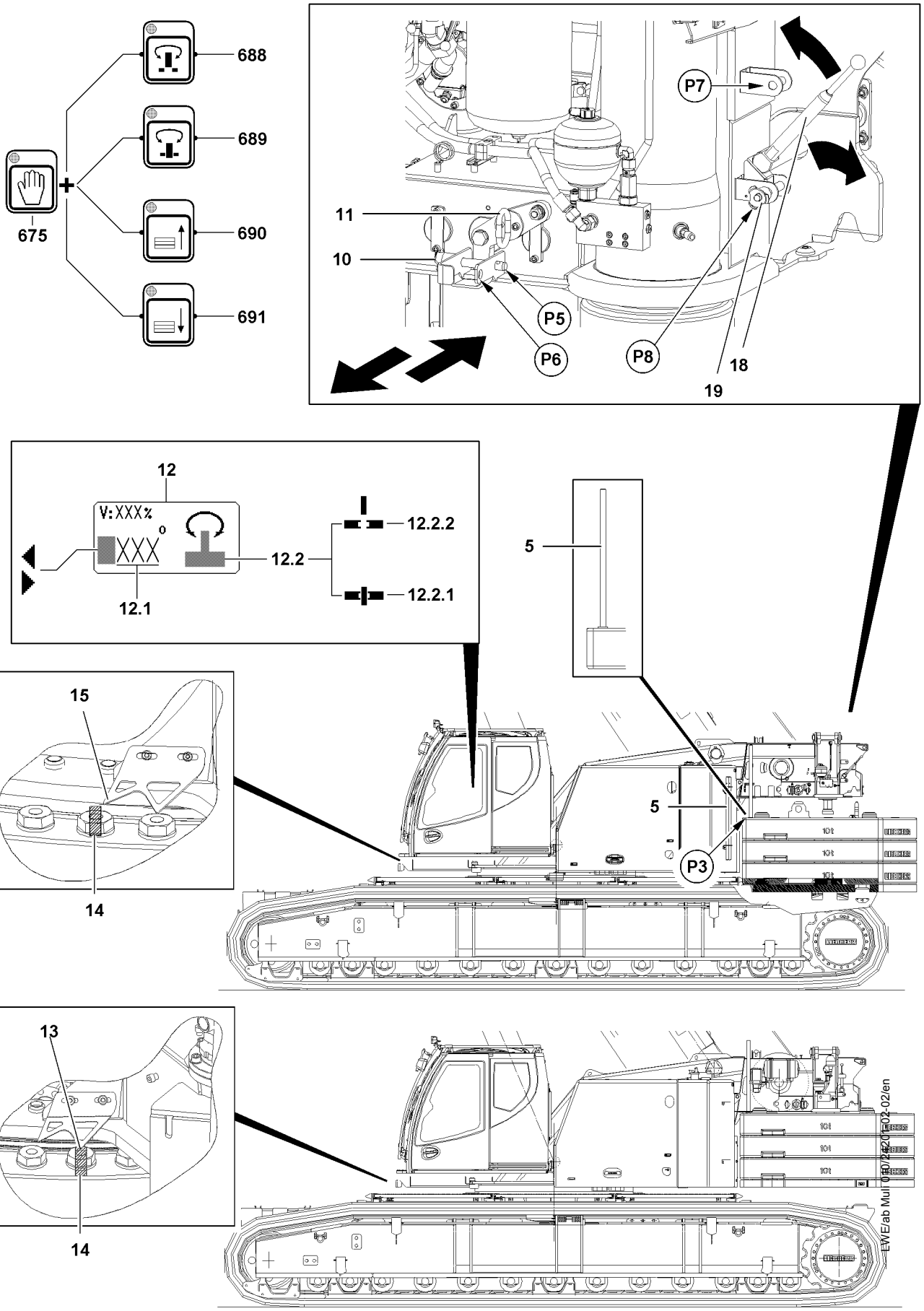

Fig.117327

copyright © Liebherr-Werk Ehingen GmbH 2016

Note

▶ Use the release button **675** to control the necessary release functions. The release key **675** is deactivated 30 s after a button is last pressed on the BKE.

▶ Activate the release button **675** and then press the button **689**.

Result:

– The LED on button **689** blinks as the turntable is pinned.
– During the pinning procedure, the pin in the „Turntable locked“ icon **12.2.1** blinks.
– As soon as the crane superstructure is locked with the crane chassis, the „turntable locked“ icon **12.2.1** appears static and the LED on button **689** lights up (static).

When the pinning procedure of the turntable lock has been completed:

▶ Release the button **689**.
▶ Press the button **691**.

Result:

– When the ballasting cylinders are extended completely, the LED on button **691** lights up static.

When the ballasting cylinders are fully extended:

▶ Release the button **691**.
▶ Press the button **688**.

Result:

– The LED on button **688** blinks as the turntable is unpinned.
– During the unpinning procedure, the pin in the „Turntable released“ icon **12.2.2** blinks.
– As soon as the crane superstructure is released, the „turntable released“ icon **12.2.2** appears static and the LED on button **689** lights up (static).

When the unpinning procedure of the turntable lock has been completed:

▶ Release the button **688**.
▶ Turn the crane superstructure carefully to the right until the large pointer **13** on the slewing ring aligns with the marked screw **14** (180° angle position), illustration **2**.

Result:

– The ballasting cylinders are now entered into the receptacle studs of the counterweight.
– Shown on the LICCON monitor, in the Turning range icon **12** is the value **12.1** 180°.

copyright © Liebherr-Werk Ehingen GmbH 2016

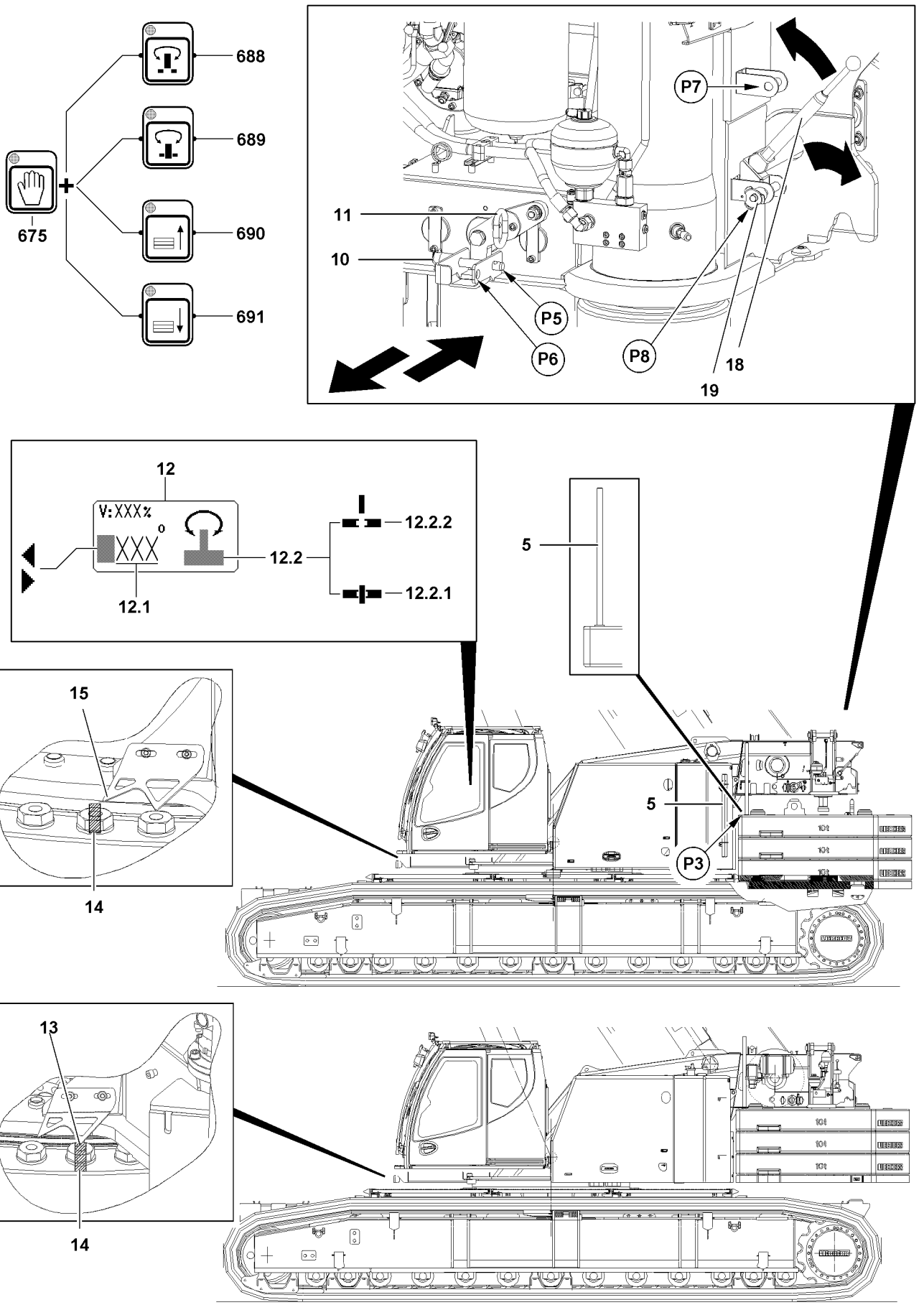

Fig.117327

LWE/ab Muli 010/24201-02-02/en

copyright © Liebherr-Werk Ehingen GmbH 2016

▶ Press the button **689**.

Result:

– The LED on button **689** blinks as the turntable is pinned.
– During the pinning procedure, the pin in the „Turntable locked“ icon **12.2.1** blinks.
– As soon as the crane superstructure is locked with the crane chassis, the „turntable locked“ icon **12.2.1** appears static and the LED on button **689** lights up (static).

When the pinning procedure of the turntable lock has been completed:
▶ Release the button **689**.
▶ Press the button **690**.

Result:

– The ballasting cylinders are retracted and the counterweight is raised.

When the ballasting cylinders are completely retracted and the counterweight is fully raised:
▶ Release the button **690**.

4.4.3 Pinning the ballasting device

WARNING
Falling counterweight!
If the ballasting device is not pinned when the counterweight is installed, then the counterweight can loosen up! The counterweight can fall down and cause severe accidents!
Personnel can be severely injured or killed!
▶ Pin the ballasting device with the counterweight!

▶ Take the retaining pipe **5** from park position and pin on both sides in the counterweight plate on position **P3**.
▶ Release the grip pins: Unpin the ball locking pins **10**.
▶ Pin the grip pins **11**.
▶ Secure the grip pins **11**: Insert the ball locking pin **10** on position **P5**.
▶ Unpin the ball locking pin **19** in park position **P8**.
▶ Swing the hand lever **18** upward.
▶ Secure the hand lever **18**: Insert the ball locking pin **19** on point **P7**.
▶ Unpin the retaining pipe **5** and pin it in park position.

4.4.4 Releasing the turntable lock

▶ Press the button **688**.

Result:

– The LED on button **688** blinks as the turntable is unpinned.
– During the unpinning procedure, the pin in the „Turntable released“ icon **12.2.2** blinks.
– As soon as the crane superstructure is released, the „turntable released“ icon **12.2.2** appears static and the LED on button **688** lights up (static).

copyright © Liebherr-Werk Ehingen GmbH 2016

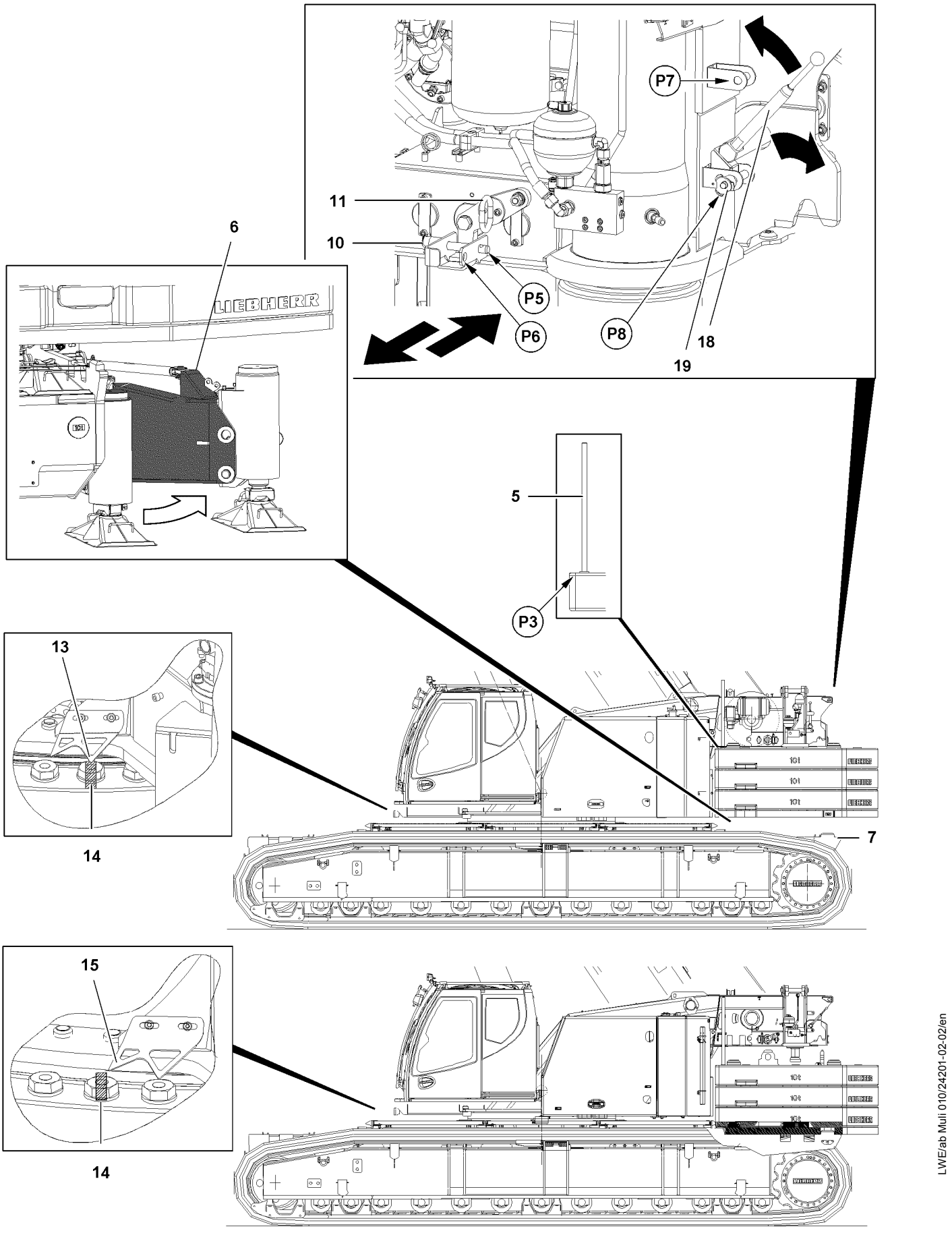

Fig.117355

LWE/ab Muli 010/24201-02-02/en

copyright © Liebherr-Werk Ehingen GmbH 2016

5 Disassembly of counterweight

WARNING
Danger of falling!
During assembly and disassembly, personnel must be secured with appropriate aids to prevent them from falling! If this is not observed, assembly personnel can fall and suffer life-threatening or fatal injuries!

- ▶ Any work, where there is a danger of falling, must be carried out with suitable aids (for example: lifting platforms, scaffoldings, ladders, auxiliary crane)!
- ▶ If the work can neither be carried out with such aids nor from the ground, then the assembly personnel must secure themselves with approved catch systems to avoid falling, see chapter 2.04 of the operating instruction!
- ▶ If railings are present on the crane components, then they must be brought into the corresponding position and secured for assembly / disassembly work!
- ▶ Step on aids and fall protection equipment only with clean shoes!
- ▶ Keep aids and fall protection equipment clean and free from snow and ice!
- ▶ During all assembly and disassembly work, maintenance work and inspections, travel or crane operation is prohibited!

WARNING
Danger of accident!
During assembly or disassembly of the counterweight, personnel can be injured or killed!
Objects can be damaged!

- ▶ During the assembly or disassembly of the counterweight, no personnel may remain within the danger zone!
- ▶ During the assembly or disassembly of the counterweight, no objects may remain within the danger zone!

5.1 Removing hoist gear 2*

When hoist gear 2 is to be removed, see Crane operating instructions, chapter 5.09.

LWE/ab Muli 010/24201-02-02/en

copyright © Liebherr-Werk Ehingen GmbH 2016

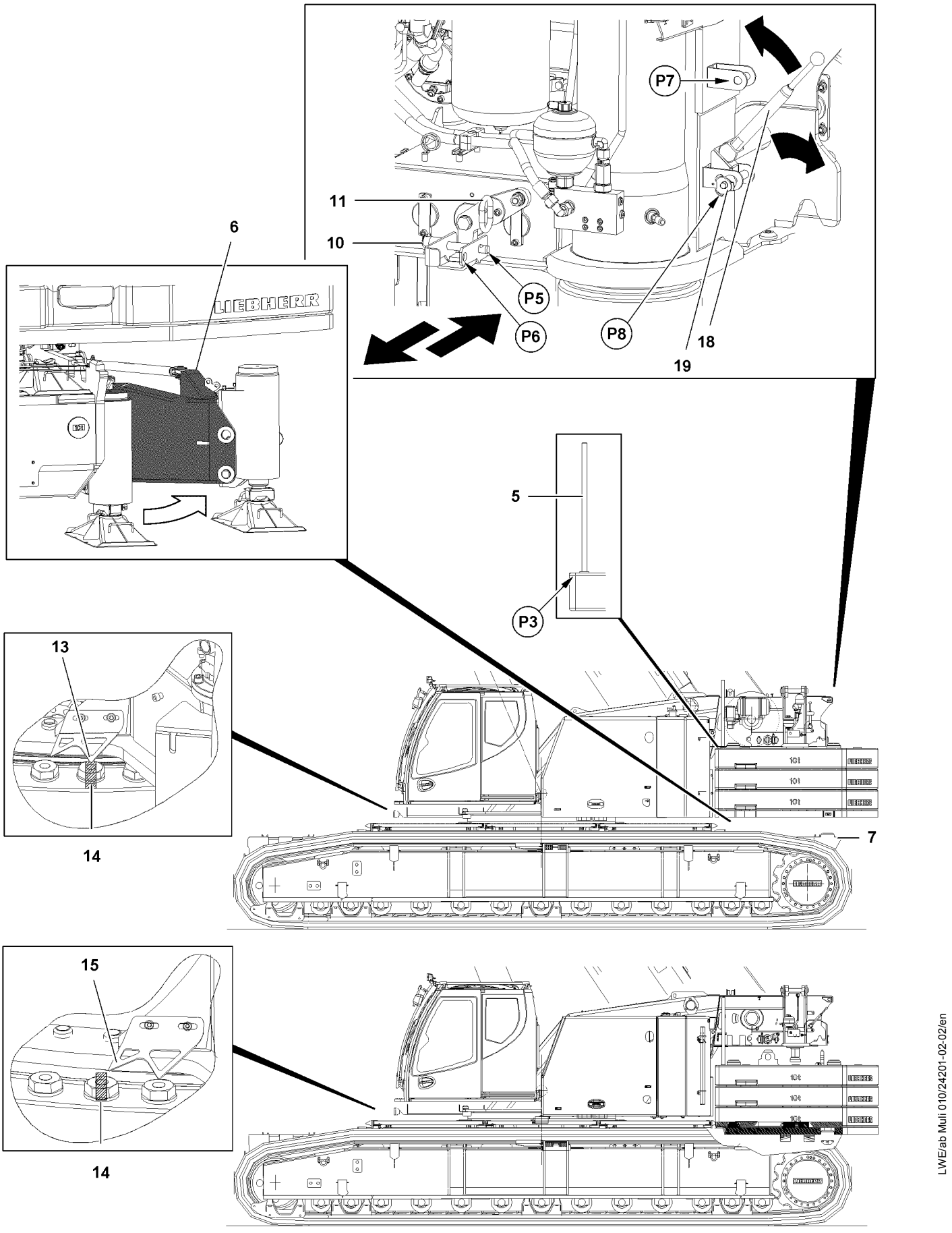

Fig.117355

copyright © Liebherr-Werk Ehingen GmbH 2016

LWE/ab Muli 010/24201-02-02/en

5.2 Setting the counterweight with the ballasting device down

Make sure that the following prerequisites are met:
- The crane is positioned on a level and load-bearing surface.
- The crane is aligned in horizontal direction.
- The central ballast blocks **7** are installed on the front and rear, see Crane operating instructions, chapter 3.03.
- The crane with installed crawler carriers is operational as assembly crane.
- The support cylinders are completely retracted.
- The transport vehicle for the counterweight plates is in the immediate vicinity of the crane.
- No support plates and the assembly device are placed on the central ballast.
- The fall protection equipment is installed.
- The LICCON overload protection has been set according to the load chart and the set up configuration.
  - Crawler operation with track width
  - Central ballast 20 t
  - Counterweight 0 t
  - Without auxiliary boom / accessory
  - Slewing range

NOTICE
Damage of receptacle plate due to collision!
If the support cylinders are pinned in the uppermost position, then the support cylinders can collide with the base plate.
▶ Swing both folding beam brackets **6** out and secure.

5.2.1 Unpinning the ballasting device

Make sure that the following prerequisites are met:
- The large pointer **13** on the slewing ring aligns with the marked screw **14** (180° angle position).

NOTICE
Damage to the ballasting system!
If the ballasting device is not unpinned before moving the ballasting cylinders out, then the ballasting device can be damaged!
▶ Unpin the ballasting device before moving the ballasting cylinders out.

▶ Take the retaining pipe **5** from park position and pin on both sides in the counterweight plate on position **P3**.
▶ Release the grip pins: Unpin the ball locking pins **10**.
▶ Unpin the grip pins **11** to the stop.
▶ Secure the grip pins **11**: Insert the ball locking pin **10** on position **P6**.
▶ Release the hand lever **18**: Unpin the ball locking pin **19** on point **P7**.
▶ Pull hand lever **18** downwards.
▶ Insert the ball locking pin **19** in park position **P8**.
▶ Unpin the retaining pipe **5** and pin it in park position.

LWE/ab Muli 010/24201-02-02/en

copyright © Liebherr-Werk Ehingen GmbH 2016

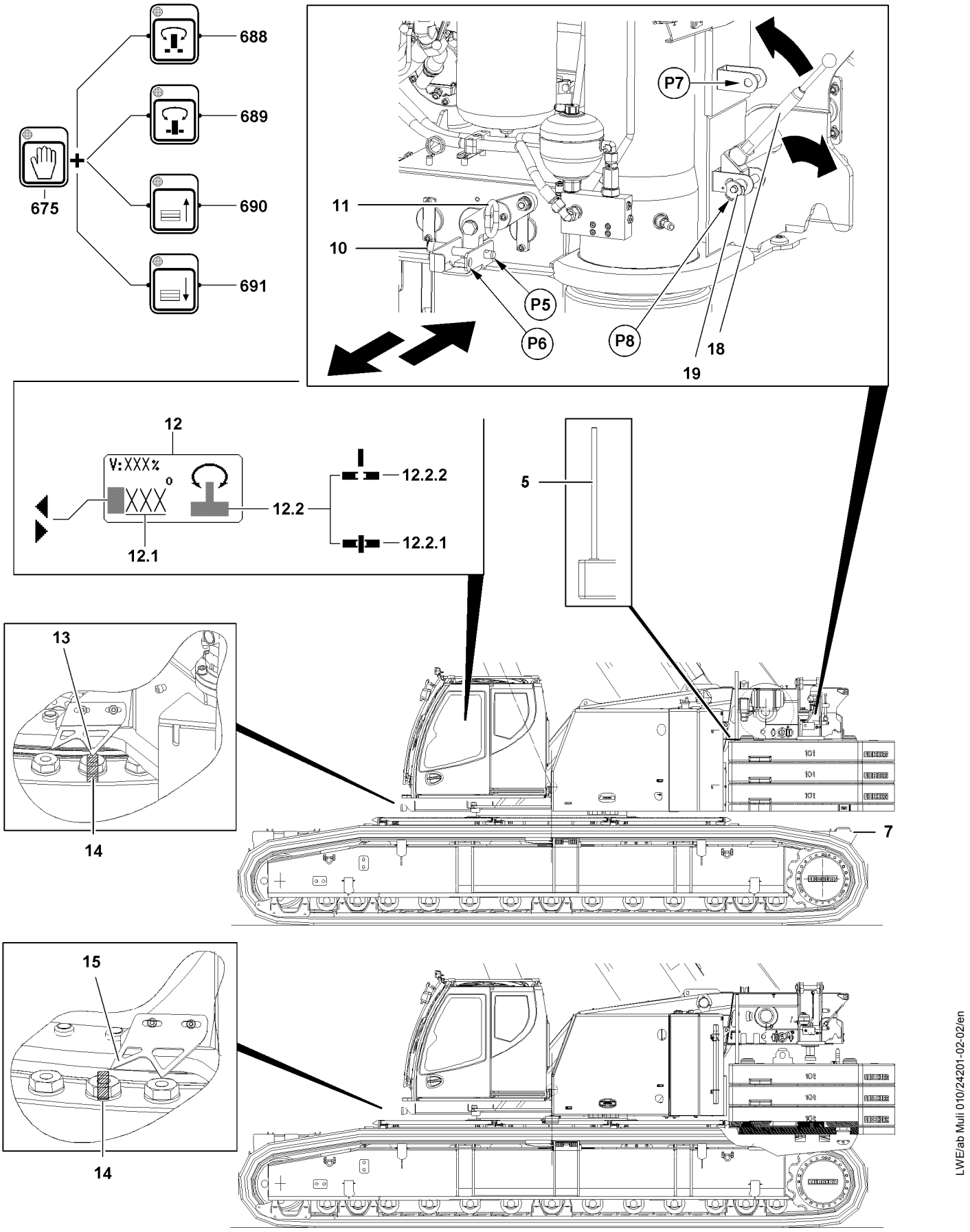

Fig.117328

LWE/ab Muli 010/24201-02-02/en

copyright © Liebherr-Werk Ehingen GmbH 2016

5.2.2 Placing the counterweight plates on the central ballast

Note

▶ Use the release button **675** to control the necessary release functions. The release key **675** is deactivated 30 s after a button is last pressed on the BKE.

▶ Activate the release button **675** and then press the button **689**.

Result:

– The LED on button **689** blinks as the turntable is pinned.
– During the pinning procedure, the pin in the „Turntable locked“ icon **12.2.1** blinks.
– As soon as the crane superstructure is locked with the crane chassis, the „turntable locked“ icon **12.2.1** appears static and the LED on button **689** lights up (static).

When the pinning procedure of the turntable lock has been completed:

▶ Release the button **689**.
▶ Press the button **691**.

Result:

– The counterweight is lowered on the counterweight receptacle.
– When the ballasting cylinders are extended completely, the LED on button **691** lights up static.

When the ballasting cylinders are completely extended and the counterweight is completely placed down on the counterweight receptacle:

▶ Release the button **691**.
▶ Press the button **688**.

Result:

– The LED on button **688** blinks as the turntable is unpinned.
– During the unpinning procedure, the pin in the „Turntable released“ icon **12.2.2** blinks.
– As soon as the crane superstructure is released, the „turntable released“ icon **12.2.2** appears static and the LED on button **688** lights up (static).

LWE/ab Muli 010/24201-02-02/en

copyright © Liebherr-Werk Ehingen GmbH 2016

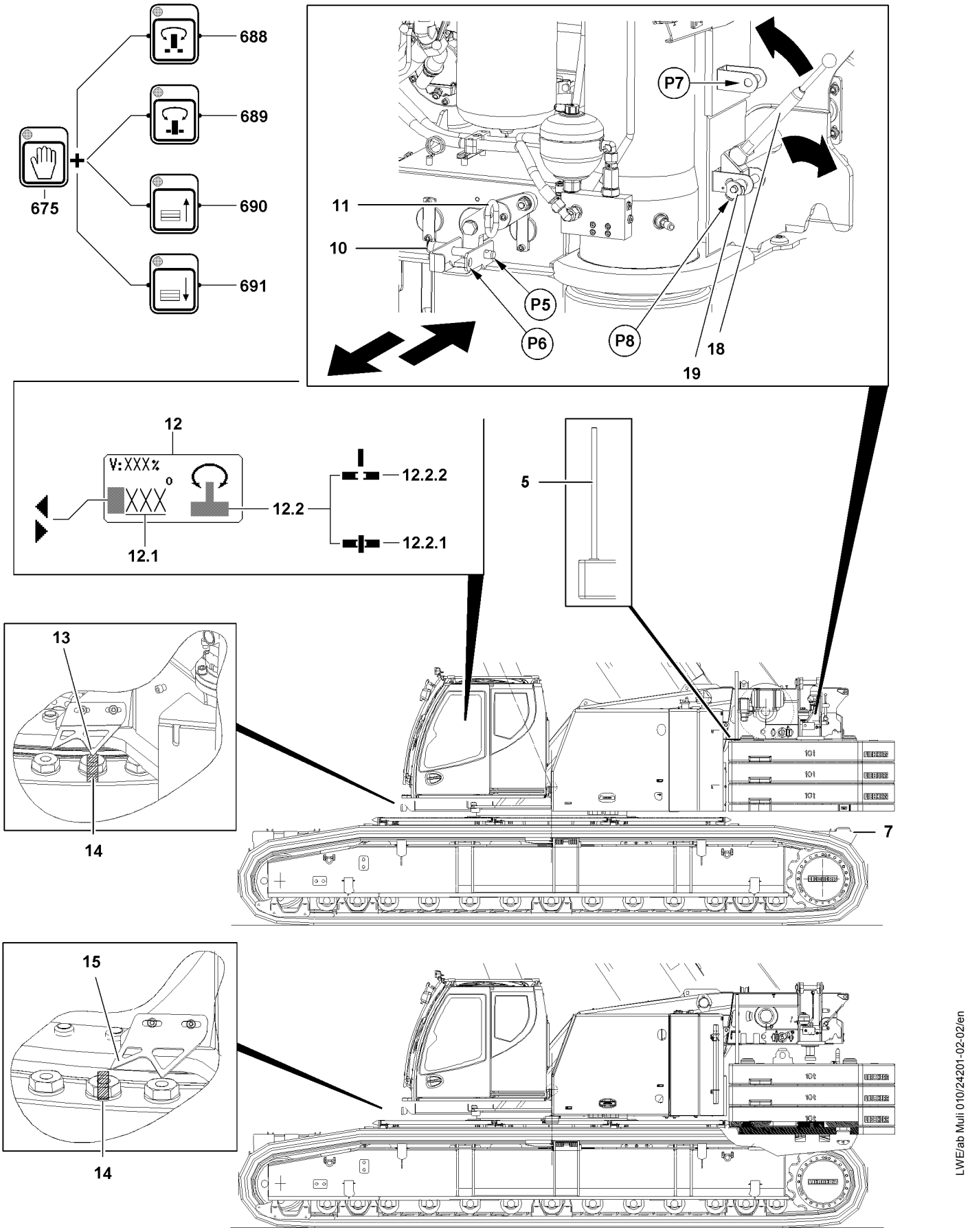

Fig.117328

copyright © Liebherr-Werk Ehingen GmbH 2016

LWE/ab Muli 010/24201-02-02/en

When the unpinning procedure of the turntable lock has been completed:

▶ Release the button **688**.

▶ Rotate the crane superstructure until the small pointer **15** on the slewing ring aligns with the marked screw **14**, illustration **1**.

Result:

– The ballasting cylinders are now moved out from the receptacle studs of the counterweight.
– On the LICCON monitor, in the turning rage icon **12** 176° to 177° is shown as a value **12.1**.

▶ Press the button **689**.

Result:

– The LED on button **689** blinks as the turntable is pinned.
– During the pinning procedure, the pin in the „Turntable locked“ icon **12.2.1** blinks.
– As soon as the crane superstructure is locked with the crane chassis, the „turntable locked“ icon **12.2.1** appears static and the LED on button **689** lights up (static).

When the pinning procedure of the turntable lock has been completed:

▶ Release the button **689**.

▶ Press the button **690**.

Result:

– The ballasting cylinders are moved in.

5.2.3 Releasing the turntable lock

▶ Press the button **688**.

Result:

– The LED on button **688** blinks as the turntable is unpinned.
– During the unpinning procedure, the pin in the „Turntable released“ icon **12.2.2** blinks.
– As soon as the crane superstructure is released, the „turntable released“ icon **12.2.2** appears static and the LED on button **688** lights up (static).

LWE/ab Muli 010/24201-02-02/en

copyright © Liebherr-Werk Ehingen GmbH 2016

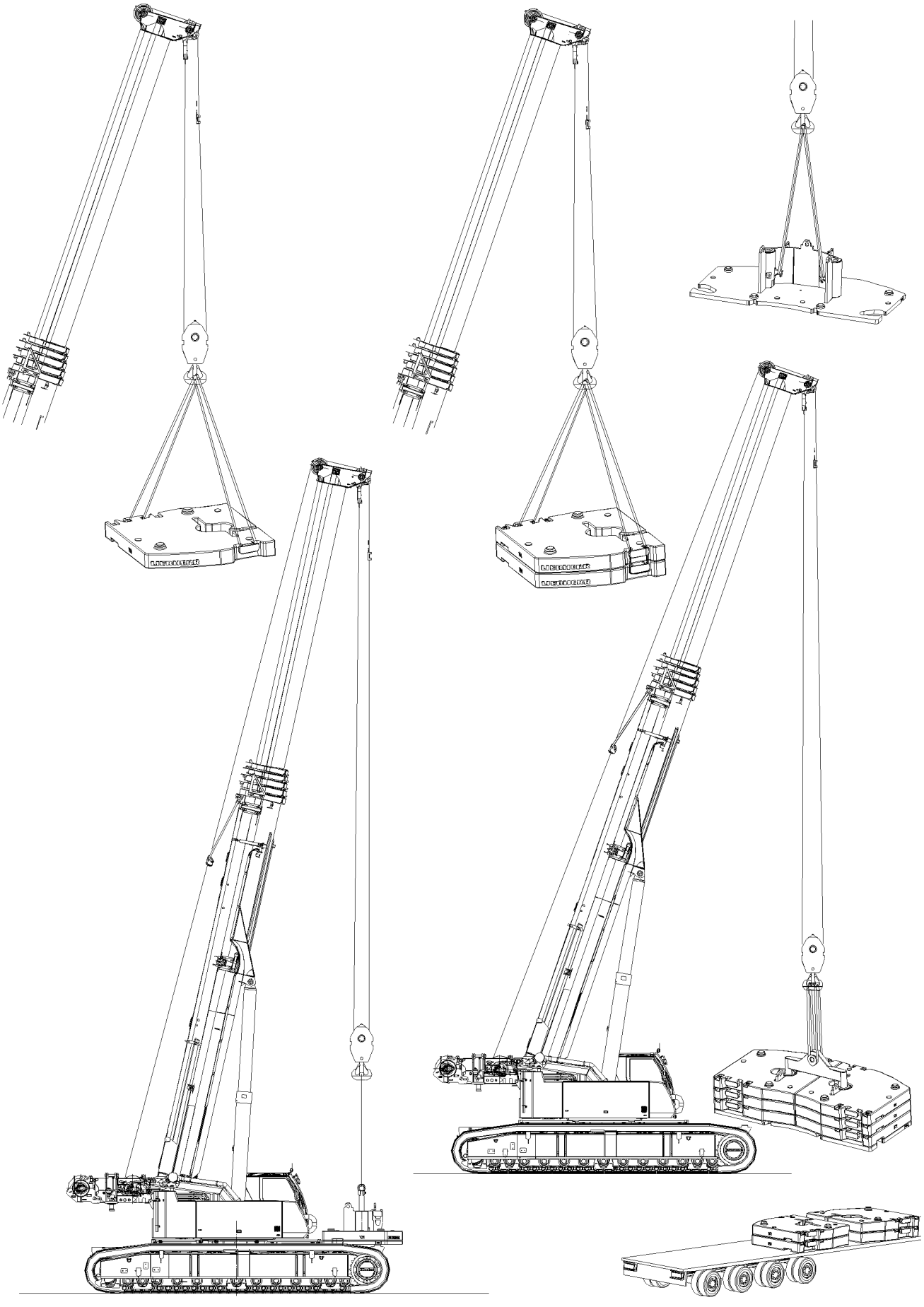

Fig.117332

LWE/ab Muli 010/24201-02-02/en

copyright © Liebherr-Werk Ehingen GmbH 2016

5.3 Lifting the counterweight from the central ballast

WARNING
Danger of accident due to toppling the crane!
The boom lengths and boom radii specified in the load chart may not be exceeded. If this is not observed, there is a danger of accidents as the crane can topple over!
Personnel can be severely injured or killed!
▶ The boom lengths and boom radii noted in the load chart must be strictly observed!

▶ Attach the counterweight on the crane.
▶ Place the counterweight individually or as an assembly with the cross beam on the transport vehicle.

LWE/ab Muli 010/24201-02-02/en

copyright © Liebherr-Werk Ehingen GmbH 2016

1

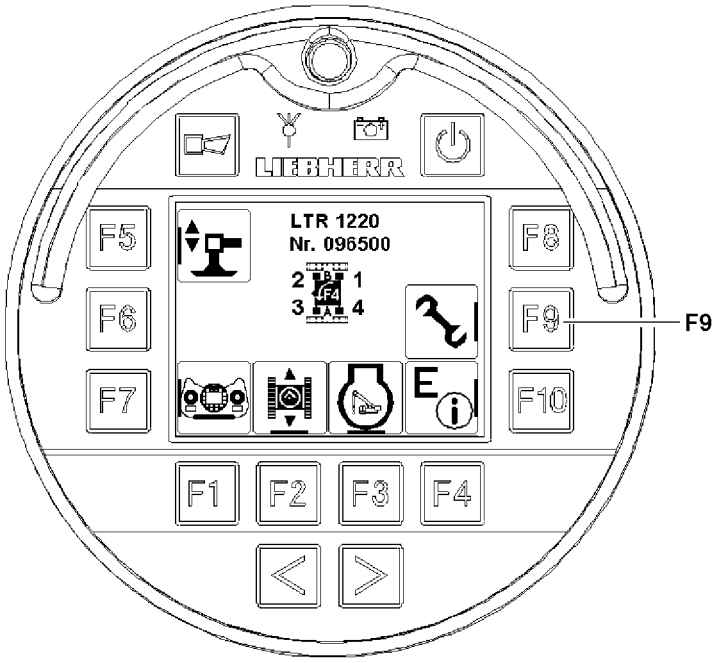

2

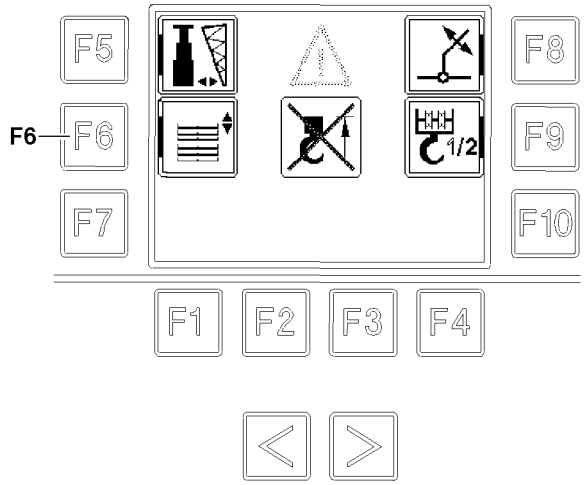

3

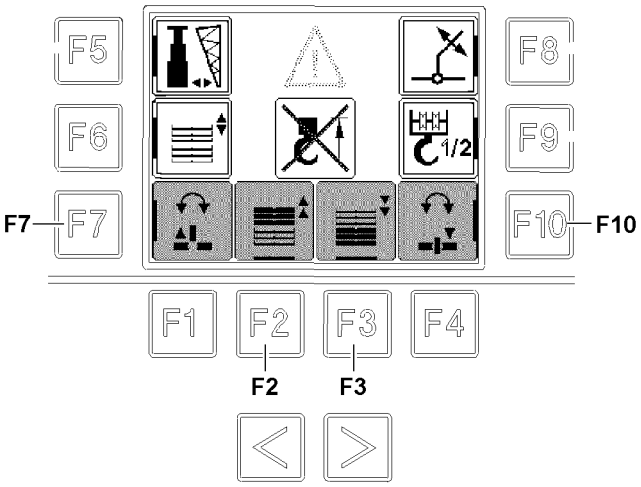

Fig.117334

LWE/ab Muli 010/24201-02-02/en

copyright © Liebherr-Werk Ehingen GmbH 2016

6 Operating element Bluetooth™ Terminal

The turntable lock and the ballasting cylinders can be controlled with the Bluetooth™ Terminal.

Make sure that the following prerequisite is met:
- The Bluetooth™ Terminal is turned on.
- The start menu is set, see illustration **1**

6.1 Pinning the turntable with the Bluetooth™ Terminal

▶ Press the function key **F9**.

Result:

– The BTT displays the „Main menu“, see illustration **2**.

▶ Press the function key **F6**.

Result:

– The BTT displays the „Main menu“, see illustration **3**.

▶ Press the function key **F10**, see illustration **3**.

Result:

– The turntable lock is pinned.

▶ Press the function key **F7**, see illustration **3**.

Result:

– The turntable lock is unpinned.

6.2 Retract / extend the ballasting cylinders with the Bluetooth™ Terminal

▶ Press the function key **F9**.

Result:

– The BTT displays the „Main menu“, see illustration **2**.

▶ Press the function key **F6**.

Result:

– The BTT displays the „Main menu“, see illustration **3**.

▶ Press the function key **F2**, see illustration **3**.

Result:

– The ballasting cylinders are moved in.

▶ Press the function key **F3**, see illustration **3**.

Result:

– The ballasting cylinders are moved out.

LWE/ab Muli 010/24201-02-02/en

copyright © Liebherr-Werk Ehingen GmbH 2016

Empty page!

copyright © Liebherr-Werk Ehingen GmbH 2016

4.08 Working with a load

1	Safety technical instructions for working with a load	3
2	Checks before starting to work with the crane	3
3	Crane movement - Telescoping	4
4	Taking on a load	7
5	Crane operation	13

LWE/ab Muli 010/24201-02-02/en

copyright © Liebherr-Werk Ehingen GmbH 2016

LWE/ab Muli 010/24201-02-02/en

Fig.195219

copyright © Liebherr-Werk Ehingen GmbH 2016

1 Safety technical instructions for working with a load

Note

▶ In addition to this chapter, observe Chapter 2.04 in the Crane operating instructions.

WARNING

The crane can topple over!

For steep boom positions, for which no loads are specified in the load charts there is a risk of the crane superstructure toppling when turning „backward“, i.e. towards the counterweight side.

There is a particular danger if the support basis has been reduced and supported with the sliding beams retracted.

Personnel can be severely injured or killed.

▶ The radii specified in the load chart must be observed.

WARNING

Danger of accident due to faulty operation!

If the reeving number on the pulley head is less than the reeving number set on the LICCON computer system and if the load is lifted with the luffing gear, it can result in an overload of the hoist rope, as a result, the hoist rope can rip, causing the load to drop.

Personnel can be severely injured or killed.

▶ Always comply with the reeving numbers specified in the load chart for maximum loads.

▶ The reeving on the pulley head and the reeving set on the LICCON computer system must match, otherwise crane operation is prohibited.

DANGER

Danger of fatal accidents due falling load!

If the number of three coils is fallen below (for example due to a technical defect), the hoist rope is ripped from the winch drum and the load falls down.

Personnel can be severely injured or killed.

▶ The crane operator must ensure that there are always at least three rope coils on the winch drum.

Always comply with the maximum loads specified in the load chart.

The weight of the hook block according the load chart must be taken into account.

For the lift, use the hook block which is suited best for the existing set up configuration in connection with the load chart.

Initiate all crane movements carefully. Also slow down the crane movements carefully. That way you can avoid a swinging or pendulum motion in the suspended load.

2 Checks before starting to work with the crane

Before starting work with the crane, the crane operator must carry out a further inspection to satisfy himself about the crane’s operational safety:

– Check that the crane is properly supported and level.
– Check that all values in the load chart that apply to the current equipment configuration have been entered and met.
– Ensure that there are no people or objects in the crane danger zone.

LWE/ab Muli 010/24201-02-02/en

copyright © Liebherr-Werk Ehingen GmbH 2016

WARNING
Danger of accidents when turning the crane superstructure!
By turning the crane superstructure in restricted space conditions on the job site, especially in the rear area of the counterweight and towards the chassis, personnel can be crushed and severely injured or killed.
- ▶ Give a short warning signal (horn) before starting a crane movement.
- ▶ Ensure before starting any slewing movement that there are no people or objects in the danger zone.

2.1 Visual check for damage

WARNING
Danger of accident!
If the crane is operated despite existing defects, personnel can be severely injured or killed.
- ▶ In the event of deficiencies which threaten operational safety, stop crane operations immediately.

The following deficiencies threaten the crane's operational safety:
- Damage to load-bearing parts of the crane design, such as booms, supports etc.
- Failure of the hoist gear brake and consequent slipping of the load
- Functional failures in the crane control system
- Functional defects in the indicator and warning lights
- Damage to the hoist ropes
- Functional defects in the safety devices
- Leakages on safety relevant components of the crane hydraulic

Inform the appropriate supervisor about the deficiencies on the crane and also inform your relief when crane operators are changed.

2.2 Telescopic boom distortion because of sunshine on one side

A temperature difference occurs between the side facing the sun and the side facing away from the sun for cranes with telescopic booms. This causes telescopic boom side distortion, which can reduce the load-bearing capacity of the telescopic boom.

For example, a temperature difference between the two boom sides of 30 °C and a boom length of 60 m results in a length difference caused by the temperature difference between the two sides of the telescopic boom of approximately 22 mm. With narrow boom parts, this causes the profiles to bend sideways.

If the maximum load carrying capacity is being utilized when a telescopic boom extension such as a fixed lattice jib, luffing lattice jib or folding jib is being used, then in must be ensured through a visual inspection before picking up the load that the boom is not showing signs of side deformation due to one-sided sun exposure.

WARNING
Danger of accident due to component overload!
If the telescopic boom has become distorted because of one-sided sunlight, this can cause component overload and therefore accidents.
- ▶ Turn the crane so that both sides of the boom are heated up equally, eliminating side deformation due to temperature difference.

3 Crane movement - Telescoping

If the telescopic boom is telescoped with the auxiliary boom or telescopic boom extension, before the telescoping procedure, ensure that:
- The crane is properly supported and horizontally aligned.
- The telescopic boom is evenly warmed up by solar radiation.

LWE/ab Muli 010/24201-02-02/en

copyright © Liebherr-Werk Ehingen GmbH 2016

– There is no strong side wind.

WARNING
Damage of the telescopic boom or the hoist rope!
If these 3 factors are not adhered to, damage of the telescopic boom or the hoist rope can occur and lead to accidents.

- ▶ Support the crane properly and align it horizontally.
- ▶ Keep both sides of the boom at about the same temperature.
- ▶ Telescope only to the permissible wind speed according to the load chart.
- ▶ If the actual wind speed is higher than the permissible wind speed noted on the load chart, telescoping is prohibited.

LWE/ab Muli 010/24201-02-02/en

copyright © Liebherr-Werk Ehingen GmbH 2016

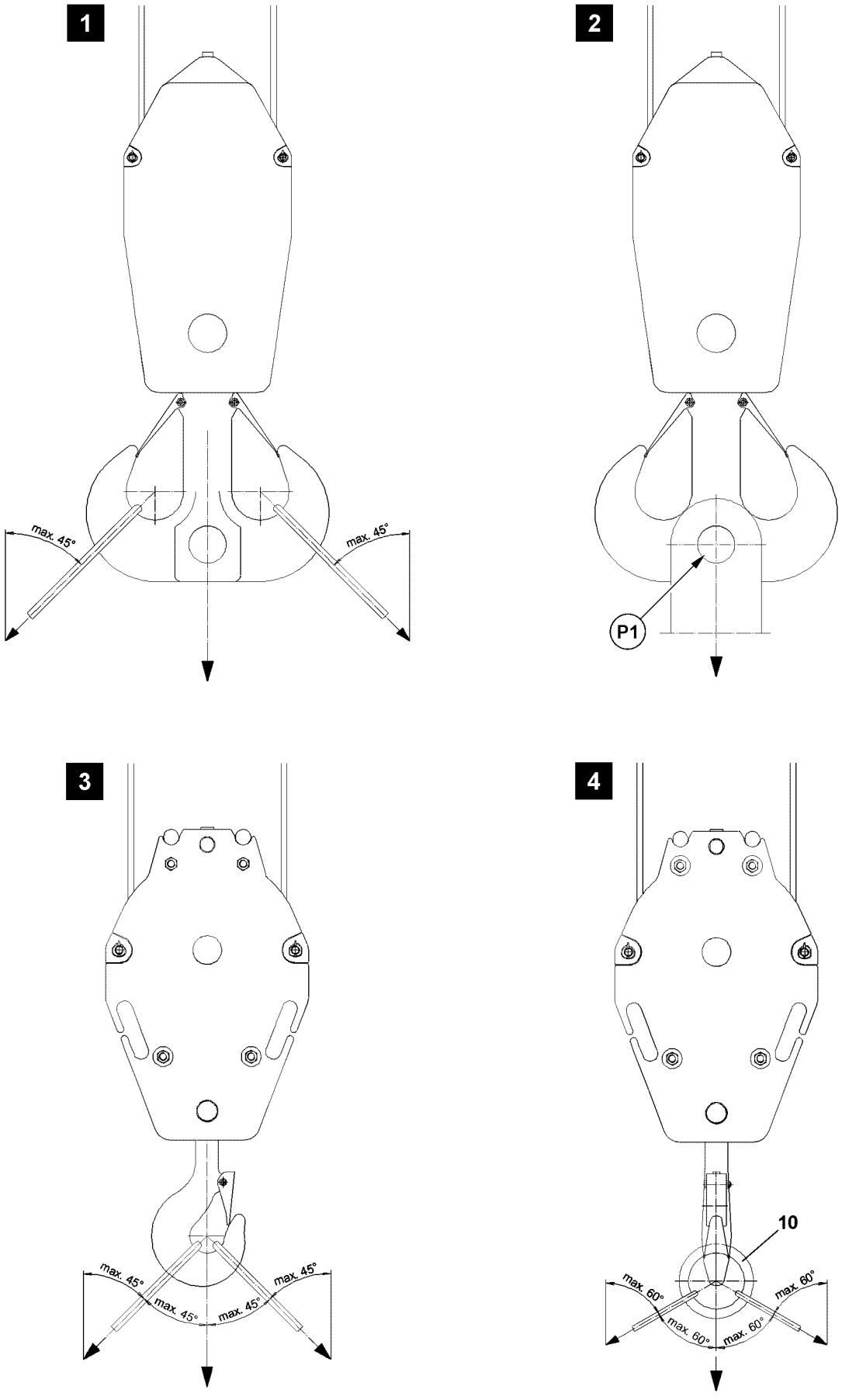

Fig.121650

LWE/ab Muli 010/24201-02-02/en

copyright © Liebherr-Werk Ehingen GmbH 2016

4 Taking on a load

The crane must always be operated in such a way that its load-bearing parts are not destroyed or damaged and its stability is ensured.

Make sure that the following prerequisites are met:
- The crane is supported and horizontally aligned.
- The LICCON overload protection has been set according to the load chart.
- The LICCON overload protection is active.
- The central ballast has been attached according to the load chart.
- The counterweight is installed according to the load chart.
- The derrick ballast has been installed according to the load chart.
- The hook block or the load hook is correctly reeved.

4.1 Fastening the load

WARNING
Load can be ripped off!
If impermissible fastening and / or load handling equipment is used when taking up a load on the centric bore on the double hook at point **P1** (illustration **2**), then the double hook as well as the hook block can be damaged.
The load can rip off and fall down.
Personnel can be severely injured or killed.
▶ Lift the load via the centric bore on the double hook (point **P1**): For the technical requirements and the technical design of the fastening and / or load handling equipment contact the hook block manufacturer.

WARNING
The crane can topple over!
If the following conditions are not met, the crane can topple over.
Personnel can be severely injured or killed.
This could result in high property damage.
▶ Pay attention to the own weight of the load handling equipment.
▶ Pay attention to the load capacity of the load handling equipment!
▶ The maximum permissible incline of the strands fastened on the single or double hook in the hook jaws is 45°. See illustration **1** and illustration **3**.

If necessary for the single hook:
▶ Use fastening equipment with a suspension link **10**. The maximum permissible incline is 60°. See illustration **4**.
▶ Load a single and double hook symmetrically. A maximum deviation of ±3° from the direction of the center of gravity is permissible.

If necessary:
▶ Use crossbars or two cranes for taking up the load.

LWE/ab Muli 010/24201-02-02/en

copyright © Liebherr-Werk Ehingen GmbH 2016

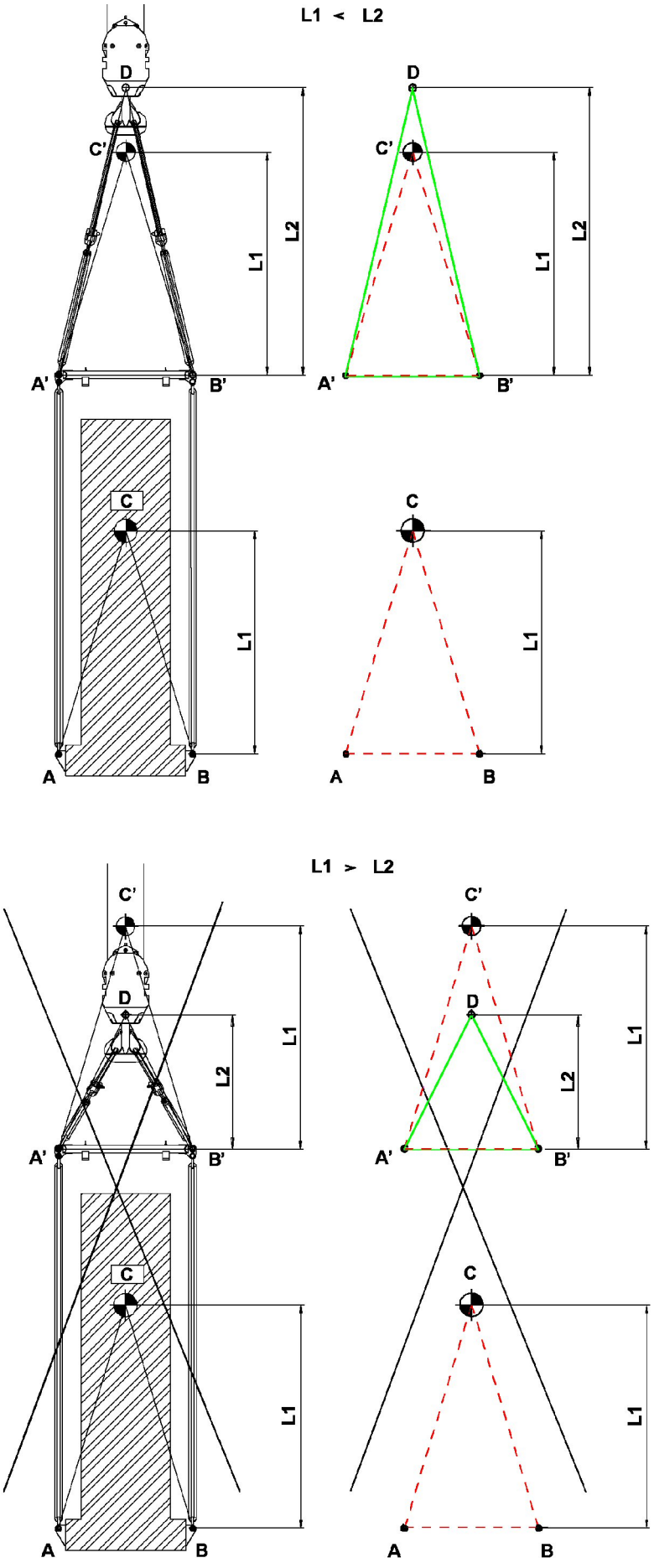

Fig.116274

LWE/ab Muli 010/24201-02-02/en

copyright © Liebherr-Werk Ehingen GmbH 2016

4.2 Load take up with cross bar

Cross bars are load handling equipment between crane hook and load.

The distance of the center of gravity **L1** is the vertical dimension from the fastening point of the load to the center of gravity of the load.

The cross bar height **L2** is the vertical dimension from the point of rotation of the crane hook to the next lower linkage point of the cross bar.

WARNING
Tipping of load to the side!
If fastening ropes are used which are too short, so that the load center of gravity is above the fastening point, then there is a danger of the load tipping to the side.
Personnel can be severely injured or killed.
- ▶ The load center of gravity must be below the crane hook.
- ▶ The distance of the center of gravity **L1** must be smaller than the cross bar height **L2** (L1 < L2).
- ▶ The triangle **A'B'C'** must be within the triangle **A'B'D**.

4.3 Transporting the hook block

WARNING
Danger of accident!
If a hook block is fastened incorrectly for transport, personnel can be injured.
- ▶ Fasten the hook block for transport on the fixed point in the center.
- ▶ Fastening the complete hook block on the auxiliary weights is prohibited.

LWE/ab Muli 010/24201-02-02/en

copyright © Liebherr-Werk Ehingen GmbH 2016

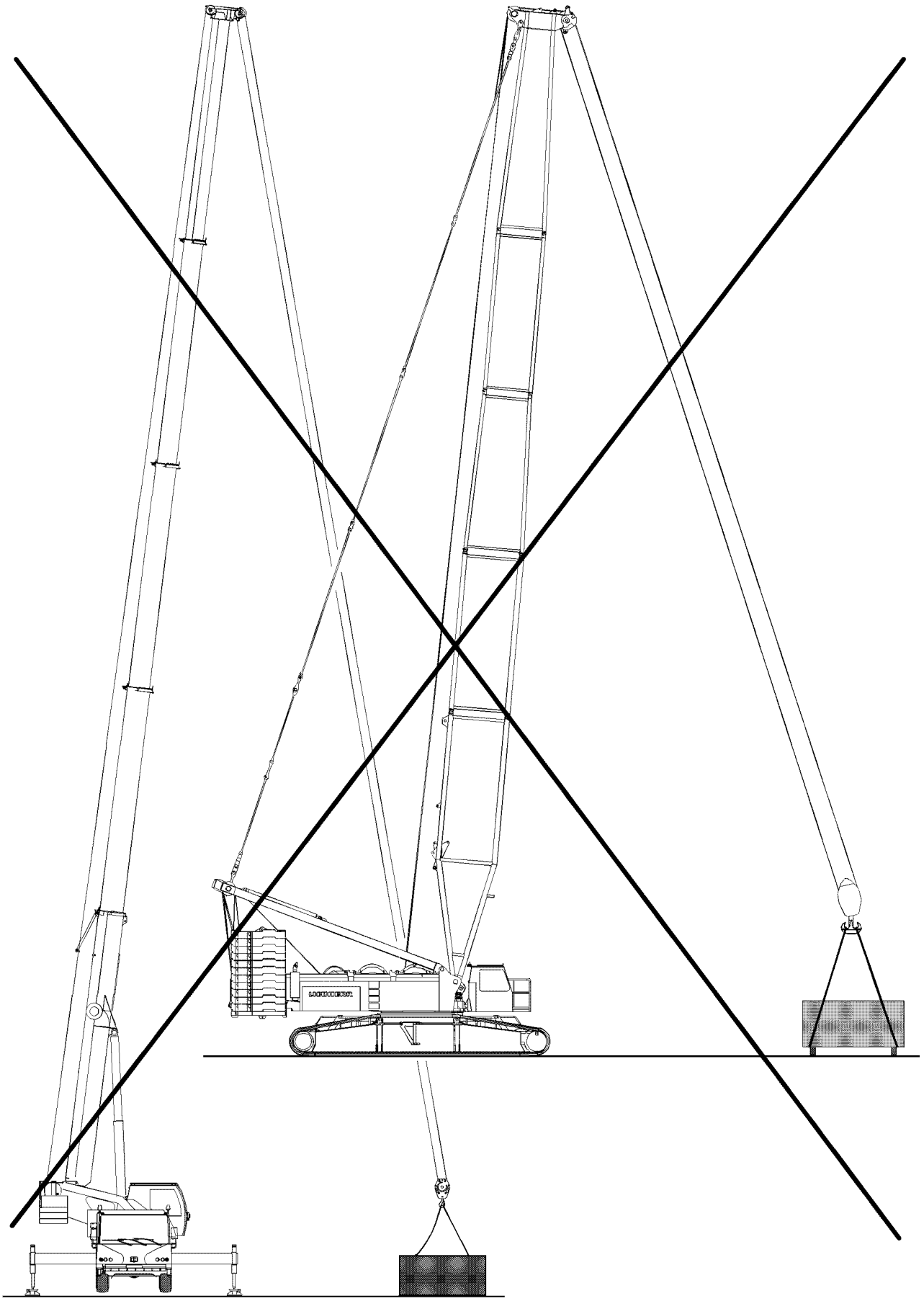

Fig.102716

LWE/ab Muli 010/24201-02-02/en

copyright © Liebherr-Werk Ehingen GmbH 2016

4.4 Lifting the load

WARNING
Danger of crushing for people in the load zone!
If personnel is located between the load to be lifted and a possible interfering edge (such as a wall of a building or similar) when the load is lifted, personnel can be severely injured or killed.
- ▶ Before lifting the load it must be ensured that there are no persons within the danger zone.
- ▶ It is prohibited to remain within the danger zone.
- ▶ It is prohibited for anyone to be under the load. Keep a safety distance.
- ▶ Swinging the load is prohibited.
- ▶ Exercise extreme caution when lifting a load.

WARNING
The crane can topple over!
If an attempt to lift a load over the hoist gear causes the LICCON overload protection to turn off, then the load may not be lifted by luffing up the boom. This causes overload or toppling the crane.
Personnel can be severely injured or killed.
- ▶ Do not lift the load by luffing up the boom off the ground.

Note
When using the assembly winch* observe the following:
- ▶ Use the assembly winch* only for assembly and not for lifting loads.
- ▶ Lifting of loads with the auxiliary winch is prohibited.

If the fastening rope is manually attached by an assistant to the load to be lifted:
- – Make sure that the assistant's hands are not crushed by the tightened ropes between the load and the fastening rope.
- – Make sure that the assistant's body parts (hands, legs etc.) are not crushed by a swaying movement of the load during lifting.

4.5 Angular pulling

WARNING
The crane can topple over!
Angular pulling can destroy the crane or cause it to topple over.
Personnel can be severely injured or killed.
- ▶ Attach (hang) the hook block always vertically over the center of gravity of the load to be lifted.
- ▶ Do not use the slewing gear to pull and set up loads.
- ▶ Angular pull is prohibited.

The crane is designed only to lift loads vertically. During angular pulling, regardless of whether this is done in the same direction as the boom or laterally, horizontal forces are generated in addition to the vertical forces, for which the boom is not designed.

LWE/ab Muli 010/24201-02-02/en

copyright © Liebherr-Werk Ehingen GmbH 2016

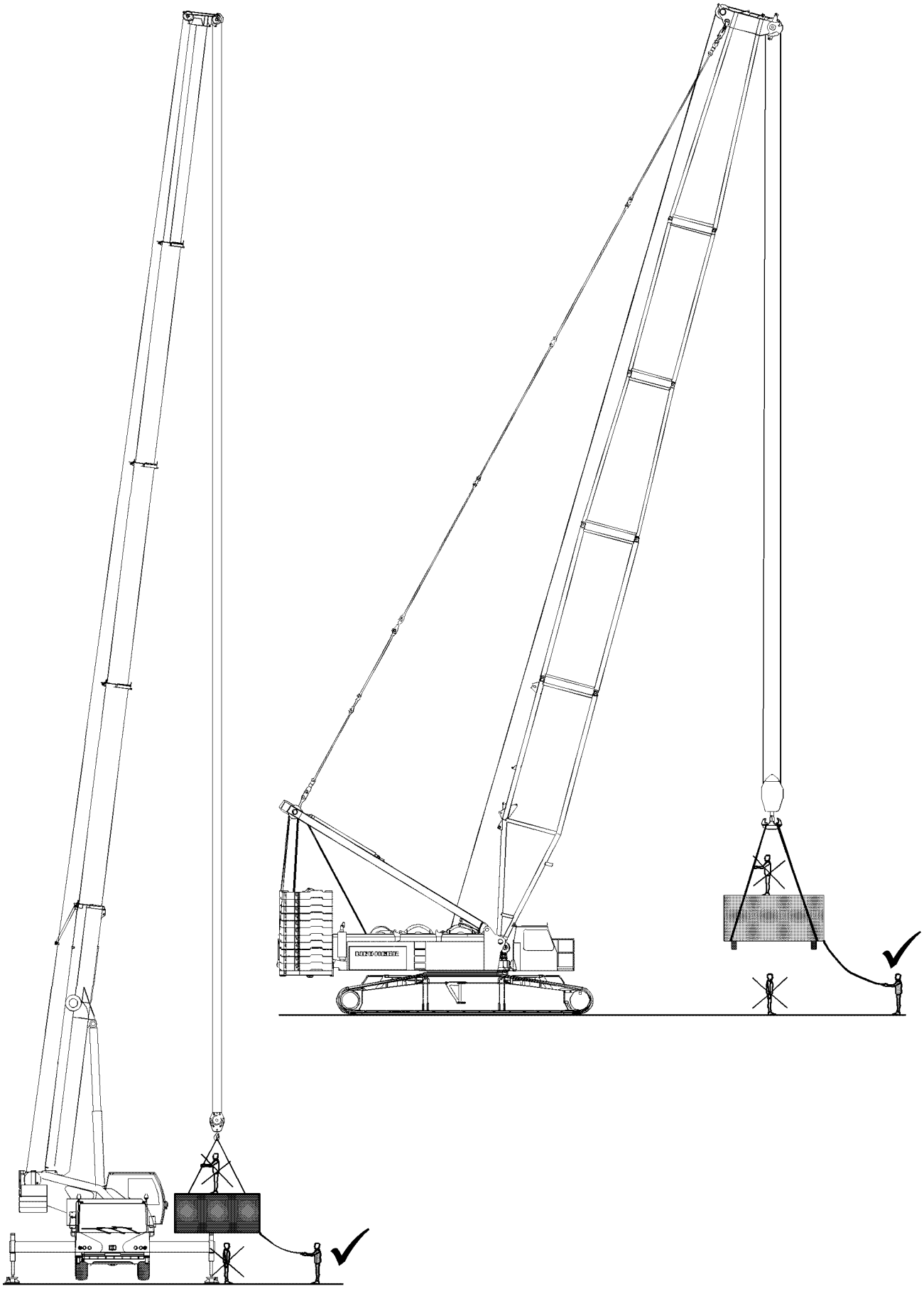

Fig.102717

LWE/ab Muli 010/24201-02-02/en

copyright © Liebherr-Werk Ehingen GmbH 2016

4.6 Breaking away fixed loads

WARNING
The crane can topple over!
Ripping stuck loads free can destroy the crane or cause it to topple over.
Personnel can be severely injured or killed.
▶ Ripping stuck loads free is prohibited.

5 Crane operation

The maximum load capacity of the crane is not just limited by the stability, but in many cases a load-bearing component breaks when the crane is overloaded **before** the crane topples over. Components that are susceptible to buckling such as the telescopic boom may fail suddenly **without showing signs of distortion beforehand** if the crane is overloaded.

WARNING
Danger of accidents for cranes with luffing cylinders!
When the luffing cylinder is on block position, the overload protection is not functioning.
▶ Crane operation at block position of luffing cylinders is prohibited.

5.1 General

A suspended load must always be kept under control. A fundamental requirement for this is the safe and delicate control of the crane's functions.

WARNING
Risk of accident due to swaying loads!
A swaying load can damage the crane and cause it to topple.
▶ All crane movements must be executed slowly and delicately.
▶ Initiate all crane movements slowly.
▶ Apply the brakes slowly in all crane movements.
▶ Crane operation with swaying load is prohibited.

NOTICE
Damage of rope pulleys!
▶ Place down hook blocks, booms, folding jibs, auxiliary booms and boom noses in such a way that the rope pulleys do not lie on the ground and are damaged.

5.2 Guiding the load

The use of guide ropes is recommended to help the crane operator manage the load more precisely and to prevent the load from swaying. This will prevent undesirable movements of the load and consequent damage.

5.3 Danger of crushing

WARNING
Danger of fatal injury!
Extreme care is needed when lowering a load. Mortal danger exists for personnel in the immediate area of the load being lowered.
Personnel can be severely injured or killed.
▶ Standing under a suspended loads is strictly prohibited.

LWE/ab Muli 010/24201-02-02/en

copyright © Liebherr-Werk Ehingen GmbH 2016

5.4 Danger of falling!

WARNING
Danger of fatal injury!
If persons are on the suspended load, then they can fall down and be severely injured or killed.
- ▶ Remaining on a suspended load is strictly prohibited.
- ▶ Remaining on or within crane components (for example: At assembly of boom sections, lattice sections) which are moved during lifting, lowering, turning or closing procedures is strictly prohibited.

5.5 Working in the vicinity of electricity transmission lines

If there are electricity transmission lines in the immediate vicinity of the building site, then the electrical transmission lines must be turned off by qualified electricians. If this is not possible, the danger area must be covered over or cordoned off.

WARNING
Danger of current transfer!
If electricity transmission lines are not shut off nor covered nor blocked off, then there is an increased danger due to current transfer.
- ▶ For rated voltages to 500 kV AC: Adhere to a safety distance of 8 m.

If the crane becomes electrified despite having taken all necessary precautions, proceed as follows:
- ▶ Remain calm!
- ▶ Do not leave the crane cab.
- ▶ Warn people outside: Stay in place and do not touch the crane.
- ▶ Move the crane away from the danger zone.

5.6 Ram work or pulling sheet piles

Vibration can be transmitted to the supporting steel structure of the crane during ram work or when pulling sheet piles with the crane. This vibration can cause premature fatigue of the material and therefore cracks in the supporting steel structure.

DANGER
Important instructions for „ram work“ or „pulling sheet piles“.
If the crane is used for ram work or pulling sheet piles, then the following instructions must be followed. Failure to follow the instructions can result in damage to the crane.
- ▶ The ramming equipment may not pass on vibrations into the boom.
- ▶ When pulling sheet piles, the maximum pull force of the crane is limited according to the load chart. Restricting the maximum pull force via the crane overload protection **only** is prohibited. The pull force must be additionally checked by measuring.

LWE/ab Muli 010/24201-02-02/en

copyright © Liebherr-Werk Ehingen GmbH 2016

4.10 Driving from the crane operator's cab

1	Prerequisites for driving the crane (crawler operation)	3
2	Displays for center of gravity, surface pressure and incline in the LICCON monitor	7
3	Preparing for driving the crane	13
4	Driving the crane: Load chart available	15
5	Driving the crane: No load chart is available	17
6	Crawler crane in crawler operation	20

LWE/ab Muli 010/24201-02-02/en

copyright © Liebherr-Werk Ehingen GmbH 2016

LWE/ab Muli 010/24201-02-02/en

Fig.199898

copyright © Liebherr-Werk Ehingen GmbH 2016

1 Prerequisites for driving the crane (crawler operation)

For driving the crane (crawler operation) the situations of the travel route are the deciding factor.
- For **ground inclines within the area of a valid load chart Driving with load** is possible at slow speed. The ground must be sufficiently level and capable of supporting the load. The addendums to the load charts for driving the crane must be observed.
- For **ground inclines outside the area of a valid load chart Driving without load** is possible at slow speed up to certain incline ranges. The ground must be sufficiently level and capable of supporting the load.

Driving the crane: Load chart available:
- valid and regular load chart available
- with load on the hook
- without load on the hook

Driving the crane: No load chart is available:
- only without load on the hook
- with specifications and limitations for the set up configuration of the crane

WARNING
The crane can topple over!
If the permissible inclines of the crane are exceeded, the crane can topple over.
If the permissible surface pressures of the travel route are exceeded, the crane can topple over.
Personnel can be severely injured or killed.
- ▶ Do not exceed the permissible inclines of the crane.
- ▶ Do not exceed the permissible surface pressures for the travel route.

WARNING
The crane can topple over!
If the following specifications, instructions and prerequisites are not observed, then the crane can topple over or be overloaded.
Personnel can be severely injured or killed.
- ▶ The crane operator is responsible for adhering to all specifications, instructions and prerequisites in the crane documentation.
- ▶ The crane operator may not drive the crane if not all specifications, instructions and prerequisites in the crane documentation can be adhered to.
- ▶ The crane operator is responsible for the correct and complete entry of data in the LICCON computer system.
- ▶ All drive movements (starting out, steering, acceleration, deceleration, stopping etc.) must be initiated sensitively, smoothly, with utmost caution and at the lowest speed.
- ▶ Depending on the situation, additional observers, who are acoustically or visually connected with the crane operator (for example by radio or sight), may have to support the crane operator with shared responsibility.

Make sure that the following prerequisites are met:
- No personnel or obstacles are within the danger zone.
- The crane is in operational condition.
- The crane is in a set up configuration permitted for travel operation.
- Installed ballast (central ballast and counterweight) is properly installed and secured.
- There are no loose objects on the crane.

LWE/ab Muli 010/24201-02-02/en

copyright © Liebherr-Werk Ehingen GmbH 2016

1.1 Travel route

WARNING
The crane can topple over!
If the following specifications, instructions and prerequisites are not observed, then the crane can topple over or be overloaded.
Personnel can be severely injured or killed.
- ▶ The transfer from the horizontal into an uphill incline and from the uphill incline into the horizontal must be made evenly, i.e.: There may be no edges which can cause the crane to topple over. Any incline changes must be made continuously.
- ▶ If the travel route cannot safely take on the surface pressure, then measures must be taken to be able to safely induce the forces into the ground.
- ▶ If measures were taken to induce the forces into the ground, then they must be checked by an expert before starting to drive for proper execution and sufficient supportability.
- ▶ An insufficient ground condition can cause accidents, for example the crane can slide away to the side and as a result get into an impermissible incline position.

Make sure that the following prerequisites are met:
- Before starting to drive, the travel route was determined.
- Before starting to drive, the condition of the ground has been checked.
- The entire travel route can safely absorb the surface pressure.
- All inclines occurring on the travel route can be driven safely by the crane.
- The entire travel route is free of obstacles.
- The friction coefficient between crawler track and ground is sufficiently large to absorb the occurring drive forces or to eliminate the crane from slipping away in an incline position.
- Possible environmental influences for driving the crane (among others precipitation and wind) were taken into account for the travel route.
- The travel route was selected and prepared in such a way that the boom system can be taken down at any time.
- Select the travel route in such a way that no steering movements are required, if possible.
- With load on the hook: Setting down the load is possible at any time.
- The entire travel route is secured as a danger zone.
- The travel route has been selected in such a way that a sufficient distance to local facilities (among others power lines) can be retained.

For falling terrain gradients outside the range of a valid load chart, the following applies additionally:
- Before starting to drive, the travel route was checked in connection with the actual set up configuration of the crane on the LICCON job planner.
- Before starting to drive, the optimum positions for the boom system were determined to obtain as even a surface pressure as possible - the LICCON job planner can be used for this purpose.

Note
- ▶ For a detailed description of the LICCON job planner on the crane*, see the Operating instructions LICCON Job planner.
- ▶ For a detailed description of the computer program LICCON job planner, see separate description.

LWE/ab Muli 010/24201-02-02/en

copyright © Liebherr-Werk Ehingen GmbH 2016

1.1.1 Optimizing measures for travel route

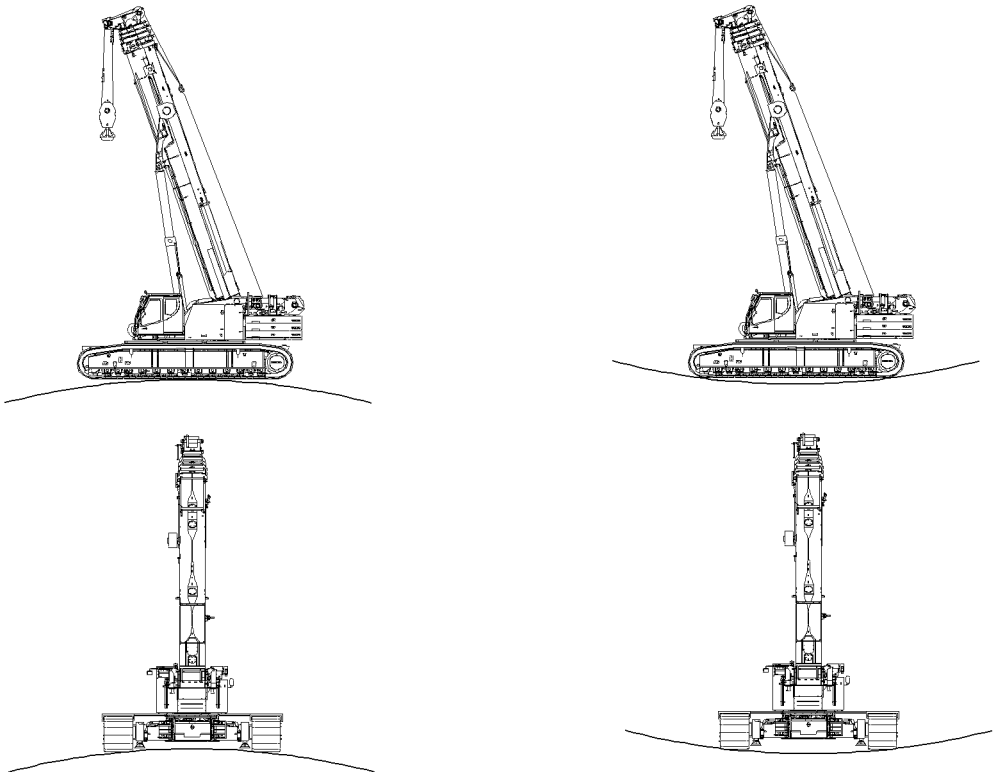

Fig.117927: Depressions, crests, track grooves and other uneven areas of the travel route cause punctiform strain to the track.

NOTICE
Damage to the track!
Continuous punctiform strain to the track causes increased wear. Continuous increased wear can cause damage to the track.
- ▶ Set up the travel routes in such a way that the track is not subjected to continuous punctiform strain.
- ▶ For extended travel operation shorten the maintenance intervals.

Through the following configuration features of the travel route, wear on the track can be minimized:
- – Shapings of the travel route (such as depressions, crests, track grooves) have been eliminated via suitable measures.
- – Select the travel route in such a way that few steering movements are required.

1.2 Calculation of required length of transfers in uphill / downhill inclines

The required length **L** for transfers results from the existing uphill angle **α** and the length of the crawlers **LC**.

copyright © Liebherr-Werk Ehingen GmbH 2016

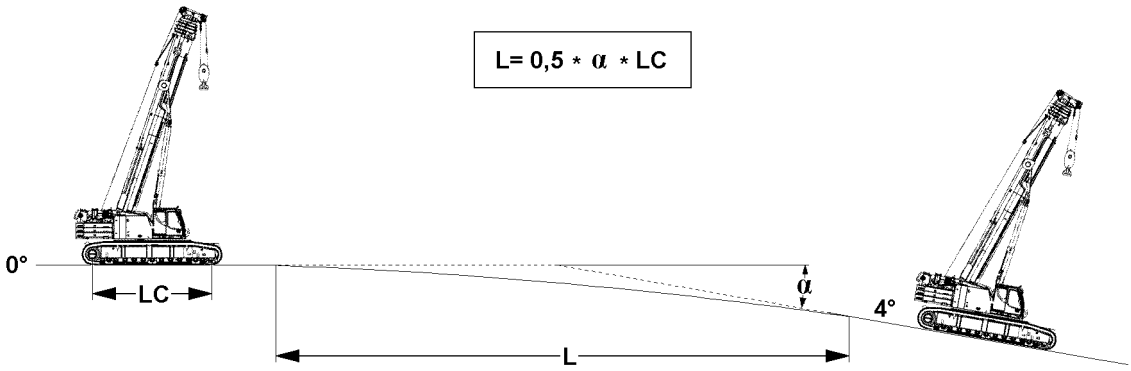

Fig.121101: Illustration is an example

Abbreviation	Description
L	Required length of transfers
α	Angle Rising / falling inclines in degrees
LC	Length of crawlers between drive wheels / steering wheels

1.2.1 Calculation example

Given:

α = 4°

LC = 8.0 m (use only the actual value of the crane!)

Wanted:

L = ?

Calculation formula						
L	=	0,5	*	**α**	*	**LC**
L	=	0,5	*	4	*	8.0 m
L	=	16.0 m				

1.3 Travel gears / hydraulic motors / track rollers

NOTICE
Damage to the travel gear, hydraulic motors and track rollers!
On longer travel routes and / or when driving uphill / downhill, the travel gears, hydraulic motors and / or track rollers can be overheated and damaged.

- ▶ Make sure that the travel gears - before driving the crane - are on maximum fill level.
- ▶ With suitable measuring devices make sure that the maximum permissible temperature of the travel gears, hydraulic motors and / or track rollers in travel operation over longer distances is below 90 °C. For a short time (**maximum** 10 minutes), the temperature may increase to a value between 90 °C and 100 °C.
- ▶ As soon as the maximum permissible temperature on one position is exceeded, take a break for cooling off.
- ▶ The crane operator is responsible for any damage on travel gears, hydraulic motors and / or track rollers.

LWE/ab Muli 010/24201-02-02/en

copyright © Liebherr-Werk Ehingen GmbH 2016

When the maximum permissible temperature range on a travel gear and / or hydraulic motor is reached:

▶ Take a break until the temperature on travel gear(s), hydraulic motor(s) and / or track rollers had dropped considerably.

Maximum permissible temperature range on travel gear(s) / hydraulic motor(s)		
	to 90 °C	**between 90 °C and 100 °C**
Duration of exposure	continuous	not longer than 10 minutes

When the temperature has dropped on all travel gears / hydraulic motors under 90 °C:

▶ Travel operation is permissible again.

1.4 Use of insertion plates into the track chains

If insertion plates are used in the track chains:

– The ground can be saved from damage.
– It is possible that the friction coefficient between the track and the ground changes.

WARNING
If the friction coefficient is too low between the track and the ground then there is a danger of accident!
In unfavorable ground characteristics, such as snow or ice, the friction coefficient between the track and the ground is reduced.
The drive forces can no longer be absorbed.
The crane can slide off.

▶ Use insertion plates only when a sufficient friction coefficient between the track with insertion plates and the ground is ensured.

2 Displays for center of gravity, surface pressure and incline in the LICCON monitor

WARNING
Danger of accident due to deviating set up configuration!
If the actual set up configuration of the crane deviates from the entries and settings in the Set up program, then the overload protection is not correctly set.
An incorrectly set overload protection calculates the actual load incorrectly and transmits faulty display values.
The crane can be overloaded without noticing it and topple over or collapse as a result.
Personnel can be severely injured or killed.

▶ The entries and settings in the set up program must match the actual set up configuration of the crane.

WARNING
Incorrect display values!
If the display values do not increase correspondingly when lifting known weights, an erroneous display value may be present.
If the crane is operated with erroneous display values, then the crane can be overloaded.
This could result in serious accidents.

▶ When lifting the hook block off the ground check if the display value for the actual load increases correspondingly.
▶ When lifting the load off the ground check if the display value for the actual load increases correspondingly.

LWE/ab Muli 010/24201-02-02/en

copyright © Liebherr-Werk Ehingen GmbH 2016

Make sure that the following prerequisites are met:
- The actual set up configuration of the crane matches the entries and settings in the set up program.
- The assignment of the crane to the displays in the LICCON monitor is clear.
- All displays function flawlessly.

Note
- ▶ For a detailed description of the displays in the LICCON monitor, see Crane operating instructions, chapter 4.02.
- ▶ For a detailed description of the safety devices, see Crane operating instructions, chapter 4.04.

2.1 Display for the center of gravity in the LICCON monitor

WARNING
Shifting of center of gravity!
The calculation of the values for the display of the center of gravity in the LICCON monitor are based on ideal assumptions.
- ▶ Side deformations of the boom system due to wind, inclined position and elastic resilience of the steel structure are not taken into account but they can lead to a shifting of the center of gravity.

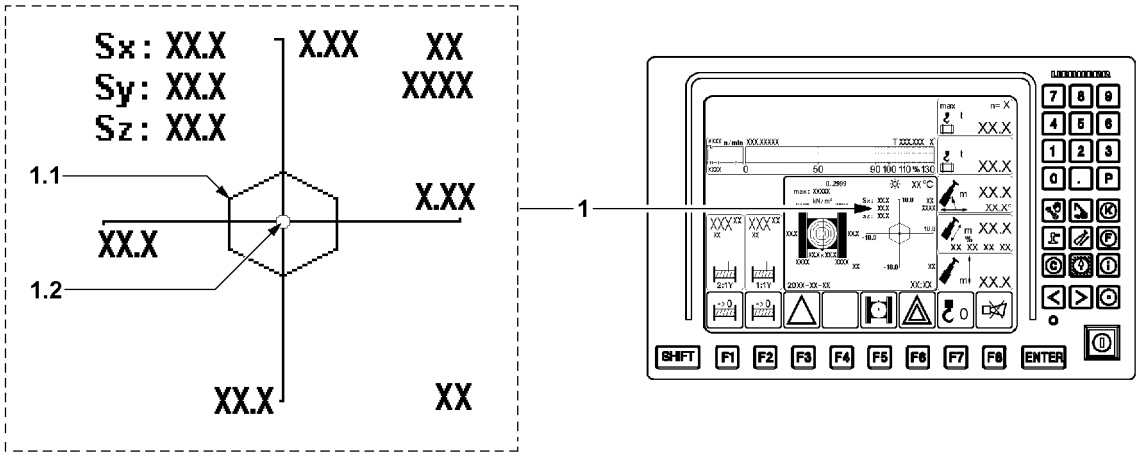

Fig.117916

Display Center of gravity **1**	
Position	**Description**
1.1	Core surface
1.2	Center of gravity

WARNING
Center of gravity of the crane is outside the core area!
If the center of gravity **1.2** of the crane is outside the core area **1.1**, then the crane can topple over. Personnel can be severely injured or killed.
- ▶ To drive the crane, the center of gravity **1.2** must always be within the core area **1.1**.
- ▶ If the center of gravity **1.2** is outside of the core area **1.1**, then it is prohibited to drive the crane.

The following specifications and instructions must be observed:
- By luffing the boom system up and down, the position of the center of gravity **1.2** must be corrected in such a way that the overall center of gravity remains within the core area **1.1**.

LWE/ab Muli 010/24201-02-02/en

copyright © Liebherr-Werk Ehingen GmbH 2016

2.2 Display for surface pressure and incline in the LICCON monitor

WARNING
Increased surface pressure!
The calculation of the values for the display of the surface pressure in the LICCON monitor are based on ideal assumptions.
▶ Side deformations of the boom system due to wind, inclined position and elastic resilience of the steel structure are not taken into account but they can lead to an increase of the surface pressure.

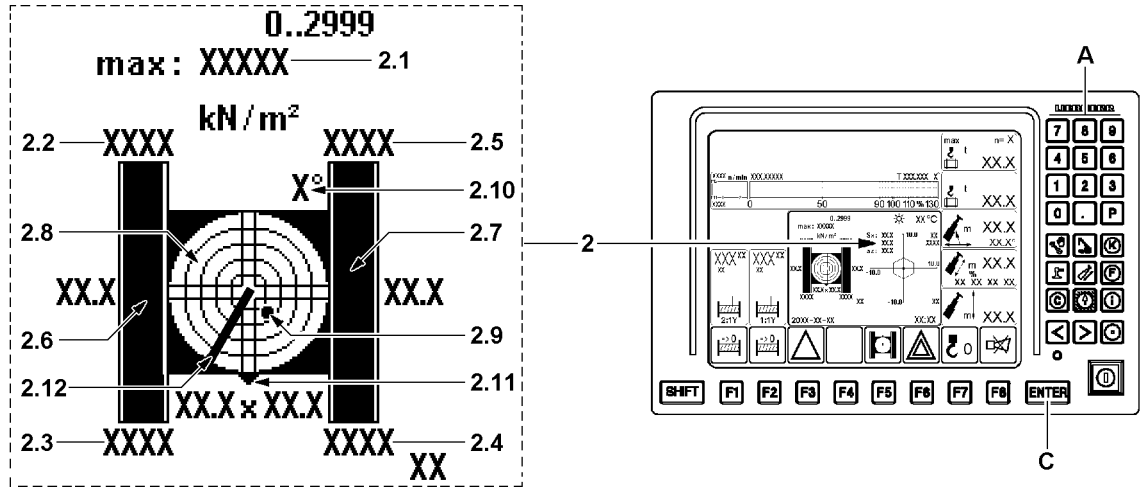

Fig.117917

Display Surface pressure **2**	
Position	**Description**
2.1	Maximum surface pressure
2.2	Surface pressure right rear
2.3	Surface pressure right front
2.4	Surface pressure left front
2.5	Surface pressure left rear
2.6	Placement surface Track right
2.7	Placement surface Track left
2.8	Incline display[1)]
2.9	Dot
2.10	Display resolution[2)]
2.11	Marker „Front side of crawler carrier“[3)]
2.12	Boom direction[4)]

1) The graphic display is in the form of a spirit level with a moving dot **2.9** representing the air bubble.
2) This value describes the resolution of the graphic view. The resolution is matched automatically to the incline.
3) The front on the crawler travel gear is always on the side where the chain tension devices for the crawler carriers are located.
4) Current boom direction in reference to the displayed icon.

copyright © Liebherr-Werk Ehingen GmbH 2016

WARNING
Surface pressure too high!
If the maximum surface pressure is exceeded, the crane can topple over.
Personnel can be severely injured or killed.
- ▶ Do not exceed the maximum surface pressure.
- ▶ The value entered in the LICCON computer system for the maximum surface pressure **2.1** must match the actual conditions of the travel route.

WARNING
The crane can topple over!
If the permissible incline of the crane is exceeded, the crane can topple over.
- ▶ Do not exceed the permissible incline from the load chart.
- ▶ Do not exceed the permissible incline for driving the crane, see the following sections.

Note
- ▶ The placement surface of the track is graphically shown in the display of the surface pressure.
- ▶ If the resulting surface pressure can be distributed so that the maximum surface pressure of the travel route is not exceeded **and** the resulting forces can be transferred safely into the ground, then the stability of the crane is ensured.
- ▶ Incline display **2.8** with number values, see section „Display of incline in LICCON monitor“.

The following specifications and instructions must be observed:
- The maximum surface pressure, which may be reached, must be entered as the maximum surface pressure **2.1**.
- By luffing the boom system up and down, the resulting surface pressure must be distributed in such a way that the maximum surface pressure of the travel route is not exceeded.
- Inclines, which are reached on the travel route are known and are taken into account.
- As soon as the crane shows the tendency that die permissible incline could be exceeded, the load must be set down. If necessary, driving the crane must be interrupted.

2.2.1 Entering the maximum permissible surface pressure

Make sure that the following prerequisites are met:
- The *Crane operation* program is called up.
- The maximum permissible surface pressure of the travel route is known.

▶ Press the enter key **C**.

Result:

- The value for the maximum surface pressure **2.1** can be changed.

▶ Enter the value for the maximum permissible surface pressure via the keyboard **A**.
▶ Press the enter key **C**.

Result:

- The new value for the maximum surface pressure **2.1** appears.

▶ Check the value for the maximum permissible surface pressure.

2.3 Display for the incline in the LICCON monitor

The display of the incline is additional shown at the monitored auxiliary functions.

There is the display of the incline of the crane to the horizontal in longitudinal and lateral direction. The display is graphic as well as numeric.

LWE/ab Muli 010/24201-02-02/en

copyright © Liebherr-Werk Ehingen GmbH 2016

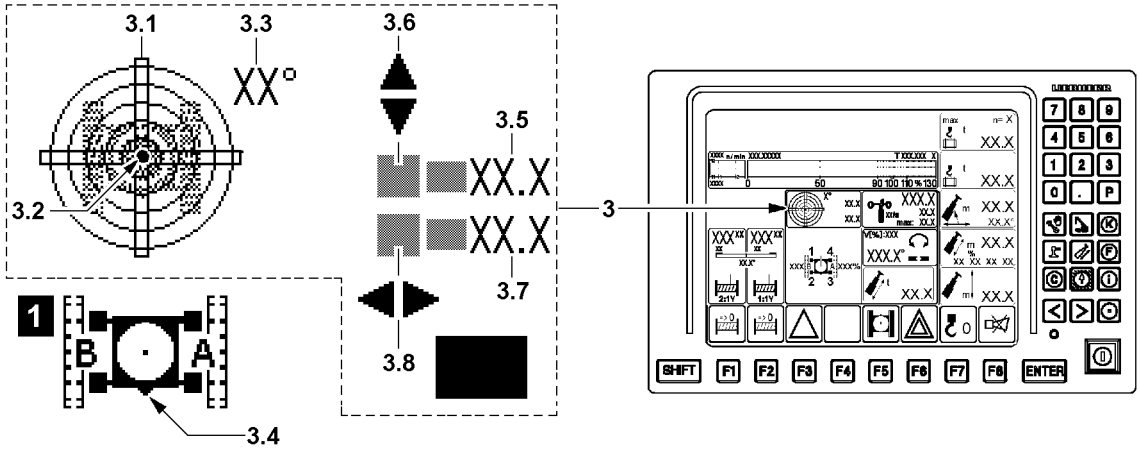

Fig.117918

Display Incline **3**	
Position	**Description**
3.1	Sight gauge
3.2	Bubble
3.3	Resolution of view
3.4	Marker Front side of crawler travel gear[1)]
3.5	Incline in longitudinal direction
3.6	Incline direction
3.7	Incline in lateral direction
3.8	Incline direction

1) The crawler travel gear is highlighted in the sight gauge **3.1** as orientation aid. The front side of the crawler travel gear **3.4** is in the display below, see detail **1**. The front on the crawler travel gear is always on the side where the chain tension devices for the crawler carriers are located.

WARNING
The crane can topple over!
If the permissible incline of the crane is exceeded, the crane can topple over.
▶ Do not exceed the permissible incline from the load chart.
▶ Do not exceed the permissible incline for driving the crane, see the following sections.

The following specifications and instructions must be observed:
– Inclines, which are reached on the travel route are known and are taken into account.
– As soon as the crane shows the tendency that die permissible incline could be exceeded, the load must be set down.

copyright © Liebherr-Werk Ehingen GmbH 2016

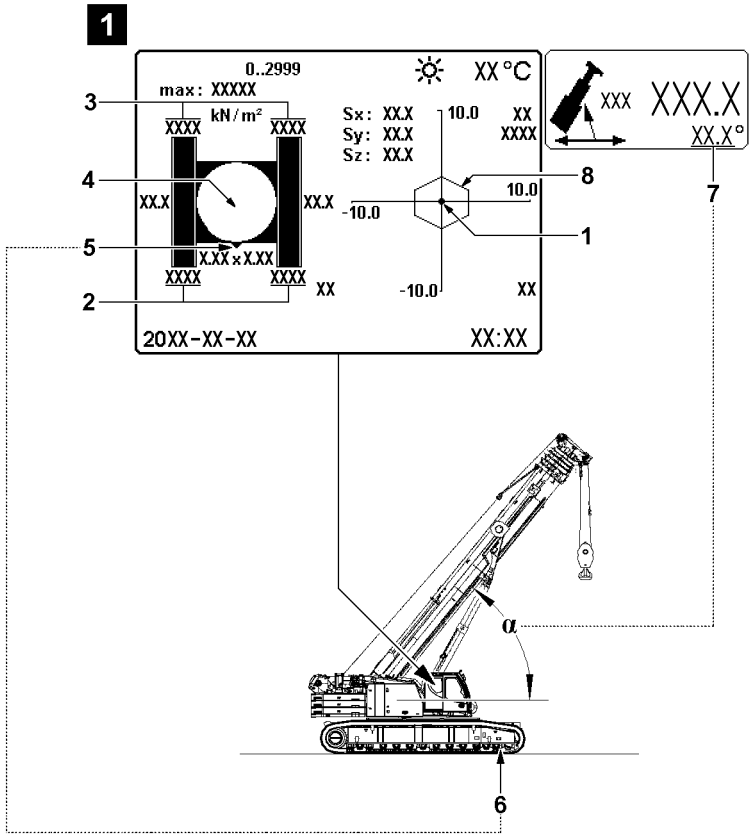

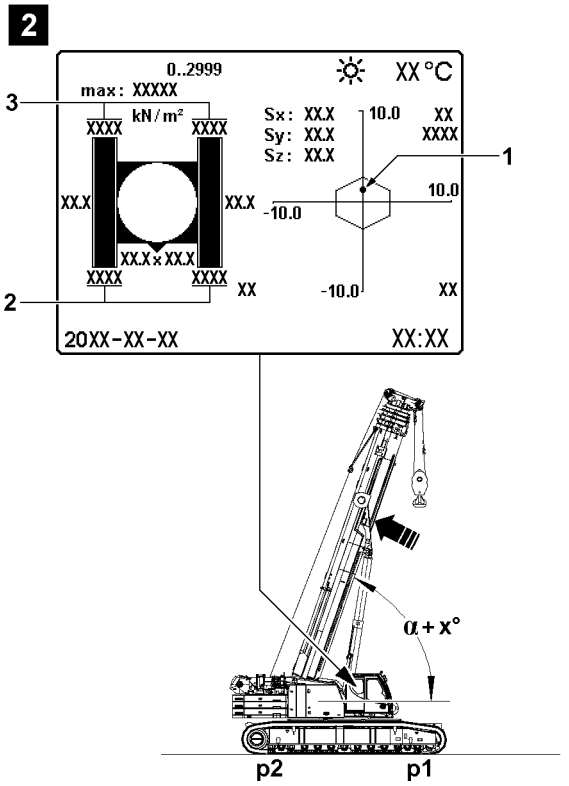

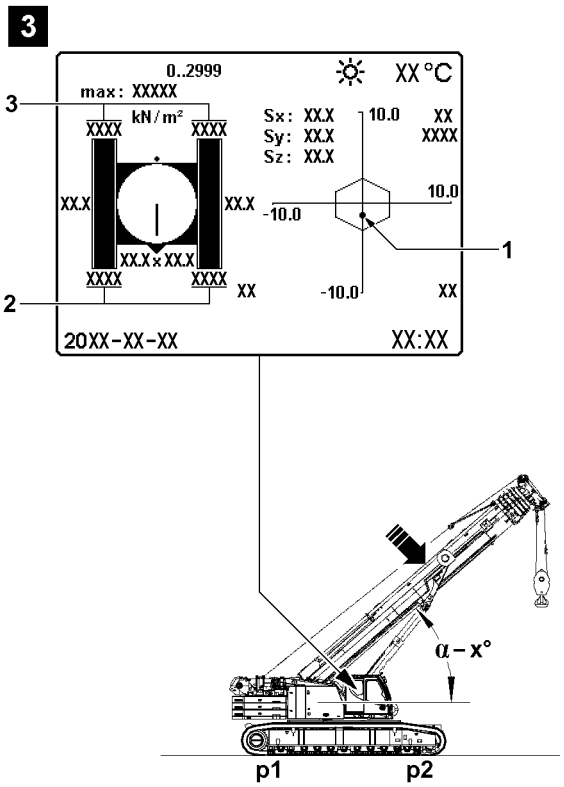

Fig.121102

LWE/ab Muli 010/24201-02-02/en

copyright © Liebherr-Werk Ehingen GmbH 2016

3 Preparing for driving the crane

3.1 Distribution of surface pressure

While driving, pay attention in all driving conditions to the ratio of the surface pressure between the front and the rear sides of both crawlers.

In the following examples it is assumed that the crawler travel gear and the turntable are oriented to the front.

Distribution of surface pressure	
Position	**Description**
1	Center of gravity
2	Surface pressure front
3	Surface pressure rear
4	Incline display[1)]
5	Marker „Front side of crawler carrier“[2)]
6	Chain tension device Crawler carrier
7	Display angle main boom
8	Core surface
α	Angle main boom

1) The angle display always refers to the crawler travel gear. As orientation aid, the front side of the crawler travel gear **5** is optically highlighted.
2) The front on the crawler travel gear is always on the side where the chain tension device for the crawler carriers is located.

Before driving the crane is it required to position the boom in such a way that a suitable distribution of surface pressure for driving is obtained.

3.1.1 Examples for the distribution of surface pressure

The center of gravity **1** is in the center, illustration **1**
- The surface pressure on the front **2** is the same as the surface pressure on the rear **3**.

The center of gravity **1** is in the rear, illustration **2**
- The boom was luffed up.
- The surface pressure on the rear **3** is higher.

The center of gravity **1** is in the front, illustration **3**
- The boom was luffed down.
- The surface pressure on the front **2** is higher.

LWE/ab Muli 010/24201-02-02/en

copyright © Liebherr-Werk Ehingen GmbH 2016

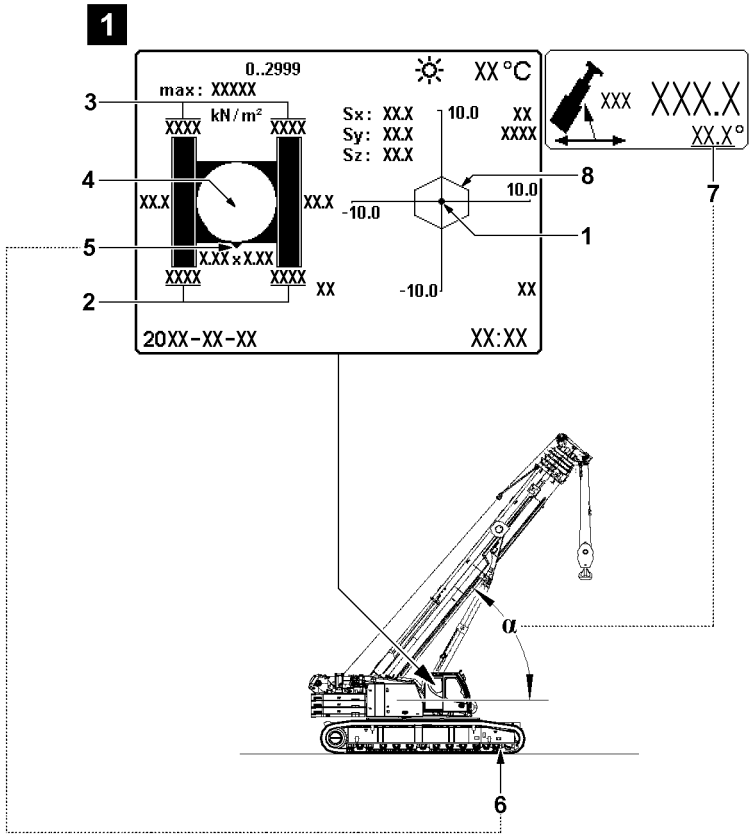

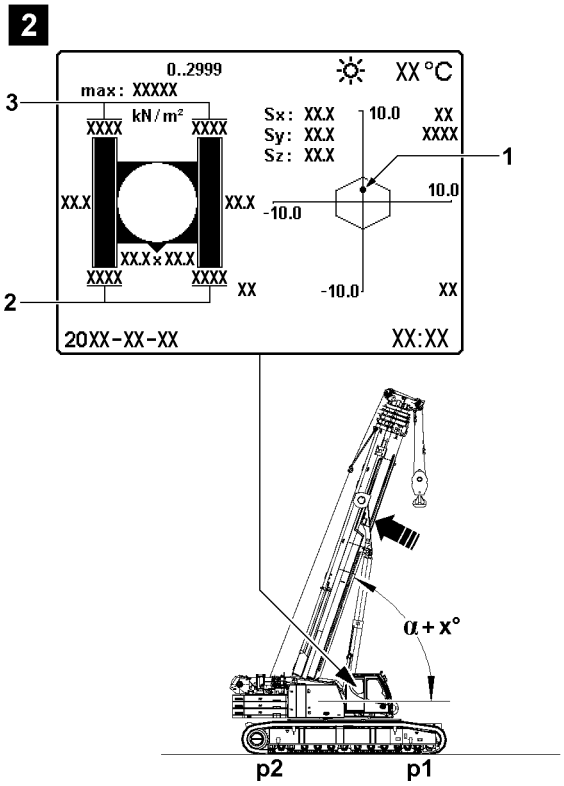

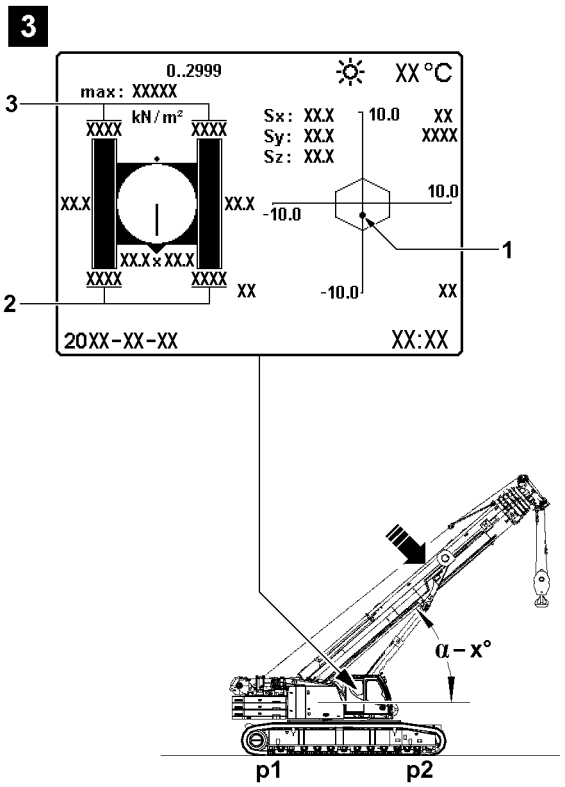

Fig.121102

LWE/ab Muli 010/24201-02-02/en

copyright © Liebherr-Werk Ehingen GmbH 2016

3.2 Suitable distribution of surface pressure

For the suitable distribution of surface pressure, the following applies:
– p1 = Surface pressure on the side of the crawler travel gear which has the lower load
– p2 = Surface pressure on the side of the crawler travel gear which has the higher load

Distribution of surface pressure p1 to p2				
p1	/	**p2**	=	Should be greater than 0.3

In case of unfavorable distribution of surface pressure it is required to position the boom system in such a way that a suitable distribution of the surface pressure is reached for driving.

▶ The turntable should be turned while at a standstill: The boom system should be luffed in such a way that the crawlers are subjected to a load as evenly as possible.
▶ Driving uphill: The boom system should be luffed in such a way that the side of the crawler travel gear which has less of a load is on the rear.
▶ Driving downhill: The boom system should be luffed in such a way that the side of the crawler travel gear which has less of a load is on the front.

3.3 Steering ability

Note
High load on the crane
When driving the crane, steering movements cause a high load on the crane travel gear.
▶ If possible, do not make any steering movements with a load on the hook.
▶ Select the travel route in such a way that no steering movements are required.
▶ If not otherwise possible, before initiating a steering movement, set down the load.

The steering ability depends on the following factors:
– Friction conditions under the chains
– Evenness of the ground:
  • Steering is not possible if the crawler track is only making contact with the ground at the front and rear.
– Load bearing capacity of the ground:
  • If the crawler travel gear sinks into the ground, then the steering ability is significantly restricted.
– Position of the overall center of gravity:
  • If the overall center of gravity - under consideration of the suspended load - is at the center of the crane, then steering is hard or not possible at all.

The steering ability can be improved by:
– Placing metal sheeting, applied sand or gravel, slight application of water.
– By taking the load bearing capacity of the ground and the position of the center of gravity into account: Changing the center of gravity.

4 Driving the crane: Load chart available

WARNING
The crane can topple over!
If the following conditions are not observed, the crane can topple over.
Personnel can be severely injured or killed.
▶ The ground must be sufficiently level and within the range of permissible incline.
▶ The ground must be able to safely take on the maximum occurring surface pressure.

LWE/ab Muli 010/24201-02-02/en

copyright © Liebherr-Werk Ehingen GmbH 2016

WARNING
The crane can topple over!
If the permissible inclines of the load charts are exceeded when driving the crane, then the crane can topple over or be overloaded.
If the permissible wind speeds of the load charts are exceeded when driving, then the crane can topple over or be overloaded.
Personnel can be severely injured or killed.
▶ If the inclines are too large then driving the crane is prohibited.
▶ If the wind speeds are too large then driving the crane is prohibited.

Permissible inclines	
Overall incline	See load charts

Permissible wind speeds	
Wind speed	See load charts

Driving with a load is possible under specifications of the load chart:
– The permissible inclines from the load charts apply for driving.
– Take the maximum permissible wind speeds from the load charts.
– Take the maximum permissible driving speed from the following sections!

WARNING
Driving the crane at active LMB-Stop!
If the crane is driven at active LMB-Stop, then the crane can topple over or be overloaded
▶ Drive the crane solely when no LMB-Stop is active.

Make sure that the following prerequisite is met:
– No LMB-Stop (shut off via load torque limiter) is active.

4.1 Driving with load on the hook

WARNING
The crane can topple over!
If the load on the hook collides with the crane, the ground or obstacles when driving, then the crane can be damaged and topple over.
Personnel can be severely injured or killed.
▶ Make sure that the load does not collide with anything when driving.

WARNING
Danger of accident!
If the suspended load starts to swing, then the crane operator can loose control over the crane.
If the following prerequisites are not observed, the crane can topple over.
This could result in serious accidents.
▶ Do not exceed the maximum permissible driving speed.
▶ Avoid jerky driving movements.
▶ The attached load must be secured to prevent it from swinging. If oscillating movements should occur, set the load as fast as possible down on the ground. Observe the limit values of the load moment display while doing so.

LWE/ab Muli 010/24201-02-02/en

copyright © Liebherr-Werk Ehingen GmbH 2016

Make sure that the following prerequisites are met:
- The permissible inclines from the load charts are adhered to.
- The maximum permissible wind speeds from the load charts are adhered to.
- The travel speed may **not** exceed 0.1 m/s or 0.36 km/h.
- The attached load hangs freely.
- The attached load must be secured to prevent it from swinging up / back and forth.
- Hold the attached load close to the ground.
- Hold the attached load at a small radius.
- The boom length is reduced as much as the load case permits.

4.2 Driving without load on the hook

Make sure that the following prerequisites are met:
- The crane is driving according to the inclines from the load charts.
- Take the maximum permissible wind speeds from the load charts.
- The maximum travel speed is matched to the local conditions.
- The hook block is secured to prevent it from swinging back and forth.
- The boom is telescoped in as far as possible.

5 Driving the crane: No load chart is available

WARNING
The crane can topple over!
If the following note is not observed, the crane can topple over.
Personnel can be severely injured or killed.
- ▶ Driving uphill and downhill must always be anticipatory, with utmost caution and at the slowest speed.
- ▶ Drive at a right angle at the beginning of uphill and downhill inclines (for example ramps), so that both crawler carriers move evenly in the uphill or downhill incline.
- ▶ It is prohibited to let the crane tip over an edge.

WARNING
The crane can topple over!
If the permissible incline of the crane is exceeded, the crane can topple over.
- ▶ Do not exceed the permissible incline for driving the crane.

WARNING
The crane can topple over!
If the crane is driven outside the load chart with a load, accidents can occur.
The crane can topple over or be overloaded.
Personnel can be severely injured or killed.
- ▶ Driving the crane with a load outside the load chart is prohibited.

Make sure that the following prerequisites are met:
- There is no load on the hook.
- The boom is telescoped in as far as possible.
- The oil level of the crane engine is at maximum fill level.
- The travel speed may **not** exceed 0.1 m/s or 0.36 km/h.
- The turntable is aligned and pinned parallel to the crawler travel gear, 0° or 180° position.
- The crawler travel gear is moved out and locked to the largest track width.
- The permissible lateral incline when driving without a load is adhered to.
- The permissible longitudinal incline when driving without a load is adhered to.

LWE/ab Muli 010/24201-02-02/en

copyright © Liebherr-Werk Ehingen GmbH 2016

Permissible incline		
Longitudinal incline smaller / same 25°	at	lateral incline smaller / same 1°
Longitudinal incline smaller / same 10°	at	lateral incline smaller / same 4°

5.1 Driving uphill / downhill

WARNING
The crane can topple over!
If the following notes are not observed, the crane can topple over.
Personnel can be severely injured or killed.
- ▶ Deciding for driving uphill are the exact knowledge of operational conditions on the jobsite.
- ▶ Specifications, instructions and prerequisites in this chapter must be adhered to.
- ▶ Driving uphill / downhill must always be anticipatory, with utmost caution and at the slowest speed.
- ▶ Uphill / downhill inclines must be driven in the direction of the dip, never angularly to the incline.

WARNING
The crane can topple over!
If the crane is driven with a load in uphill / downhill inclines, the crane can topple over.
If the crane is turned in uphill / downhill inclines, the crane can topple over.
If the angle of the boom system is not matched to the incline when driving the crane in uphill inclines, then the crane can topple over.
- ▶ Match the angle of the boom system to the uphill incline.
- ▶ Do not turn the crane in uphill / downhill inclines.
- ▶ Driving uphill with a load is prohibited.

WARNING
The crane can topple over!
If the turntable is not parallel to the crawler travel gear when driving the crane in uphill or downhill inclines, then the crawler crane can topple over or be overloaded.
- ▶ For downhill inclines outside the load charts, make sure that the turntable is aligned parallel to the crawler travel gear (0° or 180° position) and pinned before moving the crawler crane.

Make sure that the following prerequisites are met:
- – The turntable is aligned and pinned parallel to the crawler travel gear, 0° or 180° position.
- – The crawler travel gear is moved out and locked to the largest track width.

There are two different possibilities for driving crawler cranes on uphill / downhill inclines:
- – By adjusting the angle of the boom system.
- – Without adjusting the angle of the boom system.

5.1.1 Maximum climbing ability

The maximum climbing ability of the crawler crane is limited by the following criteria:
- – The location of the center of gravity for the complete crawler crane
- – The friction coefficient between roadway and track pads
- – The transit between the horizontal and the uphill incline

5.1.2 Driving uphill / downhill by changing the angle of the boom system

WARNING
The crane can topple over!
If the limit values for the center of gravity and the surface pressure are exceeded, then the crane can topple over or be overloaded.
- ▶ Driving without display values for the center of gravity and the surface pressure is only permissible when the center of gravity and the surface pressure are otherwise monitored and ensured.

LWE/ab Muli 010/24201-02-02/en

copyright © Liebherr-Werk Ehingen GmbH 2016

Note
Driving without display values for center of gravity and surface pressure!
- ▶ On level ground, set the optimum angle of the boom system regarding the center of gravity and the surface pressure.
- ▶ When driving into an uphill incline, during the transition between the horizontal into the incline, the original angle of the boom system must be changed continuously in such a way that the same angle ratio always remains between the boom system and the horizontal. This angle must be retained in the uphill incline.
- ▶ When driving out from an uphill incline, at the transition from incline into the horizontal, change the angle of the boom system continuously so that always the same angle ratio is retained.
- ▶ As a rule, the center of gravity and the surface pressure of the crane must be taken into account.

Make sure that the following prerequisites are met:
- On level ground, set the optimum angle of the boom system regarding the center of gravity and the surface pressure.
- If the telescopic boom must be telescoped out to do so, then in flat boom position, if possible.
- In uphill / downhill inclines, as soon as the value of the displays for the center of gravity and the surface pressure become more unfavorable, match the boom angle in the permissible range.

Positive longitudinal incline

Note
- ▶ When driving in positive longitudinal inclines (uphill), the main boom must usually be luffed down.

Condition	Transition	Boom angle
Driving horizontally	To uphill incline	match
Driving in uphill incline		
Driving in uphill incline	To the horizontal	match
Driving horizontally		

Negative longitudinal incline

Note
- ▶ When driving in negative longitudinal inclines (downhill), the main boom must usually be luffed up.

Condition	Transition	Boom angle
Driving horizontally	To downhill	match
Driving downhill		
Driving downhill	To the horizontal	match
Driving horizontally		

5.1.3 Prerequisites for driving uphill / downhill without changing the angle of the boom system

The following specifications and instructions must be observed:
- Make sure that with the selected position of the boom system, the center of gravity and the surface pressure is within the permissible range. Possibly telescope the telescopic boom out into flat position.

LWE/ab Muli 010/24201-02-02/en

copyright © Liebherr-Werk Ehingen GmbH 2016

WARNING
The crane can topple over!
If the limit values for the center of gravity and the surface pressure are exceeded, then the crane can topple over or be overloaded.
Personnel can be severely injured or killed.
- ▶ Before driving into uphill and downhill slops, check the change of the center of gravity and the surface pressure and ensure that it is permissible.
- ▶ Before driving the crane, determine if the crane may drive on the intended route without changing the boom system.
- ▶ If the intended uphill / downhill incline cannot be driven without changing the angle of the boom system, then the boom angle must be changed to be able to drive on the uphill / downhill incline.

Make sure that the following prerequisites are met:
- – With the selected position of the boom system, the center of gravity and the surface pressure is within the permissible range.
- – If the telescopic boom must be telescoped out to do so, then in flat boom position, if possible.

6 Crawler crane in crawler operation

WARNING
The crane can topple over!
The retracted track reduces the stability of the crawler crane. Due to operational errors during crane operation or driving, the crawler crane can topple over and fatally injure personnel.
- ▶ Crane operation and „driving with a load on the hook“ is permitted for retracted or asymmetric track if **extra load charts** are programmed for this case.
- ▶ Crane operation and „driving with a load on the hook“ is permitted for retracted or asymmetric track if **no extra load charts** are programmed for this case is strictly prohibited.

WARNING
The crane can topple over!
If the permissible incline of the crane is exceeded, the crane can topple over.
In impermissible inclines, the LICCON computer system does **not** turn the travel operation off.
The crane operator carries the sole responsibility for possible risks or dangers when working with impermissible inclines.
- ▶ Do not exceed the permissible incline from the load chart.
- ▶ Do not exceed the permissible incline for driving the crane.
- ▶ While driving the crane, monitor the displays for center of gravity, surface pressure and incline in the LICCON monitor constantly.

Make sure that the following prerequisites are met:
- – The set up configuration of the crane has been entered correctly into the LICCON computer system.
- – The displays for incline, surface pressure and center of gravity are shown.
- – There are no persons or objects in the danger zone.

LWE/ab Muli 010/24201-02-02/en

copyright © Liebherr-Werk Ehingen GmbH 2016

Empty page!

copyright © Liebherr-Werk Ehingen GmbH 2016

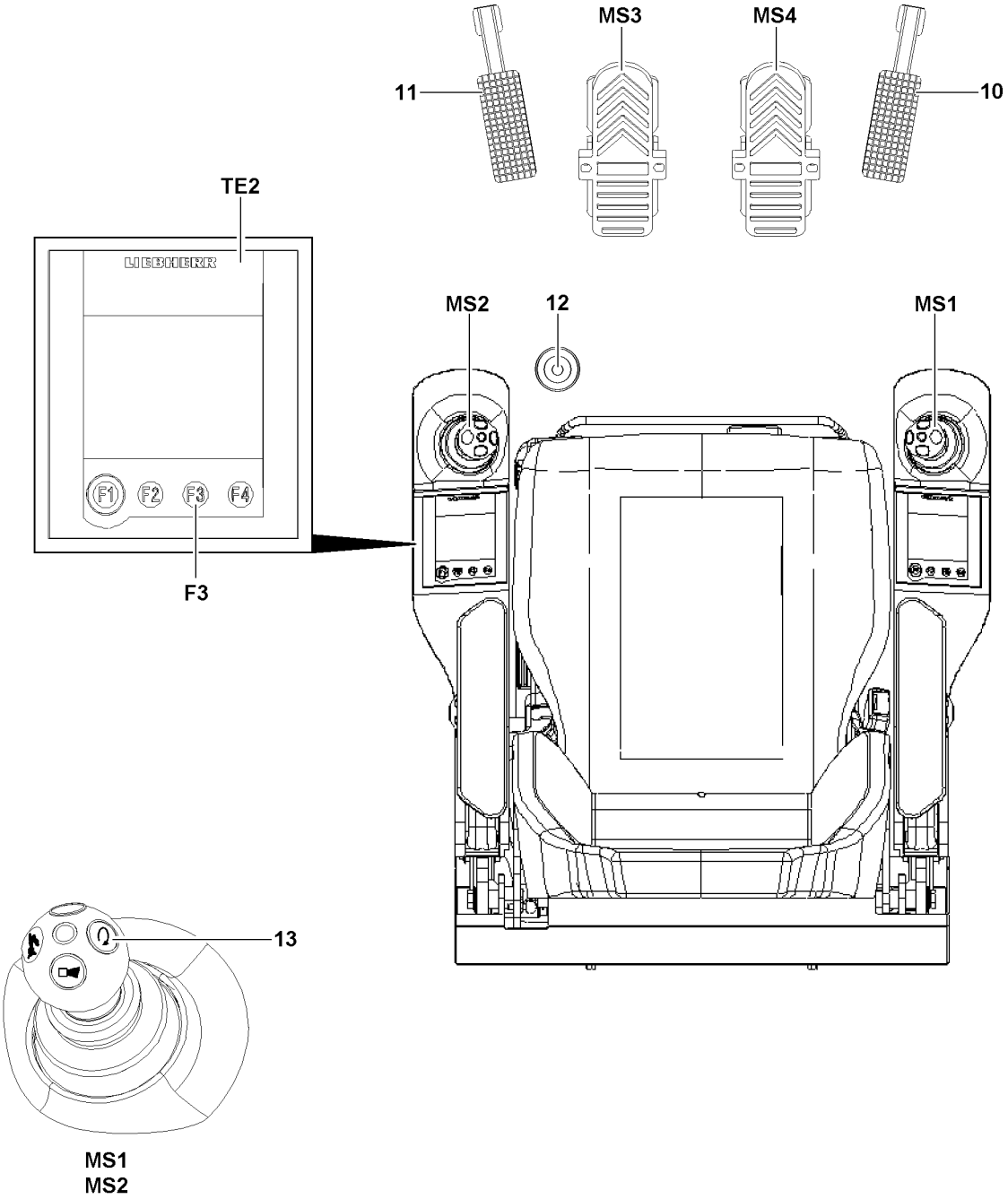

LWE/ab Muli 010/24201-02-02/en

Fig.117921

copyright © Liebherr-Werk Ehingen GmbH 2016

6.1 Operating elements for the crawler operation

Note
Variable low idle rpm (only present on certain crane types)
▶ If no hydraulic power is required, the engine rpm is automatically reduced to approx. 600 rpm. If hydraulic power is required, the engine rpm is automatically raised to at least 850 rpm.

6.1.1 Pedal carrier

– **10** Pedal for engine regulation
– **11** Pedal Slewing gear brake
– **12** Foot button for freewheeling slewing gear
  • **Note**: The foot button for freewheeling slewing gear **12** is only available on certain crane types.
– **MS3** Foot rocker
– **MS4** Foot rocker

Crawler operating mode	Pedal carrier	
	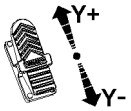 *Foot rocker **MS3***	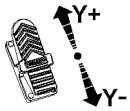 *Foot rocker **MS4***
Normal travel	Left track forward / backward: **MS3** direction **Y+ / Y-**	Right track forward / backward: **MS4** direction **Y+ / Y-**
Parallel travel	Steer both tracks: **MS3** direction **Y+ / Y-**	Forward / backward both tracks: **MS4** direction **Y+ / Y-**

6.1.2 Engine regulation

The rpm of the crane engine is controlled with the Pedal for the engine regulation **10**. For crawler operation, a certain rpm can be locked in, see Crane operating instructions, chapter 4.05.

▶ Locking the current rpm of the crane engine: Press the button **13** on master switch **MS1** or master switch **MS2**.

Result:

– Behind the rpm display in the LICCON monitor appears a „+“.
– The current rpm of the crane engine is locked.
– The rpm can be increased further via the pedal for the engine regulation **10**.

▶ Releasing the rpm lock: Press the button **13** on master switch **MS1** or master switch **MS2** again.

Result:

– The „+“ behind the rpm display turns off.

LWE/ab Muli 010/24201-02-02/en

copyright © Liebherr-Werk Ehingen GmbH 2016

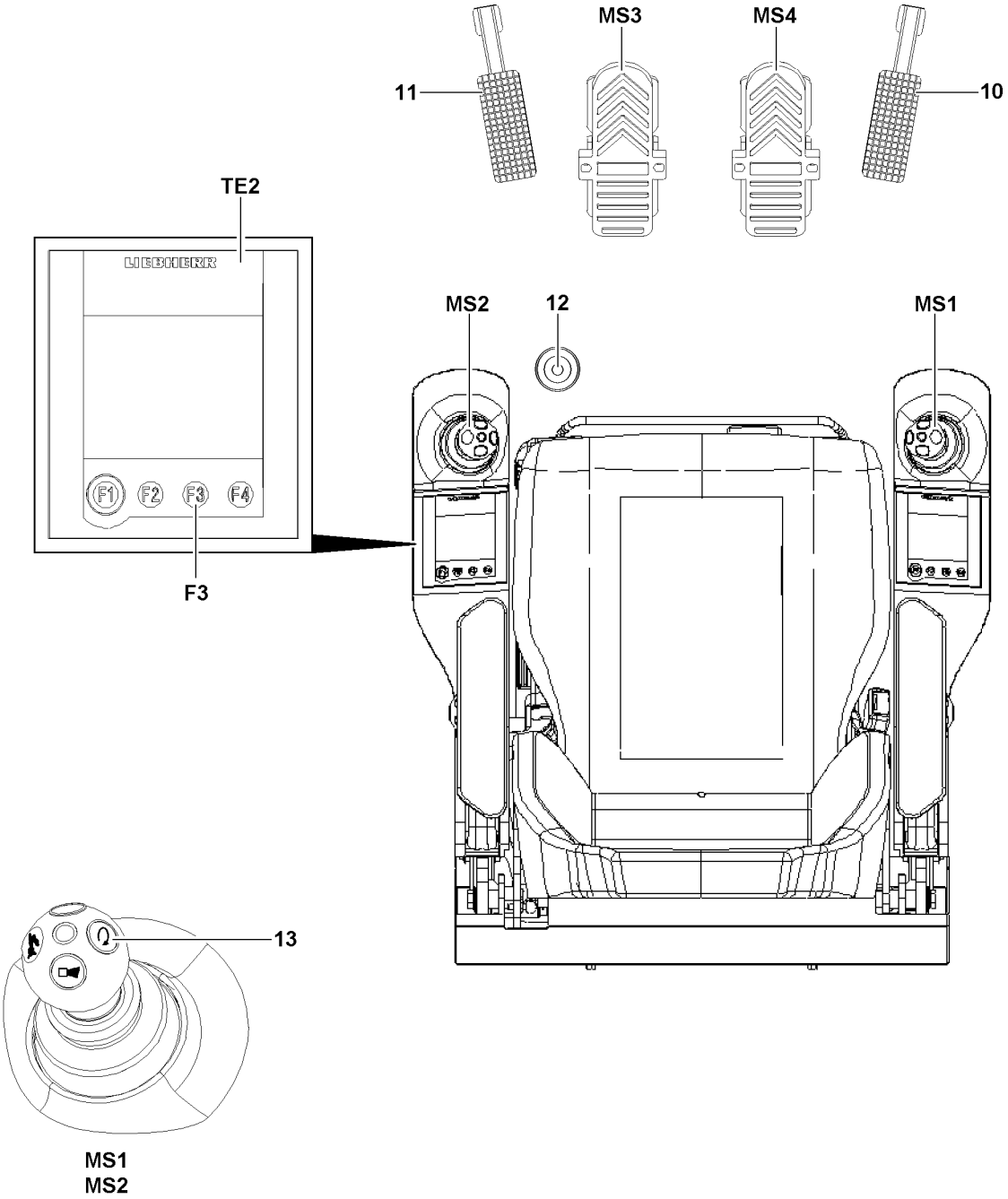

LWE/ab Muli 010/24201-02-02/en

Fig.117921

copyright © Liebherr-Werk Ehingen GmbH 2016

6.1.3 Slewing gear brake

Operating elements slewing gear brake:
- **11** Pedal Slewing gear brake
- **12** Foot button for freewheeling slewing gear
  - Note: The foot button for freewheeling slewing gear **12** is only available on certain crane types.
- Button **F3**: Slewing gear brake in TE2 (parking brake)

▶ Regulate the slewing gear brake steplessly: Press down the slewing gear brake pedal **11**.

Result:

– The slewing gear brake is regulated according to the pedal position: The further the pedal is pressed down, the stronger the slewing gear brake brakes.

▶ Adding the freewheeling for the slewing gear (only on crane types with respective foot button): Actuate the foot button for freewheeling the slewing gear **12**.

Result:

– Freewheeling the slewing gear is engaged as long as the foot button for freewheeling the slewing gear **12** is pressed down.

Icon	Assignment TE2 main menu: Slewing gear
	Nominal status slewing gear brake released, icon remains even when the slewing gear brake is applied with the slewing gear brake pedal **11**.
	Nominal status slewing gear applied, icon remains even when the slewing gear brake is automatically released by the control.

▶ Apply the slewing gear brake (parking brake): Press the button **F3** on the touch display 2 **TE2**.

Result:

– Icon „Slewing gear brake applied“ appears.

▶ Release the slewing gear brake (parking brake): Press the button **F3** on the touch display 2 **TE2** again.

Result:

– The „slewing gear brake released“ icon appears.

LWE/ab Muli 010/24201-02-02/en

copyright © Liebherr-Werk Ehingen GmbH 2016

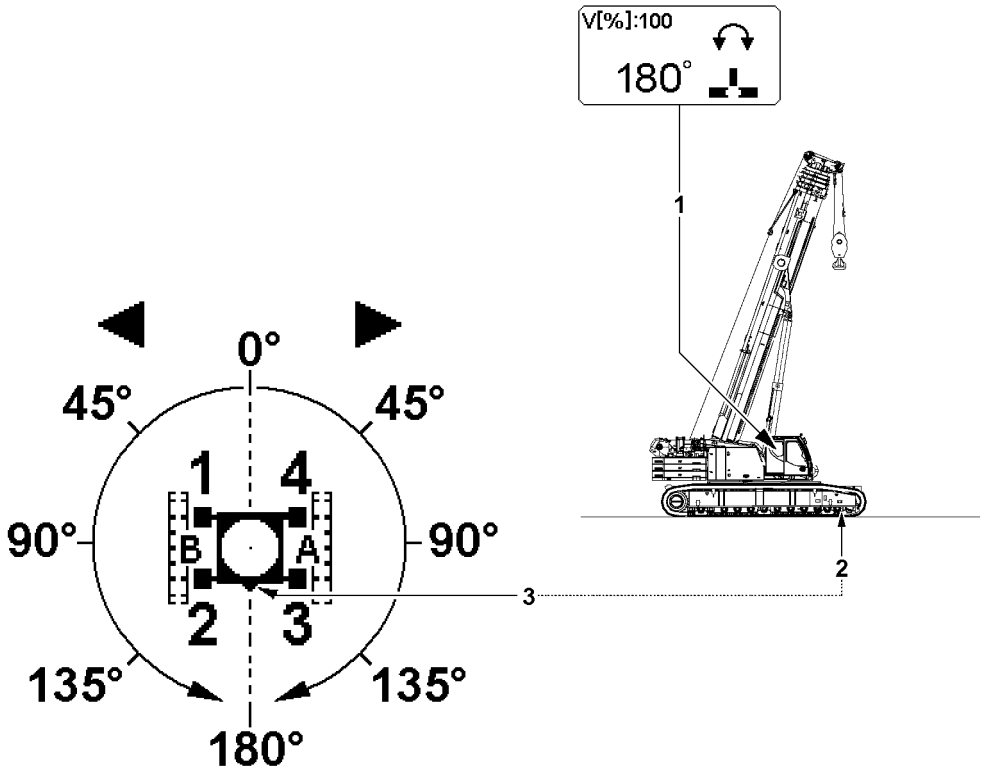

Fig.117923

LWE/ab Muli 010/24201-02-02/en

copyright © Liebherr-Werk Ehingen GmbH 2016

6.2 Assignment of the crane superstructure to the travel direction

The travel direction of the crane is continuously assigned to the position of the crane superstructure.

The position of the crane superstructure to the crawler travel gear can be read with one glance on the slewing range icon **1**:

- At display value 180° in slewing range icon **1** the crane superstructure is exactly in position „forward“, see illustration.
  Note: The front on the crawler travel gear is always on the side where the chain tension device **2** for the crawler carriers is located. In the LICCON view of the crawler travel gear, the front side is marked by a directional triangle **3**.
- At display value 0° in the slewing range icon **1** the crane superstructure is exactly in position „to the rear“.
- The apex for the assignment of the crane superstructure is at display value 90° in the slewing range icon **1**. At display values from 0° to 90° the crane superstructure is positioned „to the rear“. At display values from 90° to 180° the crane superstructure is positioned „to the front“.
- If the crane superstructure is turned over / under the display value 90° in the slewing range icon **1**, then the running direction of the crawler carriers changes to actuation direction of the foot rockers. The change happens only when the foot rockers are in position 0 (not actuated).
- If the crane superstructure is turned while driving over / under the display value 90° in the slewing range icon **1**, then the running direction of the crawler carriers and therefore the travel direction remains until the respective foot rocker is „returned“ to zero position.
  The new assignment of the travel direction becomes only active after the foot rockers are the next time in position 0 (not actuated).

WARNING
Change of travel direction after turning the crane superstructure!
If the crane superstructure is turned while driving over / under the display value 90° in the slewing range icon **1**, then the running direction of the crawler carriers only remains until the respective foot rocker is „returned“ to zero position. If the foot rocker is actuated again in the same direction, the crane is driven into the opposite direction.

- ▶ Pay attention to the assignment of the crane superstructure to the travel direction when turning the crane superstructure while driving the crane.
- ▶ After turning the crane superstructure, check the travel route in both directions for persons and obstacles. Initiate travel movements with upmost caution.

LWE/ab Muli 010/24201-02-02/en

copyright © Liebherr-Werk Ehingen GmbH 2016

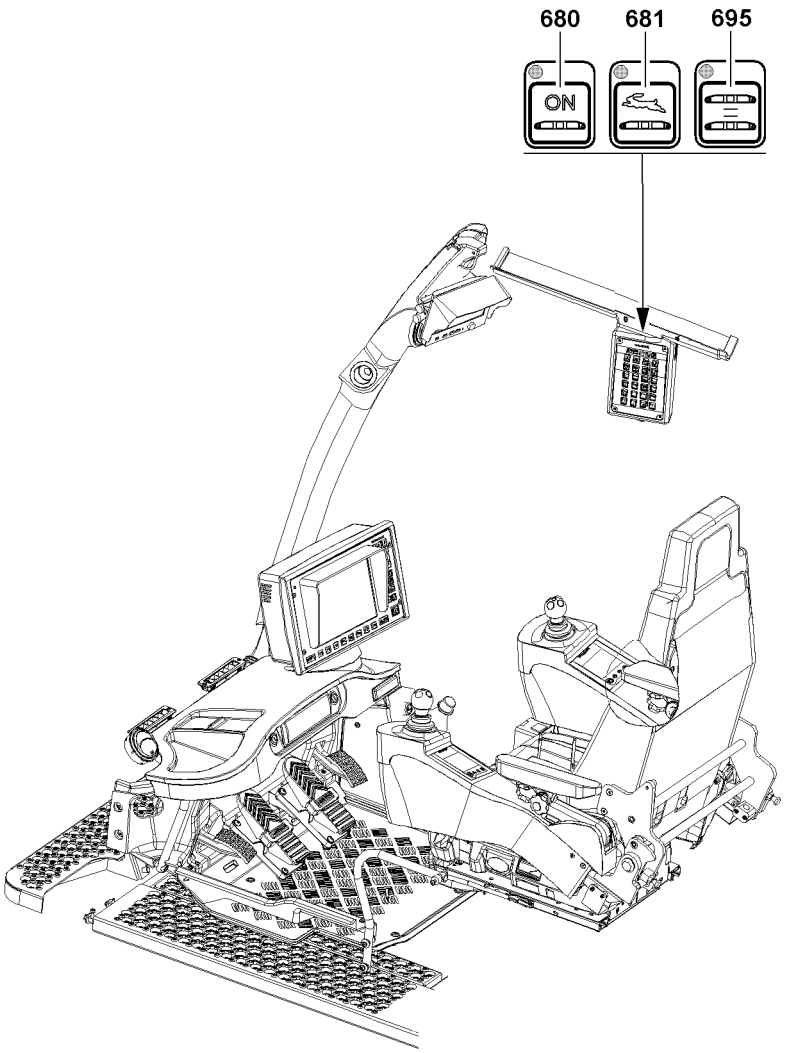

LWE/ab Muli 010/24201-02-02/en

Fig.117920

copyright © Liebherr-Werk Ehingen GmbH 2016

6.3 Turning crawler operating modes on / off

The crawler crane can be driven with various crawler operating modes:
- Normal travel crawler operation
  - Classic crawler operation, every track is controlled via a separate foot pedal
- Parallel travel crawler operation
  - The steering movement is controlled by a separate foot pedal
  - The travel direction is controlled by a separate foot pedal

To obtain a higher travel speed, the rapid gear can be activated.

6.3.1 Turning normal travel crawler operation on / off

The normal travel crawler operation is the prerequisite to drive the crane and must generally be activated.

▶ Press the control button **680**.

Result:

– The LED on the control button **680 lights up**.
  Normal travel crawler operation is activated.

If the normal travel crawler operation is to be turned off:
▶ Press the control button **680** again.

Result:

– The LED on the control button **680 is turned off**.
  The crawler operation is turned off, the crane can no longer be driven.

6.3.2 Turning parallel travel crawler operation on / off

Make sure that the following prerequisites are met:
- Normal travel crawler operation is activated.
- The tracks are at a standstill.

▶ Press the control button **695**.

Result:

– The LED on the control button **695 lights up**.
  The parallel travel crawler operation is turned on.

If the parallel travel crawler operation is to be turned off:
▶ Press the control button **695** again.

Result:

– The LED on the control button **695 is turned off**.
  The parallel travel is turned off, the normal travel crawler operation remains on.

LWE/ab Muli 010/24201-02-02/en

copyright © Liebherr-Werk Ehingen GmbH 2016

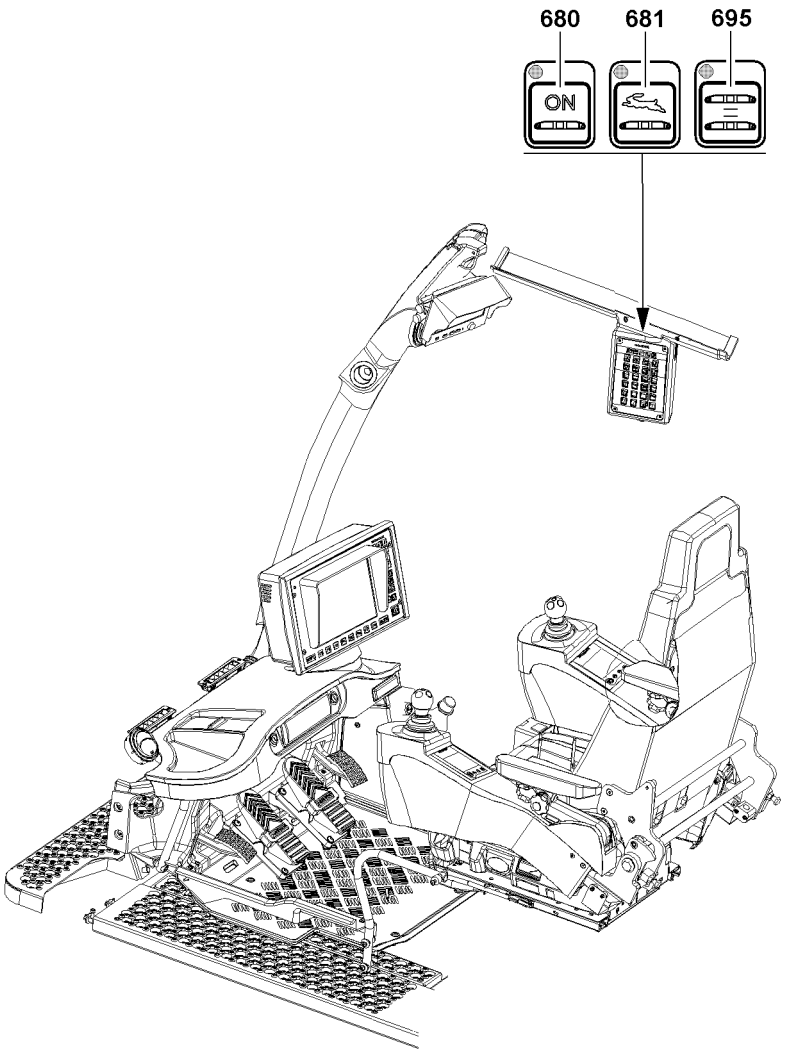

LWE/ab Muli 010/24201-02-02/en

Fig.117920

copyright © Liebherr-Werk Ehingen GmbH 2016

6.3.3 Turning the rapid gear on / off

WARNING
The crane can topple over!
If the crane is driven in rapid gear with a load, then the crane can topple over. Personnel can be severely injured or killed.
▶ Observe the permissible highest speeds for driving the crawler crane.

Make sure that the following prerequisite is met:
– Normal travel crawler operation is activated.
or
– The parallel travel crawler operation is turned on.

▶ Press the control button **681**.

Result:

– The LED on the control button **681 lights up**.
The rapid gear is added, no higher travel speeds can be obtained.

If the rapid gear is to be turned off:
▶ Press the control button **681** again.

Result:

– The LED on the control button **681 is turned off**.
The rapid gear is turned off, the normal travel crawler operation or parallel travel crawler operation remains engaged.

LWE/ab Muli 010/24201-02-02/en

copyright © Liebherr-Werk Ehingen GmbH 2016

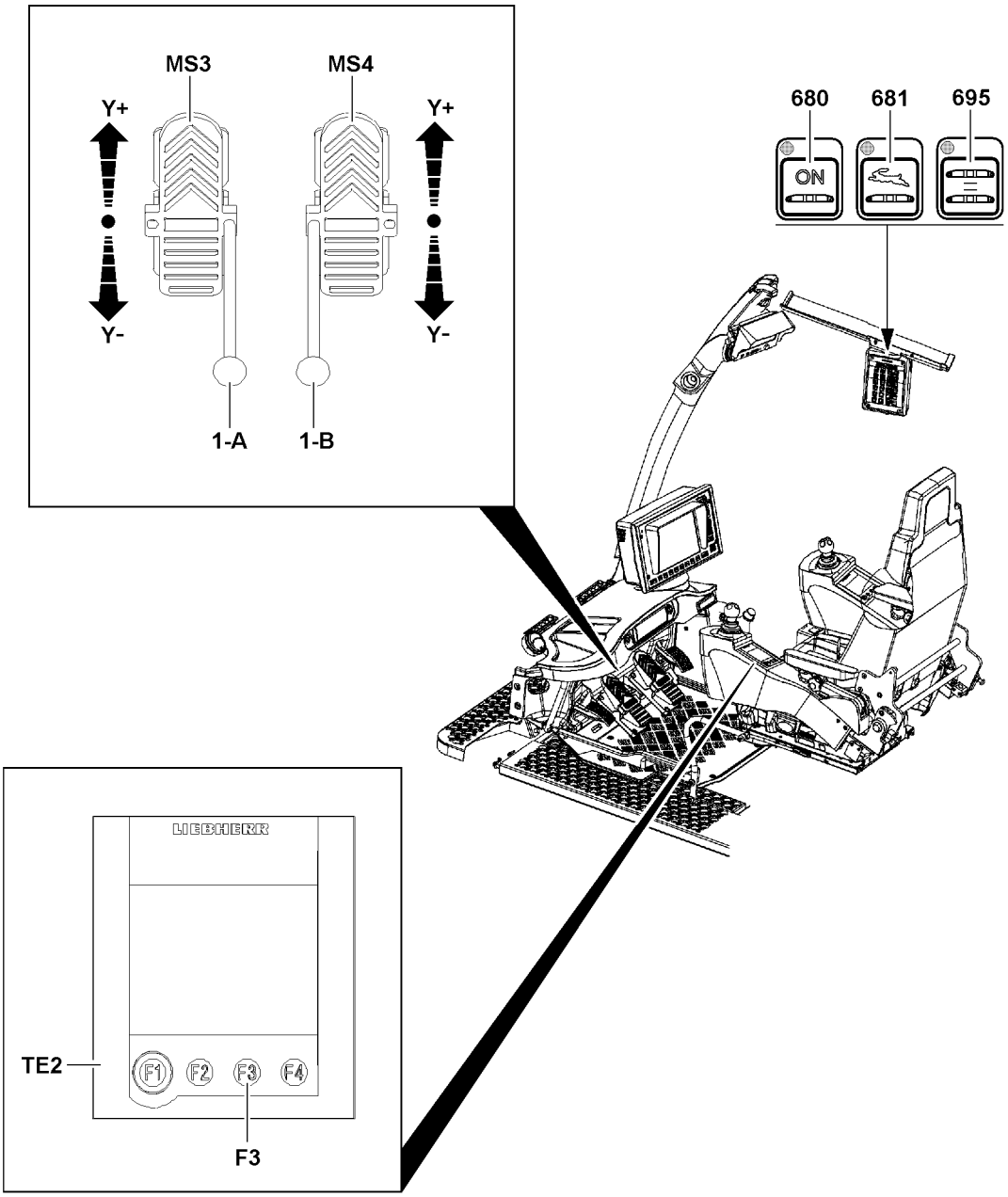

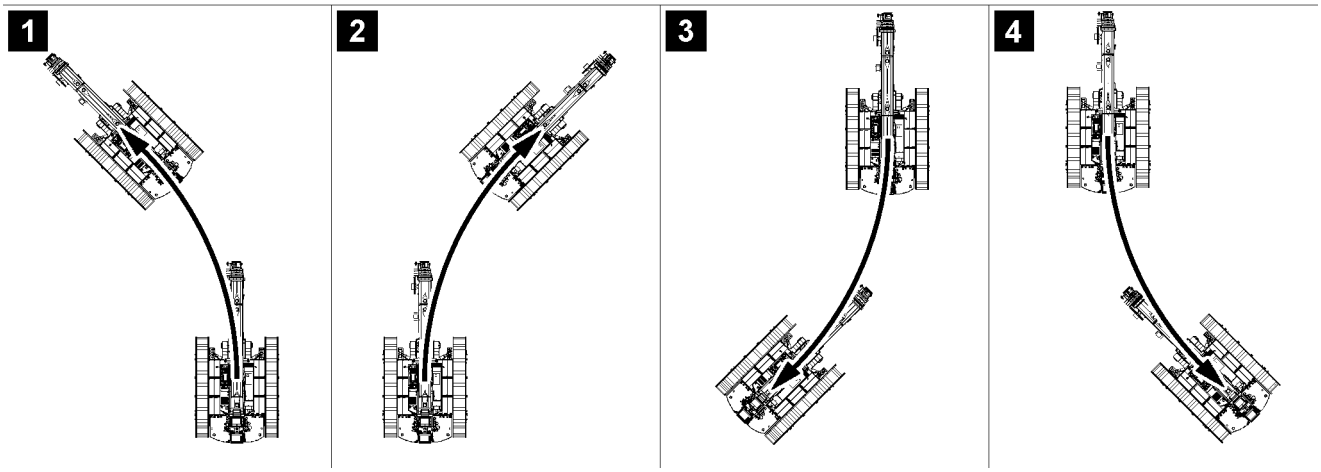

Fig.117922

LWE/ab Muli 010/24201-02-02/en

copyright © Liebherr-Werk Ehingen GmbH 2016

6.4 Driving the crawler crane in normal travel

NOTICE
Increased wear on the crawler travel gear!
When steering in small radii, high friction forces are created which lead to increased wear.
- ▶ If possible, always drive in curves with large radii.
- ▶ Avoid turning over a stationary track, if possible.
- ▶ Avoid counterrotation, if possible.

Make sure that the following prerequisites are met:
- – A travel direction change may only be done from the standstill.
- – The desired rpm of the crane engine is set.
- – Normal travel crawler operation is selected.

Note
- ▶ Special hand levers **1-A** and hand levers **1-B** can be inserted into the foot rockers. These hand levers **1-A** and hand levers **1-B** are used for delicate driving maneuvers.
- ▶ Hand lever **1-A** and hand lever **1-B** are placed in the transport retainer on the left of the crane operator's seat.
- ▶ The technical design of the hand lever **1-A** and the hand lever **1-B** is completely identical. The differentiation of the two hand levers is only in their assignment to the corresponding foot rockers in assembled (pushed on) condition.

6.4.1 Driving forward

- ▶ Deflect the left foot rocker **MS3** and the right foot rocker **MS4** synchronously forward (direction **Y+**).

Result:

- – The crane drives forward.

6.4.2 Driving in reverse

- ▶ Deflect the left foot rocker **MS3** and the right foot rocker **MS4** synchronously backward (direction **Y-**).

Result:

- – The crane drives backward.

copyright © Liebherr-Werk Ehingen GmbH 2016

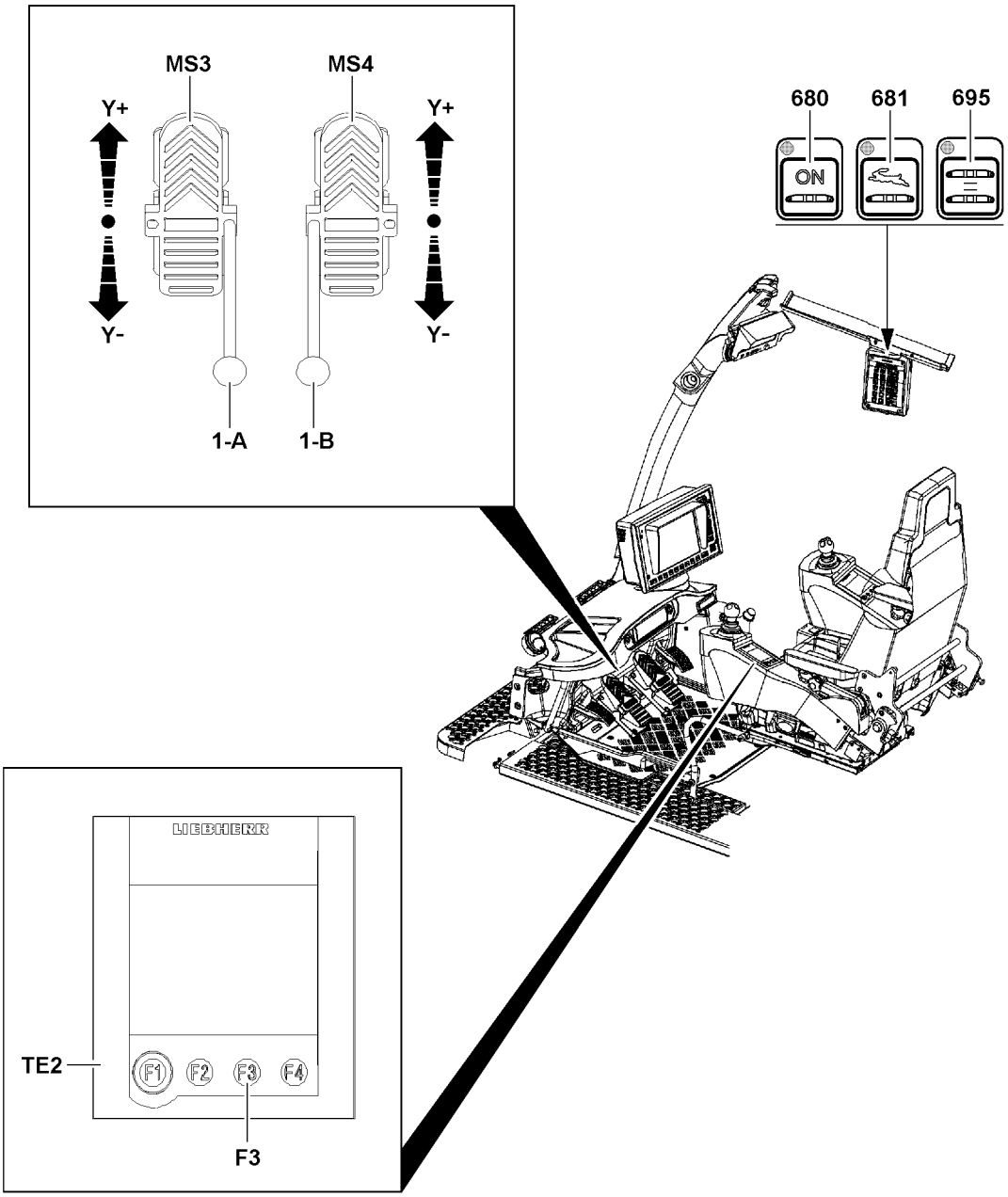

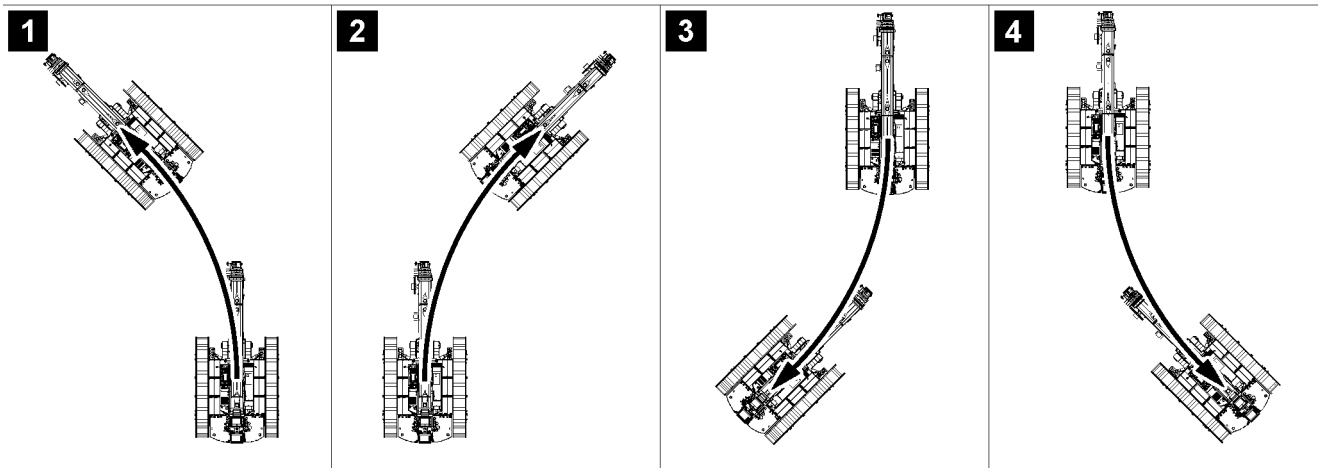

Fig.117922

LWE/ab Muli 010/24201-02-02/en

copyright © Liebherr-Werk Ehingen GmbH 2016

6.4.3 Driving in curves forward to the left

See illustration **1**.

▶ Actuate the left foot rocker **MS3** reduced to the front (direction **Y+**) and the right foot rocker **MS4** stronger to the front (direction **Y+**).

Result:

– The crane drives a forward curve to the left.

6.4.4 Driving in curves forward to the right

See illustration **2**.

▶ Actuate the left foot rocker **MS3** stronger to the front (direction **Y+**) and the right foot rocker **MS4** reduced to the front (direction **Y+**).

Result:

– The crane drives a forward curve to the right.

6.4.5 Driving in curves reverse to the left

See illustration **3**.

▶ Actuate the left foot rocker **MS3** reduced to the rear (direction **Y-**) and the right foot rocker **MS4** stronger to the rear (direction **Y-**).

Result:

– The crane drives a reverse curve to the left.

6.4.6 Driving in curves reverse to the right

See illustration **4**.

▶ Actuate the left foot rocker **MS3** stronger to the rear (direction **Y-**) and the right foot rocker **MS4** reduced to the rear (direction **Y-**).

Result:

– The crane drives a reverse curve to the right.

LWE/ab Muli 010/24201-02-02/en

copyright © Liebherr-Werk Ehingen GmbH 2016

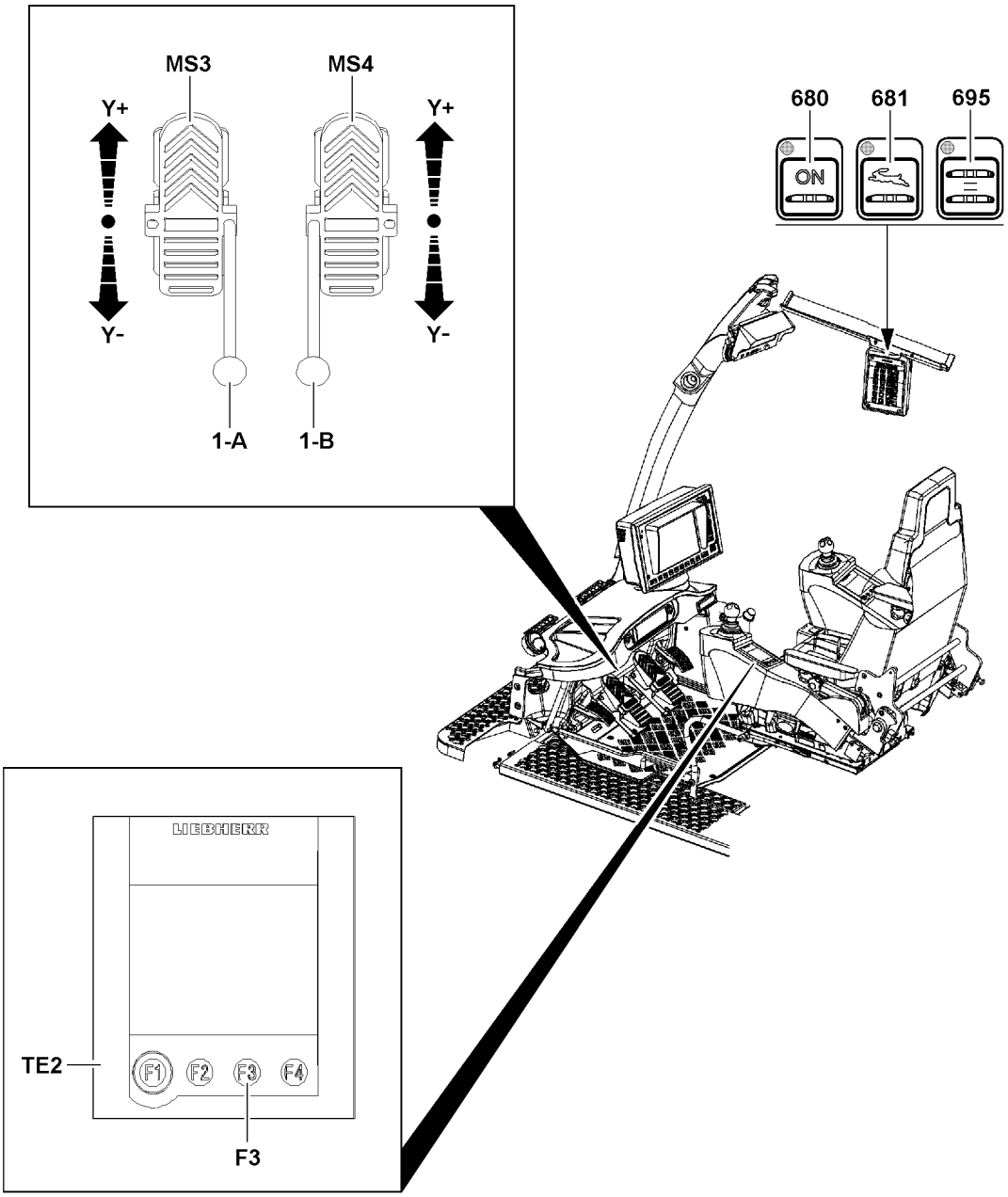

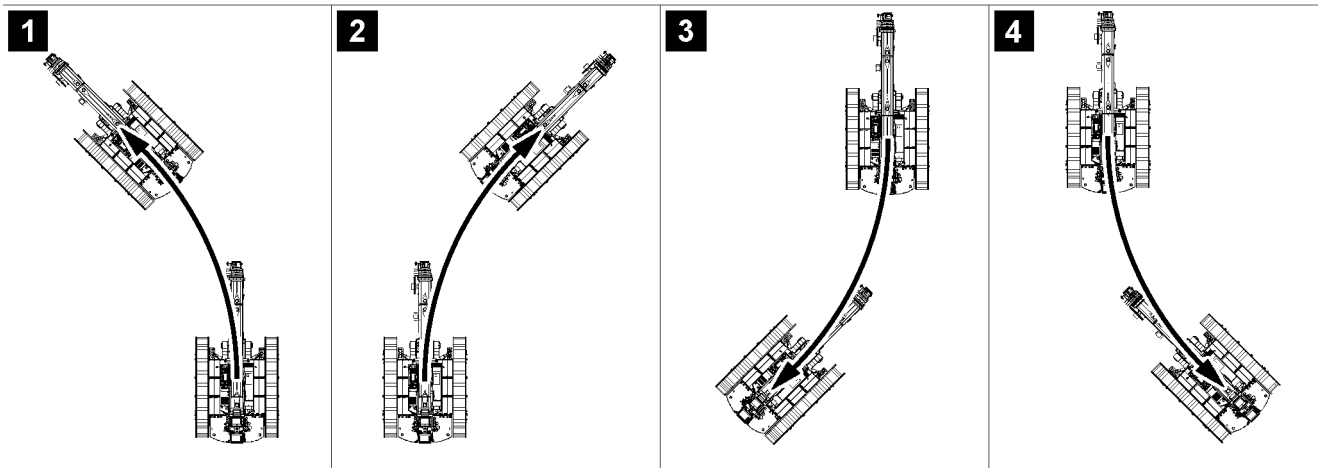

Fig.117922

LWE/ab Muli 010/24201-02-02/en

copyright © Liebherr-Werk Ehingen GmbH 2016

6.4.7 Turning forward to the left

▶ Actuate the right foot rocker **MS4** forward (direction **Y+**).

Result:

– The crane is turned forward to the left.

6.4.8 Turning forward to the right

▶ Actuate the left foot rocker **MS3** forward (direction **Y+**).

Result:

– The crane is turned forward to the right.

6.4.9 Turning backward to the left

▶ Actuate the right foot rocker **MS4** backward (direction **Y-**).

Result:

– The crane is turned backward to the left.

6.4.10 Turning backward to the right

▶ Actuate the left foot rocker **MS3** backward (direction **Y-**).

Result:

– The crane is turned backward to the right.

6.4.11 Counterrotation to the left (counterclockwise direction)

▶ Actuate the left foot rocker **MS3** to the rear (direction **Y-**) and the right foot rocker **MS4** to the front (direction **Y+**).

Result:

– The crane is turned to the left.

6.4.12 Counterrotation to the right (clockwise direction)

▶ Actuate the left foot rocker **MS3** to the front (direction **Y+**) and the right foot rocker **MS4** to the rear (direction **Y-**).

Result:

– The crane is turned to the right.

LWE/ab Muli 010/24201-02-02/en

copyright © Liebherr-Werk Ehingen GmbH 2016

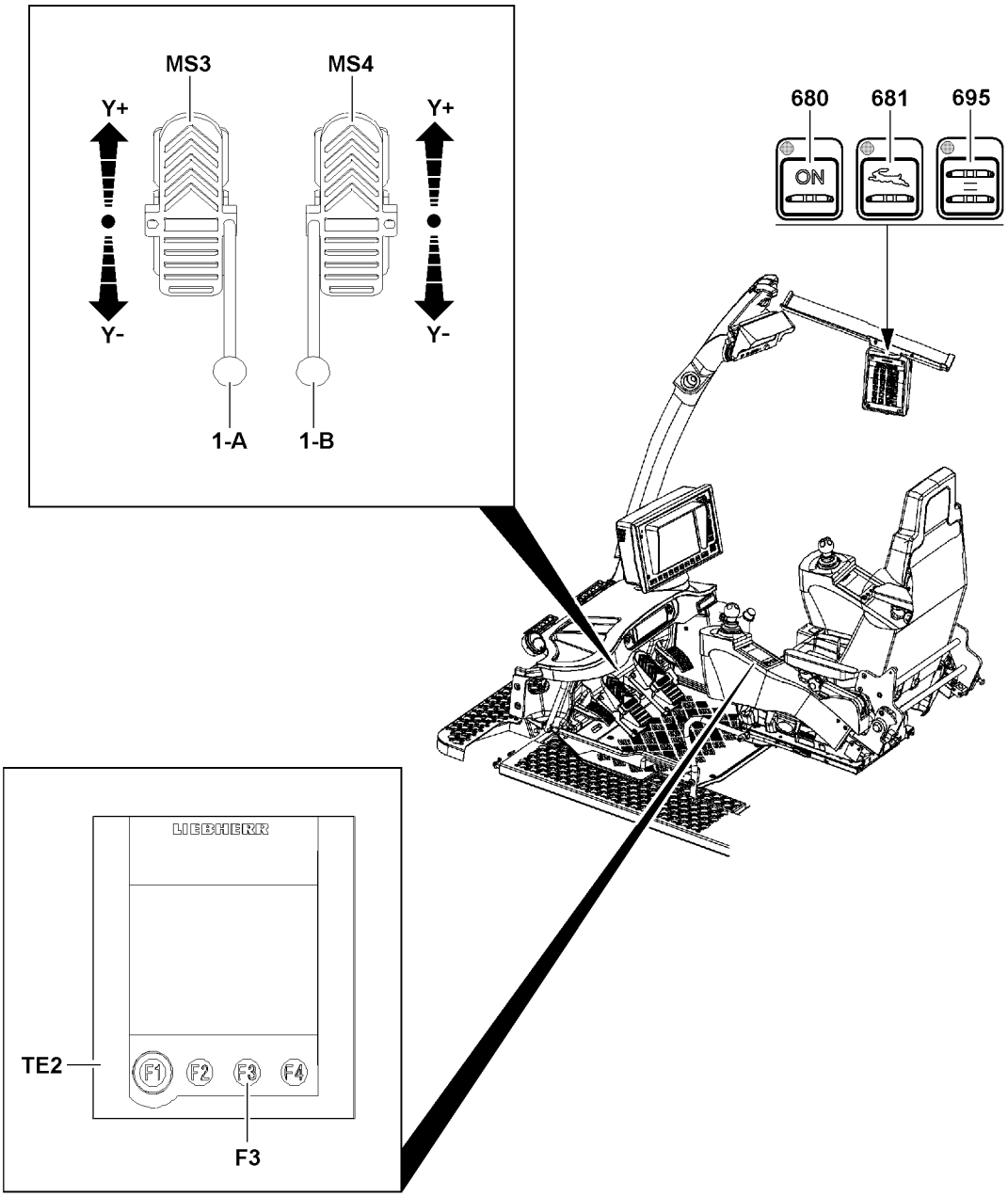

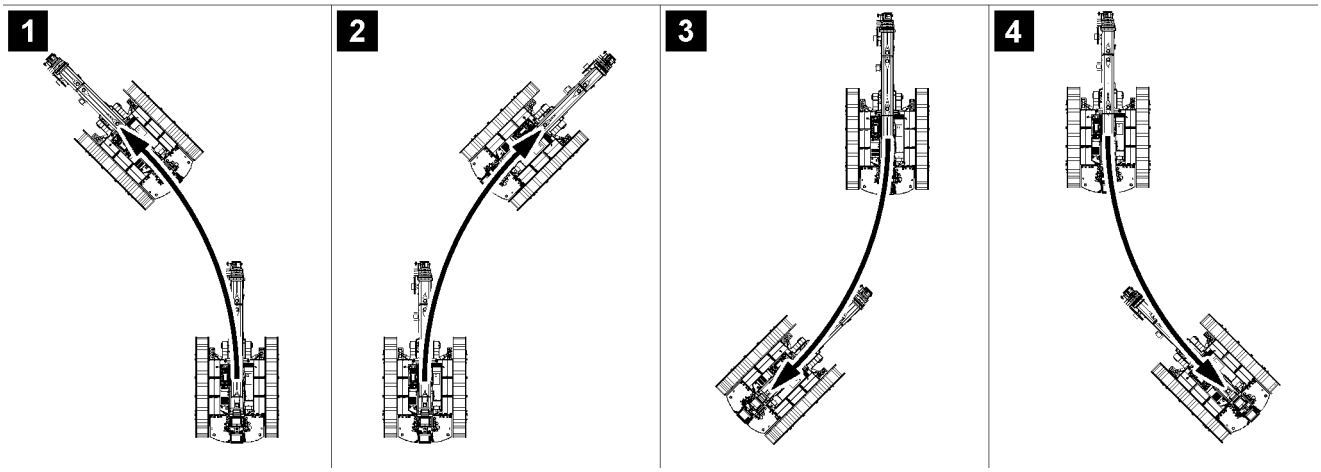

Fig.117922

LWE/ab Muli 010/24201-02-02/en

copyright © Liebherr-Werk Ehingen GmbH 2016

6.5 Driving the crawler crane in parallel travel

NOTICE
Increased wear on the crawler travel gear!
When steering in small radii, high friction forces are created which lead to increased wear.
▶ If possible, always drive in curves with large radii.
▶ Avoid turning over a stationary track, if possible.

Make sure that the following prerequisites are met:
– The desired rpm of the crane engine is set.
– The parallel travel crawler operation is selected.

Note
▶ Special hand levers **1-A** and hand levers **1-B** can be inserted into the foot rockers. These hand levers **1-A** and hand levers **1-B** are used for delicate driving maneuvers. The operation is identical to that for the foot rockers.
▶ Hand lever **1-A** and hand lever **1-B** are placed in the transport retainer on the left of the crane operator's seat.
▶ The technical design of the hand lever **1-A** and the hand lever **1-B** is completely identical. The differentiation of the two hand levers is only in their assignment to the corresponding foot rockers in assembled (pushed on) condition.

Turning the crawler travel gear in counterrotation is not possible in parallel travel.

6.5.1 Driving forward

▶ Deflect the right foot rocker **MS4** forward (direction **Y+**).

Result:

– The crane drives forward.

Note
▶ The further the foot rockers are actuated forward (direction **Y+**) the higher the speed.

6.5.2 Driving in reverse

▶ Deflect the right foot rocker **MS4** backward (direction **Y-**).

Result:

– The crane drives backward.

Note
▶ The further the foot rockers are actuated forward (direction **Y+**) the higher the speed.

copyright © Liebherr-Werk Ehingen GmbH 2016

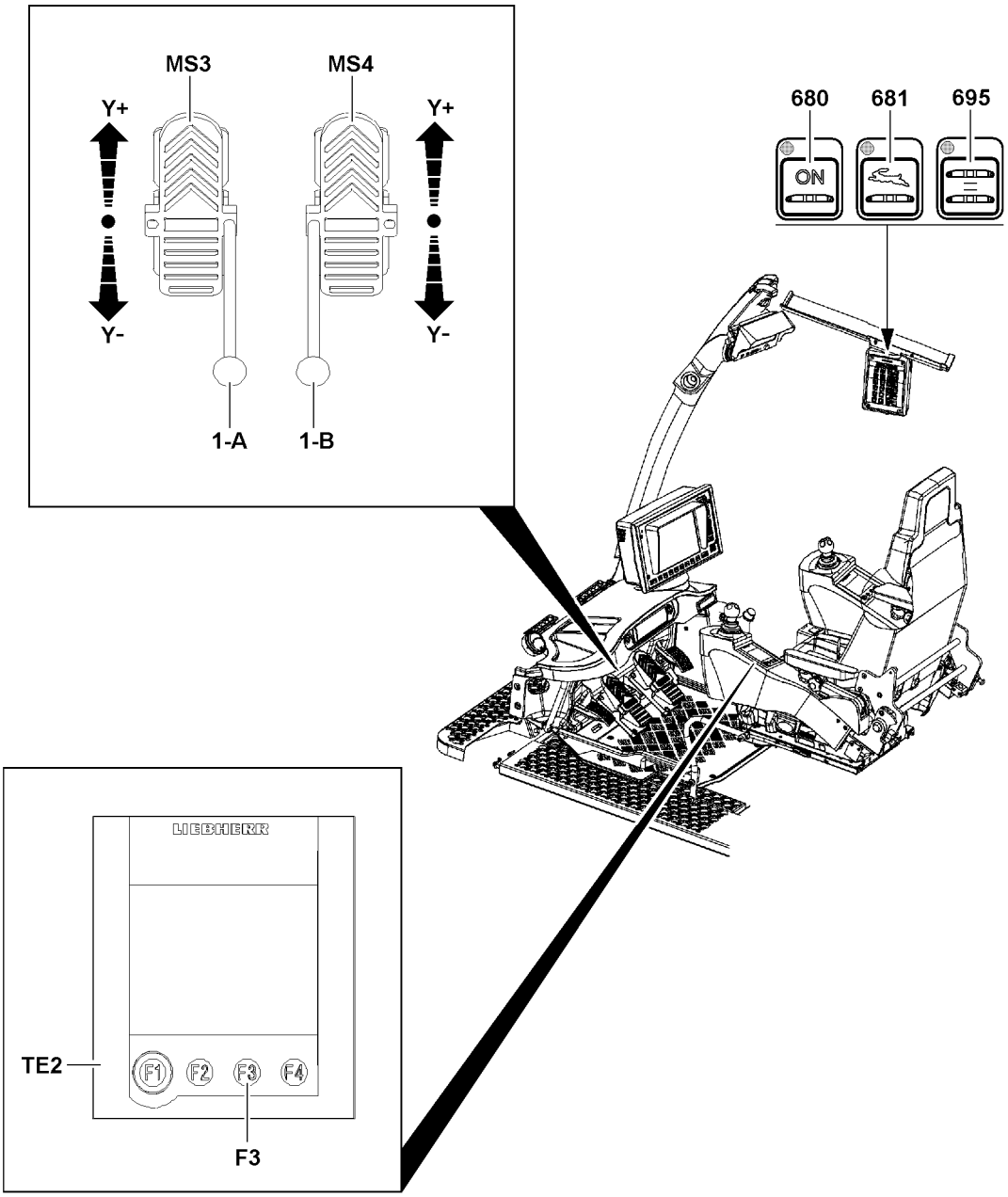

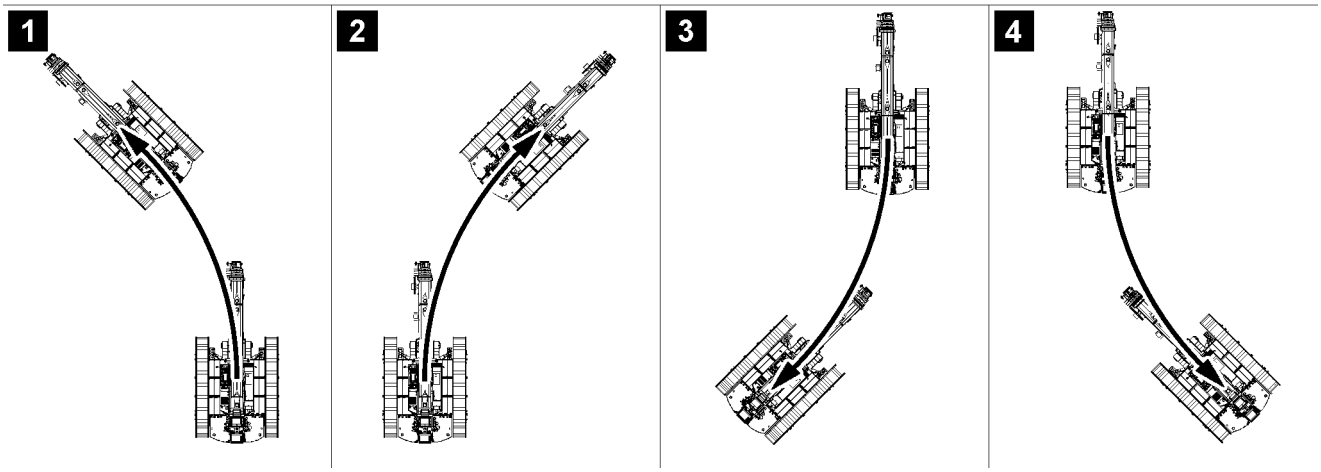

Fig.117922

LWE/ab Muli 010/24201-02-02/en

copyright © Liebherr-Werk Ehingen GmbH 2016

6.5.3 Driving in curves forward to the left

See illustration **1**.

▶ Actuate the left foot rocker **MS3** reduced to the rear (direction **Y-**) and the right foot rocker **MS4** to the front (direction **Y+**).

Result:

– The crane drives a forward curve to the left.

Note

▶ The further the right foot rocker **MS4** is actuated forward (direction **Y+**) the higher the speed of driving a curve.

▶ If the left foot rocker **MS3** is pushed fully to the rear (direction **Y-**), the left track stops.

6.5.4 Driving in curves forward to the right

See illustration **2**.

▶ Actuate the left foot rocker **MS3** reduced to the front (direction **Y+**) and the right foot rocker **MS4** to the front (direction **Y+**).

Result:

– The crane drives a forward curve to the right.

Note

▶ The further the right foot rocker **MS4** is actuated forward (direction **Y+**) the higher the speed of driving a curve.

▶ If the left foot rocker **MS3** is pushed fully to the front (direction **Y+**), the right track stops.

6.5.5 Driving in curves reverse to the left

See illustration **3**.

▶ Actuate the left foot rocker **MS3** reduced to the rear (direction **Y-**) and the right foot rocker **MS4** to the rear (direction **Y-**).

Result:

– The crane drives a reverse curve to the left.

Note

▶ The further the right foot rocker **MS4** is actuated backward (direction **Y-**) the higher the speed of driving a curve.

▶ If the left foot rocker **MS3** is pushed fully to the rear (direction **Y-**), the left track stops.

LWE/ab Muli 010/24201-02-02/en

copyright © Liebherr-Werk Ehingen GmbH 2016

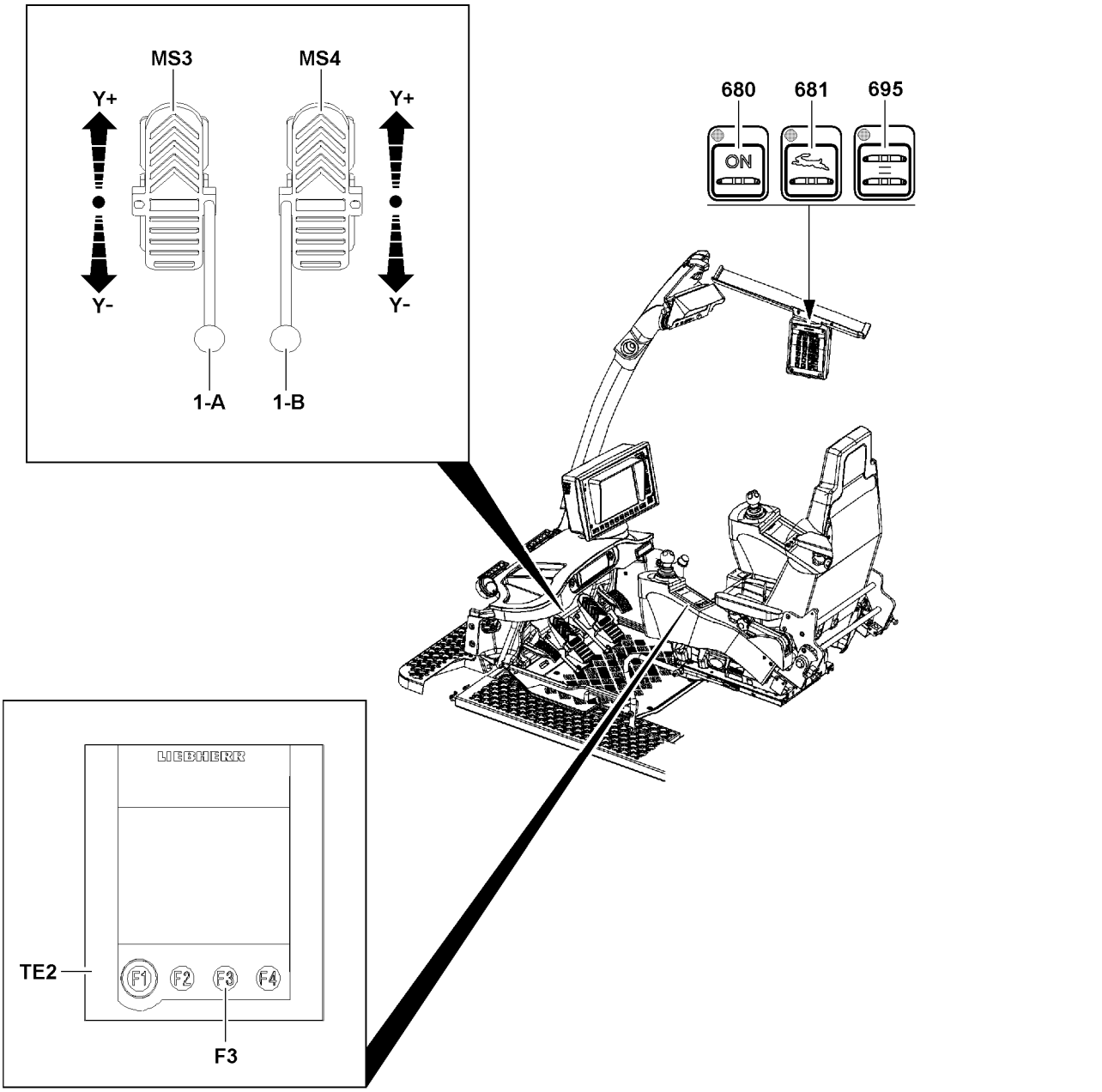

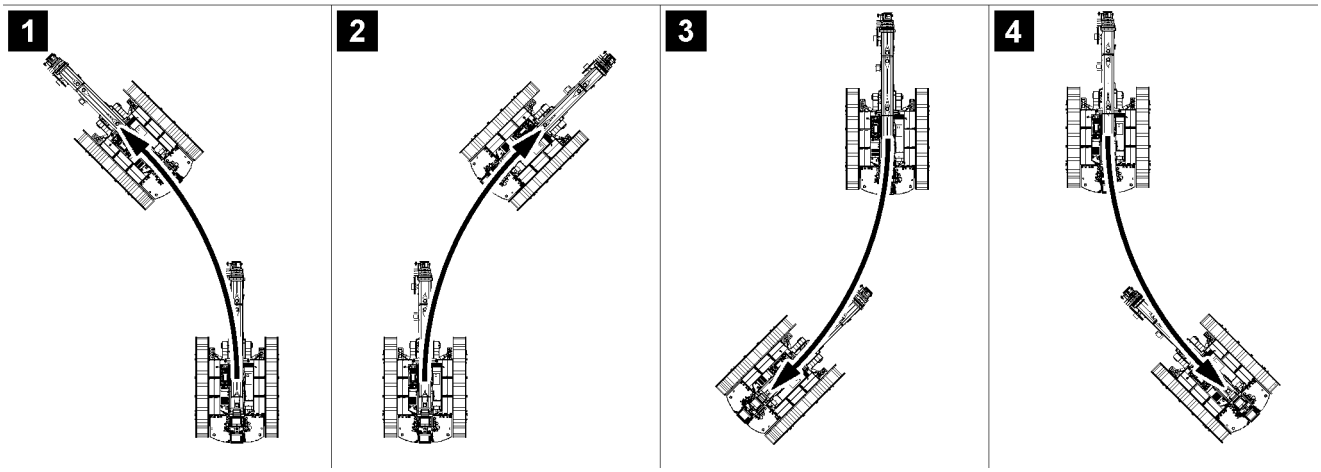

Fig.117922

LWE/ab Muli 010/24201-02-02/en

copyright © Liebherr-Werk Ehingen GmbH 2016

6.5.6 Driving in curves reverse to the right

See illustration **4**.

▶ Actuate the left foot rocker **MS3** reduced to the front (direction **Y+**) and the right foot rocker **MS4** to the rear (direction **Y-**).

Result:

– The crane drives a reverse curve to the right.

Note

▶ The further the right foot rocker **MS4** is actuated backward (direction **Y-**) the higher the speed of driving a curve.

▶ If the left foot rocker **MS3** is pushed fully to the front (direction **Y+**), the right track stops.

6.5.7 Turning forward to the left

▶ Push through and hold the left foot rocker **MS3** fully to the rear (direction **Y-**).

▶ Actuate the right foot rocker **MS4** forward (direction **Y+**).

Result:

– The crane is turned forward to the left.

Note

▶ The further the right foot rocker **MS4** is actuated forward (direction **Y+**) the higher the speed of the turning movement.

6.5.8 Turning forward to the right

▶ Push through and hold the left foot rocker **MS3** fully to the front (direction **Y+**).

▶ Actuate the right foot rocker **MS4** forward (direction **Y+**).

Result:

– The crane is turned forward to the right.

Note

▶ The further the right foot rocker **MS4** is actuated forward (direction **Y+**) the higher the speed of the turning movement.

LWE/ab Muli 010/24201-02-02/en

copyright © Liebherr-Werk Ehingen GmbH 2016

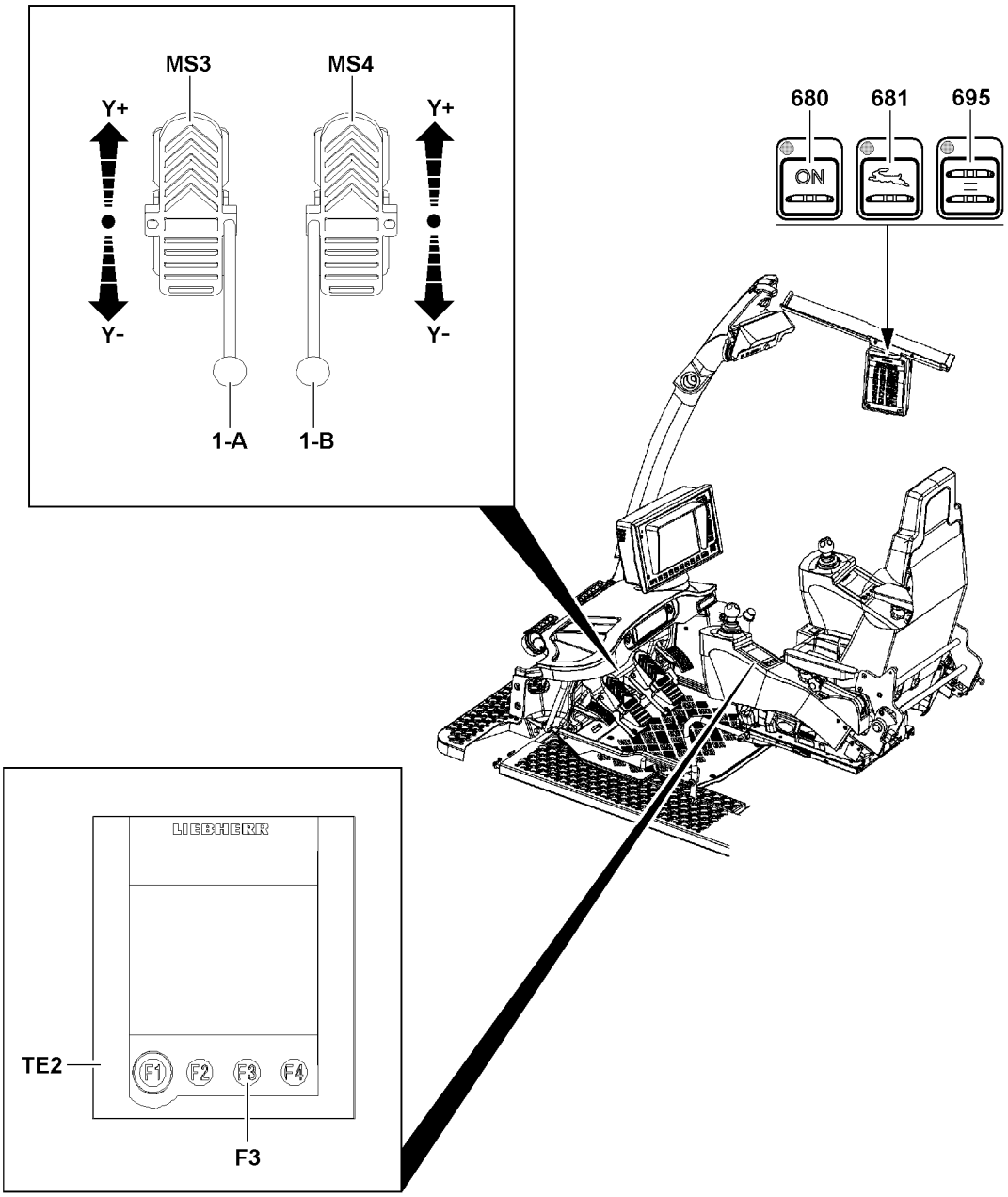

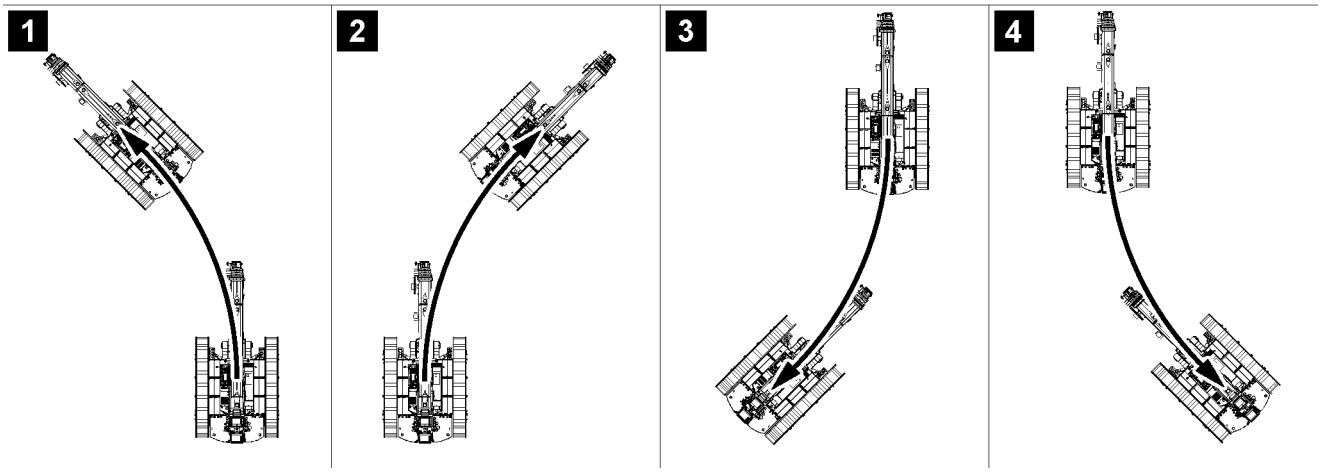

Fig.117922

LWE/ab Muli 010/24201-02-02/en

copyright © Liebherr-Werk Ehingen GmbH 2016

6.5.9 Turning backward to the left

▶ Push through and hold the left foot rocker **MS3** fully to the rear (direction **Y-**).
▶ Actuate the right foot rocker **MS4** backward (direction **Y-**).

Result:

– The crane is turned backward to the left.

Note
▶ The further the right foot rocker **MS4** is actuated backward (direction **Y-**) the higher the speed of the turning movement.

6.5.10 Turning backward to the right

▶ Push through and hold the left foot rocker **MS3** fully to the front (direction **Y+**).
▶ Actuate the right foot rocker **MS4** backward (direction **Y-**).

Result:

– The crane is turned backward to the right.

Note
▶ The further the right foot rocker **MS4** is actuated backward (direction **Y-**) the higher the speed of the turning movement.

LWE/ab Muli 010/24201-02-02/en

copyright © Liebherr-Werk Ehingen GmbH 2016

Empty page!

copyright © Liebherr-Werk Ehingen GmbH 2016

4.12 Two hook operation

1	Auxiliary boom	3
2	Hook operation	7
3	Two hook operation monitored / Two hook operation not monitored	9
4	Safety guidelines	10
5	Boom nose on telescopic boom	11
6	Auxiliary jib on telescopic boom	13
7	Folding jib	14
8	Fixed lattice jib	15
9	Boom nose on fixed lattice jib	17
10	Auxiliary jib on fixed lattice jib	18
11	Luffing lattice jib	19
12	Boom nose on luffing lattice jib	20
13	Auxiliary jib on luffing lattice jib	21
14	Lifting a joint load	23

LWE/ab Muli 010/24201-02-02/en

copyright © Liebherr-Werk Ehingen GmbH 2016

LWE/ab Muli 010/24201-02-02/en

Fig.195219

copyright © Liebherr-Werk Ehingen GmbH 2016

1 Auxiliary boom

A distinction is made between the following auxiliary booms:
- Boom nose on telescopic boom
- Boom nose on lattice jib
- Auxiliary jib
- Folding jib
- Fixed lattice jib
- Luffing lattice jib

1.1 Boom nose on telescopic boom

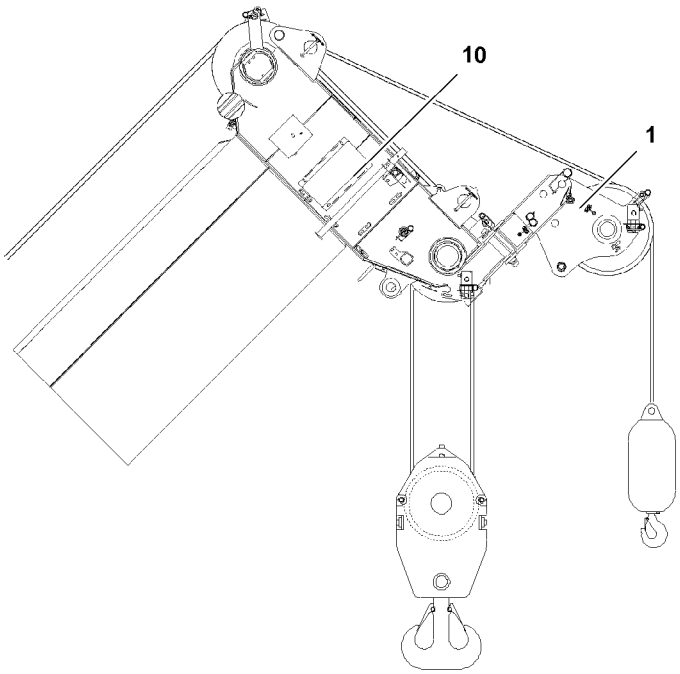

*Fig.120451: Boom nose **1** on telescopic boom*

- Short auxiliary boom as bracket
- Is installed on the telescopic boom head **10**
- No proprietary load charts available
- Abbreviation: **M**

copyright © Liebherr-Werk Ehingen GmbH 2016

1.2 Boom nose on lattice jib

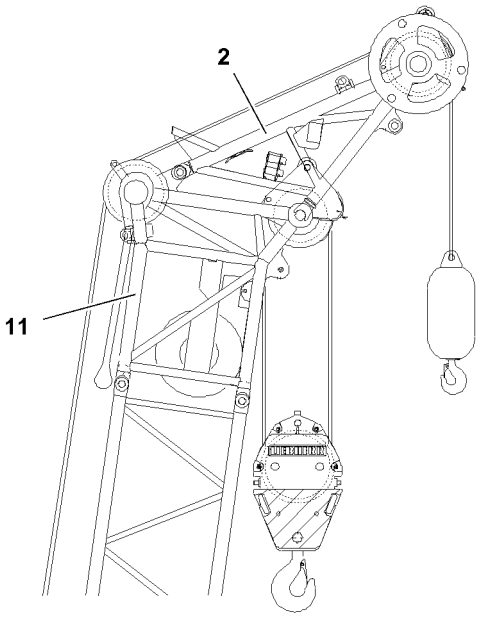

*Fig.120452: Boom nose **2** on lattice jib*

- Auxiliary boom as lattice structure
- Is installed on the N-head **11**
- No proprietary load charts available
- Abbreviation: **M**

1.3 Auxiliary jib

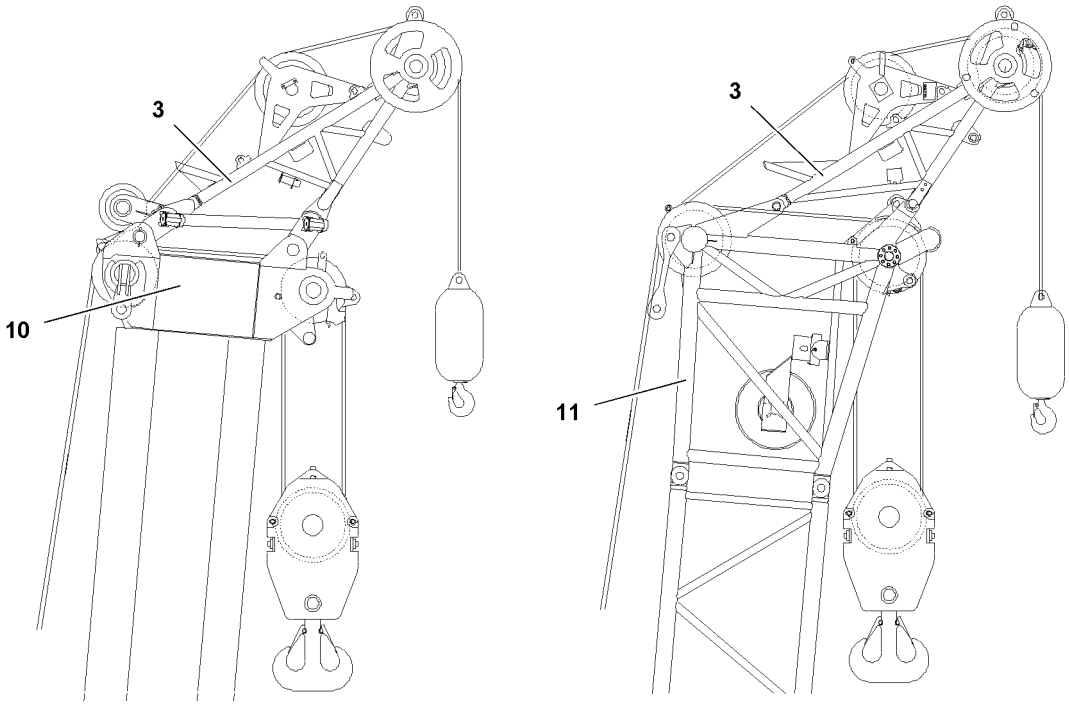

*Fig.120453: Auxiliary jib **3***

- Short auxiliary boom as lattice structure
- Is installed on the telescopic boom head **10** or N-head **11**
- Proprietary load charts available

LWE/ab Muli 010/24201-02-02/en

copyright © Liebherr-Werk Ehingen GmbH 2016

– Abbreviation: **H**

1.4 Folding jib

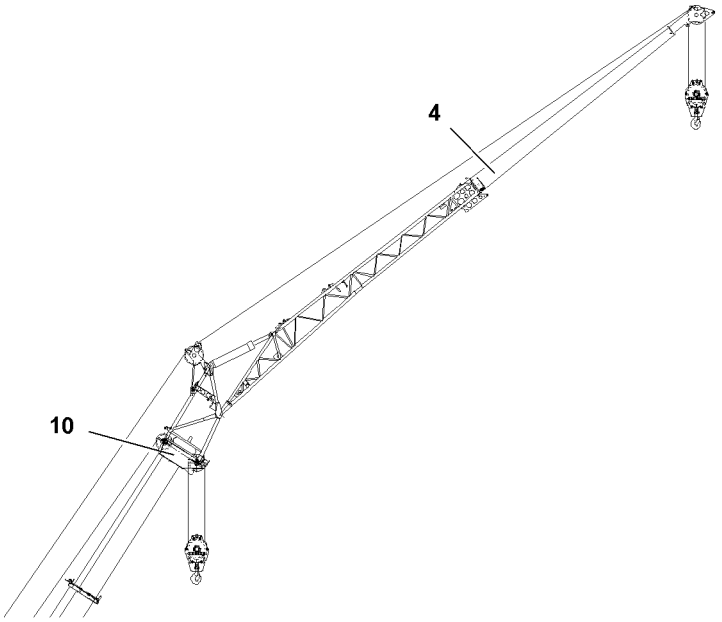

*Fig.120454: Folding jib **4***

– Auxiliary boom as lattice or metal sheeting structure
– Is installed on the telescopic boom head **10**
– Proprietary load charts available
– Abbreviation: **K**

The following folding jib variations are possible:
– Special folding jib
– Single folding jib
– Double folding jib
– 3-part single folding jib
– 3-part double folding jib
– 4-part single folding jib
– 4-part double folding jib

copyright © Liebherr-Werk Ehingen GmbH 2016

1.5 Fixed lattice jib

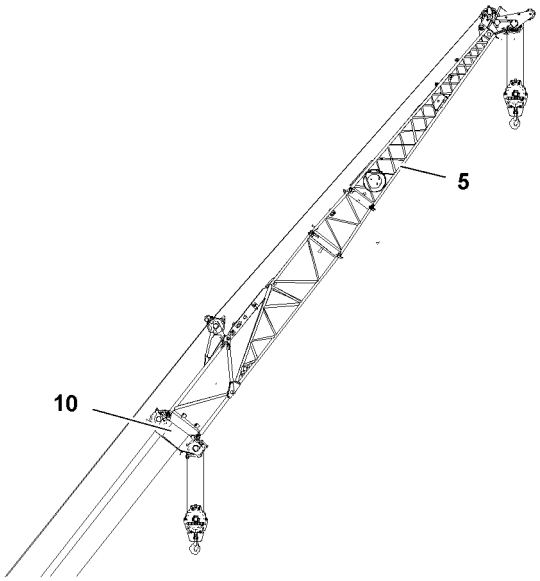

*Fig.120455: Fixed lattice jib **5***

- Auxiliary boom in lattice structure
- Is installed on the telescopic boom head **10**
- Proprietary load charts available
- Abbreviation: **F**

1.6 Luffing lattice jib

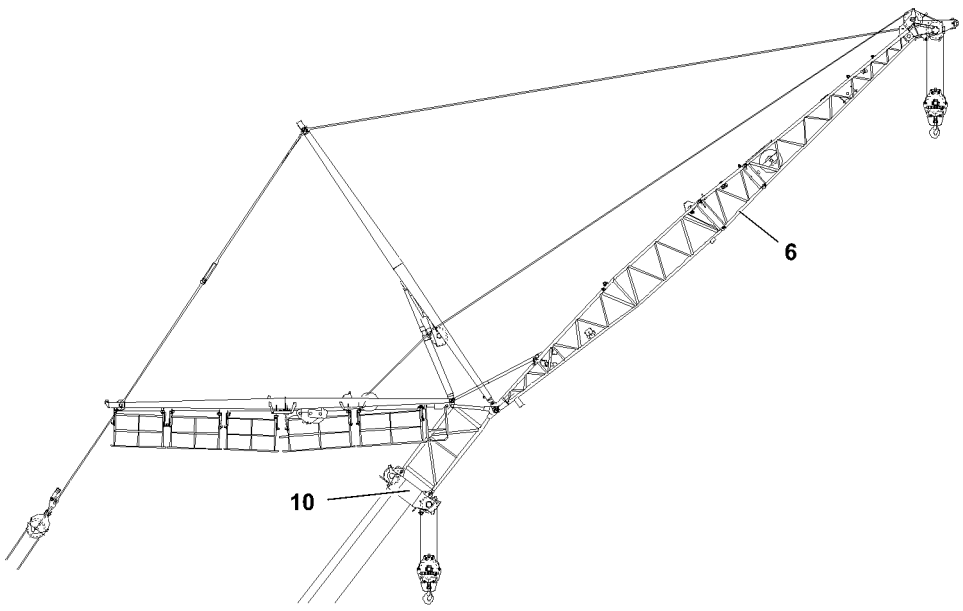

*Fig.120456: Luffing lattice jib **6***

- Auxiliary boom as lattice structure with guying
- Is installed on the telescopic boom head **10**
- Proprietary load charts available
- Abbreviation: **N**

LWE/ab Muli 010/24201-02-02/en

copyright © Liebherr-Werk Ehingen GmbH 2016

2 Hook operation

A distinction is made between the following hook operating modes:
- One hook operation
- Two hook operation
- Three hook operation
- Hook operation depending on the load

2.1 One hook operation

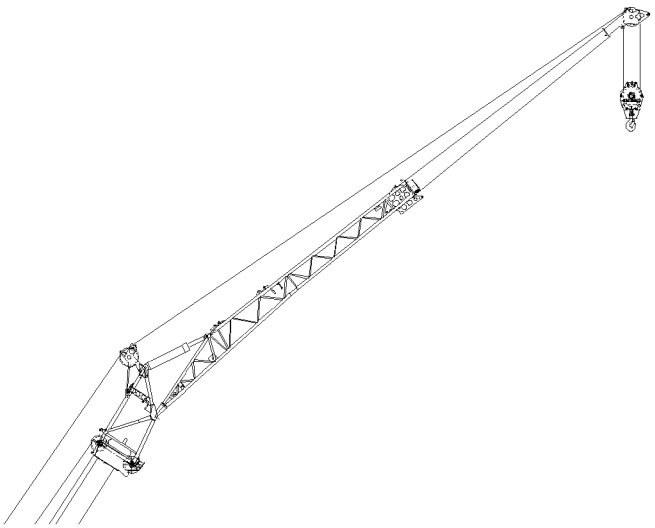

Fig.120458: One hook operation

One hook is reeved on the boom.

2.2 Two hook operation

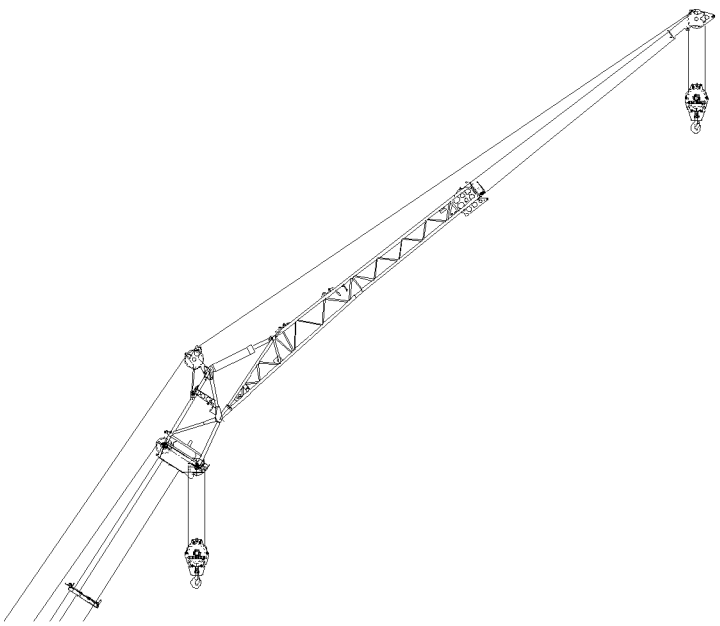

Fig.120459: Two hook operation

Two hooks are reeved on the booms. Number of loads and type of crane operation are not taken into account.

copyright © Liebherr-Werk Ehingen GmbH 2016

2.3 Three hook operation

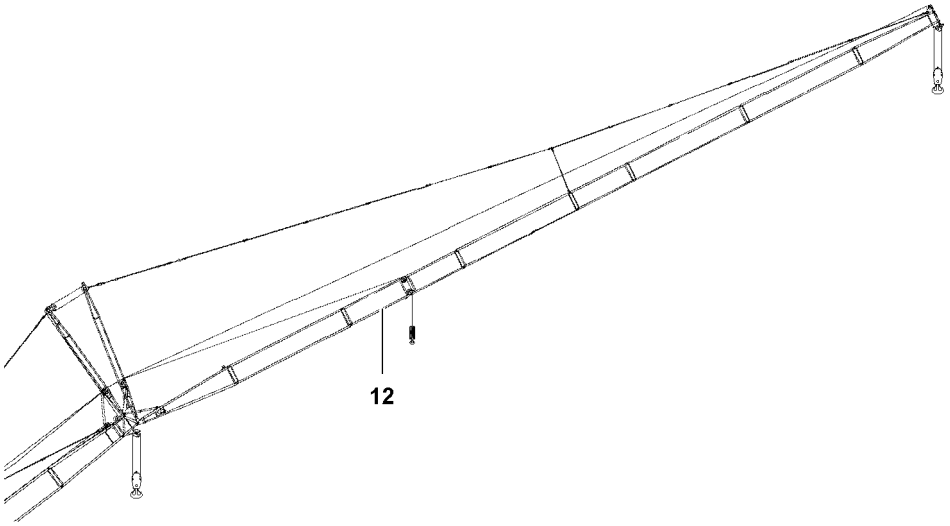

Fig.120457: Three hook operation

Three hooks are reeved on the booms. Number of loads and type of crane operation are not taken into account.

Note

▶ Three hook operation is **not** possible on telescopic cranes.

2.4 Hook operation depending on the load

The following hook operating modes are differentiated depending on the load:
- Two hook operation on joint load
- Two hook operation on individual loads

2.4.1 Two hook operation on joint load

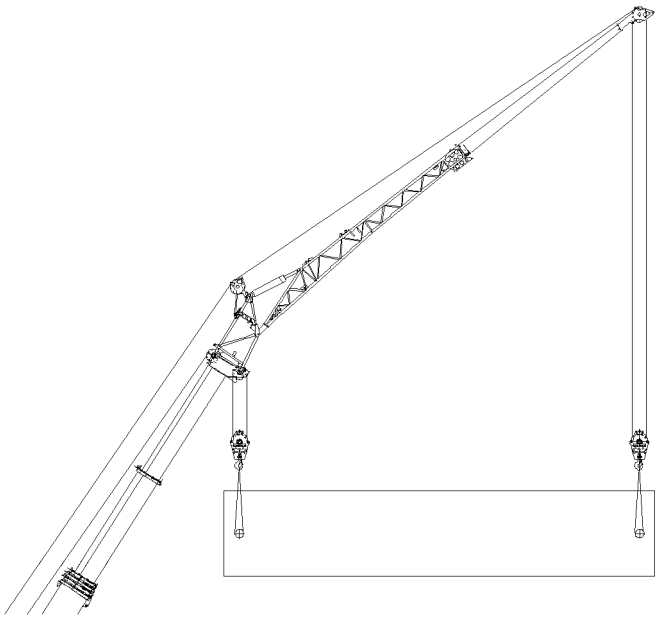

Fig.120460: Two hook operation on joint load

A joint load hangs on two hooks.

LWE/ab Muli 010/24201-02-02/en

copyright © Liebherr-Werk Ehingen GmbH 2016

2.4.2 Two hook operation on individual loads

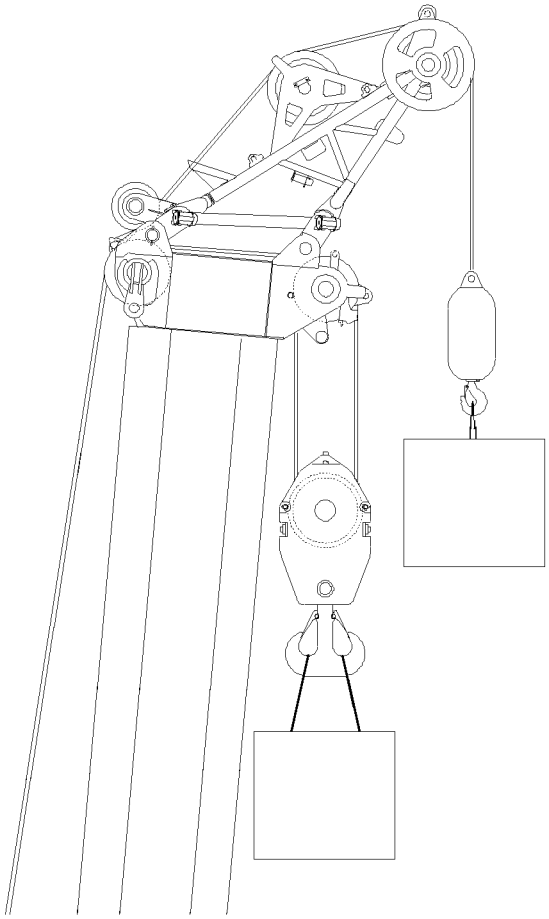

Fig.121508: Two hook operation for individual loads

Individual loads hang on individual hooks.

3 Two hook operation monitored / Two hook operation not monitored

For two hook operation the following is differentiated:

- Two hook operation monitored
  Two hook operation on joint load and on individual loads is monitored by the LICCON overload protection
- Two hook operation **not** monitored
  Two hook operation on joint load and on individual loads is **not** monitored by the LICCON overload protection

LWE/ab Muli 010/24201-02-02/en

copyright © Liebherr-Werk Ehingen GmbH 2016

3.1 Two hook operation monitored

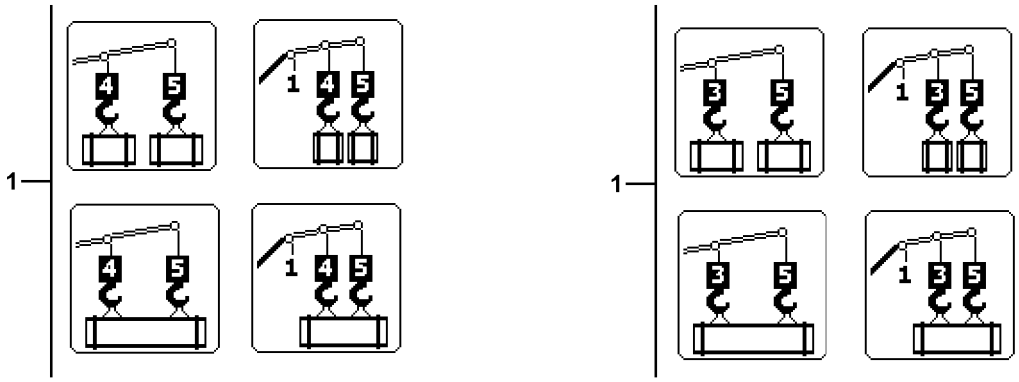

*Fig.121109: Icons **1** Two hook operation monitored*

For crane types, which are equipped with monitored two hook operation, the two hook operation can be selected in the Set up program. The monitored two hook operation is displayed by the two selectable icons **1**.

3.2 Two hook operation not monitored

If the two hook operation can **not** be selected in the Set up program, then the two hook operation is **not** monitored.

4 Safety guidelines

WARNING
Danger of accident if „two hook operation is **not** monitored“!
If „two hook operation is **not** monitored“ and both hooks are subjected to a load, then the boom can be overloaded when luffing down.

When both hooks are subjected to a load and are **not** monitored:
▶ Do not luff the boom down.

WARNING
Overload of crane!
Death, severe injuries, property damage.
▶ Set up solely permissible hook operations.
▶ Lift and lower the load vertically.

When a hook is reeved on the telescopic boom:
▶ Do **not** carry out two hook operation with TY-guying and eccentric or spacer.

WARNING
Overload of crane!
Death, severe injuries, property damage.

If no load chart is available:
▶ **Make sure that the total weight of the load(s) is smaller than / equal to the maximum permissible load of the auxiliary boom.**
▶ Two hook operation with load(s) heavier than the maximum permissible load of the auxiliary boom is prohibited.

LWE/ab Muli 010/24201-02-02/en

copyright © Liebherr-Werk Ehingen GmbH 2016

WARNING
Overload of crane due to imprecise radius and load display!
When no load charts is available, then the radius and load display is not exact.
Toppling crane, death, property damage.
▶ Move the crane within the permissible utilization range.

WARNING
Incorrect reeving for two hook operation!
Overload of crane, death, property damage.
▶ Reeve in an auxiliary boom head smaller than / equal to the main boom head.
▶ Set the LICCON overload protection to the reeving on the auxiliary boom head.

WARNING
Incorrect distance of fastening points!
Overload of crane, death, property damage.

For two hook operation on joint load:
▶ Place the fastening points according to the horizontal distance of both hooks.

WARNING
Danger of collision for two hook operation on joint load!
Falling load, death, property damage.
▶ Lift the load no higher than to the height of the main boom head.

Add the following weights to the load:
– Hook block on main boom head
– Hook block (load hook) on auxiliary boom head
– Fastening equipment

5 Boom nose on telescopic boom

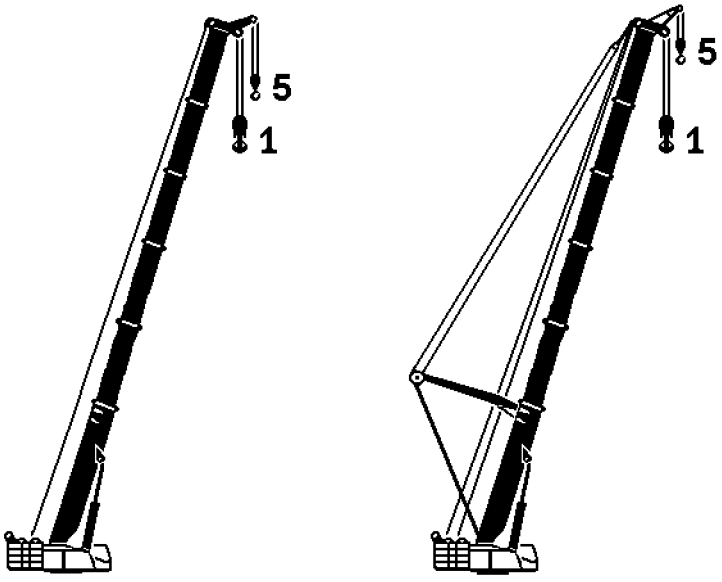

Fig.120462: Boom nose on telescopic boom

LWE/ab Muli 010/24201-02-02/en

copyright © Liebherr-Werk Ehingen GmbH 2016

WARNING
Impermissible operating conditions for two hook operation!
Overload of crane, death, property damage.
▶ Set up solely permissible hook operations.
▶ Set up of **non-permissible** hook operations is prohibited.

Hook	Illustration	Permissible hook operations for boom nose on telescopic boom
[5]		**One hook operation:** Hook 5 is reeved on **boom nose**. Load is fastened on hook 5. **WARNING!** Radius and load display is not exact.
[1]		**One hook operation:** Hook 1 is reeved on **telescopic boom**. Load is fastened on hook 1. **WARNING!** Radius and load display is not exact.
1 [5]		**Two hook operation:** Hook 1 is reeved on **telescopic boom**. Hook 5 is reeved on **boom nose**. Load is fastened on hook 5. **WARNING!** Radius and load display is not exact.
[1] 5		**Two hook operation:** Hook 1 is reeved on **telescopic boom**. Hook 5 is reeved on **boom nose**. Load is fastened on hook 1. **WARNING!** Radius and load display is not exact.

5.1 Set up for boom nose on telescopic boom

▶ Reeve in a boom nose smaller than / equal to the telescopic boom head.

When a load is fastened on hook 5 (boom nose):
▶ Set the LICCON overload protection to the reeving on the boom nose.

For the two hook operation boom nose on telescopic boom no special load charts are available.

▶ Set operating mode **telescopic boom** on the LICCON overload protection.

LWE/ab Muli 010/24201-02-02/en

copyright © Liebherr-Werk Ehingen GmbH 2016

6 Auxiliary jib on telescopic boom

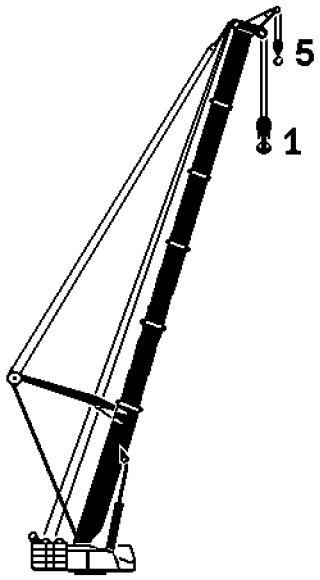

Fig.120467: Auxiliary jib on telescopic boom

WARNING
Impermissible operating conditions for two hook operation!
Overload of crane, death, property damage.
- ▶ Set up solely permissible hook operations.
- ▶ Set up of **non-permissible** hook operations is prohibited.

Hook	Illustration	Permissible hook operations for auxiliary jib on telescopic boom
[5]		**One hook operation:** Hook 5 is reeved on **auxiliary jib**. Load is fastened on hook 5.
[1]		**One hook operation:** Hook 1 is reeved on **telescopic boom**. Load is fastened on hook 1. **WARNING!** For **non-monitored** two hook operation: Radius and load display is not exact.
1 [5]		**Two hook operation:** Hook 1 is reeved on **telescopic boom**. Hook 5 is reeved on **auxiliary jib**. Load is fastened on hook 5. **WARNING!** For **non-monitored** two hook operation: Radius and load display is not exact.
[1] 5		**Two hook operation:** Hook 1 is reeved on **telescopic boom**. Hook 5 is reeved on **auxiliary jib**. Load is fastened on hook 1. **WARNING!** For **non-monitored** two hook operation: Radius and load display is not exact.
[1] [5]		**Two hook operation:** Hook 1 is reeved on **telescopic boom**. Hook 5 is reeved on **auxiliary jib**. First load is fastened on hook 1. Second load is fastened on hook 5. **WARNING!** Permissible solely for monitored two hook operation.

copyright © Liebherr-Werk Ehingen GmbH 2016

Hook	Illustration	Permissible hook operations for auxiliary jib on telescopic boom
[1 5]		**Two hook operation:** Hook 1 is reeved on **telescopic boom**. Hook 5 is reeved on **auxiliary jib**. A joint load is fastened on hook 1 and hook 5. **WARNING!** Permissible solely for monitored two hook operation. **WARNING!** Make sure that the weight of the load is smaller than / equal to the maximum permissible load of the auxiliary jib.

6.1 Set up for auxiliary jib on telescopic boom

WARNING
Impermissible hook operation!
Overload of crane, death, property damage.

Solely if the required load charts is available:
▶ Set up hook operation.

▶ Reeve in a auxiliary jib smaller than / equal to the telescopic boom head.
▶ Set the LICCON overload protection to the reeving on the auxiliary jib.
▶ Set operating mode **auxiliary jib** on the LICCON overload protection.

7 Folding jib

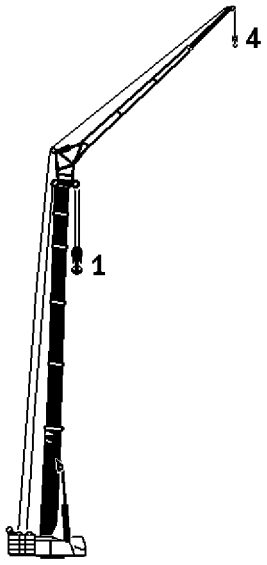

Fig.120468: Folding jib

WARNING
Impermissible hook operations!
Overload of crane, death, property damage.
▶ Set up solely permissible hook operations.
▶ Set up of **non-permissible** hook operations is prohibited.

LWE/ab Muli 010/24201-02-02/en

copyright © Liebherr-Werk Ehingen GmbH 2016

Hook	Illustration	Permissible hook operations for folding jib
[4]		**One hook operation:** Hook 4 is reeved on **folding jib**. Load is fastened on hook 4.
[1] 4		**Two hook operation:** Hook 1 is reeved on **telescopic boom**. Hook 4 is reeved on **folding jib**. Load is fastened on hook 1. **WARNING!** Radius and load display is not exact.
1 [4]		**Two hook operation:** Hook 1 is reeved on **telescopic boom**. Hook 4 is reeved on **folding jib**. Load is fastened on hook 4. **WARNING!** Radius and load display is not exact.
[1 4]		**Two hook operation:** Hook 1 is reeved on **telescopic boom**. Hook 4 is reeved on **folding jib**. A joint load is fastened on hook 1 and hook 4. **WARNING!** Radius and load display is not exact. **WARNING!** Make sure that the weight of the load is smaller than / equal to the maximum permissible load of the folding jib.

7.1 Set up for operation with folding jib

WARNING
Impermissible hook operation!
Overload of crane, death, property damage.

Solely if the required load charts is available:
▶ Set up hook operation.

▶ Reeve in a folding jib smaller than / equal to the telescopic boom head.
▶ Set the LICCON overload protection to the reeving on the folding jib.
▶ Set operating mode **folding jib** on the LICCON overload protection.

8 Fixed lattice jib

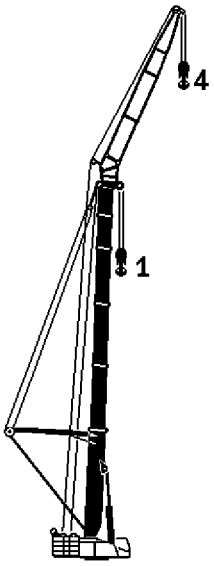

Fig.120473: Fixed lattice jib

LWE/ab Muli 010/24201-02-02/en

copyright © Liebherr-Werk Ehingen GmbH 2016

WARNING
Impermissible hook operations!
Overload of crane, death, property damage.
▶ Set up solely permissible hook operations.
▶ Set up of **non-permissible** hook operations is prohibited.

Hook	Illustration	Permissible hook operations for fixed lattice jib
[4]		**One hook operation:** Hook 4 is reeved on **fixed lattice jib**. Load is fastened on hook 4.
[1] 4		**Two hook operation:** Hook 1 is reeved on **telescopic boom**. Hook 4 is reeved on **fixed lattice jib**. Load is fastened on hook 1. **WARNING!** Radius and load display is not exact.
1 [4]		**Two hook operation:** Hook 1 is reeved on **telescopic boom**. Hook 4 is reeved on **fixed lattice jib**. Load is fastened on hook 4. **WARNING!** Radius and load display is not exact.
[1 4]		**Two hook operation:** Hook 1 is reeved on **telescopic boom**. Hook 4 is reeved on **fixed lattice jib**. A joint load is fastened on hook 1 and hook 4. **WARNING!** Radius and load display is not exact. **WARNING!** Make sure that the weight of the load is smaller than / equal to the maximum permissible load of the fixed lattice jib.

8.1 Set up for operation with fixed lattice jib

WARNING
Impermissible hook operation!
Overload of crane, death, property damage.

Solely if the required load charts is available:
▶ Set up hook operation.

▶ Reeve in a fixed lattice jib smaller than / equal to the telescopic boom head.
▶ Set the LICCON overload protection to the reeving on the fixed lattice jib.
▶ Set operating mode **fixed lattice jib** on the LICCON overload protection.

LWE/ab Muli 010/24201-02-02/en

copyright © Liebherr-Werk Ehingen GmbH 2016

9 Boom nose on fixed lattice jib

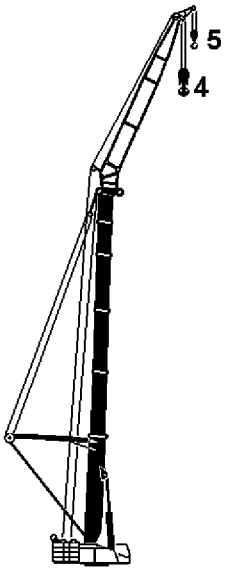

Fig.120474: Boom nose on fixed lattice jib

WARNING
Impermissible hook operations!
Overload of crane, death, property damage.
- ▶ Set up solely permissible hook operations.
- ▶ Set up of **non-permissible** hook operations is prohibited.

Hook	Illustration	Permissible hook operations for boom nose on fixed lattice jib
[5]		**One hook operation:** Hook 5 is reeved on **boom nose**. Load is fastened on hook 5. **WARNING!** Radius and load display is not exact.
[4]		**One hook operation:** Hook 4 is reeved on **fixed lattice jib**. Load is fastened on hook 4. **WARNING!** Radius and load display is not exact.
4 [5]		**Two hook operation:** Hook 4 is reeved on **fixed lattice jib**. Hook 5 is reeved on **boom nose**. Load is fastened on hook 5. **WARNING!** Radius and load display is not exact.
[4] 5		**Two hook operation:** Hook 4 is reeved on **fixed lattice jib**. Hook 5 is reeved on **boom nose**. Load is fastened on hook 4. **WARNING!** Radius and load display is not exact.
[4 5]		**Two hook operation:** Hook 4 is reeved on **fixed lattice jib**. Hook 5 is reeved on **boom nose**. A joint load is fastened on hook 4 and hook 5. **WARNING!** Radius and load display is not exact. **WARNING!** Make sure that the weight of the load is smaller than / equal to the maximum permissible load of the boom nose.

copyright © Liebherr-Werk Ehingen GmbH 2016

9.1 Set up for operation with boom nose on fixed lattice jib

▶ Reeve in a boom nose smaller than / equal to the N-head.

When a load is fastened on hook 5 (boom nose):
▶ Set the LICCON overload protection to the reeving on the boom nose.
▶ Set operating mode **fixed lattice jib** on the LICCON overload protection.

10 Auxiliary jib on fixed lattice jib

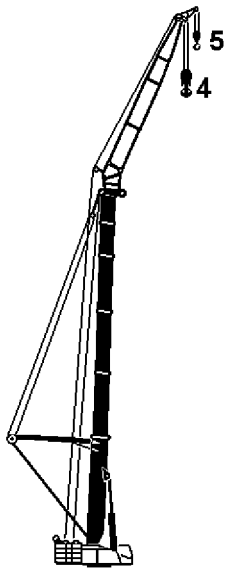

Fig.120474: Auxiliary jib on fixed lattice jib

WARNING
Impermissible hook operations!
Overload of crane, death, property damage.
▶ Set up solely permissible hook operations.
▶ Set up of **non-permissible** hook operations is prohibited.

Hook	Illustration	Permissible hook operations for auxiliary jib on fixed lattice jib
[5]		**One hook operation:** Hook 5 is reeved on **auxiliary jib**. Load is fastened on hook 5.
[4]		**One hook operation:** Hook 4 is reeved on **fixed lattice jib**. Load is fastened on hook 4. **WARNING!** For **non-monitored** two hook operation: Radius and load display is not exact.
4 [5]	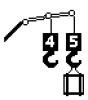	**Two hook operation:** Hook 4 is reeved on **fixed lattice jib**. Hook 5 is reeved on **auxiliary jib**. Load is fastened on hook 5. **WARNING!** For **non-monitored** two hook operation: Radius and load display is not exact.

LWE/ab Muli 010/24201-02-02/en

copyright © Liebherr-Werk Ehingen GmbH 2016

Hook	Illustration	Permissible hook operations for auxiliary jib on fixed lattice jib
[4] 5		**Two hook operation:** Hook 4 is reeved on **fixed lattice jib**. Hook 5 is reeved on **auxiliary jib**. Load is fastened on hook 4. **WARNING!** For **non-monitored** two hook operation: Radius and load display is not exact.
[4] [5]	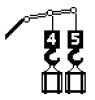	**Two hook operation:** Hook 4 is reeved on **fixed lattice jib**. Hook 5 is reeved on **auxiliary jib**. First load is fastened on hook 4. Second load is fastened on hook 5. **WARNING!** Permissible solely for monitored two hook operation.
[4 5]		**Two hook operation:** Hook 4 is reeved on **fixed lattice jib**. Hook 5 is reeved on **auxiliary jib**. A joint load is fastened on hook 4 and hook 5. **WARNING!** For **non-monitored** two hook operation: Radius and load display is not exact. **WARNING!** Make sure that the weight of the load is smaller than / equal to the maximum permissible load of the auxiliary jib.

10.1 Set up for operation with auxiliary jib on fixed lattice jib

WARNING
Impermissible hook operation!
Overload of crane, death, property damage.

Solely if the required load charts is available:
▶ Set up hook operation.

▶ Reeve in an auxiliary jib smaller than / equal to the N-head.
▶ Set the LICCON overload protection to the reeving on the auxiliary jib.
▶ Set operating mode **auxiliary jib** on the LICCON overload protection.

11 Luffing lattice jib

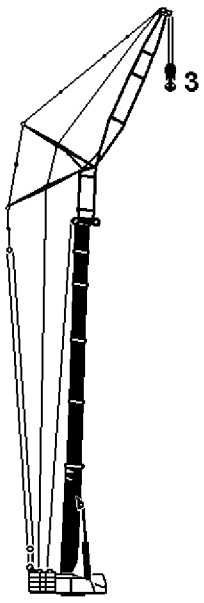

Fig.120700: Luffing lattice jib

copyright © Liebherr-Werk Ehingen GmbH 2016

WARNING
Impermissible hook operations!
Overload of crane, death, property damage.
▶ Set up solely permissible hook operations.
▶ Set up of **non-permissible** hook operations is prohibited.

Hook	Illustration	Permissible hook operations for luffing lattice jib
[3]		**One hook operation:** Hook 3 is reeved on **luffing lattice jib**. Load is fastened on hook 3.

11.1 Set up for operation with luffing lattice jib

WARNING
Impermissible hook operation!
Overload of crane, death, property damage.

Solely if the required load charts is available:
▶ Set up hook operation.

▶ Set the LICCON overload protection to the reeving on the luffing lattice jib.
▶ Set operating mode **luffing lattice jib** on the LICCON overload protection.

12 Boom nose on luffing lattice jib

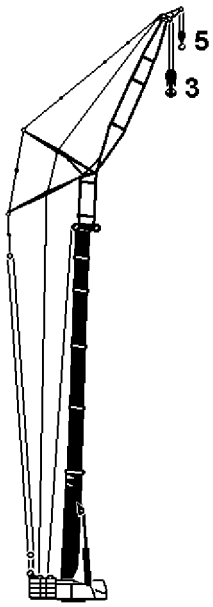

Fig.120702: Boom nose on luffing lattice jib

WARNING
Impermissible hook operations!
Overload of crane, death, property damage.
▶ Set up solely permissible hook operations.
▶ Set up of **non-permissible** hook operations is prohibited.

LWE/ab Muli 010/24201-02-02/en

copyright © Liebherr-Werk Ehingen GmbH 2016

Hook	Illustration	Permissible hook operations for boom nose on luffing lattice jib
[5]		**One hook operation:** Hook 5 is reeved on **boom nose**. Load is fastened on hook 5. **WARNING!** Radius and load display is not exact.
[3]		**One hook operation:** Hook 3 is reeved on **luffing lattice jib**. Load is fastened on hook 3. **WARNING!** Radius and load display is not exact.
3 [5]		**Two hook operation:** Hook 3 is reeved on **luffing lattice jib**. Hook 5 is reeved on **boom nose**. Load is fastened on hook 5. **WARNING!** Radius and load display is not exact.
[3] 5		**Two hook operation:** Hook 3 is reeved on **luffing lattice jib**. Hook 5 is reeved on **boom nose**. Load is fastened on hook 3. **WARNING!** Radius and load display is not exact.
[3 5]		**Two hook operation:** Hook 3 is reeved on **luffing lattice jib**. Hook 5 is reeved on **boom nose**. A joint load is fastened on hook 3 and hook 5. **WARNING!** Radius and load display is not exact. **WARNING!** Make sure that the weight of the load is smaller than / equal to the maximum permissible load of the boom nose.

12.1 Set up for operation with boom nose on luffing lattice jib

▶ Reeve in a boom nose smaller than / equal to the N-head.

When a load is fastened on hook 5 (boom nose):
▶ Set the LICCON overload protection to the reeving on the boom nose.
▶ Set operating mode **luffing lattice jib** on the LICCON overload protection.

13 Auxiliary jib on luffing lattice jib

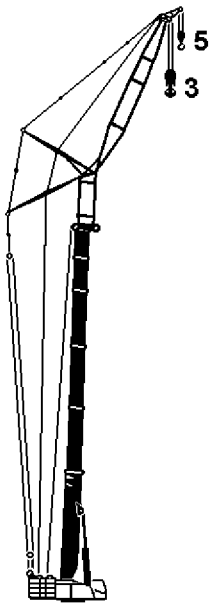

Fig.120702: Auxiliary jib on luffing lattice jib

copyright © Liebherr-Werk Ehingen GmbH 2016

WARNING
Impermissible hook operations!
Overload of crane, death, property damage.
▶ Set up solely permissible hook operations.
▶ Set up of **non-permissible** hook operations is prohibited.

Hook	Illustration	Permissible hook operations for auxiliary jib on luffing lattice jib
[5]		**One hook operation:** Hook 5 is reeved on **auxiliary jib**. Load is fastened on hook 5.
[3]		**One hook operation:** Hook 3 is reeved on **luffing lattice jib**. Load is fastened on hook 3. **WARNING!** For **non-monitored** two hook operation: Radius and load display is not exact.
3 [5]		**Two hook operation:** Hook 3 is reeved on **luffing lattice jib**. Hook 5 is reeved on **auxiliary jib**. Load is fastened on hook 5. **WARNING!** For **non-monitored** two hook operation: Radius and load display is not exact.
[3] 5		**Two hook operation:** Hook 3 is reeved on **luffing lattice jib**. Hook 5 is reeved on **auxiliary jib**. Load is fastened on hook 3. **WARNING!** For **non-monitored** two hook operation: Radius and load display is not exact.
[3] [5]		**Two hook operation:** Hook 3 is reeved on **luffing lattice jib**. Hook 5 is reeved on **auxiliary jib**. First load is fastened on hook 3. Second load is fastened on hook 5. **WARNING!** Permissible solely for monitored two hook operation.
[3 5]		**Two hook operation:** Hook 3 is reeved on **luffing lattice jib**. Hook 5 is reeved on **auxiliary jib**. A joint load is fastened on hook 3 and hook 5. **WARNING!** For **non-monitored** two hook operation: Radius and load display is not exact. **WARNING!** Make sure that the weight of the load is smaller than / equal to the maximum permissible load of the auxiliary jib.

13.1 Set up for operation with auxiliary jib on luffing lattice jib

WARNING
Impermissible hook operation!
Overload of crane, death, property damage.

Solely if the required load charts is available:
▶ Set up hook operation.

▶ Reeve in an auxiliary jib smaller than / equal to the N-head.
▶ Set the LICCON overload protection to the reeving on the auxiliary jib.
▶ Set operating mode **auxiliary jib** on the LICCON overload protection.

LWE/ab Muli 010/24201-02-02/en

copyright © Liebherr-Werk Ehingen GmbH 2016

14 Lifting a joint load

14.1 Lifting a joint load solely with auxiliary boom

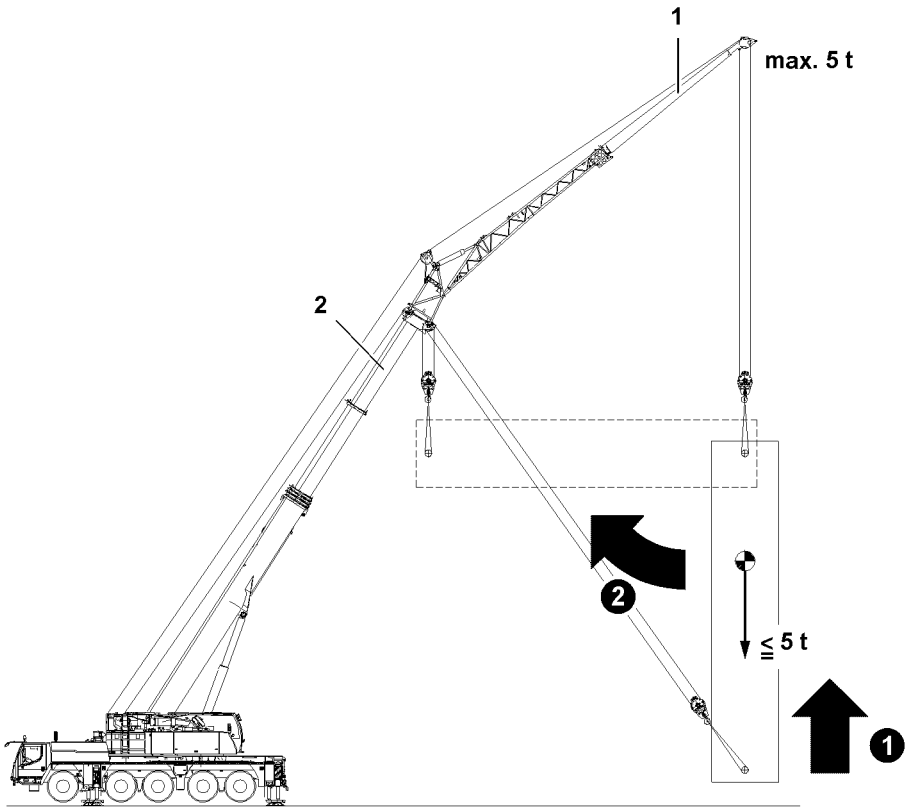

*Fig.120710: Lift the load with auxiliary boom **1** to 100 %.*

If the weight or the center of gravity of the load is not exactly known, then the load must first be lifted with the auxiliary boom **1** to 100 %.

Make sure that the following prerequisite is met:
– The weight of the load is smaller / equal to the maximum permissible load of the auxiliary boom **1**.

WARNING
Incorrect lifting the load!
Toppling crane, death, property damage.
▶ Lift the load with auxiliary boom **1** to 100 %.

copyright © Liebherr-Werk Ehingen GmbH 2016

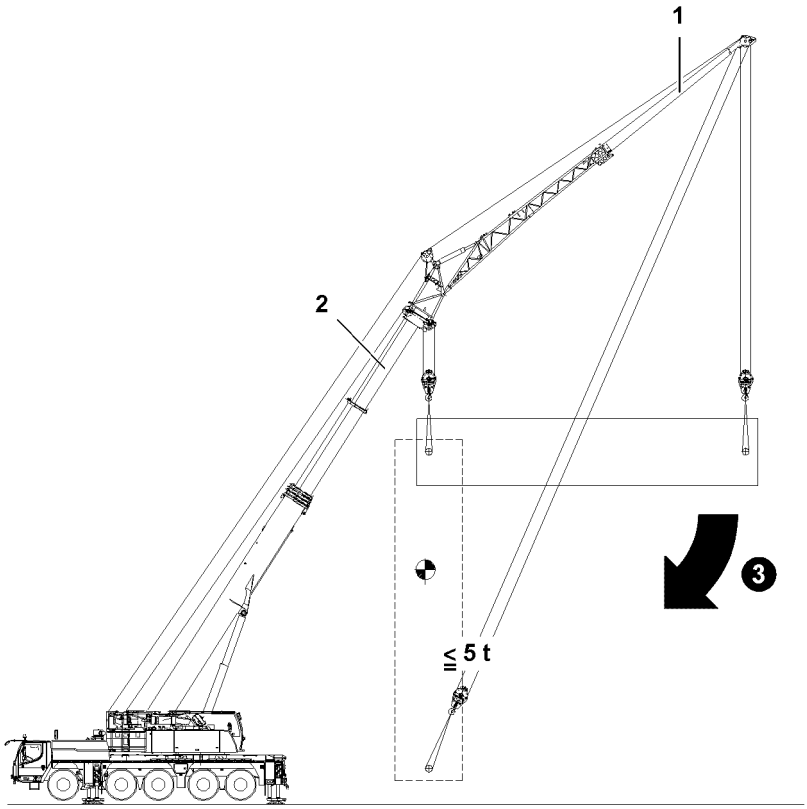

*Fig.120711: Take over the load with the main boom **2**.*

In „two hook operation“ angular pull is only permissible in boom direction with raised load.

NOTICE
Rubbing hoist ropes!

- ▶ Make sure that the hoist ropes do not rub on the rope retaining pipes of the rope pulleys during angular pull.

- ▶ Take over the load with the main boom **2**.

copyright © Liebherr-Werk Ehingen GmbH 2016

14.2 Lifting joint load with two booms

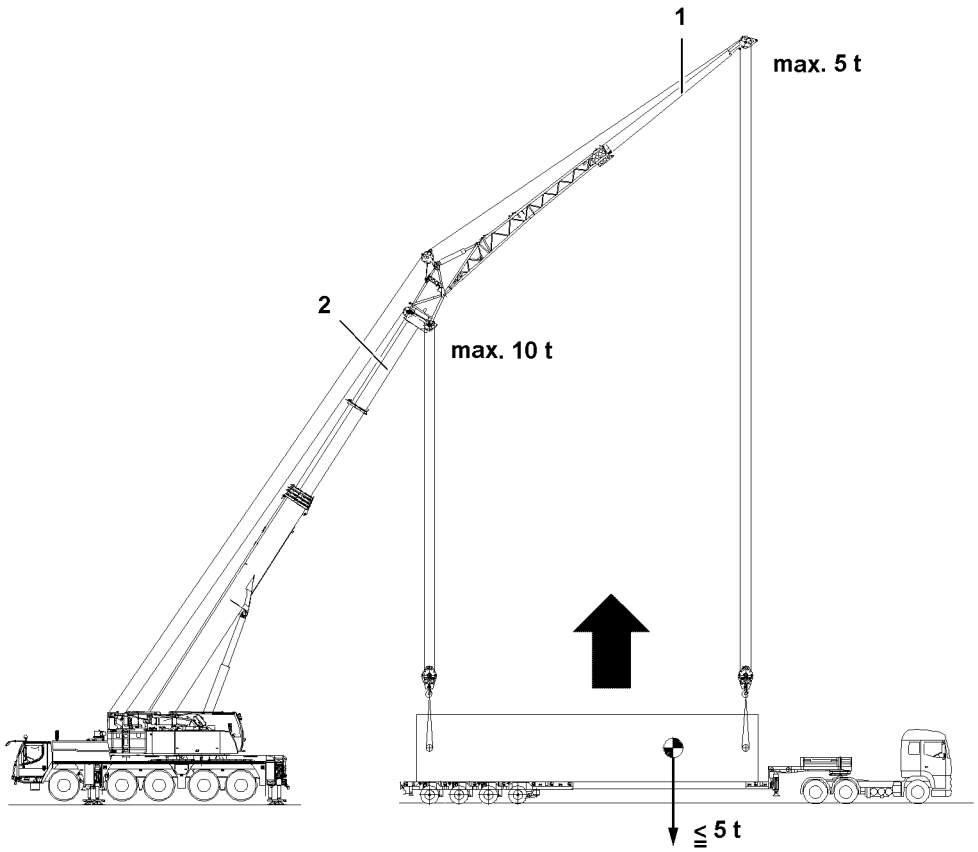

*Fig.120712: Lift the load with the main boom **2** and auxiliary boom **1**.*

Make sure that the following prerequisite is met:
– The weight of the load is smaller / equal to the maximum permissible load of the auxiliary boom **1**.

WARNING
Overload of crane!
Death, severe injuries, property damage.
▶ Make sure that the weight and the center of gravity of the load is known exactly.

In „two hook operation“ angular pull is only permissible in boom direction with raised load.

NOTICE
Rubbing hoist ropes!
▶ Make sure that the hoist ropes do not rub on the rope retaining pipes of the rope pulleys during angular pull.

▶ Lift the load with the main boom **2** and auxiliary boom **1**.

LWE/ab Muli 010/24201-02-02/en

copyright © Liebherr-Werk Ehingen GmbH 2016

Empty page!

copyright © Liebherr-Werk Ehingen GmbH 2016

4.20 Procedure for shut off of crane movements

1	General	3
2	Instructions to resume the crane movement	19

LWE/ab Muli 010/24201-02-02/en

copyright © Liebherr-Werk Ehingen GmbH 2016

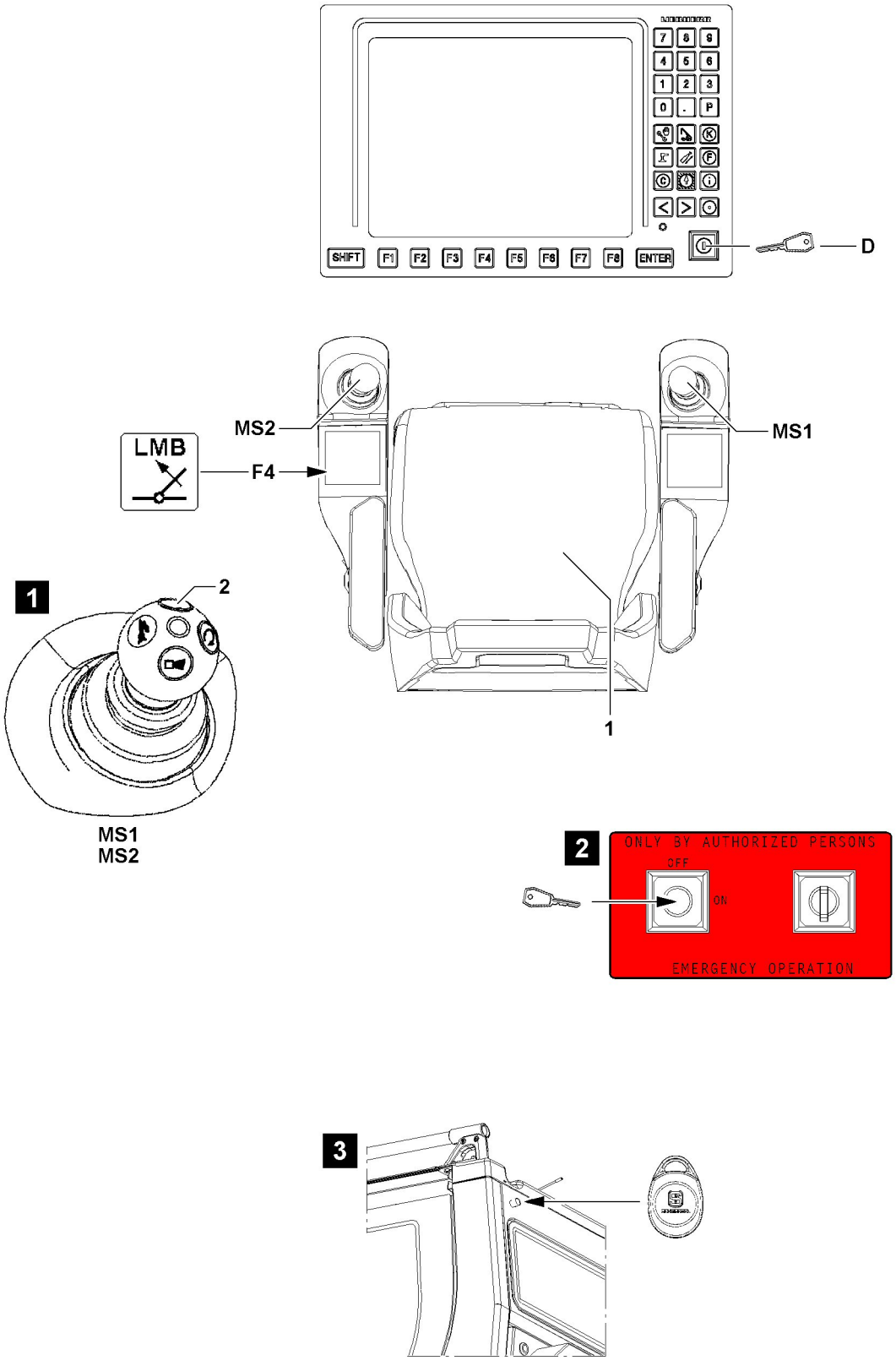

Fig.117245

LWE/ab Muli 010/24201-02-02/en

copyright © Liebherr-Werk Ehingen GmbH 2016

1 General

WARNING
Limits of LICCON computer system!
The LICCON computer system cannot reduce the danger of accidents in case of unsuitable or careless operation nor abrogate physical limits.
The LICCON computer system cannot take into account errors or judgment / erroneous operation.
- ▶ The responsibility for safe crane operation / assembly operation and crane application is resting solely with the crane operator and operating personnel.
- ▶ Always match crane operation / assembly operation and crane application with the operating conditions.

Note
- ▶ The monitor illustrations in this chapter are only examples.
- ▶ The numerical values in the individual icons and charts do not have to necessarily match the crane exactly.
- ▶ Numbers and letters can be replaced by place holders.
- ▶ The display and assignment of the icons can deviate, depending on the set up configuration, operating status and configuration of the crane.
- ▶ In addition, many of the illustrations show the maximum configuration of the LICCON monitor with icons.
- ▶ In crane operation, an identical display will **not** appear on the LICCON monitor.

Note
- ▶ Load hook and hook block are generally also described as hooks.

1.1 Operating elements for special cases at operation of the LICCON overload protection

Within the crane operator's cab, two buttons are installed as operating elements for „Special cases at operation of the LICCON overload protection“

- Button **F4** in the left control console.
- Set up key **D** on LICCON monitor 0

Depending on the crane configuration, an additional operating element can be installed outside the crane operator's cab as operating element for „Special cases at operation of the LICCON overload protection“:
- Key switch LMB-emergency operation in switch cabinet, see illustration **2**.
- Transponder/Sensor LMB-emergency operation on rear of crane cab, see illustration **3**

If a crane movement is to be carried out with master switch **MS1** or master switch **MS2**, then at least one of the following buttons must be actuated:
- **1** Seat contact button
  - Is actuated by sitting properly on the seat.
- **2** Button
  - To bypass the seat contact button **1**, to be able to work while standing up, if necessary.

1.2 Special cases at operation of the LICCON overload protection

When special cases at operation of the LICCON overload protection occur, then the functionality of the LICCON overload protection is accessed.

LWE/ab Muli 010/24201-02-02/en

copyright © Liebherr-Werk Ehingen GmbH 2016

WARNING
Access into the functionality of the LICCON overload protection!
If the functionality of the LICCON overload protection is accessed by pressing the key **F4**, set up key **D** or possibly the activation of the LMB-emergency operation, then the LICCON overload protection is entirely deactivated, bypassed or limited.
It is possible to exceed several shut off limits of the LICCON overload protection simultaneously or one after the other.
It is possible to carry out crane movements, which are not monitored by the LICCON overload protection.
Without the LICCON overload protection, no additional protection against overload of the crane via the crane control is present.
- ▶ When accessing the functionality of the LICCON overload protection, take into account that the LICCON overload protection is deactivated totally or limited.
- ▶ Carry out any access into the functionality of the LICCON overload protection exclusively according to the specifications in the Operating instructions.

Possible limitation in the crane control:
- During certain „Special cases at operation of the LICCON overload protection“, the working speed of the crane is significantly reduced.
- During certain „Special cases at operation of the LICCON overload protection“, the possibility to control the crane is limited in time.
- During certain „Special cases at operation of the LICCON overload protection“, the individual display instruments show no values.

1.2.1 Special operating conditions

If a special operating status occurs, such as self-blocking of overload protection („Deadlock“), pressing key **F4** or set up key **D** can provide a remedy.

By pressing the key **F4** you can:
- Luffing in with suspended load

By pressing the set up key **D**, the function „Exceeding the shut off limits of the LICCON overload protection“ is activated. This makes it possible:
- To exceed the maximum permissible load moment.
- To exceed the maximum value of the F-load display in crane operation
- To make it possible to carry out some limited crane movements after LMB-STOP due to sensor errors, when the erroneous sensor is not required for monitoring by the LICCON overload protection.

Note
- ▶ If there is no defect at a sensor and a load chart is available, then the display values remain for the crane utilization (load capability display).
- ▶ Depending on the crane configuration, exceeding the maximum permissible load moment is limited to 110 %.

1.2.2 Assembly / disassembly procedures

By pressing the set up key **D** you can:
- Bypass the LICCON overload protection to carry out erection / take down procedures and assembly procedures
- Bypass hoist top shut off (erection / take down procedures and assembly procedures)

Note
- ▶ For assembly / disassembly procedures, there may not no or significantly fewer reduced display values available.
- ▶ The display of required display values or determination of required values is ensured when correctly proceeded.

LWE/ab Muli 010/24201-02-02/en

copyright © Liebherr-Werk Ehingen GmbH 2016

1.2.3 Failure of components

WARNING
Erroneous operation of the crane!
If the LICCON overload protection turns the crane movement off due to failure of components, then the exact cause for the shut off must be determined.
After a failure of components, no normal operating status can be reached. No normal crane operation is possible.
▶ Procedure, see special chapter for Diagnostics and Maintenance.
▶ Assume normal crane operation only when the cause for the shut off has been remedied and the crane control is fully functioning.

Depending on the crane configuration, a shut off due to „failure of components“ can be bypassed by:
– Activating the LMB-emergency operation:
  • Key switch LMB-emergency operation in switch cabinet
    or
  • Transponder/Sensor LMB-emergency operation on rear of crane cab

  or
– **D** Set up key

The activated function contains the following:
– Allows crane movements in case of failure of components, for example sensors which are required for monitoring by the LICCON overload protection.

1.2.4 Emergency situations

WARNING
Overload of crane!
If the LICCON overload protection is bypassed, then the LICCON overload protection is entirely deactivated.
If the LICCON overload protection is bypassed, there is no further protection against crane overload.
There is no longer a load moment limitation.
If the LICCON overload protection is bypassed, the crane can be overloaded readily.
Overload of the crane can lead to accidents.
During accidents, personnel could be killed or seriously injured.
▶ If the LICCON overload protection is bypassed, take into account that the LICCON overload protection is entirely deactivated.
▶ If the LICCON overload protection is bypassed, the crane operator assumes the full responsibility for his actions.

Depending on the crane configuration, the LICCON overload protection can be bypassed by:
– Activating the LMB-emergency operation:
  • Key switch LMB-emergency operation in switch cabinet
    or
  • Transponder/Sensor LMB-emergency operation on rear of crane cab

  or
– **D** Set up key

The activated function contains the following:
– Allowing crane movements in emergency situations without monitoring by the LICCON overload protection

Note
▶ Installation location of operating elements, see Chapter 4.01

LWE/ab Muli 010/24201-02-02/en

copyright © Liebherr-Werk Ehingen GmbH 2016

1.3 Operating status of crane

A **„normal operating status“** can only be reached if all of the following statements apply:
- The crane is in proper condition.
- The crane is set up according to the specifications in the Operating instructions.
- The set up configuration of the crane has been entered correctly into the LICCON computer system.
- The crane is in the range of a valid load chart.
- The crane utilization is in the range of 0 % to 100 %.
- The F-load display is in the permissible range.
- All required displays in the LICCON monitors provide the correct display values.
- All required display instruments are functioning.
- The local conditions meet the specifications for crane application.

„**No normal operating status**“ is, among others, if one or more of the following statements apply:
- The crane has defects, which compromise the operational safety.
- The crane is not set up according to the specifications in the Operating instructions.
- The set up status of the crane deviates from the entries in the LICCON computer system.
- The limit values from the load charts are exceeded.
- The maximum permissible load moment is exceeded.
- The hoist top shut off is bypassed.
- The limit values from the F-load display are exceeded.
- Required displays in the LICCON monitors provide no correct display values.
- Required display instruments are not functioning.
- The functionality of the LICCON overload protection has been accessed by pressing the key **F4**, set up key **D**.
- When the LMB emergency operation is activated.
- Crane movements are carried out without functioning overload protection.
- Crane movements are carried out outside of the load charts.
- A special case at operation of the LICCON overload protection has occurred.

LWE/ab Muli 010/24201-02-02/en

copyright © Liebherr-Werk Ehingen GmbH 2016

Empty page!

LWE/ab Muli 010/24201-02-02/en

copyright © Liebherr-Werk Ehingen GmbH 2016

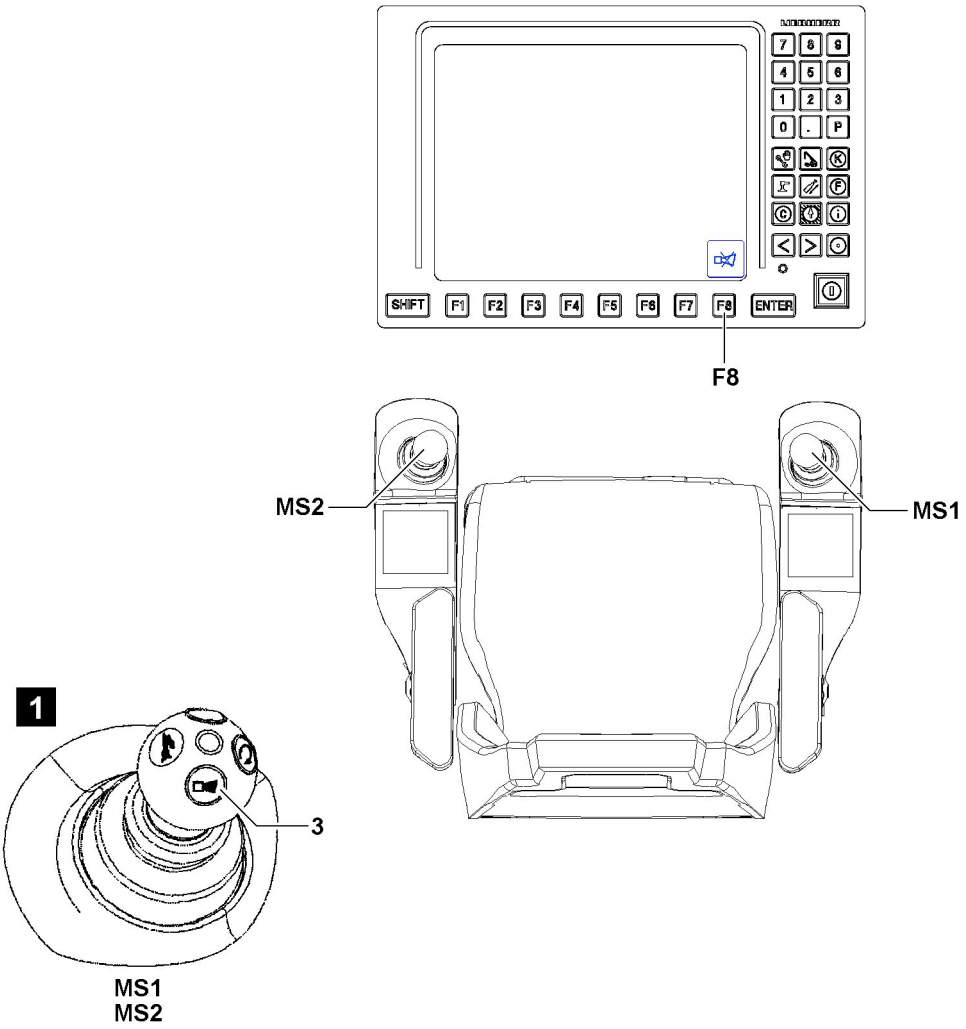

Fig.117246

LWE/ab Muli 010/24201-02-02/en

copyright © Liebherr-Werk Ehingen GmbH 2016

1.4 Overview of acoustic / optical warnings

- Via the signal sounds of the LICCON monitor, the acoustic warnings are issued to the crane operator.
- Via a horn on the turntable, the acoustic warnings are issued to the crane surrounding area.
- Via warning icons in display instruments, the optical warnings are issued to the crane operator.
- Via the LMB-warning lights, optical warnings are issued to the area surrounding the crane.
- The acoustic warnings within the crane operator's cab are turned off by pressing the key **F8** on the corresponding LICCON monitor.
- The shut off of the acoustical warnings outside the crane operator's cab is made by pressing the button **3** (signal horn / horn, illustration **1**) on master switch **MS1** or master switch **MS2**.

1.4.1 General notes regarding the acoustic / optical warnings to the crane surrounding area

WARNING
Disregard of acoustic or optical warnings!
If persons in the crane surrounding area are not informed about the meaning of acoustic / optical warnings of the crane, then there is a danger of accidents.
▶ Only persons who have been informed how to proceed correctly according to the acoustic / optical warnings may be in the area surrounding the crane.

In reference to the horn on the turntable, the following applies:
- An intermittent sound is heard: A special case in the operation of the LICCON overload protection has occurred or the overload protection has turned the crane movement off.

In reference to the three color light **9**, (illustration **2**) the following applies:
- The three color light **9** lights up green: The crane is in normal operating status.
- The three color light **9** lights up yellow: The crane is still in normal operating status, an advance warning for upcoming shut off exists.
- The three color light **9** lights up red: The crane movement was turned off by the overload protection.
- The three color light **9** blinks yellow: A special case at operation of the LICCON overload protection has occurred.
- The three color light **9** blinks red: A special case at operation of the LICCON overload protection has occurred.

LWE/ab Muli 010/24201-02-02/en

copyright © Liebherr-Werk Ehingen GmbH 2016

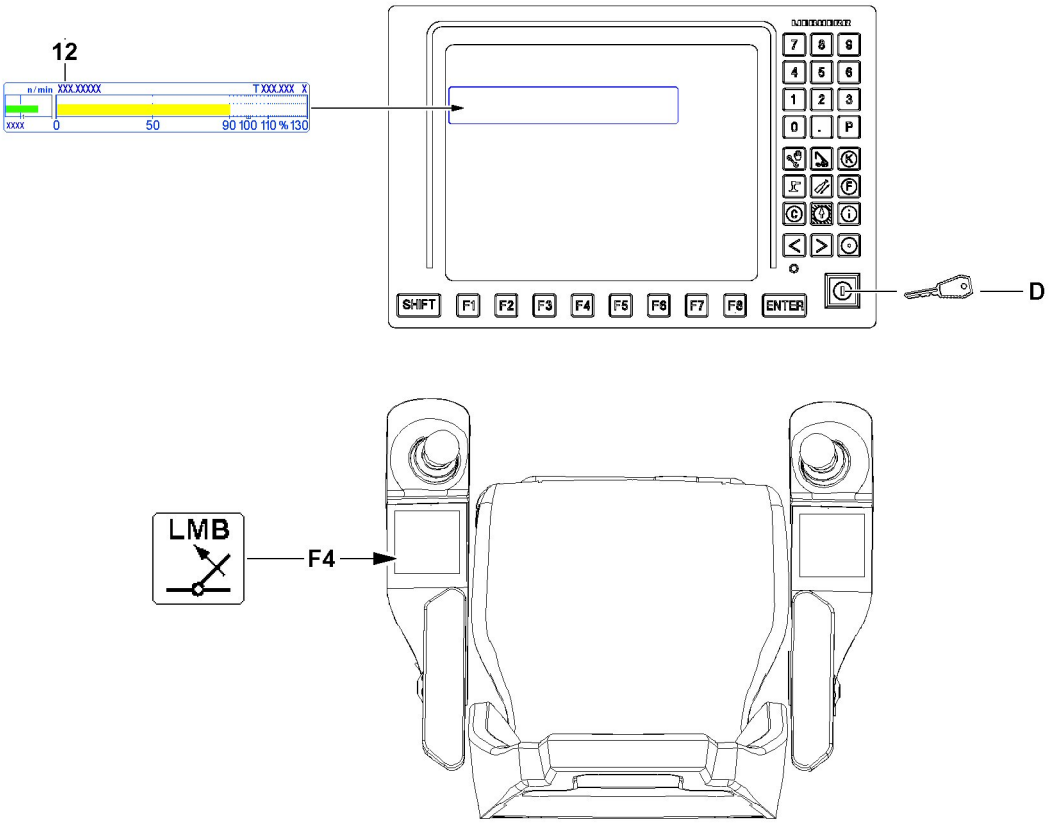

Fig.117247

LWE/ab Muli 010/24201-02-02/en

copyright © Liebherr-Werk Ehingen GmbH 2016

1.4.2 Description of acoustic / visual warnings

The occurrence of acoustic / optical warnings in crane operation is explained via sample situations. The situation numbers from the chart „Overview of possible situations“ is valid for the following charts in this chapter:

- Acoustic / visual warnings on the LICCON monitor
- LMB warning lights
- Horn on the turntable

Note

▶ The percentage values in the „Overview of possible situations“ refers to the crane utilization according to the display in the bar diagram for utilization **12**.

Overview of possible situations	
Situation number	**Sample description of the situation**
Situation 001	Normal operating status with crane utilization of 0 % to 100 %.
Situation 003	The crane movement was turned off due to a crane utilization above 100 % - LMB-STOP was triggered.
Situation 004	The crane movement was turned off even though the crane utilization is below 100 % - LMB-STOP was triggered.
Situation 005	The crane movement „luffing in with suspended load“ is carried out at a crane utilization above 100 % via the **F4** key.
Situation 006	Failure of components
Situation 010	The shut off limits of the LICCON overload protection are deactivated / exceeded with the set up key **D**.
Situation 011	An actuated hoist limit switch (hoist top shut off) is bypassed with the set up key **D**.
Situation 020	The assembly operation was activated with the set up key **D** to erect / take down the boom system. No load chart is available.

LWE/ab Muli 010/24201-02-02/en

copyright © Liebherr-Werk Ehingen GmbH 2016

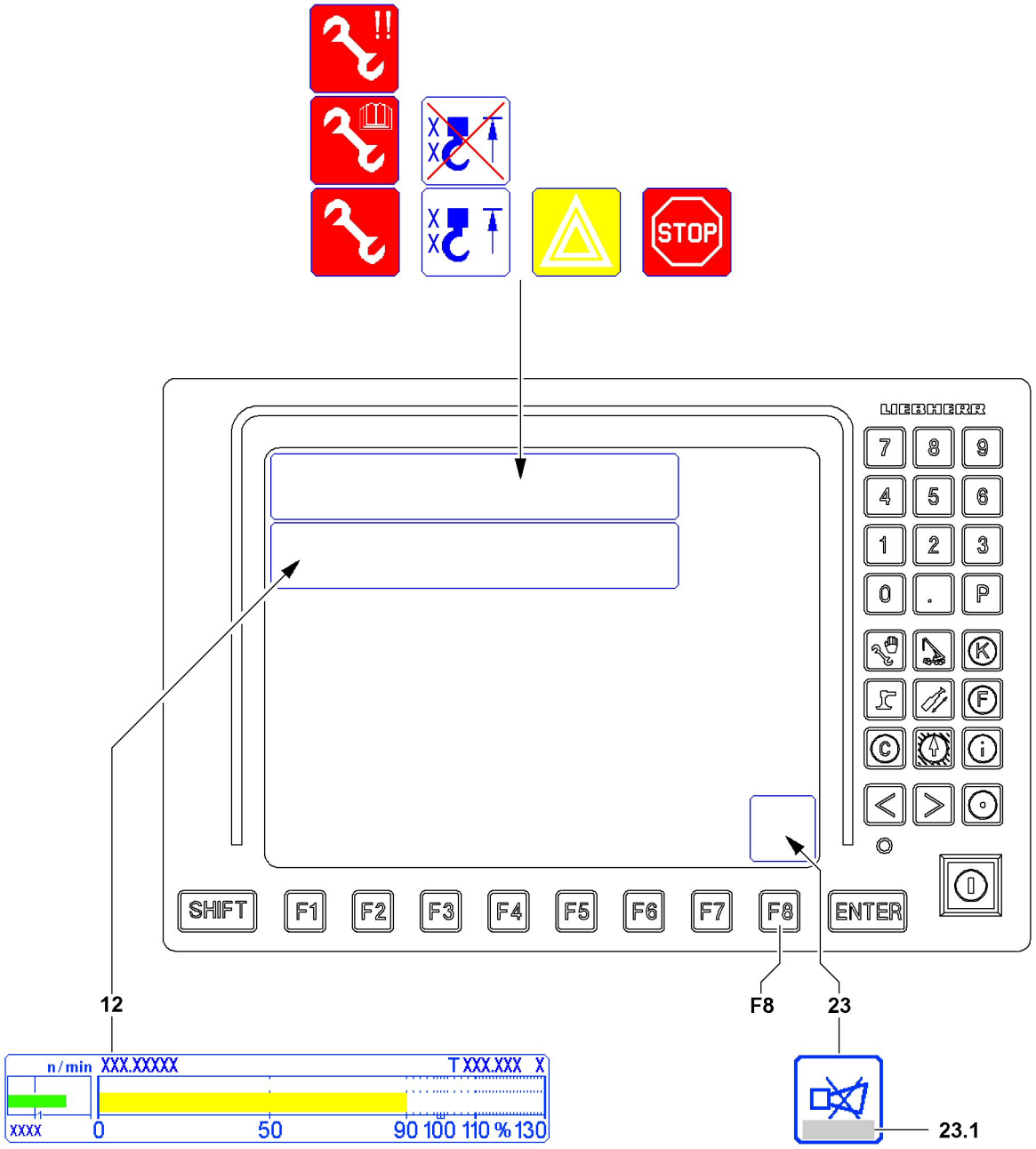

LWE/ab Muli 010/24201-02-02/en

Fig.117248

copyright © Liebherr-Werk Ehingen GmbH 2016

1.4.3 Acoustic / visual warnings within the crane operator's cab

Note

- For description of the situations assigned to the situation numbers, see chart „Overview of possible situations“
- The percentage values refer to the crane utilization according to the display in the bar diagram for utilization **12**.

WARNING

Erroneous operation of the crane!

- In relation with acoustic / optical warnings in the horn **23** icon, pay attention to the notes regarding error messages **23.1**.

Acoustic / visual warnings on the LICCON monitor							
Situation number	**Acoustic warning**		**Visual warning LICCON monitor**				
	Horn short[2]	**Horn long**[2]	**Warning signs**		**Special signs**		
Situation 001	From 90 %	-	From 90 %	-	-	-	-
Situation 003	From 90 %	From 101 %	From 90 %	From 101 %	-	-	-
Situation 004	-	Always	-	Always	-	-	-
Situation 005	-	From 101 %	From 101 %	From 101 %			
Situation 006				Always		Always[3]	
Situation 010	From 90 %	From 101 %	From 90 %	From 101 %	Always	-	-
Situation 011[1]	-	Always	-	-	-	-	Always
Situation 020	-	Always	-	-	-	Always	-

1) Is in part superseded by other warnings

2) Can be turned off immediately on the LICCON monitor key **F8**

3) Depending on the crane configuration, a similar icon appears, in which two exclamation marks (upper right) appear, see also chapter 4.02

copyright © Liebherr-Werk Ehingen GmbH 2016

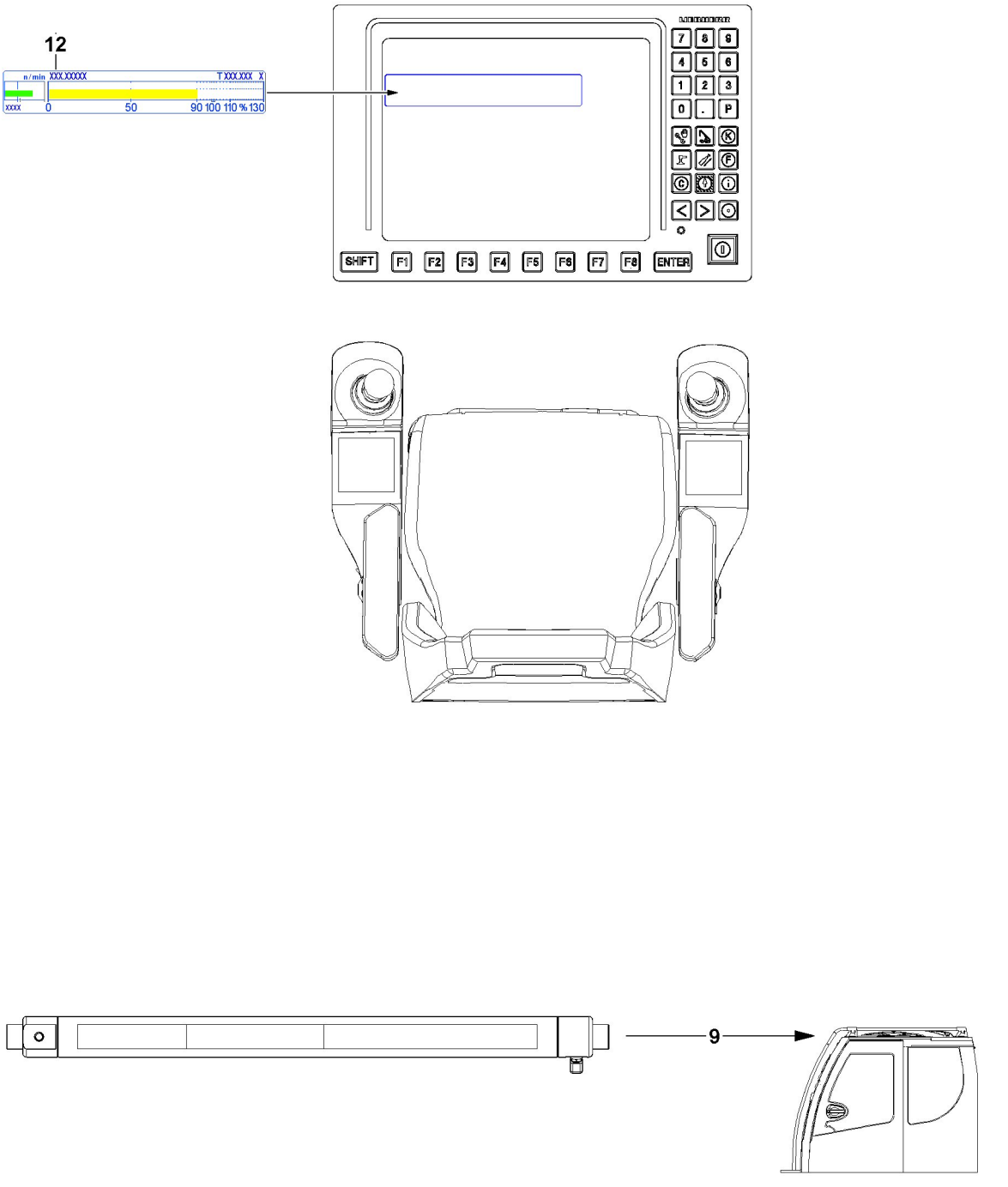

Fig.117249

LWE/ab Muli 010/24201-02-02/en

copyright © Liebherr-Werk Ehingen GmbH 2016

1.4.4 Acoustic / visual warnings outside the crane operator's cab

Note

- For description of the situations assigned to the situation numbers, see chart „Overview of possible situations“
- The percentage values refer to the crane utilization according to the display in the bar diagram for utilization **12**.

LMB warning lights				
Situation number	**At utilization of crane**	Three color light **9**		
		Green	**Yellow**	**Red**
Situation 001	0 % to 89 %	Lights up		
	90 % to 100 %		Lights up	
Situation 003	From 101 %			Lights up
Situation 004	Always			Lights up
Situation 005	From 101 %			Blinks
Situation 006	Always			Blinks
Situation 010[4)]	0 % to 89 %	Lights up		
	90 % to 100 %		Lights up	
	101 % to 110 %		Blinks	
	From 111 %			Lights up
Situation 010	0 % to 89 %	Lights up		
	90 % to 100 %		Lights up	
	From 101 %			Blinks
Situation 011[1)]	Always		Blinks	
Situation 020	No display value		Blinks	

1) Is in part superseded by other warnings

4) Cranes according to EN13000:2010

copyright © Liebherr-Werk Ehingen GmbH 2016

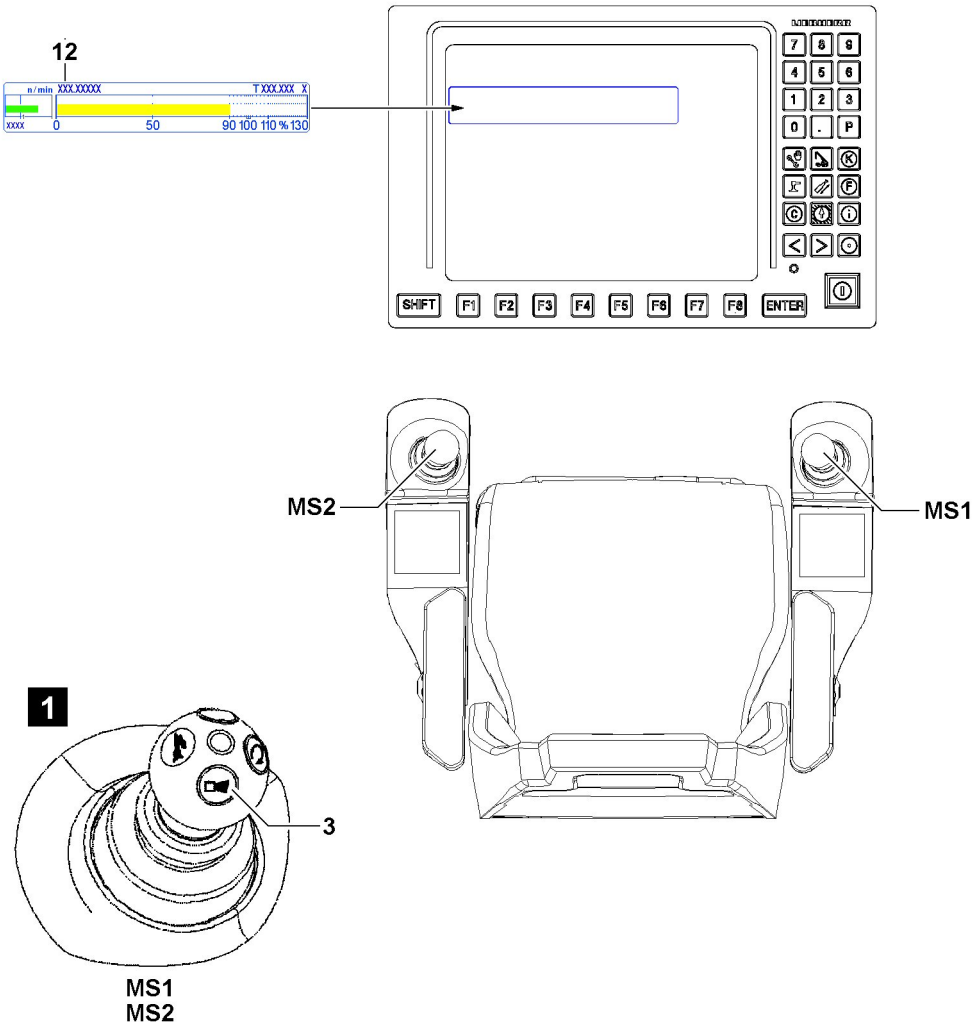

Fig.117250

LWE/ab Muli 010/24201-02-02/en

copyright © Liebherr-Werk Ehingen GmbH 2016

Note

- For description of the situations assigned to the situation numbers, see chart „Overview of possible situations“
- The percentage values refer to the crane utilization according to the display in the bar diagram for utilization **12**.

The shut off of the acoustical warnings outside the crane operator's cab is made by pressing the button **3** (signal horn / horn, illustration **1**) on master switch **MS1** or master switch **MS2**. The signal shut off is effective no earlier than after five seconds.

Signal turntable		
Situation number	**At utilization of crane**	**Signal type**
Situation 001	0 % to 89 %	-
Situation 002	90 % to 100 %	-
Situation 003	From 101 %	Intermittent sound, can be shut off after five seconds
Situation 004	Always	-
Situation 005	From 101 %	Intermittent sound, can be shut off after five seconds
Situation 006	Always	Intermittent sound
Situation 010	From 111 %	Intermittent sound, can be shut off after five seconds
Situation 011[1)]	Always	Intermittent sound, can be shut off after five seconds
Situation 020	No display value	-

1) Is in part superseded by other warnings

LWE/ab Muli 010/24201-02-02/en

copyright © Liebherr-Werk Ehingen GmbH 2016

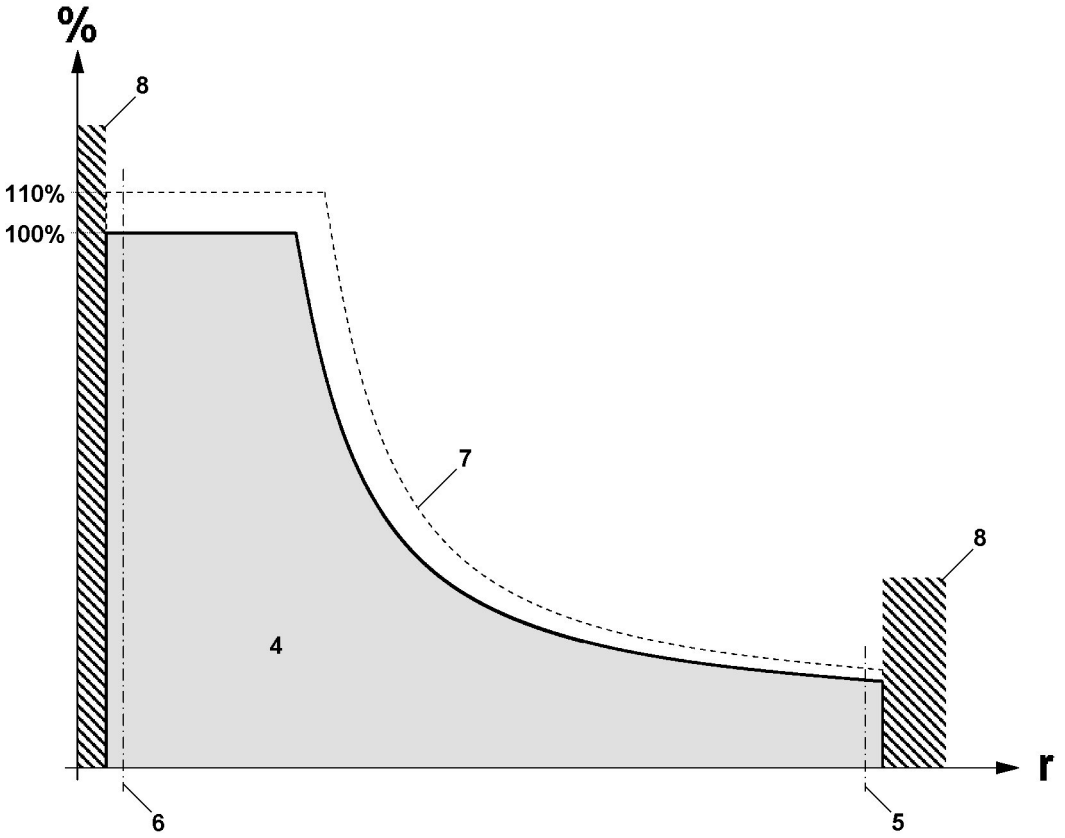

LWE/ab Muli 010/24201-02-02/en

Fig.115265

copyright © Liebherr-Werk Ehingen GmbH 2016

2 Instructions to resume the crane movement

WARNING
Danger of accident!
If the following points are not observed, personnel can be severely injured or killed.
▶ The crane operator bears the sole and full responsibility for the adherence to measures to be taken in case of shut off of crane movement.

2.1 Overview Load chart

Sample overview of a load chart.

Axle	Description
r	Radius boom (working radius)
%	Utilization of the crane in percentages

Position	Description
4	Range „Load chart available“
5	Lower limit angle load chart
6	Upper limit angle load chart
7	Curve utilization 110 %
8	Range „No load chart available“

2.2 Shut off of crane movement

The LICCON overload protection carries out the following shut offs if a limit value is exceeded in crane operation:
- Shut off of overload
- Shut off Luffing the telescopic boom up / down
- Shut off Luffing the auxiliary boom / accessory up / down
- Shut off Telescoping the telescopic boom out (limit length)
- Shut off Telescoping the telescopic boom in
- Shut off Spooling the winch up / out
- Shut off Hoist top
- Shut off Crane movement with danger of tipping to the rear
- Shut off Maximum value F-load display
- Shut off Telescoping cylinder (pressure too high)
- Shut off due to error message

LWE/ab Muli 010/24201-02-02/en

copyright © Liebherr-Werk Ehingen GmbH 2016

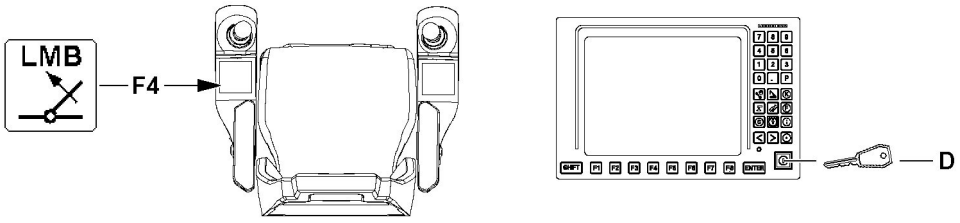

Fig.117251

WARNING
Erroneous operation of the crane!
If the LICCON overload protection turns the crane movement off, then the exact cause for the shut off must be determined first.

- ▶ Determine the cause for the shut off and remedy it if possible without pressing the key **F4** „Luffing in with suspended load“ or the set up key **D**.
- ▶ If it is not possible to reset the crane movement causing the shut off, see section „Procedure for special cases at operation of the LICCON overload protection“.

2.2.1 Shut off of overload

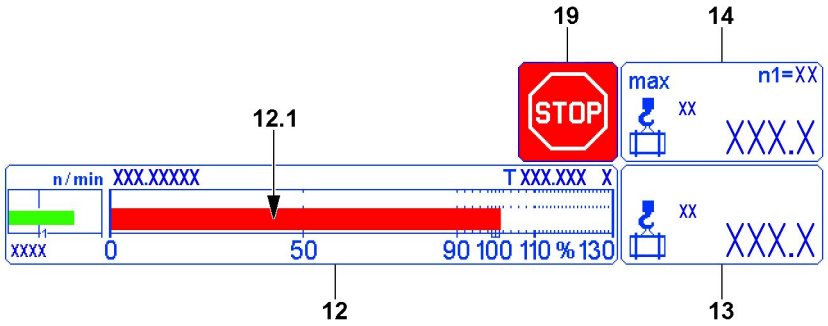

Fig.117252

In the bar diagram utilization **12** the utilization bar **12.1** exceeds the 100 % mark. The LICCON overload protection has turned off the crane movement, icon LMB-STOP **19** appears. The actual load **13** has exceeded the maximum load **14**.

Note
The crane and load may be swaying.

If possible:

- ▶ Wait until the crane and load came to a complete standstill.

When the bar diagram utilization **12** levels off at less or equal 100 %:

- ▶ Carry out crane movements in such a way that no repeated shut off by the LICCON overload protection occurs.

When the bar diagram utilization **12** levels off at more than 100 %:

- ▶ Check if there are permissible tasks, which positively influence the utilization of the crane.

When necessary and possible:

- ▶ Set down the load.

Note
It is possible that the following tasks can positively influence the utilization of the crane:

- ▶ Set down the load and reduce.
- ▶ Reduce the radius.
- ▶ Set down the load and reconfigure the crane to obtain higher load chart values.
- ▶ Set down the load and reduce the radius by changing the crane.

LWE/ab Muli 010/24201-02-02/en

copyright © Liebherr-Werk Ehingen GmbH 2016

▶ Carry out permissible tasks which reduce the utilization of the crane.

Problem remedy

The crane operation is limited because the maximum load **14** is seemingly too low or reached too soon?

▶ Make sure that the load capacity of the crane is sufficient for the upcoming crane application.
▶ Make sure that a valid set up status has been entered on the LICCON computer system.
▶ Make sure that the crane is assembled according to the specifications in the Operating instructions.
▶ Make sure that the actual set up status and the entered set up status of the crane match.
▶ Make sure that all attachment parts and guy rods on the boom system, which are not needed, have been removed (weight).
▶ Make sure that the boom system is free of snow and ice (weight).
▶ Make sure that the environmental influences (for example wind influence) onto the crane are not too great.
▶ Contact Liebherr Service.

When the shut off cannot be remedied despite noting all points listed here:

▶ Change to section „Procedure for special cases at operation of the LICCON overload protection“.

2.2.2 Shut off Luffing the telescopic boom up / down

Note

▶ The illustration of icon **15** depends on the set up status of the crane.

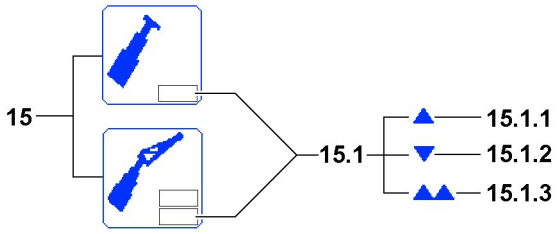

Fig.117253

In the icon **15** the arrow **15.1.1** or arrow **15.1.2** blink and the LICCON overload protection has shut off the crane movement.

„Luffing the telescopic boom up“ (arrow **15.1.1**) or „Luffing the telescopic boom down“ (arrow **15.1.2**) was shut off because the upper / lower limit angle of the selected load chart was exceeded or fallen below.

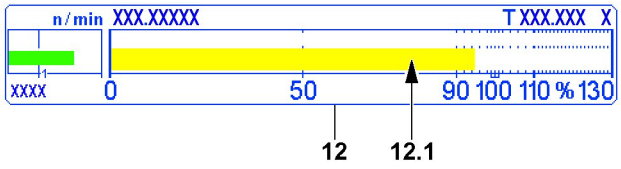

Fig.117254

Note

▶ If the utilization of the crane approaches 100 % (in the bar diagram utilization **12** the utilization bar **12.1** is just before 100 %) and the maximum load according to the load chart (falling load capacity) drops by continuing to luff up the boom, then the arrow **15.1.1** also appears and the crane movement „Luffing the telescopic boom up“ is turned off.

If the double arrow **15.1.3** appears, then:

– **either** it was luffed up to a limit switch or the limit switch has turned off the crane movement „Luffing the telescopic boom up“
– **or** there is an error on one of the limit switches „Telescopic boom top“

copyright © Liebherr-Werk Ehingen GmbH 2016

The arrow **15.1.1** appears and the crane movement „luffing the telescopic boom up“ was turned off:

▶ Luff the telescopic boom down.

Result:

– Crane operation is possible again.

The arrow **15.1.2** appears and the crane movement „luffing the telescopic boom down“ was turned off:

▶ Luff the telescopic boom up.

Result:

– Crane operation is possible again.

The double arrow **15.1.3** appears and the crane movement „Luffing the telescopic boom up“ was turned off:

▶ Luff the telescopic boom down.

Result:

– Crane operation is possible again.

Problem remedy
The double arrow **15.1.3** appears continuously?
If a double arrow **15.1.3** appears without having luffed the telescopic boom up to a limit switch, then there may be an error in the limit switches / sensors.
▶ Check if there is an error message from the LICCON computer system, see section „Shut off due to error message“.
▶ If yes: Remedy the error immediately.

WARNING
Limited warning functions!
If one of the double version limit switches / sensors is not ok and the crane is continued to be operated, then the warning functions of the LICCON overload protection are limited.
▶ The crane can only be operated in an emergency after failure of a double version limit switch.

▶ Carry out crane movements in such a way that no repeated shut off by the LICCON overload protection occurs.

2.2.3 Shut off luffing the auxiliary boom / accessory up / down

Note
▶ Only in operating modes with auxiliary boom / accessory
▶ The illustration of icon **15** depends on the set up status of the crane.
▶ The description „auxiliary boom / accessory“ comprises all boom types which are installed on the telescopic boom luffable / adjustable.

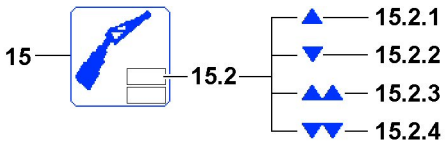

Fig.117255

In the icon **15** (upper field) the arrow **15.2.1** or arrow **15.2.2** blink and the LICCON overload protection has shut off the crane movement.

„Luffing the auxiliary boom / accessory up“ (arrow **15.2.1**) or „Luffing the auxiliary boom / accessory down“ (arrow **15.2.2**) was shut off because the upper / lower limit angle of the selected load chart was exceeded / fallen below.

LWE/ab Muli 010/24201-02-02/en

copyright © Liebherr-Werk Ehingen GmbH 2016

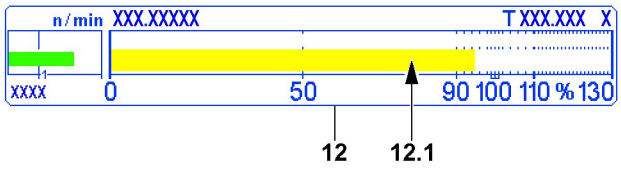

Fig.117254

Note

▶ If the utilization of the crane approaches 100 % (in the bar diagram utilization **12** the utilization bar **12.1** is just before 100 %) and the maximum load according to the load chart (falling load capacity) drops by continuing to luff up the boom, then the arrow **15.2.1** also appears and the crane movement „Luffing the auxiliary boom / accessories up“ is turned off.

If the double arrow **15.2.3** appears, then:
- **either** it was luffed up to a limit switch or the limit switch has turned off the crane movement „Luffing the auxiliary boom / accessory up“
- **or** the mechanical relapse support has turned off the crane movement „Luffing the auxiliary boom / accessory up“
- **or** there is an error on one of the limit switches „Auxiliary boom / accessory top“.

If the double arrow **15.2.4** appears, then:
- **either** it was luffed down to a limit switch „Auxiliary boom / accessory bottom“ and the limit switch has turned off the crane movement „Luffing the auxiliary boom / accessory up“
- **or** there is an error on one of the limit switches „Auxiliary boom / accessory bottom“

The arrow **15.2.1** appears and the crane movement „Luffing the auxiliary boom / accessory up“ was turned off:

▶ Luff the auxiliary boom / accessory down.

Result:

- Crane operation is possible again.

The arrow **15.2.2** appears and the crane movement „Luffing the auxiliary boom / accessory down“ was turned off:

▶ Luff the auxiliary boom / accessory up.

Result:

- Crane operation is possible again.

The double arrow **15.2.3** appears and the crane movement „Luffing the auxiliary boom / accessory up“ was turned off:

▶ Luff the auxiliary boom / accessory down.

Result:

- Crane operation is possible again.

Problem remedy

The double arrow **15.2.3** appears continuously?
If a double arrow **15.2.3** appears without having luffed up to a limit switch, then there may be an error in the limit switches „Auxiliary boom / accessory top“.

▶ Check if there is an error message from the LICCON computer system, see section „Shut off due to error message“.
▶ If yes: Remedy the error immediately.

The double arrow **15.2.4** appears and the crane movement „Luffing the auxiliary boom / accessory down“ was turned off:

▶ Luff the auxiliary boom / accessory up.

copyright © Liebherr-Werk Ehingen GmbH 2016

Result:

– Crane operation is possible again.

Problem remedy
The double arrow **15.2.4** appears continuously?
If a double arrow **15.2.4** appears without having luffed down to a limit switch, then there may be an error in the limit switches / sensors.
▶ Check if there is an error message from the LICCON computer system, see Diagnostics manual.
▶ If yes: Remedy the error immediately.

WARNING
Limited warning functions!
If one of the double version limit switches / sensors is not ok and the crane is continued to be operated, then the warning functions of the LICCON overload protection are limited.
▶ The crane can only be operated in an emergency after failure of a double version limit switch / sensor.

▶ Carry out crane movements in such a way that no repeated shut off by the LICCON overload protection occurs.

2.2.4 Shut off Telescoping the telescopic boom out (limit length)

Fig.117258

In the „Horn“ icon, illustration **1** appears an error message. An acoustical signal sounds, the LICCON overload protection has interrupted the crane movement „Telescoping the telescopic boom out“. Depending on the crane type, the double arrow in the icon **16** will also blink.

The crane movement „Telescoping the telescopic boom out“ was shut off because the **limit length** of the selected load chart has been exceeded.

▶ Telescope the telescopic boom in.

Result:

– Crane operation is possible again.

2.2.5 Shut off Telescoping the telescopic boom in

Fig.117258

In the „Horn“ icon, illustration **1** appears an error message. An acoustical signal sounds, the LICCON overload protection has interrupted the crane movement „Telescoping the telescopic boom in“. Depending on the crane type, the double arrow in the icon **16** will also blink.

The crane movement „Telescoping the telescopic boom in“ was shut off because the **limit length** of the selected load chart has been fallen below.

▶ Telescope the telescopic boom out.

LWE/ab Muli 010/24201-02-02/en

copyright © Liebherr-Werk Ehingen GmbH 2016

Result:

– Crane operation is possible again.

2.2.6 Shut off spooling the winch up / out

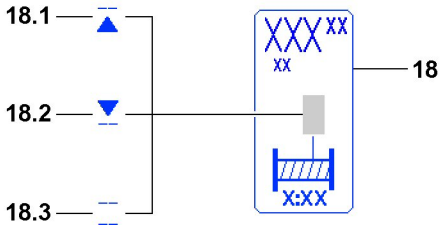

Fig.117256

In the icon **18**, the line / arrow **18.1**, arrow / line **18.2** or line / line **18.3** appears and the LICCON overload protection has shut off the crane movement.

„Spooling the winch out“ (line / arrow **18.1**) or „Spooling the winch up“ (arrow / line **18.2**) was shut off because the upper / lower limit angle of the rope for the selected winch was exceeded or fallen below.

If line / line **18.3** appears blinking in the icon **18**, then the affected winch is deactivated.

The line / arrow **18.1** appears and the crane movement „Spooling the winch out“ was turned off:

▶ Spool the winch up.

Result:

– Crane operation is possible again.

The arrow / line **18.2** appears and the crane movement „Spooling the winch up“ was turned off:

▶ Spool the winch out.

Result:

– Crane operation is possible again.

The line / line **18.3** appear and the winch is deactivated:

▶ Activate the winch, see chapter 4.02.

Result:

– Crane operation is possible again.

2.2.7 Shut off hoist top

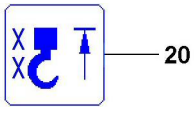

Fig.115281

The icon „hoist top“ **20** appears in the LICCON monitor and the LICCON overload protection has turned off crane movement.

Spooling the hoist winch up was turned off because the hook (hook block / load hook) has touched a hoist limit weight during the upward movement and the affected hoist limit switch was triggered.

WARNING
Property damage / falling load!
▶ After shut off spool hoist winch up (hoist top), for every further crane movement, the distance between the hook (hook block / load hook) and the boom head must be checked.

copyright © Liebherr-Werk Ehingen GmbH 2016

Note

▶ After a hoist top shut off occurred, further crane movements, which affect the length of the hoist rope are also shut off.

▶ Spool the hoist winch out.

Result:

– Crane operation is possible again.

2.2.8 Shut off Crane movement with danger of tipping to the rear

Note

▶ Applies only for cranes with support force monitoring*.

WARNING

Danger of tipping backward!
When reaching the programmed minimum / maximum support force limits there is **no** automatic shut off of crane movements.
Exception: When the two supports with the lowest forces are in boom direction, then some crane movements which increase the „danger of tipping to the rear“ significantly are turned off.

▶ If there is a „danger of tipping to the rear“, luff the boom down carefully or telescope out until the support limit forces are again within the minimum / maximum values.

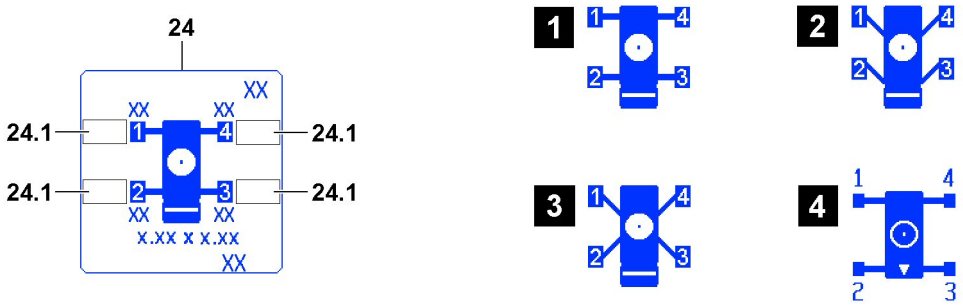

Fig.117257

The icon **24** (depending on the crane similarly to illustration **1** to illustration **4**) is shown in the LICCON monitor with blinking values in the fields **24.1** of the supports with the lowest forces. An acoustical signal sounds and the LICCON overload protection has shut off the crane movement.

Crane movements which increase the „danger of tipping to the rear“ significantly were turned off.

▶ Luff the boom down carefully until the support limit forces are again within the minimum / maximum values and no value in the fields **24.1** blinks any longer.

Result:

– Crane operation is possible again.

Note

Possibilities to counteract the tipping danger to the rear:

▶ Luff down the boom.
▶ Telescope the boom out.
▶ Reduce the counterweight.

2.2.9 Shut off Maximum value F-load display

Note

▶ Applies only for certain crane types with respective display in the second LICCON monitor.

LWE/ab Muli 010/24201-02-02/en

copyright © Liebherr-Werk Ehingen GmbH 2016

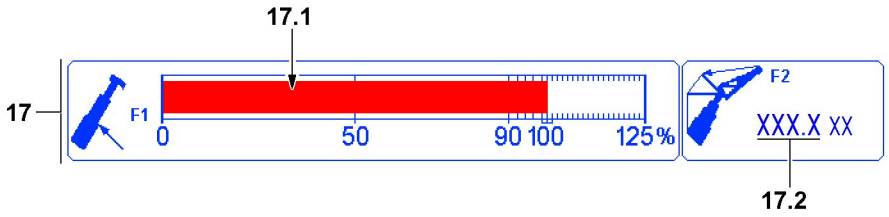

Fig.117259

- F1-utilization bar **17.1** = Test point F1 (Pressure display luffing cylinder)
- F2-actual value **17.2** = Test point F2 (force of guying auxiliary boom / accessories)
  Note: Appears only for a corresponding boom system

In the F-load display **17** the F1-utilization bar **17.1** exceeds the 100 % mark and the LICCON overload protection has shut off the crane movement. $F1_{actual}$ has exceeded $F1_{max}$.

All subsequent movements, which lead to a deterioration of the force ratios on the test point F1 are shut off.

▶ Reverse any crane movement which has caused the shut off.
or
Initiate an alternative crane movement, which improves the force ration on test point F1.

Result:

- Crane operation is possible again.

▶ Carry out crane movements in such a way that no repeated shut off by the LICCON overload protection occurs.

Problem remedy
The crane operation is limited because the $F1_{max}$ apparently is being reached too early?
▶ Make sure that a valid set up status has been entered on the LICCON computer system.
▶ Make sure that the crane is assembled according to the specifications in the Operating instructions.
▶ Make sure that the actual set up status and the entered set up status of the crane match.
▶ Make sure that all attachment parts and guy rods on the boom system, which are not needed, have been removed (weight).
▶ Make sure that the boom system is free of snow and ice (weight).
▶ Make sure that the wind influence onto the boom is not too great.

If no irregularities can be found:
▶ Contact Liebherr Service.

When the shut off cannot be remedied despite noting all points listed here:
▶ Change to section „Procedure for special cases at operation of the LICCON overload protection“.

2.2.10 Shut off Telescoping cylinder (pressure too high)

Note
▶ Applies only for certain crane types with respective display in the second LICCON monitor.

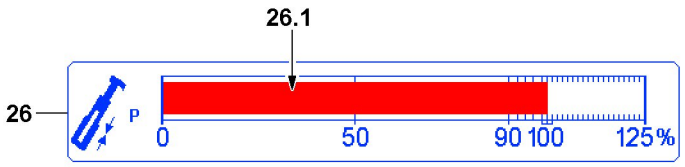

Fig.117260

In the icon **26** (telescoping cylinder pressure) the utilization bar **26.1** reaches the 100 % mark and the LICCON overload protection has shut off the crane movement.

copyright © Liebherr-Werk Ehingen GmbH 2016

All further movements, which directly lead to an increase of the telescoping cylinder pressure are shut off.

▶ Lower the telescoping cylinder pressure by lowering the load.
or
Initiate an alternative crane movement, which lowers the telescoping cylinder pressure.

Result:

– Crane operation is possible again.

In assembly operation:

Make sure that the specifications in the erection / take down charts are observed.

▶ Check that the specifications are observed.

2.2.11 Shut off due to error message

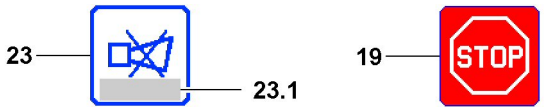

Fig.115283

In the icon **23** appears an error message, the icon **19** appears in the LICCON monitor and the LICCON overload protection has turned off crane movement.

▶ Determine the existing error with the help of the error message from the error field **23.1** in icon **23**, see Diagnostics manual.
▶ Remedy the error.

If the error cannot be remedied:
▶ Contact Liebherr Service.

Problem remedy
The erection of the crane, for example after assembly on a new job site or with another equipment configuration, is not possible due to an error message?
▶ Evaluate the error message.
▶ Make sure that all electrical connections are established correctly.
▶ Check if all sensors are connected properly.
▶ Check if all end plugs (dust caps with integrated electric) have been connected properly.

Note
If there is a defect on a participating sensor (LMB), then the crane can no longer be operated in normal operating status.
▶ Fix / replace the sensor, contact Liebherr Service if necessary.

LWE/ab Muli 010/24201-02-02/en

copyright © Liebherr-Werk Ehingen GmbH 2016

Empty page!

LWE/ab Muli 010/24201-02-02/en

copyright © Liebherr-Werk Ehingen GmbH 2016

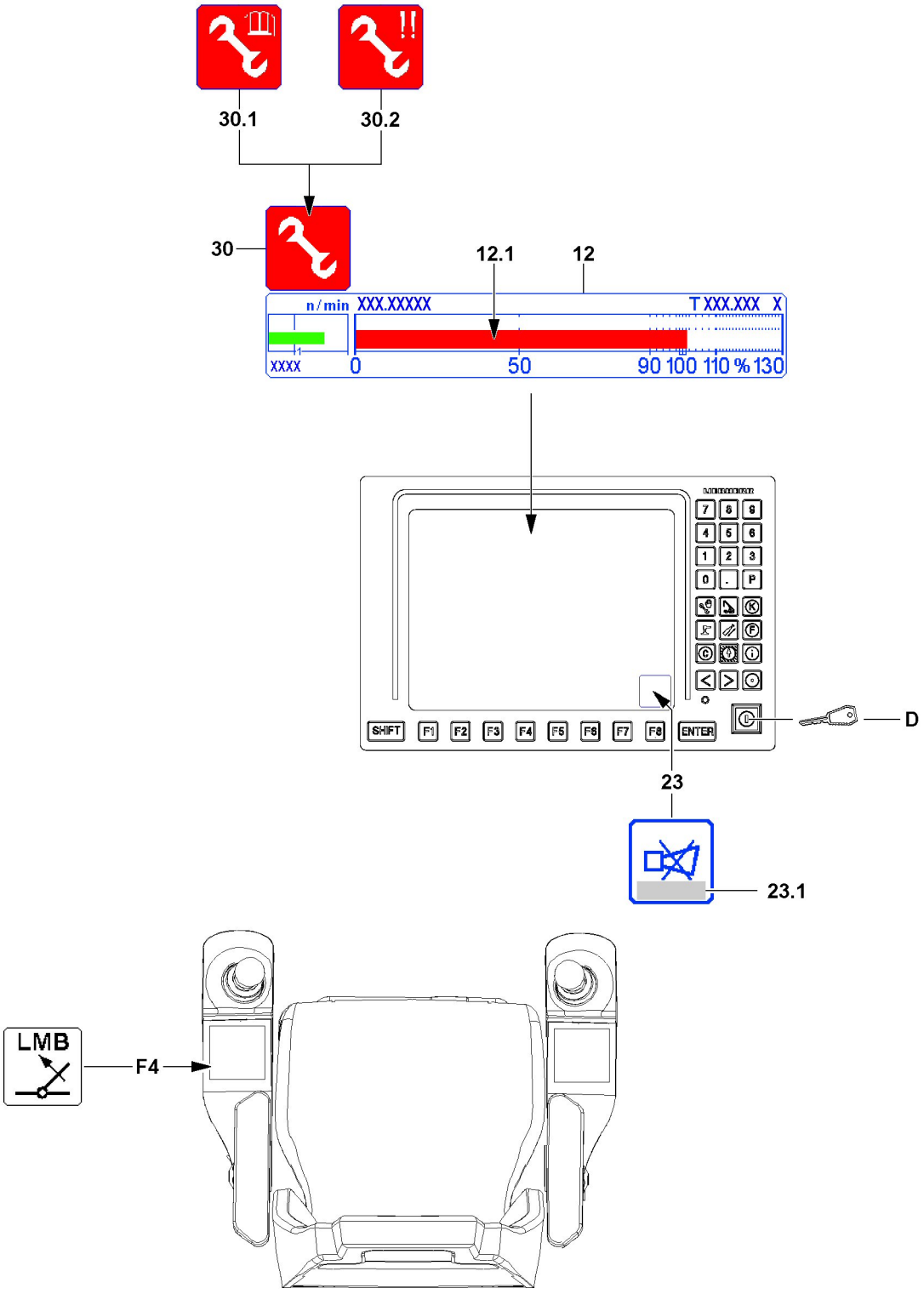

Fig.117261

LWE/ab Muli 010/24201-02-02/en

copyright © Liebherr-Werk Ehingen GmbH 2016

2.3 Procedure for special cases at operation of the LICCON overload protection

Within the crane operator's cab, the following operating elements available for Special cases at operation of the LICCON overload protection:
- Button **F4** in the left control console.
- Set up key **D** on the right LICCON monitor

By pressing key **F4** and set up key **D** the functionality of the LICCON overload protection is accessed.
If the set up key **D** is actuated, the assembly icon **30** appears in the LICCON monitor 0.

The assembly icon **30** appears, depending on the situation, also as:
- assembly icon **30.1** - no load chart / assembly status / sensor defect
- assembly icon **30.2** - emergency operation (also with only one exclamation mark)

In the horn icon **23** also appear error messages **23.1**:
- Observe and evaluate error messages **23.1**, see also Diagnostics manual.

WARNING
Risk of overloading and toppling of the crane!
If the functionality of the LICCON overload protection is accessed without knowing the exact cause for the shut off, then the crane can be overloaded and topple over.
Personnel can be severely injured or killed.
- ▶ Before accessing the functionality of the LICCON overload protection, determine the exact cause for the shut off.
- ▶ Observe and evaluate error messages **23.1**.

WARNING
Access into the functionality of the LICCON overload protection!
When accessing the functionality of the LICCON overload protection, the LICCON overload protection is deactivated totally or limited.
It is possible to exceed several shut off limits of the LICCON overload protection simultaneously or one after the other.
It is possible to carry out crane movements, which are not monitored by the LICCON overload protection.
Without the LICCON overload protection, no additional protection against overload of the crane via the crane control is present.
- ▶ When accessing the functionality of the LICCON overload protection, take into account that the LICCON overload protection is deactivated totally or limited.
- ▶ Carry out any access into the functionality of the LICCON overload protection exclusively according to the specifications in the Operating instructions.
- ▶ Outside of the load charts, the data in the erection / take down charts is binding.

WARNING
Leaving the load chart!
If the set up key **D** is actuated, it is possible that the crane leaves the range of the load charts.
Without a load chart, various display values are no longer displayed in the crane operating screen.
A load on the hook can no longer be monitored by the LICCON overload protection.
Severe accidents due to crane overload can result.
Personnel can be severely injured or killed.
- ▶ Do not leave the range of the load charts.

LWE/ab Muli 010/24201-02-02/en

copyright © Liebherr-Werk Ehingen GmbH 2016

WARNING
Danger of accident due to incorrect procedure!
Due to erroneous operation or deliberate misuse, the crane could collapse, the boom can break off or the crane can topple over.
Key **F4** „Luffing in at suspended load“ and set up key **D** may only be actuated when it is ensured that without their actuation no normal operating status (see section „operating status of the crane“) can be reached.

- ▶ Actuate the set up key **D** only when no normal operating status can be reached with the key **F4** „Luffing in with suspended load“.
- ▶ The set up key **D** may only be actuated by persons who are aware of the effects of their acts regarding the access into the functionality of the LICCON overload protection.
- ▶ Access into the functionality of the LICCON overload protection requires the presence of an authorized person and must be performed with utmost caution.
- ▶ Access into the functionality of the LICCON overload protection is prohibited in normal crane operation.

WARNING
Expanded working / danger zone of the crane!
Due to an access into the functionality of the LICCON overload protection it is possible that the working / danger zone of the crane is significantly expanded.
If these circumstances are not observed, collisions and accidents can occur.
Personnel can be severely injured or killed.

- ▶ During a special case at operation of the LICCON overload protection take an expanded working / danger zone of the crane into account and monitor it.

WARNING
Overload of crane!
Luffing in / pulling in of a load standing on the ground is not permissible.
When taking on a load by luffing the boom up, the crane can be overloaded.
This could result in serious accidents.

- ▶ Taking on load by luffing up the boom is prohibited.
- ▶ Take on a load only with the hoist gear.

WARNING
Self-blockade of overload protection (Deadlock)
After activation of the function „exceeding the shut off limits of the LICCON overload protection“, if no crane movements are initiated, which lead immediately to a normal operating status (see section „operating status of the crane“), then the overload protection can be self-blocking (Deadlock).
At a self-blocked overload protection it is no longer possible to control the crane.

- ▶ After activation of the function „exceeding the shut off limits of the LICCON overload protection“ initiate crane movements which lead immediately to a normal operating status (see section „operating status of the crane“).

Possible limitation in the crane control during certain „Special cases at operation of the LICCON overload protection“:

- During certain „Special cases at operation of the LICCON overload protection“ the shut off limits of the overload protection can be exceeded by pressing the set up key **D** maximum to 110 %.
- During certain „Special cases at operation of the LICCON overload protection“, the working speed of the crane is significantly reduced.
- During certain „Special cases at operation of the LICCON overload protection“, the possibility to control the crane is limited in time.
- During certain „Special cases at operation of the LICCON overload protection“, the individual display instruments show no values.

LWE/ab Muli 010/24201-02-02/en

copyright © Liebherr-Werk Ehingen GmbH 2016

Note
Depending on the number of load positions, the display in the bar diagram utilization **12** changes for certain crane types.

- ▶ If an additional utilization bar appears next to the utilization bar **12.1**, then the description applies accordingly.
- ▶ For a detailed description of the Bar diagram utilization **12**, see chapter 4.02.

LWE/ab Muli 010/24201-02-02/en

copyright © Liebherr-Werk Ehingen GmbH 2016

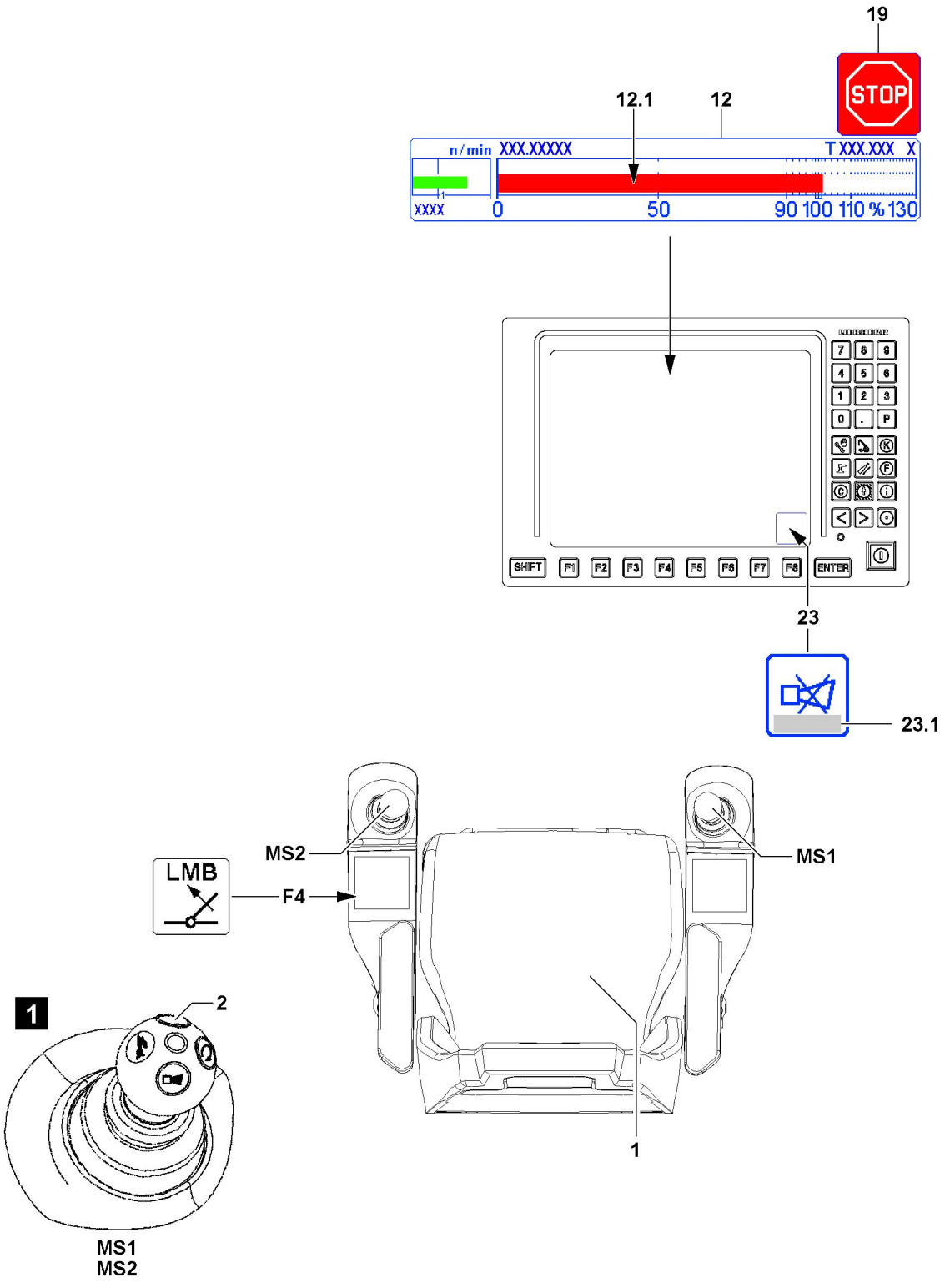

Fig.117262

LWE/ab Muli 010/24201-02-02/en

copyright © Liebherr-Werk Ehingen GmbH 2016

2.3.1 Luffing in with suspended load

If the maximum permissible load torque is exceeded, the LICCON overload protection turns off all crane movements that increase the load torque.

In the bar diagram utilization **12** (load moment display) the utilization bar **12.1** has exceeded the 100 % mark and in the LICCON monitor appears the icon **19**.

This shut off limit can be exceeded by actuating the button **F4** „Luffing in with suspended load“.

Make sure that the following prerequisites are met:
- The load hangs freely.
- The load hook / hook block and boom system have no ground contact.
- Either the seat contact button **1** or one of the buttons **2** (illustration **1**) of the master switches (MS1, MS2) is actuated.

Note
If the load is reduced by luffing up or the values in the bar diagram utilization **12** are exceeded too far, then the key **F4** „Luffing in with suspended load“ is possibly not functioning.
- ▶ Pay attention to notes regarding error messages **23.1** occurring in the horn **23** icon.
- ▶ For the procedure when the button **F4** „Luffing in with suspended load“ is not functioning, see section „Exceedance of maximum permissible load moment“.

▶ Press the key **F4** „Luffing in with suspended load“ and hold it.

Result:

– The LICCON overload protection is inactive.

▶ Luff the load in.

The function „Luffing in with suspended load“ is deactivated:
– When the key **F4** „Luffing in with suspended load“ is not longer actuated.
– When neither the seat contact button **1** nor one of the buttons **2** of the master switches (MS1, MS2) is actuated.

The function „Luffing in with suspended load“ is deactivated:
– The LICCON overload protection is active.

▶ Carry out crane movements in such a way that no repeated shut off by the LICCON overload protection occurs.

LWE/ab Muli 010/24201-02-02/en

copyright © Liebherr-Werk Ehingen GmbH 2016

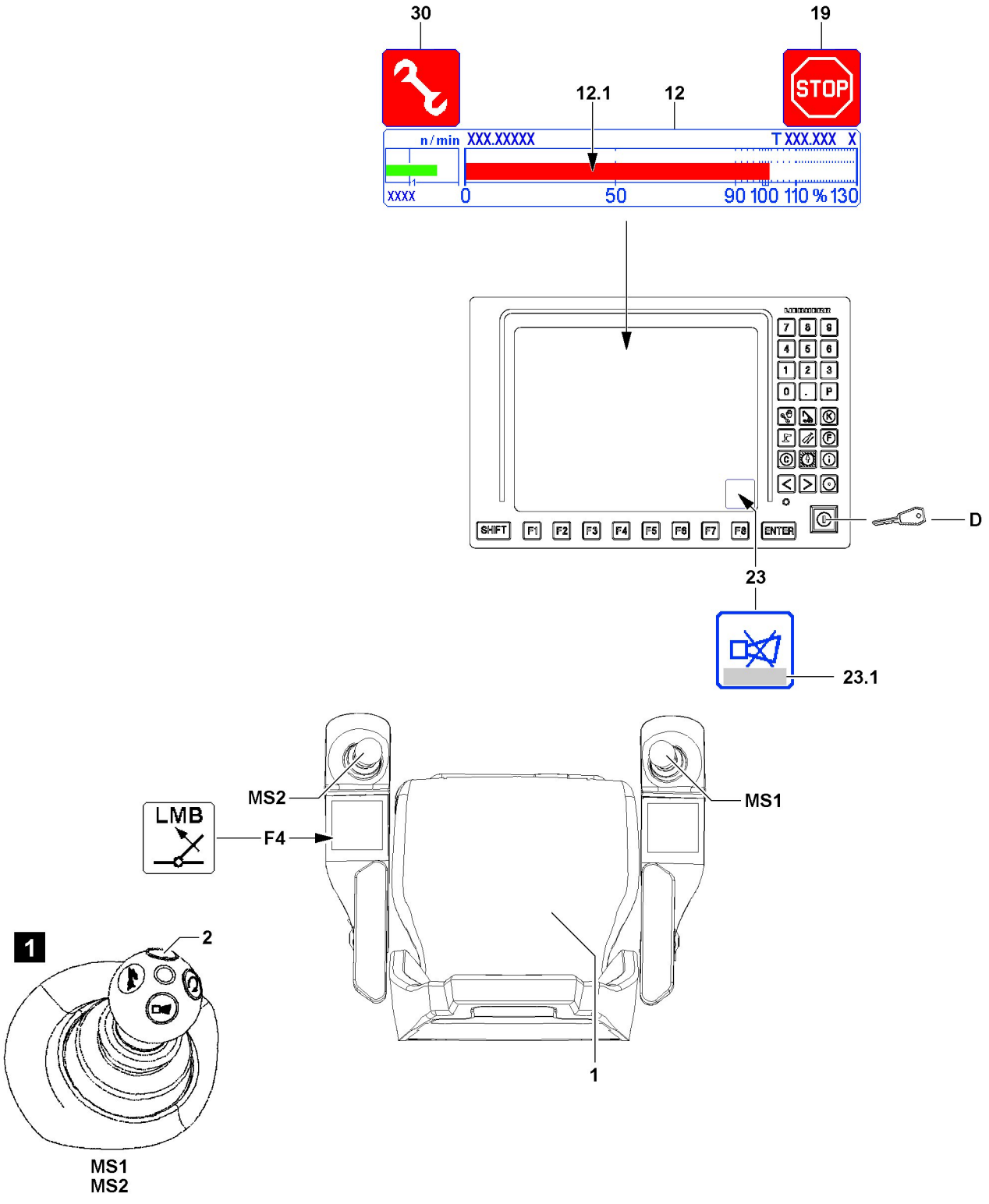

Fig.117263

LWE/ab Muli 010/24201-02-02/en

copyright © Liebherr-Werk Ehingen GmbH 2016

2.3.2 To exceed the maximum permissible load moment.

If the maximum permissible load torque is exceeded, the LICCON overload protection turns off all crane movements that increase the load torque.

In the bar diagram utilization **12** (load moment display) the utilization bar **12.1** has exceeded the 100 % mark and in the LICCON monitor appears the icon **19**.

This limit value can be exceeded by the set up key **D** in the „right touching“ position.

WARNING
Shut off safety device!
If the function „Exceedance of shut off limits of LICCON overload protection“ is activated by actuating the set up key **D** then it is possible to exceed the maximum permissible load moment.
▶ All notes regarding the „Special cases at operation of LICCON overload protection“ must be observed.

The set up key **D** on the LICCON monitor has two positions:
– Operating position (not actuated): Crane is in normal operation.
– Position to right (touching): The function „Exceedance of shut off limits of the LICCON overload protection“ is activated, the assembly icon **30** appears in the LICCON monitor.

Make sure that the following prerequisites are met:
– With the button **F4** „Luffing in with suspended load“ no normal operating status (utilization below 100 % and no active shut off) can be reached.
– All master switches are in zero position (not deflected).
– Either the seat contact button **1** or one of the buttons **2** (illustration **1**) of the master switches (MS1, MS2) is actuated.
– The crane is in the range of a load chart.

Note
If the values in the bar diagram utilization **12** are exceeded too far, then the functionality of the set up key **D** may be disabled.
▶ Pay attention to notes regarding error messages **23.1** occurring in the horn **23** icon.

▶ Turn the set up key **D** to the right (touching).

Result:

– The LICCON overload protection is inactive.
– The assembly icon **30** appears in the LICCON monitor.

copyright © Liebherr-Werk Ehingen GmbH 2016

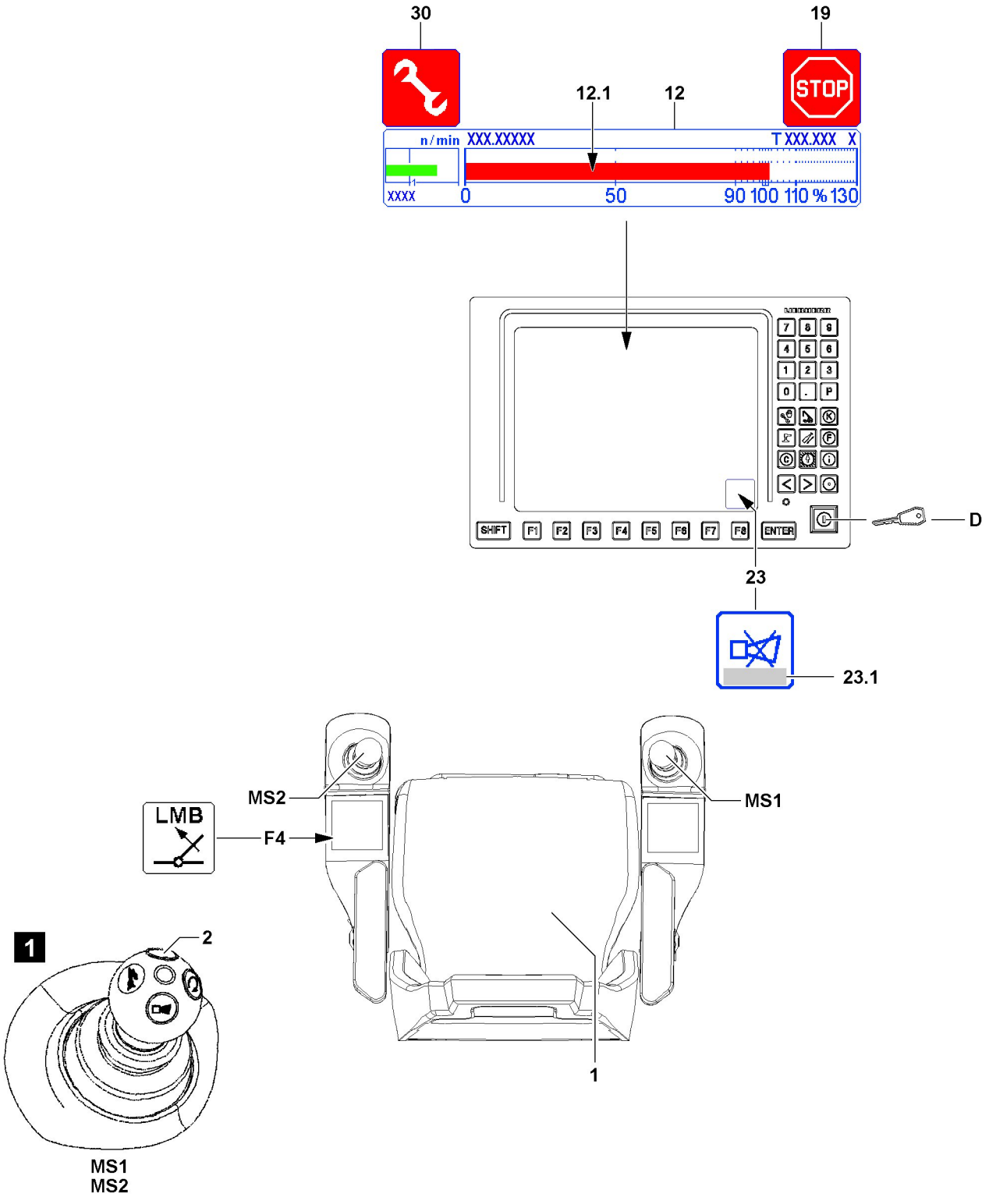

Fig.117263

LWE/ab Muli 010/24201-02-02/en

copyright © Liebherr-Werk Ehingen GmbH 2016

▶ Initiate crane movements which lead immediately to a normal operating status (see section „operating status of the crane“).

The function „Exceedance of shut off limits of LICCON overload protection“ turns off immediately also:
– If the set up key **D** is actuated again.
– If all master switches are in neutral position for 10 seconds.
– When neither the seat contact button **1** nor one of the buttons **2** of the master switches (MS1, MS2) is actuated.
– When a hoist top shut off occurs.

Note
▶ The function „Exceedance of shut off limits of the LICCON overload protection“ is only turned off when the assembly icon **30** in the LICCON monitor turns off.
▶ If the function „Exceedance of shut off limits of the LICCON overload protection“ does not turn off after pressing the set up key **D** once, then press the set up key **D** again until the assembly icon **30** in the LICCON monitor turns off.

The function „Exceedance of shut off limits of the LICCON overload protection“ has / was shut off:
– The assembly icon **30** in the LICCON monitor turns off.
– The working speed is possibly reduced until all master switches are in zero position at the same time.

▶ Make sure that the assembly icon **30** does no longer appear in the LICCON monitor.
▶ Carry out crane movements in such a way that no repeated shut off by the LICCON overload protection occurs.

LWE/ab Muli 010/24201-02-02/en

copyright © Liebherr-Werk Ehingen GmbH 2016

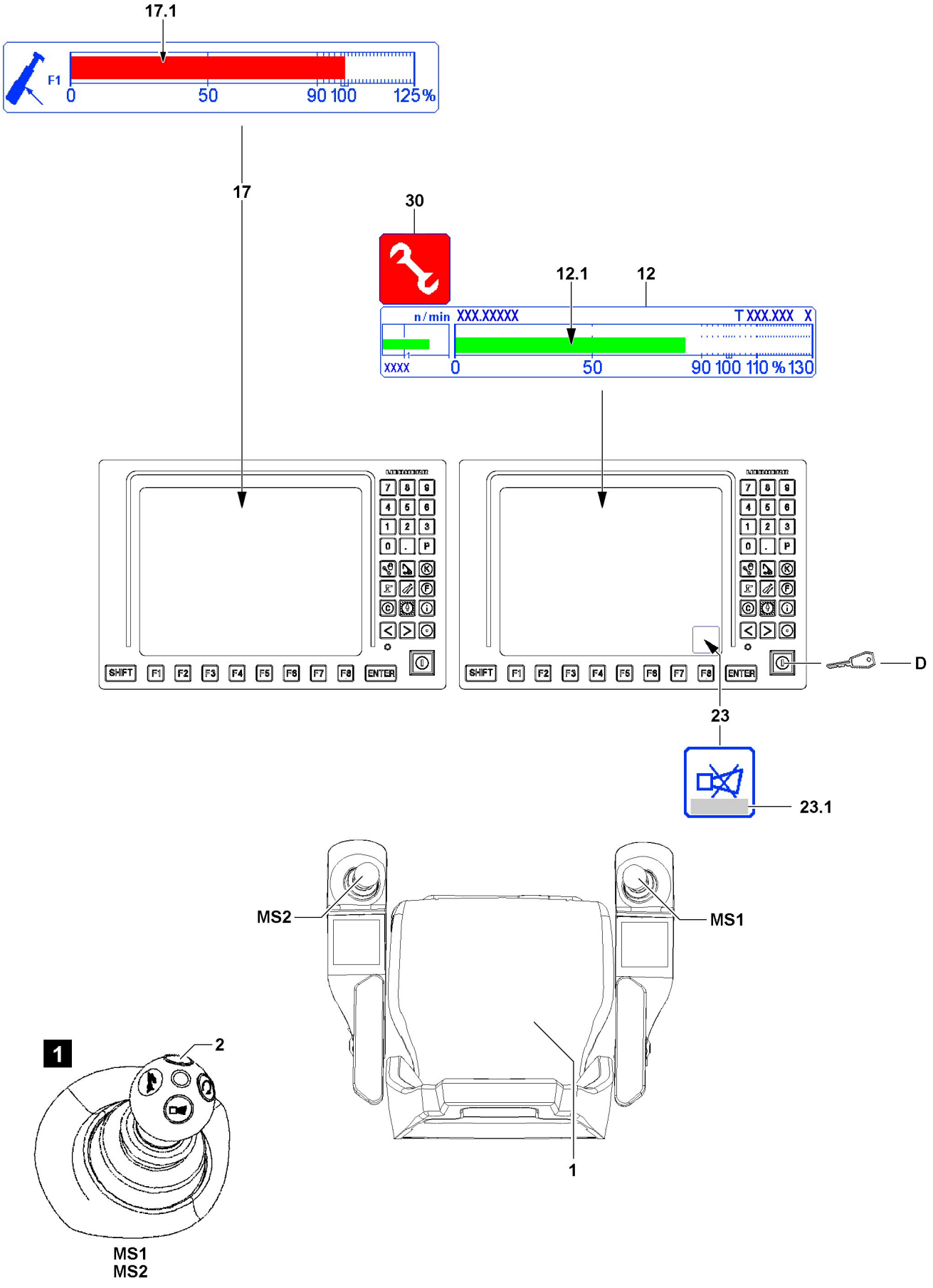

Fig.117264

copyright © Liebherr-Werk Ehingen GmbH 2016

LWE/ab Muli 010/24201-02-02/en

2.3.3 To exceed the maximum value of the F-load display in crane operation

Note
▶ Applies only for certain crane types with respective display in the second LICCON monitor.

WARNING
Shut off safety device!
By pressing the set up key **D** if the maximum value of the F-load display is exceeded, then the function „Exceedance of shut off limits of the LICCON overload protection“ is automatically activated Thus there is no shut off if the maximum permissible load moment is exceeded.
▶ All notes regarding the „Special cases at operation of LICCON overload protection“ must be observed.
▶ The utilization bar **12.1** of the bar diagram utilization **12** must be observed.
▶ The F1-utilization bar **17.1** of the F-load display **17** must be observed.

Note
▶ See also section „Maximum values of F-load display reached“.

In the F1-load display **17** the utilization bar_{actual} **17.1** exceeds the 100 % mark and the LICCON overload protection has shut off the crane movement. $F1_{actual}$ has exceeded $F1_{max}$ value.

All other movements, which lead to a decline of the force ratio in the F-load display **17** are turned off.

Note
If the values in the F-load display **17** or in the bar diagram utilization **12** are outside the permissible range, then the functionality of the set up key **D** my be disabled.
▶ Pay attention to notes regarding error messages **23.1** occurring in the horn **23** icon.

copyright © Liebherr-Werk Ehingen GmbH 2016

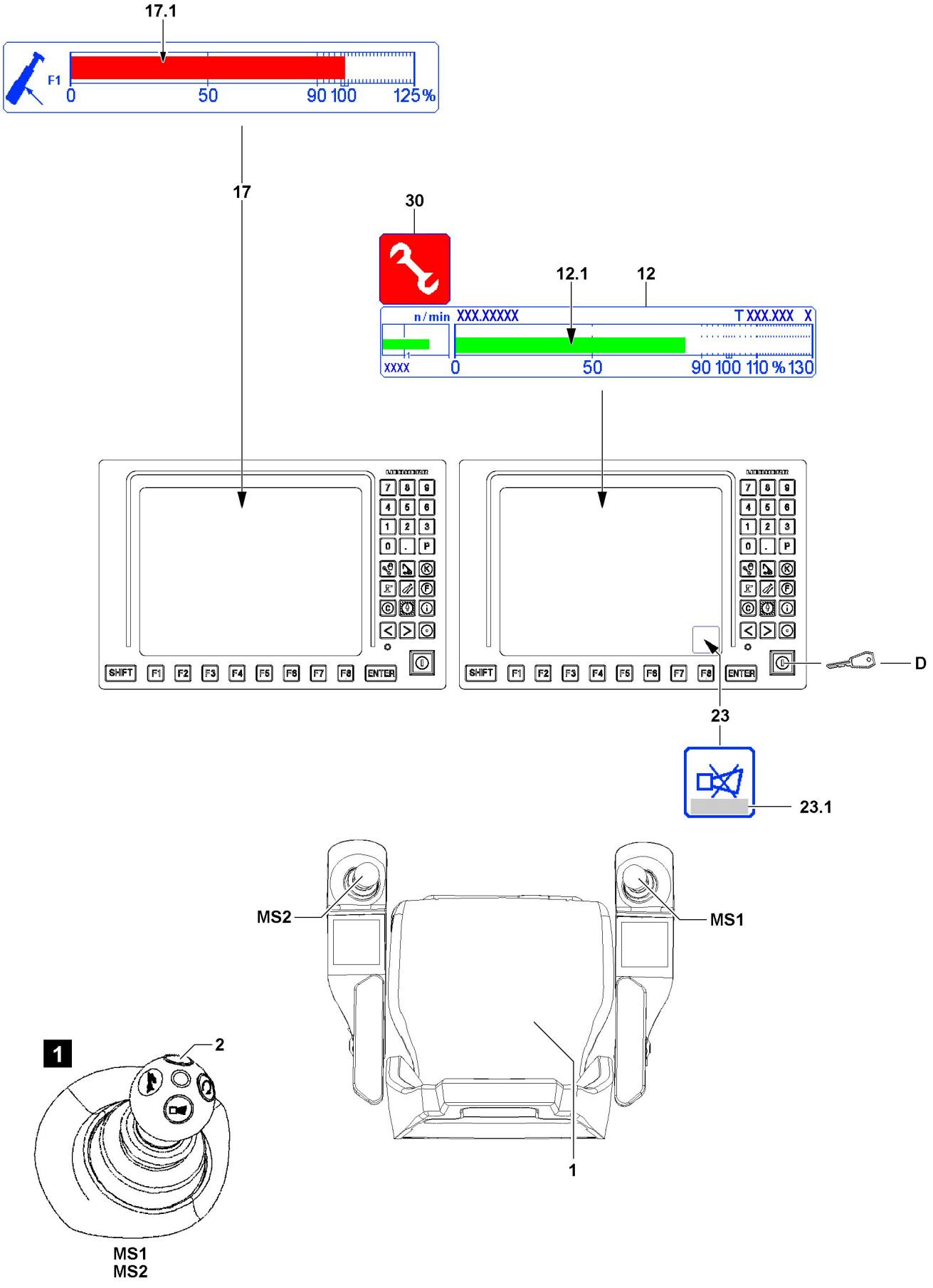

Fig.117264

copyright © Liebherr-Werk Ehingen GmbH 2016

LWE/ab Muli 010/24201-02-02/en

Make sure that the following prerequisites are met:
- All master switches are in zero position (not deflected).
- Either the seat contact button **1** or one of the buttons **2** (illustration **1**) of the master switches (MS1, MS2) is actuated.
- The crane is in the range of a load chart.

▶ Turn the set up key **D** to the right (touching).

Result:

– The function „Exceedance of shut off limits of the LICCON overload protection“ is activated. As a result the maximum value of the F-load display can be exceeded.
– The assembly icon **30** appears.
– $F1_{max}$ can be exceeded.

▶ Initiate crane movements which lead immediately to a normal operating status (see section „operating status of the crane“).

The function „Exceedance of shut off limits of LICCON overload protection“ turns off immediately also:
– If the set up key **D** is actuated again.
– If all master switches are in neutral position for 10 seconds (with load chart available).
– When neither the seat contact button **1** nor one of the buttons **2** of the master switches (MS1, MS2) is actuated.
– When a hoist top shut off occurs.

Note
▶ The function „Exceedance of shut off limits of the LICCON overload protection“ is only turned off when the assembly icon **30** in the LICCON monitor turns off.
▶ If the function „Exceedance of shut off limits of the LICCON overload protection“ does not turn off after pressing the set up key **D** once, then press the set up key **D** again until the assembly icon **30** in the LICCON monitor turns off.

The function „Exceedance of shut off limits of the LICCON overload protection“ has / was shut off:
– The assembly icon **30** in the LICCON monitor turns off.
– The working speed is possibly reduced until all master switches are in zero position at the same time.

▶ Make sure that the assembly icon **30** does no longer appear in the LICCON monitor.
▶ Carry out crane movements in such a way that no repeated shut off by the LICCON overload protection occurs.

LWE/ab Muli 010/24201-02-02/en

copyright © Liebherr-Werk Ehingen GmbH 2016

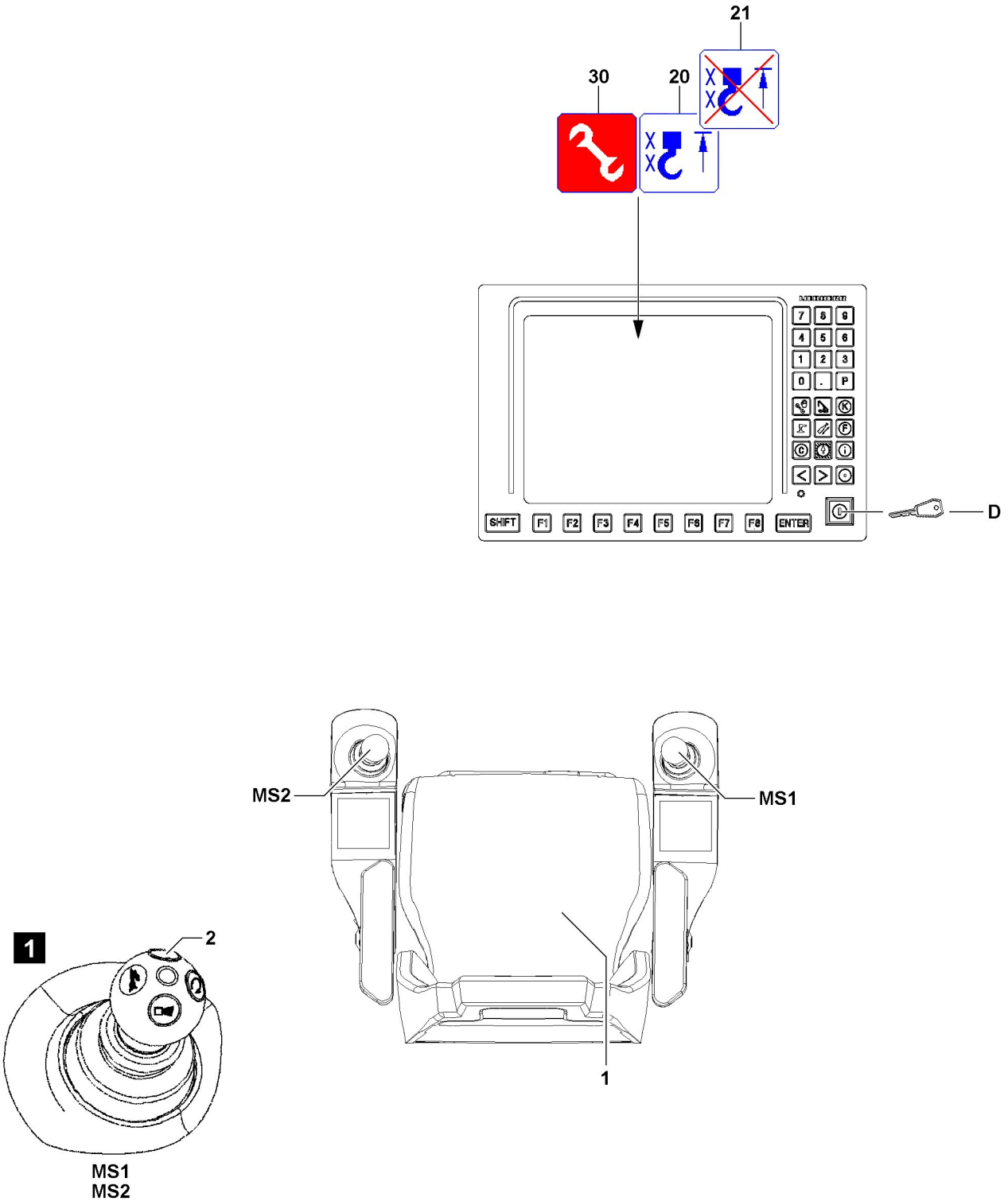

Fig.117265

LWE/ab Muli 010/24201-02-02/en

copyright © Liebherr-Werk Ehingen GmbH 2016

2.4 Bypassing the hoist top shut off

WARNING
Improper use of the function „Bypass of hoist top shut off“!
▶ The function „Bypass of hoist top shut off“ may never be used to increase the lifting height during crane operation.

WARNING
Property damage and falling load!
If the function „Bypass of hoist top shut off“ is activated, there is the danger that the hook (hook block / load hook) is pulled against the pulley head.
This danger exists especially when the hoist winch is continued to be spooled up and for crane movements which have an influence on the hoist rope, for example luffing the telescopic boom or the auxiliary boom / accessory.
Property damage and falling load can result.
Personnel can be severely injured or killed.
▶ The function „Bypass of hoist top shut off“ may only be made if the crane operator is able to determine otherwise that there is a sufficient distance between hook block / load hook and boom head.
▶ Carry out all crane movements with utmost caution.

Note
▶ A bypass of the hoist top shut off is only possible in some circumstances when the shut off has already occurred due to a triggered hoist limit switch.
▶ For assembly purposes or in emergency cases, if the activation of the function „Bypass of hoist top shut off“ **and** activation of the function „Exceedance of shut off limits of the LICCON overload protection“ is necessary, then the set up key **D** must be actuated until the icon **21** and assembly icon **30** appear.

Spooling the hoist winch up was turned off because the hook (hook block / load hook) has touched a hoist limit weight during the upward movement and the affected hoist limit switch was triggered.

Make sure that the following prerequisites are met:
– A hoist top shut off has occurred, the hoist top icon **20** appears in the LICCON monitor.
– Either the seat contact button **1** or one of the buttons **2** (illustration **1**) of the master switches (MS1, MS2) is actuated.
– All master switches are in zero position (not deflected).

LWE/ab Muli 010/24201-02-02/en

copyright © Liebherr-Werk Ehingen GmbH 2016

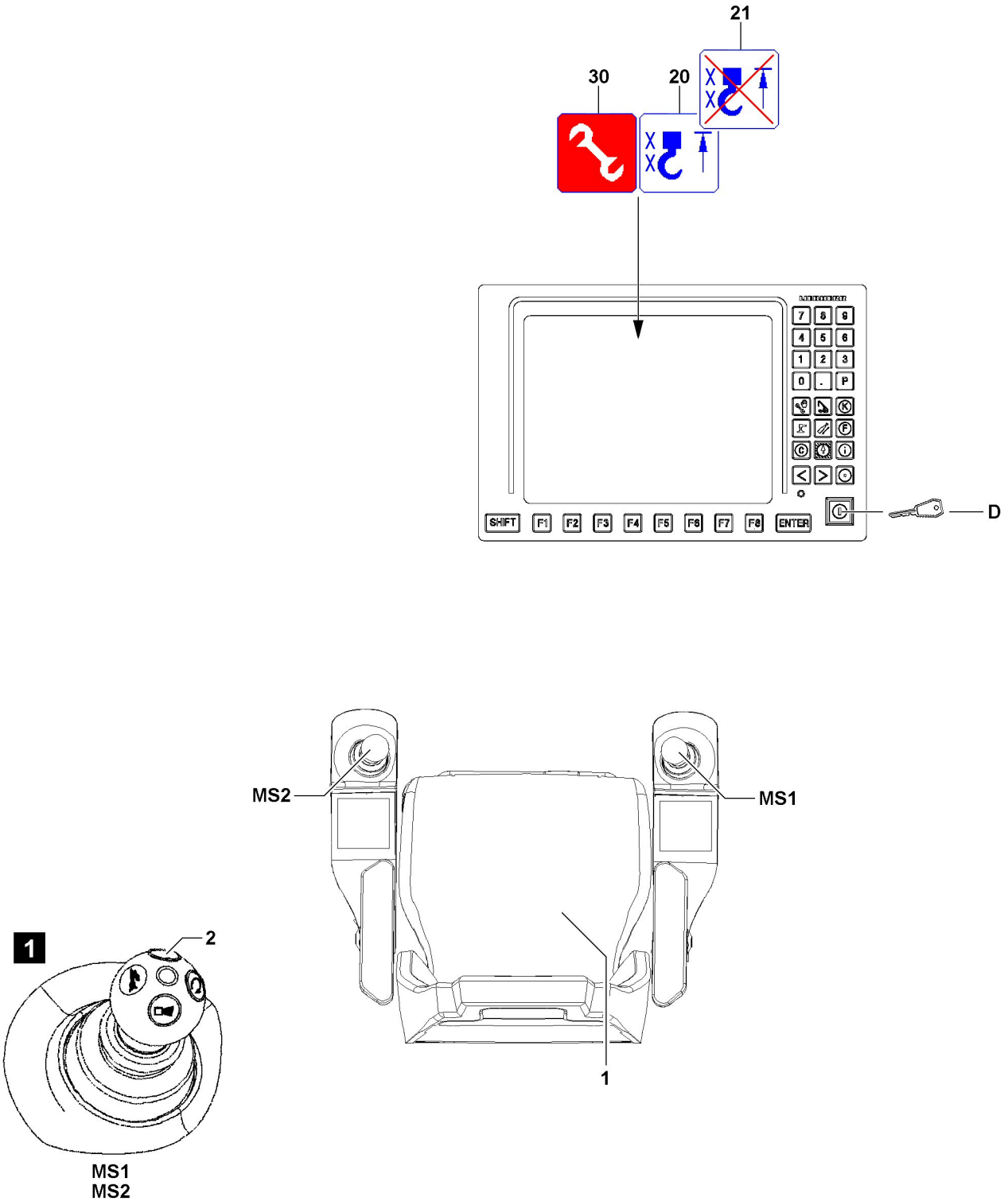

Fig.117265

LWE/ab Muli 010/24201-02-02/en

copyright © Liebherr-Werk Ehingen GmbH 2016

– To bypass the hoist top shut off, a combined actuation of the set up key **D** and at least one master switch (MS1, MS2) is required.

▶ Turn the set up key **D** to the right (touching).

Result:

– The assembly icon **30** (assembly operation) appears in the LICCON monitor.
– The hoist top icon **20** in the LICCON monitor changes to the icon **21**.

Note

▶ Depending on the situation, it may be possible that the bypass of the hoist top shut off remains only active as long as the master switch (MS1, MS2) is deflected.

Within 10 seconds, if the master switch (MS1, MS2) to lift the hoist gear is deflected, the hoist limit switches are bypassed.

▶ Carry out a crane movement with utmost caution and by taking the safety guidelines into account.

The function „Bypass of the hoist top shut off“ turns off:
– If the set up key **D** is actuated again.
– When no master switch (MS1, MS2) was deflected for 10 seconds.
– When neither the seat contact button **1** nor one of the buttons **2** of the master switches (MS1, MS2) is actuated.
– If there is no longer a shut off of a hoist limit switch.

The function „Bypass of the hoist top shut off“ has / was turned off:
– The assembly icon **30** (assembly operation) in the LICCON monitor turns off.
– The icon **21** on the LICCON monitor turns off.

▶ Make sure that the assembly icon or the assembly icon **30** (assembly operation) as well as the icon **21** no longer appear in the LICCON monitor.
▶ Carry out the crane movements in such a way that no repeated hoist top shut off occurs.

LWE/ab Muli 010/24201-02-02/en

copyright © Liebherr-Werk Ehingen GmbH 2016

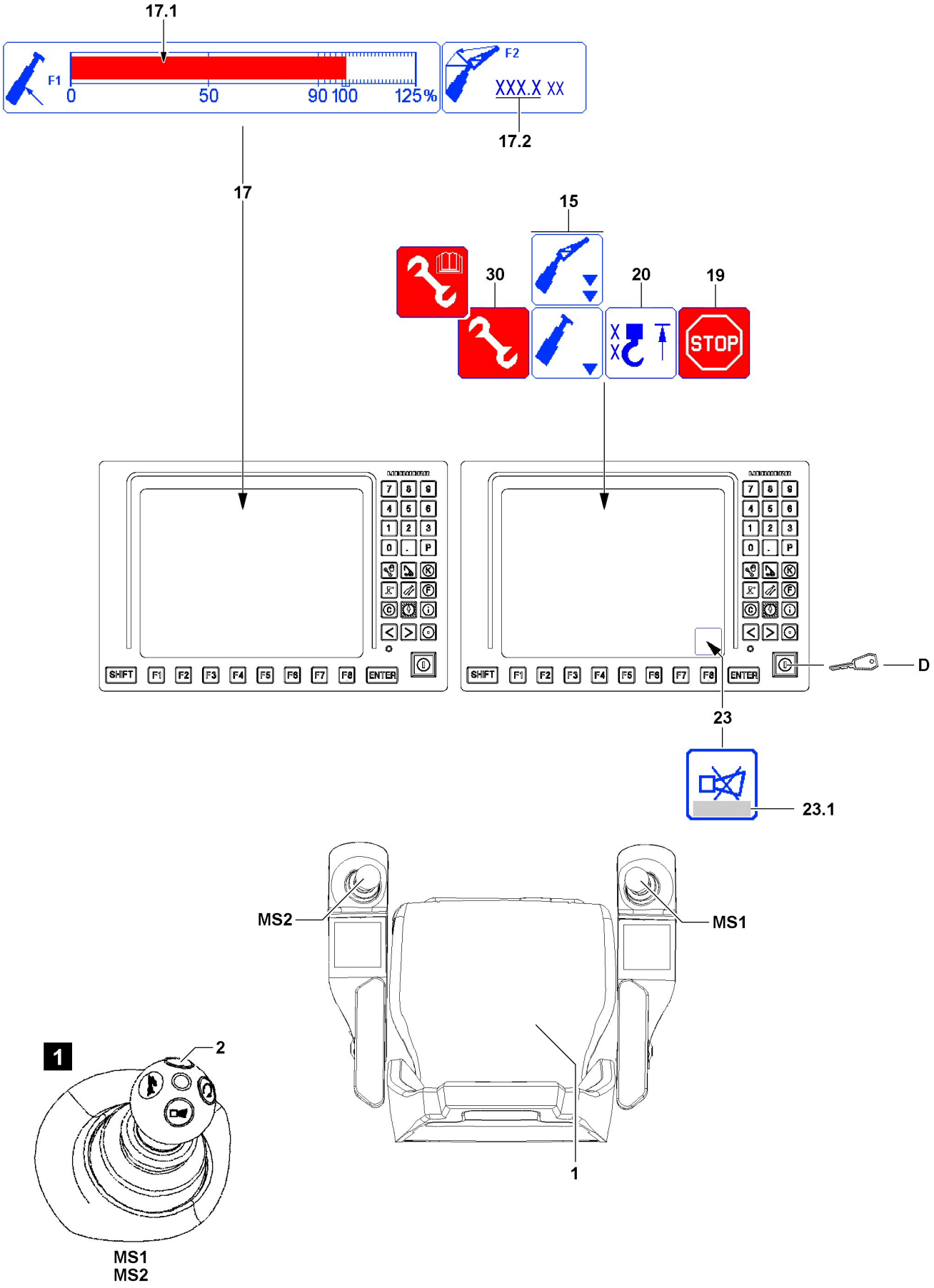

Fig.117266

LWE/ab Muli 010/24201-02-02/en

copyright © Liebherr-Werk Ehingen GmbH 2016

2.5 Carrying out the erection / take down procedures

To carry out the erection / take down procedures and assembly procedures, the LICCON overload protection can be bypassed with the set up key **D**.

Note

- ▶ If the crane is in the range „No load chart available“ then there is a shut off of the crane control by the LICCON overload protection. The icon **19** appears in the LICCON monitor.
- ▶ By pressing the set up key **D** all erection / take down procedures and assembly procedures can be carried out according to the specifications in the Operating instructions.

WARNING

Danger of accident during erection / take down procedures!
If the specifications of the Operating instructions are not observed, the crane can collapse, the boom can break off or the crane can topple over.
Personnel can be severely injured or killed.

- ▶ Make sure to adhere to all specifications in the Operating instructions.
- ▶ Press the set up key **D** only when the configuration status has been entered correctly in the LIC-CON computer system and matches the actual situation.

Additional information for cranes with F-load display:

- F1-load display
  Pressure display luffing cylinder
- F2-load display
  Force of guying Auxiliary boom / accessory
  Note:
  Appears only for corresponding boom system

Note

The permissible maximum value corresponds to 100 % in the bar display.

- ▶ The F1-utilization bar **17.1** shows the relationship $F1_{actual}$ to $F1_{max}$.
- ▶ F2-load display, the F2 $value_{actual}$ **17.2** is only shown. When $F2_{max}$ is reached, an error message **23.1** is issued.
- ▶ When leaving the range „load chart available“ the display of the assembly icon **30** changes.

copyright © Liebherr-Werk Ehingen GmbH 2016

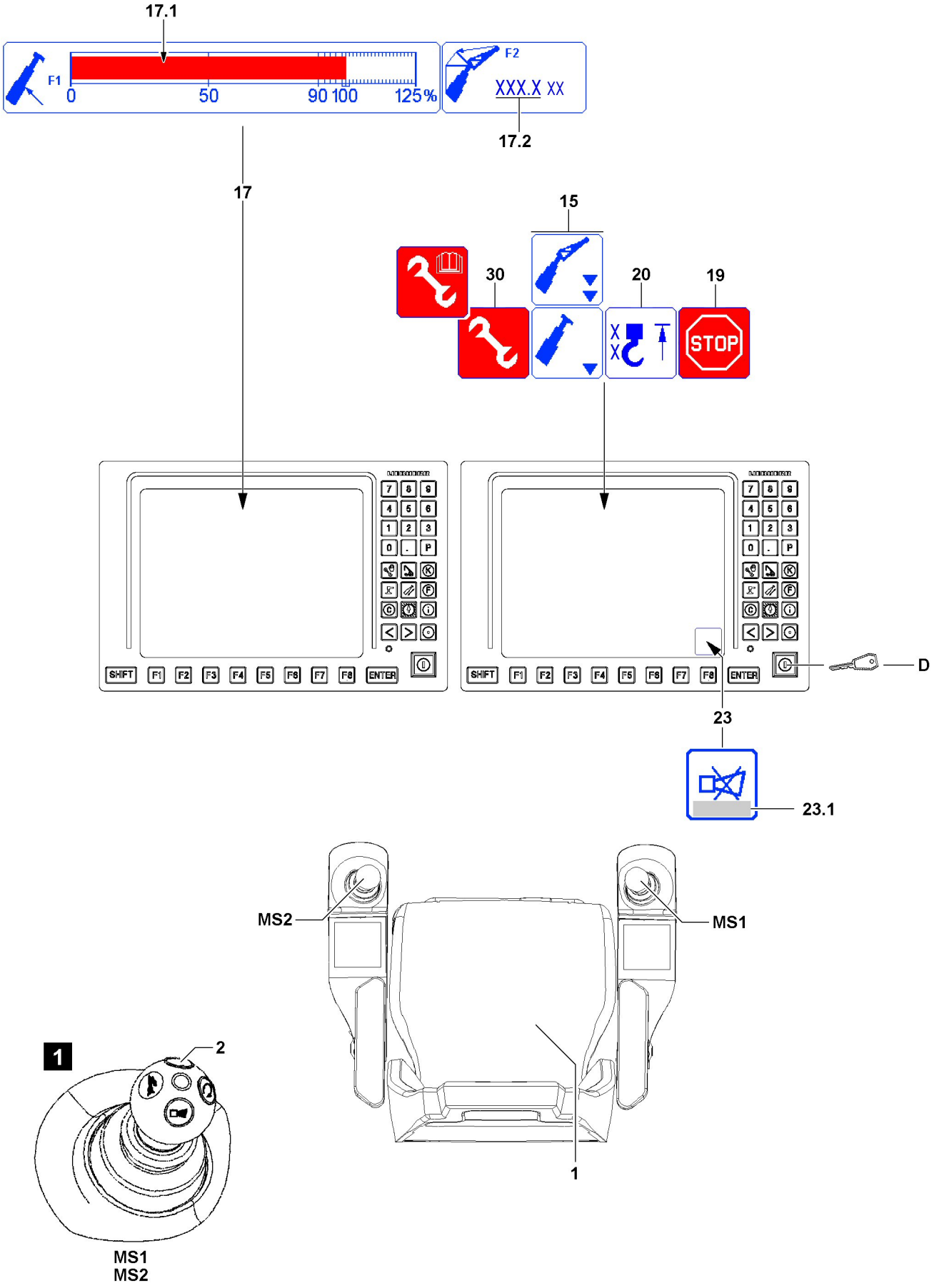

Fig.117266

LWE/ab Muli 010/24201-02-02/en

copyright © Liebherr-Werk Ehingen GmbH 2016

2.5.1 Carrying out erection procedures

Make sure that the following prerequisites are met:
- The set up status corresponds to the specifications in the Operating instructions.
- The set up status has been entered correctly into the LICCON computer system.
- All master switches are in zero position (not deflected).
- Either the seat contact button **1** or one of the buttons **2** (illustration **1**) of the master switches (MS1, MS2) is actuated.

Note
- ▶ Depending on the situation, the hoist top shut off (icon **20** appears) must be bypassed at the same time.
- ▶ Depending on the situation, one of the icons **15** appears, because a limit angle load chart is reached.

▶ Turn the set up key **D** to the right (touching).

Result:

- The assembly icon **30** appears.
- The erection procedure can be carried out.

Problem remedy
The functionality of the set up key **D** is disabled by the crane control?
- ▶ Pay attention to notes regarding error messages **23.1** occurring in the horn **23** icon.
- ▶ Check the electrical connections.
- ▶ Check if all sensors or dummy plugs with integrated electric have been connected properly.

▶ Luff the boom system according to the specifications of the Operating instructions.
▶ Observe the F-load display **17**, all values must be within the permissible range.

Problem remedy
The erection / take down procedure cannot be carried out due to exceeding of the maximum values?
- ▶ See section „Maximum values of F-load display reached“.

The „Bypass of the LICCON overload protection“ via the set up key **D** turns off:
- If the set up key **D** is actuated again.
- When an range with existing load chart is reached (erection procedure).
- If all master switches are in neutral position for 10 seconds (with „load chart available“).
- When neither the seat contact button **1** nor one of the buttons **2** of the master switches (MS1, MS2) is actuated.

The function „Exceedance of shut off limits of the LICCON overload protection“ has / was shut off:
- The assembly icon **30** in the LICCON monitor turns off.

▶ After completion of the erection / take down procedures, make sure that the assembly icon **30** no longer appears in the LICCON monitor.

LWE/ab Muli 010/24201-02-02/en

copyright © Liebherr-Werk Ehingen GmbH 2016

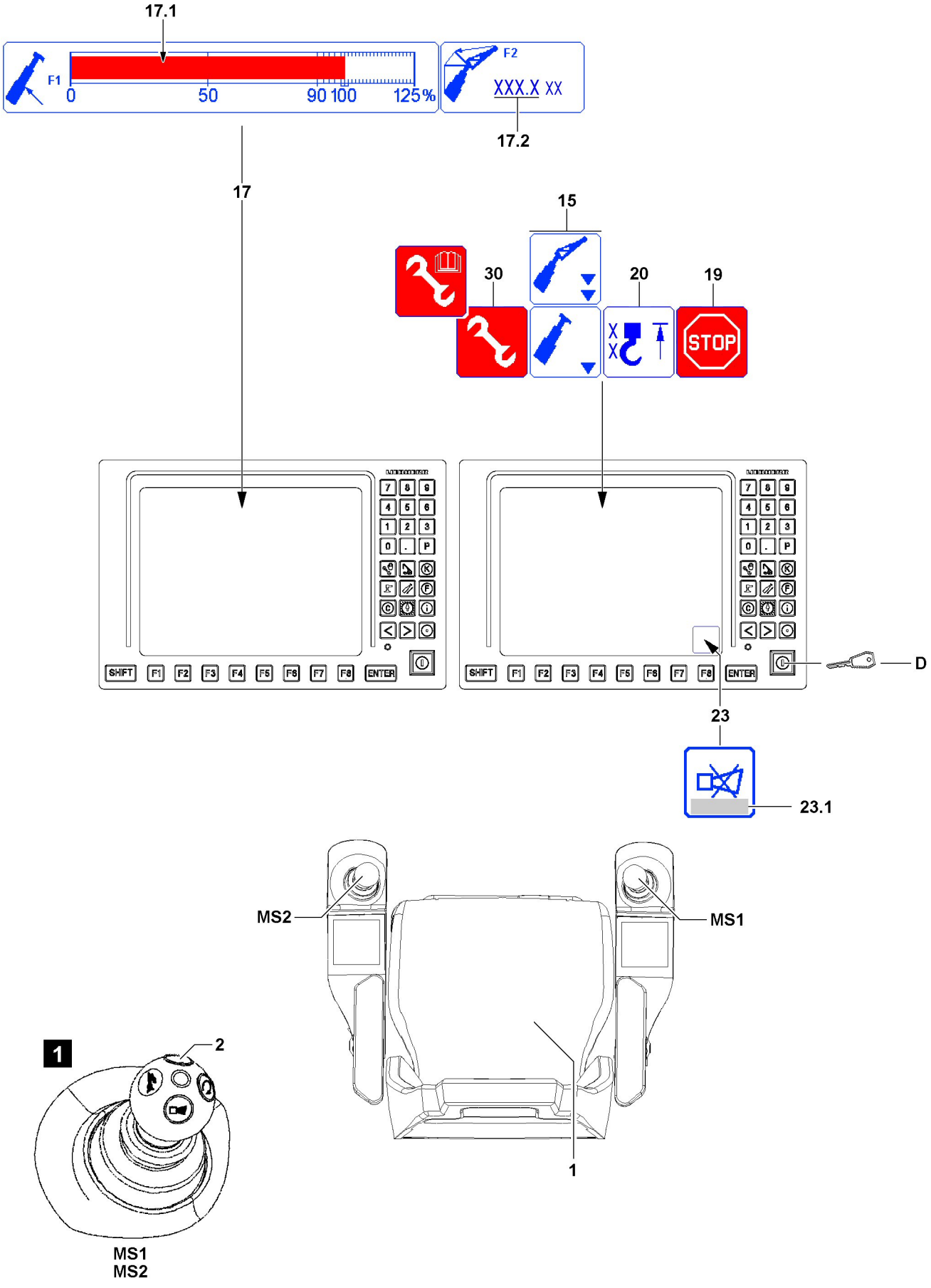

Fig.117266

LWE/ab Muli 010/24201-02-02/en

copyright © Liebherr-Werk Ehingen GmbH 2016

2.5.2 Carrying out take down procedures

WARNING
Danger of accidents when placing the boom system down!
When the shut off luffing the telescopic boom / auxiliary boom / accessory down is bypassed, then the LICCON overload protection as a whole is deactivated, bypassed or limited.
The telescopic boom and / or auxiliary boom / accessory can be luffed from the range of the load chart.
In case of deviations from the specifications of the Operating instructions, severe accidents can be the result.
Personnel can be severely injured or killed.
▶ Always proceed according to the specifications of the Operating instructions.
▶ Carry out all crane movements with utmost caution.

Make sure that the following prerequisites are met:
– One of the icons **15** appears (limit angle load chart reached) and the LICCON overload protection has shut off the crane movement.
– Either the seat contact button **1** or one of the buttons **2** (illustration **1**) of the master switches are actuated.
– All master switches are in zero position (not deflected).
– There is no load on the hook (hook block / load hook).
– If necessary, the hook (hook block / load hook) is placed on the ground.
– The set up status corresponds to the specifications in the Operating instructions.
– The set up status has been entered correctly into the LICCON computer system.

Note
▶ When leaving the range „load chart available“ the display of the assembly icon **30** changes.

▶ Turn the set up key **D** to the right (touching).

Result:

– The assembly icon **30** appears in the LICCON monitor.
– The take down procedure can be carried out.

▶ Place the boom system down according to the specifications of the Operating instructions.
▶ Observe the F-load display **17**, all values must be within the permissible range.

Problem remedy
The erection / take down procedure cannot be carried out due to exceeding of the maximum values?
▶ See section „Maximum values of F-load display reached“.

copyright © Liebherr-Werk Ehingen GmbH 2016

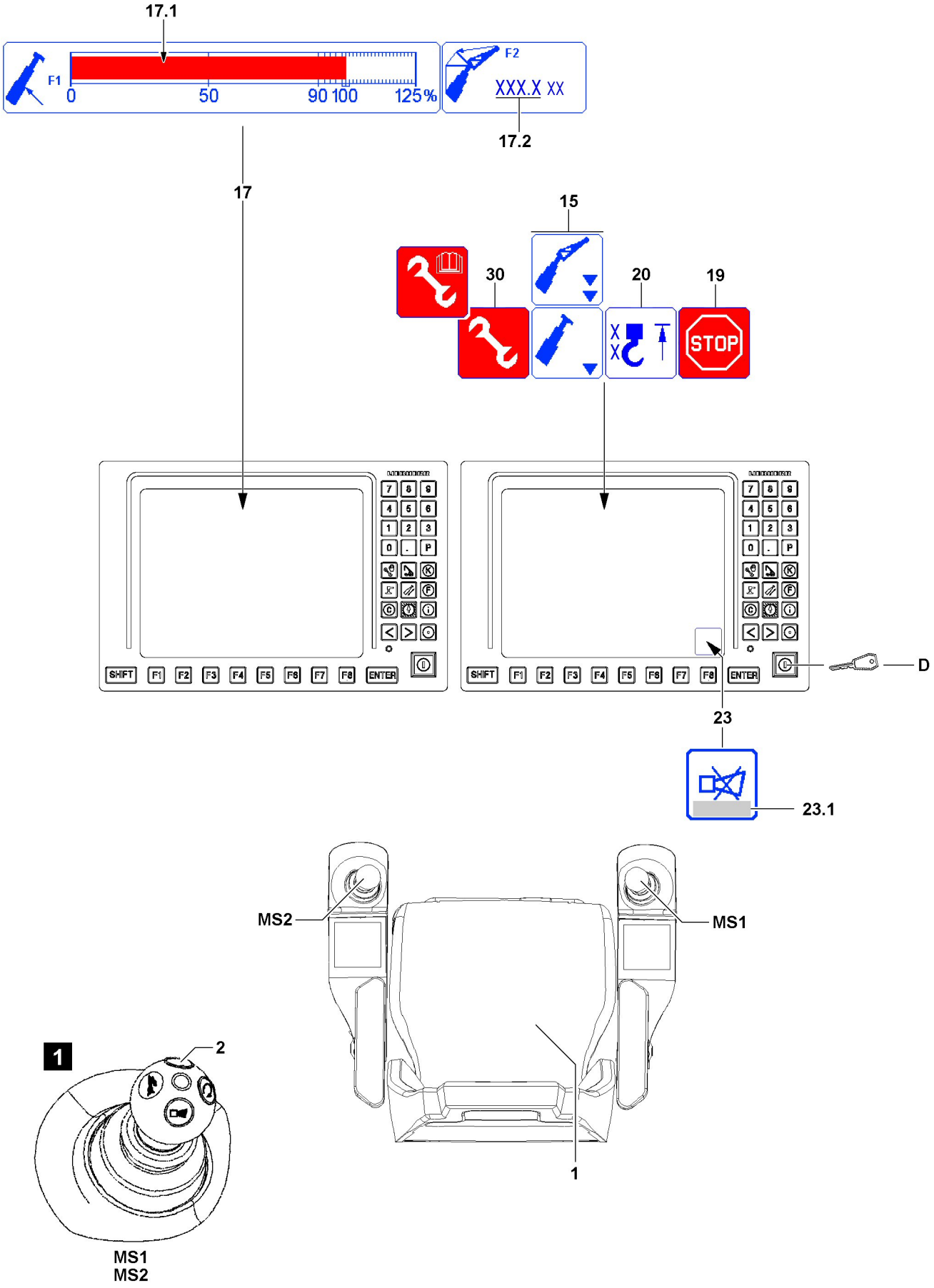

Fig.117266

LWE/ab Muli 010/24201-02-02/en

copyright © Liebherr-Werk Ehingen GmbH 2016

Note

▶ Depending on the situation, the hoist top shut off (icon **20** appears) must be bypassed at the same time.

The „Bypass of the LICCON overload protection“ via the set up key **D** turns off:
– If the set up key **D** is actuated again.
– When neither the seat contact button **1** nor one of the buttons **2** of the master switches (MS1, MS2) is actuated.
– When an area with existing load chart is reached.

The bypass of the LICCON overload protection is / was turned off:
– The assembly icon **30** in the LICCON monitor turns off.

▶ Make sure that the assembly icon **30** does no longer appear in the LICCON monitor.

2.5.3 Carrying out the assembly procedures

WARNING
Danger of accident during assembly procedures!
In case of deviations from the specifications of the Operating instructions for the assembly procedures, severe accidents can be the result.
Personnel can be severely injured or killed.
▶ Always proceed according to the specifications of the Operating instructions.
▶ **If you cannot proceed according to the Operating instructions, contact Liebherr Service before carrying out any subsequent steps and agree on the procedure.**

Make sure that the following prerequisites are met:
– The set up status corresponds to the specifications in the Operating instructions.
– The set up status has been entered correctly into the LICCON computer system.

▶ Operate the set up key **D** according to the specifications of the Operating instructions.

LWE/ab Muli 010/24201-02-02/en

copyright © Liebherr-Werk Ehingen GmbH 2016

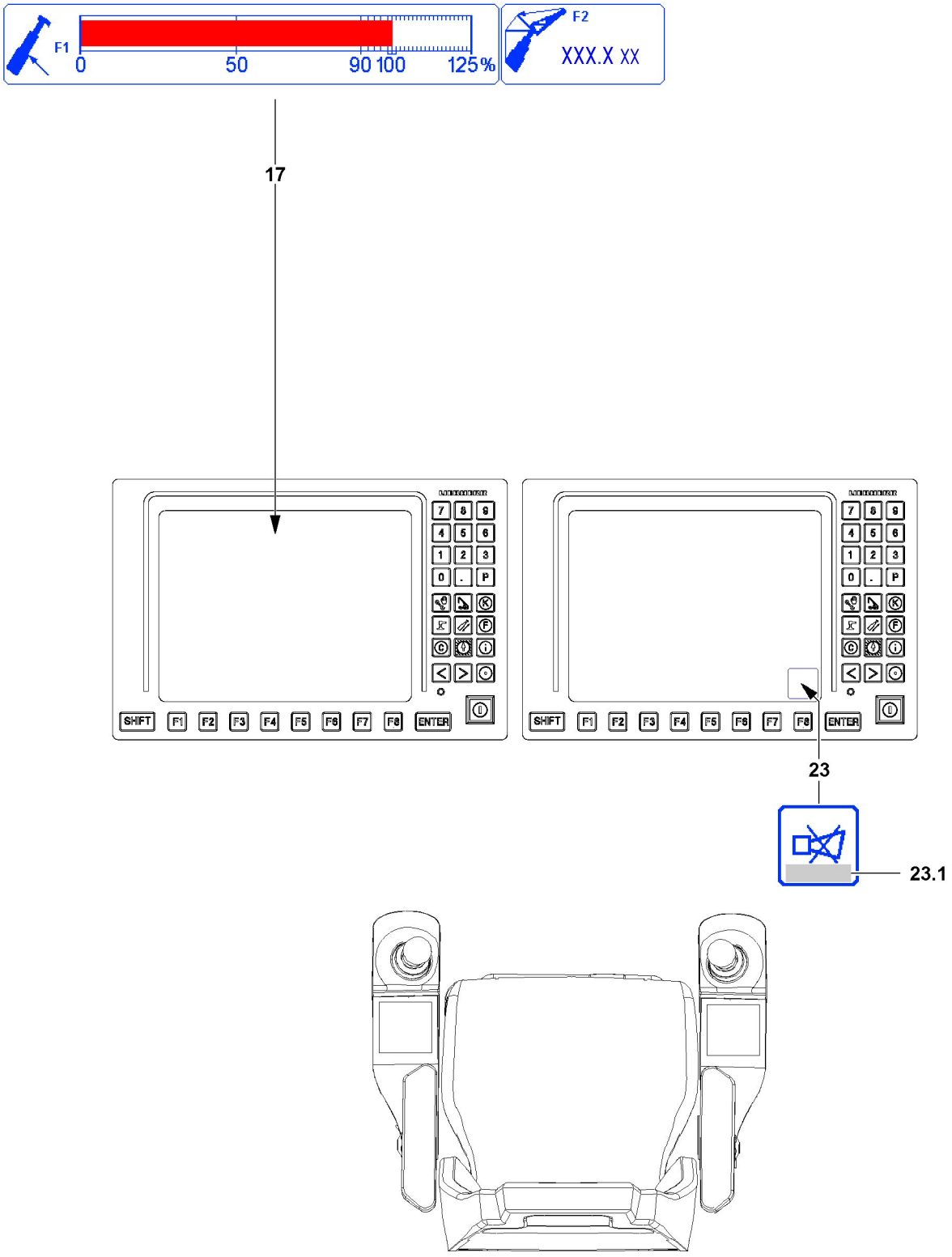

Fig.117267

LWE/ab Muli 010/24201-02-02/en

copyright © Liebherr-Werk Ehingen GmbH 2016

2.6 Maximum values of F-load display reached

Note

▶ The display and assignment of the F-load display **17** can deviate depending on the set up status, operating status and configuration of the crane, see chapter 4.02.

In the F-load display **17** the maximum values were reached.

Make sure that the following prerequisites are met:
- The crane is assembled according to the specifications in the Operating instructions.
- A valid set up configuration has been entered on the LICCON computer system (Set up program).
- The actual set up configuration has been entered on the LICCON computer system (Set up program).
- The hook block / load hook is correctly installed and reeved.
- All attachment parts and guy rods on the boom system, which are not needed, have been removed (weight).
- The boom system is free of snow and ice (weight).
- The wind influence onto the crane is not too great.
- The local conditions (terrain incline) are in the permissible range.
- Possible notes regarding error messages **23.1** occurring in the horn **23** icon were observed.

▶ Check if a crane movement was initiated, which leads to an improvement of the force ratio in the F-load display **17**.

Note

In the permissible framework of specifications of the Operating instructions, a positive influence of the force ratio in the F-load display **17** can be reached by:

▶ Erection of the telescopic boom: Carry the hook (hook block / load hook) along.

▶ In difficult local conditions (terrain incline): Support the placed down boom system to obtain more favorable angle conditions.

▶ In difficult local conditions (terrain incline): Support the placed down boom system to reduce flexation.

LWE/ab Muli 010/24201-02-02/en

copyright © Liebherr-Werk Ehingen GmbH 2016

Empty page!

copyright © Liebherr-Werk Ehingen GmbH 2016

5 Equipment

copyright © Liebherr-Werk Ehingen GmbH 2016

copyright © Liebherr-Werk Ehingen GmbH 2016

5.01 Safety technical notes for assembly and disassembly

1	Checking the retaining elements	3
2	Rope pulleys	3
3	Checking the ropes	3
4	Control measures	4
5	Dangerous conditions without shut off	7
6	Transporting components	7
7	Pneumatic springs for assembly support of components	7
8	Manual rope winches for assembly support of components	8
9	Weights	8
10	Guy rods	8
11	Auxiliary guying	9
12	Bypassing the overload protection	9
13	Bypassing the hoist top shut off	11
14	Assembly / disassembly	12
15	Erection / take down	57

LWE/ab Muli 010/24201-02-02/en

copyright © Liebherr-Werk Ehingen GmbH 2016

LWE/ab Muli 010/24201-02-02/en

Fig.195219

copyright © Liebherr-Werk Ehingen GmbH 2016

1 Checking the retaining elements

Retaining elements are used to secure the pins. Due to mechanical damage / distortion, the function of the retaining elements can be compromised. In addition, the spring force of the retaining elements can be reduced significantly. Do not re-use retaining elements if there is insufficient spring force. The pin retainer must be secured with a correctly **functioning** retaining element.

WARNING
Failure of retaining element!
If the spring force of the retaining element is not sufficient or in case of mechanical damage / distortion, the retaining element can fail.
If the correct retention of the pin is no longer ensured, then the pin can unpin by itself.
Accidents with bodily injuries / property damage can result.
▶ Use exclusively **functioning** retaining elements in proper condition.

2 Rope pulleys

WARNING
Danger of crushing due to rotating rope pulleys!
Arms and legs can be caught and crushed or severed between the rope pulley and the rope due to rotating rope pulleys.
▶ It is prohibited to touch the ropes or rope pulleys during operation.
▶ Adhere to the safety distance to ropes and rotating rope pulleys.

3 Checking the ropes

WARNING
Danger of accident!
▶ The ropes must be checked by an expert before assembly and checks must be performed at regular intervals in order to detect possible damage or wear and tear at an early stage. See Crane operating instructions, chapter 8.04.

The ropes must be removed immediately if any of the following damage is detected:
– Breakage of a strand
– Wire breaks
– Broken wire nests
– Reduction in the rope diameter by 10 % or more of the nominal size
– Rope deformations

3.1 Placing the hoist / control ropes

In order to guarantee safety and operating characteristics, only original Liebherr replacement parts or parts approved by Liebherr may be used.

NOTICE
Damage of hoist / control rope!
If a hoist / control rope is placed with worn rope pulleys, damage can occur.
▶ Before placing a rope, check the rope pulleys. See Crane operating instructions, chapter 8.01.
▶ Replace worn or damaged rope pulleys.

LWE/ab Muli 010/24201-02-02/en

copyright © Liebherr-Werk Ehingen GmbH 2016

NOTICE
If the following notes are not observed, the cam limit switch / winch turn sensor must be readjusted!
- ▶ When the hoist rope is spooled up, the end of the hoist rope must remain in front of the winch and may not be pulled over the winch.
- ▶ Pull the hoist rope end never under the winch by spooling the winch up.
- ▶ Pull the hoist rope never off from the „stationary“ winch.
- ▶ The winch turn sensor must also be readjusted, if it is determined during operation or when changing the hoist rope that the winch does not turn off when the minimum rope coils are reached.

3.1.1 Cranes with cam limit switch

The cam limit switch is adjusted at the factory that it turns off before the minimum rope coils are reached (three hoist rope coils on the winch).

WARNING
Danger of accident due to falling load!
If the following instructions are not observed, the hoist rope end attachment may be torn out, causing the load to topple.
- ▶ If a new hoist rope is used, the cam limit switch must be reset.
- ▶ The cam limit switch must be adjusted so that it turns off when only 3 hoist rope coils remain on the winch.

3.1.2 Cranes with winch turn sensor

The winch turn sensor is adjusted at the factory that it turns off before the minimum rope coils are reached (four hoist rope coils on the winch). If used properly, the winch turn sensor will not need readjustment.

WARNING
Danger of accident due to falling load!
If the following instructions are not observed, the hoist rope end attachment may be torn out, causing the load to topple.
- ▶ If a new hoist rope is placed, the winch turn sensor must be checked.
- ▶ The winch turn sensor must be set to turn off when only 4 hoist rope coils remain on the winch.

4 Control measures

WARNING
The crane can topple over!
If the control measures are not carried out before crane operation, then accidents can occur. The crane can topple over, be overloaded or damaged.
Personnel can be killed or injured.
- ▶ Crane operation with safety devices which are **not** functioning correctly is strictly prohibited.
- ▶ Start crane operation only after all safety devices have been checked and are functioning correctly.
- ▶ Start crane operation only if the overload protection has been set according to the data in the load chart.
- ▶ Start crane operation only if the crane is properly supported and horizontally aligned.

LWE/ab Muli 010/24201-02-02/en

copyright © Liebherr-Werk Ehingen GmbH 2016

WARNING
Interruption of crane operation!
If the following specifications for interruption of crane operation are not observed, accidents can occur.
- ▶ If the crane operator leaves the crane cab even if for just a short time, the crane must be secured to prevent unauthorized access.
- ▶ Before starting to work again with the crane, the crane operator is obligated to check the operating mode settings and to reset them, if necessary.

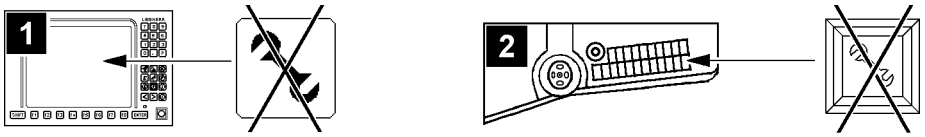

Fig.113437

Make sure that the following prerequisites are met:
- The overload protection is not bypassed.
- No assembly operation is activated.
- Crane operation can be carried out with minimum boom radius.

4.1 General control measures before crane operation

- Make sure that no visible damage is present on the crane.
- Make sure that there are no loose parts on the boom, crane chassis and crane superstructure.
- Make sure that exposed rope pulleys are free of snow, frost and ice.
- Make sure that the cable / rope drums as well as the limit switches are free of snow and ice.
- Make sure that the gear ring of the rotary connection is clean and greased.
- Make sure that the air supply to the oil and water cooler is clear.
- Make sure that steps, ladders and platforms are in the correct position for crane operation.
- Make sure that all tool boxes, compartments, coverings, covers and cabinet doors are closed.
- Make sure that no persons or objects are within the danger zone of the crane.
- Make sure that the crane is standing on level, load bearing ground.
- Make sure that the crane is sufficiently supported depending on the load case and the ground conditions.
- Make sure that there is sufficient distance to excavations and slopes.
- Make sure that no obstacles are within the working range of the crane, which obstruct the required crane movements.
- Make sure that the crane has sufficient distance to live power lines.
- Make sure that the LICCON overload protection is set according to the data in the load chart.
- Make sure that the overload protection is set according to the actual set up configuration of the crane.
- Make sure that the electrical connections, the connector plug, the pull release, the cables and the protective insulation function. Replace missing or defective parts.
- Make sure that the cable routings on the electrical connections are seated tightly. If necessary, tighten loose screw connections.
- Make sure that the existing safety devices are functioning.
- Make sure that the overload protection is functioning.
- Make sure that the hoist limit switches are functioning.
- Make sure that the limit switch boom „steepest position“ is functioning.
- Make sure that the wind speed sensor easily moves and is functioning.

4.2 Additional controls for cranes with crane support

- Make sure that the folding / sliding beams are secured with pins to prevent them from sliding.
- Make sure that the support plates are secured in the operating position.
- Make sure that the crane is properly supported.
- Make sure that the crane is horizontally aligned.
- Make sure that the axle suspension is blocked (mobile crane).
- Make sure that the tires have no contact to the ground (mobile crane).

copyright © Liebherr-Werk Ehingen GmbH 2016

- Make sure that the track chains are secured to prevent them from sagging (crawler crane).

4.3 Additional controls for cranes on tires on the front and supported on the rear

- Make sure that the rear folding / sliding beams are secured with pins to prevent them from sliding.
- Make sure that the rear support plates are secured in the operating position.
- Make sure that the crane is properly supported on the rear.
- Make sure that the axle pressure compensation is correctly switched.
- Make sure that the axle suspension is blocked.
- Make sure that the tires of the rear axle group have no contact with the ground.
- Make sure that a sufficient tire pressure is present in the tires.
- Make sure that the ground for the front axle group is sufficiently level.

4.4 Additional controls for cranes supported on the front and on tires on the rear

- Make sure that the front folding / sliding beams are secured with pins to prevent them from sliding.
- Make sure that the front support plates are secured in the operating position.
- Make sure that the crane is properly supported on the front.
- Make sure that the axle pressure compensation is correctly switched.
- Make sure that the axle suspension is blocked.
- Make sure that the tires of the front axle group have no contact with the ground.
- Make sure that a sufficient tire pressure is present in the tires.
- Make sure that the ground for the rear axle group is sufficiently level.

4.5 Additional controls for freestanding crane operation (on tires)

- Make sure that all prerequisites for freestanding crane operation are met.
- Make sure that sufficient tire pressure is in all tires for crane operation on tires.
- Make sure that the ground is sufficiently level for crane operation on tires.

4.6 Additional controls for cranes with derrick boom

- Make sure that the shut off via the limit switch - derrick is functioning.
- Make sure that the entire swing range of the suspended ballast / ballast trailer is free of personnel and obstacles.

4.7 Additional controls for cranes with luffing auxiliary boom / accessories

- Make sure that the shut off via the limit switch luffing auxiliary boom / accessories „steepest position“ is functioning.
- Make sure that the shut off via the limit switch luffing auxiliary boom / accessories „lowest position“ is functioning.
- Make sure that the shut off via the limit switch flap in „steepest position“ position is functioning.
- Make sure that the pendulum of the mechanical relapse retainer moves easily over the entire swing range and is functioning.

4.8 Additional controls for certain crawler cranes

For existing crawler assembly key button:

- Make sure that the crawler assembly key button is turned off.

LWE/ab Muli 010/24201-02-02/en

copyright © Liebherr-Werk Ehingen GmbH 2016

5 Dangerous conditions without shut off

5.1 Block position of relapse cylinders when setting down the load

NOTICE
Damage to boom or relapse cylinder!
If the block position of the relapse cylinders is triggered by the boom or the derrick with attached, freely suspended load, then there is a danger of damaging the boom or the relapse cylinders when setting the load on the ground. By setting down the load, the crane is relieved, which causes the boom system to move to the rear.
There is no shut-off of the hoist gear down function.
- ▶ Actuate the opposite direction of movement which caused the block position and eliminate the block position.

6 Transporting components

WARNING
Danger of accident!
- ▶ If any components are transported on an auxiliary vehicle, then they must be properly secured. If necessary, transport these components on supports or using a special transport device.

6.1 Transporting lattice sections

WARNING
Danger of accident!
- ▶ If the lattice sections are pushed into each other for transport, the lattice sections must be safely rigged on the transport vehicle and secured on at least two independent points.

7 Pneumatic springs for assembly support of components

Pneumatic springs are installed on various crane components to simplify the installation of these components.

WARNING
Danger of crushing!
Defective pneumatic springs no longer provide the supporting properties on the movable components.
Due to falling components, personnel can be killed or severely injured.
High risk of accident.
- ▶ Always check pneumatic springs for damage before actuating the corresponding components.
- ▶ Do not use components with defective pneumatic springs. Replace defective pneumatic springs immediately.
- ▶ Make sure that no persons or objects are in the movement range of the moving components which is supported by the pneumatic spring.
- ▶ It is strictly prohibited to remain or place any objects in the movement or other danger zone of the moving crane components which are supported by the pneumatic spring.

LWE/ab Muli 010/24201-02-02/en

copyright © Liebherr-Werk Ehingen GmbH 2016

8 Manual rope winches for assembly support of components

Manual rope winches are installed on various components to simplify the installation or removal of these components.

WARNING
Danger of crushing!
Defective manual rope winches no longer provide the supporting action on the movable components.
Due to falling components, personnel can be killed or severely injured.
High risk of accident.
- ▶ Always check manual rope winches for external and functional damage before actuating the respective components.
- ▶ Check the rope of the manual rope winch for damage.
- ▶ At least two rope coils must always remain on the rope drum.
- ▶ Do not use components with defective manual rope winches. Replace defective manual rope winches.
- ▶ It is strictly prohibited for personnel or objects to remain within the movement range of the components, which are supported by the manual rope winch.
- ▶ It is prohibited for personnel or objects to remain within the danger zone of the moveable components.

9 Weights

Note
- ▶ The weight of each component is specified in the chapter 1.03 or the respective chapter in the Crane operating instructions or is stated on the tag attached to the corresponding component.
- ▶ If components are pushed into one another (for example intermediate pieces) or folded together (for example the folding jib), then the total weight is given by the sum of the individual components.

NOTICE
False estimation of weights
- ▶ Contact the Service department at **Liebherr-Werk Ehingen GmbH** if the weight of the respective component is not stated on the tag or in the Crane operating instructions.
- ▶ Use an auxiliary crane with sufficient load carrying capacity including judicious reserve.

10 Guy rods

WARNING
Boom can break off!
The arrangement of the guy rods for the boom or boom systems is stipulated in the rod plan. If the arrangement of the guy rods according to the rod plan is not observed, the crane can collapse, the boom can break off or the crane can topple over.
Personnel can be severely injured or killed.
- ▶ Always carry out the arrangement of the guy rods according to the rod plan.
- ▶ If an auxiliary guying is required for a certain boom length, then it must always be installed according to the rod plan on the position defined in the rod plan.

LWE/ab Muli 010/24201-02-02/en

copyright © Liebherr-Werk Ehingen GmbH 2016

WARNING
Unutilized guy rods on boom!
If guy rods are on the lattice sections which are not used for operation, then there is a danger of accidents.
Unused guy rods can loosen up and fall down.
Personnel can be severely injured or killed.
The load chart is invalid.
The load display of the LICCON computer system shows an incorrect value.
The weight of the boom is too large for erection.
▶ Disassemble and remove the guy rods which are not needed on the transport retainers before erecting the boom.

Note
▶ Inspection and maintenance of guy rods, see Crane operating instructions, chapter 8.15.
▶ In reference to the guy rods, observe section „Erection / take down“.

11 Auxiliary guying

The auxiliary guying is of significant importance for safe crane operation.

The auxiliary guying is a deciding factor in relieving the boom, or the boom system during erection and take down as well as during crane operation.

WARNING
The crane can topple over!
If the auxiliary guying is not installed or not installed on the position specified in the rod plan, then the crane can collapse, the boom can break off or the crane can topple over.
▶ If an auxiliary guying is specified in the rod plan for the required boom length, then it must be installed on the respective position.
▶ Make sure that the auxiliary guying is always completely installed and that all pins are properly pinned and secured.

12 Bypassing the overload protection

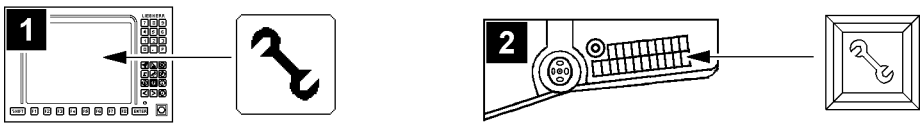

Fig.113438

– Illustration **1**: LICCON monitor (only certain crane types).
– Illustration **2**: Indicator light „Assembly“ in instrument panel crane cab (only certain crane types).

The overload protection is considered bypassed for:
– all types of assembly operations.
– all types of exceeded shut off limits of the overload protection.
– all types of emergency operation.
– all types of crane operation with deactivated or defective sensors and limit switches.
– all types of deviation from specified set up configuration of the crane.

LWE/ab Muli 010/24201-02-02/en

copyright © Liebherr-Werk Ehingen GmbH 2016

DANGER
Increased danger of accident due to bypass of the overload protection!
As section 4.2.6.3.2 of EN 13000 does not put the requirements of appendix 1 of the EC machinery directive 89/37/EC into concrete terms, the overload protection has not been designed according to this definition.
Proper and destined use of the crane is ensured due to the construction of the overload protection system and observance of the information in the Crane operating instructions. All **sensibly foreseeable erroneous operations** of the crane have been taken into consideration.
Impermissible crane operation with bypassed overload protection – with the aim of increasing the maximum load capacity of the crane above the rated value in the load chart or to extend the designated working range of the crane – does not constitute a **sensibly foreseeable erroneous operation**, rather **a deliberate improper use with high risk of accident**.
The possible risks and consequences of such deliberate improper use are detailed in the Crane operating instructions.
Such deliberate improper use can neither be prevented by means of the structural design nor by means of information in the Crane operating instructions

- ▶ Bypass the overload protection only according to the Crane operating instructions.
- ▶ Exceed the shut off limits of the overload protection only according to the Crane operating instructions.
- ▶ Any other use of the crane with bypassed overload protection than that described in the Crane operating instructions is prohibited.

If the maximum permissible load moment is exceeded, the overload protection turns all load moment increasing crane movements off.

This shut off can be bypassed or exceeded various ways by: For example:
- exceeding the shut off limits (utilization more than 100 % or leaving the load chart).
- activating an assembly operation.
- activating an emergency operation.

The displays of the LICCON overload protection remain functioning when all associated sensors and limit switches are active and a load chart is available.

WARNING
Increased danger of accident due to bypass of the overload protection!
If overload protection is bypassed, there is no further protection against overloading the crane.
In the event of deliberate improper use, the crane could collapse, the boom can break off or the crane can topple over.
Personnel can be killed.
This could result in high property damage.

- ▶ It is only permitted to bypass the overload protection for assembly or in emergencies.
- ▶ The bypass of the overload protection may only be carried out by persons who are aware of the effects of their acts.
- ▶ Bypassing the overload protection requires the presence of a person authorized by the crane operator and must be performed with utmost caution.
- ▶ It is strictly prohibited to operate the crane when the overload protection is bypassed.

12.1 Bypassing the LICCON overload protection

Note
- ▶ Applies only for cranes with LICCON overload protection.

Depending on the crane version, one or more operating elements are available to bypass the overload protection:
- Button in the control console.
- Key button on the LICCON monitor.
- Key button in the instrument panel.
- Key button in the switch cabinet.
- Sensor for transponder on the crane cab.

LWE/ab Muli 010/24201-02-02/en

copyright © Liebherr-Werk Ehingen GmbH 2016

▶ Actuate the respective operating element.

Result:

– The LICCON overload protection is bypassed / inactive.
– The „Assembly“ icon appears on the LICCON monitor.
– Depending on the circumstances, acoustic and / or optical warning signals (blinkers, flashing lights, bells and horns) sound.

If the LICCON overload protection is to be reactivated:
▶ No longer actuate the respective operating element or reset.

Result:

– The LICCON overload protection is active.
– The „Assembly“ icon no longer appears on the LICCON monitor.
– The acoustic and / or optical warning signals which were triggered by the bypass are turned off again.

12.2 Bypassing the PAT overload protection

Note
▶ Applies only for cranes with PAT overload protection.

▶ Actuate the bypass key button and turn the PAT overload protection off.

Result:

– The PAT overload protection is bypassed / inactive.

▶ Actuate the bypass key button and turn the PAT overload protection on.

Result:

– The PAT overload protection is active.

13 Bypassing the hoist top shut off

Note
▶ Applies only for cranes with hoist limit switch.

If the hook block contacts the hoist limit switch weight during its upward movement, the hoist limit switch is triggered. The crane movements „Spool up winches“, „Luff boom down“ and „Telescope telescopic boom out“ are turned off. The shut off can be bypassed.

WARNING
Danger of accidents due to bypass of Hoist top shut off!
When bypassing the hoist top shut off, there is a risk that the hook block may be pulled against the pulley head when continuing to lift or luffing down the boom. This may damage the pulleys and cause the loads to fall.
▶ The bypass of the hoist top shut off in crane operation with a load may only be carried out by a person authorized by the crane operator with the aid of a „Guide“. The guide must be in direct contact with the crane operator and must continually monitor the distance between the hook block and the boom head.
▶ Carry out all crane movements with maximum care and minimum speed.

LWE/ab Muli 010/24201-02-02/en

copyright © Liebherr-Werk Ehingen GmbH 2016

14 Assembly / disassembly

WARNING
Danger of fatal injury due to incorrect assembly or disassembly!
The assembly / disassembly of lattice sections and / or components may never be performed by untrained personnel.
An erroneous assembly / disassembly of lattice sections and / or components can cause damage on load carrying crane structures.
Crane components can fail due to improper assembly / disassembly.
Death, severe bodily injuries, property damage.

- ▶ Make sure that the assembly / disassembly of lattice sections and / or components is carried out only by authorized and trained expert personnel.
- ▶ Make sure that the fastening equipment on lattice sections and / or components is always fastened properly.
- ▶ Make sure that lattice sections and / or components are always properly pinned and secured at assembly.
- ▶ For assembly / disassembly of individual components, also observe the chapters relating to those components.
- ▶ The boom combinations must be assembled according to the separately supplied rod plans.
- ▶ The winch use is regulated in the master switch assignment in the Electric wiring diagram. The winches may only be operated according to this master switch assignment specified in the Electric wiring diagram.
- ▶ All components which must be transported separately must be transported with suitable auxiliary cranes and fastening equipment near ground level.

WARNING
Failure of auxiliary winch!

- ▶ Only use the auxiliary winch (assembly or reeving winch) for assembly and not to lift loads.
- ▶ Lifting of loads with the auxiliary winch is prohibited.

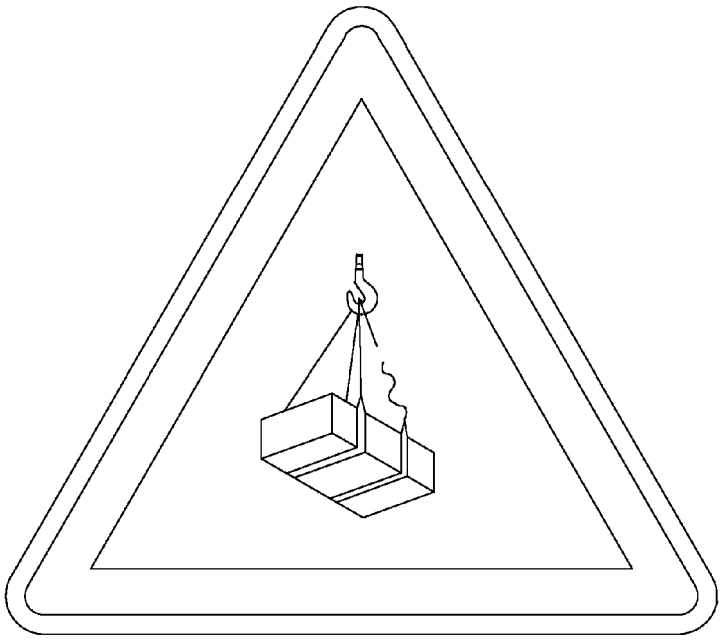

Fig.121169

LWE/ab Muli 010/24201-02-02/en

copyright © Liebherr-Werk Ehingen GmbH 2016

WARNING
Danger of impact / crushing!
When installing / removing crane components with the auxiliary crane, crane components can start to swing back and forth.
When lifting / lowering and positioning crane components, there is an increased danger of impacts / crushing.
Death, severe bodily injuries, property damage.
- ▶ Make sure that personnel cannot be caught by components.
- ▶ Make sure that the crane is horizontally aligned.
- ▶ When working in danger zones: Use aids to protect limbs.
- ▶ Guide components with suitable aids to minimize oscillation.
- ▶ During assembly / disassembly no one may be in the dangerous area around or underneath the suspended load before the load has been secured.

Part of the category „Aids for working aloft“ are, for example:
- Lifting platforms
- Scaffolding
- Auxiliary cranes
- Ladders

WARNING
Danger of falling!
During assembly / disassembly, inspection and maintenance work, assembly personnel must be secured with appropriate aids to prevent them from falling.
Death, severe bodily injuries, property damage.
- ▶ All work aloft, where there is a danger of falling must be carried out with suitable aids.
- ▶ If aids are not available and work cannot be carried out from the ground, then the assembly personnel must secure themselves with the supplied fall arrest system to prevent falling, see Crane operating instructions, chapter 2.04.
- ▶ If fall protection equipment is available, then it must be used, see Crane operating instructions, chapter 2.06.
- ▶ When lifting, lowering, swinging crane parts in and out, no persons may remain in the danger zone.
- ▶ When closing or opening boom systems during boom assembly or boom disassembly, no persons may remain on the boom system or in the danger zone.
- ▶ If railings are present for the crane, then they must be brought into the corresponding position and secured for assembly / disassembly work.
- ▶ Only step on the aids, ladders and catwalks with clean shoes.
- ▶ Keep aids, ladders and catwalks free of heavy dirt, snow, frost and ice.
- ▶ During all assembly and disassembly work, maintenance work and inspections, travel or crane operation is prohibited.
- ▶ Remaining on a suspended load is prohibited.
- ▶ Stepping and walking on crane components and lattice sections, which have an incline of more than 20° is prohibited.
- ▶ For all assembly work, the crane driver of the main crane must be in voice contact with the crane driver / crane drivers of the auxiliary crane / auxiliary cranes.
- ▶ For assembly tasks, the crane driver may only initiate crane movements when the responsible guide has explicitly released the movement.

DANGER
The components can fall down!
If the corresponding component is disengaged from the auxiliary crane before the corresponding component is pinned, then the corresponding component can fall down.
Death, severe bodily injuries, property damage.
- ▶ Do not disengage the auxiliary crane until the corresponding component is pinned and secured.

LWE/ab Muli 010/24201-02-02/en

copyright © Liebherr-Werk Ehingen GmbH 2016

WARNING
The components can fall down!
If the corresponding component is unpinned without being secured by an auxiliary crane, the corresponding component can fall down.
Death, severe bodily injuries, property damage.
▶ Do not unpin the components until they are secured by an auxiliary crane.

WARNING
Falling components and tools!
Whenever working aloft, for example on the crane or on an aerial platform, components or tools can fall down.
Death, severe bodily injuries, property damage.
▶ Make sure that the danger zone under the work area is blocked off and marked.

14.1 Assembly drawings

WARNING
Use of assembly drawings!
Due to sole use of assembly drawings, dangerous situations can arise up to toppling of the crane.
Death, severe bodily injuries, property damage.
▶ Assembly drawings should only be considered to be **additional** and **supplementary** information.
▶ The respective chapters in the crane operating instructions are decisive for the assembly and disassembly of crane structures, lattice sections or crane components.
▶ The detailed information and danger notes in the respective chapters must be observed.

14.2 Guiding crane structures, lattice sections or crane components

WARNING
Danger due to oscillating load!
During the assembly of crane structures, lattice sections or crane components with the auxiliary crane, they can start to swing back and forth.
Death, severe bodily injuries, property damage.
▶ To guide and position crane structures, lattice sections or crane components always use a guide rope.
▶ Make sure that there are no persons or obstacles within the danger zone.
▶ Make sure that the guide rope is long enough.

14.3 Pin connections

WARNING
Danger due to pin connections!
If pins / pin connections are not properly greased or lubricated before installation, then they can corrode.
The pins can be stuck in the pin bores and / or be damaged.
During the unpinning procedure, the pins can suddenly release.
Death, severe bodily injuries, property damage.
▶ Make sure that all pins, which are not supplied with grease via the central lubrication system are sufficiently greased before assembly.
▶ Make sure that all lube points, which are equipped with a grease fitting, are properly greased at assembly and according to the respective interval specification.
▶ Make sure that all pins are secured with the intended retaining elements to prevent them from loosening up by themselves.
▶ Never pin or unpin pins by force.

LWE/ab Muli 010/24201-02-02/en

copyright © Liebherr-Werk Ehingen GmbH 2016

14.4 Assembly / disassembly of electrical lines

WARNING
The crane can topple over!
If mechanical crane components, which have electrical connections are not immediately electrically connected after installation, then the limit switches and / or electrical sensors are not functioning.
Safety relevant shut offs are not recognized by the LICCON computer system.
Any errors or safety relevant messages which might occur are not shown on the LICCON computer system.
Death, severe bodily injuries, property damage.
- ▶ Make sure that the electrical connections are made immediately after installation of the respective crane components on the crane.
- ▶ Make sure that the procedure to make the electrical connections to the boom end sections in the respective assembly and set up chapters are observed.

NOTICE
Danger of damage of electrical connections!
If the following measures are not adhered to, the electrical connections can be damaged.
- ▶ Do not plug in the plug connection or unplug them under tension.
- ▶ Do not pinch or crush electrical connections.

When pulling the cable out:
- ▶ Hold the plug and not the cable. Do not pull on the cable to release the plug connection.
- ▶ Relieve the electrical connections in operating condition.
- ▶ In case of defective or faulty electrical lines, contact Service at Liebherr-Werk Ehingen.

WARNING
Faulty function if dummy plugs are not installed!
If the dummy plugs on the non-required electrical connections are not installed, then faulty functions or functional limitations can occur on the crane.
- ▶ Make sure that all non-required electrical connections, which have a dummy plug, are closed off with dummy plugs.
- ▶ Pay attention to the Electrical wiring diagram.

NOTICE
Property damage due to dirt and / or corrosion!
The plug connections are only protected when plugged in. If the plug connections are not plugged in, then the contact surfaces can corrode.
This could result in faulty functions.
- ▶ Always plug or screw the plug connections together properly.
- ▶ Keep plug connections clean and dry. Clean contact surfaces provide the best signal transfer.
- ▶ Close off the plug connections with dust caps.

- ▶ Establish the electrical connections to the installed crane components properly.
- ▶ As a rule, close off on-required electrical connections (for example for accessories which are not installed) with the respective dummy plugs.
- ▶ Properly close off electrical connections, which have no dummy plugs, with the corresponding protective dust or cover caps.

If a pull release for the cable drum is present:
- ▶ Hang the pull release in on the fixed point and relieve the plug connections from the pull strain.

After installing the plug connections:
- ▶ Check all plug connections for proper connection.

If a plug connection is not properly connected:
- ▶ Plug or screw the plug connection together properly.

LWE/ab Muli 010/24201-02-02/en

copyright © Liebherr-Werk Ehingen GmbH 2016

After removing the plug connections:

- ▶ Protect the electrical connections with protective dust or cover caps or place them in intended storage retainers.
- ▶ After unplugging the electrical plug connections, install the dummy plugs, see Electrical wiring diagram.

If locking brackets are present:

- ▶ Close the locking bracket.

14.5 Assembling / disassembly of hydraulic lines

When connecting and releasing hydraulic lines with quick couplings, make sure that the coupling procedure is carried out correctly.

WARNING
Danger of accident due to loss of pressure or leakage!
Incorrectly coupled or self-loosening quick couplings (particularly return lines) can result in serious accidents due to component failure.
Death, severe bodily injuries, property damage.

- ▶ Check the quick couplings after assembly for correct connection.
- ▶ Make sure that the sleeve and plug after fastened after assembly with the hand nut.

WARNING
Pressure in the hydraulic lines!
If the pressure supply is not interrupted before releasing the hydraulic lines, the hydraulic oil can escape with high pressure.
Death, severe bodily injuries, property damage.

- ▶ Release the pressure in the hydraulic system before releasing. Interrupt the pressure supply and wait for a short time.

- ▶ Release the pressure in the hydraulic system before connecting and disconnecting: Turn the engine off and wait for short time.
- ▶ Connect the coupling components (sleeve and connector) and screw together with the hand-tightened nut.
- ▶ Tighten the hydraulic coupling by hand. Rotate the hand-tightened nut until it reaches a tangible, fixed stop position.

14.6 Bypass at assembly / disassembly Crawler

Note

- ▶ Applies only for cranes with crawler assembly key button.

WARNING
High risk of injury in case of actuated crawler assembly key button!
If the crawler assembly key button is actuated, the overload protection is bypassed. No shut off at overload will occur in assembly operation nor in crane operation.
In the event of deliberate misuse, the crane can topple over.
Death, severe bodily injuries, property damage.

- ▶ The crawler assembly key button may only be actuated for assembly tasks.
- ▶ All other usage of the crawler assembly key button other than as described in the operating instructions is prohibited.
- ▶ Operating the crane with the crawler assembly key button enabled is strictly prohibited.

LWE/ab Muli 010/24201-02-02/en

copyright © Liebherr-Werk Ehingen GmbH 2016

14.6.1 Activating the bypass at crawler assembly and crawler disassembly

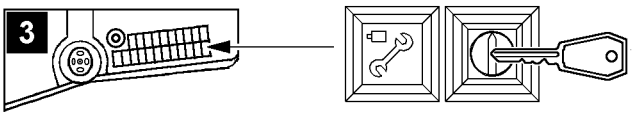

Fig.113441

– Illustration **3**: Crawler assembly key button and indicator light *Crawler assembly* with touch function *Crawler assembly off*

▶ Actuate the crawler assembly key button.

Result:

– The LICCON overload protection is inactive.
– The indicator light *Crawler assembly* lights up.

14.6.2 Deactivating the bypass at crawler assembly and crawler disassembly

Make sure that the following prerequisites are met:
– The LICCON overload protection is bypassed / inactive and the „Bypass at assembly and disassembly“ is activated.
– The indicator light *Crawler assembly* lights up.

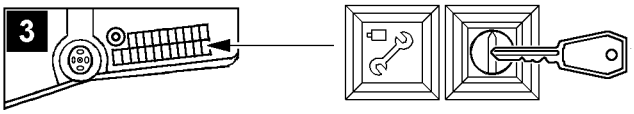

Fig.113441

If the bypass at crawler assembly is to be turned off:
▶ Turn the crawler assembly off by pressing the off button *Crawler assembly off*.

Result:

– The indicator light in the button *Crawler assembly* turns off.

14.7 Bypass at assembly / disassembly

Depending on the crane version, the „Bypass at assembly and disassembly“ is activated by:
– The set up button (key button) on the LICCON monitor.
– The assembly key button in the instrument panel.

Note
▶ Applies only for cranes with LICCON overload protection.
▶ Indicator light *Assembly* is only present in the instrument panel for certain crane types.

LWE/ab Muli 010/24201-02-02/en

copyright © Liebherr-Werk Ehingen GmbH 2016

WARNING
High danger of accident at crane operation with activated „Bypass at assembly and disassembly“!
At activated „Bypass at assembly and disassembly“ the overload protection and possibly bypassed hoist limit switches.
In the event of deliberate improper use, the crane could collapse, the boom can break off or the crane can topple over.
Personnel can be killed.
This could result in high property damage.

- ▶ The activation of the „Bypass at assembly and disassembly“ is only permissible for assembly and disassembly purposes.
- ▶ All other usage of the „Bypass at assembly and disassembly“ other than as described in the operating instructions is prohibited.
- ▶ The „Bypass at assembly and disassembly“ may only be activated by persons who are aware of the consequences of a bypass.
- ▶ Crane operation with activated „Bypass at assembly and disassembly“ is strictly prohibited.
- ▶ The „Bypass at assembly and disassembly“ must be deactivated immediately after assembly and disassembly work.
- ▶ The crane operator or a person authorized by him must make sure that no misuse of the bypass device is possible (remove the key and store it safely, if necessary).

14.7.1 Activating the bypass at assembly and disassembly

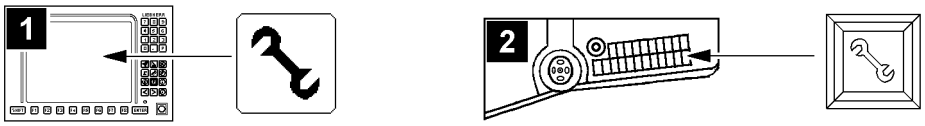

Fig.113438

– Illustration **1**: LICCON monitor (only certain crane types).
– Illustration **2**: Indicator light „Assembly“ in instrument panel crane cab (only certain crane types).

▶ Actuate the respective operating element.

Result:

– The LICCON overload protection is bypassed / inactive and the „Bypass at assembly and disassembly“ is activated.
– The „Assembly“ icon appears in the LICCON monitor and / or the indicator light „Assembly“ in the instrument panel lights up.
– Depending on the circumstances, acoustic and / or optical warning signals (blinkers, flashing lights, bells and horns) sound.

14.7.2 Bypass at assembly and disassembly

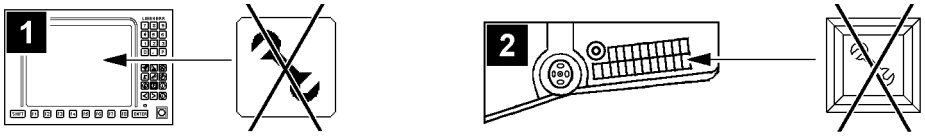

Fig.113437

▶ No longer actuate the respective operating element or reset.

Result:

– The LICCON overload protection is active and the „Bypass at assembly and disassembly“ is deactivated.
– The „Assembly“ icon turns off in the LICCON monitor and / or the indicator light „Assembly“ in the instrument panel no longer lights up.

LWE/ab Muli 010/24201-02-02/en

copyright © Liebherr-Werk Ehingen GmbH 2016

– The acoustic and / or optical warning signals which were triggered by the bypass are turned off again.

14.8 Assembly / disassembly of booms

WARNING
The crane can topple over!
Angular pull can overload the crane.
Overload can cause destruction of the crane or cause it to topple over.
Death, severe bodily injuries, property damage.
- ▶ The hook block must always be attached (hooked) vertically over the center of gravity of the load to be lifted.
- ▶ Angular pull is prohibited.

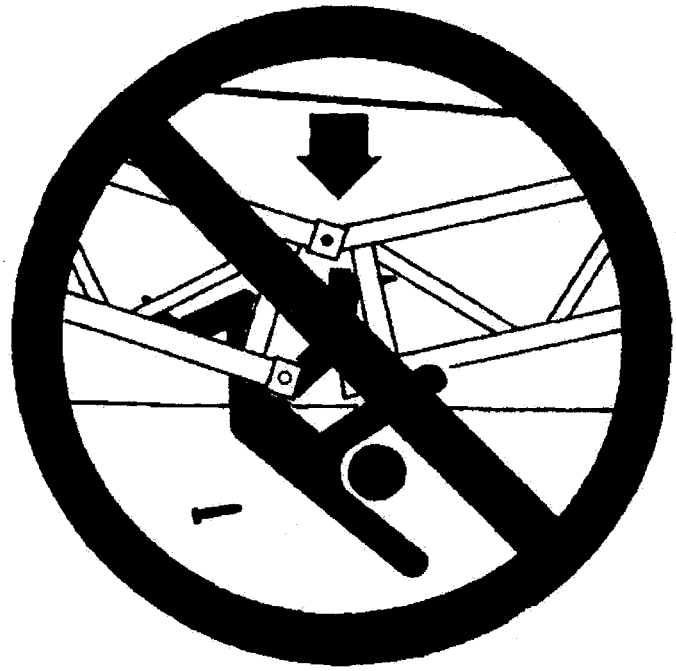

Fig.113444

WARNING
Danger of accident at assembly / disassembly of booms!
When you disassemble unsecured or unsupported booms, they can fall down.
Death, severe bodily injuries, property damage.
- ▶ Never unpin the pins under unsecured or unsupported booms.
- ▶ Never unpin the connecting pins on unsecured or unsupported booms.
- ▶ Do not stand under the booms or within the complete danger zone during the pinning and unpinning procedure of the booms.
- ▶ Secure the pins in the storage locations and in the receptacles.
- ▶ The railing at assembly and disassembly of booms must be horizontal.
- ▶ Do not lean the ladder against the component being disassembled.

LWE/ab Muli 010/24201-02-02/en

copyright © Liebherr-Werk Ehingen GmbH 2016

WARNING
Danger of accident due to distorted pins!
Angular pulling or excessive / low hoisting force of the auxiliary crane may result in distortion of the pins.
Distorted parts can suddenly fly off when the pins are unpinned.
Death, severe bodily injuries, property damage.
- ▶ When the pins are unpinned, the „lifting force“ of the crane must be adapted to the „weight“ of the parts being lifted.
- ▶ Do **not** remove difficult to remove pins by force.
- ▶ Remedy the cause of the distortion.

WARNING
If the following specifications are not observed, accidents can result:
- ▶ Pin or unpin both pins at the same horizontal level, i.e. **left and right**.
- ▶ Pin the lower collar pins **from the inside to the outside** and unpin from the **outside to inside**.
- ▶ Insert and unpin horizontally installable double cone pins from the **outside to inside**.
- ▶ Insert and unpin vertically installable double cone pins from **top to bottom**.

Make sure that the following prerequisites are met:
- – If parts of the equipment (for example lattice sections) are not in contact with the ground during assembly / disassembly, then they must be supported with suitable, stable materials.
- – Select the height of the support so that the parts of the equipment are not in contact with the ground.
- – Place the parts of the equipment with rope pulleys down in such a way that the rope pulleys are not damaged.
- – During disassembly make sure that the auxiliary crane can lift the load vertically.
- – Have an auxiliary crane with sufficient load carrying capacity available to be able to hold the load at a respective radius.

14.9 Fastening positions for assembly / disassembly of the lattice jib

WARNING
Danger of fatal accidents due falling components!
The maximum permissible tensile load on the fastening eye is engraved on the fastening eye.
The maximum permissible fastening load of the respective components can differ to the maximum permissible tensile load of the fastening eye.
Components can be damaged at overload and fall down during lifting.
- ▶ Observe the maximum permissible fastening load according to the operating instructions and the tags on the components.
- ▶ Fasten the lattice jib only according to the following descriptions.
- ▶ Do not overload the components.

LWE/ab Muli 010/24201-02-02/en

copyright © Liebherr-Werk Ehingen GmbH 2016

14.9.1 Closing the end section

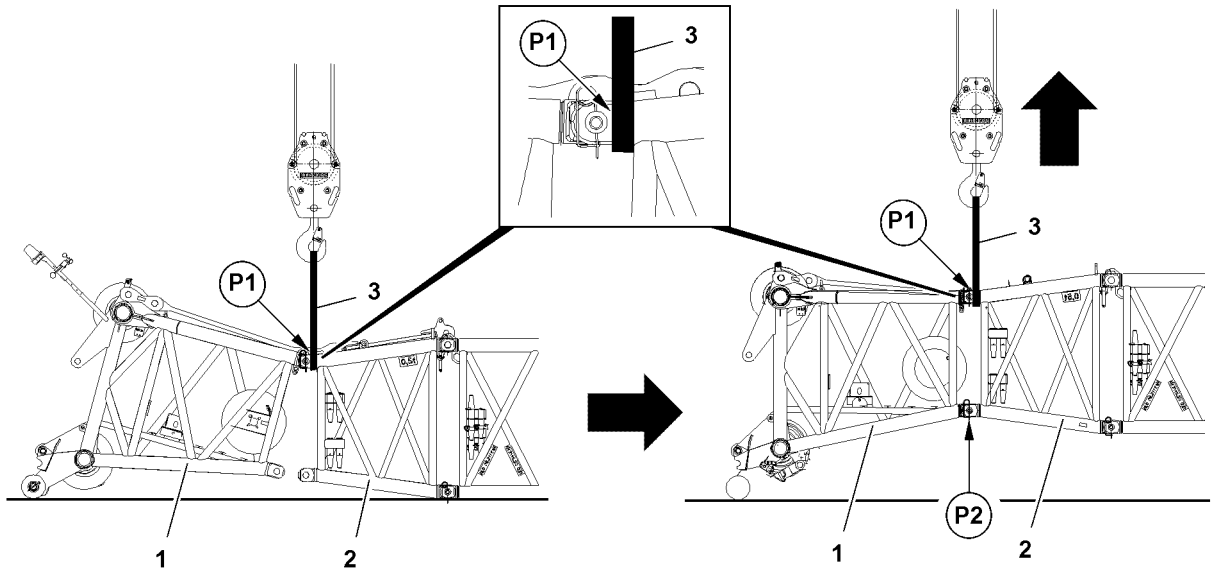

Fig.117840: Closing the end section

For closing the end section, observe the following:
- Use textile type fastening equipment **3**.
- Loop the textile type fastening equipment **3** on the left and right around on the pin points.

Before fastening:
- ▶ Check the position of the spring retainers and correct, if necessary.
- ▶ Fasten the textile type fastening equipment **3** on the upper pin points **P1** between the end section **1** and the pinned components **2**.
- ▶ Lift the lattice jib until the lower pin points **P2** align between the end section **1** and components **2**.
- ▶ Pin the end section **1** and components **2** on the lower pin points **P2** on the left and right.

After pinning:
- ▶ Remove the textile type fastening equipment **3**.

14.9.2 Placing the lattice jib into the pulley cart

Note
- ▶ The following illustrations are examples and may not match your crane exactly.

copyright © Liebherr-Werk Ehingen GmbH 2016

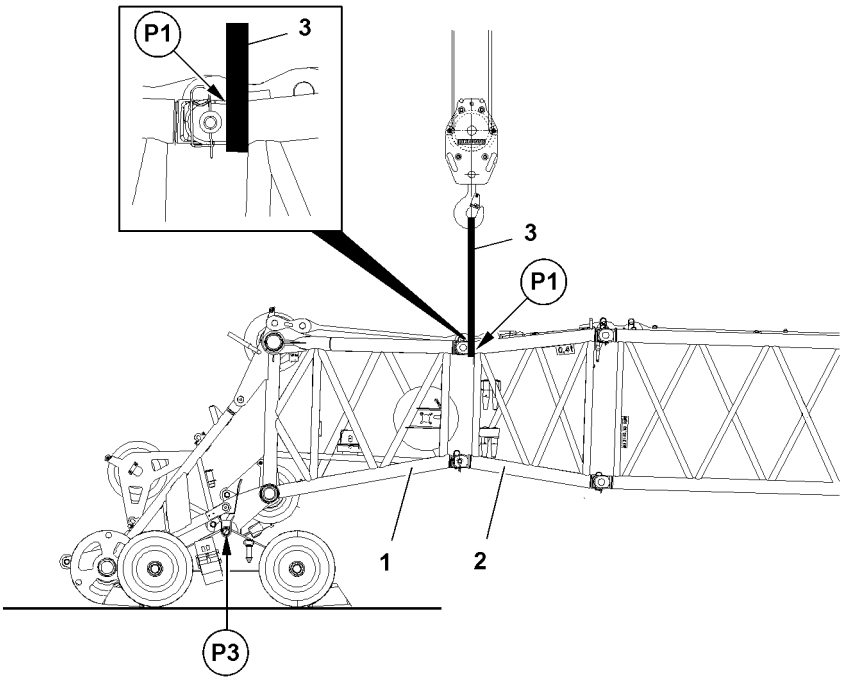

Fig.117842: Place the lattice jib into the pulley cart (telescopic crane with lattice jib)

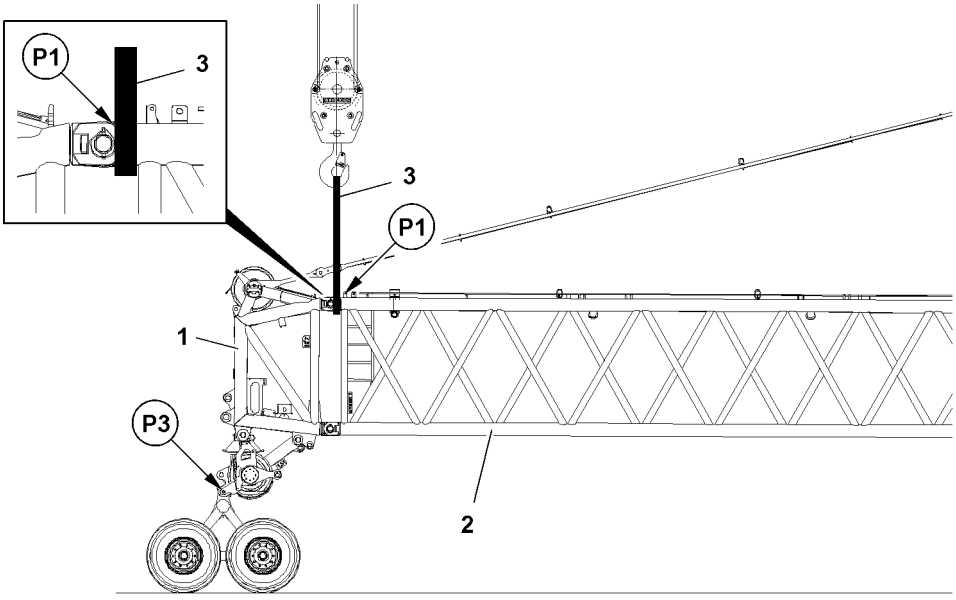

Fig.121550: Place the lattice jib into the pulley cart (lattice mast crane)

When placing it into the pulley cart, observe the following:
- The end section **1** is completely installed.
- Use textile type fastening equipment **3**.
- Loop the textile type fastening equipment **3** on the left and right around on the pin points.

Before fastening:
- ▶ Check the position of the spring retainers and correct, if necessary.
- ▶ Fasten the textile type fastening equipment **3** on the upper pin points **P1** between the end section **1** and the pinned components **2**.
- ▶ Lift the lattice jib and place it in the pulley cart **4**.
- ▶ Pin the end section **1** with the pulley cart **4** on the pin points **P3** on the left and right.
- ▶ Remove the textile type fastening equipment **3**.

LWE/ab Muli 010/24201-02-02/en

copyright © Liebherr-Werk Ehingen GmbH 2016

Note

▶ The disassembly and removal of the pulley cart **4** is handled accordingly.

14.9.3 Opening the end section

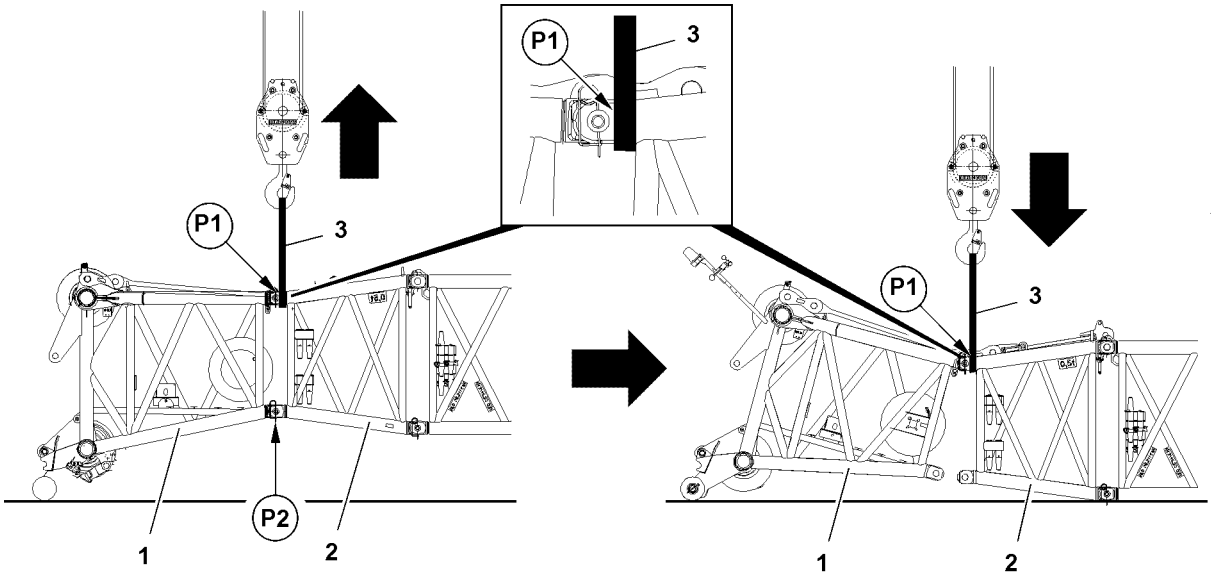

Fig.117841: Opening the end section

For opening the end section, observe the following:

- The pulley cart is disassembled and removed.
- Use textile type fastening equipment **3**.
- Loop the textile type fastening equipment **3** on the left and right around on the pin points.

Before fastening:

▶ Check the position of the spring retainers and correct, if necessary.
▶ Fasten the textile type fastening equipment **3** on the upper pin points **P1** between the end section **1** and the pinned components **2**.
▶ Lift the lattice jib and relieve the pins on the lower pin points **P2**.
▶ Unpin the end section **1** and components **2** on the lower pin points **P2** on the left and right.
▶ Place the lattice jib on the ground.
▶ Remove the textile type fastening equipment **3**.

LWE/ab Muli 010/24201-02-02/en

copyright © Liebherr-Werk Ehingen GmbH 2016

14.9.4 Holding the luffing lattice jib

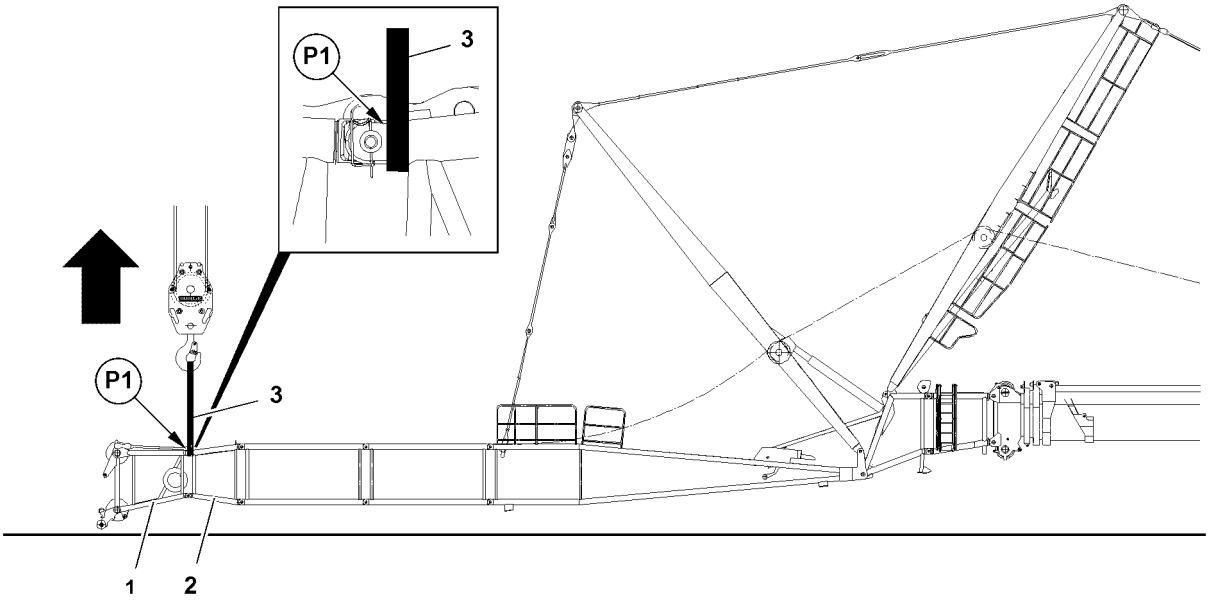

Fig.117843: Holding the luffing lattice jib

To be able to install or remove the guy rods and "flying assembly", the luffing lattice jib must be held on the upper pin points **P1**.

When holding the luffing lattice jib, observe the following:
- The lattice jib has been completely assembled.
- Use textile type fastening equipment **3**.
- Loop the textile type fastening equipment **3** on the left and right around on the pin points.

Before fastening:
- ▶ Check the position of the spring retainers and correct, if necessary.
- ▶ Fasten the textile type fastening equipment **3** on the upper pin points **P1** between the end section **1** and the pinned components **2**.
- ▶ Lift the lattice jib and install the guy rods.

When the guy rods are installed:
- ▶ Remove the textile type fastening equipment **3**.

Note
- ▶ The removal of the guy rods is handled accordingly.

14.9.5 Assembling the fixed lattice jib on the TF-adapter

WARNING
Mortal danger if the lattice jib tilts over!
Due to unfavorable center of gravity, only certain lattice jib lengths can be installed / removed as an assembled lattice jib.
If a lattice jib length cannot be installed / removed as an assembled lattice jib, then they must be installed / removed individually in flying mode.
- ▶ Check if the respective lattice jib length can be installed / removed as an assembled lattice jib. See charts in the Crane operating instructions, chapter 5.01.10.

LWE/ab Muli 010/24201-02-02/en

copyright © Liebherr-Werk Ehingen GmbH 2016

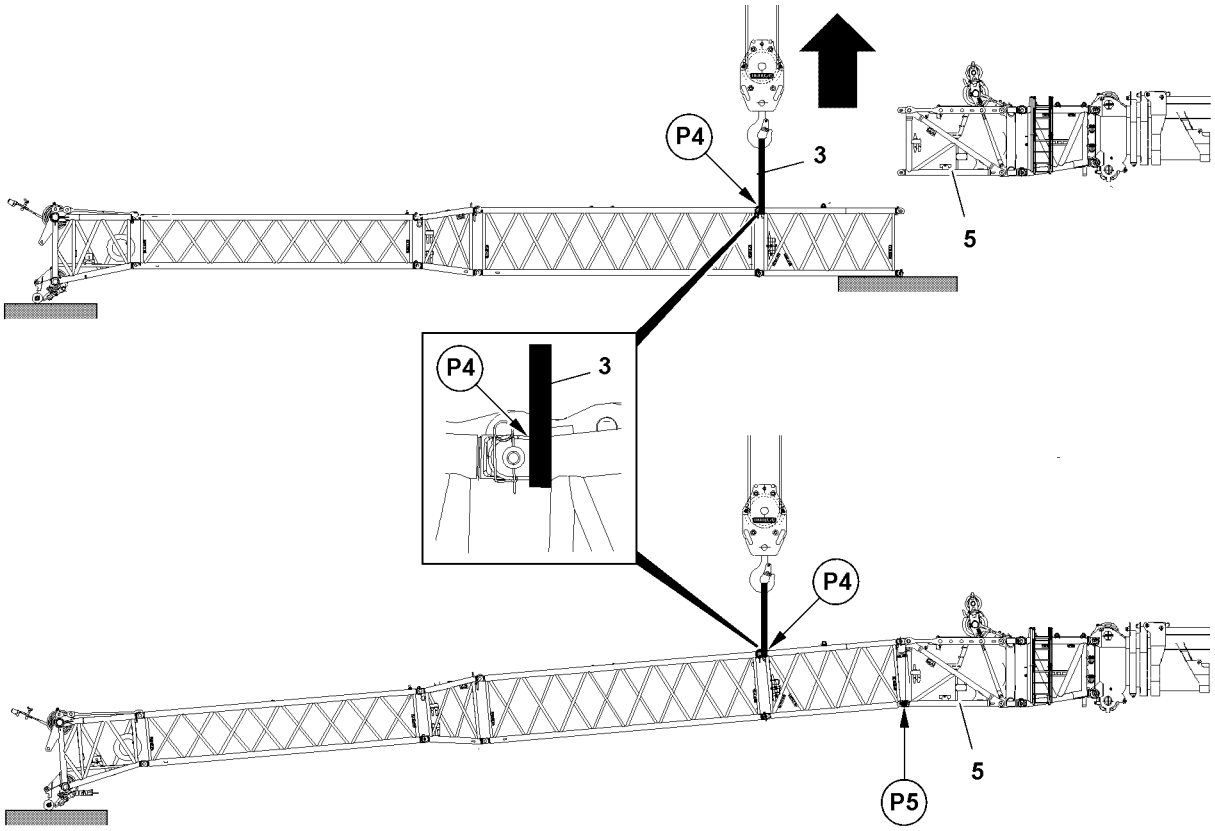

Fig.117844: Assembling the lattice jib on the TF-adapter

For installation on the TF-adapter, observe the following:
- The lattice jib has been assembled.
- The TF-adapter **5** is installed.
- Use textile type fastening equipment **3**.
- Loop the textile type fastening equipment **3** on the left and right around on the pin points.

Before fastening:
▶ Check the position of the spring retainers and correct, if necessary.

Fasten between the lattice sections, which are installed directly on the TF-adapter.

▶ Fasten the textile type fastening equipment **3** on the upper pin points **P4**.
▶ Lift the lattice jib and affix on the lower pin point **P5** on the TF-adapter **5**.
▶ Pin the lattice jib on the lower pin point **P5** with the TF-adapter **5**.

After pinning:
▶ Remove the textile type fastening equipment **3**.

WARNING
Mortal danger if the lattice jib tilts over!
▶ Make sure to always observe the permissible lattice jib length at disassembly.

▶ Disassemble accordingly.

copyright © Liebherr-Werk Ehingen GmbH 2016

14.9.6 Closing the fixed lattice jib

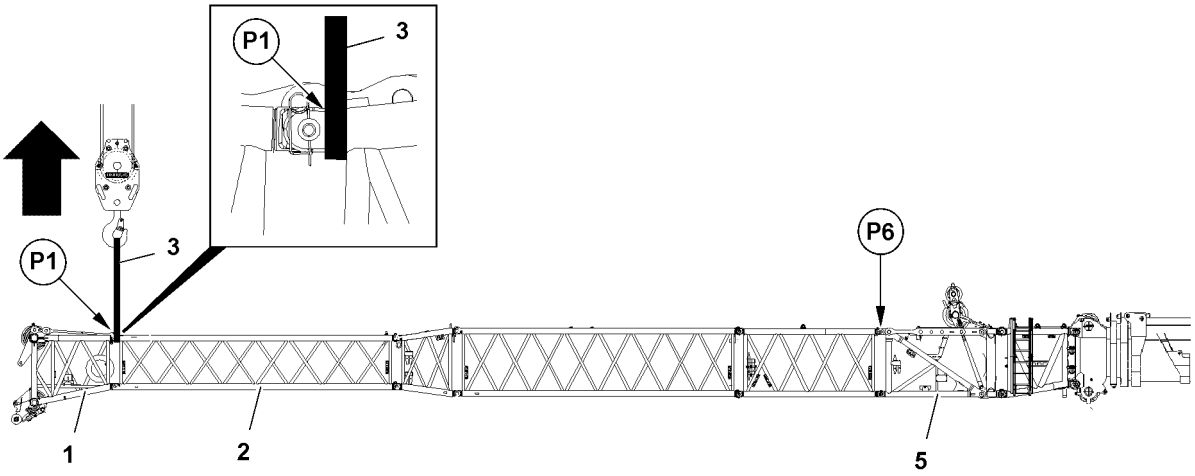

Fig.117850: Closing the lattice jib

For installation on the TF-adapter, observe the following:
- The lattice jib is pinned on the lower pin points of the TF-adapter **5**.
- Use textile type fastening equipment **3**.
- Loop the textile type fastening equipment **3** on the left and right around on the pin points.

Before fastening:
- ▶ Check the position of the spring retainers and correct, if necessary.
- ▶ Fasten the textile type fastening equipment **3** on the upper pin points **P1** between the end section **1** and the pinned components **2**.
- ▶ Lift the lattice jib and affix on the upper pin point **P6** on the TF-adapter **5**.
- ▶ Pin the lattice jib on the upper pin point **P6** with the TF-adapter **5**.

After pinning:
- ▶ Remove the textile type fastening equipment **3**.

Note
- ▶ Disassemble accordingly.

copyright © Liebherr-Werk Ehingen GmbH 2016

14.9.7 Angle adjustment on the fixed lattice jib

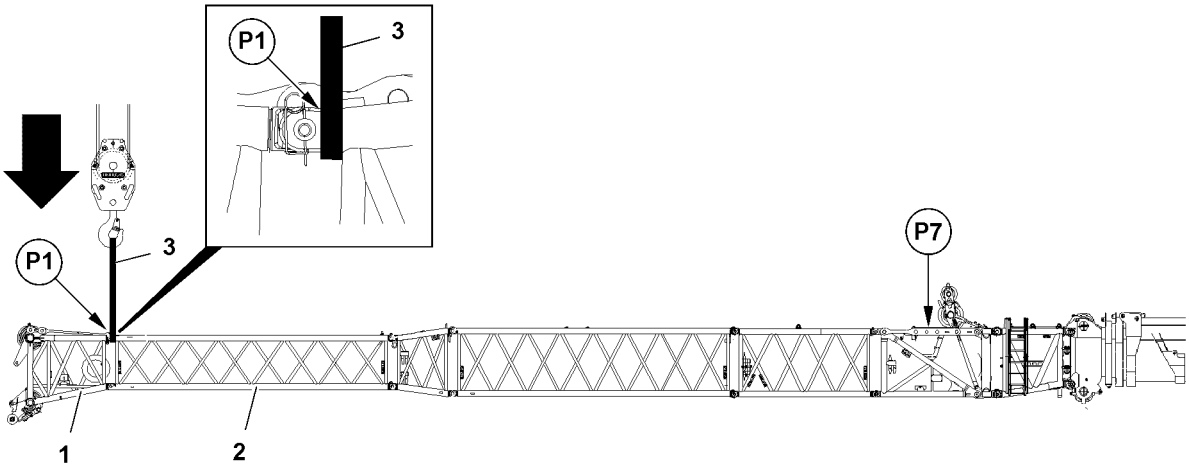

Fig.117851: Angle adjustment on the fixed lattice jib

For the angle adjustment on the fixed lattice jib, observe the following:
- The lattice jib has been completely assembled.
- Use textile type fastening equipment **3**.
- Loop the textile type fastening equipment **3** on the left and right around on the pin points.

Before fastening:
- ▶ Check the position of the spring retainers and correct, if necessary.
- ▶ Fasten the textile type fastening equipment **3** on the upper pin points **P1** between the end section **1** and the pinned components **2**.
- ▶ Lift the lattice jib and relieve the pins on the angle adjustment **P7**.
- ▶ Unpin the angle adjustment **P7**, see Crane operating instructions, chapter 5.03.
- ▶ Set and pin a New angle on the angle adjustment **P7**, see Crane operating instructions, chapter 5.03.
- ▶ Lower the lattice jib.

After lowering:
- ▶ Remove the textile type fastening equipment **3**.

14.9.8 Loading the preassembled lattice jib

For loading the lattice jib, observe the following:
- The lattice jib has been preassembled.
- Use textile type fastening equipment.
- Loop the textile type fastening equipment on the left and right around on the pin points.

Before fastening:
- ▶ Check the position of the spring retainers and correct, if necessary.
- ▶ Fasten the preassembled lattice jib according to the fastening points in the Crane operating instructions, chapter 5.03.

copyright © Liebherr-Werk Ehingen GmbH 2016

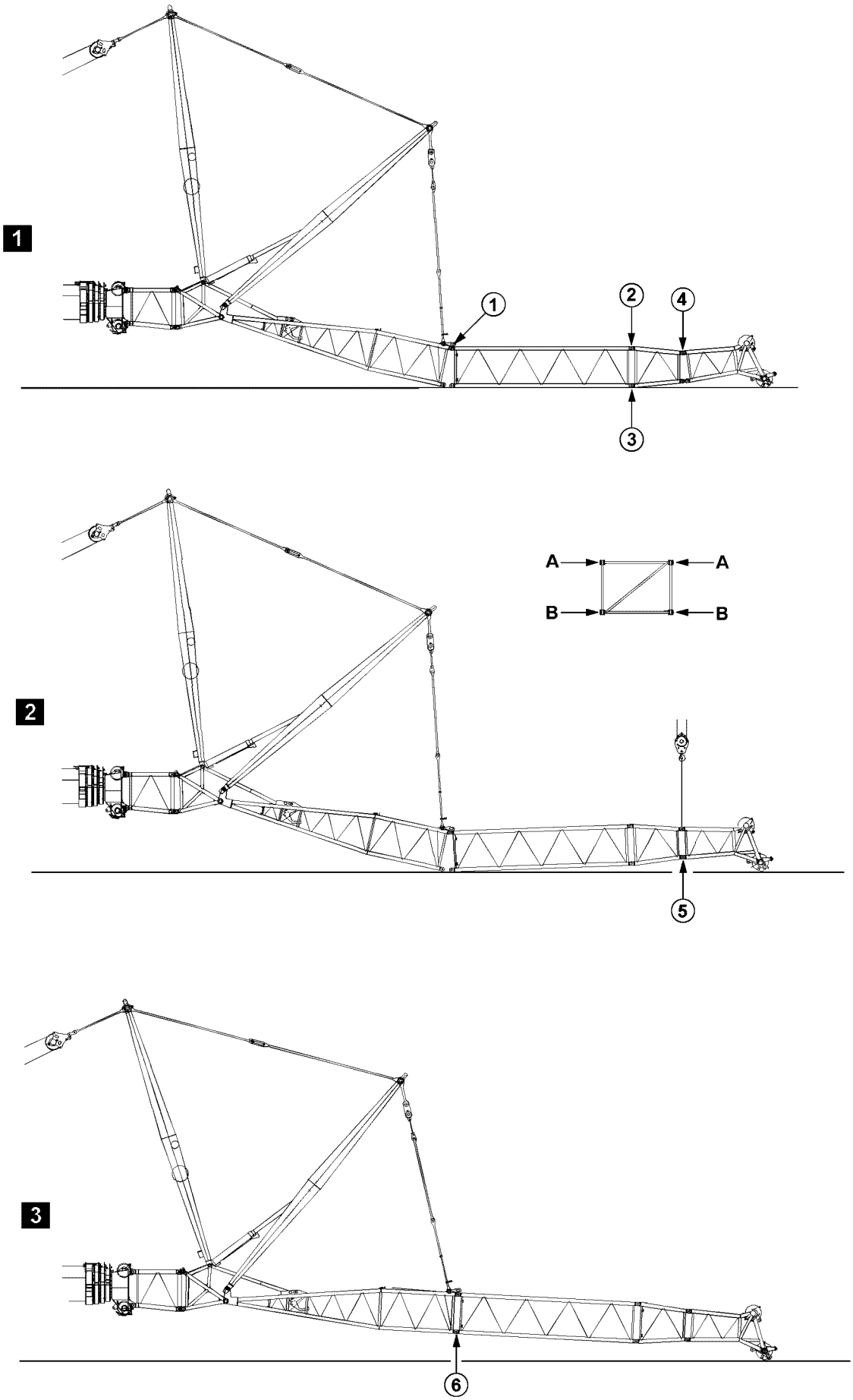

Fig.197718: Example for cranes with telescopic boom

LWE/ab Muli 010/24201-02-02/en

copyright © Liebherr-Werk Ehingen GmbH 2016

14.10 Assembly / disassembly of lattice sections on telescopic cranes with guyed auxiliary boom with an auxiliary crane

14.10.1 Assembly of lattice sections for guyed auxiliary boom with an auxiliary crane

The illustrations serve as examples. The illustrations may differ depending on the crane.

WARNING
Danger of fatal injury when assembling auxiliary booms!
If the pins are not pinned in the given sequence, then lattice sections may suddenly fold down or fall down.
Death, severe bodily injuries, property damage.
▶ Pins must be pinned in the order specified.

▶ Pin and secure pins at both sides (level **A**) at point **1**, illustration **1**.
▶ Pin and secure pins at both sides (level **A**) at point **2**, illustration **1**.
▶ Pin and secure pins at both sides (level **B**) at point **3**, illustration **1**.
▶ Pin and secure pins at both sides (level **A**) at point **4**, illustration **1**.
▶ Close the end section with the auxiliary crane, illustration **2**.
▶ Pin and secure pins at both sides (level **B**) at point **5**, illustration **2**.
▶ Lift the lattice sections, illustration **3**.
▶ Pin and secure pins at both sides (level **B**) at point **6**, illustration **3**.

LWE/ab Muli 010/24201-02-02/en

copyright © Liebherr-Werk Ehingen GmbH 2016

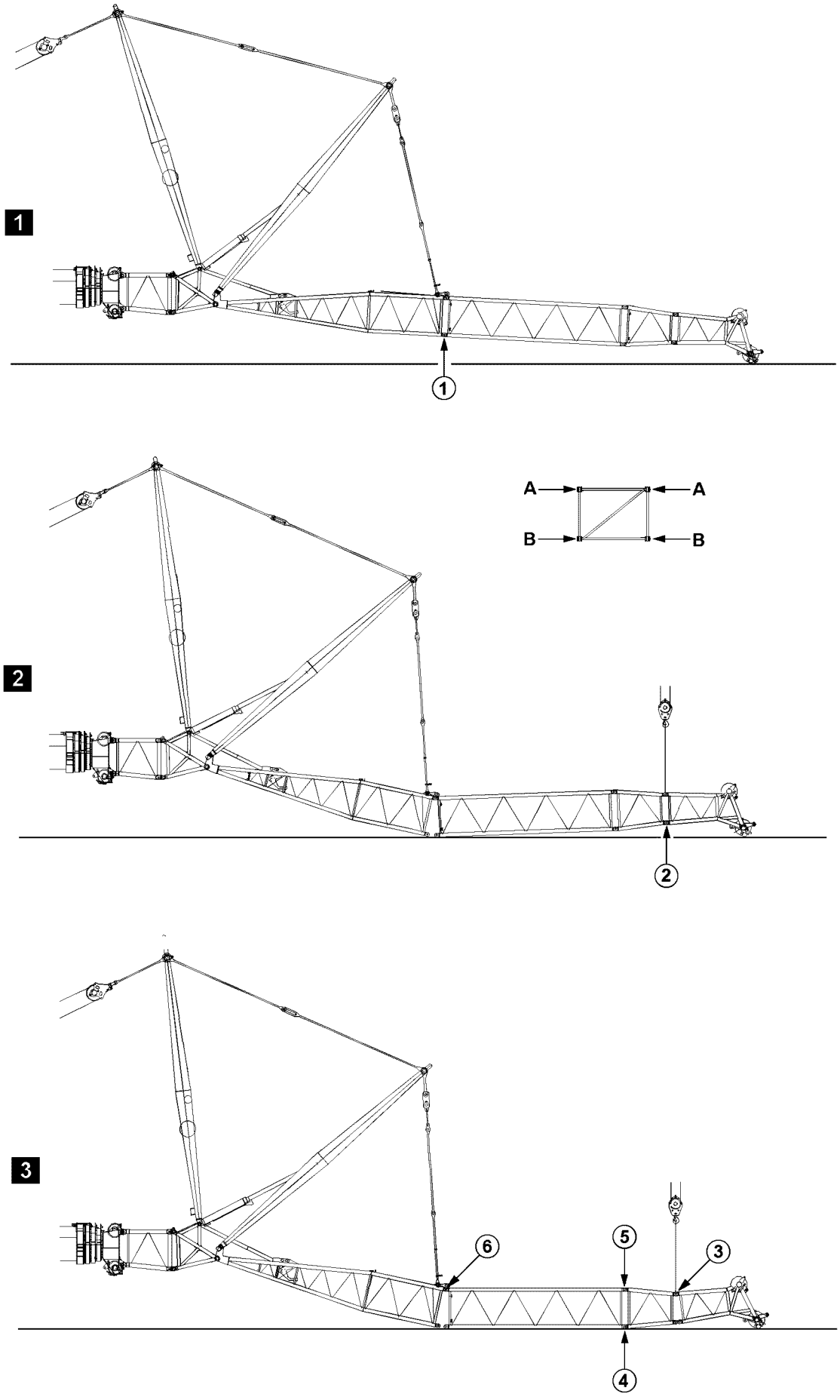

Fig.197719: Example for cranes with telescopic boom

LWE/ab Muli 010/24201-02-02/en

copyright © Liebherr-Werk Ehingen GmbH 2016

14.10.2 Disassembly of lattice sections for guyed auxiliary boom with an auxiliary crane

The illustrations serve as examples. The illustrations may differ depending on the crane.

WARNING
Danger of fatal injury when disassembling auxiliary booms!
If the pins are not unpinned in the given sequence, then lattice sections may suddenly fold down or fall down.
Death, severe bodily injuries, property damage.
▶ Pins must be unpinned in the order specified.

- ▶ Luff the auxiliary boom down until the end section touches the ground slightly, illustration **1**.
- ▶ Release and unpin the pins at both sides (level **B**) at point **1**, illustration **1**.
- ▶ Completely remove the lattice sections, illustration **2**.
- ▶ Lift the end section with the auxiliary crane, illustration **2**.
- ▶ Release and unpin the pins at both sides (level **B**) at point **2**, illustration **2**.
- ▶ Release and unpin the pins at both sides (level **A**) at point **3**, illustration **3**.
- ▶ Release and unpin the pins at both sides (level **B**) at point **4**, illustration **3**.
- ▶ Release and unpin the pins at both sides (level **A**) at point **5**, illustration **3**.
- ▶ Release and unpin the pins at both sides (level **A**) at point **6**, illustration **3**.

LWE/ab Muli 010/24201-02-02/en

copyright © Liebherr-Werk Ehingen GmbH 2016

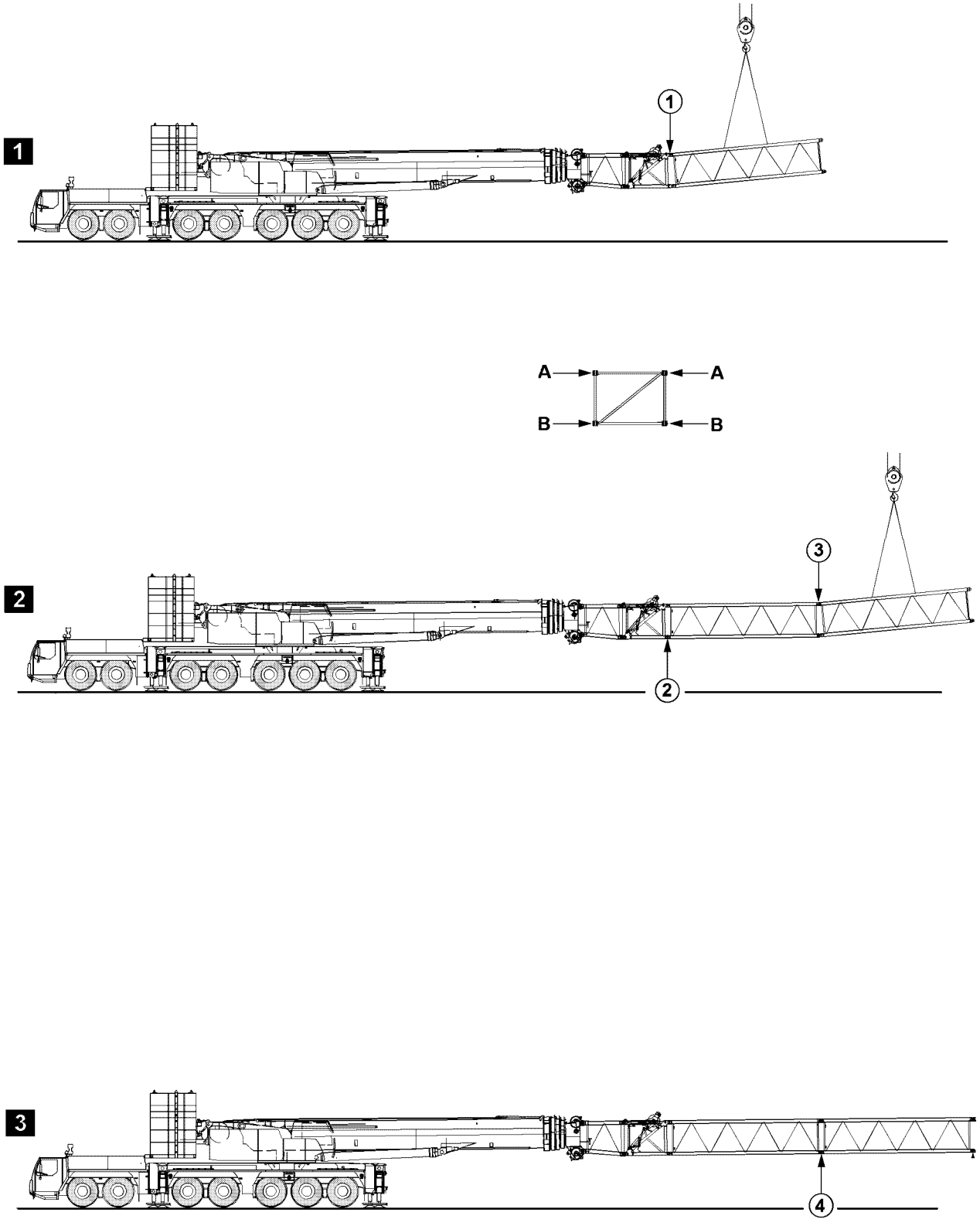

LWE/ab Muli 010/24201-02-02/en

Fig.197705: Example for cranes with telescopic boom

copyright © Liebherr-Werk Ehingen GmbH 2016

14.11 Assembly / disassembly of lattice sections on telescopic cranes with self-supporting auxiliary boom with an auxiliary crane

14.11.1 Assembly of lattice sections on self-supporting auxiliary boom with an auxiliary crane

The illustrations serve as examples. The illustrations may differ depending on the crane.

WARNING
Danger of fatal injury when assembling auxiliary booms!
If the pins are not pinned in the given sequence, then lattice sections may suddenly fold down or fall down.
Death, severe bodily injuries, property damage.
▶ Pins must be pinned in the order specified.

▶ Pin and secure pins at both sides (level **A**) at point **1**, illustration **1**.
▶ Pin and secure pins at both sides (level **B**) at point **2**, illustration **2**.
▶ Pin and secure pins at both sides (level **A**) at point **3**, illustration **2**.
▶ Pin and secure pins at both sides (level **B**) at point **4**, illustration **3**.

LWE/ab Muli 010/24201-02-02/en

copyright © Liebherr-Werk Ehingen GmbH 2016

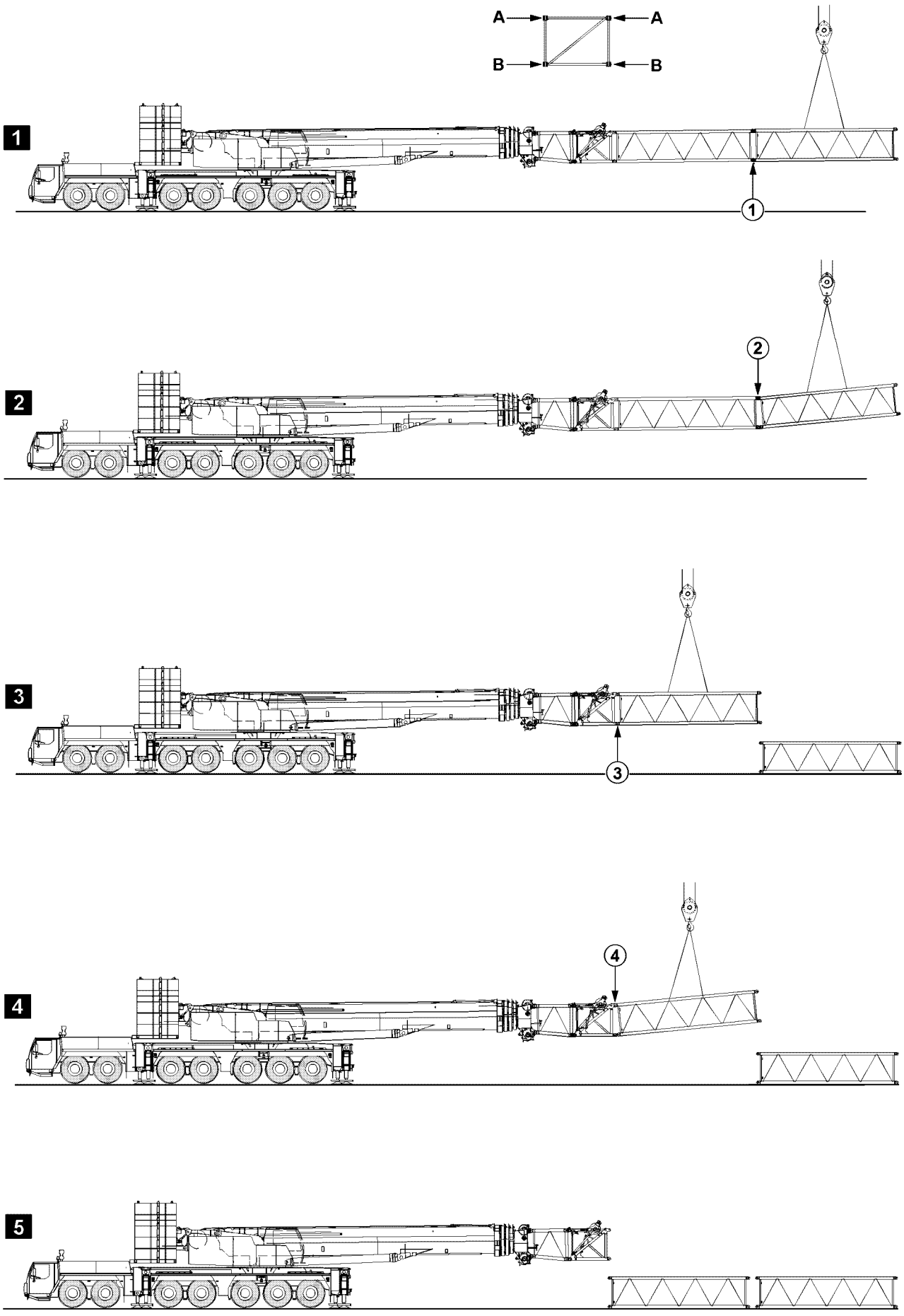

Fig.105510: Example for cranes with telescopic boom

LWE/ab Muli 010/24201-02-02/en

copyright © Liebherr-Werk Ehingen GmbH 2016

14.11.2 Disassembly of lattice sections on self-supporting auxiliary boom with an auxiliary crane

The illustrations serve as examples. The illustrations may differ depending on the crane.

WARNING
Danger of fatal injury when disassembling auxiliary booms!
If the pins are not unpinned in the given sequence, then lattice sections may suddenly fold down or fall down.
Death, severe bodily injuries, property damage.
▶ Pins must be unpinned in the order specified.

▶ Release and unpin the pins at both sides (level **B**) at point **1**, illustration **1**.
▶ Release and unpin the pins at both sides (level **A**) at point **2**, illustration **2**.
▶ Release and unpin the pins at both sides (level **B**) at point **3**, illustration **3**.
▶ Release and unpin the pins at both sides (level **A**) at point **4**, illustration **4**.

LWE/ab Muli 010/24201-02-02/en

copyright © Liebherr-Werk Ehingen GmbH 2016

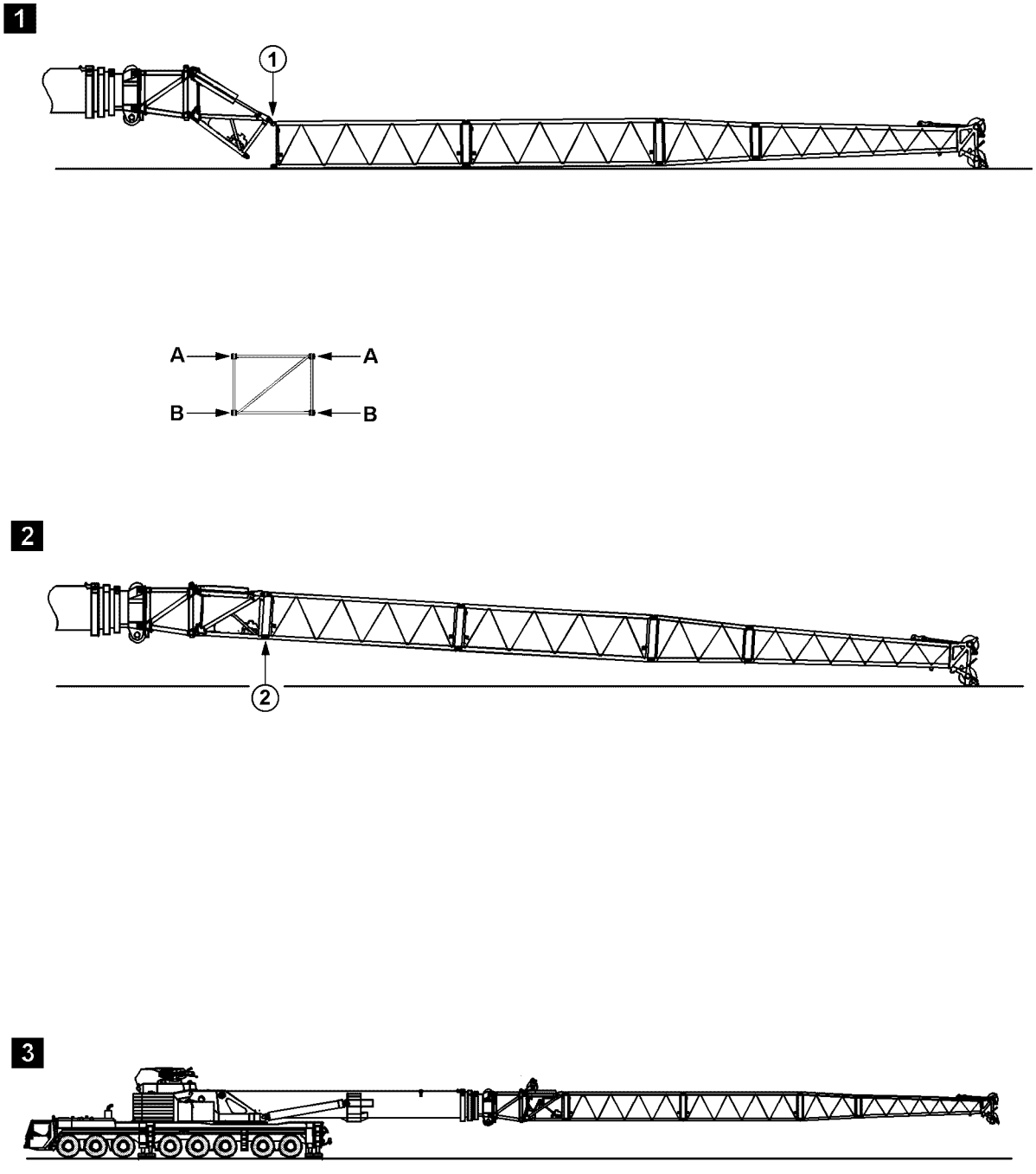

LWE/ab Muli 010/24201-02-02/en

Fig.197712: Example for cranes with telescopic boom

copyright © Liebherr-Werk Ehingen GmbH 2016

14.12 Assembly / disassembly of lattice sections on telescopic cranes with self-supporting auxiliary boom, without an auxiliary crane

14.12.1 Assembly of lattice sections on self-supporting auxiliary booms, without auxiliary crane

The illustrations serve as examples. The illustrations may differ depending on the crane.

WARNING
Danger of fatal injury when assembling auxiliary booms!
If the pins are not pinned in the given sequence, then lattice sections may suddenly fold down or fall down.
Death, severe bodily injuries, property damage.
▶ Pins must be pinned in the order specified.

For cranes with hydraulic angle adjustment and self-supporting auxiliary boom, the assembly / disassembly of additional lattice sections may be performed using the crane itself.

In order to do so, proceed as follows.

▶ Assemble the lattice sections to the required length.
▶ Pin and secure pins at both sides (level **A**) at point **1**, illustration **1**.
▶ Close the auxiliary boom until the pins can be pinned at point **2**, illustration **2**.
▶ Pin and secure pins at both sides (level **B**) at point **2**, illustration **2**.

LWE/ab Muli 010/24201-02-02/en

copyright © Liebherr-Werk Ehingen GmbH 2016

1

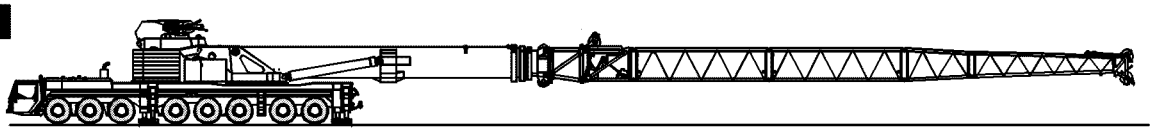

2

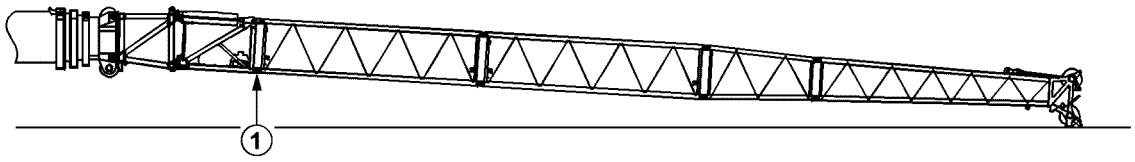

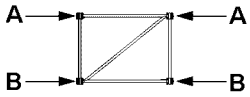

3

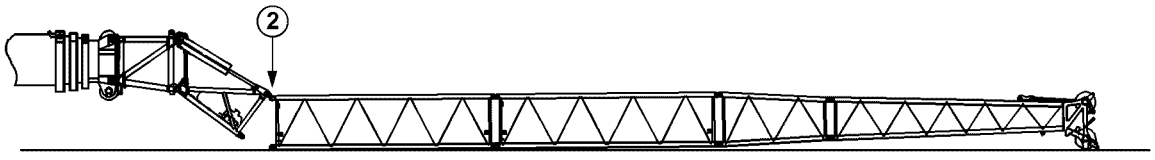

LWE/ab Muli 010/24201-02-02/en

Fig.197713: Example for cranes with telescopic boom

copyright © Liebherr-Werk Ehingen GmbH 2016

14.12.2 Disassembly of lattice sections on self-supporting auxiliary booms, without auxiliary crane

The illustrations serve as examples. The illustrations may differ depending on the crane.

WARNING
Danger of fatal injury when disassembling auxiliary booms!
If the pins are not unpinned in the given sequence, then lattice sections may suddenly fold down or fall down.
Death, severe bodily injuries, property damage.
▶ Pins must be unpinned in the order specified.

For cranes with hydraulic angle adjustment and self-supporting auxiliary boom, the assembly / disassembly of additional lattice sections may be performed using the crane itself.

In order to do so, proceed as follows.

NOTICE
Damage of hydraulic cylinders on the TF-adapter!
▶ As soon as the lattice jib is placed, stop the luff down movement.
▶ It is prohibited to set down the fixed lattice jib „hard“.

▶ Luff the main boom down until the end section touches the ground slightly, illustration **2**.

If it is not possible to luff down that far:
▶ Adjust the TF-adapter until the end section touches the ground slightly, illustration **2**.
▶ Release and unpin the pins at both sides (level **B**) at point **1**, illustration **2**.

NOTICE
Damage of hydraulic cylinders on the TF-adapter.
▶ As soon as the lattice jib is placed, stop the opening movement.

▶ Open the auxiliary boom until the lattice sections to be removed are laying completely on the ground, illustration **3**.
▶ Release and unpin the pins at both sides (level **A**) at point **2**, illustration **3**.
▶ Completely remove the auxiliary boom.

LWE/ab Muli 010/24201-02-02/en

copyright © Liebherr-Werk Ehingen GmbH 2016

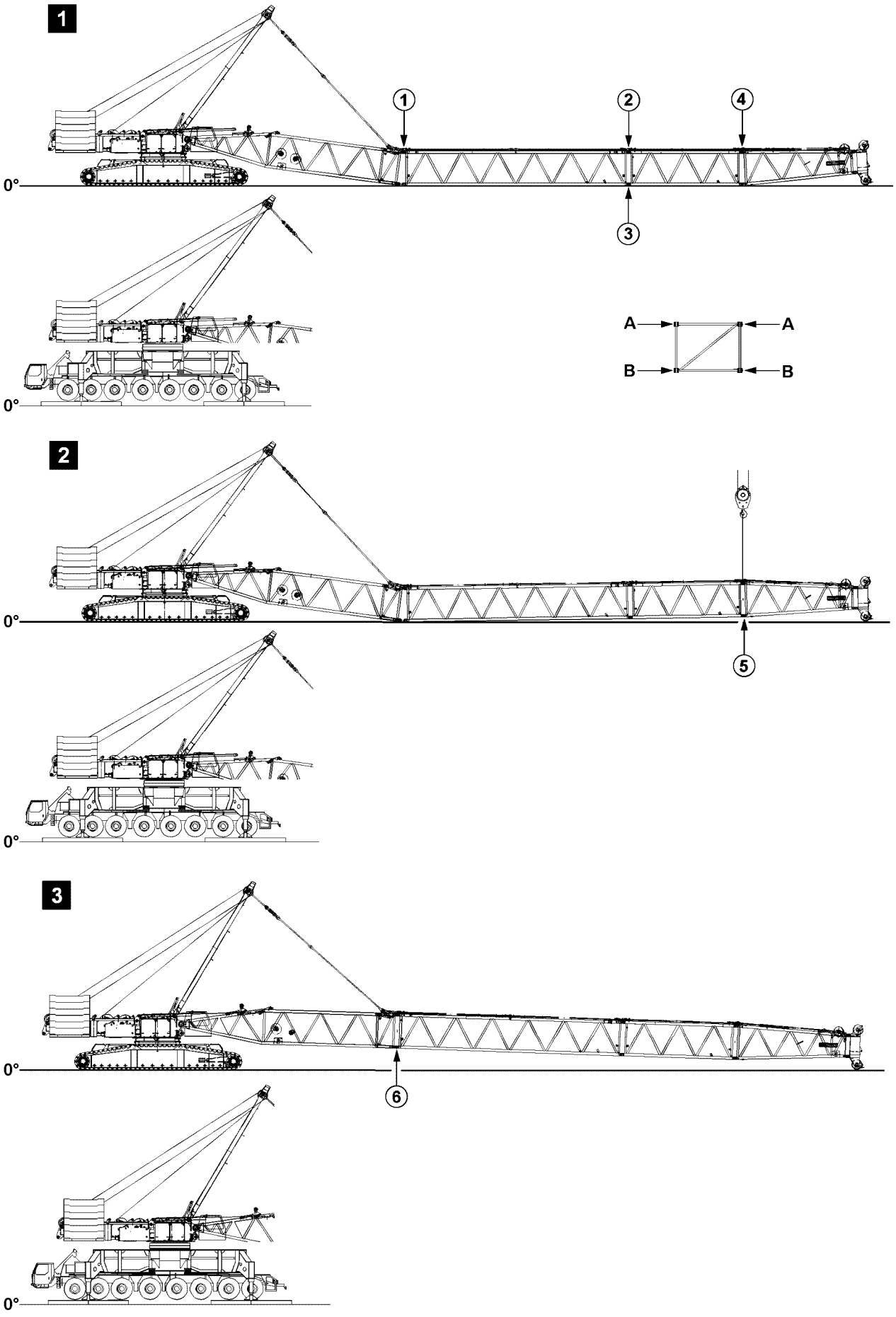

Fig.121633: Example for cranes with lattice mast booms

LWE/ab Muli 010/24201-02-02/en

copyright © Liebherr-Werk Ehingen GmbH 2016

14.13 Assembly / disassembly of lattice sections for lattice mast cranes

14.13.1 Assembly of lattice sections

The illustrations serve as examples. The illustrations may differ depending on the crane.

WARNING
Danger of fatal injury when assembling booms!
If the pins are not pinned in the given sequence, then lattice sections may suddenly fold down or fall down.
Personnel can be killed or seriously injured.
▶ Pins must be pinned in the order specified.

- ▶ Pin and secure pins at both sides (level **A**) at point **1**, illustration **1**.
- ▶ Pin and secure pins at both sides (level **A**) at point **2**, illustration **1**.
- ▶ Pin and secure pins at both sides (level **B**) at point **3**, illustration **1**.
- ▶ Pin and secure pins at both sides (level **A**) at point **4**, illustration **1**.
- ▶ Lift the end section with the auxiliary crane, illustration **2**.
- ▶ Pin and secure pins at both sides (level **B**) at point **5**, illustration **2**.
- ▶ Close the boom system with the SA-frame, illustration **3**.
- ▶ Pin and secure pins at both sides (level **B**) at point **6**, illustration **3**.

LWE/ab Muli 010/24201-02-02/en

copyright © Liebherr-Werk Ehingen GmbH 2016

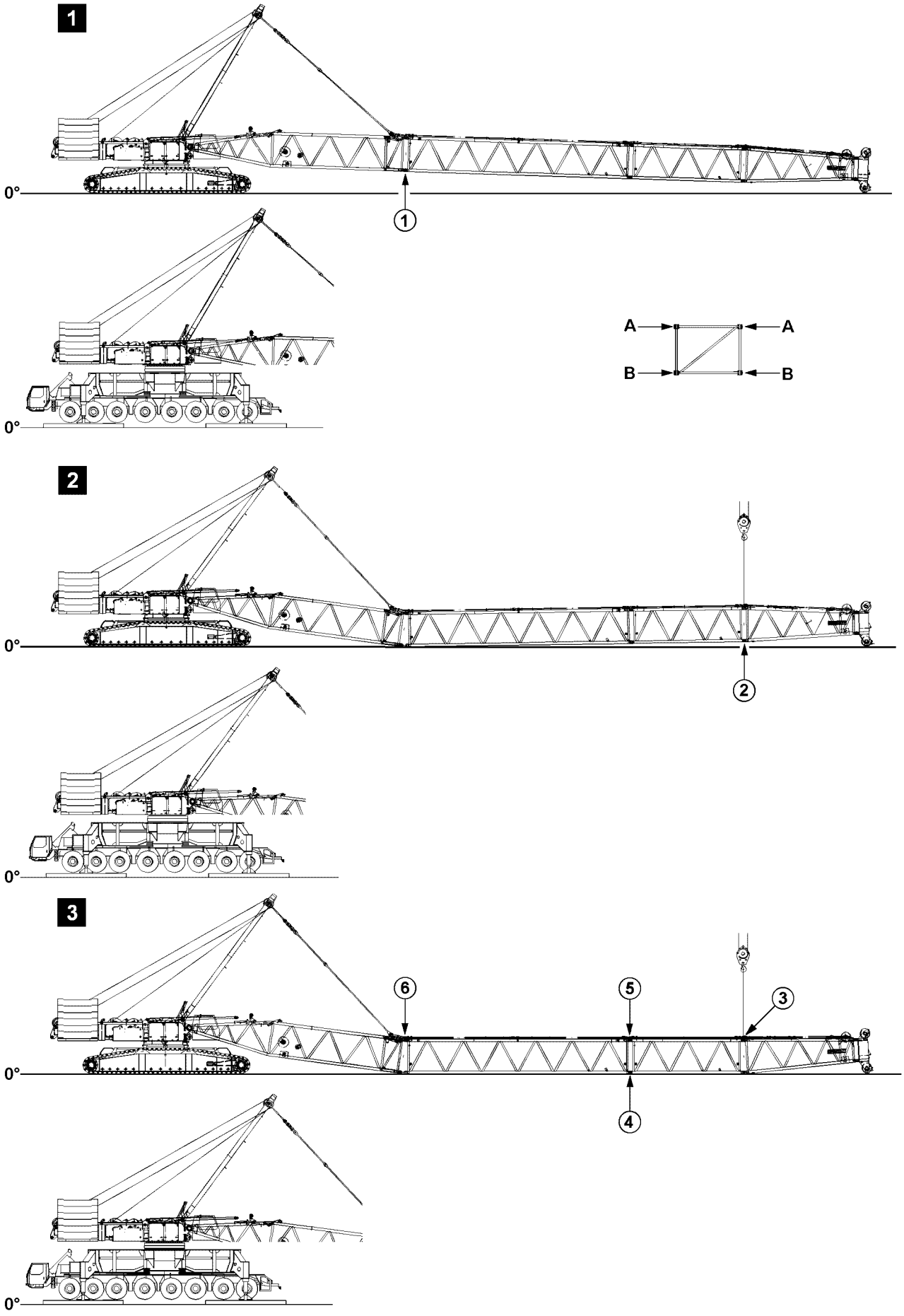

Fig.121634: Example for cranes with lattice mast booms

LWE/ab Muli 010/24201-02-02/en

copyright © Liebherr-Werk Ehingen GmbH 2016

14.13.2 Disassembly of lattice sections

The illustrations serve as examples. The illustrations may differ depending on the crane.

WARNING
Danger of fatal injury when disassembling booms!
If the pins are not unpinned in the given sequence, then lattice sections may suddenly fold down or fall down.
Personnel can be killed or seriously injured.

- ▶ Make sure that the SA-frame guying is tensioned before the pins are unpinned at point **1**, see illustration **1**.
- ▶ Pins must be unpinned in the order specified.

- ▶ Luff the boom down until the end section touches the ground slightly, illustration **1**.
- ▶ Guy the boom with SA-frame, illustration **1**.
- ▶ Release and unpin the pins at both sides (level **B**) at point **1**, illustration **1**.
- ▶ Open the boom system with the SA-frame, illustration **2**.
- ▶ Completely remove the lattice sections, illustration **2**.
- ▶ Lift the end section with the auxiliary crane, illustration **2**.
- ▶ Release and unpin the pins at both sides (level **B**) at point **2**, illustration **2**.
- ▶ Release and unpin the pins at both sides (level **A**) at point **3**, illustration **3**.
- ▶ Release and unpin the pins at both sides (level **B**) at point **4**, illustration **3**.
- ▶ Release and unpin the pins at both sides (level **A**) at point **5**, illustration **3**.
- ▶ Release and unpin the pins at both sides (level **A**) at point **6**, illustration **3**.

LWE/ab Muli 010/24201-02-02/en

copyright © Liebherr-Werk Ehingen GmbH 2016

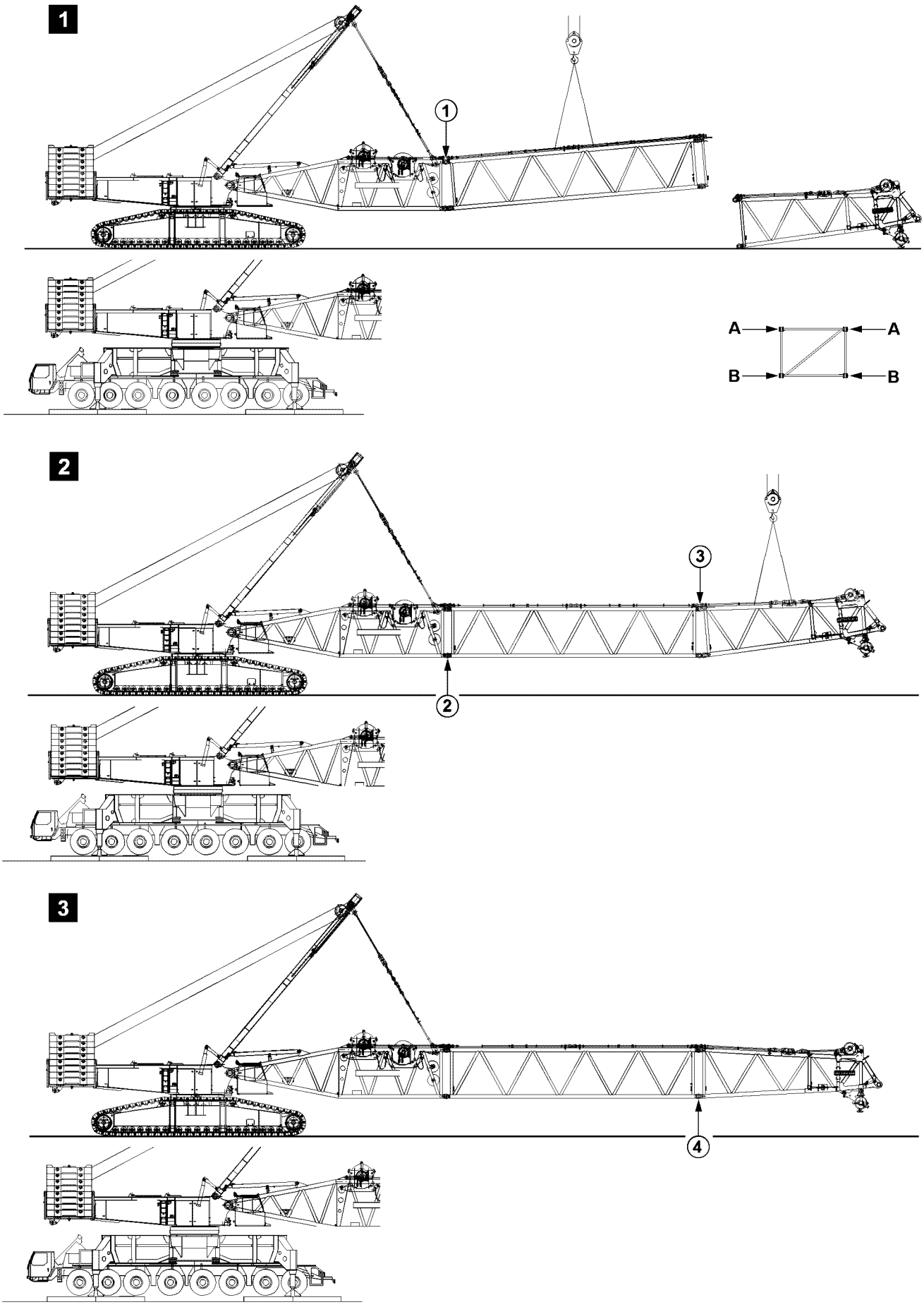

Fig.198182: Example for cranes with lattice mast booms

LWE/ab Muli 010/24201-02-02/en

copyright © Liebherr-Werk Ehingen GmbH 2016

14.14 Flying assembly / disassembly of lattice sections

14.14.1 Flying assembly of lattice sections

The illustrations serve as examples. The illustrations may differ depending on the crane.

WARNING
Danger of fatal injury when assembling booms!
If the pins are not pinned in the given sequence, then lattice sections may suddenly fold down or fall down.
Personnel can be killed or seriously injured.
▶ Pins must be pinned in the order specified.

▶ Pin and secure pins at both sides (level **A**) at point **1**, illustration **1**.
▶ Pin and secure pins at both sides (level **B**) at point **2**, illustration **2**.
▶ Pin and secure pins at both sides (level **A**) at point **3**, illustration **2**.
▶ Pin and secure pins at both sides (level **B**) at point **4**, illustration **3**.

LWE/ab Muli 010/24201-02-02/en

copyright © Liebherr-Werk Ehingen GmbH 2016

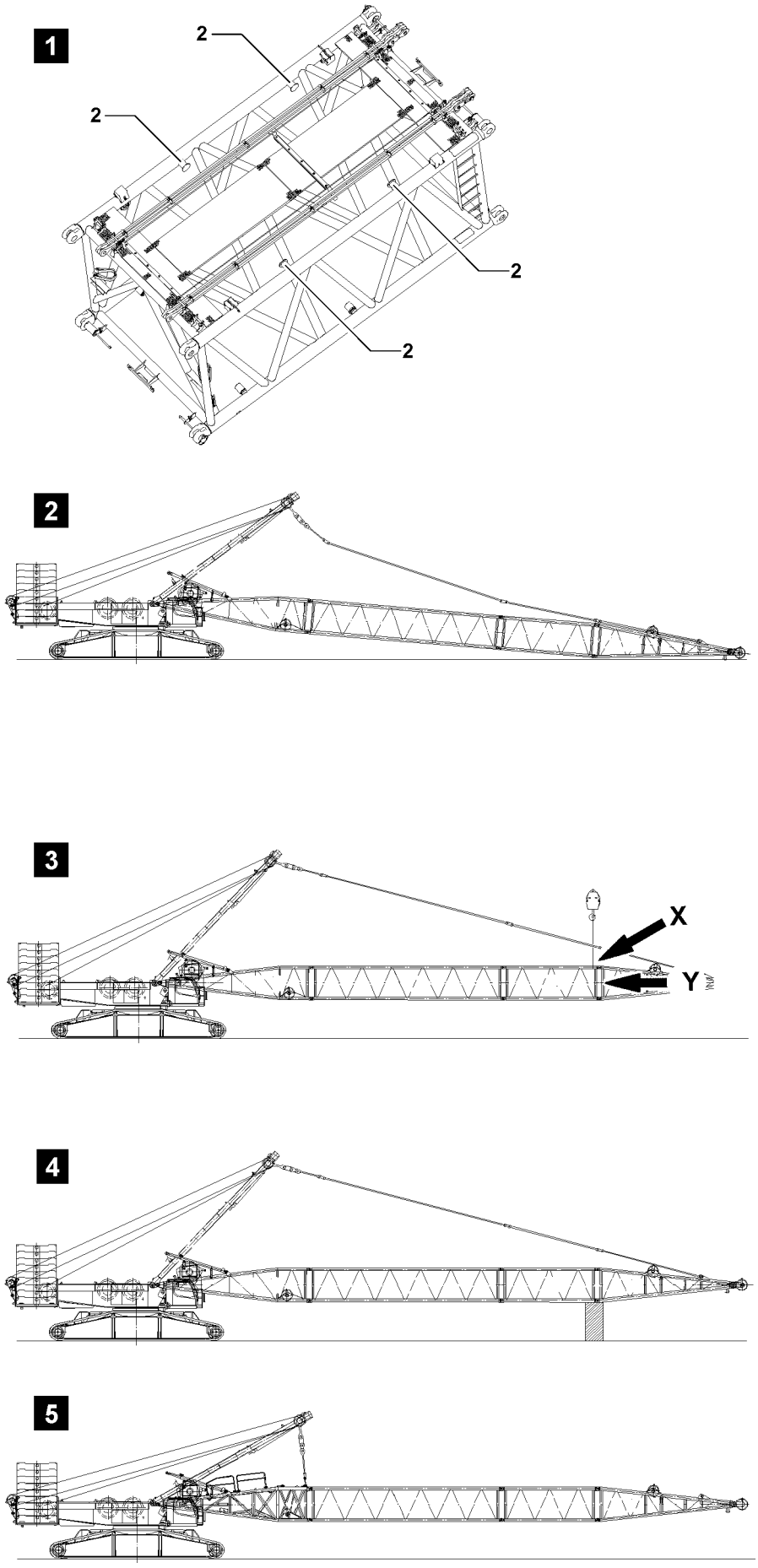

Fig.111448: Guying the pivot section with the SA-frame

LWE/ab Muli 010/24201-02-02/en

copyright © Liebherr-Werk Ehingen GmbH 2016

14.14.2 Flying disassembly of lattice sections

The illustrations serve as examples. The illustrations may differ depending on the crane.

The flying disassembly of lattice sections can be used on:
- Derrick boom
- Main boom

Make sure that the following prerequisite is met:
- Before guying the pivot section, secure the boom properly to prevent it from falling down!

Guying the pivot section in flying mode with the SA-frame

▶ Place the boom on the ground, see illustration **2**.
or

WARNING
Lattice section incorrectly attached!
If the fastening equipment is attached on the bitts **2** when securing the boom, then the bitts will be overloaded. The lattice section will be damaged.
The boom can fall down.
Personnel can be severely injured or killed.

If the auxiliary crane is used to secure the boom for flying disassembly:
▶ Do **not** fasten the lattice section on the bitts **2**, see illustration **1**.
▶ Attach the fastening equipment in the area of point **P1** on both sides on the lattice section, see detail **X**.
▶ Make sure that the long fastening equipment is used, so that the angle between the cross section of lattice section and guyed fastening equipment is at least 60°, see detail **Y**.

Secure the boom with the auxiliary crane, see illustration **3**.
or

WARNING
Falling boom!
If the boom is not properly and securely supported from below, then the boom can fall down.
▶ Support the boom properly and safely with suitable material.

Support the boom, see illustration **4**.

Result:

– The guy rods can be disassembled.

▶ Place down, secure and disassemble the guy rods.
▶ Pin and secure the guy rods SA-frame on the pivot section.
▶ Tighten the guy rods SA-frame until the boom is in horizontal position.

Result:

– Pivot section is guyed in flying mode with the SA-frame, see illustration **5**.
– The lattice sections can be disassembled in flying mode.

copyright © Liebherr-Werk Ehingen GmbH 2016

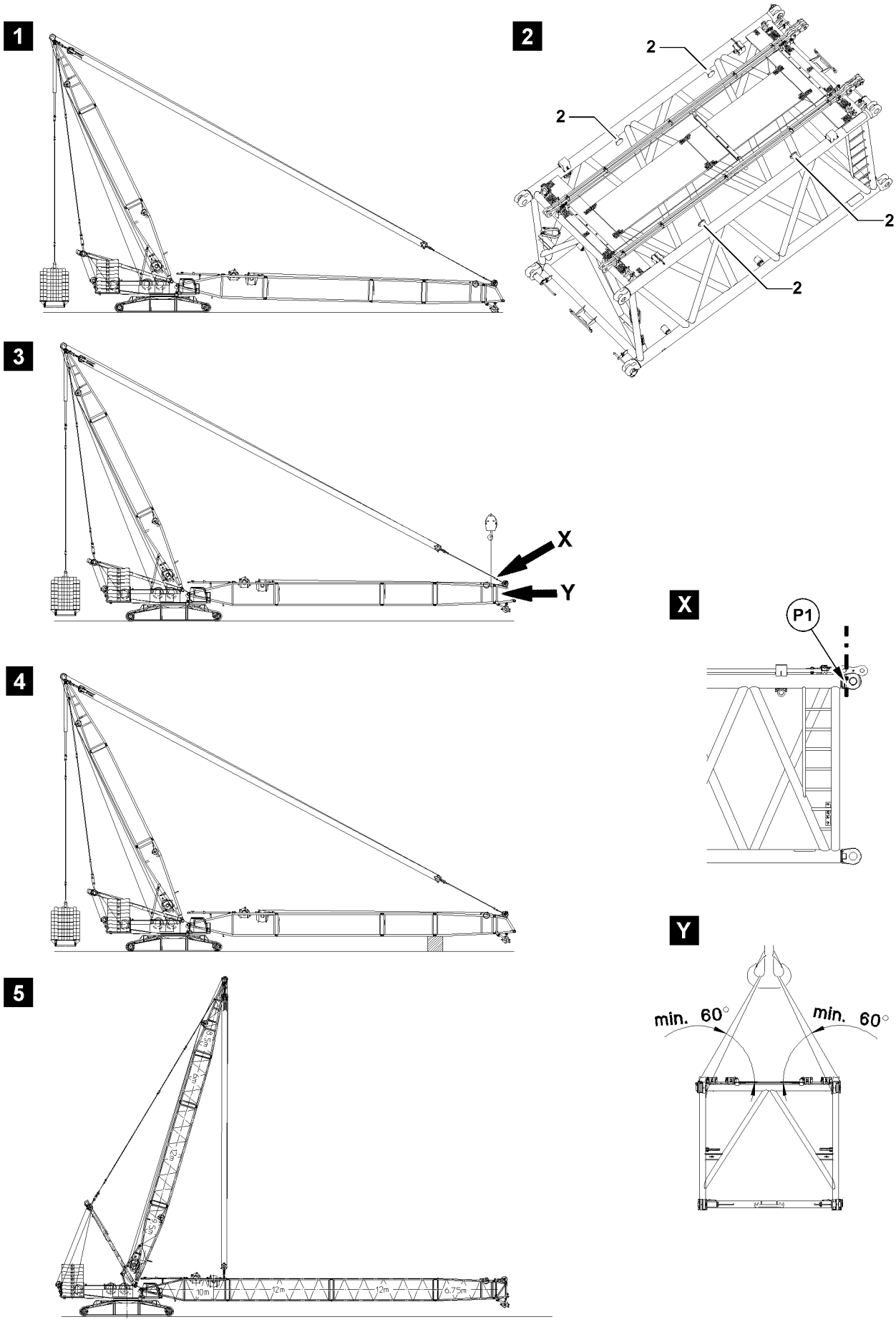

Fig.111449: Guying the pivot section with the derrick boom

LWE/ab Muli 010/24201-02-02/en

copyright © Liebherr-Werk Ehingen GmbH 2016

Guying the pivot section in flying mode with the derrick boom

▶ Place the boom on the ground, see illustration **1**.
or

WARNING
Lattice section incorrectly attached!
If the fastening equipment is attached on the bitts **2** when securing the boom, then the bitts will be overloaded. The lattice section will be damaged.
The boom can fall down.
Personnel can be severely injured or killed.

If the auxiliary crane is used to secure the boom for flying disassembly:
▶ Do **not** fasten the lattice section on the bitts **2**, see illustration **2**.
▶ Attach the fastening equipment in the area of point **P1** on both sides on the lattice section, see detail **X**.
▶ Make sure that the long fastening equipment is used, so that the angle between the cross section of lattice section and guyed fastening equipment is at least 60°, see detail **Y**.

Secure the boom with the auxiliary crane, see illustration **3**.
or

WARNING
Falling boom!
If the boom is not properly supported from below, then the boom can fall down.
▶ Support the boom properly and safely with suitable material.

Support the boom, see illustration **4**.

Result:

– The guy rods can be disassembled.

▶ Place down, secure and disassemble the guy rods.
▶ Pin and secure the pulley block on the pivot section.
▶ Tighten the control rope until the boom is in horizontal position.

Result:

– Pivot section is guyed in flying mode with the derrick boom, see illustration **5**.
– The lattice sections can be disassembled in flying mode.

copyright © Liebherr-Werk Ehingen GmbH 2016

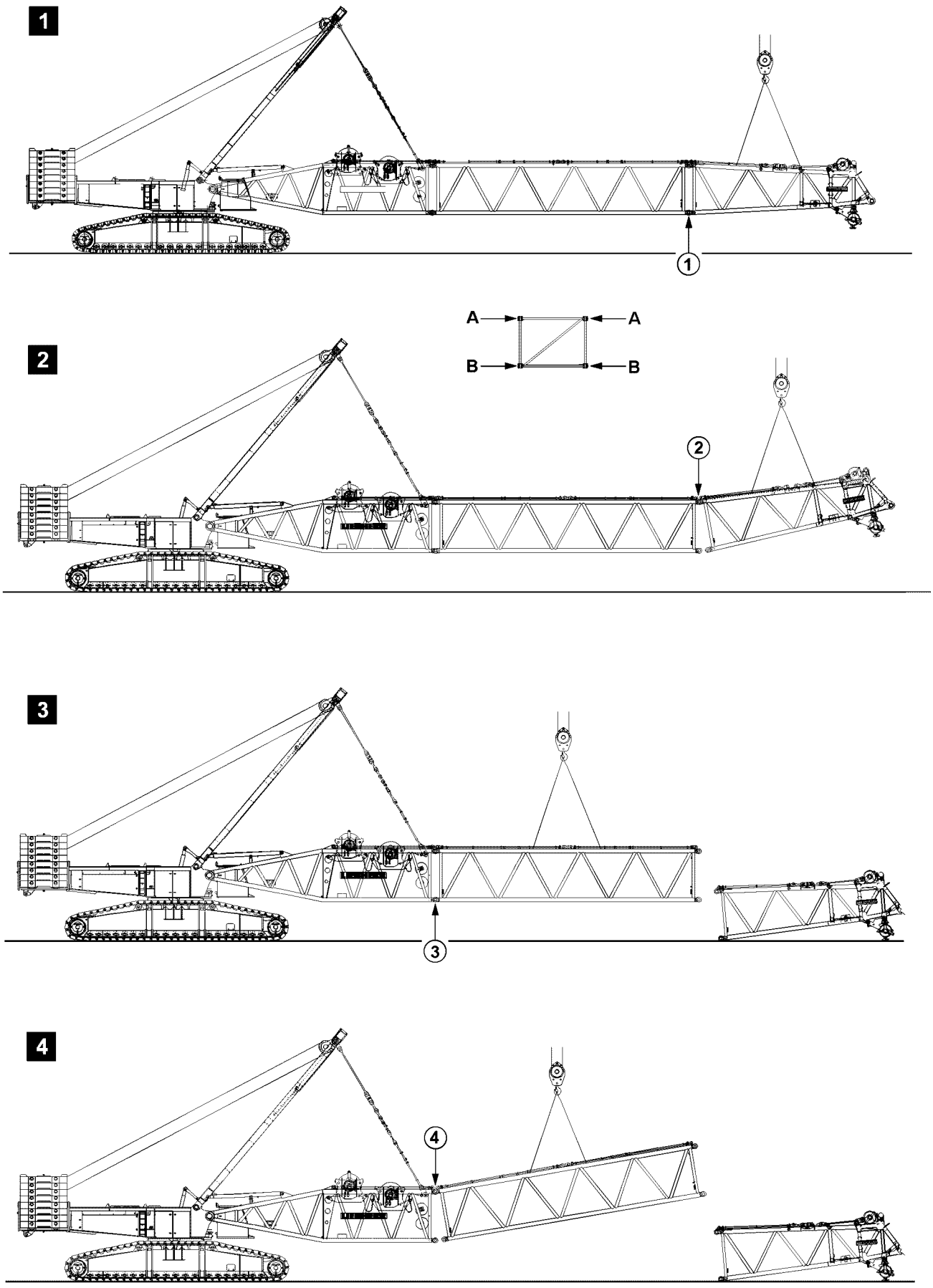

Fig.105511: Example for cranes with lattice mast booms

LWE/ab Muli 010/24201-02-02/en

copyright © Liebherr-Werk Ehingen GmbH 2016

Unpinning the lattice components

WARNING
Danger of fatal injury when disassembling booms!
If the pins are not unpinned in the given sequence, then lattice sections may suddenly fold down or fall down.
Personnel can be killed or seriously injured.
▶ Pins must be unpinned in the order specified.

▶ Release and unpin the pins at both sides (level **B**) at point **1**, illustration **1**.
▶ Release and unpin the pins at both sides (level **A**) at point **2**, illustration **2**.
▶ Release and unpin the pins at both sides (level **B**) at point **3**, illustration **3**.
▶ Release and unpin the pins at both sides (level **A**) at point **4**, illustration **4**.

14.15 Assembly / disassembly of boom systems for supporting on ascending terrain (assembly / disassembly schematic)

Note
▶ The following assembly steps are simplified and are examples and may not match your crane exactly.

WARNING
Mortal danger at assembly / disassembly of booms!
If the pins are not pinned / unpinned in the specified sequence, then lattice sections may suddenly fold down or fall down.
Personnel can be killed or seriously injured.
▶ Pin / unpin pins in the specified sequence, see section „Assembly of lattice sections“.
▶ Observe all safety technical notes in section „Assembly / disassembly“.
▶ Make sure that there are no persons within the danger zone.

14.15.1 Assembly of boom systems on ascending terrain

Make sure that the following prerequisites are met:
– The lattice sections are properly assembled.
– An auxiliary crane with sufficient load carrying capacity if available.

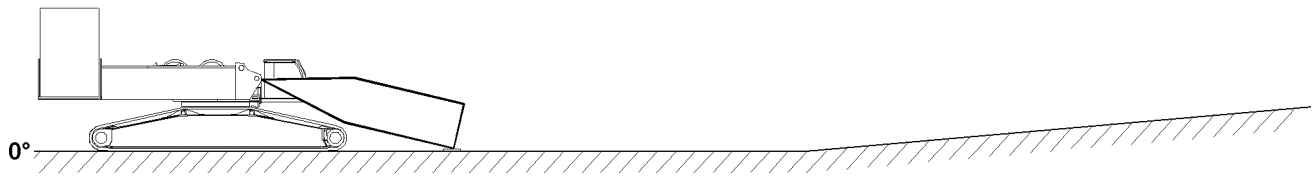

Fig.121635: Boom - pivot section installed on turntable and placed on the ground

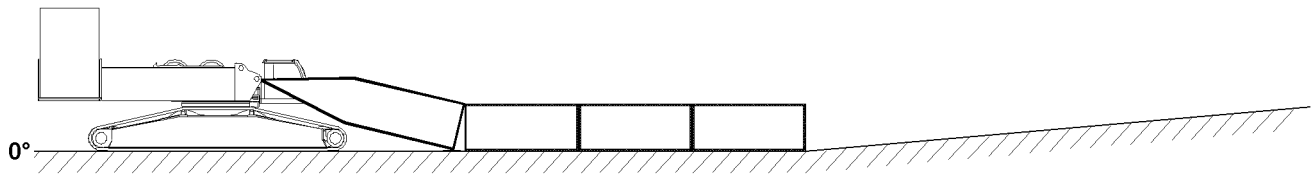

Fig.121636: Boom - intermediate sections installed on boom - pivot section and placed on the ground

LWE/ab Muli 010/24201-02-02/en

copyright © Liebherr-Werk Ehingen GmbH 2016

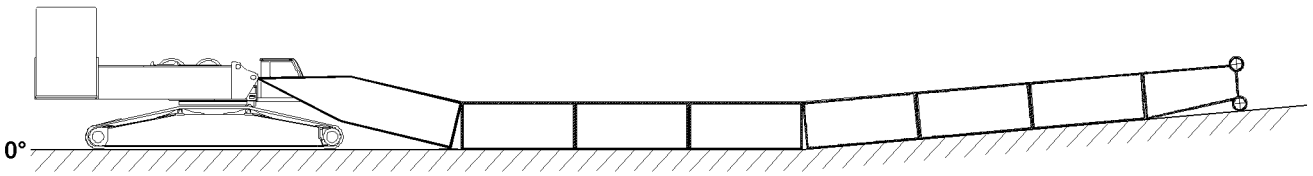

Fig.121637: Boom - intermediate sections installed and placed in ascending terrain

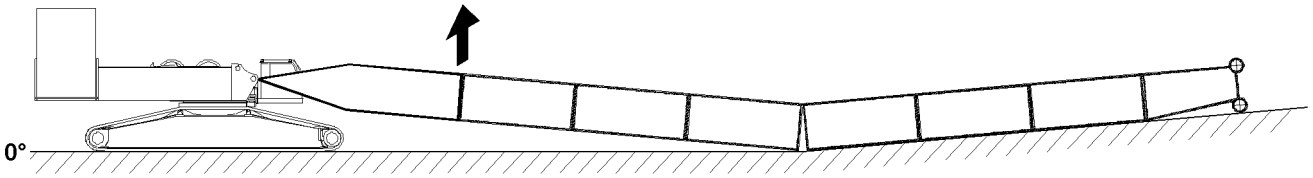

Fig.121638: Lift and close the boom system in the area of the boom - pivot section

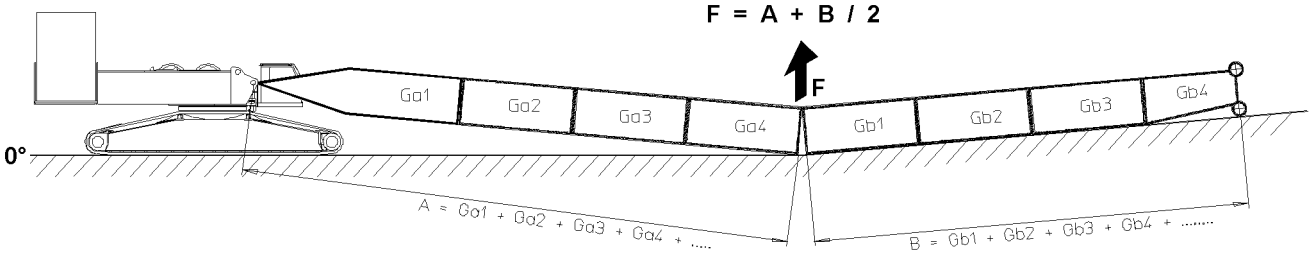

Fig.121645: Calculate the force for the closing procedure of the boom system

Note

- ▶ The abbreviations Ga1, Ga2, ... and Gb1, Gb2, ... are for the weights of the individual lattice sections.
- ▶ The weights of the lattice sections are noted on the welded on weight tags on the lattice sections.

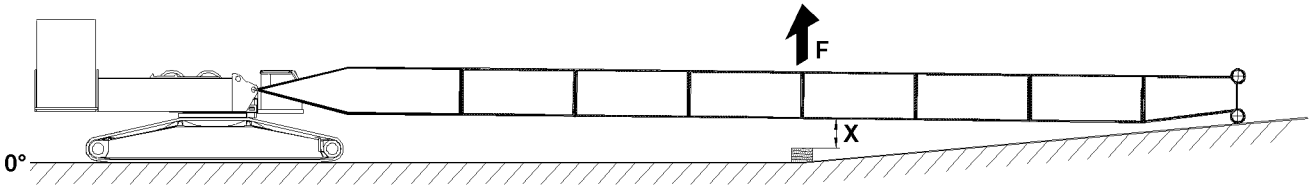

Fig.121639: Lift and close the boom system // Support the boom system

Note

- ▶ The height of the support or dimension **X** is noted on the respective boom assembly chapter, see Crane operating instructions, chapter 5.38 or chapter 5.39.

- ▶ Support the boom system properly after the closing procedure.

14.15.2 Disassembly of boom systems on ascending terrain

Make sure that the following prerequisites are met:

– An auxiliary crane with sufficient load carrying capacity if available.

LWE/ab Muli 010/24201-02-02/en

copyright © Liebherr-Werk Ehingen GmbH 2016

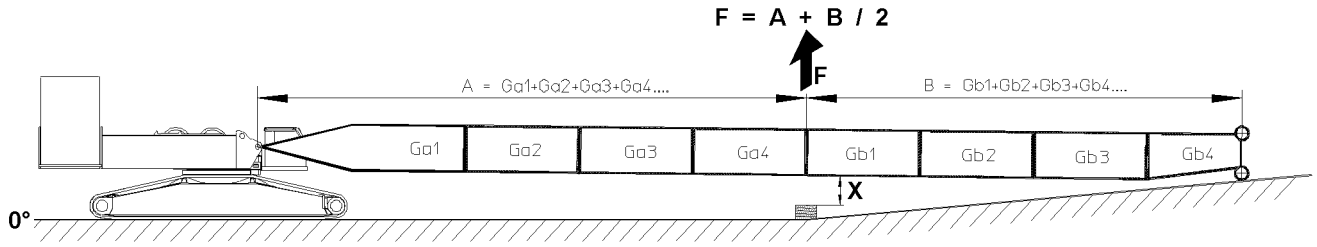

Fig.121651: Calculation of force for opening the boom system // Lift the boom system // Remove the support // Open the boom system

Note

- The abbreviations Ga1, Ga2, ... and Gb1, Gb2, ... are for the weights of the individual lattice sections.
- The weights of the lattice sections are noted on the welded on weight tags on the lattice sections.

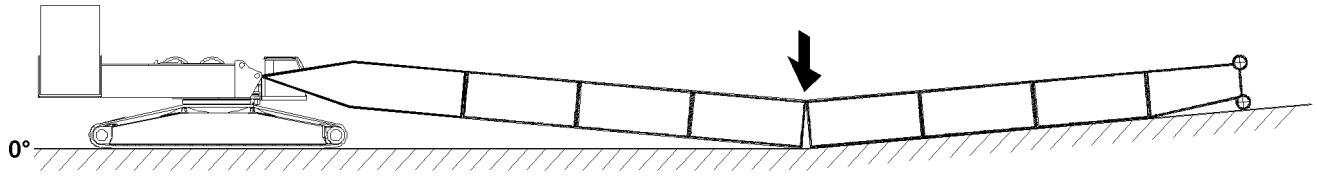

Fig.121657: Place the boom system down

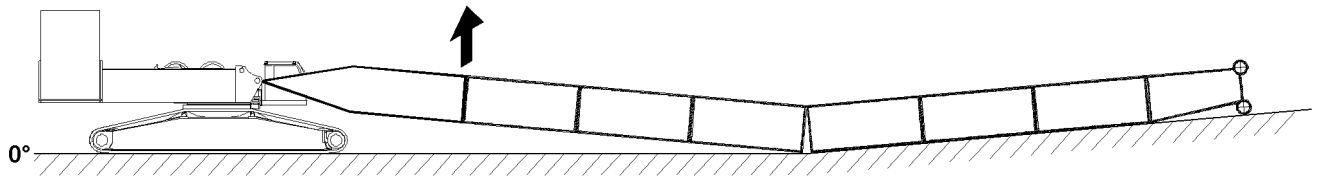

Fig.121652: Lift and open the boom system

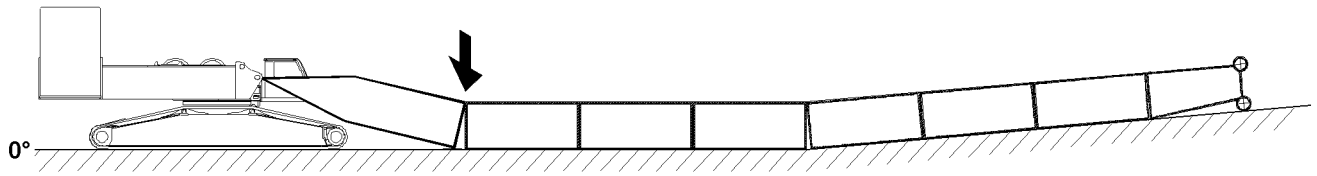

Fig.121653: Place the boom system down

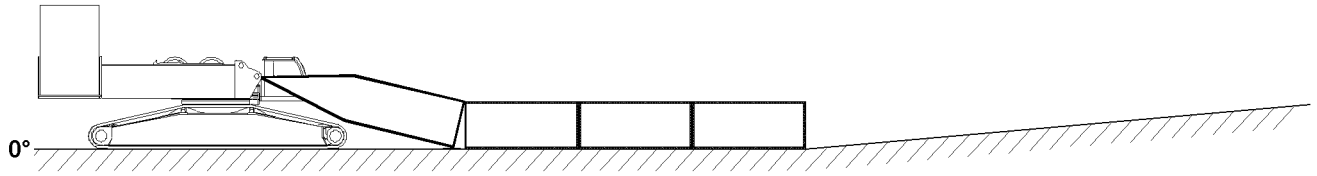

Fig.121636: Disassemble and remove the boom - intermediate sections with the end section

LWE/ab Muli 010/24201-02-02/en

copyright © Liebherr-Werk Ehingen GmbH 2016

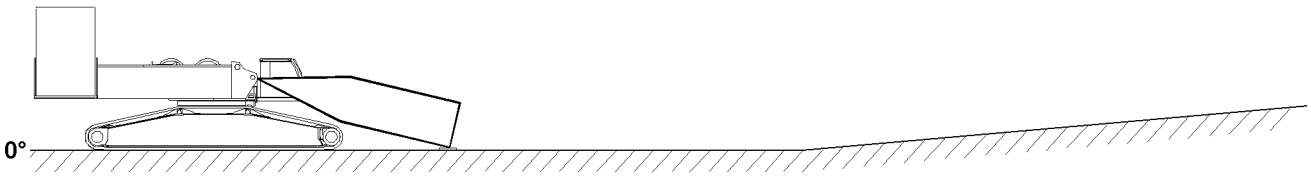

Fig.121635: Disassemble and remove the boom - intermediate sections to the boom - pivot section

▶ Disassemble and remove the boom - pivot section.

14.16 Assembly / disassembly of boom systems for supporting on descending terrain (assembly / disassembly schematic)

Note

▶ The following assembly steps are simplified and are examples and may not match your crane exactly.

WARNING

Mortal danger at assembly / disassembly of booms!
If the pins are not pinned / unpinned in the specified sequence, then lattice sections may suddenly fold down or fall down.
Personnel can be killed or seriously injured.

▶ Pin / unpin pins in the specified sequence, see section „Assembly of lattice sections“.
▶ Observe all safety technical notes in section „Assembly / disassembly“.
▶ Make sure that there are no persons within the danger zone.

14.16.1 Assembly of boom systems on descending terrain

Make sure that the following prerequisites are met:
– The lattice sections are properly assembled.
– An auxiliary crane with sufficient load carrying capacity if available.

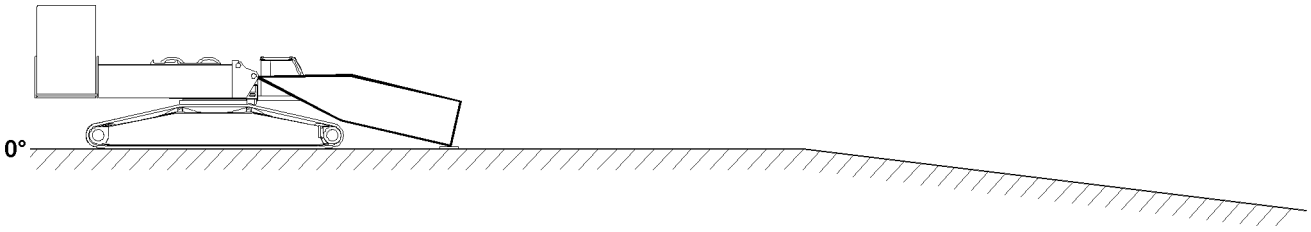

Fig.121640: Boom - pivot section installed on turntable and placed on the ground

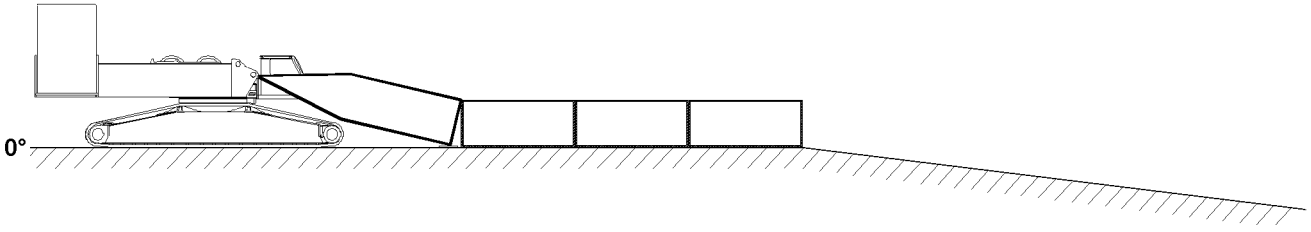

Fig.121641: Boom - intermediate sections installed on boom - pivot section and placed on the ground

LWE/ab Muli 010/24201-02-02/en

copyright © Liebherr-Werk Ehingen GmbH 2016

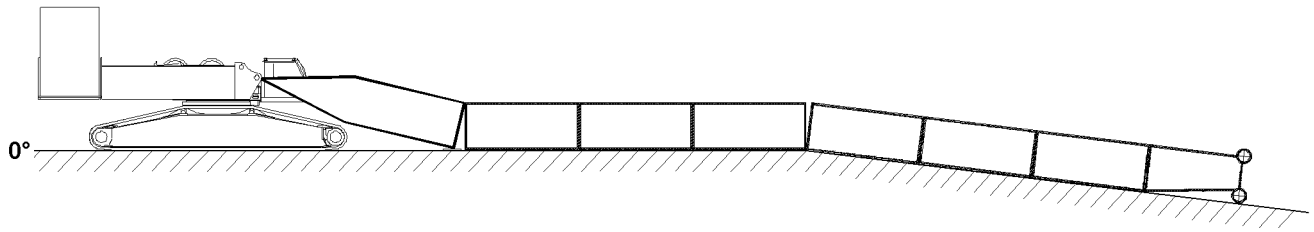

Fig.121642: Boom - intermediate sections installed and placed in descending terrain

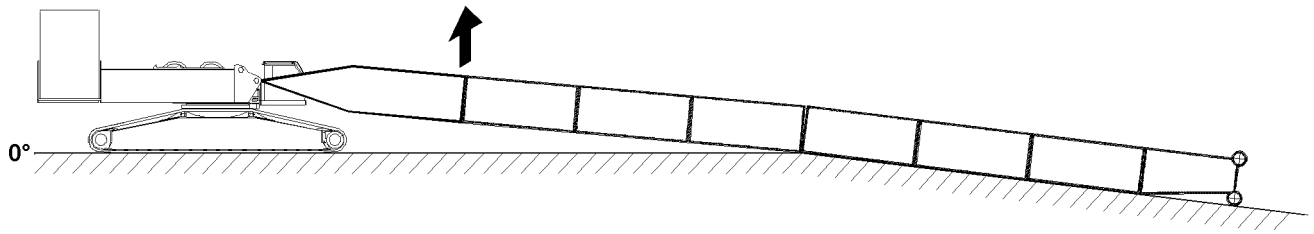

Fig.121643: Lift and close the boom system in the area of the boom - pivot section

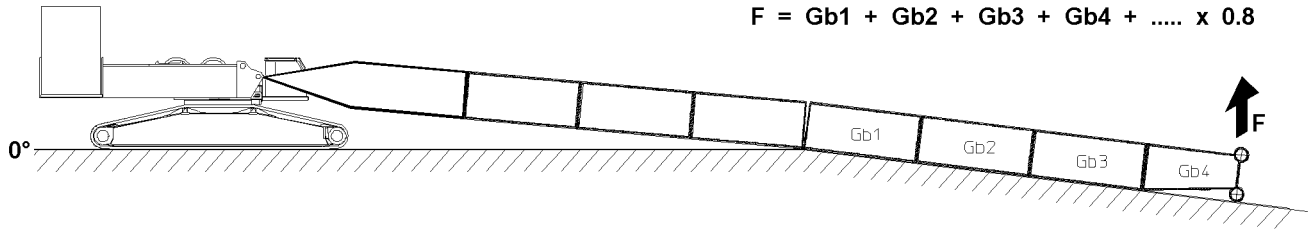

Fig.121646: Calculate the force for the closing procedure of the boom system

Note
- ▶ The abbreviations Gb1, Gb2, ... are for the weights of the individual lattice sections.
- ▶ The weights of the lattice sections are noted on the welded on weight tags on the lattice sections.

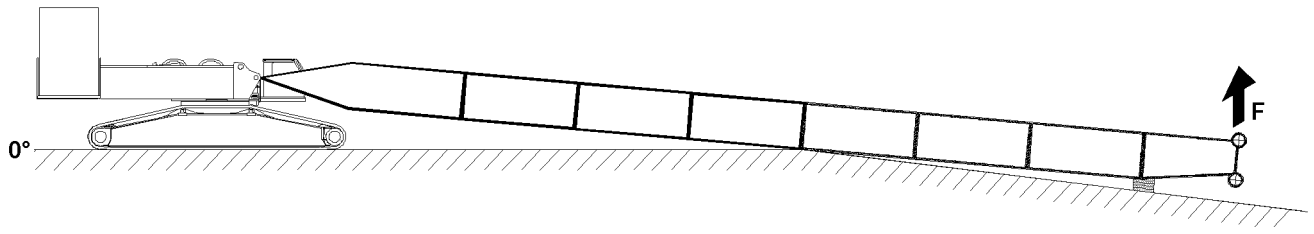

Fig.121644: Lift and close the boom system // Support the boom system

Note
- ▶ The height of the support depends on the lay of the terrain and the resulting incline of the boom system.

- ▶ Support the boom system properly after the closing procedure.

14.16.2 Disassembly of boom systems on descending terrain

Make sure that the following prerequisite is met:
- An auxiliary crane with sufficient load carrying capacity if available.

copyright © Liebherr-Werk Ehingen GmbH 2016

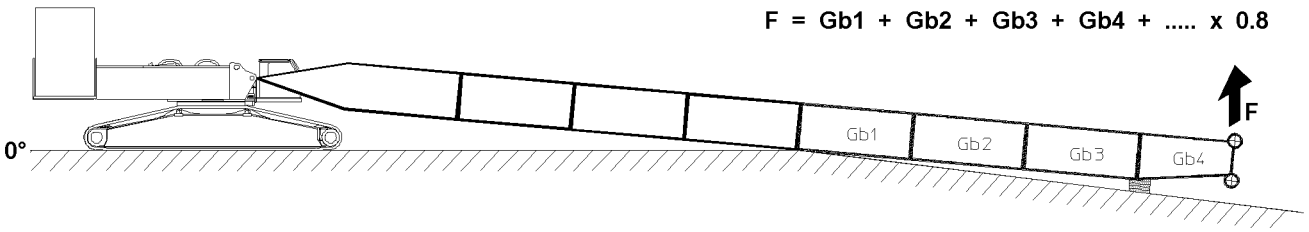

Fig.121654: Calculation of force for opening the boom system // Lift the boom system // Remove the support // Open the boom system

Note

- The abbreviations Gb1, Gb2, ... are for the weights of the individual lattice sections.
- The weights of the lattice sections are noted on the welded on weight tags on the lattice sections.

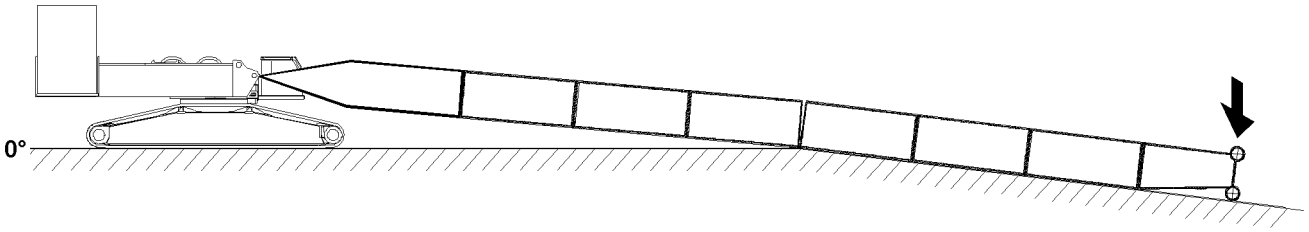

Fig.121658: Place the boom system down

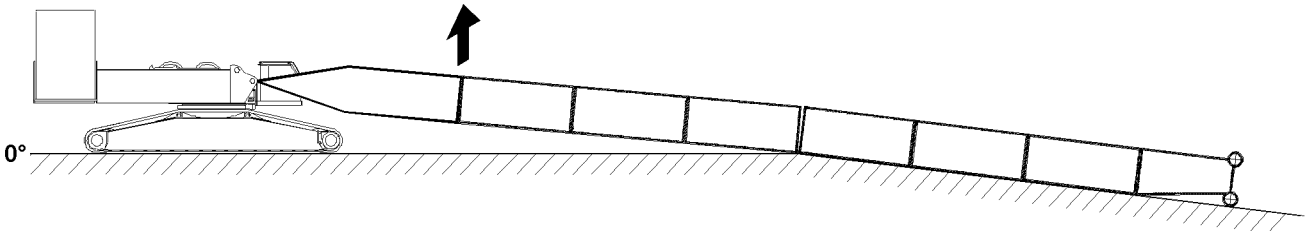

Fig.121655: Lift and open the boom system

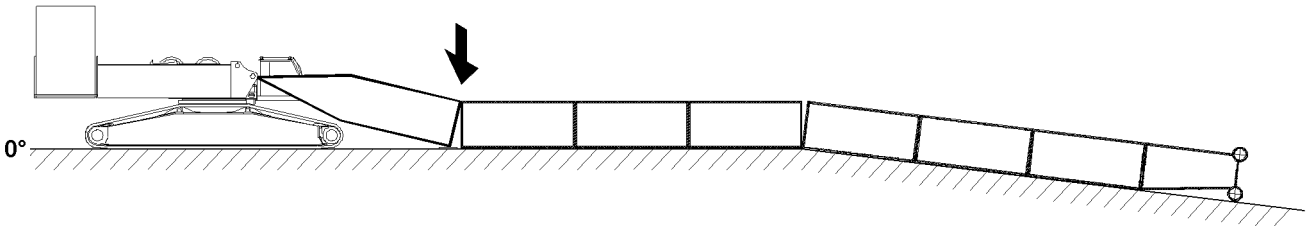

Fig.121656: Place the boom system down

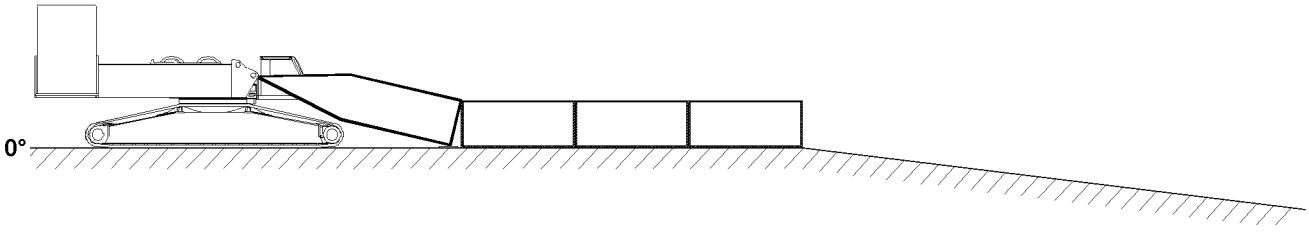

Fig.121641: Disassemble and remove the boom - intermediate sections with the end section

LWE/ab Muli 010/24201-02-02/en

copyright © Liebherr-Werk Ehingen GmbH 2016

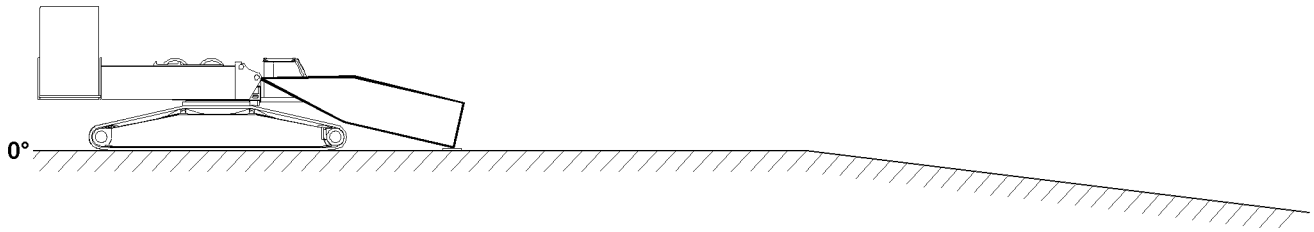

Fig.121640: Disassemble and remove the boom - intermediate sections to the boom - pivot section

▶ Disassemble and remove the boom - pivot section.

15 Erection / take down

WARNING
The crane can topple over!
Due to an unforeseen occurrence, for example: Sudden strong wind or storm can lead to dangerous operating situations, up to toppling the crane.
Personnel can be severely injured or killed.
▶ The boom must be able to be placed down at any time with its current equipment, observe the erection and take down charts.
▶ The required counterweight must always be in direct vicinity of the crane.
▶ The crane operator must ensure that the required counterweight is carried along when driving the crane with the equipment in place and that the boom can be placed down at any time.

WARNING
Mortal danger.
▶ Incorrectly installed or non-functioning limit switches as well as falling parts (pins, spring retainers, ice etc.) can cause accidents.

15.1 Erection / take down for mobile cranes

Make sure that the following prerequisites are met:
– The crane is properly supported.
– The crane is horizontally aligned.
– The counterweight has been installed on the turntable according to the load chart or the erection / take down charts.
– The derrick ballast (suspended ballast or ballast trailer ballast) is installed according to the load chart or the erection / take down charts.
– The telescopic boom is fully telescoped in.
– The boom has been installed according to the load chart and the Crane operating instructions.
– The hoist rope has been correctly placed in the rope pulleys and prevented from jumping out with the rope retaining pins.
– All limit switches have been correctly installed and are fully functional.
– All pin connections have been secured.
– No personnel is within the danger zone.
– There are no loose parts on the boom or the auxiliary boom.
– In winter, the exposed rope pulleys must be kept free of snow, frost and ice.
– In winter, the telescopic boom, the auxiliary boom and their associated components (limit switches, cable drum, flashing beacon, wind speed sensor etc.) must be kept free of ice and snow.

▶ Check if all prerequisites have been met.

LWE/ab Muli 010/24201-02-02/en

copyright © Liebherr-Werk Ehingen GmbH 2016

15.2 Erection / take down for crawler cranes

Make sure that the following prerequisites are met:
- The crane is horizontally aligned.
- The crane is properly supported (cranes with support).
- The counterweight has been installed on the turntable according to the load chart.
- The central ballast has been installed according to the load chart.
- The counterweight is installed according to the load chart or the erection / take down charts.
- The derrick ballast (suspended ballast or ballast trailer ballast) is installed according to the load chart or the erection / take down charts.
- The boom has been installed according to the load chart and the Crane operating instructions.
- The hoist rope has been correctly placed in the rope pulleys and prevented from jumping out with the rope retaining pins.
- All limit switches have been correctly installed and are fully functional.
- All pin connections have been secured.
- No personnel is within the danger zone.
- There are no loose parts on the boom or the auxiliary boom.
- In winter, the exposed rope pulleys must be kept free of snow, frost and ice.
- In winter, the boom, the auxiliary boom and their associated components (limit switches, cable drum, flashing beacon, wind speed sensor etc.) must be kept free of ice and snow.

▶ Check if all prerequisites have been met.

15.3 Rigging the guy rods on lattice booms on placed down boom system

WARNING
Danger of fatal injury due to damaged guy rods!
If the boom system is placed on the ground or a load bearing support in strong wind or longer downtime, the guy rods can be damaged due to wind influence on the boom guying. This wind influenced oscillations can lead to fatigue on the guy rods.
As a result, the guy rods could break or rip off under load - for example when erecting the boom system or in crane operation. The boom system can therefore fall uncontrolled forward onto the ground. Personnel can be severely injured or killed.
- ▶ Make sure that the guy rods are placed completely on the lattice sections and relieved when the boom systems are placed on the ground.
- ▶ Make sure that freely suspended guy rods are rigged on the lattice boom.
- ▶ Make sure that the upper pulley block is rigged on the lattice boom in Derrick operating modes.
- ▶ Make sure, that the guying on the luffing lattice jib is removed on lattice mast cranes.
- ▶ Make sure that the guy rods are inspected before resuming crane operation and that no damage or cracks are present.
- ▶ Make sure that the maintenance intervals of the guy rods are adhered to.

Note
- ▶ In case of strong wind or longer downtimes of the crane, the boom system must be placed on the ground or on a load bearing support.
- ▶ The guying must be relieved and the guy rods must be placed on the transport receptacles.
- ▶ The following illustrations are examples and may not match your crane exactly.

LWE/ab Muli 010/24201-02-02/en

copyright © Liebherr-Werk Ehingen GmbH 2016

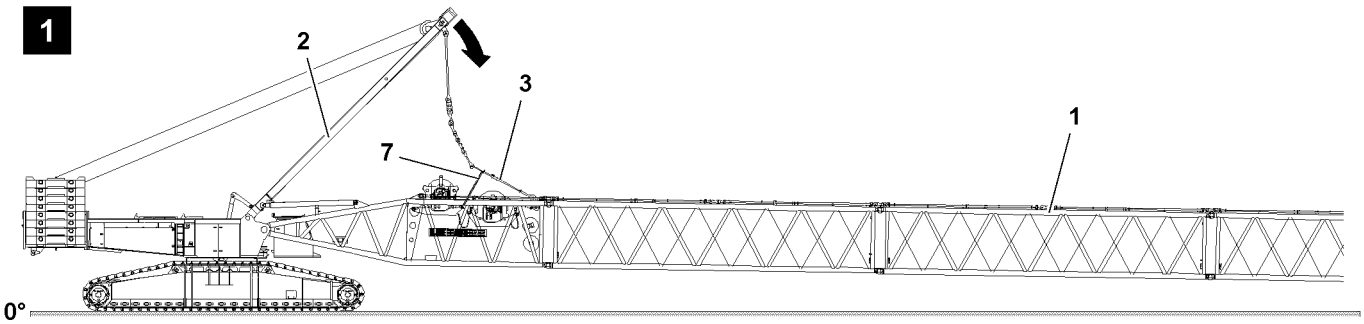

Fig.120722: Guying placed in transport receptacle and SA-frame guying relieved

- ▶ Place the guy rods on the lattice sections **1**: Luff the SA-frame **2** to the front until the guying is placed completely in the transport receptacles on the lattice sections and the SA-frame guying **3** is relieved, see illustration **1**.
- ▶ To minimize side oscillation of the SA-frame guying **3** due to wind influence: Rig the SA-frame guying **3** with suitable rigging straps / ropes **7** against the boom, see illustration **1**.

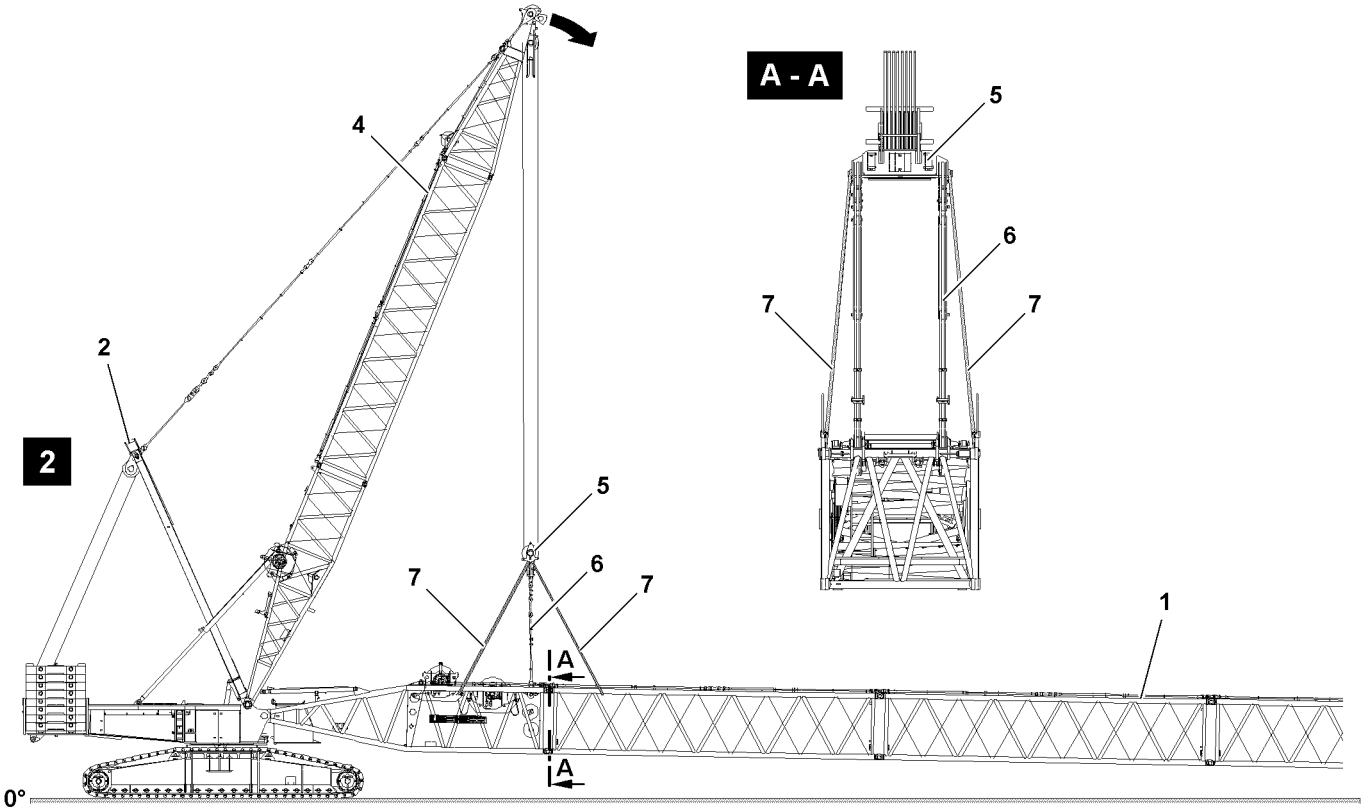

Fig.120771: Guying placed in transport receptacle and upper pulley block rigged against the boom

- ▶ Place the boom system down and - if present - release the derrick guying to the derrick ballast.
- ▶ Place the guy rods on the lattice sections **1**: Luff the D-boom **4** down to the front until the main boom guying is placed completely in the transport receptacles on the lattice sections and the upper pulley block **5** is positioned over the S-pivot section, see illustration **2**.
- ▶ To minimize side oscillation of the upper pulley block **5** due to wind influence: Rig the upper pulley block **5** with suitable rigging straps / ropes **7** against the boom, see illustration **2**.

For lattice mast cranes with luffing lattice jib the following applies:

LWE/ab Muli 010/24201-02-02/en

copyright © Liebherr-Werk Ehingen GmbH 2016

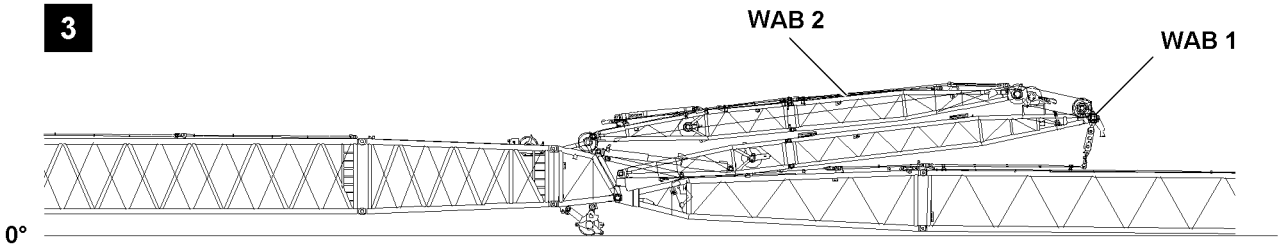

Fig.120821: Guying in transport receptacle(s) and WA-frames placed down to the front (example lattice mast crane)

WARNING
Danger of accident when removing the W-guying!
When placing down and removing the guying dangerous situations can arise.
▶ Make sure that the danger notes in the respective chapter of the Crane operating instructions are observed.

▶ Remove the guy rods on the luffing lattice jib and place them into the transport receptacles.
▶ Place the WA-frames (WA-frame 1 **WAB 1** and WA-frame 2 **WAB 2**) down to the front.

For telescopic cranes with luffing lattice jib the following applies:

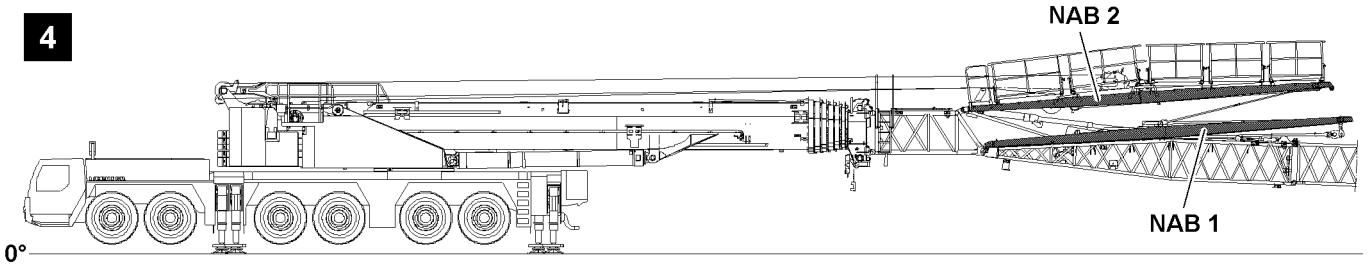

Fig.121261: Guying in transport receptacle(s) and NA-frames placed down to the front (example telescopic crane)

WARNING
Danger of accident when placing the NA-frames down!
When placing the guy rods as well as the NA-frames down dangerous situations can arise.
▶ Make sure that the danger notes in the respective chapter of the Crane operating instructions are observed.

▶ Spool the jib control winch out and place the NA-frames down to the front so that the guy rods are relieved.

LWE/ab Muli 010/24201-02-02/en

copyright © Liebherr-Werk Ehingen GmbH 2016

5.02 Folding jib - TK

1	General	3
2	Assembling the folding jib	13
3	Reeving the hoist rope	43
4	Changing over mechanical folding jib from 0° to 22.5° or 45°	45
5	Hydraulic connections	57
6	Electrical connections	63
7	Erection	71
8	Adjusting the folding jib angle hydraulically*	73
9	Changing over mechanical folding jib from 22.5° or 45° to 0°	75
10	Unreeving the hoist rope	83
11	Removing the folding jib	85

LWE/ab Muli 010/24201-02-02/en

copyright © Liebherr-Werk Ehingen GmbH 2016

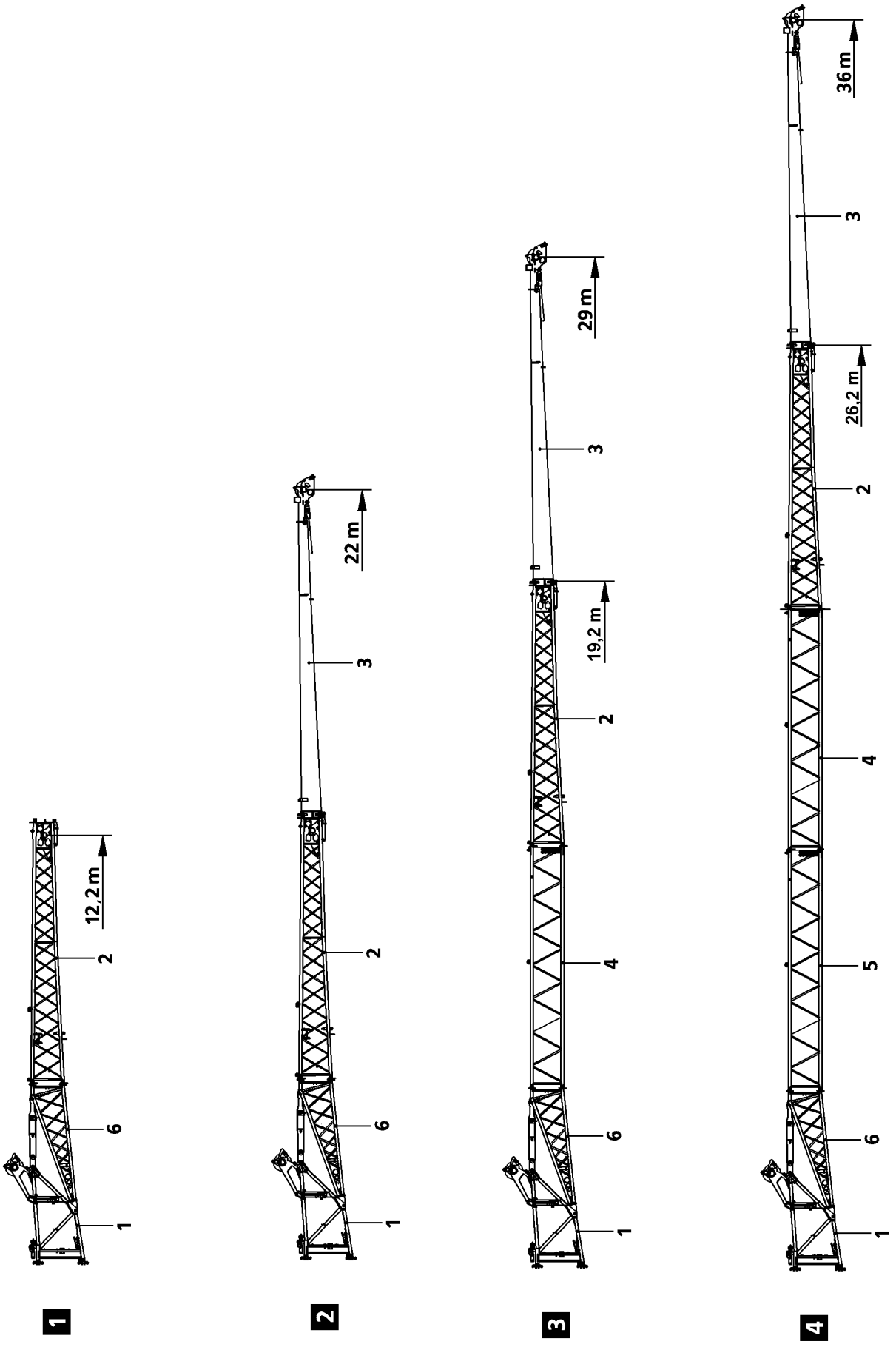

LWE/ab Muli 010/24201-02-02/en

Fig.192122

copyright © Liebherr-Werk Ehingen GmbH 2016

1 General

This crane may be equipped with a hydraulic or mechanical folding jib. The folding jib with „mechanical angle adjustment“ may be assembled as a straight (0 °) extension or below an angle of 22.5 ° or 45 ° to the telescopic boom. The folding jib with „hydraulic angle adjustment“ may be luffed under load from 0 ° to 45 ° . The folding jib is folded onto the telescopic boom and mechanically secured for on road travel.

DANGER
Danger of accident when driving with folding jib!
- ▶ Before on road travel, the folding jib must always be brought into the transport position and mechanically secured.
- ▶ Make sure that the folding jib is properly secured before moving the crane on public roads.

1.1 Folding jib variations

The following folding jib variations are possible:
- Single folding jib with „mechanical angle adjustment“
- Single folding jib with „hydraulic angle adjustment“
- Double folding jib with „mechanical angle adjustment“
- Double folding jib with „hydraulic angle adjustment“
- 3-piece folding jib with „mechanical angle adjustment“
- 3-piece folding jib with „hydraulic angle adjustment“
- 4-piece folding jib with „mechanical angle adjustment“
- 4-piece folding jib with „hydraulic angle adjustment“

1.1.1 Single folding jib, see illustration 1

Position	Description	Length
1	Adapter	1.5 m
2	Reducer section	7.55 m
6	Pivot section	3.65 m
Length of single folding jib		12.7 m

1.1.2 Double folding jib, see illustration 2

Position	Description	Length
1	Adapter	1.5 m
2	Reducer section	7.55 m
3	End section	9.3 m
6	Pivot section	3.65 m
Length of double folding jib		22.0 m

LWE/ab Muli 010/24201-02-02/en

copyright © Liebherr-Werk Ehingen GmbH 2016

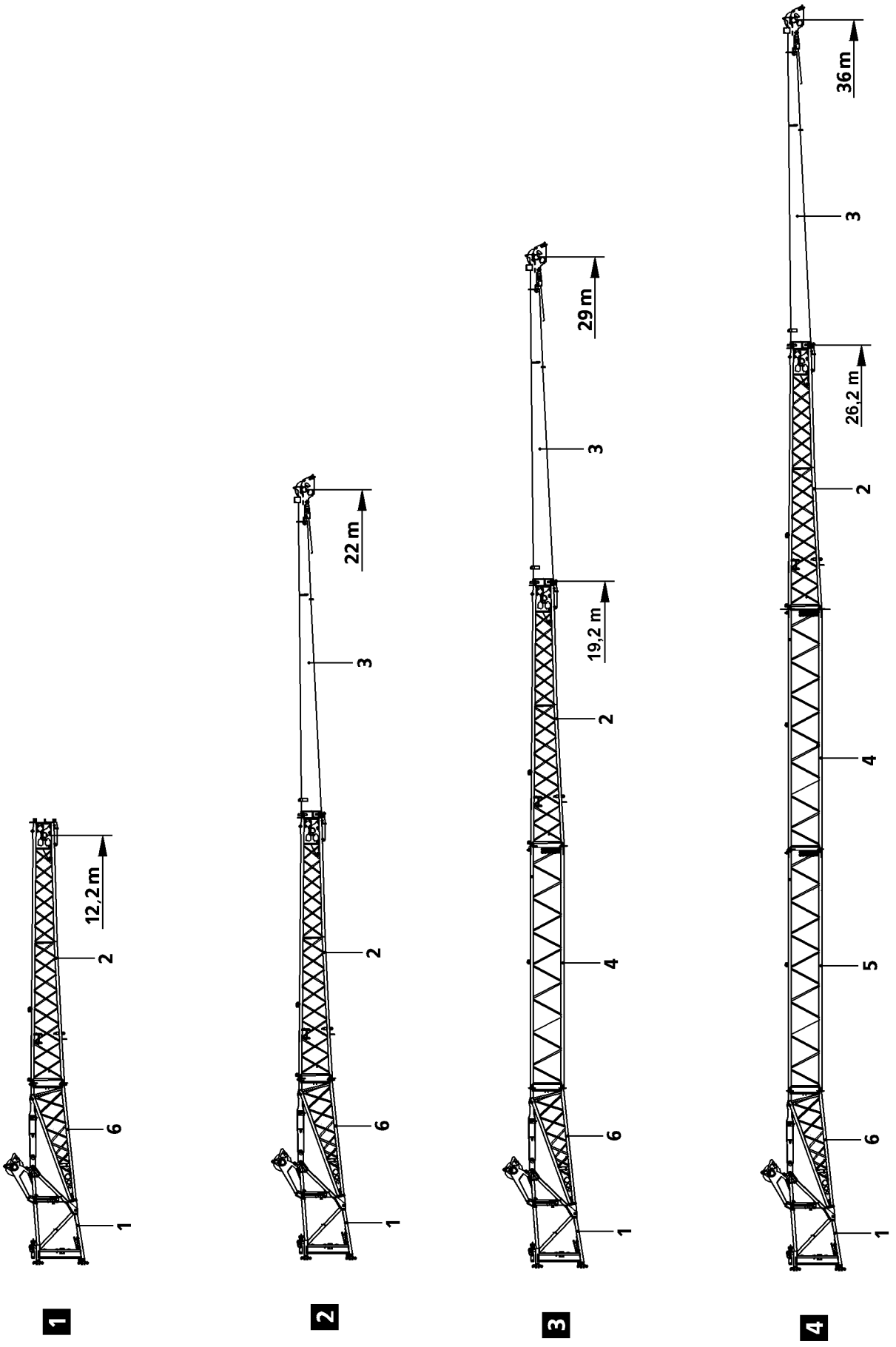

LWE/ab Muli 010/24201-02-02/en

Fig.192122

copyright © Liebherr-Werk Ehingen GmbH 2016

1.1.3 3-piece folding jib, see illustration 3

Position	Description	Length
1	Adapter	1.5 m
2	Reducer section	7.55 m
3	End section	9.3 m
4	Folding jib extension	7 m
6	Pivot section	3.65 m
Length of 3-piece folding jib		29 m

1.1.4 4-piece folding jib, see illustration 4

Position	Description	Length
1	Adapter	1.5 m
2	Reducer section	7.55 m
3	End section	9.3 m
4	Folding jib extension	7 m
5	Folding jib extension	7 m
6	Pivot section	3.65 m
Length of 4-piece folding jib		36 m

LWE/ab Muli 010/24201-02-02/en

copyright © Liebherr-Werk Ehingen GmbH 2016

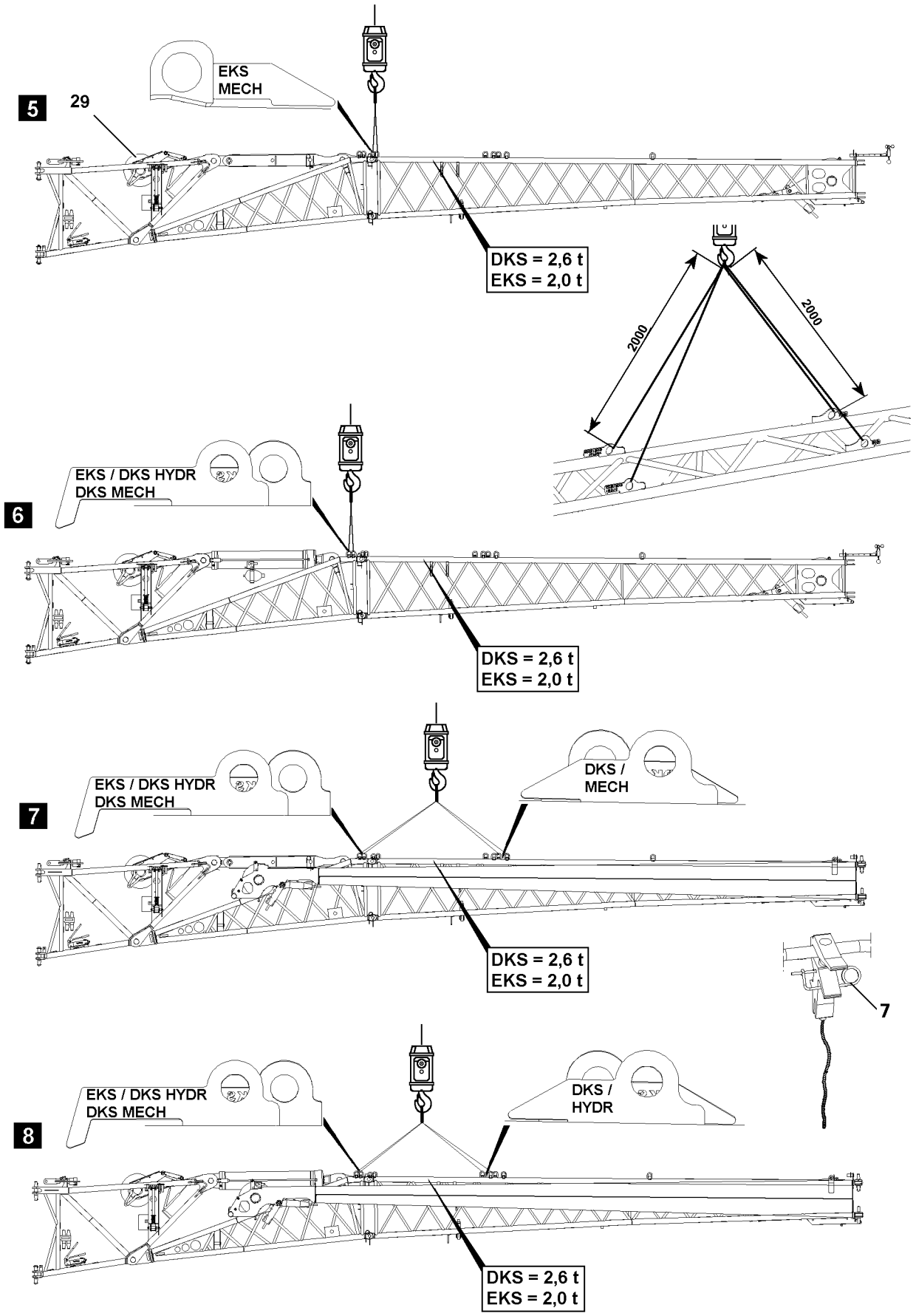

Fig.117343

LWE/ab Muli 010/24201-02-02/en

copyright © Liebherr-Werk Ehingen GmbH 2016

1.2 Fastening points „folding jib complete“

If the folding jib is carried along separately with a transport vehicle, then fastening points are installed for the assembly and disassembly of the folding jib. The transportation methods vary in terms of single or double folding jib and / or „mechanical angle adjustment“ or „hydraulic angle adjustment“.

The appropriate fastening eyes are marked with tags.

Make sure that the following prerequisites are met:
- The single folding jib or the double folding jib is pinned and secured in 0° position.
- The rope guide pulley **29** is pinned and secured in transport position.
- The end section is pinned with the pivot section in folded in position and secured with spring retainer **7**.

DANGER
Danger of accident due to incorrect attachment!
Life-threatening situations can arise if the folding jib is improperly or incorrectly attached!
- ▶ Attach the folding jib according to the fastening points shown on the signs!
- ▶ The appropriate fastening eyes and points are marked with tags.
- ▶ Attaching the single folding jib or the double folding jib on non-intended points or on any arbitrary location is **prohibited**!
- ▶ When attaching the double folding jib, the end section **3** must be folded in, locked and the spring retainer **7** must be secured!

CAUTION
Damage of fastening points!
If the fastening equipment is too short, then the fastening points on the folding jibs can be damaged!
- ▶ To attach the folding jibs, fastening equipment with a strand length of at least 2000 mm each must be used!

LWE/ab Muli 010/24201-02-02/en

copyright © Liebherr-Werk Ehingen GmbH 2016

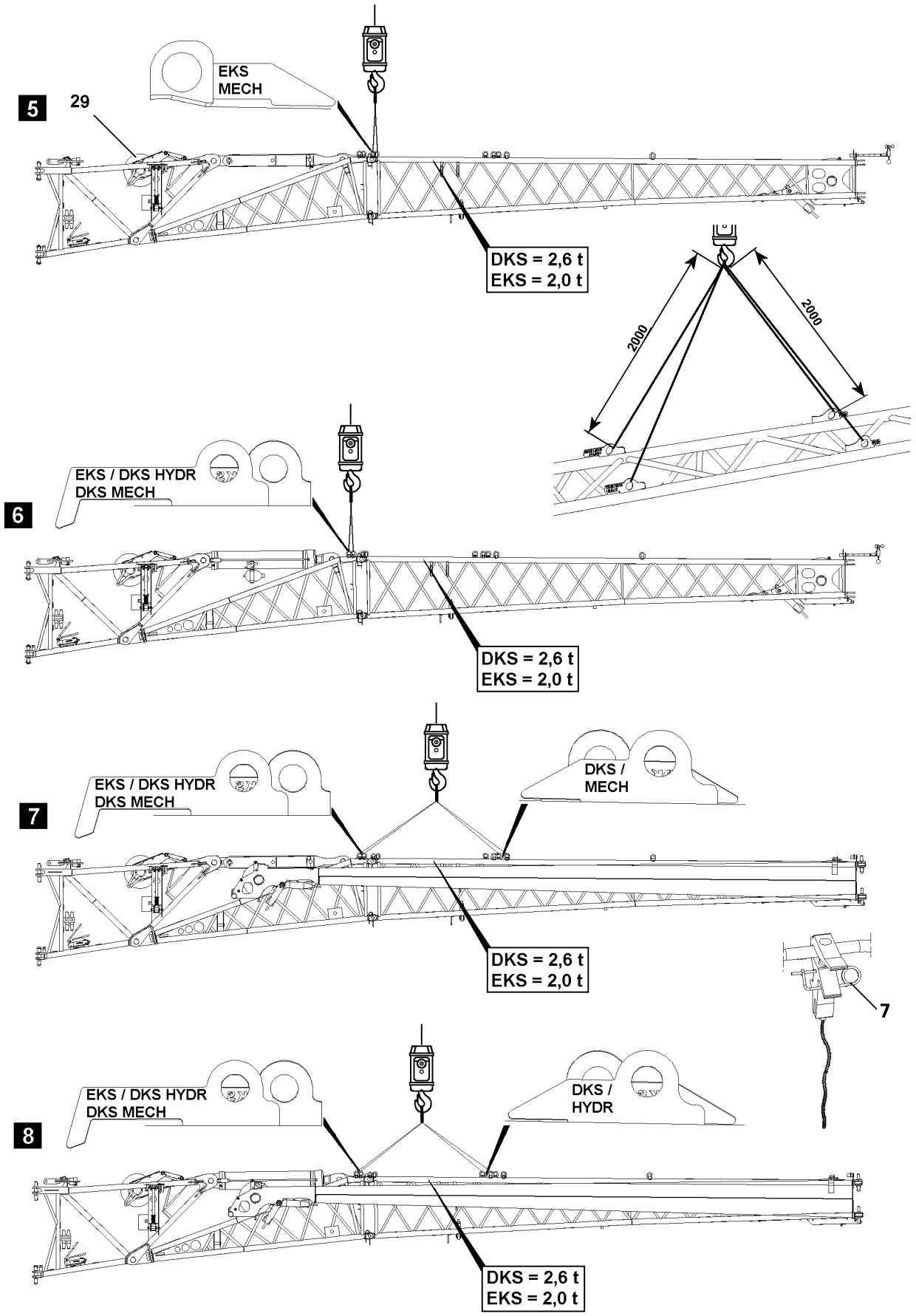

Fig.117343

LWE/ab Muli 010/24201-02-02/en

copyright © Liebherr-Werk Ehingen GmbH 2016

1.2.1 Single folding jib, see illustration 5

Single folding jib with „mechanical angle adjustment“.

Description	Abbreviation	Weight
Mechanical	MECH	
Single folding jib	EKS	2.0 t

1.2.2 Single folding jib, see illustration 6

Single folding jib with „hydraulic angle adjustment“.

Description	Abbreviation	Weight
Hydraulic	HYDR	
Single folding jib	EKS	2.0 t

1.2.3 Double folding jib, see illustration 7

Double folding jib with „mechanical angle adjustment“.

Description	Abbreviation	Weight
Mechanical	MECH	
Double folding jib	DKS	2.6 t

1.2.4 Double folding jib, see illustration 8

Double folding jib with „hydraulic angle adjustment“.

Description	Abbreviation	Weight
Hydraulic	HYDR	
Double folding jib	DKS	2.6 t

LWE/ab Muli 010/24201-02-02/en

copyright © Liebherr-Werk Ehingen GmbH 2016

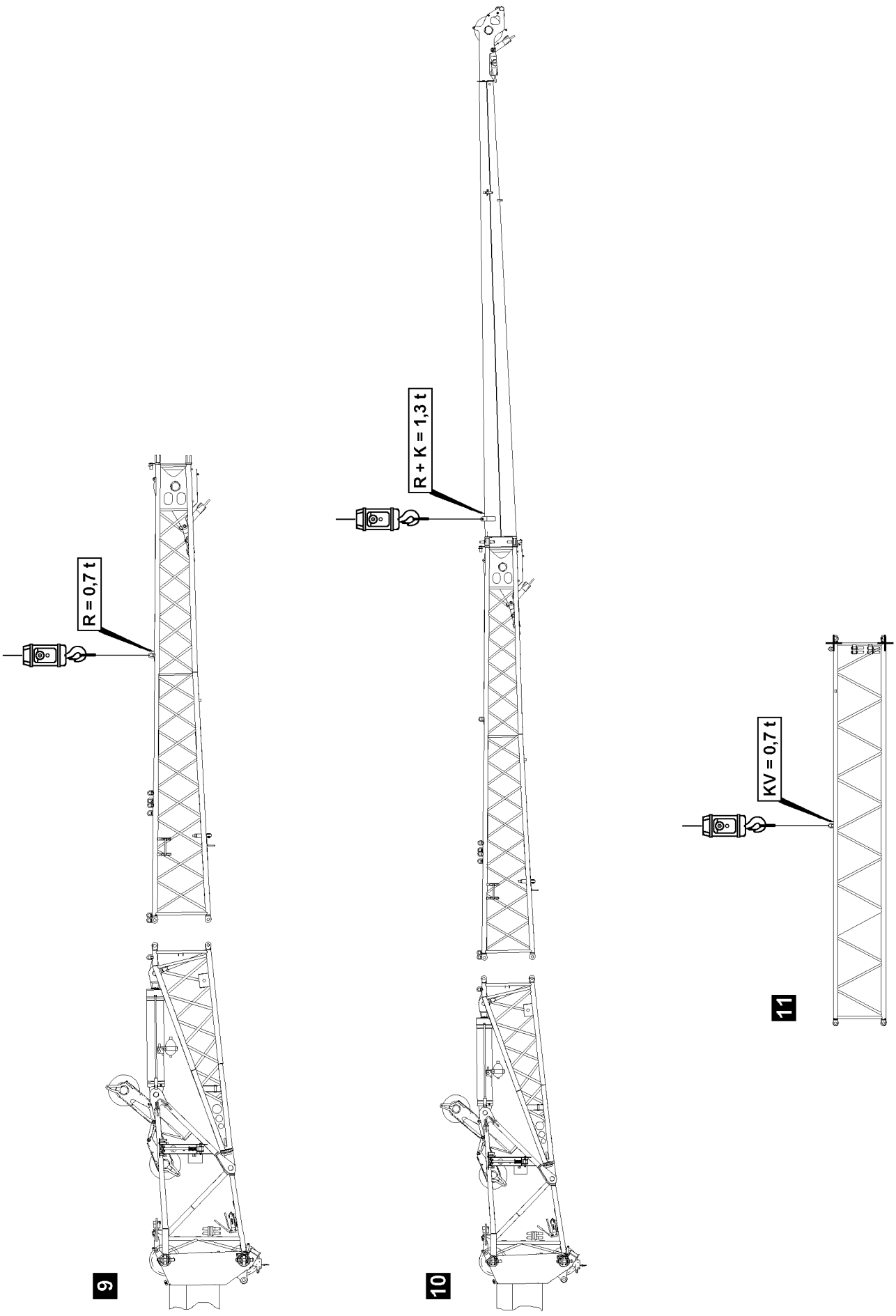

Fig.196429

LWE/ab Muli 010/24201-02-02/en

copyright © Liebherr-Werk Ehingen GmbH 2016

1.3 Fastening points „separated folding jib“

To install or remove the 3 or 4 piece folding jib, various fastening eyes are installed on the folding jib.

The appropriate fastening eyes are marked with tags.

1.3.1 Single folding jib, see illustration 9

Description	Abbreviation	Weight
Reducer section	R	0.7 t

1.3.2 Double folding jib, see illustration 10

Description	Abbreviation	Weight
Reducer section with end section	R + K	1.3 t

1.3.3 Folding jib extension, see illustration 11

Description	Abbreviation	Weight
Folding jib extension	KV	0.7 t

LWE/ab Muli 010/24201-02-02/en

copyright © Liebherr-Werk Ehingen GmbH 2016

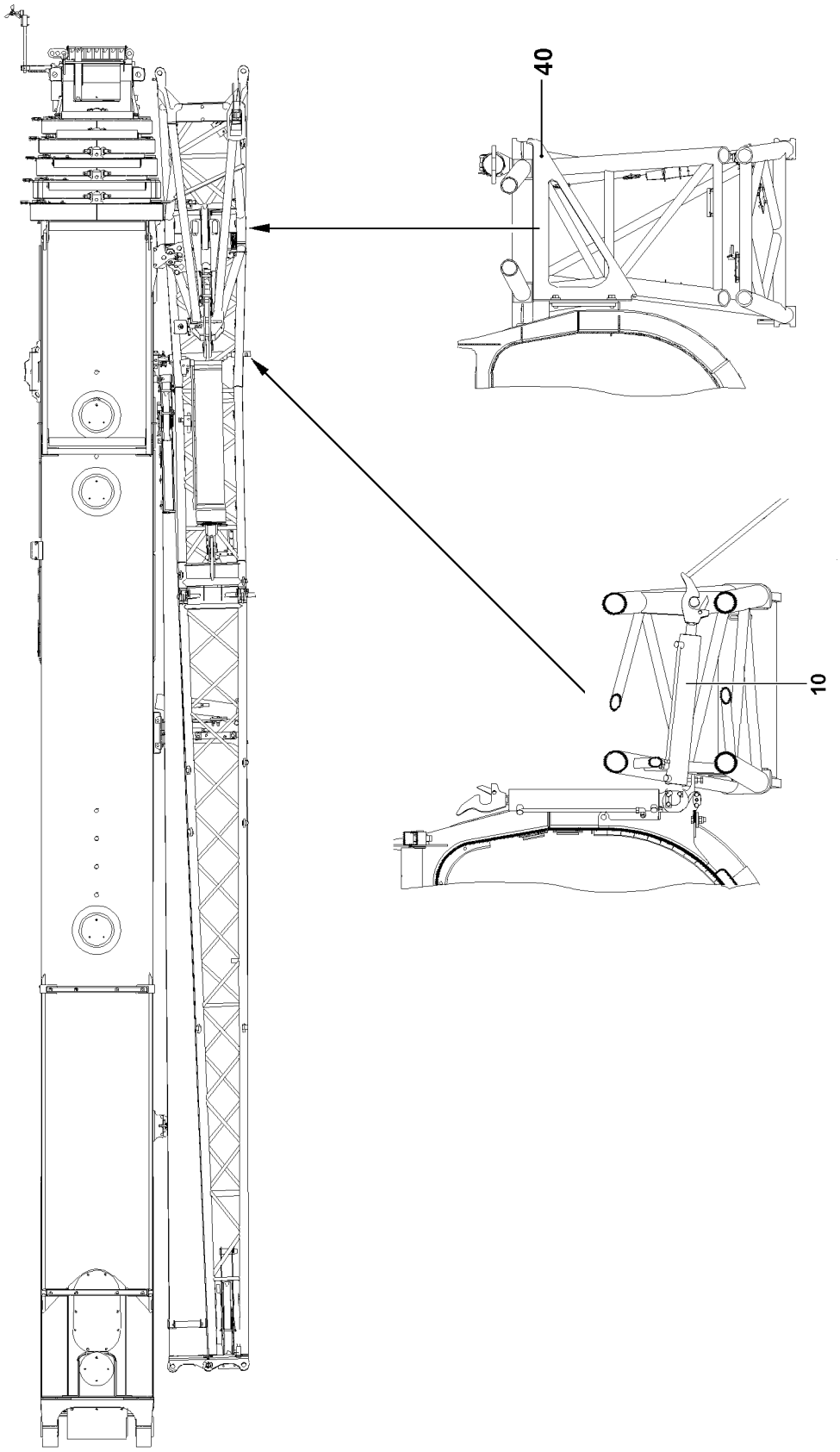

Fig.103445

copyright © Liebherr-Werk Ehingen GmbH 2016

LWE/ab Muli 010/24201-02-02/en

2 Assembling the folding jib

For Tele operation, the swing cylinder **10** can be folded up, if necessary.

2.1 General

DANGER
Danger of fatal injuries due to falling folding jib!
As a result of improperly assembled, damaged or non-existing catch bar **40** on the telescopic boom pivot section, the folding jib – due to an assembly error – can fall down and cause fatal injuries.

- ▶ Before folding jib assembly, make sure that the catch bar **40** is properly mounted on the telescopic boom pivot section and that it is not damaged.
- ▶ The catch bar **40** is a mechanical safety device. For that reason, it is prohibited to change the catch bar **40** in any way.
- ▶ Standing under the folding jib during the swing procedure is prohibited!
- ▶ Standing in the swing range as well as in the folding area of the folding jib is prohibited!
- ▶ The folding jib must be secured by an auxiliary rope during the swinging process!

WARNING
Danger of falling!
During assembly and disassembly, personnel must be secured with appropriate aids to prevent them from falling! If this is not observed, assembly personnel could fall and suffer fatal injuries!

- ▶ All work aloft, where there is a danger of falling must be carried out with suitable aids!
- ▶ If fall arrest equipment is available, then it must be used, see Crane operating instructions, chapter 2.06!
- ▶ If aids are not available and work cannot be carried out from the ground, then the assembly personnel must secure themselves with the supplied fall arrest system to prevent falling, see Crane operating instructions, chapter 2.04!
- ▶ The supplied fall arrest system must be fastened on the fastening and hook points as well as on the safety ropes. For safety points, see Crane operating instructions, chapter 2.06!
- ▶ Only step on the aids, ladders and catwalks with clean shoes!
- ▶ Keep aids, ladders and catwalks free of heavy dirt, snow and ice!
- ▶ It is prohibited to walk on the telescopic boom!

LWE/ab Muli 010/24201-02-02/en

copyright © Liebherr-Werk Ehingen GmbH 2016

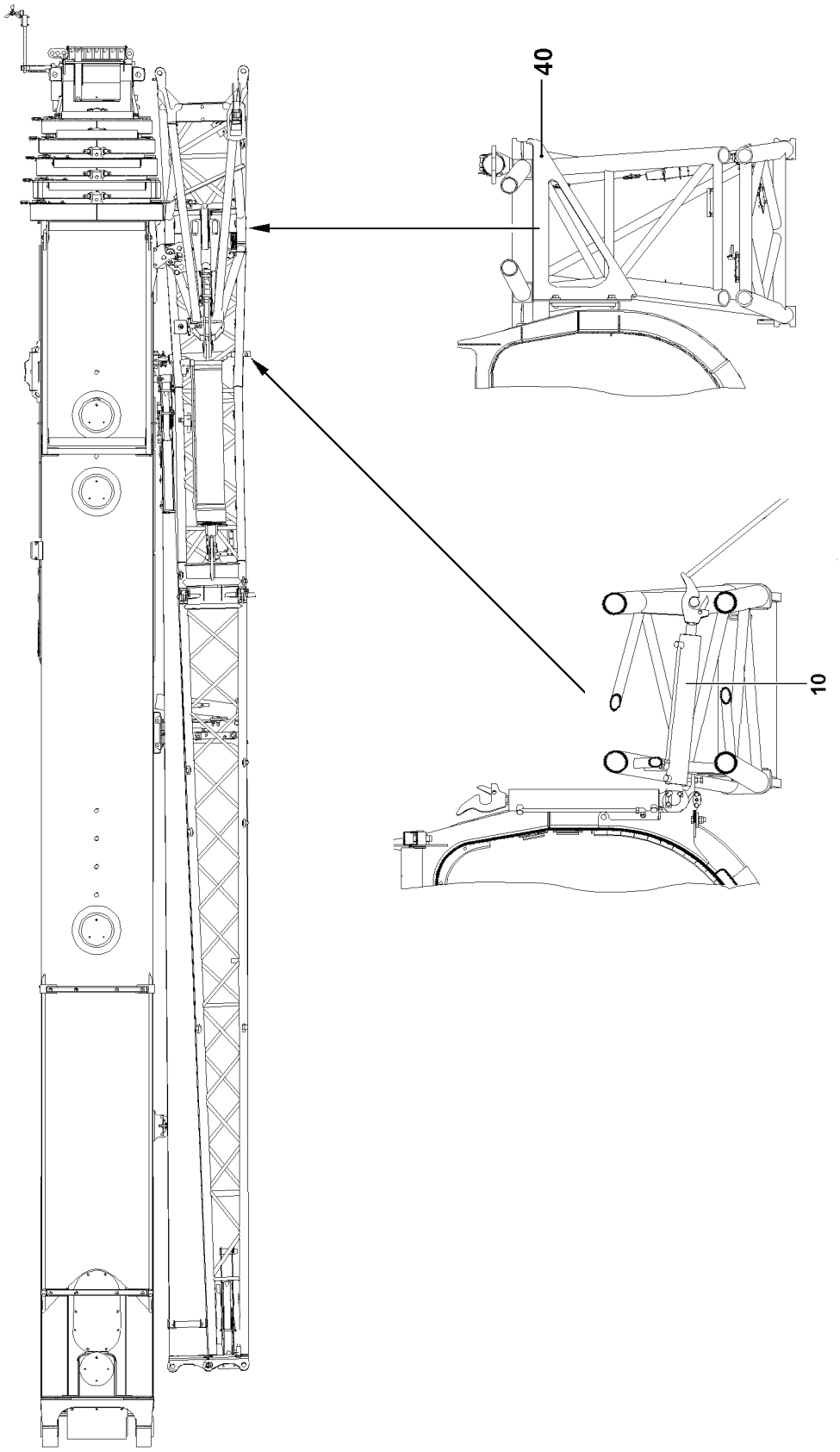

LWE/ab Muli 010/24201-02-02/en

Fig.103445

copyright © Liebherr-Werk Ehingen GmbH 2016

2.1.1 Prerequisite for assembly

Make sure that the following prerequisites are met:
- The crane is properly supported and horizontally aligned.
- The counterweight has been installed on the turntable according to the load chart.
- The telescopic boom is fully telescoped in.
- The folding jib has been attached for transport on the telescopic boom pivot section.

2.1.2 Prerequisites for operation with crane LTM 1220

Make sure that the following prerequisite is met:
- The telescopic boom has been luffed down to the rear or the side in the 0° position.

DANGER
Danger of accident if the folding jib swings out by itself when it is unpinned!
If the telescopic boom is not in the 0° position, there is a danger of accidents if the folding jib swings out by itself when it is unpinned.
▶ Move the telescopic boom to 0° position.

2.1.3 Prerequisites for operation with crane LTR 1220

Make sure that the following prerequisite is met:
- The telescopic boom is luffed up to the rear or to the side to 1°.

DANGER
Danger of accident if the folding jib swings out by itself when it is unpinned!
If the telescopic boom is not in the 1° position, there is a danger of accidents if the folding jib swings out by itself when it is unpinned.
▶ Move the telescopic boom to 1° position.

LWE/ab Muli 010/24201-02-02/en

copyright © Liebherr-Werk Ehingen GmbH 2016

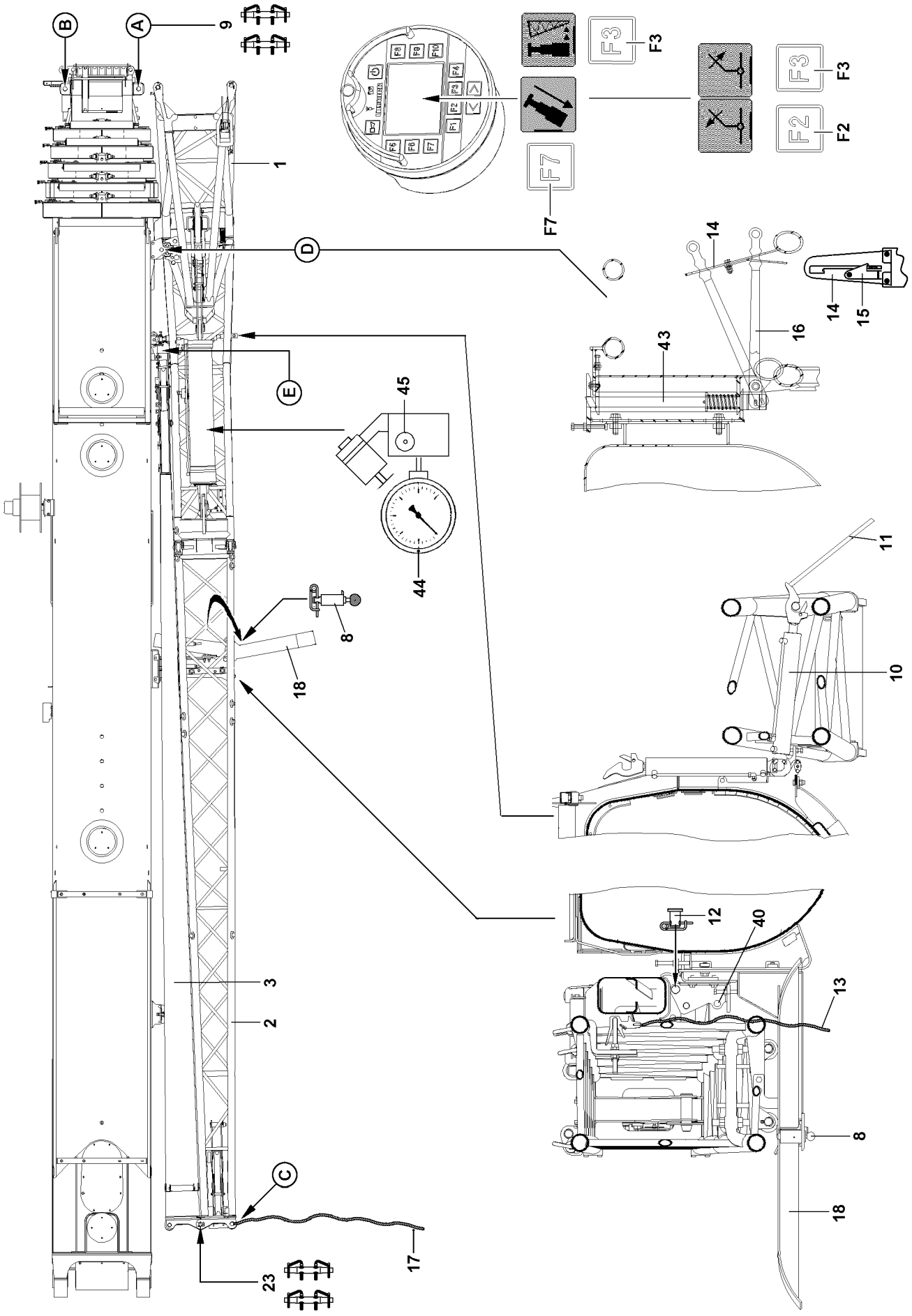

Fig.118027

LWE/ab Muli 010/24201-02-02/en

copyright © Liebherr-Werk Ehingen GmbH 2016

2.2 Reeving out the hoist rope on the telescopic boom head

In order to speed up subsequent reeving in of the hoist rope after assembling the folding jib, the hook block can be set down at a distance from the crane approximating to the subsequent distance of the telescoped in telescopic boom **with** assembled folding jib.

- ▶ Telescope the telescopic boom out to the respective length.
- ▶ Place the hook block on the ground.
- ▶ Disengage the hoist rope on the rope fixed point.
- ▶ For safety reasons, remove the hoist limit switch weight and the chain.

Note

- ▶ The hoist limit switch must be pulled mechanically and the operating rope must be attached to the telescopic boom head with the snap hook when operating the folding jib.
- ▶ The telescopic boom may remain reeved if the hoist rope of winch 2 is used for folding jib operation.

- ▶ Remove the rope retaining pipes on the pulley head and on the back pulley.
- ▶ Telescope the telescopic boom in again completely.

2.3 Important check before swinging out the hydraulic folding jibs (TNZK operation)

DANGER

Danger of fatal injury if the folding jib inadvertently folds down!
When using hydraulic folding jibs (TNZK operation), before swinging the folding jib out, check if a pressure of 60 bar is shown on the pressure gauge **44**. If the pressure on the pressure gauge **44** is too low, fatal accidents can occur if the folding jib folds down by itself!

- ▶ It is **expressly prohibited** to swing out the folding jib with less than 60 bar on the pressure gauge **44**.

The restrictor **45** may only be operated during maintenance operations.

If the pressure gauge **44** shows low pressure:

- ▶ Connect hydraulic line.
- ▶ Luff the folding jib up with the master switch until a pressure of at least 60 bar is shown on the pressure gauge **44**.
  or
  On the Bluetooth™ Terminal (BTT) call up the „Lift / lower the folding jib“ menu.
- ▶ Press the key **F2** until a pressure of at least 60 bar is shown on the pressure gauge **44**, see Crane operating instructions, chapter 5.31.

LWE/ab Muli 010/24201-02-02/en

copyright © Liebherr-Werk Ehingen GmbH 2016

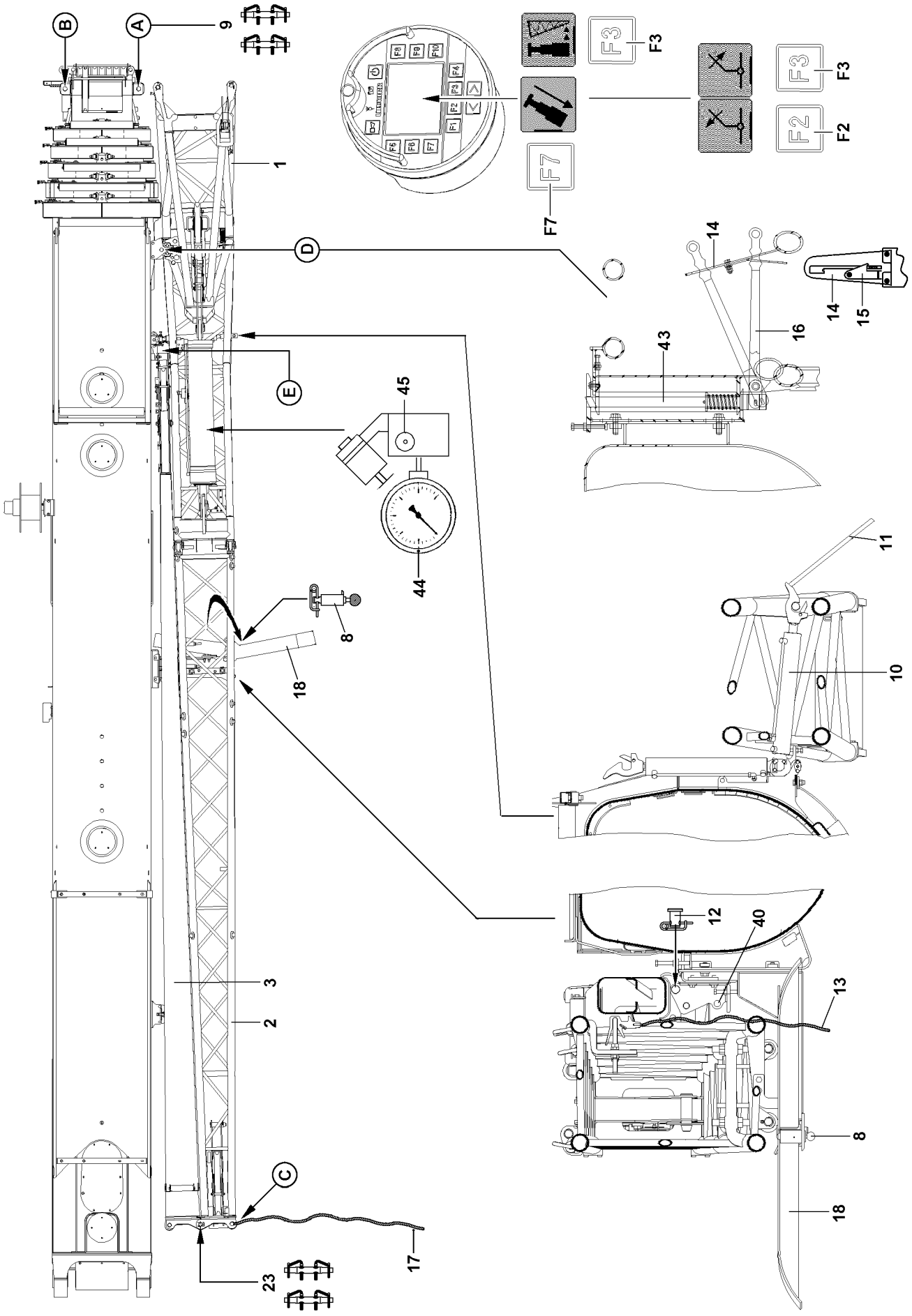

Fig.118027

LWE/ab Muli 010/24201-02-02/en

copyright © Liebherr-Werk Ehingen GmbH 2016

2.4 Assembly of the single folding jib carried on the crane

The end section **3**, which is not required, remains pinned to the telescopic boom during single folding jib operation.

DANGER
Danger of fatal injuries due to toppling end section!
During operation with the single folding jib, the end section **3** may not be unpinned from the telescopic boom. Otherwise, there is a danger of accidents if the end section **3** falls down.
▶ Do not unpin the end section **3** on the telescopic boom!

2.4.1 Assembly procedure, part 1

When swinging the folding jib support **18** in and out, ensure that the spring pin **8** is unlocked with one hand and that the folding jib support **18** is moved overhead with the other hand.

▶ Release and unpin the spring pin **8**.
▶ Swing the folding jib support **18** out until the spring pin **8** locks again.

For a „hydraulic folding jib“ (TNZK operation), the hydraulic line must be uncoupled before swinging the folding jib out.

If a hydraulic folding jib is carried along:
▶ Uncouple the hydraulic line on point **E**.
▶ Attach the auxiliary rope **17** on point **C**.

If a double folding jib is carried along:
▶ Release and unpin the pin **23**.

If a double folding jib is carried along:
▶ Pull the nylon rope **13** and loosen the lock between the end section **3** and the reducer section **2**.
▶ Start the crane engine.
▶ Press the function key **F3** on the BTT and swing out the folding jib with swing cylinder until it can be pinned at point **A**.

Problem remedy
If the pin bores on point **A** do not align, the telescopic boom can be tensioned with the function key **F7**:
▶ Place the telescopic boom down and telescope all telescopes in completely.
▶ Pin telescope 5.

WARNING
Danger of severe crushing!
For the „Tension the telescope boom“ function, all telescoping sections are pulled together, which can lead to severe crushing injuries of fingers.
▶ As long as the function „Tension telescopic boom“ is carried out, it is prohibited for any personnel to remain in the push out range of the telescoping sections!

▶ Press the function key **F7** on the BTT.

Result:

– All telescopic sections are pulled together.

LWE/ab Muli 010/24201-02-02/en

copyright © Liebherr-Werk Ehingen GmbH 2016

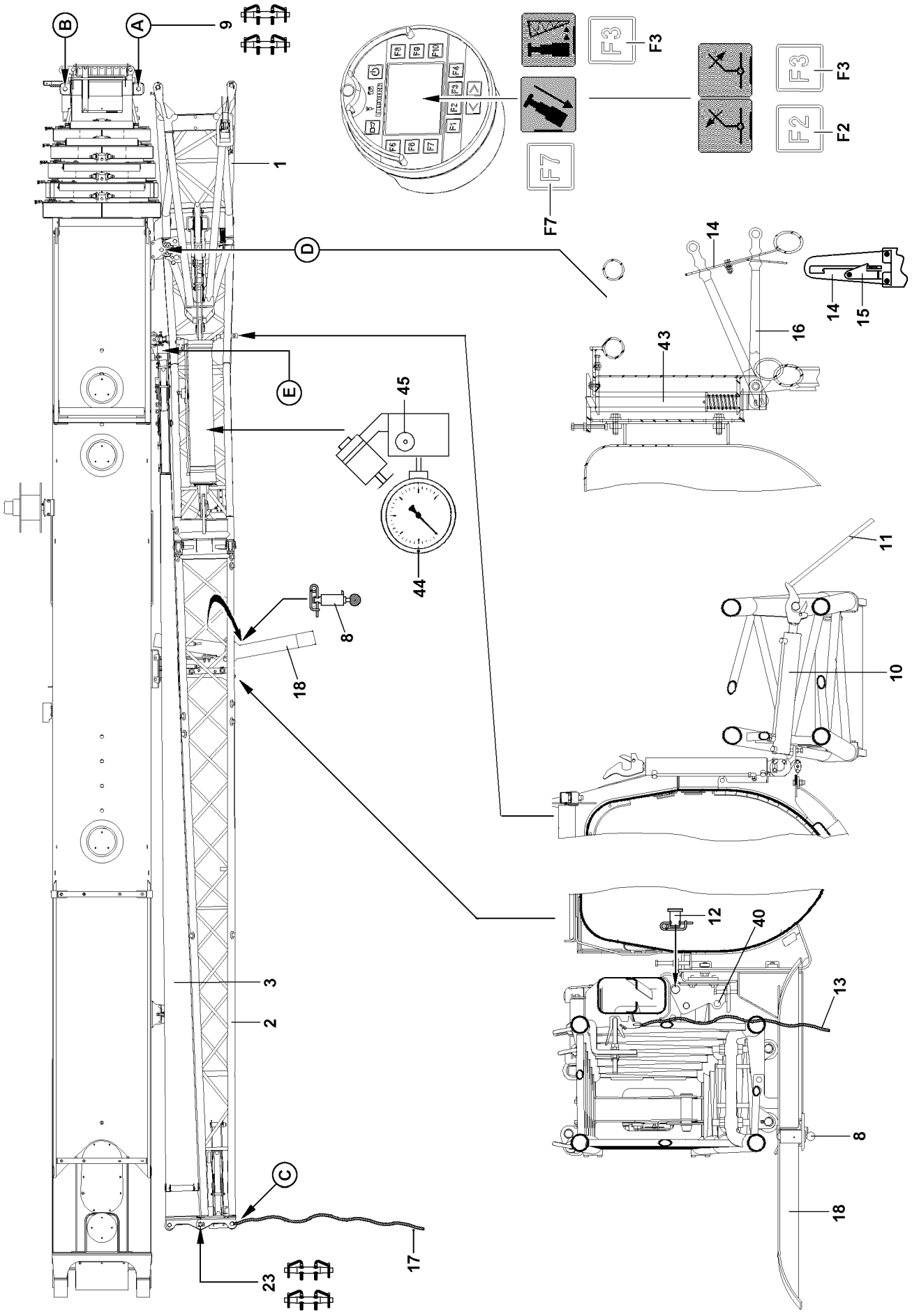

Fig.118027

LWE/ab Muli 010/24201-02-02/en

copyright © Liebherr-Werk Ehingen GmbH 2016

Note

▶ Bluetooth™ Terminal (BTT), see Crane operating instructions, chapter 5.31, section „The assembly function menu on the BTT“.

▶ Insert the pins **9** on top and bottom on point **A** and secure.

DANGER

Danger of fatal injuries due to falling folding jib!

Special retaining clips must be used to secure the pins **9**. The use of spring pins or spring retainers on the pins **9** is not permitted. The folding jib may only be unlocked at point **D**, when the pins **9** are pinned and secured at the top and bottom at point **A**.

▶ Pin and secure pins **9** at point **A** on top and bottom.

▶ Swing the safety bracket **15** with assembly rod **11** to the side.
▶ Press the lever **16** with the assembly rod **11** upward and latch it into the link **14**.
▶ Press the function key **F3** on the BTT and swing the folding jib with the swing cylinder all the way out.
▶ Unlock the swing cylinder **10** with assembly rod **11**.

DANGER

Danger of fatal injuries due to falling folding jib!

The folding jib could fall down due to an assembly error.

▶ Standing under the folding jib during the swing procedure is prohibited!
▶ Standing in the swing range as well as in the folding area of the folding jib is prohibited!

▶ Swing the reducer section **2** with the auxiliary rope **17** by 180° until it can be pinned on the top and at the bottom at the point **B**.

LWE/ab Muli 010/24201-02-02/en

copyright © Liebherr-Werk Ehingen GmbH 2016

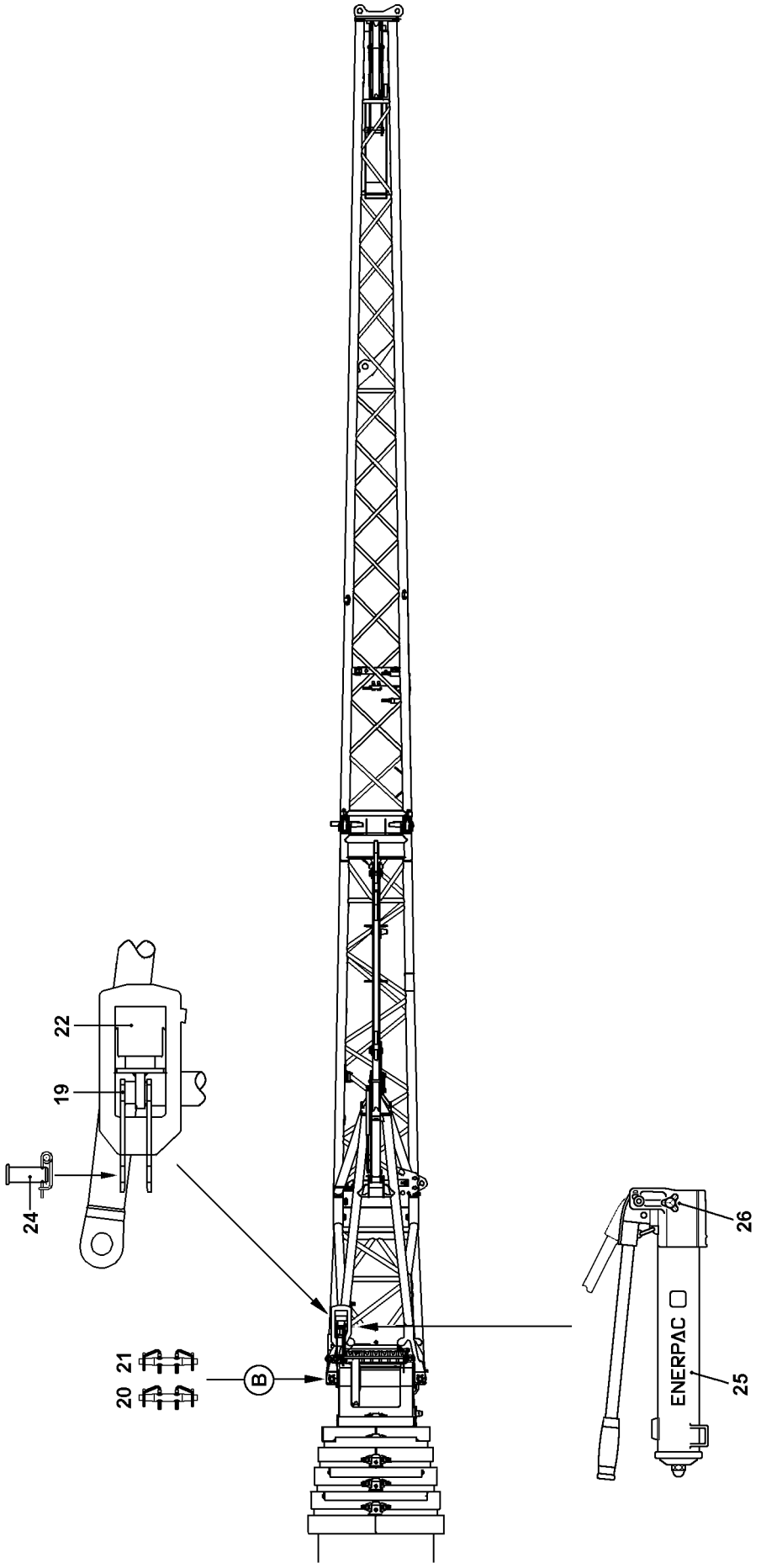

LWE/ab Muli 010/24201-02-02/en

Fig.196431

copyright © Liebherr-Werk Ehingen GmbH 2016

2.4.2 Assembly procedure, part 2

DANGER
Danger of accident!
- ▶ The use of spring pins or retaining springs is prohibited on pins **20** and pins **21**!
- ▶ To secure the pin **20** and the pin **21**, use the special retaining clips.

▶ Pin and secure the pin **20** on the bottom at point **B**.

In order to be able to pin on top on point **B**, the hydraulic / mechanical assembly aid **22** must be used.

- ▶ Release the pin **24** and unpin from bore **19**.
- ▶ Pin and secure the assembly aid **22** to the towing bracket with pin **24**.
- ▶ Close the knob **26**.
- ▶ Extend the hydraulic cylinder of the assembly aid **22** by operating the hand pump **25** until the bore is aligned at the opening of the folding jib and the telescopic boom.
- ▶ Pin and secure the pin **21** on top on point **B**.
- ▶ Open the knob **26**.

Result:

– The hydraulic cylinder of the assembly aid **22** returns to the starting position and the pin **24** is released.

LWE/ab Muli 010/24201-02-02/en

copyright © Liebherr-Werk Ehingen GmbH 2016

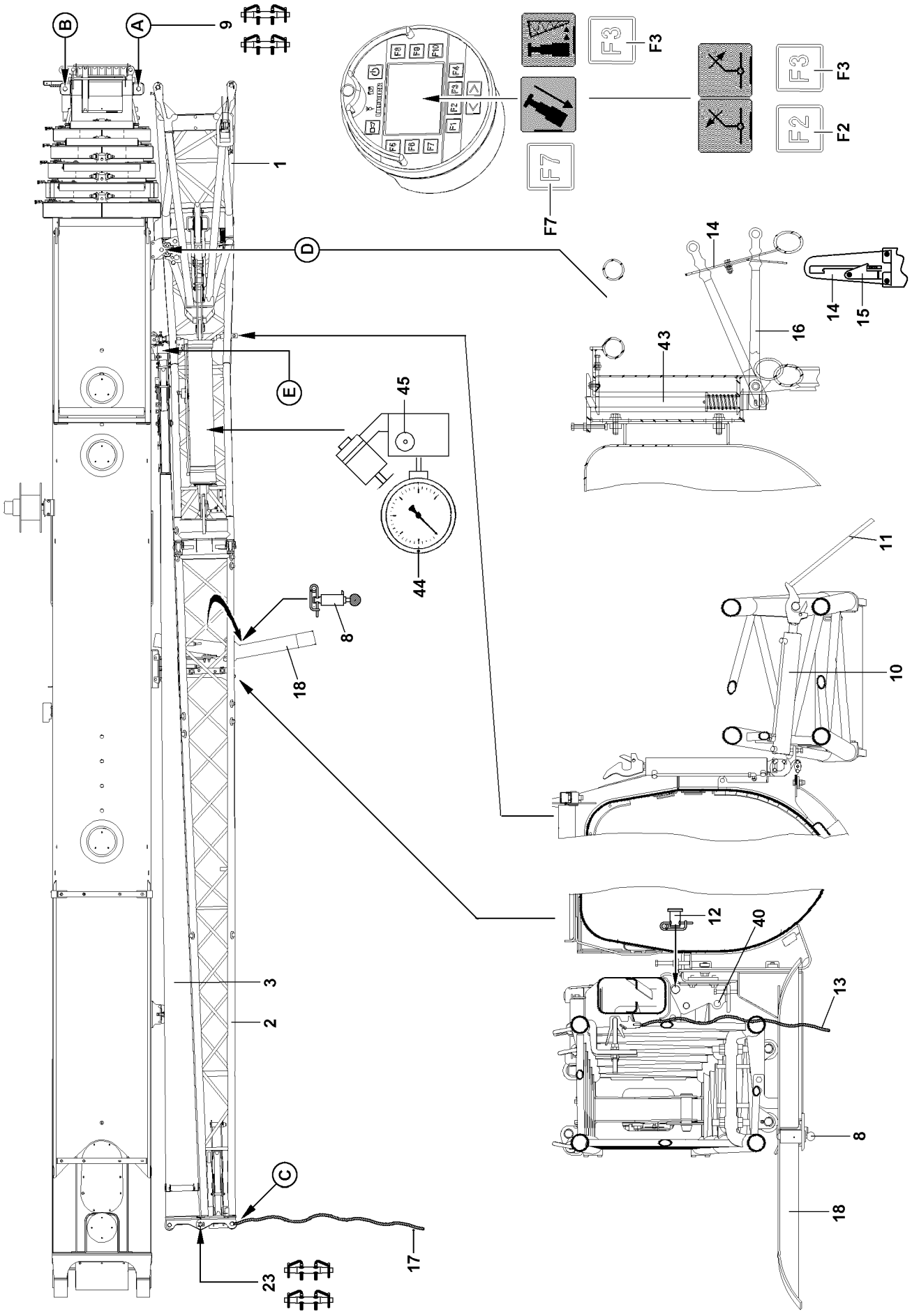

Fig.118027

LWE/ab Muli 010/24201-02-02/en

copyright © Liebherr-Werk Ehingen GmbH 2016

2.5 Assembly of the double folding jib carried on the crane

2.5.1 Assembly of reducer section, part 1

When swinging the folding jib support **18** in and out, ensure that the spring pin **8** is unlocked with one hand and that the folding jib support **18** is moved overhead with the other hand.

- ▶ Release and unpin the spring pin **8**.
- ▶ Swing the folding jib support **18** out until the spring pin **8** locks again.

For a „hydraulic folding jib“ (TNZK operation), the hydraulic line must be uncoupled before swinging the folding jib out.

If a hydraulic folding jib is carried along:

- ▶ Uncouple the hydraulic line on point **E**.
- ▶ Attach the auxiliary rope **17** on point **C**.
- ▶ Release and unpin pin **12** and insert into bore **40**.
- ▶ Press the function key **F3** on the BTT and swing out the folding jib with swing cylinder until it can be pinned at point **A**.

Problem remedy

If the pin bores on point **A** do not align, the telescopic boom can be tensioned with the function key **F7**:

- ▶ Place the telescopic boom down and telescope all telescopes in completely.
- ▶ Pin telescope 5.

WARNING

Danger of severe crushing!

For the „Tension the telescope boom“ function, all telescoping sections are pulled together, which can lead to severe crushing injuries of fingers.

- ▶ As long as the function „Tension telescopic boom“ is carried out, it is prohibited for any personnel to remain in the push out range of the telescoping sections!

- ▶ Press the function key **F7** on the BTT.

Result:

– All telescopic sections are pulled together.

Note

- ▶ Bluetooth™ Terminal (BTT), see Crane operating instructions, chapter 5.31, section „The assembly function menu on the BTT“.

copyright © Liebherr-Werk Ehingen GmbH 2016

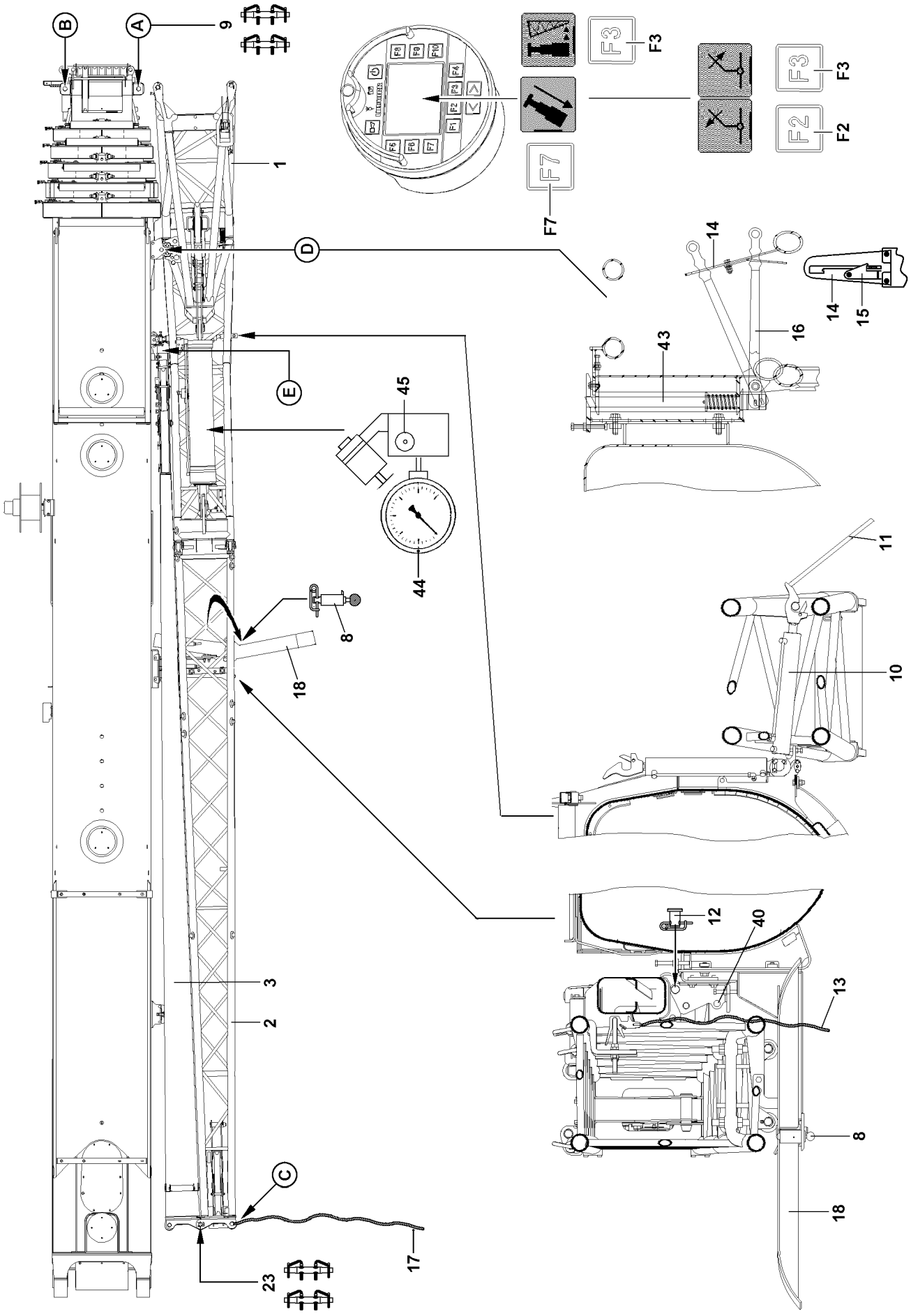

Fig.118027

copyright © Liebherr-Werk Ehingen GmbH 2016

LWE/ab Muli 010/24201-02-02/en

▶ Insert the pins **9** on top and bottom on point **A** and secure.

DANGER
Danger of fatal injuries due to falling folding jib!
Special retaining clips must be used to secure the pins **9**. The use of spring pins or spring retainers on the pins **9** is not permitted. The folding jib may only be unlocked at point **D**, when the pins **9** are pinned and secured at the top and bottom at point **A**.
▶ Pin and secure pins **9** at point **A** on top and bottom.

▶ Swing the safety bracket **15** with assembly rod **11** to the side.
▶ Press the lever **16** with the assembly rod **11** upward and latch it into the link **14**.
▶ Press the function key **F3** on the BTT and swing the folding jib with the swing cylinder all the way out.
▶ Unlock the swing cylinder **10** with assembly rod **11**.

DANGER
Danger of fatal injuries due to falling folding jib!
The folding jib could fall down due to an assembly error.
▶ Standing under the folding jib during the swing procedure is prohibited!
▶ Standing in the swing range as well as in the folding area of the folding jib is prohibited!

▶ Swing the reducer section **2** with the auxiliary rope **17** by 180° until it can be pinned on the top and at the bottom at the point **B**.

LWE/ab Muli 010/24201-02-02/en

copyright © Liebherr-Werk Ehingen GmbH 2016

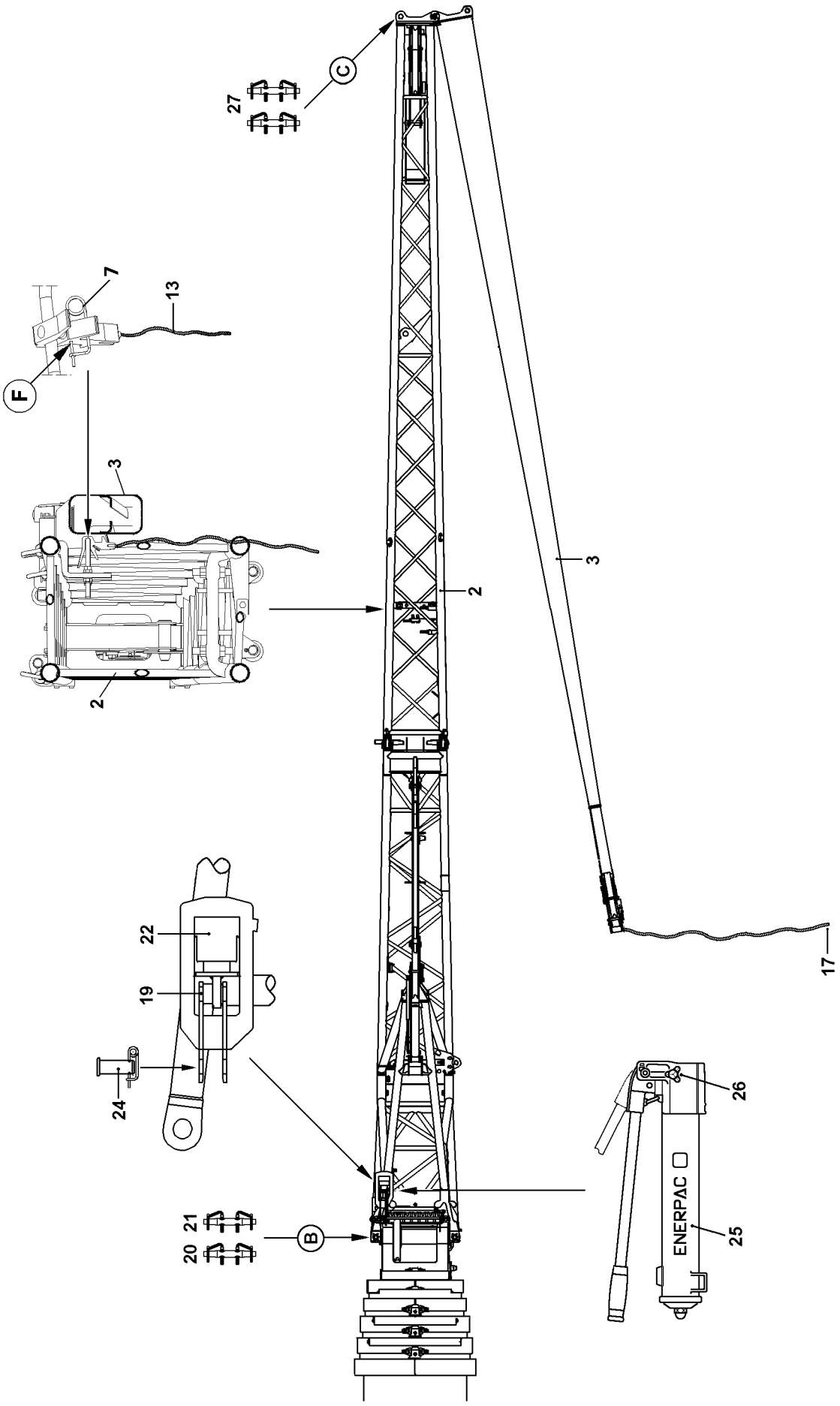

LWE/ab Muli 010/24201-02-02/en

Fig.103448

copyright © Liebherr-Werk Ehingen GmbH 2016

2.5.2 Assembly of reducer section, part 2

DANGER
Danger of accident!
- ▶ The use of spring pins or retaining springs is prohibited on pins **20** and pins **21**!
- ▶ To secure the pin **20** and the pin **21**, use the special retaining clips.

▶ Pin and secure the pin **20** on the bottom at point **B**.

In order to be able to pin on top on point **B**, the hydraulic / mechanical assembly aid **22** must be used.

- ▶ Release the pin **24** and unpin from bore **19**.
- ▶ Pin and secure the assembly aid **22** to the towing bracket with pin **24**.
- ▶ Close the knob **26**.
- ▶ Extend the hydraulic cylinder of the assembly aid **22** by operating the hand pump **25** until the bores are aligned at the opening of the folding jib and the telescopic boom.
- ▶ Pin and secure the pin **21** on top on point **B**.
- ▶ Open the knob **26**.

Result:

– The hydraulic cylinder of the assembly aid **22** returns to the starting position and the pin **24** is released.

2.5.3 Assembly of end section

▶ Remove the auxiliary rope **17** on point **C** and attach on the end section **3**.

CAUTION
The folding jib can swing out inadvertently!
The folding jib may swing out inadvertently while releasing the lock.

In order to prevent the folding jib from swinging out by itself:
- ▶ Hold the folding jib with the auxiliary rope!

- ▶ Remove the spring retainer **7** on point **F**.
- ▶ Pull the nylon rope **13** and loosen the lock between the end section **3** and the reducer section **2**.
- ▶ Swing the end section **3** forward by 180° until it can be pinned at point **C**.

DANGER
Danger of fatal injuries due to falling folding jib!
The folding jib could fall down due to an assembly error.
- ▶ Standing under the folding jib during the swing procedure is prohibited!
- ▶ Standing in the swing range as well as in the folding area of the folding jib is prohibited!
- ▶ The use of spring pins or retaining springs is prohibited on pins **27**!
- ▶ Special retaining clips must be used to secure the pins **27**.

- ▶ Pin and secure pins **27** at top and bottom using safety clips.
- ▶ Remove the auxiliary rope.

copyright © Liebherr-Werk Ehingen GmbH 2016

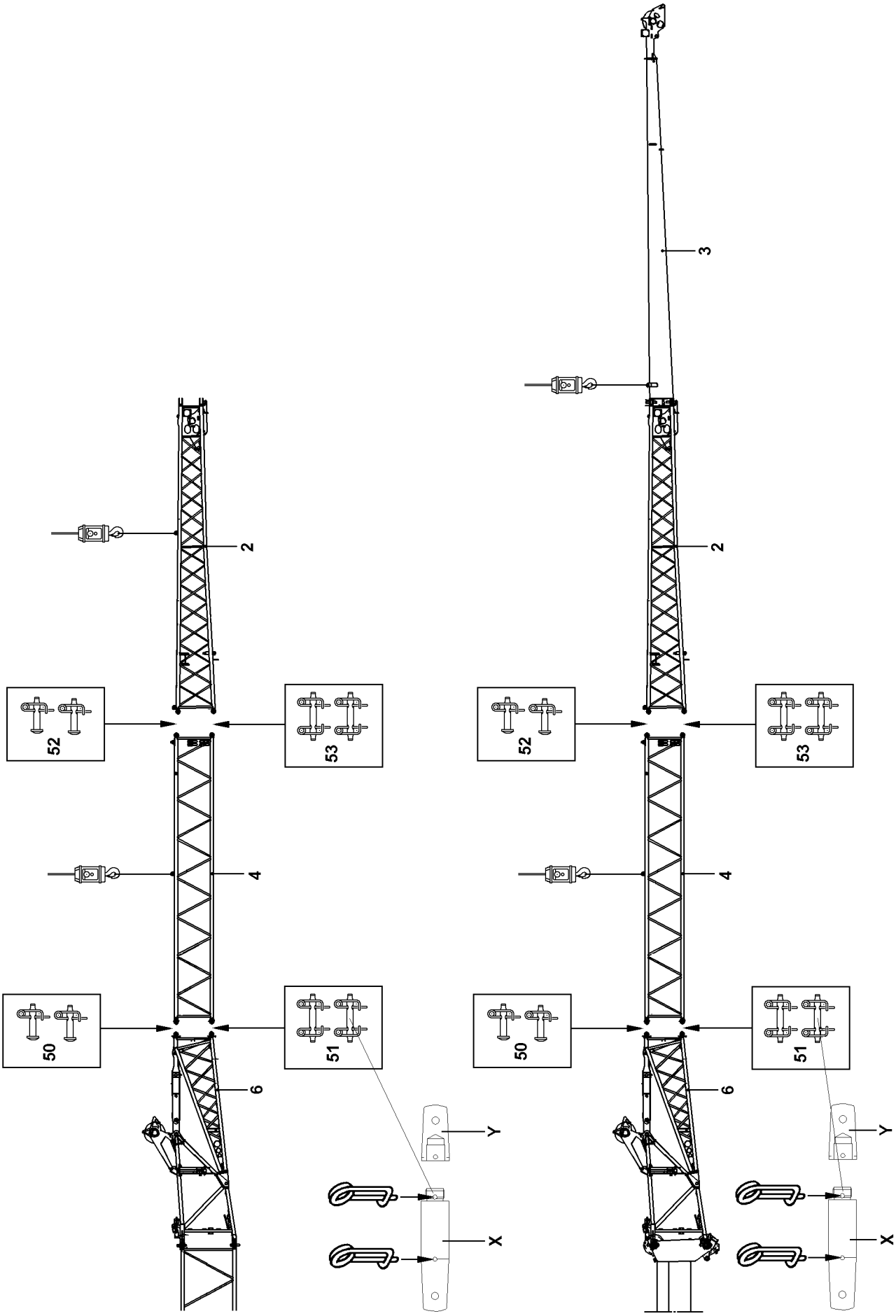

LWE/ab Muli 010/24201-02-02/en

Fig.197289

copyright © Liebherr-Werk Ehingen GmbH 2016

2.6 Assembly of the 3-piece folding jib

The 3-piece folding jib is a folding jib that has been extended with a folding jib extension **4**.

Make sure that the following prerequisites are met:
- The folding jib is attached on the telescopic boom or on the telescopic boom extension.
- An auxiliary crane with an adequate load-bearing capacity is available.

DANGER
Danger of accident when assembling / disassembling the 3-piece folding jib!
If the following conditions are not met, personnel can be fatally injured during assembly / disassembly.
- ▶ When knocking out the pins, no one may remain under the folding jib!
- ▶ Pin and unpin the pins in the specified sequence!
- ▶ Attach the auxiliary crane in such a way that no angular pull occurs!

▶ Attach the reducer section **2** to auxiliary crane and tighten the fastening rope slightly.
or
Attach the reducer section **2** with the end section **3** on the auxiliary crane and tighten the fastening rope slightly.

DANGER
Danger of accident due to distorted pins!
Angular pulling or excessive / low hoisting force of the auxiliary crane may result in distortion of the pins.
Distorted parts can suddenly fly off when the pins are unpinned.
- ▶ When the pins are unpinned, the „lifting force“ of the crane must be adapted to the „weight“ of the parts being lifted!
- ▶ Do **not** remove difficult to remove pins by force!
- ▶ Remedy the cause of the distortion!

▶ Release and unpin the pins **50** on both sides.

Note
- ▶ Before unpinning and pinning the pins **X**, unbolt the extension **Y** or on accordingly. Then secure the pins **X** on both sides with spring retainers. Before driving on public roads, the extension **Y** must be removed again, and the pins **X** must be secured on both sides with the spring retainers.

▶ Release the pins **51** on both sides and unpin from the outside to the inside.
▶ Place the reducer section **2** down.
or
Place the reducer section **2** with the end section **3** down.

LWE/ab Muli 010/24201-02-02/en

copyright © Liebherr-Werk Ehingen GmbH 2016

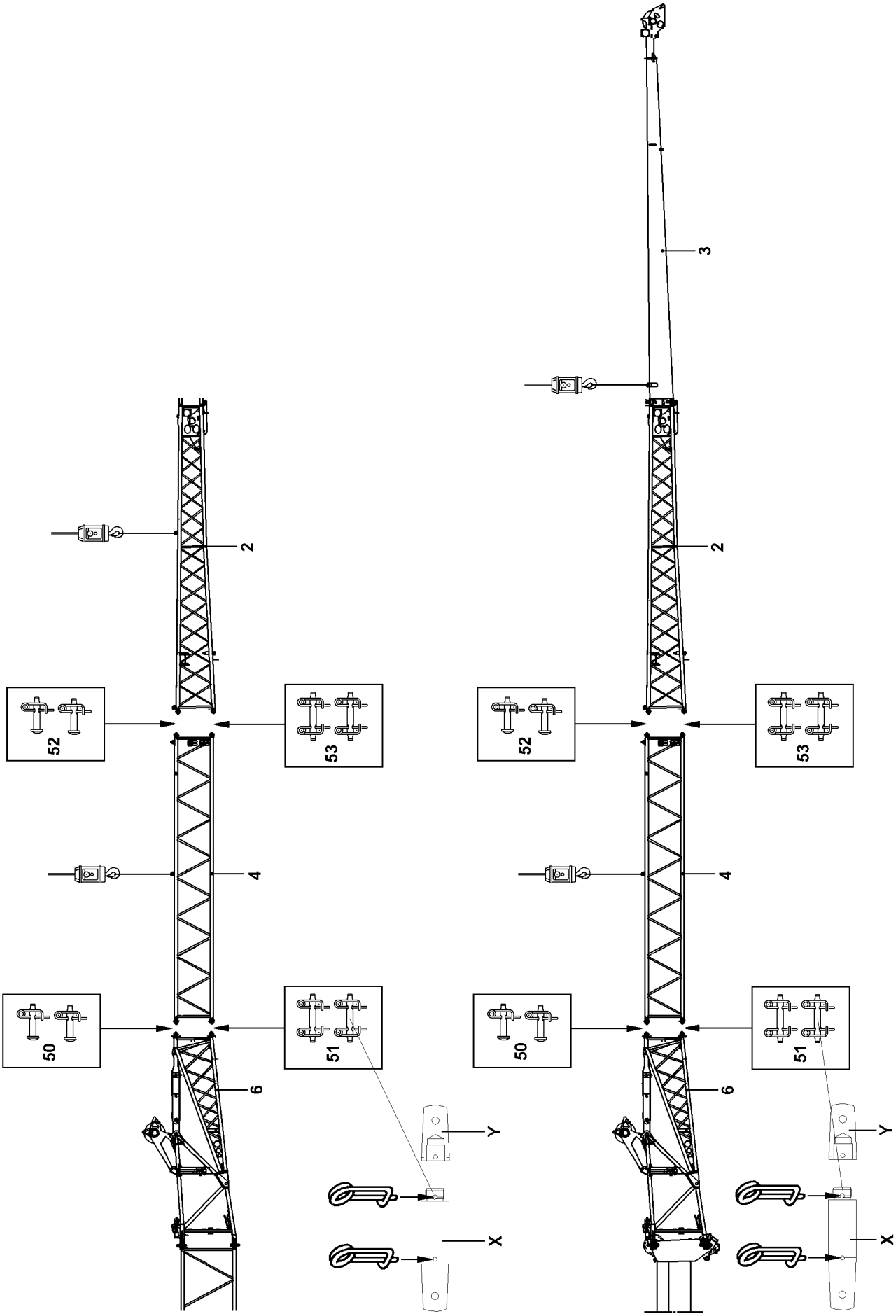

LWE/ab Muli 010/24201-02-02/en

Fig.197289

copyright © Liebherr-Werk Ehingen GmbH 2016

- ▶ Fasten the folding jib extension **4** to the auxiliary crane and insert into the fork heads on the pivot section **6**.
- ▶ Pin the folding jib extension **4** with the pivot section **6**: Pin the pins **50** on both sides from the outside to the inside and secure.
- ▶ Pin the pins **51** on both sides from the outside to the inside and secure.
- ▶ Attach the reducer section **2** to the auxiliary crane and insert into the fork heads on the folding jib extension **4**.
  or
  Attach the reducer section **2** with the end section **3** on the auxiliary crane and insert into the fork heads on the folding jib extension **4**.
- ▶ Pin the reducer section **2** with the folding jib extension **4**: Pin the pins **52** on both sides from the outside to the inside and secure.
- ▶ Pin the pins **53** on both sides from the outside to the inside and secure.

LWE/ab Muli 010/24201-02-02/en

copyright © Liebherr-Werk Ehingen GmbH 2016

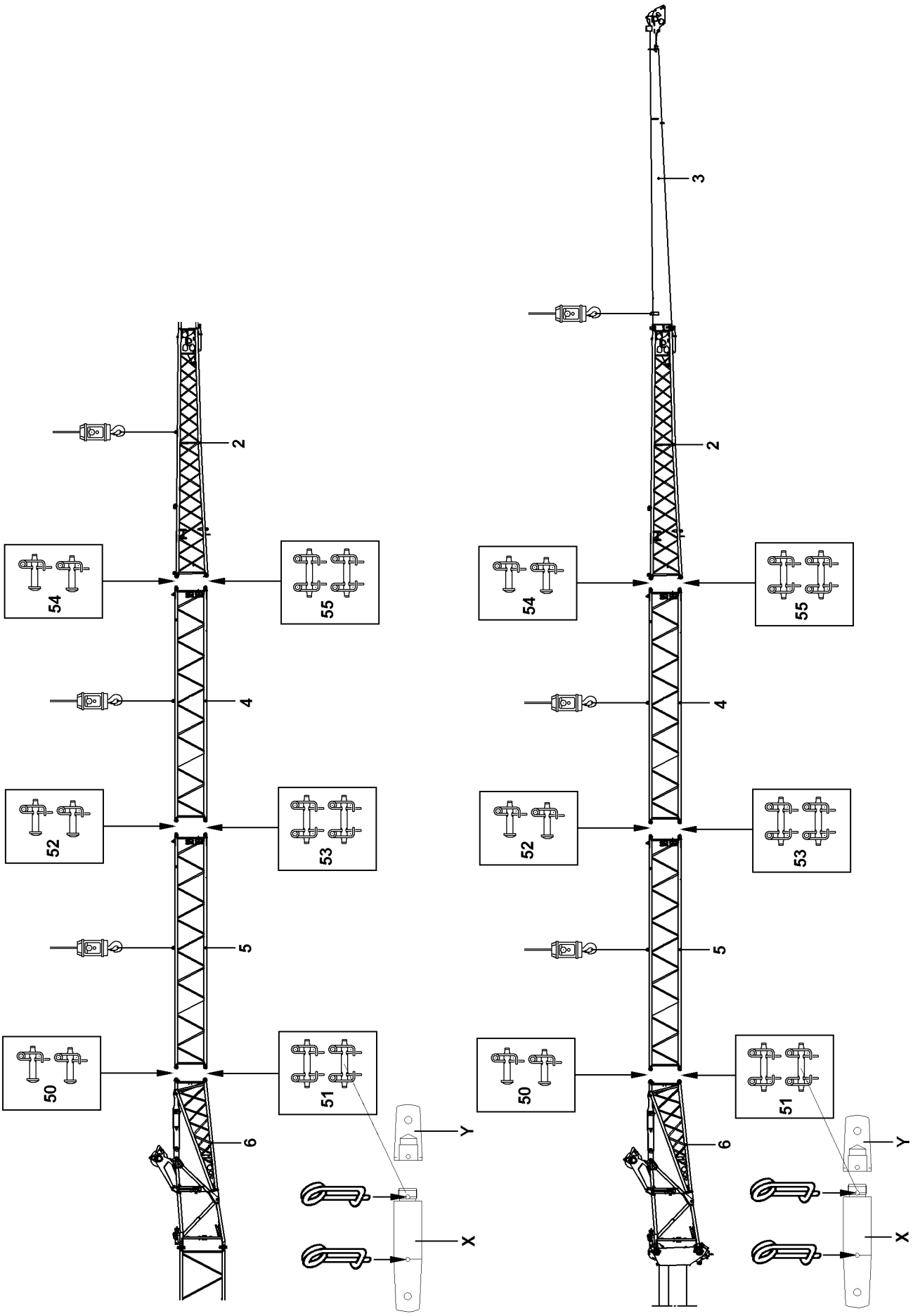

Fig.197290

LWE/ab Muli 010/24201-02-02/en

copyright © Liebherr-Werk Ehingen GmbH 2016

2.7 Assembly of the 4-piece folding jib

The 4-piece folding jib is a folding jib that has been extended with a folding jib extension **4** and a folding jib extension **5**.

Make sure that the following prerequisites are met:
- The folding jib is attached on the telescopic boom or on the telescopic boom extension.
- An auxiliary crane with an adequate load-bearing capacity is available.

DANGER
Danger of accident when assembling / disassembling the 4-piece folding jib!
If the following conditions are not met, personnel can be fatally injured during assembly / disassembly.
- ▶ When knocking out the pins, no one may remain under the folding jib!
- ▶ Pin and unpin the pins in the specified sequence!
- ▶ Attach fastening ropes in such a way that no angular pull occurs!

- ▶ Attach the reducer section **2** to auxiliary crane and tighten the fastening rope slightly.
  or
  Attach the reducer section **2** with the end section **3** on the auxiliary crane and tighten the fastening rope slightly.

DANGER
Danger of accident due to distorted pins!
Angular pulling or excessive / low hoisting force of the auxiliary crane may result in distortion of the pins.
Distorted parts can suddenly fly off when the pins are unpinned.
- ▶ When the pins are unpinned, the „lifting force“ of the crane must be adapted to the „weight“ of the parts being lifted!
- ▶ Do **not** remove difficult to remove pins by force!
- ▶ Remedy the cause of the distortion!

- ▶ Release and unpin the pins **50** on both sides.
- ▶ Release the pins **51** on both sides and unpin from the outside to the inside.
- ▶ Place the reducer section **2** down.
  or
  Place the reducer section **2** with the end section **3** down.
- ▶ Fasten the folding jib extension **5** to the auxiliary crane and insert into the fork heads on the pivot section **6**.
- ▶ Pin the folding jib extension **5** with the pivot section **6**: Pin the pins **50** on both sides from the outside to the inside and secure.

Note
- ▶ Before unpinning and pinning the pins **X**, unbolt the extension **Y** or on accordingly. Then secure the pins **X** on both sides with spring retainers. Before driving on public roads, the extension **Y** must be removed again, and the pins **X** must be secured on both sides with the spring retainers.

- ▶ Pin the pins **51** on both sides from the outside to the inside and secure.

LWE/ab Muli 010/24201-02-02/en

copyright © Liebherr-Werk Ehingen GmbH 2016

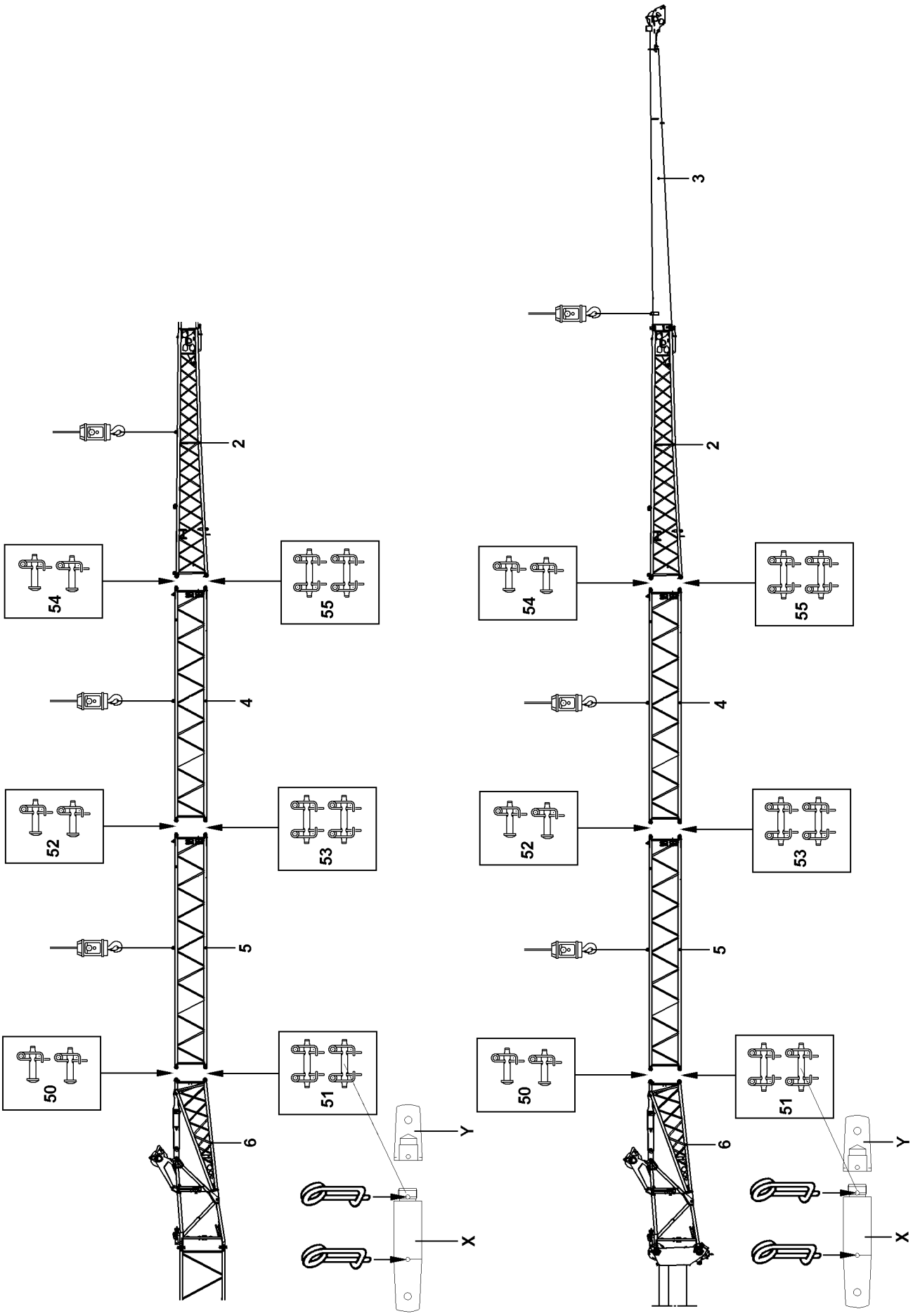

Fig.197290

LWE/ab Muli 010/24201-02-02/en

copyright © Liebherr-Werk Ehingen GmbH 2016

- ▶ Attach folding jib extension **4** to the auxiliary crane and insert into the fork heads on the folding jib extension **5**.
- ▶ Pin the folding jib extension **4** with folding jib extension **5**: Pin the pins **52** on both sides from the outside to the inside and secure.
- ▶ Pin the pins **53** on both sides from the outside to the inside and secure.
- ▶ Attach the reducer section **2** to the auxiliary crane and insert into the fork heads on the folding jib extension **4**.
  or
  Attach the reducer section **2** with the end section **3** on the auxiliary crane and insert into the fork heads on the folding jib extension **4**.
- ▶ Pin the reducer section **2** with the folding jib extension **4**: Pin the pins **54** on both sides from the outside to the inside and secure.
- ▶ Pin the pins **55** on both sides from the outside to the inside and secure.

LWE/ab Muli 010/24201-02-02/en

copyright © Liebherr-Werk Ehingen GmbH 2016

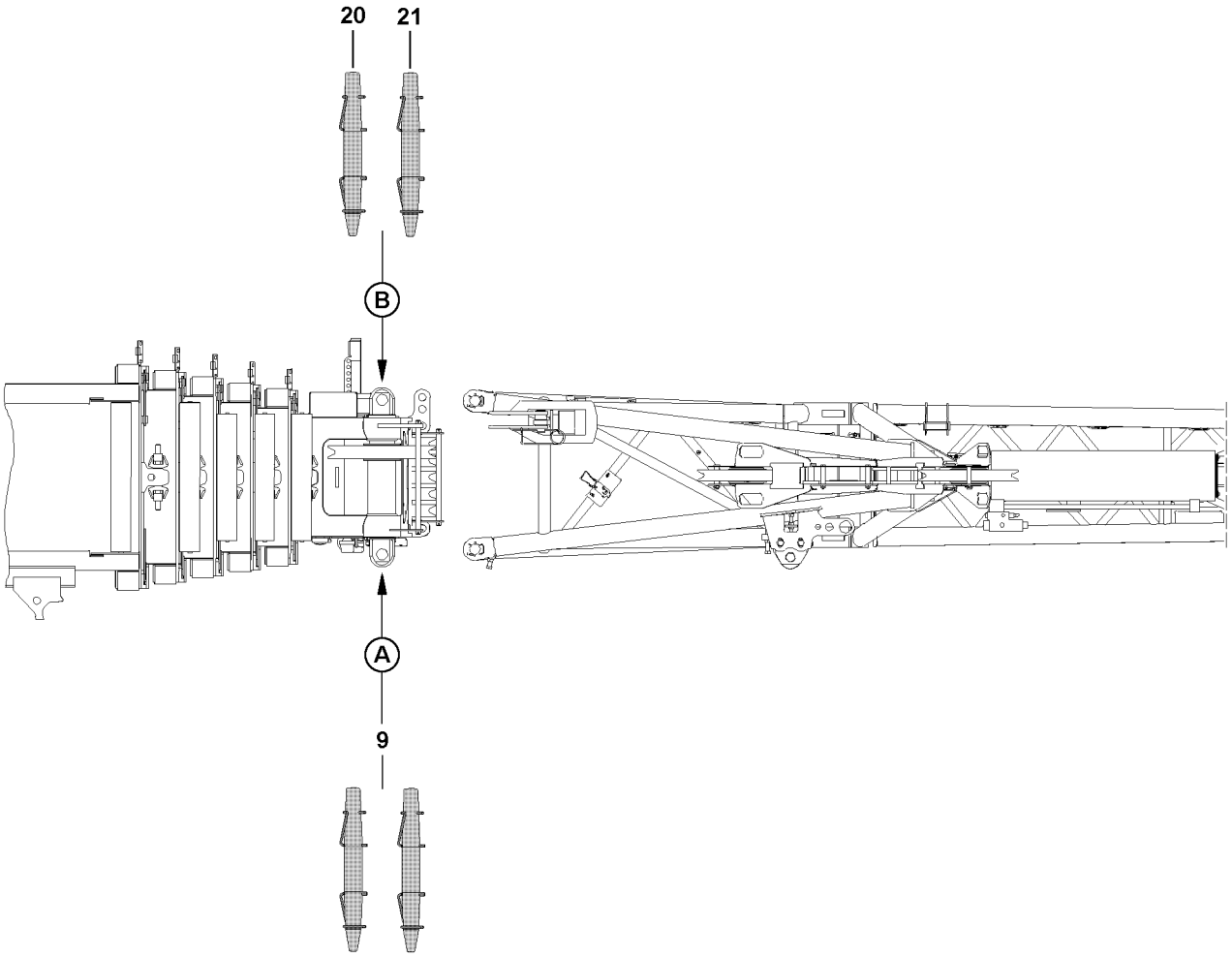

LWE/ab Muli 010/24201-02-02/en

Fig.103446

copyright © Liebherr-Werk Ehingen GmbH 2016

2.8 Assembling the separately transported folding jib on the crane

2.8.1 Assembling the separately transported folding jib for crane operating position

For description of fastening points, see section „Fastening points“.

DANGER
Danger of accident due to incorrect attachment!
Life-threatening situations can arise if the folding jib is improperly or incorrectly attached!
- ▶ Attach the folding jib according to the fastening points shown on the signs!
- ▶ The appropriate fastening eyes and points are marked with tags.
- ▶ Attaching the single folding jib or the double folding jib on non-intended points or on any arbitrary location is **prohibited**!
- ▶ When attaching the double folding jib, the end section must be folded in, locked and the spring retainer must be secured!

CAUTION
Damage of fastening points!
If the fastening equipment is too short, then the fastening points on the folding jibs can be damaged!
- ▶ To attach the folding jibs, fastening equipment with a strand length of at least 2000 mm each must be used!

- ▶ Attach the auxiliary crane on the respective fastening points of the folding jib.
- ▶ Lift the folding jib with the auxiliary crane and insert it into the pin points on the telescopic boom.

DANGER
Danger of accident!
- ▶ The use of spring pins or spring retainers is prohibited on pins **9**, pins **20** and pins **21**!
- ▶ Use the special retaining clips to secure pins **9**, pins **20** and pins **21**.

- ▶ Pin the folding jib with the telescopic boom:
- ▶ Pin and secure the pin **9** on top on point **A**.
- ▶ Pin and secure the pin **20** on top on point **B**.
- ▶ Pin and secure the pin **9** on the bottom at point **A**.
- ▶ Pin and secure the pin **21** on the bottom at point **B**.
- ▶ For more information concerning the double folding jib assembly, see section „Assembly of the end section“.

LWE/ab Muli 010/24201-02-02/en

copyright © Liebherr-Werk Ehingen GmbH 2016

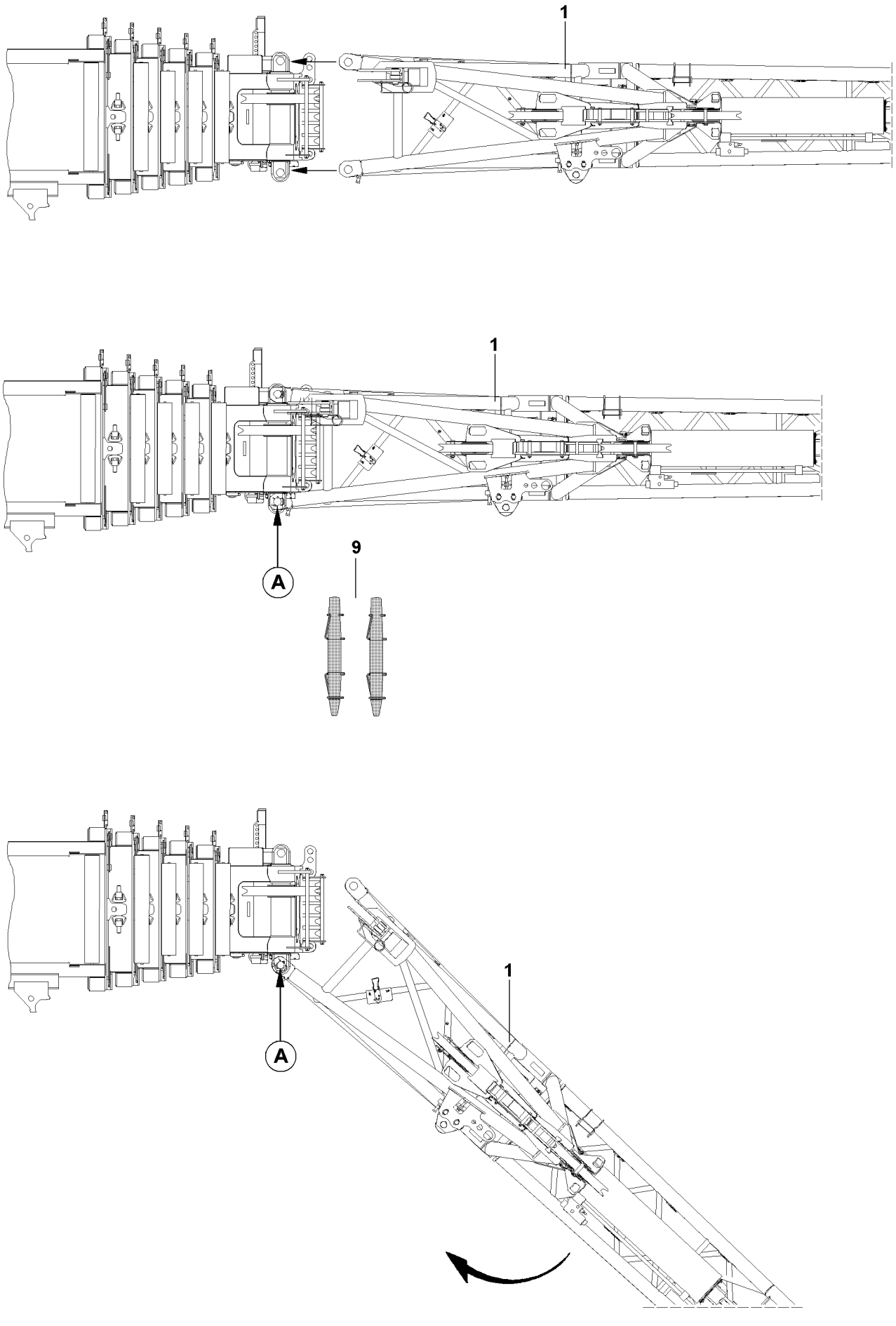

Fig.103447

LWE/ab Muli 010/24201-02-02/en

copyright © Liebherr-Werk Ehingen GmbH 2016

2.8.2 Installing separately transported folding jib for transport position

An auxiliary crane must be available for the assembly of the separate folding jib **1**.

Make sure that the following prerequisites are met:
- The crane is properly supported and horizontally aligned.
- The telescopic boom is fully telescoped in.
- The telescopic boom is in travel direction in 0° position.

DANGER
Danger of accident from involuntary swinging out of the folding jib when removing the fastening equipment!
If the telescopic boom is not in 0° position, a danger of accident exists due to involuntary swinging out of the folding jib when the fastening equipment is removed.
▶ Move the telescopic boom to 0° position.

▶ Attach the auxiliary crane to corresponding fastening points on folding jib, see section „Fastening points“.

CAUTION
Danger of property damage!
If the following notes are not observed, the folding jib can move uncontrolled and as a result, damage can occur in the area of the telescopic boom and the driver’s cab.
▶ Carry out auxiliary crane movements only with utmost care and the least possible acceleration.
▶ The folding jib must be secured with an auxiliary rope during the assembly procedure!

▶ Lift the folding jib with the auxiliary crane and guide it into pin points on the telescopic boom head.

DANGER
Danger of accident!
▶ The use of spring pins or spring retainers is prohibited on the pins **9**!
▶ Special retaining clips must be used to secure the pins **9**.

▶ Pin the folding jib with the telescopic boom:
▶ Pin and secure pins **9** on top and on the bottom at point **A**.

DANGER
Danger of fatal injuries due to falling folding jib!
If the folding jib is improperly pinned on the telescopic boom, life threatening or even fatal injuries can occur.
▶ Before removing the auxiliary crane, make sure that the folding jib is pinned and secured on point **A** on top and bottom.

▶ Remove the auxiliary crane.

Note
▶ For further procedure to fold the folding jib onto the telescopic boom or in transport position, refer to section „Removing the folding jib“.

LWE/ab Muli 010/24201-02-02/en

copyright © Liebherr-Werk Ehingen GmbH 2016

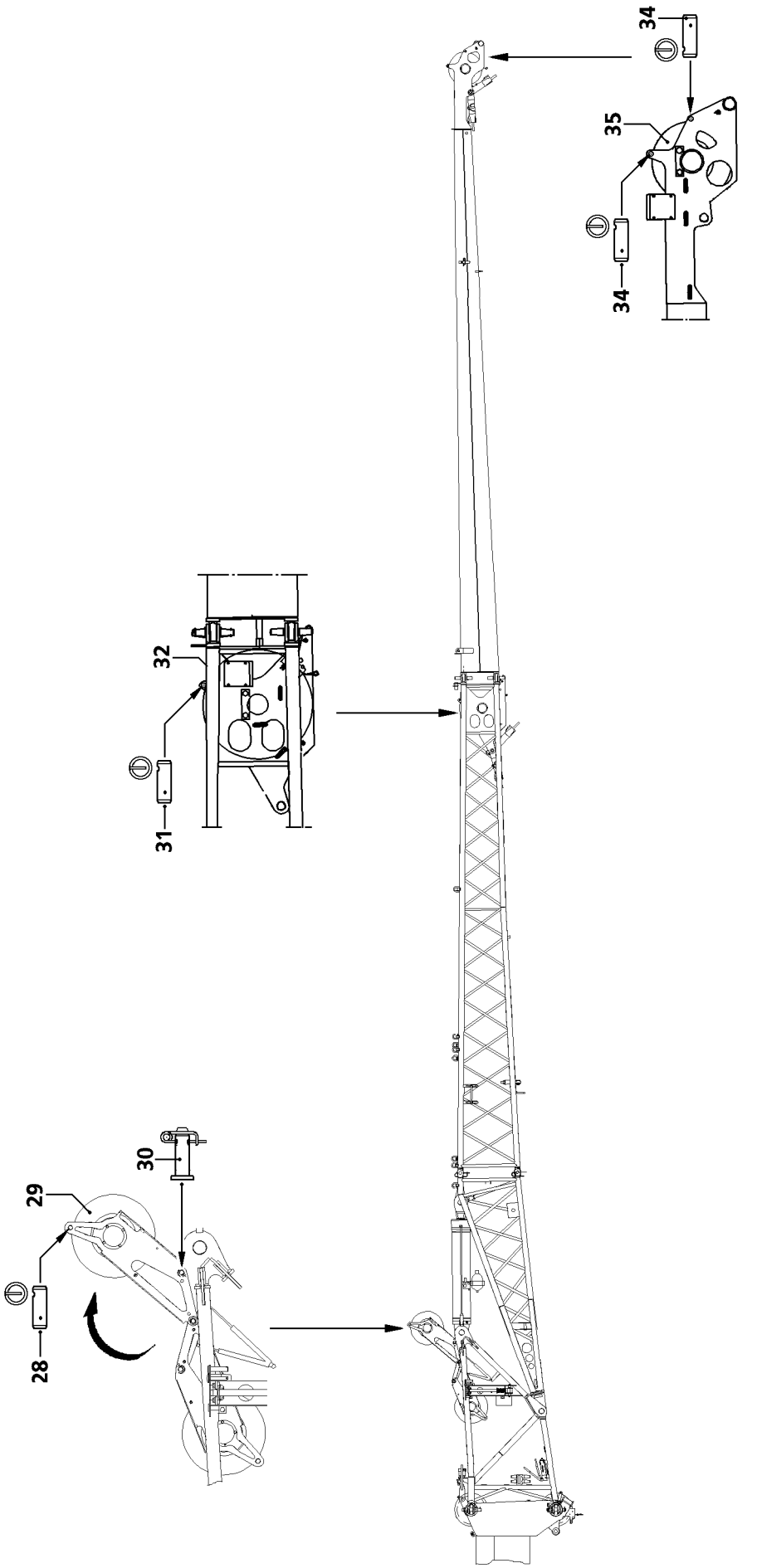

Fig.196435

LWE/ab Muli 010/24201-02-02/en

copyright © Liebherr-Werk Ehingen GmbH 2016

3 Reeving the hoist rope

DANGER
Danger of sliding off the folding jib!
When stepping on the folding jib, for example to reeve the hoist rope in or out, there is a danger of slipping and falling from the folding jib.
▶ Do not step on the folding jib!

3.1 Swinging the rope guide pulley into operating position

▶ Release and unpin the pin **30**.
▶ Swing the rope guide pulley **29** into operating position.
▶ Pin the rope guide pulley **29** in operating position: Insert and secure pin **30**.

3.2 Reeving the hoist rope

▶ Release and unpin the rope retaining pin **28** and rope retaining pin **31**.

For operation with double folding jib, 3-piece folding jib or 4-piece folding jib:
▶ Release and unpin the rope retaining pins **34**.
▶ Place the hoist rope over the rope guide pulley **29** and over the end pulley **32** at 12.2 m or over the end pulley **35** at 22 m.
▶ Insert the rope retaining pin again and secure with locking pins.

NOTICE
Damage to the hoist rope!
If the rope retaining pin **31** is inserted during operation with the double folding jib, the 3-piece folding jib or the 4-piece folding jib, then the slack hoist rope can scrape against the rope retaining pin **31** and be damaged.
▶ Do **not** insert the rope retaining pins **31** for double folding jib, 3-piece folding jib or 4-piece folding jib operation!

▶ Install the load hook on the hoist rope.
or
Reeve in the hoist rope on the hook block.
▶ Attach the hoist limit switch weight.

LWE/ab Muli 010/24201-02-02/en

copyright © Liebherr-Werk Ehingen GmbH 2016

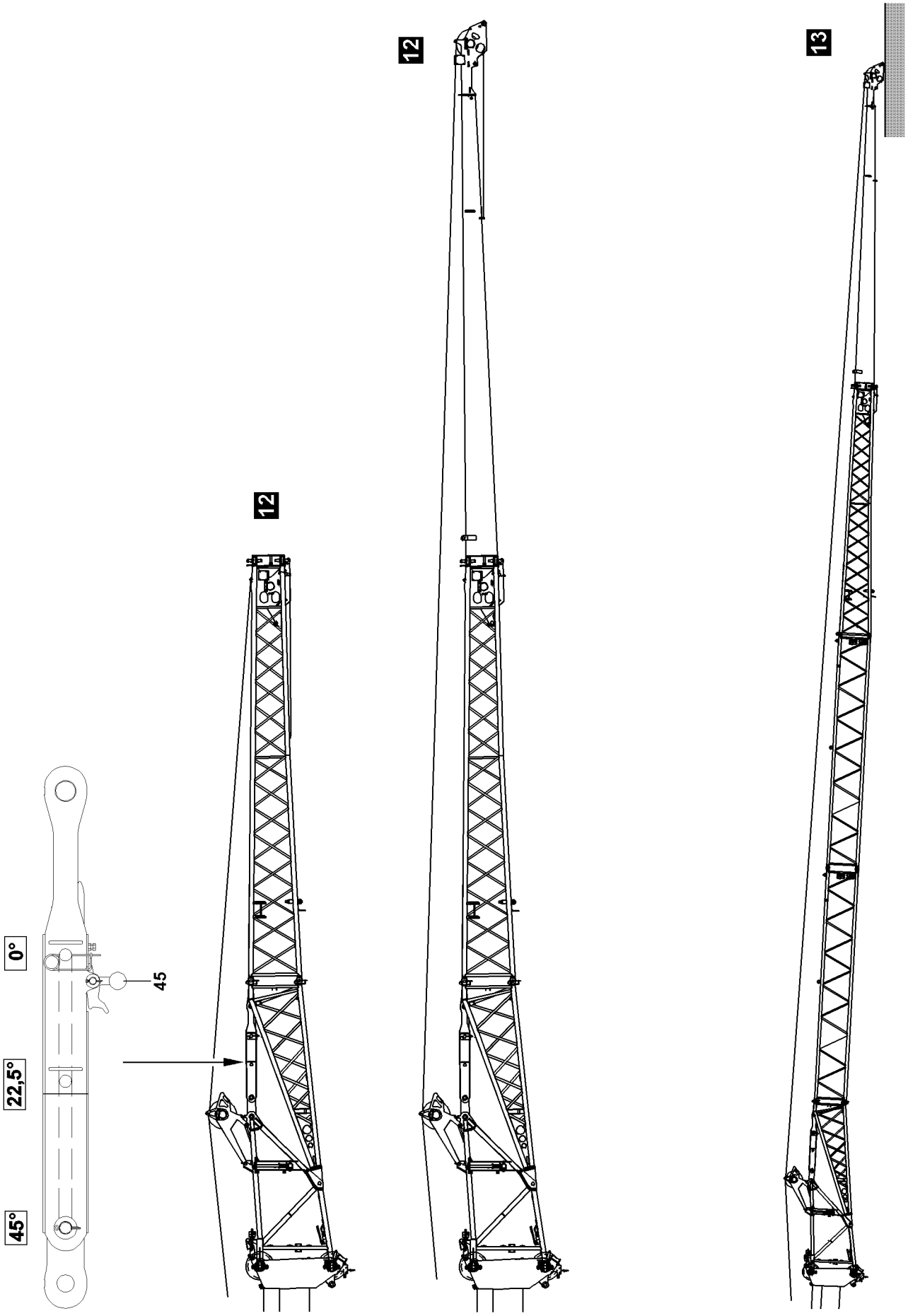

Fig.114341

LWE/ab Muli 010/24201-02-02/en

copyright © Liebherr-Werk Ehingen GmbH 2016

4 Changing over mechanical folding jib from 0° to 22.5° or 45°

DANGER
Danger of fatal injury!
If the following danger notes are not observed, fatal injuries can occur during assembly and change over work on the folding jib.
▶ Make sure that there are no persons within the danger zone of the crane!

There are two ways of changing the mechanical folding jib to 22.5° or 45°:
1. Changing the double folding jib with the hoist rope, see illustration **12**.
   Only permitted for operation with single folding jib and double folding jib.
2. Changing the folding jib by supporting, see illustration **13**.

DANGER
Danger of accident due to hard to move oscillation guard!
If the oscillation guard **45** is stiff, safe crane operation with the folding jib is **not** ensured.
▶ Before crane operation with folding jib, check the oscillation guard **45** for easy movement!
▶ Crane operation with folding jib with a stiff oscillation guard **45** is prohibited!

LWE/ab Muli 010/24201-02-02/en

copyright © Liebherr-Werk Ehingen GmbH 2016

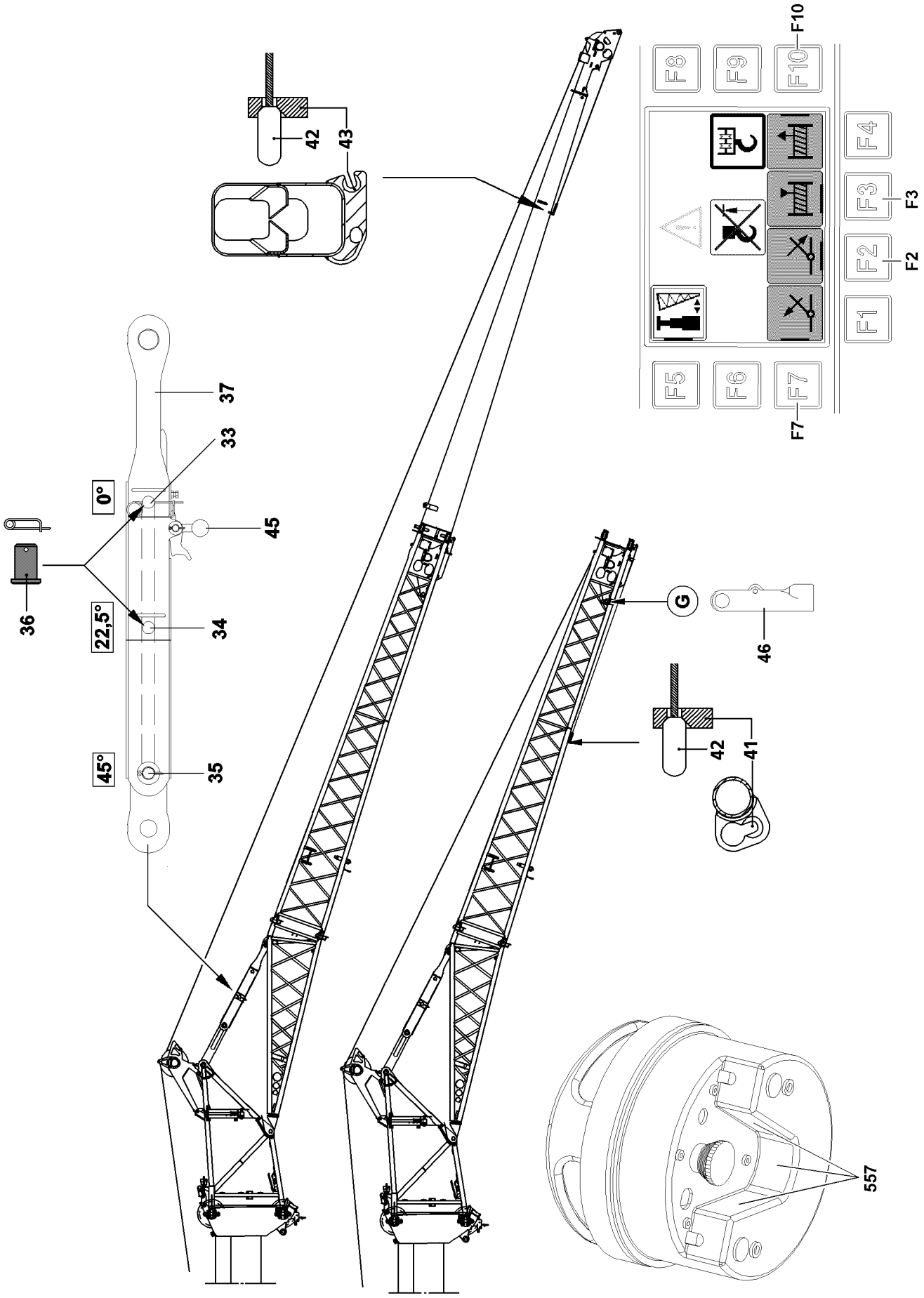

Fig.114342

LWE/ab Muli 010/24201-02-02/en

copyright © Liebherr-Werk Ehingen GmbH 2016

4.1 Changing the folding jib with the hoist rope

WARNING
Life-threatening danger at angle installation with the BTT!
Due to jerky movements at angle installation of the folding jib with the hoist rope, the boom along with the folding jib can swing up. This can cause the folding jib to fold down uncontrolled!
Personnel can be severely injured or killed!
▶ Make sure that there are no persons within the danger zone of the folding jib!
▶ Actuate all movements carefully with the BTT!

4.1.1 Preparatory work

Make sure that the following prerequisites are met:
– The telescopic boom is luffed down and completely telescoped in.
– The counterweight has been installed on the turntable according to the load chart.
– The folding jib is attached as a straight extension in the 0° position.
– The telescopic boom has been luffed to the rear or the side.
– The hoist rope is detached from the rope lock.
– The rope lock has been removed.
– The hoist limit switch weight has been removed.
– The master switches have **not** been operated.
– The hook block or the load hook is unreeved.

WARNING
Danger of accident!
▶ When adjusting the folding jib angle with the hoist rope, it is **explicitly prohibited** to telescope the telescopic boom out / in or to luff the telescopic boom up / down!
▶ If this is not observed, crane components of the folding jib will be overloaded and damaged!

CAUTION
Damage to the hoist rope!
The hoist rope can be damaged by the rope lock **46**.
▶ Remove the rope lock **46** on point **G**!

LWE/ab Muli 010/24201-02-02/en

copyright © Liebherr-Werk Ehingen GmbH 2016

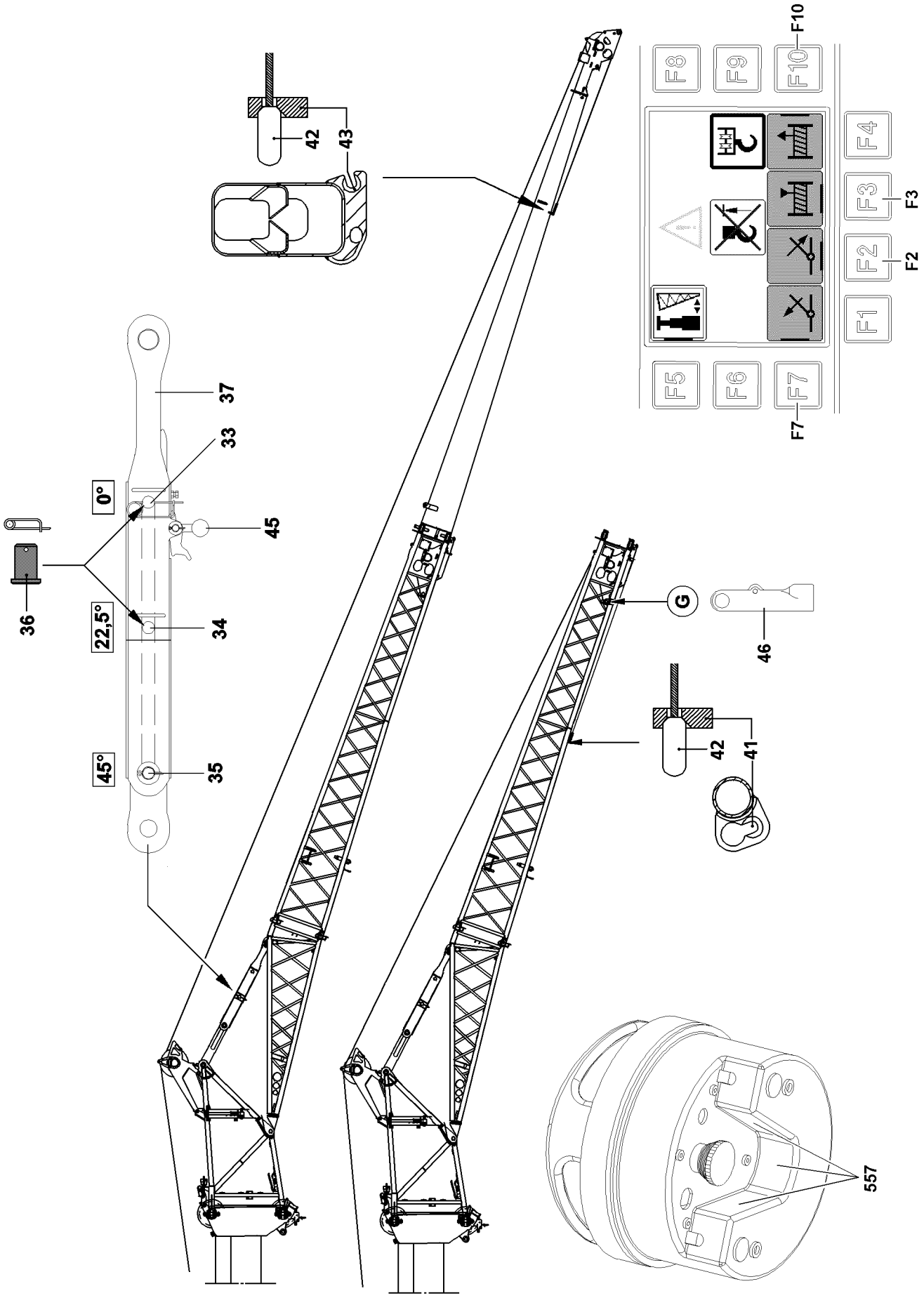

Fig.114342

LWE/ab Muli 010/24201-02-02/en

copyright © Liebherr-Werk Ehingen GmbH 2016

For operation with double folding jib

▶ Guide the press fitting **42** into the assembly fixed point **43**.

or

For operation with the single folding jib

Guide the press fitting **42** into the assembly fixed point **41**.

▶ Press the set up key on the LICCON monitor.

Note

▶ When changing the folding jib with the BTT, the hoist limit switch is bypassed.

▶ BTT, see Crane operating instructions, chapter 5.31!

▶ Tighten the hoist rope by **carefully deflecting** the appropriate manual control lever.

or

Tighten the hoist rope by actuating the 2-hand keypad **557** and the function key **F3**.

Note

▶ Hold the pulley head of the folding jib approx. 1 m above the ground.

LWE/ab Muli 010/24201-02-02/en

copyright © Liebherr-Werk Ehingen GmbH 2016

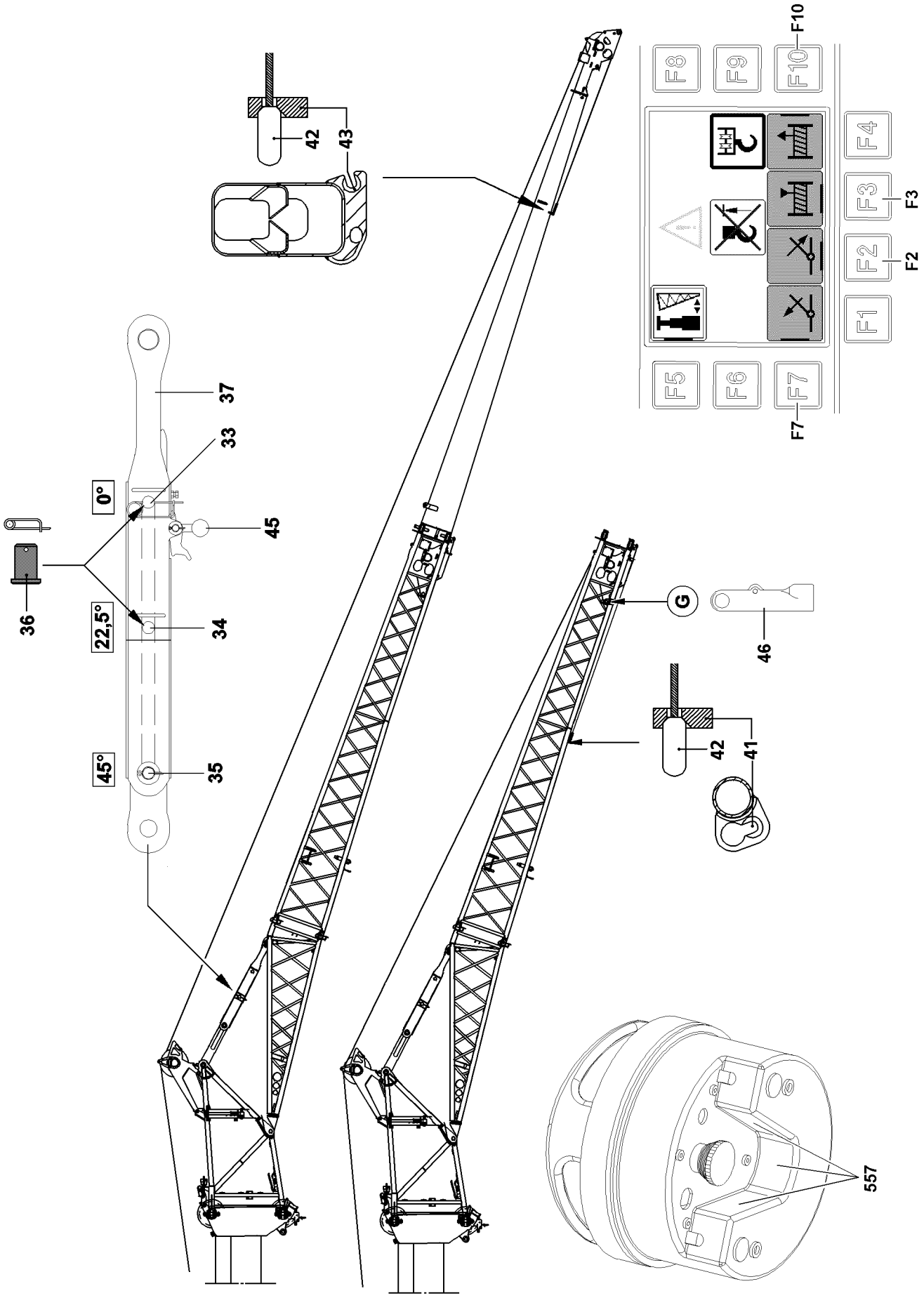

Fig.114342

LWE/ab Muli 010/24201-02-02/en

copyright © Liebherr-Werk Ehingen GmbH 2016

4.1.2 Changing the angle with the hoist rope

You can operate the folding jib at three different angles. The required angle is set with the pin **36**. In the „Basic setting“, immediately after assembling the folding jib, the folding jib is in the 0° position.

DANGER
Danger of fatal injury!
Danger of accident if the folding jib suddenly „folds downward“!
- ▶ Make sure that there are no persons within the danger zone of the folding jib.
- ▶ **Before unpinning** the pins **36**, ensure that the hoist rope is taut and that the folding jib is held by the hoist rope.
- ▶ Unpinning the retaining pins **35** on the 45° pin bores is **prohibited**.

Angle setting 22.5°

- ▶ Release the pin **36** and unpin from the 0° bore **33**.
- ▶ Insert the pin **36** into the 22.5° bore **34** and secure.

Angle setting 45°

- ▶ Release the pin **36** and unpin from the 0° bore **33**.
- ▶ Insert the pin **36** into the pin receptacle and secure.

Positioning the folding jib

Make sure that the pin **36** is properly pinned in and secured for the required angle setting.

NOTICE
Danger of property damage!
- ▶ When using the hoist rope to adjust the angle from 0° to 22.5° or 45°, it must be ensured that no slack rope forms when simultaneously luffing the telescopic boom up and spooling the hoist rope out when the corresponding end position is reached!

- ▶ Spool the hoist rope out by carefully deflecting the corresponding master switch and simultaneously luffing the telescopic boom up.
  or
  Spool out the hoist rope by actuating the 2-hand keypad **557** and the function key **F10** on the BTT. At the same time, luff the telescopic boom up slowly and carefully by pressing the function key **F7**.

Result:

– The pull bracket **37** places itself against the respective pin in the selected angle setting.
– The folding jib is held by the pin **36**.

Note
- ▶ BTT, see Crane operating instructions, chapter 5.31.

- ▶ Release the press fitting from the assembly fixed point.
- ▶ Install the rope lock **46** on point **G**!

copyright © Liebherr-Werk Ehingen GmbH 2016

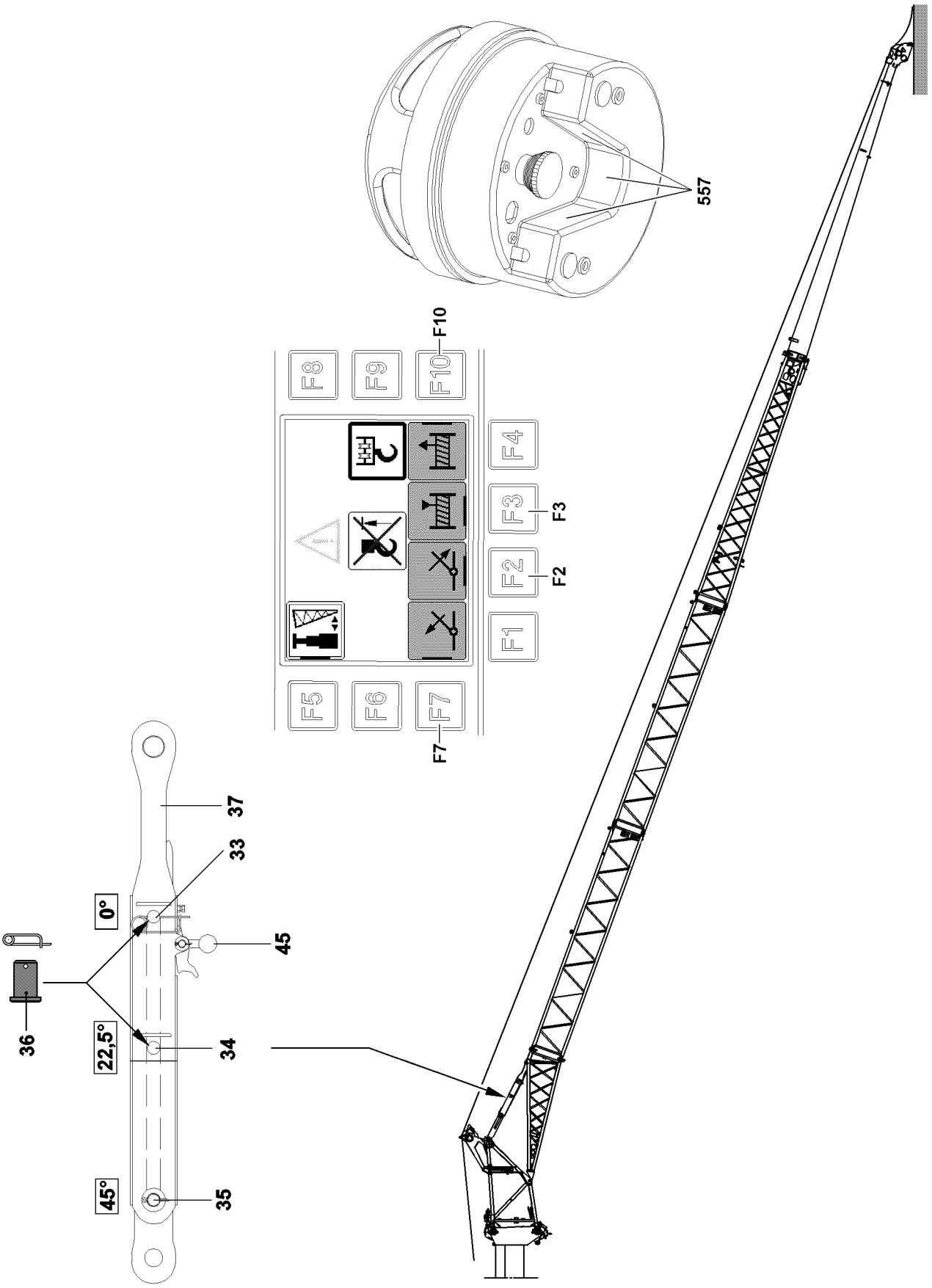

Fig.114343

copyright © Liebherr-Werk Ehingen GmbH 2016

4.2 Changing the folding jib by supporting it

4.2.1 Preparatory work

Note

▶ The folding jib can lie on the ground or must be properly supported, if necessary.

CAUTION

Danger of property damage!

▶ When laying down the folding jib, make sure that the folding jib is **not** laid down on the rope pulley. The folding jib can be damaged.

▶ Make sure that the hoist rope is **not** damaged.

▶ Completely luff down the telescopic boom until the folding jib lies on the ground.

4.2.2 Changing angle with folding jib supported

The folding jib can be operated in three different angles. The required angle is set with the pin **36**. In the „Basic setting“ - immediately after assembling the folding jib - the folding jib is in the 0° position.

DANGER

Danger of fatal injury!

Danger of accident if the folding jib suddenly „folds downward“!

▶ Make sure that there are no persons within the danger zone of the folding jib.

▶ **Before unpinning** the pins **36**, make sure that the folding jib is lying on the ground or on a proper and secure support.

▶ Unpinning the retaining pins **35** on the 40° pin bores is **prohibited**.

Angle setting 22.5°

▶ Release the pin **36** and unpin from the 0° bore **33**.

▶ Insert the pin **36** into the 22.5° bore **34** and secure.

Angle setting 45°

▶ Release the pin **36** and unpin from the 0° bore **33**.

▶ Insert the pin **36** into the pin receptacle and secure.

LWE/ab Muli 010/24201-02-02/en

copyright © Liebherr-Werk Ehingen GmbH 2016

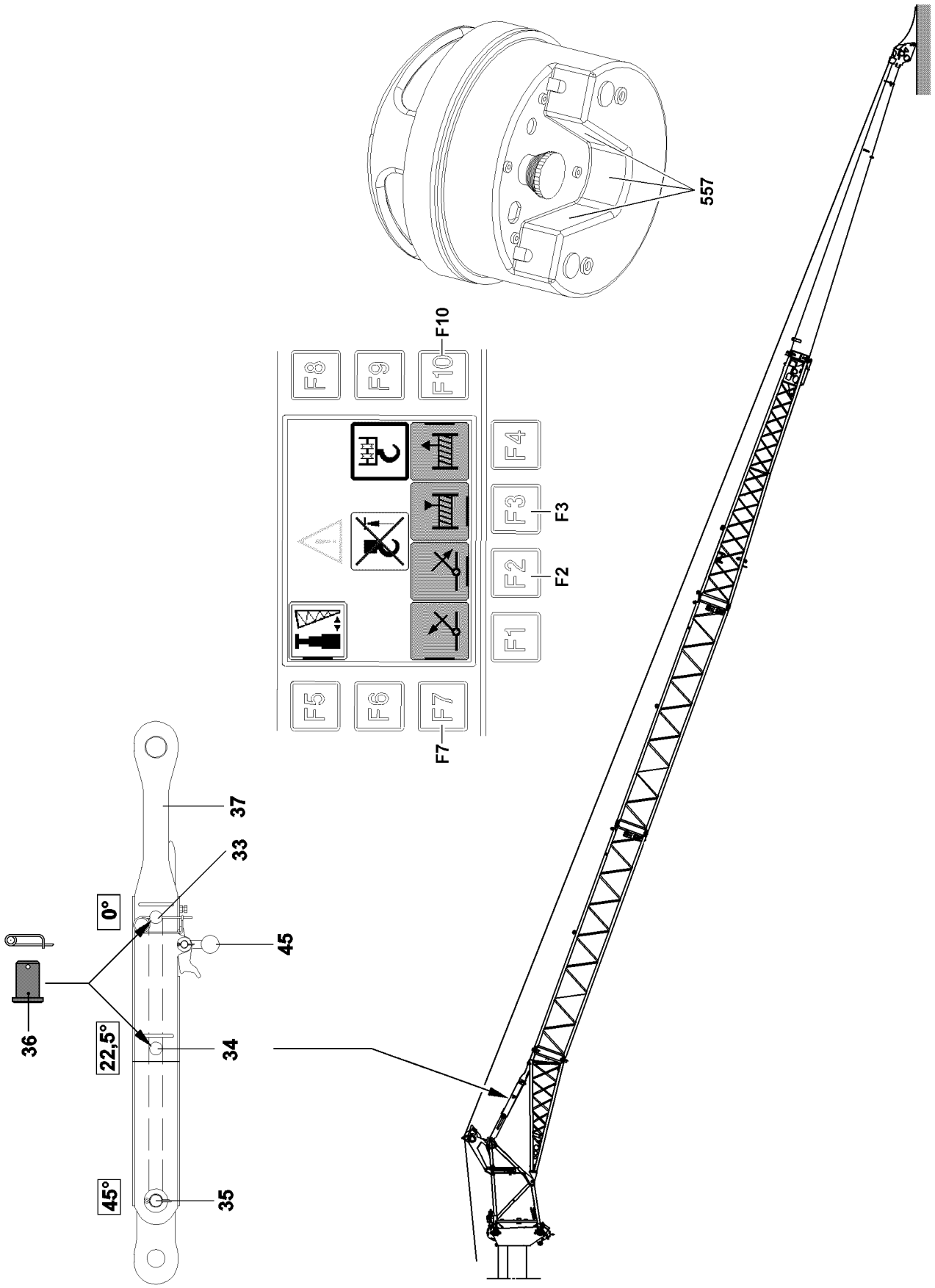

Fig.114343

copyright © Liebherr-Werk Ehingen GmbH 2016

Positioning the folding jib

WARNING
Life-threatening danger at angle installation with the BTT!
- ▶ Actuate all movements carefully with the BTT!
- ▶ Make sure that there are no persons within the danger zone of the folding jib!

Note
- ▶ When changing the folding jib with the BTT, the hoist limit switch is bypassed.
- ▶ BTT, see Crane operating instructions, chapter 5.31.

Make sure that the pin **36** is properly pinned in and secured for the required angle setting.

▶ Spool the hoist rope out by deflecting the corresponding manual control lever and at the same time luff up the telescopic boom slowly and carefully.
or
Luff the telescopic boom up slowly and carefully by actuating the 2-hand keypad **557** and the function key **F7** on the BTT.

Result:

– The pull bracket **37** places itself against the respective pin in the selected angle setting.
– The folding jib is held by the respective pin.

▶ Install the hoist limit switch weight and chain.
▶ Attach the hoist limit switch weight on the hoist rope.

LWE/ab Muli 010/24201-02-02/en

copyright © Liebherr-Werk Ehingen GmbH 2016

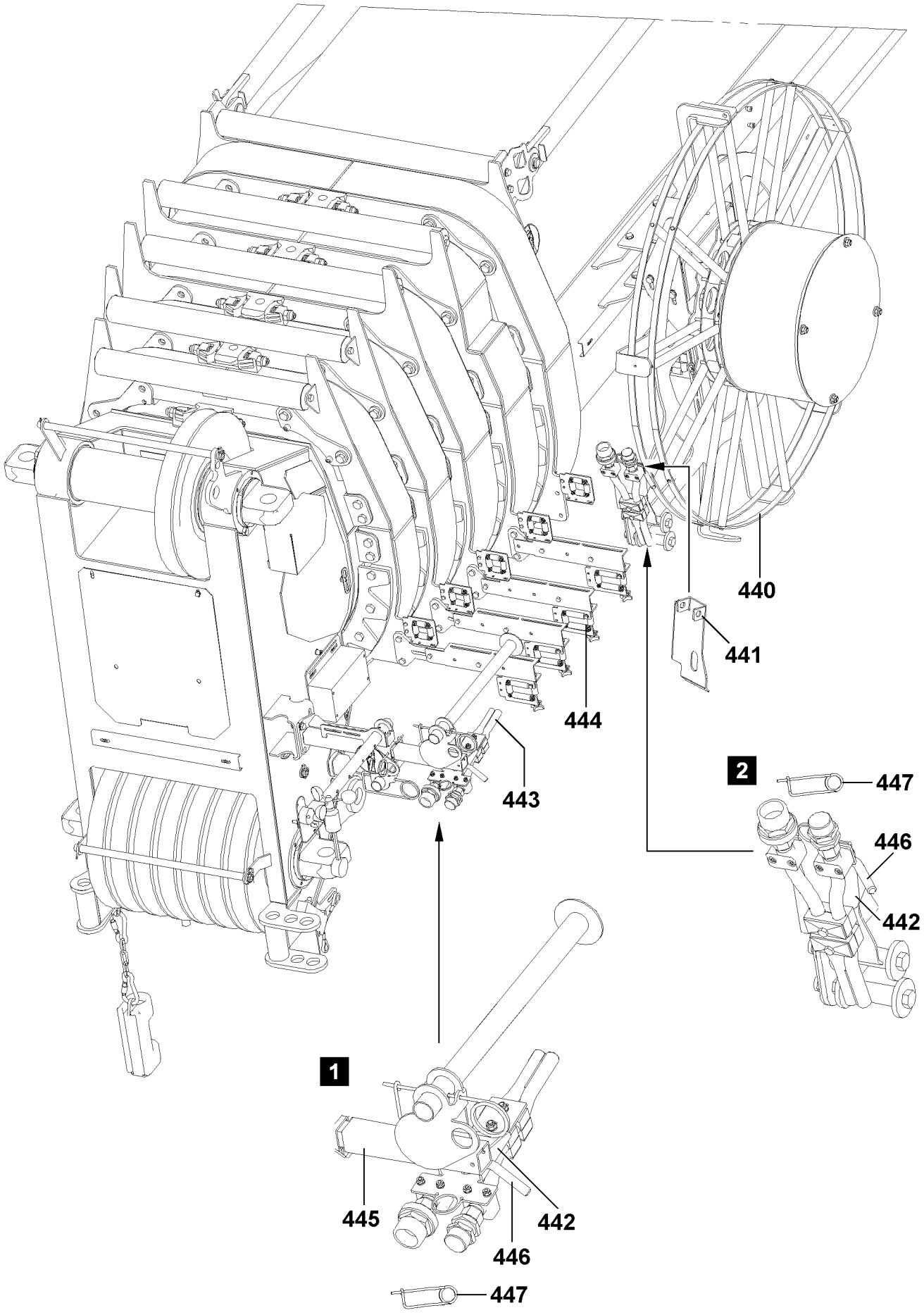

LWE/ab Muli 010/24201-02-02/en

Fig.114339

copyright © Liebherr-Werk Ehingen GmbH 2016

5 Hydraulic connections

5.1 Establishing the hydraulic connections

A hydraulic connection to the folding jib only has to be established for hydraulic angle adjustment (TNZK operation). Hydraulic lines cannot be incorrectly connected due to the different diameters of the hydraulic connections.

For operation with a hydraulic folding jib:
▶ Establish the hydraulic connections.

After operation with a hydraulic folding jib:
▶ Protect the connections from contamination.

5.2 Installing the hose couplings in operating or neutral position

The hydraulic supply to the folding jib is made via the hydraulic hose drum **440** on the telescopic boom. For extended telescopic boom operation, the bracket **442** should be installed in the retainer **441** in the „neutral position“.

This avoids having to spool the hydraulic hoses up and out unnecessarily.

CAUTION
Danger of accident due to rebounding hydraulic hoses!
The hydraulic hoses are under spring tension. If the removed bracket **442** is released, it snaps back against the hydraulic hose drum **440** due to the spring force. This can cause injury to assembly personnel or damage the hydraulic hose drum **440**.
▶ Do not allow removed bracket **442** to snap back!
▶ Hold the removed bracket **442** and then reinstall it!

5.2.1 Assembling the hose couplings in operating position (illustration 1)

▶ Unpin the bracket **442** with the hydraulic couplings from the retainer **441**.
▶ Place the two-fold hydraulic hose **443** into the guides **444**.
▶ Install the bracket **442** with hydraulic couplings in the retainer **445** on the telescopic boom head, to do so, insert the pin **446** and secure with spring retainer **447**, see illustration **1**.
▶ Secure the hydraulic hose **443** in the guides **444**.

5.2.2 Assembling the hose couplings in resting position (illustration 2)

▶ Release the hydraulic hose **443** in the guides **444**.
▶ Remove the bracket **442** with the hydraulic couplings from the retainer **445** on the boom head, to do so, release and remove the pin **446**, see illustration **1**.
▶ Remove the two-fold hydraulic hose **443** from the guides **444**.
▶ Install the bracket **442** with hydraulic couplings in the retainer **441** on the hydraulic hose drum **440**, to do so, insert the pin **446** and secure with spring retainer **447**, see illustration **2**.

LWE/ab Muli 010/24201-02-02/en

copyright © Liebherr-Werk Ehingen GmbH 2016

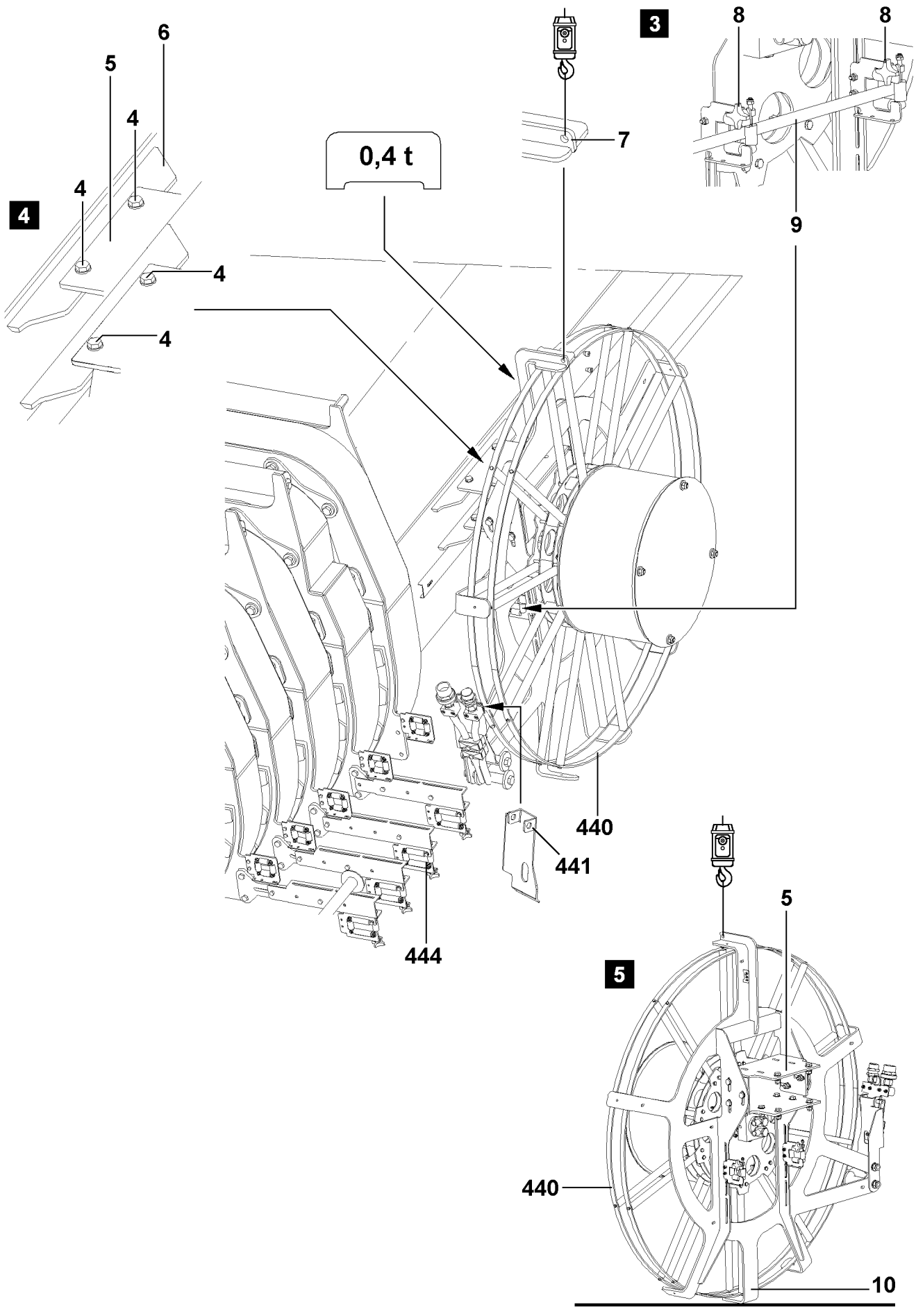

Fig.107186

LWE/ab Muli 010/24201-02-02/en

copyright © Liebherr-Werk Ehingen GmbH 2016

5.3 Removing the hydraulic hose drum

WARNING
Danger of falling!
During installation and removal of the hydraulic hose drum **440**, personnel must be secured with appropriate fall arrest aids to prevent them from falling. If this is not observed, assembly personnel could fall and suffer life-threatening or fatal injuries!
- ▶ All work aloft, where there is a danger of falling must be carried out with suitable aids!
- ▶ If fall arrest equipment is available, then it must be used, see Crane operating instructions, chapter 2.06!
- ▶ If aids are not available and work cannot be carried out from the ground, then the assembly personnel must secure themselves with the supplied fall arrest system to prevent falling, see Crane operating instructions, chapter 2.04!
- ▶ The supplied fall arrest system must be fastened on the fastening and hook points as well as on the safety ropes. For safety points, see Crane operating instructions, chapter 2.06!
- ▶ Only step on the aids, ladders and catwalks with clean shoes!
- ▶ Keep aids, ladders and catwalks free of heavy dirt, snow and ice!
- ▶ It is prohibited to walk on the telescopic boom!

WARNING
Danger of fatal injuries due to toppling hose drum!
- ▶ In case of an assembly / disassembly error, the hydraulic hose drum **440** can fall down!
- ▶ It is prohibited for anyone to remain under the hydraulic hose drum **440** during assembly or disassembly!

Make sure that the following prerequisites are met:
- – The telescopic boom is luffed down, telescoped in and swung by 90° to the side **or** to the rear.
- – The hydraulic connections of the hose couplings to the folding jib are released and the hose couplings are installed in resting position, see section „Assembling the hose couplings in resting position“.
- – An auxiliary crane with suitable fastening equipment is available for removing the hydraulic hose drum **440**.

- ▶ Attach the auxiliary crane with fastening equipment on the suspension lug **7** of the hydraulic hose drum **440** and secure, see illustration **3**.
- ▶ Release the cross handles **8** from the pulley sections and remove the cable **9**, see illustration **3**.

WARNING
Danger of burning due to hot oil!
When releasing hydraulic connections, hot oil can emerge!
- ▶ When releasing hydraulic connections, it is imperative to use suitable work gloves!

- ▶ Release all hydraulic connections from the telescopic boom to the hydraulic hose drum **440**.
- ▶ Remove all **four** hex head screws **4** from the retainer **5** and bracket **6**, see illustration **4**.
- ▶ Lift the hydraulic hose drum **440** with the auxiliary crane and remove.

WARNING
Danger of crushed limbs!
When placing the hydraulic hose drum **440** down, limbs can be crushed!
- ▶ Place the hydraulic hose drum **440** down especially carefully!

- ▶ Place the hydraulic hose drum **440** on the center spoke **10** on level ground, see illustration **5**.
- ▶ Place the hydraulic hose drum **440** slowly on the retainer **5**, see illustration **5**.

LWE/ab Muli 010/24201-02-02/en

copyright © Liebherr-Werk Ehingen GmbH 2016

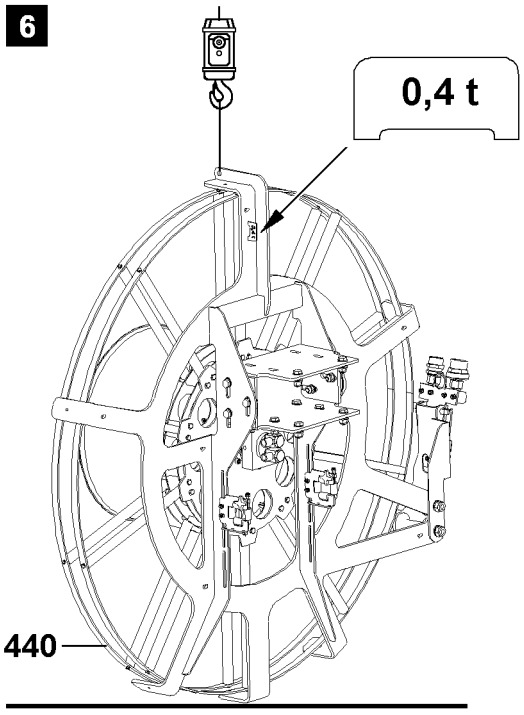

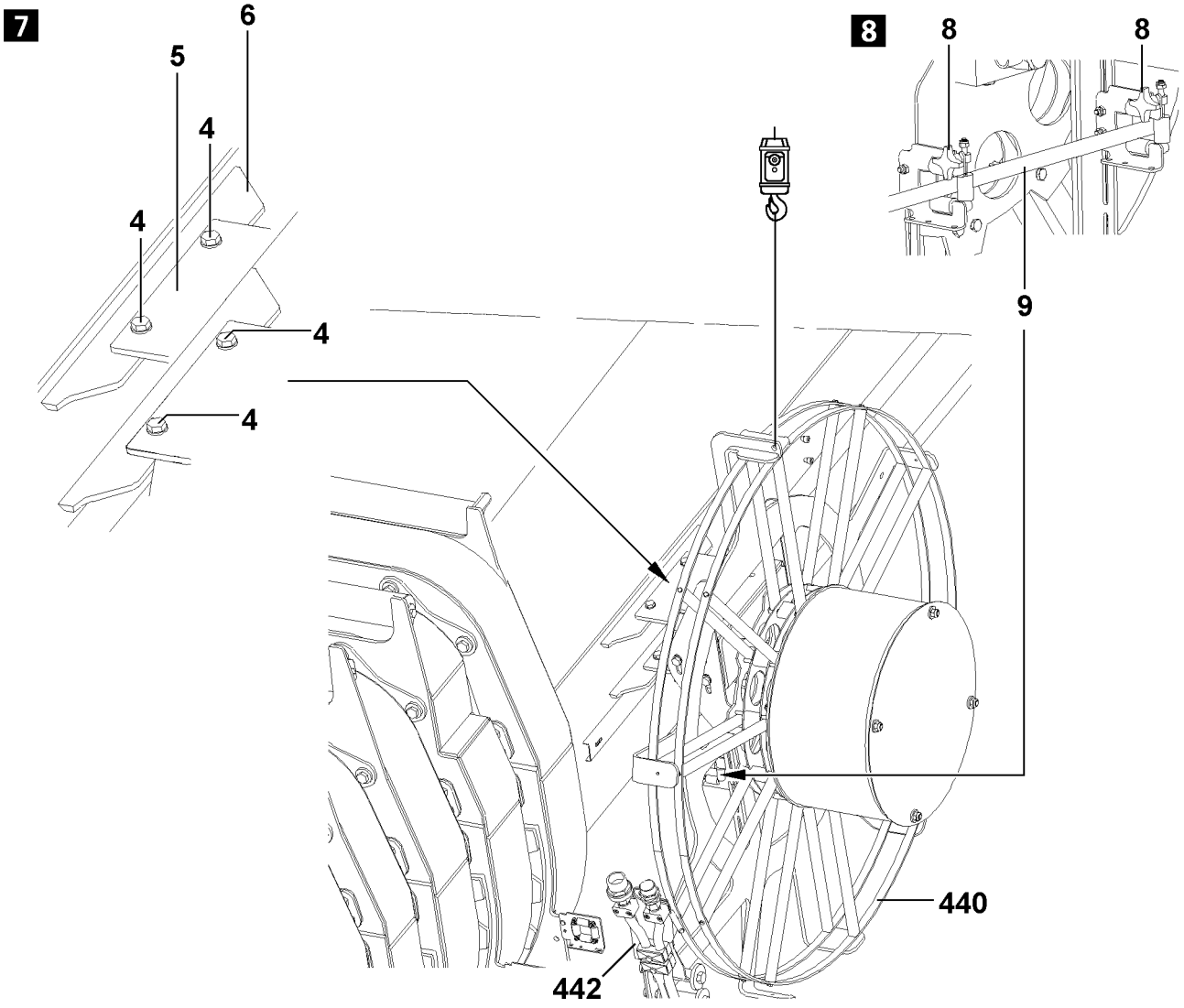

Fig.107270

LWE/ab Muli 010/24201-02-02/en

copyright © Liebherr-Werk Ehingen GmbH 2016

5.4 Installing the hydraulic hose drum

WARNING
Danger of falling!
During installation and removal of the hydraulic hose drum **440**, personnel must be secured with appropriate fall arrest aids to prevent them from falling. If this is not observed, assembly personnel could fall and suffer life-threatening or fatal injuries!

- ▶ All work aloft, where there is a danger of falling must be carried out with suitable aids!
- ▶ If fall arrest equipment is available, then it must be used, see Crane operating instructions, chapter 2.06!
- ▶ If aids are not available and work cannot be carried out from the ground, then the assembly personnel must secure themselves with the supplied fall arrest system to prevent falling, see Crane operating instructions, chapter 2.04!
- ▶ The supplied fall arrest system must be fastened on the fastening and hook points as well as on the safety ropes. For safety points, see Crane operating instructions, chapter 2.06!
- ▶ Only step on the aids, ladders and catwalks with clean shoes!
- ▶ Keep aids, ladders and catwalks free of heavy dirt, snow and ice!
- ▶ It is prohibited to walk on the telescopic boom!

WARNING
Danger of fatal injuries due to toppling hose drum!

- ▶ Due to an assembly / disassembly error, the hydraulic hose drum **440** can fall down!
- ▶ It is prohibited for anyone to remain under the hydraulic hose drum **440** during assembly or disassembly!

Make sure that the following prerequisites are met:

- – The telescopic boom is luffed down, telescoped in and swung by 90° to the side **or** to the rear.
- – An auxiliary crane with suitable fastening equipment is available for removing the hydraulic hose drum **440**.

- ▶ Attach the auxiliary crane on the suspension lug **7** of the hydraulic hose drum **440** with suitable fastening equipment and secure, see illustration **6**.
- ▶ Lift the hydraulic hose drum **440** with the auxiliary crane and affix on the telescopic boom, see illustration **7**.

WARNING
Danger of crushed limbs!
When installing the hydraulic hose drum **440** on the telescopic boom, limbs can be crushed!

- ▶ Be especially careful at installation of the hydraulic hose drum **440**!

- ▶ Screw the retainer **5** on the bracket **6** with all **four** hex head screws **4** and **new self-locking nuts**, see illustration **7**.
- ▶ Guide the cable **9** into the pulley sections and attach the cross handles **8** tightly, see illustration **8**.
- ▶ Establish all hydraulic connections from the telescopic boom to the hydraulic hose drum **440**.
- ▶ Remove the auxiliary crane.
- ▶ Install the bracket **442** with hose couplings in operating position, if needed, see section „Installing the hose couplings in operating position“.

copyright © Liebherr-Werk Ehingen GmbH 2016

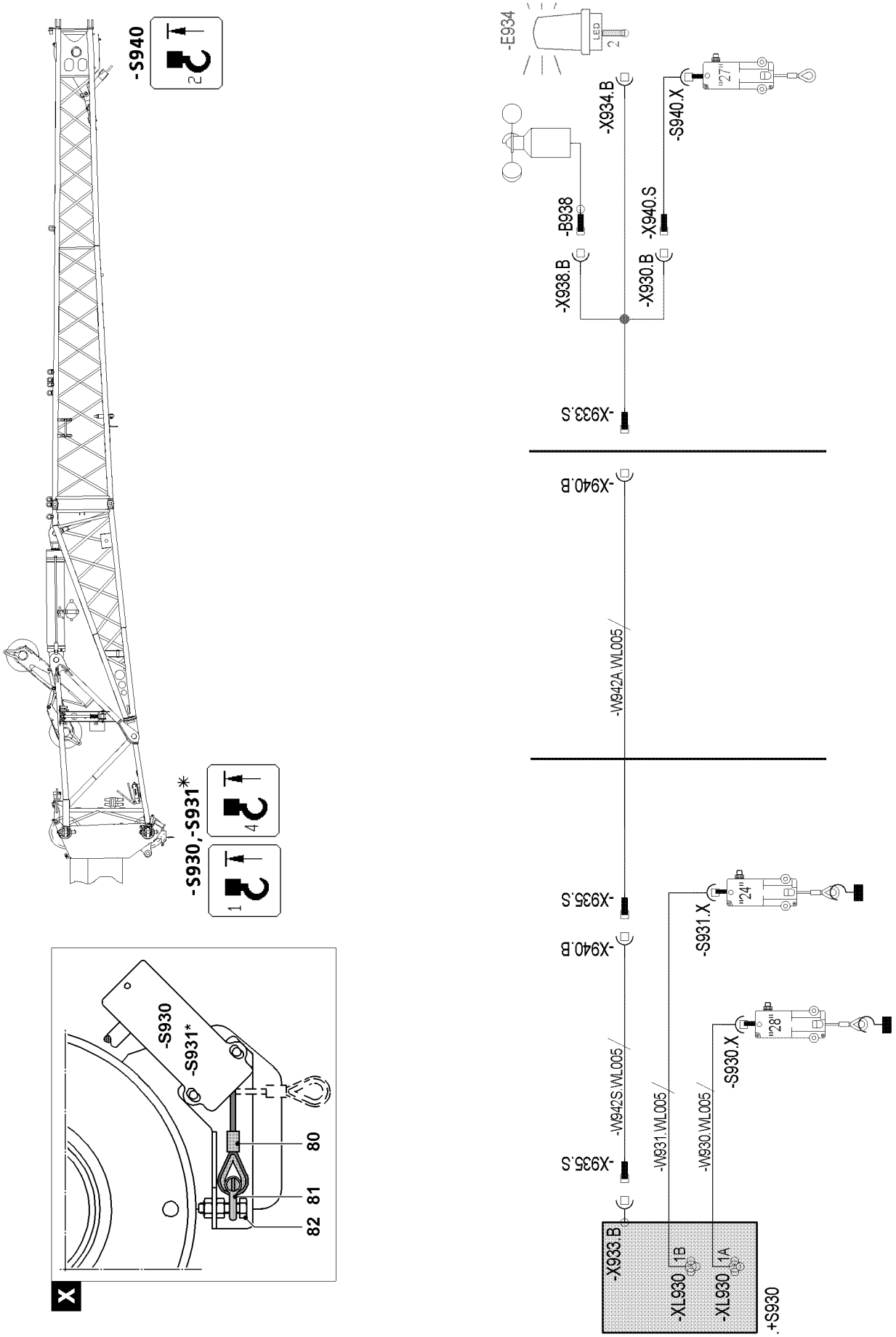

Fig.115025

copyright © Liebherr-Werk Ehingen GmbH 2016

6 Electrical connections

6.1 Mechanically actuating the hoist limit switch, illustration X

If you are working in „Single hook mode“ with the installed folding jib, the hoist limit switch **-S930** and hoist limit switch***** **-S931** which is not required must be actuated manually.

- ▶ Remove the hoist limit switch weight and chain.
- ▶ Pull the hoist limit switch rope **80** and attach to the fixed point **82** with the shackle **81**.

6.2 Establishing the electrical connections on the single folding jib

6.2.1 Establishing the electrical connection to the hoist limit switch

Note

- ▶ In single hook operation, only the hoist limit switch **-S940** on the single folding jib is active. The hoist limit switch **-S930** and the hoist limit switch***** **-S931** must be mechanically actuated, see illustration **X**.
- ▶ In two hook operation, the hoist limit switch **-S940** on the single folding jib and the hoist limit switch **-S930** on the telescopic boom are active. The hoist limit switch***** **-S931** must be mechanically actuated, see illustration **X**.

- ▶ Plug in the cable **W942** with the plug **-X935.S** on the terminal box **-S930**.
- ▶ Plug the cable **W942** with the plug **-X935.S** into the socket **-X940.B**.

Note

- ▶ To be able to establish the electrical connection to the hoist limit switch **-S940**, the Y-adapter must be plugged in the socket **-X940.B** with the plug **-X933.S**.

- ▶ Plug the Y-adapter with the plug **-X933.S** in the socket **-X940.B**
- ▶ Plug the Y-adapter with the plug **-X940.S** in the socket **-X930.B**
- ▶ Plug in the hoist limit switch **-S940**.

6.2.2 Establishing the electrical connection to the LED continuous light* or flashing beacon*

Note

- ▶ To be able to establish the electrical connection to the LED continuous light and the rotating beacon, the Y-adapter on the cable must be plugged in the socket **-X940.B** with the plug **X933.S**.

- ▶ Plug the LED continuous light or flashing beacon in the socket **-X934.B**.

6.2.3 Establishing the electrical connection to the wind speed sensor*

Note

- ▶ To be able to establish the electrical connection to the wind speed sensor, the plug **X933.S** must be plugged in the socket **-X940.B**.

- ▶ Plug the wind speed sensor in the socket **-X938.B**.

Note

- ▶ After folding jib operation, protect the electrical connections from contamination with caps.

copyright © Liebherr-Werk Ehingen GmbH 2016

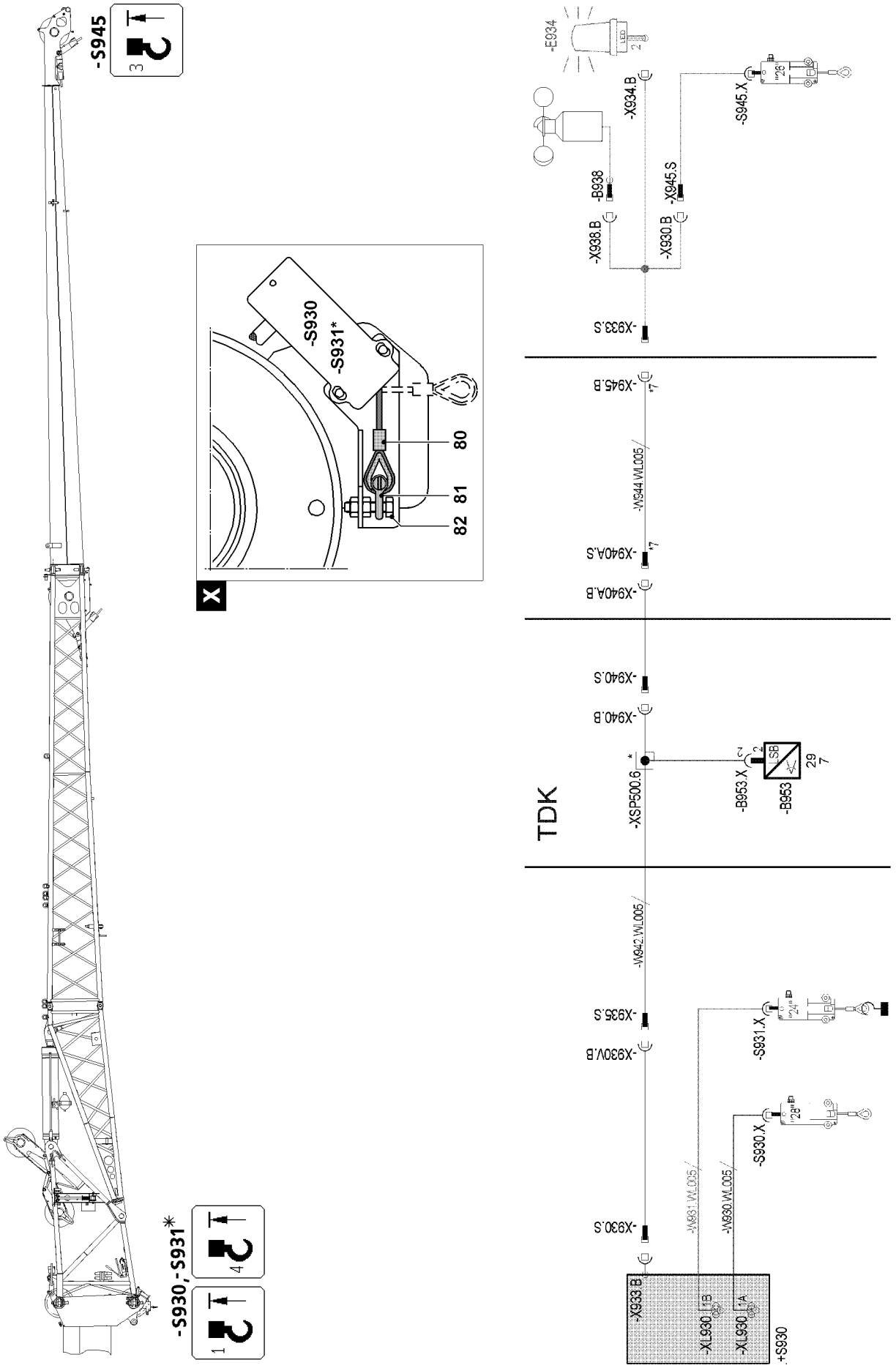

Fig.115026

LWE/ab Muli 010/24201-02-02/en

copyright © Liebherr-Werk Ehingen GmbH 2016

6.3 Establishing the electrical connections on the double folding jib

6.3.1 Establishing the electrical connection to the hoist limit switch

Note

- Only the hoist limit switch **-S945** on the double folding jib is active during single hook operation. The hoist limit switch **-S940** on the single folding jib must be unplugged. The hoist limit switch **-S930** and the hoist limit switch* **-S931** must be mechanically actuated, see illustration **X**.
- In two hook operation, the hoist limit switch **-S945** on the double folding jib and the hoist limit switch **-S930** on the telescopic boom are active. The hoist limit switch **-S940** must be unplugged and the hoist limit switch* **-S931** must be mechanically actuated, see illustration **X**.

- Plug the cable with the plug **-X930.S** in on the terminal box **-S930**.
- Plug the cable **W942** with the plug **-X935.S** into the socket **-X930V.B**.
- Plug the cable with the plug **-X940.S** into the socket **-X940.B**.
- Plug the cable with the plug **-X940.AS** into the socket **-X945.A.B**.
- Plug the Y-adapter with the plug **X933.S** in the socket **-X945.B**
- Plug in the hoist limit switch **-S945**.

6.3.2 Establishing the electrical connection to the LED continuous light* or flashing beacon*

Note

- To be able to establish the electrical connection to the LED continuous light and the rotating beacon, the Y-adapter must be plugged in the socket **-X945.B** with the plug **X933.S**.

- Plug the LED continuous light or flashing beacon in the socket **-X934.B**.

6.3.3 Establishing the electrical connection to the wind speed sensor*

Note

- To be able to establish the electrical connection to the wind speed sensor, the plug **X933.S** must be plugged in the socket **-X945.B**.

- Plug the wind speed sensor in the socket **-X938.B**.

LWE/ab Muli 010/24201-02-02/en

copyright © Liebherr-Werk Ehingen GmbH 2016

1

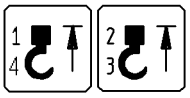

2

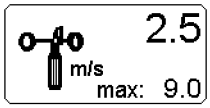

LWE/ab Muli 010/24201-02-02/en

Fig.105574

copyright © Liebherr-Werk Ehingen GmbH 2016

6.4 Function check

Make sure that the following prerequisites are met:
- All electrical connections have been established.
- The crane engine is running.
- The appropriate folding jib operating mode is set on the LICCON monitor.

6.4.1 Hoist limit switch

▶ Actuate all active hoist limit switches manually.

Result:

– The corresponding symbol element „Hoist top“ appears on the LICCON monitor.
– The hoist winch turns off in the lift direction, see illustration **1**.

Note
The respective symbol element „Hoist top“does not appear on the monitor when manually actuating the hoist limit switch?
Is „spool winch up“ and „luff telescopic boom down“ blocked?
The auxiliary boom is not compatible with the LICCON overload protection!
▶ Contact the next **Liebherr Service location** or **Liebherr-Werk Ehingen**!

Note
▶ When replacing or changing the hoist limit switch (HES), the corresponding hoist limit switch must have the correct bus address and the correct software version in order to be detected again by the bus system (LSB).

copyright © Liebherr-Werk Ehingen GmbH 2016

1

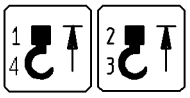

2

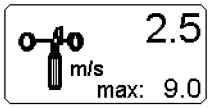

LWE/ab Muli 010/24201-02-02/en

Fig.105574

copyright © Liebherr-Werk Ehingen GmbH 2016

6.4.2 Function check

Make sure that the following prerequisites are met:
- All electrical connections have been established.
- The crane engine is running.
- The appropriate folding jib operating mode is set on the LICCON monitor.

Hoist limit switch

▶ Actuate all active hoist limit switches manually.

Result:

- The corresponding symbol element „Hoist top“ appears on the LICCON monitor.
- The hoist winch turns off in the lift direction, see illustration **1**.

Note
The respective symbol element „Hoist top“does not appear on the monitor when manually actuating the hoist limit switch?
Is „spool winch up“ and „luff telescopic boom down“ blocked?
The auxiliary boom is not compatible with the LICCON overload protection!
▶ Contact the next **Liebherr Service location** or **Liebherr-Werk Ehingen**!

Note
▶ When replacing or changing the hoist limit switch (HES), the corresponding hoist limit switch must have the correct bus address and the correct software version in order to be detected again by the bus system (LSB).

Wind sensor

WARNING
Danger of accident due to toppling crane!
The wind speed can no longer be determined when attaching a defective wind sensor.
▶ Check the function of the wind sensor after every assembly.

▶ Manually actuate the wind sensor.

Result:

- The icon „Wind speed“, see illustration **2**, appears on the LICCON monitor.

LWE/ab Muli 010/24201-02-02/en

copyright © Liebherr-Werk Ehingen GmbH 2016

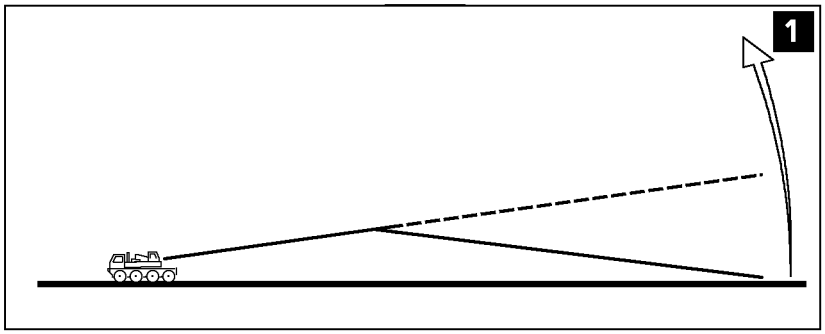

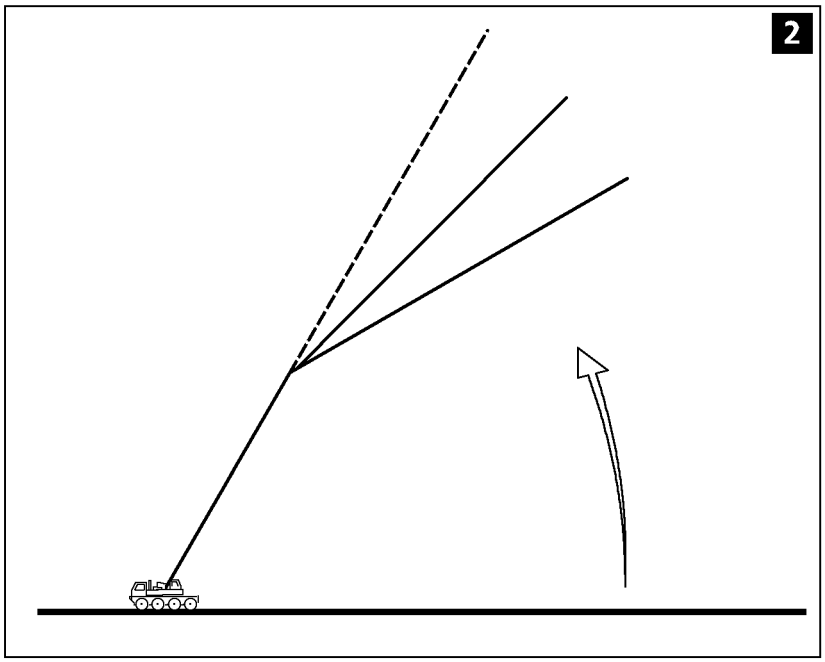

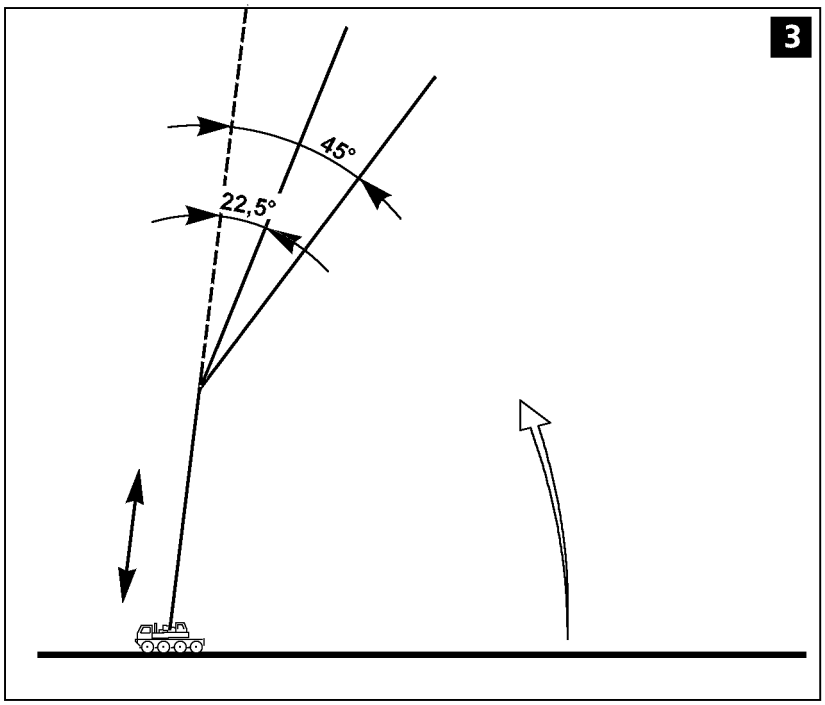

LWE/ab Muli 010/24201-02-02/en

Fig.196442

copyright © Liebherr-Werk Ehingen GmbH 2016

7 Erection

7.1 Preparatory work

Make sure that the following prerequisites are met:
- The crane is properly supported and horizontally aligned.
- The counterweight has been installed on the turntable according to the load chart.
- The telescopic boom is fully telescoped in.
- The folding jib has been assembled according to the load chart and the operating instructions.
- All limit switches have been correctly installed and are fully functional.
- All pin connections have been secured.
- The hoist rope has been correctly placed in the rope pulleys and is secured with the rope retaining pins to prevent it from jumping out.
- There are no „foreign objects“ on the telescopic boom and the folding jib.
- The telescopic boom, the folding jib and its components (such as: Limit switch, airplane warning light, wind speed sensor) must be free of snow and ice in winter.

DANGER
Danger of accident!
Incorrectly installed or non-functioning limits switches as well as falling parts (such as: pins, cotter / spring pins, ice) can cause accidents!
▶ Install all limit switches, pins and spring pins properly.

▶ Check if all prerequisites have been met.

7.2 Erection procedure

DANGER
Danger of accidents due to toppling of the crane!
The radii specified in the load chart may not be exceeded or fallen below, even if there is no load on the hook! If this regulation is not observed, the crane can topple over.
▶ Compare and check the settings on the LICCON computer system with the actual configuration status!

Adjustment of the LICCON overload safety device, refer to Crane operating instructions, chapter 4.02.

▶ Set and confirm the LICCON overload protection according to the required set up configuration.
▶ Luff the telescopic boom up with the folding jib attached until the LICCON signals the release.
▶ Telescope the telescopic boom out to the values specified in the load chart.

LWE/ab Muli 010/24201-02-02/en

copyright © Liebherr-Werk Ehingen GmbH 2016

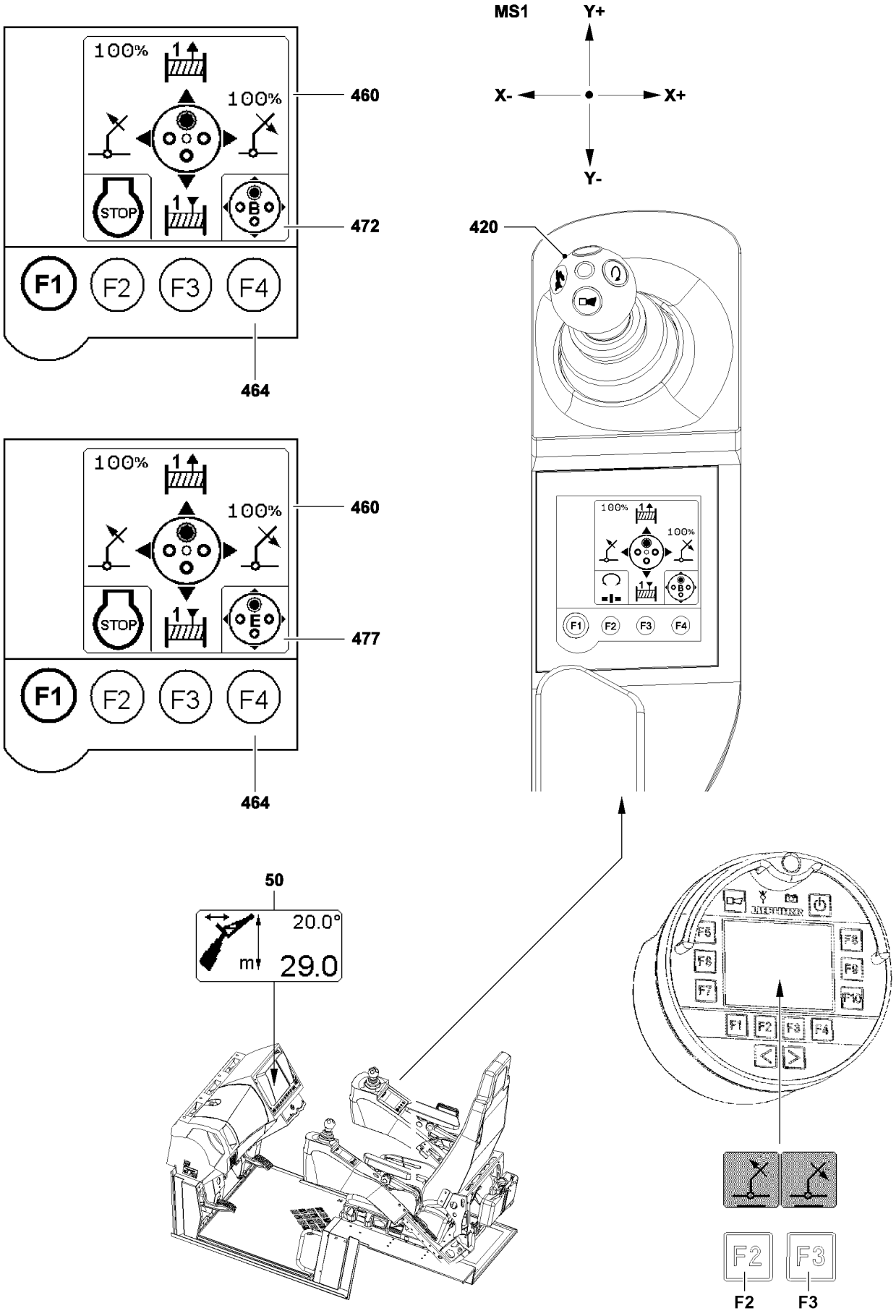

Fig.118512

LWE/ab Muli 010/24201-02-02/en

copyright © Liebherr-Werk Ehingen GmbH 2016

8 Adjusting the folding jib angle hydraulically*

8.1 Folding jib with hydraulic* angle adjustment

The adjustment range of the folding jib lies between 0° and 40° to the telescopic boom. It is possible to luff the hydraulically adjustable folding jib under load.

DANGER
Danger of accident due to toppling crane!
The crane may topple if the maximum load is exceeded.
- ▶ The specifications in the load charts must be adhered to!
- ▶ The load charts for the hydraulically adjustable folding jib are only valid for angles of 0°, 20° and 40°!
- ▶ For the adjustment angles between the nominal angles of 0°, 20° and 40°, the maximum load carrying capacity will be determined by the LICCON computer system shown on the LICCON monitor.

Make sure that the following prerequisites are met:
- – All hydraulic connections have been made.
- – All electrical connections have been made.
- – The crane engine is running.
- – The operating mode **TNZK** has been set and confirmed on the LICCON computer system.

8.1.1 Angle display for folding jib

The folding jib angle **50** is shown on the LICCON monitor as the relative angle between the telescopic boom pulley head and the folding jib.

8.1.2 Luffing with „hydraulic angle adjustment“

Make sure that the following prerequisites are met:
- – The right touch display **460** appears on the „Driving mode + Master switch configuration“ menu.
- – The master switch configuration „B“ **472** is active (for devices with one winch).
- – The master switch assignment „E“ **477** is active (for devices with two winches).

The folding jib angle adjustment can be made under load.

If the folding jib is to be luffed down:
- ▶ Deflect the master switch **420** to the right in direction X+.

Result:

- – The hydraulic folding jib is luffed down.

If the folding jib is to be luffed up:
- ▶ Deflect the master switch **420** to the left in direction X-.

Result:

- – The hydraulic folding jib is luffed up.

Note
- ▶ Alternatively, the hydraulic angle adjustment can also be made with the BTT.
- ▶ The hydraulic folding jib can be luffed up with the function key **F2** or luffed down with the function key **F3**, see chapter 5.31, section „The menu Assembly functions on the BTT“.

LWE/ab Muli 010/24201-02-02/en

copyright © Liebherr-Werk Ehingen GmbH 2016

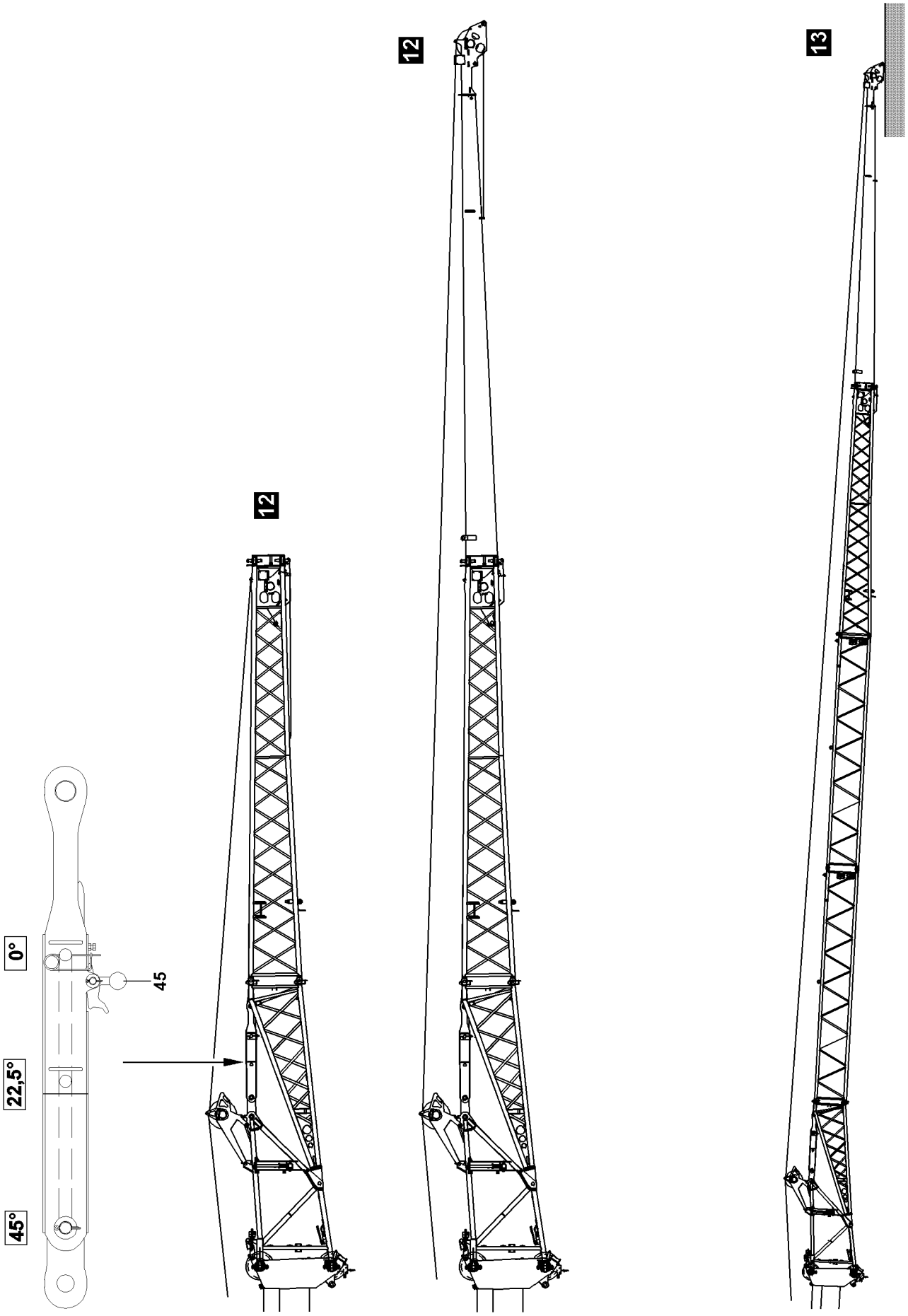

Fig.114341

LWE/ab Muli 010/24201-02-02/en

copyright © Liebherr-Werk Ehingen GmbH 2016

9 Changing over mechanical folding jib from 22.5° or 45° to 0°

DANGER
Danger of fatal injury!
If the following danger notes are not observed, fatal injuries can occur during assembly and change over work on the folding jib.
▶ No persons may remain within the danger zone of the crane.

There are two ways of changing the mechanical folding jib to 0°:
1. Changing the folding jib with the hoist rope, see illustration **12**.
   Only permitted for operation with single folding jib and double folding jib.
2. Changing the folding jib by supporting it from below, see illustration **13**.

9.1 Changing the folding jib with the hoist rope

WARNING
Life-threatening danger at angle installation with the BTT!
Due to jerky movements at angle installation of the folding jib with the hoist rope, the boom along with the folding jib can swing up. This can cause the folding jib to fold down uncontrolled!
Personnel can be severely injured or killed!
▶ Actuate all movements carefully with the BTT!
▶ Make sure that there are no persons within the danger zone of the folding jib!

Note
▶ When changing the folding jib with the BTT, the hoist limit switch is bypassed.
▶ BTT, see Crane operating instructions, chapter 5.31.

Make sure that the following prerequisites are met:
– The crane is properly supported and horizontally aligned.
– The counterweight has been installed on the turntable according to the load chart.
– The telescopic boom is fully telescoped in.
– The folding jib is installed at an angle of 22.5° or 45°.
– The telescopic boom has been luffed to the rear or the side.

LWE/ab Muli 010/24201-02-02/en

copyright © Liebherr-Werk Ehingen GmbH 2016

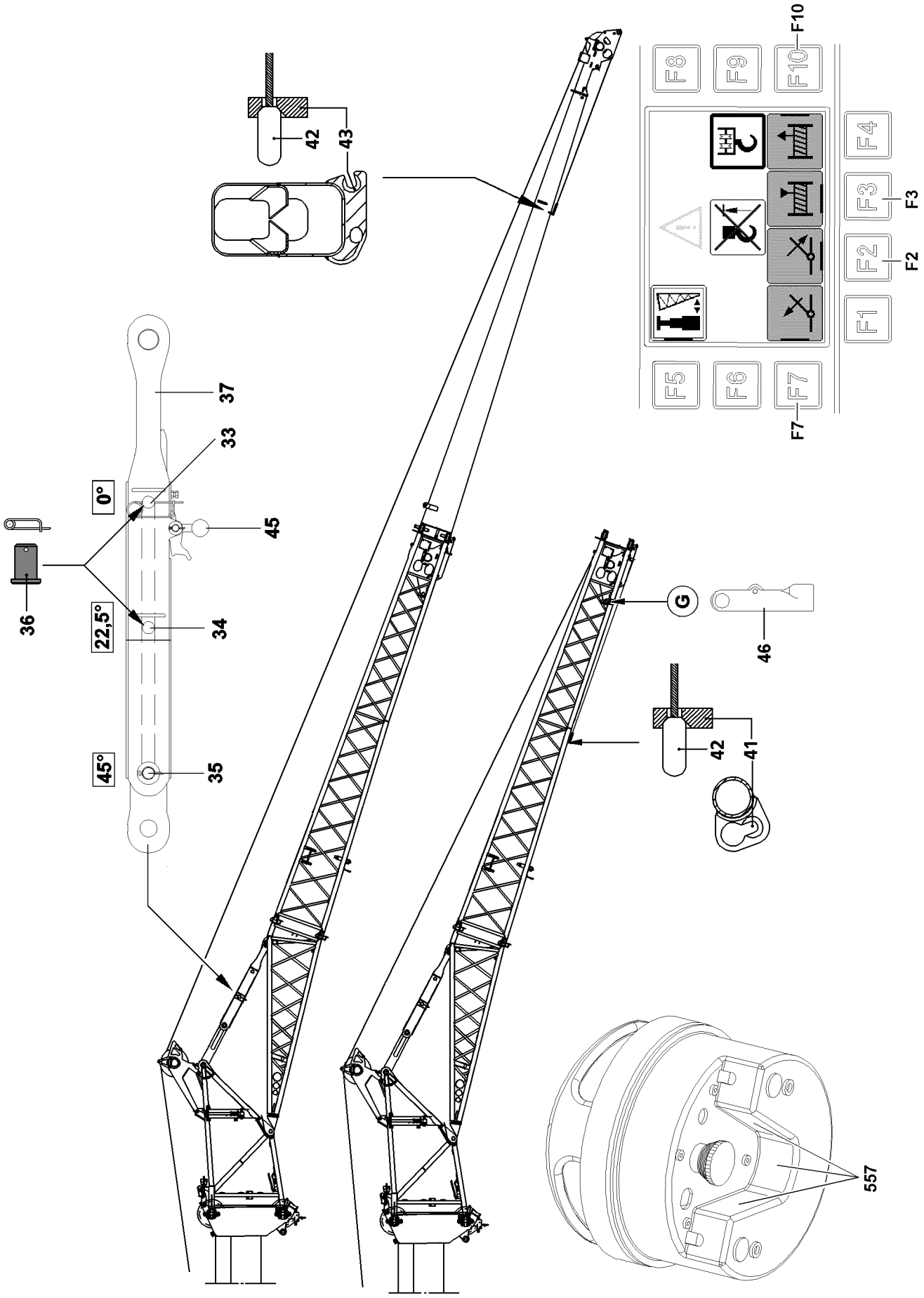

Fig.114342

copyright © Liebherr-Werk Ehingen GmbH 2016

LWE/ab Muli 010/24201-02-02/en

9.1.1 Preparatory work

- ▶ Lower the telescopic boom until the hook block can be reeved out on the end section of the folding jib.
- ▶ Unreeve the hoist rope on the hook block.
- ▶ Remove the hoist limit switch weight.

CAUTION
Danger of damage to the folding jib and the hoist rope!
If the telescopic boom is telescoped out or luffed down as long as the hoist rope is tightened on the assembly fixed point, the hoist rope can rip and the folding jib can be damaged.

- ▶ Do not telescope out or luff down the telescopic boom with the hoist rope attached on the assembly fixed point!

For operation with double folding jib:

- ▶ Guide the press fitting **42** into the assembly fixed point **43**.

or

For operation with single folding jib:

Guide the press fitting **42** into the assembly fixed point **41**.

- ▶ Tighten the hoist rope by **carefully deflecting** the appropriate manual control lever.

or

Tighten the hoist rope by actuating the 2-hand keypad **557** and the function key **F3**.

LWE/ab Muli 010/24201-02-02/en

copyright © Liebherr-Werk Ehingen GmbH 2016

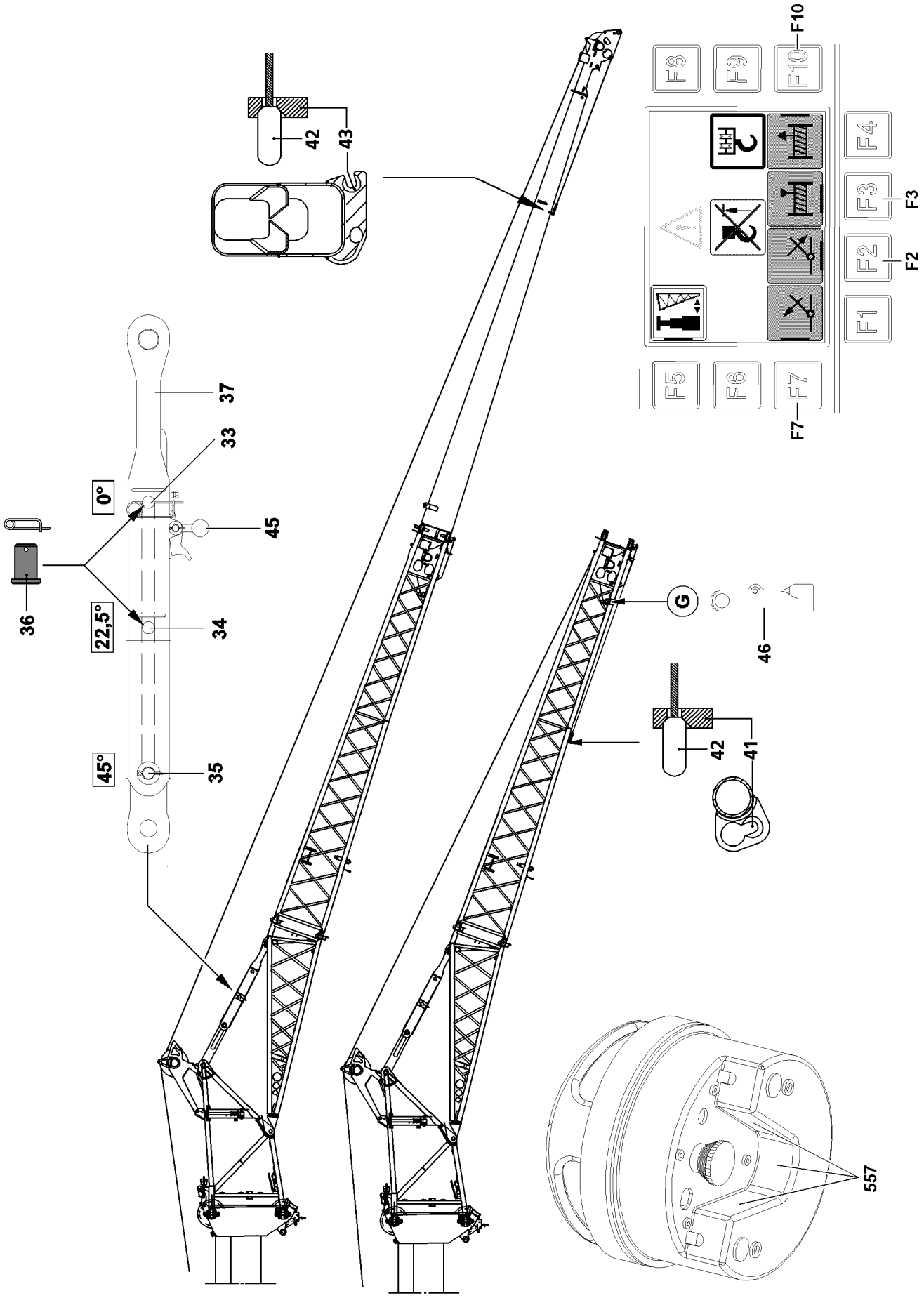

Fig.114342

LWE/ab Muli 010/24201-02-02/en

copyright © Liebherr-Werk Ehingen GmbH 2016

9.1.2 Changing the angle with the hoist rope

CAUTION
Danger of damage to the folding jib and the hoist rope!
- ▶ As soon as the folding jib has reached the 0° position (stop at pull bracket), the „Lifting“ and „Luffing“ movement must be stopped immediately.

- ▶ Luff down telescopic boom and simultaneously spool up the hoist rope so that the pivot section of the folding jib is always kept at the same height, approx. 1.0 m - 1.5 m , above the ground until the 0° position (stop on pull bracket) has been reached.
  or
  Luff the telescopic boom down via the BTT by actuating the 2-hand keypad **557** and the function key **F2**. Spool up the hoist rope simultaneously with the function key **F3** so that the pivot section of the folding jib is always held at the same height, approx. 1.0 m to 1.5 m above the ground until the 0 ° position „Stop on pull bracket“ is reached.

DANGER
Danger of fatal injury!
Danger of accident if the folding jib suddenly „folds downward“!
- ▶ Make sure that there are no persons within the danger zone of the folding jib.
- ▶ **Before unpinning** the pins **36**, ensure that the hoist rope is taut and that the folding jib is actually held by the hoist rope.
- ▶ Unpinning the retaining pins **35** on the 45° pin bores is **prohibited**.

- ▶ Release the pins **36** and unpin from the 22.5° bore **34 or** remove from the transport retainer.
- ▶ Insert the pin **36** into the 0° bore **33** and secure.
- ▶ Disengage the hoist rope on the assembly fixed point.
- ▶ Install the rope lock **46** on point **G**!

LWE/ab Muli 010/24201-02-02/en

copyright © Liebherr-Werk Ehingen GmbH 2016

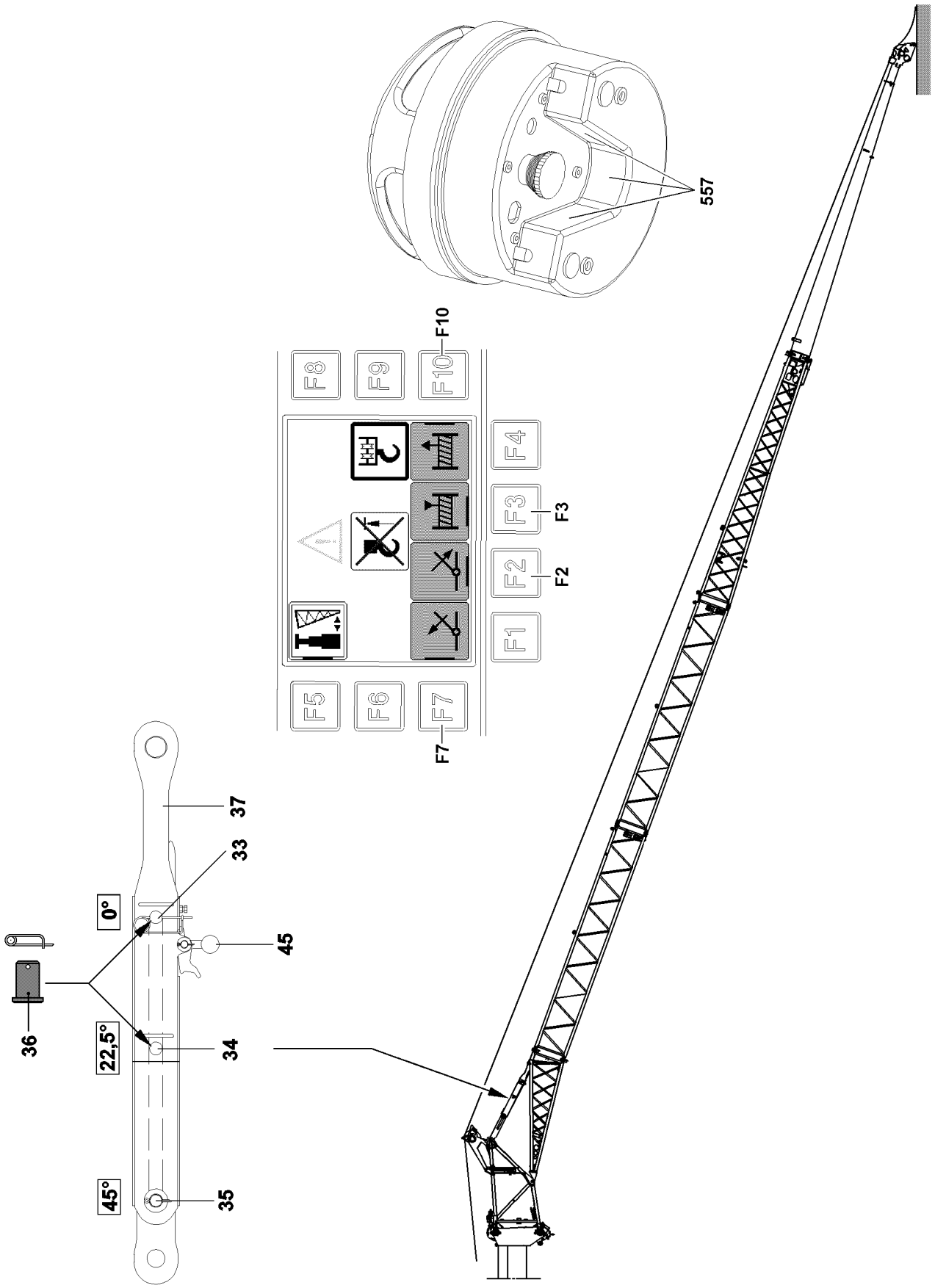

Fig.114343

copyright © Liebherr-Werk Ehingen GmbH 2016

9.2 Changing the folding jib by supporting it

WARNING
Life-threatening danger at angle installation with the BTT!
- ▶ Actuate all movements carefully with the BTT!
- ▶ Make sure that there are no persons within the danger zone of the folding jib!

Note
- ▶ When changing the folding jib with the BTT, the hoist limit switch is bypassed.

- ▶ Luff the telescopic boom completely down via the master switch until the hook block can be reeved out.
- ▶ Remove the lock and the hoist limit switch weight.

CAUTION
Danger of property damage!
- ▶ When laying down the folding jib, make sure that the folding jib is **not** laid down on the rope pulley. The folding jib can be damaged.
- ▶ Make sure that the hoist rope is **not** damaged.
- ▶ Make sure that the ground is level and solid, so that the folding jib does not sink into the ground when luffing it down.

- ▶ Completely luff down the telescopic boom until the folding jib lies on the ground.
  or
  Luff the telescopic boom down all the way by actuating the 2-Hand key field **557** and the function key **F2** on the BTT until the folding jib is laying on the ground.
- ▶ Continue to luff down the telescopic boom carefully until the 0° position (stop at pull bracket) is reached.

DANGER
Danger of fatal injury!
Danger of accident if the folding jib suddenly „folds downward“!
- ▶ No persons may remain within the danger zone of the crane.
- ▶ Make sure **before unpinning** the pin **36**, that the folding jib is lying on the ground or on a proper and secure support.
- ▶ Unpinning the retaining pins **35** on the 45° pin bores is **prohibited**.

- ▶ Release the pins **36** and unpin from the 22.5° bore **34 or** remove from the transportation retainer.
- ▶ Insert the pin **36** into the 0° bore **33** and secure.

LWE/ab Muli 010/24201-02-02/en

copyright © Liebherr-Werk Ehingen GmbH 2016

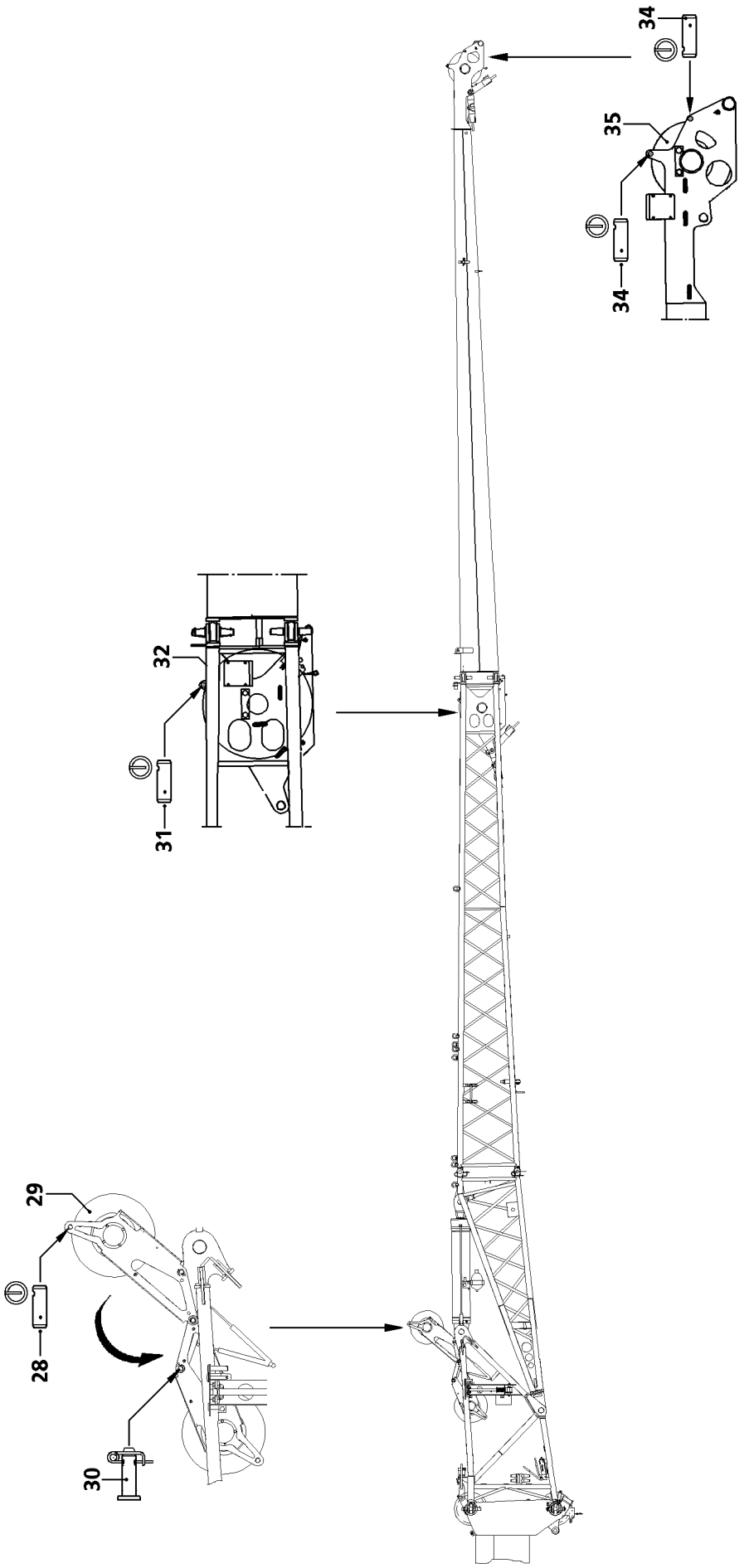

Fig.196444

LWE/ab Muli 010/24201-02-02/en

copyright © Liebherr-Werk Ehingen GmbH 2016

10 Unreeving the hoist rope

DANGER
Danger of falling from folding jib!
When stepping on the folding jib, for example to reeve the hoist rope in or out, there is a risk of slipping and falling from the folding jib.
▶ Do not step on the folding jib!

Make sure that the following prerequisites are met:

– The telescopic boom is telescoped in.
– The hook block / load hook has been placed on the ground.
– The hoist rope is detached from the rope fixed point.
– The hoist limit switch weight and the chain have been removed.

10.1 Unpinning / pinning the rope retaining pin

▶ Release and unpin the rope retaining pin **28** and rope retaining pin **31**.

For operation with double folding jib, 3-piece folding jib or 4-piece folding jib:
▶ Release and unpin the rope retaining pin **34**.
▶ Spool the hoist rope up.
▶ Repin the rope retaining pin **28**, rope retaining pin **31** and rope retaining pin **34** and secure with locking pins.

10.2 Swinging the rope guide pulley into transport position

▶ Release and unpin the pin **30**.
▶ Swing the rope guide pulley **29** into transport position.
▶ Pin the rope guide pulley **29** in transport position: Insert and secure pin **30**.

LWE/ab Muli 010/24201-02-02/en

copyright © Liebherr-Werk Ehingen GmbH 2016

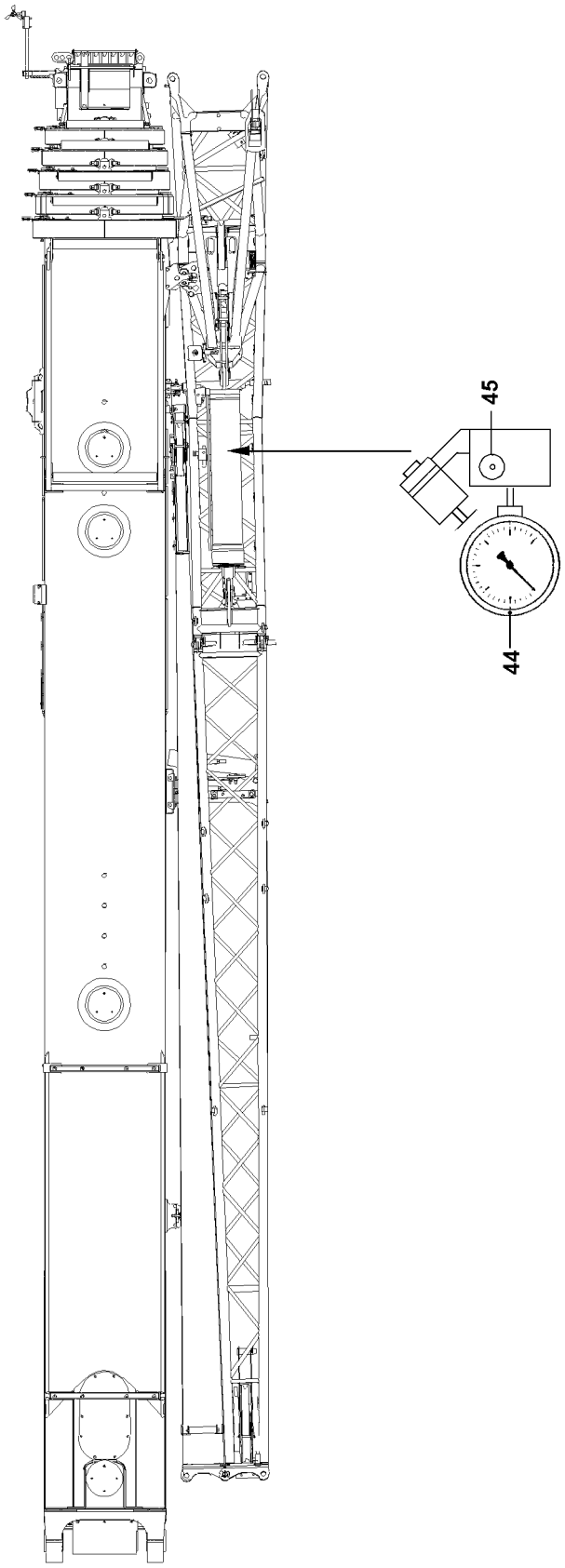

Fig.103452

LWE/ab Muli 010/24201-02-02/en

copyright © Liebherr-Werk Ehingen GmbH 2016

11 Removing the folding jib

11.1 General

DANGER
Danger of fatal injuries due to falling folding jib!
The folding jib could fall down due to a disassembly error.
- ▶ Standing under the folding jib during the swing procedure is prohibited!
- ▶ Standing in the swing range as well as in the folding area of the folding jib is prohibited!
- ▶ The folding jib must be secured by an auxiliary rope during the swinging process!

WARNING
Danger of falling!
During assembly and disassembly, personnel must be secured with appropriate aids to prevent them from falling! If this is not observed, assembly personnel could fall and suffer fatal injuries!
- ▶ All work aloft, where there is a danger of falling must be carried out with suitable aids!
- ▶ If fall arrest equipment is available, then it must be used, see Crane operating instructions, chapter 2.06!
- ▶ If aids are not available and work cannot be carried out from the ground, then the assembly personnel must secure themselves with the supplied fall arrest system to prevent falling, see Crane operating instructions, chapter 2.04!
- ▶ The supplied fall arrest system must be fastened on the fastening and hook points as well as on the safety ropes. For safety points, see Crane operating instructions, chapter 2.06!
- ▶ Only step on the aids, ladders and catwalks with clean shoes!
- ▶ Keep aids, ladders and catwalks free of heavy dirt, snow and ice!
- ▶ It is prohibited to walk on the telescopic boom!

LWE/ab Muli 010/24201-02-02/en

copyright © Liebherr-Werk Ehingen GmbH 2016

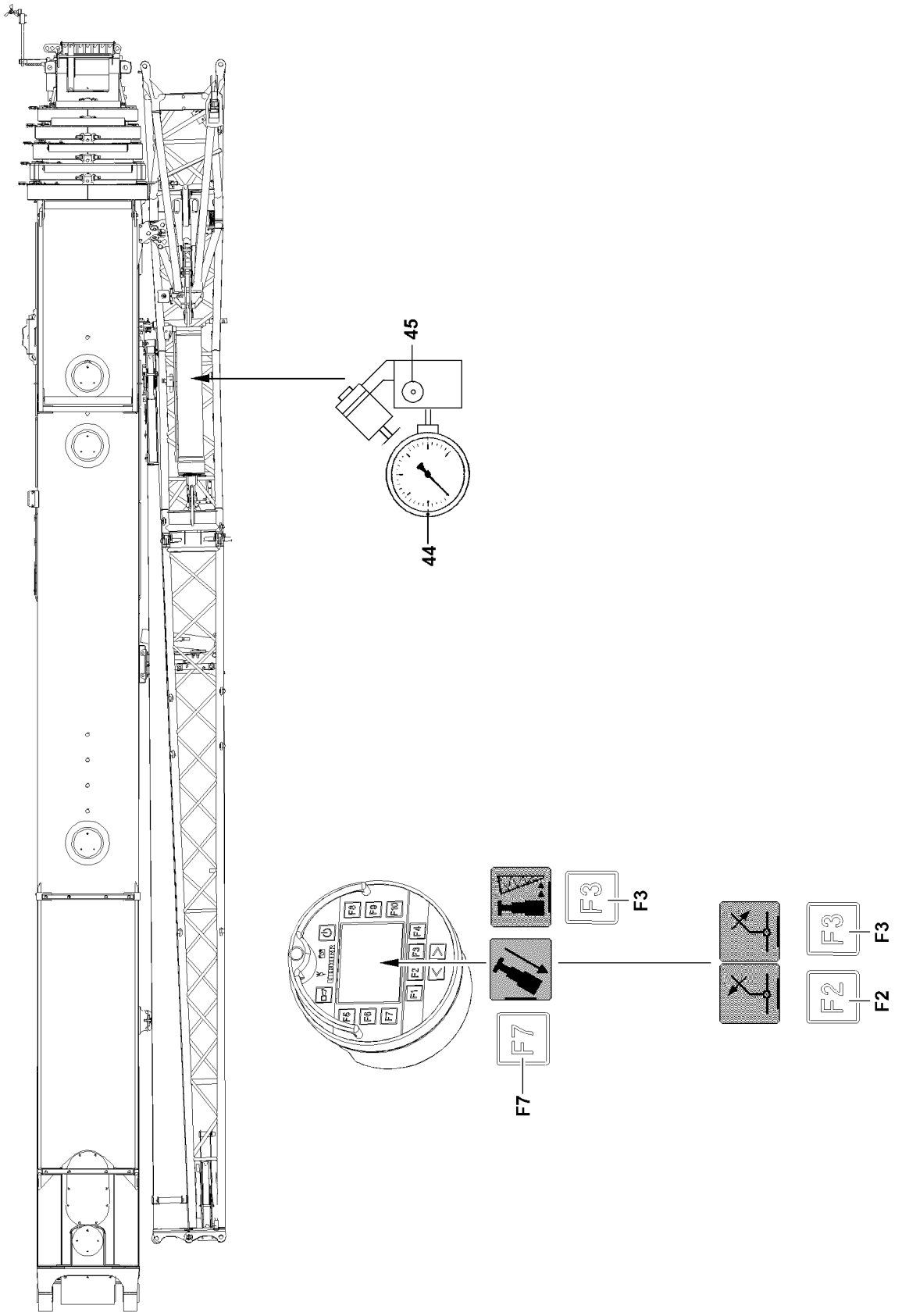

LWE/ab Muli 010/24201-02-02/en

Fig.118028

copyright © Liebherr-Werk Ehingen GmbH 2016

11.2 Preparatory work before swinging in hydraulic folding jibs

DANGER
Danger of fatal injury if the folding jib inadvertently folds down!
When using hydraulic folding jibs (TNZK operation), prior to swinging in the folding jib, check if a pressure of at least 200 bar is shown on the pressure gauge **44**. If the pressure on the pressure gauge **44** is too low, fatal accidents can occur if the folding jib folds down by itself!

▶ It is **expressly prohibited** to swing in the folding jib with less than 200 bar on the pressure gauge **44**.

Prior to swinging in the hydraulic folding jib*, the folding jib must be completely luffed up and held in the end position for approximately 15 seconds. This causes the hydraulic reservoir to fill.

If the oil pressure on the pressure gauge **44** is below 200 bar

▶ Luff the folding jib completely up with the master switch and move it to end position.
or
On the Bluetooth™ Terminal (BTT) call up the „Lift / lower the folding jib“ menu.

▶ Press the key **F2** until a pressure of at least 200 bar is shown on the pressure gauge **44**, see Crane operating instructions, chapter 5.31.

Result:

– The pressure gauge **44** then must show 200 bar to 250 bar.

11.3 Prerequisite for disassembly

Make sure that the following prerequisites are met:
– The crane is properly supported and horizontally aligned.
– The counterweight has been installed on the turntable according to the load chart.
– The telescopic boom is fully telescoped in.
– The folding jib is in the 0° position.
– The electrical / hydraulic connections on the folding jib have been released.
– The rope guide pulley has been folded from the operating position into transport position.

DANGER
Danger of accident if the folding jib swings out by itself when it is unpinned!
If the telescopic boom is not in the 0° position, there is a danger of accidents if the folding jib swings out by itself when it is unpinned.

▶ Move the telescopic boom to 0° position.

LWE/ab Muli 010/24201-02-02/en

copyright © Liebherr-Werk Ehingen GmbH 2016

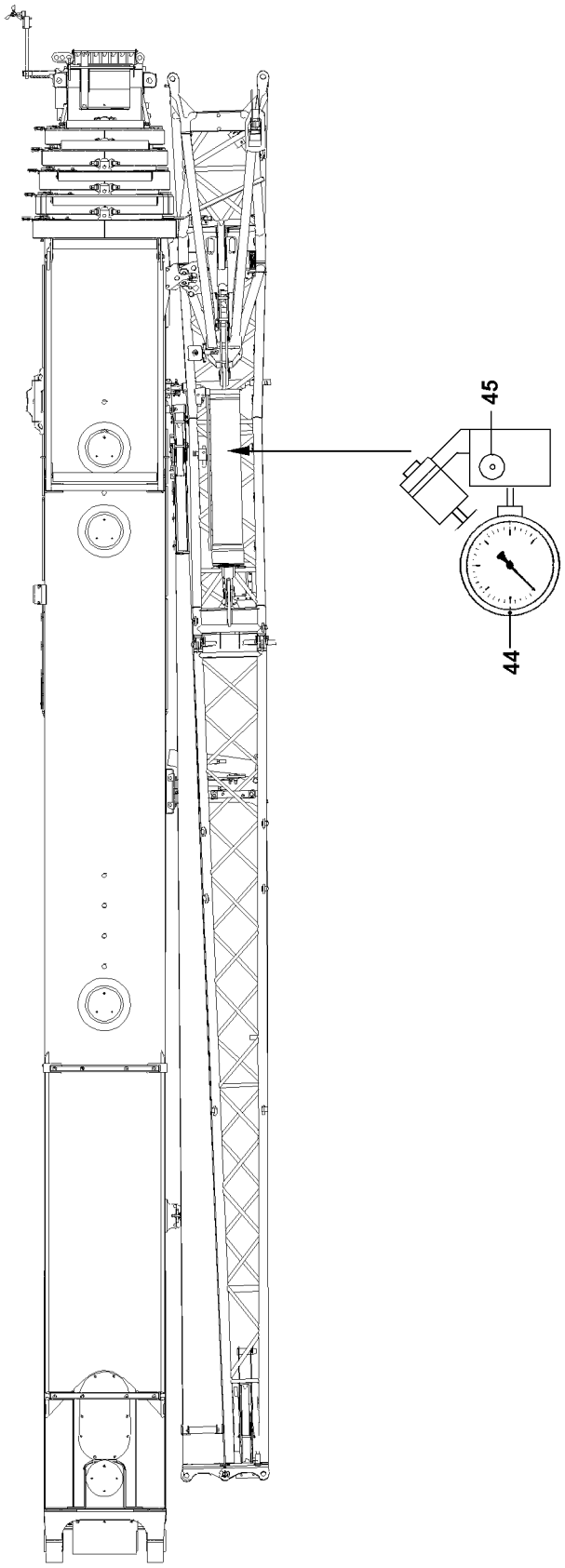

Fig.103452

LWE/ab Muli 010/24201-02-02/en

copyright © Liebherr-Werk Ehingen GmbH 2016

11.4 Prerequisites for operation with crane LTM 1220

Ensure that the following prerequisites are met:
– The telescopic boom has been luffed down to the rear or the side in the 0° position.

DANGER
Danger of accident if the folding jib swings out by itself when it is unpinned!
If the telescopic boom is not in the 0° position, there is a danger of accidents if the folding jib swings out by itself when it is unpinned.
▶ Move the telescopic boom to 0° position.

11.5 Prerequisites for operation with crane LTR 1220

Ensure that the following prerequisites are met:
– The telescopic boom is luffed up to the rear or to the side to 1°.

Note
▶ If the telescopic boom is not luffed up by 1°, then the folding jib cannot be installed.

LWE/ab Muli 010/24201-02-02/en

copyright © Liebherr-Werk Ehingen GmbH 2016

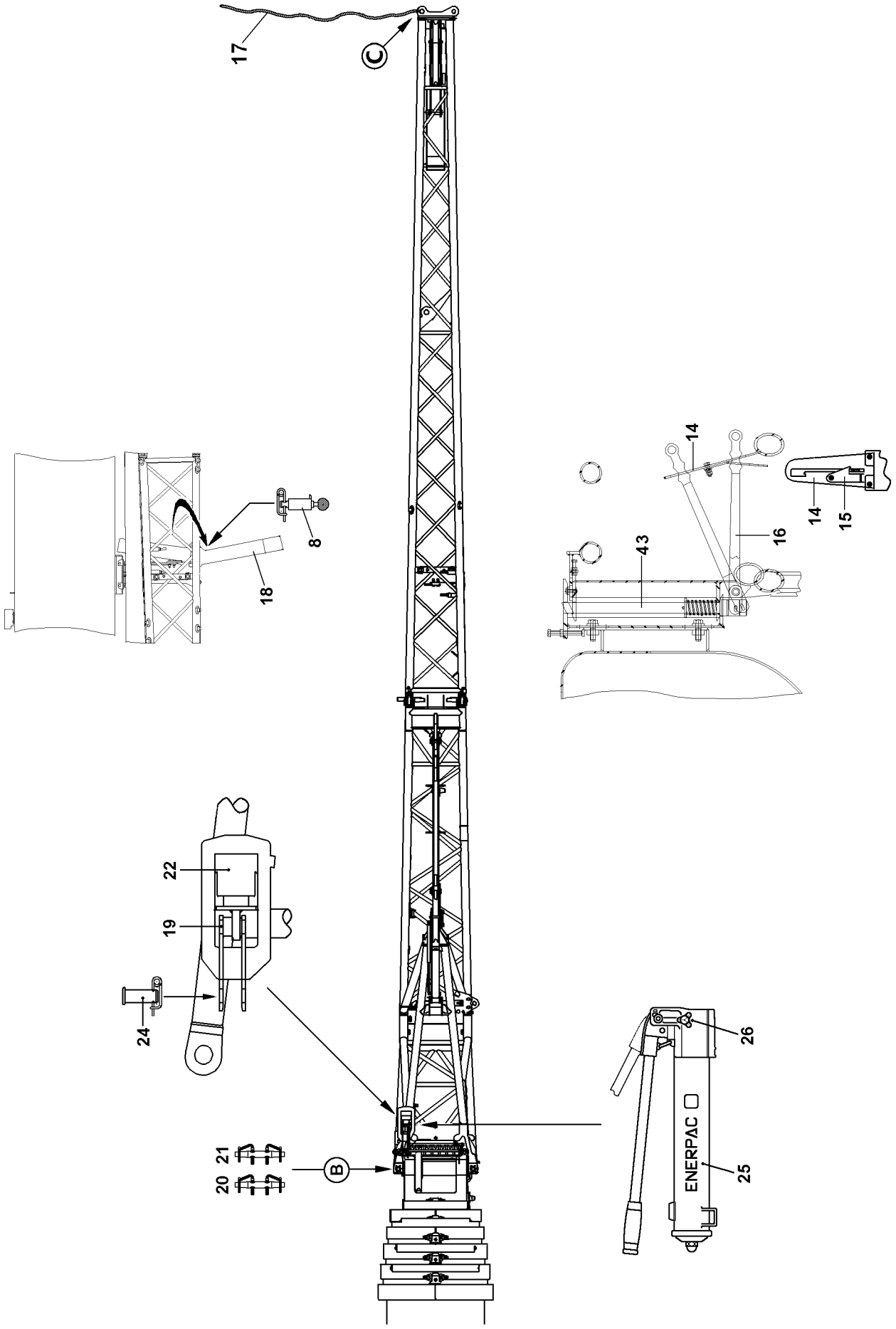

Fig.196445

LWE/ab Muli 010/24201-02-02/en

copyright © Liebherr-Werk Ehingen GmbH 2016

11.6 Removing the single folding jib carried on the crane, part 1

▶ Disengage the lever **16** with the assembly rod from the link **14** and pull downward.
▶ Attach the auxiliary rope **17** on point **C**.

When swinging the folding jib support **18** in and out, ensure that the spring pin **8** is unlocked with one hand and that the folding jib support **18** is moved overhead with the other hand.

▶ Release and unpin the spring pin **8**.
▶ Swing out the folding jib support **18** until the spring pin **8** engages again.

In order to unpin on top on point **B**, the hydraulic / mechanical assembly aid **22** must be used.

▶ Close the knob **26** on the hand pump **25**.
▶ Extend the hydraulic cylinder of the assembly aid **22** by operating the hand pump **25** until the pin **21** can be unpinned.
▶ Release and unpin the pin **21** on top.
▶ Open the knob **26** on the hand pump **25**.

Result:

– The hydraulic cylinder of the assembly aid **22** returns to the starting position.

▶ Unpin the pins **24** and insert into bore **19** and secure.

DANGER
The folding jib can swing out inadvertently!
When removing the pin **20**, the folding jib can swing out inadvertently.

In order to prevent the folding jib from swinging out by itself:
▶ Hold the folding jib with the auxiliary rope!
▶ Do not lean the ladder against the folding jib!

▶ Release the pin **20** on the bottom and unpin.

copyright © Liebherr-Werk Ehingen GmbH 2016

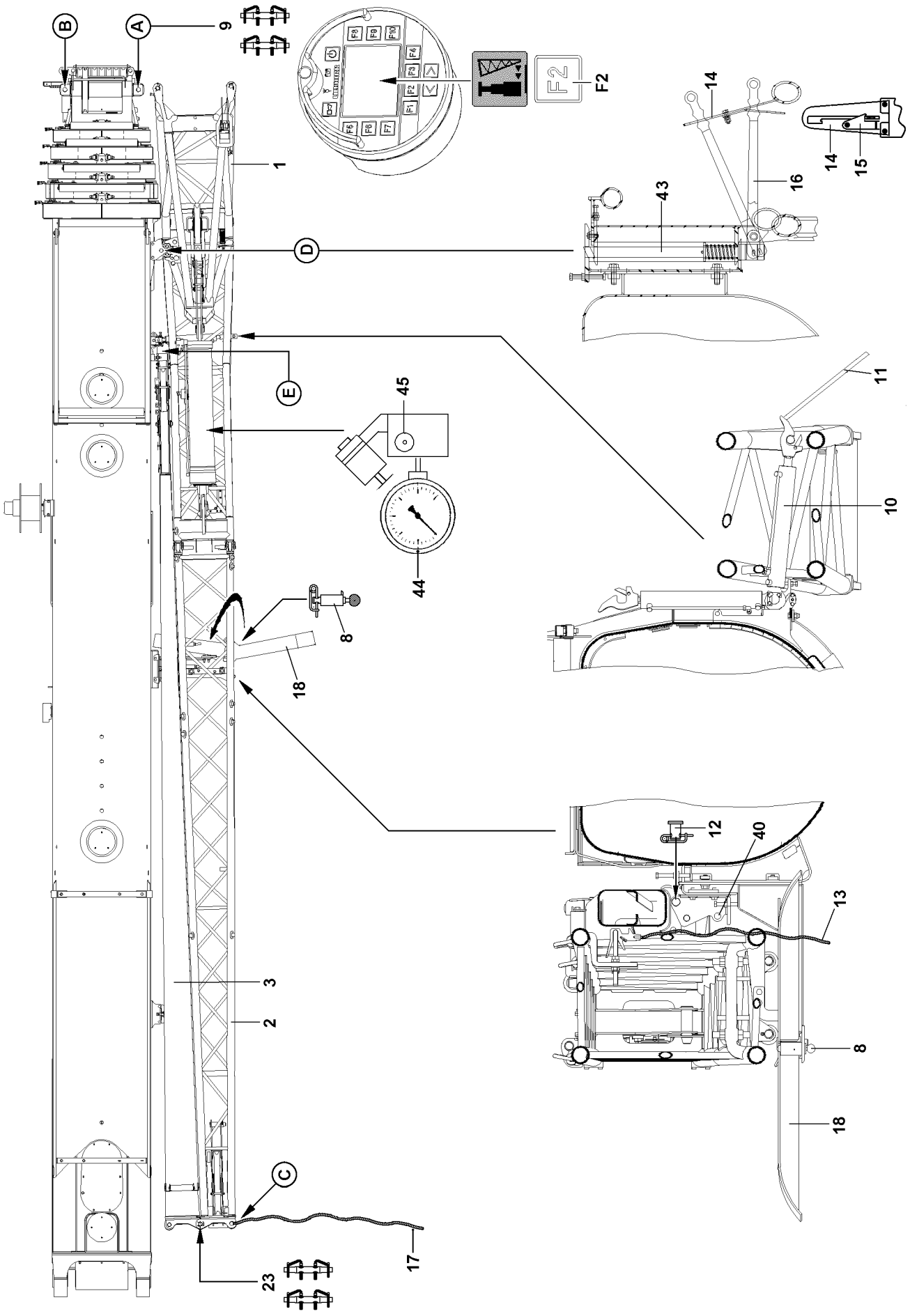

Fig.114340

copyright © Liebherr-Werk Ehingen GmbH 2016

LWE/ab Muli 010/24201-02-02/en

11.7 Removing the single folding jib carried on the crane, part 2

DANGER
Danger of fatal injuries due to falling folding jib!
The folding jib could fall down due to a disassembly error.
- ▶ Standing under the folding jib during the swing procedure is prohibited!
- ▶ Standing in the swing range as well as in the folding area of the folding jib is prohibited!

- ▶ Swing the folding jib back until the swing cylinder **10** is locked with the folding jib.
- ▶ Start the crane engine.
- ▶ Press the function key **F2** on the BTT and swing in the folding jib with the swing cylinder until the lock **43** engages audibly.
- ▶ Check if the lock **43** is engaged properly.

DANGER
Danger of fatal injury when unpinning the pins **9**!
If the pins **9** are unpinned before the lock **43** has engaged, then the folding jib will fall down and possibly cause fatal injury to the assembly personnel.
- ▶ The pins **9** may not be unpinned until the lock **43** has engaged and the manual lever **16** has been secured with the safety bracket **15**.

- ▶ Secure the manual lever **16** with the safety bracket **15**.
- ▶ Release the pin **9** at point **A**, unpin and insert into transport retainer.
- ▶ Press the function key **F2** on the BTT and swing the folding jib with swing cylinder in all the way.

Result:

– When carrying the double folding jib along, the reducer section **2** is locked with the end section **3**.

If a double folding jib is carried along:
- ▶ Insert and secure pin **23**.

When swinging the folding jib support **18** in and out, ensure that the spring pin **8** is unlocked with one hand and that the folding jib support **18** is moved overhead with the other hand.

- ▶ Unpin the spring pin **8** and swing in the folding jib support **18** until the spring pin **8** engages.
- ▶ Secure the spring pin **8**.

If a hydraulic folding jib is carried along:
- ▶ Connect the hydraulic line to the hydraulic cylinder at the point **E**.
- ▶ Remove the auxiliary rope **17**.

„Hydraulic folding jibs“ have an overflow tank attached to the hydraulic cylinder. The overflow tank must be emptied when it is full. Even when the folding jib is not carried along on the crane.

For operation with a hydraulic folding jib:
- ▶ Empty the overflow tank on the hydraulic cylinder.

LWE/ab Muli 010/24201-02-02/en

copyright © Liebherr-Werk Ehingen GmbH 2016

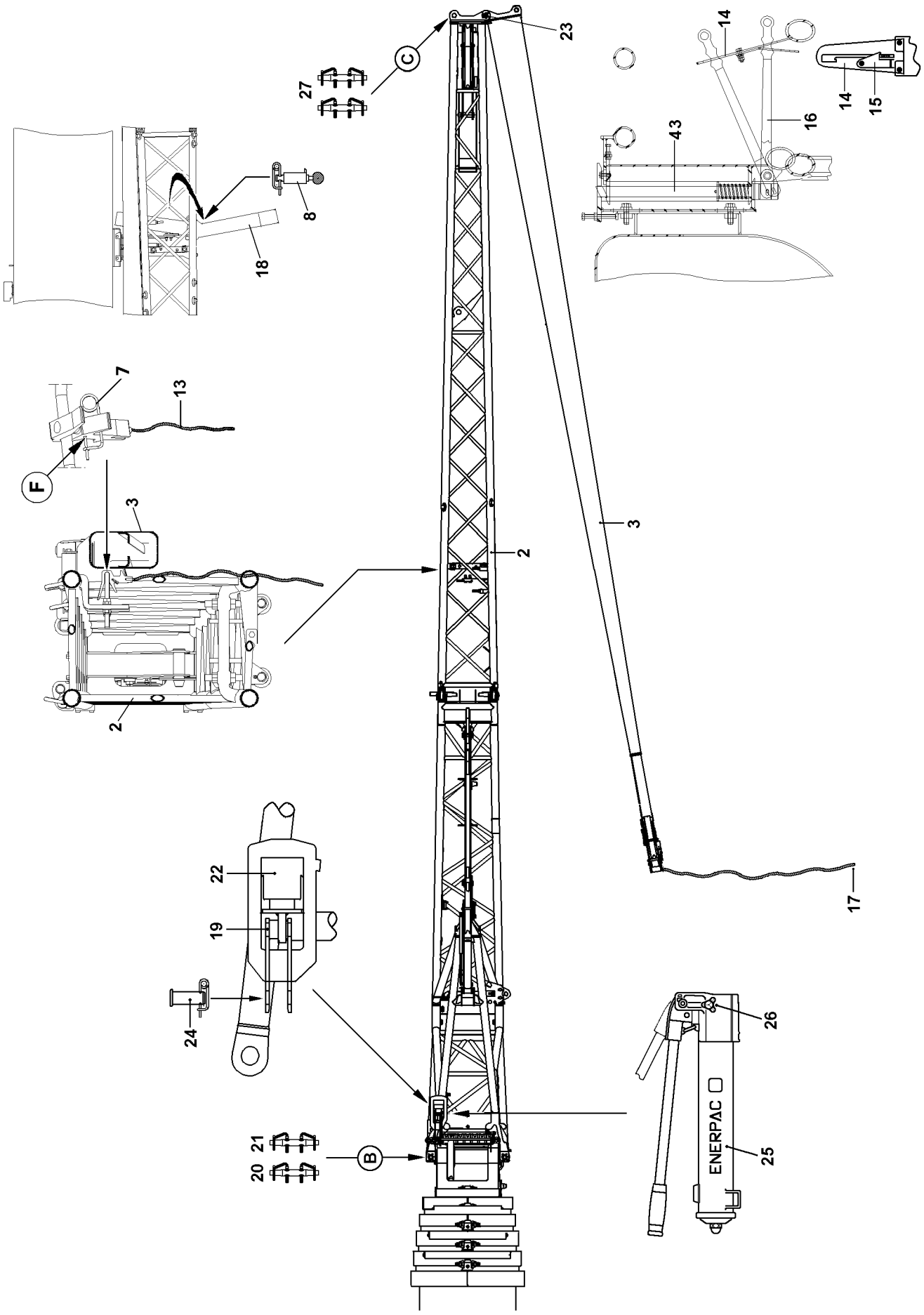

Fig.103449

copyright © Liebherr-Werk Ehingen GmbH 2016

LWE/ab Muli 010/24201-02-02/en

11.8 Removing the double folding jib carried on the crane

11.8.1 Removing the end section

▶ Attach the auxiliary rope **17** on the end section.

DANGER
The folding jib can swing out inadvertently!
When removing the pin **27**, the folding jib can swing out inadvertently.

In order to prevent the folding jib from swinging out by itself:
▶ Hold the folding jib with the auxiliary rope!
▶ Do not lean the ladder against the folding jib!

▶ Release and unpin the pin **27**.

DANGER
Danger of fatal injuries due to falling folding jib!
The folding jib could fall down due to a disassembly error.
▶ Standing under the folding jib during the swing procedure is prohibited!
▶ Standing in the swing range as well as in the folding area of the folding jib is prohibited!
▶ The pins **23** must remain pinned.

▶ Swing in the end section **3** and then lock with the reducer section **2**.

DANGER
The end section can swing out inadvertently!
To prevent the lock between the end section **3** and the pivot section **2** from opening inadvertently, the spring retainer **7** must also be inserted on point **F**.
▶ Insert the spring retainer **7** on point **F**.

▶ Check if the end section **3** and the reducer section **2** are properly locked.
▶ Remove the auxiliary rope **17** from the end section **3** and attach on point **C**.
▶ Disengage the lever **16** with the assembly rod from the link **14** and pull downward.

When swinging the folding jib support **18** in and out, ensure that the spring pin **8** is unlocked with one hand and that the folding jib support **18** is moved overhead with the other hand.

▶ Release and unpin the spring pin **8**.
▶ Swing out the folding jib support **18** until the spring pin **9** engages again.

LWE/ab Muli 010/24201-02-02/en

copyright © Liebherr-Werk Ehingen GmbH 2016

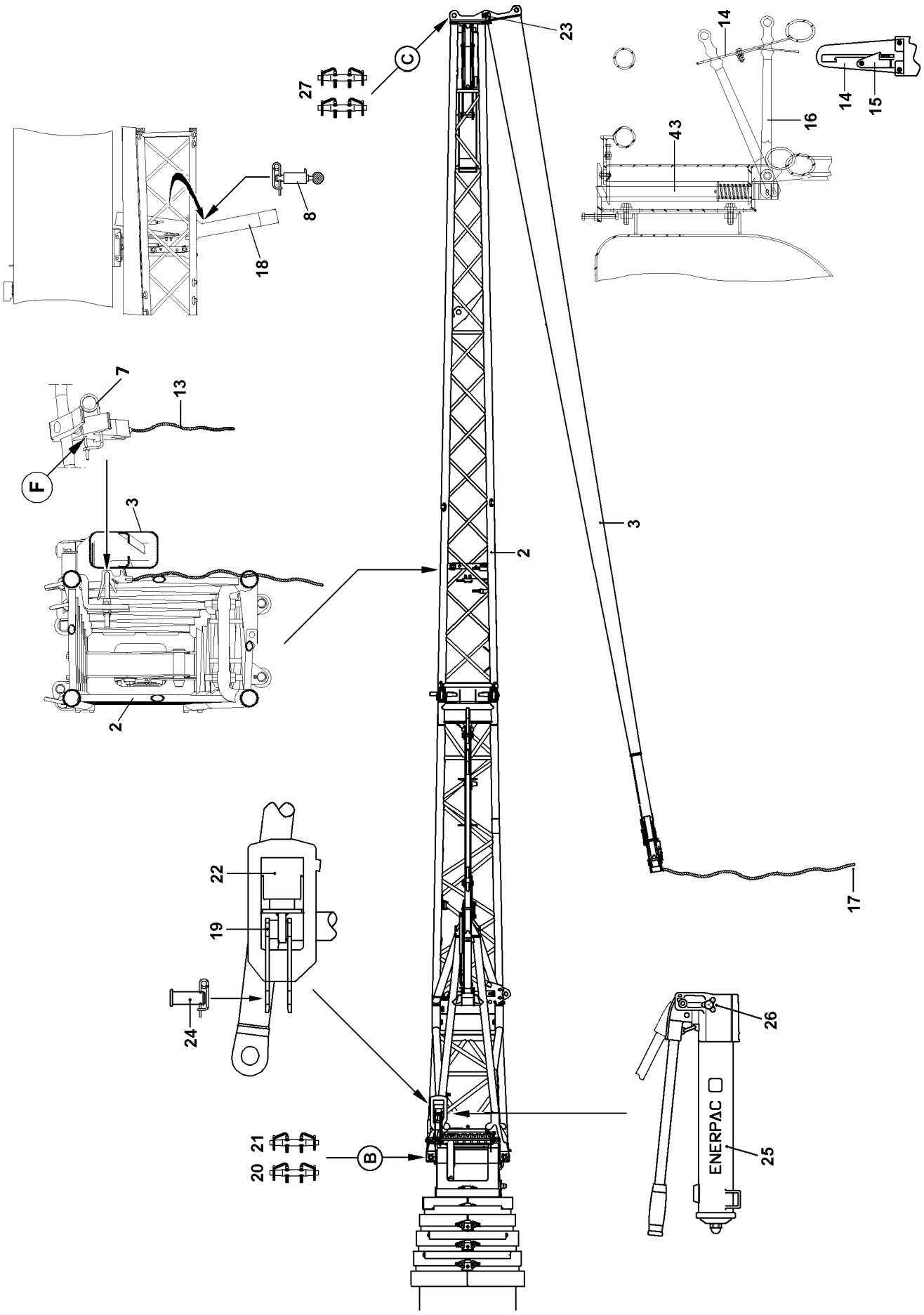

Fig.103449

LWE/ab Muli 010/24201-02-02/en

copyright © Liebherr-Werk Ehingen GmbH 2016

11.8.2 Disassembly of reducer section, part 1

In order to unpin on top on point **B**, the hydraulic / mechanical assembly aid **22** must be used.

- ▶ Close the knob **26** on the hand pump **25**.
- ▶ Extend the hydraulic cylinder of the assembly aid **22** by operating the hand pump **25** until the pin **21** can be unpinned.
- ▶ Release and unpin the pin **21** on top.
- ▶ Open the knob **26** on the hand pump **25**.

Result:

– The hydraulic cylinder of the assembly aid **22** returns to the starting position.

- ▶ Unpin the pins **24** and insert into bore **19** and secure.

CAUTION
The folding jib can swing out inadvertently!
When removing the pin **20**, the folding jib can swing out inadvertently.

In order to prevent the folding jib from swinging out by itself:
- ▶ Hold the folding jib with the auxiliary rope!
- ▶ Do not lean the ladder against the folding jib!

- ▶ Release the pin **20** on the bottom and unpin.

copyright © Liebherr-Werk Ehingen GmbH 2016

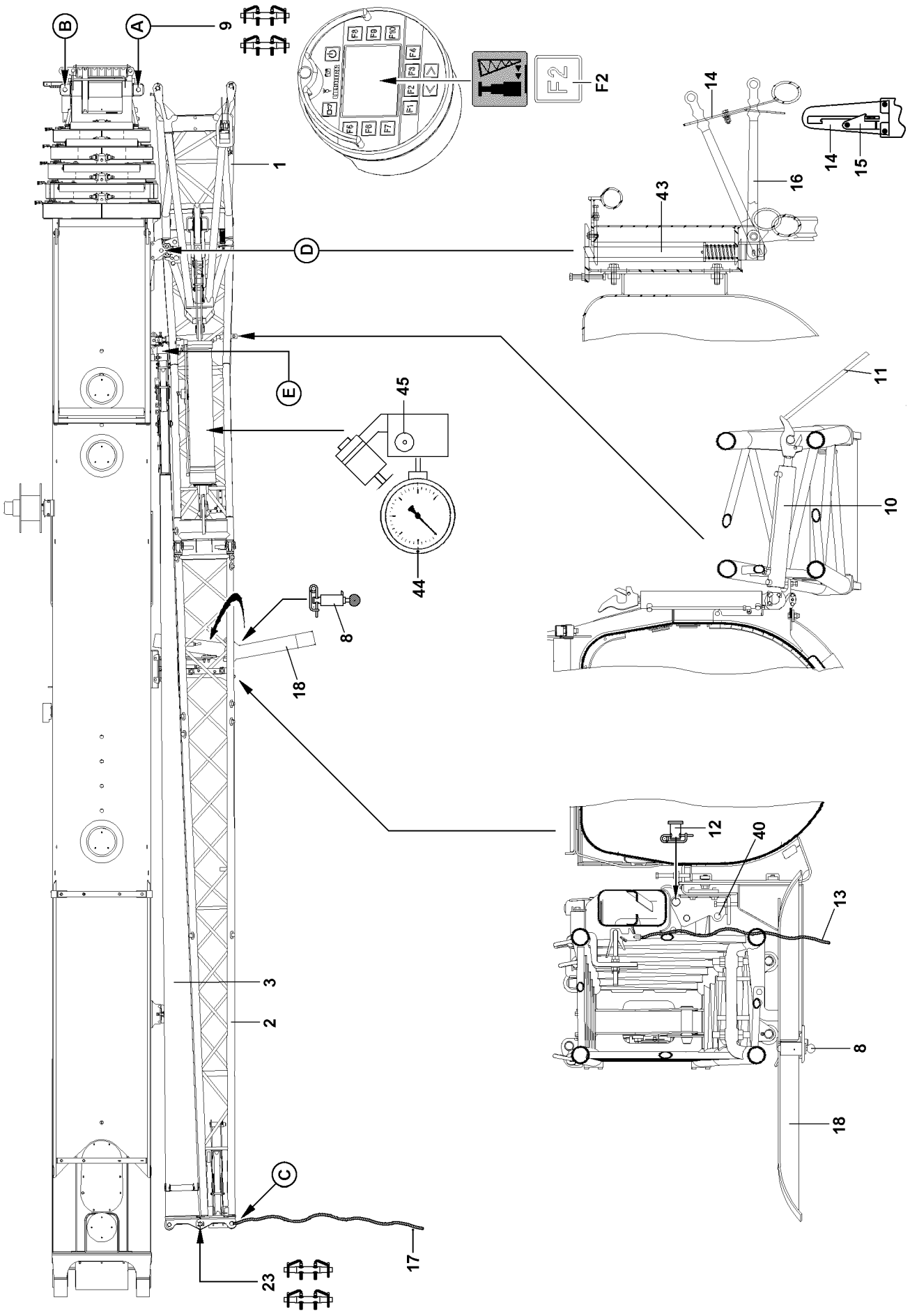

Fig.114340

copyright © Liebherr-Werk Ehingen GmbH 2016

LWE/ab Muli 010/24201-02-02/en

11.8.3 Disassembly of reducer section, part 2

DANGER
Danger of fatal injuries due to falling folding jib!
The folding jib could fall down due to a disassembly error.
- ▶ Standing under the folding jib during the swing procedure is prohibited!
- ▶ Standing in the swing range as well as in the folding area of the folding jib is prohibited!

- ▶ Swing the folding jib back until the swing cylinder **10** is locked with the folding jib.
- ▶ Start the crane engine.
- ▶ Press the function key **F2** on the BTT and swing in the folding jib with the swing cylinder until the lock **43** engages audibly.
- ▶ Check if the lock **43** is engaged properly.

DANGER
Danger of fatal injury when unpinning the pins **9**!
If the pins **9** are unpinned before the lock **43** has engaged, then the folding jib will fall down and possibly cause fatal injury to the assembly personnel.
- ▶ The pins **9** may not be unpinned until the lock **43** has engaged and the manual lever **16** has been secured with the safety bracket **15**.

- ▶ Secure the manual lever **16** with the safety bracket **15**.
- ▶ Release the pin **9** at point **A**, unpin and insert into transport retainer.
- ▶ Press the function key **F2** on the BTT and swing the folding jib with swing cylinder in all the way.
- ▶ Pin the folding jib with the folding jib retainer: Insert and secure pin **12**.

Unpin the spring pin **8** and swing in the folding jib support **18** until the spring pin **8** engages.

- ▶ Unpin the spring pin **8** and swing in the folding jib support **18** until the spring pin **8** engages.
- ▶ Secure the spring pin **8**.

If a hydraulic folding jib is carried along:
- ▶ Connect the hydraulic line to the hydraulic cylinder at the point **E**.
- ▶ Remove the auxiliary rope **17**.

„Hydraulic folding jibs“ have an overflow tank attached to the hydraulic cylinder. The overflow tank must be emptied when it is full. Even when the folding jib is not carried along on the crane.

For operation with a hydraulic folding jib:
- ▶ Empty the overflow tank on the hydraulic cylinder.

copyright © Liebherr-Werk Ehingen GmbH 2016

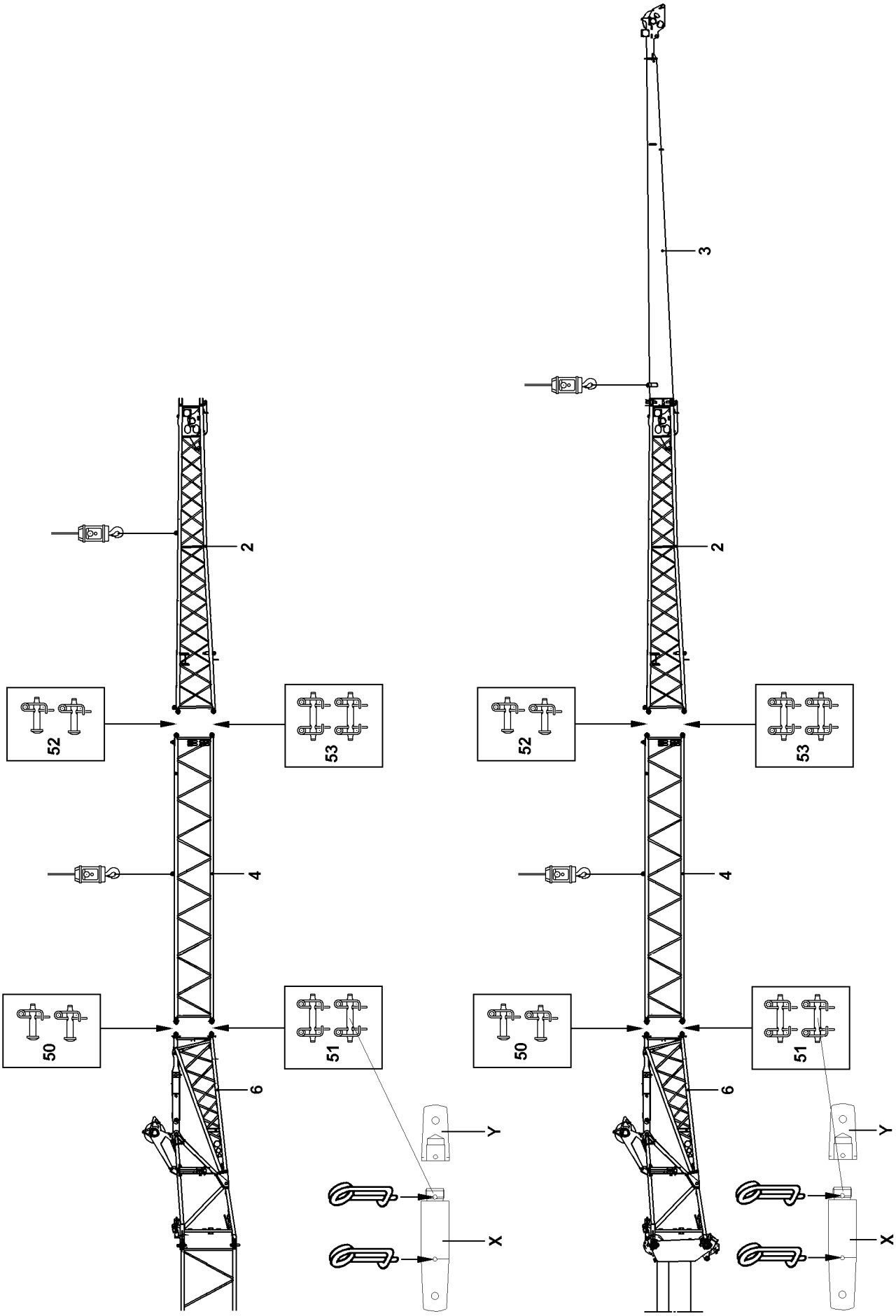

Fig.197289

LWE/ab Muli 010/24201-02-02/en

copyright © Liebherr-Werk Ehingen GmbH 2016

11.9 Disassembly of the 3-piece folding jib

DANGER
Danger of accident when assembling / disassembling the 3-piece folding jib!
If the following conditions are not met, personnel can be fatally injured during assembly / disassembly.
- ▶ When knocking out the pins, no one may remain under the folding jib!
- ▶ Pin and unpin the pins in the specified sequence!
- ▶ Attach the auxiliary crane in such a way that no angular pull occurs!
- ▶ Do not remove folding jib until it has been secured with the auxiliary crane to prevent it from falling!
- ▶ Do not lean the ladder against the folding jib!

- ▶ Attach the reducer section **2** to auxiliary crane and tighten the fastening rope slightly.
  or
  Attach the reducer section **2** with the end section **3** on the auxiliary crane and tighten the fastening rope slightly.

DANGER
Danger of accident due to distorted pins!
Angular pulling or excessive / low hoisting force of the auxiliary crane may result in distortion of the pins.
Distorted parts can suddenly fly off when the pins are unpinned.
- ▶ When the pins are unpinned, the „lifting force“ of the crane must be adapted to the „weight“ of the parts being lifted!
- ▶ Do **not** remove difficult to remove pins by force!
- ▶ Remedy the cause of the distortion!

- ▶ Release and unpin the pins **52** on both sides.
- ▶ Place the pins **52** into the transport retainer.
- ▶ Release the pins **53** on both sides and unpin from the outside to the inside.
- ▶ Place the pins **53** into the transport retainer.
- ▶ Place the reducer section **2** down.
  or
  Place the reducer section **2** with the end section **3** down.
- ▶ Attach folding jib extension **4** to the auxiliary crane and tighten the cables lightly.
- ▶ Release and unpin the pins **50** on both sides.
- ▶ Place the pins **50** into the transport retainer.

Note
- ▶ Before unpinning and pinning the pins **X**, unbolt the extension **Y** or on accordingly. Then secure the pins **X** on both sides with spring retainers. Before driving on public roads, the extension **Y** must be removed again, and the pins **X** must be secured on both sides with the spring retainers.

- ▶ Release the pins **51** on both sides and unpin from the outside to the inside.

LWE/ab Muli 010/24201-02-02/en

copyright © Liebherr-Werk Ehingen GmbH 2016

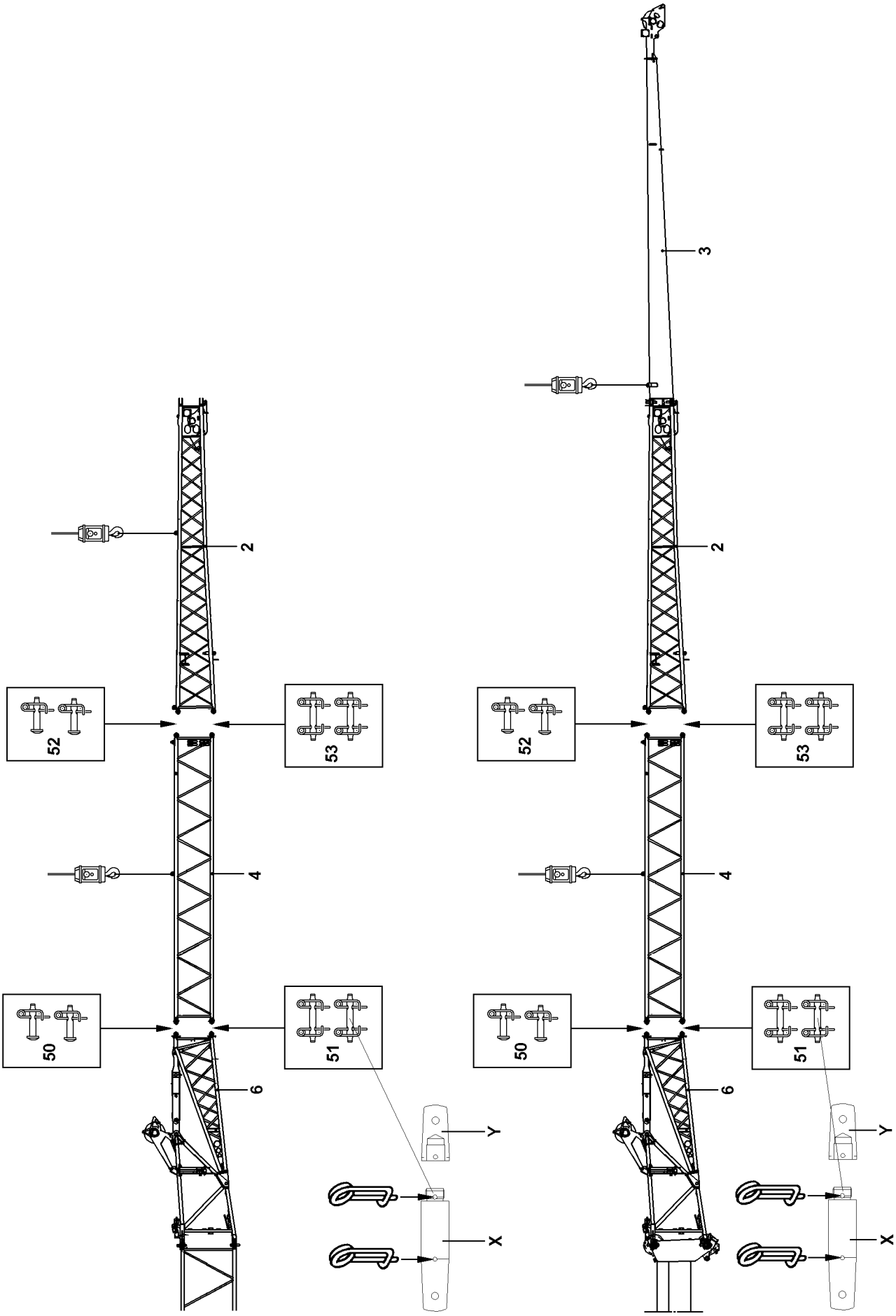

Fig.197289

LWE/ab Muli 010/24201-02-02/en

copyright © Liebherr-Werk Ehingen GmbH 2016

- ▶ Place the pins **51** into the transport retainer.
- ▶ Place the folding jib extension **4** down.
- ▶ Hang the reducer section **2** on the auxiliary crane and guide into the fork heads on the pivot section **6**.
  or
  Hang the reducer section **2** with the end section **3** on the auxiliary crane and guide into the fork heads on the pivot section **6**.
- ▶ Pin the reducer section **2** to the pivot section **6**: Pin the pins **50** on both sides from the outside to the inside and secure.
- ▶ Pin the pins **51** on both sides from the outside to the inside and secure.

copyright © Liebherr-Werk Ehingen GmbH 2016

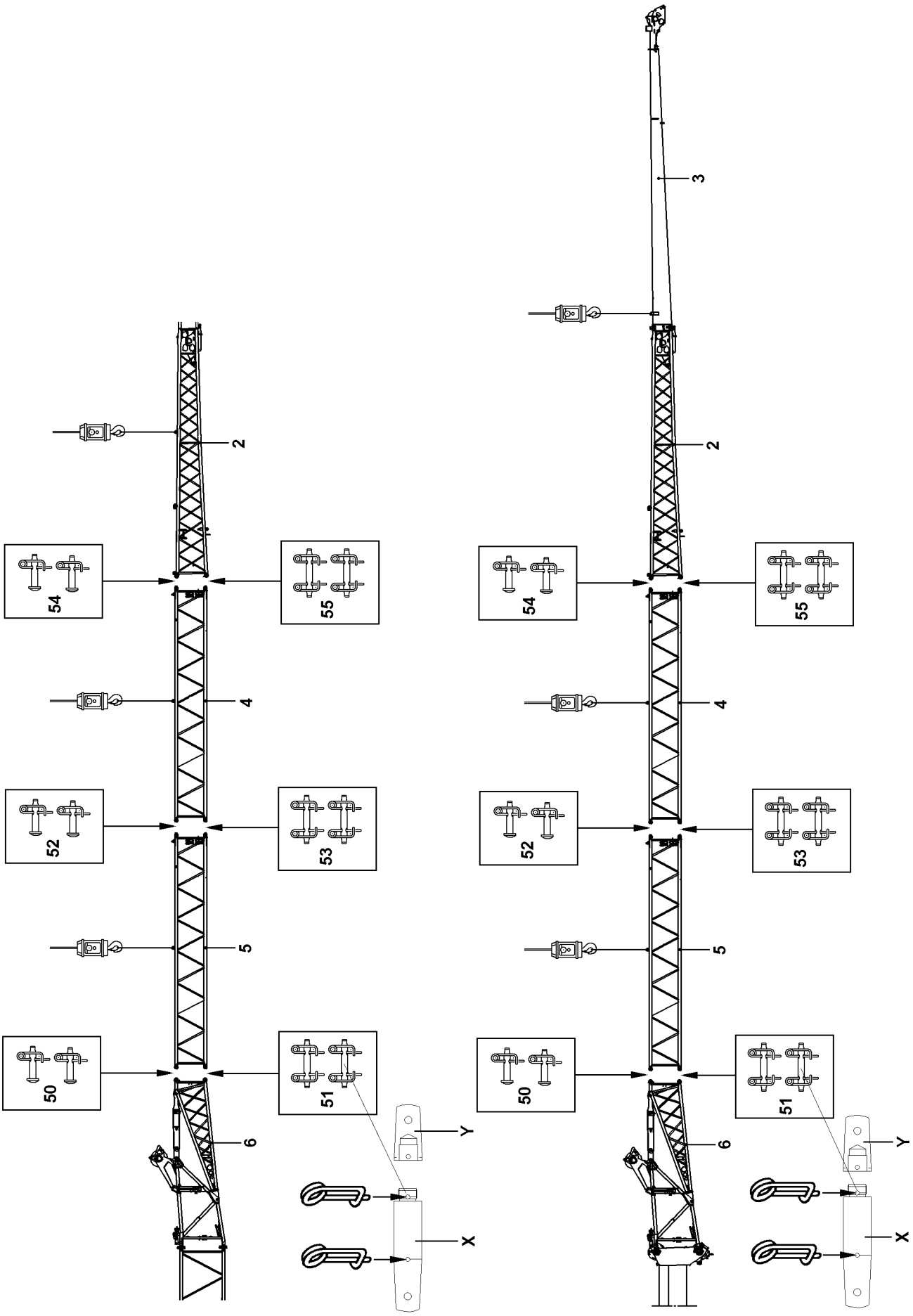

Fig.197290

LWE/ab Muli 010/24201-02-02/en

copyright © Liebherr-Werk Ehingen GmbH 2016

11.10 Disassembly of the 4-piece folding jib

DANGER
Danger of accident when assembling / disassembling the 4-piece folding jib!
If the following conditions are not met, personnel can be fatally injured during assembly / disassembly.
- ▶ When knocking out the pins, no one may remain under the folding jib!
- ▶ Pin and unpin the pins in the specified sequence!
- ▶ Attach fastening ropes in such a way that no angular pull occurs!
- ▶ Do not remove folding jib until it has been secured with the auxiliary crane to prevent it from falling!
- ▶ Do not lean the ladder against the folding jib!

- ▶ Attach the reducer section **2** to auxiliary crane and tighten the fastening rope slightly.
  or
  Attach the reducer section **2** with the end section **3** on the auxiliary crane and tighten the fastening rope slightly.

DANGER
Danger of accident due to distorted pins!
Angular pulling or excessive / low hoisting force of the auxiliary crane may result in distortion of the pins.
Distorted parts can suddenly fly off when the pins are unpinned.
- ▶ When the pins are unpinned, the „lifting force“ of the crane must be adapted to the „weight“ of the parts being lifted!
- ▶ Do **not** remove difficult to remove pins by force!
- ▶ Remedy the cause of the distortion!

- ▶ Release and unpin the pins **54** on both sides.
- ▶ Release the pins **55** on both sides and unpin from the outside to the inside.
- ▶ Place the pins **54** and the pins **55** in the transport retainer.
- ▶ Place the reducer section **2** down.
  or
  Place the reducer section **2** with the end section **3** down.
- ▶ Attach folding jib extension **4** to the auxiliary crane and tighten the cable lightly.
- ▶ Release and unpin the pins **52** on both sides.
- ▶ Release the pins **53** on both sides and unpin from the outside to the inside.
- ▶ Place the folding jib extension **4** down.
- ▶ Place the pins **52** and the pins **53** in the transport retainer.
- ▶ Attach folding jib extension **5** to the auxiliary crane and tighten the cable lightly.

LWE/ab Muli 010/24201-02-02/en

copyright © Liebherr-Werk Ehingen GmbH 2016

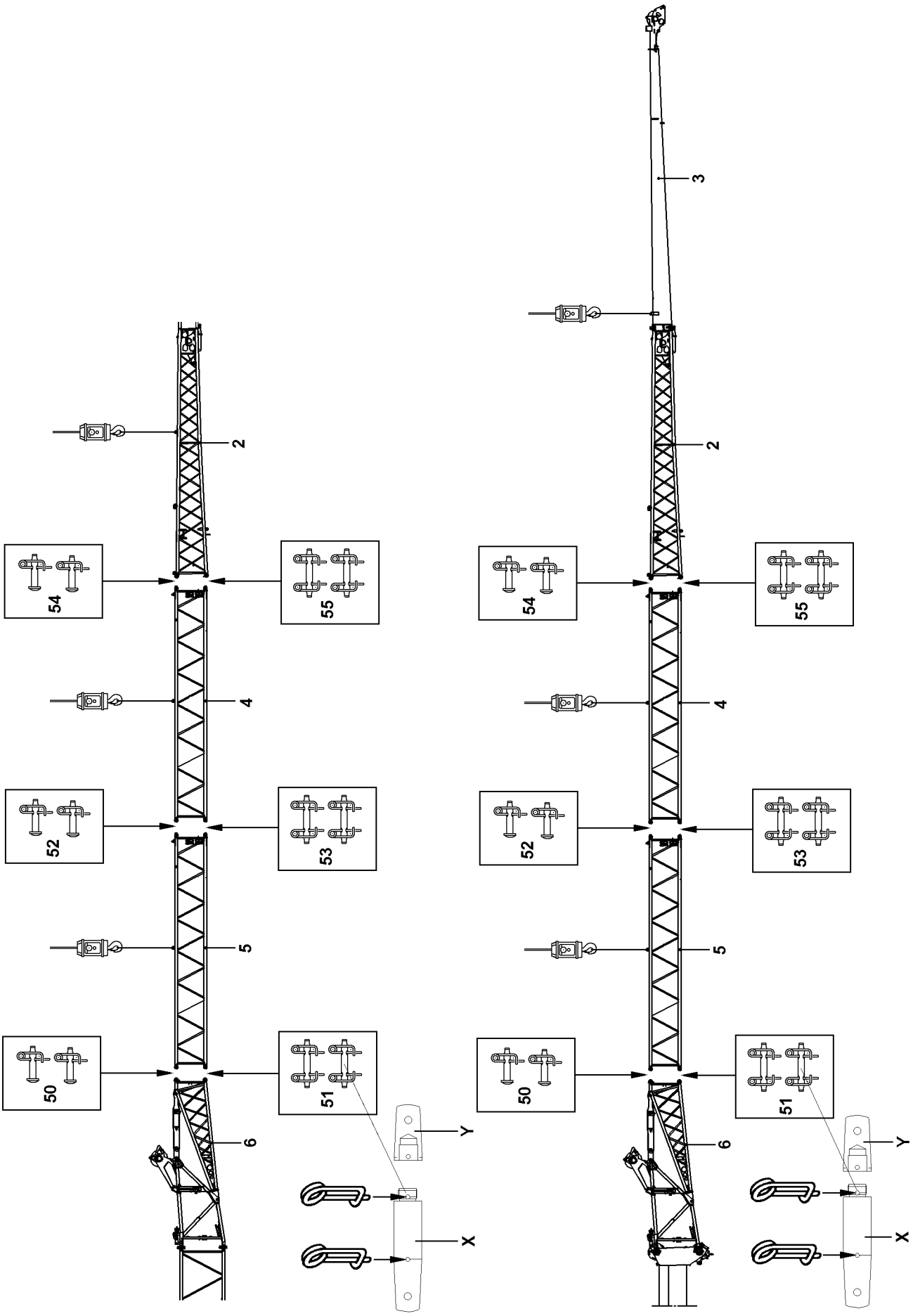

Fig.197290

LWE/ab Muli 010/24201-02-02/en

copyright © Liebherr-Werk Ehingen GmbH 2016

▶ Release and unpin the pins **50** on both sides.

Note

▶ Before unpinning and pinning the pins **X**, unbolt the extension **Y** or on accordingly. Then secure the pins **X** on both sides with spring retainers. Before driving on public roads, the extension **Y** must be removed again, and the pins **X** must be secured on both sides with the spring retainers.

▶ Release the pins **51** on both sides and unpin from the outside to the inside.
▶ Place the folding jib extension **5** down.
▶ Hang the reducer section **2** on the auxiliary crane and guide into the fork heads on the pivot section **6**.
or
Hang the reducer section **2** with the end section **3** on the auxiliary crane and guide into the fork heads on the pivot section **6**.
▶ Pin the reducer section **2** to the pivot section **6**: Pin the pins **50** on both sides from the outside to the inside and secure.
▶ Pin the pins **51** on both sides from the outside to the inside and secure.

LWE/ab Muli 010/24201-02-02/en

copyright © Liebherr-Werk Ehingen GmbH 2016

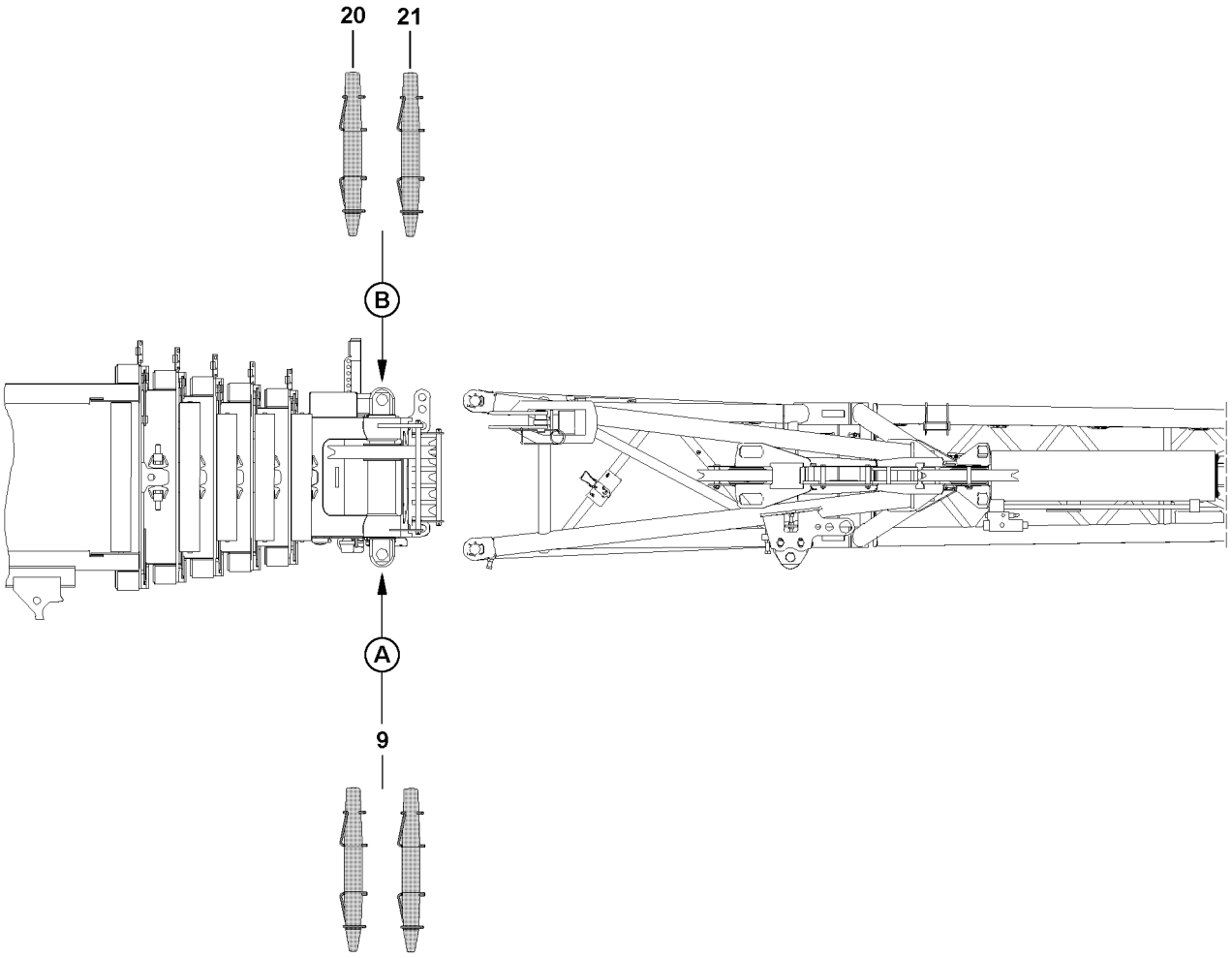

LWE/ab Muli 010/24201-02-02/en

Fig.103446

copyright © Liebherr-Werk Ehingen GmbH 2016

11.11 Disassembly of the separately transported folding jib

Make sure that the following prerequisite is met:
- The end section is locked with the reducer section.
  See section „Disassembly of the end section“.

For description of fastening points, see section „Folding jib fastening points, complete“.

DANGER
Danger of accident due to incorrect attachment!
Life-threatening situations can arise if the folding jib is improperly or incorrectly attached!
- ▶ Attach the folding jib according to the fastening points shown on the signs!
- ▶ The appropriate fastening eyes and points are marked with tags.
- ▶ Attaching the single folding jib or the double folding jib on non-intended points or on any arbitrary location is **prohibited**!
- ▶ When attaching the double folding jib, the end section must be folded in, locked and secured!

CAUTION
Damage of fastening points!
If the fastening equipment is too short, then the fastening points on the folding jibs can be damaged!
- ▶ To attach the folding jibs, fastening equipment with a strand length of at least 2000 mm each must be used!

▶ Attach the auxiliary crane on the respective fastening points of the folding jib.

DANGER
Danger of accident when disassembling the folding jib!
If the following conditions are not met, then the assembly personnel can be fatally injured during disassembly.
- ▶ When knocking out the pins, no one may remain under the folding jib!
- ▶ Attach the auxiliary crane so that no angular pull occurs!
- ▶ Only lift a weight with the auxiliary crane that corresponds to the weight of the folding jib that is being removed!
- ▶ The folding jib can suddenly release due to distortion!
- ▶ Do not remove folding jib until it has been secured with the auxiliary crane to prevent it from falling!
- ▶ Do not lean the ladder against the folding jib!

- ▶ Tighten the fastening ropes until the folding jib is secured to prevent it from falling.
- ▶ Unpin the folding jib from the telescopic boom:
- ▶ Release the pin **9** on top on point **A** and unpin.
- ▶ Release the pin **20** on top on point **B** and unpin.
- ▶ Release the pin **9** on the bottom on point **A** and unpin.
- ▶ Release the pin **21** on the bottom on point **B** and unpin.
- ▶ Place the folding jib onto the transport vehicle.

On hydraulic folding jibs, an overflow tank is installed on the hydraulic cylinder. The overflow tank must be emptied when it is full. Even if the folding jib is not transported on the crane.

For operation with a hydraulic folding jib:
- ▶ Empty the overflow tank on the hydraulic cylinder.

LWE/ab Muli 010/24201-02-02/en

copyright © Liebherr-Werk Ehingen GmbH 2016

Empty page!

copyright © Liebherr-Werk Ehingen GmbH 2016

5.09 Hoist gear 2

1	General	3
2	Assembly winch 2	5
3	Assembly of winch 2 with auxiliary crane	9
4	Disassembly winch 2	11
5	Disassembly of winch 2 with auxiliary crane	17

LWE/ab Muli 010/24201-02-02/en

copyright © Liebherr-Werk Ehingen GmbH 2016

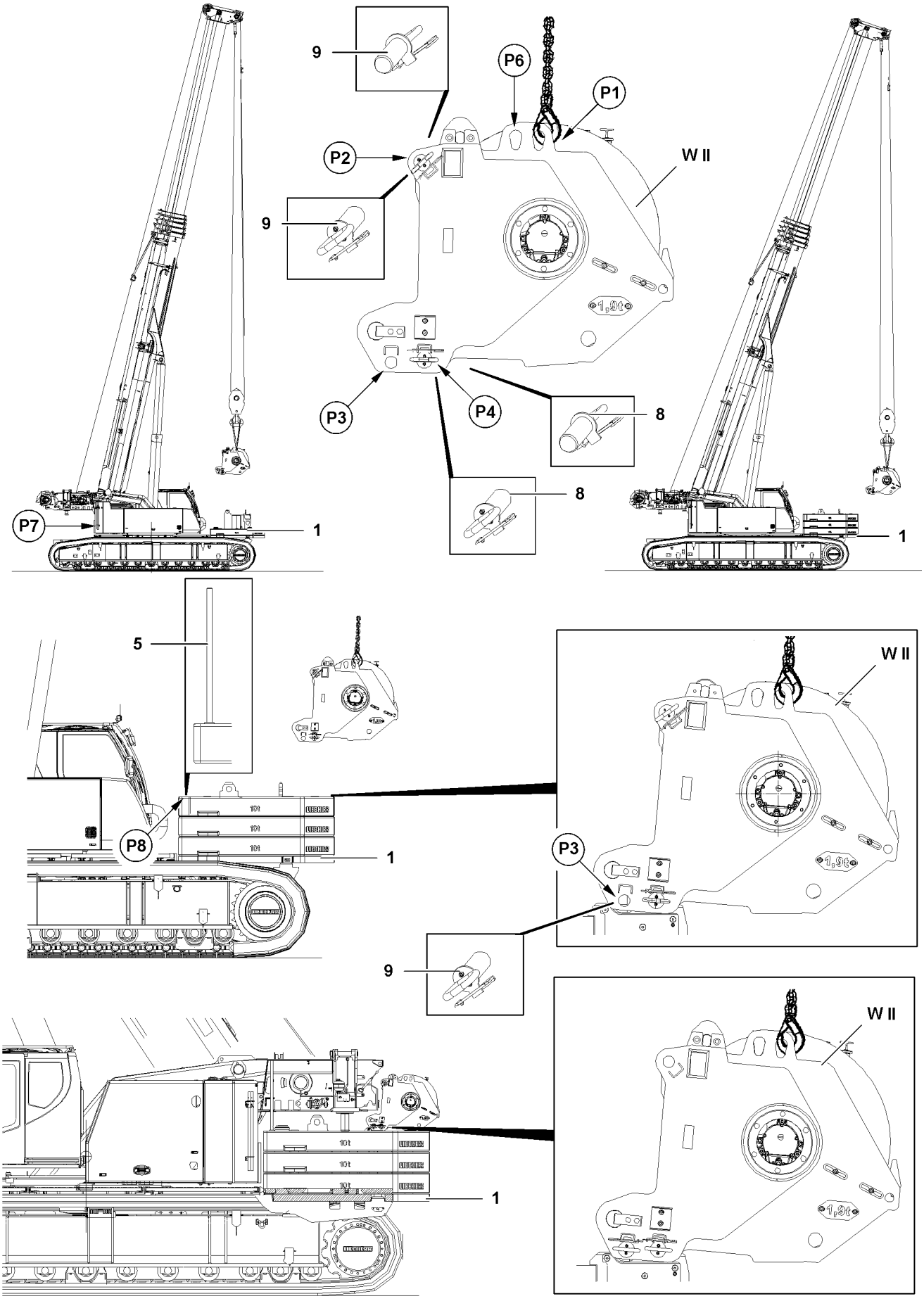

Fig.117356

LWE/ab Muli 010/24201-02-02/en

copyright © Liebherr-Werk Ehingen GmbH 2016

1 General

The winch 2 **WII** is installed or removed through self-installation, without auxiliary crane.

Note

- For the assembly of the winch 2 **WII** at least the receptacle plate must be placed on the central ballast block on the „rear“.
- The winch assembly is permissible with counterweight combinations of 30 t to 70 t.
- Place the receptacle plate or the counterweight on the central ballast block, see Crane operating instructions, chapter 4.07.

Description	Weight
Winch 2 **WII**	1.9 t

1.1 Fastening points winch 2

For the assembly and disassembly without auxiliary crane, the winch 2 **WII** must be fastened on the fastening points **P1**.

For the assembly and disassembly with auxiliary crane, the winch 2 **WII** must be fastened on the fastening points **P6**.

LWE/ab Muli 010/24201-02-02/en

copyright © Liebherr-Werk Ehingen GmbH 2016

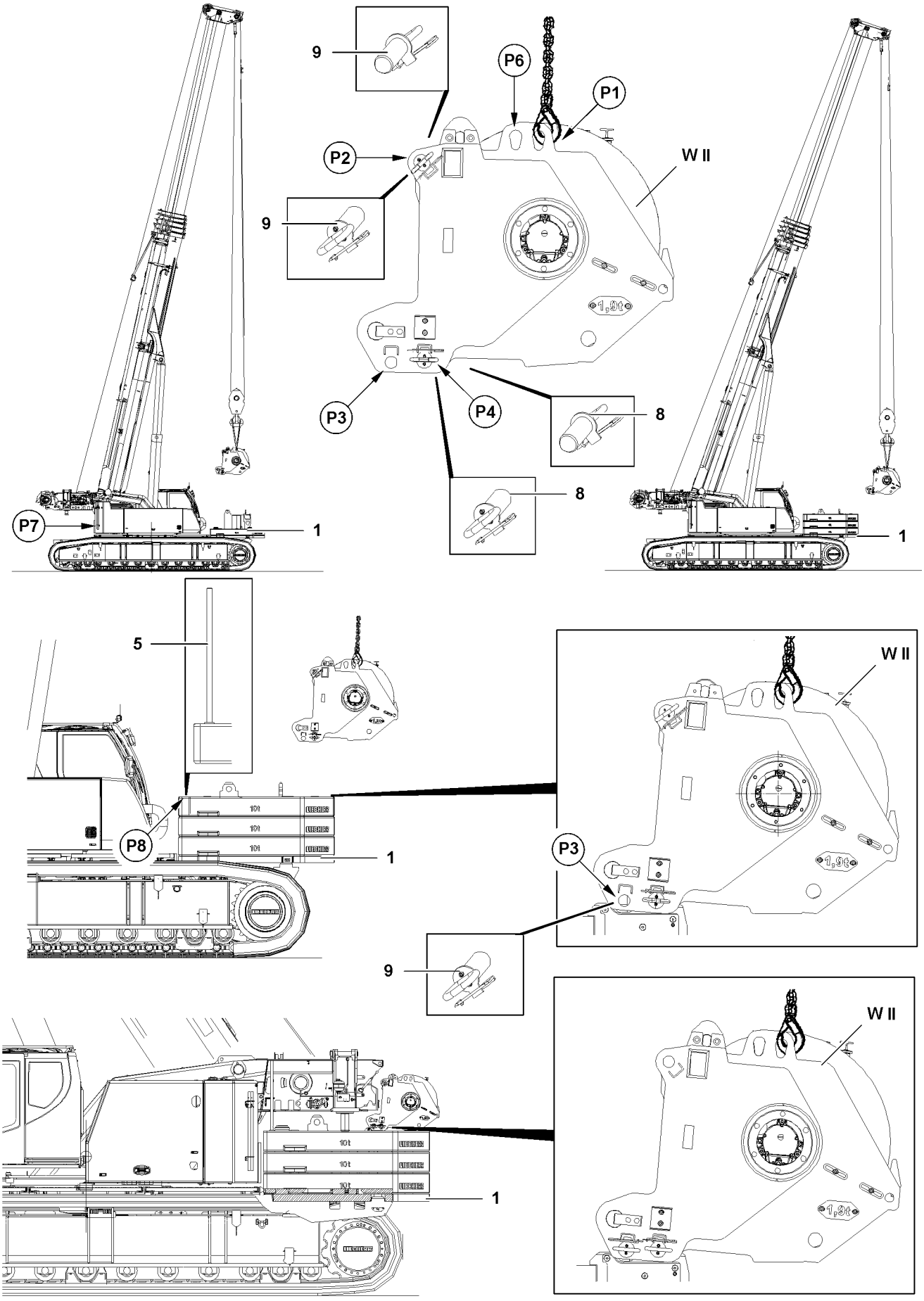

Fig.117356

LWE/ab Muli 010/24201-02-02/en

copyright © Liebherr-Werk Ehingen GmbH 2016

2 Assembly winch 2

Make sure that the following prerequisites are met:
- The pin **8** is pinned and secured on both sides on position **P4**.
- The crane is aligned in horizontal direction.
- The receptacle plate or the counterweight is placed on the central ballast.
- The counterweight is not ballasted.
- The LICCON overload protection is set:
  - Crawler operation with track width
  - Central ballast 2 0 t
  - Counterweight 0 t
  - Without auxiliary boom / accessory
  - Slewing range

2.1 Assembling Winch 2*

▶ Fasten winch 2 **WII** on both sides on the fastening eyes **P1** on the crane.
▶ Release the pins **9** on both sides on position **P2** and unpin.
▶ Set winch 2 **WII** on the receptacle plate **1**.

DANGER
Winch 2 can fall down!
When winch 2 **WII** is released from the crane before winch 2 **WII** is pinned with the receptacle plate **1**, then winch 2 **WII** can fall down.
Personnel can be severely injured or killed.
▶ Do not disengage the crane until winch 2 **WII** has been pinned with receptacle plates **1** and secured.

▶ Insert the pins **9** on both sides into the receptacle plate **1** on position **P3** and secure.
▶ Release winch 2 **WII** from the crane.
▶ Swing the crane superstructure, extend the ballasting cylinder and swing into the receptacle of the counterweight, see Crane operating instructions, chapter 4.07.
▶ Take the retaining pipe **5** from park position **P7** and pin on both sides in the counterweight plate on position **P8**.

LWE/ab Muli 010/24201-02-02/en

copyright © Liebherr-Werk Ehingen GmbH 2016

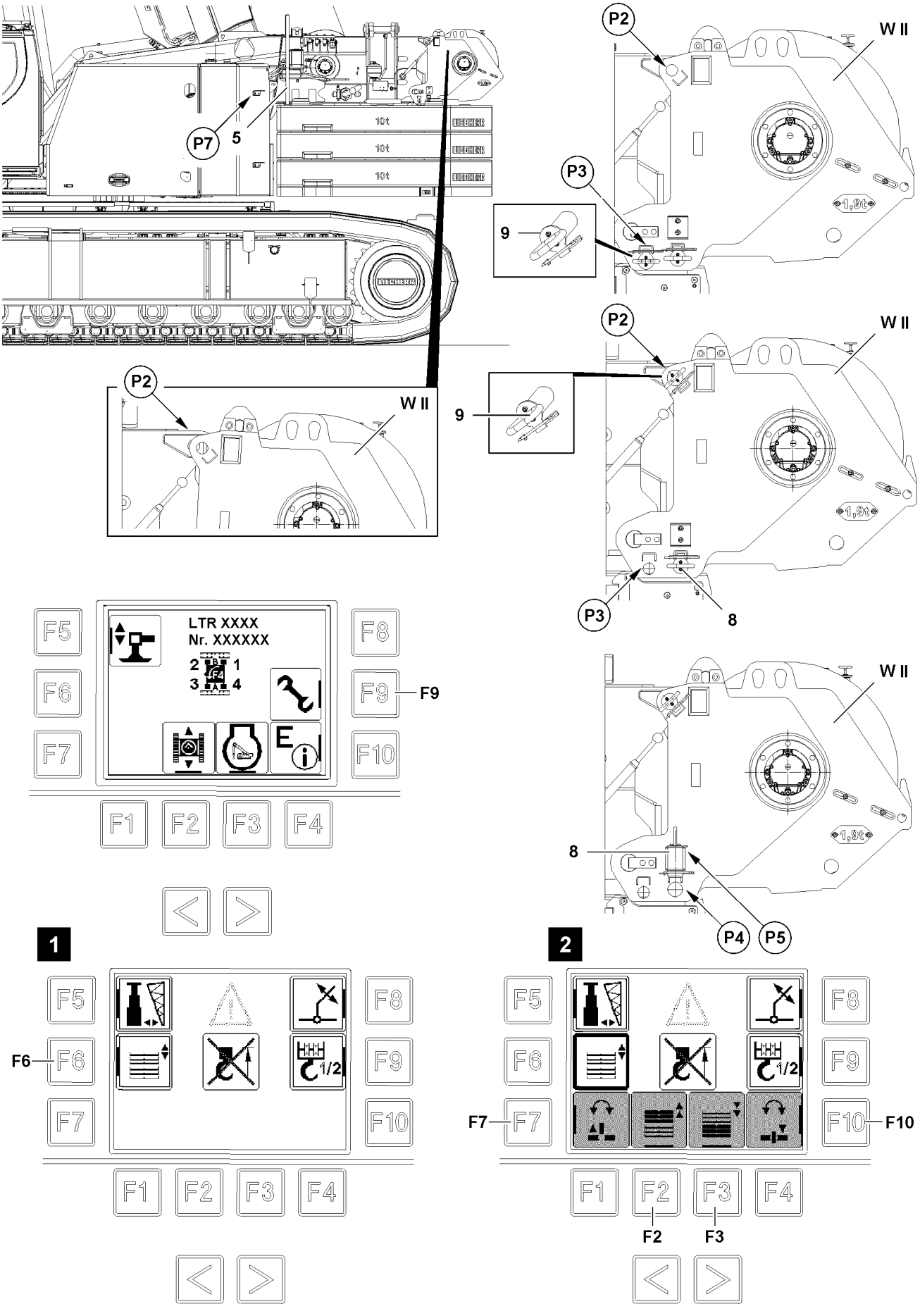

Fig.117357

LWE/ab Muli 010/24201-02-02/en

copyright © Liebherr-Werk Ehingen GmbH 2016

▶ Press the function key **F9** on the BTT.

Result:

– The menu „Ballasting cylinder“ appears, see illustration **1**.

▶ Press the function key **F6** on the BTT.

Result:

– The menu „Ballasting cylinder“ is active, see illustration **2**.

▶ Retract the ballasting cylinder completely with function key **F2**.

WARNING
Winch 2 can fall down!
If the pins **9** are unpinned before the ballasting cylinders are fully retracted, then the winch can fall down.
▶ Make sure that the ballast cylinders are fully retracted.

When the ballast cylinders are fully retracted:
▶ Unpin pins **9** on both sides on position **P3**.
▶ Insert the pins **9** on both sides in the bores on position **P2** and secure with spring retainers.
▶ Press the function key **F3**, relieve the ballasting cylinder.

DANGER
Damage to winch 2!
If the pins **8** are not removed after assembly, then the winch or the ballasting cylinders can be damaged.
▶ Release and unpin the pins **8**.

▶ Release the pins **8** on both sides on position **P4** and unpin.
▶ Insert the pins **8** on both sides in park position **P5** and secure.
▶ Unpin the retaining pipe **5** and insert it in park position **P7**.
▶ Retract the ballasting cylinder completely with function key **F2**.

2.2 Connecting the supply lines

▶ Establish the electrical connection for winch 2 **WII**.
▶ Establish the supply line for the central lubrication system.

The engine must be turned off before connecting and disconnecting hydraulic lines.

The different diameters of the hydraulic lines prevent incorrect coupling.

▶ Establish the hydraulic connection for winch 2 **WII**.
▶ Unpin the retaining pipe **5** and insert it in park position.

LWE/ab Muli 010/24201-02-02/en

copyright © Liebherr-Werk Ehingen GmbH 2016

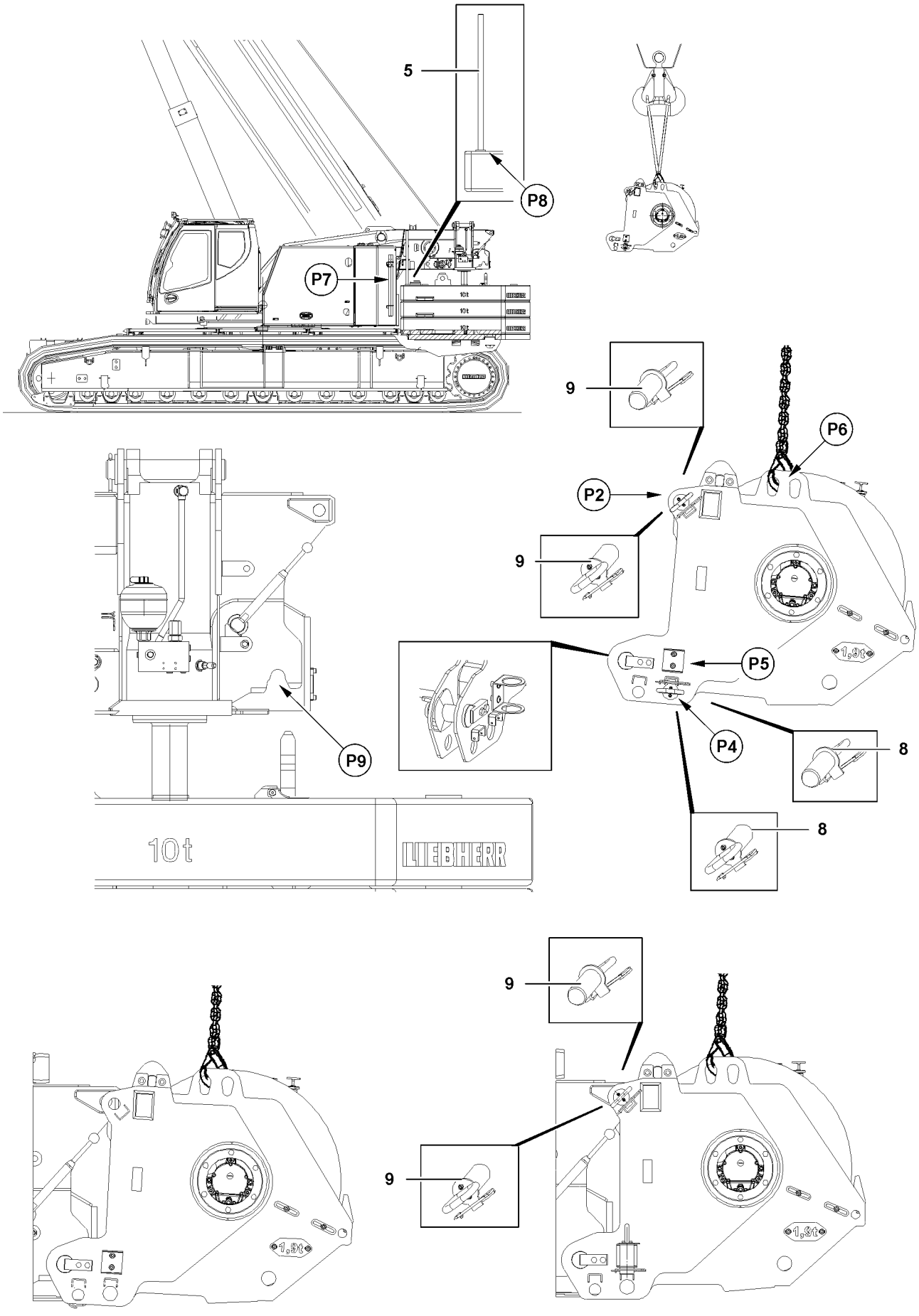

Fig.117360

LWE/ab Muli 010/24201-02-02/en

copyright © Liebherr-Werk Ehingen GmbH 2016

3 Assembly of winch 2 with auxiliary crane

Make sure that the following prerequisites are met:
- The crane is aligned in horizontal direction.
- An auxiliary crane is on hand.
- The pins **8** are unpinned on both sides and pinned in park position **P5** and secured.
- The counterweight has been placed on the central ballast.

3.1 Assembling Winch 2*

- ▶ Fasten winch 2 **WII** on both sides on the fastening eyes **P6** on the auxiliary crane.
- ▶ Take the retaining pipe **5** from park position and pin on both sides in the counterweight plate on position **P8**.
- ▶ Winch 2 **WII** with auxiliary crane in assembly position.
- ▶ Move winch 2 **WII** into the receptacle **P9**.
- ▶ Lift winch 2 **WII** until the pin bores of winch 2 **WII** align with the pin bores on the turntable.
- ▶ Pin the turntable with winch 2 **WII**: Insert the pins **9** on both sides on position **P2**.
- ▶ Secure the pins **9** with spring retainers.

DANGER
Danger of accident if winch 2 falls down!
- ▶ Do not remove the fastening equipment until winch 2 **WII** has been properly pinned and secured on position **P2**!

- ▶ Unhook winch 2 **WII** from the auxiliary crane.

3.2 Connecting the supply lines

- ▶ Establish the electrical connection for winch 2 **WII**.
- ▶ Establish the supply line for the central lubrication system.

The engine must be turned off before connecting and disconnecting hydraulic lines.

The different diameters of the hydraulic lines prevent incorrect coupling.

- ▶ Establish the hydraulic connection for winch 2 **WII**.
- ▶ Unpin the retaining pipe **5** and pin it in park position **P7**.

LWE/ab Muli 010/24201-02-02/en

copyright © Liebherr-Werk Ehingen GmbH 2016

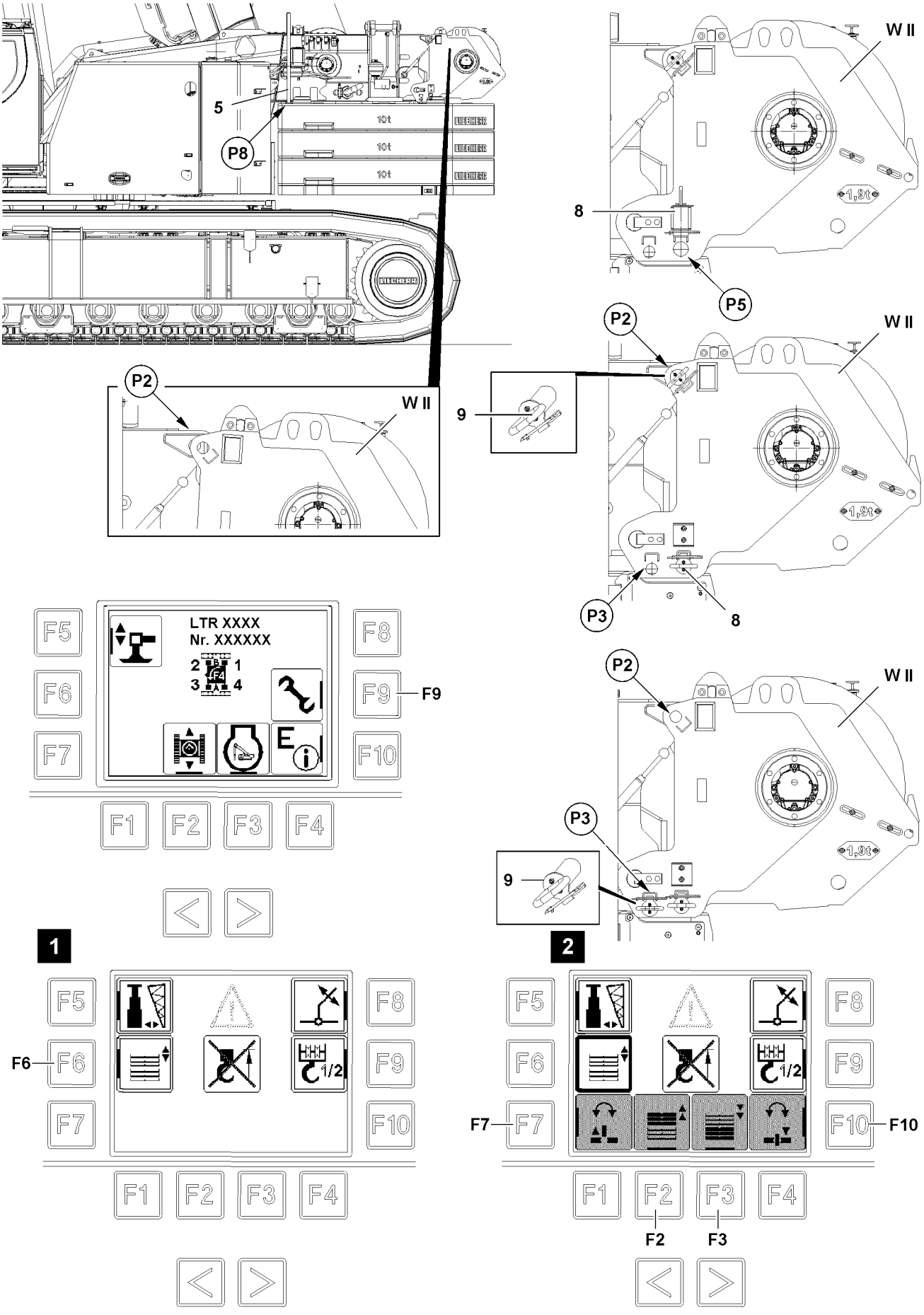

Fig.117358

copyright © Liebherr-Werk Ehingen GmbH 2016

LWE/ab Muli 010/24201-02-02/en

4 Disassembly winch 2

Make sure that the following prerequisites are met:
- The pin **8** is pinned and secured on position **P5**.
- The crane is aligned in horizontal direction.
- The receptacle plate or the counterweight are placed on the central ballast.
- The hoist rope is spooled up and secured.
- The LICCON overload protection is set:
  - Crawler operation with track width
  - Central ballast 2 0 t
  - Counterweight 0 t
  - Without auxiliary boom / accessory
  - Slewing range

4.1 Releasing the supply lines

The engine must be turned off before connecting and disconnecting hydraulic lines.

▶ Release the hydraulic connection for winch 2.
▶ Release the electrical connection for winch 2.
▶ Remove the supply line for central lubrication system.
▶ Secure the supply lines in the transport retainers.

4.2 Removing winch 2

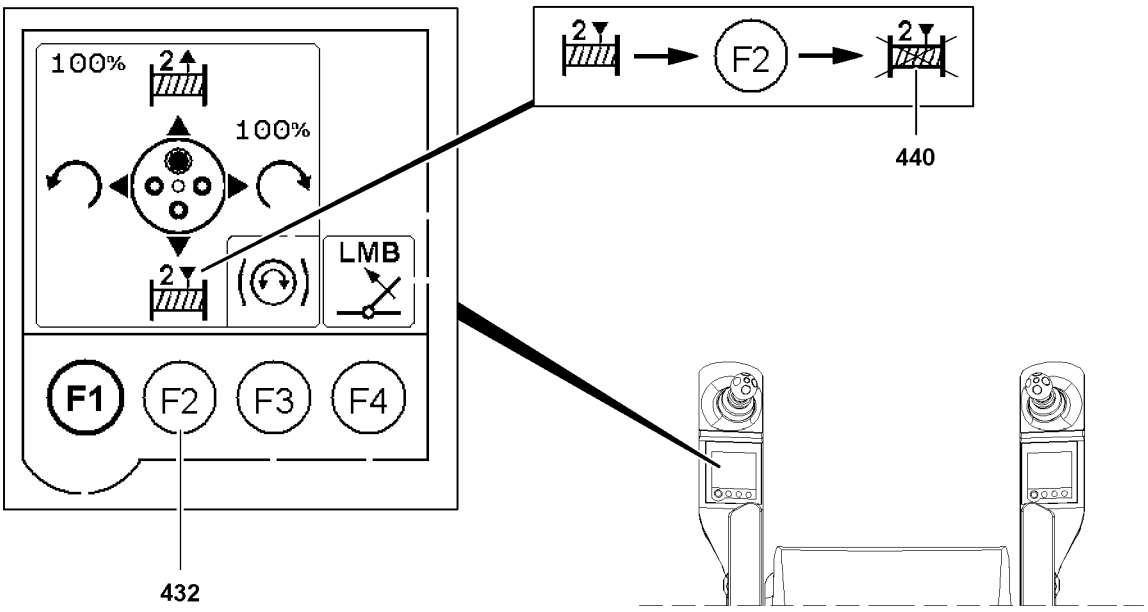

Fig.118093

▶ Block winch 2 **WII** on left touch display by pressing function key F2 **432**.

Result:

– Icon **440** is visible.

▶ Swing the crane superstructure, extend the ballasting cylinder and swing into the receptacle of the counterweight, see Crane operating instructions, chapter 4.07.
▶ Press the function key **F9** on the BTT.

Result:

– The menu „Ballasting cylinder“ appears, see illustration **1**.

LWE/ab Muli 010/24201-02-02/en

copyright © Liebherr-Werk Ehingen GmbH 2016

▶ Press the function key **F6** on the BTT.

Result:

– The menu „Ballasting cylinder“ is active, see illustration **2**.

▶ Retract the ballasting cylinder completely with function key **F2**.
▶ Take the retaining pipe **5** from park position and pin on both sides in the counterweight plate on position **P8**.

WARNING
Winch 2 can fall down!
If the pins **9** are unpinned before the ballasting cylinders are fully retracted, then the winch can fall down.
▶ Make sure that the ballast cylinders are fully retracted.

When the ballast cylinders are fully retracted:
▶ Unpin pins **9** on both sides on position **P2**.
▶ Insert the pins **9** on both sides in the bores on position **P3** and secure with spring retainers.
▶ Press the function key **F3** on the BTT.

Result:

– The ballasting cylinders are extended, the counterweight plates are placed with winch 2 **WII** on the crane chassis.

LWE/ab Muli 010/24201-02-02/en

copyright © Liebherr-Werk Ehingen GmbH 2016

Empty page!

LWE/ab Muli 010/24201-02-02/en

copyright © Liebherr-Werk Ehingen GmbH 2016

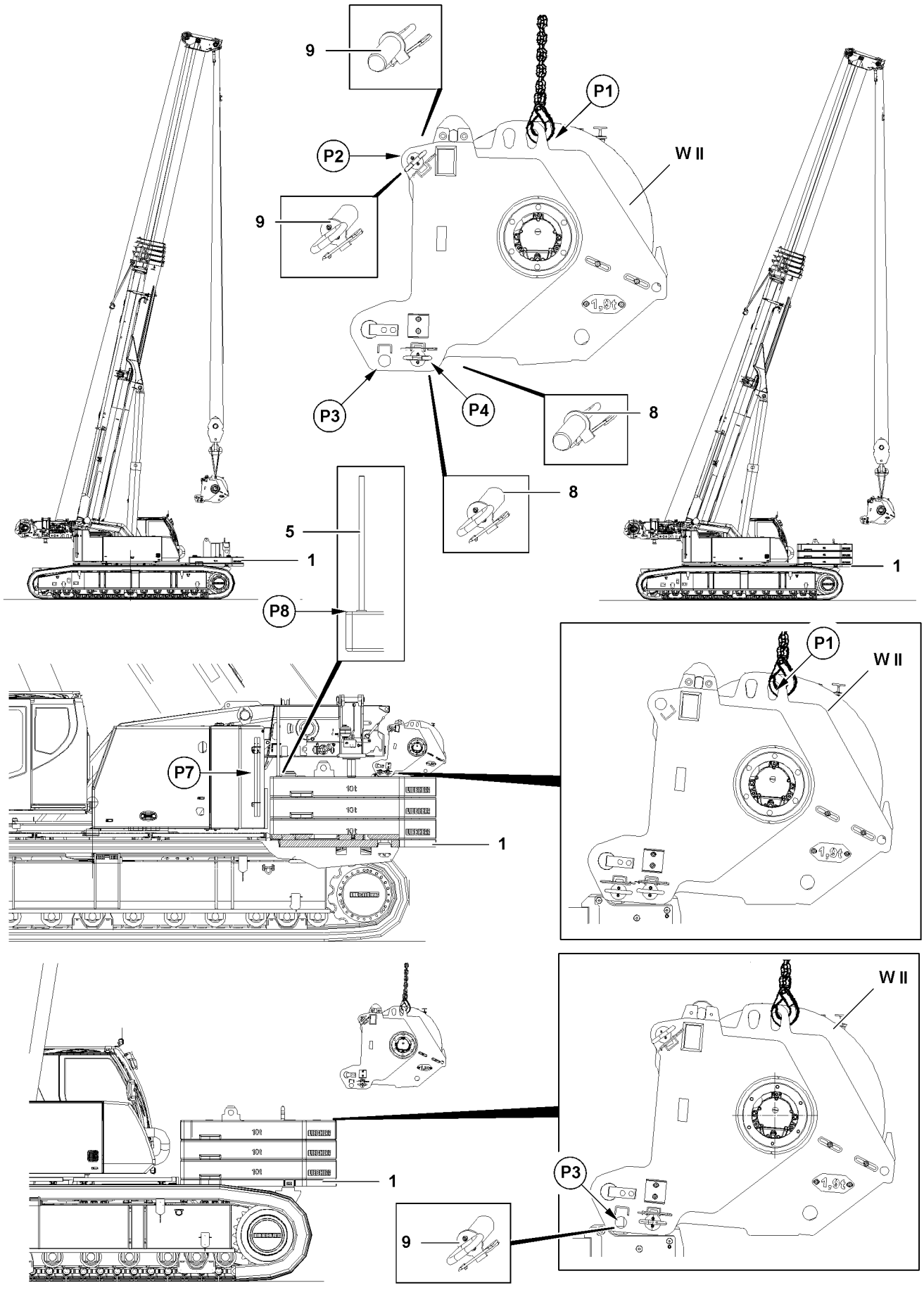

Fig.117359

copyright © Liebherr-Werk Ehingen GmbH 2016

LWE/ab Muli 010/24201-02-02/en

DANGER
Winch 2 can fall down!
If the pin **9** on position **P3** is unpinned before the winch is fastened and secured on the crane, then winch 2 **WII** can fall down.
Personnel can be severely injured or killed.
▶ Fasten winch 2 **WII** on the crane.

▶ Fasten winch 2 **WII** on the fastening eyes **P1** on the crane.
▶ Release the pins **9** on both sides on position **P3** and unpin.
▶ Insert the pins **9** on both sides in winch 2 **WII** on position **P2** and secure.
▶ Unpin the retaining pipe **5** and insert it in park position **P7**.
▶ Lift winch 2 **WII** from the counterweight and set it on the transport vehicle.

Note
▶ If winch 2 **WII** has been removed, the master switch assignment must be switched from a „two-winch system“ to a „one-winch system“, see Crane operating instructions, chapter 4.01.

LWE/ab Muli 010/24201-02-02/en

copyright © Liebherr-Werk Ehingen GmbH 2016

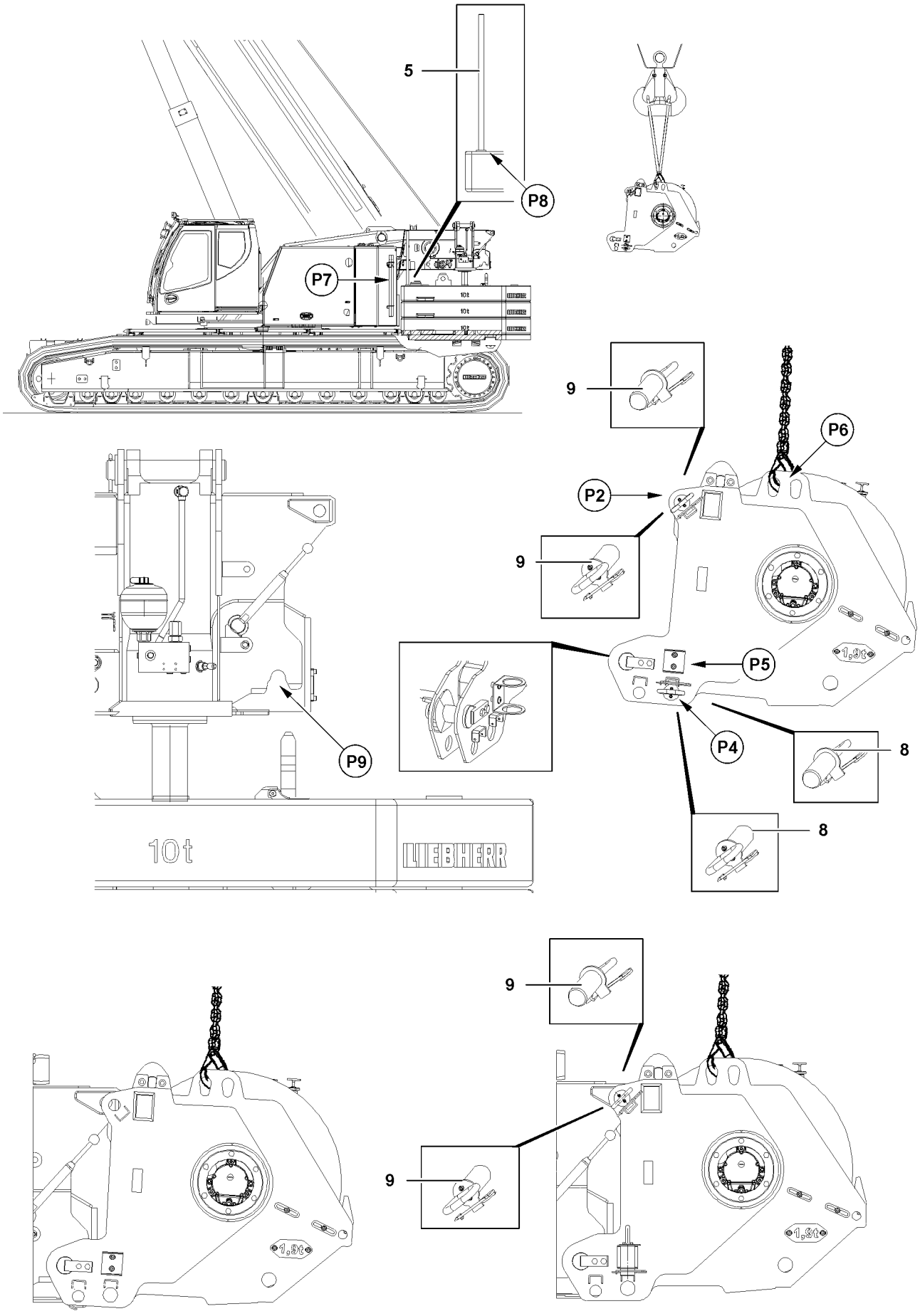

Fig.117360

LWE/ab Muli 010/24201-02-02/en

copyright © Liebherr-Werk Ehingen GmbH 2016

5 Disassembly of winch 2 with auxiliary crane

Make sure that the following prerequisites are met:
- The crane is aligned in horizontal direction.
- An auxiliary crane is on hand.
- The hoist rope is spooled up and secured.
- The counterweight has been placed on the central ballast.

5.1 Releasing the supply lines

5.1.1 Releasing the supply lines

The engine must be turned off before connecting and disconnecting hydraulic lines.

▶ Release the hydraulic connection for winch 2.
▶ Release the electrical connection for winch 2.
▶ Remove the supply line for central lubrication system.
▶ Secure the supply lines in the transport retainers.

5.2 Removing winch 2*

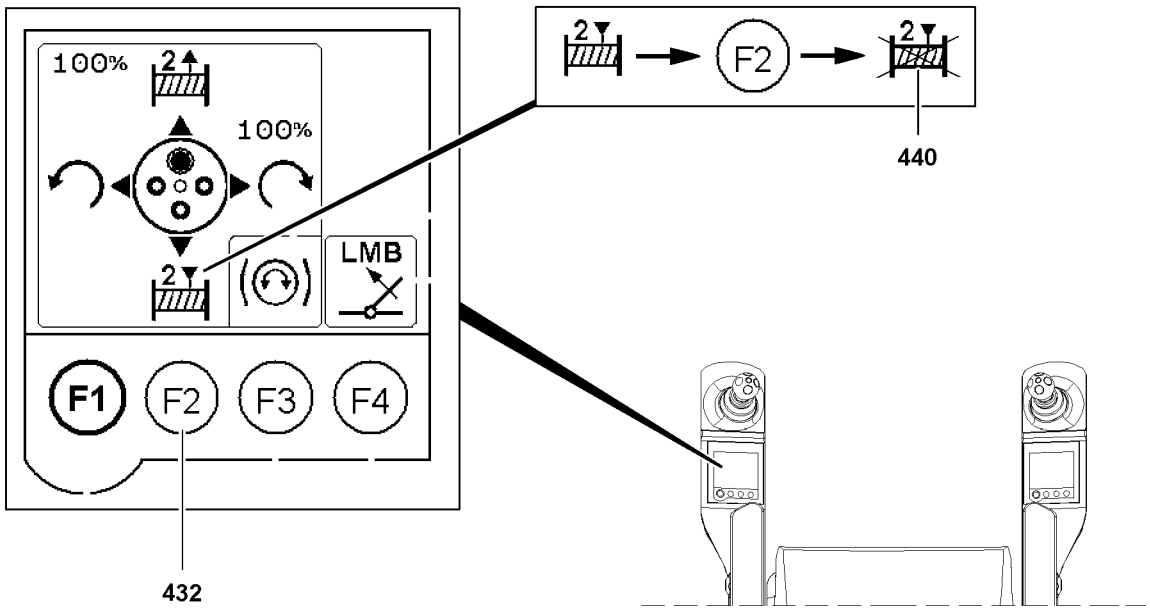

Fig.118093

▶ Block winch 2 **WII** on left touch display by pressing function key F2 **432**.

Result:

– Icon **440** is visible.

▶ Take the retaining pipe **5** from park position **P7** and pin on both sides in the counterweight plate on position **P8**.
▶ Attach the auxiliary crane on the eyehooks **P6** on both sides.
▶ Tension the hoist rope of the auxiliary crane lightly.

DANGER
Danger of accident if winch 2 falls down!
▶ Do not unpin the pin **9** until winch 2 **WII** has been secured with the auxiliary crane.

▶ Release and unpin the pin **9**.

copyright © Liebherr-Werk Ehingen GmbH 2016

- ▶ Place winch 2 **WII** on the transport vehicle.
- ▶ Unpin the retaining pipe **5** and pin it in park position **P7**.

Note

- ▶ If winch 2 **WII** has been removed, the master switch assignment must be switched from a „two-winch system“ to a „one-winch system“, see Crane operating instructions, chapter 4.01.

LWE/ab Muli 010/24201-02-02/en

copyright © Liebherr-Werk Ehingen GmbH 2016

5.10 Boom nose - telescopic boom

1	General	3
2	Assembly	5
3	Disassembly	11

LWE/ab Muli 010/24201-02-02/en

copyright © Liebherr-Werk Ehingen GmbH 2016

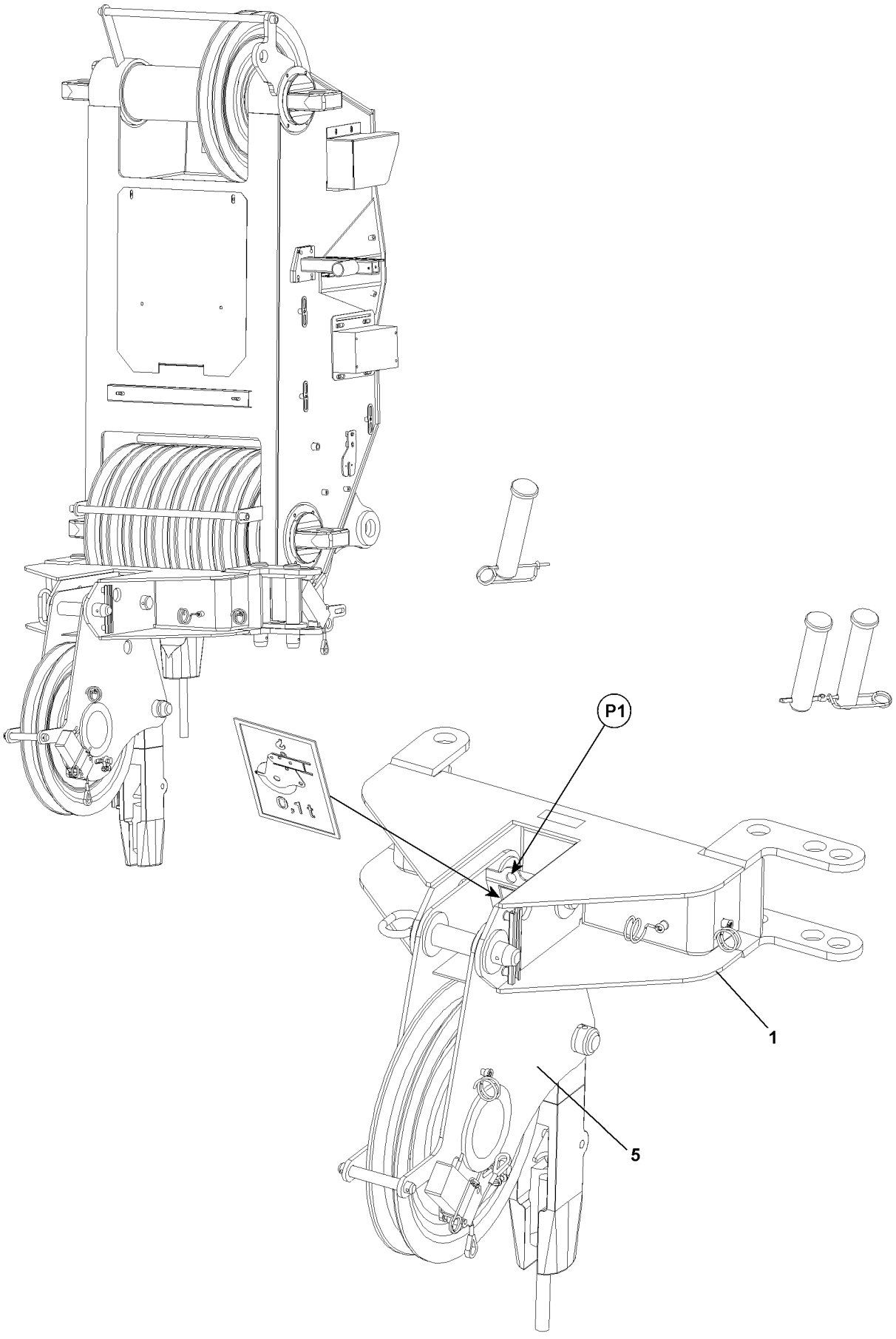

Fig.114100

LWE/ab Muli 010/24201-02-02/en

copyright © Liebherr-Werk Ehingen GmbH 2016

1 General

Operation with the boom nose **1** is set up for rapid lifting via theboom nose **1**, whereby the hook block can remain reeved on the telescopic boom.

Position	Description	Weight
1	Boom nose	0.1 t

Note
Load charts
▶ No special load charts are available for operation with boom nose **1**. The boom nose is generally run in the telescopic boom operating mode. However, the load is reduced by the weight of the boom nose and the lifting and fastening equipment that is used.

1.1 Fastening point

A fastening point **P1** is installed on the boom nose **1**.

The fastening point **P1** is marked with a tag.

WARNING
Danger of accident!
Life-threatening situations can arise if the boom nose **1** is improperly or incorrectly attached!
▶ At assembly / disassembly, fasten the boom nose **1** properly on the fastening point **P1**!

LWE/ab Muli 010/24201-02-02/en

copyright © Liebherr-Werk Ehingen GmbH 2016

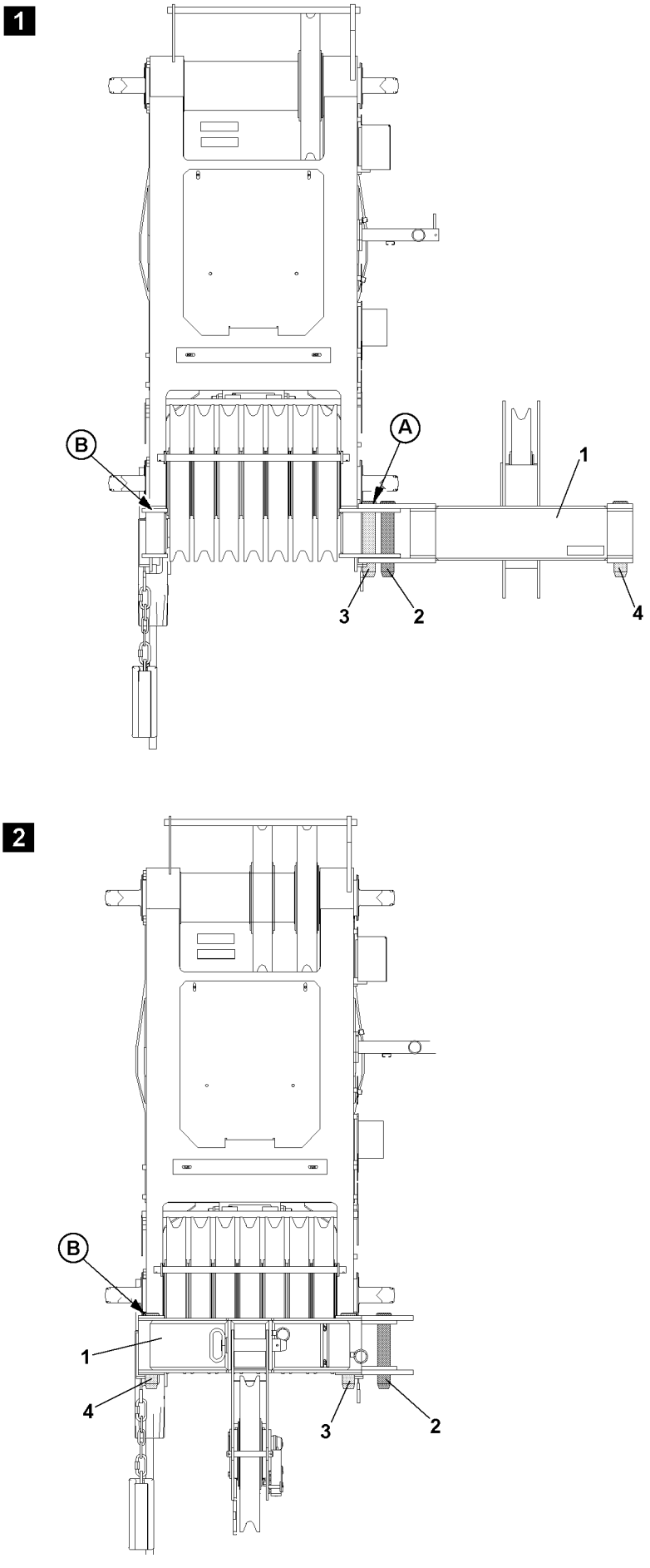

Fig.196449

LWE/ab Muli 010/24201-02-02/en

copyright © Liebherr-Werk Ehingen GmbH 2016

2 Assembly

2.1 Installing the boom nose on the telescopic boom

WARNING
Danger of crushing!
During assembly, hands can be crushed due to swing movements of the boom nose **1**!
▶ Make sure that the boom nose **1** is not swinging back and forth during installation!

▶ Attach the boom nose **1** on the auxiliary crane.

DANGER
The boom nose can fall down!
If the boom nose **1** is unhooked from the auxiliary crane before the boom nose **1** is pinned, then the boom nose **1** can fall down and kill or severely injure personnel!
▶ Do not detach the auxiliary crane until the boom nose **1** is properly installed and secured!

▶ Install the boom nose on the telescopic boom: Insert the swing pin **2** and secure with spring retainer.
▶ Detach the auxiliary crane.

2.2 Swinging the boom nose into operating position, illustrations 1 and 2

DANGER
Danger of accident if the boom nose falls down!
If the swing pin **2** is unpinned, the boom nose will fall down.
▶ Never unpin the swing pin **2**!

▶ Release the pin **3** and the pin **4** and unpin.

CAUTION
Danger of crushing fingers!
Fingers could be crushed between the telescopic boom and the boom nose when the boom nose is swivelled.
▶ Do not put fingers between the boom nose and the telescopic boom!

▶ Swing the boom nose **1** by 180 ° until the pin **4** can be inserted on point **B**.
▶ Pin and secure the pin **4**.
▶ Pin and secure the pin **3**.

LWE/ab Muli 010/24201-02-02/en

copyright © Liebherr-Werk Ehingen GmbH 2016

3

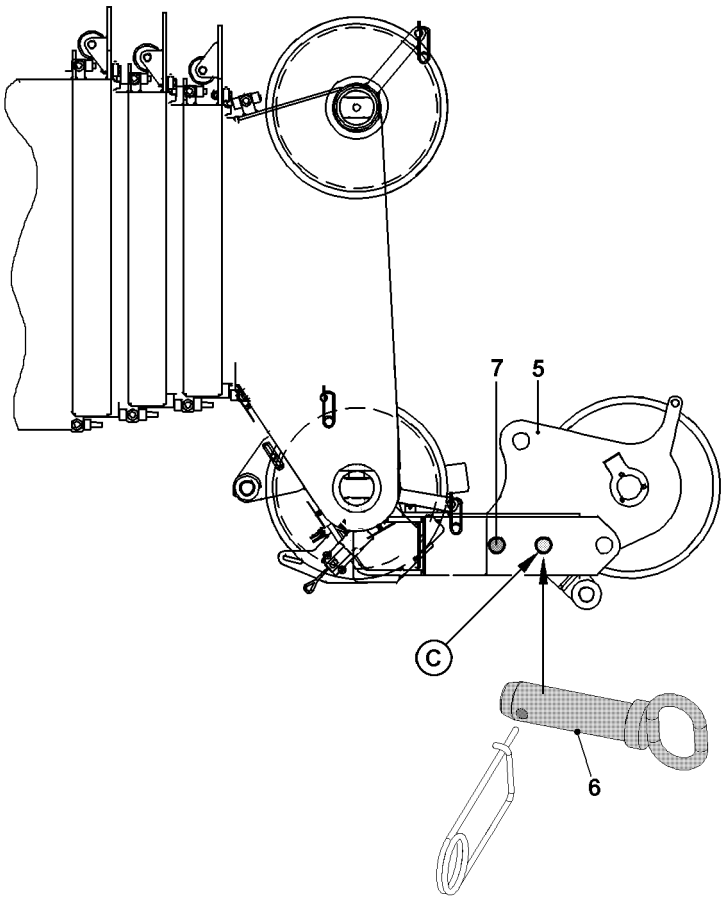

4

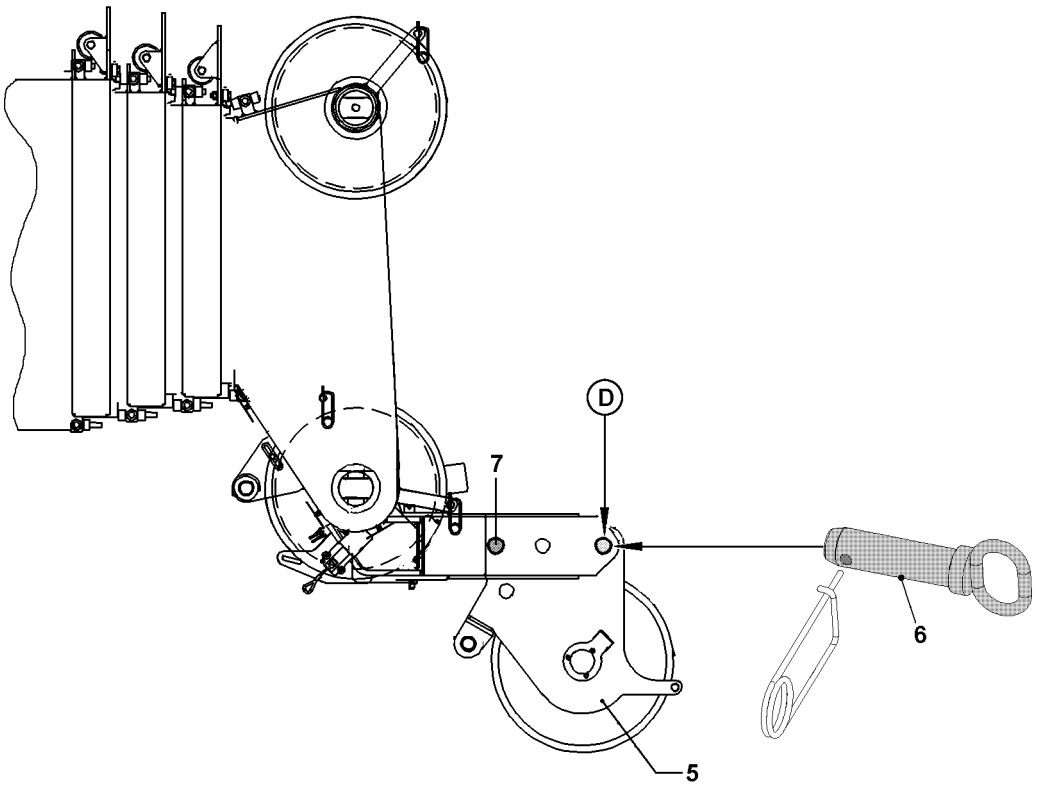

LWE/ab Muli 010/24201-02-02/en

Fig.196450

copyright © Liebherr-Werk Ehingen GmbH 2016

2.3 Folding the boom nose into operating position, illustrations 3 and 4

WARNING
Damage of boom nose!
If the boom nose is not folded into operating position, the boom nose can be overloaded!
▶ Fold the boom nose into operating position!

DANGER
Danger of accident if the boom nose falls down!
If the swing pin **7** is unpinned, the boom nose will fall down.
▶ Never unpin the swing pin **7**!

▶ Release the pin **6** on point **C** and unpin.

CAUTION
Danger of crushing fingers!
Fingers can be crushed when the boom nose is folded.
▶ Do not crush your fingers when the rope pulley **5** folds down!

▶ Fold the rope pulley **5** down until it can be pinned at point **D**.
▶ Pin and secure the pin **6**.

LWE/ab Muli 010/24201-02-02/en

copyright © Liebherr-Werk Ehingen GmbH 2016

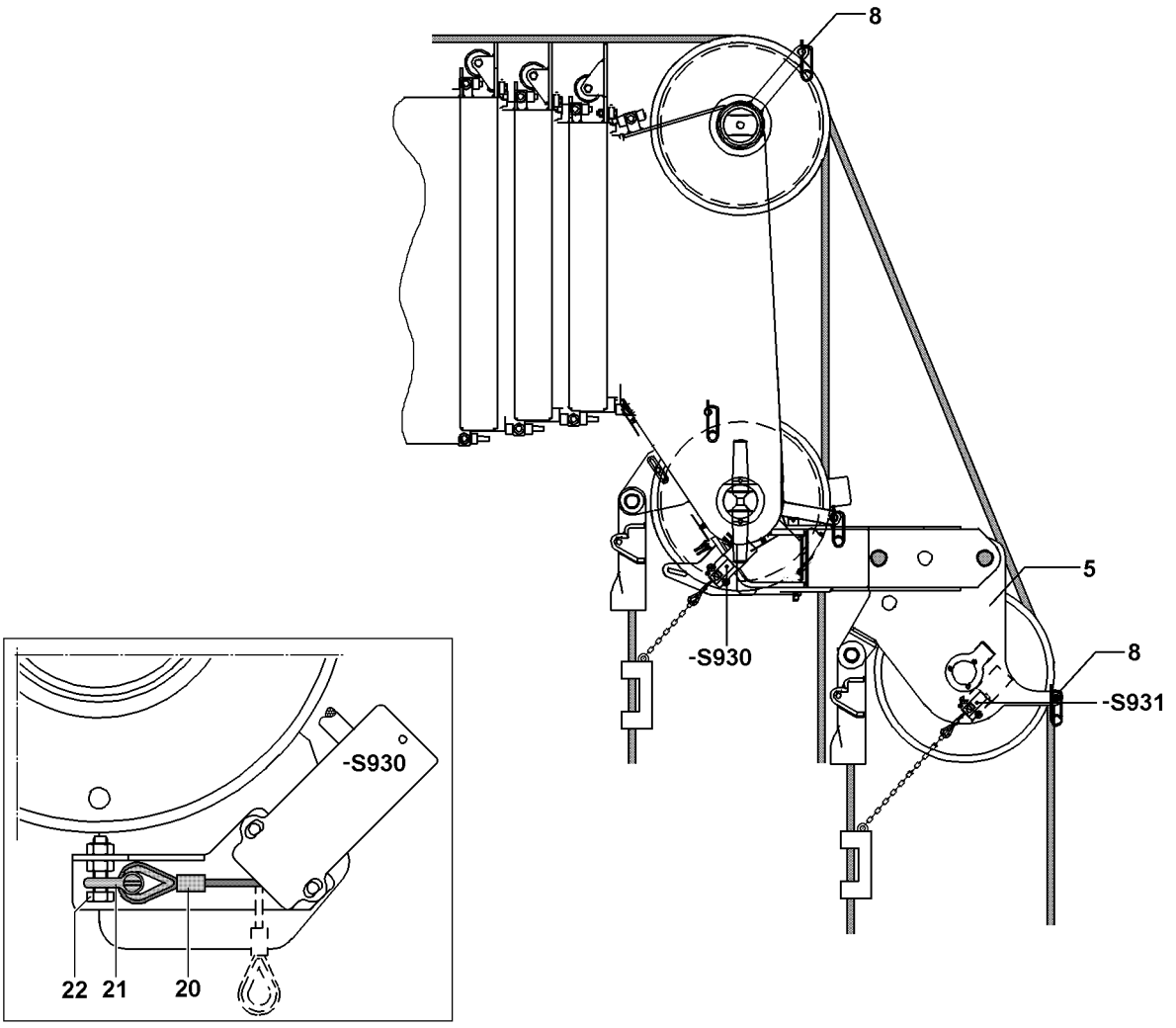

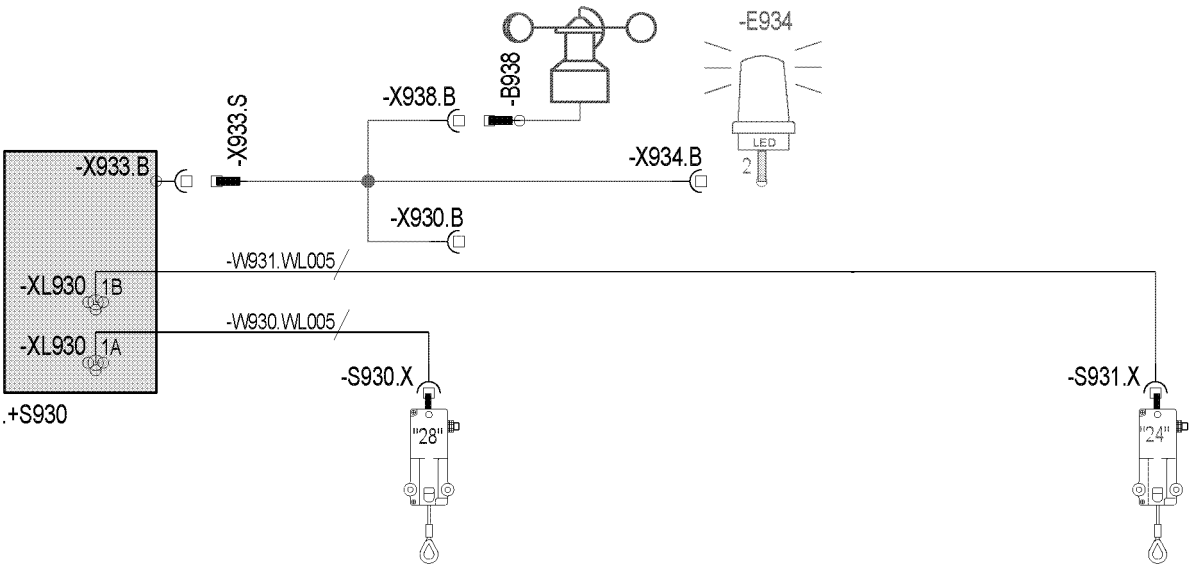

LWE/ab Muli 010/24201-02-02/en

Fig.114102

copyright © Liebherr-Werk Ehingen GmbH 2016

2.4 Reeving in the hoist rope

Can be reeved in a maximum of 2 times on the boom nose.

- ▶ Release and unpin the rope retaining pipes **8**.
- ▶ Place the hoist rope over the end pulley on the telescopic boom and over the rope pulley **5**.
- ▶ Pin the rope retaining pipes **8** and secure.
- ▶ Reeve in the load hook or hook block.
- ▶ Attach the hoist limit switch weight.

2.5 Hoist limit switch

The hoist limit switch **-S930**, the airplane warning light***** and the wind sensor***** remain attached on the telescopic boom head.

If the hoist limit switch **-S931** is attached to the telescopic boom:

- ▶ Remove the hoist limit switch **-S931** from the telescopic boom and assemble to the boom nose.

2.6 Single hook operation

If you are working in „single hook mode“, the hoist limit switch **-S930** that is not required must be operated manually.

- ▶ Remove the hoist limit switch weight and chain.
- ▶ Pull the hoist limit switch rope **20** and attach to the fixed point **22** with the shackle **21**.
- ▶ Actuate the hoist limit switch **-S930** mechanically.

2.7 Two hook operation

During two hook operation the hoist limit switch **-S930** on the telescopic boom and the hoist limit switch **-S931** on the boom nose are active!

2.8 Function check

The function check **must** be performed by the operator before lifting a load.

The following checks must be performed.

- ▶ Check that the hoist limit switch, wind sensor***** and airplane warning light***** connections are properly connected.
- ▶ Check wind sensor***** operation on LICCON monitor.
- ▶ Check the function of the airplane warning light*****.

Check the movement of hoist limit switches. The following steps are required to perform these checks.

- ▶ Actuate the hoist limit switch manually.
- ▶ Check that „Hoist top“ icon is displayed on LICCON monitor for main boom or boom nose.
- ▶ Check that hoist winch switches off correctly.

LWE/ab Muli 010/24201-02-02/en

copyright © Liebherr-Werk Ehingen GmbH 2016

5

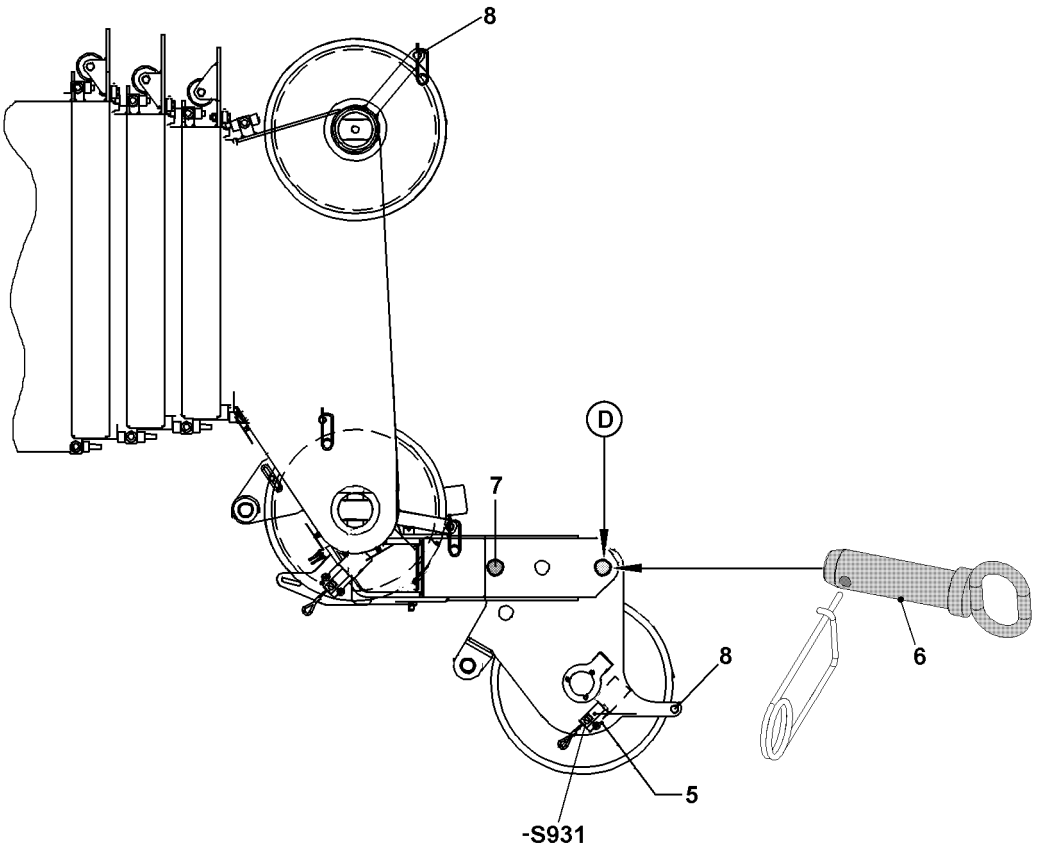

6

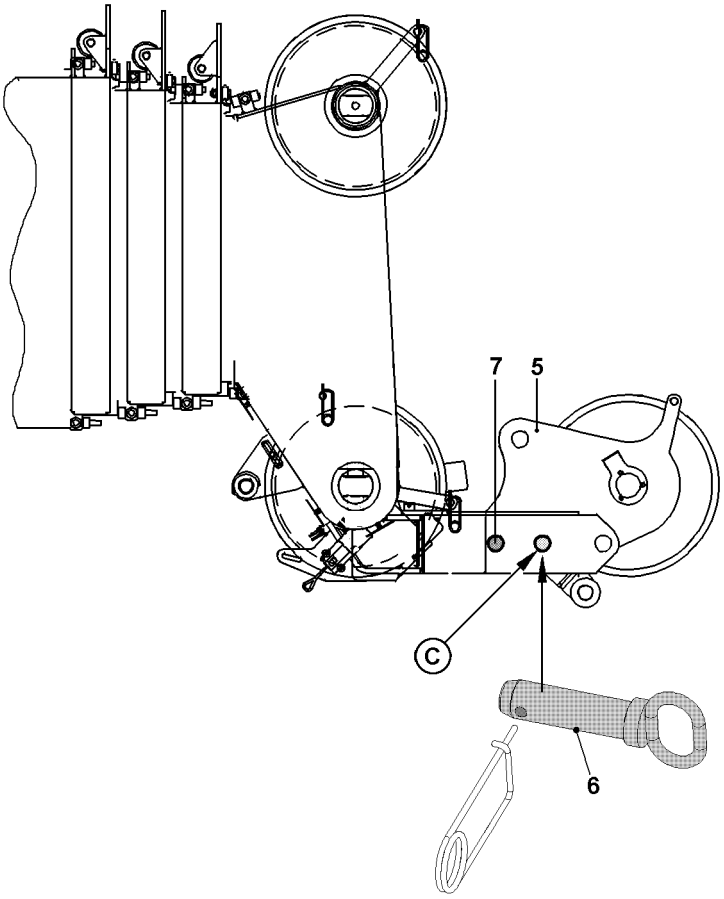

LWE/ab Muli 010/24201-02-02/en

Fig.196452

copyright © Liebherr-Werk Ehingen GmbH 2016

3 Disassembly

3.1 Folding the boom nose into transport position, illustrations 5 and 6

- ▶ Remove the hoist limit switch weight.
- ▶ Reeve out the load hook / hook block to boom nose.
- ▶ Release and unpin the rope retaining pipes **8**.

Do not pull hoist rope beneath the winch when reeling in.

- ▶ Spool the hoist rope up.

Note

- ▶ During operation **without** the boom nose, you must use the hoist limit switch **-S931** as an additional hoist limit switch for the telescopic boom **or** mechanically pull the hoist limit switch **-S931** and attach it to the rope fixed position with a shackle.

DANGER

Danger of accident if the boom nose falls down!
If the swing pin **7** is unpinned, the boom nose will fall down.

- ▶ Never unpin the swing pin **7**!

- ▶ Release the pin **6** on point **D** and unpin.

CAUTION

Danger of crushing fingers!
Fingers can be crushed when the boom nose is folded.

- ▶ Do not crush your fingers when the rope pulley **5** folds up!

- ▶ Move the rope pulley **5** up until it can be pinned at the point **C**.
- ▶ Pin and secure the pin **6**.

LWE/ab Muli 010/24201-02-02/en

copyright © Liebherr-Werk Ehingen GmbH 2016

7

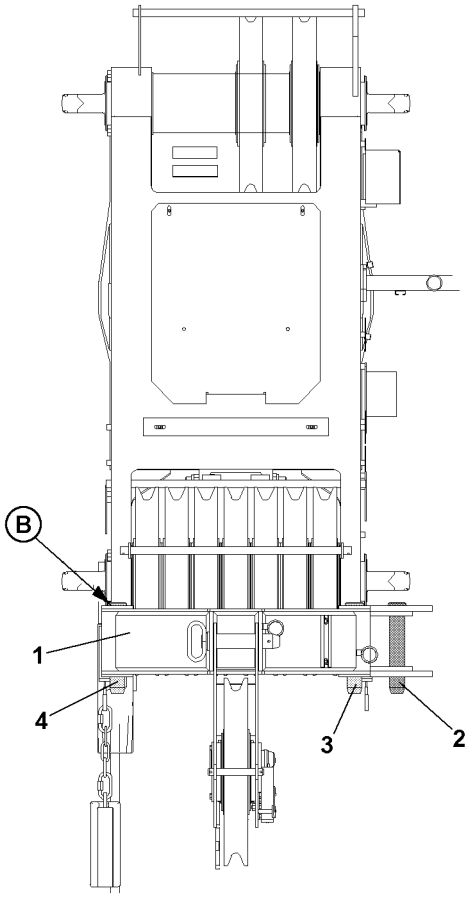

8

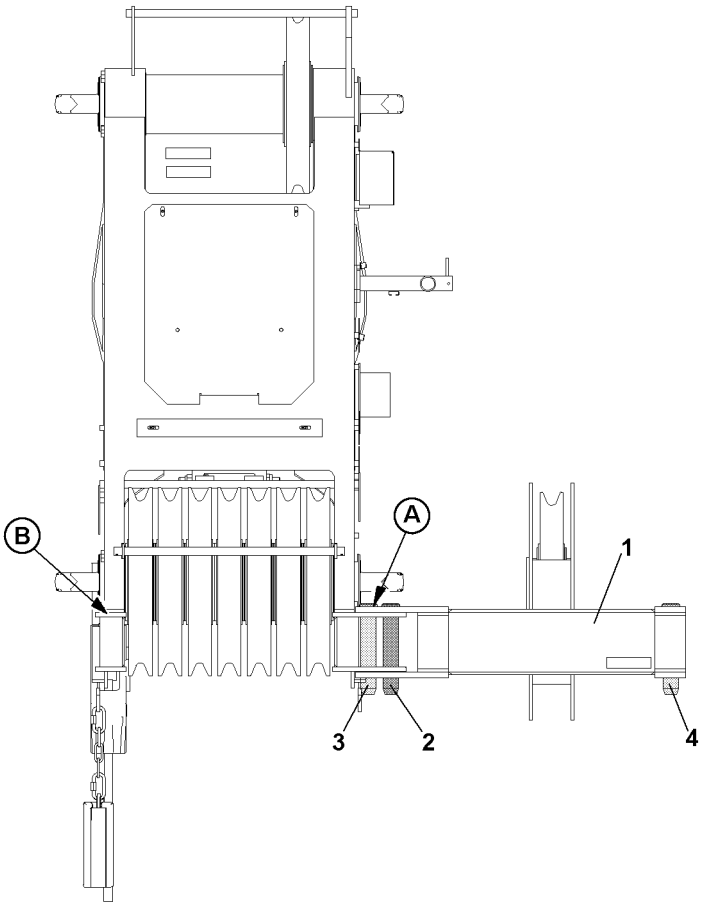

LWE/ab Muli 010/24201-02-02/en

Fig.196453

copyright © Liebherr-Werk Ehingen GmbH 2016

3.2 Swinging the boom nose into transport position, illustrations 7 and 8

DANGER
Danger of accident if the boom nose falls down!
If the swing pin **2** is unpinned, the boom nose will fall down.
▶ Never unpin the swing pin **2**!

▶ Release and unpin the pin **4**.

CAUTION
Danger of crushing fingers!
Fingers could be crushed between the telescopic boom and the boom nose when the boom nose is swivelled.
▶ Do not put fingers between the boom nose and the telescopic boom!

▶ Swing the boom nose **1** by 180 ° until the pin **3** can be inserted on point **A**.
▶ Insert and secure pin **3**.
▶ Pin the pin **4** on the boom nose and secure.

LWE/ab Muli 010/24201-02-02/en

copyright © Liebherr-Werk Ehingen GmbH 2016

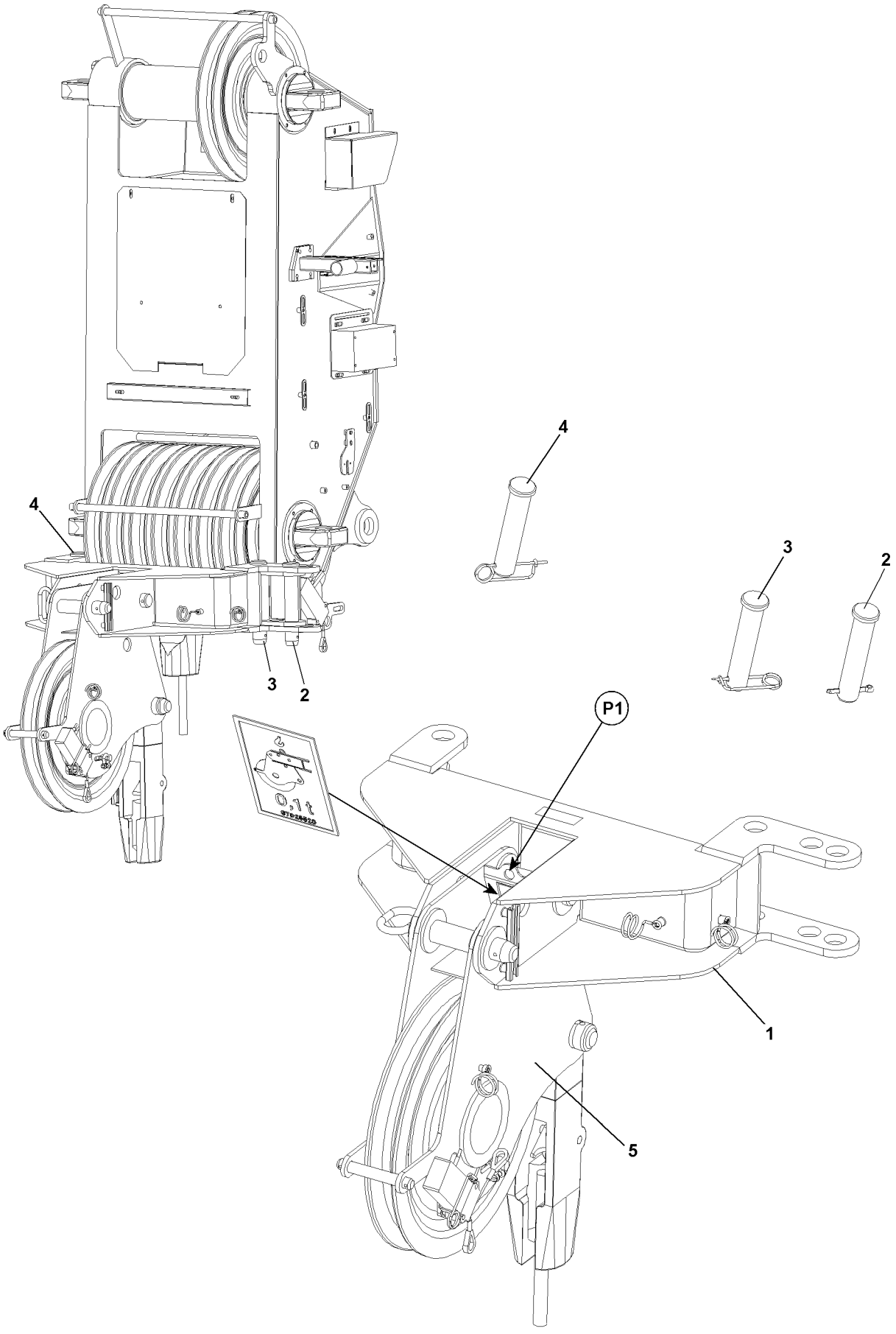

Fig.114101

LWE/ab Muli 010/24201-02-02/en

copyright © Liebherr-Werk Ehingen GmbH 2016

3.3 Removing the boom nose on the telescopic boom

Make sure that the following prerequisite is met:
– The boom nose is folded into operating position.

DANGER
Danger of accident if the boom nose falls down!
If the swing pin **2** is unpinned before the boom nose **1** is secured with the auxiliary crane, then the boom nose **1** can fall down and kill or severely injure personnel!
▶ Unpin the swing pin **2** only when the boom nose is secured with the auxiliary crane!

▶ Attach the auxiliary crane on the boom nose **1**.

WARNING
Danger of crushing!
During disassembly, hands can be crushed due to swing movements of the boom nose **1**!
▶ Make sure that the boom nose **1** is not swinging back and forth during removal!

Remove the boom nose **1**:

▶ Release and unpin the pin **3**.
▶ Release and unpin the pin **4**.
▶ Release and unpin the swing pin **2**.
▶ Place the boom nose onto the transport vehicle.
▶ Detach the auxiliary crane.

LWE/ab Muli 010/24201-02-02/en

copyright © Liebherr-Werk Ehingen GmbH 2016

Empty page!

copyright © Liebherr-Werk Ehingen GmbH 2016

5.12 Auxiliary boom

1	General	3
2	Installing the auxiliary boom	5
3	Erection	25
4	Unreeving the hoist rope	27
5	Disassembly of the auxiliary boom	29

LWE/ab Muli 010/24201-02-02/en

copyright © Liebherr-Werk Ehingen GmbH 2016

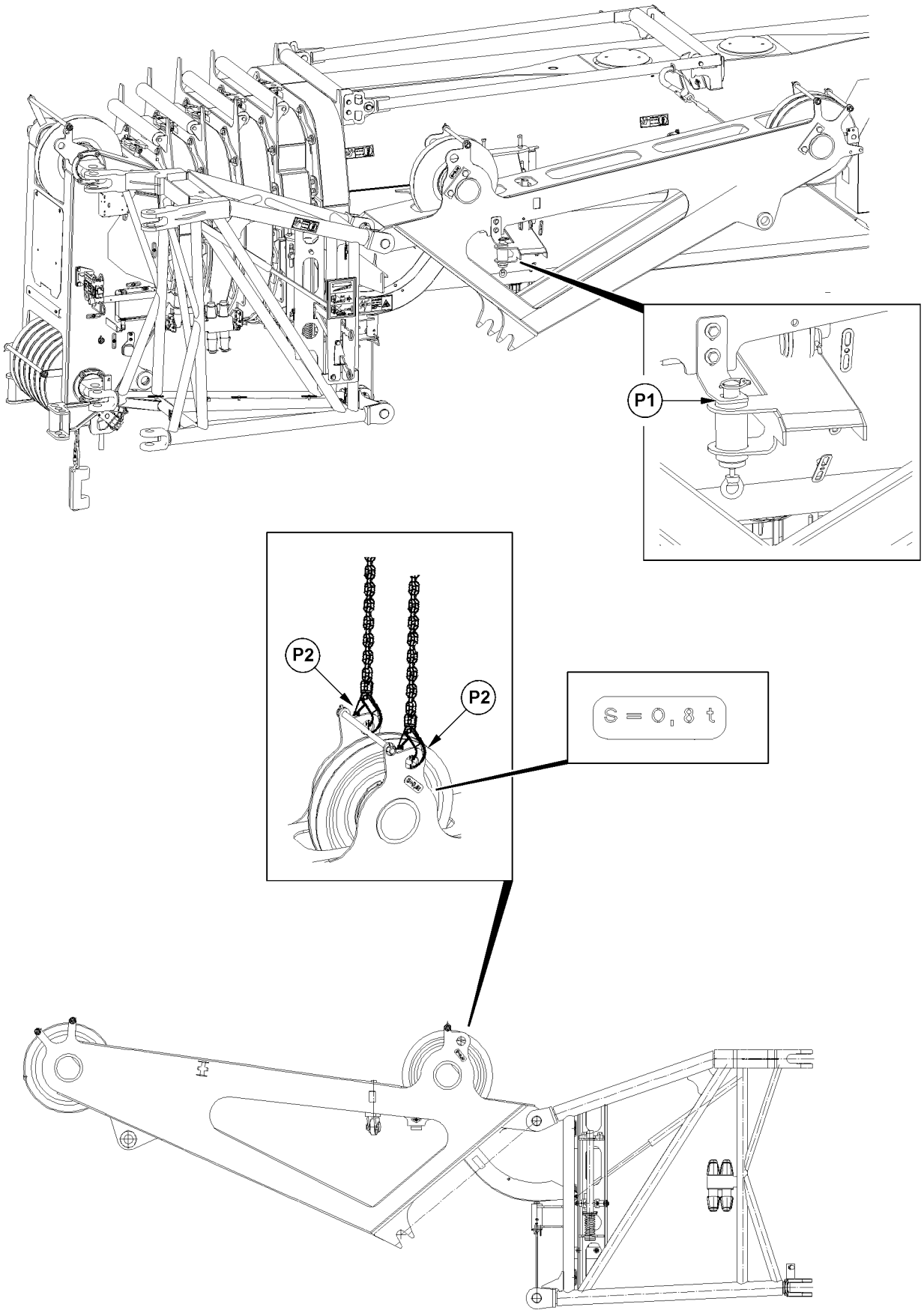

Fig.117354

LWE/ab Muli 010/24201-02-02/en

copyright © Liebherr-Werk Ehingen GmbH 2016

1 General

DANGER
Danger of accident when transporting the crane with auxiliary boom!
- ▶ Before transporting the crane, the auxiliary boom must always be brought into transport position and mechanically secured on point **P1**.
- ▶ Make sure that the auxiliary boom is properly secured on point **P1** before transporting the crane on public roads.

Note
- ▶ **Load reduction!** With the hook block reeved on the telescopic boom, loads in auxiliary boom operating modes must be reduced by the weight of the hook block.

1.1 Component overview

Position	Description	Length	Weight
1	Pivot section	3.4 m	0.8 t
2	End section		

1.2 Fastening point

DANGER
Danger of accident due to incorrect attachment!
Life-threatening situations can arise due to improper or incorrect fastening of the auxiliary boom!
- ▶ Fasten the auxiliary boom according to the fastening point **P2** shown on the tag.
- ▶ The appropriate fastening eyes and points are marked with tags.
- ▶ Attaching the auxiliary boom on non-intended points or on any arbitrary location is **prohibited**.

Description	Abbreviation
Auxiliary boom	**S**

LWE/ab Muli 010/24201-02-02/en

copyright © Liebherr-Werk Ehingen GmbH 2016

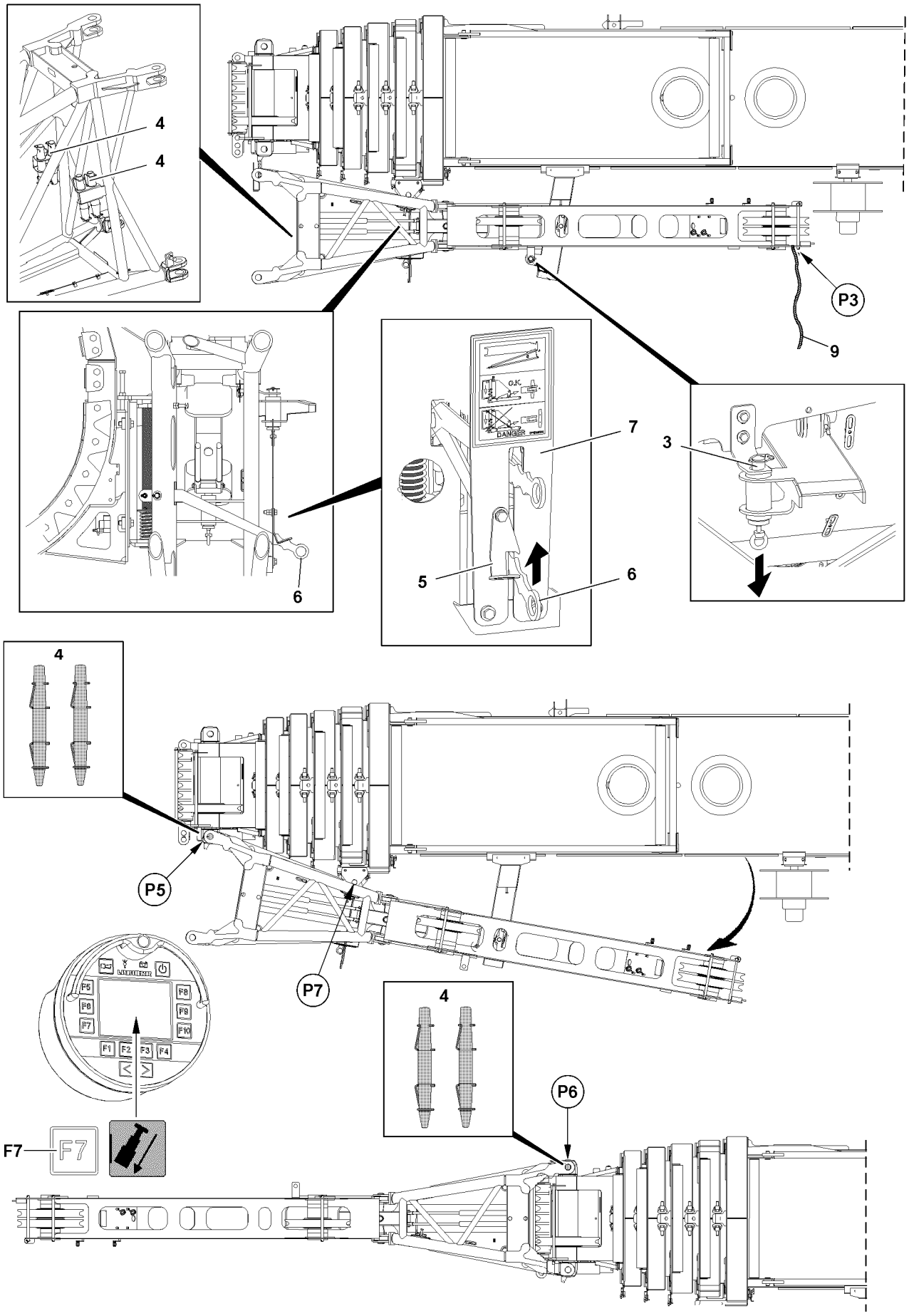

Fig.117349

LWE/ab Muli 010/24201-02-02/en

copyright © Liebherr-Werk Ehingen GmbH 2016

2 Installing the auxiliary boom

2.1 General

DANGER
Danger of fatal injury due to falling auxiliary boom!
The auxiliary boom can fall down due to an assembly error.
- ▶ Standing under the auxiliary boom during the swing operation is prohibited.
- ▶ It is prohibited for anyone to remain within the swing range as well as the folding area of the auxiliary boom.
- ▶ The auxiliary boom must be secured by an auxiliary rope during the swing process.

WARNING
Danger of falling!
During assembly and disassembly, personnel must be secured with appropriate aids to prevent them from falling! If this is not observed, assembly personnel could fall and suffer fatal injuries.
- ▶ All work aloft, where there is a danger of falling must be carried out with suitable aids.
- ▶ If fall protection equipment is available, then it must be used, see Crane operating instructions, chapter 2.06.
- ▶ If aids are not available and work cannot be carried out from the ground, then the assembly personnel must secure themselves with the supplied fall arrest system to prevent falling, see Crane operating instructions, chapter 2.04.
- ▶ The supplied fall arrest system must be fastened on the fastening and hook points. For safety points, see Crane operating instructions, chapter 2.06.
- ▶ Only step on the aids, ladders and catwalks with clean shoes.
- ▶ Keep aids, ladders and catwalks free of heavy dirt, snow and ice.
- ▶ Do not walk on the auxiliary boom.

Make sure that the following prerequisites are met:
- – The crane is aligned in horizontal direction.
- – The counterweight has been installed on the turntable according to the load chart.
- – The telescopic boom is fully telescoped in.
- – The auxiliary boom is attached on the telescopic boom pivot section for transport.
- – The telescopic boom has been luffed up to the rear or the side in the 1° position.

LWE/ab Muli 010/24201-02-02/en

copyright © Liebherr-Werk Ehingen GmbH 2016

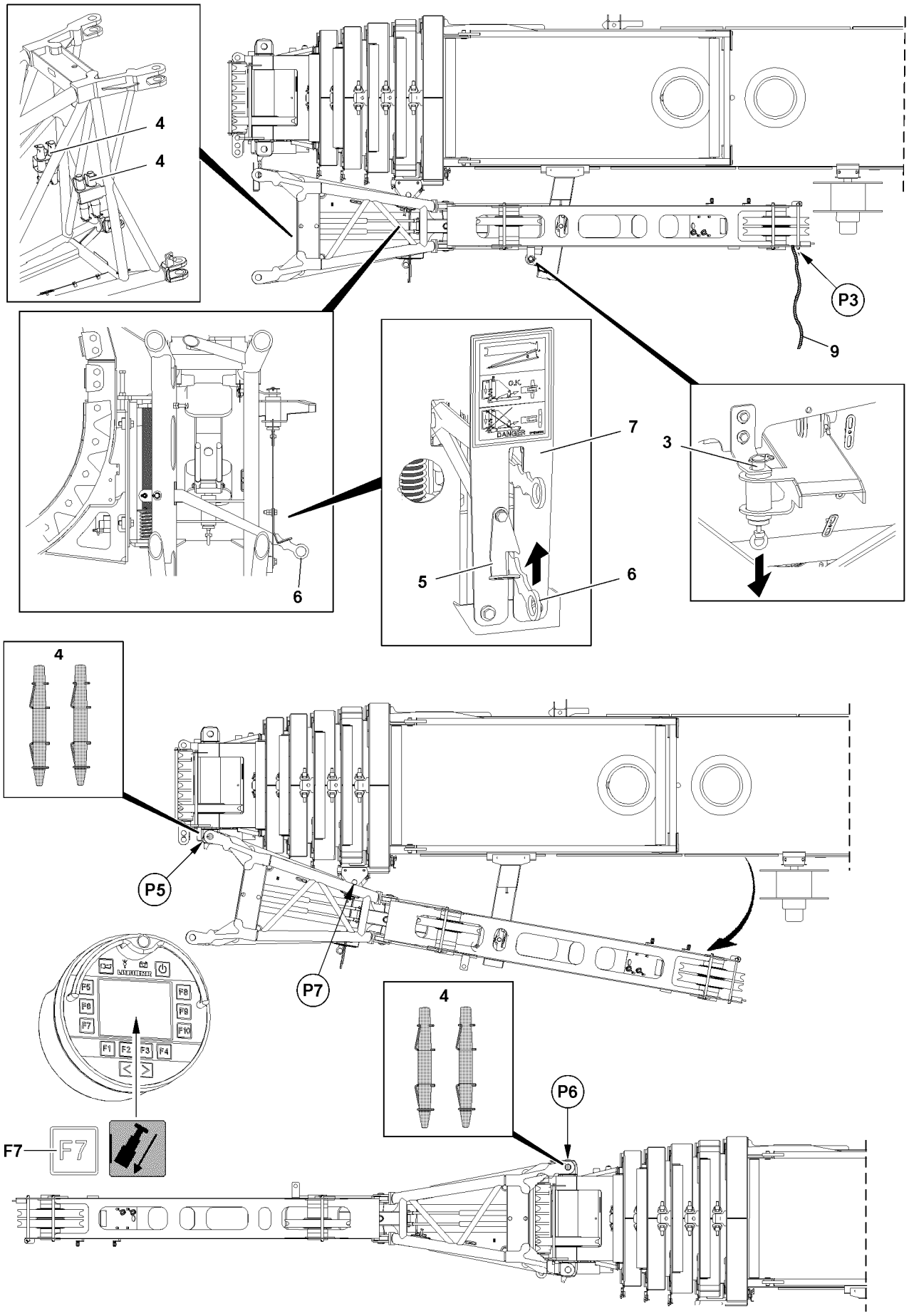

Fig.117349

LWE/ab Muli 010/24201-02-02/en

copyright © Liebherr-Werk Ehingen GmbH 2016

2.2 Reeving out the hoist rope on the telescopic boom head

- ▶ Extend the telescopic boom to a length of approximately 4 m.
- ▶ Place the hook block on the ground.
- ▶ Disengage the hoist rope on the rope fixed point.
- ▶ For safety reasons, remove the hoist limit switch weight and the chain.

Note

- ▶ The hoist limit switch must be pulled mechanically and the control rope must be attached to the telescopic boom head with the snap hook when operating the auxiliary boom.
- ▶ The telescopic boom may remain reeved, if the hoist rope of winch 2 is used for auxiliary boom operation.

- ▶ Remove the rope retaining pipes on the pulley head and on the back pulley.
- ▶ Telescope the telescopic boom in all the way.

LWE/ab Muli 010/24201-02-02/en

copyright © Liebherr-Werk Ehingen GmbH 2016

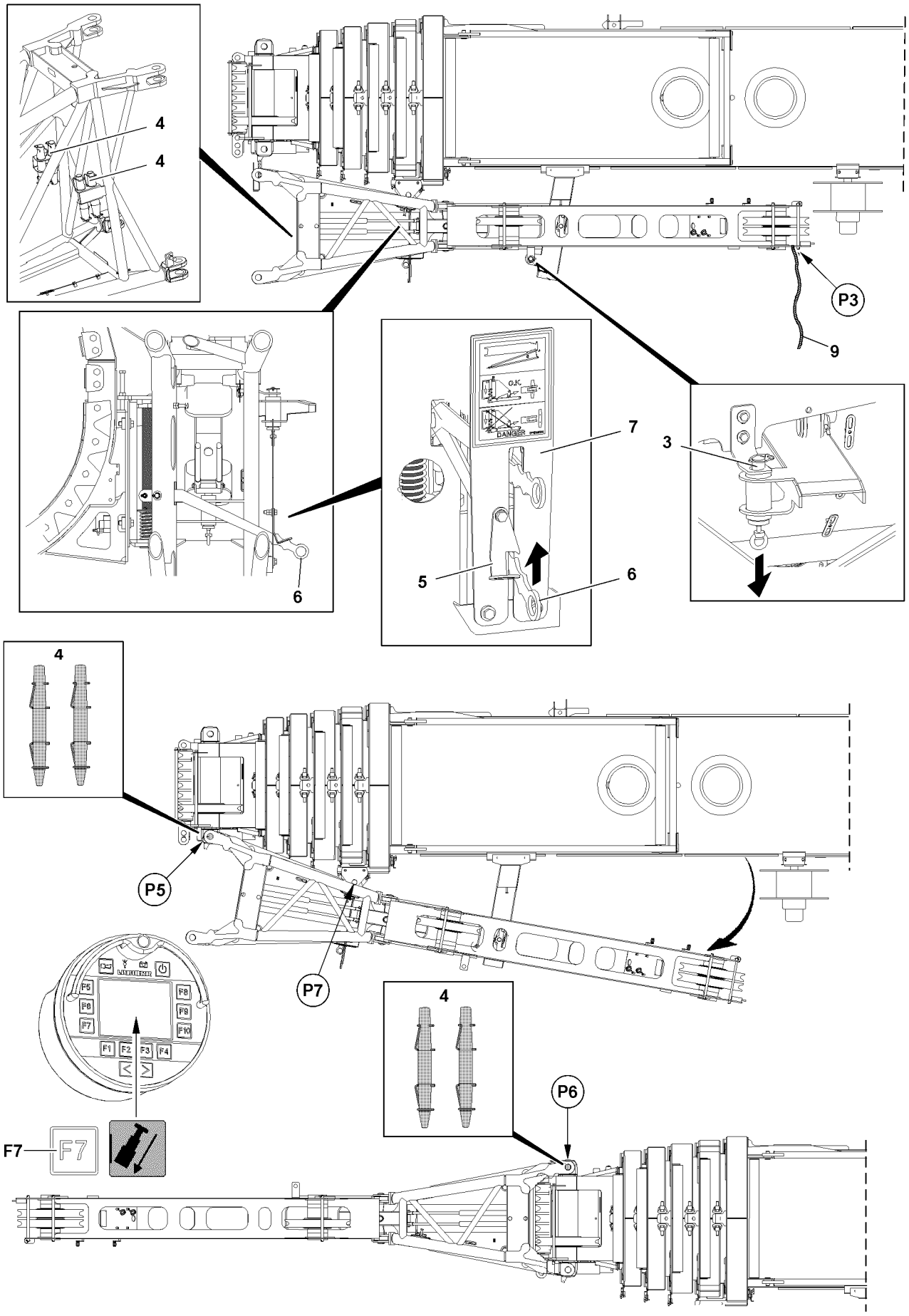

Fig.117349

LWE/ab Muli 010/24201-02-02/en

copyright © Liebherr-Werk Ehingen GmbH 2016

2.3 Assembly of the auxiliary boom carried on the crane

2.3.1 Swinging the auxiliary boom into operating position

Make sure that the following prerequisite is met:
– The telescopic boom is luffed up to the rear or to the side to 1°.

WARNING
Danger of accident due to involuntary swinging out of the auxiliary boom!
If the telescopic boom is not luffed up to 1°, then the auxiliary boom may not be installed.
▶ Luff the telescopic boom up to 1°.

▶ Attach the auxiliary rope **9** on point **P3**.
▶ Release the spring pin **3**.
▶ Pull the spring pin **3**.
▶ Swing auxiliary boom out until it can be pinned at point **P5**.

Problem remedy
If the pin bores on point **P5** do not align, the telescopic boom can be tensioned with the function key **F7**on the BTT in the „Assembly functions on the BTT“ menu:
▶ Start the crane engine.
▶ Pin telescope 5.

Note
▶ Bluetooth™ Terminal (BTT), see Crane operating instructions, chapter 5.31.

WARNING
Danger of severe crushing!
For the „Tension the telescope boom“ function, all telescoping sections are pulled together, which can lead to severe crushing injuries of fingers.
▶ As long as the function „Tension telescopic boom“ is carried out, it is prohibited for any personnel to remain in the push out range of the telescoping sections!

▶ Press the function key **F7** on the BTT.

Result:

– All telescopic sections are pulled together.

▶ Insert the pins **4** on top and bottom on point **P5** and secure.

DANGER
Danger of fatal injury due to falling auxiliary boom!
Special retaining clips must be used to secure the pins **4**. The use of spring pins or spring retainers on the pins **4** is not permitted.
The auxiliary boom may only be released at point **P7** if the pins **4** are pinned and secured on top and bottom at point **P5**.
▶ Pin and secure pins **4** at point **P5** on top and bottom.

LWE/ab Muli 010/24201-02-02/en

copyright © Liebherr-Werk Ehingen GmbH 2016

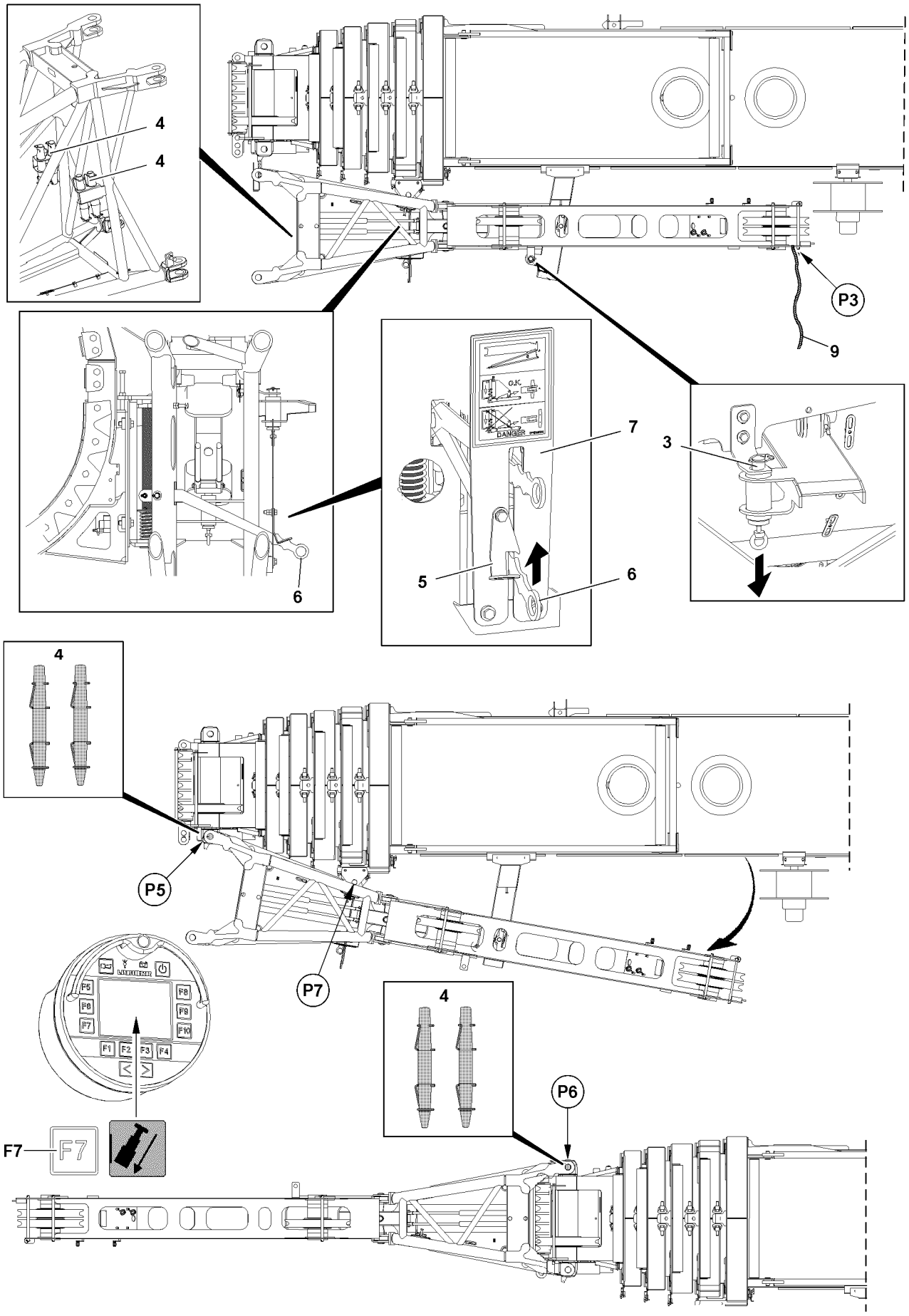

Fig.117349

LWE/ab Muli 010/24201-02-02/en

copyright © Liebherr-Werk Ehingen GmbH 2016

- ▶ Swing the safety bracket **5** with the assembly rod to the side.
- ▶ Push the lever **6** with the assembly rod up and latch into the bracket **7**.

DANGER
Danger of fatal injury due to falling auxiliary boom!
The auxiliary boom can fall down due to an assembly error.
- ▶ Standing under the auxiliary boom during the swing operation is prohibited.
- ▶ Standing in the swing range as well as the folding range of the auxiliary boom is prohibited.

- ▶ Swing the auxiliary boom with the auxiliary rope **9** by 180 ° until it can be pinned at point **P6** on the top and bottom.

DANGER
Danger of fatal injury due to falling auxiliary boom!
- ▶ Special retaining clips must be used to secure the pins **4**.
- ▶ The use of spring pins or spring retainers on the pins **4** is prohibited!

- ▶ Insert the pins **4** on top and bottom on point **P6** and secure.
- ▶ Remove the auxiliary rope **9**.

LWE/ab Muli 010/24201-02-02/en

copyright © Liebherr-Werk Ehingen GmbH 2016

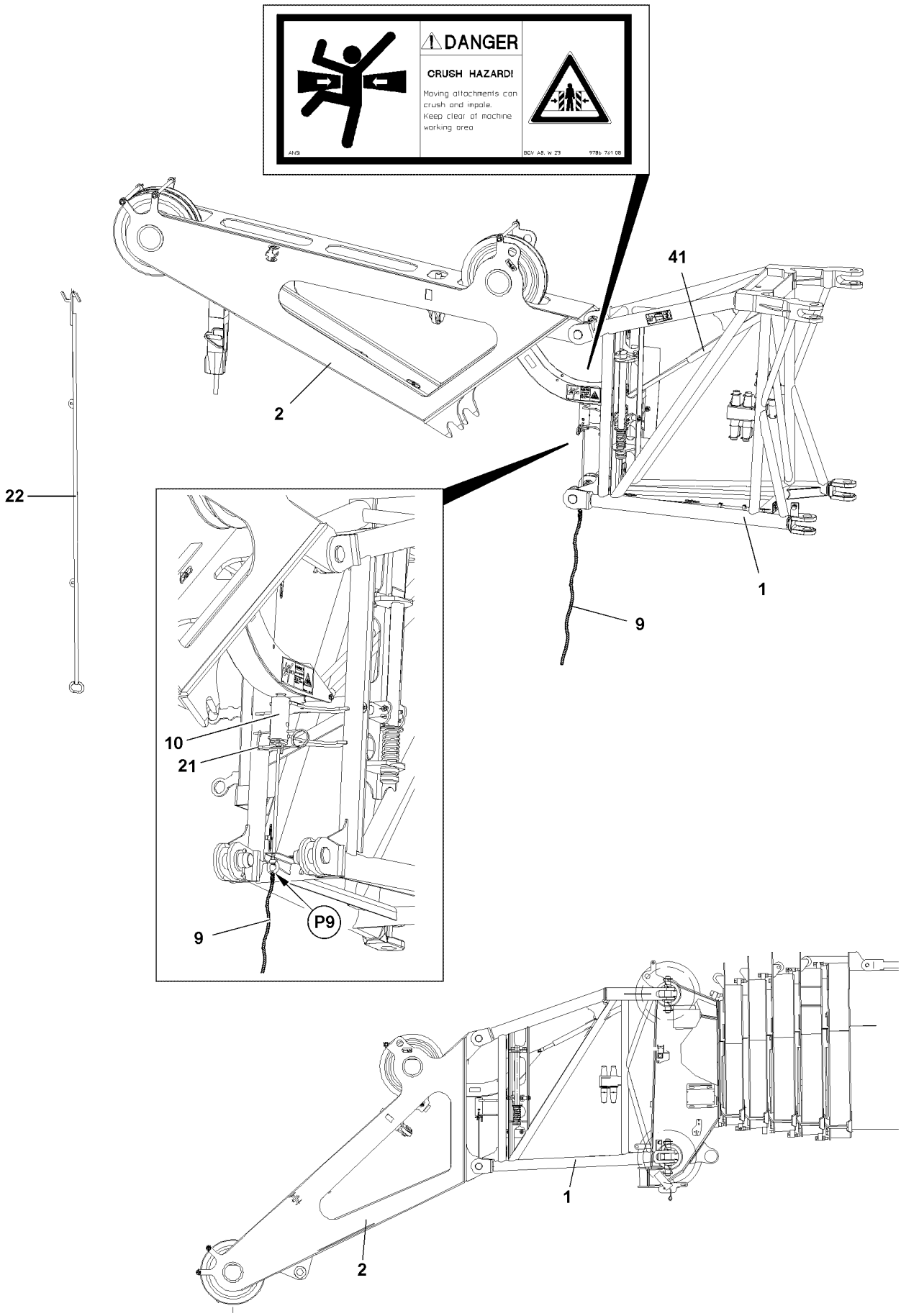

Fig.118506

LWE/ab Muli 010/24201-02-02/en

copyright © Liebherr-Werk Ehingen GmbH 2016

2.3.2 Folding the end section into operating position

DANGER
Danger of fatal injury in case of defective pneumatic spring!
Defective pneumatic springs **41** no longer provide the supporting action for the movable components on the auxiliary boom.
If the pneumatic spring **41** is defective, the end section **2** can fall down and fatally or seriously injure personnel.
There is an increased danger of accidents.

- ▶ Before unpinning the spring pin **10** and before actuation, check the pneumatic spring **41** for external damage.
- ▶ Do not use auxiliary boom with defective pneumatic spring **41**! Replace the defective pneumatic spring **41**.
- ▶ If the pneumatic spring **41** is defective, support the end section **2** from below or hang it on an auxiliary crane.
- ▶ **2 1**It is strictly prohibited for personnel or objects to remain within the movement range between the end section and the pivot section.
- ▶ It is prohibited for personnel or objects to remain within the danger zone of the moveable components.

- ▶ Attach the auxiliary rope **9** on point **P9**.

DANGER
Danger of accident!
Before unpinning the spring pins **10** it must be ensured that no persons or objects are in the danger zone, particularly between the end section **2** and the pivot section **1**.

- ▶ Unpin the spring pin **10** only if there are no persons or objects in the danger zone.

- ▶ Remove the retaining pin **21**.
- ▶ Hook the assembly rod **22** in the end section **2** and unpin the spring pin **10** with the auxiliary rope **9**.
- ▶ Fold the end section **2** down with the assembly rod **22** until the spring pin **10** engages.
- ▶ Secure the spring pin **10** with retaining pin **21**.

DANGER
Danger of accident!

- ▶ Before operation with the auxiliary boom can be started, the end section **2** must lie against the pivot section **1** and be pinned and secured with the spring pin **10**.

- ▶ Check if the auxiliary boom has been pinned according to the operating instructions.
- ▶ Remove the auxiliary rope **9**.

LWE/ab Muli 010/24201-02-02/en

copyright © Liebherr-Werk Ehingen GmbH 2016

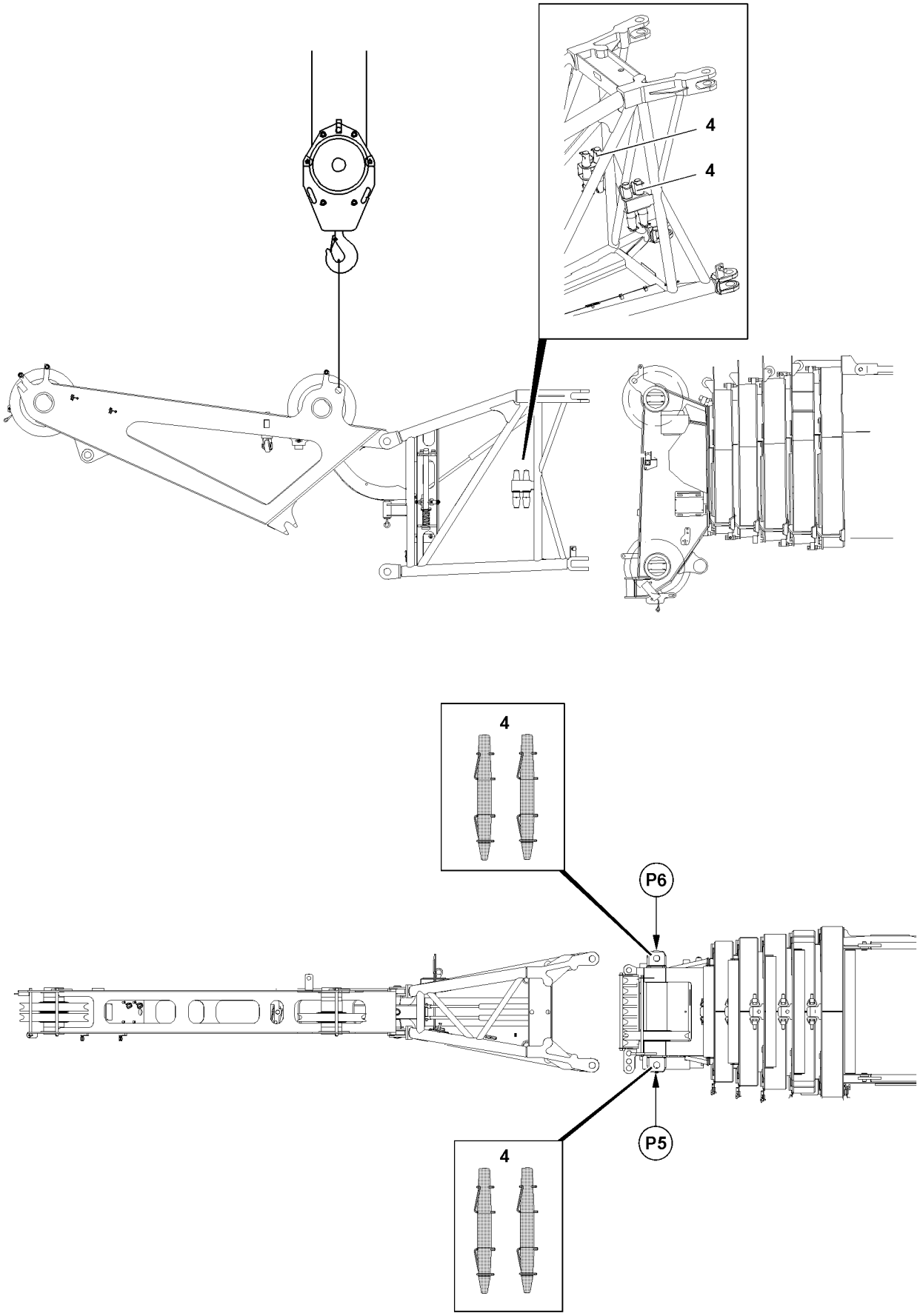

LWE/ab Muli 010/24201-02-02/en

Fig.117350

copyright © Liebherr-Werk Ehingen GmbH 2016

2.4 Assembling the separately transported auxiliary boom

Make sure that the following prerequisite is met:
– The telescopic boom is luffed up to the rear or to the side to 1°.

DANGER
Danger of fatal injury due to falling auxiliary boom!
The auxiliary boom can fall down due to an assembly error.
▶ Do not allow anyone to stand beneath the auxiliary boom during installation!

▶ Attach auxiliary boom at attachment point and insert into pinning points of telescopic boom.

DANGER
Danger of fatal injury due to falling auxiliary boom!
▶ The use of spring pins or spring retainers on the pins **4** is prohibited!
▶ To secure the pin **4** and the pin **8**, use the special safety clips.

▶ Pin the auxiliary boom with the telescopic boom:
▶ Pin and secure the pin **4** on top on point **P5** and point **P6**.
▶ Pin and secure the pin **4** on the bottom at point **P5** and point **P6**.
▶ For the rest of the assembly see section „Folding the end section into operating position“.

LWE/ab Muli 010/24201-02-02/en

copyright © Liebherr-Werk Ehingen GmbH 2016

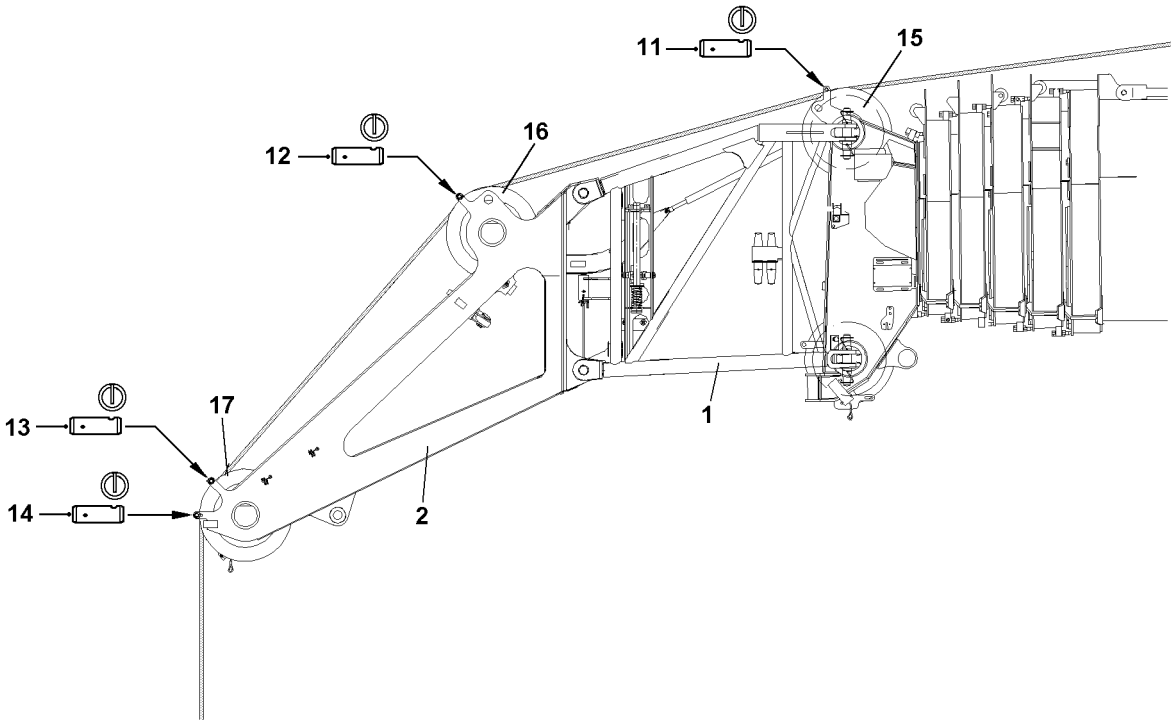

Fig.118508

LWE/ab Muli 010/24201-02-02/en

copyright © Liebherr-Werk Ehingen GmbH 2016

2.5 Reeving the hoist rope

DANGER
Danger of falling from auxiliary boom!
When walking on the auxiliary boom to reeve the hoist rope in or out, there is a risk of slipping and falling from the auxiliary boom.
▶ Do not walk on the auxiliary boom!

▶ Release and unpin rope retaining pin **11**, rope retaining pin **12** , rope retaining pin **13** and rope retaining pin **14**.
▶ Run hoist rope over rope guide pulley **15**, rope guide pulley **16** and rope guide pulley **17**.
▶ Insert all rope retaining pins and secure with locking pins.
▶ Reeve in the hoist rope. See chapter „4.06 Rope reeving“.
▶ Attach the hoist limit switch weight.

Note
▶ For auxiliary boom operation with hook block reeved in on the telescopic boom, the weight of the hook block reeved in on the telescopic boom must be deducted from the load.

LWE/ab Muli 010/24201-02-02/en

copyright © Liebherr-Werk Ehingen GmbH 2016

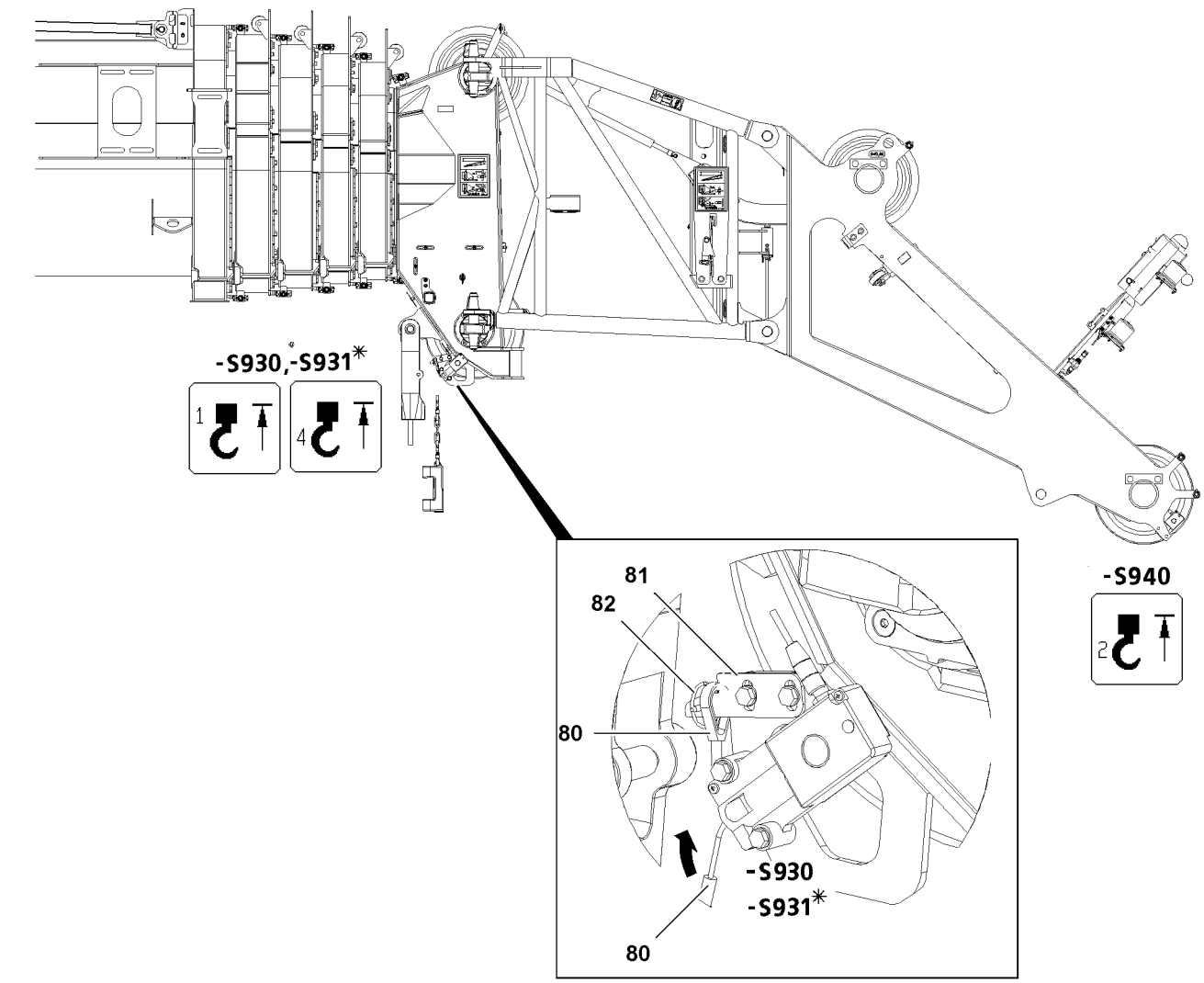

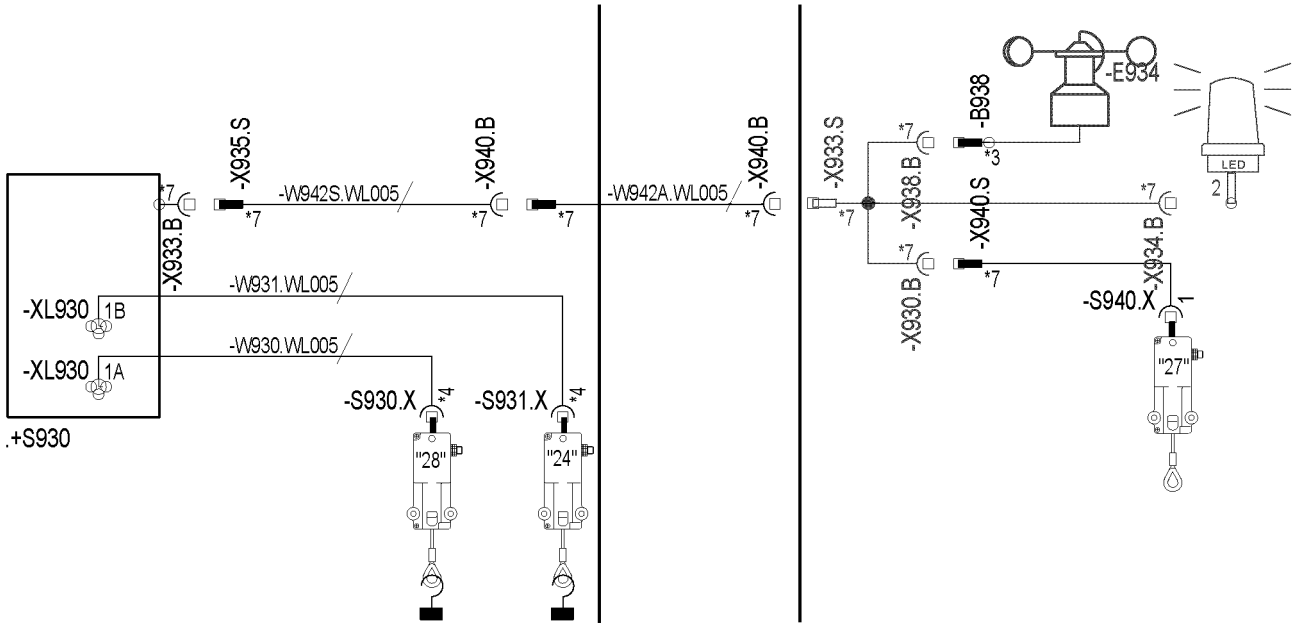

Fig.117351

LWE/ab Muli 010/24201-02-02/en

copyright © Liebherr-Werk Ehingen GmbH 2016

2.6 Electrical connections on auxiliary boom

2.6.1 Actuating the hoist limit switch mechanically, illustration 1

In auxiliary boom operation in „single hook mode“, the hoist limit switch **-S930/-S931** which is not required must be mechanically actuated.

- ▶ Remove the hoist limit switch weight of the hoist limit switch **-S930.X** and hoist limit switch*** -S931.X**.
- ▶ Pull the hoist limit switch rope **80**, hang in on the fixed point **81** and secure with locking pin **82**.
- ▶ After auxiliary boom operation, protect the electrical connections from contamination with caps.

2.6.2 Electrical connections

Single hook operation

Note
- ▶ Only the hoist limit switch **S940** on the auxiliary boom is active during single hook operation.

- ▶ Actuate the hoist limit switch **-S930** mechanically.

If installed on the telescopic boom:
- ▶ Actuate the hoist limit switch*** -S931** mechanically.
- ▶ Insert the cable **-W942.S** with cable plug **-X935.S** into the socket **-X933.B**.
- ▶ Plug the cable **-W942A** into the socket **-X940.B**.
- ▶ Plug the Y-adapter with the plug **-X933.S** in the socket **-X940.B**
- ▶ Plug the Y-adapter with the plug **-X940.S** in the socket **-X930.B**
- ▶ Plug in the hoist limit switch **-S940**.

Establishing the electrical connection to the LED continuous light* or flashing beacon*

Note
- ▶ To be able to establish the electrical connection to the LED continuous light and the rotating beacon, the Y-adapter on the cable must be plugged in the socket **-X940.B** with the plug **X933.S**.

- ▶ Plug the LED continuous light or flashing beacon in the socket **-X934.B**.

Establishing the electrical connection to the wind speed sensor*

Note
- ▶ To be able to establish the electrical connection to the wind speed sensor, the plug **X933.S** must be plugged in the socket **-X940.B**.

- ▶ Plug the wind speed sensor in the socket **-X938.B**.

Note
- ▶ After folding jib operation, protect the electrical connections from contamination with caps.

LWE/ab Muli 010/24201-02-02/en

copyright © Liebherr-Werk Ehingen GmbH 2016

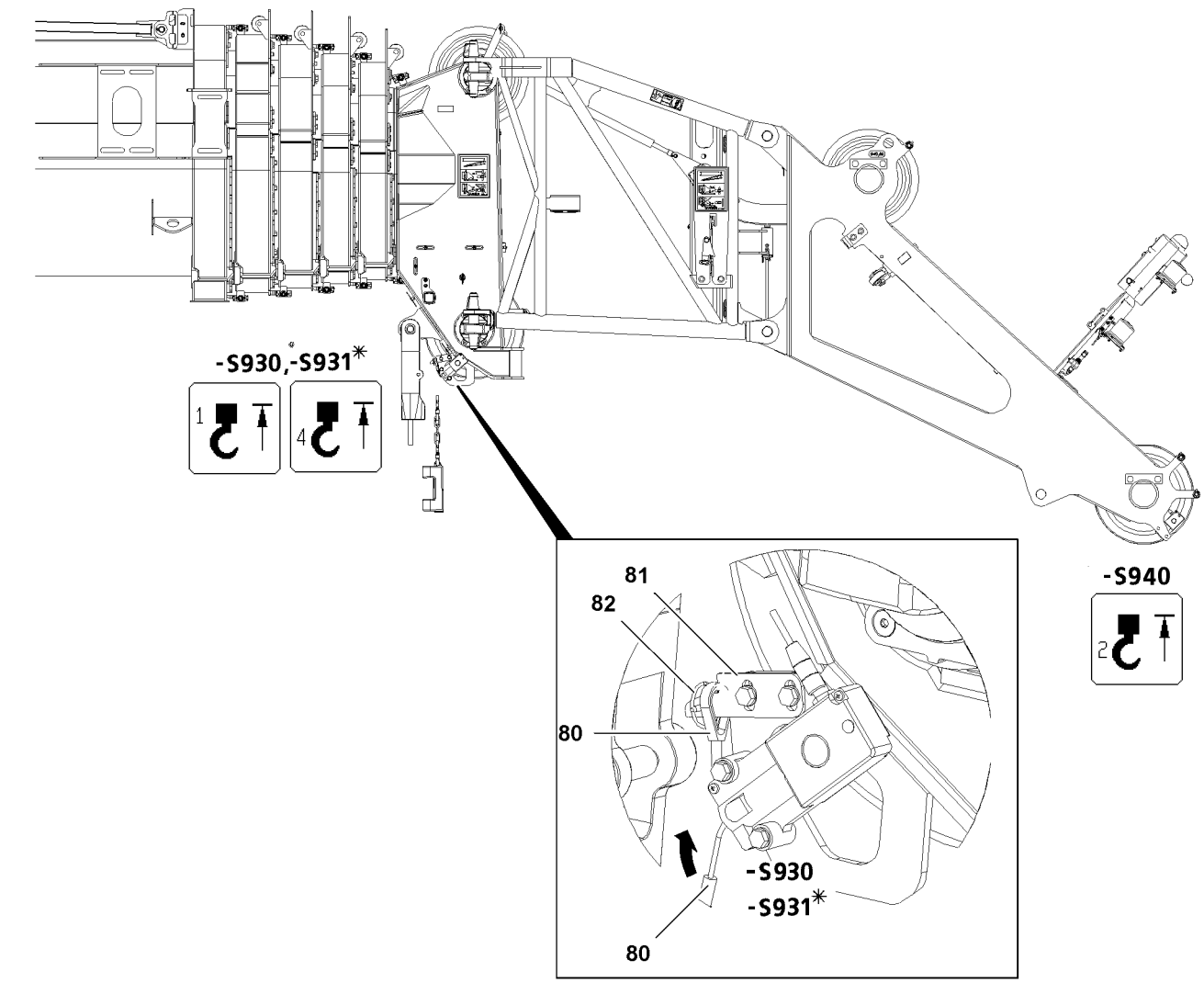

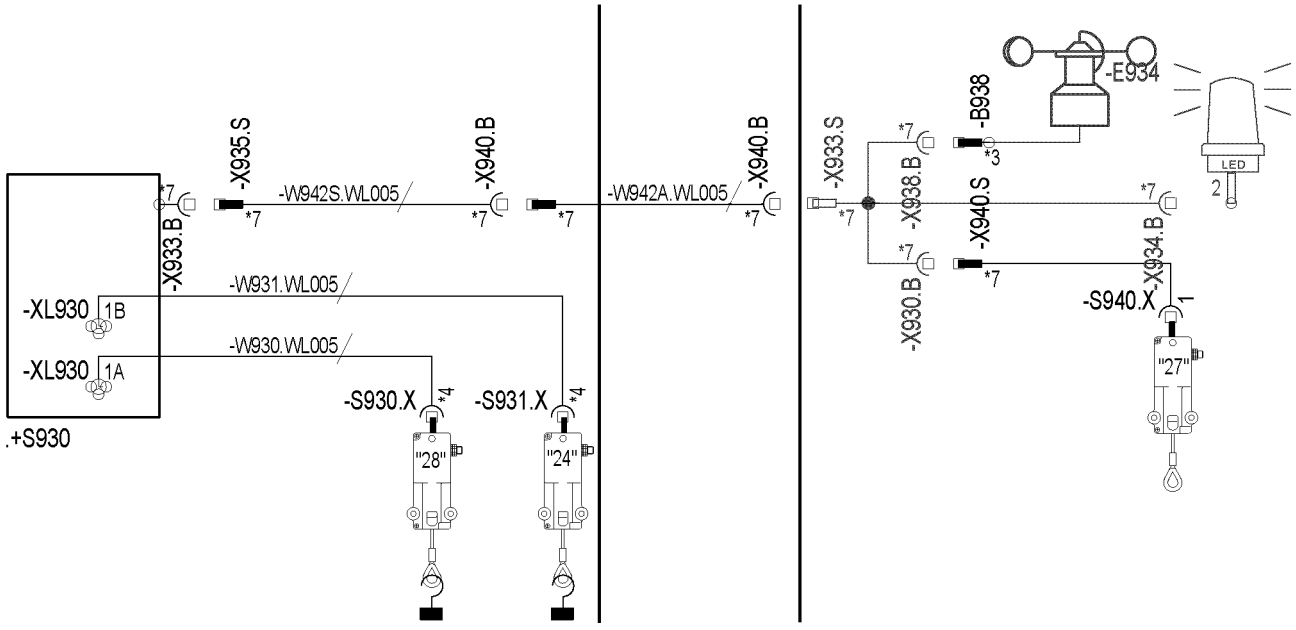

Fig.117351

LWE/ab Muli 010/24201-02-02/en

copyright © Liebherr-Werk Ehingen GmbH 2016

Operation with two hooks

Note
▶ In two hook operation, the hoist limit switch **S930** on the telescopic boom and the hoist limit switch **S940** on the auxiliary boom are active.

If installed on the telescopic boom:
▶ Actuate the hoist limit switch* **-S931** mechanically.
▶ Insert the cable **-W942.S** with cable plug **-X935.S** into the socket **-X933.B**.
▶ Plug the cable **-W942A** into the socket **-X940.B**.
▶ Plug the Y-adapter with the plug **-X933.S** in the socket **-X940.B**
▶ Plug the Y-adapter with the plug **-X940.S** in the socket **-X930.B**
▶ Plug in the hoist limit switch **-S940**.

Establishing the electrical connection to the LED continuous light* or flashing beacon*

Note
▶ To be able to establish the electrical connection to the LED continuous light and the rotating beacon, the Y-adapter on the cable must be plugged in the socket **-X940.B** with the plug **X933.S**.

▶ Plug the LED continuous light or flashing beacon in the socket **-X934.B**.

Establishing the electrical connection to the wind speed sensor*

Note
▶ To be able to establish the electrical connection to the wind speed sensor, the plug **X933.S** must be plugged in the socket **-X940.B**.

▶ Plug the wind speed sensor in the socket **-X938.B**.

Note
▶ After folding jib operation, protect the electrical connections from contamination with caps.

LWE/ab Muli 010/24201-02-02/en

copyright © Liebherr-Werk Ehingen GmbH 2016

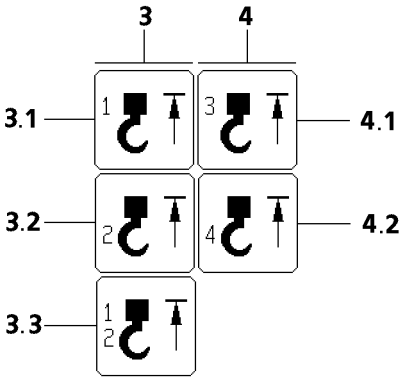

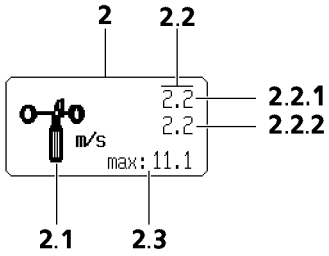

Fig.103473

LWE/ab Muli 010/24201-02-02/en

copyright © Liebherr-Werk Ehingen GmbH 2016

2.6.3 Function check

Make sure that the following prerequisites are met:
- All electrical connections have been made.
- The LICCON computer system is running.

Wind sensor

CAUTION
Danger of accident due to toppling crane!
The wind speed can no longer be determined when attaching a defective wind sensor.
▶ Check the function of the wind sensor after every assembly.

▶ Manually actuate the wind sensor.

Result:

– The icon element „Wind speed“ **2.2** appears on the monitor.

Hoist limit switch

▶ Actuate all active hoist limit switches manually.

Result:

– The appropriate icon element „Hoist top“ appears on the monitor.
– The winch turns off.

Note
▶ When replacing or changing the hoist limit switch, the respective hoist limit switch must have the correct bus address and the correct software version in order to be detected by the bus system.

LWE/ab Muli 010/24201-02-02/en

copyright © Liebherr-Werk Ehingen GmbH 2016

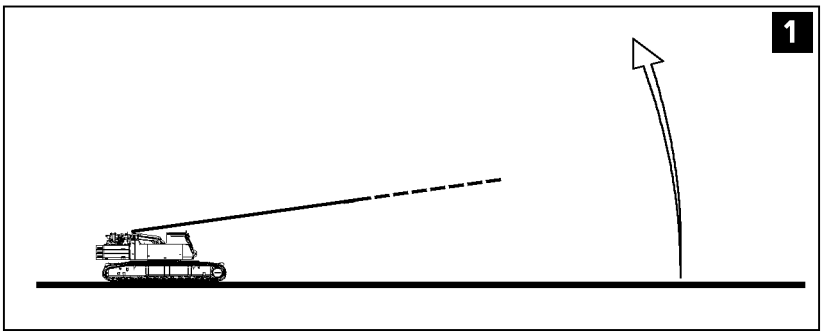

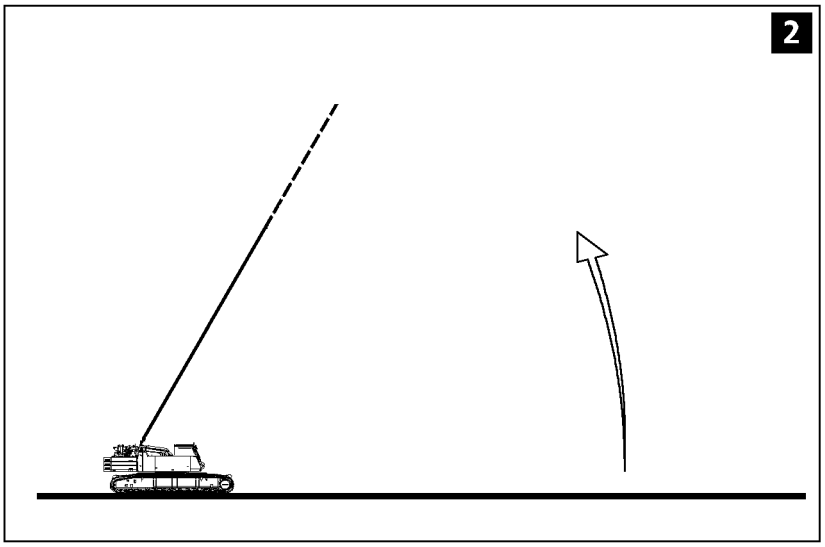

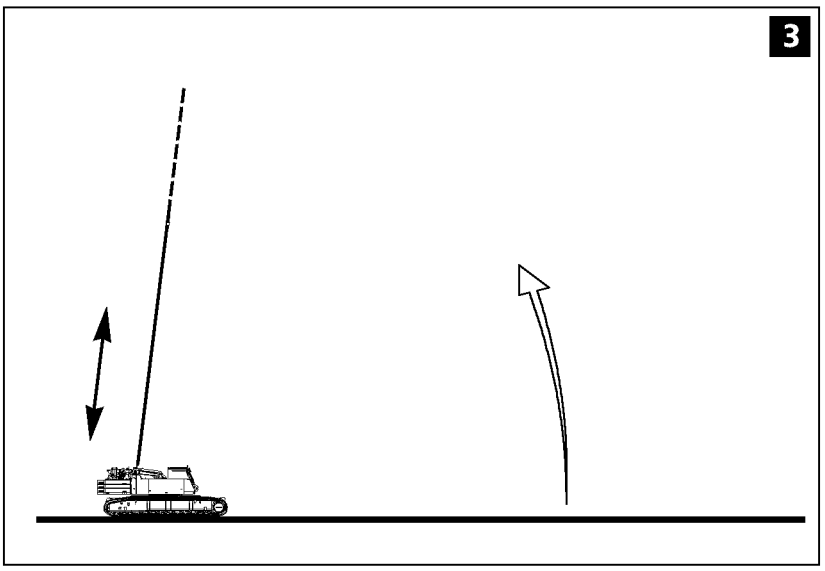

Fig.117352

LWE/ab Muli 010/24201-02-02/en

copyright © Liebherr-Werk Ehingen GmbH 2016

3 Erection

3.1 Preparatory work

Make sure that the following prerequisites are met:
- The track width is extended according to the load chart.
- The crane is aligned in horizontal direction.
- The counterweight has been installed on the turntable according to the load chart.
- The telescopic boom is fully telescoped in.
- The auxiliary boom has been assembled according to the load chart and the operating instructions.
- The end section is folded and secured in operating position.
- All limit switches have been correctly installed and are fully functional.
- All pin connections have been secured.
- The hoist rope has been correctly placed in the rope pulleys and is secured with the rope retaining pins to prevent it from jumping out.
- There is no „debris“ on the telescopic boom and the auxiliary boom.
- The telescopic boom, the auxiliary boom and its components (such as: Limit switch, airplane warning light, wind speed sensor) must be free of snow and ice in winter.

DANGER
Danger of accident!
Incorrectly installed or non-functioning limits switches as well as falling parts (such as: pins, spring pins, ice) can cause accidents.
▶ Install all limit switches, pins and spring pins properly.

▶ Check if all prerequisites have been met.

3.2 Erection procedure

DANGER
Danger of accident due to toppling crane!
The radii specified in the load chart may not be exceeded or fallen below, even if there is no load on the hook! If this regulation is not observed, the crane can topple over.
▶ Compare and check the settings on the LICCON computer system with the actual set up configuration.

Adjustment of the LICCON overload safety device, refer to Crane operating instructions, chapter 4.02.

▶ Set and confirm the LICCON overload protection according to the required set up configuration.
▶ Luff the telescopic boom up with installed auxiliary boom until the LICCON issues the release.
▶ Telescope the telescopic boom out to the values specified in the load chart.

LWE/ab Muli 010/24201-02-02/en

copyright © Liebherr-Werk Ehingen GmbH 2016

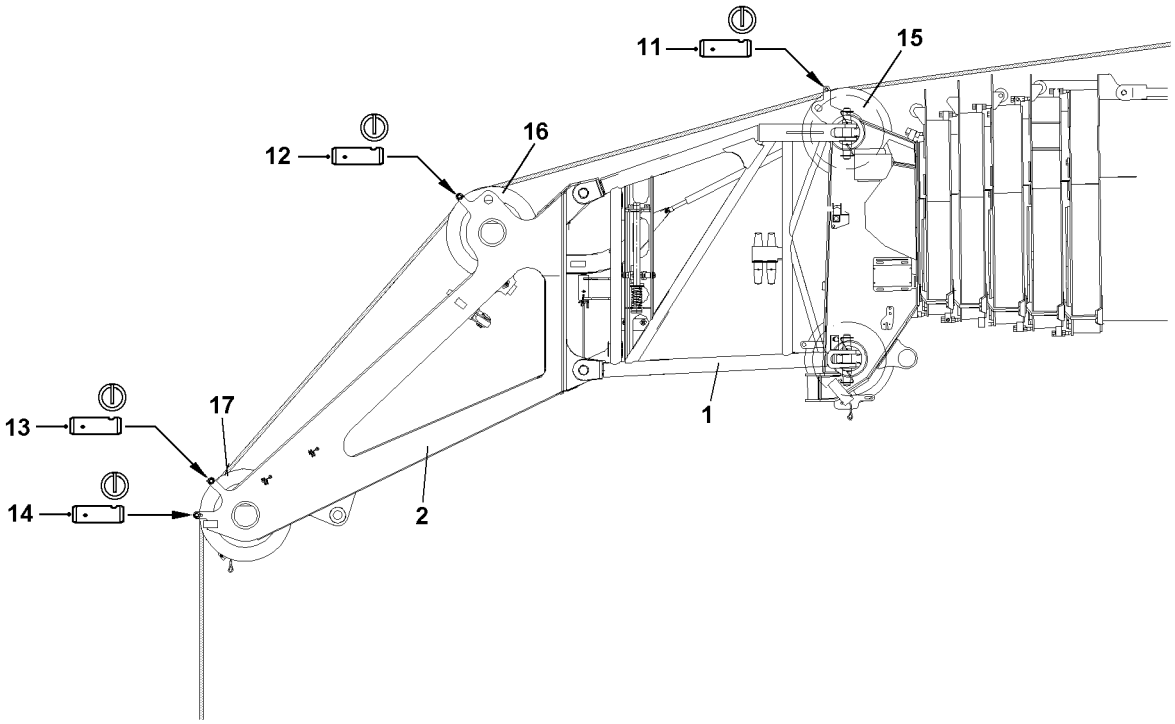

Fig.118508

LWE/ab Muli 010/24201-02-02/en

copyright © Liebherr-Werk Ehingen GmbH 2016

4 Unreeving the hoist rope

DANGER
Danger of falling from auxiliary boom!
When walking on the auxiliary boom to reeve the hoist rope in or out, there is a risk of slipping and falling from the auxiliary boom.
▶ Do not walk on the auxiliary boom.

4.1 Unreeving the hoist rope

Make sure that the following prerequisites are met:

- The telescopic boom is telescoped in.
- The hook block / load hook has been placed on the ground.
- The hoist rope is detached from the rope fixed point.
- The hoist limit switch weight and the chain have been removed.

▶ Release and unpin rope retaining pin **11**, rope retaining pin **12** , rope retaining pin **13** and rope retaining pin **14**.
▶ Spool the hoist rope up.
▶ Insert the rope retaining pin **11**, rope retaining pin **12**, rope retaining pin **13** and rope retaining pin **14** and secure with locking pins.

LWE/ab Muli 010/24201-02-02/en

copyright © Liebherr-Werk Ehingen GmbH 2016

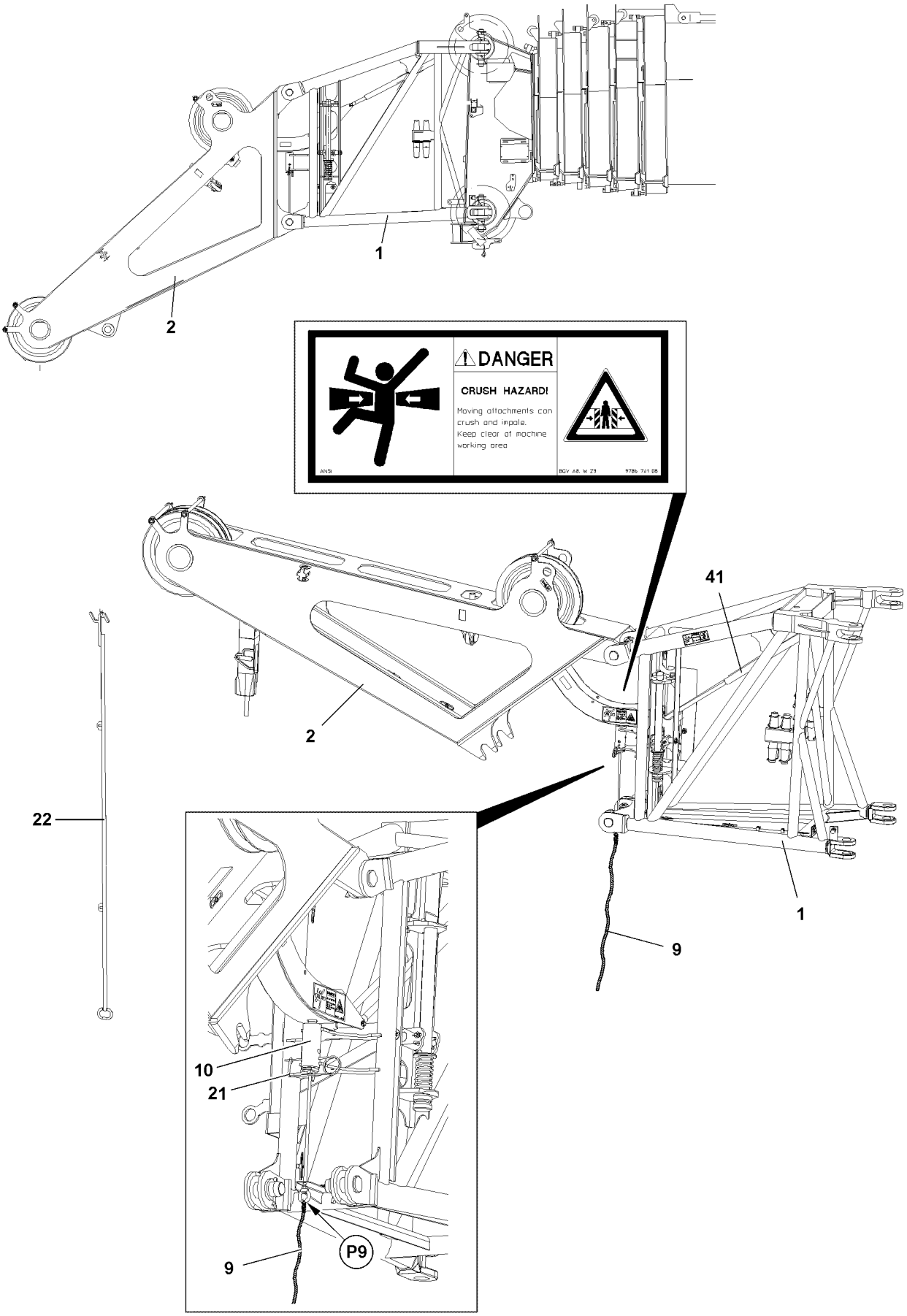

Fig.118507

LWE/ab Muli 010/24201-02-02/en

copyright © Liebherr-Werk Ehingen GmbH 2016

5 Disassembly of the auxiliary boom

5.1 General

DANGER
Danger of fatal injury due to falling auxiliary boom!
The auxiliary boom can fall down due to a disassembly error.
- ▶ Standing under the auxiliary boom during the swing operation is prohibited.
- ▶ It is prohibited for anyone to remain within the swing range as well as the folding area of the auxiliary boom.
- ▶ The auxiliary boom must be secured by an auxiliary rope during the swing process.

WARNING
Danger of falling!
During assembly and disassembly, personnel must be secured with appropriate aids to prevent them from falling! If this is not observed, assembly personnel could fall and suffer fatal injuries!
- ▶ All work aloft, where there is a danger of falling must be carried out with suitable aids.
- ▶ If fall protection equipment is available, then it must be used, see Crane operating instructions, chapter 2.06.
- ▶ If aids are not available and work cannot be carried out from the ground, then the assembly personnel must secure themselves with the supplied fall arrest system to prevent falling, see Crane operating instructions, chapter 2.04.
- ▶ The supplied fall arrest system must be fastened on the fastening and hook points. For safety points, see Crane operating instructions, chapter 2.06.
- ▶ Only step on the aids, ladders and catwalks with clean shoes.
- ▶ Keep aids, ladders and catwalks free of heavy dirt, snow and ice.
- ▶ Do not walk on the auxiliary boom.

Make sure that the following prerequisites are met:
- – The crane is aligned in horizontal direction.
- – The counterweight has been installed on the turntable according to the load chart.
- – The telescopic boom is fully telescoped in.
- – The electrical connection of the auxiliary boom has been disconnected.
- – The telescopic boom has been luffed up to the rear or the side in the 1° position.

LWE/ab Muli 010/24201-02-02/en

copyright © Liebherr-Werk Ehingen GmbH 2016

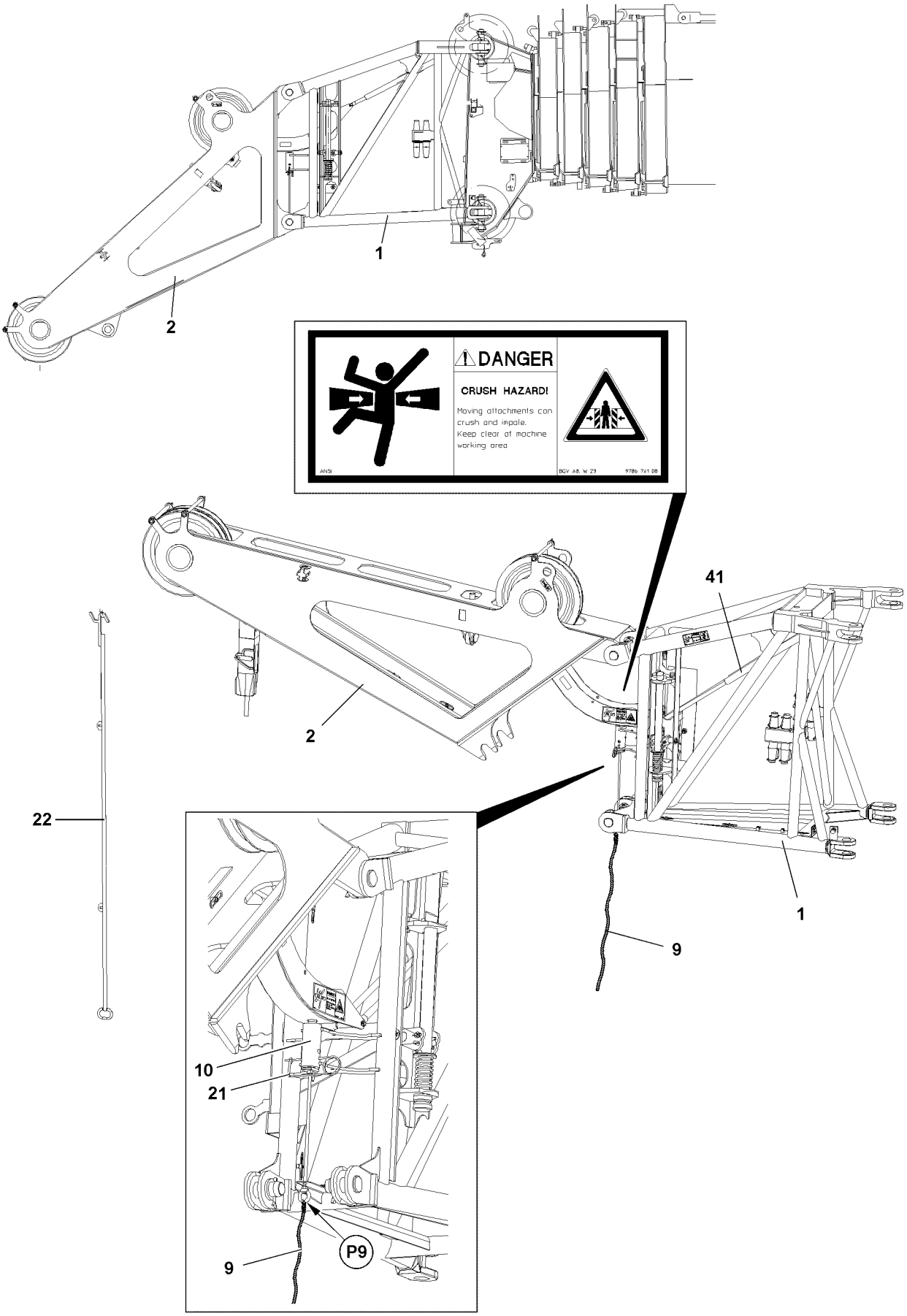

Fig.118507

LWE/ab Muli 010/24201-02-02/en

copyright © Liebherr-Werk Ehingen GmbH 2016

5.2 Disassembly of the auxiliary boom carried on the crane

5.2.1 Folding the end section into transport position

DANGER
Danger of fatal injury in case of defective pneumatic spring!
Defective pneumatic springs **41** no longer provide the supporting action for the movable components on the auxiliary boom.
If the pneumatic spring **41** is defective, the end section **2** can fall down and fatally or seriously injure personnel.
There is an increased danger of accidents.

- ▶ Before unpinning the spring pin **10** and before actuation, check the pneumatic spring **41** for external damage.
- ▶ Do not use auxiliary boom with defective pneumatic spring **41**. Replace the defective pneumatic spring **41**.
- ▶ If the pneumatic spring **41** is defective, support the end section **2** from below or hang it on an auxiliary crane.
- ▶ **2 1**It is strictly prohibited for personnel or objects to remain within the movement range between the end section and the pivot section.
- ▶ It is prohibited for personnel or objects to remain within the danger zone of the moveable components.

- ▶ Check the pneumatic spring **41** for external damage.
- ▶ Attach the auxiliary rope **9** on point **P9**.
- ▶ Remove the retaining pin **21**.
- ▶ Hook the assembly rod **22** in the end section **2** and unpin the spring pin **10** with the auxiliary rope **9**.
- ▶ Fold the end section **2** up with the assembly rod **22** until the spring pin **10** engages.
- ▶ Secure the spring pin **10** with retaining pin **21**.

DANGER
Danger of accident!

- ▶ The spring pin **10** must be engaged and secured **before** the auxiliary boom is swung into transport position.

- ▶ Engage and secure the spring pin **10**.

LWE/ab Muli 010/24201-02-02/en

copyright © Liebherr-Werk Ehingen GmbH 2016

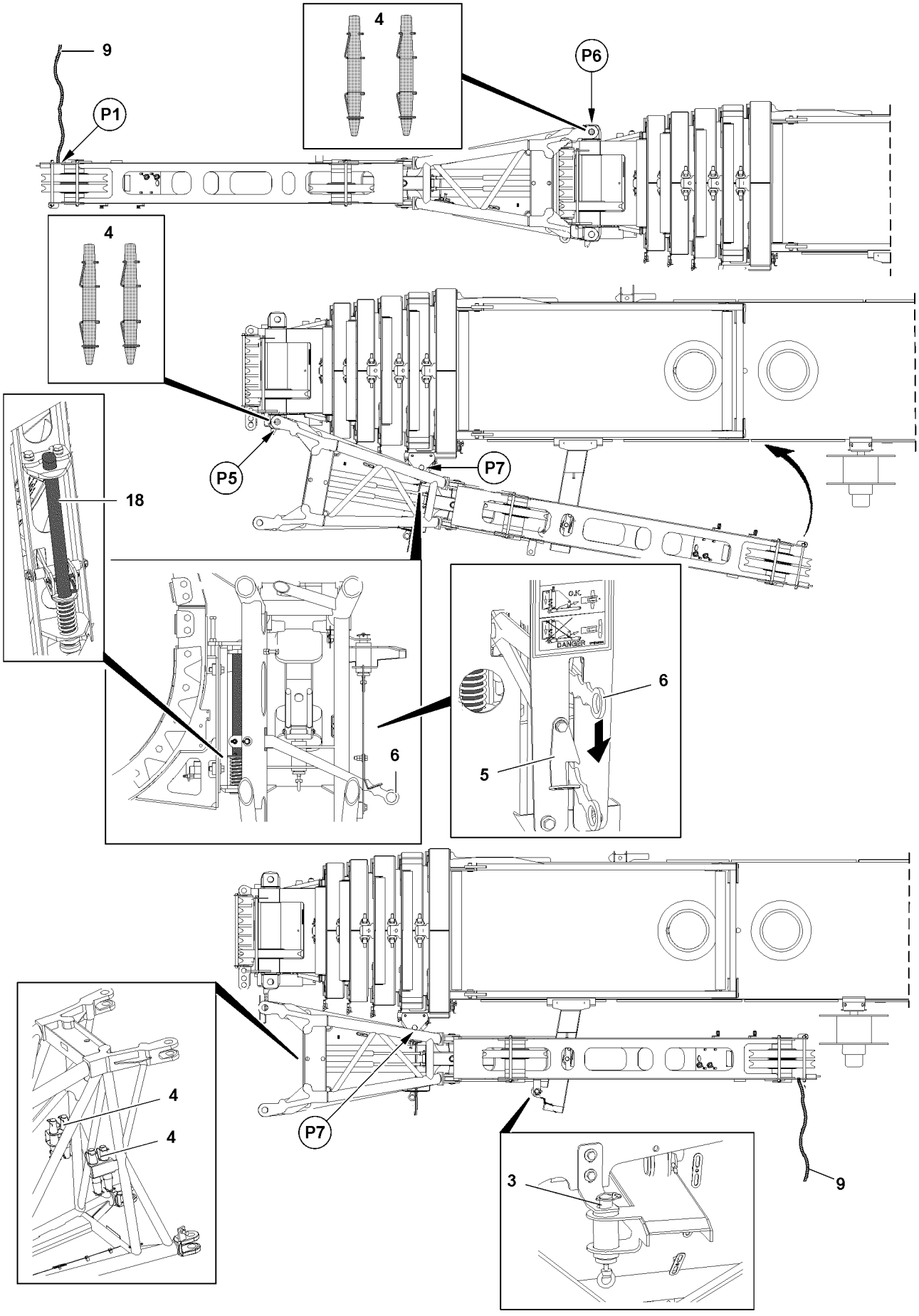

Fig.117353

LWE/ab Muli 010/24201-02-02/en

copyright © Liebherr-Werk Ehingen GmbH 2016

5.2.2 Swinging the auxiliary boom into the transport position

Make sure that the following prerequisite is met:
– The telescopic boom is luffed up to the rear or to the side to 1°.

WARNING
Danger of accident due to involuntary swinging out of the auxiliary boom!
If the telescopic boom is not luffed up to 1°, then the auxiliary boom may not be removed.
▶ Luff the telescopic boom up to 1°.

▶ Attach the auxiliary rope **9** on point **P1**.

DANGER
The auxiliary boom can swing out inadvertently!
While unpinning the pin **4** on point **P6**, the auxiliary boom can swing out inadvertently.

In order to prevent the auxiliary boom from inadvertently swinging out:
▶ Hold the auxiliary boom with the auxiliary rope.
▶ It is prohibited to lean the auxiliary ladder against the auxiliary boom.

▶ Release and unpin pins **4** on the bottom and on top at point **P6**.
▶ Swing the safety bracket **5** to the side.
▶ Disengage the hand lever **6** with the assembly rod from the platform **7** and pull downward.
▶ Swing the auxiliary boom in with the auxiliary rope **9** until the lock **18** audibly engages on point **P7**.
▶ Check if the lock **18** has engaged properly on point **P7**.
▶ Secure hand lever **6** with retaining bracket **5**.

DANGER
Danger of fatal injury due to falling auxiliary boom!
If the pins **4** are unpinned on point **P5** before the lock **18** has audibly engaged, then the auxiliary boom will fall down and possibly fatally injure the assembly personnel.
▶ The pins **4** may not be unpinned until the lock **18** has audibly engaged on point **P7** and the hand lever **6** has been secured with the safety bracket **5**.

▶ Release and unpin pins **4** on the bottom and on top at point **P5**.
▶ Release and unpin the spring pin **3**.
▶ Swing the auxiliary boom in until the spring pin **3** engages.
▶ Secure the spring pin **3**.
▶ Remove the auxiliary rope **9**.

LWE/ab Muli 010/24201-02-02/en

copyright © Liebherr-Werk Ehingen GmbH 2016

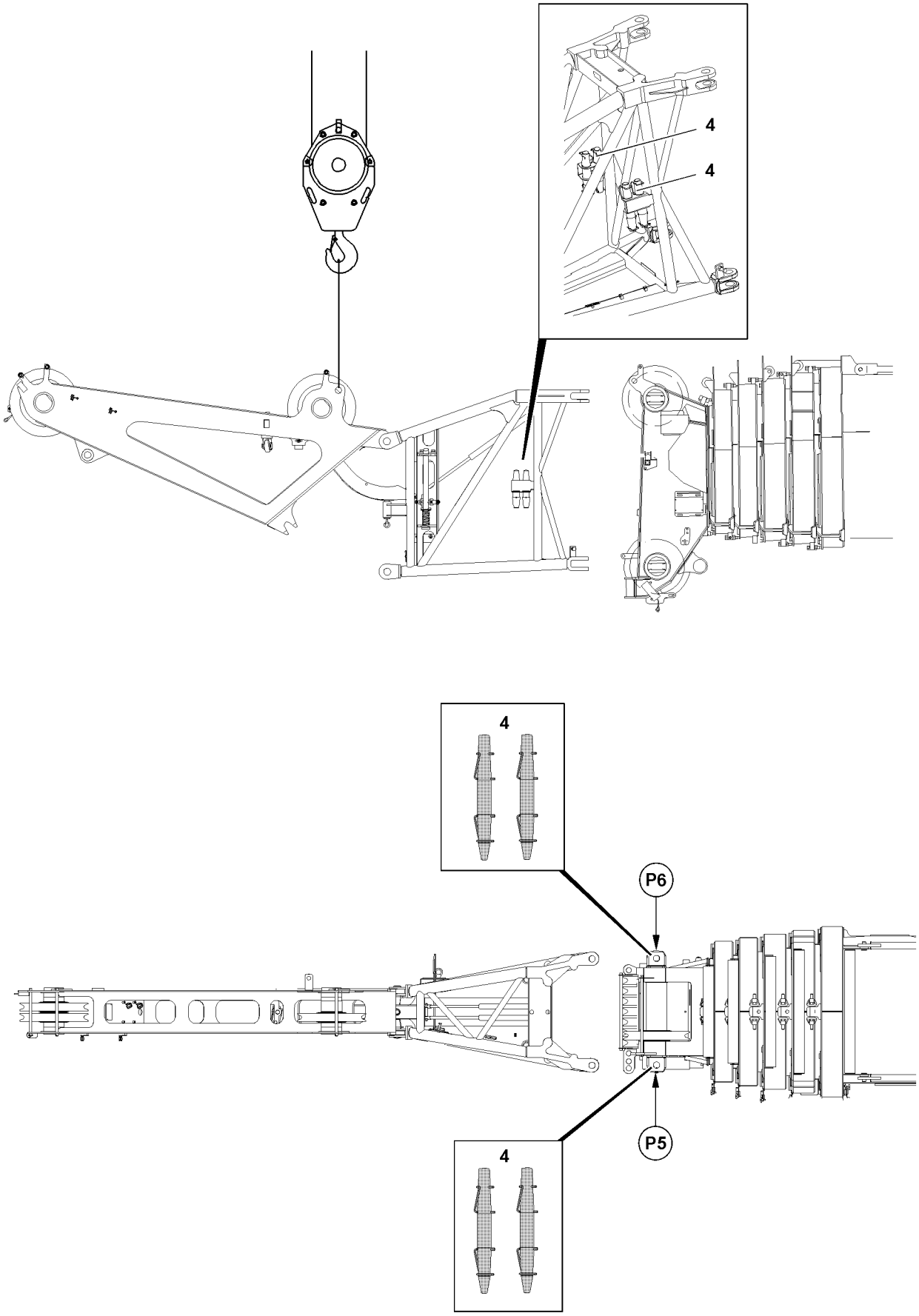

LWE/ab Muli 010/24201-02-02/en

Fig.117350

copyright © Liebherr-Werk Ehingen GmbH 2016

5.3 Disassembly of separately transported auxiliary boom

Make sure that the following prerequisite is met:
- The telescopic boom is luffed up to the rear or to the side to 1°.

▶ Attach the auxiliary crane on the fastening point of the auxiliary boom.

DANGER
Danger of accident when removing the auxiliary boom!
If the following conditions are not met, then the assembly personnel can be fatally injured during disassembly.
- ▶ When knocking out the pins, no personnel may remain under the auxiliary boom!
- ▶ Attach the auxiliary crane so that no angular pull occurs.
- ▶ Only lift as much weight with the auxiliary crane which corresponds to the weight of the auxiliary boom.
- ▶ The auxiliary boom can detach suddenly because of distortion.
- ▶ Do not remove auxiliary boom until it has been secured with the auxiliary crane to prevent it from falling.
- ▶ It is prohibited to lean the auxiliary ladder against the auxiliary boom.

- ▶ Tighten the fastening ropes until the auxiliary boom is secured to prevent it from falling.
- ▶ Unpin the auxiliary boom on the telescopic boom:
- ▶ Release the pin **4** on the bottom on point **P5** and unpin.
- ▶ Release the pin **4** on the bottom on point **P6** and unpin.
- ▶ Release the pin **4** on top on point **P5** and unpin.
- ▶ Release the pin **4** on top on point **P6** and unpin.
- ▶ Insert the pins **4** in the transport receptacles and secure.
- ▶ Place the auxiliary boom on the transport vehicle.

LWE/ab Muli 010/24201-02-02/en

copyright © Liebherr-Werk Ehingen GmbH 2016

Empty page!

copyright © Liebherr-Werk Ehingen GmbH 2016

5.19 Hook blocks

1	Procedure in case of slack rope	3
2	Hook block overview	5
3	Transporting the hook block / load hook	7
4	Installing the single blocks	9
5	Removing the single blocks	13

LWE/ab Muli 010/24201-02-02/en

copyright © Liebherr-Werk Ehingen GmbH 2016

LWE/ab Muli 010/24201-02-02/en

Fig.195219

copyright © Liebherr-Werk Ehingen GmbH 2016

1 Procedure in case of slack rope

1.1 Lowering the hook block if slack rope forms

If the hook block can no longer be lowered due to slack rope formation, then the following steps must be carried out.

1.1.1 Spooling up loose hoist rope

▶ Spool up loose hoist rope between the boom head and the wind carefully onto the winch.

Note

▶ A slight rope slack must remain between the boom head and the winch!

1.1.2 Luffing the boom down

NOTICE

Risk of collision!

When luffing the boom down, the hoist rope length can shorten and pull the hook block against the boom head.

▶ Monitor the distance of the hook block to the boom head!

▶ Luff the boom down carefully.

Result:

– The hoist rope between the boom head and the winch is tensioned.

1.1.3 Lowering the hook block

▶ Lower the hook block carefully with the hoist gear.

LWE/ab Muli 010/24201-02-02/en

copyright © Liebherr-Werk Ehingen GmbH 2016

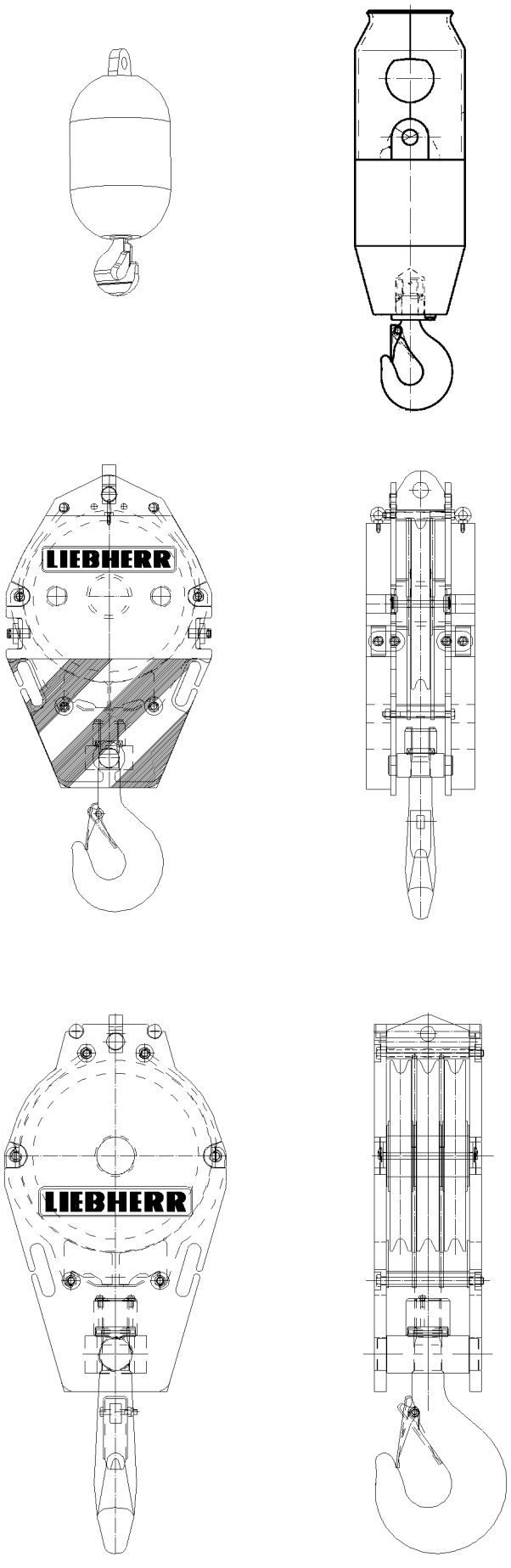

Fig.108963

LWE/ab Muli 010/24201-02-02/en

copyright © Liebherr-Werk Ehingen GmbH 2016

2 Hook block overview

2.1 Handling of hook blocks

Note

- ▶ For the load hooks and hook blocks approved for this crane type refer to the separate load chart manual!
- ▶ The hook blocks shown in this chapter are only examples and can differ from your hook block in type and number of rope pulleys. The different assembly and disassembly procedures are therefore only an example of the description for a number of different hook blocks!

DANGER

Hook block weights!

If the data in the erection and take down charts as well as the load charts are not observed, dangerous situations up to toppling of the crane can occur!

Personnel can be severely injured or killed, in addition, high property damage can result!

- ▶ Observe the data in the erection and take down charts!
- ▶ The specifications in the load charts must be adhered to!
- ▶ The crane operator bears the sole and full responsibility for the adherence to the data in the erection and take down charts as well as the load charts!

Differently sized hook blocks can be used for various loads.

NOTICE

Rope damage due to insufficient hook block weight!

If the hook block weight is too low to tighten the hoist rope sufficiently, spooling problems may occur on the winches when lowering and lifting the hook block due to slack rope formation!

The hoist rope can be damaged!

- ▶ In order to prevent spooling problems on the winches, the hook block weight may be increased with auxiliary weights, if necessary!
- ▶ If problems develop in the assembly and set up conditions due to the weight increase of the hook block, auxiliary weights must be removed again!

LWE/ab Muli 010/24201-02-02/en

copyright © Liebherr-Werk Ehingen GmbH 2016

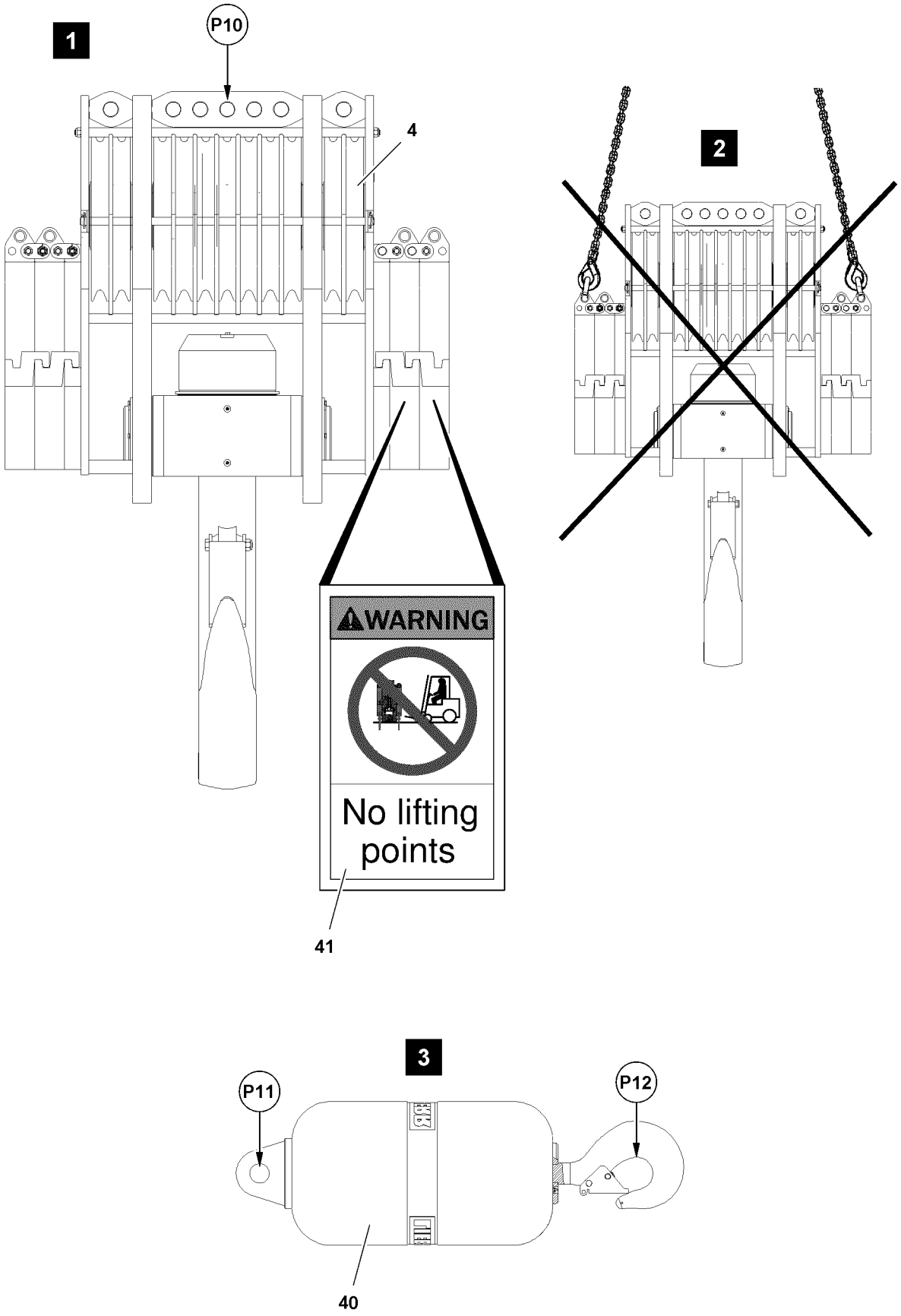

LWE/ab Muli 010/24201-02-02/en

Fig.118076

copyright © Liebherr-Werk Ehingen GmbH 2016

3 Transporting the hook block / load hook

3.1 Transporting the hook block / load hook with the crane

WARNING
Falling hook block during transport!
If the hook block **4** is fastened incorrectly, then the fasting point can fail and the hook block **4** can fall down!
Personnel can be killed or seriously injured!
- ▶ Fasten the hook block **4** exclusively in the center on the fastening point **P10**, illustration **1**.
- ▶ Do **not** fasten the hook block **4** on the auxiliary weights, illustration **2**.

▶ Fasten the load hook **40** on the fastening point **P11** or on the hook **P12**, illustration **3**.

3.2 Transporting the hook block / load hook with the forklift

WARNING
Falling hook block during transport!
If the hook block **4** is lifted with a forklift on the auxiliary weights, the auxiliary weights can fail and the hook block **4** can fall down! See sign **41**.
Personnel can be killed or seriously injured!
- ▶ Place the hook block **4** for transport on the EU-pallet.
- ▶ Do **not** lift the hook block **4** with a forklift on the auxiliary weights.

▶ Transport the hook block **4** with a EU-pallet.

LWE/ab Muli 010/24201-02-02/en

copyright © Liebherr-Werk Ehingen GmbH 2016

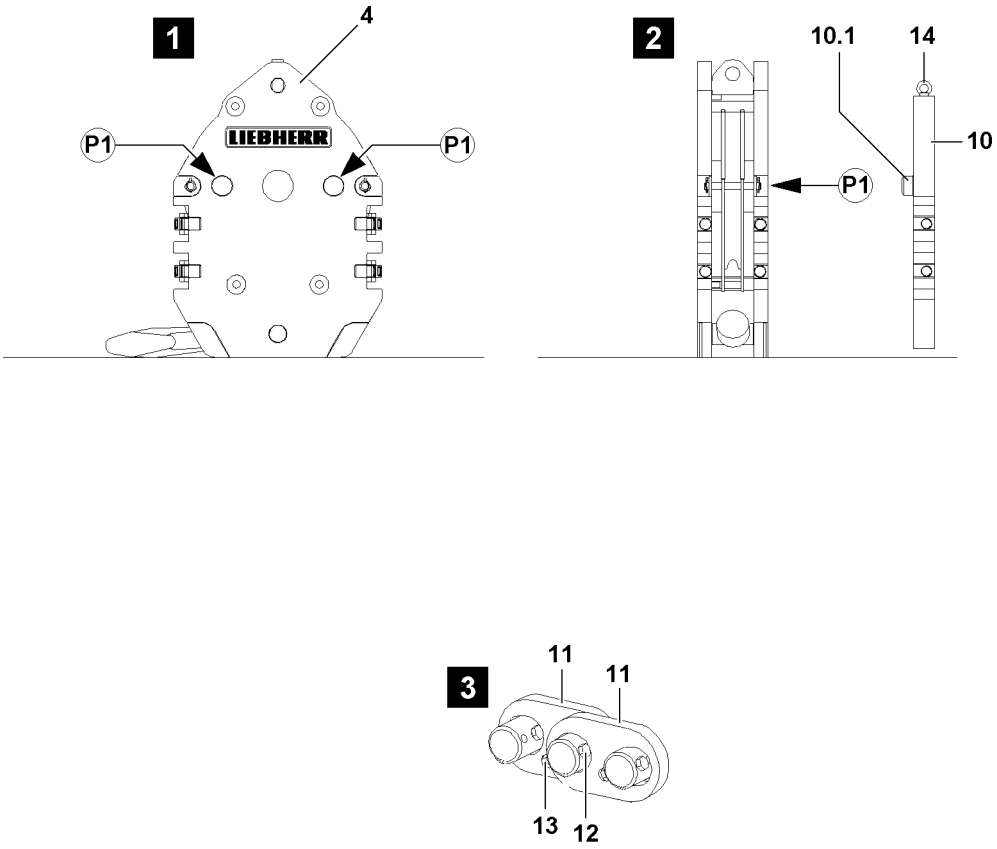

Fig.108965

LWE/ab Muli 010/24201-02-02/en

copyright © Liebherr-Werk Ehingen GmbH 2016

4 Installing the single blocks

4.1 Installing the auxiliary weights

Note

▶ The own weight for each auxiliary weight is marked on the auxiliary weight!

WARNING

Toppling of hook block!

If the auxiliary weights are installed one-sided, the hook block can topple over!

Personnel can be severely injured or killed!

▶ The auxiliary weights may only be installed **individually** and alternately on the left and right on the hook block!

▶ When the required auxiliary weight is installed on the hook block, the difference between the left and right side may never be more than one auxiliary weight!

▶ Asymmetrical installation of auxiliary weights is prohibited!

▶ Do not exceed the maximum permissible own weight of the hook block! The maximum permissible own weight is engraved on ballastable hook blocks. See „Engraving WT max.“.

Make sure that the following prerequisite is met:

– The hook block is placed on the ground.

WARNING

Falling auxiliary weights!

If the auxiliary weights are not properly installed on the hook block, then they can fall down during installation or in crane operation!

Personnel can be severely injured or killed!

▶ Standing under a suspended auxiliary weight is prohibited!

▶ Make sure that the auxiliary weights are properly installed and secured!

▶ Crane operation with insufficiently secured auxiliary weights is prohibited!

▶ Attach the auxiliary weight **10** on the ring screw **14** on the auxiliary crane.

WARNING

Danger of crushing!

When swinging the auxiliary weights to the hook block, personnel can be severely injured or killed!

Fingers, hands and arms can be crushed or severed!

▶ It is prohibited for anyone to remain between the hook block and the auxiliary weight!

▶ Swing auxiliary weights in to the hook block with utmost caution and at the least possible speed!

LWE/ab Muli 010/24201-02-02/en

copyright © Liebherr-Werk Ehingen GmbH 2016

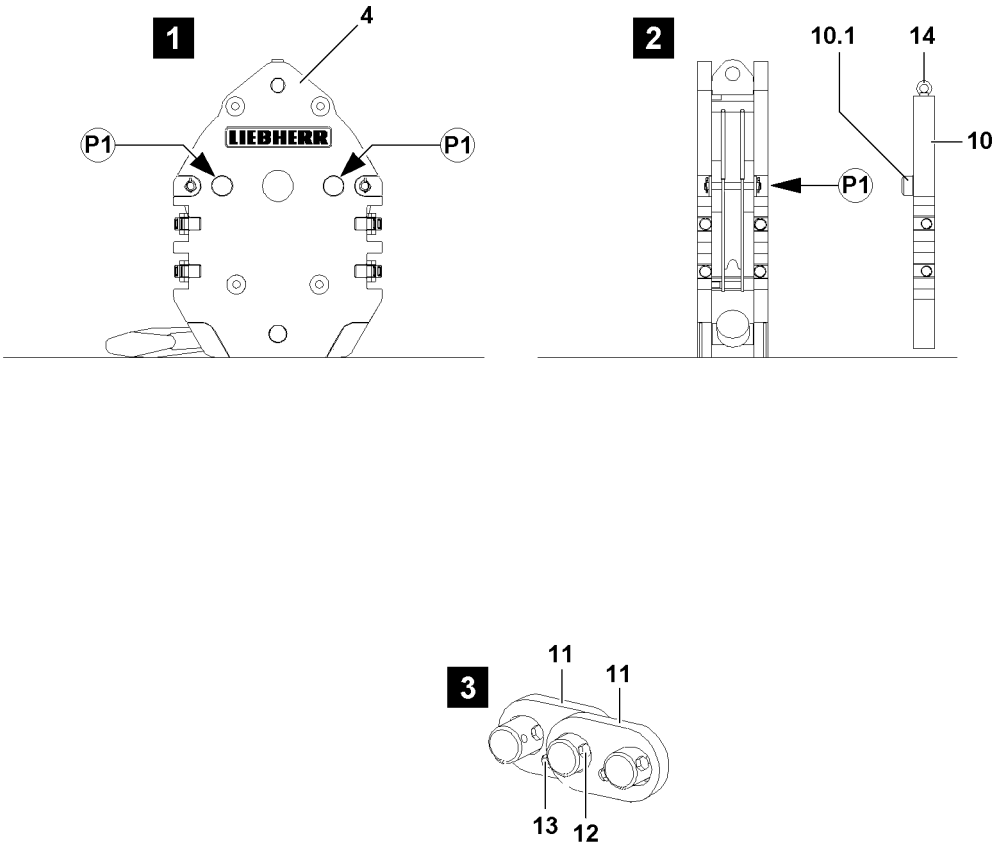

Fig.108965

LWE/ab Muli 010/24201-02-02/en

copyright © Liebherr-Werk Ehingen GmbH 2016

- ▶ Align the auxiliary weight **10** on the hook block.
- ▶ Move the centering pin **10.1** of the auxiliary weight into the centering bores **P1** on the hook block.

WARNING
Falling auxiliary weights!
If all mounting brackets **11** are removed simultaneously on an unsecured auxiliary weight, then the auxiliary weight can fall down!
Personnel can be severely injured or killed!
- ▶ Never remove all mounting brackets **11** of an unsecured auxiliary weight at the same time!
- ▶ Always install or remove the mounting brackets **11** alternately!

- ▶ Install the mounting brackets **11** on the side and connect the hook block with the auxiliary weight **10**, illustration **3**.
- ▶ Secure the mounting brackets **11** with screws **12** and lock nuts **13**, illustration **3**.

Note
- ▶ Additional auxiliary weights must be connected with the mounting brackets **11**!

WARNING
Falling auxiliary weights!
The auxiliary weights can fall down by removing the auxiliary crane!
Personnel can be severely injured or killed!
- ▶ Remove the auxiliary crane only when it is ensured that the auxiliary weight **10** is properly secured with the mounting brackets **11**!

When the respective auxiliary weight is properly installed and secured:
- ▶ Remove the auxiliary crane.

4.2 Preparing the hook block for crane operation

Note
- ▶ The reeving of the hook blocks is described in chapter 4.06 of the Crane operating instructions!
- ▶ Observe the „permissible hook block weights“ in the erection and take down charts!

- ▶ Reeve the hoist rope according to the instructions in chapter 4.06 of the Crane operating instructions and the reeving plans!

LWE/ab Muli 010/24201-02-02/en

copyright © Liebherr-Werk Ehingen GmbH 2016

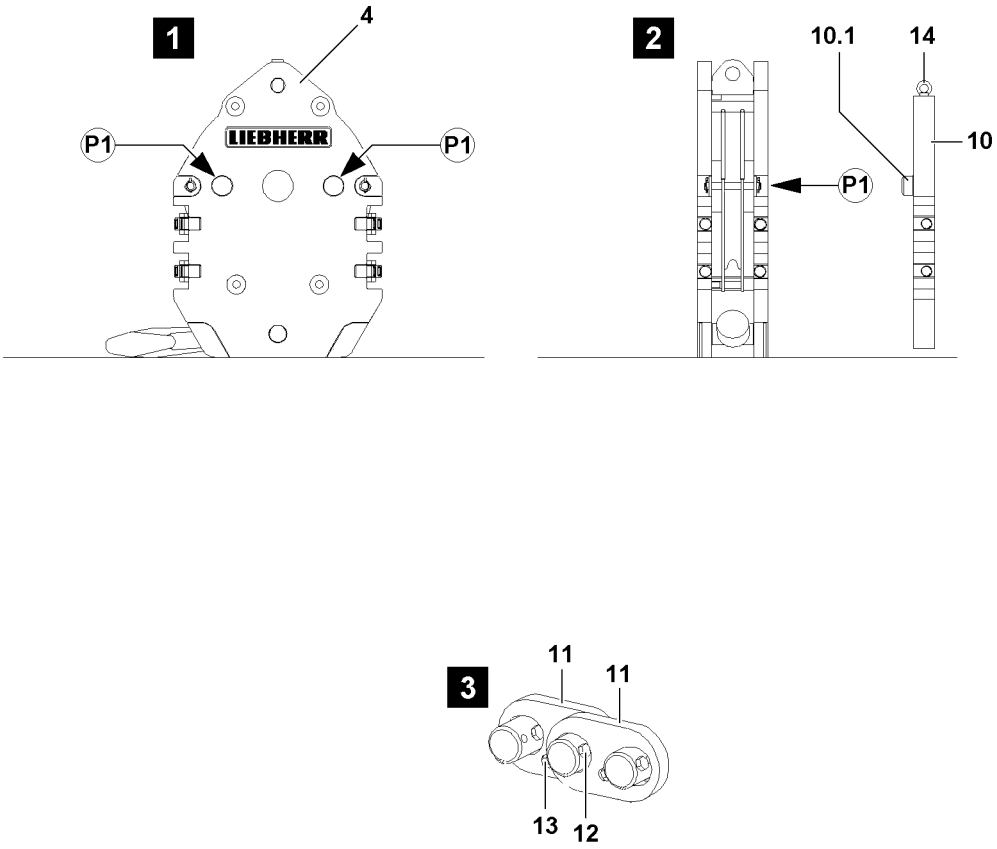

LWE/ab Muli 010/24201-02-02/en

Fig.108965

copyright © Liebherr-Werk Ehingen GmbH 2016

5 Removing the single blocks

5.1 Preparing the hook block for removal

Note
- ▶ The unreeving of the hook blocks is described in chapter 4.06 of the Crane operating instructions!
- ▶ Observe the „permissible hook block weights“ in the erection and take down charts!

Make sure that the following prerequisites are met:
- The ground is sufficiently load bearing to take on the weight of the hook block and the auxiliary weights safely.
- The ground is level and horizontal.

▶ Lower the hook block completely to the ground.

When the hook block was placed down on the ground properly:
▶ Unreeve the hoist rope according to chapter 4.06 of the Crane operating instructions!

5.2 Removing the auxiliary weights

Note
- ▶ The own weight for each auxiliary weight is marked on the auxiliary weight!

WARNING
Toppling of hook block!
If the auxiliary weights are removed one-sided, the hook block can topple over!
Personnel can be severely injured or killed!
- ▶ The auxiliary weights may only be removed **individually** and alternately on the left and right on the hook block!
- ▶ The difference between the left and the right side at removal of the auxiliary weights may never be more than one auxiliary weight!
- ▶ Asymmetrical removal of auxiliary weights is prohibited!

WARNING
Falling auxiliary weights!
If the auxiliary weights on the pulley block are not properly removed, then they can fall down at removal!
Personnel can be severely injured or killed!
- ▶ Standing under a suspended auxiliary weight is prohibited!

▶ Attach the auxiliary weight **10** on the ring screw **14** on the auxiliary crane.
▶ Tension the fastening equipment carefully.

LWE/ab Muli 010/24201-02-02/en

copyright © Liebherr-Werk Ehingen GmbH 2016

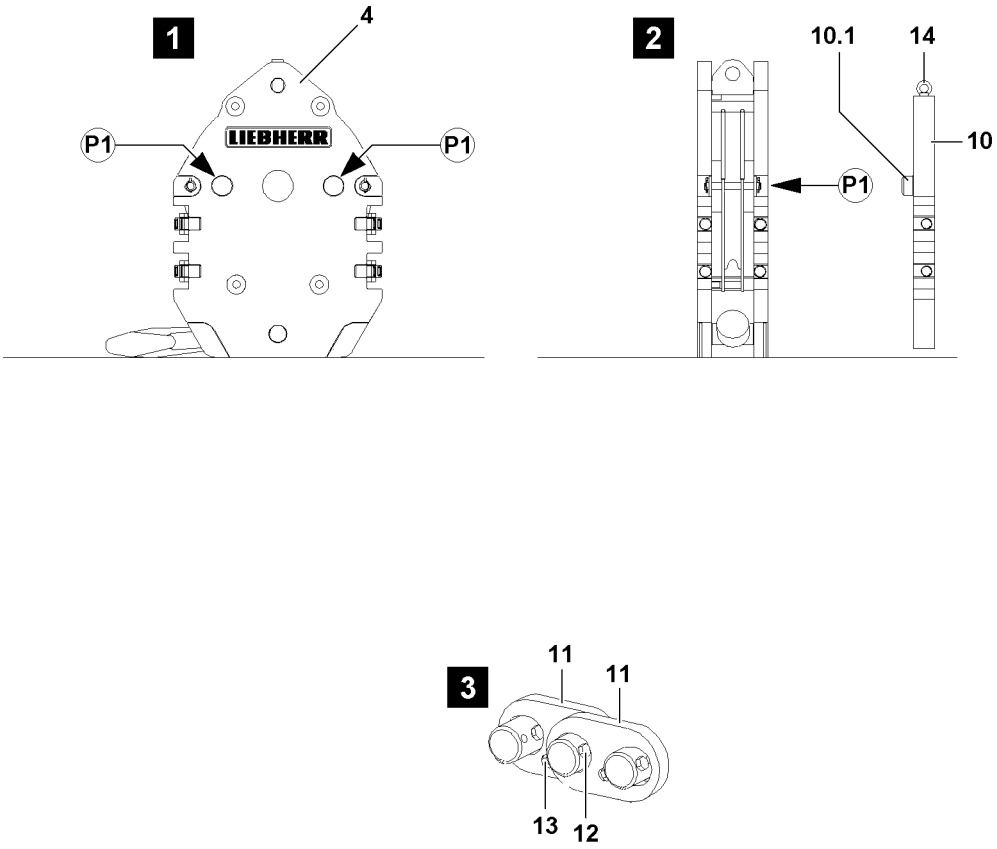

Fig.108965

LWE/ab Muli 010/24201-02-02/en

copyright © Liebherr-Werk Ehingen GmbH 2016

WARNING
Oscillating auxiliary weights!
During the removal of the auxiliary weights, the auxiliary weights can start to swing back and forth!
Personnel can be severely injured or killed!
- ▶ It is prohibited for anyone to remain in the danger zone!
- ▶ Make sure that the auxiliary weight which is being removed is properly attached on the auxiliary crane before releasing the mounting brackets!
- ▶ Angular pull is prohibited!

When the fastening equipment is tensioned on the auxiliary weight:
- ▶ Release the screw connection on the mounting brackets of the outermost auxiliary weight and remove the screws.

WARNING
Falling auxiliary weights!
If all mounting brackets **11** are removed simultaneously on an unsecured auxiliary weight, then the auxiliary weight can fall down!
Personnel can be severely injured or killed!
- ▶ Never remove all mounting brackets **11** of an unsecured auxiliary weight at the same time!
- ▶ Always install or remove the mounting brackets **11** alternately!

- ▶ Pull the mounting brackets **11** off to the side.

WARNING
Falling auxiliary weights!
If additional auxiliary weights which are being removed are released, then these auxiliary weights can fall down!
Personnel can be severely injured or killed!
- ▶ Make sure, before removing the outermost auxiliary weight, that the other auxiliary weights are secured with the mounting brackets **11**!

If additional mounting brackets **11** must be removed to release the outermost auxiliary weight:
- ▶ Reinstall the mounting brackets **11** again immediately, so that only the auxiliary weight which is being removed is released.
- ▶ Lift the auxiliary weight with the auxiliary crane from the hook block.
- ▶ Place the auxiliary weight onto the ground.
- ▶ Remove the auxiliary crane.
- ▶ Remove additional auxiliary weights as described above.

LWE/ab Muli 010/24201-02-02/en

copyright © Liebherr-Werk Ehingen GmbH 2016

Empty page!

copyright © Liebherr-Werk Ehingen GmbH 2016

5.25 Telescopic boom extension

1	General	3
2	Assembly	5
3	Establishing the electrical / hydraulic connections	7
4	Erection	7
5	Disassembly	9

LWE/ab Muli 010/24201-02-02/en

copyright © Liebherr-Werk Ehingen GmbH 2016

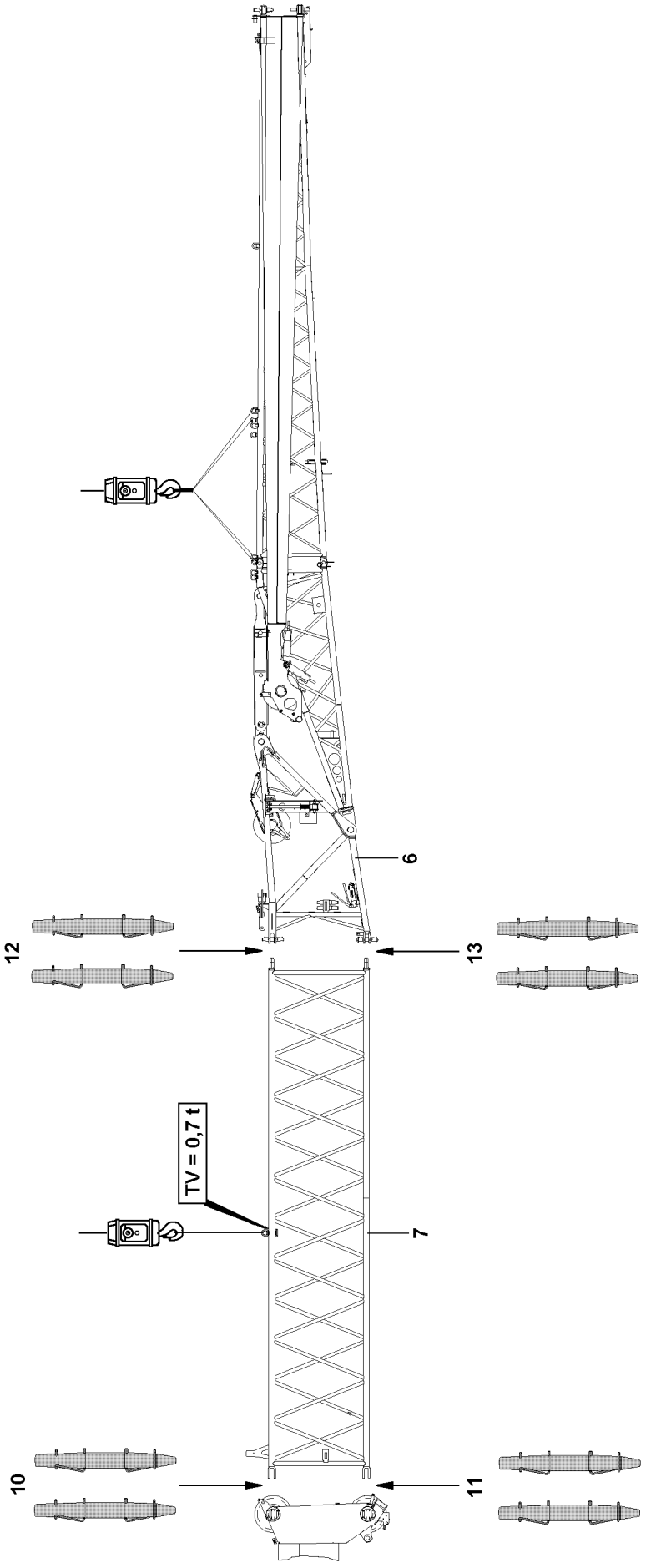

Fig.114346

LWE/ab Muli 010/24201-02-02/en

copyright © Liebherr-Werk Ehingen GmbH 2016

1 General

In order to increase the lifting height on this crane, a 7 m long telescopic boom extension can be installed.

DANGER
Danger of falling!
During assembly and disassembly, assembly personnel must be secured with appropriate aids to prevent them from falling. If this is not observed, assembly personnel could fall and suffer life-threatening injuries.
▶ Also refer to hazard warnings in the Crane operating instructions, chapter 5.01, section „Assembly / disassembly“.

1.1 Telescopic boom extension fastening points

DANGER
Danger of accident due to incorrect attachment!
Life-threatening situations can arise if the telescopic boom extension is improperly or incorrectly attached!
▶ Attach the telescopic boom extension according to the fastening points shown on the signs!
▶ The appropriate fastening eye hooks / fastening points are marked with signs.
▶ Attaching the telescopic boom extension on non-intended points or on any arbitrary location is **prohibited**!

CAUTION
Damage of fastening points!
If the fastening equipment is too short, then the fastening points on the telescopic boom extension can be damaged!
▶ To attach the telescopic boom extension, fastening equipment with a strand length of at least 2000 mm each must be used!

Description	Abbreviation	Weight
Telescopic boom extension	TV	0.7 t

LWE/ab Muli 010/24201-02-02/en

copyright © Liebherr-Werk Ehingen GmbH 2016

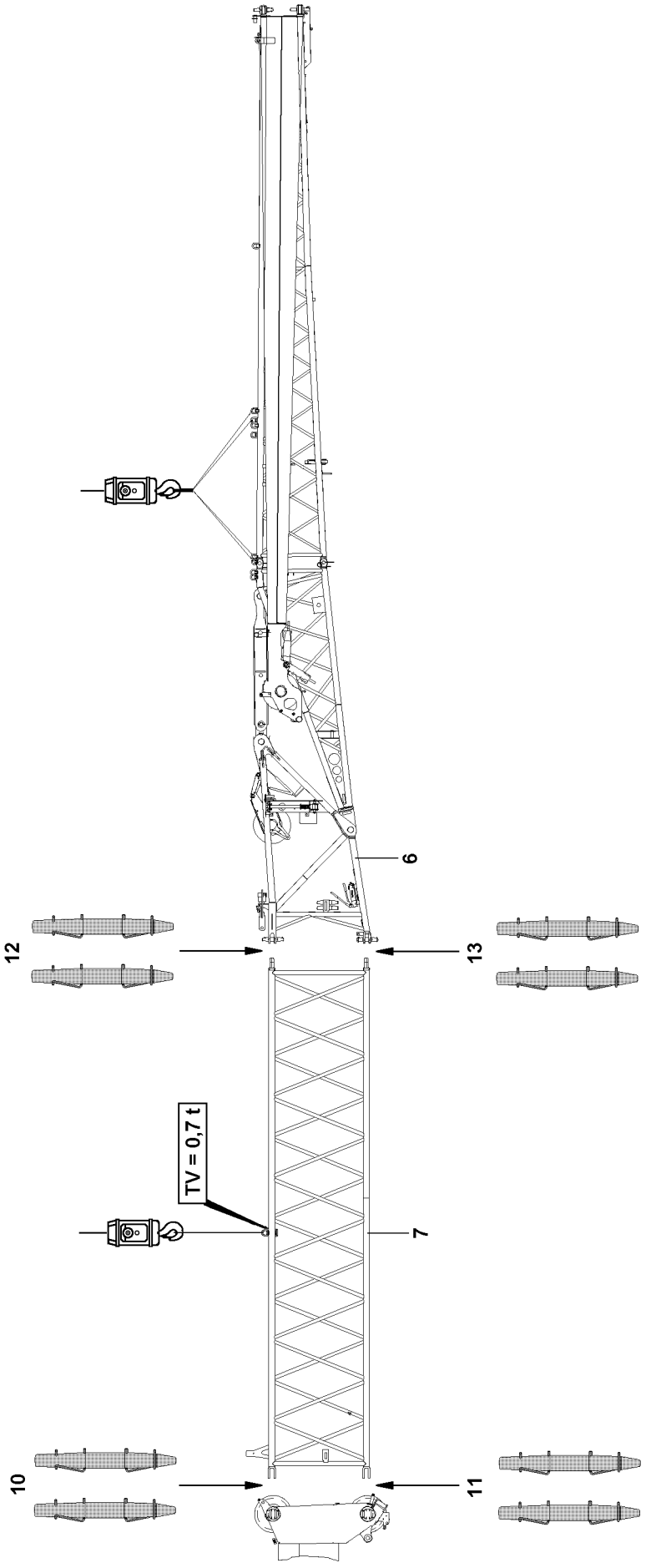

Fig.114346

LWE/ab Muli 010/24201-02-02/en

copyright © Liebherr-Werk Ehingen GmbH 2016

2 Assembly

DANGER
Danger of accident during the assembly / disassembly of the telescopic boom extension!
If the following conditions are not fulfilled, people may be fatally injured during assembly / disassembly.

- ▶ When knocking the pins out, no personnel may be underneath the telescopic boom extension!
- ▶ Unpin or insert the pins in the sequence specified in the operating instructions!
- ▶ Unpin or insert the pins from the top to the bottom!
- ▶ The use of cotter pins or spring retainers is prohibited on pins **10**, pins **11**, pins **12** and pins **13**!
- ▶ To secure the pins **10**, pins **11**, pins **12** and pins **13**, use the special retaining clips.
- ▶ Attach the auxiliary crane so that no diagonal pull occurs!

Make sure that the following prerequisites are met:

- The crane is properly supported and horizontally aligned.
- The counterweight has been installed on the turntable according to the load chart.
- The telescopic boom is fully telescoped in.
- The telescopic boom has been luffed down to the rear or the side in the 0° position.
- An auxiliary crane is on hand.

2.1 Assembly procedure

- ▶ Attach telescopic boom extension **7** to the auxiliary crane and insert into the fork heads at the telescopic boom.
- ▶ Pin the telescopic boom extension **7** with the telescopic boom: Insert the pins **10** on both sides from top to bottom and secure.
- ▶ Insert the pins **11** on both sides from top to bottom and secure.

For the fastening points of the folding jib, see chapter 5.02.

- ▶ Attach folding jib to the auxiliary crane and insert into the fork heads at the telescopic boom extension **7**.
- ▶ Pin the folding jib with the telescopic boom extension **7**: Insert the pins **12** on both sides from top to bottom and secure.
- ▶ Insert the pins **13** on both sides from top to bottom and secure.

For more information concerning folding jib assembly see chapter 5.02.

- ▶ Completely assemble the folding jib.

LWE/ab Muli 010/24201-02-02/en

copyright © Liebherr-Werk Ehingen GmbH 2016

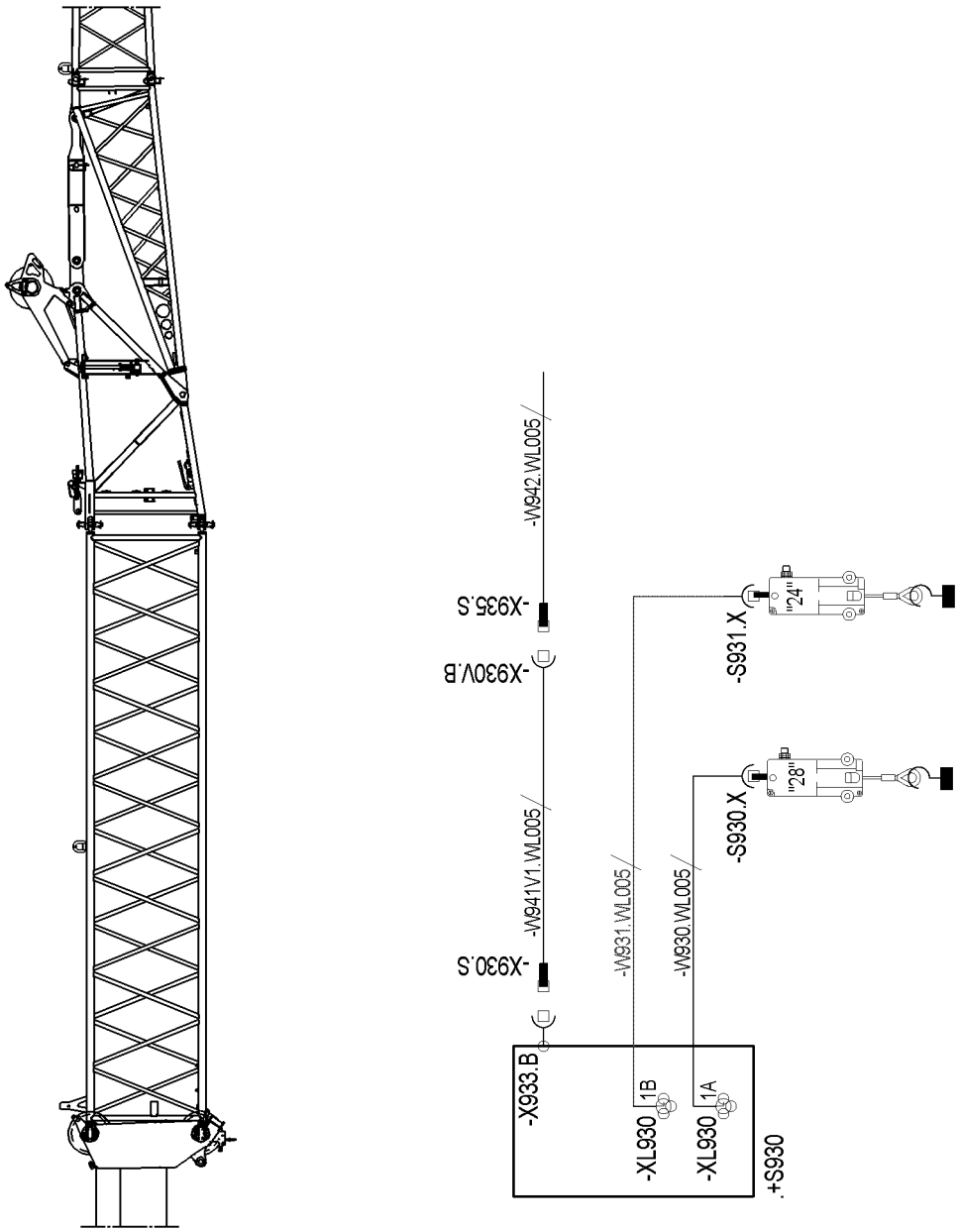

LWE/ab Muli 010/24201-02-02/en

Fig.114347

copyright © Liebherr-Werk Ehingen GmbH 2016

3 Establishing the electrical / hydraulic connections

3.1 Establishing the hydraulic connection

A hydraulic connection to the folding jib must only be established for a hydraulic angle adjustment (TNZK operation). Hydraulic lines cannot be incorrectly connected due to the different diameters of the hydraulic connections.

For operation with a hydraulic folding jib:

▶ Establish the hydraulic connections.

After operation with a hydraulic folding jib:

▶ Protect the connections from contamination.

3.2 Establishing the electrical connection

▶ Insert the cable plug **-X930.S** into the socket **-X933B**.

▶ Insert the cable plug **-X935S** into the socket **-X930VB**.

For remaining electrical connections to the folding jib, see Crane operating instructions, Chapter 5.02.

▶ Establish the electrical connection for the folding jib.

4 Erection

Carry out the erection according to the Crane operating instructions, chapter 5.02.

LWE/ab Muli 010/24201-02-02/en

copyright © Liebherr-Werk Ehingen GmbH 2016

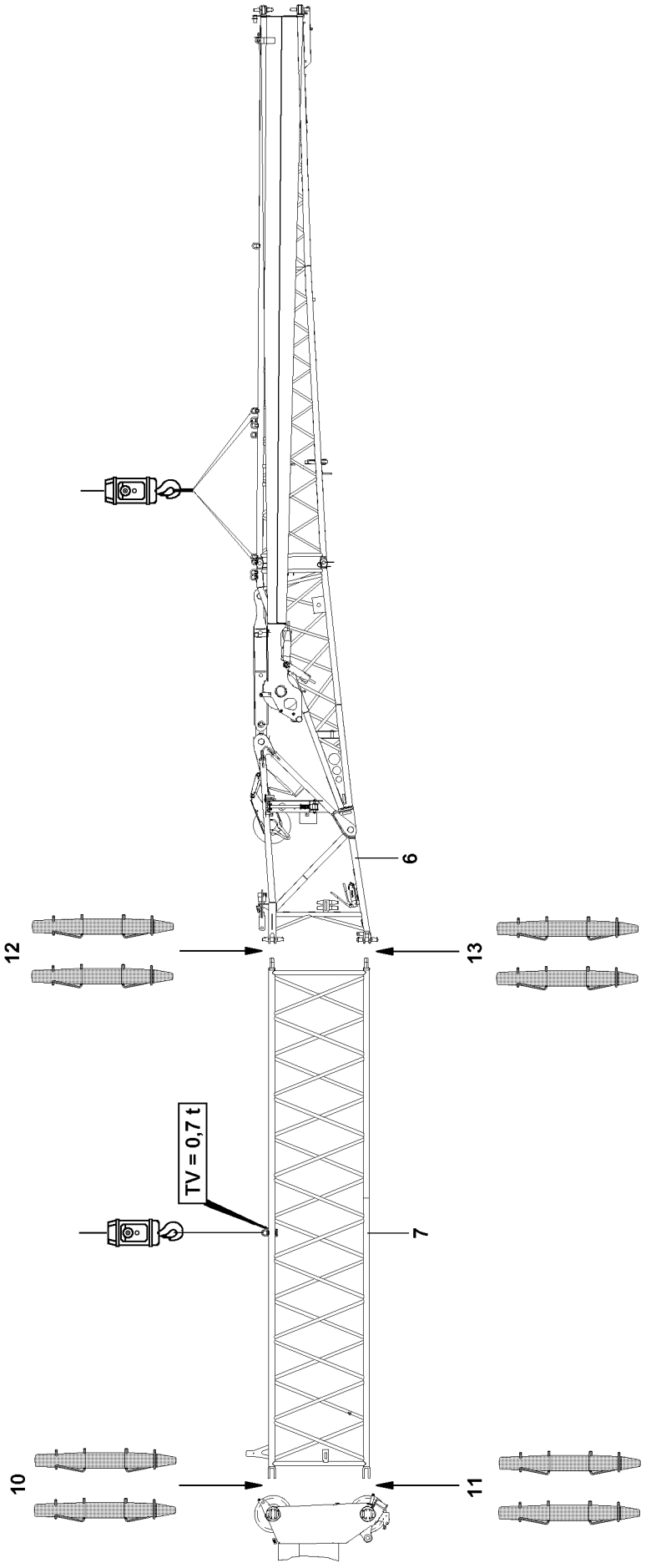

Fig.114346

LWE/ab Muli 010/24201-02-02/en

copyright © Liebherr-Werk Ehingen GmbH 2016

5 Disassembly

DANGER
Danger of accident during the assembly / disassembly of the telescopic boom extension!
If the following conditions are not fulfilled, people may be fatally injured during assembly / disassembly.

- When knocking the pins out, no personnel may be underneath the telescopic boom extension or the folding jib!
- Remove or insert the pins in the sequence specified in the operating instructions!
- Unpin or insert the pins from the top to the bottom!
- Attach the auxiliary crane so that no diagonal pull occurs!
- Only lift a weight with the auxiliary crane that corresponds to the weight of the folding jib or telescopic boom extension that is being removed!
- The folding jib or telescopic boom extension may detach suddenly because of distortion!
- Do not remove folding jib or telescopic boom extension until it has been secured with the auxiliary crane to prevent it from falling!
- Leaning the auxiliary ladder on the folding jib or the telescopic boom extension is prohibited if it is just being removed!

DANGER
Danger of accident due to incorrect attachment!
Life-threatening situations can arise if the telescopic boom extension is improperly or incorrectly attached!

- Attach the telescopic boom extension according to the fastening points shown on the signs!
- The appropriate fastening eye hooks / fastening points are marked with signs.
- Attaching the telescopic boom extension on non-intended points or on any arbitrary location is **prohibited**!

CAUTION
Damage of fastening points!
If the fastening equipment is too short, then the fastening points on the telescopic boom extension can be damaged!

- To attach the telescopic boom extension, fastening equipment with a strand length of at least 2000 mm each must be used!

LWE/ab Muli 010/24201-02-02/en

copyright © Liebherr-Werk Ehingen GmbH 2016

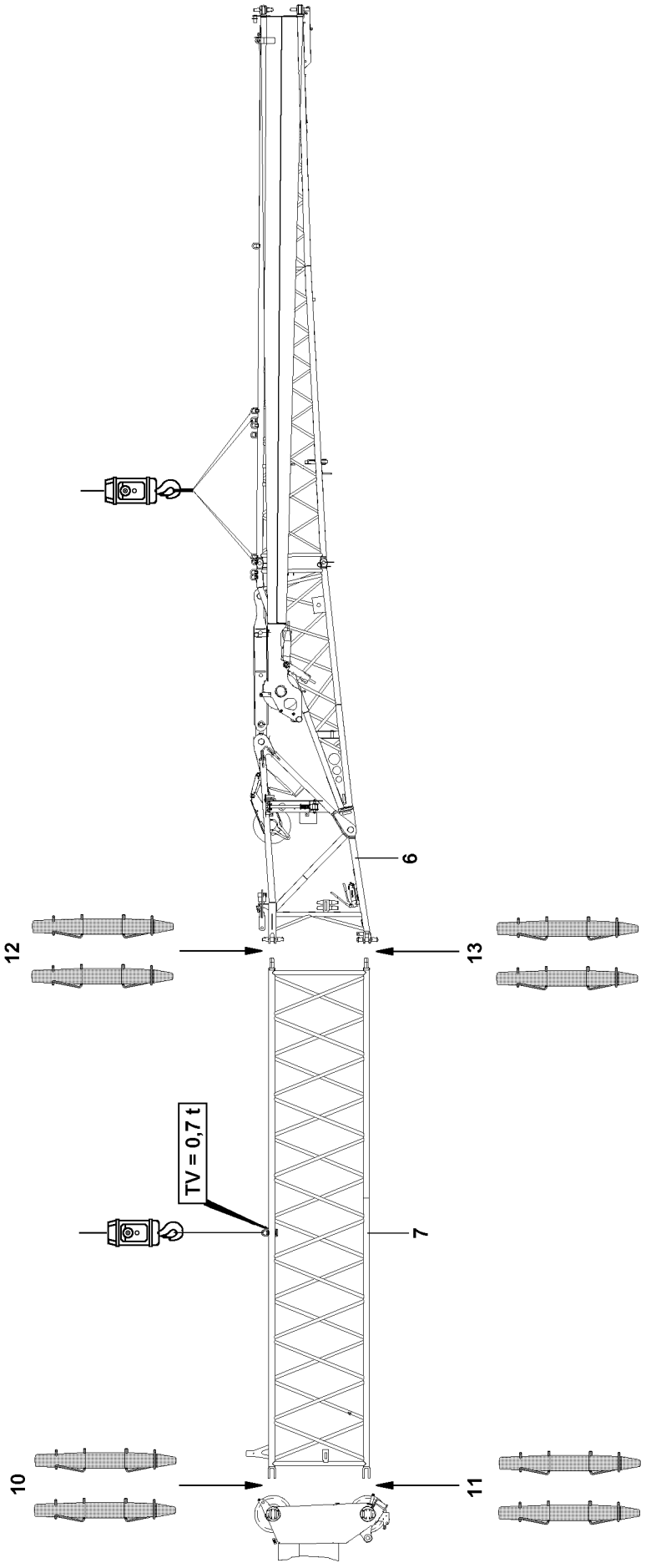

Fig.114346

LWE/ab Muli 010/24201-02-02/en

copyright © Liebherr-Werk Ehingen GmbH 2016

5.1 Disassembly procedure

Make sure that the following prerequisites are met:
- The crane is properly supported and horizontally aligned.
- The telescopic boom is fully telescoped in.
- The telescopic boom has been luffed down to the rear or the side in the 0° position.
- The folding jib is in the 0° position.
- The end section, if it is carried along, is folded in and locked.
- The electrical and hydraulic lines have been disconnected.
- An auxiliary crane is on hand.

Note

▶ Fastening points folding jib, see Crane operating instructions, chapter 5.02.

▶ Attach the fastening ropes on the folding jib and tighten until the folding jib is secured to prevent it from falling.
▶ Release pins **13** at both sides and unpin from top to bottom.
▶ Release pins **12** at both sides and unpin from top to bottom.
▶ Put down folding jib.
▶ Attach the fastening ropes on the telescopic boom extension **7** and tension until the telescopic boom extension **7** is secured to prevent it from falling down.
▶ Release pins **10** at both sides and unpin from top to bottom.
▶ Release pins **11** at both sides and unpin from top to bottom.
▶ Place the telescopic boom extension **7** down.

The following tasks are only necessary if the folding jib is to be driven along with the crane.

▶ Attach folding jib to the auxiliary crane and insert into the fork heads at the telescopic boom.
▶ Pin the folding jib to telescopic boom: Insert the pins **10** on both sides from top to bottom and secure.
▶ Insert the pins **11** on both sides from top to bottom and secure.

For the remaining disassembly of the folding jib, see Crane operating instructions, chapter 5.02.

▶ Completely disassemble the folding jib.

LWE/ab Muli 010/24201-02-02/en

copyright © Liebherr-Werk Ehingen GmbH 2016

Empty page!

copyright © Liebherr-Werk Ehingen GmbH 2016

5.31 Bluetooth Terminal (BTT)

1	Display / operating element BTT	3
2	Start menu of BTT	12
3	Settings and condition displays on the BTT	15
4	Orienting the BTT to the crane	17
5	Crawler travel gear menu	19
6	Menu Engine operation	27
7	Menu Support	37
8	Menu Assembly functions	47
9	Menu Test system	61
10	Operation BTT	63
11	Measures in case of problems	65

LWE/ab Muli 010/24201-02-02/en

copyright © Liebherr-Werk Ehingen GmbH 2016

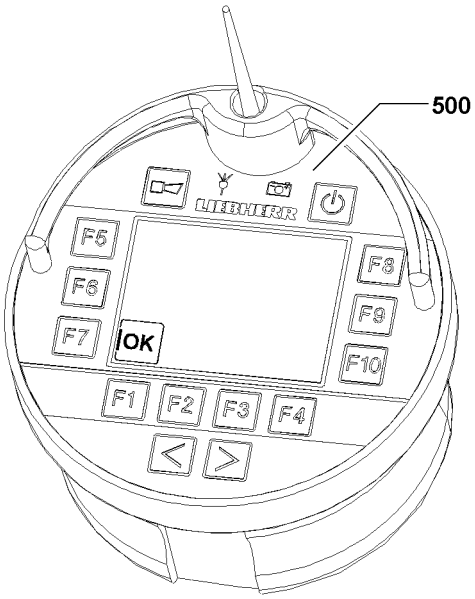

Fig.114221

LWE/ab Muli 010/24201-02-02/en

copyright © Liebherr-Werk Ehingen GmbH 2016

1 Display / operating element BTT

Note
- ▶ The Bluetooth Terminal is described as BTT in the description.
- ▶ The Bluetooth Basis is described as BTB in the description.

The BTT is a combined display / operating element for the crane. Selected crane movements can be carried out. The data exchange is made via the BTB on the crane. The data exchange can also be made wireless as well as via a connector cable.

The BTT is operated using function keys F1 - F10 and two changeover buttons.

Note
- ▶ The illustrations or icons in the monitor display of the BTT are only examples.
- ▶ They may differ from the crane!

Via the BTT **500**, you can call up various menus. Various crane functions can be selected or preselected, turned on or off, or directly activated in these menus.

The operation of the BTT **500** via the function keys and changeover buttons:

Function keys
- The function of the function keys is menu dependent. For exact description, see the respective menu section.

Changeover buttons
- The function of the changeover buttons is menu dependent. For exact description, see the respective menu section.

NOTICE
The BTT will be destroyed!
- ▶ Under no circumstances clean the BTT **500** with a jet of water or a steam cleaner.

LWE/ab Muli 010/24201-02-02/en

copyright © Liebherr-Werk Ehingen GmbH 2016

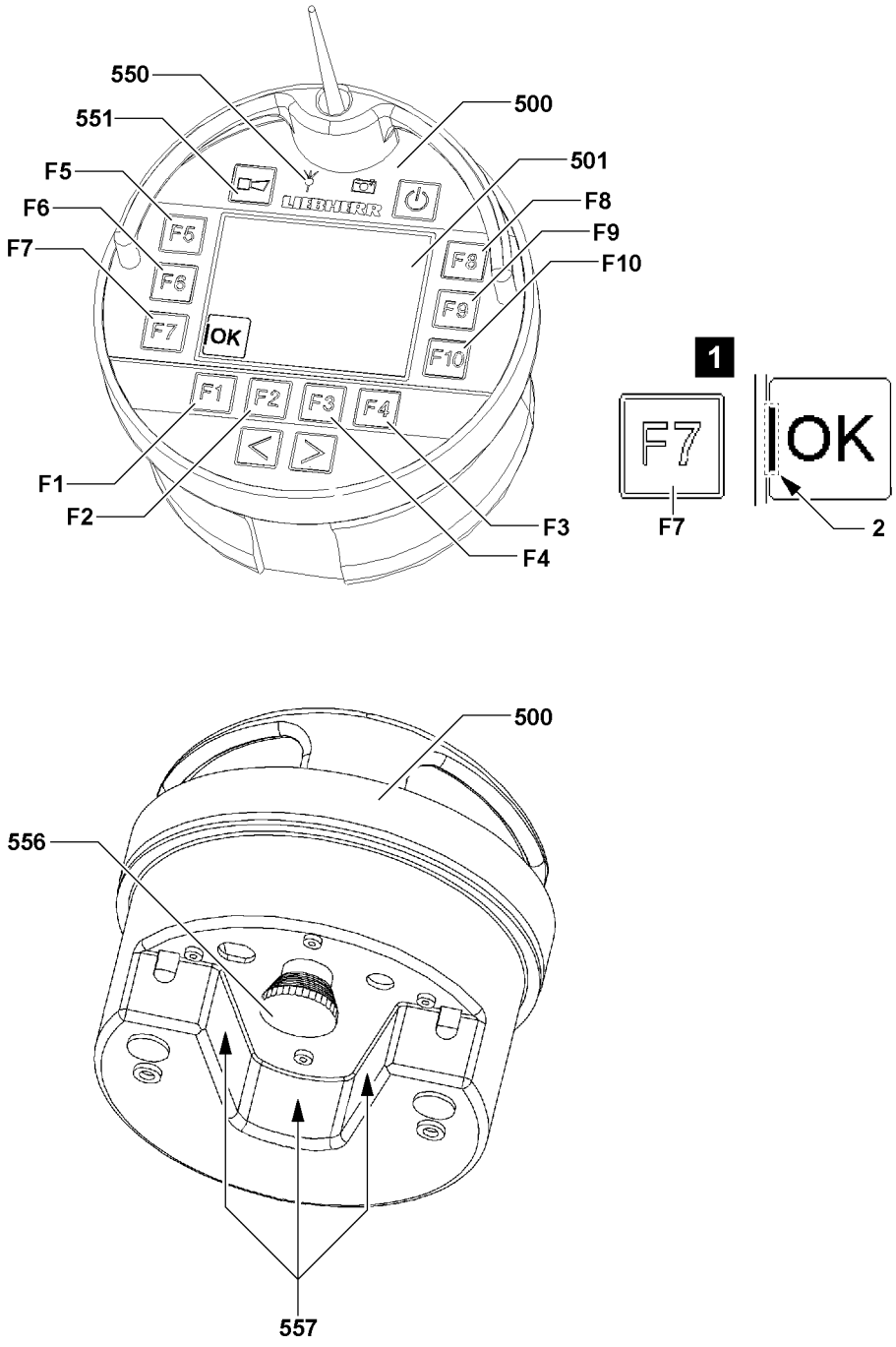

Fig.114222

LWE/ab Muli 010/24201-02-02/en

copyright © Liebherr-Werk Ehingen GmbH 2016

1.1 Important information for BTT

The following important information must be observed for operation with the BTT **500**:

- The machine number on the data tag of the crane cab must match the machine number on the BTT display **501**.
- It can only be turned on when the EMERGENCY STOP switch **556** on the rear of the BTT is **not** actuated.
- The rechargeable battery of the BTT is only charged if the EMERGENCY STOP switch **556** on the rear of the BTT is **not** actuated when plugging it into the charging module.
- When a function is selected via a function key, the corresponding icon is surrounded with a black border. In some case, additional icons are shown on the display.
- The operation of the BTT must be made with two hands for safety reasons, see section „Release of button block on the BTT“.
- During crane operation via the BTT **500**, the complete crane must be in the field of visibility of the operator.
- Before any movement, which is controlled via the BTT **500**, the horn **551** must be actuated.
- As soon as the reception of the radio signal deteriorates, the indicator light **550** lights up orange.
- The reach of the radio signal can fluctuate due to local conditions.
- If the radio contact between the BTT **500** and the BTB is interrupted or the EMERGENCY STOP switch **556** on the rear of the BTT **500** is actuated, the crane movement stops.
- Keep the BTT **500** and the charging module clean.
- Protect the BTT **500** from direct sun exposure.
- Protect the BTT **500** from dirt and moisture.

Note

Function keys **F1** to **F10**

▶ Icons are assigned to the individual function keys. A small bar **2** marks the assigned button, see illustration **1**. Example for function key **F7**.

1.2 Release of the button block on the BTT

To prevent inadvertent crane operation, movements to be carried out on the BTT are secured by a button block. The 2-Hand keypad **557** can be activated by finger touch. The button block is removed.

After selecting a function, the actual movement (operation) is only released after activation of the 2-hand keypad **557**. Released icons are highlighted with the color **purple**.

If the icon is released and the respective function key is pressed, the movement is carried out.

Note

▶ Any actuation of the 2-hand keypad **557** is stored for 30 seconds. If no movement is actuated within these 30 seconds or if the 2-hand keypad **557** is actuated again, then the button block is activated and a signal tone sounds.

LWE/ab Muli 010/24201-02-02/en

copyright © Liebherr-Werk Ehingen GmbH 2016

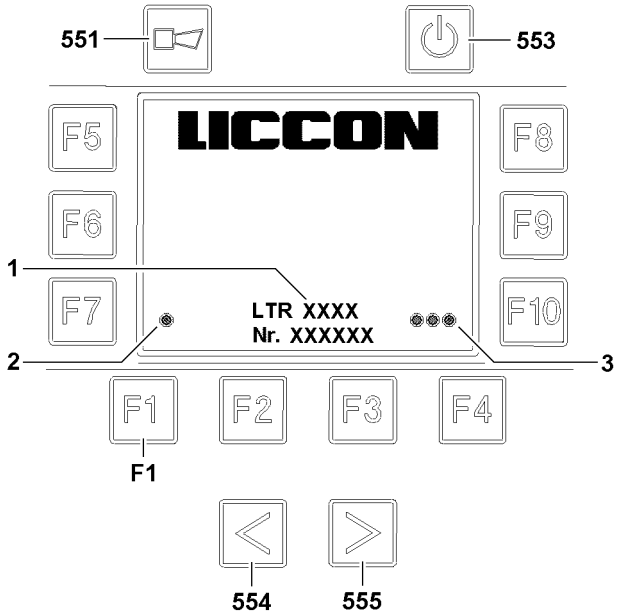

Fig.114223

LWE/ab Muli 010/24201-02-02/en

copyright © Liebherr-Werk Ehingen GmbH 2016

1.3 Connecting the BTB and BTT

Note
▶ If crane type and crane number **2** do not match, a connection of BTB and BTT is not possible.

To be able to control the crane via the BTT a connection to the BTB must be established.

The connection is based on a pairing process and a code calibration.

1.3.1 Pairing process

If the BTT is plugged into the charging module when the ignition is turned on, then a pairing process is carried out automatically with the BTB.

Carry out the pairing process by hand:

To do so, the turned on BTT must be plugged into the charging module. Various connecting parameters are compared and checked for a match via an infrared interface.

When the pairing process is completed successfully, the indicator light **1** lights up green.

Note
▶ If the pairing process does not run successfully, contact your **Liebherr Service location** or **Liebherr-Werk Ehingen**!

1.3.2 Code calibration

If the BTT is plugged into the charging module when the ignition is turned on, then the code calibration is made automatically.

Carry out the code calibration by hand:

One after the other, press the button **554**, then the button **555** and then the function key **F1**.

When the code calibration is completed successfully, all indicator lights **3** light up green.

LWE/ab Muli 010/24201-02-02/en

copyright © Liebherr-Werk Ehingen GmbH 2016

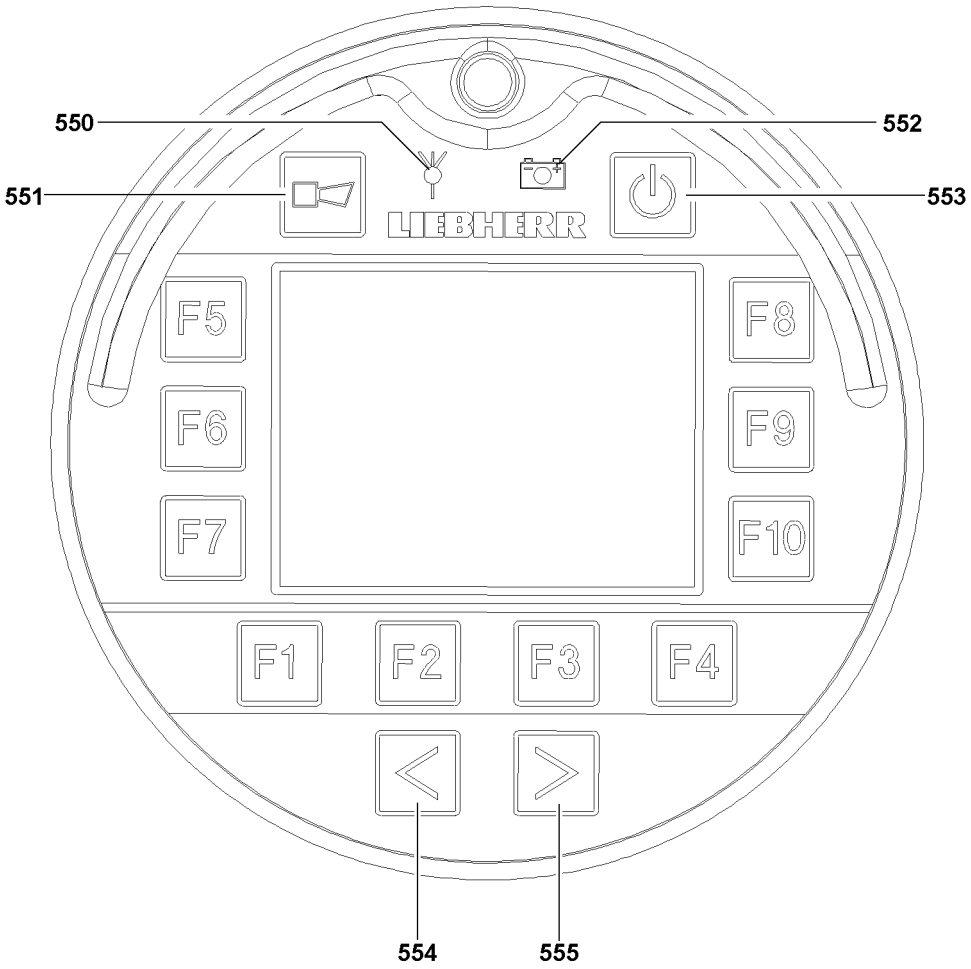

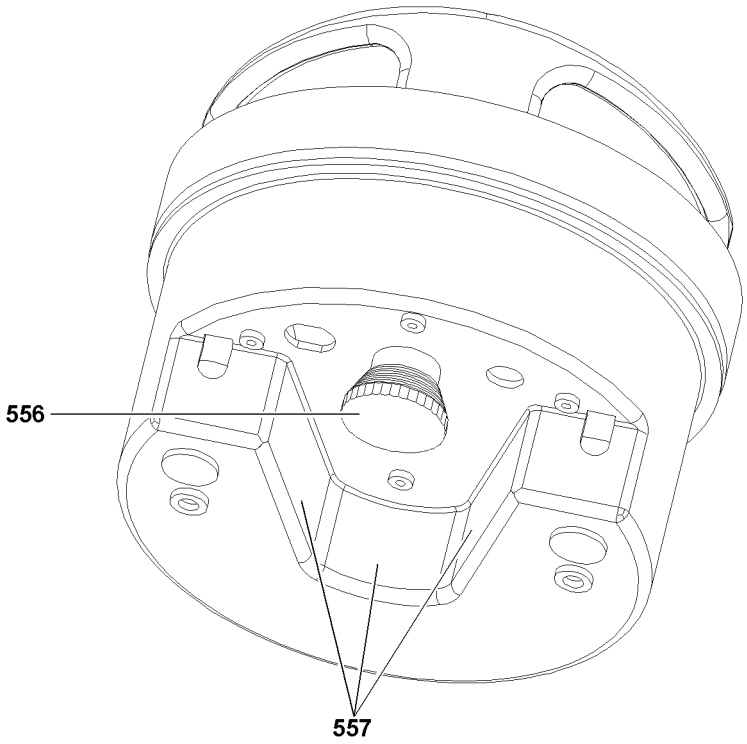

Fig.110315

LWE/ab Muli 010/24201-02-02/en

copyright © Liebherr-Werk Ehingen GmbH 2016

1.4 General notes for the BTT

550 Indicator light

Transmission signal for BTT:
- Green: Transmission signal ok.
- Yellow: Transmission signal about to be lost.
- Red: Transmission signal not available.

551 Button
- Operate the acoustic signal of the crane (horn)

552 Indicator light

Charge condition of rechargeable battery on the BTT:
- Green: Rechargeable battery fully charged.
- Yellow: Rechargeable battery almost discharged.
- Red: Rechargeable battery discharged.

Note

▶ To recharge the rechargeable battery, the BTT **500** must be plugged into the charging cradle.

553 Button
- ON / OFF button: BTT turn on / off
- ON / OFF button: Ending stand-by of BTT

554 Button
- Changeover button (menu dependent)

555 Button
- Changeover button (menu dependent)

556 EMERGENCY STOP switch
- **Note:**
  The EMERGENCY STOP switch **556** is on the underside of the BTT.

557 2-hand keypad
- **Note:**
  The 2-hand keypad **557** must be actuated in order to be able to actuate a movement with the BTT.

LWE/ab Muli 010/24201-02-02/en

copyright © Liebherr-Werk Ehingen GmbH 2016

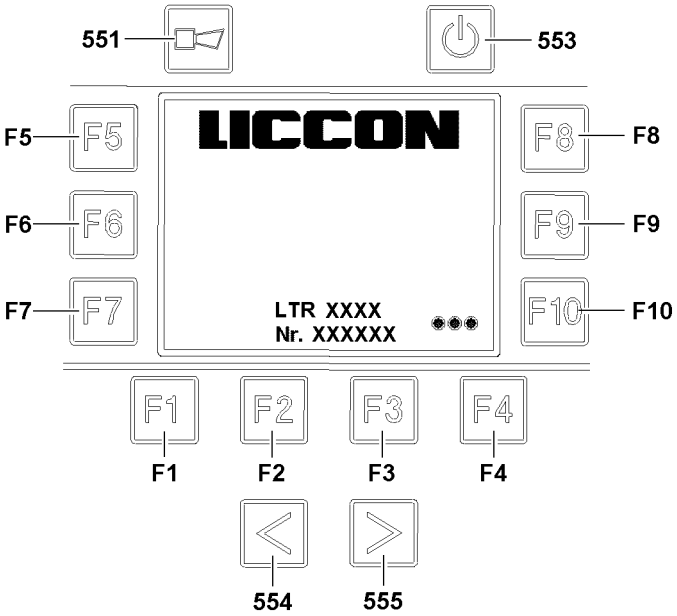

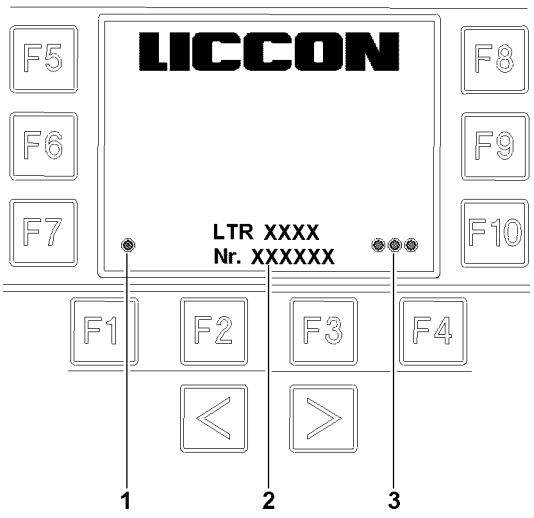

Fig.110317

LWE/ab Muli 010/24201-02-02/en

copyright © Liebherr-Werk Ehingen GmbH 2016

1.5 Start screen BTT

1.5.1 Icon explanation start screen BTT

1 Indicator light

Condition display connection to BTT receiver
- Yellow / red: Not connected
- Yellow: Transmission signal being build up or severed
- Green / magenta: Connection prepared
- Green: Connection established
- Red: No connection between BTT and BTB
  Note:
  If necessary, the pairing process must be repeated, see section „Connecting the BTB and BTT“

2 Crane type and crane number

3 Indicator lights

Condition display Code entry:
- Green: Code entry OK
- Red: No code entered, code entry incorrect

F1- F10 Function key
- **Note**:
  Once the code has been successfully entered, press any function key **F1-F10** to switch back to the selection overview.

LWE/ab Muli 010/24201-02-02/en

copyright © Liebherr-Werk Ehingen GmbH 2016

2 Start menu of BTT

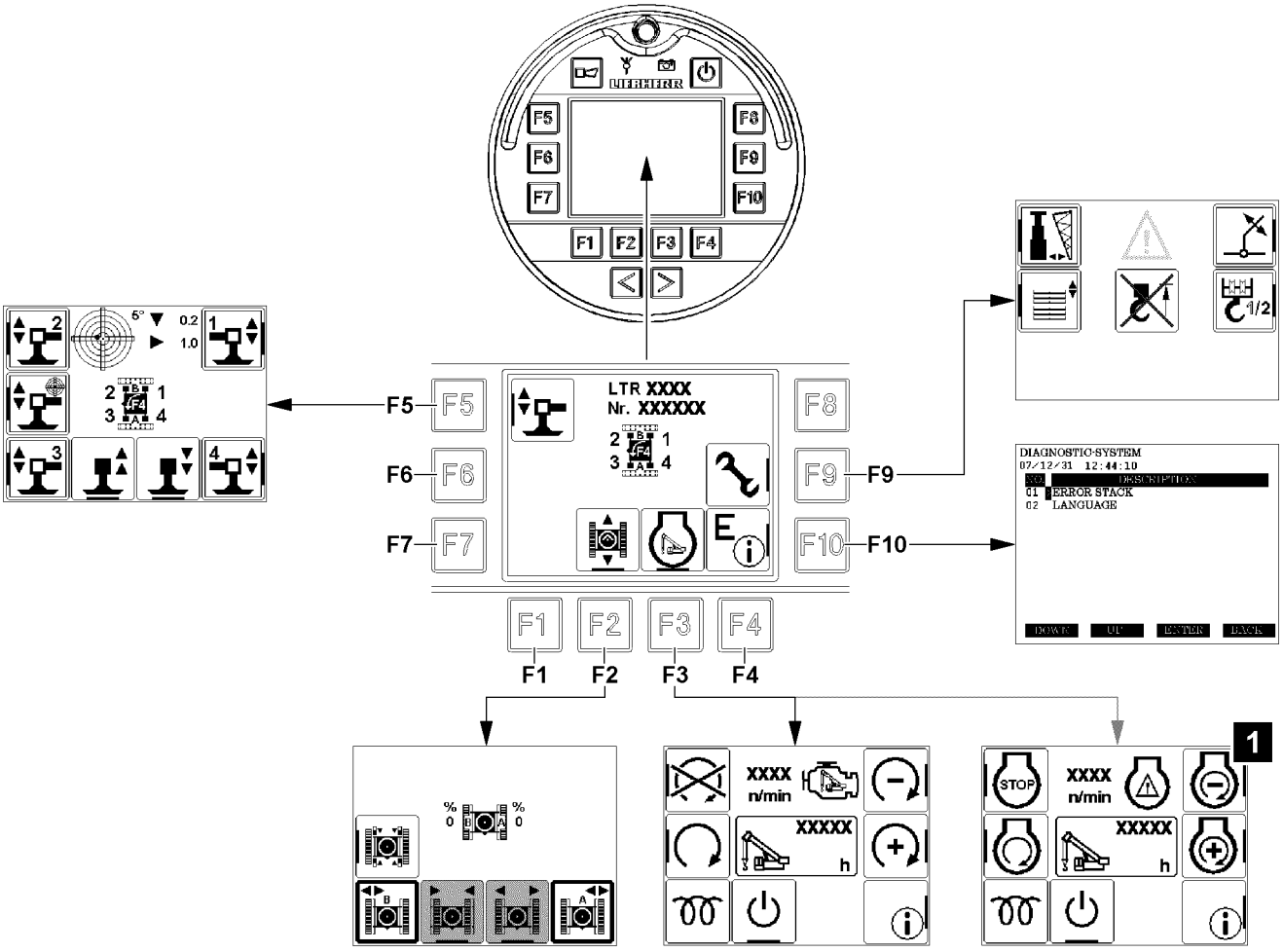

Fig.122497

F2		Crawler travel gear menu
>>	**F1**	-Back to the start menu-
>>	**F2**	Retract the selected crawler carrier
>>	**F3**	Extend the selected crawler carrier
>>	**F6**	Unpin / pin the track width adjustment
>>	**F7**	Selection / deselection of crawler carrier B
>>	**F10**	Selection / deselection of crawler carrier A

F3		Menu Engine operation [1]
>>	**F1**	-Back to the start menu-
>>	**F2**	Turn the ignition crane superstructure on / off [2]
>>	**F5**	Turn the engine off
>>	**F6**	Turn the engine on

LWE/ab Muli 010/24201-02-02/en

copyright © Liebherr-Werk Ehingen GmbH 2016

F3		Menu Engine operation [1]
>>	**F8**	Decrease engine rpm
>>	**F9**	Increase engine rpm
>>	**F10**	Call up test system

1) Illustration of individual icons can vary, depending on the crane programming, see example illustration **1**
2) Function available only for certain crane types

F4	Turn off disengageable acoustic warning signal
	Note: After an error message of the LICCON computer system the BTT issues an *acoustic warning signal*. Depending on the error message (for example operating error or system error), the warning signal can be turned off directly via the **F4** function key or it remains and additional steps are required.

F5		Menu Support
>>	**F1**	-Back to the start menu-
>>	**F2**	Retract selected support(s)
>>	**F3**	Extend selected support(s)
>>	**F5**	Selection / deselection of the support according to crane position
>>	**F6**	Selection / deselection of the automatic support [2]
>>	**F7**	Selection / deselection of the support according to crane position
>>	**F8**	Selection / deselection of the support according to crane position
>>	**F10**	Selection / deselection of the support according to crane position

2) Function available only for certain crane types

F9		Menu Assembly functions crane superstructure
>>	**F1**	-Back to the start menu-
>>	**F5**	Selection / deselection of hydraulic folding jib assembly*****
>>	**F6**	Selection / deselection of ballasting / turntable lock
>>	**F8**	Selection / deselection of lifting / lowering the hydraulic folding jib*****
>>	**F9**	Selection / deselection of fastening the hook block.
	>>	**554** Control working floodlights menu[2]

2) Function available only for certain crane types

F10	Test system
	Note: The test system can be called up at any time. If an error message of the LICCON computer system is present, then an error text can be viewed

LWE/ab Muli 010/24201-02-02/en

copyright © Liebherr-Werk Ehingen GmbH 2016

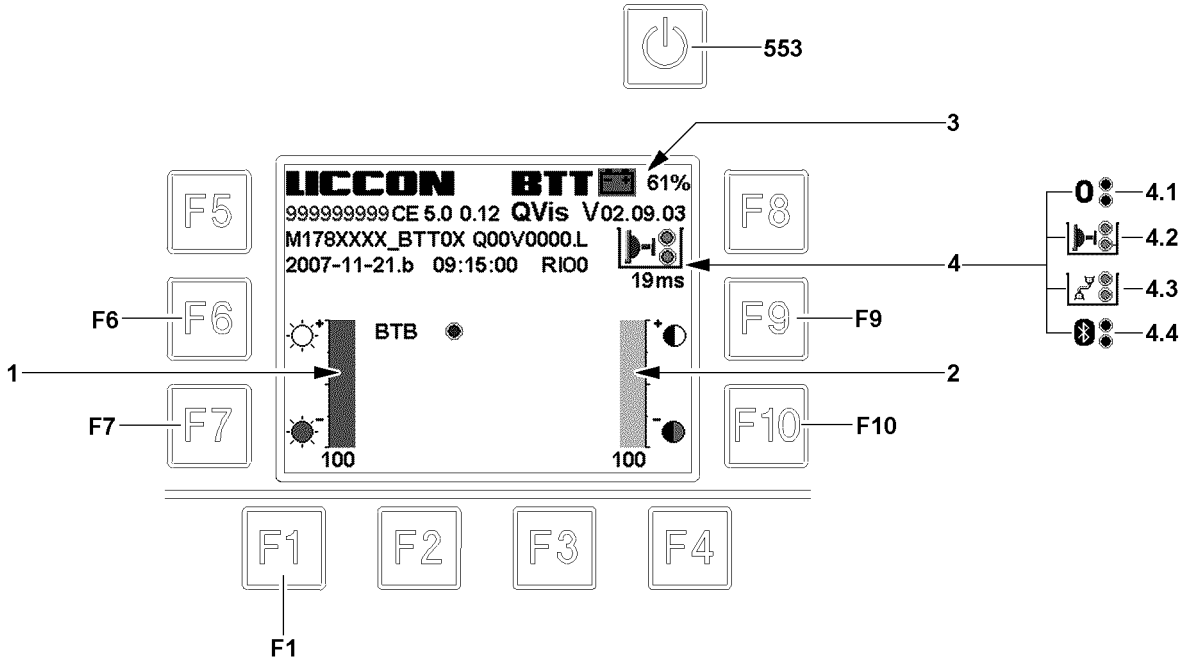

Fig.117976

LWE/ab Muli 010/24201-02-02/en

copyright © Liebherr-Werk Ehingen GmbH 2016

3 Settings and condition displays on the BTT

In the system screen of the BTT, settings can be made and condition displays can be read.

3.1 Calling up / closing the system screen

Make sure that the following prerequisite is met:
- The start menu is displayed.

▶ Select the System screen: Press the button **553** momentarily until the system screen appears (max. 1 second).

Note
▶ When the button **553** is pressed too long, the BTT turns off.

▶ To change back to the System menu: Press the function key **F1**.

3.2 Adjusting the brightness level of the BTT display

The current setting stage for brightness can be read on the bar diagram **1**.

▶ BTT display brighter: Press the function key **F6**.
▶ BTT display darker: Press the function key **F7**.

3.3 Adjusting the contrast of the BTT display

Note
▶ Only available for certain crane types:

The current setting stage for the contrast can be read on the bar diagram **2**.

▶ BTT display more contrast: Press the function key **F9**.
▶ BTT display less contrast: Press the function key **F10**.

3.4 Determining the exact charge condition of the rechargeable battery

The exact charge condition of the rechargeable battery can be read on the charge condition display **3**.

▶ Read the charge condition, if necessary recharge the BTT by inserting it in the charging bay.

3.5 Checking the connection type

The connection type can be read on the connection type display **4**.

▶ Read the connection type.

Result:

- **4.1** No connection
- Infrared **4.2** (only in the charging bay)
- **4.3** Cable
- **4.4** Bluetooth

LWE/ab Muli 010/24201-02-02/en

copyright © Liebherr-Werk Ehingen GmbH 2016

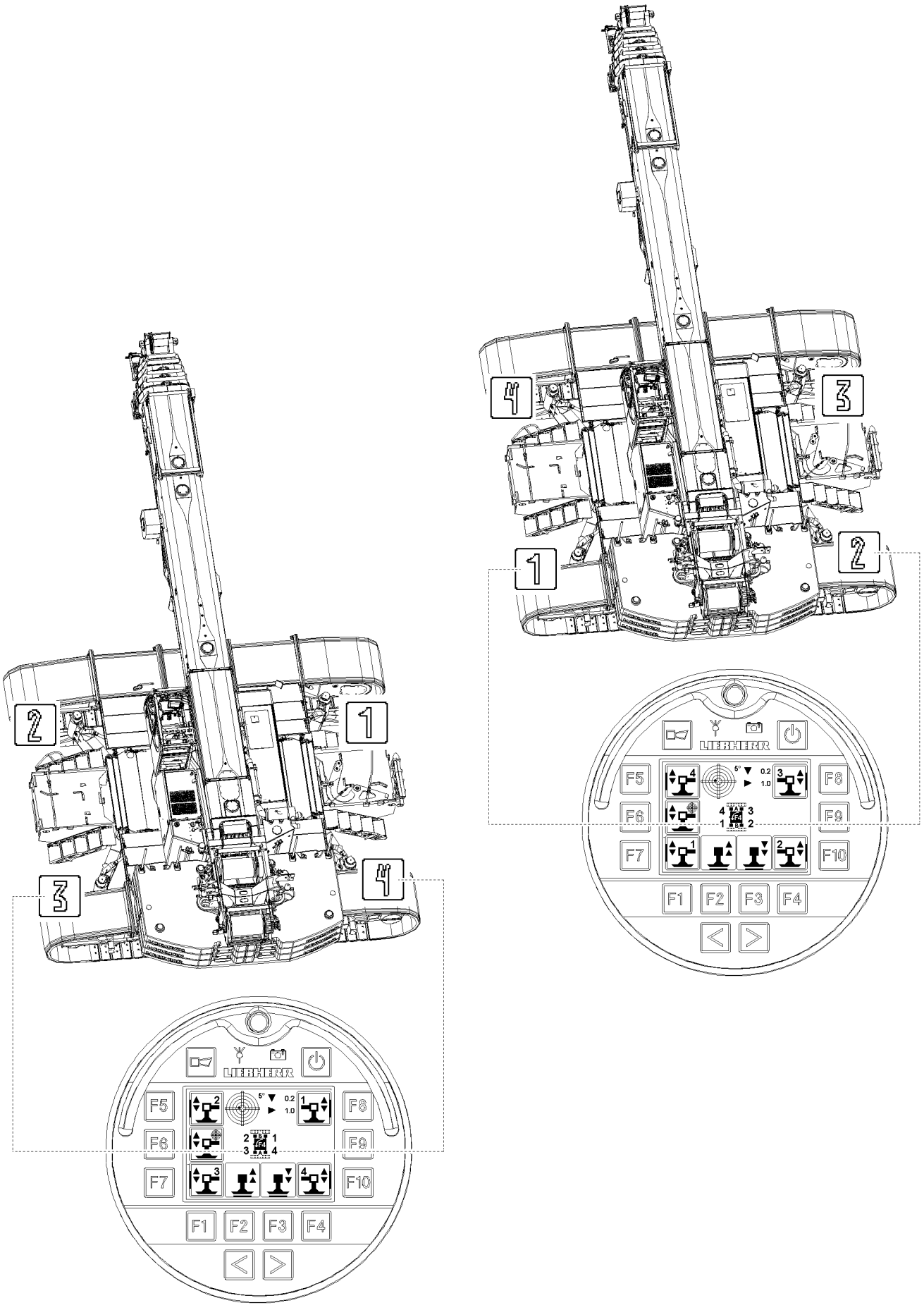

Fig.117814

LWE/ab Muli 010/24201-02-02/en

copyright © Liebherr-Werk Ehingen GmbH 2016

4 Orienting the BTT to the crane

If „F4“ and two rotation arrows appear within the crane icon on the display, then the location of the operator must be oriented with the BTT to the crane.

– The determining factor for the orientation of the BTT is the crane chassis.
– A selection can be made between two orientations:
  • Illustration **1**:
    • Operator is standing on the side of support 3 and support 4 (crawler carrier A).
    • In the crane icon on the BTT display, the supports with number 3 and number 4 are on the bottom.
  • Illustration **2**:
    • Operator is standing on the side of support 1 and support 2 (crawler carrier B).
    • In the crane icon on the BTT display, the supports with number 1 and number 2 are on the bottom.

WARNING
Danger of accident if operator is incorrectly oriented to the crane!
If the operator is not correctly oriented to the crane, then the working range / danger zone cannot be viewed completely!
Personnel can be severely injured or killed!
▶ The crane icon on the BTT display and the actual orientation of the operator to the crane must match!

F4 Function key
  • When „F4“ and two rotation arrows appear within the crane icon:
    Press function key **F4** to turn the crane icon in 180° increments.

copyright © Liebherr-Werk Ehingen GmbH 2016

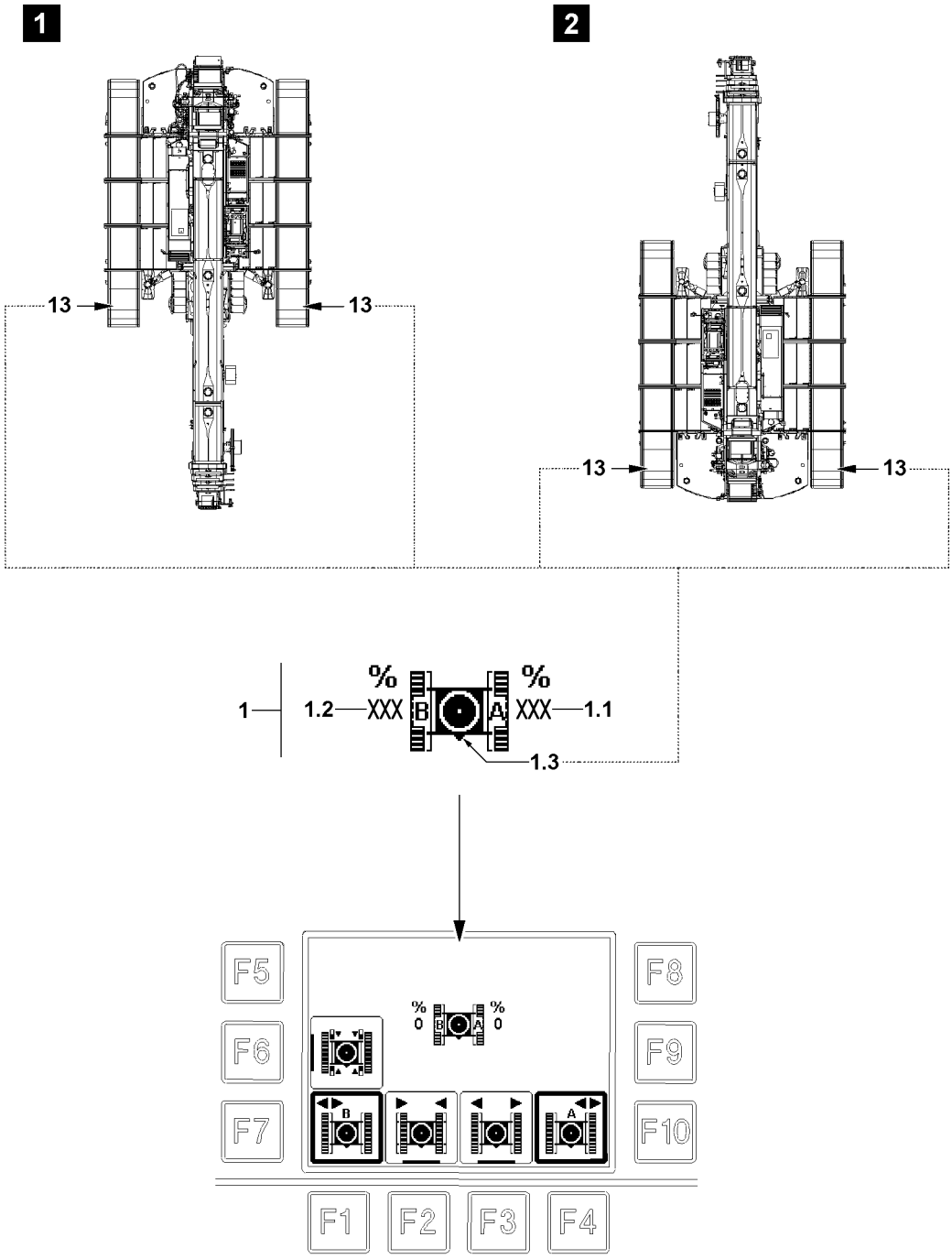

LWE/ab Muli 010/24201-02-02/en

Fig.117969

copyright © Liebherr-Werk Ehingen GmbH 2016

5 Crawler travel gear menu

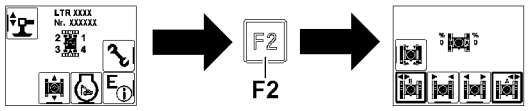

Fig.119845

Note
Change from start menu to crawler travel gear menu:
▶ Press the function key **F2**.

Functions in the „crawler travel gear“ menu:
– Extending / retracting the crawler carriers

In the crawler travel gear menu, the display of the crane icon **1** cannot be adjusted:
– The marker „front side of crawler travel gear“ **1.3** shows where in the display the front side of the crawler travel gear is.
– The position of the crane superstructure is not relevant in the crawler travel gear menu, see example of illustration **1** and illustration **2**.
– Front and rear on the crawler track can be determined by the chain tension devices **13** (chain tension side):
  • The chain tension devices **13** are always on the front of the crawler travel gear.
  • The chain tension devices **13** are on the side of support 2 and support 3.

5.1 Icon explanation in crawler travel gear menu

1 Track width display
  • The crawler carriers are marked with letters.
  • The extension conditions of the cross carriers are given in percentages.

1.1 Crawler carrier A
  • Extension condition of crawler carrier A in percent (%)
    0 % = Crawler carrier A is completely retracted
    to
    100 % = Crawler carrier A is completely extended

1.2 Crawler carrier B
  • Extension condition of crawler carrier B in percent (%)
    0 % = Crawler carrier B is completely retracted
    to
    100 % = Crawler carrier B is completely extended

1.3 Front on travel gear
  • Shows where the front side of the crawler travel gear is in the icon.

LWE/ab Muli 010/24201-02-02/en

copyright © Liebherr-Werk Ehingen GmbH 2016

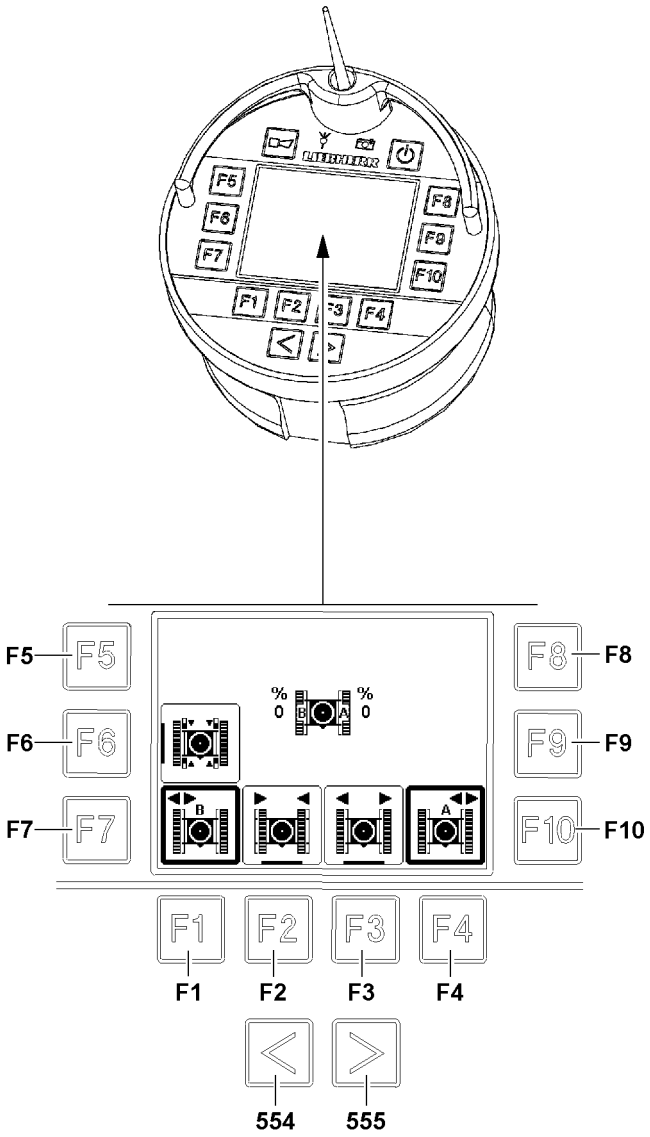

Fig.117971

LWE/ab Muli 010/24201-02-02/en

copyright © Liebherr-Werk Ehingen GmbH 2016

5.2 Function keys in the crawler travel gear menu

554 Button
- Change to the Engine operation menu

555 Button
- Call of the operating screen for the radio remote control

F1 Function key
- Return to the start menu

F2 Function key
- Retract the selected crawler carrier

F3 Function key
- Extend the selected crawler carrier

F4 Function key
- -No function-

F5 Function key
- -No function-

F6 Function key
- Unpin / pin the track width adjustment

F7 Function key
- Selection / deselection of crawler carrier B

F8 Function key
- -No function-

F9 Function key
- -No function-

F10 Function key
- Selection / deselection of crawler carrier A

LWE/ab Muli 010/24201-02-02/en

copyright © Liebherr-Werk Ehingen GmbH 2016

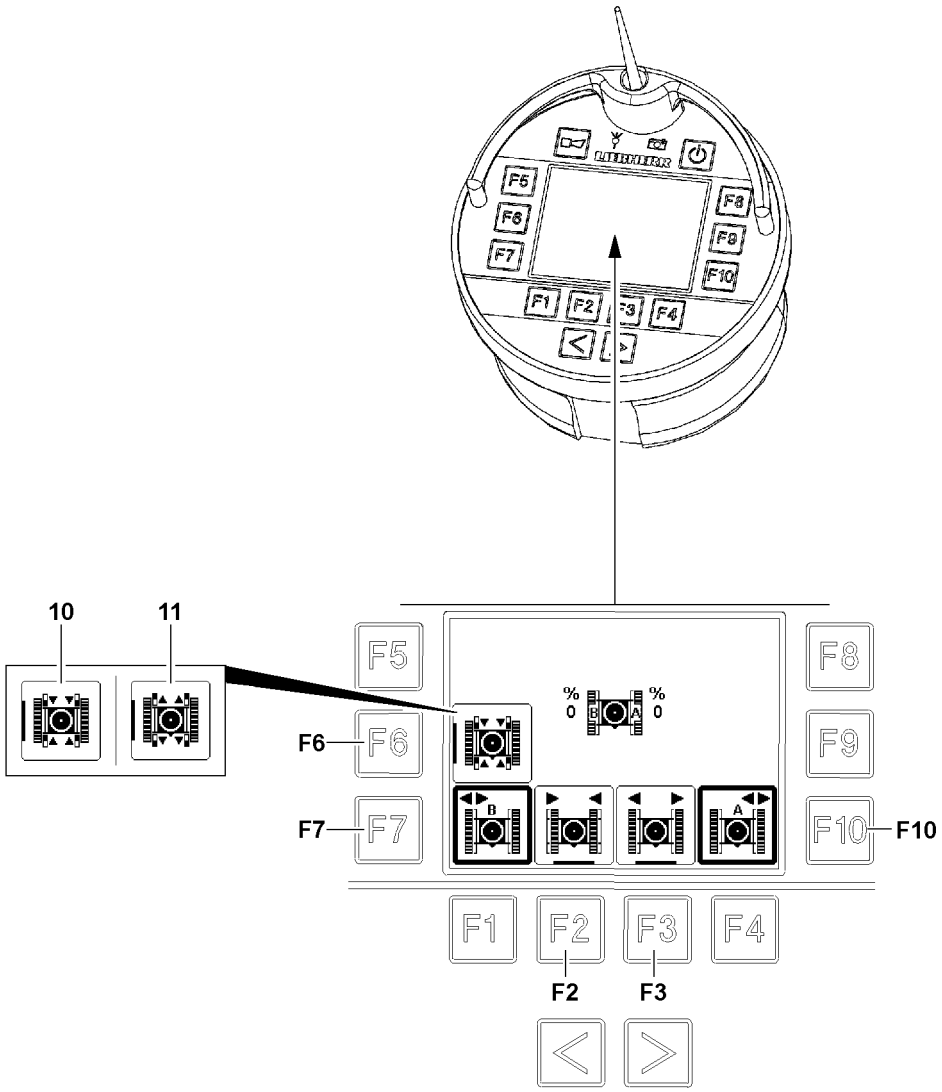

Fig.117972

LWE/ab Muli 010/24201-02-02/en

copyright © Liebherr-Werk Ehingen GmbH 2016

5.3 Extending / retracting the crawler carriers

The crawler carriers can be selected and controlled individually or together.

To be able to extend / retract the crawler carriers, the cross carriers must be unpinned.

– **Selection / deselection of crawler carrier:**
  • Press function key **F7** for crawler carrier B
  • Press function key **F10** for crawler carrier A
    • **Result**: Selected crawler carriers are bordered in bold. The other crawler carrier can be selected / deselected as desired.

– **Unpin / pin the cross carriers:**
  • Press the function key **F6**.
    • Pin the cross carrier active: Icon **10** appears.
      As soon as the pin aligns with a pin point, the cross carriers are pinned. Pin points are at 0 %, 50 % or 100 % extension condition of crawler carriers.
    • Unpin the cross carriers active: Icon **11** appears.
      Unpin the pin from the pin point is actuated.

– **Control release:**
  • The control release is made by touching the 2-Hand keyboard in the rear of the BTT, see section „Release of button block on BTT“
  • After completed control release, the icons over the function key **F2** / function key **F3** are highlighted in purple.

Note

▶ To control the crawler carriers, a control release must be issued: The corresponding icons must be highlighted in purple.

LWE/ab Muli 010/24201-02-02/en

copyright © Liebherr-Werk Ehingen GmbH 2016

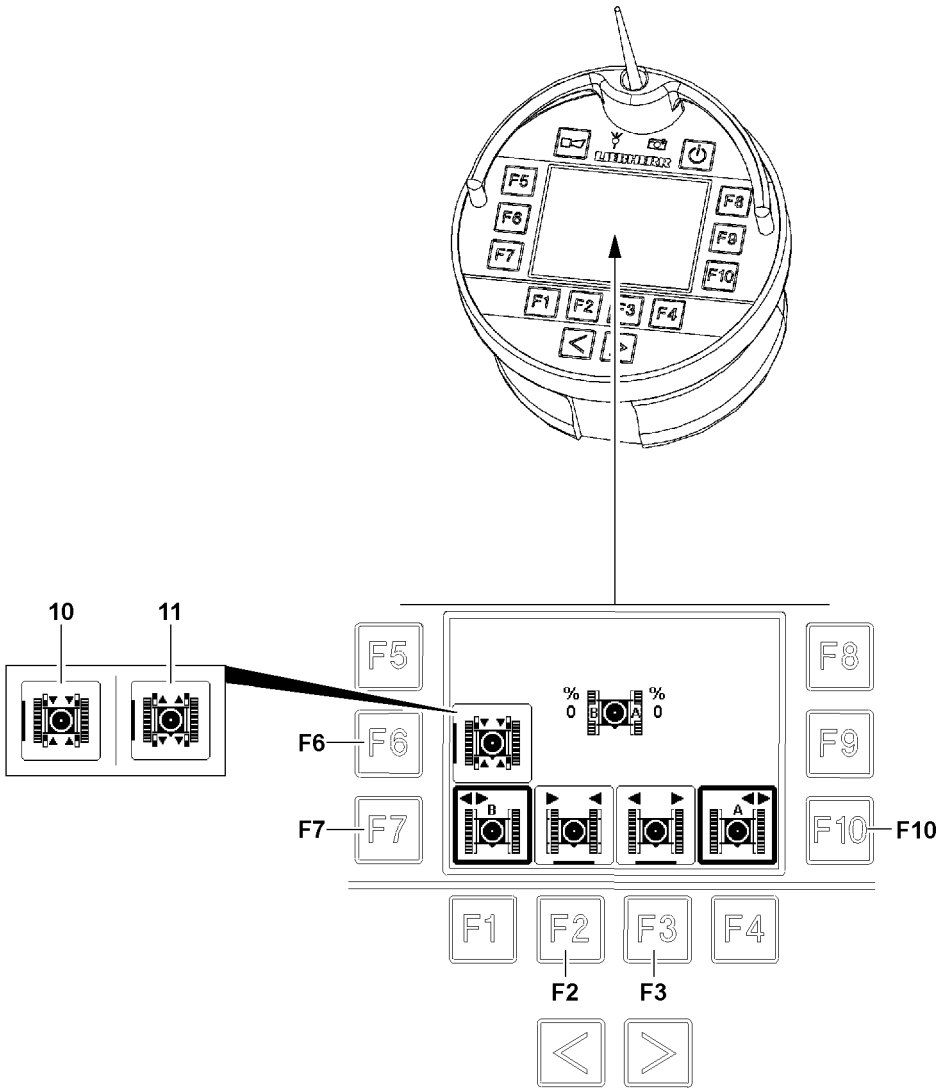

Fig.117972

LWE/ab Muli 010/24201-02-02/en

copyright © Liebherr-Werk Ehingen GmbH 2016

– **Retract the crawler carrier A:**
  Prerequisites: Icon **11** must appear, crawler carrier A is selected.
  • Press the function key **F2**.

– **Extend crawler carrier A:**
  Prerequisites: Icon **11** must appear, crawler carrier A is selected.
  • Press the function key **F3**.

– **Retract the crawler carrier B:**
  Prerequisites: Icon **11** must appear, crawler carrier B is selected.
  • Press the function key **F2**.

– **Extend the crawler carrier B:**
  Prerequisites: Icon **11** must appear, crawler carrier B is selected.
  • Press the function key **F3**.

– **Retract both crawler carriers parallel:**
  Prerequisites: Icon **11** must appear, crawler carrier A and crawler carrier B are selected.
  • Press the function key **F2**.

– **Extend both crawler carriers parallel:**
  Prerequisites: Icon **11** must appear, crawler carrier A and crawler carrier B are selected.
  • Press the function key **F3**.

LWE/ab Muli 010/24201-02-02/en

copyright © Liebherr-Werk Ehingen GmbH 2016

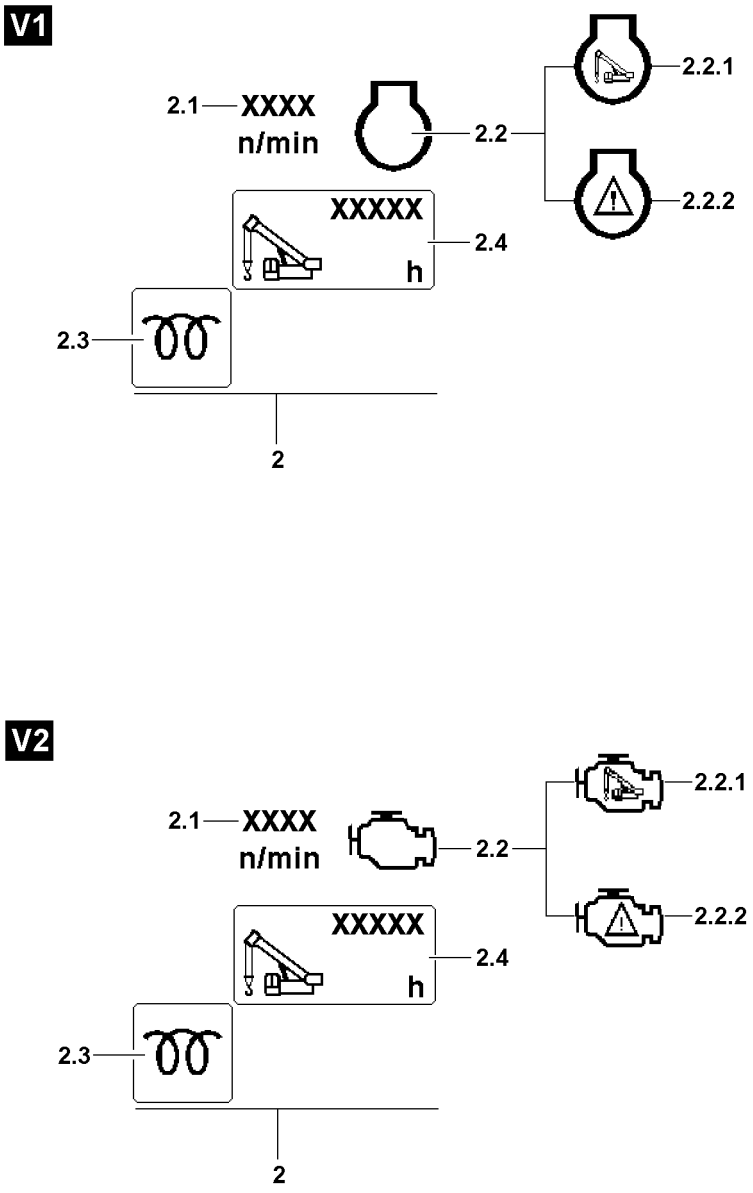

LWE/ab Muli 010/24201-02-02/en

Fig.122498

copyright © Liebherr-Werk Ehingen GmbH 2016

6 Menu Engine operation

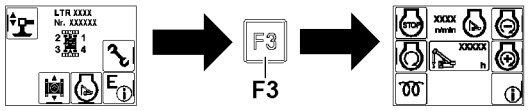

Fig.119846

Note
Change from start menu to engine operation menu:
▶ Press the function key **F3**.

Note
The depiction of the Engine operation **2** icons depends on the crane programming.
▶ The variation **V1** or variation **V2** icons appear.

6.1 Icon explanation in engine operation menu

2 Icons Engine operation

2.1 Engine speed
- Actual engine speed in rpm

2.2 Engine monitoring
- If icon **2.2.1** appears, then there is no engine warning present.
- If warning icon **2.2.2** appears, then an engine warning is present.
- **NOTICE:**
  Call up engine monitoring functions and evaluate.

2.3 Monitoring display
- The indicator light lights up green: The crane superstructure engine is ready to start.
- The indicator light lights up yellow: Crane superstructure engine preheating is active.
- The indicator light lights up red: The crane superstructure engine is not ready to start.

2.4 Operating hour meter
- Operating hours of crane engine

LWE/ab Muli 010/24201-02-02/en

copyright © Liebherr-Werk Ehingen GmbH 2016

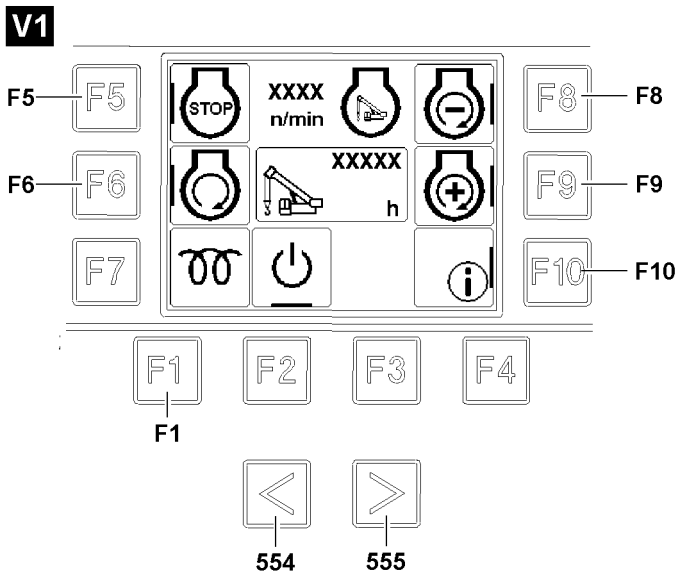

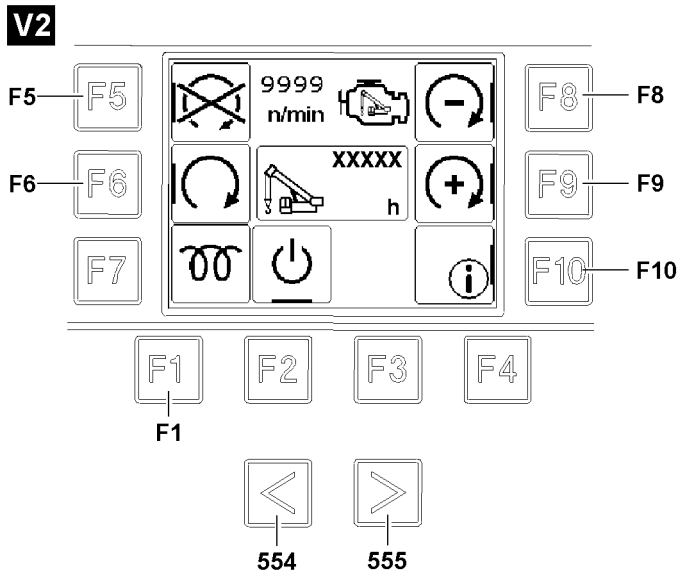

LWE/ab Muli 010/24201-02-02/en

Fig.122499

copyright © Liebherr-Werk Ehingen GmbH 2016

6.2 The function keys

Note
The depiction of the Engine operation icons depends on the crane programming.
▶ The variation **V1** or variation **V2** icons appear.

554 Button
- Call up monitoring functions for engine

555 Button
- Call up monitoring functions for engine

F1 Function key
- Back to the start menu

F2 Function key
- Turn the ignition crane chassis on / off
- **Note**: Appears only for certain crane types

F5 Function key
- Press momentarily (less than 0.5 seconds): Reset settings in the engine operation menu
- Press long: Turn the engine off
- **Note**: The control release must be made by touching the 2-Hand keyboard in the rear of the BTT, see section „Release of button block on BTT“.

F6 Function key
- Turn the engine on

F8 Function key
- Decrease engine rpm
- **Note**: The control release must be made by touching the 2-Hand keyboard in the rear of the BTT, see section „Release of button block on BTT“.

F9 Function key
- Increase engine rpm
- **Note**: The control release must be made by touching the 2-Hand keyboard in the rear of the BTT, see section „Release of button block on BTT“.

F10 Function key
- Change to test system

LWE/ab Muli 010/24201-02-02/en

copyright © Liebherr-Werk Ehingen GmbH 2016

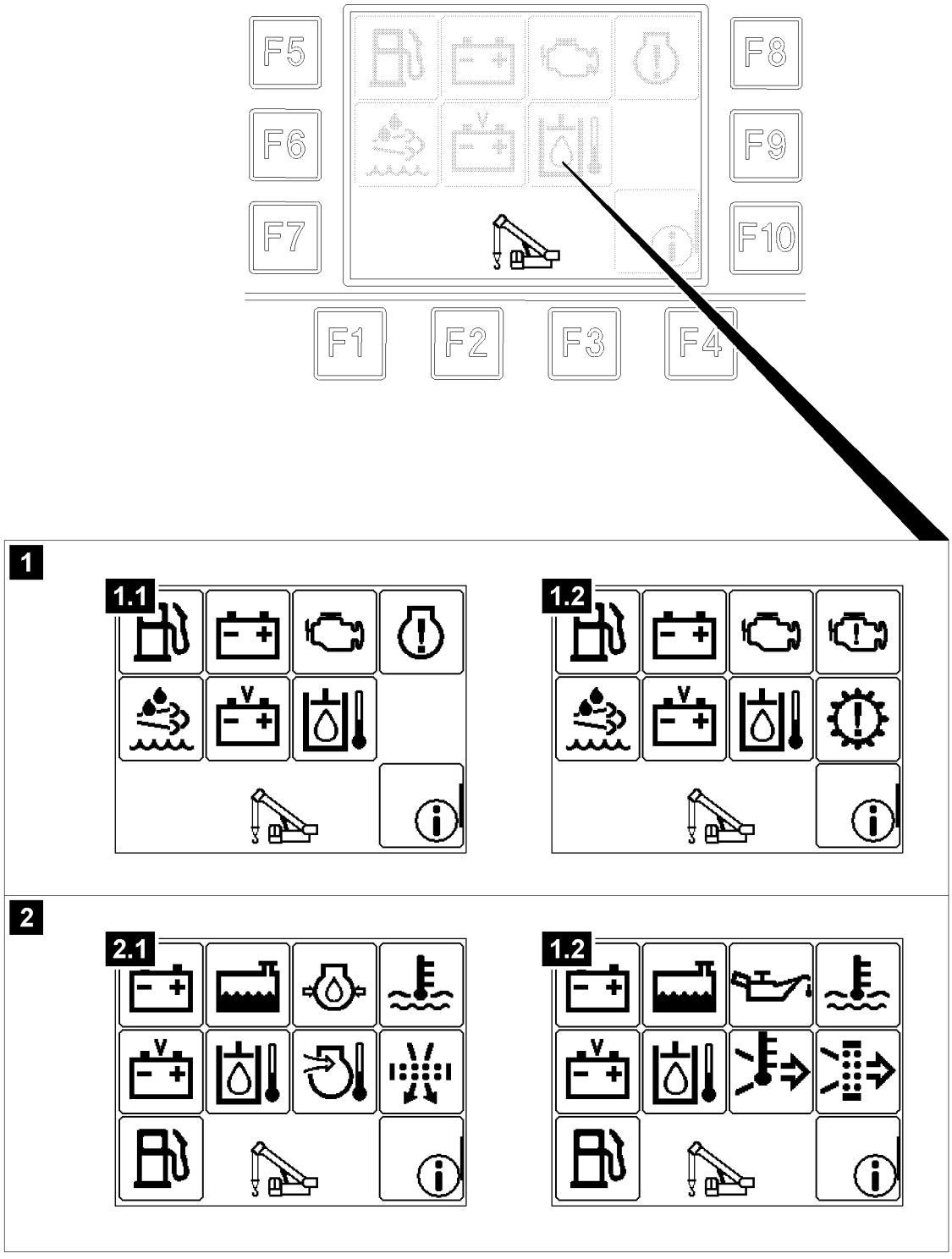

LWE/ab Muli 010/24201-02-02/en

Fig.122500

copyright © Liebherr-Werk Ehingen GmbH 2016

6.3 Monitoring functions for engine

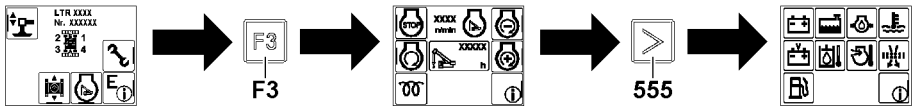

Fig.119847

Note
Change from the start menu to the engine monitoring functions:
- ▶ Press the function key **F3**.
- ▶ Press the function key **555**.

Note
- ▶ Engines **with SCR system** for exhaust aftertreatment - Display in BTT display, see illustration **1**. Depending on the crane programming, either icons illustration **1.1** or illustration **1.2** appear.
- ▶ Engines **without SCR system** - Display in BTT display, see illustrations **2**. Depending on the crane programming, either icons illustration **2.1** or illustration **2.2** appear.
- ▶ If a function is highlighted **green**, this function is operating correctly.
- ▶ If a function is highlighted **red** or **orange**, then this function has an error.

NOTICE
Property damage!
Property damage can result if a malfunction is not immediately rectified!
- ▶ Immediately rectify the faulty function!

Note
The scope of the monitoring functions depends on the crane type and crane configuration.
The depiction of the icon depends on the crane programming. If two icons are depicted for one function, then only one of the two appears.
- ▶ Not all crane types have all listed monitoring functions.

	Fuel reserve
Green:	Fuel reserve **more** or equal to 5 %
Yellow:	Fuel reserve approx. 3 % - 4 %
Red:	Fuel reserve **less** than 3 % / system error **NOTICE!** Immediately bring the crane to a standstill, turn the engine off and remedy the problem (add fuel immediately). Pay attention to error message.

	Coolant temperature
Green:	Coolant temperature OK
Red:	Coolant temperature **too high** / system error **NOTICE!** Immediately bring the crane to a standstill, turn the engine off and remedy the problem. Pay attention to error message.

copyright © Liebherr-Werk Ehingen GmbH 2016

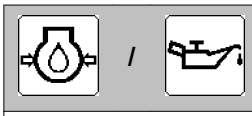	**Engine oil pressure**
Green:	Engine oil pressure OK (engine on)
Red:	Engine oil pressure too low (engine on) / system error **NOTICE!** Immediately bring the crane to a standstill, turn the engine off and remedy the problem. Pay attention to error message.

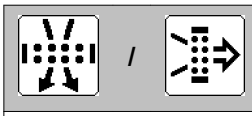	**Air filter Engine**
Green:	Air filter OK (engine on)
Yellow / red:	Air filter dirty (engine on) / system error **NOTICE!** Immediately bring the crane to a standstill, turn the engine off and remedy the problem. Pay attention to error message.

	Charge control indicator (alternator)
Green:	Charge control OK (engine on)
Red:	Charge control has a problem (engine on) / system error **NOTICE!**: Immediately bring the crane to a standstill, turn the engine off and remedy the problem. Pay attention to error message.

	Urea tank / exhaust aftertreatment[1)]
Green:	Urea available
Yellow / red:	Urea level too low or erroneous function of exhaust aftertreatment system / system error **NOTICE!** Add urea or remedy the erroneous function of the exhaust aftertreatment. Under some circumstances a power reduction or start block of the engine [2)] is triggered, pay attention to the error message.

1) Valid only for engines which are equipped with an SCR system with exhaust aftertreatment.
2) The type and scope of a power reduction of the engine depends on the respectively valid national / regional regulations and the vehicle configuration. The engine can possibly not be started any longer (starting block).

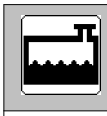	**Coolant level**
Green:	Coolant level OK
Red:	Insufficient coolant / system error **NOTICE!**: Immediately bring the crane to a standstill, turn the engine off and remedy the problem. Pay attention to error message.

LWE/ab Muli 010/24201-02-02/en

copyright © Liebherr-Werk Ehingen GmbH 2016

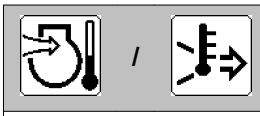	**Charge air temperature**
Green:	Charge air temperature OK
Red:	Charge air temperature too high / system error **NOTICE!**: Immediately bring the crane to a standstill, turn the engine off and remedy the problem. Pay attention to error message.

	Hydraulic oil temperature
Green:	Hydraulic oil temperature OK
Red:	Hydraulic oil temperature too high / system error **NOTICE!**: Immediately bring the crane to a standstill, turn the engine off and remedy the problem. Pay attention to error message.

	Battery voltage
Green:	Battery voltage OK
Red:	On-board power supply over / undervoltage / system error **NOTICE!**: Immediately bring the crane to a standstill, turn the engine off and remedy the problem. Pay attention to error message.

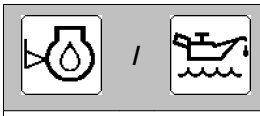	**Engine oil level**
Green:	Engine oil level OK.
Blue	The engine oil level can not be checked here on the display, call up the individual control display.
Red:	Engine oil level not OK. / System error **NOTICE!**: Immediately bring the crane to a standstill, turn the engine off and remedy the problem. Call up individual control displays and adjust the engine oil according to the display - pay attention to error message.

	Hydraulic oil level
Green:	Hydraulic oil level ok
Red:	Hydraulic oil level too low / error / system error **NOTICE!**: Immediately bring the crane to a standstill, turn the engine off and remedy the problem. Pay attention to error message.

copyright © Liebherr-Werk Ehingen GmbH 2016

	Exhaust aftertreatment[1]
Green:	Exhaust aftertreatment OK.
Yellow / red:	Erroneous function Exhaust aftertreatment or Urea level too low / system error **NOTICE!** Add urea or remedy the erroneous function of the exhaust aftertreatment. Under some circumstances a power reduction or start block of the engine [2] is triggered, pay attention to the error message.

1) Valid only for engines which are equipped with an SCR system with exhaust aftertreatment.
2) The type and scope of a power reduction of the engine depends on the respectively valid national / regional regulations and the vehicle configuration. The engine can possibly not be started any longer (starting block).

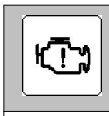	**Collective warning**
Green:	No warning messages present
Generally at yellow or red:	A warning is present / system error **NOTICE!** Determine the cause with the error message or in the LICCON monitor and observe the following description.
Yellow:	Air intake opening / air filter dirty **NOTICE!** Turn the engine off immediately and remedy the problem, pay attention to the error message!
Red:	Engine oil pressure too low or too high **NOTICE!** Turn the engine off immediately and remedy the problem, pay attention to the error message!
Red:	Engine oil level too low or too high **NOTICE!** Call up the display for the engine oil level in the LICCON monitor and match the engine oil level according to the display. See Crane operating instructions, chapter 4.02. Pay attention to error message!
Red:	Coolant level too low **NOTICE!** Turn the engine off and add coolant, see Crane operating instructions, chapter 7.04 or chapter 7.05. Pay attention to error message!
Red:	Coolant temperature too high **NOTICE!** Bring the coolant temperature into a permissible range, turn the engine off if necessary. Pay attention to error message!
Red:	Charge air temperature too high **NOTICE!** Bring the charge air temperature into a permissible range, turn the engine off if necessary. Pay attention to error message!

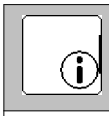	**Information field**
B / E:	If a *B (operating error)* or *E (system error)* appears in the information field, then at least one error message is present. Call up and evaluate the error message by pressing function key F10 on the BTT, see also Diagnostics Manual.

LWE/ab Muli 010/24201-02-02/en

copyright © Liebherr-Werk Ehingen GmbH 2016

Note

Triggers a power reduction or start block of engine

If Urea level is too low or if there is a faulty function in the exhaust aftertreatment, then a power reduction or start block of the engine can be triggered.

The crane operation and travel operation can be limited or disabled.

- ▶ Replenish the Urea level in time.
- ▶ Remedy the faulty function of the exhaust aftertreatment immediately.
- ▶ Observe any valid national / regional regulations and the vehicle configuration.

LWE/ab Muli 010/24201-02-02/en

copyright © Liebherr-Werk Ehingen GmbH 2016

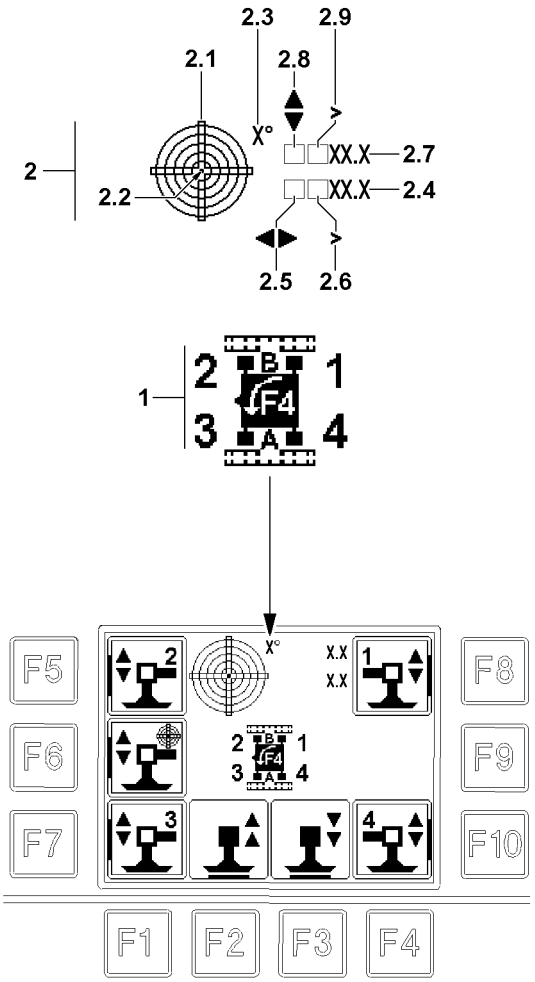

Fig.117930

LWE/ab Muli 010/24201-02-02/en

copyright © Liebherr-Werk Ehingen GmbH 2016

7 Menu Support

WARNING
Danger of accident if operator is incorrectly oriented to the crane!
If the operator is not correctly oriented to the crane, then the working range / danger zone cannot be viewed completely!
Personnel can be severely injured or killed!
▶ The crane icon on the BTT display must correspond to the actual orientation of the operator to the crane, see section „Orienting the radio remote control to the crane“!

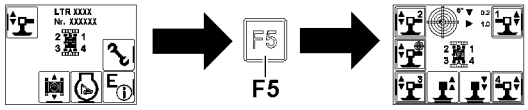

Fig.119848

Note
Change from start menu to support menu:
▶ Press the function key **F5**.

In the Support menu, the operator can select between manual support and automatic support* (only for certain crane types).

copyright © Liebherr-Werk Ehingen GmbH 2016

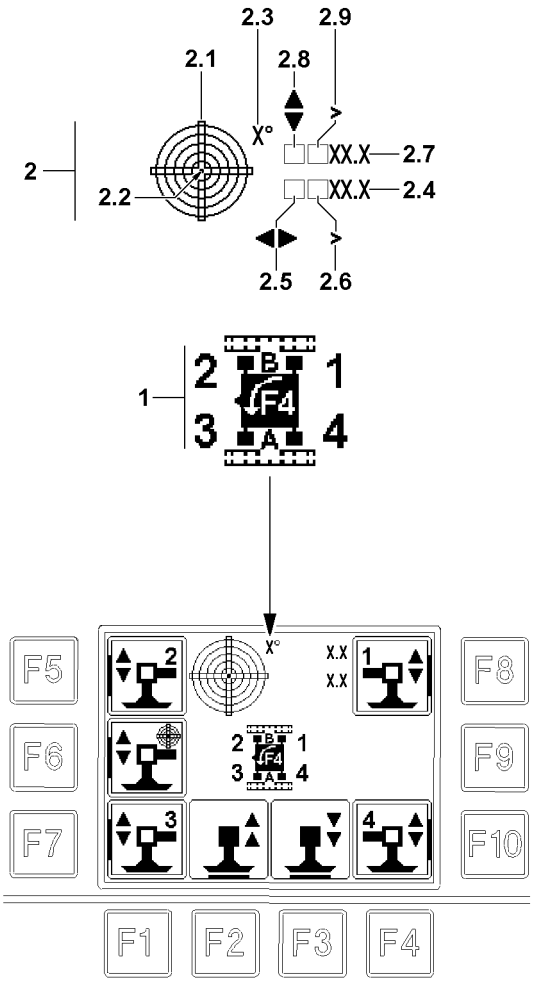

Fig.117930

LWE/ab Muli 010/24201-02-02/en

copyright © Liebherr-Werk Ehingen GmbH 2016

7.1 Icon explanation in support menu

1 Crane icon
- On the crane icon:
  - The crawler carriers are displayed with their identification letter.
  - The support cylinders are displayed with numbers.

WARNING
The crane can topple over!
The „larger than symbol“ shows that the crane is inclined further than can be shown!
The exact incline can then not be read!
▶ Do not exceed the permissible incline of the crane!

2 „Incline“ icon
- Display of the incline of the crane to the horizontal in longitudinal and lateral direction. The display is graphic as well as numeric.
- The direction data refer to the orientation of the displayed crane icon.

2.1 Graphic display
- The graphic display has the form of a sight gauge. In it is a moving dot **2.2**, which represents the air bubble.

2.2 Dot
- The center of the dot **2.2** shows the incline value.

2.3 Resolution of view
- This value describes the resolution of the graphic view. The resolution is matched automatically to the incline.

2.4 Longitudinal direction
- Incline of crane in longitudinal direction in [°].

2.5 Direction arrow
- The direction arrow shows the direction of the incline.

2.6 Display range exceeded
- If the „larger than icon“ appears, then the display range is exceeded.
- **Note:**
  The crane is inclined further than can be shown!

2.7 Lateral direction
- Incline of crane in lateral direction in [°].

2.8 Direction arrow
- The direction arrow shows the direction of the incline.

2.9 Display range exceeded
- If the „larger than icon“ appears, then the display range is exceeded.
- **Note:**
  The crane is inclined further than can be shown!

LWE/ab Muli 010/24201-02-02/en

copyright © Liebherr-Werk Ehingen GmbH 2016

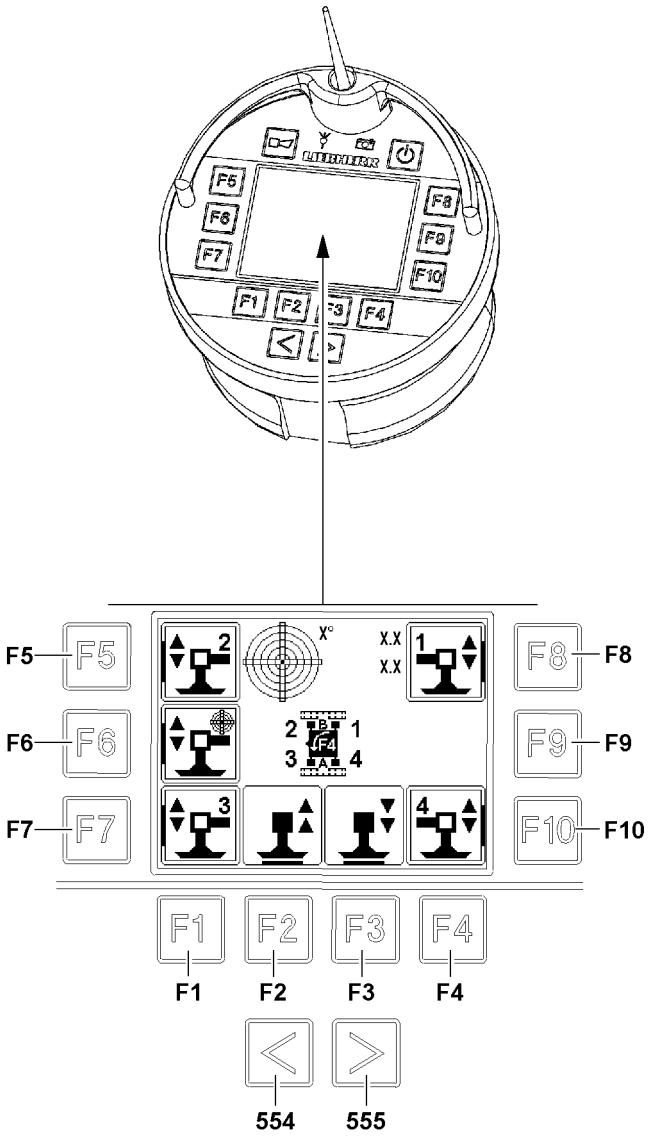

Fig.117973

LWE/ab Muli 010/24201-02-02/en

copyright © Liebherr-Werk Ehingen GmbH 2016

7.2 Function keys in the support menu

554 Button
- Change to the Engine operation menu

555 Button
- Change to the Engine operation menu

F1 Function key
- Return to the start menu

F2 Function key
- Moving the selected support cylinders in
- **Note**: The control release must be made by touching the 2-Hand keyboard in the rear of the BTT, see section „Release of button block on BTT“.

F3 Function key
- Moving the selected support cylinders out
- **Note**: The control release must be made by touching the 2-Hand keyboard in the rear of the BTT, see section „Release of button block on BTT“.

F4 Function key
- Turn the crane icon in 180° increments

F5 Function key
- Select / deselect the support cylinders according to the crane position

F6 Function key
- Select / deselect the support automatic*****
- **Note**: The function support automatic***** is only available on certain crane types.

F7 Function key
- Select / deselect the support cylinders according to the crane position

F8 Function key
- Select / deselect the support cylinders according to the crane position

F9 Function key
- -No function-

F10 Function key
- Select / deselect the support cylinders according to the crane position

LWE/ab Muli 010/24201-02-02/en

copyright © Liebherr-Werk Ehingen GmbH 2016

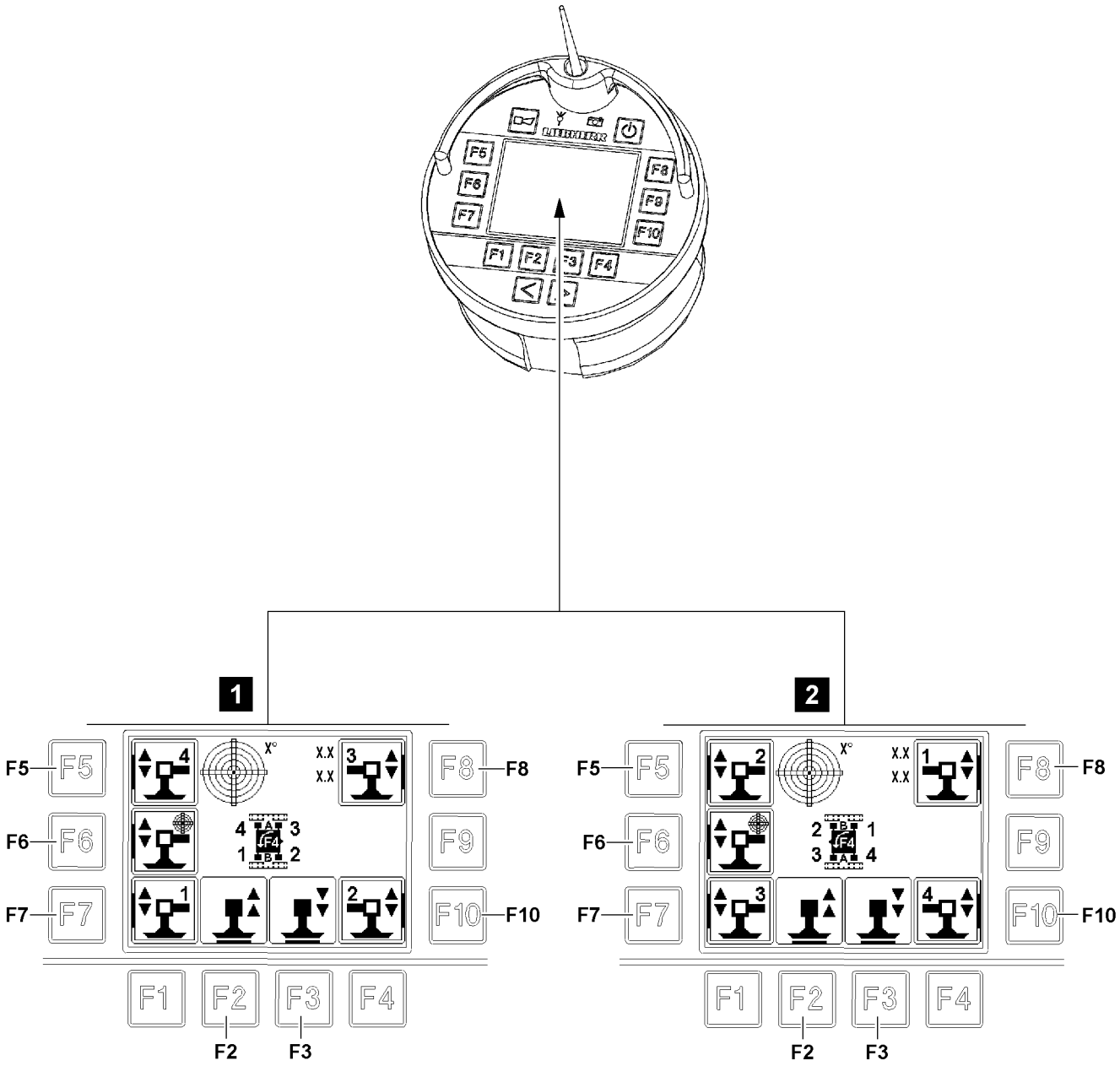

LWE/ab Muli 010/24201-02-02/en

Fig.117974

copyright © Liebherr-Werk Ehingen GmbH 2016

7.3 Manual support

The supports can be selected and controlled individually or in groups. When a support cylinder is directly selected, then the automatic support selection is cancelled.

Make sure that the following prerequisite is met:
– The orientation of the operator to the crane has been set correctly, see section „Orienting the radio remote control to the crane“

Selection / deselection of support cylinder:
– Illustration **1**: Operator is standing on the side of crawler carrier B:
  • Press the function key **F5** for support cylinder 4.
  • Press the function key **F7** for support cylinder 1.
  • Press the function key **F8** for support cylinder 3.
  • Press the function key **F10** for support cylinder 2.
    • **Result**: Selected support cylinders are bordered in bold. Additional support cylinders can be selected / deselected as desired.
– Illustration **2**: Operator is standing on the side of crawler carrier A:
  • Press the function key **F5** for support cylinder 2.
  • Press the function key **F7** for support cylinder 3.
  • Press the function key **F8** for support cylinder 1.
  • Press the function key **F10** for support cylinder 4.
    • **Result**: Selected support cylinders are bordered in bold. Additional support cylinders can be selected / deselected as desired.
– **Control release:**
  • The control release is made by touching the 2-Hand keyboard in the rear of the BTT, see section „Release of button block on BTT“
  • After completed control release, the icons over the function key **F2** / function key **F3** are highlighted in purple.

Note
▶ To control the support cylinders, a control release must be issued: The corresponding icons must be highlighted in purple.

– **Retract the support cylinder:**
  • Press the function key **F2**.
– **Extend the support cylinder:**
  • Press the function key **F3**.

copyright © Liebherr-Werk Ehingen GmbH 2016

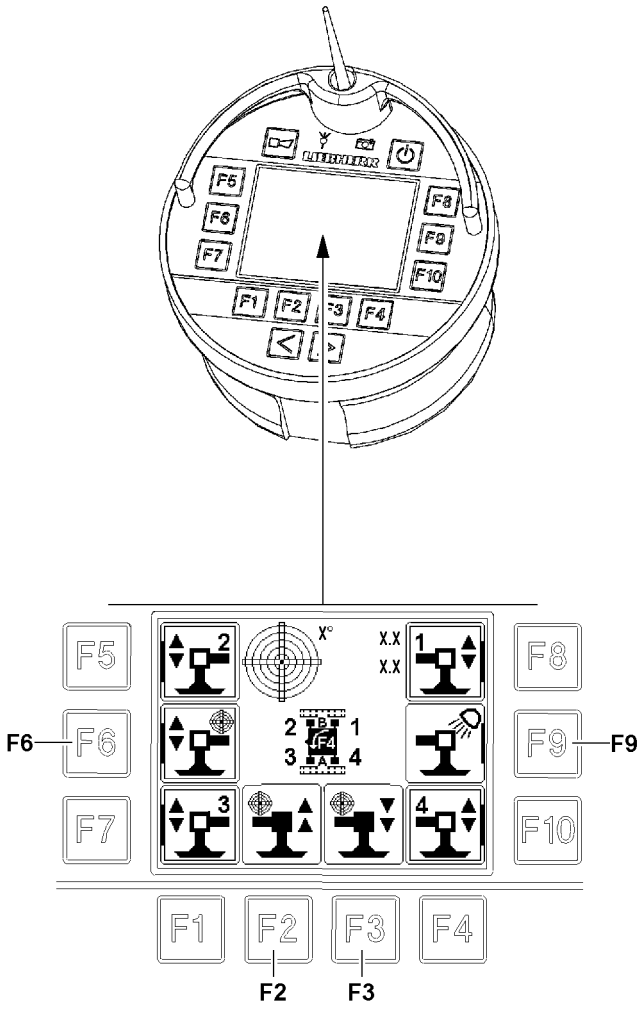

Fig.118947

LWE/ab Muli 010/24201-02-02/en

copyright © Liebherr-Werk Ehingen GmbH 2016

7.4 Automatic support*

Note
▶ The function support automatic* is only available on certain crane types.

The automatic support function automatically levels the crane during the support procedure.

At selection of the support automatic, an existing individual selection of the support cylinders will be deleted.

Make sure that the following prerequisite is met:
– The orientation of the operator to the crane has been set correctly, see section „Orienting the radio remote control to the crane“

– **Selection support automatic:**
  • Press the function key **F6**.
    • **Result**: When the support automatic is selected, the icon is surrounded with a bold border. When subsequently individual support cylinders are selected / deselected, the support automatic is deselected.

– **Control release:**
  • The control release is made by touching the 2-Hand keyboard in the rear of the BTT, see section „Release of button block on BTT“
  • After completed control release, the icons over the function key **F2** / function key **F3** are highlighted in purple.

Note
▶ To control the support cylinders, a control release must be issued: The corresponding icons must be highlighted in purple.

– **Levelling the crane by retracting the support cylinder:**
  • Press the function key **F2**.
– **Levelling the crane by extending the support cylinder:**
  • Press the function key **F3**.

LWE/ab Muli 010/24201-02-02/en

copyright © Liebherr-Werk Ehingen GmbH 2016

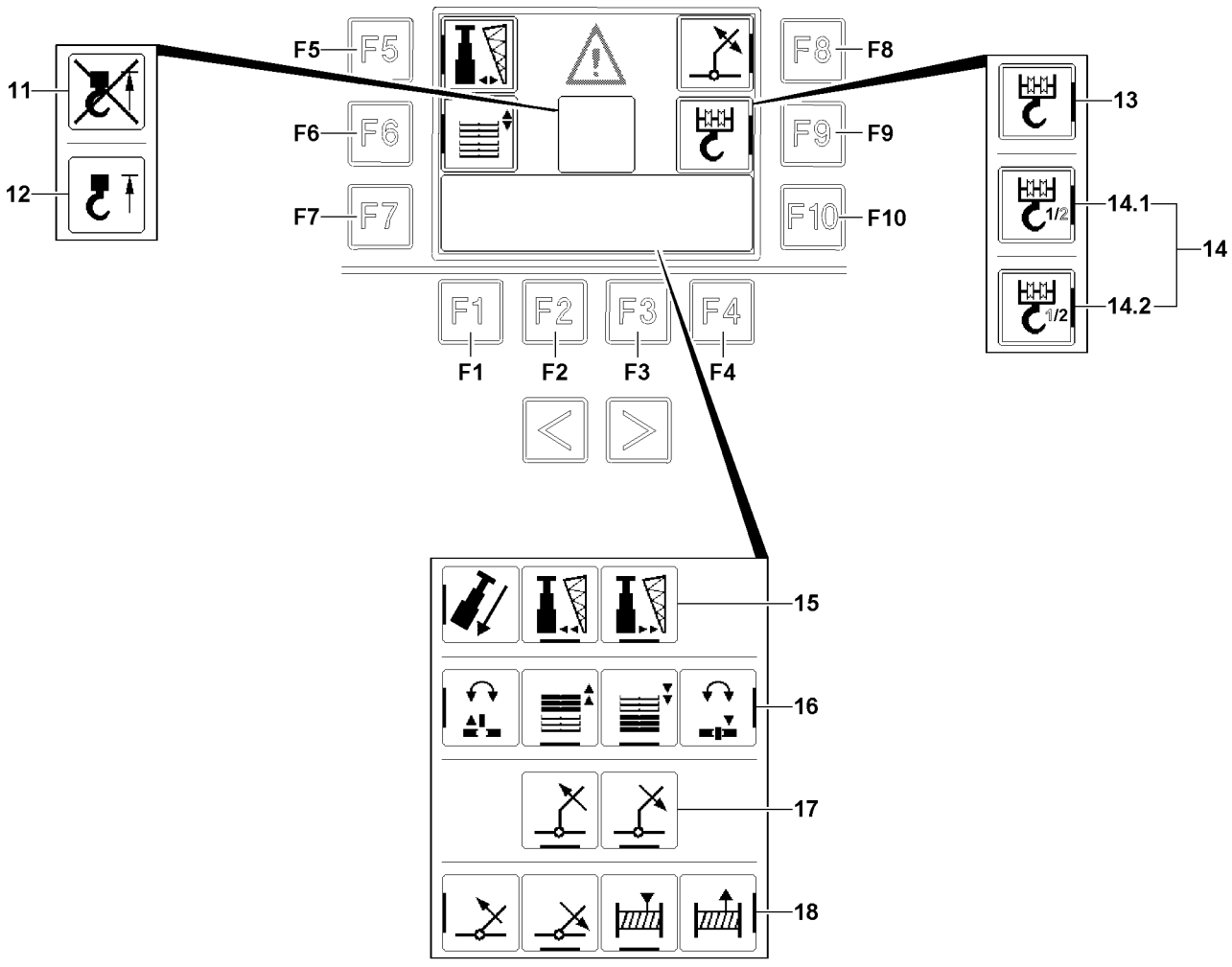

LWE/ab Muli 010/24201-02-02/en

Fig.117950

copyright © Liebherr-Werk Ehingen GmbH 2016

8 Menu Assembly functions

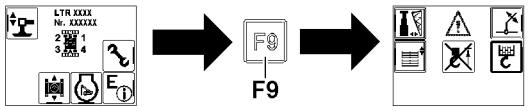

Fig.119849

Note
Change from start menu to Assembly function menu:
▶ Press the function key **F9**.

Note
▶ The function key **F5** and the function key **F9** in the Assembly functions menu remain active only as long as the telescopic boom is completely telescoped in.

8.1 Icon explanation in assembly function menu

11 Hoist top bypassed
- Appears when the hoist top limit switch is automatically bypassed by the control.

12 Hoist top triggered
- Appears when the hoist top limit switch is triggered.

13 Single hoist gear
- Icon appears when only one hoist winch is activated.

14 Two hoist gears
- Icon appears if two hoist winches are activated.
- Icon **14.1** appears: Hoist gear 1 selected.
- Icon **14.2** appears: Hoist gear 2***** selected.

8.2 The function keys in the assembly functions menu

554 Button
- Call up engine operation.

555 Button
- Call up engine operation.

F1 Function key
- Back to the start menu.

F5 Function key
- Selection / deselection of hydraulic folding jib assembly*****.
- After selection, the operating icons **15** appear additionally.
- Function is only active when the telescopic boom is completely telescoped in.

F6 Function key
- Selection / deselection of ballasting / turntable lock.
- After selection, the operating icons **16** appear additionally.

F8 Function key
- Selection / deselection of lifting / lowering the hydraulic folding jib*****.
- After selection, the operating icons **17** appear additionally.

F9 Function key
- Selection / deselection of fastening the hook block.
- After selection, the operating icons **18** appear additionally.
- Function is only active when the telescopic boom is completely telescoped in.

LWE/ab Muli 010/24201-02-02/en

copyright © Liebherr-Werk Ehingen GmbH 2016

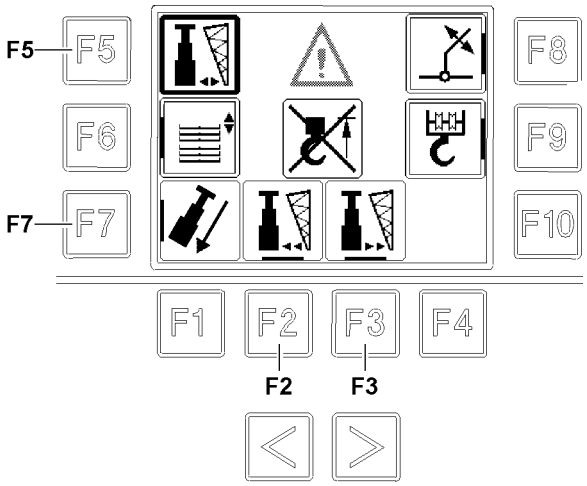

Fig.117953

LWE/ab Muli 010/24201-02-02/en

copyright © Liebherr-Werk Ehingen GmbH 2016

8.3 Assembling the hydraulic folding jib*

In order to be able to assemble the hydraulic folding jib* on the boom head, it must be swung out over a cylinder.

To be able to pin the hydraulic folding jib* on the boom head, it can be possible that the pin bores do not align. Then the telescopic boom must be tensioned, then the telescopic sections are pulled together.

Make sure that the following prerequisites are met:
– The telescopic boom is fully telescoped in.
– The boom angle is less than 5°.

WARNING
Danger of crushing!
For the function tension the telescopic boom, all telescopic sections are pulled together. Limbs or other body parts can be caught and crushed.
▶ As long as the function „tension the telescopic boom“ is carried out, keep sufficient distance to the push area of the telescopic sections!

– **Selection / deselection of hydraulic folding jib assembly*:**
  • Press the function key **F5**.
    • **Result**: When the selection has been made, the border on the icon on the right of function key **F5** is bolded. The icons over the function key **F2** / function key **F3** and next to the function key **F7** appear.
– **Control release:**
  • The control release is made by touching the 2-Hand keyboard in the rear of the BTT, see section „Release of button block on BTT“
  • After provided control release, the icons over the function key **F2** / function key **F3** and next to function key **F7** are highlighted in purple.

Note
▶ To control the functions, a control release must be issued: The corresponding icons must be highlighted in purple.

– Swing the **hydraulic folding jib* out:**
  • Press the function key **F3**.
– Swing the **hydraulic folding jib* in:**
  • Press the function key **F2**.
– **Tension telescopic boom:**
  • Press the function key **F7**.

Note
▶ To be able to tension the telescopic boom completely, the telescopic cylinder must be pinned with the innermost telescope, see Crane operating instructions, chapter 4.05.

copyright © Liebherr-Werk Ehingen GmbH 2016

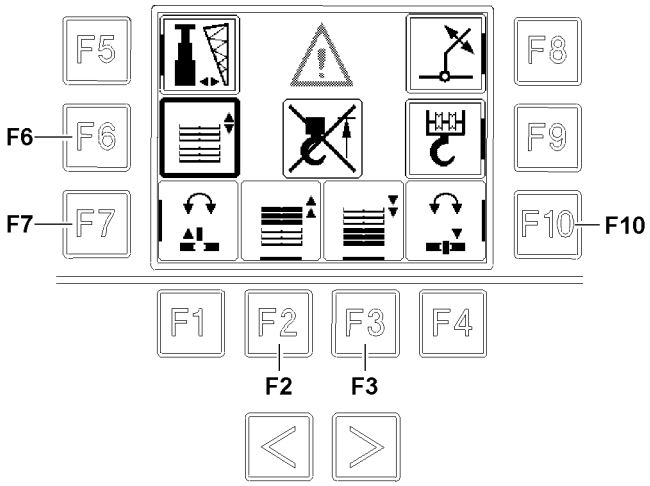

Fig.117954

LWE/ab Muli 010/24201-02-02/en

copyright © Liebherr-Werk Ehingen GmbH 2016

8.4 Ballasting / turntable lock

Ballasting is made via the ballasting cylinders. By pinning the turntable lock, the crane superstructure is prevented from turning. By pinning the turntable lock on the respective location, a collision of the ballasting cylinder with the counterweight can be eliminated. The turntable can be pinned on the intake point of the counterweight plates and on the receptacle point of the receptacle plate, see Crane operating instructions, chapter 4.07.

– **Selection / deselection of ballasting / turntable lock:**
  • Press the function key **F6**.
    • **Result**: When the selection has been made, the border on the icon on the right of function key **F6** is bolded. The icons over the function key **F2** / function key **F3** and next to the function key **F7** / function key **F10** appear.

– **Control release:**
  • The control release is made by touching the 2-Hand keyboard in the rear of the BTT, see section „Release of button block on BTT“
  • After provided control release, the icons over the function key **F2** / function key **F3** and next to function key **F7** / function key **F10** are highlighted in purple.

Note

▶ To control the functions, a control release must be issued: The corresponding icons must be highlighted in purple.

– **Lift the counterweight / retract the ballasting cylinders:**
  • Press the function key **F2**.

– **Lower the counterweight / extend the ballasting cylinders:**
  • Press the function key **F3**.

– **Unpin the turntable lock:**
  • Press the function key **F7**.

– **Pin the turntable lock:**
  • Press the function key **F10**.

LWE/ab Muli 010/24201-02-02/en

copyright © Liebherr-Werk Ehingen GmbH 2016

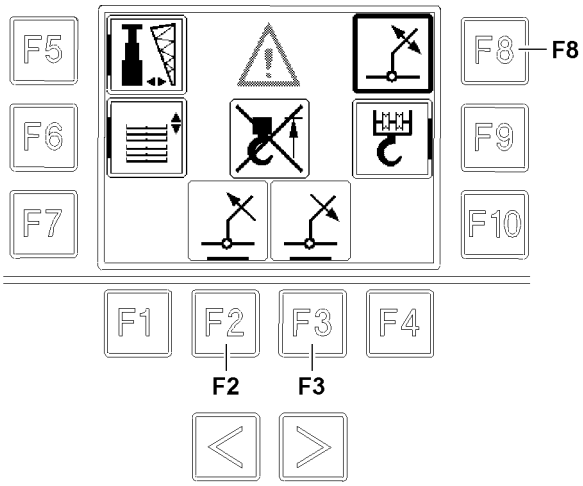

Fig.117955

LWE/ab Muli 010/24201-02-02/en

copyright © Liebherr-Werk Ehingen GmbH 2016

8.5 Lifting / lowering the hydraulic folding jib*

The hydraulic folding jib* can be raised / lowered for assembly, see Crane operating instructions, chapter 5.02.

– **Selection / deselection of lifting / lowering the hydraulic folding jib*:**
  • Press the function key **F8**.
    • **Result**: When the selection has been made, the border on the icon on the left of function key **F8** is bolded. The icons over the function key **F2** / function key **F3** appear.

– **Control release:**
  • The control release is made by touching the 2-Hand keyboard in the rear of the BTT, see section „Release of button block on BTT“
  • After completed control release, the icons over the function key **F2** / function key **F3** are highlighted in purple.

Note

▶ To control the functions, a control release must be issued: The corresponding icons must be highlighted in purple.

– Lift the **hydraulic folding jib*:**
  • Press the function key **F2**.

– Lower the **hydraulic folding jib*:**
  • Press the function key **F3**.

LWE/ab Muli 010/24201-02-02/en

copyright © Liebherr-Werk Ehingen GmbH 2016

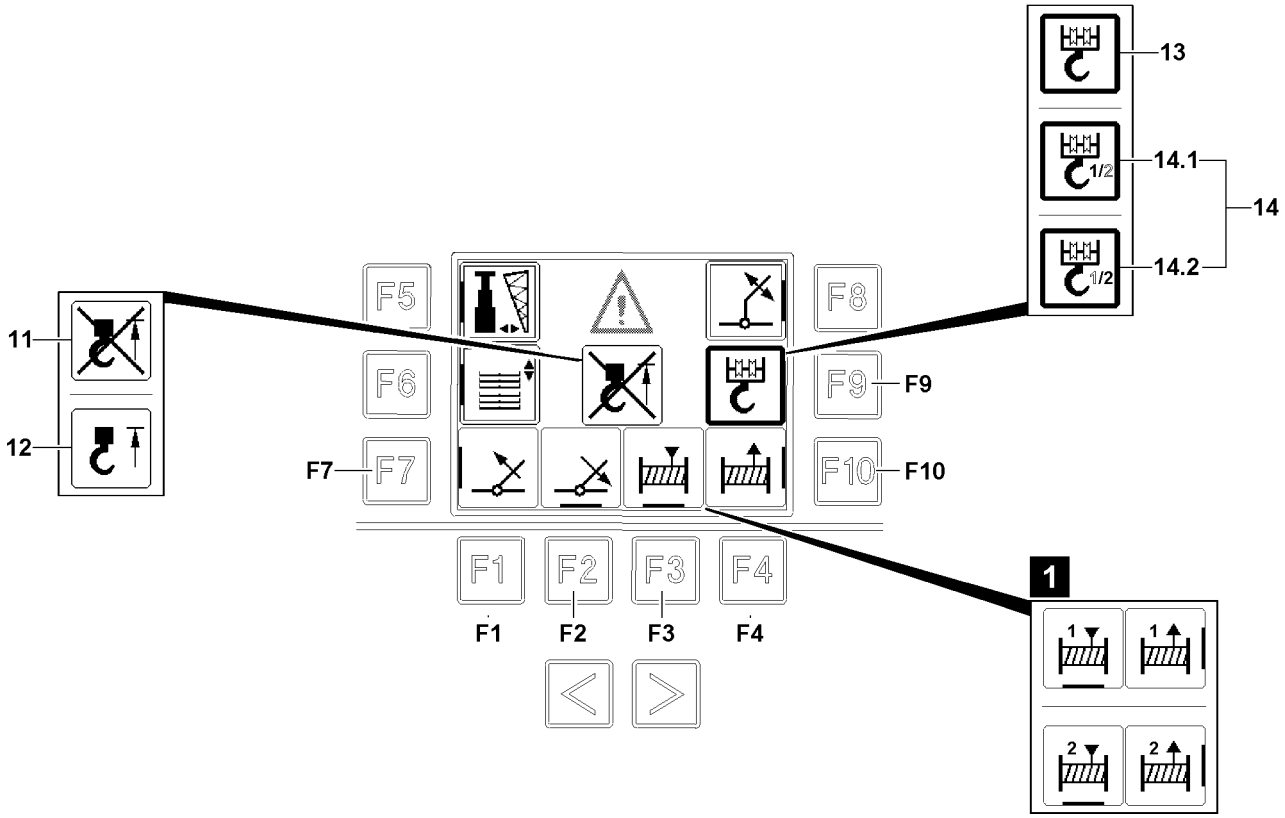

LWE/ab Muli 010/24201-02-02/en

Fig.117951

copyright © Liebherr-Werk Ehingen GmbH 2016

8.6 Fastening the hook block

NOTICE
Incorrect hoist winch selected!
If the incorrect hoist winch is selected, the crane can be damaged.
▶ When two hoist winches are active, select the correct hoist winch for the hook block.

8.6.1 Selecting the hoist winch

When the hoist winches **14** icon appears, a hoist winch must be selected first. The selection is only possible via the operating elements in the crane operator's cab! To do so, the winch which is not be driven must be blocked.

– Icon hoist winch **14.1** is displayed: Hoist winch 1 (winch 1) is active.
– Icon hoist winch **14.2** is displayed: Hoist winch 2 (winch 2) is active.

Make sure that the following prerequisite is met:
– Icon hoist winches **14** appears in the BTT display

– **Selection of hoist winch:**
  • Release the respective winch, see Crane operating instructions, chapter 4.05.
    • **Result:** The number for the active hoist winch is displayed in bold.
      In the icons for the control appears the number of the active hoist winch, see illustration **1**.

LWE/ab Muli 010/24201-02-02/en

copyright © Liebherr-Werk Ehingen GmbH 2016

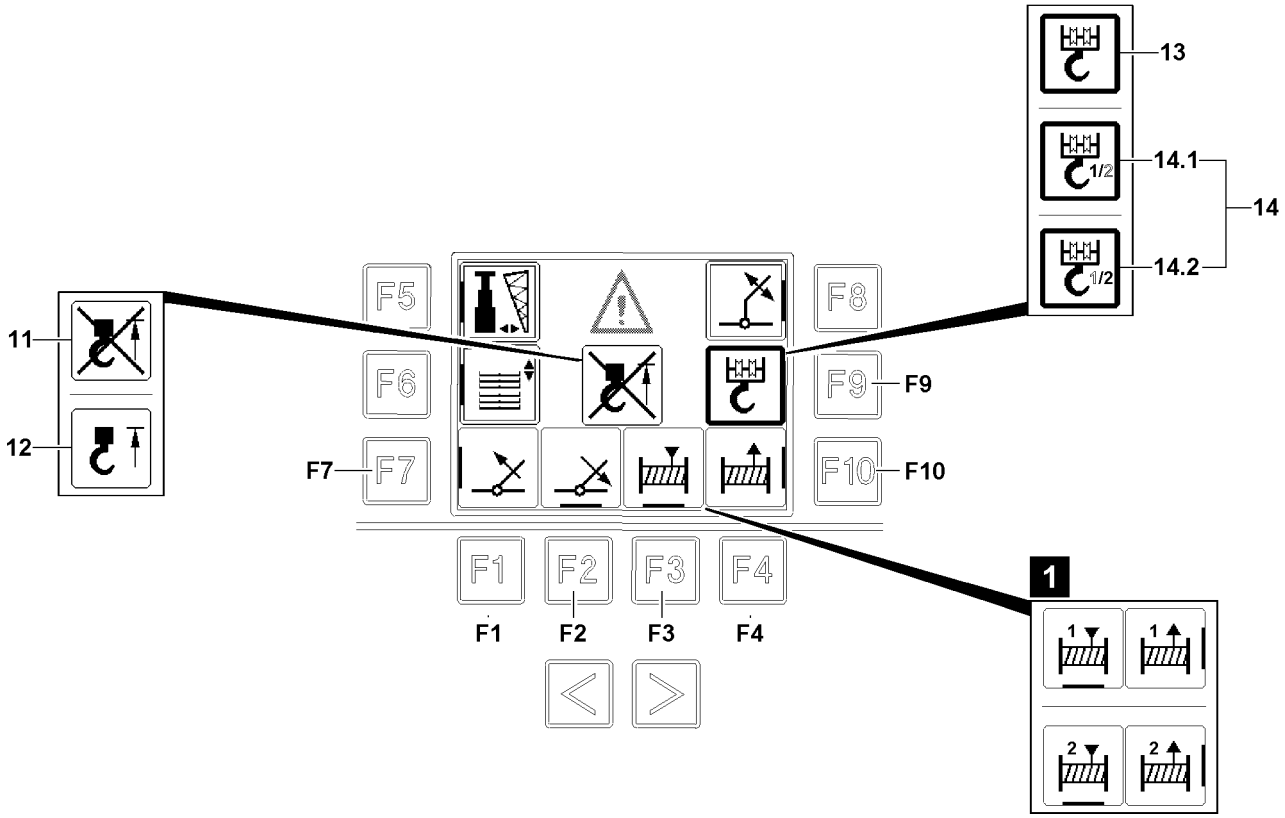

LWE/ab Muli 010/24201-02-02/en

Fig.117951

copyright © Liebherr-Werk Ehingen GmbH 2016

8.6.2 Detaching / attaching the hook block on the fastening point

- **11** Hoist top limit switch bypassed
  is displayed when the hoist top limit switch is automatically bypassed by the control.
- **12** Hoist top limit switch triggered
  is displayed when the hoist top limit switch is triggered, crane movements are limited.

Make sure that the following prerequisite is met:
- The crane superstructure is in 0°-position or in 180°-position pinned with the crane chassis.

- **Selection of hoist winch / hook block:**
  - Press the function key **F9**.
    - **Result**: When the selection has been made, the border on the icon on the left of function key **F9** is bolded. The icons over the function key **F2** / function key **F3** and next to the function key **F7** / function key **F10** appear.

- **Control release:**
  - The control release is made by touching the 2-Hand keyboard in the rear of the BTT, see section „Release of button block on BTT“
  - After provided control release, the icons over the function key **F2** / function key **F3** and next to function key **F7** / function key **F10** are highlighted in purple.

Note
▶ To control the functions, a control release must be issued: The corresponding icons must be highlighted in purple.

Note
▶ The function key **F2**, function key **F3**, function key **F7** and function key **F10** have 2 speed stages. For example, if the function key **F10** is actuated lightly, the hoist rope is spooled out slowly. If the function key **F10** is actuated harder, the hoist rope is spooled out quickly.

Spool the hoist winch up:
- Press the function key **F3**.

Spool the hoist winch out:
- Press the function key **F10**.

Luff the telescopic boom down:
- Press the function key **F2**.

Luff the telescopic boom up:
- Press the function key **F7**.

8.7 Menu Control Working floodlight*

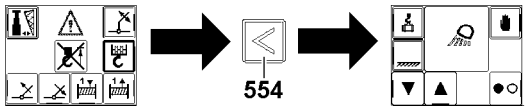

Fig.121447: Change from fastening the hook block function to the Control working floodlight menu*

Via the function *fasten the hook block*, the Control the working floodlight* menu can be called up.

copyright © Liebherr-Werk Ehingen GmbH 2016

8.7.1 Icon explanation Menu Control Working floodlight*

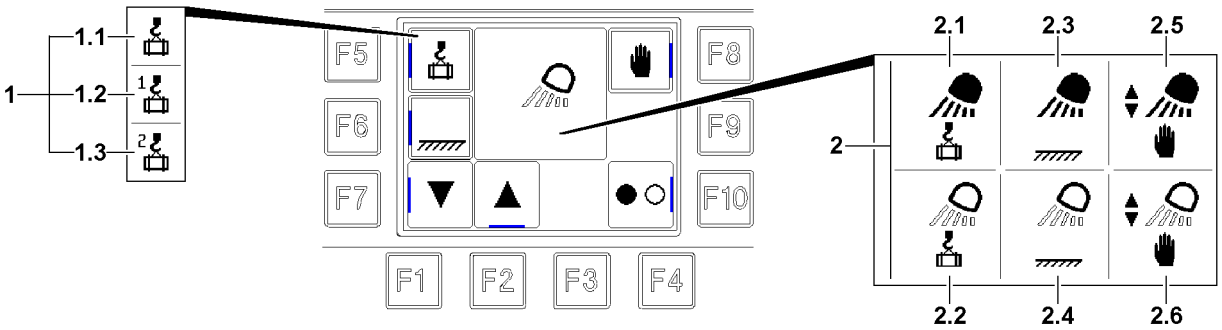

*Fig.121448: Icon explanation Menu Control Working floodlight**

- **1** Load following icon
  - **1.1** Load following Hoist gear
  - **1.2** Load following is set in case of two active hoist gears on hoist gear 1
    Note: Only present for certain crane types.
  - **1.3** Load following is set in case of two active hoist gears on hoist gear 2
    Note: Only present for certain crane types.
- **2** Working floodlight icon
  - **2.1** Working floodlight turned on and set to load following
  - **2.2** Working floodlight turned off and set to load following
  - **2.3** Working floodlight turned on and set to illuminate work area
  - **2.4** Working floodlight turned off and set to illuminate work area
  - **2.5** Working floodlight turned on and set to manual control
  - **2.6** Working floodlight turned off and set to manual control

8.7.2 Function keys Menu Control Working floodlight*

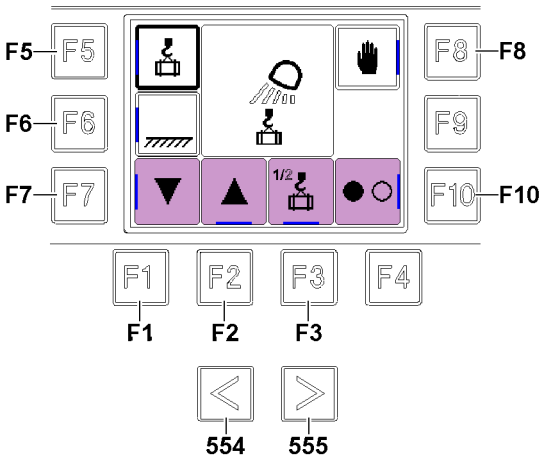

*Fig.121449: Function keys Menu Working floodlight**

554 Button
- Call up engine operation

555 Button
- back to function *Fasten the hook block*

F1 Function key
- Back to menu overview *Mobile operating element*

F2 Function key
- Swing working floodlight down manually

F3 Function key
- Load following for two active hoist gears: change between the hoist gears
  Note: Only present for certain crane types.

LWE/ab Muli 010/24201-02-02/en

copyright © Liebherr-Werk Ehingen GmbH 2016

F5 Function key
• Working floodlight automatic control operation: Select load following
F6 Function key
• Working floodlight automatic control operation: Select illuminate work area
F7 Function key
• Swing working floodlight up manually
F7 Function key
• Swing working floodlight up manually
F8 Function key
• Select working floodlight manual control operation
F10 Function key
• Turn the working floodlight on / off

8.7.3 Control Working floodlight*

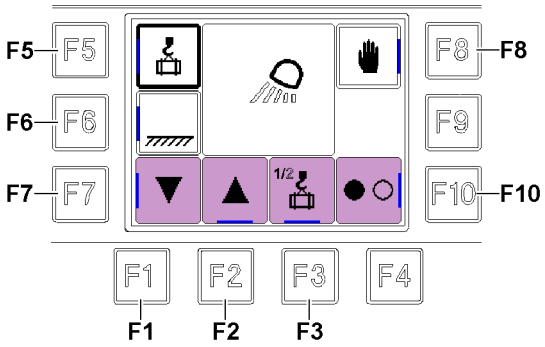

*Fig.121446: Function Control Working floodlight**

– **Turn the working floodlight on / off:**
  • Press the function key **F10**.
    • **Result**: The working floodlight is turned on / off.

– **Working floodlight automatic control operation: Select load following:**
  • Press the function key **F5**.
    • **Result**: The working floodlight is automatically controlled according to the movement of the load.
    • Readjust downward by pressing the function key **F2**.
    • Readjust upward by pressing the function key **F7**.

– **Working floodlight automatic control operation: Select illuminate work area:**
  • Press the function key **F6**.
    • **Result**: The working floodlight is automatically controlled according to the location of the work area.
    • Readjust forward by pressing the function key **F2**.
    • Readjust backward by pressing the function key **F7**.

– **Working floodlight manual control operation:**
  • Swing the working floodlight up / forward: Press function key **F2**.
    • **Result**: The working floodlight is controlled according to the actuation of the key.
  • Swing the working floodlight down / backward: Press function key **F7**.
    • **Result**: The working floodlight is controlled according to the actuation of the key.

copyright © Liebherr-Werk Ehingen GmbH 2016

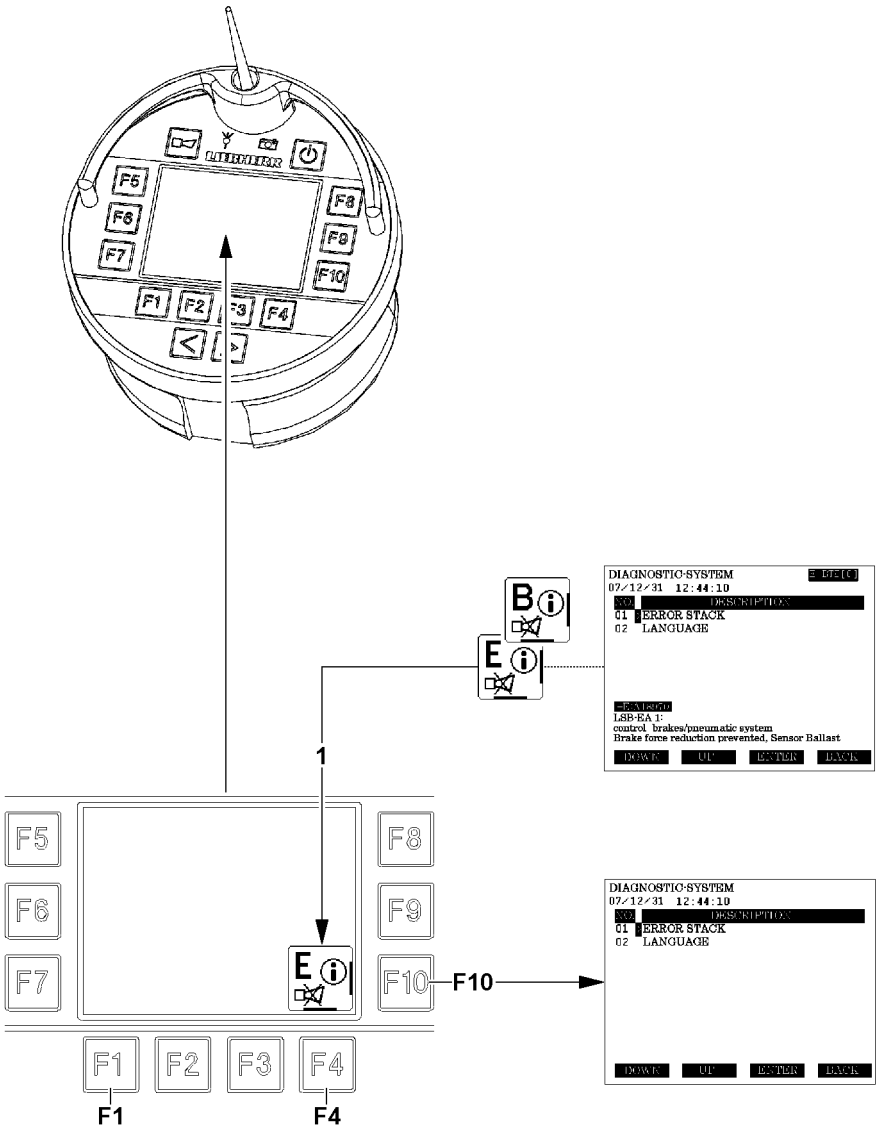

LWE/ab Muli 010/24201-02-02/en

Fig.117975

copyright © Liebherr-Werk Ehingen GmbH 2016

9 Menu Test system

If an error message is issued for the LICCON control:
– a „B“ or „E“ is shown in the information field **1**, see illustration
– an acoustic warning signal of the radio remote control is issued

9.1 Function keys in the „Test system“ menu

F1 Function key
- Return to selection overview

F4 Function key
- When a note for an error message appears and a horn is shown in the information field **1**:
  Press 1x: Acoustic warning signal of the radio remote control, which can be shut off in case of operating / system errors is shut off.
  Press 2x: Call up test system

F10 Function key
- Call up test system

9.2 Operating the test system

– **Turn acoustic warning signal off:**
  - Press the function key **F4**.
    - **Result**: Acoustic warning signal of the radio remote control, which can be shut off in case of operating / system errors is shut off.
– **Call up test system:**
  - Press function key **F4** again.
    or
  - Press the function key **F10**.
    - **Result**: Start page of test system is called up.
– **Close the test system:**
  - Press the function key **F1**.

Note
▶ For detailed description of the test system, see Diagnostics Manual.

LWE/ab Muli 010/24201-02-02/en

copyright © Liebherr-Werk Ehingen GmbH 2016

1

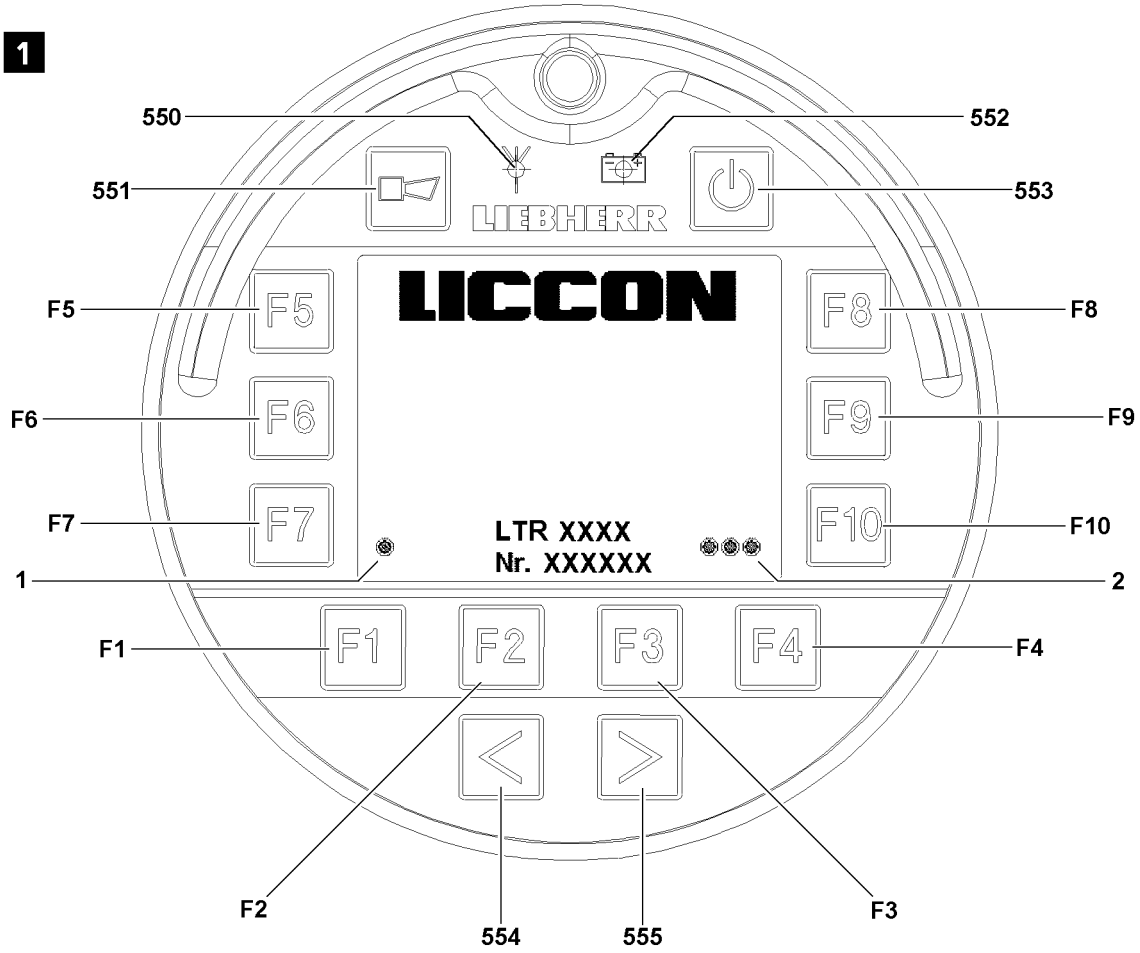

2

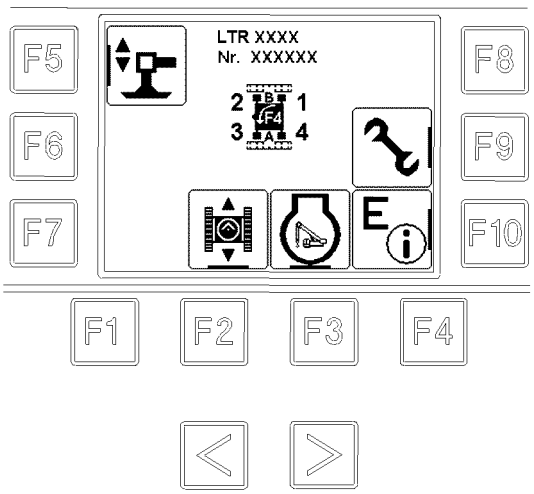

LWE/ab Muli 010/24201-02-02/en

Fig.117808

copyright © Liebherr-Werk Ehingen GmbH 2016

10 Operation BTT

There are two ways to turn the BTT:
- Turn the BTT on via the ignition switch.
- Turn the BTT on via the ON / OFF button.

10.1 Turning the BTT on via the ignition switch

Make sure that the following prerequisite is met:
- The BTT is in the charging cradle.

▶ Turn the ignition for the crane engine on: Actuate the ignition switch, see Crane operating instructions, chapter 4.01.

Result:

- The BTT turns on.
- After completion of the starting procedure, the indicator light **550** and indicator light **552** light up green, see illustration **1**.
- The start screen is shown before the display for „Menu overview“ changes, see illustration **2**.

10.2 Turning the BTT on via the ON / OFF button

Make sure that the following prerequisite is met:
- The BTT removed from the charging cradle.

▶ Turn the ignition for the crane engine on: Actuate the ignition switch, see Crane operating instructions, chapter 4.01.

▶ Turn the BTT on: Press the button **553** (ON / OFF button).

Result:

- The BTT turns on.
- The indicator light **550** and indicator light **552** light up in orange.
- The start screen is displayed, see illustration **1**.

▶ Enter the code: Press button **554**, then button **555** and then function key **F1**.

Result:

- The indicator light **550** and indicator light **552** light up in green.
- The indicator light **1** and indicator light **2** light up green.
- The connection between the BTT and the receiver is established.

▶ Press any function key.

Result:

- On the BTT appears the „Menu overview“, see illustration **2**.

▶ Select the menu with the appropriate function key, see relevant technical chapter.

LWE/ab Muli 010/24201-02-02/en

copyright © Liebherr-Werk Ehingen GmbH 2016

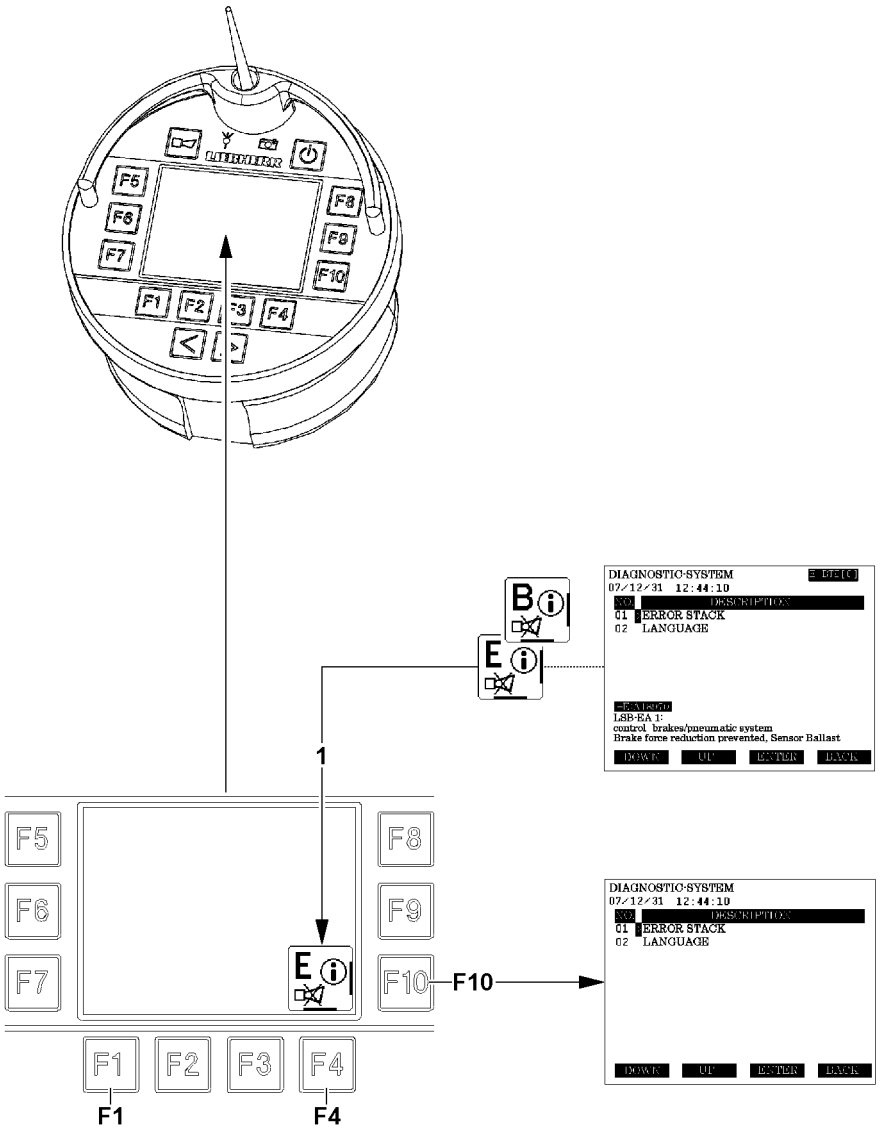

LWE/ab Muli 010/24201-02-02/en

Fig.117975

copyright © Liebherr-Werk Ehingen GmbH 2016

11 Measures in case of problems

11.1 Did an error message occur?

If an event occurs which leads to the display of an error message, a „B“ or „E“ are shown on icon **1**, see illustration.

WARNING
Danger of accident!
If the displayed errors in the icon **1** are ignored, there is a risk of accidents!
▶ Take the crane out of service and remedy the cause of the error!
▶ Do not put the crane back into operation before the cause of the error has been remedied!

▶ Press the function key **F4**.

Result:

– Acoustic warning signal of the radio remote control, which can be shut off in case of operating / system errors is shut off.

▶ Press the function key **F10**.

Result:

– The „Test system“ program (error determination screen) is called up.

Note
▶ To be able to find the cause of the problem, the error or errors must be read in the error determination screen / error stack of the BTT **500**, see Diagnostics manual.

Close the „Test system“ program (error determination screen):

▶ Press the function key **F1**.

Result:

– The „Test system“ program (error determination screen) is closed.

LWE/ab Muli 010/24201-02-02/en

copyright © Liebherr-Werk Ehingen GmbH 2016

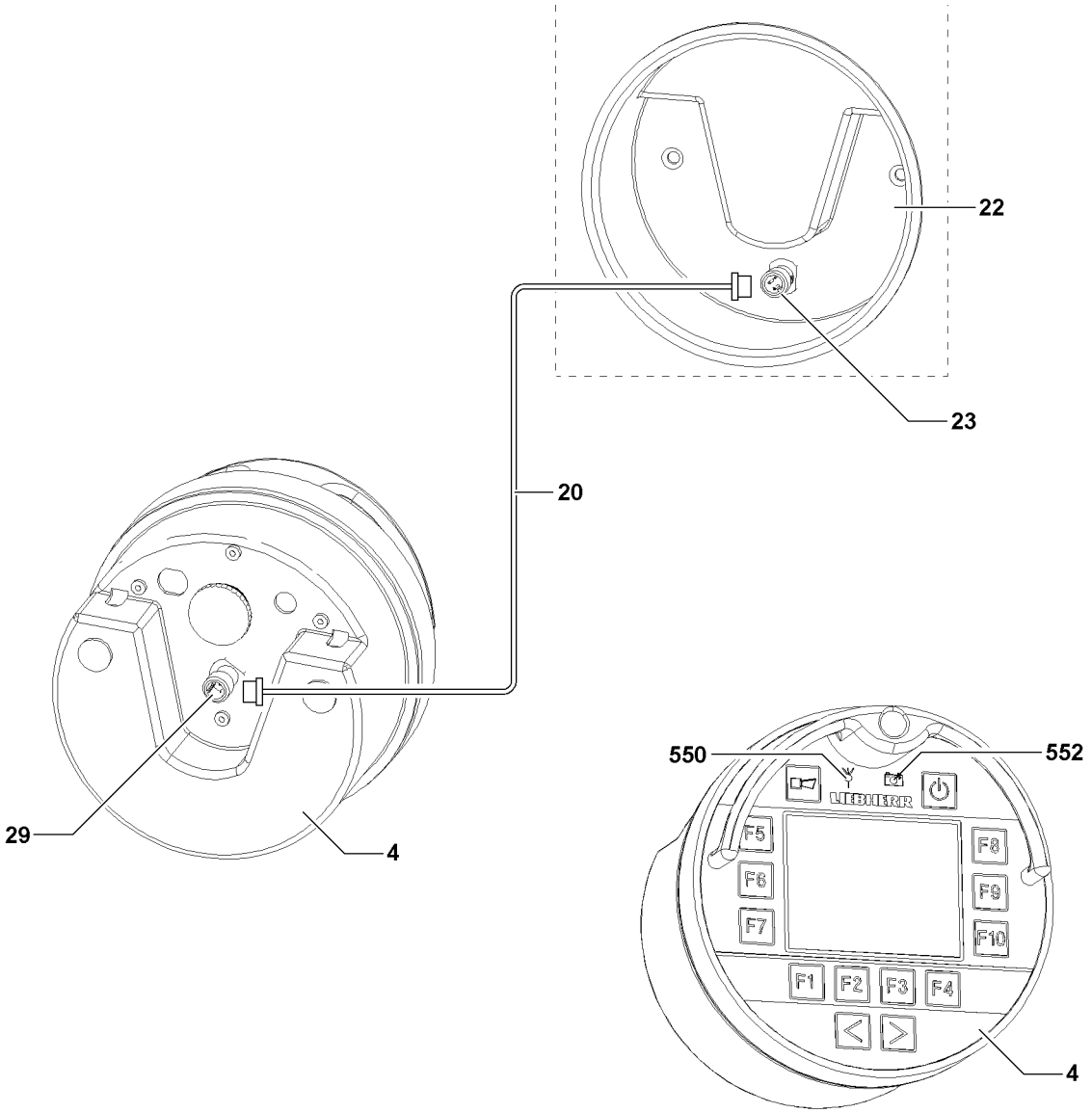

Fig.112952

11.2 The displays remain dark?

Note

- ▶ Indicator light Charge condition **552** shows the charge condition.
- ▶ Indicator light Transmission signal **550** shows the quality of the radio contact connection.

When the indicator light charge condition **552** does not light up or lights up red:

- ▶ Plug the BTT **4** in the charging module **22**.

When the LED **552** does not light up even though the BTT **4** is in the charging module **22** or the BTT **4** can not be turned on:

- ▶ Contact Liebherr Service to determine the cause of the problem and further procedure.

11.3 Is the radio connection faulty?

If the radio contact connection to the BTT **4** is faulty or interrupted (Indicator light Transmission signal **550** lights up red), then it can be bypassed with line **20**.

LWE/ab Muli 010/24201-02-02/en

copyright © Liebherr-Werk Ehingen GmbH 2016

The radio contact connection to the BTT **4** can become faulty or interrupted by the following occurrences:
- By interference signals from a nearby radio tower.
- The radio module on the BTT **4** or on the BTB is defective.
- The rechargeable battery in the BTT **4** is discharged.
- Due to bad selection of the placement location by the operator.

11.3.1 Bypassing the radio connection

Make sure that the following prerequisites are met:
- The line **20** to bypass the radio communication has been removed from the switch cabinet of the crane cab.
- The BTT **4** has been removed from the charging module **22** and is turned on.
- The caps on the plug connection **23** and the plug connection **29** have been removed.

▶ Screw the line **20** on the charging module **22** onto the plug connection **23**.
▶ Screw the line **20** on the BTT **4** on the plug connection **29**.

Result:

– The radio communication is bypassed.

Note
If the BTT **4** does not turn on, even though the line **20** is connected with the charging module **22**, then the rechargeable battery may be defective!
▶ Contact Liebherr Service to determine the cause of the problem and further procedure.

LWE/ab Muli 010/24201-02-02/en

copyright © Liebherr-Werk Ehingen GmbH 2016

Empty page!

copyright © Liebherr-Werk Ehingen GmbH 2016

6 Additional equipment

copyright © Liebherr-Werk Ehingen GmbH 2016

copyright © Liebherr-Werk Ehingen GmbH 2016

6.02 Heater / engine preheating / Air conditioning system Crane operator’s cab

1	Climate control systems	3
2	Safety guidelines	3
3	Climate control	4
4	Climate control system*	11
5	Auxiliary heater*	12
6	Maintenance Heater	19
7	Maintenance Auxiliary heater*	20

LWE/ab Muli 010/24201-02-02/en

copyright © Liebherr-Werk Ehingen GmbH 2016

LWE/ab Muli 010/24201-02-02/en

Fig.195219

copyright © Liebherr-Werk Ehingen GmbH 2016

1 Climate control systems

The climate control systems consists of:
- Heater (engine dependent)
- Auxiliary heater* with engine preheating (engine independent)
- Climate control system*

The heater and the climate control system* are only operational when the engine is running.

The auxiliary heater* is operational when the engine is turned on and off.

Keep the air intake and the air filter free of:
- Ice
- Snow
- Contaminants
- Objects

For efficient climate control, close the windows and door.

Measures can accelerate the cooling in warm weather.

Measures to accelerate the cooling in warm weather:
- Ventilate the crane cab for a short time
- Turn the climate control system* on
- Switch the air supply for a short time to recirculating air

2 Safety guidelines

Observe the country specific regulations for the operation of climate control systems.

WARNING
Danger of accident due to fogged up window!
▶ Do **not** drive the crane with fogged up window.

In case of fogged up window:
▶ Turn the function *defrost window* on.

Measures to prevent the windows from fogging up:
- Adjust the air distribution to window
- Adjust the air supply to recirculating air
- Adjust the maximum fan stage
- Turn the climate control system* on

NOTICE
Damage of climate control systems!
▶ Match the operating fluids in time to the ambient temperatures.
▶ Operate the auxiliary heater* and climate control system* at least once a month for 15 minutes.

NOTICE
Total discharge of battery!
When the engine is turned off, the auxiliary heater* can discharge the battery.
▶ Make sure that the battery charge is sufficient.

NOTICE
Damage of climate control systems!

Repair work on the climate control systems:
▶ Have them carried out solely by employees from Liebherr-Werk Ehingen.

LWE/ab Muli 010/24201-02-02/en

copyright © Liebherr-Werk Ehingen GmbH 2016

3 Climate control

The climate control of the crane cab is regulated via the *Climate control* menu. The *Climate control* menu is shown on the left touch display.

The functions are selected by tapping the respective icon in the display.

With function keys **F2** to **F4** the functions can be activated. The active functions are highlighted in black.

If no setting is selected after a certain period of time, the *Climate control* menu is blanked out.

Note
At low temperatures, the touch display can react delayed.
▶ Wait a few minutes until the touch display reacts.

Make sure that the following prerequisites are met:
– The engine is running
– The *Climate control* menu is selected

3.1 Automatic operation

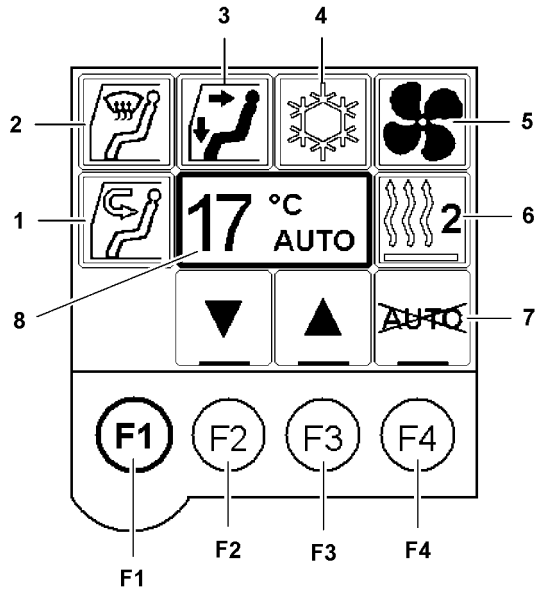

Fig.121519: Automatic operation

In *Automatic operation* the system tries to reach the set temperature and to keep it automatically constant.

The following settings are automatically adjusted:
– Temperature
– Fan stage
– Air supply

If the engine is running, the auxiliary heater* is automatically engaged if needed.

The Climate control system* can be turned on or off.

To turn *Automatic operation* on:
▶ Press the function key **F4**.

Result:

– The *Automatic operation* icon **8** is shown.

LWE/ab Muli 010/24201-02-02/en

copyright © Liebherr-Werk Ehingen GmbH 2016

▶ Set the desired temperature with function key **F2** and function key **F3**.

Problem remedy
Does the **AUTO** icon blink in the display?
The set temperature cannot be reached.

To increase the temperature:
▶ Turn the auxiliary heater* on.

To decrease the temperature:
▶ Turn the climate control system* on

To turn *Automatic operation* off:
▶ Press the function key **F4** and select the *manual operation*.
or
Tap the *defrost window* icon **2**.
or
Tap the *fan stage* **5** icon.

3.2 Manual operation

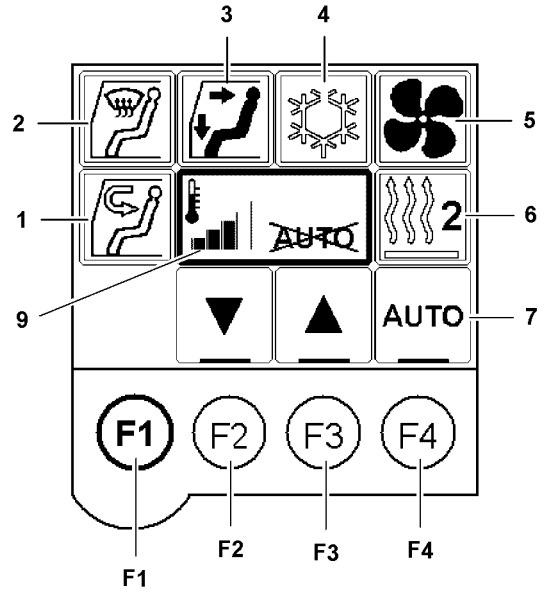

Fig.121520: Manual operation

In *manual operation* all settings must be set by hand.

To turn manual operation on:
▶ Press the function key **F4**.

Result:

– The *manual operation* icon **9** is shown.

▶ Set the desired heat supply with function key **F2** and function key **F3**.
▶ Regulate the remaining settings by hand.

To turn *manual operation* off:
▶ Press the function key **F4** and select the *automatic operation*.

LWE/ab Muli 010/24201-02-02/en

copyright © Liebherr-Werk Ehingen GmbH 2016

3.3 Air supply

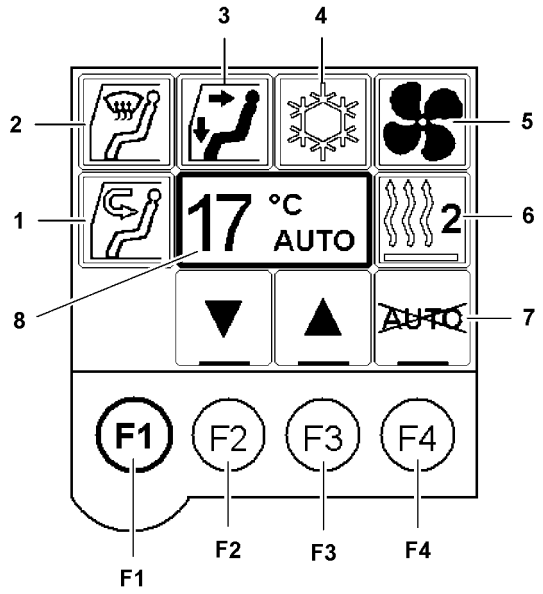

Fig.121519: Menu Climate control

Use the recirculating air function to regulate the air supply between recirculating air and fresh air.

▶ Tap the Recirculating air **1** icon.

Result:

– The *Recirculating air* menu is selected.

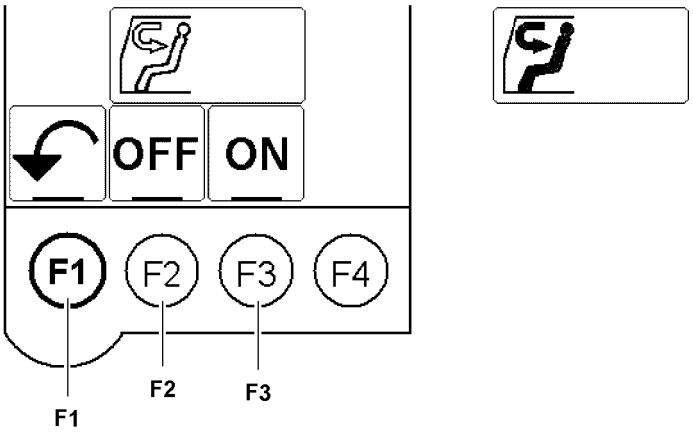

Fig.121522: Recirculating air menu

To turn the *recirculating air* function on:
▶ Press the function key **F3**.

Result:

– The *Recirculating air* icon is highlighted in black.
– Switch the air supply to recirculating air

To turn the *recirculating air* function off:
▶ Press the function key **F2**.

Result:

– The *Recirculating air* icon is highlighted in white.
– Switch the air supply to fresh air

LWE/ab Muli 010/24201-02-02/en

copyright © Liebherr-Werk Ehingen GmbH 2016

To get back to the *Climate control* menu:
▶ Press the function key **F1**.

3.4 Defrosting the window

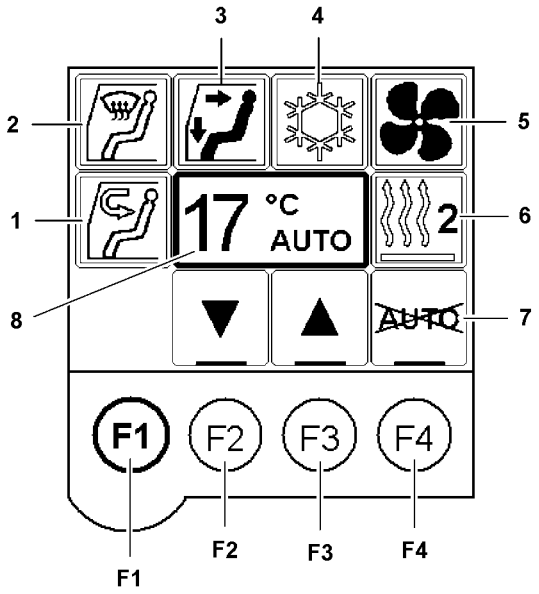

Fig.121519: Menu Climate control

Use the *defrost window* function to quickly defrost the window to remove condensation on the inside of the window.

Note

When the window is defrosted:
▶ Turn the function *defrost window* off.

▶ Tap the *defrost window* icon **2**.

Result:

– The *defrost window* menu is selected.

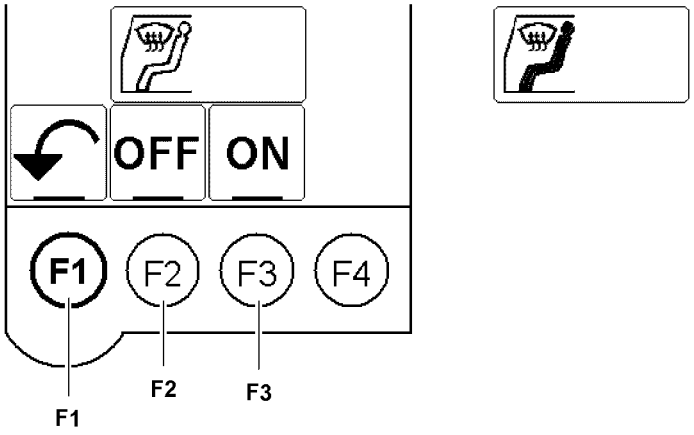

Fig.121521: Menu Defrost window

To turn the function *defrost window* on:
▶ Press the function key **F3**.

LWE/ab Muli 010/24201-02-02/en

copyright © Liebherr-Werk Ehingen GmbH 2016

Result:

– The *defrost window* icon is highlighted in black.
– Fan stage is increased
– Air is directed to the window
– Switch the air supply to recirculating air
– Climate control* engages, as needed.

To turn the function *defrost window* off:
▶ Press the function key **F2**.

Result:

– The *defrost window* icon is highlighted in white.

To get back to the *Climate control* menu:
▶ Press the function key **F1**.

3.5 Air distribution

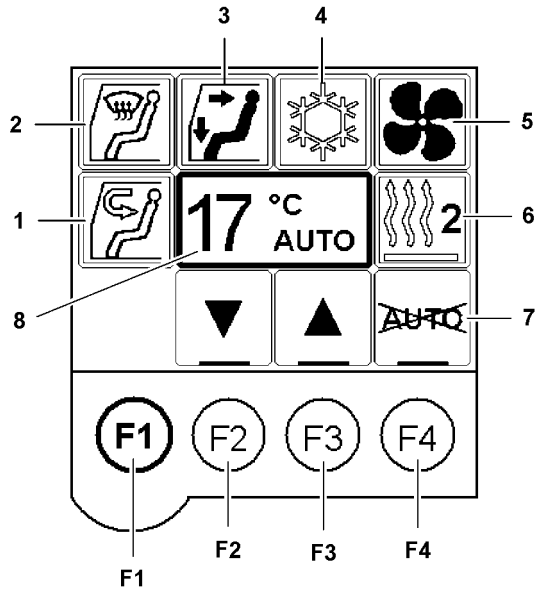

Fig.121519: Menu Climate control

Use the air distribution function to regulate the air distribution between floorboard area and the head area.

▶ Tap the air distribution **3** icon.

Result:

– The *air distribution* menu is selected.

LWE/ab Muli 010/24201-02-02/en

copyright © Liebherr-Werk Ehingen GmbH 2016

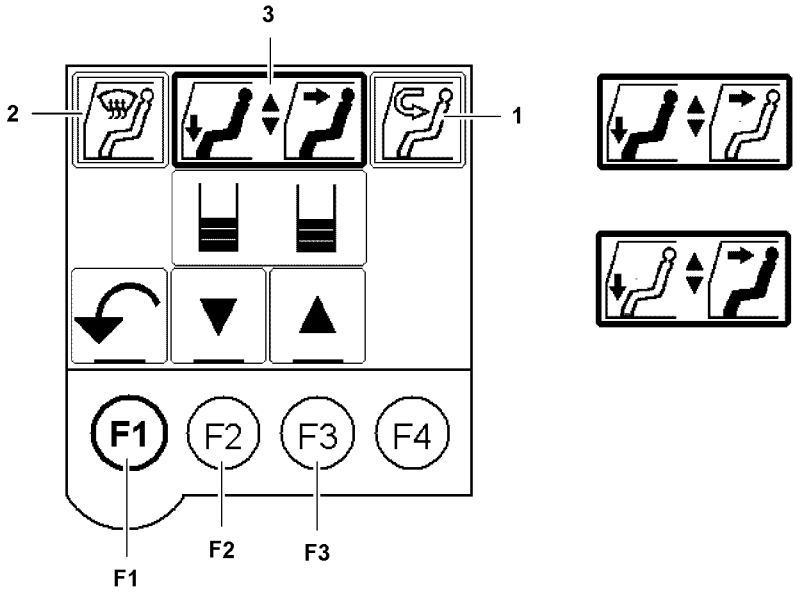

Fig.121523: Menu Air distribution

By tapping the icon **1** the *air supply* function is preselected.

By tapping the icon **2** the *defrost window* function is preselected.

By tapping the icon **3** the *air distribution* function is preselected.

Note

To regulate the air supply:
▶ Observe and adhere to the description in section Air supply.

To defrost the window:
▶ Observe and adhere to the description in section *Defrost window*.

When the air distribution **3** icon is **not** selected:
▶ Tap the air distribution **3** icon.

To increase *air distribution* to the head area:
▶ Press the function key **F3**.

Result:

– the bar display on the right side is increased
– at maximum *air distribution* to the head area, the *floorboard area* icon is highlighted in white

To increase *air distribution* to the floorboard area:
▶ Press the function key **F2**.

Result:

– the bar display on the left side is increased
– at maximum *air distribution* to the floorboard area, the *head area* icon is highlighted in white

To get back to the *Climate control* menu:
▶ Press the function key **F1**.

LWE/ab Muli 010/24201-02-02/en

copyright © Liebherr-Werk Ehingen GmbH 2016

3.6 Fan stage

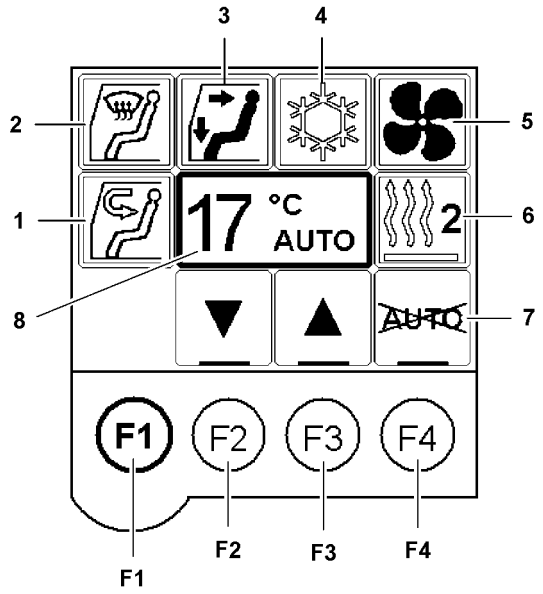

Fig.121519: Menu Climate control

The fan stage can be adjusted from *fan off* to *highest fan stage*.

▶ Tap the fan stage **5** icon.

Result:

– The *Fan stage* menu is selected.

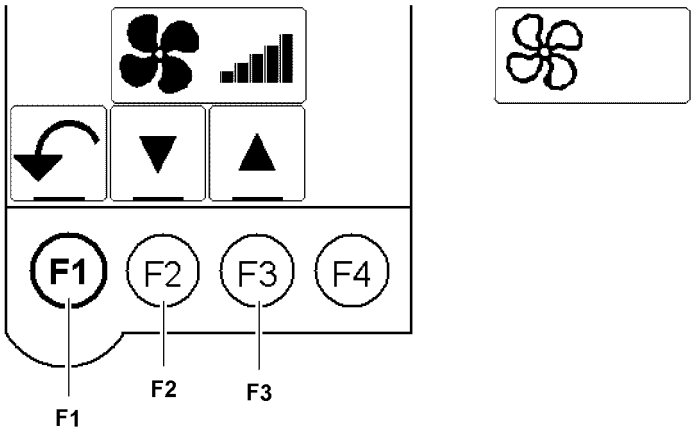

Fig.121525: Fan stage menu

To increase the *fan stage*:

▶ Press the function key **F3**.

Result:

– the bar display is increased

To decrease the *fan stage*:

▶ Press the function key **F2**.

Result:

– the bar display is decreased
– at *fan off* the fan icon is highlighted in white

LWE/ab Muli 010/24201-02-02/en

copyright © Liebherr-Werk Ehingen GmbH 2016

To get back to the *Climate control* menu:
▶ Press the function key **F1**.

4 Climate control system*

4.1 Turning the climate control system* on / off

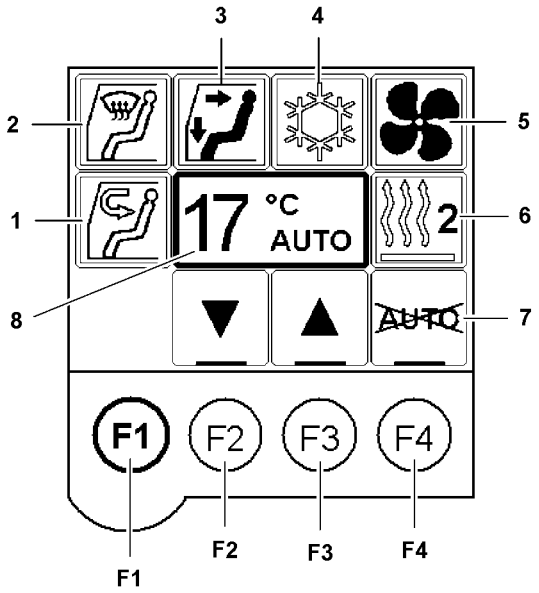

Fig.121519: Menu Climate control

The climate control system* is a combination of:
– Heating system
– Cooling system

The cooling system is responsible for dehumidification and cooling the air in the crane cab.

During cooling operation the humidity is reduced. This prevents the windows from fogging up.

The maximum cooling output is reached when:
– The air supply is switched to recirculating air.
– The fan stage is set to maximum output.
– The temperature stage is set to zero.
– All air vents are open.
– The door and windows are closed.

Make sure that the following prerequisites are met:
– The engine is running
– The *Climate control* menu is selected

▶ Tap the Climate control system **4** icon.

Result:

– The *Climate control system* menu is selected.

LWE/ab Muli 010/24201-02-02/en

copyright © Liebherr-Werk Ehingen GmbH 2016

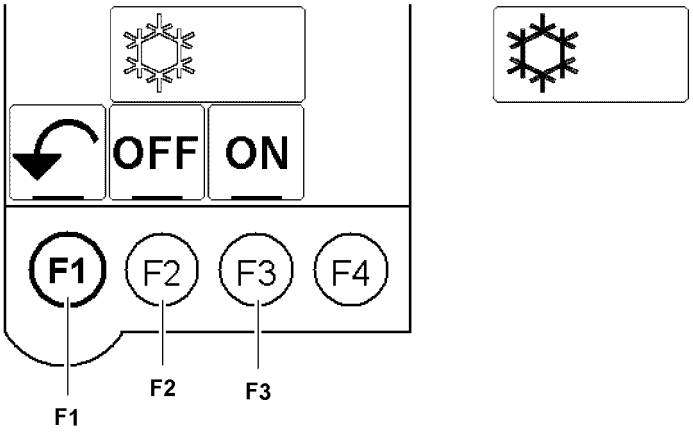

Fig.121524: Recirculating air menu

To turn the *climate control system* function on:
▶ Press the function key **F3**.

Result:

– The *Climate control system* icon is highlighted in black.

Problem remedy
The temperature from the air vents is not below the ambient temperature?
Filter or condenser is dirty.
▶ Check the filter for impurities. If necessary, clean or replace.
▶ Check the evaporator for impurities and clean, if necessary.

When all these measures do not help:
▶ Contact the Service Dept. at Liebherr-Werk Ehingen.

To turn the *climate control system* function off:
▶ Press the function key **F2**.

Result:

– The *Climate control system* icon is highlighted in white.

To get back to the *Climate control* menu:
▶ Press the function key **F1**.

5 Auxiliary heater*

The auxiliary heater* can be used as:
– Auxiliary heater crane cab
– Engine preheating
– Auxiliary heater crane cab / engine preheating

WARNING
Danger of poisoning and suffocation in enclosed areas!

Exclusively when the suction of the exhaust gases is ensured:
▶ turn the auxiliary heater* on in closed rooms.
▶ Do not breathe in exhaust gases.

LWE/ab Muli 010/24201-02-02/en

copyright © Liebherr-Werk Ehingen GmbH 2016

WARNING
Danger of explosion due to flammable vapors, gases or dust!

On surroundings where vapors, gases or dust can form:
▶ Turn the auxiliary heater* off.

WARNING
Danger of poisoning and suffocation!
After turning the auxiliary heater* off, a shut off delay occurs.
During the shut off delay, exhaust gases are still emitted.
▶ Ensure sufficient ventilation.

NOTICE
Damage of auxiliary heater*!
▶ Operate the auxiliary heater* at least once a month for 15 minutes.

Make sure that the following prerequisites are met:
– Sufficient fuel for the auxiliary heater* has been added
– The battery master switch is turned on
– The *Climate control* menu is selected

5.1 Selecting the Auxiliary heater* menu

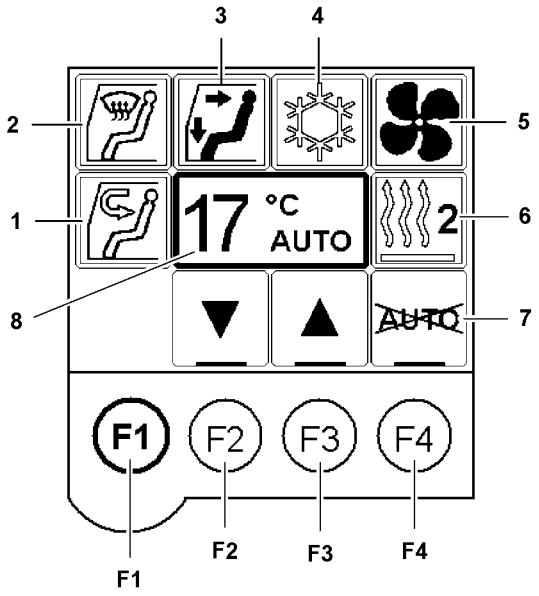

Fig.121519: Menu Climate control

▶ Tap the Auxiliary heater **6** icon.

Result:

– The *auxiliary heater* menu is selected.

LWE/ab Muli 010/24201-02-02/en

copyright © Liebherr-Werk Ehingen GmbH 2016

5.2 Auxiliary heater* icons

Auxiliary heater crane cab	
Icon	**Function**
	Auxiliary heater crane cab turned off
	Auxiliary heater crane cab turned on
	Auxiliary heater crane cab turned off, timer activated
	Auxiliary heater crane cab turned on, timer activated

Engine preheating	
Icon	**Function**
	Engine preheating turned off
	Engine preheating turned on
	Engine preheating turned off, timer activated
	Engine preheating turned on, timer activated

Auxiliary heater crane cab / engine preheating	
Icon	**Function**
	Auxiliary heater crane cab / engine preheating turned off
	Auxiliary heater crane cab / engine preheating turned on
	Auxiliary heater crane cab / engine preheating turned off, timer activated
	Auxiliary heater crane cab / engine preheating turned on, timer activated

LWE/ab Muli 010/24201-02-02/en

copyright © Liebherr-Werk Ehingen GmbH 2016

5.3 Turning the auxiliary heater* on / off

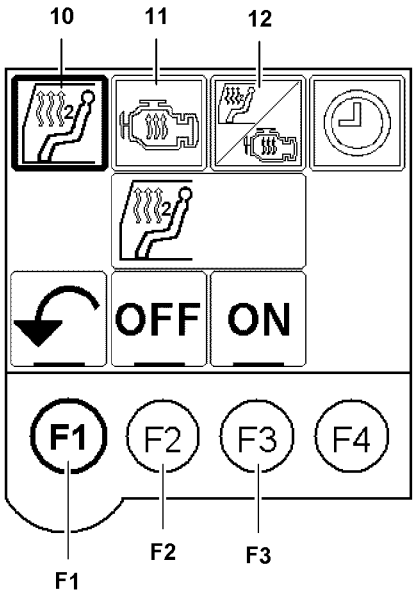

Fig.121565: Menu Auxiliary heater

The functions are selected by tapping the respective icon in the display. A selected function is bordered in black.

▶ Tap the *Auxiliary heater crane cab* **10** icon.
or
Tap the *Engine preheating* **11** icon.
or
Tap the *Auxiliary heater crane cab / engine preheating* **12** icon.

Result:

– The selected icon is bordered in black
– The selected function is shown in the display

To turn the selected function on:
▶ Press the function key **F3**.

To turn the selected function off:
▶ Press the function key **F2**.

To get back to the *Climate control* menu:
▶ Press the function key **F1**.

LWE/ab Muli 010/24201-02-02/en

copyright © Liebherr-Werk Ehingen GmbH 2016

5.4 Auxiliary heater* with ignition off

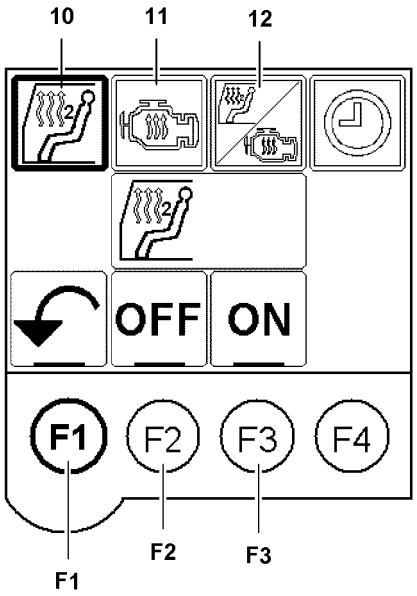

Fig.121565: Menu Auxiliary heater

If no entry is made within a certain time, then the touch display is automatically turned off.

If the ignition is turned off during operation of the auxiliary heater* the auxiliary heater* continues to run for 30 minutes due to the shut off delay. By pressing the function key **F2** the auxiliary heater* can be turned off, ending the shut off delay.

5.4.1 Turning the auxiliary heater* on / off

- ▶ Press function key **F1** until the *Auxiliary heater* menu appears.
- ▶ Select the settings.

To turn auxiliary heater* on:

- ▶ Press the function key **F3**.

To turn auxiliary heater* off:

- ▶ Press the function key **F2**.

LWE/ab Muli 010/24201-02-02/en

copyright © Liebherr-Werk Ehingen GmbH 2016

5.5 Programming the timer

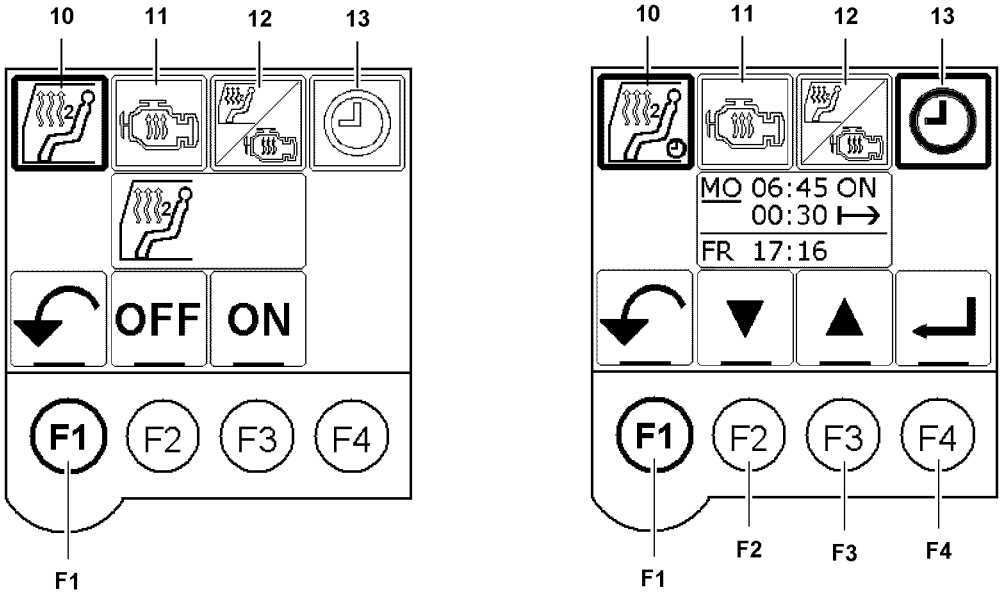

Fig.121566: Menu Auxiliary heater with timer

WARNING
Danger of suffocation and explosion!

Only when sufficient ventilation is ensured and no danger of explosion exists:
▶ Activate the timer.

The previously set function, air supply and air distribution is taken over.

The fan stage is set to 30 %.

The program ends after the set time and does not repeat.

The timer is only activated when all program steps are completed.

Make sure that the following prerequisites are met:
– The LICCON has booted up
– The auxiliary heater* menu is selected
– At the time of start up, the ignition is turned off

▶ Tap the *Auxiliary heater crane cab* **10** icon.
or
Tap the *Engine preheating* **11** icon.
or
Tap the *Auxiliary heater crane cab / engine preheating* **12** icon.

Result:

– The selected icon is bordered in black

▶ Tap the *Timer* **13** icon.

Result:

– The *timer* **13** icon is then surrounded with a black border.
– The program dialog for the timer is shown in the display
– The cursor is on the turn on day. The turn on day is underlined.

Set the turn on day (single day of the week) daily from Monday to Friday or daily from Monday to Sunday.

▶ Select the turn on day with function key **F2** and function key **F3**.

LWE/ab Muli 010/24201-02-02/en

copyright © Liebherr-Werk Ehingen GmbH 2016

▶ Confirm the turn on day with function key **F4**.

Result:

– The cursor is on turn on time (hour). The turn on time (hour) is underlined.

Set the turn on time (hour).

▶ Select the turn on time (hour) with function key **F2** and function key **F3**.
▶ Confirm the turn on time (hour) with function key **F4**.

Result:

– The cursor is on turn on time (minute). The turn on time (minute) is underlined.

Set the turn on time (minute).

▶ Select the turn on time (minute) with function key **F2** and function key **F3**.
▶ Confirm the turn on time (minute) with function key **F4**.

Result:

– The cursor is on the turn on duration. The turn on duration is underlined.

Set the turn on duration between 5 minutes and 55 minutes.

▶ Select the turn on duration with function key **F2** and function key **F3**.
▶ Confirm the turn on duration with function key **F4**.

Result:

– The timer is programmed and activated.
– The *timer* icon **13** is bolded.
– The selected *auxiliary heater* icon has a clock symbol.

To get back to the *Climate control* menu:
▶ Press the function key **F1**.

5.6 Turning the timer off when the ignition is on

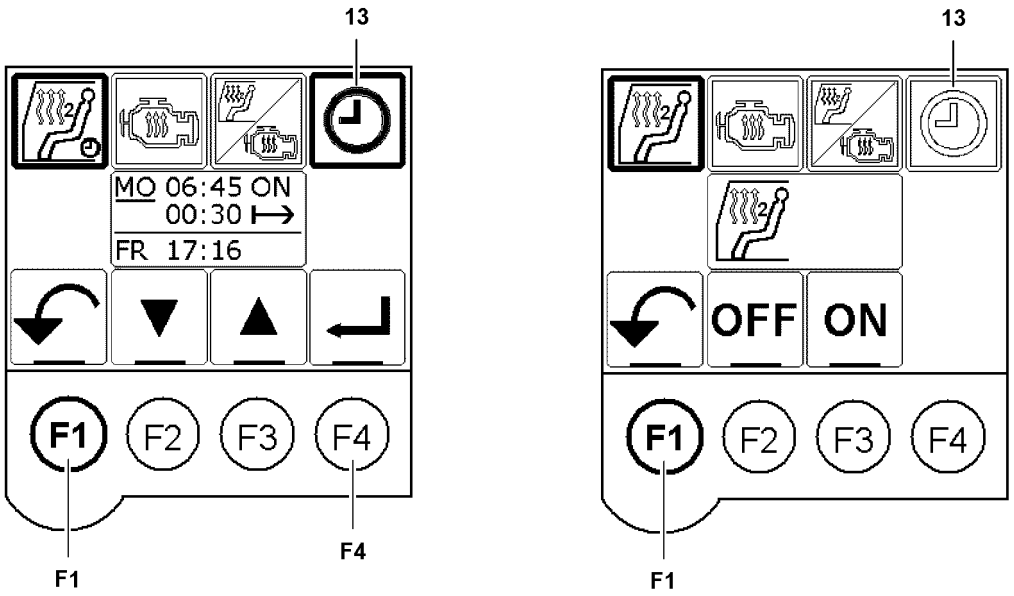

Fig.121567: Turn the timer off

Make sure that the following prerequisite is met:
– On the program dialog for the timer the turn on day is selected.

▶ Press the function key **F4**.

LWE/ab Muli 010/24201-02-02/en

copyright © Liebherr-Werk Ehingen GmbH 2016

Result:

– The *timer* icon **13** is not bolded.
– The clock on the selected auxiliary heater icon is deleted.
– The timer is turned off.

To get back to the *Climate control* menu:
▶ Press the function key **F1**.

5.7 Turning the timer off when the ignition is off

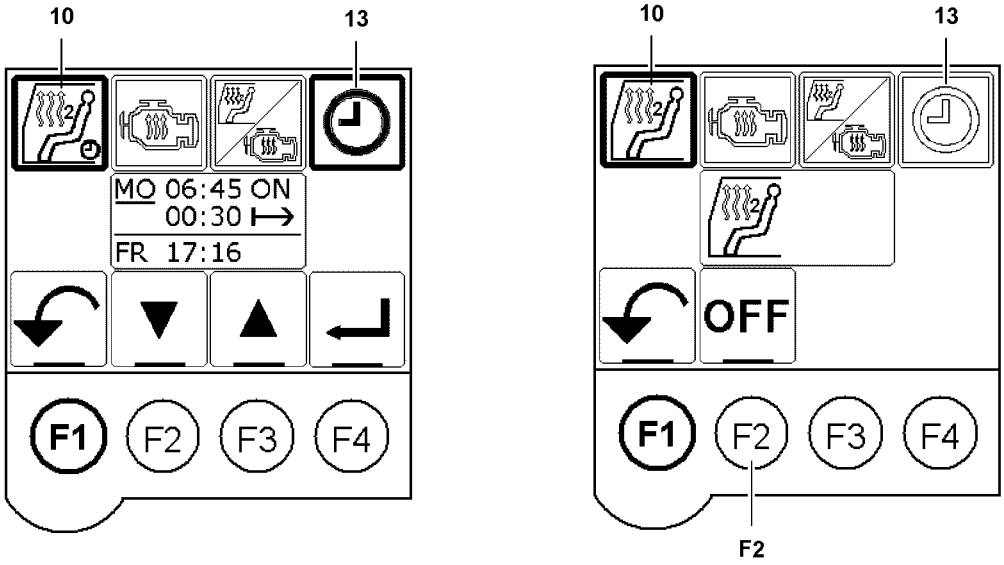

Fig.121568: Turn the timer off

▶ Tap the *Auxiliary heater crane cab* **10** icon.
▶ Tap the *Timer* **13** icon.
▶ Press the function key **F2**.

Result:

– The clock on the selected auxiliary heater icon is deleted.
– The timer is turned off.
– The auxiliary heater is turned off.

6 Maintenance Heater

The heating system uses the engine coolant as heat carrier.

Bleed the cooling circuit every time the engine coolant is supplemented or refilled.

6.1 Bleeding the heater

Make sure that the following prerequisites are met:
– The components and cooling circuit are cooled off.
– Sufficient engine coolant has been added.

WARNING
Severe burns on hot components!
▶ Let components and the cooling circuit cool off.
▶ Carry out maintenance solely when components and cooling circuit are cold.

LWE/ab Muli 010/24201-02-02/en

copyright © Liebherr-Werk Ehingen GmbH 2016

▶ Start the engine.
▶ Set the heater to maximum temperature.

As soon as no more air bubbles rise in the expansion tank and the fill level remains constant, the engine is bled.

When no more air bubbles rise:
▶ Set the heater to minimum temperature.

As soon as no more air bubbles rise in the expansion tank and the fill level remains constant, the engine is bled.

▶ Wait until no more air bubbles rise.

7 Maintenance Auxiliary heater*

The maintenance of the auxiliary heater* includes:
– Function test (monthly)
– Inspections and maintenance work (before ever heating period)
– Replacing parts
– Bleeding the fuel line

WARNING
Severe burns on hot components!
▶ Let components and the cooling circuit cool off.
▶ Carry out maintenance solely when components and cooling circuit are cold.

7.1 Function test

Operate the auxiliary heater* at least once a month for 15 minutes.

Make sure that the following prerequisites are met:
– Air filters are clear.
– Combustion air infiltration and exhaust emission of the heater are free of foreign particles.
– If present: Pollen filter / dust filter of the heater are not blocked
– Heating circuit is bled
– Fuel line is bled
– Heating circuit is cold
– Error stack of the LICCON computer system contains no error messages regarding the auxiliary heater*
– The engine is **turned off**

▶ Turn the auxiliary heater* on.

Wait a few minutes:
▶ Check the heat effect on the air vents of the vehicle.

When engine preheating* is active:
▶ Check the increase of the engine temperature.

7.2 Inspections and maintenance work

Carry out the following inspections and maintenance work before ever heating period.

Make sure that the following prerequisites are met:
– The heater and the heating circuit are cold.

When cleaning the heater, avoid water penetration.

▶ Clean the heater externally.
▶ Check the electrical connections for corrosion and tight seating.
▶ Check the exhaust and combustion air line for damage and free passage.

LWE/ab Muli 010/24201-02-02/en

copyright © Liebherr-Werk Ehingen GmbH 2016

▶ Check the fuel line for leaks and cracks.

When separately installed:
▶ Check the fuel filter for free passage.

When the fuel filter is dirty:
▶ Replace the fuel filter.
▶ Check the circulation pump for leaks.
▶ Check the heating circuit for leaks and cracks.

The ratio of corrosion inhibitor - antifreeze in the heating circuit must be 50 %.

▶ Check the ratio of corrosion inhibitor / antifreeze in the heating circuit.

7.3 Replacing parts

The heater manufacturer specifies time frames, after which the components of the heater must be replaced.

No later than after 3000 operating hours:
▶ Replace the burner of the heating unit.

No later than after 10 years:
▶ Replace the heat exchanger of the heating unit.

7.4 Bleeding the fuel line

If the fuel ran out, then the fuel line may have to be bled.

Note
▶ Contact Service at Liebherr-Werk Ehingen and coordinate the procedure.

LWE/ab Muli 010/24201-02-02/en

copyright © Liebherr-Werk Ehingen GmbH 2016

Empty page!

copyright © Liebherr-Werk Ehingen GmbH 2016

6.05 Emergency take-down

1 Emergency control 3

LWE/ab Muli 010/24201-02-02/en

copyright © Liebherr-Werk Ehingen GmbH 2016

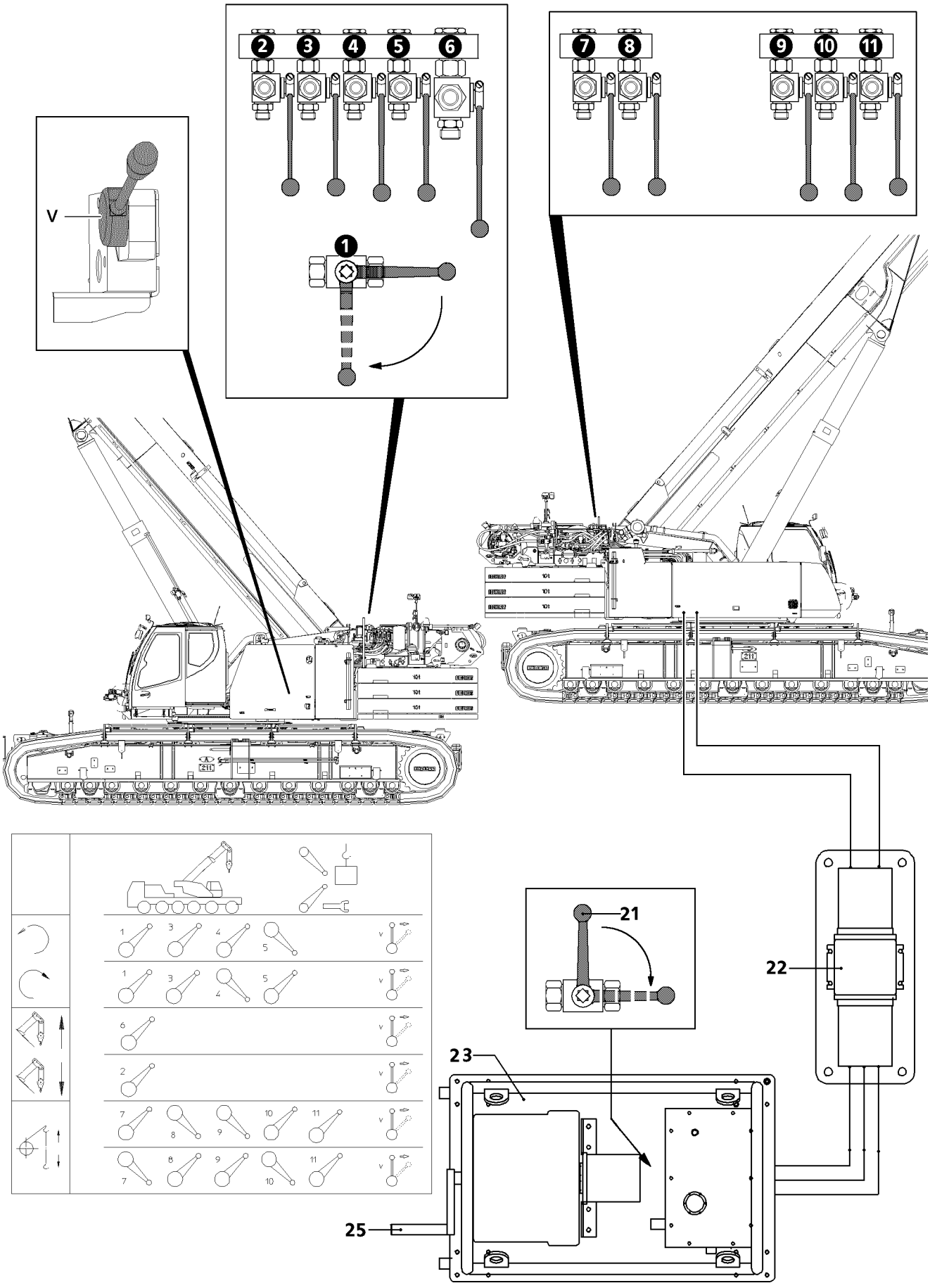

Fig.118014

LWE/ab Muli 010/24201-02-02/en

copyright © Liebherr-Werk Ehingen GmbH 2016

1 Emergency control

To be able to take down the crane in case of failure of the crane hydraulic, the crane electrical system or the crane engine, ball valves and a hand lever **V** are installed on the superstructure. Via the ball valves, the corresponding crane movement can be preselected and carried out by deflecting the hand lever **V**.

1.1 General

DANGER
Increased danger of accident during emergency operation!
The crane movements are no longer monitored by LICCON in emergency operation.
- ▶ Emergency operation and particularly luffing down of the telescopic boom may only be carried out in accordance with the information in the load chart.
- ▶ If possible, set down the load first.

- – For normal „crane operation“, turn the ball valves downward.
- – For „emergency operations“, turn the respective ball valves (see following section and emergency operation sign on the crane superstructure) upward.
- – Several movements cannot be carried out at the same time.
- – All crane movements must be carried out with extreme caution and slowly.
- – The ball valves must always be switched over completely into the corresponding switch position.

1.2 Ball valve positions during emergency operation

1.2.1 Turning the turntable to the left

- ▶ Switch ball valve **1**, ball valve **3** and ball valve **4** upwards.
- ▶ Move the ball valve **5** downward.

1.2.2 Turning the turntable to the right

- ▶ Move the ball valve **1**, ball valve **3** and ball valve **5** upwards.
- ▶ Move the ball valve **4** downward.

1.2.3 Luff the telescopic boom up

- ▶ Move the ball valve **6** upward.

1.2.4 Luff the telescopic boom down

- ▶ Move the ball valve **2** upward.

1.2.5 Raising the hoist gear

- ▶ Move the ball valve **7**, ball valve **10** and ball valve **11** upwards.
- ▶ Switch ball valve **8** and ball valve **9** downwards.

1.2.6 Lowering the hoist gear

- ▶ Move the ball valve **8**, ball valve **9** and ball valve **11** upwards.
- ▶ Switch ball valve **7** and ball valve **10** downwards.

LWE/ab Muli 010/24201-02-02/en

copyright © Liebherr-Werk Ehingen GmbH 2016

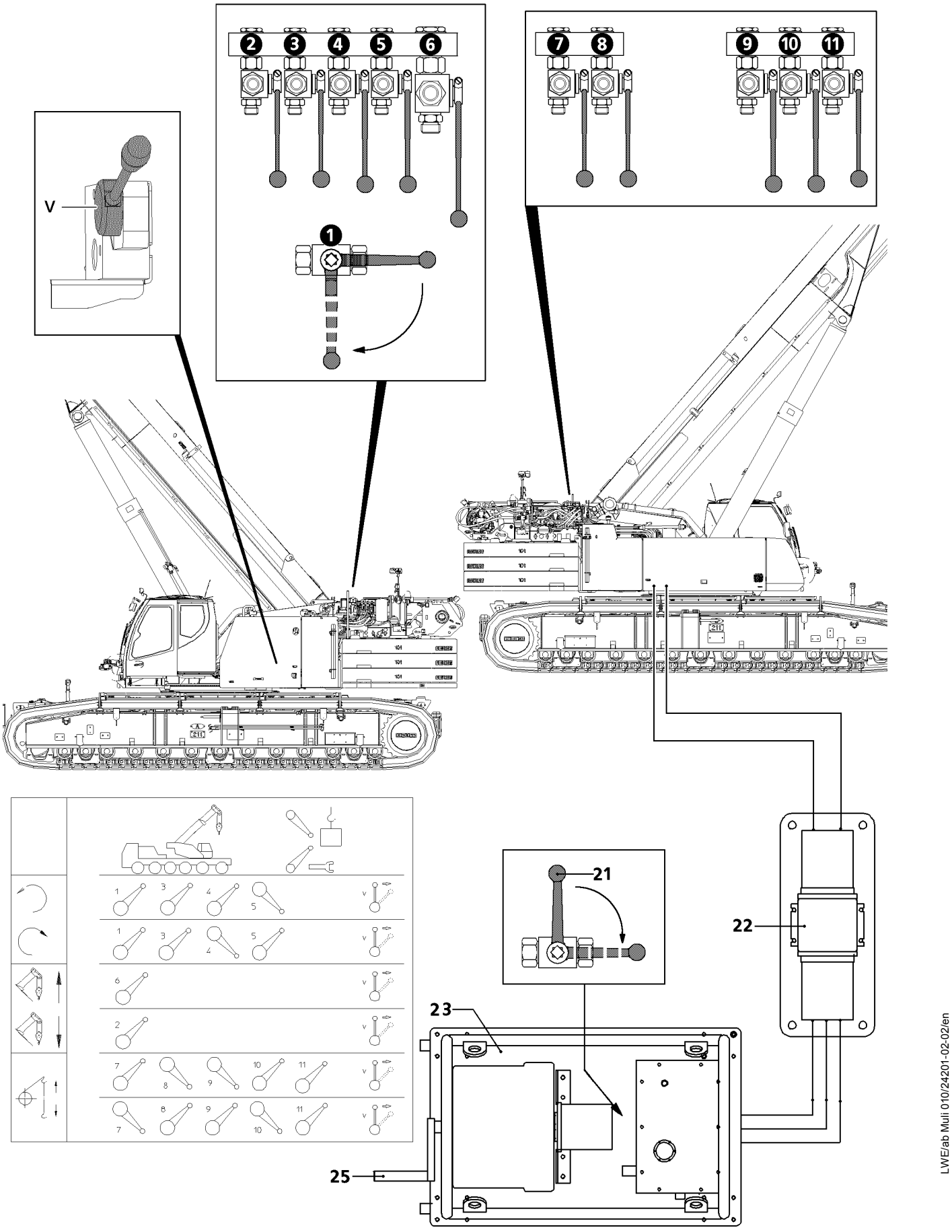

Fig.118014

copyright © Liebherr-Werk Ehingen GmbH 2016

1.3 Emergency operation with emergency operation unit

In cranes with one motor the superstructure can be supplied with power with the aid of the emergency operation unit **23** and a hydraulic transformer **22**.

1.3.1 Preparing the crane for emergency operation

▶ Remove the dummy plugs on the hydraulic connections.

The different diameters of the hydraulic lines prevent incorrect piping.

▶ Establish the hydraulic connections from the emergency operation aggregate **23** to the transformer **22**.
▶ Make the hydraulic connections between the transformer **22** and the superstructure and the chassis.

1.3.2 Emergency operation unit

▶ Start the emergency operation unit **23**.
▶ Move the ball valve **21** to emergency operation.

Note
▶ The engine rpm can be adjusted using a separate rpm regulator on the emergency operation unit **23**.

1.3.3 Emergency control

▶ Preselect ball valves (1 -11) for the respective crane movement, see previous section or the emergency operation tag on the crane superstructure.

The deflection of the hand lever **V** determines the speed of the respective crane movement.

▶ Move the hand lever **V** and carry out the respective crane movement carefully.

1.3.4 Completing emergency control

DANGER
Danger of accident!
▶ After „emergency operation“, always change the ball valves over to „crane operation“.

▶ Change all ball valves to „crane operation“.
▶ Turn the emergency operation unit **13** off and close the ball valve **21**.
▶ Disconnect the hydraulic lines and screw in dummy plugs.

LWE/ab Muli 010/24201-02-02/en

copyright © Liebherr-Werk Ehingen GmbH 2016

Empty page!

copyright © Liebherr-Werk Ehingen GmbH 2016

7 Service and maintenance

LWE/ab Muli 010/24201-02-02/en

copyright © Liebherr-Werk Ehingen GmbH 2016

copyright © Liebherr-Werk Ehingen GmbH 2016

7.01 Maintenance and service - General

1	Technical safety instructions	3
2	Warranty and coverage	7
3	Liebherr Service	7
4	Oil and lubricant analysis	8
5	Cleaning	9
6	Disposal	10

LWE/ab Muli 010/24201-02-02/en

copyright © Liebherr-Werk Ehingen GmbH 2016

LWE/ab Muli 010/24201-02-02/en

Fig.195219

copyright © Liebherr-Werk Ehingen GmbH 2016

1 Technical safety instructions

WARNING
Maintenance instructions **not** adhered to!
Death, severe injury, increased wear and failure of components.
- ▶ Observe the following listed safety notes and the generally applicable safety rules!
- ▶ Adhere to the maintenance intervals.
- ▶ Carry out only applicable maintenance tasks.
- ▶ Repair and maintenance tasks are to be carried out carefully.
- ▶ For aggregates and components: Follow the operating instructions of the manufacturer.

1.1 Description of intervals and tasks

Note
- ▶ Fill quantities and descriptions of service items and lubricants are specified in the Service fill.

The maintenance intervals and scope of maintenance are described in several chapters.

For crane maintenance, observe the following chapters:
- Crane operating instructions, chapter 7.02: Maintenance intervals - Crane chassis [1)]
- Crane operating instructions, chapter 7.02.50: Maintenance intervals Ballast trailer*[1)]
- Crane operating instructions, chapter 7.03: Maintenance intervals - Crane superstructure [1)]
- Crane operating instructions, chapter 7.03.50: Maintenance intervals - Crane boom [1)]
- Crane operating instructions, chapter 7.04: Maintenance guidelines - Crane chassis [2)]
- Crane operating instructions, chapter 7.05: Maintenance guidelines - Crane superstructure [2)]
- Crane operating instructions, chapter 7.05.50 Maintenance guidelines - Crane boom [2)]
- Crane operating instructions, chapter 7.06: Fill quantities, lubrication chart
- Crane operating instructions, chapter 7.07: Service items and lubricants

[1)] These chapters contain a list of maintenance intervals for all maintenance tasks.
[2)] For aggregates, observe and adhere to additionally to the instructions of the manufacturer.

1.2 Definition of „Checking“

The action of „Checking“ includes all required task in connection with the maintenance, for example:
- Determining a specified value
- Cleaning
- Adjusting
- Refilling
- Replacing

1.3 Maintenance intervals

Use the following rules for interval determination:
- Carry out maintenance and inspection tasks on the crane chassis after reaching the specified driven mileage, operating hours or calendar intervals. The interval which occurs first is the deciding factor.
- Carry out maintenance and inspection tasks on the crane superstructure after reaching the specified operating hours or calendar intervals. The interval which occurs first is the deciding factor.
- The maintenance intervals complement each other. If a higher interval is coming up, then carry out the tasks according to the lower interval also.

LWE/ab Muli 010/24201-02-02/en

copyright © Liebherr-Werk Ehingen GmbH 2016

1.4 Securing against operation

WARNING
Impermissible driving or crane operation during maintenance or repair tasks!
Death, severe injury, severe property damage.
- ▶ Make sure that driving and crane operation is not possible during maintenance and repair tasks.
- ▶ Show clearly with signs that maintenance or repair tasks are being carried out on the mobile crane.
- ▶ Use signs which show without a doubt that it is prohibited to drive and operate the crane.
- ▶ Adhere to the national regulations regarding tagging on mobile crane and signs.
- ▶ Turn the engine on the crane superstructure and the crane chassis off!
- ▶ Apply the „parking brake crane chassis“.

If possible:
- ▶ Lock the driver's cab and the crane cab.
- ▶ Hand the ignition key from the crane superstructure and the crane chassis to an authorized person.

1.5 Personnel

WARNING
Unauthorized and **untrained** expert personnel!
Improper maintenance, personal injury, property damage.
- ▶ Carry out maintenance or repair tasks exclusively with authorized and trained expert personnel.
- ▶ Make sure that **exclusively** authorized persons are within the danger zone.

1.6 Securing against falls

WARNING
Personnel is **not** secured against falls!
During maintenance tasks on the crane superstructure or boom, personnel must be secured with appropriate safety measures to prevent them from falling. If this is **not** observed, working personnel can fall and be killed or severely injured.
- ▶ For all tasks on the crane where there is a danger of falling, take suitable safety measures.
- ▶ The crane superstructure or the boom may **not** be accessed without suitable aids.
- ▶ Suitable aids are, for example: Lifting platforms, scaffoldings, ladders, assembly platforms, auxiliary crane.
- ▶ If railings are present on the crane superstructure, then they must be swung into operating position and secured for all tasks. See Crane operating instructions, chapter 2.06.
- ▶ Only step on such aids with clean shoes.
- ▶ Keep aids clean, free of snow and ice.
- ▶ If tasks cannot be carried out using these aids or from the ground, then the maintenance personnel must be protected from falling using approved fall arrest systems. See Crane operating instructions, chapter 2.04.
- ▶ It is prohibited to step on the driver's cab or cab roof and specially marked surfaces. See Crane operating instructions, chapter 2.05.

WARNING
Dirty slip-resistant mats!
Fall
- ▶ Keep slip-resistant mats clean and free of snow and ice!
- ▶ Only step on slip-resistant mats with clean shoes!
- ▶ Replace or renew missing or damaged slip-resistant mats!

LWE/ab Muli 010/24201-02-02/en

copyright © Liebherr-Werk Ehingen GmbH 2016

1.7 Preventing fires

WARNING
Excess fuel, excess oil in engine compartment during operation!
Death, severe injury, fire damage.
- ▶ Check the diesel engine after repairs and Service tasks but also in regular intervals for leaking oil and fuel.
- ▶ Make sure that the V-area of the Diesel engine is free of oil and fuel.
- ▶ Do **not** spill any service fluids over the hot components.

WARNING
Disregard of general safety regulations during tasks on the fuel system or on the electrical system!
Severe burns, fire damage.
- ▶ Disconnect the battery from the power supply.
- ▶ Do **not** smoke.
- ▶ Do **not** work near open flames.
- ▶ Keep a functioning fire extinguisher ready.

WARNING
Insulation (sound insulation) are contaminated with solvents or foreign matter!
Solvents, engine oils, gear oils, hydraulic oils or fuels can ignite the insulation.
Severe burns, fire damage.
- ▶ Remove any polluted insulation **immediately** and **replace immediately** with **Original Liebherr spare parts**.

1.8 Protecting from burns

WARNING
Hot surfaces!
Severe burns.
- ▶ Let any components to be maintained or inspected cool off.
- ▶ Let hot components cool off.
- ▶ Avoid contact with hands and skin.
- ▶ Wear personal protective equipment and suitable protective gloves.

WARNING
Hot Service fluids!
Severe burns.
- ▶ Let hot service fluids cool off.
- ▶ Avoid contact with hands, skin and eyes.
- ▶ Wear personal protective equipment and suitable protective gloves.

WARNING
Electric short circuit!
Severe burns.
- ▶ Prevent short circuits in the electrical system, especially on the battery.
- ▶ Replace or change missing or defective protective insulation.

LWE/ab Muli 010/24201-02-02/en

copyright © Liebherr-Werk Ehingen GmbH 2016

1.9 Protecting from scalding

WARNING
Cooling system is pressurized!
When the coolant reservoir is opened, hot coolant can escape explosively.
Severe scalding.

When the engine is warm:
- ▶ Do **not** open the cover of the coolant reservoir.
- ▶ To protect face, hands and arms from hot steam of hot coolant, cover the cap with a large rag when opening.

1.10 Rotating parts

WARNING
Rotating parts, ignition system on running engine!
The cooler fan can turn on suddenly.
Death, severe injury.
- ▶ Proceed especially careful.
- ▶ Do **not** reach into rotating parts.
- ▶ Never reach into the cooler fan when the engine is warm.

1.11 Protecting from aggressive environmental conditions

NOTICE
Aggressive environmental conditions!
When using cranes under aggressive environmental conditions, for example at places with maritime climates and particularly salty air, hydraulic cylinders can corrode and thereby be destroyed or severely damaged.
Elaborate and expensive repairs.

If the crane is taken out of operation for an extended period of time:
- ▶ Take down the crane.
- ▶ Fully retract all crane hydraulic cylinders.

When hydraulic cylinders can **not** be retracted completely:
- ▶ Protect exposed areas of the piston rod from corrosion, for example with grease.
- ▶ Grease any exposed areas on the piston rods, for example on luffing cylinders and ballasting cylinders, especially carefully.

1.12 Use suitable operating fluids

WARNING
Operating fluids **not** suitable for ambient temperature!
Death, severe injuries, property damage.
- ▶ Match the operating fluids in time to the ambient temperatures.

1.13 Replacing damaged crane components

WARNING
Damaged crane components **not** replaced!
Death, severe injury, failure of components.
- ▶ Maintain crane components according to the data in the maintenance intervals, the maintenance guidelines and the chart for service items and lubricants.
- ▶ Replace damaged crane components immediately.

LWE/ab Muli 010/24201-02-02/en

copyright © Liebherr-Werk Ehingen GmbH 2016

1.14 After replacement of components

Type of oil, see data tag and supplied „Service fill“.

The following instructions must be observed when replacing components such as engine, gear or axle:

WARNING
Maintenance of a replaced component **not** carried out!
- ▶ Before start up, be sure to refill with the correct type of oil to the center of the minimum / maximum mark.
- ▶ Carry out first maintenance. See chapter „Maintenance intervals“.
- ▶ Adhere to regular maintenance intervals.
- ▶ Follow the break-in guidelines. See Crane operating instructions, chapter 2.02.

2 Warranty and coverage

NOTICE
Maintenance intervals and maintenance guidelines **not** adhered to, impermissible lubricants used!
Damage, failure of crane components.
The warranty for the respective crane component is voided.
- ▶ Maintain crane components according to the data in the maintenance intervals, the maintenance guidelines and the chart for service items and lubricants.

NOTICE
Not using Original Liebherr spare parts and **not** using Original Liebherr Service items!
In the event that replacement parts are used that are **not** Original Liebherr replacement parts and **not** Original Liebherr service items and lubricants, Liebherr-Werk Ehingen GmbH disclaims all liability for system functionality as well as for the parts.
- ▶ Use exclusively Original Liebherr spare parts.

Note
- ▶ Original Liebherr replacement parts have been tested for crane operational use and may be used without risking safety.

The buyer in entitled to warranty or coverage only:
- when exclusively Original Liebherr spare parts are used.
- when Liebherr Service items and Liebherr lubricants are used for the Liebherr crane.

3 Liebherr Service

Liebherr mobile cranes, whether truck-mounted, mobile or crawler cranes - are technically advanced products, which prove their worth daily even under tough conditions.

The high technical standards of these cranes provide functional security, resistance to failure and ease of maintenance.

Liebherr is continuously developing the drive and control components. The combination of well proven units and modern manufacturing methods produces cranes that are safe to operate and easy to maintain.

Several hundred cranes are built every year for the international market, supported by international service.

Liebherr's „After Sales Service“ plays an important role at Liebherr in ensuring operational readiness and high crane availability.

LWE/ab Muli 010/24201-02-02/en

copyright © Liebherr-Werk Ehingen GmbH 2016

With Liebherr, Service begins when the crane is handed over. Your crane operators will be professionally trained in line with their level of knowledge and we devote much time to this.

We also train your workshop staff in all crane-specific matters, because we know that they can deal with more than just minor repairs themselves. Often there are specialists who can quickly and reliably carry out crane repairs.

We have special service advisers available who will solve any problems you may have. This phone contact saves time and money. You should take advantage of it as soon as possible.

Our service technicians are specialists with years of experience, who can be deployed from local support points. Naturally these experts have specialized knowledge and special tools.

But before you call these specialists, it is worth making use of the facilities for getting advice mentioned above.

4 Oil and lubricant analysis

NOTICE
Oil analysis intervals and oil change intervals **not** adhered to!
Gear damage.
- ▶ Strictly adhere to the oil analysis and oil change intervals.
- ▶ If an earlier oil change is required due to oil analysis results: Change the oil.
- ▶ Carry out regular lubricant analysis for gear oils in travel gear, slewing gear and winch gears.
- ▶ Adhere to the maintenance intervals. See Crane operating instructions, chapter 7.02, 7.03 and chapter 7.03.50.

The following properties of the oil can be determined through oil analysis:
- – Degree of wear of gear components
- – Composition of mechanical abrasion in the oil
- – Viscosity of the oil
- – Degree of oil contamination
- – Other relevant properties of the oil

Advantages of oil or lubricant analysis:
- – Technical evaluation regarding further use of the gear or the oil
- – The gear oil change intervals can be matched according to the operating conditions and the results of the oil analysis, without risk, effectively and economically.
- – A just starting gear damage can be recognized in time and as a result, the correct time of gear replacement can be determined.
- – Operating times or repairs can be planned more effectively.
- – Am earlier repair of gear components protects from larger and unforeseen damage.
- – Subsequent damage can therefore be avoided to the greatest possible extent.

4.1 Taking an oil sample

WARNING
Tasks on components and operating fluids at operating temperature!
Burns.
- ▶ Carry out all tasks with utmost caution.
- ▶ Wear protective clothing.

Make sure that the following prerequisites are met:
- – Gear was shut down immediately
- – Oil has normal operating temperature

- ▶ Always take oil on the same location of the gear.
- ▶ Take oil always according to the same method.
- ▶ For gears with double slipring seal: Take oil additionally from the slipring sealing chamber.

LWE/ab Muli 010/24201-02-02/en

copyright © Liebherr-Werk Ehingen GmbH 2016

- ▶ Do **not** take oil right after an oil change.
- ▶ Do **not** take oil immediately after larger amounts of oil have been added.

Note
Recommendation:
- ▶ Fill oil into original sample containers.

- ▶ Fill oil exclusively in a clean and dry sample container.

5 Cleaning

5.1 Exhaust system

NOTICE
Ingress of water, steam or cleaning substances into the SCR-module!
Sensors for exhaust aftertreatment can be destroyed, the coating of the SCR catalytic converter can be washed off.
- ▶ Before cleaning, let the SCR system cool off (surface temperature 50 °C).
- ▶ Before cleaning, cover all openings.
- ▶ Make sure that **no** fluids and **no** dirt gets into the tailpipe opening of the SCR module.
- ▶ During cleaning, keep sufficient distance to the tailpipe opening.

5.2 Insulation (sound insulation)

NOTICE
Improper cleaning (tools or cleaning methods)!
Insulation can be destroyed or damaged.
- ▶ Remove severe contamination with suitable tools, for example with soft plastic scrapers.
- ▶ Do **not** use tools with sharp edges.
- ▶ Use steam cleaners **exclusively** with extreme caution and with a sufficient distance to the insulation and with low water pressure.
- ▶ Do **not** use solvents for cleaning.

Note
- ▶ Sound insulation may **not** be removed!

Sound insulation in the area of engines and other noise sources is an integral part of the total construction. Sound insulation limits the noise generation of vehicles and the sound level in the workplace to the legally specified values in connection with sound insulation and the design of the equipment. Sound insulation is therefore an integral part for the construction permits for the machines.

From a construction point of view, sound insulation has been designed to be maintenance-free. Sound insulation has been equipped with surfaces that repel dirt, oil and water. Sound insulation is very flame-resistant and in part, depending on application, is fireproof.

For these reasons, sound insulation requires no care. Any small dirt deposits can be disregarded, as the acoustic effectiveness of the parts is not reduced.

5.3 Slip-resistant mats

- ▶ Before every access: Check the slip-resistant mats for slip resistance and cleanliness.
- ▶ If dirty: Clean the slip-resistant mats with a brush with hard plastic bristles.
- ▶ For cleaning the surfaces, use commercially available cleaners.
- ▶ Flush with water.

LWE/ab Muli 010/24201-02-02/en

copyright © Liebherr-Werk Ehingen GmbH 2016

5.4 Driver's cab and crane cab

Note

- ▶ The steering wheel, centre console, instrument panel cover, floor covering and dirty upholstery in the driver's cab and the crane cab should only be cleaned with warm water mixed with dishwashing detergent!
- ▶ Do not use any scouring agents!

5.5 Ladders

- ▶ Remove any dirt on the ladders.
- ▶ Make sure that the grooves on the rungs are free of dirt.

6 Disposal

6.1 Service items and lubricants

WARNING

Operating items and lubricants are dangerous waste products!

- ▶ Dispose of operating fluids and lubricants separately.
- ▶ Service items and lubricants may **not** be disposed of in the ground, bodies of waters, wastewater systems, sewers or in the groundwater.
- ▶ Dispose of operating items and lubricants in an environmentally safe manner.
- ▶ When disposing operating items and lubricants observe and follow the valid regulations of the relevant authorities.

Service items and lubricants are:

- Fuels
- Coolant
- Urea
- Engine oils, gear oils
- Hydraulic fluids
- Brake fluids
- Window washer concentrate
- Greases

6.2 Batteries

WARNING

Batteries contain harmful substances!

- ▶ Do **not** dispose of batteries in regular household trash.
- ▶ Collect batteries separately and send them for environmentally safe disposal.
- ▶ Leave batteries at a qualified workshop or at a collection points for used batteries.

LWE/ab Muli 010/24201-02-02/en

copyright © Liebherr-Werk Ehingen GmbH 2016

7.02 Maintenance intervals Crawler chassis

1 Maintenance and inspection schedule 3

LWE/ab Muli 010/24201-02-02/en

copyright © Liebherr-Werk Ehingen GmbH 2016

LWE/ab Muli 010/24201-02-02/en

Fig.195219

copyright © Liebherr-Werk Ehingen GmbH 2016

1 Maintenance and inspection schedule

Note

- ▶ Carry out maintenance work after reaching the specified operating hours or calendar intervals. The interval which occurs first is the deciding factor.
- ▶ The maintenance intervals complement each other. If a higher interval is coming up, then carry out the work according to the lower interval also.
- ▶ For the operating hour intervals, the hour meter of the crawler travel gear is the determining factor.
- ▶ The operating hour meter is visible on the BTT display, Menu „Engine operation“.

First maintenance	Operating hour intervals			Calendar intervals			Work to be carried out
after	10 h	100 h	1000 h	Daily	Weekly	Annually	
Safety systems							
						X	Personal protective equipment Follow the instructions of the manufacturer
						X	Height rescue system Follow the instructions of the manufacturer
Fall protection equipment							
						X	Check protection points
						X	Check safety ropes
						X	Check the ladders for technically immaculate condition
						X	Check railings, steps and pedestals for safe function
						X	Check catwalks and open mesh flooring for safe function
Crane surface							
					X		Check accessible surfaces for cleanliness
						X	Check accessible surfaces for completeness and slip resistance
						X	Check labels for completeness and legibility
Rigging and fastening points							
				X [2)]			Check condition and mounting
						X	Check for continued suitability by expert
Travel gear							
		X					Check for leaks
	X						Grease the sprocket bearing if it is not lubricated via the central lubrication system
		X					Check the mounting screws for tight seating
		500 h					Check the gear oil via oil analysis
200 h			4000 h			Every 4 years	Replace the gear oil

copyright © Liebherr-Werk Ehingen GmbH 2016

First maintenance	Operating hour intervals			Calendar intervals			Work to be carried out
after	10 h	100 h	1000 h	Daily	Weekly	Annually	
Crawler carrier							
		X					Check track rollers, carrier rollers with oil lubrication for leaks
	50 h				Every 4 weeks		Check the roll off surfaces of the track rollers / carrier rollers / glide elements for wear
	X				X		Check the idler, sprocket and guides for wear
						X	Grease guide rails on sliding section
						X	Lubricate the consoles
					Every 4 weeks		Lubricate the connector pins between crawler carrier and crawler center section or crawler carrier and cross carriers
Track chain							
		X					Check for damage
	50 h				Every 4 weeks		Check the chain tension, retension the track chain if necessary
	50 h						Retighten the bolts on the track pads until the specified torque is reached
	50 h				Every 4 weeks		Check the contact surfaces / glide surfaces of the chain links for wear
Chain tension cylinder							
				X			Check pretension pressure for the grease tensioner
Cross carrier							
	X				X		Check hydraulic cylinder for track adjustment for leaks and tight seating
	X				X		Clean and grease visible gliding surfaces
Assembly support							
					X		Check the hydraulic cylinder for leaks
						X	Lubricate the bearing points of the support beams
Hydraulic cylinder							
					X		Check for leaks
Hydraulic hose lines							
				X			Check for leaks and damage
						X	Have safe working condition checked by expert

LWE/ab Muli 010/24201-02-02/en

copyright © Liebherr-Werk Ehingen GmbH 2016

First maintenance after	Operating hour intervals			Calendar intervals			Work to be carried out
	10 h	100 h	1000 h	Daily	Weekly	Annually	
Central lubrication system							
				X			Check grease supply of central lubrication system. Fill the reservoir if the grease supply has dropped below 1/4 of the reservoir content.
		X					Check for correct function

[2)] before every start up: Check visually

copyright © Liebherr-Werk Ehingen GmbH 2016

Empty page!

copyright © Liebherr-Werk Ehingen GmbH 2016

7.03 Maintanance intervals - Crane superstructure

1 Maintenance and inspection schedule 3

LWE/ab Muli 010/24201-02-02/en

copyright © Liebherr-Werk Ehingen GmbH 2016

LWE/ab Muli 010/24201-02-02/en

Fig.195219

copyright © Liebherr-Werk Ehingen GmbH 2016

1 Maintenance and inspection schedule

Note

- ▶ Carry out maintenance work after reaching the specified operating hours or calendar intervals. The interval which occurs first is the deciding factor!
- ▶ The maintenance intervals complement each other. If a higher interval is coming up, then carry out the work according to the lower interval also!

First maintenance after	Operating hour intervals 250 h	500 h	1000 h	Calendar intervals Daily	Weekly	Annually	Work to be carried out
Safety systems							
						X	Personal protective equipment Follow the instructions of the manufacturer
						X	Height rescue system Follow the instructions of the manufacturer
Fall protection equipment							
						X	Check protection points
						X	Check safety ropes
						X	Check the ladders for technically immaculate condition
						X	Check railings, steps and pedestals for safe function
						X	Check catwalks and open mesh flooring for safe function
Crane surface							
					X		Check accessible surfaces for cleanliness
						X	Check accessible surfaces for completeness and slip resistance
						X	Check labels for completeness and legibility
Rigging and fastening points							
				X [2)]			Check condition and mounting
						X	Check for continued suitability by expert
Load handling equipment and assembly aids							
				X [2)]			Check for cracks, damage, wear and distortion
						X	Check for continued suitability by expert
Fastening equipment and load securing devices							
				X [2)]			Observe and adhere to the manufacturer's instructions
Fire extinguishing system							
						X	Carry out a visual inspection of the system

copyright © Liebherr-Werk Ehingen GmbH 2016

First maintenance	Operating hour intervals			Calendar intervals			Work to be carried out
after	250 h	500 h	1000 h	Daily	Weekly	Annually	
							For all other maintenance tasks, observe the instructions of the fire extinguisher manufacturer.
						Every 5 years	Replace trigger elements and extinguisher tank.
Diesel engine							
				X			Check the oil level For all other maintenance tasks, observe the instructions of the engine manufacturer
Cooling system							
				X			Check the coolant level in the expansion tank
			6000 h			Every 4 years	Replace the coolant if filled with **Liebherr Antifreeze OS Mix**
			3000 h			Every 2 years	Replace the coolant
SCR Exhaust aftertreatment							
			4500 h			Every 2 years	Replace foam and filter element of urea pump
Engine independent heater							
				X			Check the fluid level in the expansion tank
					Monthly		Operate for 10 minutes with cold engine and lowest fan setting
						X	Carry out service work before and after every heating period
						Every 2 years	Replace the fluid for the heating system
Air filter							
					X		Check monitoring device
						X	Clean, change the filter insert Observe the instructions of the engine manufacturer
Slewing ring connection							
	X						Lubricate the gears
						X [1)]	Lubricating the slewing ring connection
					Every 6 months [1)]		Drain water on the water drain bores of the slewing ring (only LTM 11200-9.1, LTR 11200)
250 h			1500 h			X	Check the mounting screws for tight seating
						X	Check the tilt play
Winches							

LWE/ab Muli 010/24201-02-02/en

copyright © Liebherr-Werk Ehingen GmbH 2016

First maintenance after	Operating hour intervals 250 h	500 h	1000 h	Calendar intervals Daily	Weekly	Annually	Work to be carried out
250 h			X			X	Check the mounting screws for tight seating
				X			Check for leaks
					X		Check the oil level
			1500 h			X	Check the gear oil via oil analysis
250 h			3000 h			Every 4 years	Replace the gear oil
			1500 h			X	Lubricate the space between V-ring / winch bearing (only LR 11000)
			200 h			X	Check the condition of the tooth flanks; determining factor are the operating hours of the winch (only for winches with gear ring drive)
						X	Check the remaining theoretical utilization life by a technical expert
						Every 4 years	Check the remaining theoretical utilization life by authorized specialist
Winch brakes							
				X			Check for leaks
						X	Check for correct function
Relapse supports							
					Every 3 months [5), 6)]		Lubricate the bearings
X [2), 6)]							Check the oscillation guard for easy movement
Relapse cylinder							
X [2), 6)]					X		Check for leaks
					Every 3 months [5), 6)]		Lubricate the bearings
X [2), 6)]		X				X	Check pretension pressure (nitrogen)
X [2), 6)]		X				X	Check the oil quantity
Pneumatic springs							
X [2), 5), 6)]		X				X	Check for correct function
A-bracket							
		X					Lubricate the bearing
X [2), 6)]						X	Check the lever for the limit switch on the A-frame 3 for easy movement and reset of spring

copyright © Liebherr-Werk Ehingen GmbH 2016

First maintenance after	Operating hour intervals 250 h	500 h	1000 h	Calendar intervals Daily	Weekly	Annually	Work to be carried out
X [2), 6)]						X	Check the rods with guide rail on the A-frame 2 and A-frame 3 for easy movement and distortion
Counterweight							
1,000 km		or 10,000 km				X	Check tightening torque of mounting screws
Concrete ballast plates (ballast container) (only LR 13000)							
				X			Check for damage
						Every 5 years	Check by licensing agency
Ballasting							
	X					X	Lubricate the bearings
						X	Check the swing play (only LTM 11200-9.1)
Press on pulleys of rope winches							
	X					X	Grease guides
Rope pulleys							
			X			X	Check for wear, damage, cracks and easy movement
			3000 h			Every 3 years	Lubricate the bearings
Carrier rollers							
				X [2)]			Check for damage and distortion
			X			X	Check for wear, damage, cracks and easy movement
			X			X	Check the mounting screws for tight seating
Crane cab							
				X			Check instruments for function
				X			Check indicator lights for function
						X	Replace the filter insert for switch cabinet ventilation
						X	Replace filter insert in water heater
				X			Check fluid level in expansion tank of engine control
		X				X	Check the sliding or incline device for function
		X				X	Lubricate the bearings of the sliding or incline device
		X				X [7)]	Check the lift device (telescope arm) for function

LWE/ab Muli 010/24201-02-02/en

copyright © Liebherr-Werk Ehingen GmbH 2016

First maintenance after	Operating hour intervals 250 h	500 h	1000 h	Calendar intervals Daily	Weekly	Annually	Work to be carried out
		X				X [7]	Lubricate the bearings of the lift device and telescope arm
Window washer system, camera washer system							
				X			Check the fluid level in the reservoir for the washer system
Overload protection							
				X			Check for correct function
		X				X	Check length sensor for function
		X				X	Check length sensor rope for damage
Remote diagnostics device							
						X	Check for correct function
						X	Check the validity of the SIM card
Electrical system							
						X	Cable connections
					Every 6 months [3]		Service the batteries
					Every 6 months [3]		Empty the acid container
						X [5]	Replace the interior compartment filter of the switch cabinet ventilation
Fuel system							
				X			Check for leaks
						X	Check condition and mounting
						X	Drain off water and sediments
						X	Clean preliminary filter for auxiliary fuel pump
	Every 50 h						Check fuel preliminary filter, drain off water if necessary
		Every 1000 h					Replace preliminary fuel filter
Slewing gear							
250 h			X			X	Check the mounting screws for tight seating
				X			Check for leaks
					X		Check the oil level
			1500 h			X	Check the gear oil via oil analysis
250 h			3000 h			Every 4 years	Replace the gear oil
Slewing gear brakes							

copyright © Liebherr-Werk Ehingen GmbH 2016

First maintenance after	Operating hour intervals 250 h	500 h	1000 h	Calendar intervals Daily	Weekly	Annually	Work to be carried out
				X			Check for leaks
						X	Check for correct function
Turntable lock							
		X				X	Grease
		X				X	Check for correct function
Bearings							
						X	Checking the retaining elements
Pump distributor gear							
				X			Check for leaks
					X		Check the oil level
500 h			1500 h			X	Replace the gear oil
Hydraulic hose lines							
				X			Check for leaks and damage
						X	Check for safe condition by expert
Hydraulic system							
				X			Check the oil level
					X		Check for leaks
250 h		X				X	Replace the servo pressure and replenishing pressure filter inserts
250 h		X				X	Replace return filter inserts (only for cranes with open hydraulic circuit)
250 h		X				X	Replace bleeder filter of hydraulic tank
500 h			X			X	Check hydraulic oil, required degree of purity: 20/18/15 Take oil sample and have it tested by oil supplier
Hydraulic cylinder							
					X		Check for leaks
					Every 3 months [5), 6)]		Lubricate the bearings
Hydraulic pressure accumulator (nitrogen)							
		X [4)]				X [4)]	Check pretension pressures
Compressed air system							
					X		Check for leaks
					X		Check operating pressure
					X		Check shut off pressure

LWE/ab Muli 010/24201-02-02/en

copyright © Liebherr-Werk Ehingen GmbH 2016

First maintenance after	Operating hour intervals 250 h	500 h	1000 h	Calendar intervals Daily	Weekly	Annually	Work to be carried out
					X		Check operation of automatic drain valve
						X	Replace air drier granular cartridges
						X	Clean air drier preliminary filter
Central lubrication system							
					Every 6 months [1)]		Carrying out an intermediate lubrication
		X					Check for correct function
					X		Check the grease container fill level
Emergency control							
						X	Check for correct function
Suspended ballast							
						X	Check the fall protection equipment
						X	Check frame, suspension and guide section for distortion and cracks

[1)] if the crane is not moved: Every 3 months
[2)] before every start up: Check visually
[3)] in hot climate zones: Every 3 months
[4)] observe maintenance instructions for Crane superstructure, chapter 7.05
[5)] and as necessary
[6)] and during assembly
[7)] in Great Britain: Every 6 months

LWE/ab Muli 010/24201-02-02/en

copyright © Liebherr-Werk Ehingen GmbH 2016

Empty page!

copyright © Liebherr-Werk Ehingen GmbH 2016

7.03.50 Maintenance intervals - Crane boom

1 Maintenance and inspection schedule 3

LWE/ab Muli 010/24201-02-02/en

copyright © Liebherr-Werk Ehingen GmbH 2016

LWE/ab Muli 010/24201-02-02/en

Fig.195219

copyright © Liebherr-Werk Ehingen GmbH 2016

1 Maintenance and inspection schedule

Note

- Carry out maintenance work after reaching the specified operating hours or calendar intervals. The interval which occurs first is the deciding factor!
- The maintenance intervals complement each other. If a higher interval is coming up, then carry out the work according to the lower interval also!

First maintenance after	Operating hour intervals 250 h	500 h	1000 h	Calendar intervals Daily	Weekly	Annually	Work to be carried out
Safety systems							
						X	Personal protective equipment Follow the instructions of the manufacturer
						X	Height rescue system Follow the instructions of the manufacturer
Fall protection equipment							
						X	Check protection points
						X	Check safety ropes
						X	Check the ladders for technically immaculate condition
						X	Check railings, steps and pedestals for safe function
						X	Check catwalks and open mesh flooring for safe function
Surface of crane boom							
					X		Check accessible surfaces for cleanliness
						X	Check accessible surfaces for completeness and slip resistance
						X	Check labels for completeness and legibility
Rigging and fastening points							
				X [2)]			Check condition and mounting
						X	Check for continued suitability by expert
Load handling equipment and assembly aids							
				X [2)]			Check for cracks, damage, wear and distortion
						X	Check for continued suitability by expert
Fastening equipment and load securing devices							
				X [2)]			Observe and adhere to the manufacturer's instructions
Lattice sections							
						X	Check cracks, damage and distortion
						X	Check protection points

LWE/ab Muli 010/24201-02-02/en

copyright © Liebherr-Werk Ehingen GmbH 2016

First maintenance	Operating hour intervals			Calendar intervals			Work to be carried out
after	250 h	500 h	1000 h	Daily	Weekly	Annually	
						X	Check safety ropes
						X	Check railings and pedestals for safe function
						X	Check catwalks and open mesh flooring for safe function
Guy rods							
						X	Check for cracks, damage and distortion by a technical expert
						Every 4 years	Check for cracks, damage and distortion by an authorized inspector
						X	Checking the retaining elements
						X	Check labels for completeness and legibility
Fiber guy ropes							
					Every 3 months 7)		Check braid and intermediate layers for damage and distortion
					Every 3 months 7)		Check rope end connections for cracks, damage and distortion
					Every 3 months 7)		Check rope grommet transitions for damage and distortion
Relapse supports							
					Every 3 months 5), 6)		Lubricate the bearings
X 2), 6)							Check the oscillation guard for easy movement
Relapse cylinder							
X 2), 6)					X		Check for leaks
					Every 3 months 5), 6)		Lubricate the bearings
X 2), 6)		X				X	Check pretension pressure (nitrogen)
X 2), 6)		X				X	Check the oil quantity
Hydraulic hose lines							
				X			Check for leaks and damage
						X	Check for safe condition by expert
Hydraulic cylinder							
					X		Check for leaks

LWE/ab Muli 010/24201-02-02/en

copyright © Liebherr-Werk Ehingen GmbH 2016

First maintenance after	Operating hour intervals 250 h	500 h	1000 h	Calendar intervals Daily	Weekly	Annually	Work to be carried out
					Every 3 months [5), 6)]		Lubricate the bearings
Hydraulic pressure accumulator (nitrogen)							
		X [4)]				X [4)]	Check pretension pressures
Rope pulleys							
			X			X	Check for wear, damage, cracks and easy movement
			3000 h			Every 3 years	Lubricate the bearings
Carrier rollers							
				X [2)]			Check for damage and distortion
			X			X	Check for wear, damage, cracks and easy movement
			X			X	Check the mounting screws for tight seating
Telescopic boom with rope mechanism							
						X	Check telescopic boom for distortions and cracks
	X					X	Grease the sliding surfaces of the telescopic boom bearing
			X			X	Check change over pulleys of push out mechanics for damage and cracks
	X					X	Grease the change over pulleys of push out mechanism
	X					X	Check mounting screws on change over pulleys for tight seating
250 h		X					Check, adjust rope mechanism
			20000 h			Every 10 years	Disassemble and check the boom
Telematik telescopic boom system							
						X	Check telescopic boom system for distortion, damage and cracks
						X	Check hydraulic components for leaks and damage
		X				X	Check telescoping cylinder for proper condition
						X	Check pull knob retainer and mounting screws for tight seating
						X	Check mounting screws of push out cylinder for tight seating

copyright © Liebherr-Werk Ehingen GmbH 2016

First maintenance	Operating hour intervals			Calendar intervals			Work to be carried out
after	250 h	500 h	1000 h	Daily	Weekly	Annually	
						X	Check twist guard of cylinder pinning and telescopic boom pinning
		X				X	Check push out gripper for proper condition
		X				X	Check the locking bores for proper condition
		X				X	Check locking pins for easy movement and proper condition
		X				X [5)]	Lubricate the locking pins
		X				X	Check inner and outer sliding surfaces for proper condition
						X [5)]	Lubricating the gliding surfaces
						X [5)]	Grease the guide rails on the telescoping cylinder
			20000 h			Every 10 years	Disassemble and check the boom
Telescopic boom guying							
						X	Check cracks, damage and distortion
					Every 3 months [5), 6)]		Lubricate guy points on telescopic boom head on the grease nipples
					Every 3 months [5), 6)]		Lubricate the TA/TY-guying on the grease fittings
250 h		X				X	Check mounting screws of guy winch for tight seating
				X			Check guy winch for leaks
					Every 6 months		Check the oil level on the guy winch
			3000 h			Every 4 years	Replace gear oil of guy winch
						X [4)]	Check the rope connection between the guy rope and the auxiliary rope (only LTM 1400-7.1)
Crane ropes							
				X			Check for damage and distortion
					Monthly		Check, grease by expert personnel
						X	Check by technical expert
						Every 4 years	Check by authorized inspector
Hook blocks							

copyright © Liebherr-Werk Ehingen GmbH 2016

First maintenance after	Operating hour intervals			Calendar intervals			Work to be carried out
	250 h	500 h	1000 h	Daily	Weekly	Annually	
			X			X	Check rope pulleys for distortion, wear, damage and cracks
			3000 h			Every 3 years	Lubricate rope pulleys
	100 h				Every 3 months		Lubricate pressure bearings
	100 h				Every 3 months		Lubricate radial bushing
	100 h				Every 3 months		Lubricate suspension of hook beam
					Every 6 months		Replace batteries on incline sensor
						X	Check distance dimension (y)
						X	Check for distortion, wear, damage and cracks by expert
						Every 4 years	Check for distortion, wear, damage and cracks by authorized inspector

[2] before every start up: Check visually
[4] observe maintenance instructions for Crane superstructure, chapter 7.05
[5] and as necessary
[6] and during assembly
[7] by authorized and trained expert personnel with boom placed down and before every erection procedure

LWE/ab Muli 010/24201-02-02/en

copyright © Liebherr-Werk Ehingen GmbH 2016

Empty page!

copyright © Liebherr-Werk Ehingen GmbH 2016

7.04 Maintenance guidelines - Crane chassis

1	Servicing the travel gear	3
2	Crawler travel gear	9
3	Servicing the central lubrication system of the crawler carrier	21
4	Hydraulic hose lines	27
5	Ladders	28

LWE/ab Muli 010/24201-02-02/en

copyright © Liebherr-Werk Ehingen GmbH 2016

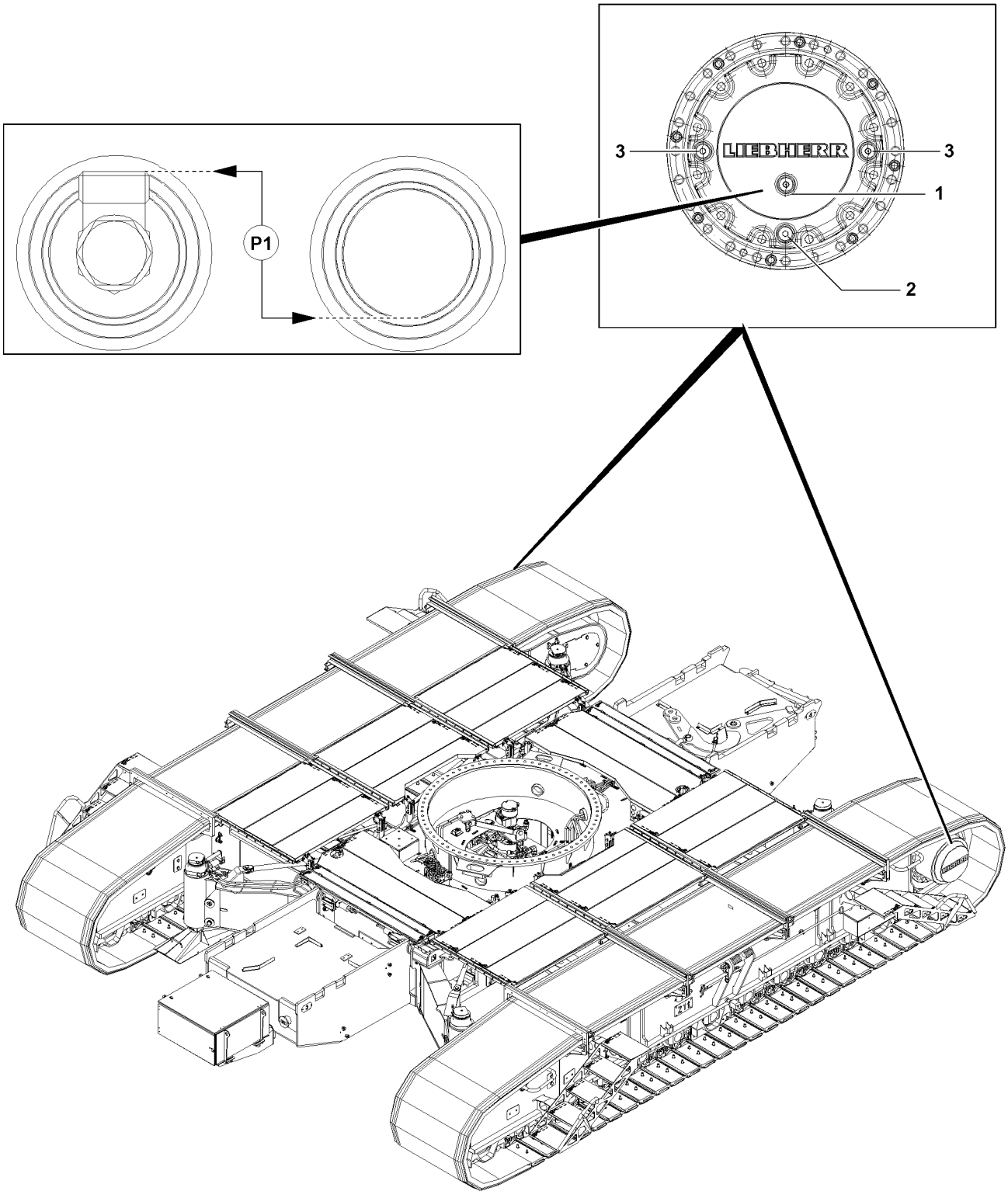

LWE/ab Muli 010/24201-02-02/en

Fig.118012

copyright © Liebherr-Werk Ehingen GmbH 2016

1 Servicing the travel gear

Note

- ▶ Use only service items and lubricants according to the Service fill!
- ▶ Adhere to the maintenance intervals as specified in chapter 7.02 of the Crane operating instructions!

The travel gear consists of:

– Planetary gear

WARNING

Danger of burns during maintenance and inspection work!

Severe burns can results due to the travel gear and oils at operating temperatures!

- ▶ Avoid direct body contact to heated components and fluids!

NOTICE

Dirt in travel gear!

If any dirt gets into the inside of the travel gear, gear damage can occur!

- ▶ Make sure that no dirt gets into the inside of the travel gear during maintenance work!

The following maintenance ports are on the planetary gear:

1 Oil level plug, oil level port

2 Oil drain plug, oil drain port

3 Oil filler plug, oil filler port

LWE/ab Muli 010/24201-02-02/en

copyright © Liebherr-Werk Ehingen GmbH 2016

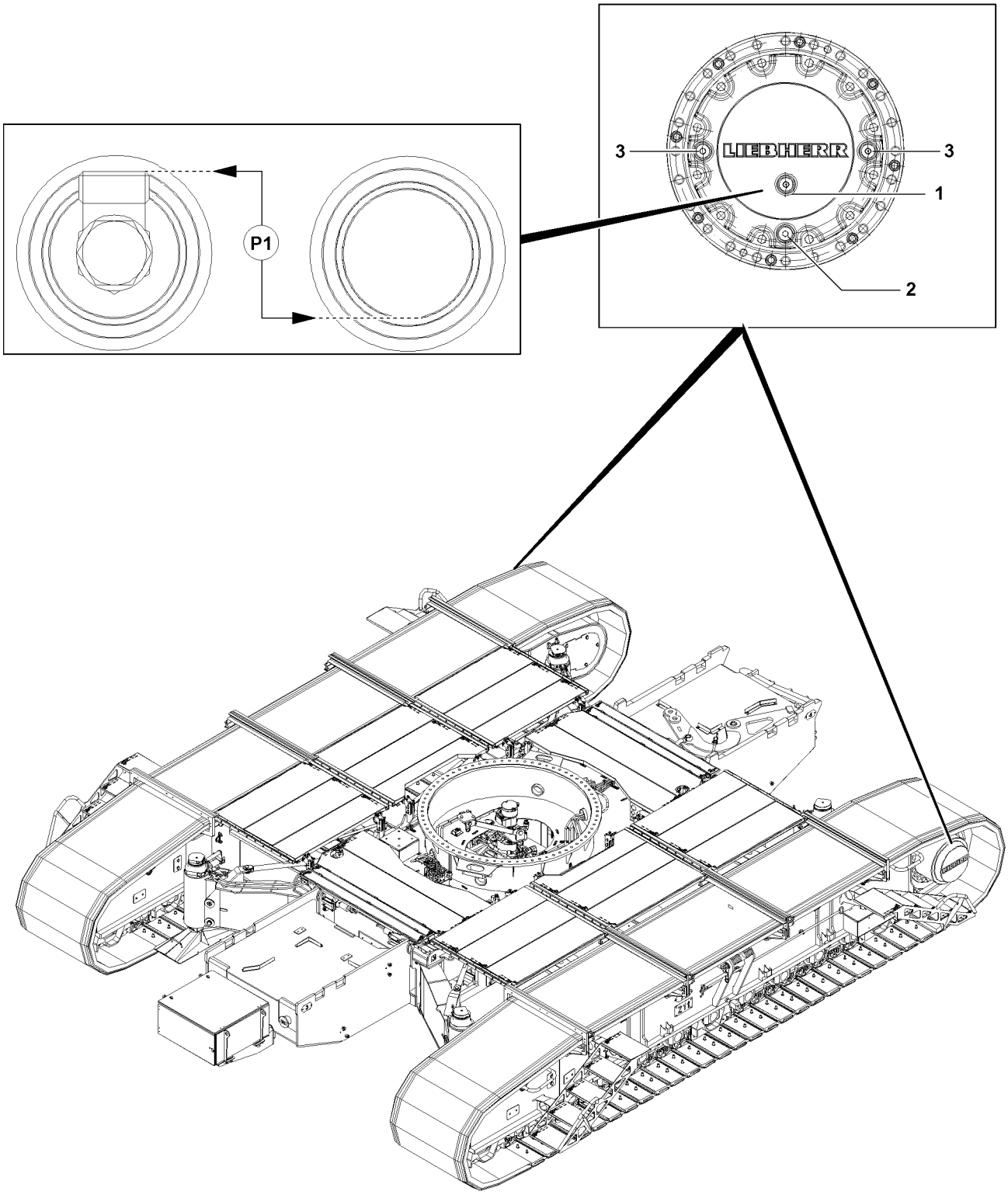

LWE/ab Muli 010/24201-02-02/en

Fig.118012

copyright © Liebherr-Werk Ehingen GmbH 2016

1.1 Checking for leaks

▶ Check visually to ensure that the travel gears do not leak.

1.2 Checking the oil level

NOTICE
Damage to the travel gear!
If seals are used repeatedly, it can result in loss of oil!
Due to loss of oil, the travel gears can wear significantly and / or be damaged!
▶ Use the seals on the maintenance ports only once!

NOTICE
Varying oil level in planetary gear!
Depending on the position of the gears in the planetary gear, the oil level can vary slightly upward!
When opening the oil level plug, oil can emerge despite correct fill quantity!
▶ The fill height must be at least on the height of the point **P1**!
▶ If any oil emerged during the check, replace the same amount!

Make sure that the following prerequisites are met:
– The crane is in horizontal position.
– The travel gear is at a standstill.

Note
▶ To ensure a reliable oil level check, it must be ensured that the travel gears have been at a standstill for at least two minutes. This ensures that the oil has returned to the oil chamber completely!

▶ Open the oil level port carefully.

NOTICE
Insufficient oil fill quantity!
If the oil level drops below the fill level on point **P1**, the travel gears can be damaged!
▶ Add gear oil until the oil level is again on the fill level on point **P1**!

If gear oil must be added:
▶ Add oil on the oil filler port.
▶ If the oil level is on the fill level on point **P1**, then the oil level on the travel gear is OK.
▶ Close the maintenance ports tightly.

LWE/ab Muli 010/24201-02-02/en

copyright © Liebherr-Werk Ehingen GmbH 2016

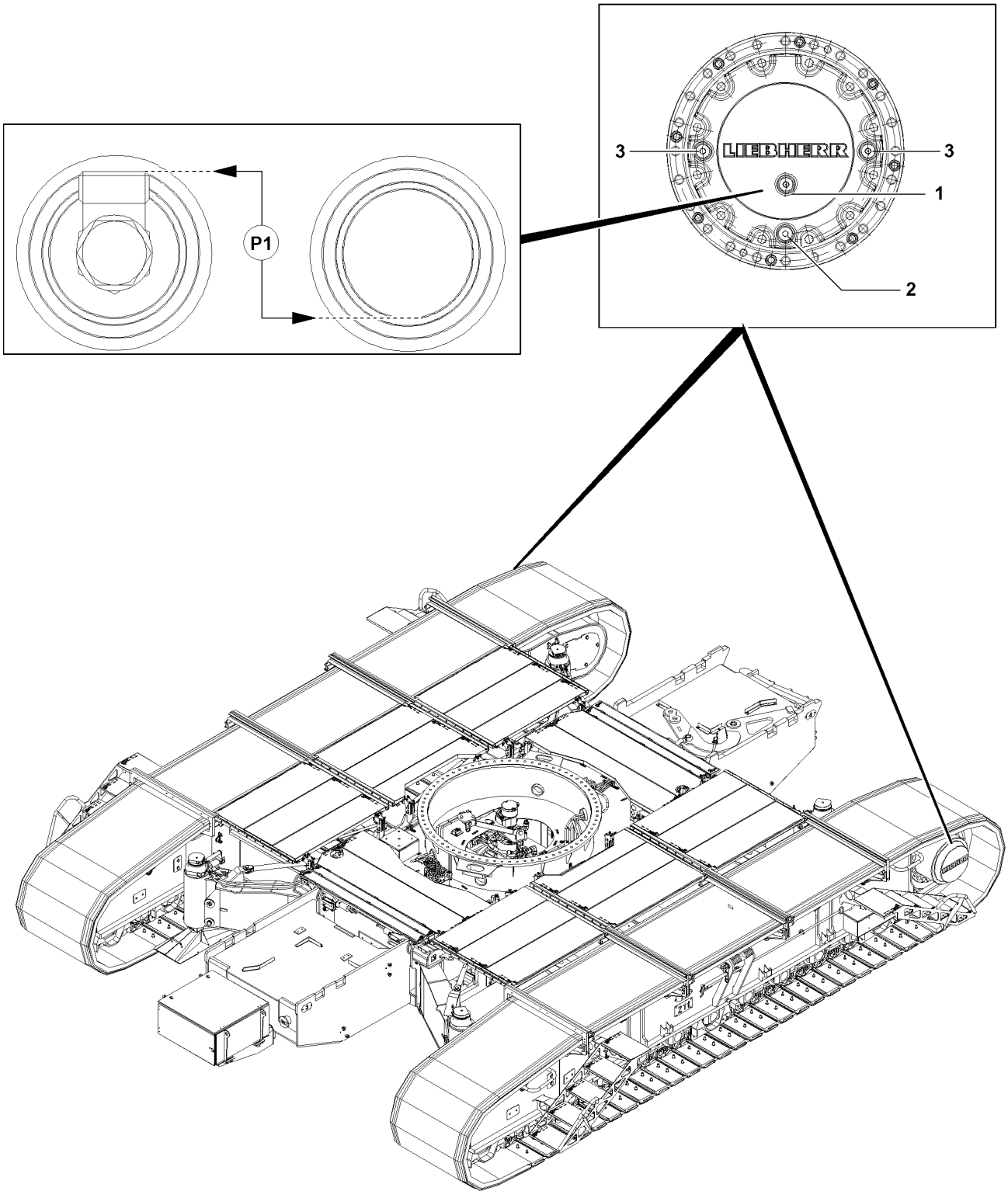

LWE/ab Muli 010/24201-02-02/en

Fig.118012

copyright © Liebherr-Werk Ehingen GmbH 2016

1.3 Changing oil on the planetary gear

NOTICE
Damage to the travel gear!
If seals are used repeatedly, it can result in loss of oil!
Due to loss of oil, the travel gears can wear significantly and / or be damaged!
▶ Use the seals on the maintenance ports only once!

Make sure that the following prerequisites are met:
– The crane is in horizontal position.
– The travel gear must be at a standstill.
– The travel gear is at operating temperature.
– A container to catch the used oil is available.

Note
▶ When selecting the container to catch the used oil, make sure that the container is sufficiently sized to be able to catch all the used oil!
▶ For fill quantity of planetary gear, see Chapter 7.06 in the Crane operating instructions!

▶ Remove the oil level plug **1**.
▶ Remove the oil drain plug **2** and drain oil into a suitable container.

Note
▶ Empty the planetary gear completely!

▶ Clean the oil drain plug **2** and the sealing surface.
▶ Close off the oil drain port **2** tightly.
▶ Add oil on an oil level plug **3** until it „stands“ at the height of the fill level **P1** of the oil level port **1** or until it starts to run over.
▶ Clean the sealing surfaces.
▶ Close off the oil level ports **1** tightly.
▶ Close off the oil fill plug **3** tightly.

LWE/ab Muli 010/24201-02-02/en

copyright © Liebherr-Werk Ehingen GmbH 2016

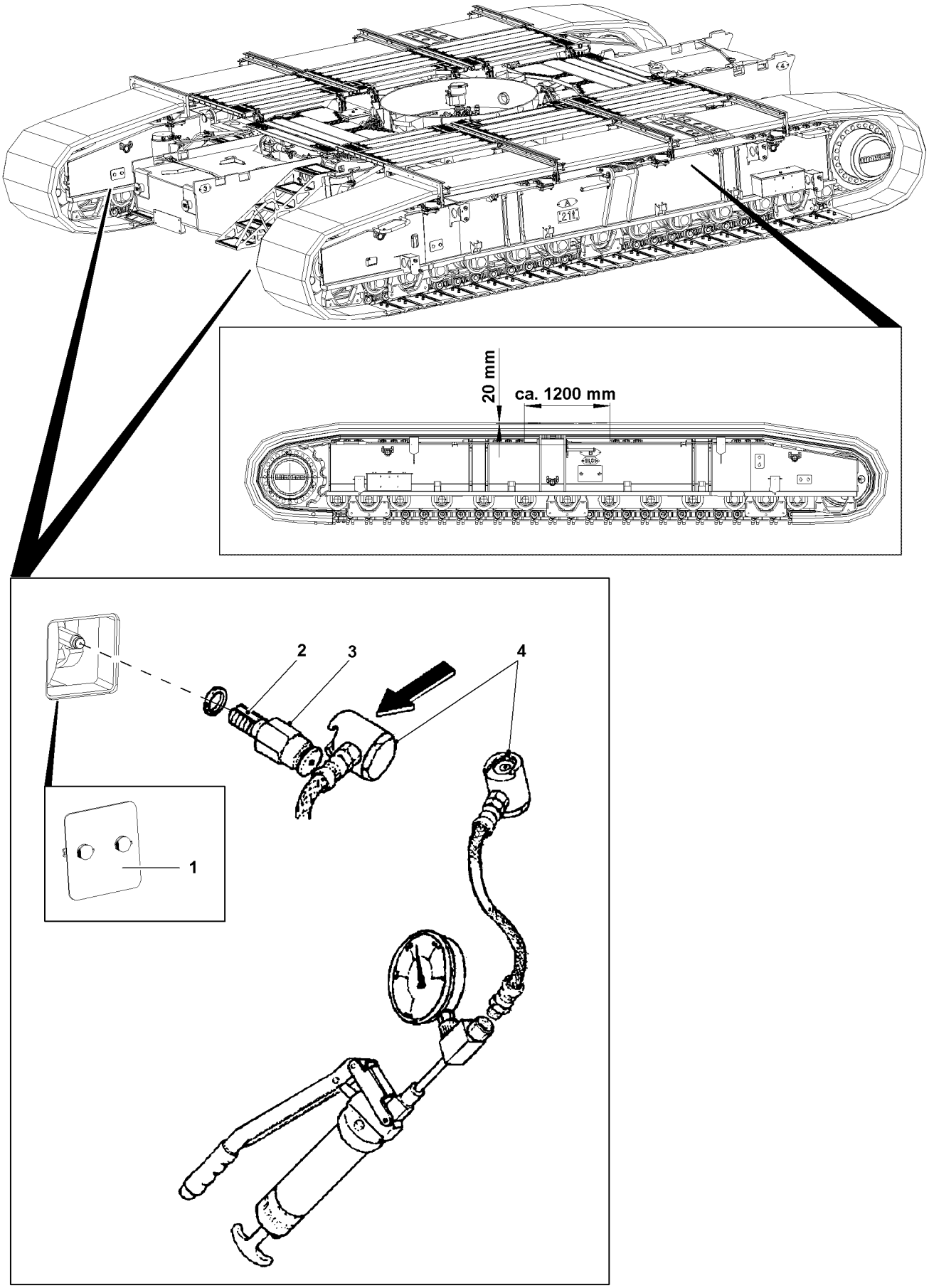

Fig.118013

LWE/ab Muli 010/24201-02-02/en

copyright © Liebherr-Werk Ehingen GmbH 2016

2 Crawler travel gear

In crawler operation, the components of the track chain wear and must therefore be checked in specified intervals, see chapter 7.02 of the Crane operating instructions and replaced with new components, if necessary.

The track chains are tensioned with tension cylinders, which are extended with a manual grease gun.

To release the tension of the track chains, reduce the pressure in the tension cylinder.

2.1 Tensioning the track chain

NOTICE
Damage to the track chain!
If the chain tension is not checked within the specified maintenance intervals, the track chain or the steel structure of the crawler carrier can be damaged!
- ▶ Observe and adhere to the maintenance intervals as specified in chapter 7.02 of the Crane operating instructions!
- ▶ Establish the permissible chain tension.

NOTICE
Foreign matter in track chains!
Foreign matter in the track chains and on the travel drive can cause damage!
- ▶ Before tensioning the track chains, check the track chains and the travel drives for foreign particles, such as rocks, and clean them, if necessary!

Make sure that the following prerequisites are met:

- The crane is in horizontal position.
- The manual grease gun with pressure gauge is on hand.

LWE/ab Muli 010/24201-02-02/en

copyright © Liebherr-Werk Ehingen GmbH 2016

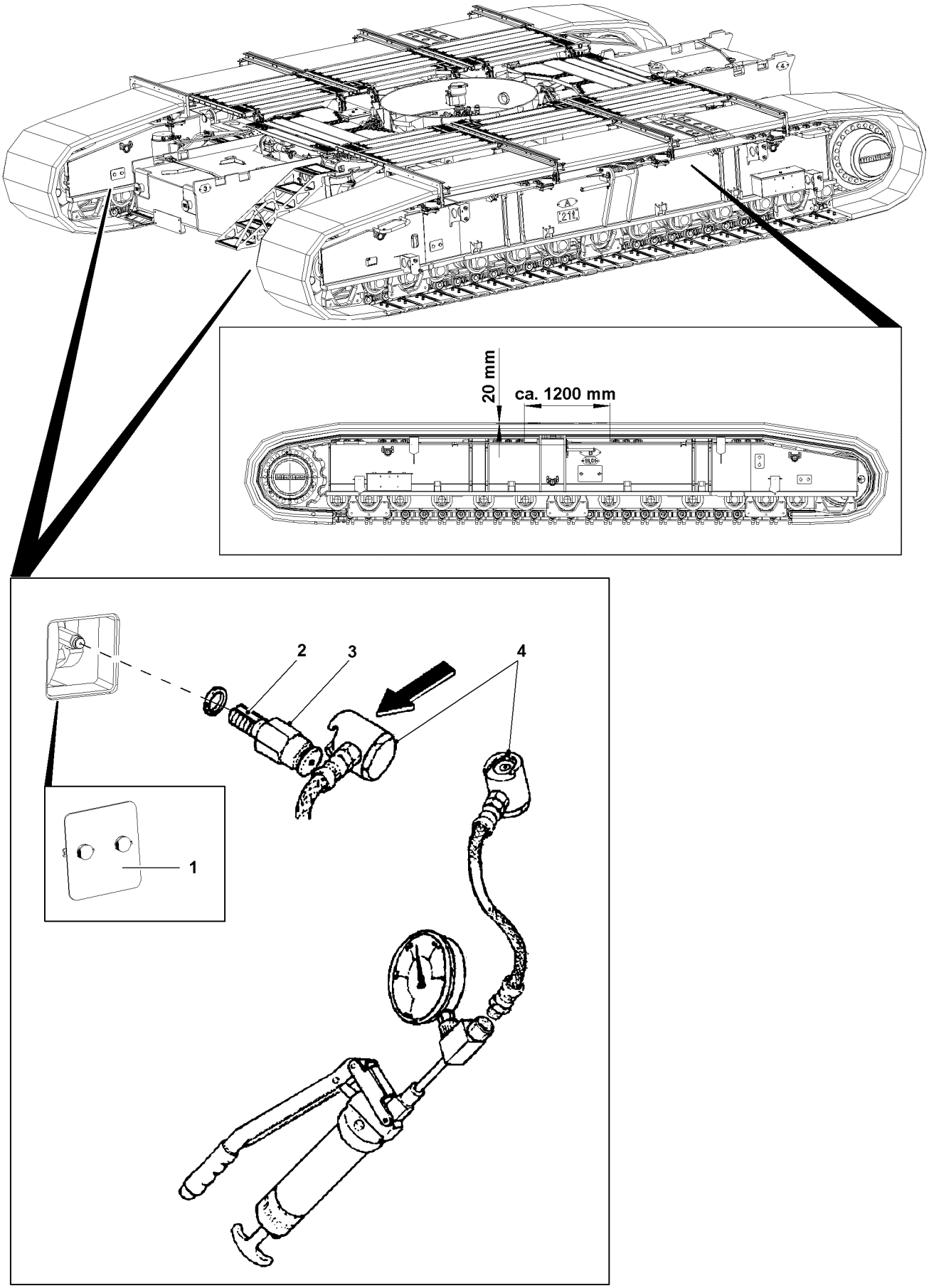

Fig.118013

LWE/ab Muli 010/24201-02-02/en

copyright © Liebherr-Werk Ehingen GmbH 2016

2.1.1 Tensioning procedure

- ▶ Unscrew the cover **1** on the inside of the crawler carrier.
- ▶ Attach the hose **4** of the manual grease gun to the grease fitting **3** of the tension cylinder to the stop position (push).

NOTICE
Component wear due to **insufficient** chain tension!
- ▶ The track chain may have a sag of approx. 20 mm at a length section of 1200 mm.

- ▶ Activate the manual grease gun until the pressure gauge shows a pressure of approx. **82 bar**.

Result:

– The track chain is tensioned.

- ▶ Remove the pressure hose **4** from the grease fitting.

Problem remedy
The pressure hose **4** does not detach from the grease fitting **3**?
The pressure in the pressure hose **4** is too high.
- ▶ Carefully loosen the pressure hose **4** on the manual grease gun, so that the pressure in the pressure hose is reduced.

- ▶ Remove the pressure hose **4** from the grease fitting **3**.
- ▶ Fasten the cover **1** tightly on the inside of the crawler carrier.
- ▶ After the tensioning procedure, drive the track chain by about one track length straight ahead forwards and backwards.

Result:

– The tension in the lower chain area is relieved.

Note
- ▶ If necessary, repeat the tensioning procedure on the track chain.

copyright © Liebherr-Werk Ehingen GmbH 2016

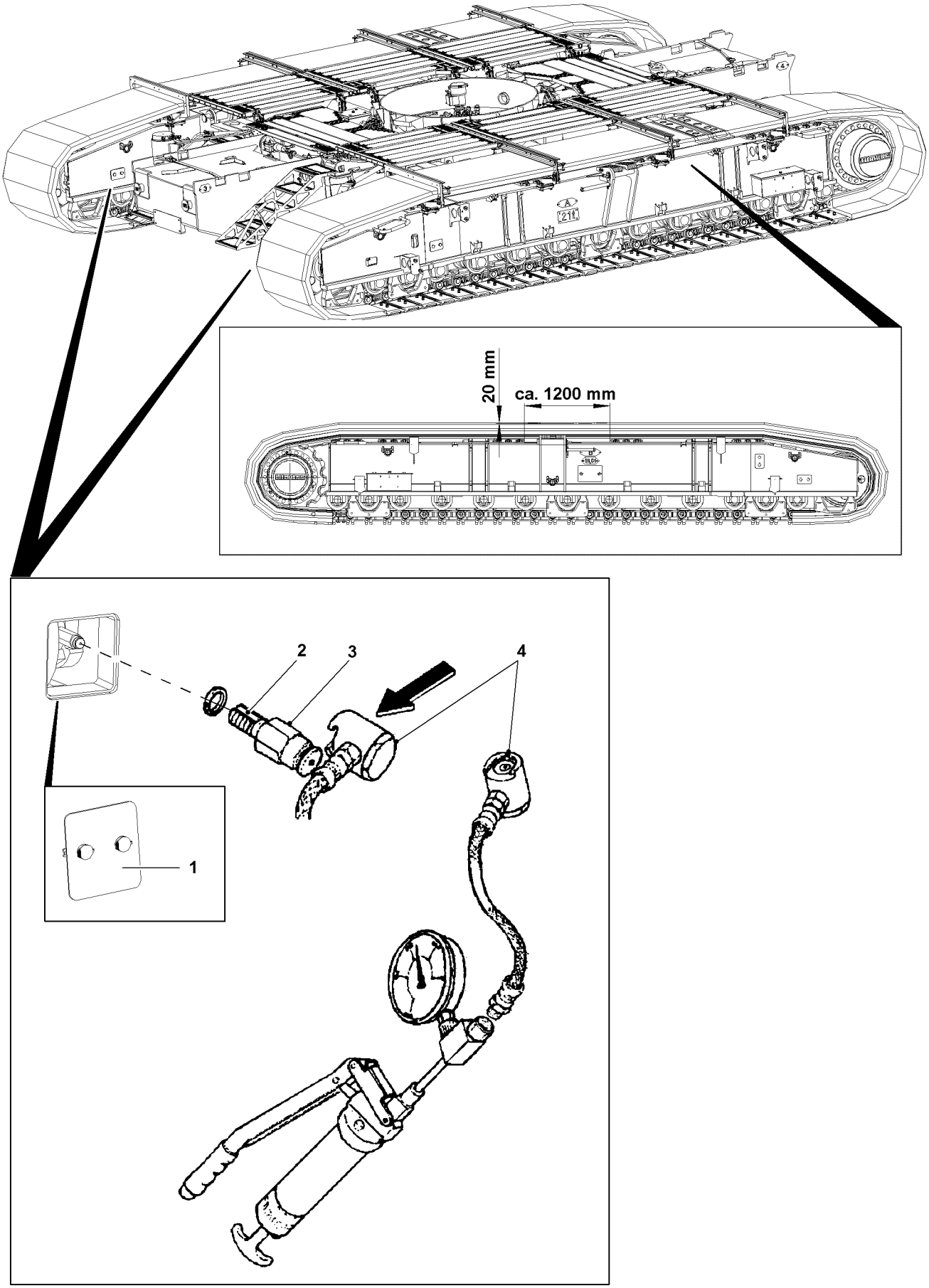

Fig.118013

LWE/ab Muli 010/24201-02-02/en

copyright © Liebherr-Werk Ehingen GmbH 2016

2.2 Relieving the track chain

NOTICE
Property damage due to high chain tension
▶ Establish the permissible chain tension.

WARNING
Danger of injury due to excess pressure!
Due to improper procedure when releasing the track chain, severe injuries to the face and especially the eyes can occur due to spraying grease.
▶ When releasing the grease fitting, do not look straight into the opening.
▶ The following steps for the release procedure must be strictly adhered to.

2.2.1 Release procedure

▶ Unscrew the cover **1** on the inside of the crawler carrier.
▶ Loosen the grease fitting **3** with extreme caution.
▶ Back the grease fitting **3** out carefully by 2 or 3 threads until grease can emerge from the groove **2**.
▶ Tighten the grease fitting **3** again.
▶ Fasten the cover **1** tightly on the inside of the crawler carrier.

LWE/ab Muli 010/24201-02-02/en

copyright © Liebherr-Werk Ehingen GmbH 2016

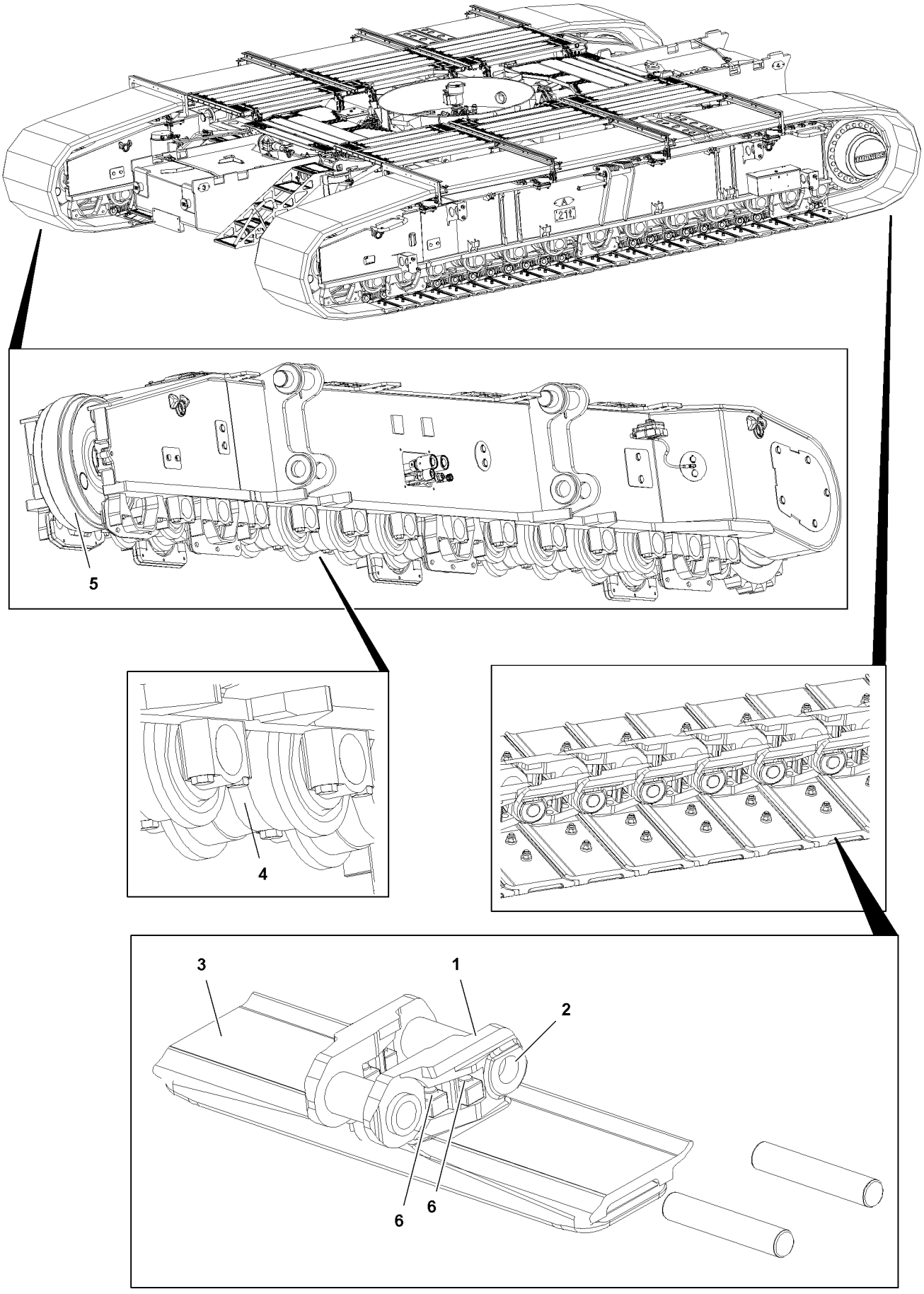

Fig.118030

LWE/ab Muli 010/24201-02-02/en

copyright © Liebherr-Werk Ehingen GmbH 2016

2.3 Wear data for crawler travel gear

WARNING
Track chain can be ripped off!
If the wear limit on the track pads, bolts or track rollers is exceeded, then the track chain can break off during crawler operation!
The crane can topple over and personnel can be severely injured or killed!
- ▶ Random inspections of the track pads, bolts and track rollers must be carried out within the specified intervals!
- ▶ During the random inspection of the track rollers, the first and last track roller on the crawler carrier must be included in the inspection!
- ▶ If a wear limit on the component is reached, then the component must be replaced or remachined!

NOTICE
Significant wear of crawler travel gear!
If an individual track pad must be replaced, then it may not be replaced with a track pad which shows a much lower degree of wear!
Significant height differences between the individual track pads, see illustration, lead to an increased mechanical stress on the track pads and the track rollers of the crawler carrier!
- ▶ Replace a defective track pad with a track pad which shows a similar degree of wear!

2.3.1 Components

1 Chain link
2 Chain bushing
3 Track pad
4 Track roller
5 Idler
6 Track pad bolts

2.3.2 Chain link

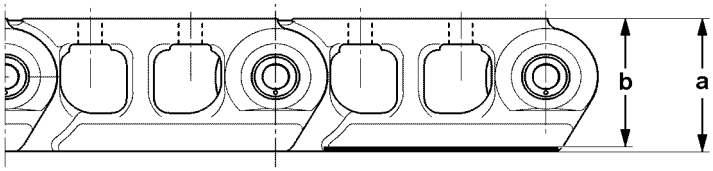

Fig.111492

Component	Dimensions	
	New	Wear limit
	a	b
Chain link	156 mm	144 mm

LWE/ab Muli 010/24201-02-02/en

copyright © Liebherr-Werk Ehingen GmbH 2016

2.3.3 Chain pitch

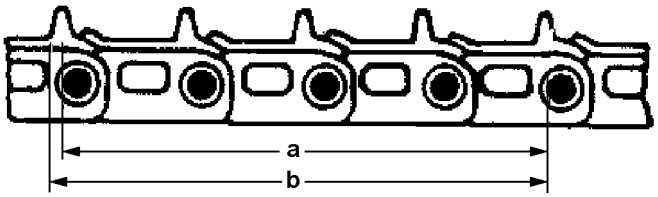

Fig.198807

Component	Dimensions	
	New	Wear limit
	a	b
Chain pitch	1041 mm	1062 mm

2.3.4 Chain bushing

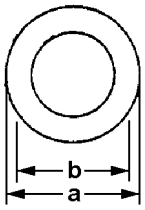

Fig.198808

Component	Dimensions	
	New	Wear limit
	a	b
Chain bushing	Diameter 85.62 mm	Diameter 81.4 mm

2.3.5 Track pad

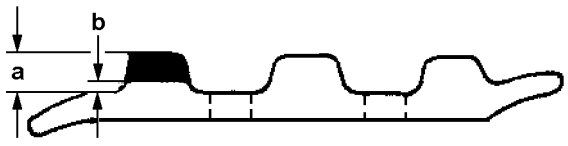

Fig.198809

Component	Dimensions	
	New	Wear limit
	a	b
Track pad	50 mm	15 mm

LWE/ab Muli 010/24201-02-02/en

copyright © Liebherr-Werk Ehingen GmbH 2016

2.3.6 Track roller

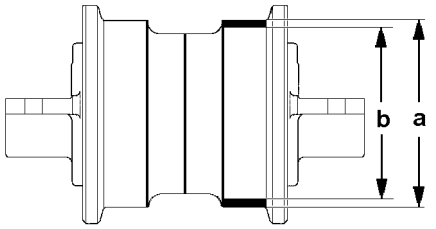

Fig.118517

Component	Dimensions	
	New	Wear limit
Track roller B9HD	a = Diameter 270 mm	b = Diameter 250 mm
Track roller B9HDS	a = Diameter 250 mm	b = Diameter 225 mm

2.3.7 Idler

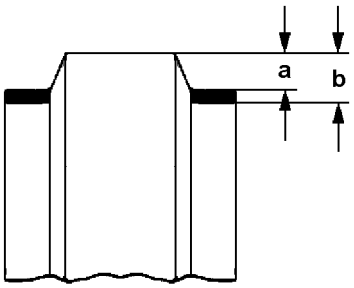

Fig.198812

Component	Dimensions	
	New	Wear limit
	a	b
Idler B9HD	22.5 mm	31.0 mm
Idler B9HDS	17.0 mm	30.0 mm

2.4 Installation of the track pads

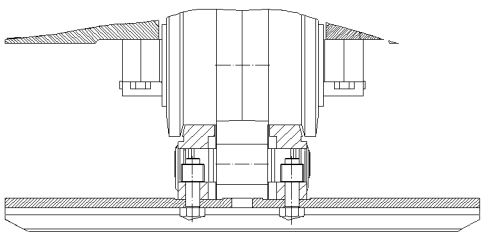

Fig.118970

The track pad bolts must be retightened after 50 operating hours.

copyright © Liebherr-Werk Ehingen GmbH 2016

For regular maintenance intervals for the track pad bolts refer to chapter 7.02 in the Crane operating instructions.

Track pad bolts	Tightening torque
1–1/8”	2210 Nm ± 110 Nm

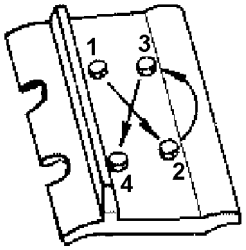

Fig.199143

▶ Retighten the bolts in the order shown on the illustration.

copyright © Liebherr-Werk Ehingen GmbH 2016

Empty page!

LWE/ab Muli 010/24201-02-02/en

copyright © Liebherr-Werk Ehingen GmbH 2016

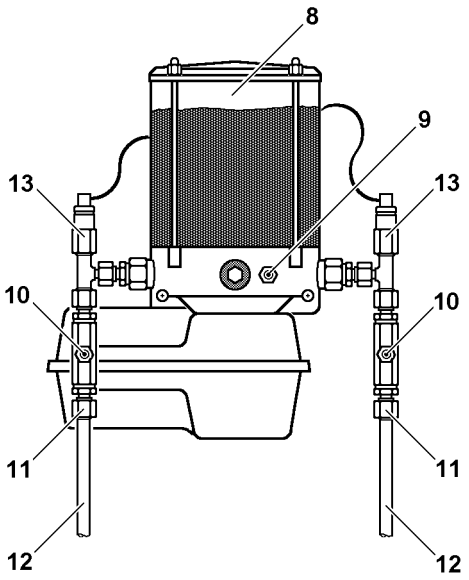

LWE/ab Muli 010/24201-02-02/en

Fig.118029

copyright © Liebherr-Werk Ehingen GmbH 2016

3 Servicing the central lubrication system of the crawler carrier

Note
- ▶ Use only service items and lubricants according to the Service fill.
- ▶ Adhere to the maintenance intervals as specified in chapter 7.02 of the Crane operating instructions.

If the crane is driven via the crawler travel gear, then the central lubrication system for the crawler carrier turns on automatically and supplies all grease points with the correct amount of grease.

NOTICE
Insufficient lubrication!
The lubrication film is removed over time due to environmental influences!
Due to insufficient lubrication, the crawler carriers are exposed to significant wear and can be damaged!
- ▶ If the crawler carriers are not moved for a period of more than three months, then it must be lubricated every quarter, possibly with an external grease pump!

Note
- ▶ When putting the crane back into service after an extended downtime, check the central lubrication system for function!
- ▶ When working on the central lubrication system, observe utmost cleanliness!
- ▶ Every crawler carrier has a separate grease pump with several lubrication circuits!
- ▶ Every lubrication circuit has its own main line **12**!

On the grease pump, see illustration, there are the following maintenance relevant components:

8 Grease container
9 Grease fitting
- Filling the grease container

10 Grease fitting
- Fill the lube lines

11 Main line connection
12 Main line
13 Pressure relief valve

3.1 Filling the grease container

NOTICE
Insufficient lubrication!
In case of insufficient lubrication, the grease lubrication points can run dry!
This could result in high property damage!
- ▶ Fill the grease container **8** before it is completely empty!

Note
- ▶ Do not deplete the grease container **8**!
- ▶ If the grease container **8** is empty, the central lubrication system must be bled!

- ▶ Fill the grease container **8** with an external grease pump via the grease fitting **9**.

LWE/ab Muli 010/24201-02-02/en

copyright © Liebherr-Werk Ehingen GmbH 2016

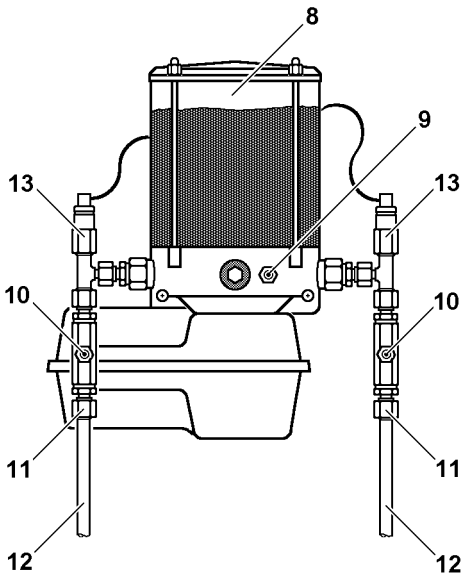

LWE/ab Muli 010/24201-02-02/en

Fig.118029

copyright © Liebherr-Werk Ehingen GmbH 2016

3.2 Bleeding the central lubrication system

NOTICE
Insufficient lubrication!
If there is air in the grease pump, lubrication points can run dry!
▶ Bleed the central lubrication system carefully!

The central lubrication system of the crawler travel gear can be bled two ways:
– By actuation of the grease pump by simulating the crawler operation.
– By separate actuation of the grease pump with the aid of the electric wiring diagram.

3.2.1 Bleeding by simulating crawler operation

WARNING
Crane can start to drive unintentionally!
If the foot rocker in the crane operator's cab or the manual control lever on the radio remote control console* is moved too far while bleeding the grease pump, then the track chain can start to move!
The crane can start to drive and catch personnel!
Personnel can be severely injured or killed!
▶ Actuate the foot rocker carefully while bleeding the grease pump!
▶ Watch the emergence of grease from the grease pump from a safe position!

▶ Fill the grease container **8** with an external grease pump via the grease fitting **9**.
▶ Fill the main lines **12** with an external grease pump via the grease fittings **10** until grease free of air bubbles emerges on all grease points.

Note
▶ Carry out the bleeding procedure individually for each main line connection **11**!
▶ Every crawler carrier has a separate grease pump!

▶ Unscrew the main line **12** from the main line connection **11**.
▶ Start the crane engine.
▶ Select crawler operation.
▶ Actuate the foot rocker / manual control lever of the crawler carrier of the grease pump which is being bled only so far that the track chain does not start to move.

Result:

– The grease pump starts to supply.
– The acoustic signal crawler operation sounds.

▶ Actuate the foot rocker / manual control lever only until grease free of air bubbles emerges on the main line connection **11**.
▶ Connect the main line **12** again.
▶ Actuate the foot rocker / manual control lever again until grease emerges again on at least one of the grease points in the bled lubrication circuit.

LWE/ab Muli 010/24201-02-02/en

copyright © Liebherr-Werk Ehingen GmbH 2016

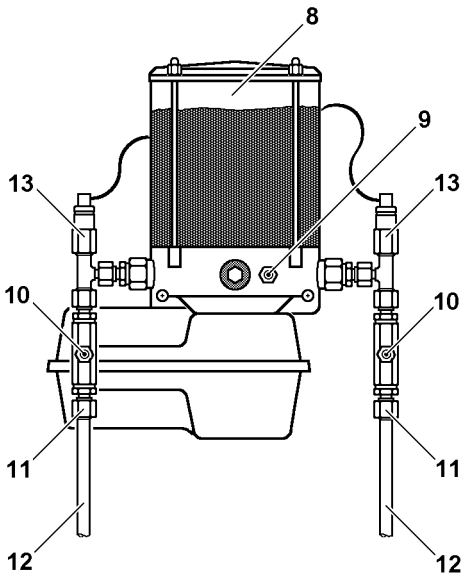

LWE/ab Muli 010/24201-02-02/en

Fig.118029

copyright © Liebherr-Werk Ehingen GmbH 2016

3.2.2 Bleeding by separate actuation of the grease pump

Note
▶ Work on the electrical system of the crane may only be carried out by authorized and trained expert personnel!

Make sure that the following prerequisite is met:
– The separate electric wiring diagram of the crane is available.

▶ Fill the grease container **8** with an external grease pump via the grease fitting **9**.
▶ Fill the main lines **12** with an external grease pump via the grease fittings **10** until grease free of air bubbles emerges on all grease points.

Note
▶ The bleeding procedure must be carried out individually for each main line connection **11**!
▶ Every crawler carrier has a separate grease pump!

▶ Unscrew the main line **12** from the main line connection **11**.
▶ Actuate the grease pump separately, see crane electric wiring plan.

Result:

– The grease pump starts to supply.

▶ Actuate the grease pump until grease free of air bubbles emerges on the main line connection **11**.
▶ Connect the main line **12** again.
▶ Actuate the grease pump again until grease emerges again on at least one of the grease points in the bled lubrication circuit.

3.3 Bleeding repaired lubrication lines

NOTICE
Insufficient lubrication!
If there is air in the lube lines, lubrication points can run dry!
▶ If the lubrication lines are repaired or replaced, make sure that they are completely filled with grease!

▶ Fill lubrication lines completely with grease before installation.
▶ Check repaired lubrication lines for function and leaks.

3.4 Intermediate lubrication of crawler carriers

▶ Fill the main line **12** with an external grease pump via the grease fitting **10** until grease free of air bubbles emerges on all grease points.
or
Actuate the foot rocker / manual control lever in crawler operation until the grease pump starts to supply, but the track chain does not yet start to move. Continue actuation until grease emerges on all lube points.

LWE/ab Muli 010/24201-02-02/en

copyright © Liebherr-Werk Ehingen GmbH 2016

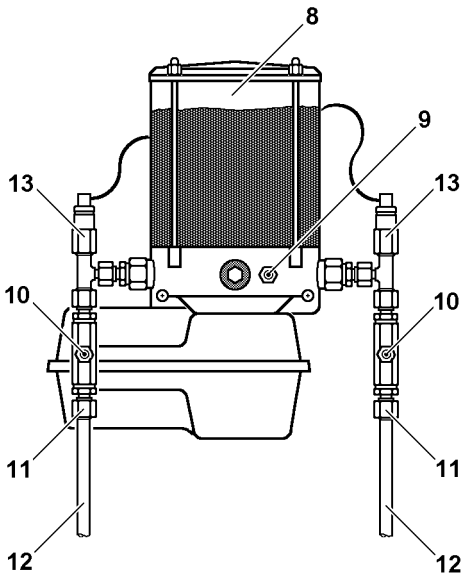

LWE/ab Muli 010/24201-02-02/en

Fig.118029

copyright © Liebherr-Werk Ehingen GmbH 2016

3.5 Troubleshooting on the central lubrication system of the crawler carrier

Problem	Cause	Remedy
The grease pump does not work	Electrical line interrupted, grease pump defective	Fix or replace the electrical line, replace the grease pump
Grease pump operates, but does not deliver	Air cushion in delivery piston, minimum fill level fallen below, grease pump element defective	Bleed grease pump, fill reservoir, replace grease pump element
No grease collar on all lube points	Grease pump does not work, system blocked	See „Grease pump does not work“ or „Grease emerges via pressure relief valve“
No grease collar on several lube points	Supply lines to secondary distributors broken or leaking, screw connections leaking	Replace lines, tighten or replace screw connections
No grease collar on one lube point	Associated lube line broken or leaking, screw connection leaking	Replace line, tighten or replace screw fitting
Grease pump speed reduced	High system pressure, low ambient temperature	Check system / grease points, no damage: Lubricate manually once or twice in between [1)]
Grease emerges via pressure relief valve	System pressure too high, distributor blocked, system blocked, defective valve spring on pressure relief valve	Check system, replace distributor, repair blocked / seized bearing point, replace pressure relief valve

1) See section „Intermediate lubrication of crawler carriers“.

If a problem cannot be remedied, contact the Service Dept. at Liebherr-Werk Ehingen.

4 Hydraulic hose lines

WARNING
Damaged and leaky hydraulic hose lines!
Fire, accidents, death, severe injury, property damage.

If leaky areas are found during the visual inspection:
▶ Have these leaky areas inspected immediately by authorized and trained expert personnel and remedied.

If damage is found during the visual inspection:
▶ Have hydraulic hose lines checked by an **expert person for hydraulic hose lines**.

Note
▶ For annual inspection of hydraulic hose lines and for definition of **expert person for hydraulic hose lines**, see Crane operating instructions, chapter 8.06.

Hydraulic hose lines must be inspected **once a year** by an **expert person for hydraulic hose lines**.

The system must be visually inspected **daily**.

The system must be visually inspected **before starting to work**.

copyright © Liebherr-Werk Ehingen GmbH 2016

4.1 Inspecting the hydraulic hose lines for damage

Hydraulic hose lines must be inspected by an **expert person for hydraulic hose lines** when one of the following defects is found:
– Damage on outer surface, such as chafe marks, cuts and cracks
– Brittleness due to aging of outer layer (cracks)
– Distortion, such as splitting of hose layers, bubbles, crushed areas, kinks, twists
– Damage or distortion of hose fixtures or hose fitting (seal is endangered)

▶ Inspect the hydraulic hose lines for damage.

If one of the listed defects is found:
▶ Have hydraulic hose lines checked by an **expert person for hydraulic hose lines**.
▶ Document conspicuous findings, decisions and replacements comprehensibly, see Crane operating instructions, chapter 8.06.

4.2 Inspecting the hydraulic hose lines for leaks

▶ Check the crane for escaped hydraulic oil.
▶ Check the ground under the crane for leaks.

When the hydraulic system leaks:
▶ Have these leaky areas inspected by authorized and trained expert personnel and remedied.

If one of the listed defects is found:
▶ Have hydraulic hose lines checked by an **expert person for hydraulic hose lines**.
or
Contact Liebherr Service.
▶ Document conspicuous findings, decisions and replacements comprehensibly, see Crane operating instructions, chapter 8.06.

5 Ladders

WARNING
Danger of falling!
If the following safety guidelines are **not** observed, personnel can fall down and be killed or severely injured.
▶ Observe and adhere to the installation and safety guidelines for ladders.
▶ Observe and adhere to the safety signs on the ladders.
▶ Install and secure the ladders properly.
▶ Do **not** use damaged ladders and replace them immediately.
▶ Repair the ladder exclusively through authorized service facilities.

LWE/ab Muli 010/24201-02-02/en

copyright © Liebherr-Werk Ehingen GmbH 2016

5.1 Lubricating ladders

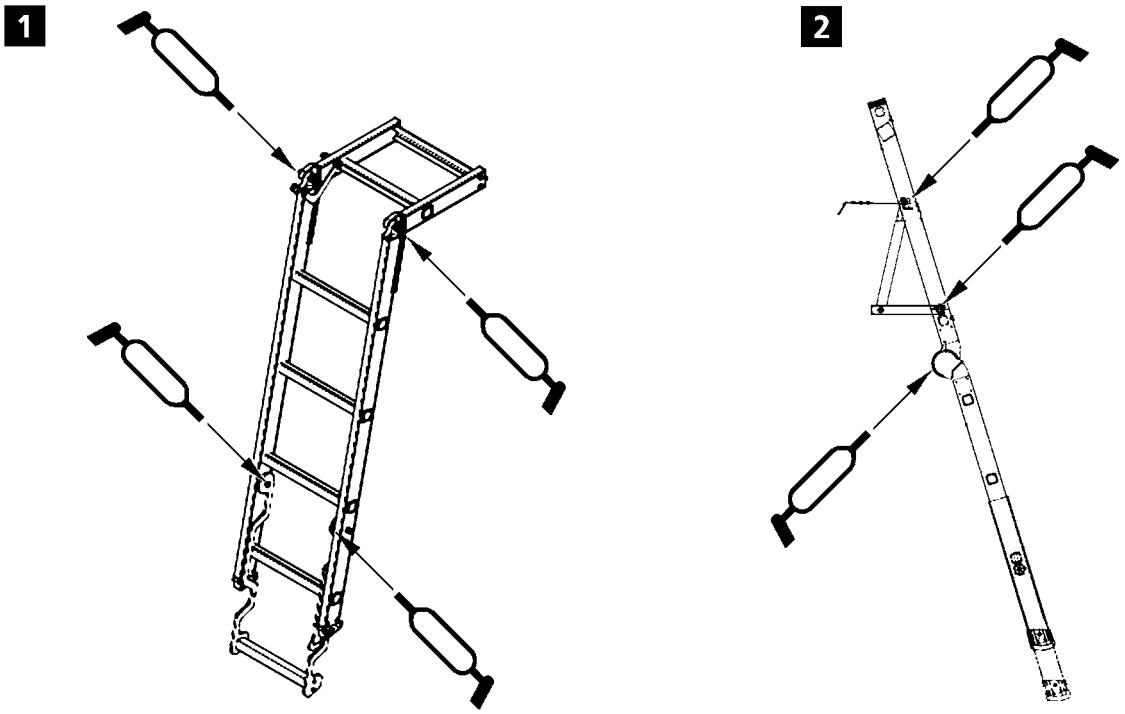

Fig.109766

- ▶ Grease joints and pivot points on the ladders regularly and check them for easy movement, see illustration **1** and illustration **2**!
- ▶ Repairs and maintenance work on the ladder must be made by expert personnel.

LWE/ab Muli 010/24201-02-02/en

copyright © Liebherr-Werk Ehingen GmbH 2016

Empty page!

copyright © Liebherr-Werk Ehingen GmbH 2016

7.05 Maintenance guidelines - Crane superstructure

1	Diesel engine	3
2	Cooling system	6
3	Air filter system	8
4	Fuel system	9
5	Urea system*	15
6	Exhaust system	17
7	Pump distributor gear	18
8	Central lubrication system	20
9	Slewing ring connection	24
10	Slewing gear(s)	26
11	Hoist gear(s)	31
12	Auxiliary heater*	33
13	Ventilation	38
14	Hydraulic system	38
15	Hydraulic hose lines	43
16	Compressed air system*	43
17	Electrical system	44
18	Ladders	48

LWE/ab Muli 010/24201-02-02/en

copyright © Liebherr-Werk Ehingen GmbH 2016

LWE/ab Muli 010/24201-02-02/en

Fig.195219

copyright © Liebherr-Werk Ehingen GmbH 2016

1 Diesel engine

DANGER
Danger of fires due to spilled fuel!
▶ Keep the engine area free of diesel fuel.
▶ Absorb fuel with rags.
▶ Dry up spilled fuel.

NOTICE
Property damage due to mechanical demands!
▶ When working in the engine area, do **not** step on the fuel lines.

Note
Recommendation!
▶ Check the oil level before starting to travel or before starting to work.

1.1 Checking the oil level on the LICCON monitor

Make sure that the following prerequisites are met:
– The crane is in horizontal position.
– The diesel engine has been turned off for at least 30 minutes.
– The ignition is turned on.

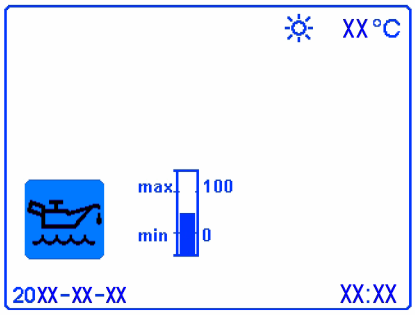

Fig.122224: Individual control display Engine oil level

In the LICCON monitor the oil level is shown in the form of a bargraph in percentages [%].

Explanation of bargraph:
– Under *min*: Oil level too low.
– Between *min* and *max*: Oil level OK.
– Over *max*: Oil level overfilled.

The selection of the individual control display is described in the Crane operating instructions, chapter 4.02.

▶ Select Individual control display *Engine oil level*

NOTICE
Engine damage due to insufficient engine oil!

If too little engine oil is shown:
▶ Add engine oil.

▶ Check the oil level.

LWE/ab Muli 010/24201-02-02/en

copyright © Liebherr-Werk Ehingen GmbH 2016

Problem remedy
Oil consumption or loss of oil too high?
▶ Find the cause and remedy it.

If the cause cannot be remedied:
▶ Contact Liebherr Service.

1.2 Checking the oil level with the dipstick

CAUTION
Engine damage due to lack of oil!
▶ Check the oil level and establish the permissible oil level, if necessary.

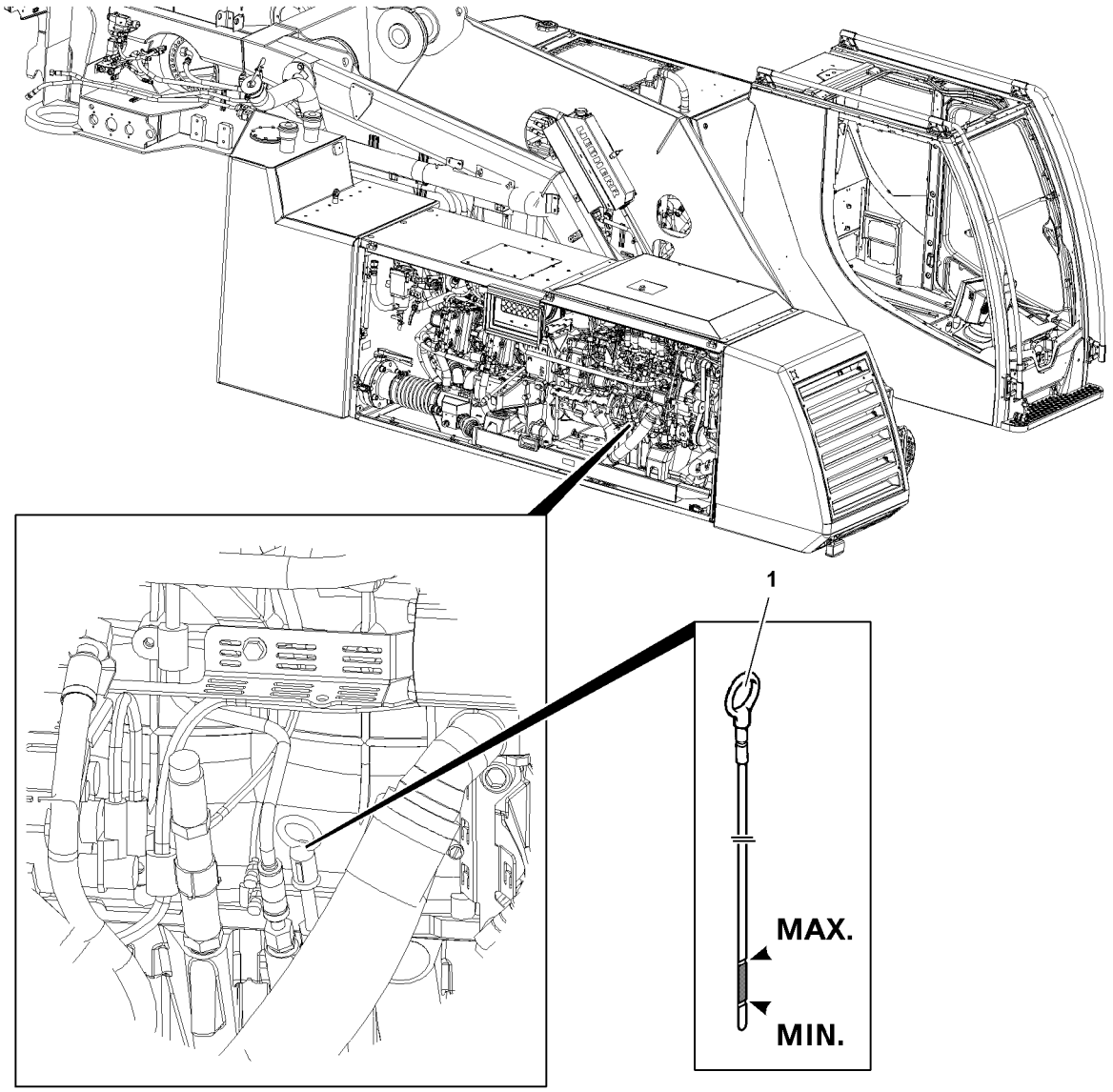

Fig.122553: Dipstick Diesel engine

Make sure that the following prerequisites are met:
– The crane is in horizontal position.
– The Diesel engine has been turned off for at least eight hours (complete return flow of engine oil).
– The turntable cover is open.

▶ Pull out the dipstick **1** and wipe it off.

LWE/ab Muli 010/24201-02-02/en

copyright © Liebherr-Werk Ehingen GmbH 2016

▶ Insert the dipstick **1** and pull it out.

The engine oil must be visible between both marks on the dipstick **1**.

▶ Check the oil level.

Problem remedy
The oil level is too low?
▶ Add engine oil until the oil level is visible between both marks on the dipstick **1**. See diesel engine operating instructions.

▶ Insert the dipstick **1**.

Problem remedy
Oil consumption or loss of oil too high?
▶ Find the cause and remedy it.

If the cause cannot be remedied:
▶ Contact Liebherr Service.

1.3 Servicing the diesel engine according to the information from the manufacturer

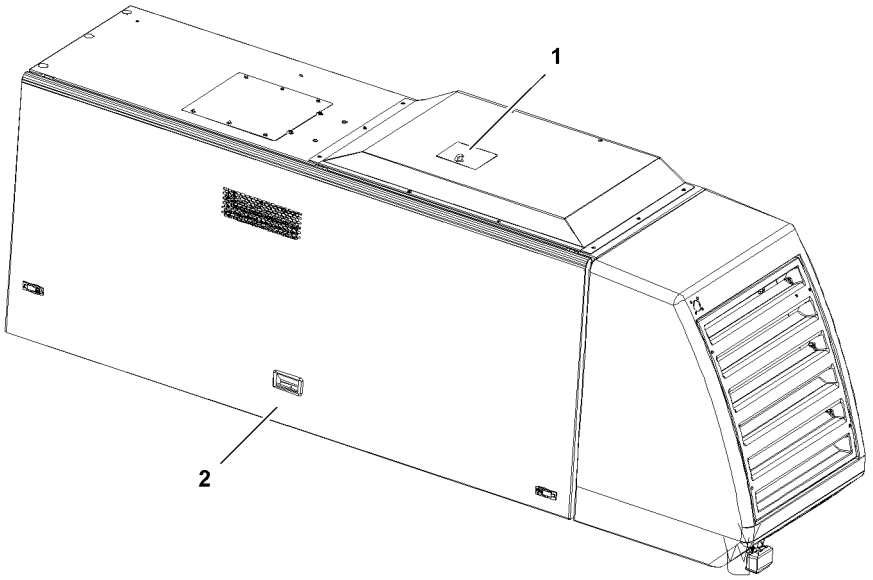

Fig.122796: Cover Diesel engine

▶ Remove the cover **1**.
▶ Fold the cover **2** up.
▶ Service the diesel engine according to the information from the manufacturer.

copyright © Liebherr-Werk Ehingen GmbH 2016

2 Cooling system

WARNING
Swallowing coolant, contact with coolant!
Poisoning when ingesting, eye damage and skin irritation at contact.
▶ Make sure that eyes, skin and clothing do **not** come in contact with coolant.

If coolant was swallowed:
▶ Contact a physician immediately.

When eyes came in contact with coolant:
▶ Flush the eyes out with a lot of clear water and go to a physician, if necessary.

When skin and clothing came in contact with coolant:
▶ Clean the skin and clothing immediately with water and soap.

NOTICE
Property damage due to impermissible coolant!
▶ Do **not** mix different coolant products.
▶ Do **not** thin Liebherr-Fertig-Mix (Liebherr Ready Made Mix).

When adding coolant:
▶ Use exclusively the same coolant with the same color.

Different coolants are differentiated by different colors.

Coolants contain corrosion inhibitor - antifreeze fluid.

2.1 Checking the coolant level

Make sure that the following prerequisites are met:
– The crane is in horizontal position.
– The diesel engine is cold.

The coolant level is monitored by the LICCON computer system.

▶ Call up the monitoring functions, see Crane operation manual, chapter 4.02.

Fig.122792

When **11** *coolant level* icon is yellow, then the coolant level is too low.

▶ Call up individual control display.

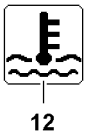

Fig.122795

When the icon **12** *Coolant temperature* is red:
▶ Wait until the coolant is cooled off.

LWE/ab Muli 010/24201-02-02/en

copyright © Liebherr-Werk Ehingen GmbH 2016

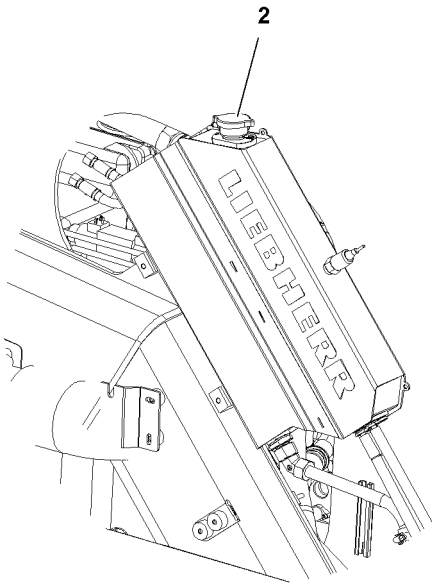

Fig.122554: Water cooler expansion tank

DANGER
Scalding due to hot coolant vapor!
- ▶ Check the coolant level exclusively when the diesel engine is cold.
- ▶ Wear protective gloves and safety glasses.

- ▶ Release excess pressure: Turn the cap **2** on filler neck of water cooler expansion tank to the first notch.
- ▶ Remove the cap **2**.
- ▶ Check the coolant level.

Problem remedy
Coolant level is too low?

When the coolant level is too low:
- ▶ Add coolant until the lower edge of the riser tube.
- ▶ Add coolant only on the filler neck.

2.2 Replace the coolant

Note

When the coolant is changed:
- ▶ Empty the cooling system completely and flush it.

Make sure that the following prerequisite is met:
- – Coolant is replaced by authorized and trained expert personnel.

When the cooling system is completely emptied:
- ▶ Add coolant until the lower edge of the riser tube.

2.3 Servicing the cooling system according to the information from the manufacturer

Service the cooling system according to the information from the manufacturer.

copyright © Liebherr-Werk Ehingen GmbH 2016

3 Air filter system

3.1 Replacing the air filter

The air filters are monitored by the LICCON computer system.

▶ Call up the monitoring functions, see Crane operating instructions, chapter 4.02.

Depending on the crane, different icons appear for the air filter.

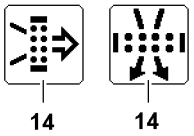

Fig.122794

When **14** *air filter* icon is yellow, then the air filter is dirty.

▶ Call up individual control display.

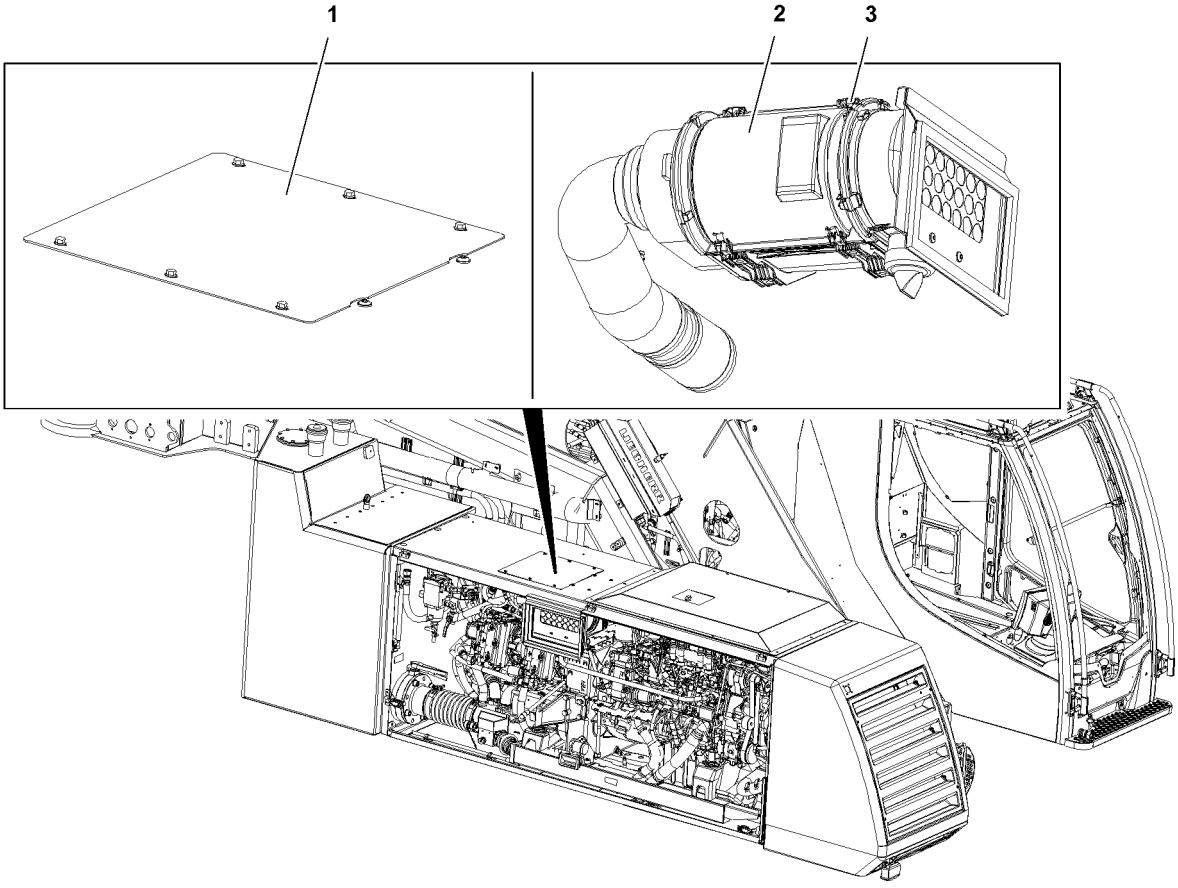

Fig.122555: Air filter system

When the **14** *air filter* icon is yellow:

▶ Remove the cover **1**.
▶ Open the locks **3** and open the cover **2**.
▶ Replace the filter insert.
▶ Close the cover **2** and fasten with locks **3**.

LWE/ab Muli 010/24201-02-02/en

copyright © Liebherr-Werk Ehingen GmbH 2016

4 Fuel system

DANGER
Danger of fires due to spilled fuel!
- ▶ Keep the engine area free of fuel.
- ▶ Extreme cleanliness is vital during filter changes and bleeding.
- ▶ Absorb fuel with rags.
- ▶ Dry up spilled fuel.

DANGER
Danger of fire and explosion!
- ▶ Do **not** smoke.
- ▶ Avoid open flames and light.
- ▶ Work only when the diesel engine is turned off.
- ▶ Maintain utmost cleanliness during all work.

Note
Recommendation!
- ▶ Before releasing the fuel filter, place cleaning rags underneath.

4.1 Bleeding the fuel preliminary filter

Bleeding the preliminary fuel filter and the fuel low pressure system becomes necessary after:
- draining the fuel preliminary filter
- changing the fuel preliminary filter
- emptying the fuel tank
- initial operation of the diesel engine

WARNING
Manual opening of the fuel system!
Death, severe injuries, destruction of the Common Rail System.
- ▶ Do **not** release or open the fuel lines and injection lines.
- ▶ Bleed solely through actuation of the hand pump.
- ▶ Maintain utmost cleanliness during all work.

LWE/ab Muli 010/24201-02-02/en

copyright © Liebherr-Werk Ehingen GmbH 2016

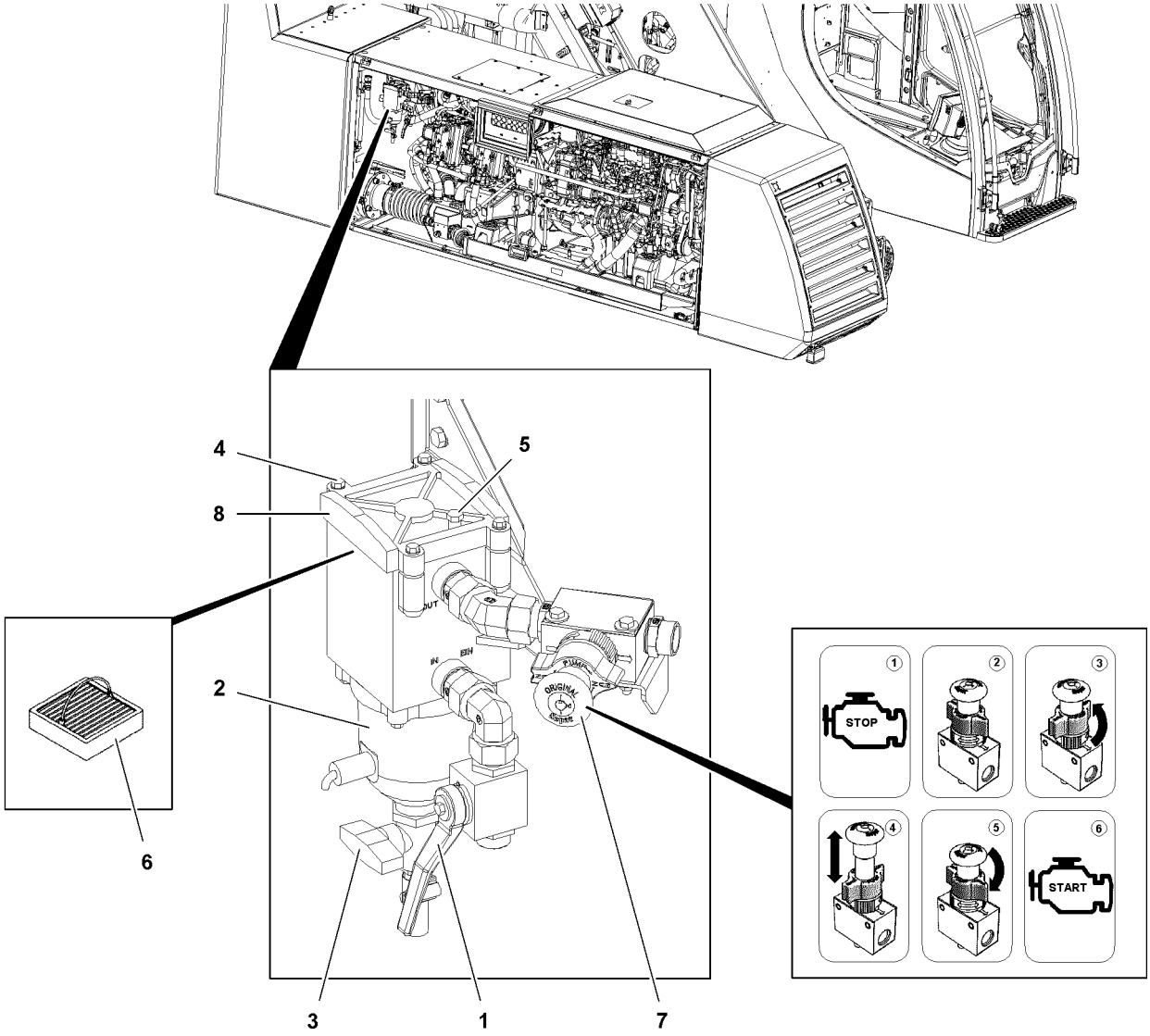

Fig.122557: Fuel preliminary filter

NOTICE
Breather screw is open!
Emerging fuel.
▶ Screw in the breather screw **5** on the fuel preliminary filter and tighten.

Make sure that the following prerequisites are met:
– The breather screw **5** on the fuel preliminary filter is screwed in and tightened.
– The ball valve is open.

▶ Turn the flow indicator on the manual supply pump to pump position (PUMP).

The hand pump **7** is actuated by pulling.

▶ Actuate the hand pump **7** until a stronger resistance can be felt.
▶ Turn the mark flow indicator into operating position (RUN).

Result:

– The red arrow of the flow indicator points in the same direction as the connections of the fuel lines on the pump housing.

▶ Start the diesel engine.

LWE/ab Muli 010/24201-02-02/en

copyright © Liebherr-Werk Ehingen GmbH 2016

Problem remedy
Starting procedure remains unsuccessful after approx. 20 seconds?
Mark of flow indicator is in incorrect position.
▶ Wait for 1 minute.
▶ Check if the red arrow of the flow indicator points in the same direction as the connections of the fuel lines on the pump housing.

When the procedure has been repeated three times:
▶ Repeat the bleeding procedure.

4.2 Replacing the fuel preliminary filter insert

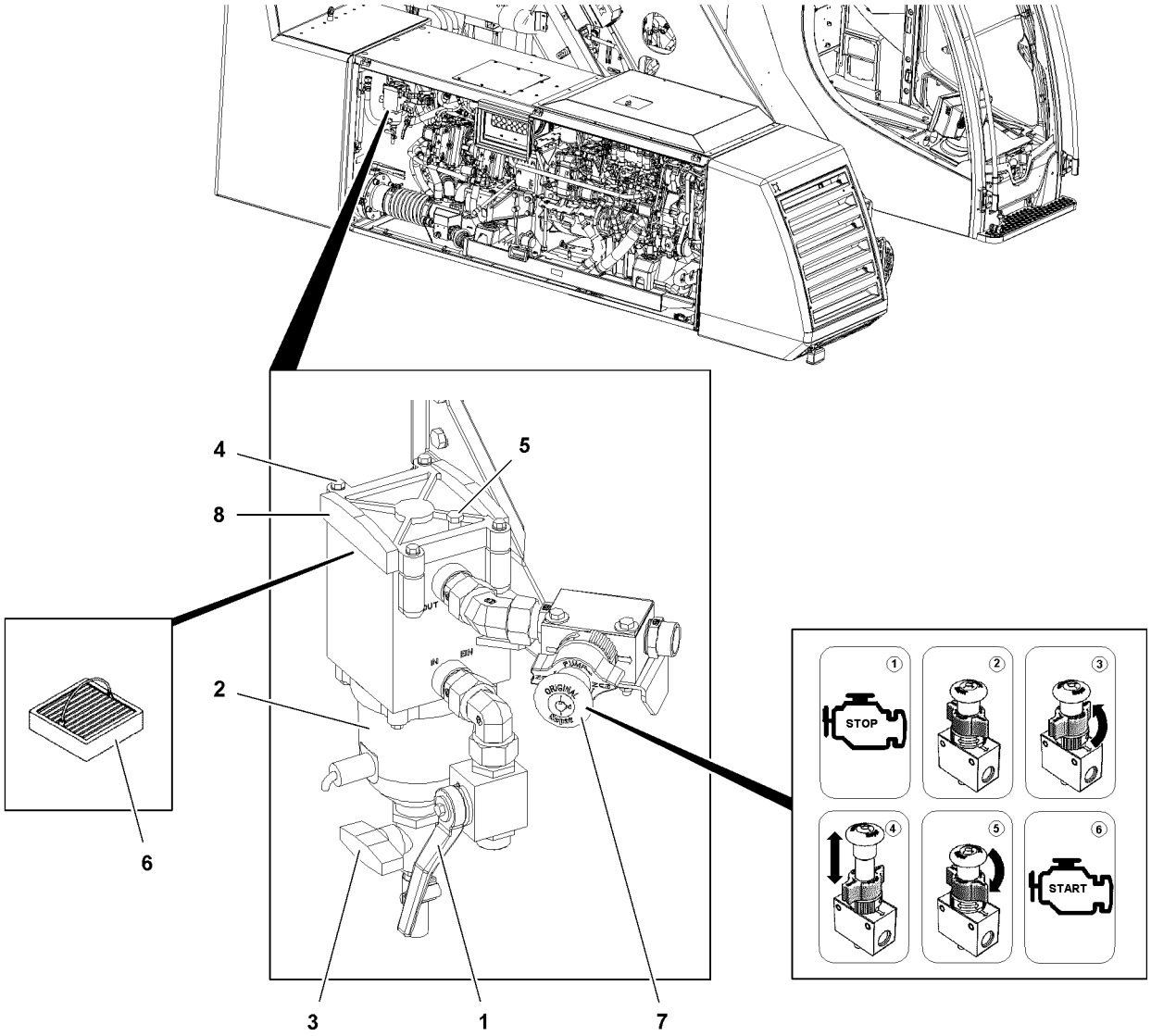

Fig.122557: Fuel preliminary filter

The filter strainer **6** on the fuel preliminary filter is changed:
- after maintenance intervals
- **or** when an error message is shown

Make sure that the following prerequisites are met:
- A container with the required capacity is on hand.
- New fuel preliminary filter insert is on hand.

copyright © Liebherr-Werk Ehingen GmbH 2016

- ▶ Turn the diesel engine off.
- ▶ Catch diesel fuel: Place a container under the fuel preliminary filter.
- ▶ Close the ball valve **1**.
- ▶ Turn the flow indicator on the manual supply pump to pump position (PUMP).
- ▶ Release the breather screw **5**.
- ▶ Drain diesel fuel: Open the drain valve **3** until diesel fuel is visible on the water separator **2**.
- ▶ Close the drain valve **3**.
- ▶ Screw in the breather screw **5** on the fuel preliminary filter and tighten.

NOTICE
Dirt!
Destruction of Common Rail System.
- ▶ Make sure that **no** dirt gets into the inside of the filter.
- ▶ Do not reuse a used filter.

- ▶ Back out the screws **4** and remove the cover **8**.
- ▶ Take out the filter strainer **6**.
- ▶ Insert a new filter strainer **6** properly.
- ▶ Check the seal for damage.

When the seal is damaged:
- ▶ Replace the seal.
- ▶ Install the cover **8** with seals properly.
- ▶ Properly install and tighten the screws **4**.
- ▶ Open the ball valve **1**.

The hand pump **7** is actuated by pulling.

- ▶ Actuate the hand pump **7** until a stronger resistance can be felt.
- ▶ Turn the mark flow indicator into operating position (RUN).

Result:

– The red arrow of the flow indicator points in the same direction as the connections of the fuel lines on the pump housing.

- ▶ Remove the container and dispose of the fluid.
- ▶ Start the diesel engine.

Problem remedy
Starting procedure remains unsuccessful after approx. 20 seconds?
Mark of flow indicator is in incorrect position.
- ▶ Wait for one minute.
- ▶ Check if the red arrow of the flow indicator points in the same direction as the connections of the fuel lines on the pump housing.

When the procedure has been repeated three times:
- ▶ Repeat the bleeding procedure.

LWE/ab Muli 010/24201-02-02/en

copyright © Liebherr-Werk Ehingen GmbH 2016

4.3 Draining the fuel preliminary filter

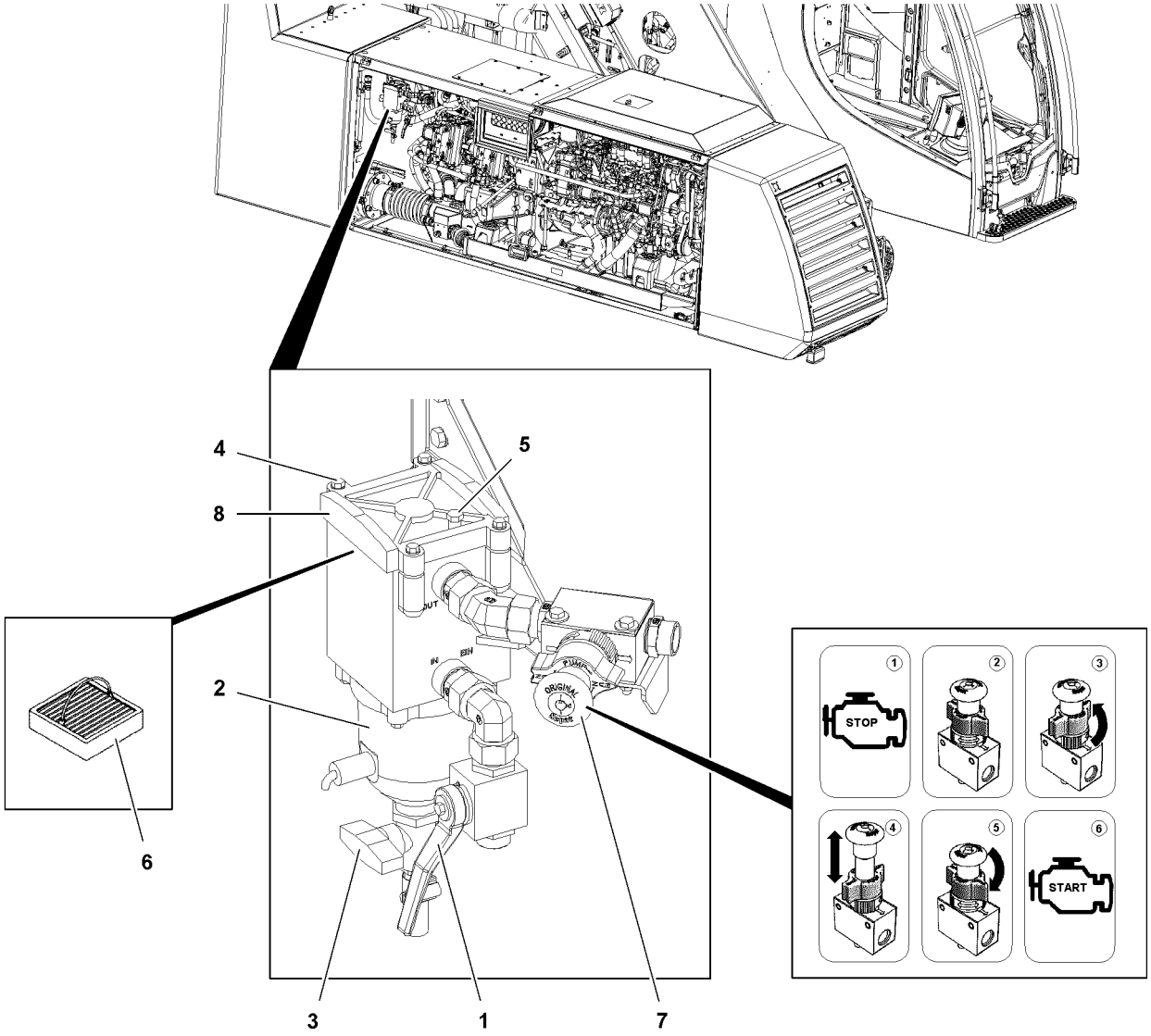

Fig.122557: Fuel preliminary filter

The water separator **2** on the fuel preliminary filter is drained:
- when an error message is shown.
- when a diesel - water mix is found in the water separator.

Make sure that the following prerequisite is met:
- The Diesel engine is turned off, the ignition is turned off.
- A container with the required capacity is on hand.
- New fuel preliminary filter insert is on hand.

▶ Catch diesel fuel: Place a container under the fuel preliminary filter.
▶ Close the ball valve **1**.
▶ Turn the flow indicator on the manual supply pump to pump position (PUMP).
▶ Release the breather screw **5**.
▶ Drain the diesel - water mix: Open the drain valve **3** until diesel fuel is visible on the water separator **2**.
▶ Close the drain valve **3**.
▶ Screw in the breather screw **5** on the fuel preliminary filter and tighten.
▶ Open the ball valve **1**.

LWE/ab Muli 010/24201-02-02/en

copyright © Liebherr-Werk Ehingen GmbH 2016

The hand pump **7** is actuated by pulling.

▶ Actuate the hand pump **7** until a stronger resistance can be felt.
▶ Turn the mark flow indicator into operating position (RUN).

Result:

– The red arrow of the flow indicator points in the same direction as the connections of the fuel lines on the pump housing.

▶ Remove the container and dispose of the fluid.
▶ Start the diesel engine.

Problem remedy
Starting procedure remains unsuccessful after approx. 20 seconds?
Mark of flow indicator is in incorrect position.
▶ Wait for 1 minute.
▶ Check if the red arrow of the flow indicator points in the same direction as the connections of the fuel lines on the pump housing.

When the procedure has been repeated three times:
▶ Repeat the bleeding procedure.

4.4 Servicing the fuel system according to the information from the manufacturer

▶ Service the fuel system according to the information from the manufacturer.

4.5 Adding diesel fuel

WARNING
Danger of fire!
Diesel fuel is easily flammable and can cause fatal accidents in case of fire or open flames.
High property damage.
▶ Before the refueling procedure, turn the heating systems off, for example the auxiliary heater, flame start system.
▶ During refueling, preclude fire, open light and smoking.

DANGER
Danger of fires due to spilled fuel!
▶ Keep the engine area free of fuel.
▶ Absorb fuel with rags.
▶ Dry up spilled fuel.

WARNING
Poisoning due to fuel!
Fuel is poisonous and hazardous to health.
▶ Do **not** allow for fuel to come in contact with skin, eyes or clothing.
▶ Do **not** breathe in fuel vapors.
▶ Keep children away from fuel.

If persons did come in contact with fuel:
▶ In case of eye contact, flush out the eyes immediately and consult a physician if necessary.
▶ Clean affected skin areas with clear water.

If fuel was swallowed:
▶ Contact a physician immediately.

LWE/ab Muli 010/24201-02-02/en

copyright © Liebherr-Werk Ehingen GmbH 2016

NOTICE
Engine damage due to impermissible fuel!
When using incorrect fuel, the engine and the fuel system can be severely damaged.
▶ Do **not** use gasoline on vehicles with diesel engine.
▶ Do **not** mix diesel fuel with gasoline.

When impermissible fuel was added:
▶ Do **not** turn the ignition on.
▶ Have the fuel tank and fuel lines completely drained by authorized and trained expert personnel.

Make sure that the following prerequisites are met:
– The crane is in horizontal position.
– The parking brake is applied.
– The Diesel engine is turned off, the ignition is turned off.
– The heating systems are turned off, for example auxiliary heater, flame start system.

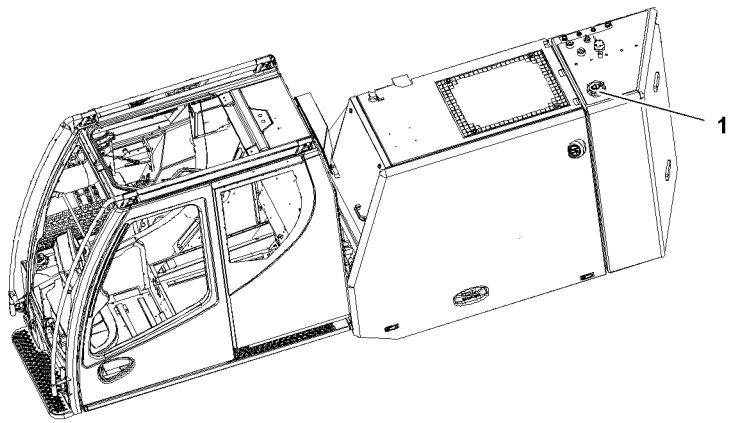

Fig.122556: Fuel tank

▶ Adhere to the safety guidelines. See Crane operating instructions, chapter 7.01.
▶ Climb on the crane chassis. See Crane operating instructions, chapter 2.07.
▶ Open the tank cover **1**.
▶ Insert the fuel nozzle in the filler neck.
▶ Add diesel fuel.

When the refueling procedure is done:
▶ Remove the fuel nozzle from the filler neck.
▶ Close the tank cover **1**.

5 Urea system*

Note
▶ Applies exclusively if a Diesel engine with exhaust aftertreatment, system SCR, is installed.

LWE/ab Muli 010/24201-02-02/en

copyright © Liebherr-Werk Ehingen GmbH 2016

WARNING
Skin irritation and eye injuries due to contact with urea!
Urea can cause skin irritation and eye injuries at contact.
▶ Do **not** allow for urea to come in contact with skin, eyes or clothing.

If persons did come in contact with urea:
▶ In case of eye contact, flush out the eyes immediately and consult a physician if necessary.
▶ Clean affected skin areas with clear water.

If urea was swallowed:
▶ Flush the mouth immediately with a lot of water. Then drink a lot of water and consult a physician, if necessary.

WARNING
Irritation of eyes and mucous membranes due to ammonia vapors!
If the urea tank cover is opened at high temperatures, ammonia vapors can emerge.
Burning eyes, nose, throat. Urge to cough.
▶ Keep the urea tank closed at high temperatures.
▶ Do **not** breathe in ammonia vapors.

5.1 Adding Urea solution

Make sure that the following prerequisites are met:
– The crane is in horizontal position.
– The Diesel engine is turned off, the ignition is turned off.
– The heating systems are turned off, for example auxiliary heater, flame start system.

▶ Adhere to the safety guidelines. See Crane operating instructions, chapter 7.01.

NOTICE
Corrosion due to spilled urea!
If urea is spilled during refueling, affected surfaces can corrode.
▶ Flush affected surfaces immediately with lots of water.
▶ Do **not** overfill the tank.

If present:
▶ Refuel on a fuel pump with nozzle.

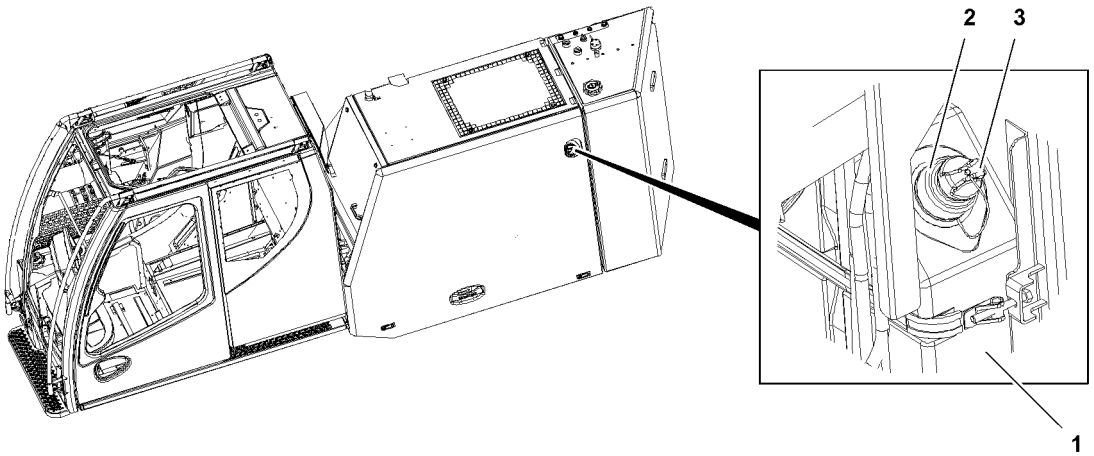

Fig.122558

▶ Climb on the crane chassis. See Crane operating instructions, chapter 2.07.
▶ Open the cover **3** on the Urea tank **1**.
▶ Insert the fuel nozzle in the filler neck **2**.
▶ Add diesel fuel.

LWE/ab Muli 010/24201-02-02/en

copyright © Liebherr-Werk Ehingen GmbH 2016

When the refueling procedure is done:

▶ Remove the fuel nozzle and close the tank cover **3**.

6 Exhaust system

6.1 Diesel particle filter*

DANGER

Danger of igniting the diesel particle filter*!

▶ Regenerate the diesel particle filter* solely under supervision of the operating personnel.

Note

▶ Diesel particle filter **not** possible on Diesel engines with exhaust aftertreatment system SCR (Selective Catalytic Reduction).

▶ Maintain and operate the diesel particle filter*, see Operating instructions of the manufacturer.

LWE/ab Muli 010/24201-02-02/en

copyright © Liebherr-Werk Ehingen GmbH 2016

7 Pump distributor gear

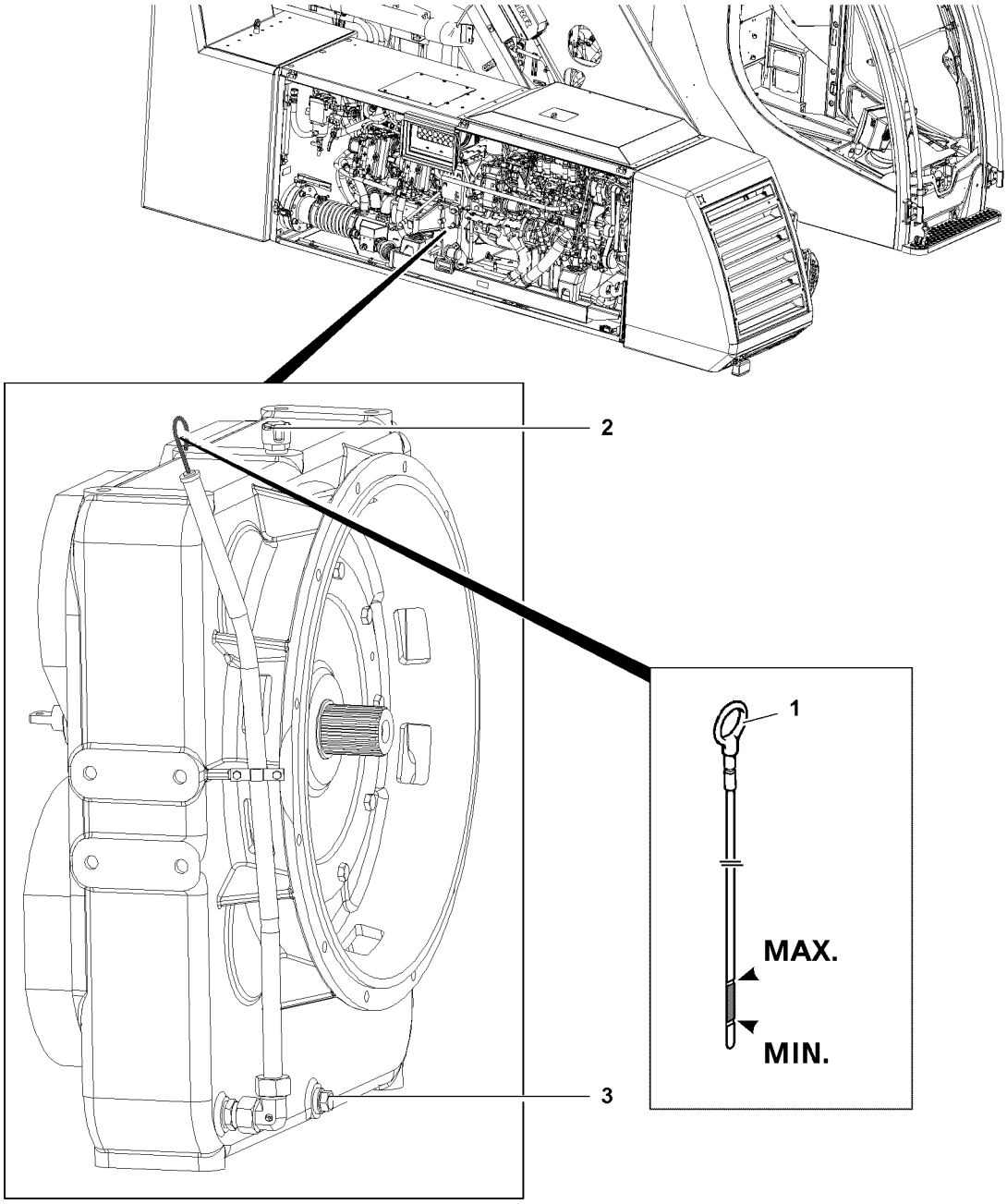

Fig.122559: Pump distributor gear

NOTICE
Gear damage due to lack of oil!

When the oil level has dropped below the minimum mark:
▶ Add gear oil on the filler bore until the oil level is visible between the minimum and maximum mark on the dipstick **1**.

Maintain utmost cleanliness during all work to prevent any dirt from entering the inside of the gear.

Make sure that the following prerequisites are met:
– The crane is in horizontal position.
– The gear is warm.

LWE/ab Muli 010/24201-02-02/en

copyright © Liebherr-Werk Ehingen GmbH 2016

7.1 Check the oil level

▶ Pull out the dipstick **1** and wipe it off.
▶ Insert the dipstick **1** and pull it out.

The oil level must be visible between the minimum and maximum mark on the dipstick **1**.

▶ Check the oil level.
▶ Insert the dipstick **1**.

Problem remedy
Oil consumption or loss of oil too high?
▶ Find the cause and remedy it.

If the cause cannot be remedied:
▶ Contact Liebherr Service.

7.2 Replace the gear oil

Make sure that the following prerequisite is met:
– Gear oil is replaced by authorized and trained expert personnel.

▶ Unscrew the filler plug **2**.
▶ Catch the gear oil: Place a container under the drain plug.
▶ Drain the gear oil: Unscrew the drain plug **3**.

When gear oil is drained:
▶ Clean the drain plug **3** and sealing surface on the housing.
▶ Install the drain plug **3** with new seal and tighten.
▶ Add gear oil on the filler bore until gear oil is visible between the minimum and maximum mark on the dipstick **1**.
▶ Install the filler plug **2** with new seal.
▶ Check the oil level.

LWE/ab Muli 010/24201-02-02/en

copyright © Liebherr-Werk Ehingen GmbH 2016

8 Central lubrication system

1

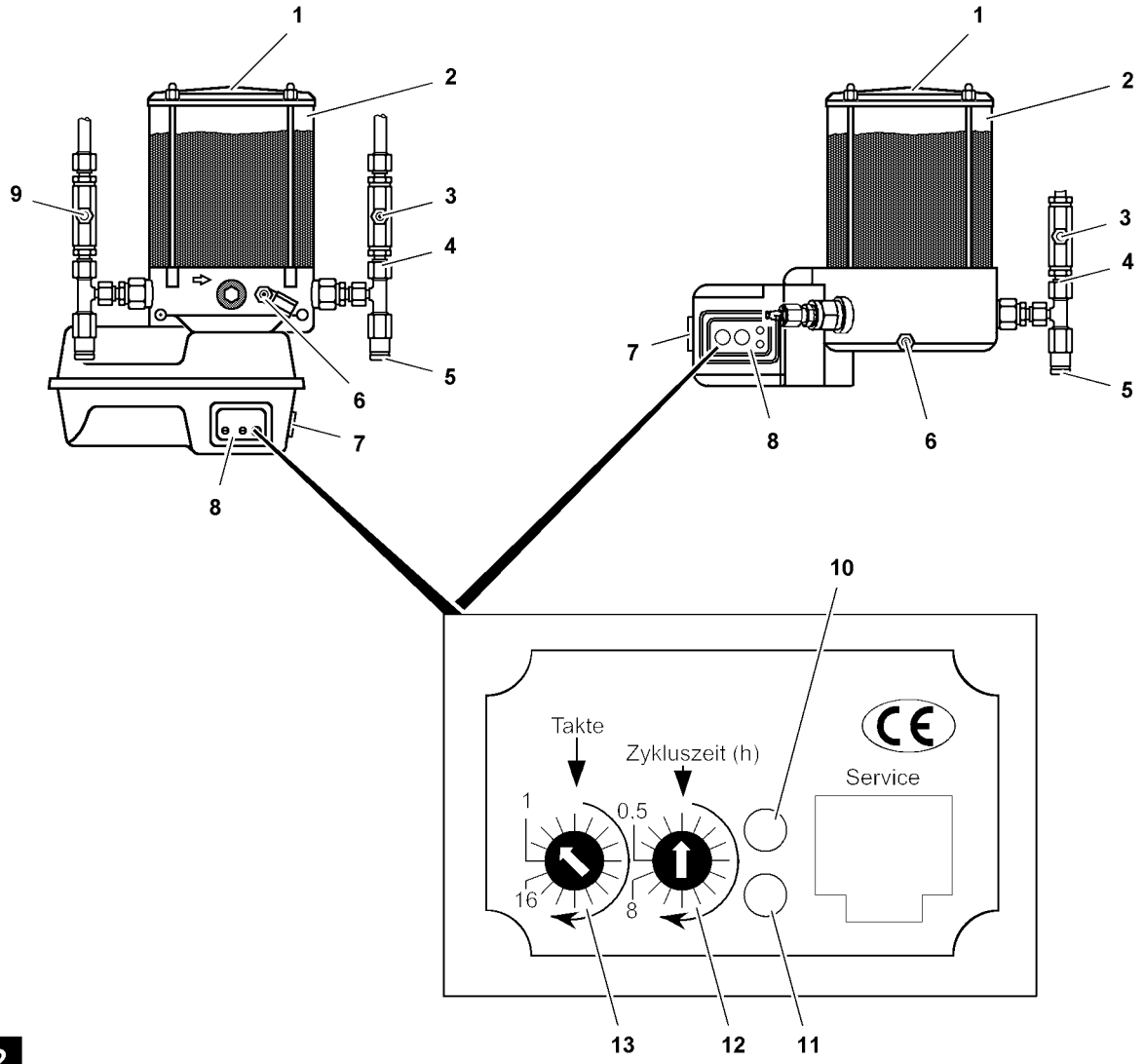

2

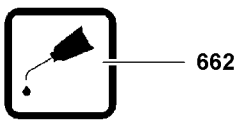

Fig.118546: Central lubrication system

1	Cover Grease container	**6**	Grease fitting Grease container	**11**	LED green
2	Grease container	**7**	Button	**12**	Raster switch cycle time

For continuation of legend for illustrations, see next page

LWE/ab Muli 010/24201-02-02/en

copyright © Liebherr-Werk Ehingen GmbH 2016

3 Grease fitting Lube line
4 Pump outlet
5 Pressure relief valve
8 Control element
9 Grease fitting Lube line
10 LED red
13 Raster switch lube cycles
662 Button Crane operator's cab

8.1 Technical safety instructions

WARNING
Non-observance of safety instructions!
Personnel can be harmed due to electrical, mechanical and chemical exposure.
Dangerous substances can be discharged and endanger the environment.
Property damage on the system can occur.
- ▶ Have maintenance and repair work carried out exclusively by authorized and trained expert personnel.
- ▶ Use exclusively original Liebherr spare parts.
- ▶ Remedy any problems, which affect safety immediately.

NOTICE
Property damage if the crane has not been moved for longer than three months!
- ▶ Press the button **7** until lubricant emerges on all lube points.
- ▶ Repeat the respective crane movement several times.
- ▶ Carry out intermediate lubrications again.

NOTICE
Property damage due to crane cleaning procedure!
- ▶ Cleaning is only permitted in washing bays.
- ▶ Carry out the cleaning procedure with a steam cleaner or high pressure cleaner at a minimum distance of 0.4 m.

When the crane is cleaned:
- ▶ Carry out intermediate lubrications manually with button **7** until lubricant emerges on all lube points.

8.2 Description of function

The crane superstructure is equipped with a central lubrication system.

Types of central lubrication systems, see illustration **1**.

The lube points in the bearings of the following components are automatically supplied with lubricant:
- Slewing ring connection
- Pivot section
- Luffing cylinder
- Winches

8.2.1 Displays on control element

Note
- ▶ In the crane operator's cab, operating conditions and problems of the central lubrication system are shown on button **662**, see illustration **2**.
- ▶ Problems, see section „Diagnostics“.
- ▶ For overview of indicator lights on the crane operator's cab, see Crane operating instructions, chapter 4.01.

copyright © Liebherr-Werk Ehingen GmbH 2016

LED red 11	LED green 10	Operating condition
Lights up for 1.5 seconds	Lights up for 1.5 seconds	Operational readiness after ignition on
Off	Lights up	Lubrication is active (during lube cycles)

*Status of LEDs on control element **8***

8.2.2 Lube cycle

Note
The lubrication time and the cycle time are set in the factory!
▶ Do **not** change the settings.

Cycle time: Time from start of one lubrication to the start of another lubrication.

The cycle time is set with the raster switch **12**.

Lube cycles: Number of strokes, during which lubricant is supplied by the pump cylinder.

The number of lube pulses for a lube cycle is set with the raster switch **13**.

8.3 Checking the function

Make sure that the following prerequisite is met:
– The ignition is turned on.

Note
▶ When lubricant emerges on all lube points, then the central lubrication system functions error-free.
▶ Problems, see section „Diagnostics“.

▶ To check the function: Trigger several lube pulses.
▶ Trigger a lube pulse: Press the button **7** until lubricant emerges on all lube points.

8.4 Carrying out an intermediate lubrication

Manual intermediate lubrication is carried out, for example:
– When the crane has not been moved for longer than three months.
– After washing the crane.

Note
▶ When an intermediate lubrication is carried out, the pump starts the lube cycle again. The lube cycle is reset.

Several lube pulses may be required until lubricant emerges on all lube points.

▶ Press the button **7** until lubricant emerges on all lube points.

8.5 Filling the grease container

NOTICE
Property damage due to insufficient lubrication!
▶ Make sure that the grease container **2** is filled.
▶ Make sure that all grease fittings are clean.

▶ Fill the grease container **2** with a grease pump on the grease fitting **6**.

LWE/ab Muli 010/24201-02-02/en

copyright © Liebherr-Werk Ehingen GmbH 2016

8.6 Bleeding the central lubrication system

If the grease container **2** is emptied, it may be necessary to bleed the central lubrication system.

- ▶ Fill the grease container **2** with a grease pump via the grease fitting **6**.
- ▶ Unscrew the main line from the pump outlet **4**.
- ▶ Trigger additional lubricating pulses until there are no more air bubbles in the emerging grease at the pump outlet **4**.
- ▶ Reconnect the main line.
- ▶ Carry out intermediate lubrication until lubricant emerges on all lube points.

8.7 Filling the lubrication lines

NOTICE
Components running dry due to insufficient lubrication!
- ▶ After every repair on greased components via the lube lines with grease.
- ▶ Make sure that all grease fittings are clean.

- ▶ Fill lube lines with a grease pump on grease fitting **3** (and grease fitting **9**).
  or
  Carry out intermediate lubrication until lubricant emerges on all lube points.

8.8 Diagnostics and problem remedy

8.8.1 Problem signals on control element

Note
- ▶ In the crane operator's cab, operating conditions and problems of the central lubrication system are shown on button **662**, see illustration **2**.
- ▶ For overview of indicator lights on the crane operator's cab, see Crane operating instructions, chapter 4.01.

Status LEDs		**Cause**	**Remedy**
LED red 10	**LED green 11**		
Blinks once in two seconds	Blinks once in two seconds	Cycle error	Fix system; contact Liebherr Service
Blinks once a second	Off	Error CPU, Error memory	Fix system; contact Liebherr Service
Lights up	Off	Grease level too low (depending on system type)	Filling the grease container

*Diagnostics for problem signals on control element **8***

8.8.2 Problems on central lubricating system

Status lubrication system	**Cause**	**Remedy**
Lubricant emerges via pressure relief valve **5**	Lubrication system is blocked	Fix system; contact Liebherr Service
No lubricant emerges on the system	Grease container is empty **or** electric pump is defective	Fill grease container **or** fix system; contact Liebherr Service

Diagnostics for problems on the central lubrication system

LWE/ab Muli 010/24201-02-02/en

copyright © Liebherr-Werk Ehingen GmbH 2016

8.8.3 Resetting a problem

▶ Press the button **7**.

Result:

– Problem signal on control element turns off.

When a problem signal occurs again:
▶ Contact Liebherr Service.

9 Slewing ring connection

WARNING
Danger of crushing due to turning of crane superstructure!
▶ Work only when the crane superstructure is at a standstill.
▶ Do not crush your fingers during lubrication.

Make sure that the following prerequisites are met:
– The crane is in horizontal position.
– The engine and the ignition are turned off.

9.1 Lubricating the slewing ring connection

To ensure the best possible corrosion protection, carry out the lubrication especially diligently:
– Before and after any winter breaks
– Before and after longer breaks in operation

▶ Lubricate the slewing ring connection.

If the crane has **not** been moved for longer than three months:

▶ Lubricate with an external grease pump every 3 months until lubricant emerges on the sealing lips. See section „Central lubrication system“.
▶ Repeat a crane movement several times and carry out the lubrication procedure again.

LWE/ab Muli 010/24201-02-02/en

copyright © Liebherr-Werk Ehingen GmbH 2016

9.2 Lubricating the gear ring and the slewing gear pinion

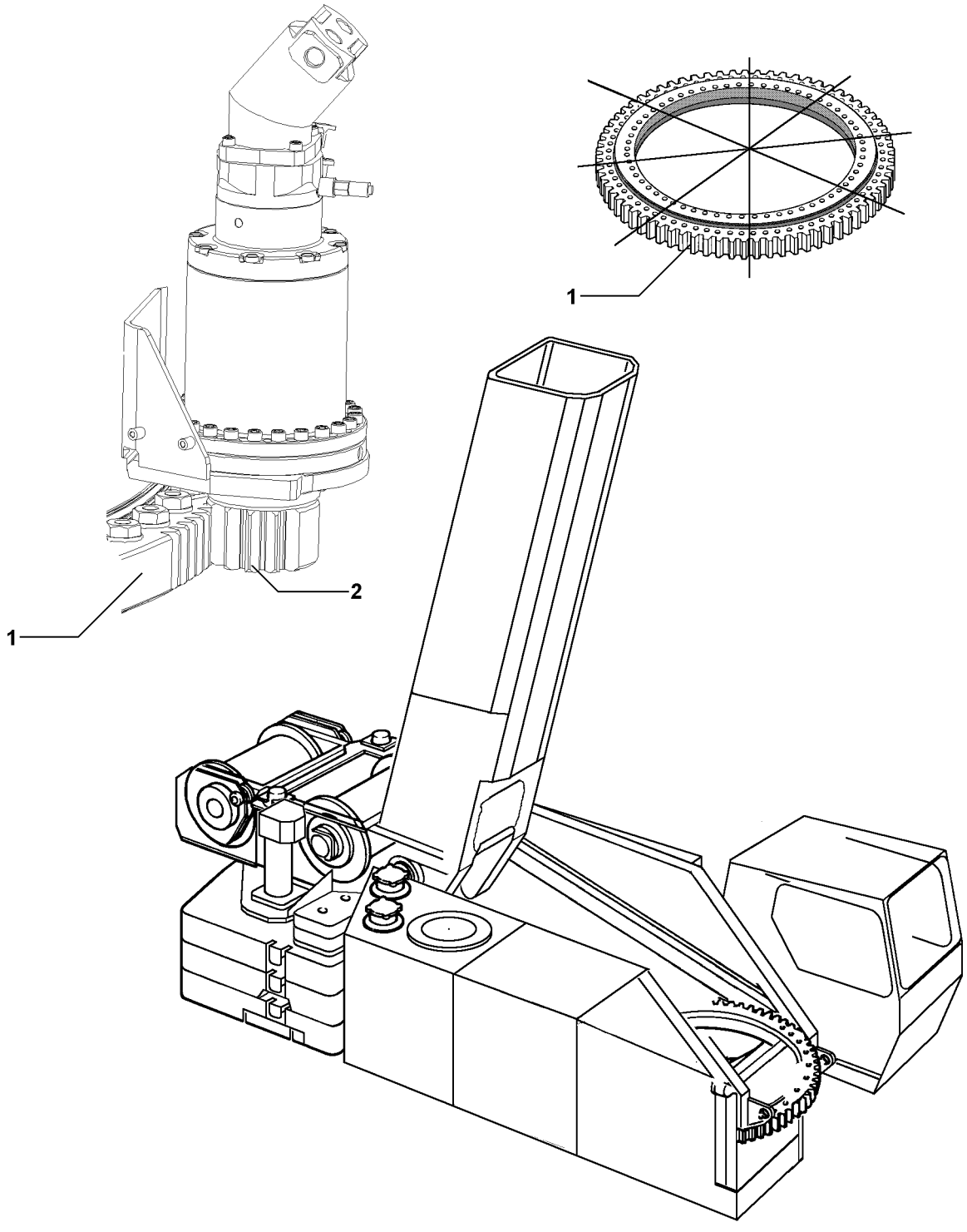

Fig.123717: Slewing gear

Before and after extended breaks in service, grease the gear ring **1** and the slewing gear pinion **2** to ensure the best possible protection from corrosion.

▶ Grease the gear ring **1** and the slewing gear pinion **2** externally.

copyright © Liebherr-Werk Ehingen GmbH 2016

9.3 Check the tilt play

The wear of the slewing ring connection is determined by measuring the „tilt play“ with the ring installed.

DANGER
Danger of accident if tilt play of roller ring connection is too large!
If the permissible tilt play of 2.0 mm is exceeded, then safe crane operation is **no** longer possible.

When the tilt play is more than 2.0 mm:
▶ Replace the roller ring connection.

Note
▶ The determination of the „tilt play“ must be carried out according to the **test instructions** of **Liebherr-Werk Ehingen GmbH**.
▶ Contact the Service Dept. at **Liebherr-Werk Ehingen GmbH** for **test instructions**.

10 Slewing gear(s)

Maintain utmost cleanliness during all work to prevent any dirt from entering the inside of the gear.

Make sure that the following prerequisites are met:
– The crane is in horizontal position.
– The gear is warm.

LWE/ab Muli 010/24201-02-02/en

copyright © Liebherr-Werk Ehingen GmbH 2016

10.1 Check the oil level

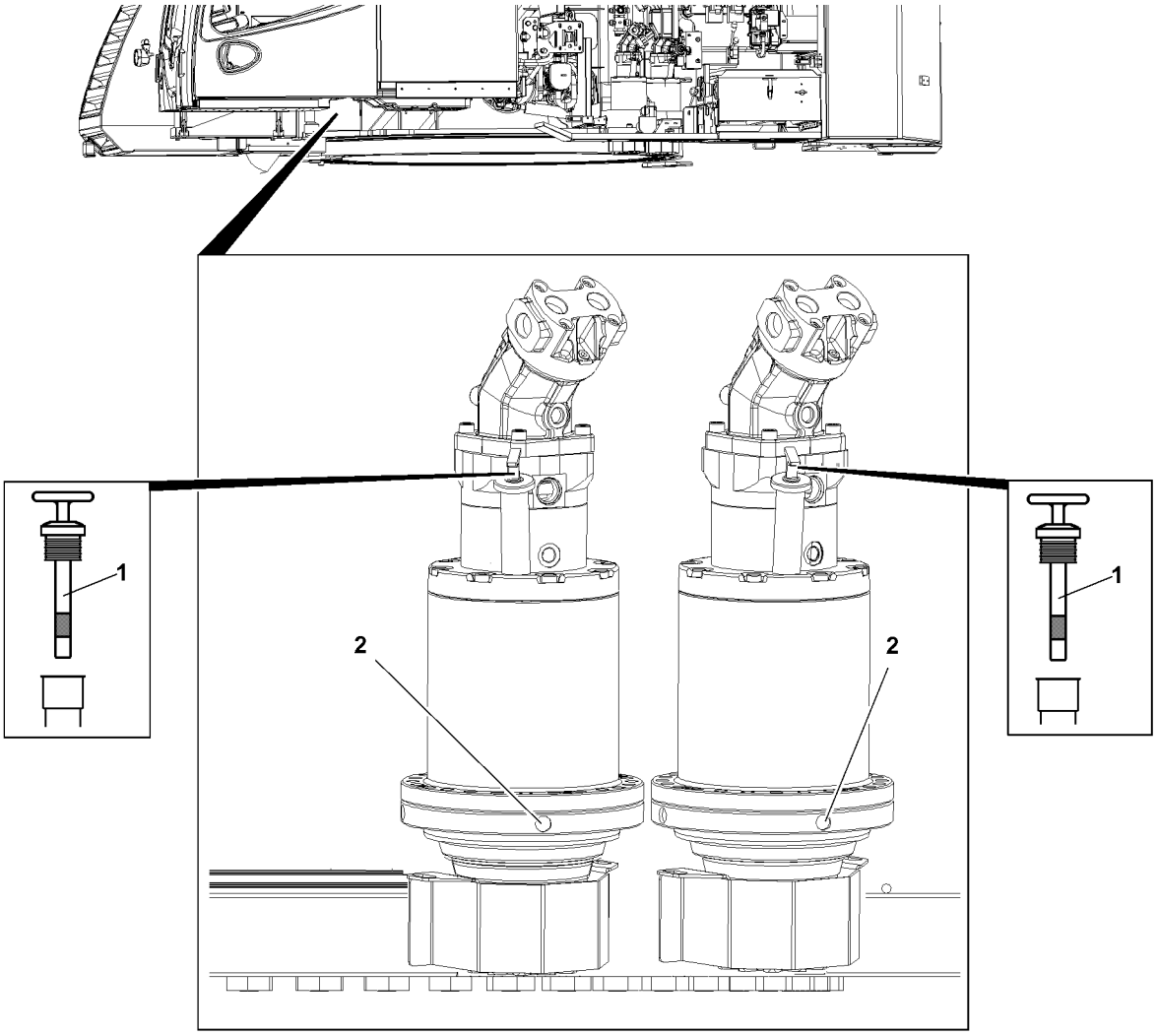

Fig.123718: Slewing gear

- ▶ Pull out the dipstick **1** and wipe it off.
- ▶ Insert the dipstick **1** and pull it out.

The oil level must be visible between the minimum and maximum mark on the dipstick **1**.

- ▶ Check the oil level.
- ▶ Insert the dipstick **1**.

Problem remedy
Oil consumption or loss of oil too high?
- ▶ Find the cause and remedy it.

If the cause cannot be remedied:
- ▶ Contact Liebherr Service.

10.2 Replace the gear oil

Make sure that the following prerequisite is met:
- – Gear oil is replaced by authorized and trained expert personnel.

- ▶ Pull out the dipstick **1**.
- ▶ Catch the gear oil: Place a container under the drain plug.

copyright © Liebherr-Werk Ehingen GmbH 2016

▶ Drain the gear oil: Unscrew the drain plug **2**.

When gear oil is drained:
▶ Clean the drain plug **2** and sealing surface on the housing.
▶ Install the drain plug **2** with new seal and tighten.
▶ Add gear oil on the filler bore until gear oil is visible between the minimum and maximum mark on the dipstick **1**.
▶ Insert the dipstick **1**.
▶ Check the oil level.

copyright © Liebherr-Werk Ehingen GmbH 2016

Empty page!

LWE/ab Muli 010/24201-02-02/en

copyright © Liebherr-Werk Ehingen GmbH 2016

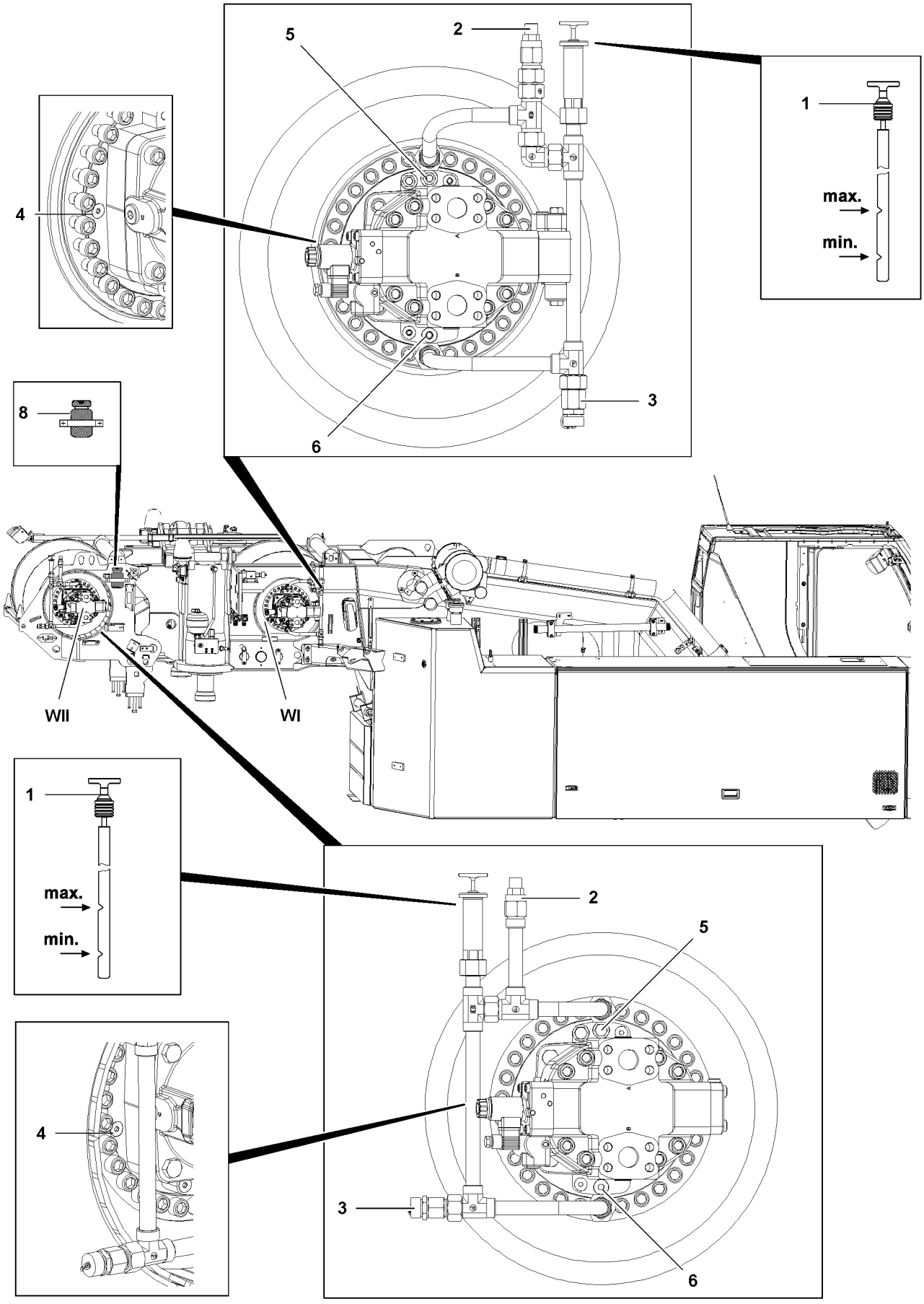

Fig.122797

LWE/ab Muli 010/24201-02-02/en

copyright © Liebherr-Werk Ehingen GmbH 2016

11 Hoist gear(s)

Winch **WI** is the main hoist gear.

Winch***** **WII** is optional.

Make sure that the following prerequisites are met:
- The crane is in horizontal position.
- The hoist gear is at a standstill.

11.1 Hoist gear

Maintain utmost cleanliness during all work to prevent any dirt from entering the inside of the gear.

11.1.1 Check the oil level

▶ Remove the dipstick **1** and wipe it off.
▶ Reinsert the dipstick **1** and pull it out again.

The oil level must be between the min. and max. marks on the dipstick **1**.

▶ Check the oil level.

CAUTION
Gear damage due to incorrect oil level!
If the oil level has dropped below the minimum mark, add oil until the oil level is between the minimum and maximum marks. See Service fill.
▶ Add oil and check again.

▶ Reinsert the dipstick **1**.

11.1.2 Replacing the oil

▶ Unscrew the breather screw **2**.
▶ Unscrew the oil drain plug **2** with seal ring and drain oil into a suitable container.
▶ Install the oil drain plug **3** with new seal ring and tighten.
▶ Unscrew the dipstick **1** to open the oil filler port.
▶ Add oil on the oil filler port.
▶ Screw in and tighten the breather screw **2**.
▶ Check the oil level as described above.

LWE/ab Muli 010/24201-02-02/en

copyright © Liebherr-Werk Ehingen GmbH 2016

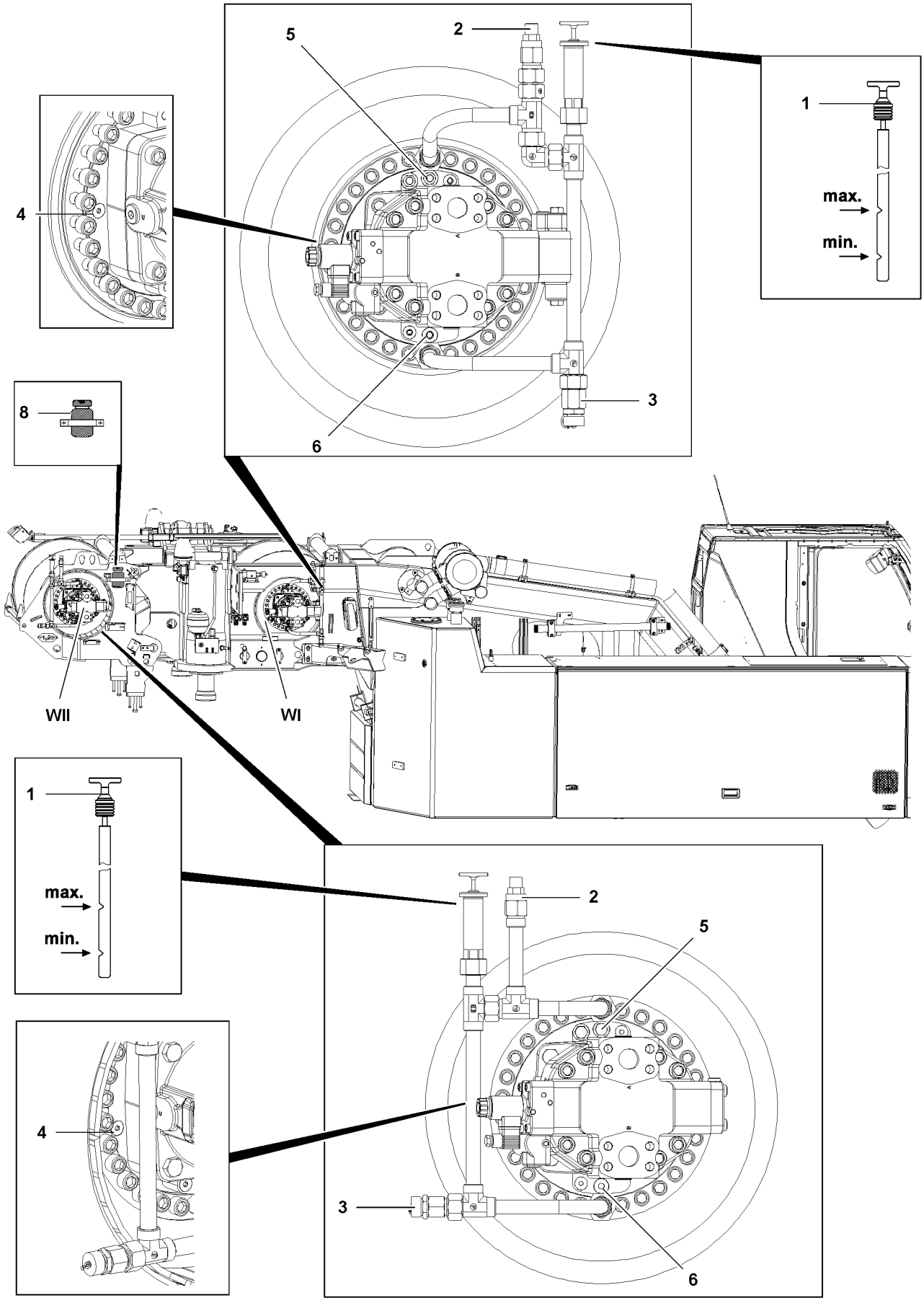

Fig.122797

LWE/ab Muli 010/24201-02-02/en

copyright © Liebherr-Werk Ehingen GmbH 2016

11.2 Hoist gear brake

Maintain utmost cleanliness during all work to prevent any dirt from entering the inside of the gear.

11.2.1 Check the oil level

▶ Remove the plug **4**.

The oil level must reach the edge of the bore.

▶ Perform a visual inspection.

CAUTION
Gear damage due to incorrect oil level!
▶ If the oil level has dropped, add oil up to the overflow of the oil filler port.

▶ Clean the sealing surfaces on the housing and on the plug.
▶ Reinstall the plug **4** and tighten.

11.2.2 Replacing the oil

▶ Remove the oil filler plug **5** and clean the sealing surface.
▶ Unscrew the oil drain plug **6** with seal ring and drain oil into a suitable container.
▶ Clean the oil drain plug **6** and sealing surface on the housing.
▶ Install the oil drain plug **6** with new seal ring and tighten.
▶ Add oil on the oil filler plug **5** until the oil starts to overflow on the opening **4**.
▶ Clean the oil filler plug **5** and reinstall it with a new seal ring and tighten.
▶ Check the oil level as described above.

11.3 Overflow container

11.3.1 Disposing of the oil

When the oil heats up in the hydraulic motor of winch* **WII**, the oil can enter the overflow container **4** via a check valve, but cannot flow back into the hydraulic system after cooling off.

Maintenance intervals Crane superstructure, see Crane operating instructions, chapter 7.03.

▶ Dispose of the oil in the overflow container **4** properly.

12 Auxiliary heater*

12.1 Replacing the filter insert

The crane operator's cab can be tilted upward for maintenance work.

WARNING
Danger of accident!
Personnel can be severely injured or killed!
▶ While the crane operator's cab is tilted, it is prohibited for any persons or objects to remain within the danger zone of the crane operator's cab!
▶ Before stepping on the step, set the crane operator's cab into horizontal position.

12.1.1 Tilting the crane operator's cab up

Make sure that the following prerequisite is met:
– The sliding door of the crane operator's cab is open and pushed into locking position.

copyright © Liebherr-Werk Ehingen GmbH 2016

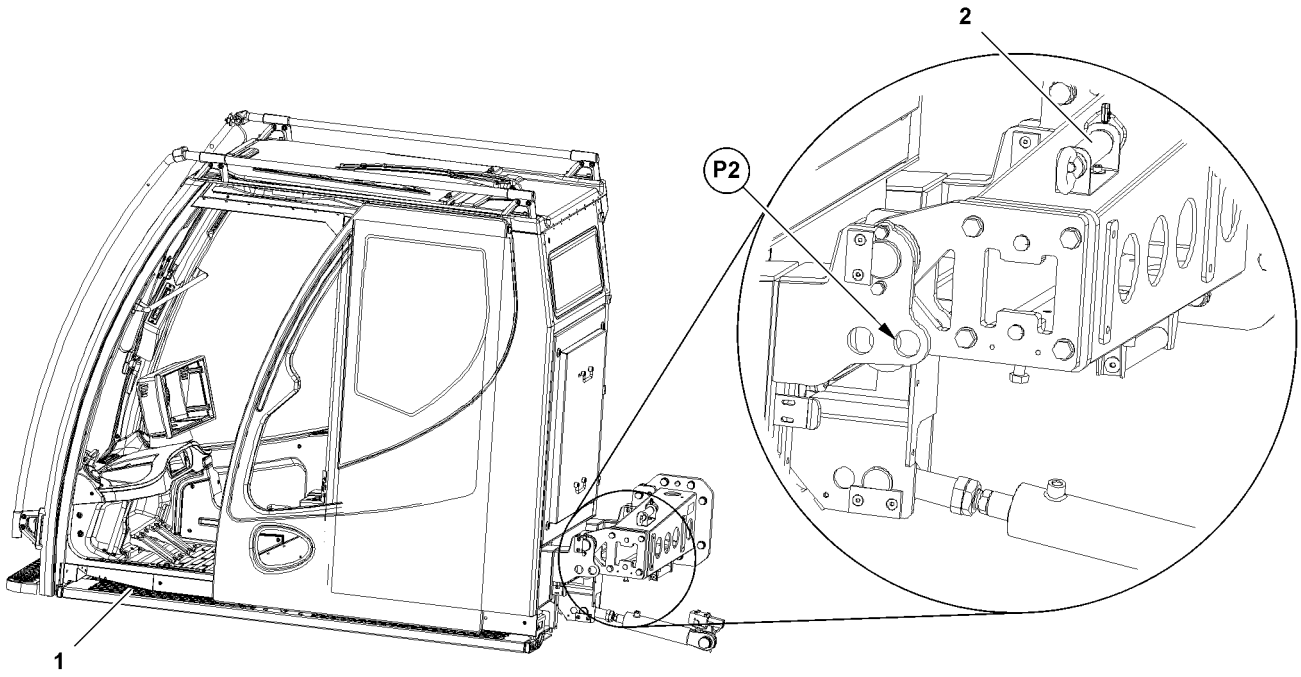

Fig.123711

WARNING
Danger of injuries if sliding door opens in tilted position!
The sliding door can move back suddenly.
Hands can be crushed or injured.
When stepping on the step, persons can slip off.

▶ Before tilting the crane operator's cab, open the sliding door of the crane operator's cab and slide it into locking position.

When the crane operator's cab is tilted:

▶ Do **not** step on the step **1**.
▶ Leave the crane operator's cab with a suitable aid, such as a working platform.

▶ Until the retaining pin **2** can be pinned on point **P2**: Swing the crane operator's cab up.
▶ Turn the engine off and pull the ignition key.

LWE/ab Muli 010/24201-02-02/en

copyright © Liebherr-Werk Ehingen GmbH 2016

12.1.2 Securing the crane operator's cab for maintenance work

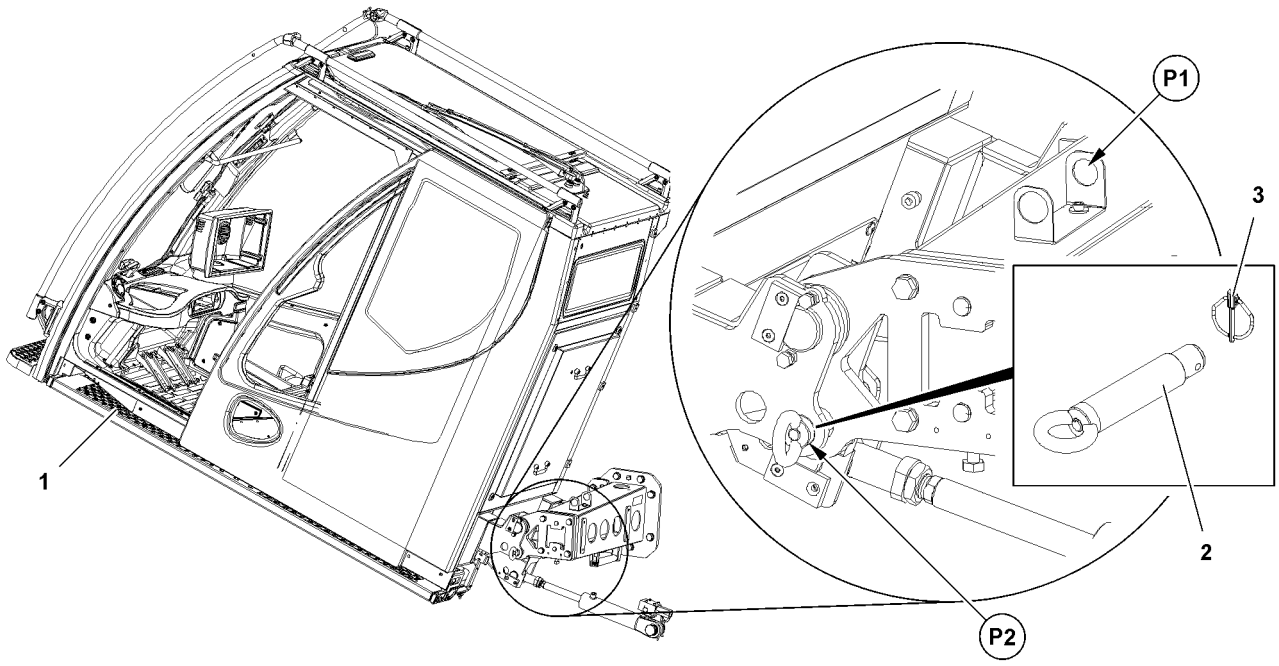

Fig.123709

WARNING
Danger of crushing!
If maintenance work is carried out before the crane operator's cab is secured to prevent it from tilting, personnel can be killed or severely injured!
▶ Secure the crane operator's cab with the retaining pin **1** to prevent it from swinging downward uncontrolled!

▶ Release retaining pin **2** on point **P1**.
▶ Insert the retaining pin **2** on point **P2** and secure with locking pin **3**.

Result:

– The crane operator's cab is secured.

12.1.3 Replacing the filter insert

Note
▶ For change cycle, see Crane operating instructions, chapter 7.03.
▶ The change cycle can change, depending on the area of application.

Make sure that the following prerequisites are met:
– The crane operator's cab is secured.

copyright © Liebherr-Werk Ehingen GmbH 2016

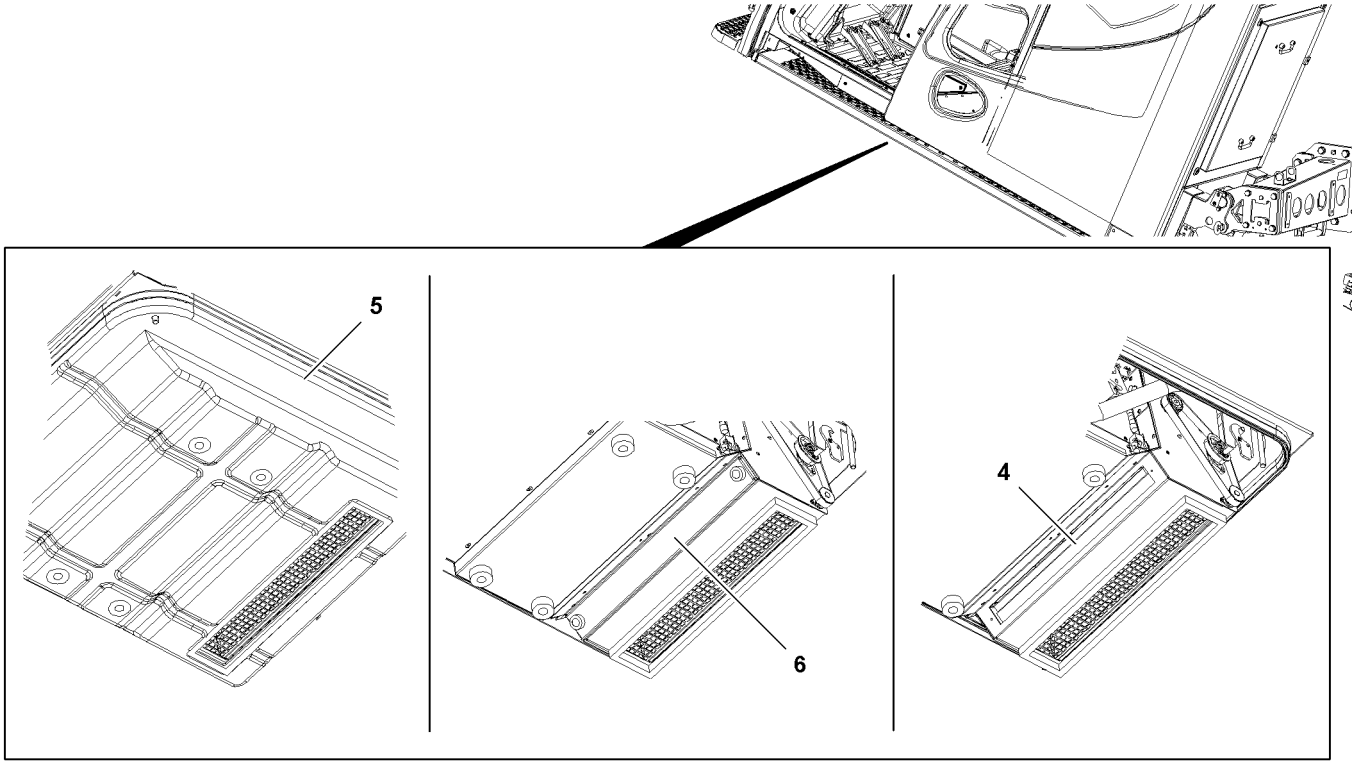

Fig.123690

- ▶ Remove the housing **5** and cover **6**.
- ▶ Remove the filter insert **4** and replace it.
- ▶ Install the cover **6** and housing **5**.

12.1.4 Releasing the crane operator's cab

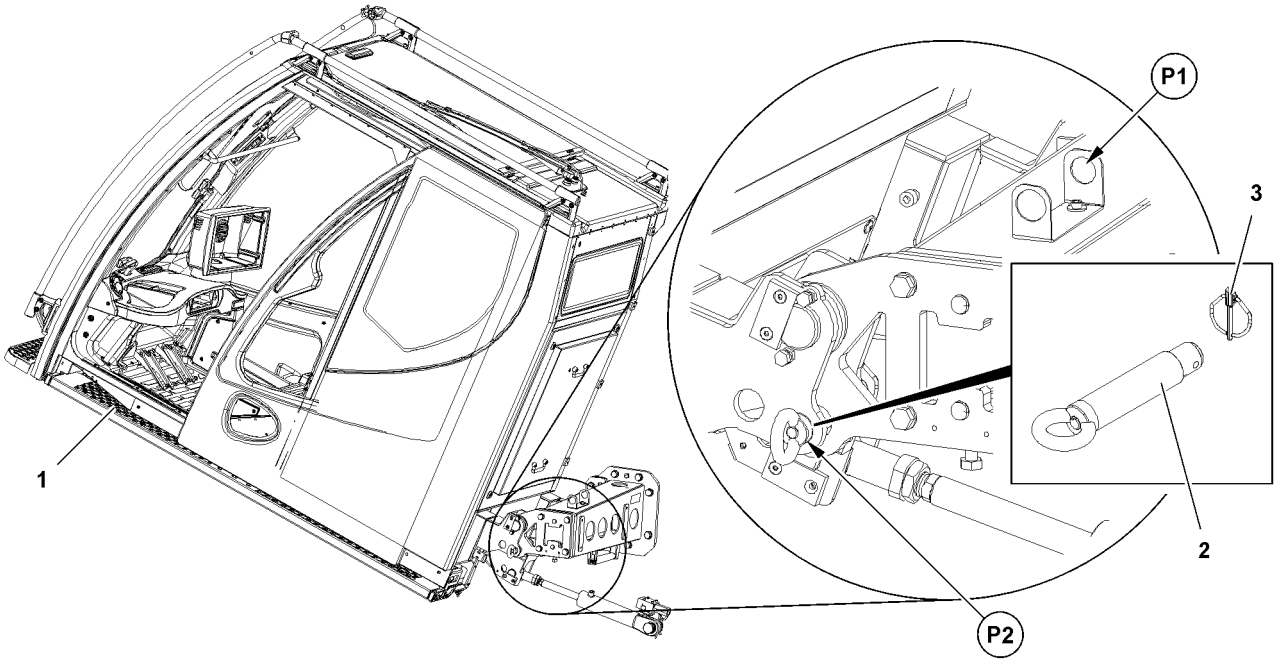

LWE/ab Muli 010/24201-02-02/en

Fig.123709

- ▶ Release retaining pin **2** on point **P2** and remove.

copyright © Liebherr-Werk Ehingen GmbH 2016

▶ Install the retaining pin **2** on point **P1** and secure with locking pin **3**.

Result:

– The crane operator's cab is released.

▶ Align the crane operator's cab horizontally.

12.2 Refueling fuel

The fuel container* is optional and is solely required for operation with auxiliary heater.

Make sure that the following prerequisites are met:
- The crane is in horizontal position.
- The auxiliary heater is turned off.
- The engine and the ignition are turned off.
- All railings and steps are swung into assembly position, see Crane operating instructions, chapter 2.06.

Note

▶ Observe and adhere to the danger notes. See Crane operating instructions, chapter 7.01.

▶ Access the crane, see Crane operating instructions, chapter 2.07.

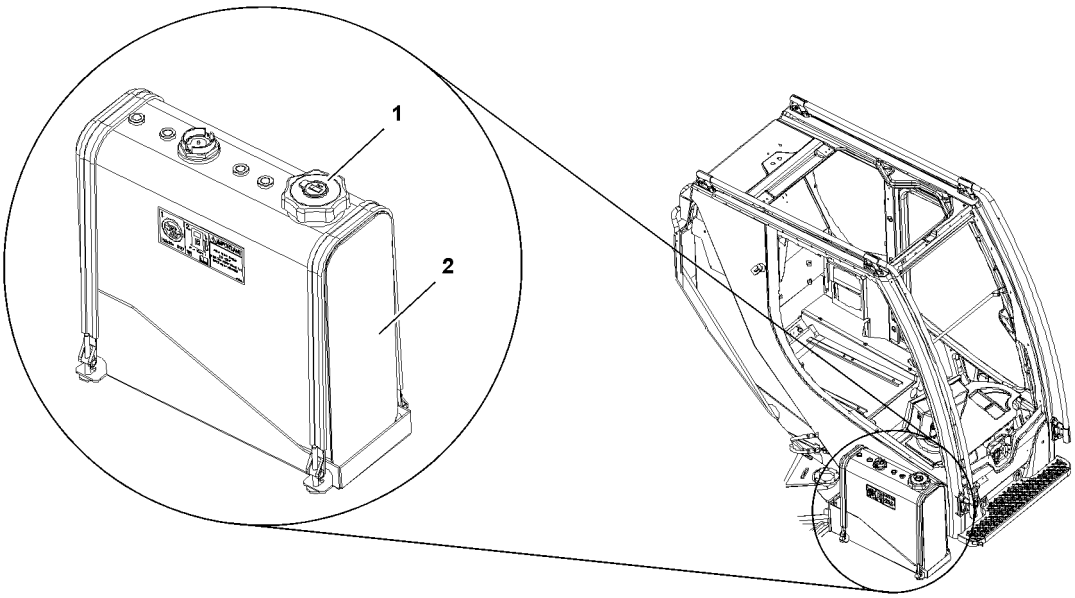

Fig.122551

▶ Open the tank cover **1**.
▶ Insert the fuel nozzle in the filler neck.
▶ Refuel fuel.

After the refueling procedure:
▶ Remove the fuel nozzle from the filler neck.
▶ Close the fuel container **2** with the tank cover **1** and remove the fuel nozzle.

LWE/ab Muli 010/24201-02-02/en

copyright © Liebherr-Werk Ehingen GmbH 2016

13 Ventilation

13.1 Replacing the filter

An interior filter for the ventilation of the control cabinet is located in the cab.

The filter must be replaced depending on the area of application and contamination.

The filter must be replaced at least once a year.

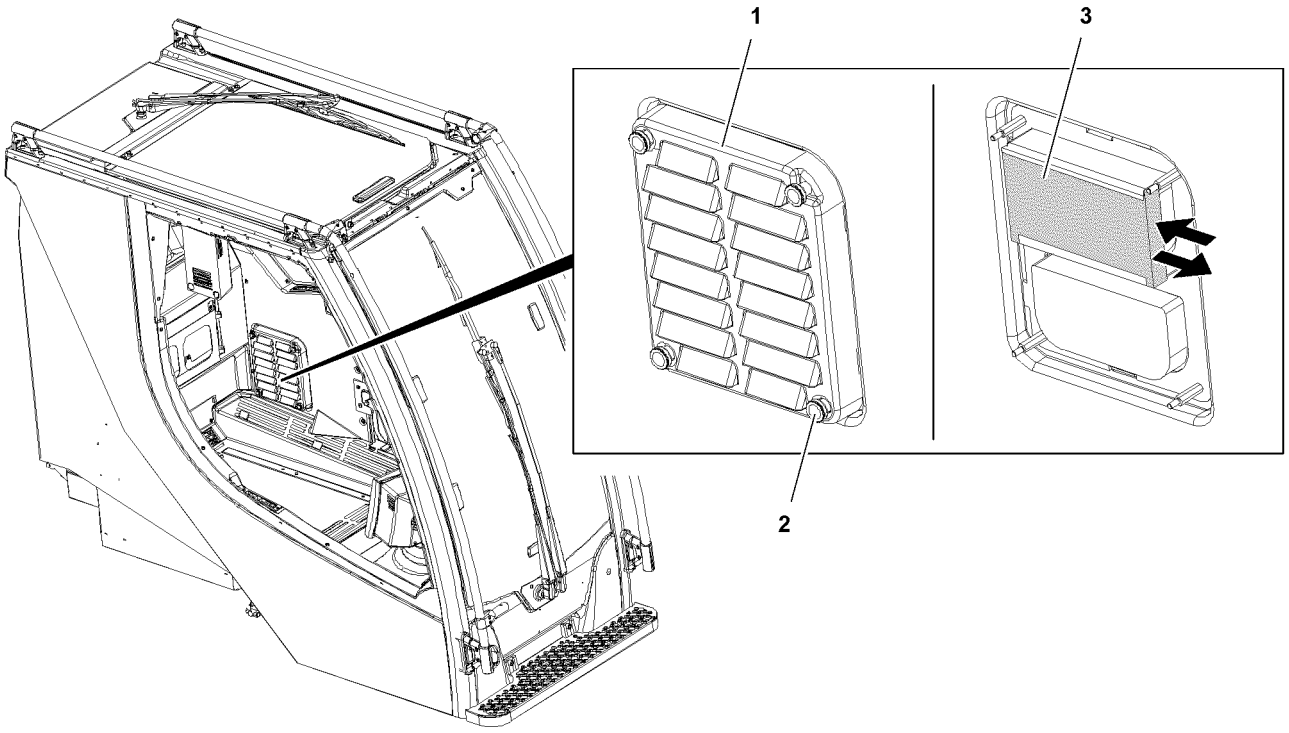

Fig.122791: Control cabinet ventilation

- ▶ Release and remove the knurled knobs **2**.
- ▶ Remove the cover **1**.
- ▶ Pull the filter **3** out.
- ▶ Slide in a new filter **3**.
- ▶ Place the cover **1** and screw tight with knurled knobs **2**.

14 Hydraulic system

NOTICE
Dirt inside the hydraulic system!
Increased wear and shorter service life of the components.
- ▶ Extreme cleanliness must be maintained when adding oil.

14.1 Checking the oil level

Make sure that the following prerequisites are met:
- The crane is in horizontal position.
- The luffing cylinder and the telescoping cylinder are fully retracted.

LWE/ab Muli 010/24201-02-02/en

copyright © Liebherr-Werk Ehingen GmbH 2016

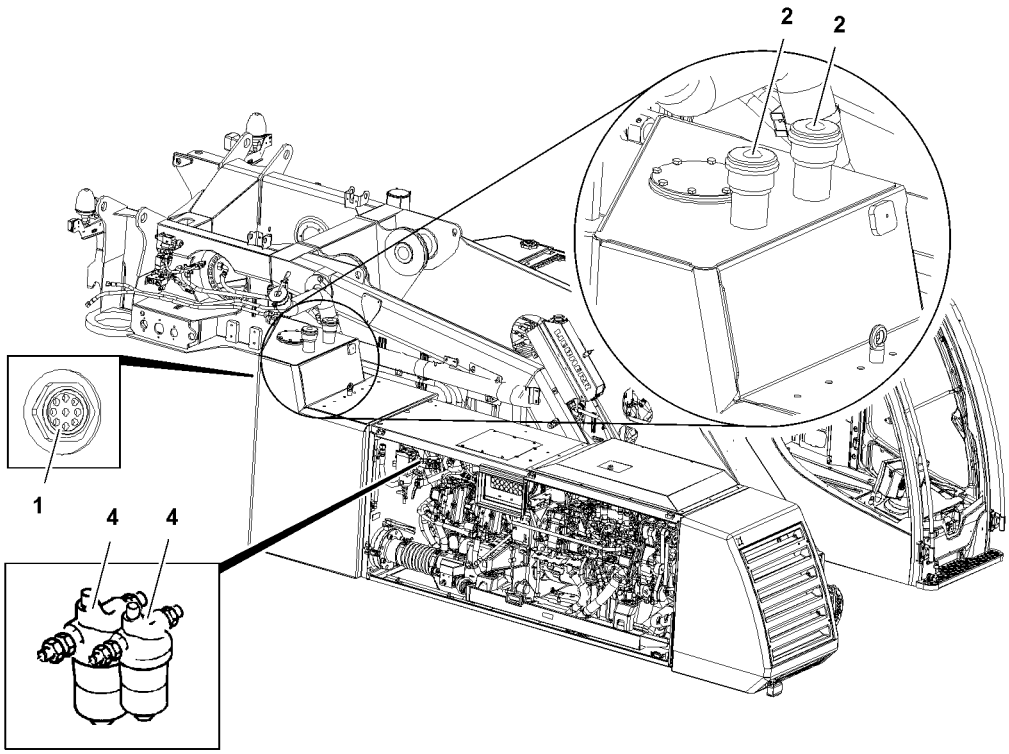

Fig.122788: Hydraulic oil tank

The oil level must be at 20 °C oil temperature in the center of the sight gauge **1**.

When the hydraulic temperature is lower than 20 °C:

▶ Warm up the hydraulic oil.

When the hydraulic temperature is higher than 20 °C:

▶ Let the hydraulic oil cool off.

▶ Retract all hydraulic cylinders completely, for example luffing cylinder, telescoping cylinder.

On cranes with level regulation:

▶ Lower the crane completely with the level regulation.

Extreme cleanliness must be maintained when adding hydraulic oil.

The oil level must be in the center of the sight gauge **1**.

▶ Check the oil level on the sight gauge **1**.

Problem remedy

No hydraulic oil is visible in the sight gauge **1**?

▶ Add hydraulic oil with a fine-meshed strainer via the return filter until the oil level is visible in center of sight gauge **1**.

Problem remedy

Oil consumption or loss of oil too high?

▶ Find the cause and remedy it.

If the cause cannot be remedied:

▶ Contact Liebherr Service.

copyright © Liebherr-Werk Ehingen GmbH 2016

14.2 Checking the vent filter / breather filter

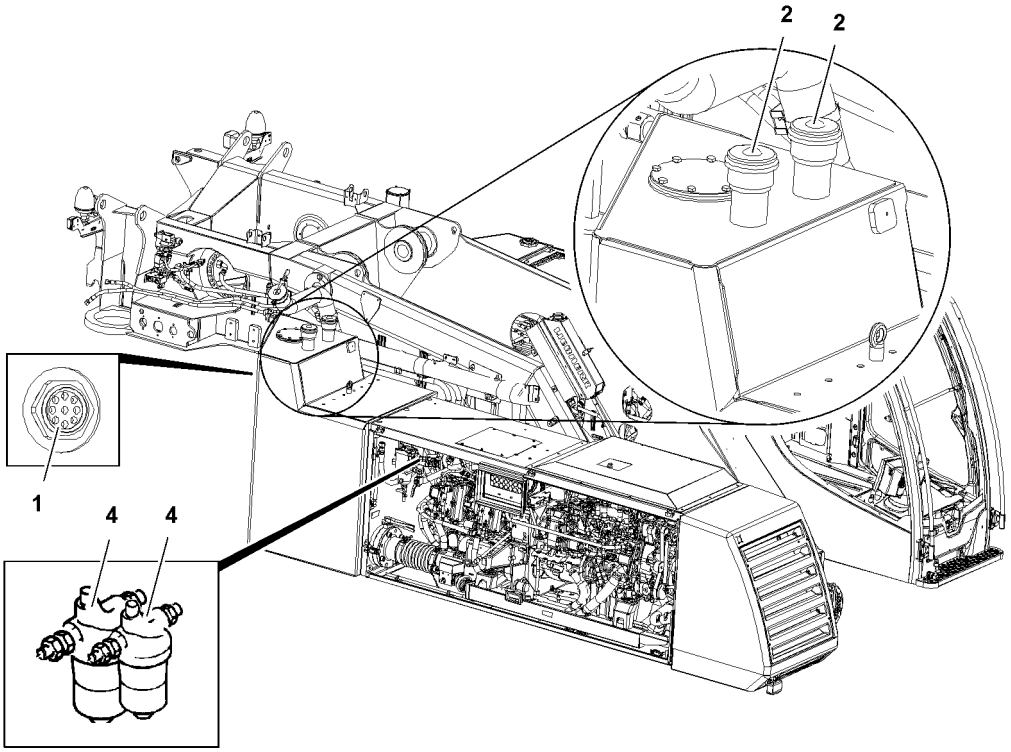

Fig.122788: Hydraulic oil tank

- ▶ Open the cover with the turn lock.
- ▶ Check the vent filter **2** for impurities (visual inspection).

When the vent filter **2** is very dirty:

- ▶ Replace the vent filter **2** .
- ▶ Close the cover with the turn lock.
- ▶ Start the diesel engine.
- ▶ Slowly run through all crane movements.
- ▶ Check the oil level and add hydraulic oil if necessary.

LWE/ab Muli 010/24201-02-02/en

copyright © Liebherr-Werk Ehingen GmbH 2016

14.3 Checking and replacing the return filter

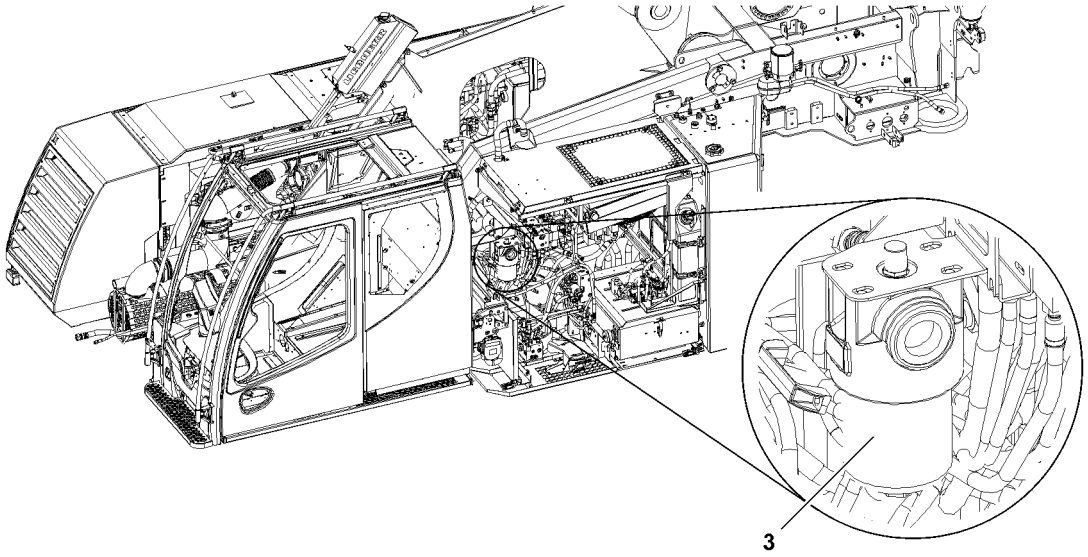

Fig.122789: Hydraulic system, return filter

One of the two return filters **3** is equipped with a maintenance indicator.

If the red mark is visible when the hydraulic oil is at operating temperature:

- ▶ Unscrew both filter covers.
- ▶ Remove the filter units.
- ▶ Clean the sealing surface on the covers.
- ▶ Install new filter units.
- ▶ Lubricate the rubber seal rings in the covers with oil.
- ▶ Place both filter covers and tighten.
- ▶ Start the engine and check the filter for leaks.
- ▶ Check the oil level and add hydraulic oil if necessary.

LWE/ab Muli 010/24201-02-02/en

copyright © Liebherr-Werk Ehingen GmbH 2016

14.4 Replacing the pressure filter elements

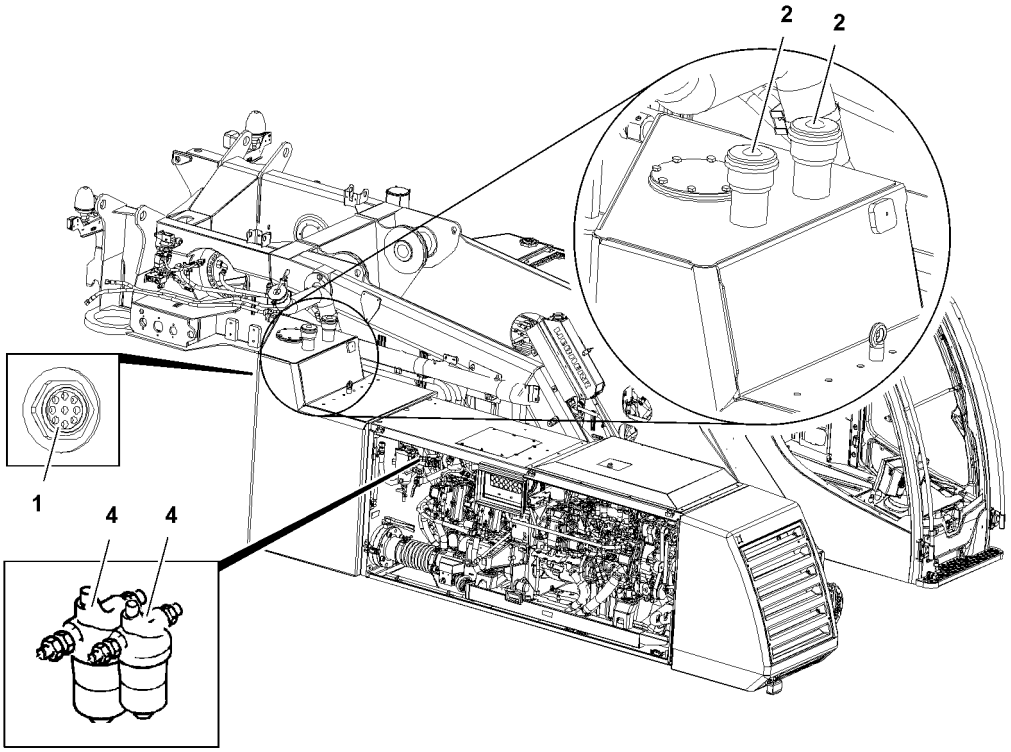

Fig.122788: Hydraulic oil tank

The pressure filters **4** are equipped with a maintenance indicator.

If the red bar is visible when the hydraulic oil is at operating temperature:
- ▶ Turn the diesel engine off.
- ▶ Release filter element and catch escaping hydraulic oil in a container.
- ▶ Remove and dispose of the filter element.
- ▶ Clean the sealing surface on the filter bracket.
- ▶ Lubricate the rubber seal ring on the new filter element with oil.
- ▶ Screw on and new filter element and tighten.
- ▶ Start the diesel engine and check for leaks.
- ▶ Slowly run through all crane movements.

Result:

– This hydraulic system is bled.

▶ Check the oil level and add hydraulic oil if necessary.

14.5 Checking pretension pressure for the diaphragm reservoir

Various diaphragm reservoirs are installed in the hydraulic system.

The pretension pressures are specified in the hydraulic circuit diagram as well as on the individual diaphragm reservoirs.

The pretension pressure must be measured separately in each diaphragm reservoir.

Significantly fluctuating ambient temperatures occur:
- After transfer into countries with extremely warm or cold temperatures.
- In case of significant temperature differences between summer and winter.

LWE/ab Muli 010/24201-02-02/en

copyright © Liebherr-Werk Ehingen GmbH 2016

NOTICE
Changes of pressures in diaphragm reservoirs due to significantly fluctuating ambient temperatures!
Inadequate gas pretension may cause the reservoir diaphragms to be overstressed.
▶ Check the gas accumulator pressures and correct if necessary.

Make sure that the following prerequisite is met:
– The crane engine is turned off: The diaphragm reservoir is relieved on the fluid side.
– Authorized and trained expert personnel checks the pretension pressure of the diaphragm reservoir.

DANGER
Danger of explosion!
The pressure in the nitrogen cylinder must be less than the maximum permissible operating pressure of the accumulator or the pressure gauge. Otherwise install a pressure reducer between the cylinder and the filling device.
▶ Do **not** use air or oxygen to fill the diaphragm reservoir.

The pretension pressure in the hydraulic reservoirs must be checked by expert personnel with appropriate training and equipment.

In addition, the national regulations regarding pressurized container inspection must be observed and adhered to.

▶ Check the pretension pressure with a testing and filling device and correct, if necessary.

15 Hydraulic hose lines

Note
▶ See Crane operating instructions, chapter 7.04.

16 Compressed air system*

16.1 Replacing the granular cartridge of the air dryer

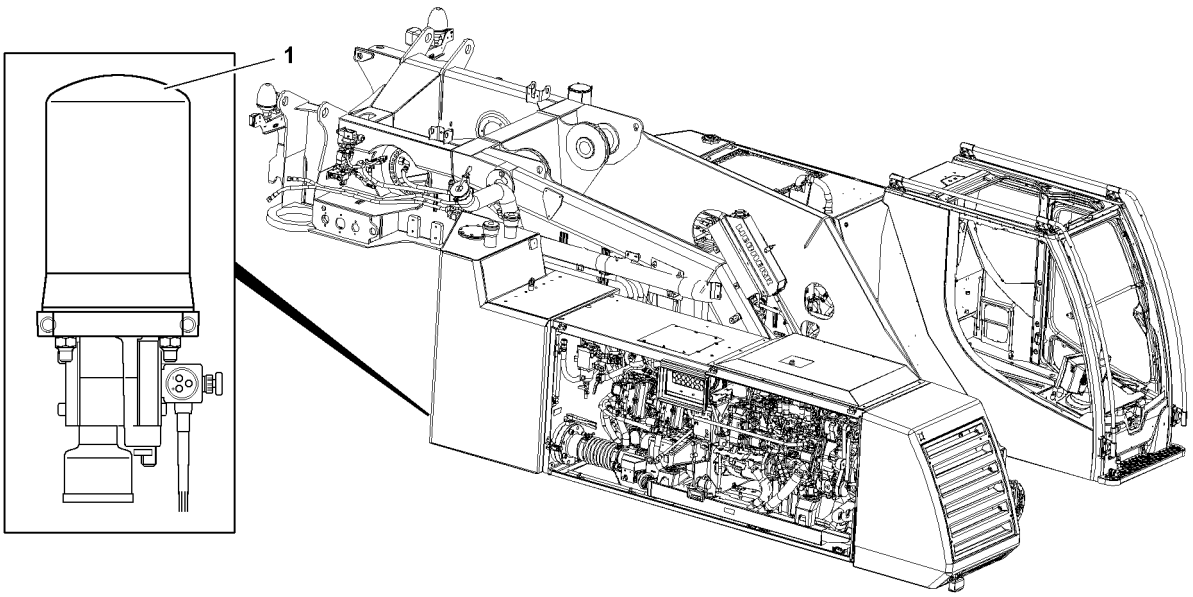

Fig.122790

LWE/ab Muli 010/24201-02-02/en

copyright © Liebherr-Werk Ehingen GmbH 2016

The granular cartridge must be replaced annually.

The granular cartridge of the air dryer **1** is under spring tension.

WARNING
Uncontrolled release of the granular cartridge!
Severe injury, property damage.
▶ Replace the granular cartridge carefully and professionally.

▶ Replace the granular cartridge.

17 Electrical system

17.1 Bulbs and fuses

NOTICE
Property damage on the electrical system!
▶ Defective fuses may **not** be bypassed with wire or the like.
▶ Always replace defective fuses with fuses for the same current strength.
▶ Always replace defective bulbs with bulbs for the same output.

When the same fuse of bulb becomes defective repeatedly:
▶ Check the electrical system.

17.2 Lines

▶ Make sure that all electrical lines are properly routed and fastened in their retainers.
▶ Fix any chafes or brittle areas in the insulation and coverings immediately.
▶ Any installation lines that are **not** in perfect condition must be immediately and professionally replaced.

17.3 Batteries

17.3.1 Safety guidelines

WARNING
Danger of accidents due to discharged batteries!
▶ Plug in the cable of the external power supply on the Liebherr charger.
▶ Make sure that the batteries are charged while the crane is not in operation.

WARNING
Chemical burns due to battery acid!
Eye damage and skin irritation on contact.
▶ Make sure that eyes and skin do **not** come in contact with battery acid.
▶ Wear eye protection.
▶ Wear protective gloves.

When eyes came in contact with battery acid:
▶ Flush the eyes out immediately with clear water and consult a physician.

When skin came in contact with battery acid:
▶ Flush the skin immediately with water and consult a physician.

LWE/ab Muli 010/24201-02-02/en

copyright © Liebherr-Werk Ehingen GmbH 2016

Note

- ▶ All safety signs on the batteries must be complete and always legible.
- ▶ Observe and adhere to the manufacturer's operating instructions.

Sign	Explanation
	Follow the guidelines on the battery, in the instruction manual and in the Crane operating instructions.
	Wear eye protection.
	Keep children away from acid and batteries.
	Danger of explosion! A highly explosive acoustic mixture is created when charging batteries.
	Warning! Fire, sparks, open light and smoking is prohibited. Avoid spark formation when handling cables and electrical devices. Avoid short circuits.
	Danger of chemical burns! Battery acid is very caustic, for that reason: Wear protective gloves and eye protection. Do **not** tilt the battery, acid can emerge from the vent openings.
	First aid: Flush splashed acid in the eye immediately for several minutes with clear water and consult a physician immediately. Neutralize splashed acid on skin or clothing immediately with an antacid or soap and flush with lots of water. When acid was ingested, contact a physician immediately.

copyright © Liebherr-Werk Ehingen GmbH 2016

Sign	Explanation
	Warning! Do **not** expose batteries unprotected to direct daylight. Discharged batteries can freeze. Store batteries frost free.
	Disposal! Dispose old batteries at a collection point. During transport, observe the guidelines of the manufacturer. Never dispose of old batteries in general trash.
	Back to the manufacturer! Used batteries with this sign are reusable assets. Send batteries for recycling. Old batteries, which are **not** recycled must be disposed of as hazardous waste under observation of all regulations.

17.3.2 Checking the batteries

DANGER
Mortal danger due to electric shock!
- ▶ When working on the electrical system of the crane, disconnect batteries from the electric circuits.
- ▶ Avoid spark formation caused by electrostatic charge.

When working on batteries:
- ▶ Wear a ground strap.
- ▶ Do **not** bring oil, grease, fuel or solvents into contact with the battery casting compound.

- ▶ Keep batteries dry and clean.
- ▶ Release dirty terminals, clean and grease them with an acid-free and acid-resistant grease.

NOTICE
Property damage due to excessively high or low acid level!
- ▶ Check the acid level in the battery only with a wooden stick or cardboard strip.
- ▶ Never check the acid level in the battery with metallic material.
- ▶ Adhere to the „minimum“ or „maximum“ acid level over the lead plates in the batteries according to the specifications of the battery manufacturer.

- ▶ Check the acid level in the batteries **every six months**.
- ▶ In summer and in hot climates, check it at least **every three months**.
- ▶ If necessary, add distilled water to the specified „max mark“.

An acid container is located in the battery box.

- ▶ Check the acid container.
- ▶ Fill the acid in the acid container into the battery.

The charge condition of a battery is determined by measuring the acid density.

Measure the acid density: The optimal acid temperature is + 20 °C.

When distilled water was added:
- ▶ Measure the acid density after 30 minutes.
- ▶ For the charge condition test, adhere to the specifications, see the following chart.

LWE/ab Muli 010/24201-02-02/en

copyright © Liebherr-Werk Ehingen GmbH 2016

Acid density	Charge condition	Measure
in kg/l at +25 °C		
1.28/1.23*	charged	—
1.20/1.16*	semi-charged	charge
1.12/1.,08*	discharged	charge immediately

Specifications for the charge condition test

* in tropical countries

Reduced battery performance requires greater power requirements.

- ▶ Charge batteries in time.
- ▶ Make sure that batteries are charged in the cold season.

17.3.3 Charging batteries with the Liebherr charger*

The Liebherr charger is integrated in the crane electric.

Make sure that the following prerequisite is met:
- – The ignition is turned off.

▶ Turn the battery master switch off.

A socket for external power supply for the Liebherr charger is located on the crane.

▶ Plug in the cable of the external power supply on the socket.

17.3.4 Charging the battery with an external charger

WARNING
Danger of injuries!
- ▶ Do **not** place tools on batteries and keep out of open light.
- ▶ Eliminate spark formation caused by electrostatic charge.
- ▶ Work solely in well ventilated rooms.
- ▶ Before working on batteries, wear a ground strap.
- ▶ Do **not** tilt or shake the batteries.

NOTICE
Property damage if charge voltage is more than 33 V !
- ▶ Make sure that the external charger delivers a charge voltage of maximum 33 V.

NOTICE
Loss of data due to disconnected battery!

When the battery is disconnected:
- ▶ Make sure that the temporary data memory is **not** needed.

Make sure that the following prerequisite is met:
- – The ignition is turned off.

Charging the battery while installed

- ▶ Turn the battery master switch off.
- ▶ Use an external charger with a charge voltage of maximum 33 V.
- ▶ Charge the battery professionally with an external charger.

copyright © Liebherr-Werk Ehingen GmbH 2016

Charging the battery while removed

NOTICE
Damage to alternator!
▶ Disconnect batteries solely if the diesel engine has been turned off.

Removing the batteries

▶ Turn the battery master switch off.
▶ Use an external charger with a charge voltage of maximum 33 V.
▶ Disconnect the negative terminal first (ground cable), then the positive terminal.
▶ Disconnect the vent hose from the vent channels of the batteries.
▶ Remove the batteries.

Charging the batteries externally

NOTICE
Damage to batteries!
▶ Charge only with direct current: Maximum current: 1/10 of the battery capacity.

Example for charging: To charge a battery with 170 Ah , the maximum charge current is 17.0 A.

▶ Thaw frozen batteries before charging.

When a plug is present:
▶ Before charging, remove all plugs.
▶ Check the acid level in the battery, see section „Maintaining the batteries“.
▶ Make sure that the battery is ventilated during the charging procedure (danger of oxyhydrogen explosion).
▶ Connect the battery to a battery charger (positive to positive and negative to negative).
▶ Turn on the battery charger after connecting the battery.

Stop charging immediately if:
– The acid temperature exceeds 55 °C (casing more than warm to the touch).
– The battery starts to give off gas.
– The electrolyte concentration or the charging voltage has **not** changed for 2 hours.

▶ Turn the battery charger off after charging, then remove the connector cables individually from battery and battery charger.

Installing the batteries

▶ Check the acid level in the battery, see section „Checking the batteries“.
▶ Reinstall the batteries tightly in the vehicle.
▶ Connect the vent hose on the vent channels of the batteries.
▶ Connect the positive terminal to the battery first, then the negative terminal (ground cable).
▶ Check that the terminals are tightly seated (low transfer resistance).
▶ Grease the terminals and terminal posts with acid-free and acid-resistant grease (use corrosion protection even for modern maintenance-free batteries).

18 Ladders

18.1 Servicing ladders

Note
▶ See Crane operating instructions, chapter 7.04.

LWE/ab Muli 010/24201-02-02/en

copyright © Liebherr-Werk Ehingen GmbH 2016

7.05.50 Maintenance guidelines - Crane boom

1	Telescopic boom	3
2	Rope pulleys and guide pulleys	6
3	Crane ropes	7

LWE/ab Muli 010/24201-02-02/en

copyright © Liebherr-Werk Ehingen GmbH 2016

LWE/ab Muli 010/24201-02-02/en

Fig.195219

copyright © Liebherr-Werk Ehingen GmbH 2016

1 Telescopic boom

WARNING
Impermissible extension conditions!
Toppling crane. Death, severe bodily injuries, property damage.
- ▶ For lubrication, adhere to the specified extension conditions of the telescope boom.
- ▶ Do **not** telescope out more telescopes than specified.

WARNING
Personnel in danger zone!
Death, severe bodily injuries.
- ▶ Make sure that during telescoping **no** personnel remains within the danger zone of the telescopic boom.
- ▶ Lubricate the telescopic boom only in resting status.

WARNING
Telescoping the telescopic boom!
Shearing off of fingers.
- ▶ During telescoping, do **not** place your fingers in the maintenance port.

Note
- ▶ For the gliding surfaces of the telescopic boom use special grease as lubricant. See Service fill and Crane operating instructions, chapter 7.07.

Make sure that the following prerequisites are met:
- Safety measures against falling have been made.
- Extend the crawler carriers to **wide** track width.
- The central ballast of 20 t is installed.
- At least one counterweight of 10 t is installed on the turntable.
- **No** hook block is reeved (reeved n=1)
- **No** auxiliary boom / accessory is installed.
- The hoist rope is spooled up and secured on the winch.
- The LICCON overload protection has been set according to the set up configuration.
- The telescopic boom is aligned in horizontal position to the rear (0°- main boom angle).
- The telescopic boom is fully telescoped in.
- The *Telescoping* program is selected on the LICCON computer system, see Crane operating instructions, chapter 4.05.

Note
- ▶ The folding jib may remain on the side on the telescopic boom in the transport retainer.

1.1 Lubricating the outer gliding surfaces

Note
Optimum lubrication result:
- ▶ To obtain an optimum lubrication result, let the sprayed on special grease cure four to eight hours before telescoping in.

To grease the outer gliding surfaces, every telescope can be telescoped out individually to 100 %.

copyright © Liebherr-Werk Ehingen GmbH 2016

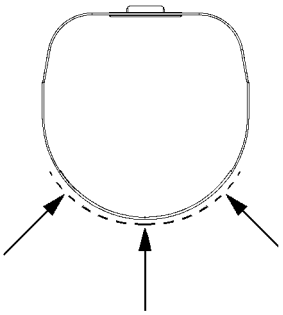

Fig.124866

- ▶ Telescope every telescope out individually to 100 % and spray special grease on the outer gliding surfaces.

1.2 Lubricating the inner gliding surfaces

Make sure that the following prerequisites are met:
- – The telescopic boom is completely telescoped in **0/0/0/0/0**.

Note
- ▶ The inner gliding surfaces of the telescopes (plastic glide bearing plates) are lubricated via grease fittings.
- ▶ The grease fittings can be accessed from the outside via maintenance ports on both sides of the pivot section and the telescopes.

LWE/ab Muli 010/24201-02-02/en

copyright © Liebherr-Werk Ehingen GmbH 2016

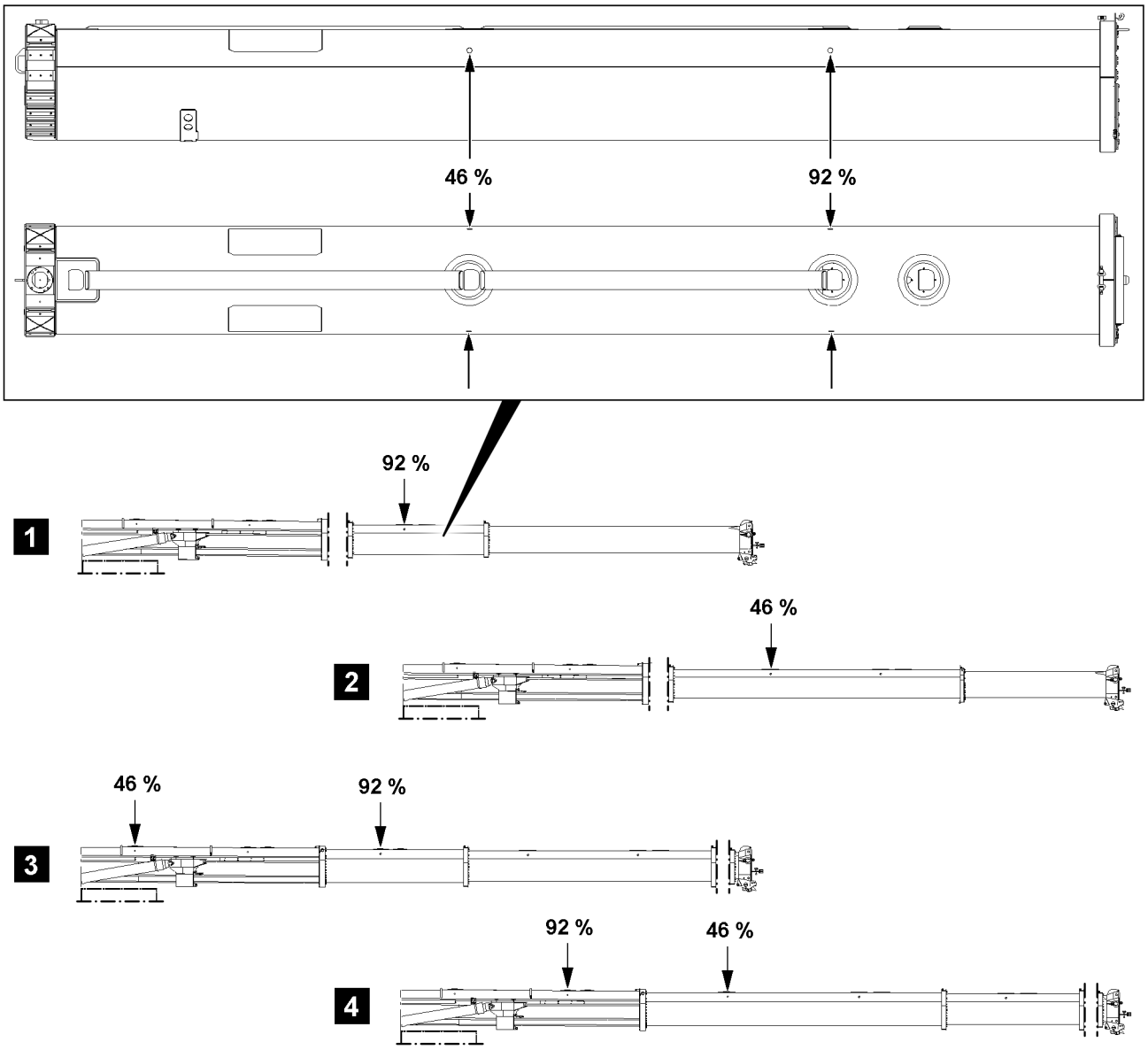

Fig.124863: Extension conditions and maintenance ports

Extension condition	Telescope	Maintenance port
0/0/0/46/92	4	92 %, see illustration **1**
0/0/0/92/46	4	46 %, see illustration **2**
0/0/46/92/0	3	92 %
0/0/92/46/0	3	46 %
0/46/92/0/0	2	92 %
0/92/46/0/0	2	46 %
46/92/0/0/0	1	46 % on pivot section, 92 % on telescope 1, see illustration **3**
92/46/0/0/0	1	92 % on pivot section, 46 % on telescope 1, see illustration **4**

LWE/ab Muli 010/24201-02-02/en

copyright © Liebherr-Werk Ehingen GmbH 2016

▶ Telescope the telescopic boom one after the other to all extension conditions and lubricate the telescopes on the grease fittings.

1.3 Lubricate the locking pins

Make sure that the following prerequisites are met:
- The telescopic boom is telescoped to extension condition **92/46/0/0/0**.
- An aerial platform is on hand.

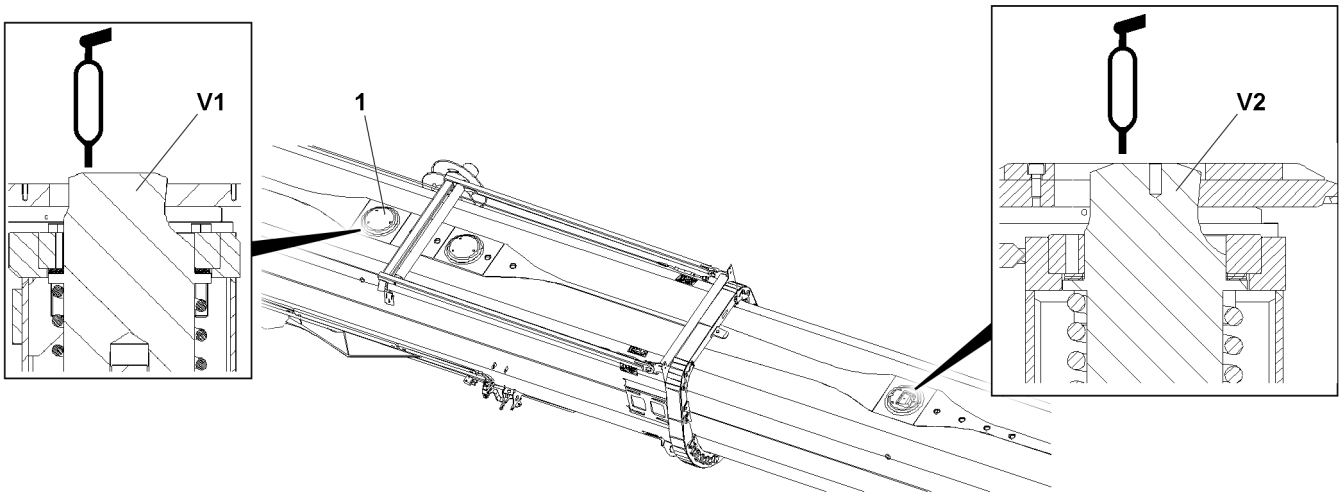

Fig.124867: Locking pins on telescopic boom

▶ Remove the cover **1** on the pivot section.
▶ Lubricate the locking pins **V1**.
▶ Install the cover **1**.

Extension condition	Locking pin
92/46/0/0/0	V2
0/92/46/0/0	V3
0/0/92/46/0	V4
0/0/0/92/46	V5

▶ Lubricate the locking pins **V2**.

The following steps must be carried out for every additional locking pin.

▶ Telescope the telescopic boom to the next extension condition.
▶ Lubricate the locking pin.

When all locking pins are lubricated:
▶ Telescope the telescopic boom all the way in and lock.

2 Rope pulleys and guide pulleys

2.1 Checking for mechanical damage

Ropes can cause mechanical damage, such as stress marks.

▶ Check guide pulleys and rope pulleys for mechanical damage.
▶ Check the surface of the guide pulley and the groove of the rope pulley for smoothness.

LWE/ab Muli 010/24201-02-02/en

copyright © Liebherr-Werk Ehingen GmbH 2016

The actual grove diameter must be larger than the actual rope diameter.

▶ Check the actual groove diameter of the rope pulley.

2.2 Checking the bearings for easy movement

Stiff or blocked rope pulleys or compensation pulleys wear rapidly and unevenly and cause serious rope abrasion.

Ineffective compensation pulleys can lead to irregular rope tension.

▶ Check the rope pulleys for proper movement in their bearings.

When rope pulleys are **not** easily moveable in their bearings:
▶ Fix the bearings.

When the crane is at a standstill for a longer period of time:
▶ Turn the rope pulleys regularly.

2.3 Lubricate the bearings

Rope pulleys with a diameter of more than 25 mm can be lubricated.

NOTICE
Lube pressure is too high!
When too much lubricant is introduced, then the lube pressure increases: Seal rings are pressed out.
▶ Meter the lube amount carefully.

▶ Turn the rope pulley and lubricate.

3 Crane ropes

3.1 Personal protective equipment

WARNING
Injury due to wires and skin irritation due to lubricant!
▶ When working with ropes, always wear work gloves.

WARNING
Injuries if protective equipment is **not** worn!
▶ Wear hard hat, safety shoes and safety glasses.

3.2 Safe and problem-free operation

WARNING
Wear, overload, incorrect use, damage, improper maintenance!
Failure of ropes. Death, severe injuries, property damage.
▶ Prevent failure of ropes: Observe and adhere to the following notes.

Carry out the following measures to ensure safe and problem-free rope operation:
- Service ropes and rope end connections regularly according to the maintenance intervals.
- Check ropes and rope end connections regularly according to the inspection intervals.
- When it is determined that the ropes should be withdrawn from service, do **not** continue to use them further.
- Exclude contact of rope with components except rope drive elements.
- Exclude contact of rope with structural parts, power lines or other objects within the surrounding area.

LWE/ab Muli 010/24201-02-02/en

copyright © Liebherr-Werk Ehingen GmbH 2016

- Avoid corrosive and chemical surroundings.
- Avoid excessive soiling.
- Avoid excessive heat influence.
- Ensure proper condition of all elements of rope drive.
- Ensure proper spooling formation on the rope drum.
- Use the entire rope length of hoist ropes.
- Avoid slack rope formation on the drum.
- Do **not** bring outer twists into the rope.
- Avoid shock relief of the rope, such as sudden set down of the load.
- Avoid **non-** permissible angular pull, for example by pulling the load at an angle.

3.3 Temperature operating limits

Adhere the temperature operating limits for steel ropes. The determining factors are wire material, lubricant, rope end connections. See Manufacturer's specifications.

3.4 Qualification Maintenance personnel

Make sure that the following prerequisites are met:
- The maintenance personnel is trained and instructed in maintenance tasks.
- The maintenance personnel is assigned (authorized) for the maintenance by the crane operator.

3.5 Damage on rope

Rope removal criteria: If severe damage reduces the operational safety, then the rope can reached the removal criteria.

This section provides an overview for possible damage on the rope. For clearer illustration, the distortions on the illustrations are exaggerated.

The displayed ropes show a condition, which is far above the removal criteria.

Damage on the rope causes uneven load distribution in the affected areas.

Damage on the rope is most often localized.

Typical examples for damage, which can be recognized during maintenance work:
- Broken strands
- Wire breaks
- Reduction of rope diameter
- Localized increase of rope diameter
- Corrosion
- Flattenings
- Corkscrew-like distortion
- Basket formation
- Protruding, distorted inlay or braiding
- Loop formation
- Kinking, rope loops (grommets) pulled closed
- Buckles
- Influence of heat or electrical voltage, such as arcing

Occurrence of removal criteria for individual criteria, see Crane operating instructions, chapter 8.04.

3.5.1 Broken strands

A strand consists of several individual wires.

When a complete strand is broken, then the rope must be taken down.

3.5.2 Broken wire

Externally visible broken wires are the result of wear caused by operation.

LWE/ab Muli 010/24201-02-02/en

copyright © Liebherr-Werk Ehingen GmbH 2016

Additional types of broken wires:
- Broken wires in the inside of the rope
- Broken wires in the strand valleys
- Broken wires on a rope connection

A broken wire does not endanger the safety of the rope.

3.5.3 Reduction of rope diameter

The rope diameter changes due to abrasion, settling and external influences.

Abrasion of cover wires of outer strands of rope due to frictional contact. Especially in those areas where ropes are in contact with the rope pulleys during start up or slow down of the load.

Wear is increased by lack of or incorrect lubrication and the effect of dust.

Abrasion reduces the tensile strength of steel ropes because the cross section of the steel is reduced.

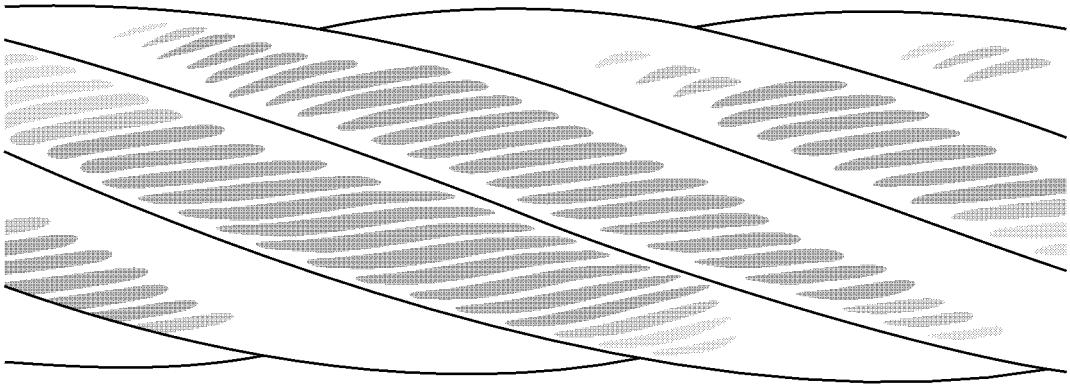

Fig.121001: External abrasion on the rope

When the rope diameter is reduced, the rope must be checked by **expert personnel for crane rope inspection**.

3.5.4 Localized increase of rope diameter

An increase, which occurs over a longer area of the rope can be caused by absorption of moisture in the fiber insert or due to corrosion in the inside of the rope.

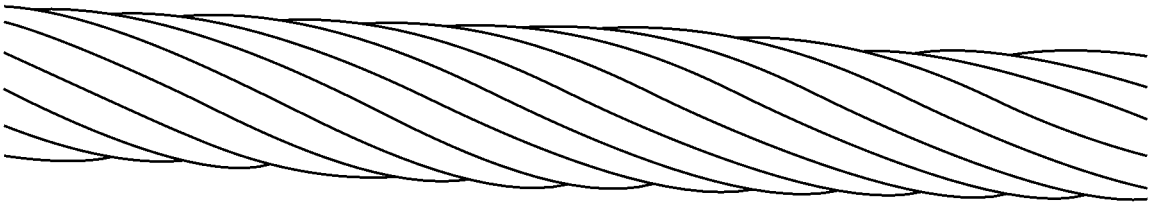

Fig.120992: Increase of rope diameter

When a localized increase of the rope diameter is present, then the rope must be checked by **expert personnel for crane rope inspection**.

3.5.5 Corrosion

Corrosion occurs due to insufficient lubrication, in maritime climates and in an atmosphere polluted by industrial fumes.

LWE/ab Muli 010/24201-02-02/en

copyright © Liebherr-Werk Ehingen GmbH 2016

External corrosion is indicated by a rough wire surface. A superficial rust film can be wiped off.

Significant corrosion reduces the strength and elasticity of the rope due to the reduction of the rope diameter.

Inner corrosion is hard to detect.

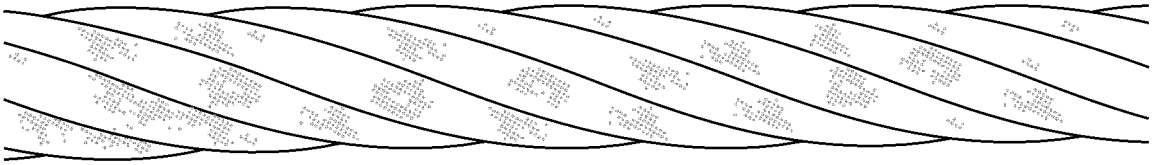

Fig.120994: External corrosion

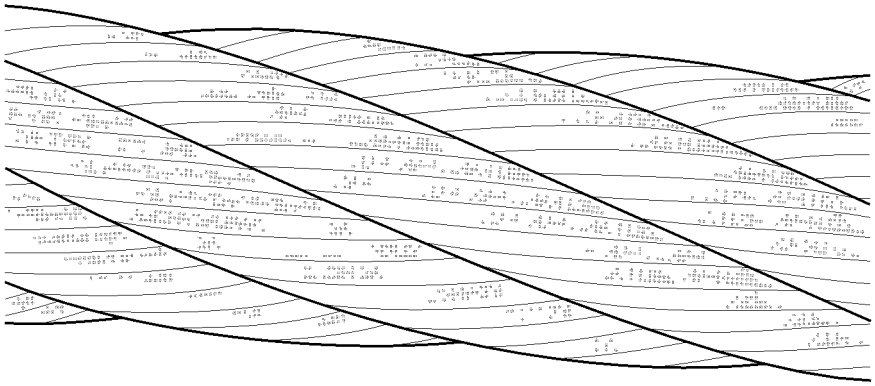

Fig.120995: Magnification of external corrosion for better depiction

When significant corrosion is present, the rope must be checked by **expert personnel for crane rope inspection**.

3.5.6 Flattening

Flattening occurs when the rope runs through the rope pulleys. In this area the rope wears quicker.

Corrosion occurs faster on retaining ropes and guy ropes.

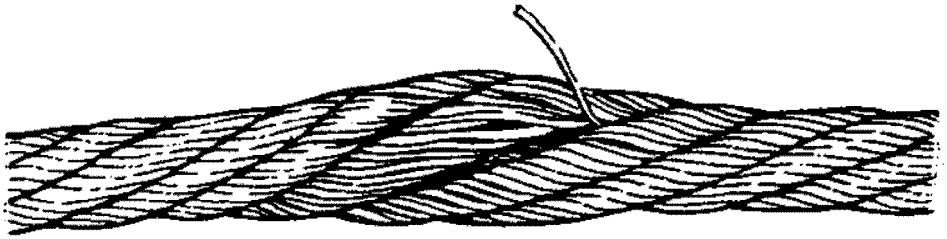

Fig.120997: Localized limited flattening, which leads to broken wires (single layer rope)

LWE/ab Muli 010/24201-02-02/en

copyright © Liebherr-Werk Ehingen GmbH 2016

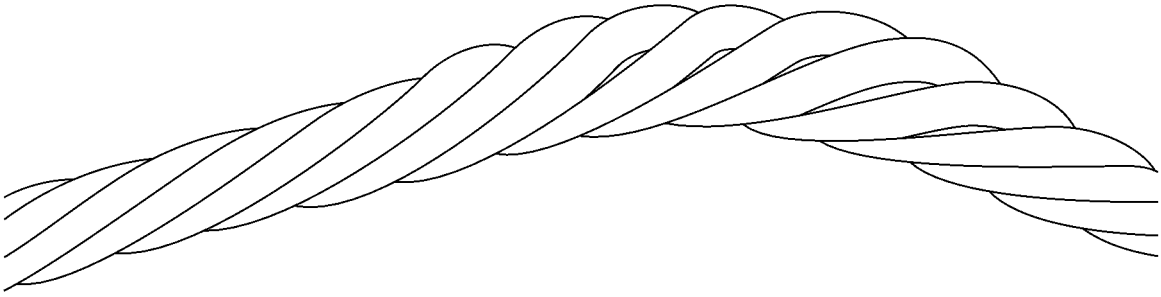

Fig.120996: Flattenings on multi layer spoolings

When flattening is present, the rope must be checked by **expert personnel for crane rope inspection**.

3.5.7 Corkscrew-like distortion

Distortion where the rope is in the form of a corkscrew along its longitudinal axis.

Corkscrew-like distortion causes rope wear, broken wires and bearing damage on rope pulleys.

Fig.120988: Corkscrew-like distortion

When corkscrew-like distortion is present, the rope must be checked by **expert personnel for crane rope inspection**.

3.5.8 Basket formation

This distortion occurs due to different layers between the outer strand layers and the inside of the rope.

Causes for basket formation are high angular pull angles during the run over the rope pulleys and run-in rope pulleys. Even load distribution over the entire cross section is not possible.

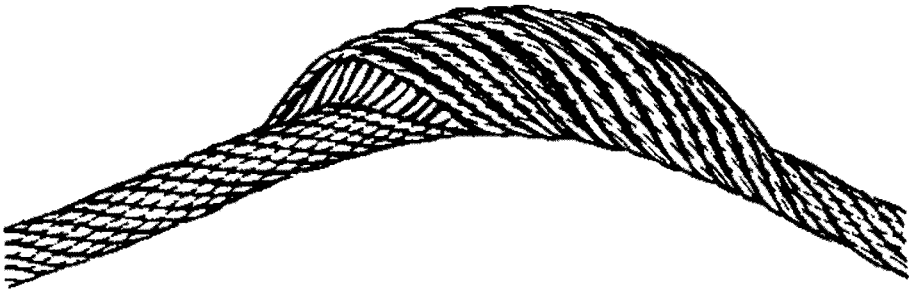

Fig.120989: Basket formation

When basket formation is present, then the rope must be taken down.

LWE/ab Muli 010/24201-02-02/en

copyright © Liebherr-Werk Ehingen GmbH 2016

3.5.9 Protruding, distorted inlay, braiding

This distortion is a special form of basket formation: The insert or the core of the rope protrudes between the external braids or an external braid protrudes from the rope banding.

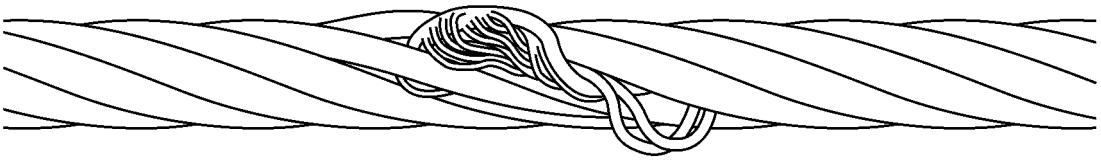

Fig.120990: Protrusion of an insert (rope single layer)

Fig.120991: Distorted or protruding strand

When the insert or a strand protrudes or is distorted, place the rope down. Have **expert personnel for crane rope inspection** check if the rope area with the distortion can be removed.

3.5.10 Loop formation

At loop formation individual wires protrude from the rope banding, when no broken wire ends can be seen.

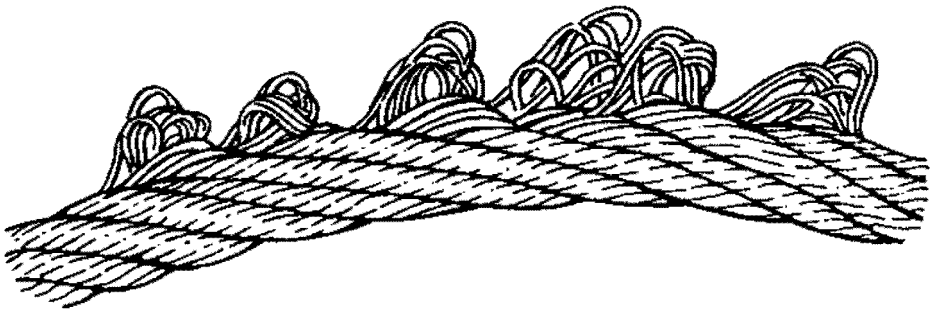

Fig.120993: Emergence of individual wires

When loop formation is present, take the rope down.

3.5.11 Kinking, rope loops (grommets) pulled closed

Deformation, where a loop has formed in the rope, without the possibility to rotate around its own axis during a load. The rope is subjected to more wear.

The rope is deformed. The strength remains only in part.

LWE/ab Muli 010/24201-02-02/en

copyright © Liebherr-Werk Ehingen GmbH 2016

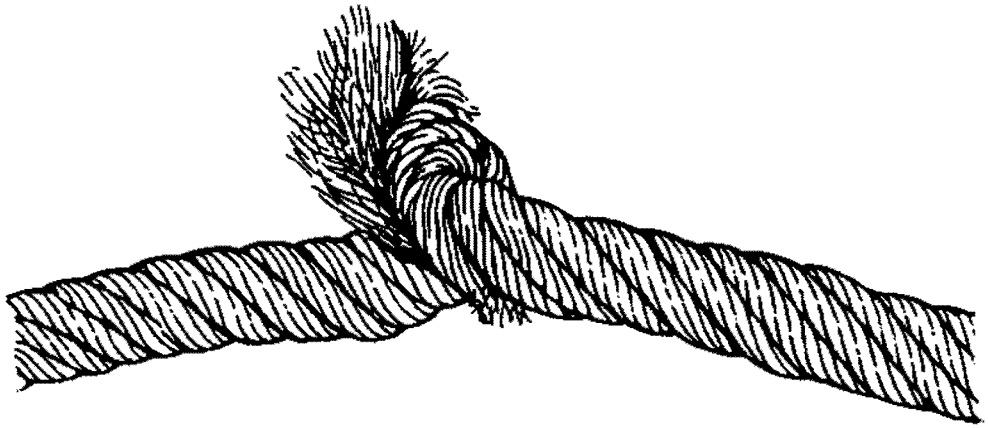

Fig.120998: Severe kinking or knots

When kinking or rope loops are present, place the rope down.

3.5.12 Buckles

Buckles are angular deformations. The rope was damaged due to external influences. Strong deformations of the rope cause stronger wear.

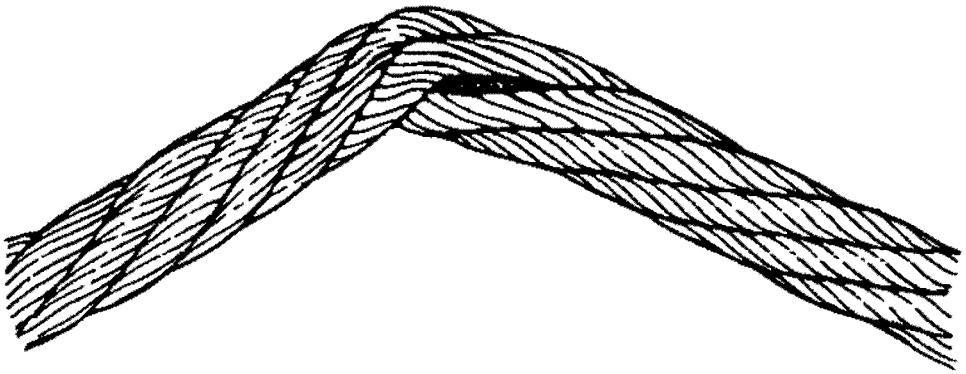

Fig.120999: Severe buckle

When buckles are present, take the rope down.

3.5.13 Effects of heat, arcs

Damage caused to the rope by welding work, for example.

Unusual heat impact is visible by tempering colors and loss of lubricant.

When heat impact has occurred on the rope, then the rope must be taken down.

3.6 Checking the ropes

WARNING
Operation with damaged rope!
Failure of rope. Death, severe injury, property damage.

When damage, wear and deformations are present:
▶ Have **expert personnel for crane rope inspection** determine if the rope has to be taken down.

copyright © Liebherr-Werk Ehingen GmbH 2016

The following sections describe the tasks for **daily visual inspection**.

The crane operator can carry out a daily visual inspection if he is sufficiently trained in the tasks and considered to be able to do so.

3.6.1 Intervals

Intervals and situations where the daily visual inspection must be made:
- Daily, before starting to work
- In case of change of the reeving of the crane rope due to:
  - Transport
  - New reeving
  - Removal and installation

3.6.2 Areas

The rope must be checked over the entire length.

The following areas must be checked with special diligence:
- Rope end connections.
- Safety coils and fixed point on the winch.
- Areas of the rope which run through the hook block.
- Areas of the rope which run over the rope pulleys or laying on the rope pulleys.
- Areas of the rope which are spooled on the winch, especially cross over areas.
- Areas of the rope which are laying above the compensation pulleys.
- Areas of the rope which are subjected to abrasion due to external components.
- All areas of the rope which are subjected to temperatures above 60°C.

3.6.3 Documentation of rope condition

Every visible change of the wire rope must be documented in the crane records.

3.6.4 Checking the lubrication

WARNING
Missing lubrication!
Functional problems. Inner and outer corrosion.
- ▶ Lubricate the rope regularly.
- ▶ Make sure that the rope is lubricated all around.
- ▶ Select manual or automatic lubrication procedures.

The lubrication must be checked at least once a **month**.

When the rope shows signs of drying out:
- ▶ Lubricate the rope, see section „Lubricating the rope“.

3.6.5 Check for wear and distortion

- ▶ Check all visible parts of the rope for wear and distortion.
- ▶ Check the rope end connections and fixed points especially carefully for wear, damage, cracks and distortion.
- ▶ Check pressed together rope end connection for slipping and traces on the rope.

Note
- ▶ The maximum permissible number for broken wires over a certain rope length may not be exceeded.
- ▶ Determine the maximum permissible number of broken wires, see Crane operating instructions, chapter 8.04.

- ▶ Check the rope end connection and rope area near the rope end connection for broken wires.

LWE/ab Muli 010/24201-02-02/en

copyright © Liebherr-Werk Ehingen GmbH 2016

When broken wires are present on the rope:
▶ Remove the broken wire, see section „Removing broken wires“.

When broken wires or damage is present on the rope end connection:
▶ Document visible changes of the rope condition.
▶ Have the rope checked by **expert personnel for crane rope inspection**.

When the rope can be shortened without reducing the operational safety:
▶ Shorten the rope, see section „Shortening the rope“.

3.6.6 Checking the rope drive for spooling problems

Lacking pretension of the rope on the winch can cause spooling problems in multi layer spooling.

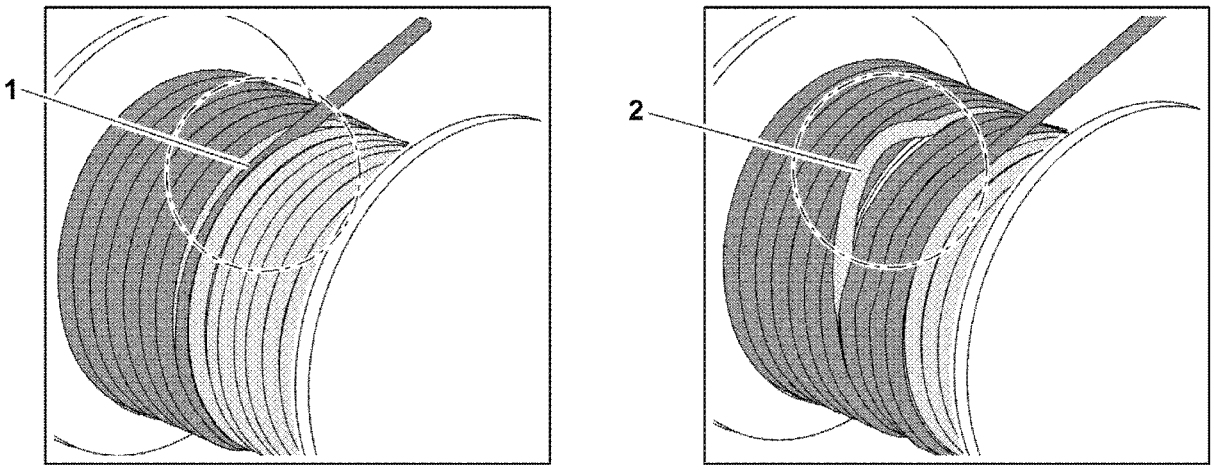

Fig.120967: Possible spooling problems on the rope winch

1 Cutting into the lower rope layers **2** Loop formation in the lower rope layers

▶ Check the spooling behavior of rope on the rope winch for cutting into the lower rope layers **1**.
▶ Check the spooling behavior of rope on the rope winch for loop formation in the lower rope layers **2**.

When spooling defects are found:
▶ Renew the pretension, see section „Renewing the pretension of hoist ropes“.
▶ Document visible changes of the rope condition.
▶ Have the rope checked by **expert personnel for crane rope inspection**.

3.6.7 Checking the position

▶ Check the correct position of the rope on the rope pulleys.

When the rope is **not** correctly laying on the rope pulley:
▶ Have the rope and rope pulley checked by **expert personnel for crane rope inspection**.

3.6.8 Checking for corrosion

A superficial „rust film“ can be wiped off.

▶ Do **not** clean the rope with solvents or cleaners.
▶ Clean the rope solely with a wire hand brush.
▶ Check rope for corrosion.

When the rope shows a rough surface:
▶ Document visible changes of the rope condition and have the rope checked by **expert personnel for crane rope inspection**.

LWE/ab Muli 010/24201-02-02/en

copyright © Liebherr-Werk Ehingen GmbH 2016

If there is any uncertainly regarding the condition of the rope:
▶ Place the rope down or contact Liebherr Service.

3.6.9 Checking for flattenings

In the cross over area of the spooled up rope layers on the winch the rope is stressed more. The rope can be flattened as a result.

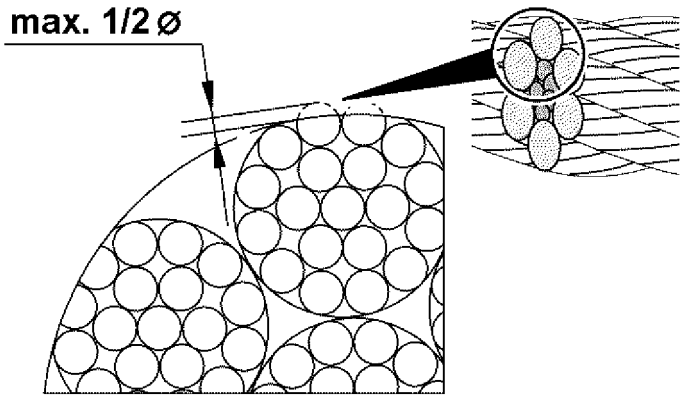

Fig.120966: Maximum flattening of wires on the outer strands

▶ Check the rope in the ascent zones of the rope spooling on the winch for flattenings.

When the outer braids are flattened more than half of the wire diameter:
▶ Document visible changes of the rope condition.
▶ Have the rope inspected by **expert personnel for crane rope inspection** or place the rope down.

When the rope can be shortened without reducing the operational safety:
▶ Shorten the rope on the rope drum fixed point, see section „Shortening the rope“.

3.7 Checking the control rope for distortions

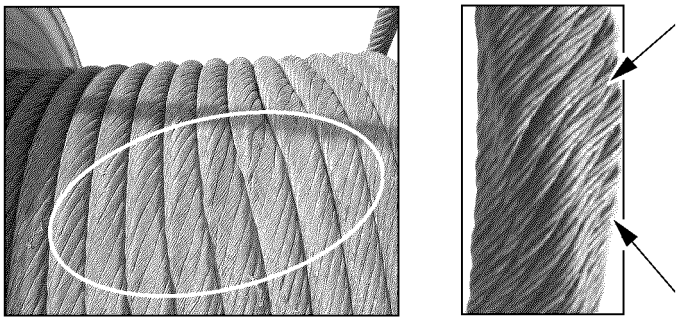

Fig.114002: Distortion on control ropes

▶ Check the first rope layer of the control rope for crushed areas and distortions.

When distortions are present:
▶ Have the rope checked by **expert personnel for crane rope inspection**.

LWE/ab Muli 010/24201-02-02/en

copyright © Liebherr-Werk Ehingen GmbH 2016

3.8 Lubricating the rope

WARNING
Missing lubrication!
Functional problems. Inner and outer corrosion.
- ▶ Lubricate the rope regularly.
- ▶ Make sure that the rope is lubricated all around.
- ▶ Select manual or automatic lubrication procedures.

NOTICE
Too much or incorrect lubricant!
Excessive soiling. Wear on rope, on rope pulley and on winch. Recognition of take down criteria is impeded.
- ▶ Use lubricant, which is compatible with the rope and the original lubricant.

- ▶ Do **not** clean the rope with solvents or cleaners.
- ▶ Clean the rope solely with a wire hand brush.

Areas, which must be lubricated especially well are bending zones on winch and rope pulleys.

- ▶ Lubricate the rope.

3.9 Removing broken wires

NOTICE
Broken wires!
Damage of other components in crane operation, for example rope pulleys and compensation pulleys.
- ▶ Remove broken wires.

Make sure that the following prerequisites are met:
- – Suitable pliers are on hand.

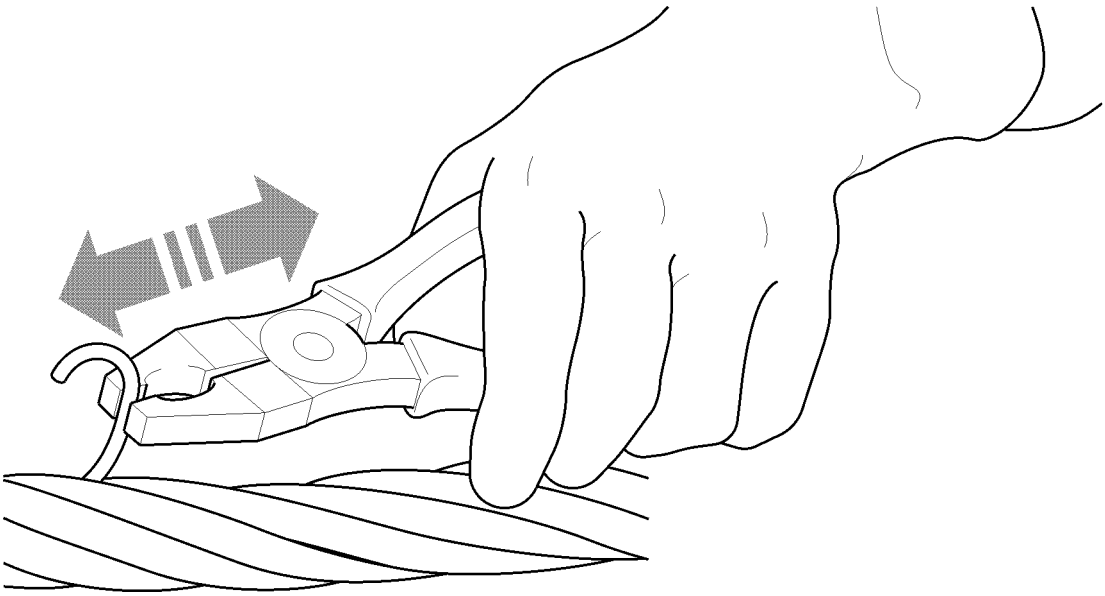

Fig.120979: Remove broken wire

- ▶ Grasp the wire on the upper end with pliers. Bend the wire back and forth until the wire breaks off in the braid valley.

copyright © Liebherr-Werk Ehingen GmbH 2016

The position of a broken wire is important for subsequent inspection. Individual broken wires are counted and are recorded later in the evaluation for withdrawal from service.

▶ Document the position of the broken wires in the crane record. Inspection checklist, see chapter 8.04.

3.10 Turning an extremely rotation-resistant hoist rope out

WARNING
Damage of rope due to incorrect procedure!
▶ Use extreme caution for the following procedures.
▶ Observe the following instructions exactly.

The cause for the turn-in of the hook block can have various reasons.

Check the crane for the following peculiarities:
– Scrub marks: Are hoist rope scrub marks present on the crane components? If scrub marks are present, check the hoist rope run and correct it.
– Rope pulleys: Did the groove diameter become too small?
  • Groove diameter dimensional stability must be present.
  • If this is not the case, the rope pulley must be replaced.
– Rope lubrication: Has the hoist rope been sufficiently lubricated? If the rope surface is dry, the hoist rope must be re-lubricated.

If the crane does not display other peculiarities, the hoist rope must be spun out.

The following sections describe two methods of how to spin out the hoist rope. The methods must be applied in the described sequence.

3.10.1 Spinning out with single strand reeving

▶ Reeve in the single strand hoist rope.
▶ Extend the boom to the maximal boom length and hook height.
▶ Lower hooks to approximately 1 m above the ground and allow the hoist rope to spin out.
▶ With an empty hook block, carry out one complete hoist cycle.
▶ Lower the hook again to approximately 1 m above the ground and allow the hoist rope to spin out again.
▶ Reeve the number of strands of hoist rope carefully and spin free where the twisting of the hook block is largest.
▶ Distribute the spin out to the entire rope length: Run at least two entire hoist cycles at maximum boom length and hook height.

Note
When the hook block continues to turn in:
▶ Spin the rope out, see section „Spinning out by turning the hook block out“.

3.10.2 Spinning out by turning out the hook block

Make sure that the following prerequisites are met:
– The hook block is reeved with the number of strands where the twisting is the largest.

▶ Extend the boom completely and lower the hook block.
▶ Attach a load of approximately 10 % of the nominal rope pull on the hook block.

Before lifting the load, a helper must rotate the twisted hook block to a straight position by hand until the rope strands no longer touch each other.

▶ Continue to turn the hook block by one entire turn.

Result:

– The rope strands touch again.

LWE/ab Muli 010/24201-02-02/en

copyright © Liebherr-Werk Ehingen GmbH 2016

NOTICE
The hook block turns back under load in a straight position!

When the hook block turns back in a straight position:
▶ Release the hook block.

▶ Hold the hook block in the prescribed position until the load lifts off the ground.
▶ Move the load until approximately 15 m before the uppermost hook position of the completely extended boom.
▶ Lower load and set it down.

3.11 Renewing the pretension of hoist ropes

WARNING
Lacking pretension of the rope on the winch!
Excessive rope wear in the lower spooling layers, gap formation, rope cutting in.

When the lower rope layers on the winch are hardly used or **not**:
▶ Renew the pretension in the entire rope regularly.

Make sure that the following prerequisites are met:
– A reeving is selected where the entire rope length can be spooled.
– A clean spooling picture is visible when spooling on the drum.

Note
Recommendation!
▶ The rope application is the most economical when the entire rope length is utilized.

When only a part of the rope length is used for a longer period of time:
▶ Use a proportionally shorter rope.

▶ Spool the rope out until three safety coils.
▶ Spool the rope up with a rope tensile force of 10 % of the maximum rope tensile force.

3.12 Shortening the rope

WARNING
Distortions and mechanical damage!
Operational safety significantly disturbed, uneven load distribution within the rope.
▶ Have the manufacturer check if the distorted and damaged area can be severed.

Visible form changes often occur localized or in short rope sections.

When a safe operation of the rope is ensured, a distorted and damaged area can be severed.

To shorten the rope there are different prerequisites:
– Rope shows flattenings.
– Broken wires occur solely within the area of the rope end connection, the remaining rope is undamaged.

DANGER
Minimum number of remaining coils on the winch fallen below!
Rope releases or rips off, falling load. Death, severe injury, property damage.
▶ Make sure, after shortening the rope that **at least three remaining coils** remain on the winch in all working positions of the crane.

Make sure that the following prerequisites are met:
– The rope was shortened by authorized and trained expert personnel.

Multi layer spooling: When the rope on the fixed point on the winch is shortened by half the winch diameter, then the service life of the rope increases significantly.

copyright © Liebherr-Werk Ehingen GmbH 2016

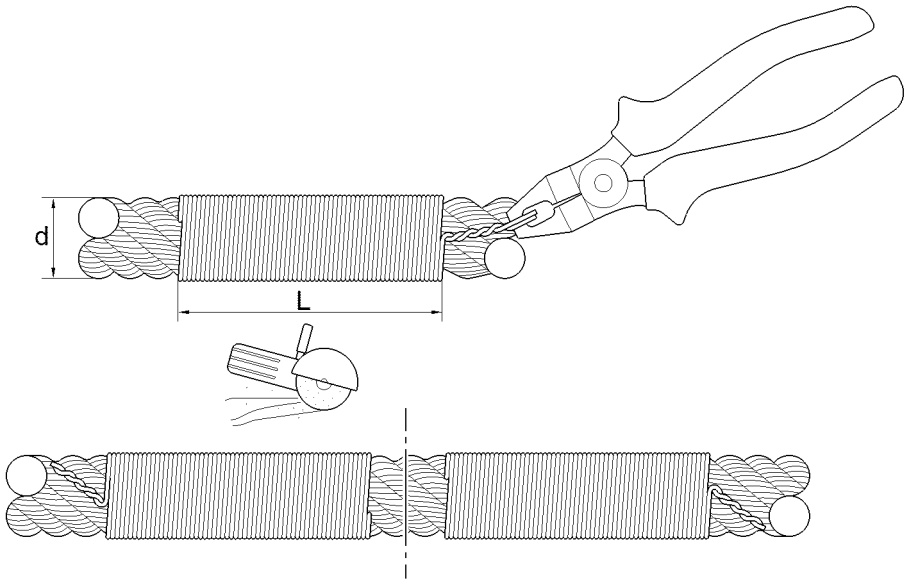

Fig.120972: Tie the rope before shortening it

d Rope nominal diameter **L** Length of tie, at least 2d

The length of the tie **L** must be at least 2 times the rope nominal diameter (2d).

The shortening of the rope in this section applies to a single layer rope. On rotation-resistance, parallel roped ropes it may be necessary to tie several times to prevent the rope from jumping open when it is cut.

- ▶ Tie the rope on both sides with wire.
- ▶ Twist the end of the wire with the pliers to prevent them from releasing.

WARNING
Danger of injury due to flying sparks!
- ▶ Wear safety glasses and safety gloves.

- ▶ Separate the rope vertically to the rope axis.
- ▶ Fasten the end connections on the rope according to the manufacturer's instructions.
- ▶ Remove the tie on both ends of the separation from the rope.

LWE/ab Muli 010/24201-02-02/en

copyright © Liebherr-Werk Ehingen GmbH 2016

7.06 Fill quantities, lubrication schedule

1	Fill quantities	3
2	Lubrication schedule	4

LWE/ab Muli 010/24201-02-02/en

copyright © Liebherr-Werk Ehingen GmbH 2016

LWE/ab Muli 010/24201-02-02/en

Fig.195219

copyright © Liebherr-Werk Ehingen GmbH 2016

1 Fill quantities

WARNING
Handling poisonous operating fluids and lubricants!
Poisoning, severe health damage.

When operating fluids are to be used, stored and disposed of:
- ▶ Observe and follow the printed instructions on the original containers.
- ▶ Store operating fluids exclusively in the closed original container.
- ▶ Keep children away from operating fluids. Keep operating fluids away from children.
- ▶ Dispose of operating items and lubricants in an environmentally safe manner.

NOTICE
Damage on aggregates due to impermissible additives!
- ▶ Make sure that **no** impermissible additives are added to the operating fluids.

Note
- ▶ Fill quantities and descriptions of service items and lubricants are specified in the Service fill.
- ▶ Fill the crane chassis, crane superstructure and equipment with the respective operating fluids.
- ▶ The specified fill quantities (change quantities) are orientation values. The marks on the dipsticks, inspection ports and sight gauges are decisive for filling.
- ▶ The equipment depends on the purchased scope of delivery.

On mobile cranes with truck chassis:
- ▶ Observe the maintenance intervals and maintenance notes of the truck chassis manufacturer.

NOTICE
Danger of property damage!
- ▶ Do **not** mix different oil products!
- ▶ Do **not** mix synthetic oils with mineral oils!
- ▶ Adhere to the data in the Service fill!

1.1 Diesel engine

- ▶ Check the engine oil. See Maintenance intervals and maintenance instructions.
- ▶ Adhere to the operating instructions of the engine manufacturer.

1.2 Coolant system

NOTICE
Property damage due to impermissible coolant!
- ▶ Do **not** mix different coolant products.
- ▶ Do **not** thin Liebherr-Fertig-Mix (Liebherr Ready Made Mix).

When adding coolant:
- ▶ Use exclusively the same coolant.

Coolants contain corrosion inhibitor - antifreeze fluid.

Add coolant only on the filler neck. See Service fill.

Note
If the coolant is changed:
- ▶ Contact the Service Dept. at Liebherr-Werk Ehingen GmbH for procedure.
- ▶ Empty the cooling system completely and flush.

In exceptional cases, the coolant can be supplemented with different coolants.

LWE/ab Muli 010/24201-02-02/en

copyright © Liebherr-Werk Ehingen GmbH 2016

Note
Supplementing the coolant with different coolants:
▶ Contact the Service Dept. at Liebherr-Werk Ehingen GmbH for procedure.

▶ Check the coolant level. See Maintenance intervals and maintenance instructions.

1.3 Transmission

▶ Check the gear oil. See Maintenance intervals and maintenance instructions.

1.4 Hydraulic system

Note
▶ The oil level must be in the center of the hydraulic oil level sight gauge at 20 °C oil temperature.

At lower hydraulic oil temperature:
▶ Warm up the hydraulic oil.

At higher hydraulic oil temperature:
▶ Cool off the hydraulic oil.
▶ Retract all hydraulic cylinders completely, for example luffing cylinder, telescoping cylinder.

On vehicles with level regulation:
▶ Lower the vehicle completely with the level regulation.

▶ Check the hydraulic oil. See Maintenance intervals and maintenance instructions.

2 Lubrication schedule

Note
▶ Grease the crane chassis, crane superstructure and equipment with the respective lubricants. See Service fill.
▶ The equipment depends on the purchased scope of delivery.

On mobile cranes with truck chassis:
▶ Observe the maintenance intervals and maintenance notes of the truck chassis manufacturer.

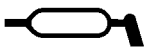

Fig.107729

Note
▶ Lube points are marked with a symbol.

LWE/ab Muli 010/24201-02-02/en

copyright © Liebherr-Werk Ehingen GmbH 2016

7.07 Service fluids and lubricants

1 Specified service items and lubricants for Liebherr cranes 3

LWE/ab Muli 010/24201-02-02/en

copyright © Liebherr-Werk Ehingen GmbH 2016

LWE/ab Muli 010/24201-02-02/en

Fig.195219

copyright © Liebherr-Werk Ehingen GmbH 2016

1 Specified service items and lubricants for Liebherr cranes

No.	Crane components	Ambient temperature for driving and crane operation	
		-25 °C to +50 °C	**-40 °C to +30 °C**
1.1	Diesel engine **with**	**LWE Id. No.: 10871536**	**LWE Id. No.: 10871536**
	Exhaust aftertreatment	**Liebherr Motoroil 5W-30**	**Liebherr Motoroil 5W-30**
	US Tier 4	SAE 5W-30 and ACEA E4	SAE 5W-30 and ACEA E4
	EU-Stage IV	Observe the instructions of the engine manufacturer	Observe the instructions of the engine manufacturer
	EU-Stage III A Derivat	**Below -20 °C** with pre-heating	**Below -20 °C** with pre-heating
1.2	Diesel engine **with**	**LWE Id. No.: 10663796**	**LWE Id. No.: 11100934**
	Exhaust aftertreatment	**Liebherr Motoroil 10W-40 low ash**	**Liebherr Motoroil 5W-30 low ash**
	US Tier 4 interim	SAE 10W-40 low ash and ACEA E6	SAE 5W-30 low ash and ACEA E6
	EU-Stufe III B	Observe the instructions of the engine manufacturer	Observe the instructions of the engine manufacturer
		Below -20 °C with pre-heating	**Below -20 °C** with pre-heating
	Note: To improve the cold start ability of the diesel engine at an ambient temperature below -10 °C , we recommend the use of Liebherr Motoroil 5W-30 low ash, **LWE-Id. No.: 11100934**		
1.3	Diesel engine **without**	**LWE Id. No.: 861005308**	**LWE Id. No.: 10871536**
	Exhaust aftertreatment	**Liebherr Motoroil 10W-40**	**Liebherr Motoroil 5W-30**
	as 1.2 or	SAE 10W-40 and ACEA E4	SAE 5W-30 and ACEA E4
	optionally also	Observe the instructions of the engine manufacturer	Observe the instructions of the engine manufacturer
		Below -20 °C with pre-heating	**Below -20 °C** with pre-heating
	Note: To improve the cold start ability of the diesel engine at an ambient temperature below -10 °C , we recommend the use of Liebherr Motoroil 5W-30, **LWE-Id. No.: 10871536**		
2	Drive axle	**LWE Id. No.: 861901008**	**LWE Id. No.: 10425142**
	with differentials,	**Liebherr Gear Hypoid 90 EP**	**Liebherr Syntogear Plus 75W-90**
	planetary gear and	SAE 90 and API GL 5	SAE 75W-90 and API GL 5
	installed distributor gear		
3	Axle drive ZF DK-7	**LWE Id. No.: 861901008**	**LWE Id. No.: 10425142**
		Liebherr Gear Hypoid 90 EP	**Liebherr Syntogear Plus 75W-90**
		ZF TE-ML 05	ZF TE-ML 05
4.1	Vehicle distributor gear	**LWE Id. No.: 861901008**	**LWE Id. No.: 10425142**
	KESSLER	**Liebherr Gear Hypoid 90 EP**	**Liebherr Syntogear Plus 75W-90**
	VG 1800, VG 2400, VG 2550, VG 2600, VG 3750	SAE 90 and API GL 5	SAE 75W-90 and API GL 5

copyright © Liebherr-Werk Ehingen GmbH 2016

No.	Crane components	Ambient temperature for driving and crane operation	
		-25 °C to +50 °C	-40 °C to +30 °C
	W3750		
4.2	Vehicle Distributor gear with PTO for crane operation KESSLER VG 2700 with PTO VG 3751 mit PTO	**LWE Id. No.: 10425142** **Liebherr Syntogear Plus 75W-90** SAE 75W-90 and API GL 5	**LWE Id. No.: 10425142** **Liebherr Syntogear Plus 75W-90** SAE 75W-90 and API GL 5
4.3	Vehicle distributor gear ZF Passau, STEYR PUCH VG 1200, VG 1600, VG 2000, VG 3800	**LWE Id. No.: 861901008** **Liebherr Gear Hypoid 90 EP** ZF TE-ML 19	**LWE Id. No.: 10425142** **Liebherr Syntogear Plus 75W-90** ZF TE-ML 19
5	Miter gear for crane operation	**LWE Id. No.: 10425142** **Liebherr Syntogear Plus 75W-90** SAE 75W-90 and API GL 5	**LWE Id. No.: 10425142** **Liebherr Syntogear Plus 75W-90** SAE 75W-90 and API GL 5
6	Offset gear (drop box) ZF Passau, STEYR PUCH	**LWE Id. No.: 861901008** **Liebherr Gear Hypoid 90 EP** ZF TE-ML 19	**LWE Id. No.: 10425142** **Liebherr Syntogear Plus 75W-90** ZF TE-ML 19
7.1	Pump distributor gear filled with **mineral** gear oil	**LWE Id. No.: 861901008** **Liebherr Gear Hypoid 90 EP** SAE 90 and API GL 5	**LWE Id. No.: 10425142** **Liebherr Syntogear Plus 75W-90** SAE 75W-90 and API GL 5
7.2	Pump distributor gear filled with **synthetic** gear oil	**LWE Id. No.: 861901208** **Liebherr Gear PG 220** CLP PG 220, DIN 51517-3 **WARNING: May not be mixed with other oils!**	**LWE Id. No.: 10664125** **Liebherr Gear PG 150** CLP PG 150, DIN 51517-3 **WARNING: May not be mixed with other oils!**
7.3	Pump distributor gear LTC 1055-3.1	**LWE Id. No.: 10425142** **Liebherr Syntogear Plus 75W-90** SAE 75W-90 and API GL 5	**LWE Id. No.: 10425142** **Liebherr Syntogear Plus 75W-90** SAE 75W-90 and API GL 5
8.1	Powershift transmission ZF Torque converter transmission WG 120, WG 150, WG 180, WG 181, WG 200, WG 201	**LWE Id. No.: 861005308** **Liebherr Motoroil 10W-40** ZF TE-ML 03 **Below -20 °C** run until warm according to operating instructions	**LWE Id. No.: 861900608** **Liebherr Hydraulic-Gear ATF** ZF TE-ML 03 **Below -20 °C** run until warm according to operating instructions
8.2	Powershift transmission	**LWE Id. No.: 861900608**	**LWE Id. No.: 861900608**

LWE/ab Muli 010/24201-02-02/en

copyright © Liebherr-Werk Ehingen GmbH 2016

No.	Crane components	Ambient temperature for driving and crane operation	
		-25 °C to +50 °C	-40 °C to +30 °C
	ZF torque converter WG 251* ZF ERGOPOWER WG 210, WG 260, WG 310 * also for ambient temperatures above -10 °C	**Liebherr Hydraulic-Gear ATF** ZF TE-ML 03 **Below -20 °C** run until warm according to operating instructions	**Liebherr Hydraulic-Gear ATF** ZF TE-ML 03 **Below -20 °C** run until warm according to operating instructions
9	Powershift transmission CLARK	**LWE Id. No.: 861005308** **Liebherr Motoroil 10W-40** SAE 10W-40 and ACEA E4 **Below -20 °C** run until warm according to operating instructions	**LWE Id. No.: 861900608** **Liebherr Hydraulic-Gear ATF** ATF Dexron II D and ALLISON C4 **Below -20 °C** run until warm according to operating instructions
10	Offset gear (drop box) ALLISON	**LWE Id. No.: 861005308** **Liebherr Motoroil 10W-40** SAE 10W-40 and API CF, ACEA E4 **Below -20 °C** run until warm according to operating instructions	**LWE Id. No.: 861900608** **Liebherr Hydraulic-Gear ATF** ATF Dexron II D or ALLISON C4 **Below -20 °C** run until warm according to operating instructions
11.1	Automatic transmission ALLISON CLBT 740, CLBT 750, CLBT 754, CLBT 755 HT 755, HD 4560	**LWE Id. No.: 861900608** **Liebherr Hydraulic-Gear ATF** ATF Dexron III or ALLISON C4 **Below -20 °C** run until warm according to operating instructions	**LWE Id. No.: 861903708** **CASTROL Transynd** ATF Dexron III or ALLISON C4 **Below -20 °C** run until warm according to operating instructions
11.2	Automatic transmission ZF	**LWE Id. No.: 861900608** **Liebherr Hydraulic-Gear ATF** ZF TE-ML 14 **Below -20 °C** run until warm according to operating instructions	**LWE Id. No.: 861900608** **Liebherr Hydraulic-Gear ATF** ZF TE-ML 14 **Below -20 °C** run until warm according to operating instructions
12	Automatic transmission ZF AS-Tronic ZF TC-Tronic (basic gear) ZF TC-Tronic HD (basic gear)	**LWE Id. No.: 10218305** **ZF-Ecofluid M** ZF TE-ML 02	**LWE Id. No.: 10218305** **ZF-Ecofluid M** ZF TE-ML 02 **below -20 °C** preheat gear according to operating instructions
13.1	Torque converter coupling ZF TC HD	**LWE Id. No.: 10218305** **ZF-Ecofluid M** ZF TE-ML 02	**LWE Id. No.: 10218305** **ZF-Ecofluid M** ZF TE-ML 02

copyright © Liebherr-Werk Ehingen GmbH 2016

No.	Crane components	Ambient temperature for driving and crane operation	
		-25 °C to +50 °C	-40 °C to +30 °C
			below -20 °C preheat gear according to operating instructions
13.2	Torque converter coupling ZF TC 2	**LWE Id. No.: 861900608** **Liebherr Hydraulic-Gear ATF** ZF TE-ML 14	**LWE Id. No.: 861900608** **Liebherr Hydraulic-Gear ATF** ZF TE-ML 14
14	Gearbox ZF ECO-Split	**LWE Id. No.: 10218305** **ZF Ecofluid M** ZF TE-ML 02	**LWE Id. No.: 10218305** **ZF Ecofluid M** ZF TE-ML 02
15	Slewing gear	**LWE Id. No.: 861901208** **Liebherr Gear PG 220** CLP PG 220, DIN 51517-3 **WARNING: May not be mixed with other oils!**	**LWE Id. No.: 861901208** **Liebherr Gear PG 220** CLP PG 220, DIN 51517-3 **WARNING: May not be mixed with other oils!**
16.1	Rope winch	**LWE Id. No.: 861901208** **Liebherr Gear PG 220** CLP PG 220, DIN 51517-3 **WARNING: May not be mixed with other oils!**	**LWE Id. No.: 861901208** **Liebherr Gear PG 220** CLP PG 220, DIN 51517-3 **WARNING: May not be mixed with other oils!**
16.2	Rope winch LR 13000	**LWE Id. No.: 11000948** **Liebherr Universalfett 9900** KPF2N-25, DIN 51502	**LWE Id. No.: 11000948** **Liebherr Universalfett 9900** KPF2N-25, DIN 51502
17	Winch of Telescopic boom guying	**LWE Id. No.: 861901208** **Liebherr Gear PG 220** CLP PG 220, DIN 51517-3 **WARNING: May not be mixed with other oils!**	**LWE Id. No.: 861901208** **Liebherr Gear PG 220** CLP PG 220, DIN 51517-3 **WARNING: May not be mixed with other oils!**
18.1	Crane hydraulics Crane chassis and crane superstructure	**LWE Id. No.: 861903508** **Liebherr Hydraulic 37** HVLP, DIN 51524-3	**LWE Id. No.: 10293807** **Liebherr Hydraulic Plus Arctic** HVLPD HC, DIN 51524-3
18.2	Crane hydraulics Crane chassis and crane superstructure LTM 11200-9.1 LTR 11200 LR 13000, LR 11000, LR 1600/2, LR 1600/2-W LTC 1055-3.1	**LWE Id. No.: 10293807** **Liebherr Hydraulic Plus Arctic** HVLPD HC, DIN 51524-3	**LWE Id. No.: 10293807** **Liebherr Hydraulic Plus Arctic** HVLPD HC, DIN 51524-3
19	Brake system	**LWE Id. No.: 861000108**	**LWE Id. No.: 861000108**

LWE/ab Muli 010/24201-02-02/en

copyright © Liebherr-Werk Ehingen GmbH 2016

No.	Crane components	Ambient temperature for driving and crane operation	
		-25 °C to +50 °C	-40 °C to +30 °C
	if hydraulically actuated	**DOT 4** SAE J 1703e	**DOT 4** SAE J 1703e
20	Clutch actuator	**LWE Id. No.: 861000108** **DOT 4** SAE J 1703e	**LWE Id. No.: 861000108** **DOT 4** SAE J 1703e
21	King pin bearing Drive shaft if **not** maintenance-free	**LWE Id. No.: 861301308** **Liebherr Spezialfett 9610 Plus** KP2K-20, DIN 51502	**LWE Id. No.: 10296825** **Liebherr Universalfett Arctic** KPFHC1N-60, DIN 51502
22	Glide and roller bearing roller bearing joint	**LWE Id. No.: 861301308** **Liebherr Spezialfett 9610 Plus** KP2K-20, DIN 51502	**LWE Id. No.: 10296825** **Liebherr Universalfett Arctic** KPFHC1N-60, DIN 51502
23	Central lubrication system	**LWE Id. No.: 861301308** **Liebherr Spezialfett 9610 Plus** KP2K-20, DIN 51502	**LWE Id. No.: 10296825** **Liebherr Universalfett Arctic** KPFHC1N-60, DIN 51502
24.1	Slewing ring connection Roller bearing	**LWE Id. No.: 861301308** **Liebherr Spezialfett 9610 Plus** KP2K-20, DIN 51502	**LWE Id. No.: 10296825** **Liebherr Universalfett Arctic** KPFHC1N-60, DIN 51502
24.2	Slewing ring connection LR 13000	**LWE Id. No.: 11000948** **Liebherr Universalfett 9900** KPF2N-25, DIN 51502	**LWE Id. No.: 10296825** **Liebherr Universalfett Arctic** KPFHC1N-60, DIN 51502
25.1	Support plate with equalization	**LWE Id. No.: 861303608** **Liebherr Teleskopfett 9613 Plus** KP2K-30, DIN 51502	**LWE Id. No.: 861303608** **Liebherr Teleskopfett 9613 Plus** KP2K-30, DIN 51502
25.2	Glide shoes for cab guidance on vehicle frame LTC 1045-3.1	**LWE Id. No.: 861303608** **Liebherr Teleskopfett 9613 Plus** KP2K-30, DIN 51502	**LWE Id. No.: 861303608** **Liebherr Teleskopfett 9613 Plus** KP2K-30, DIN 51502
26	Sliding beam Plastic glide bearing Beam for track adjustment	**LWE Id. No.: 861303608** **Liebherr Teleskopfett 9613 Plus** KP2K-30, DIN 51502	**LWE Id. No.: 861303608** **Liebherr Teleskopfett 9613 Plus** KP2K-30, DIN 51502
27.1	Telescopic boom Plastic glide bearing Corner guide top	**LWE Id. No.: 861303608** **Liebherr Teleskopfett 9613 Plus** KP2K-30, DIN 51502	**LWE Id. No.: 861303608** **Liebherr Teleskopfett 9613 Plus** KP2K-30, DIN 51502

copyright © Liebherr-Werk Ehingen GmbH 2016

No.	Crane components	Ambient temperature for driving and crane operation	
		-25 °C to +50 °C	-40 °C to +30 °C
27.2	Telescopic boom Outer glide bearing Lower shell Inner glide bearing (only during assembly)	**LWE Id. No.: 861303308** **Liebherr Spezialfett 1336** KP2K-30, DIN 51502 Spray grease	**LWE Id. No.: 861303308** **Liebherr Spezialfett 1336** KP2K-30, DIN 51502 Spray grease
27.3	Telescopic boom LTC 1045-3.1 LTM 1050-3.1	**LWE Id. No.: 11651459** **Bechem Berulub TCG 1 V**	**LWE Id. No.: 11651459** **Bechem Berulub TCG 1 V**
28	Boom lock	**LWE Id. No.: 861301308** **Liebherr Spezialfett 9610 Plus** KP2K-20, DIN 51502	**LWE Id. No.: 10296825** **Liebherr Universalfett Arctic** KPFHC1N-60, DIN 51502
29	Guide rail on Telescoping cylinder	**LWE Id. No.: 861303308** **Liebherr Spezialfett 1336** KP2K-30, DIN 51502 Spray grease	**LWE Id. No.: 861303308** **Liebherr Spezialfett 1336** KP2K-30, DIN 51502 Spray grease
30	Gear ring rotary connection Slewing gear drive pinion	**LWE Id. No.: 861007708** **RHS-Fluid** OGPFOS-20, DIN 51502	**LWE Id. No.: 861007708** **RHS-Fluid** OGPFOS-20, DIN 51502
31	Running rope	**LWE Id. No.: 10173371** **Liebherr WR-Lube SC** Adhesive grease	**LWE Id. No.: 10173371** **Liebherr WR-Lube SC** Adhesive grease
32	Radiator fluid Diesel engine and heating system	**LWE Id. No.: 10871121** **Liebherr Antifreeze OS Mix** Pre-mixed corrosion inhibitor / antifreeze **WARNING: May not be diluted and / or mixed with other corrosion inhibitors / antifreeze!**	**LWE Id. No.: 10871121** **Liebherr Antifreeze OS Mix** Pre-mixed corrosion inhibitor / antifreeze **WARNING: May not be diluted and / or mixed with other corrosion inhibitors / antifreeze!**
33.1	Travel gears Crawler crane	see data tag	see data tag
33.2	Travel gear LTR 1060 LTR 1100	**LWE Id. No.: 861901008** **Liebherr Gear Hypoid 90 EP** SAE 90 and API GL 5	**LWE Id. No.: 10425142** **Liebherr Syntogear Plus 75W-90** SAE 75W-90 and API GL 5
33.3	Travel gear LTR 11200	**LWE Id. No.: 861901208** **Liebherr Gear PG 220** CLP PG 220, DIN 51517-3 **WARNING: May not be mixed with other oils!**	**LWE Id. No.: 861901208** **Liebherr Gear PG 220** CLP PG 220, DIN 51517-3 **WARNING: May not be mixed with other oils!**

LWE/ab Muli 010/24201-02-02/en

copyright © Liebherr-Werk Ehingen GmbH 2016

No.	Crane components	Ambient temperature for driving and crane operation	
		-25 °C to +50 °C	**-40 °C to +30 °C**
34	Recovery winch	See data tag and manufacturer's instructions	See data tag and manufacturer's instructions
35	Recovery winch rope	See manufacturer's instructions	See manufacturer's instructions
36	Steering uncoupling LTC 1045-3.1	**LWE Id. No.: 10800345** **Teflon-Spray**	**LWE Id. No.: 10800345** **Teflon-Spray**

LWE/ab Muli 010/24201-02-02/en

copyright © Liebherr-Werk Ehingen GmbH 2016

Empty page!

copyright © Liebherr-Werk Ehingen GmbH 2016

8 Inspections of cranes

copyright © Liebherr-Werk Ehingen GmbH 2016

copyright © Liebherr-Werk Ehingen GmbH 2016

8.01 Periodic crane inspections

1	General	3
2	Inspection of carrying crane structures, especially steel structures	4
3	Inspection of the rope feed mechanism in the telescopic boom	78
4	Inspection of locking system of telescopic boom	80
5	Inspection of safety ropes and anchor points	82
6	Inspection of load handling equipment and assembly aids	84
7	Inspection of fastening equipment	85
8	Inspection of membrane accumulator	85
9	Inspection of relapse cylinders	85
10	Inspection of rope pulleys	86
11	Inspection of carrier rollers	87
12	Inspection of extension conditions of sliding beams	88
13	Inspecting the function of the overload protection	88
14	Inspecting the roller slewing ring connection	88
15	Inspection of the mounting of the load bearing equipment	88
16	Inspection of the tele extension with eccentric, illustration 1	90
17	Inspection of change over pulleys, illustration 2	90
18	Inspection of the oil and fuel reservoirs	90

LWE/ab Muli 010/24201-02-02/en

copyright © Liebherr-Werk Ehingen GmbH 2016

LWE/ab Muli 010/24201-02-02/en

Fig.195219

copyright © Liebherr-Werk Ehingen GmbH 2016

1 General

This crane was tested at the manufacturer's facilities prior to shipment in accordance with the valid ISO, FEM and DIN Standards and BGV D6 (BGG 905).

The safety level achieved during initial commissioning may not be attainable during operation.

Examples of the root cause of such deviations include; e.g., wear and tear, corrosion, effects of external forces, changes in the environment and changes to the mode of operation.

The operator is responsible for taking the necessary steps to ensure that the level of safety is maintained.

The crane operator is therefore obligated to have the crane inspected by an **expert**, at intervals depending on the operational conditions but at least once per year, from the first day of vehicle registration.

The crane must be inspected by an **authorized inspector** every four years after it has been licensed.

The crane must be annually inspected by an **authorized inspector** after its twelfth year of operation.

To ensure the high safety standard of the crane, we recommend - no later than the 12th year, in the 20th year, in the 26th year and then every 4 years - to have the crane undergo a general inspection by an **authorized inspector**. At that time, in addition to the usual scope of inspection, all load carrying parts of the crane - the complete steel structure with all welding seams as well as all components and connecting devices - are to be subjected to a complete visual inspection. The following procedural notes for repeat inspections are to be observed for that.

WARNING
There is a risk of weakening the supporting components when major changes or repairs are made to the crane!
▶ In this case, the operator must have the crane reinspected by an authorized inspector before placing it back into service!

In addition, all respective local and national regulations also apply.

Expert: Is a person whose technical training and experience means that he has adequate knowledge in the field of inspecting technical equipment. They must be familiar with regulations on safety at work, as well as guidelines and standards that allow them to assess the safe condition of technical equipment (e.g. cranes). Potential experts are workshop staff and customer service engineers.

Note
▶ Experts are not authorized inspectors!

Authorized inspector: Is a person whose technical training and experience means that he has explicit knowledge in the field of inspecting technical equipment. They must be familiar with regulations on safety at work, as well as guidelines and standards that allow them to assess the safe condition of technical equipment (e.g. cranes). They are responsible for testing technical equipment and giving an expert opinion. Authorized inspectors can be active engineers.

Note
▶ Authorized inspectors are recognized experts who have received special training!

Periodic inspection are principally a visual inspection, where the inspector (either type) appraises the condition of the crane and its components.

The purpose of the inspections is to avoid accidents by detecting deficiencies early on. Any deficiencies determined by the expert / authorized inspector must be documented, corrected, and subsequently reinspected.

A number of important examples of items that are particularly important during the periodic crane inspections are listed in the following. We wish to advise that the authorized inspectors / experts take sole responsibility for the crane inspections that they carry out.

LWE/ab Muli 010/24201-02-02/en

copyright © Liebherr-Werk Ehingen GmbH 2016

Note

▶ The inspection may not be solely limited to the following positions shown in the sample construction illustrations. Rather the **entire** crane structure must be subjected to a careful inspection!

In the Crane operating instructions, chapter 8.90 is a checklist to assist the inspector during the periodic inspections of Liebherr mobile and crawler cranes.

If the inspector has any questions they should be directed through the Service Department of Liebherr-Werk Ehingen GmbH to the technical departments.

WARNING

Danger of accident!

▶ Adhere to the following inspection guidelines and intervals.

2 Inspection of carrying crane structures, especially steel structures

2.1 Basic principles and procedure

DANGER

Danger of fatal injury!

The crane structures, particularly steel constructions have to be checked by an expert or authorized inspector at least once a year. If this is not the case, they could fail and cause fatal injury or seriously damage the crane!

▶ Crane structures, particularly steel constructions must be checked by an expert or an authorized inspector at least once a year!

▶ Shorten the inspection intervals when the crane is subjected to above-average load spectrums, for example when handling large material quantities or frequently erecting long boom systems.

▶ When the crane was subjected to excessive operating loads; e.g., due to an unusual impact, the crane structure, especially the steel structures must be inspected immediately!

Crane structures, especially steel structures, such as booms, turntables, chassis, support equipment (e.g., sliding beams or folding outriggers) must be carefully inspected, at the very least during the annual recommended crane inspections. Inspect welding seams especially through an intensive visual inspection.

If paint damage with corrosion (rust) is found on load carrying parts of the crane structure, especially on telescopic booms, lattice booms, lattice jibs, pull rods etc., then the rust must be removed, primed and painted.

During an electrolyte process, such as corrosion in combination with water, an atomic hydrogen is created, which causes to hydrogen induced corrosion with resulting cracks on high tensile fine grain construction steel.

If disassembly and assembly work on the crane is required to carry out the inspections, then they must be carried out by taking the manufacturer's data into account or in coordination with the crane manufacturer.

We would like to point out that the framework of mobile cranes is designed for a limited number of stress work cycles. This also determines the utilization or service life of the framework. The service life is not determined solely by the number of stress cycles. It also depends on the loads (load spectrum) applied during the time in operation.

Liebherr mobile and crawler cranes are designed for specific characteristics and movements, such as constant deployment of drive forces, only occasional operation and load conditions according to EN 13000:2010.

LWE/ab Muli 010/24201-02-02/en

copyright © Liebherr-Werk Ehingen GmbH 2016

Liebherr mobile and crawler cranes are designed for assembly operation and - according to EN 13000:2010, chapter 4.1.2.1 - they can only take on a limited number of work cycles (N = 32000) when grouping them into collective class Q_1 = light (k_p = 0.125).

Example of a load collective according to grouping in collective class Q_1 = light (k_p = 0.125).

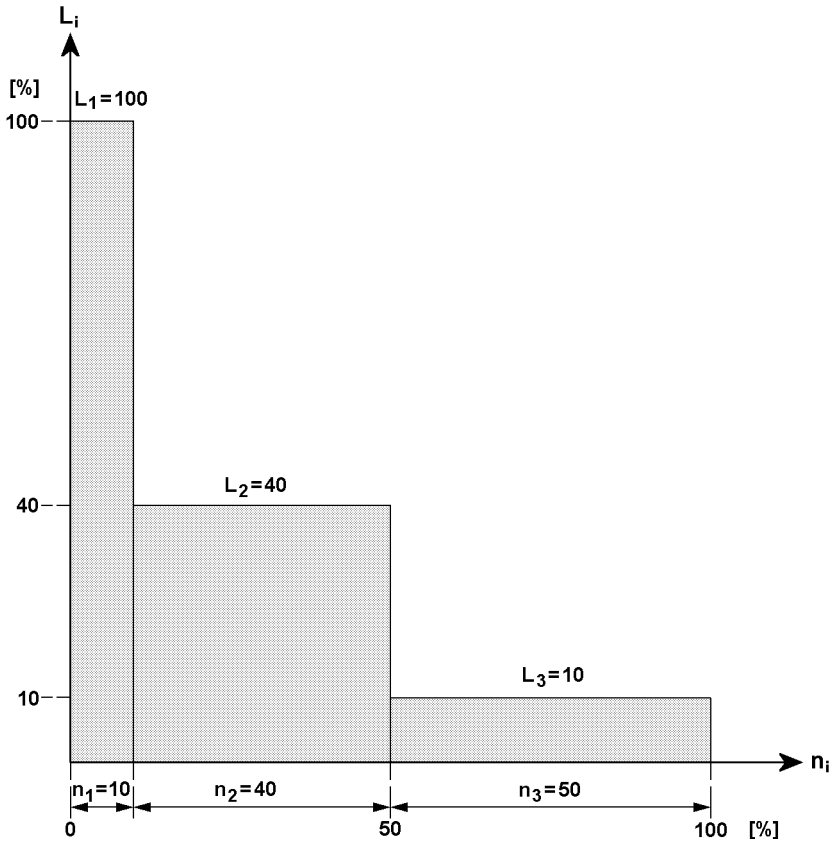

Fig.104716

L_i: Load proportion in relation to maximum load [%]

n_i: Load cycles in relation to maximum number [%]

Note

- The service life of Liebherr mobile and crawler cranes can be drastically reduced, for example when used in magnet, grapple or material handling applications!
- Repeated inspection of crane structure, especially the steel structure and the welding seams must then be carried out in shorter intervals than specified.

For that reason, the steel structures and the welding joints must be subjected to an visual intensive inspection by the expert during the specified periodic inspections.

If any damage (such as cracks or suspicion of cracks) are apparent on any part of the steel structure, the total extent of the damage must be determined by qualified specialists using appropriate material testing methods, such as magnetic crack detection, ultrasound or x-rays. Thereafter, the qualified personnel must determine whether or not the damaged area can be repaired by welding or by other means.

The following diagrams are samples of the load-bearing welding structures. The welding joints or seams or steel structural zones that require inspection may be present more than once and in various forms. The joints or zones must be inspected all around at the locations identified by arrows.

LWE/ab Muli 010/24201-02-02/en

copyright © Liebherr-Werk Ehingen GmbH 2016

Note

- The scope and extent of all inspections remain the sole responsibility of the inspectors!
- The scope and results of tests should be documented to permit reproducibility. This documentation forms part of the crane records and should be safely stored during the entire service life of the crane!
- The following diagrams are provided to assist the inspector. The illustrations are only examples and are not necessarily 100 % complete!

2.2 Repair welding

Defects such as cracks or permanent deformation on load-bearing steel components must be immediately reported to the Service Department at **Liebherr-Werk Ehingen GmbH**.

The defect must immediately be appraised by an authorized inspector according to standard welding technology rules. The authorized inspector must immediately ascertain if the crane can continue to be safely operated until a repair welding.

Repair welding may solely be made in consultation and under the instructions of the Customer Service at **Liebherr-Werk Ehingen GmbH** by authorized and trained expert personnel.

WARNING

Repair welding **not** according to regulations!
Death, severe bodily injuries, property damage.

- Contact Customer Service at **Liebherr-Werk Ehingen GmbH**.
- Coordinate the procedure for repair welding with **Liebherr-Werk Ehingen GmbH**.

Note

Exclusion of liability!
For repair welding, which were not carried out by personnel from **Liebherr-Werk Ehingen GmbH** or by authorized personnel from **Liebherr-Werk Ehingen GmbH**, **Liebherr-Werk Ehingen GmbH** excludes any liability, for system functionality as well as for the parts.

- Have repair welding made solely by personnel of **Liebherr-Werk Ehingen GmbH** or by personnel authorized by **Liebherr-Werk Ehingen GmbH**.

LWE/ab Muli 010/24201-02-02/en

copyright © Liebherr-Werk Ehingen GmbH 2016

2.3 Example for test points

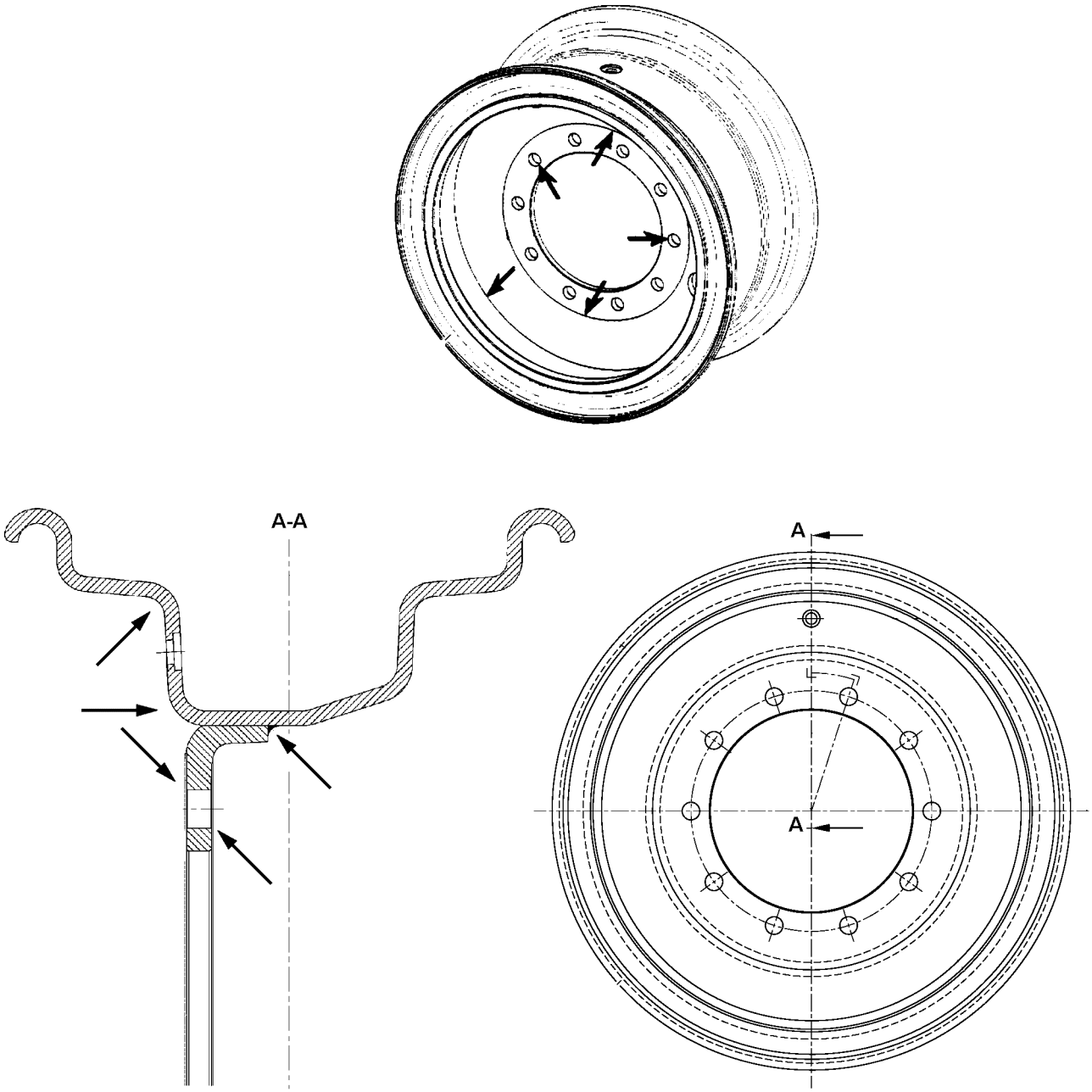

Fig.118052: Example for 1-part disk wheel

LWE/ab Muli 010/24201-02-02/en

copyright © Liebherr-Werk Ehingen GmbH 2016

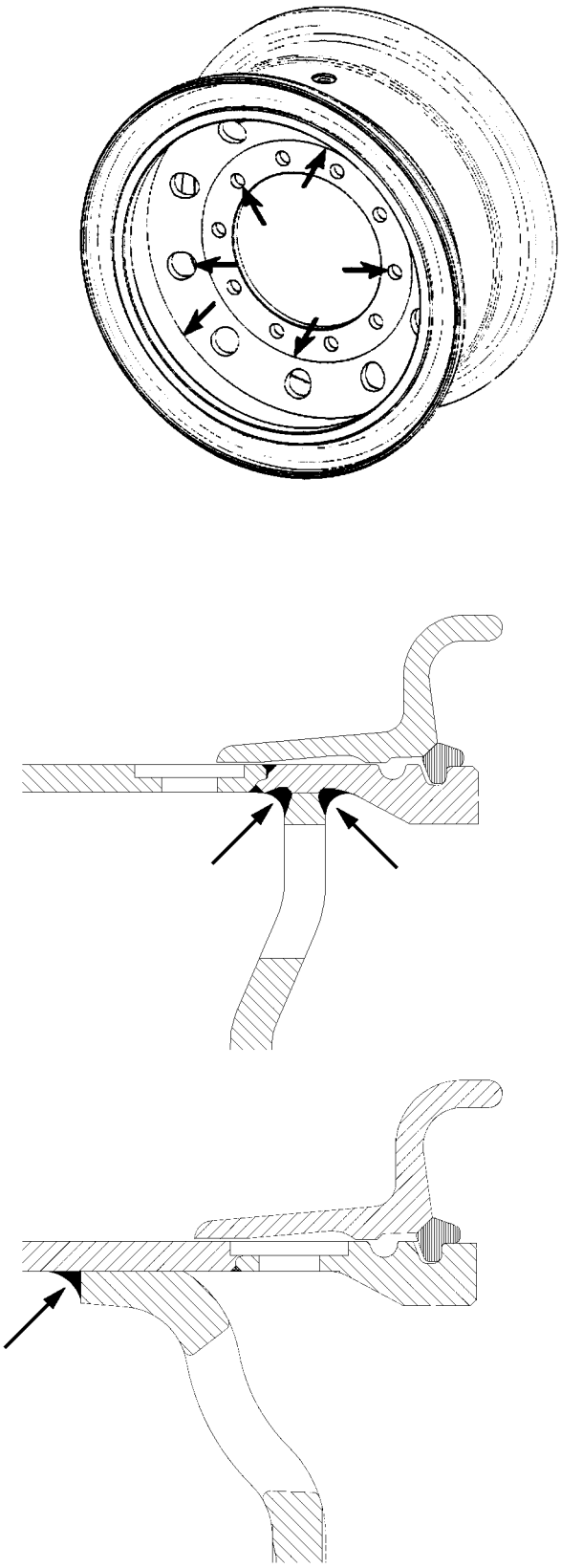

Fig.118053: Example for 3-part disk wheel

LWE/ab Muli 010/24201-02-02/en

copyright © Liebherr-Werk Ehingen GmbH 2016

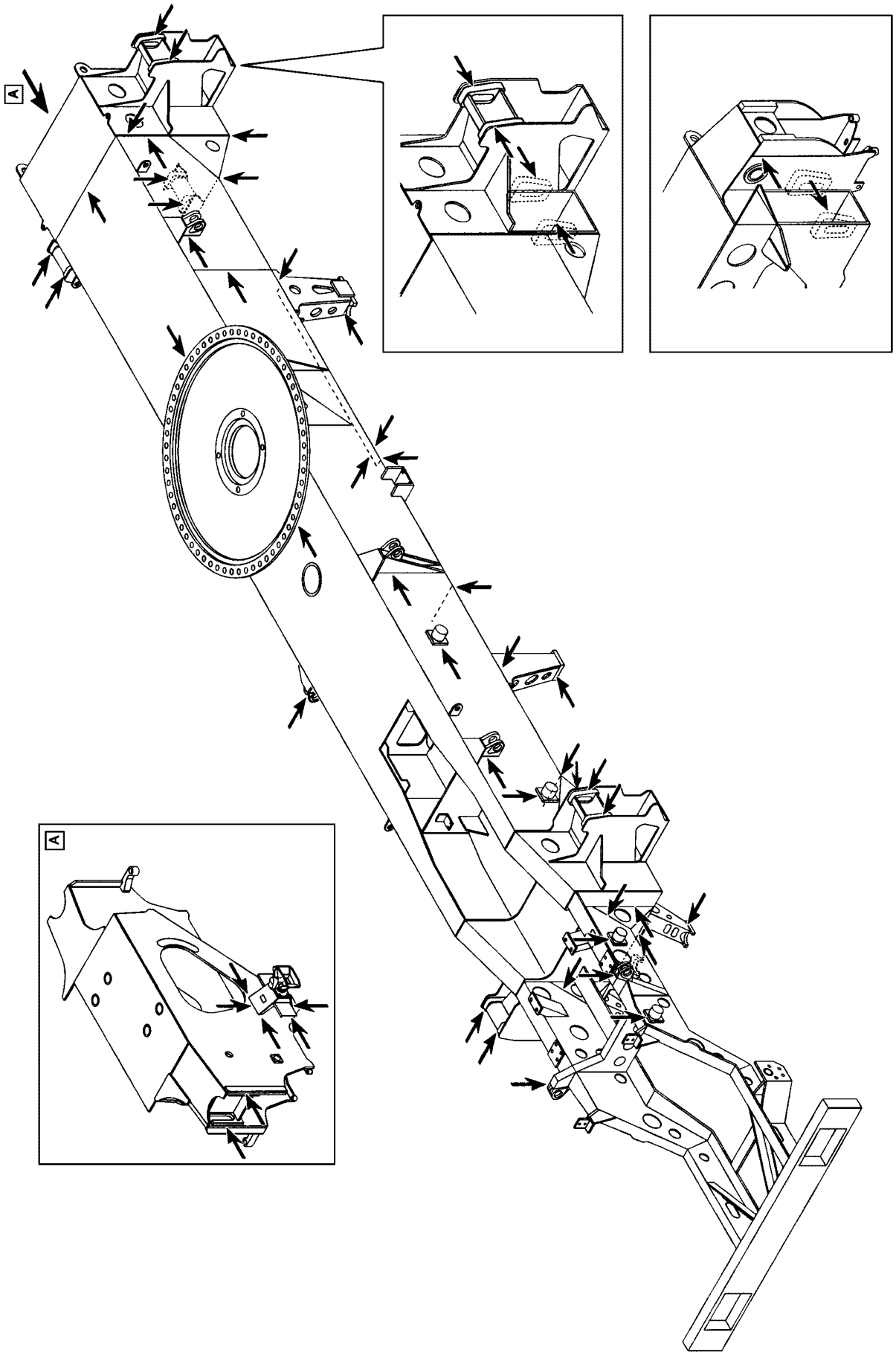

Fig.185046: Example for vehicle frames

copyright © Liebherr-Werk Ehingen GmbH 2016

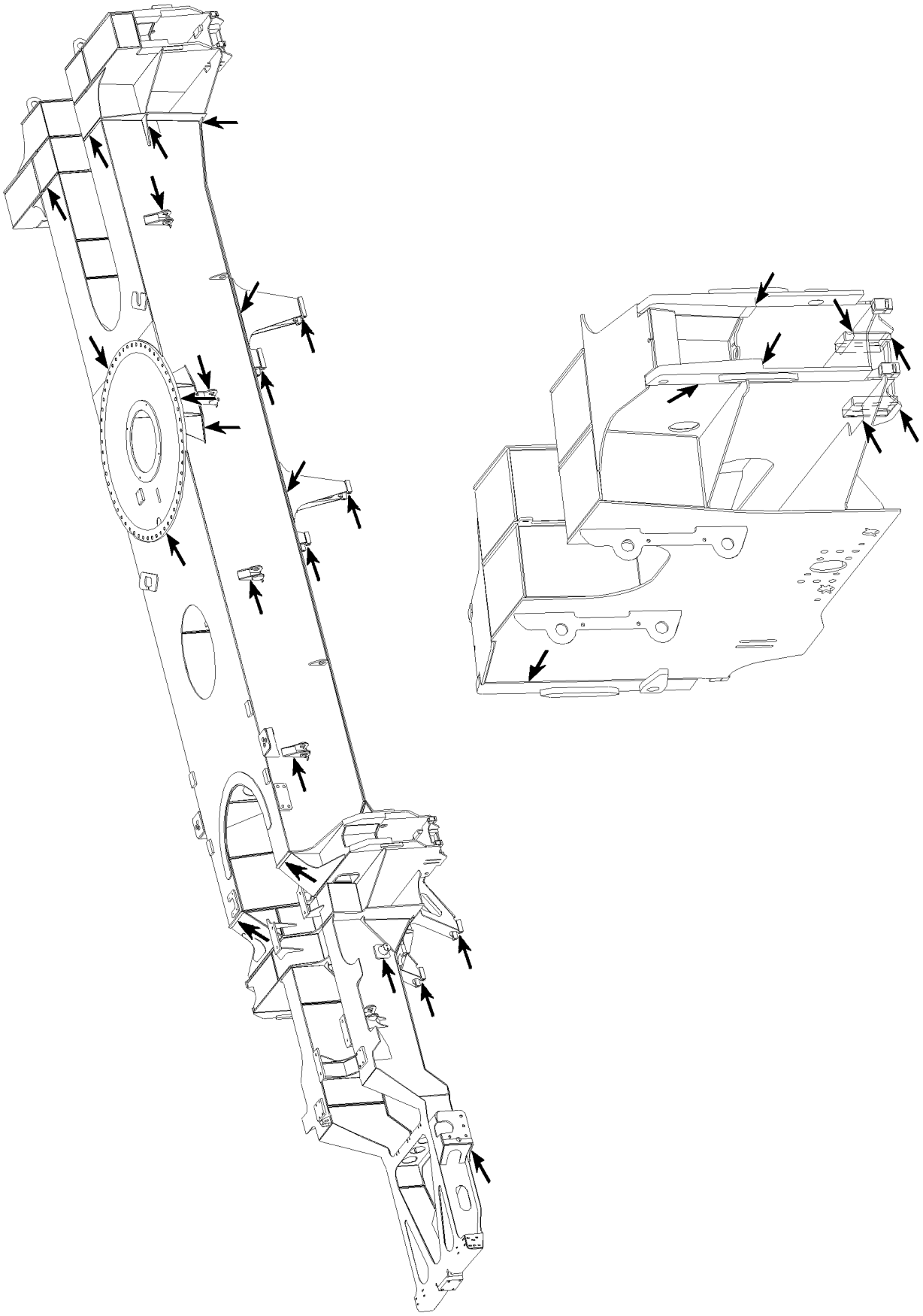

Fig.105702: Example for vehicle frames

LWE/ab Muli 010/24201-02-02/en

copyright © Liebherr-Werk Ehingen GmbH 2016

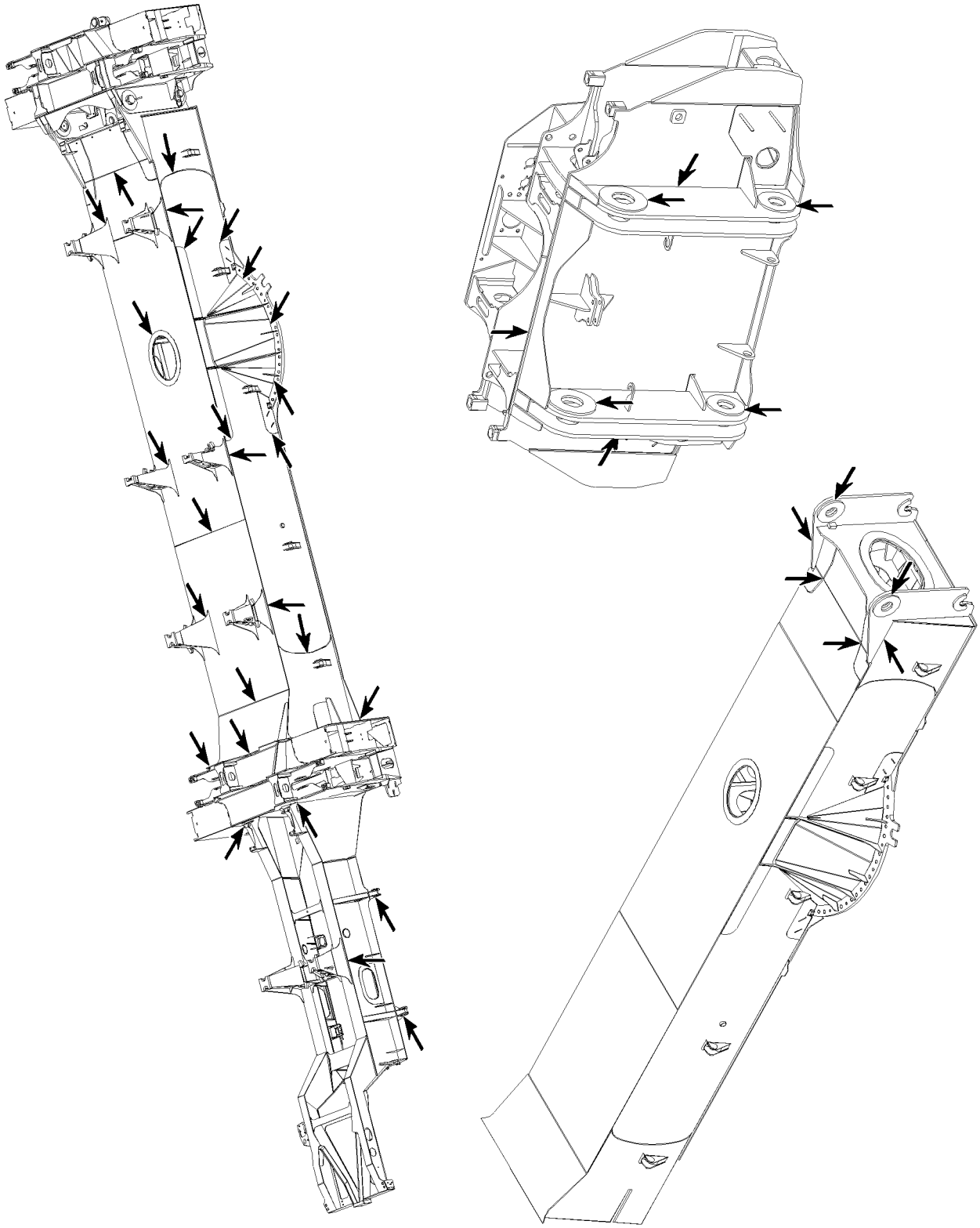

Fig.105719: Example for vehicle frames

LWE/ab Muli 010/24201-02-02/en

copyright © Liebherr-Werk Ehingen GmbH 2016

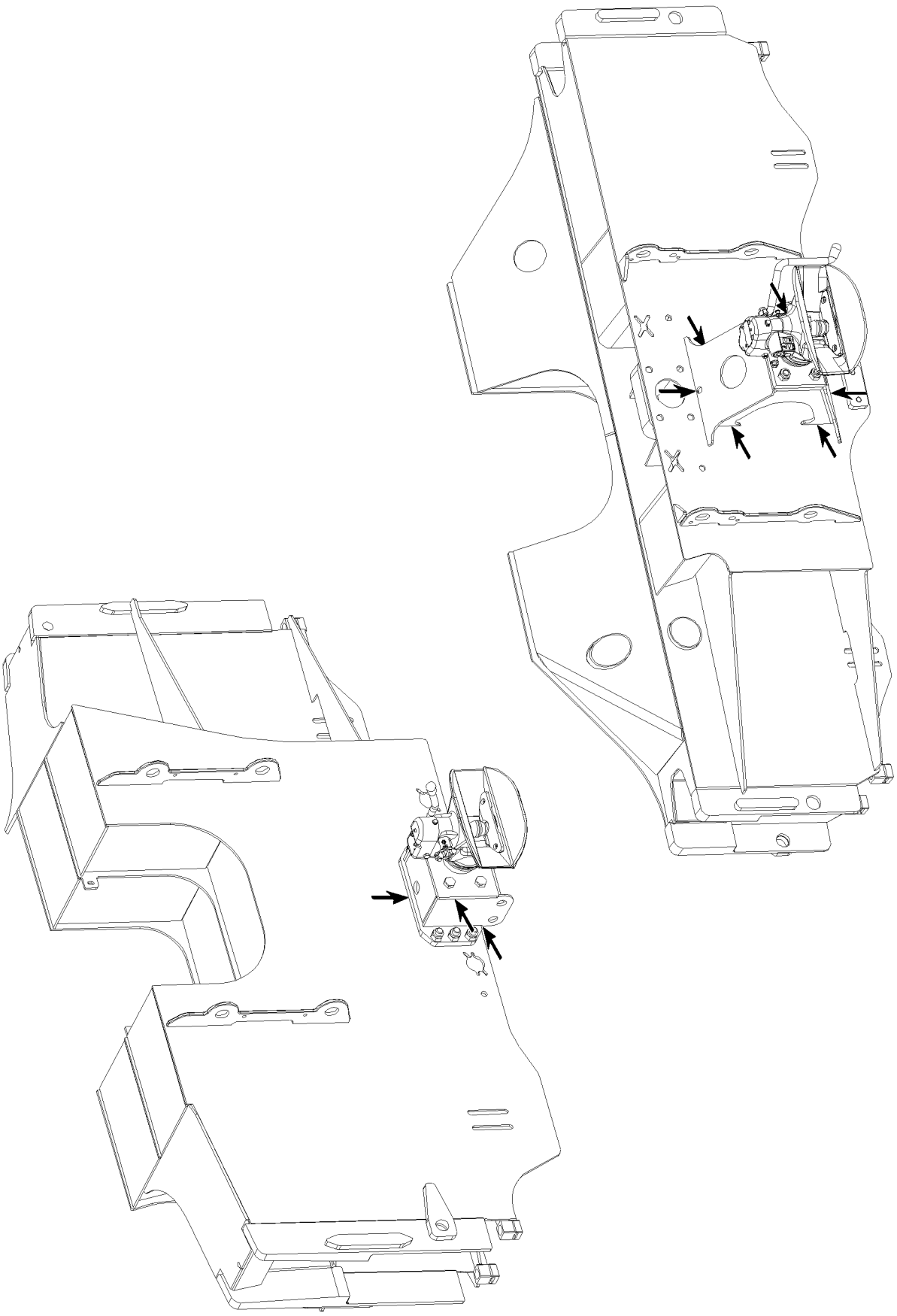

Fig.105687: Example for tow coupling

LWE/ab Muli 010/24201-02-02/en

copyright © Liebherr-Werk Ehingen GmbH 2016

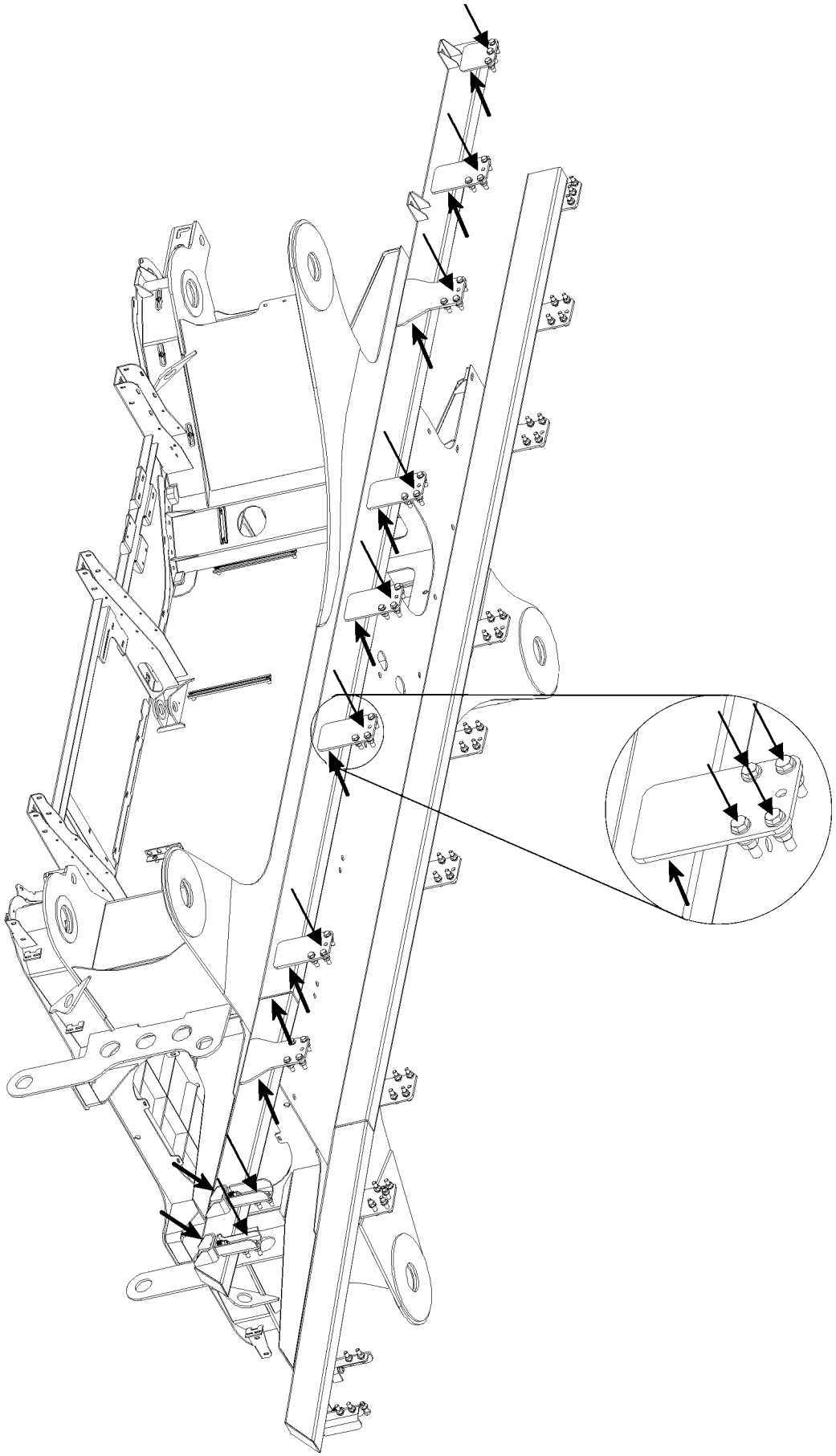

Fig.113940: Example for intermediate frame

LWE/ab Muli 010/24201-02-02/en

copyright © Liebherr-Werk Ehingen GmbH 2016

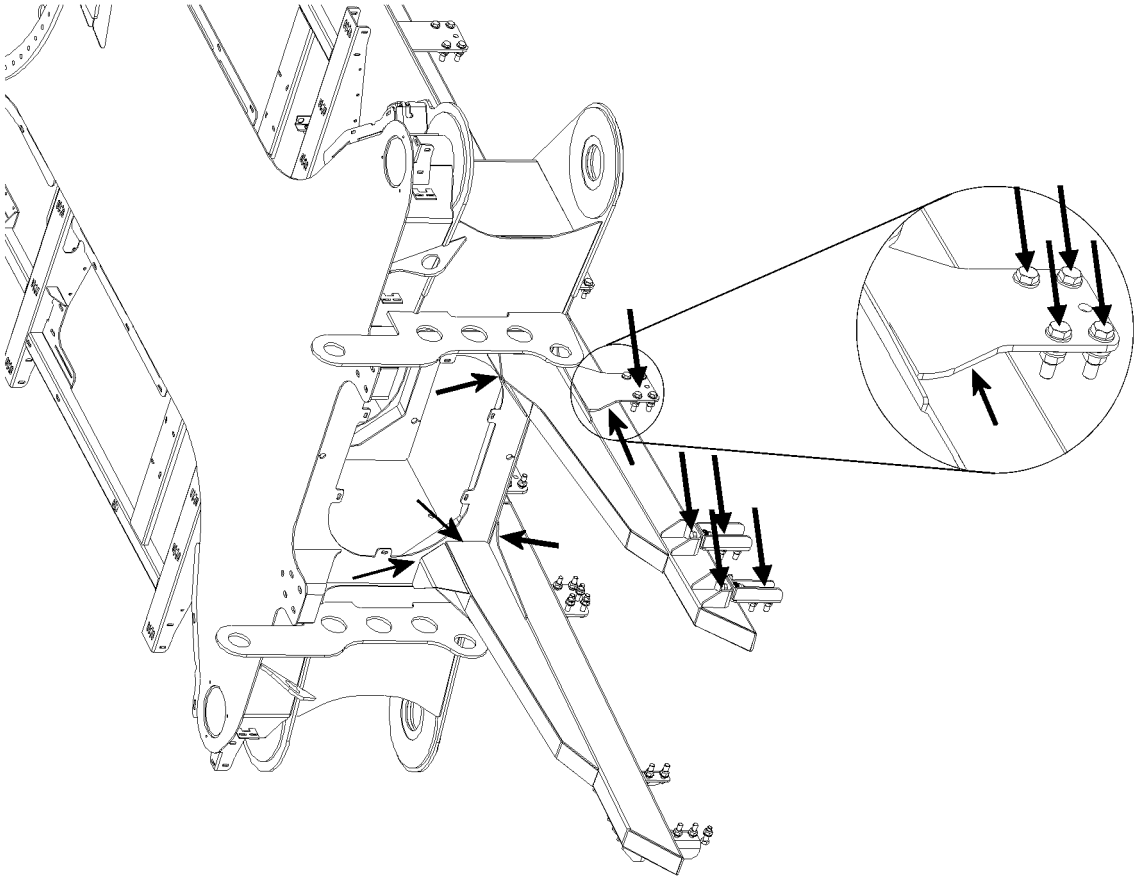

Fig.114000: Example for intermediate frame

LWE/ab Muli 010/24201-02-02/en

copyright © Liebherr-Werk Ehingen GmbH 2016

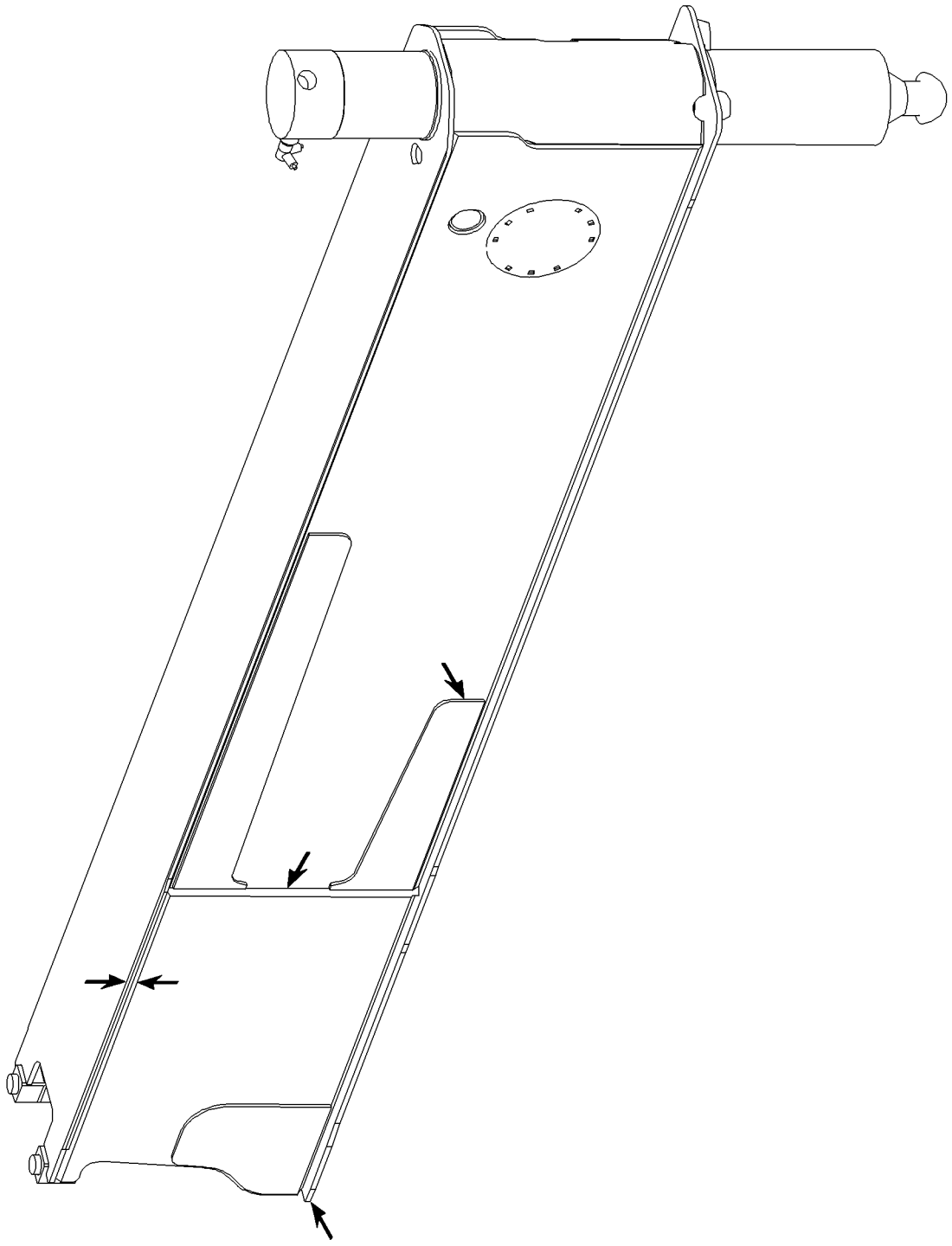

Fig.105698: Example for sliding beam

LWE/ab Muli 010/24201-02-02/en

copyright © Liebherr-Werk Ehingen GmbH 2016

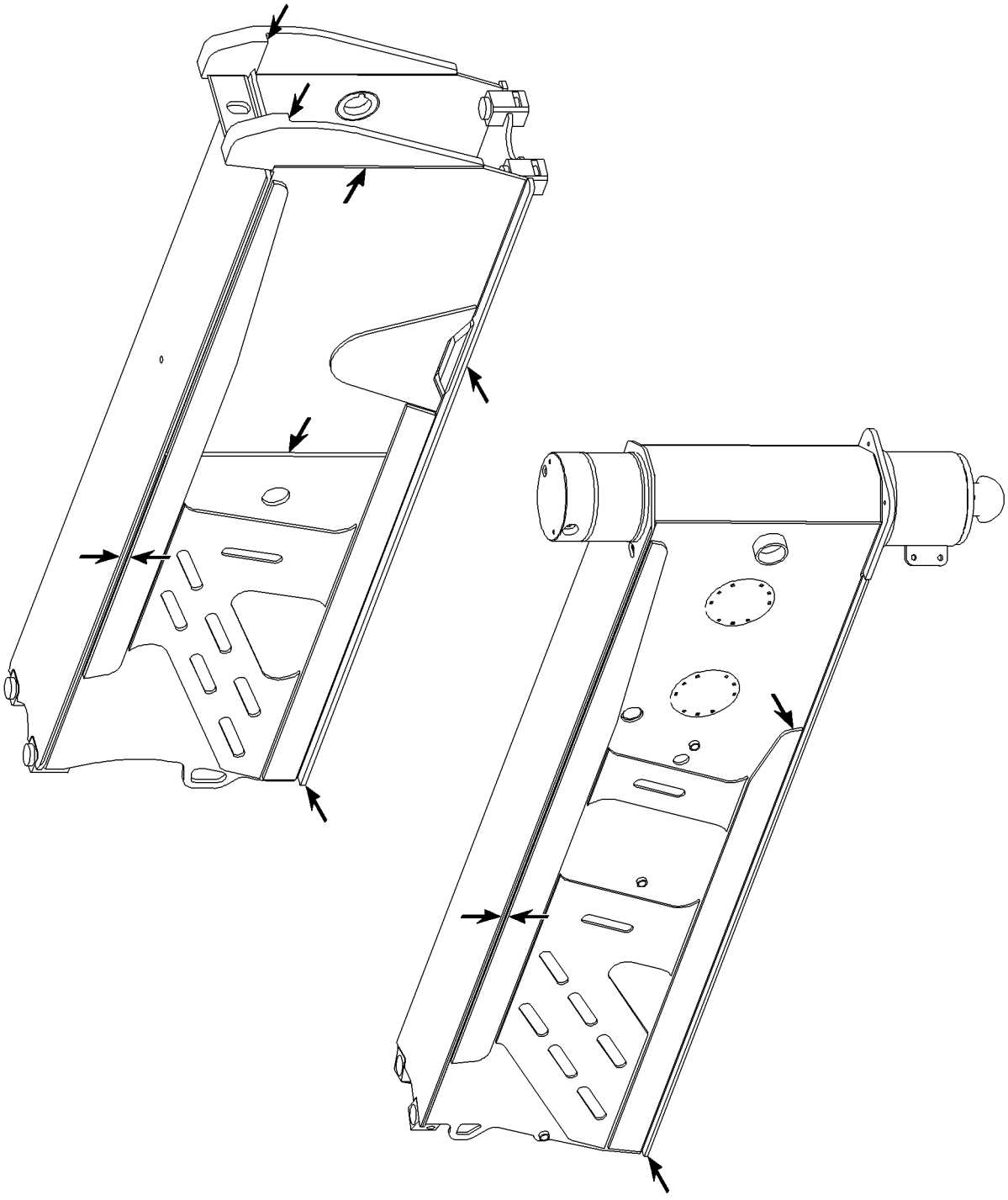

LWE/ab Muli 010/24201-02-02/en

Fig.105717: Example for sliding beam

copyright © Liebherr-Werk Ehingen GmbH 2016

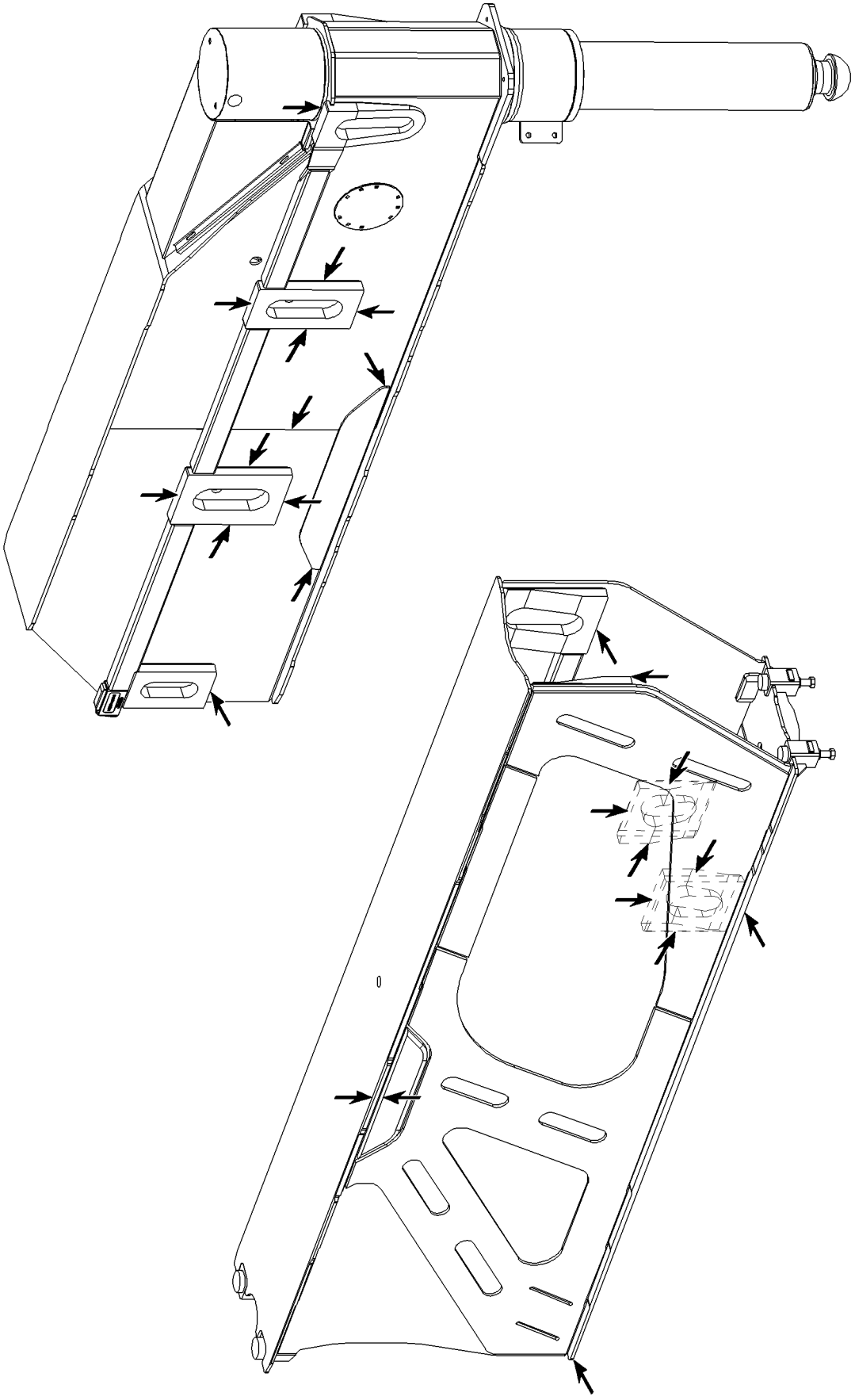

Fig.105718: Example for sliding beam

copyright © Liebherr-Werk Ehingen GmbH 2016

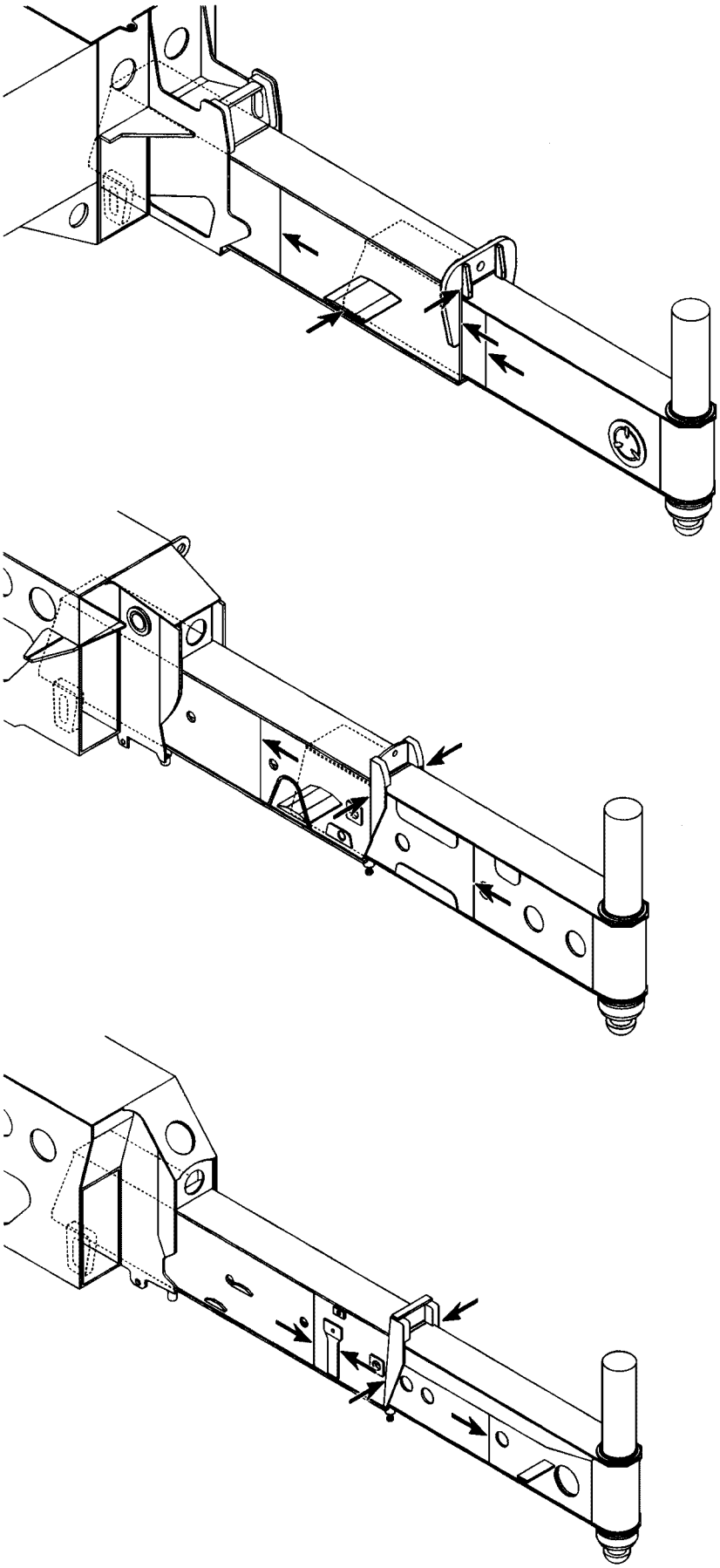

Fig.185047: Example for sliding beam

LWE/ab Muli 010/24201-02-02/en

copyright © Liebherr-Werk Ehingen GmbH 2016

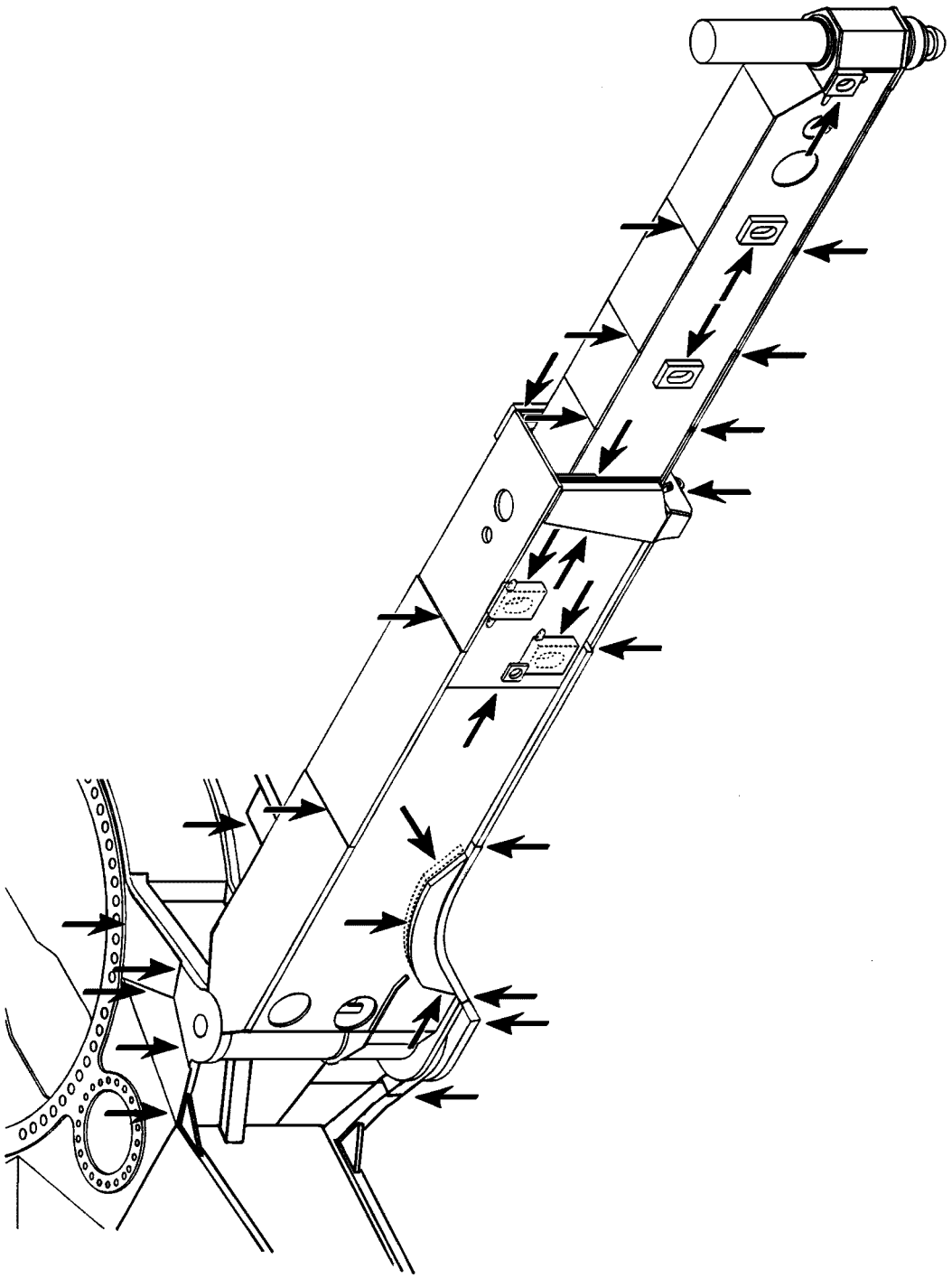

Fig.185060: Example for swingable sliding beam

copyright © Liebherr-Werk Ehingen GmbH 2016

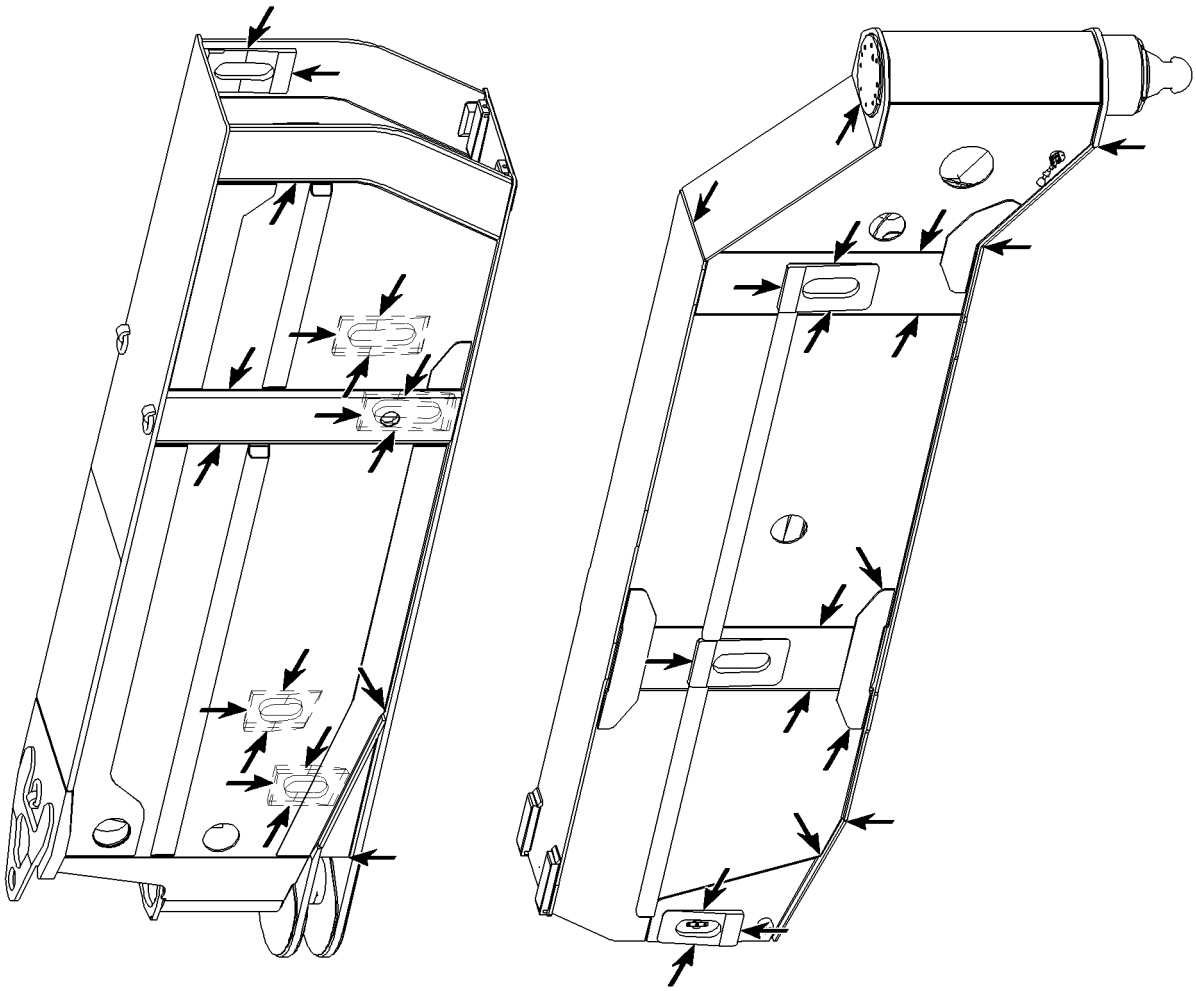

Fig.105690: Example for swingable sliding beam

LWE/ab Muli 010/24201-02-02/en

copyright © Liebherr-Werk Ehingen GmbH 2016

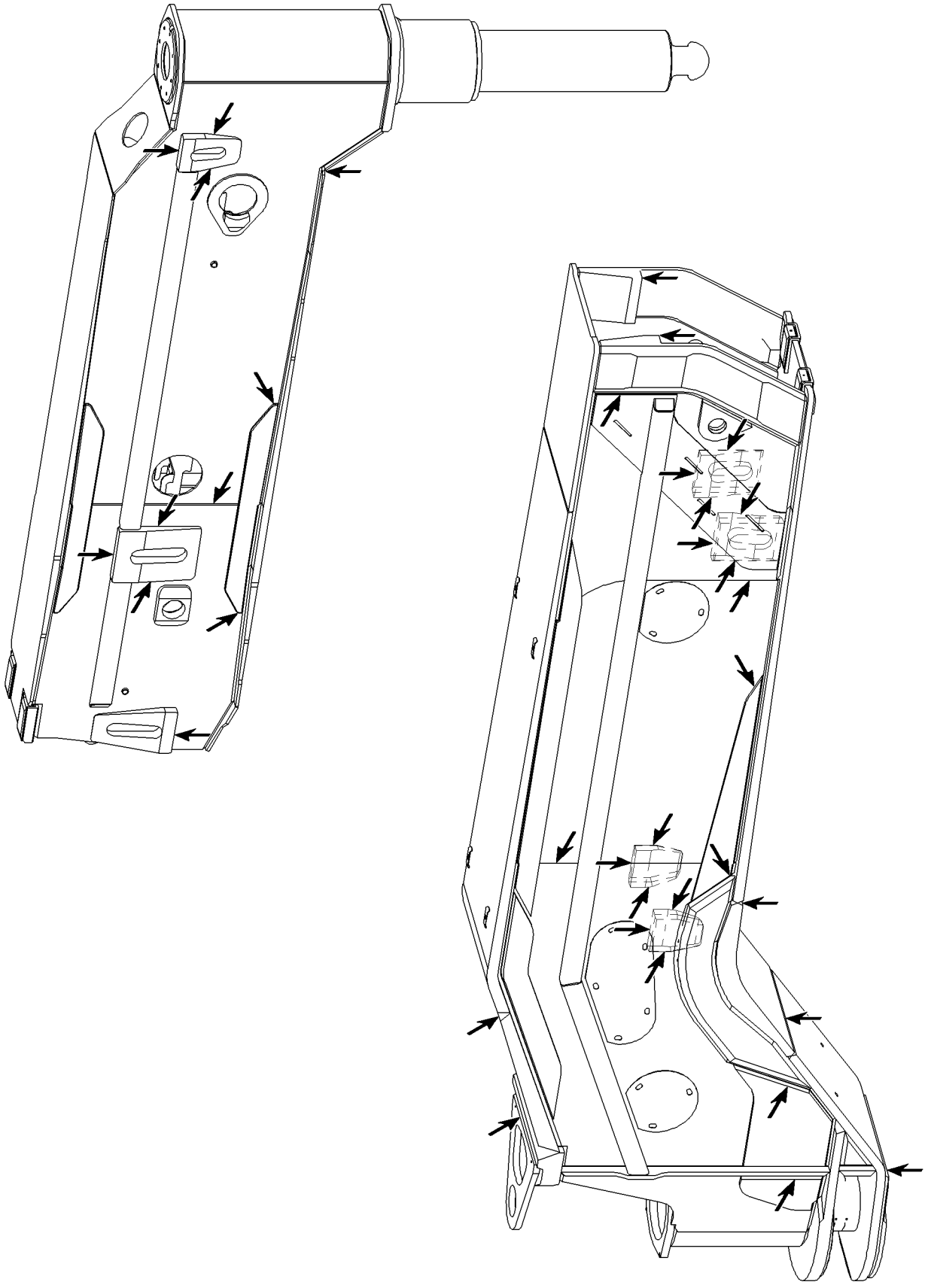

Fig.105704: Example for swingable sliding beam

copyright © Liebherr-Werk Ehingen GmbH 2016

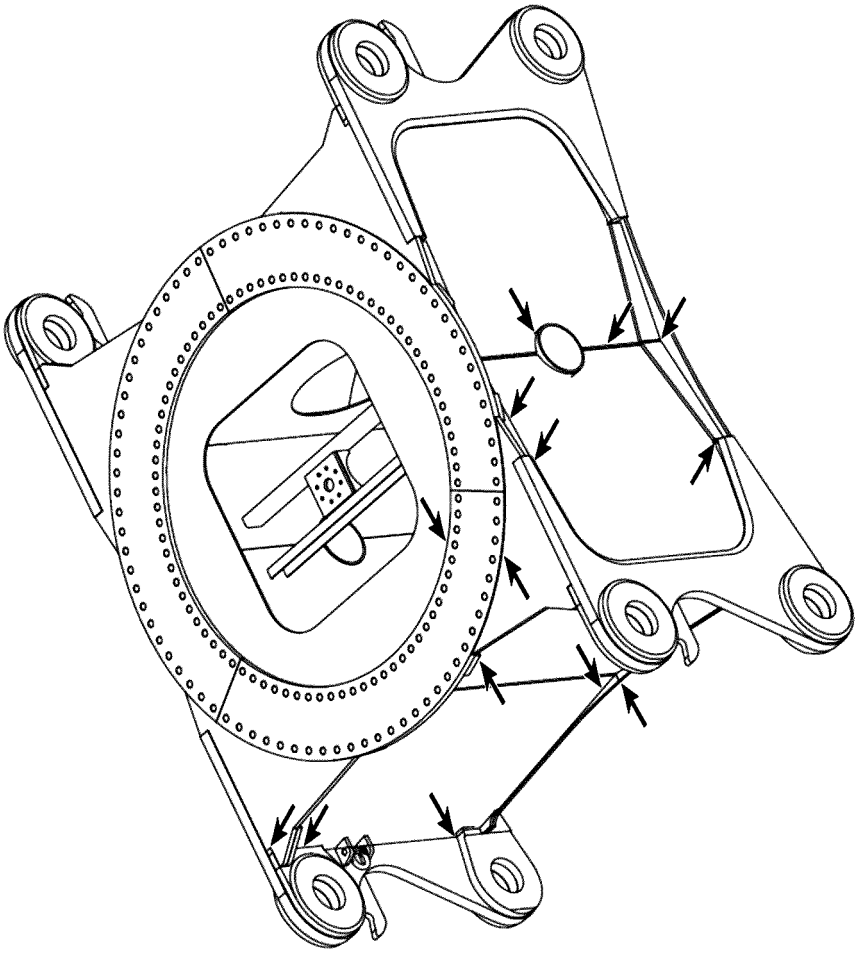

Fig.105725: Example for crawler center section

LWE/ab Muli 010/24201-02-02/en

copyright © Liebherr-Werk Ehingen GmbH 2016

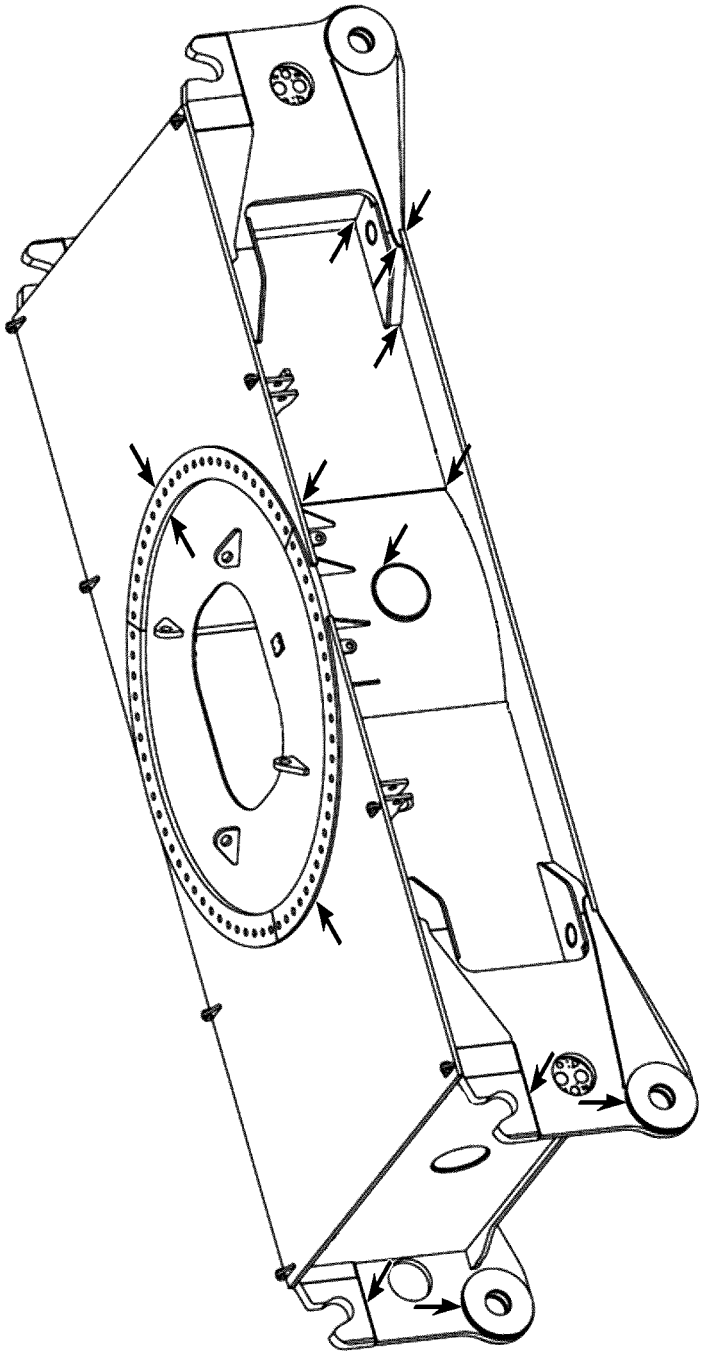

Fig.105726: Example for crawler center section

LWE/ab Muli 010/24201-02-02/en

copyright © Liebherr-Werk Ehingen GmbH 2016

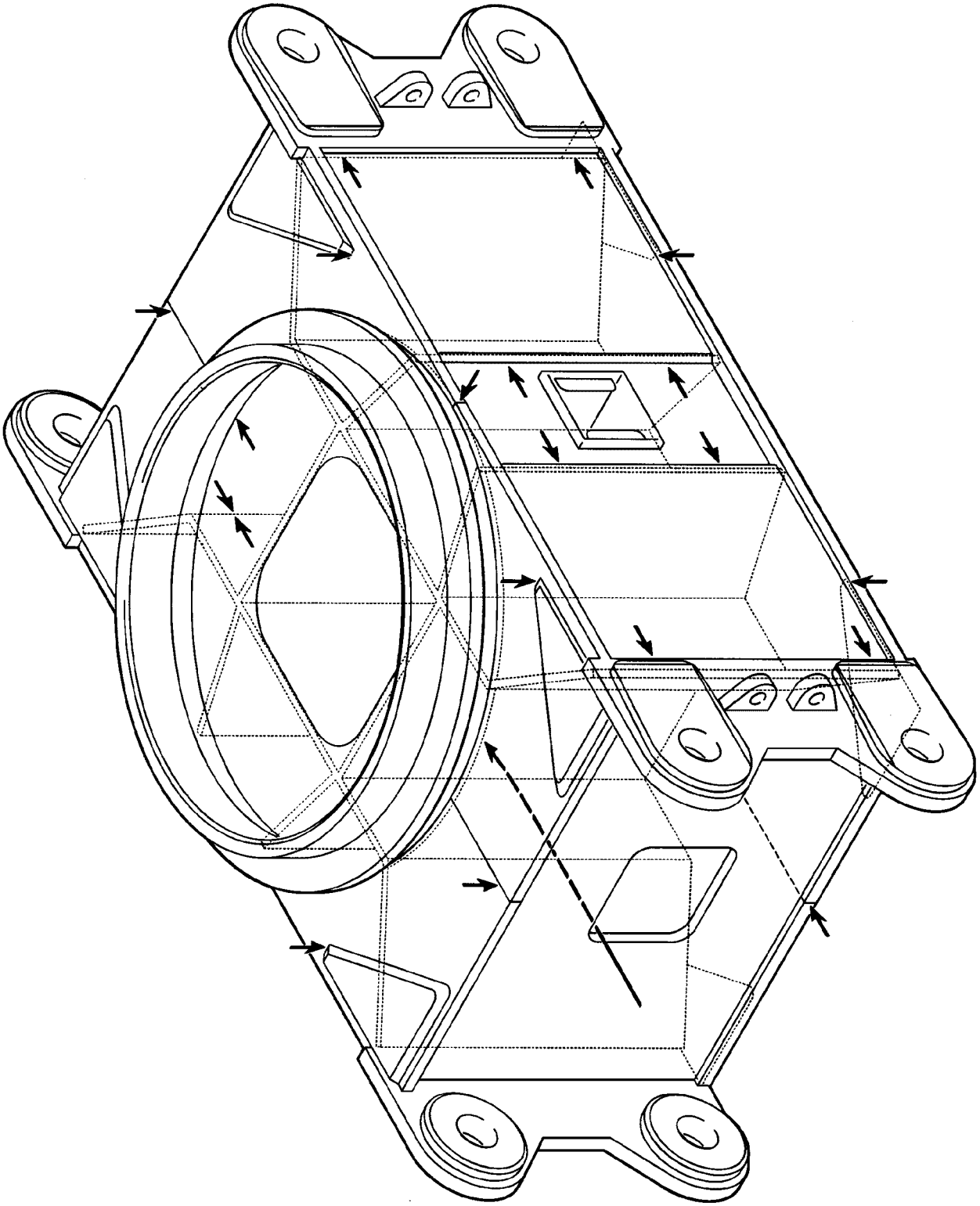

LWE/ab Muli 010/24201-02-02/en

Fig.187347: Example for crawler center section

copyright © Liebherr-Werk Ehingen GmbH 2016

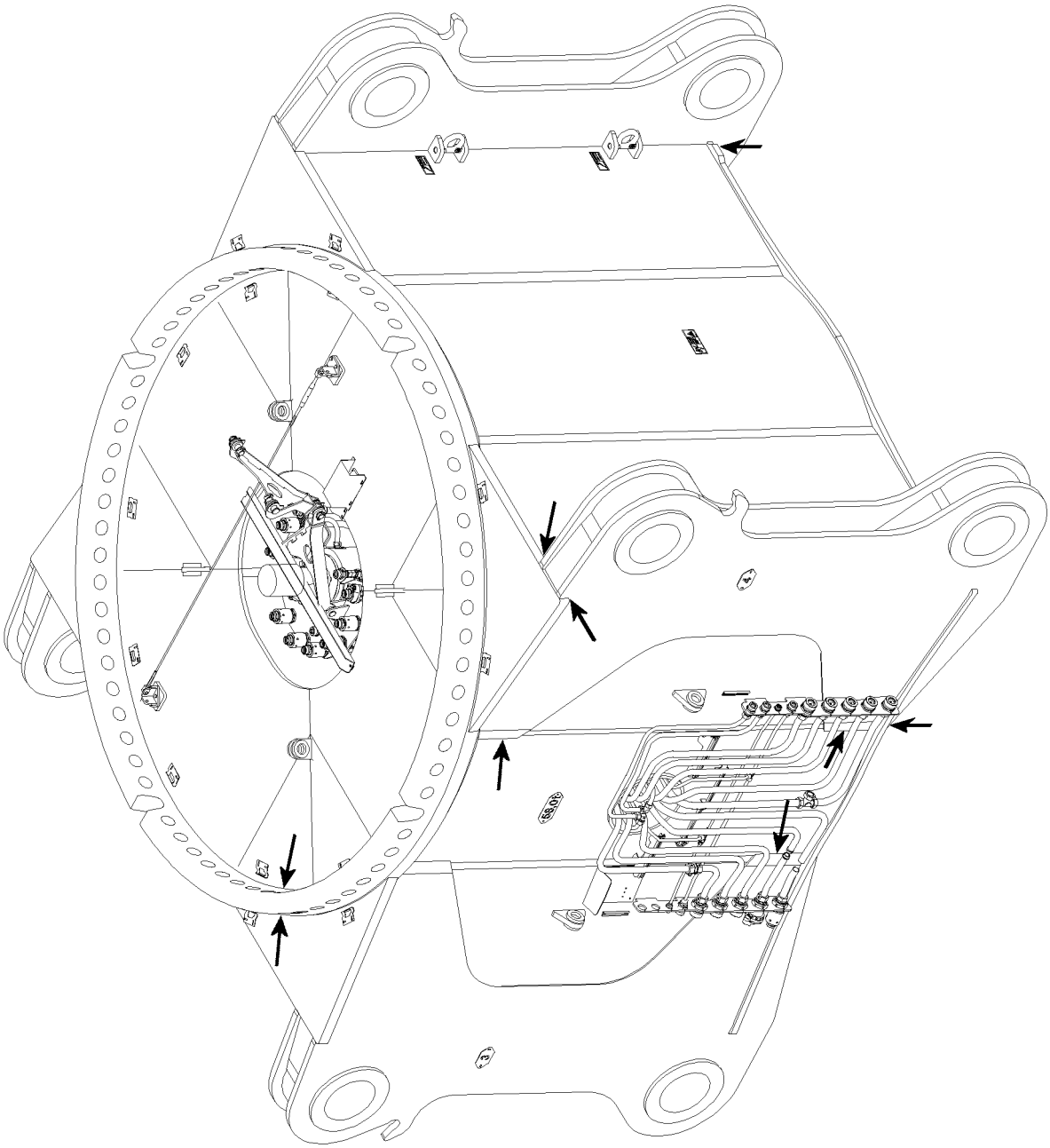

LWE/ab Muli 010/24201-02-02/en

Fig.115920: Example for crawler center section

copyright © Liebherr-Werk Ehingen GmbH 2016

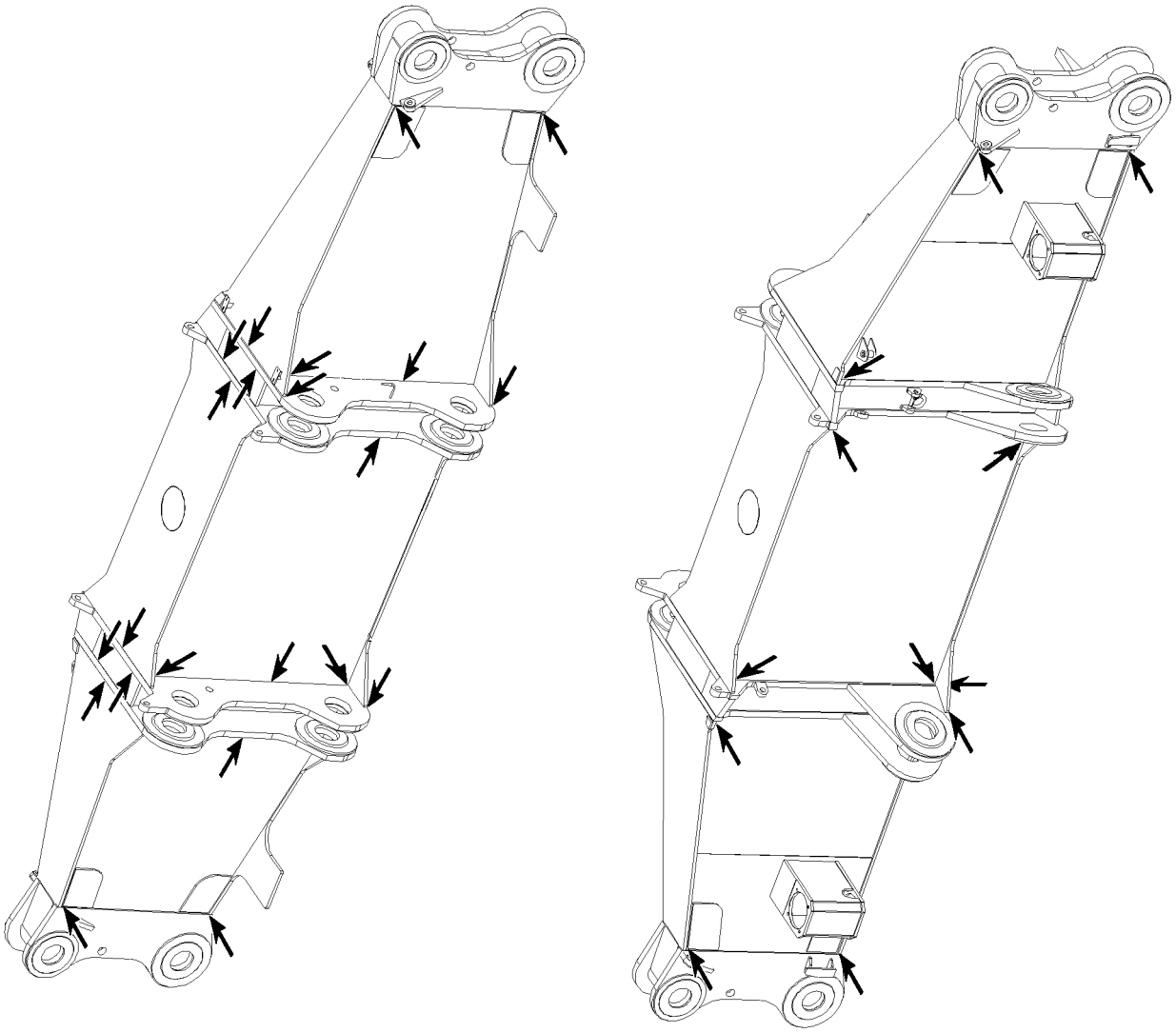

Fig.105727: Example for cross carrier

LWE/ab Muli 010/24201-02-02/en

copyright © Liebherr-Werk Ehingen GmbH 2016

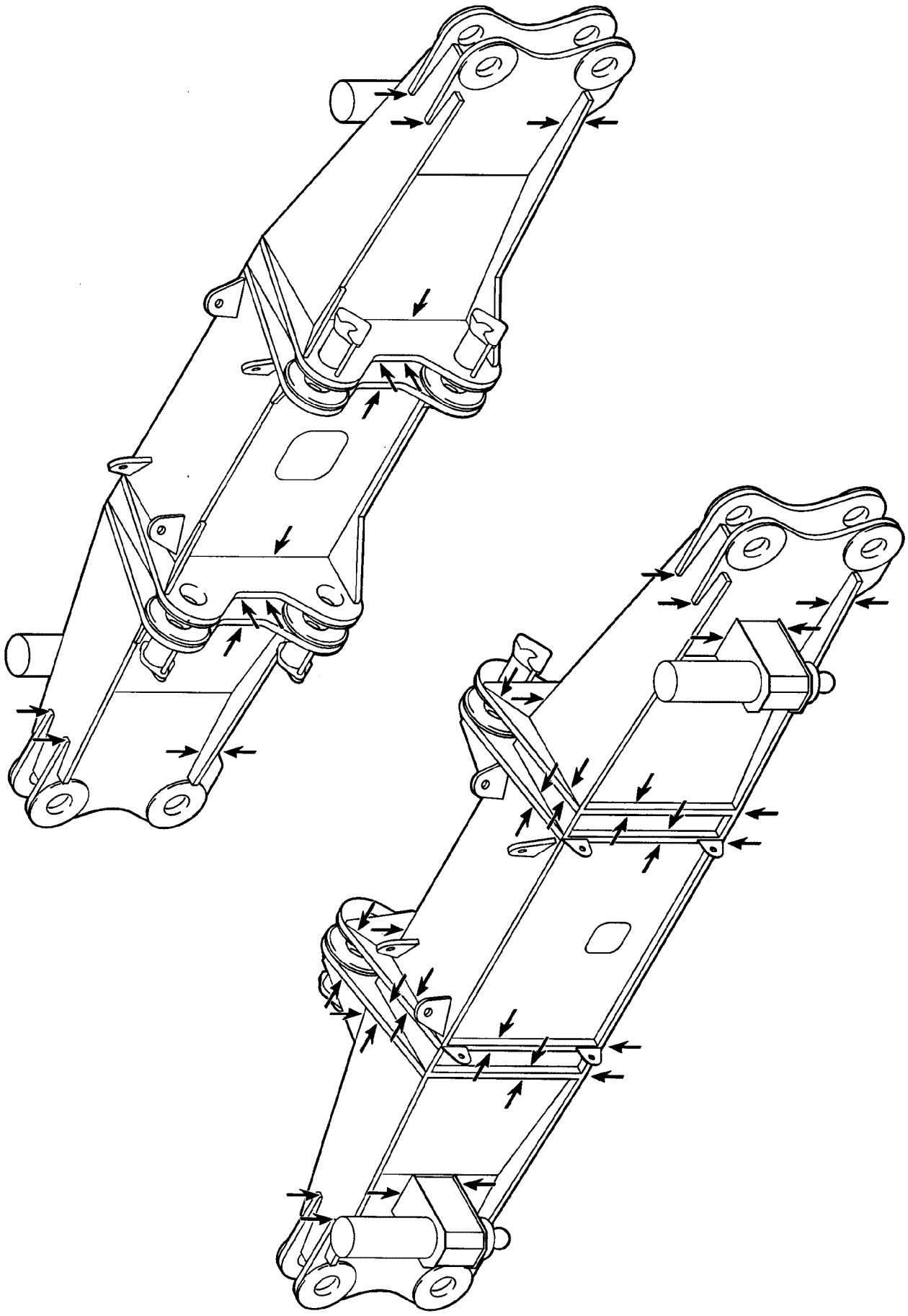

Fig.187348: Example for cross carrier

LWE/ab Muli 010/24201-02-02/en

copyright © Liebherr-Werk Ehingen GmbH 2016

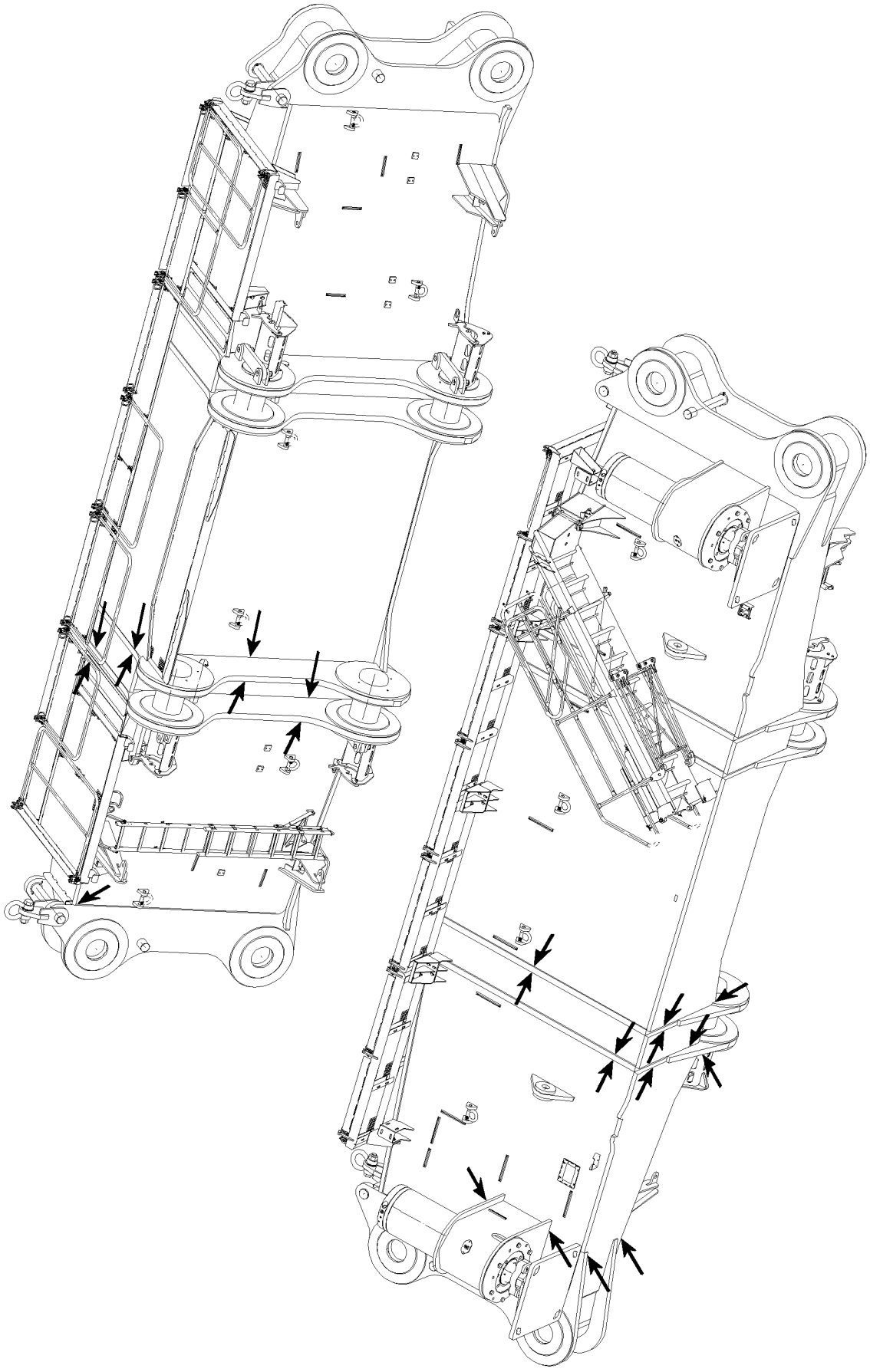

Fig.115921: Example for cross carrier

LWE/ab Muli 010/24201-02-02/en

copyright © Liebherr-Werk Ehingen GmbH 2016

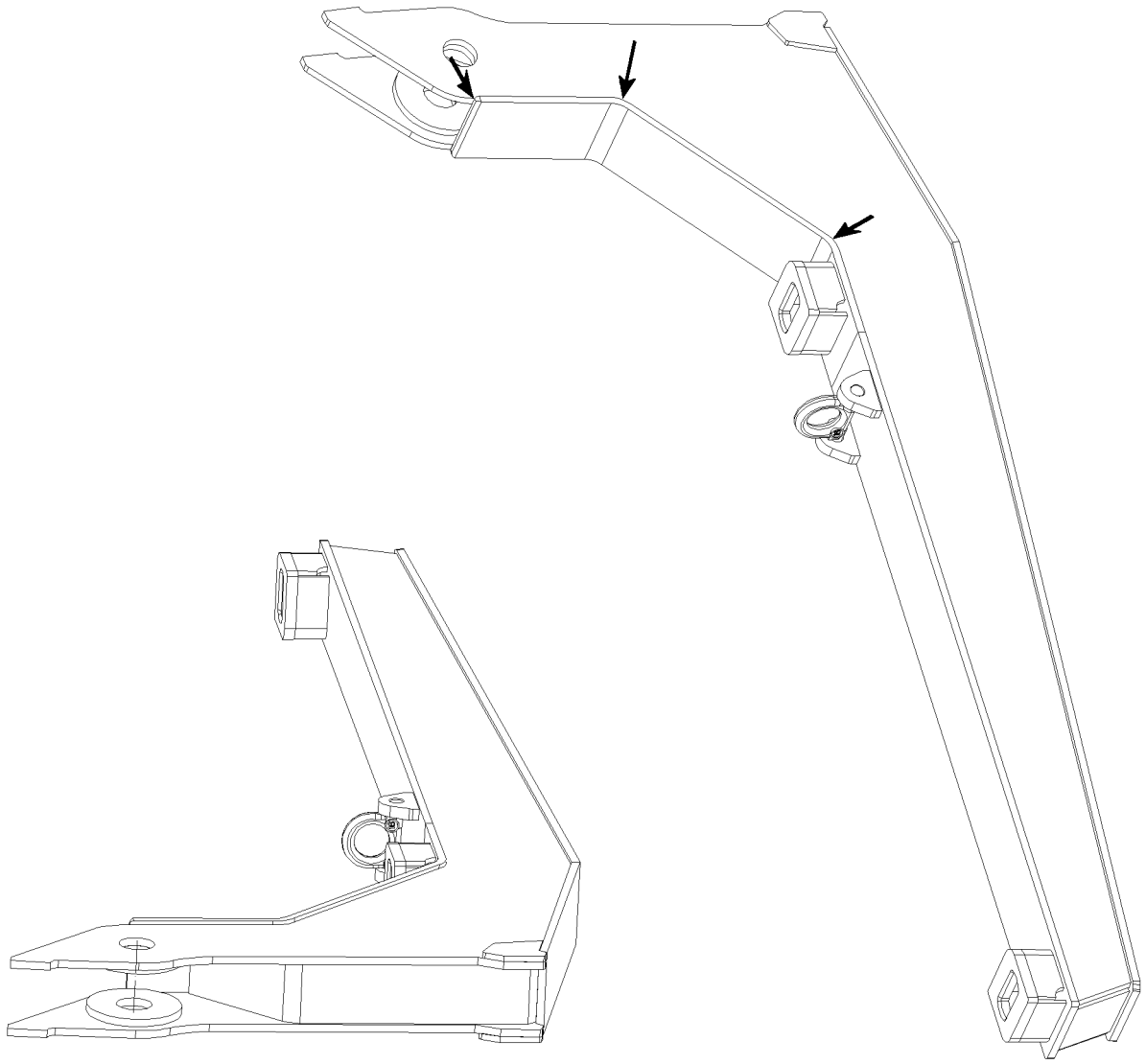

LWE/ab Muli 010/24201-02-02/en

Fig.115919: Example for carrier for central ballast

copyright © Liebherr-Werk Ehingen GmbH 2016

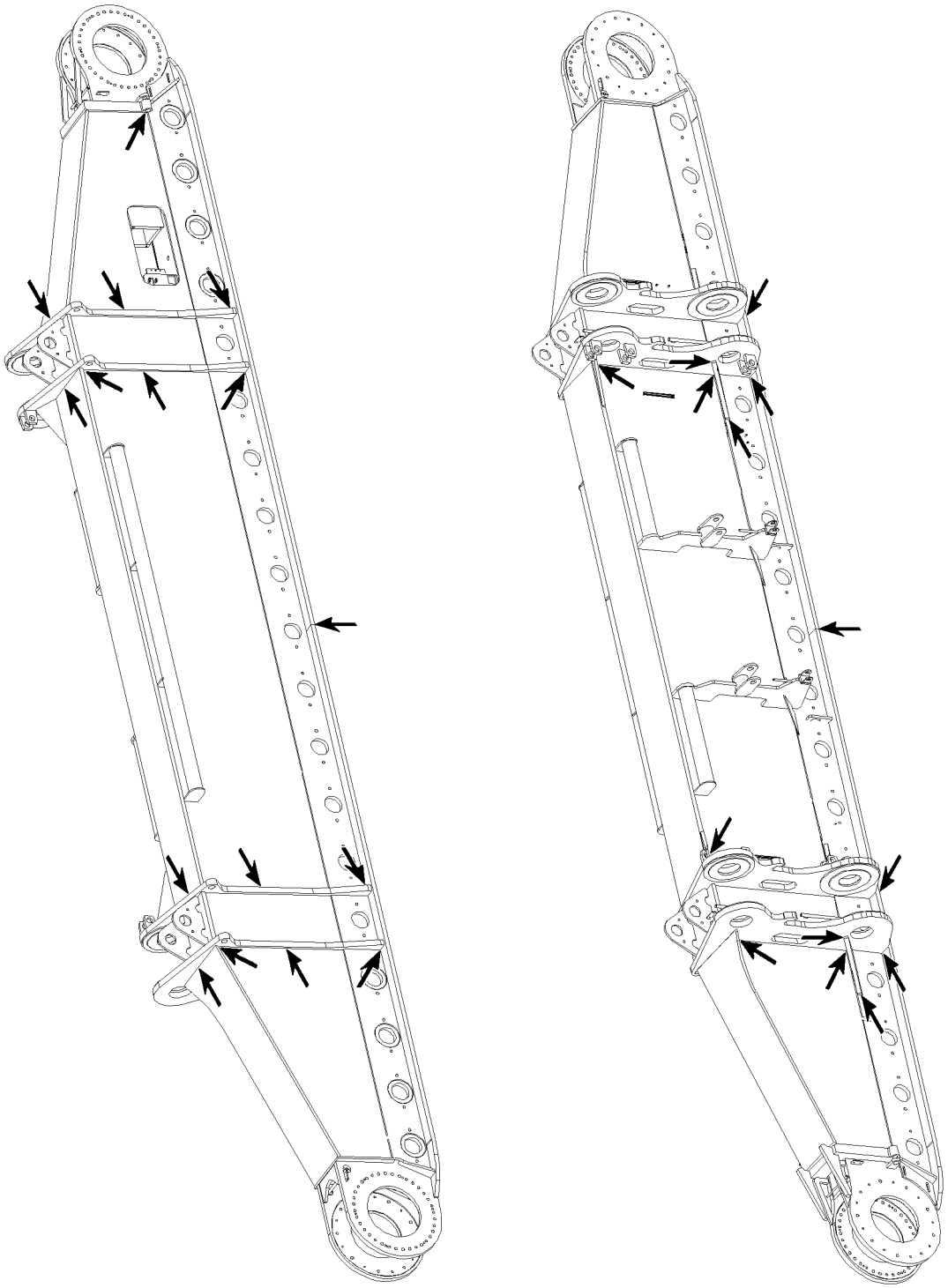

LWE/ab Muli 010/24201-02-02/en

Fig.105728: Example for crawler carrier

copyright © Liebherr-Werk Ehingen GmbH 2016

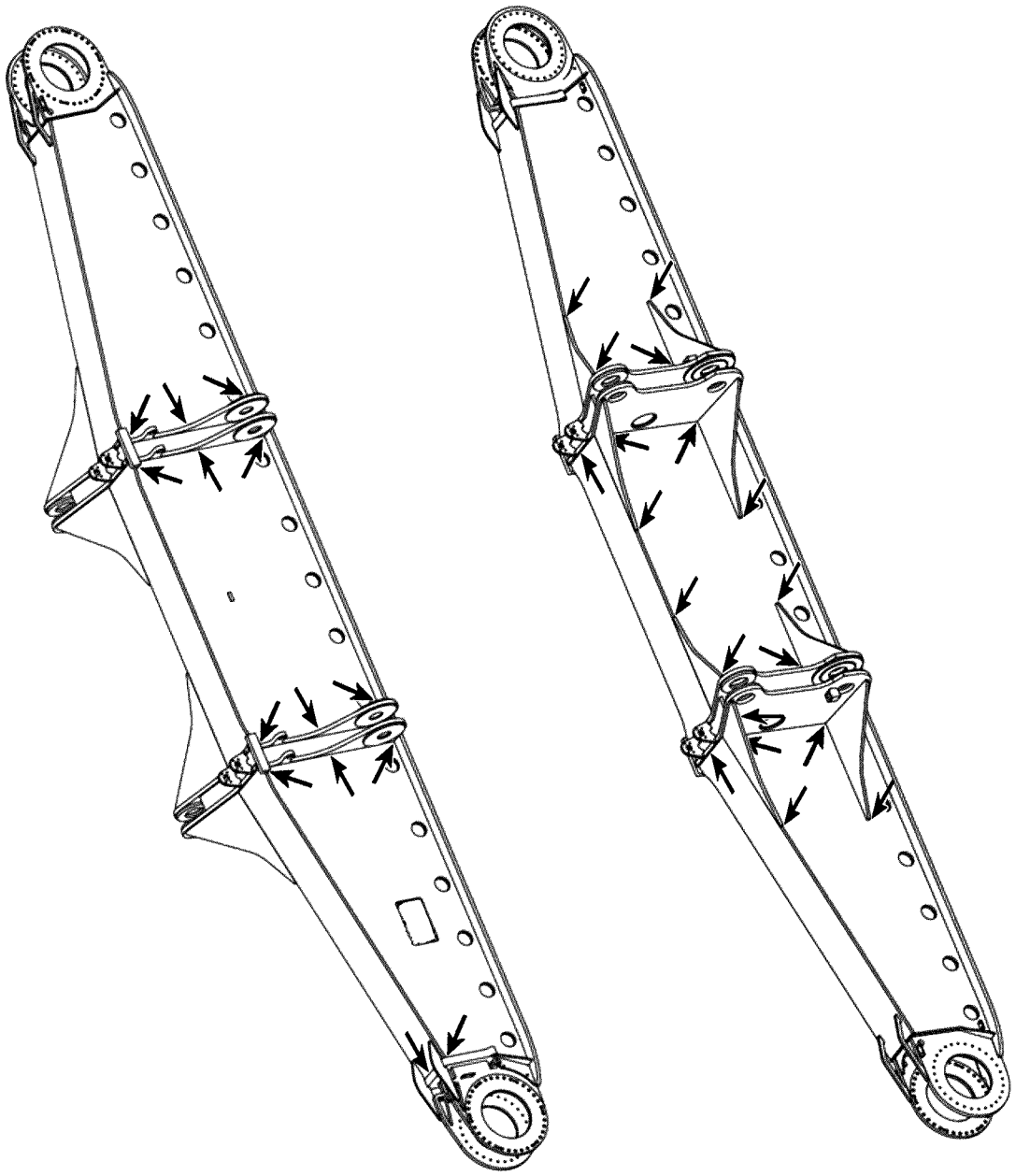

Fig.105729: Example for crawler carrier

copyright © Liebherr-Werk Ehingen GmbH 2016

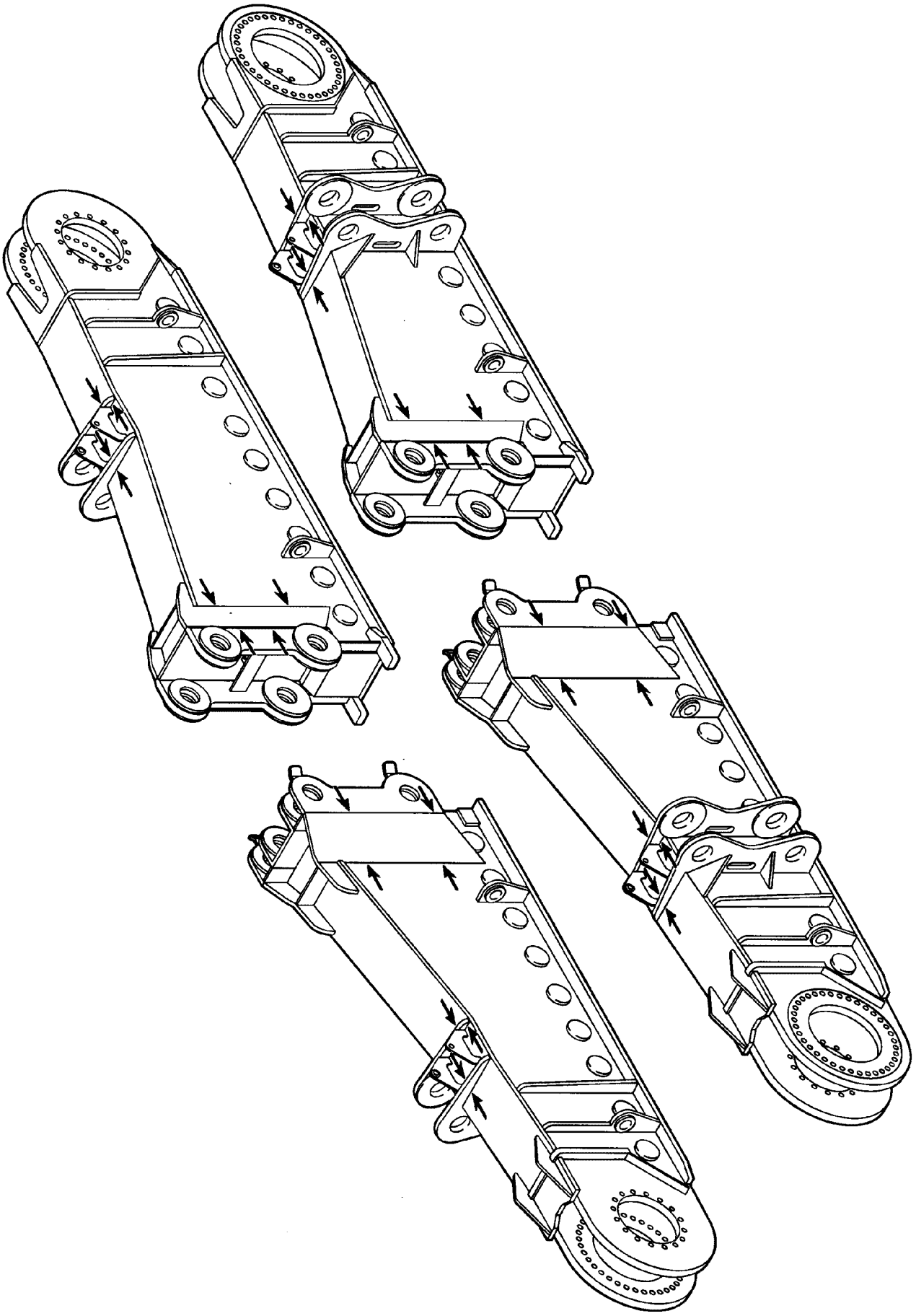

LWE/ab Muli 010/24201-02-02/en

Fig.187349: Example for crawler carrier

copyright © Liebherr-Werk Ehingen GmbH 2016

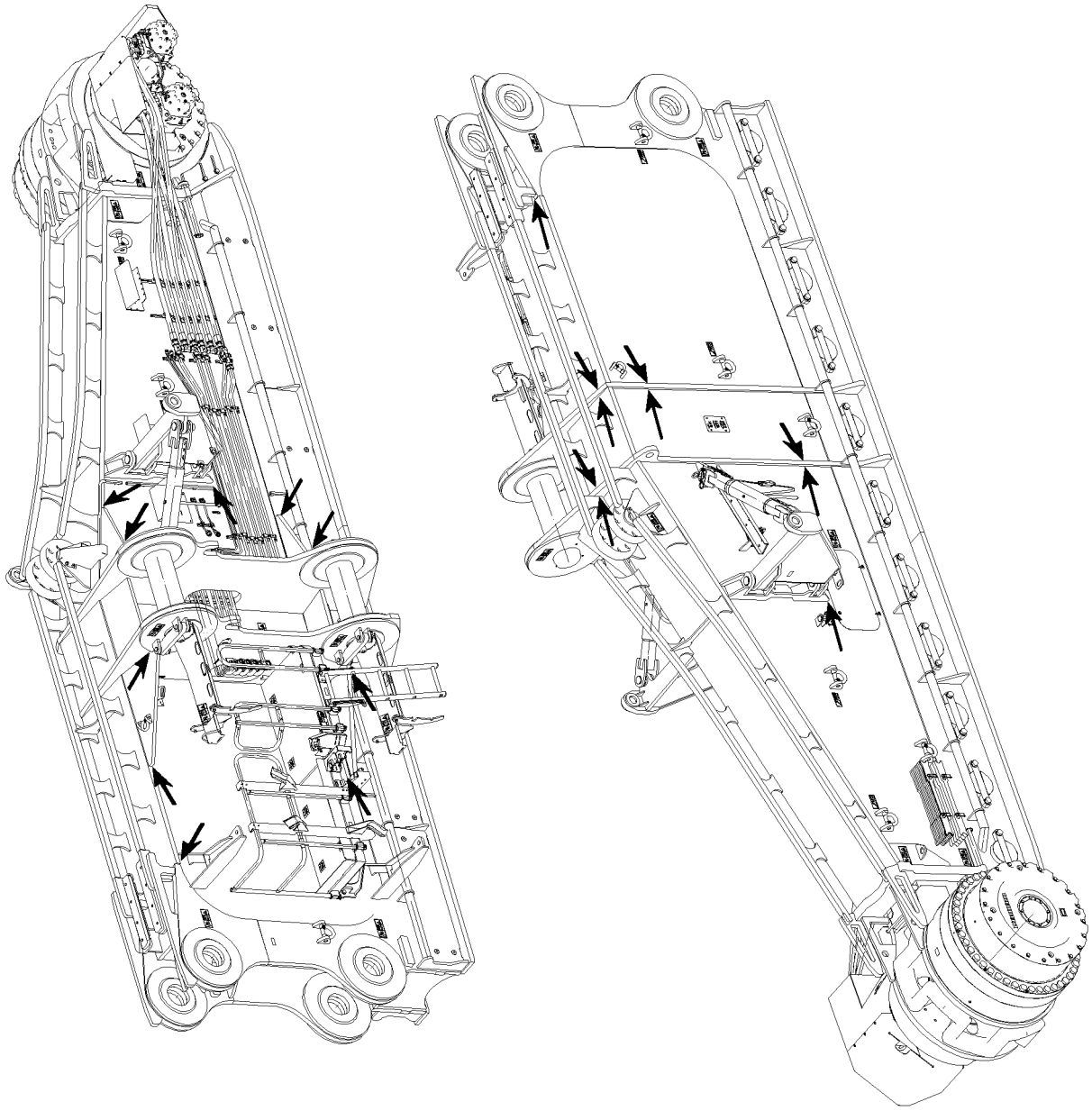

Fig.115917: Example for crawler carrier

copyright © Liebherr-Werk Ehingen GmbH 2016

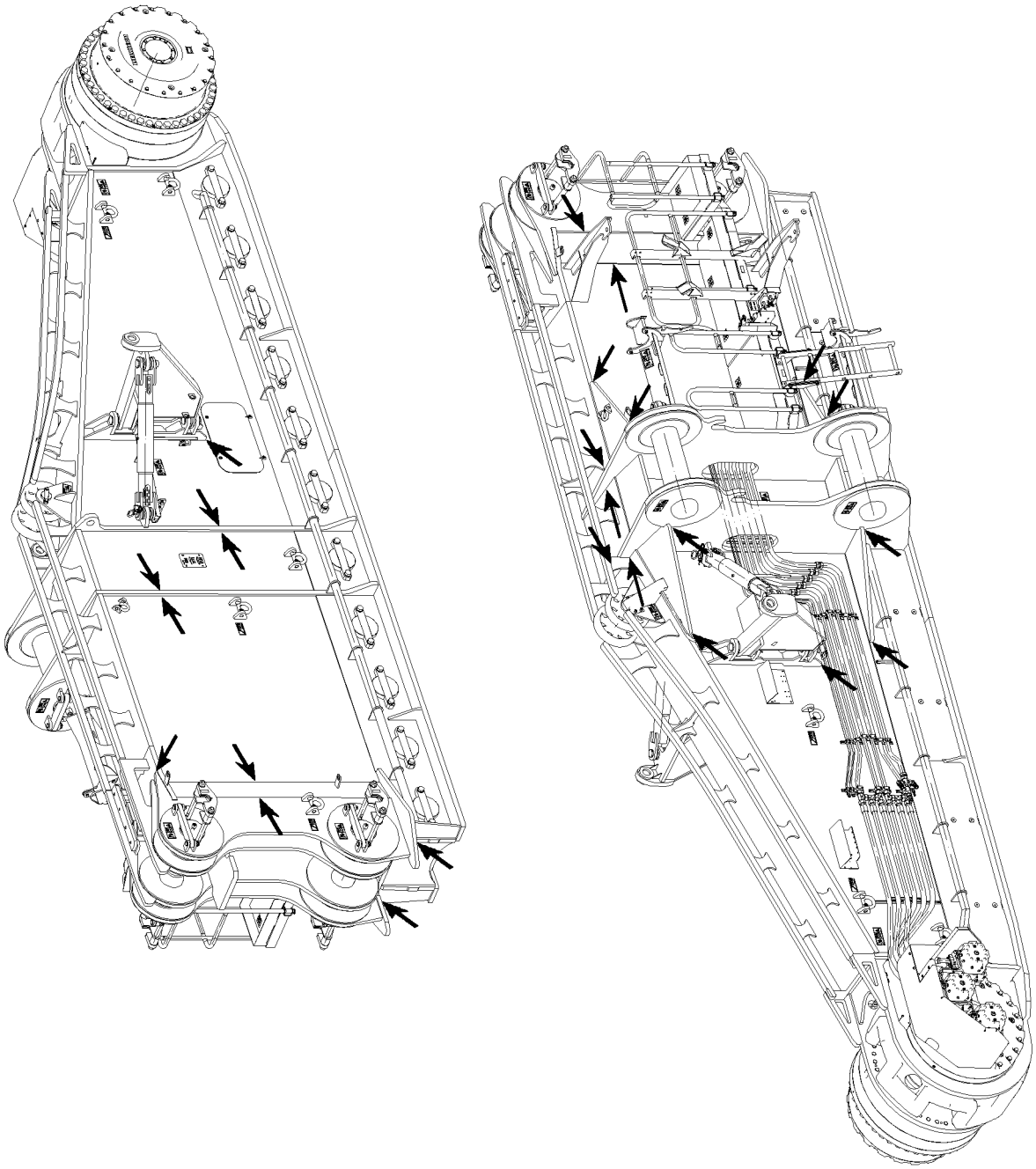

LWE/ab Muli 010/24201-02-02/en

Fig.115918: Example for crawler carrier

copyright © Liebherr-Werk Ehingen GmbH 2016

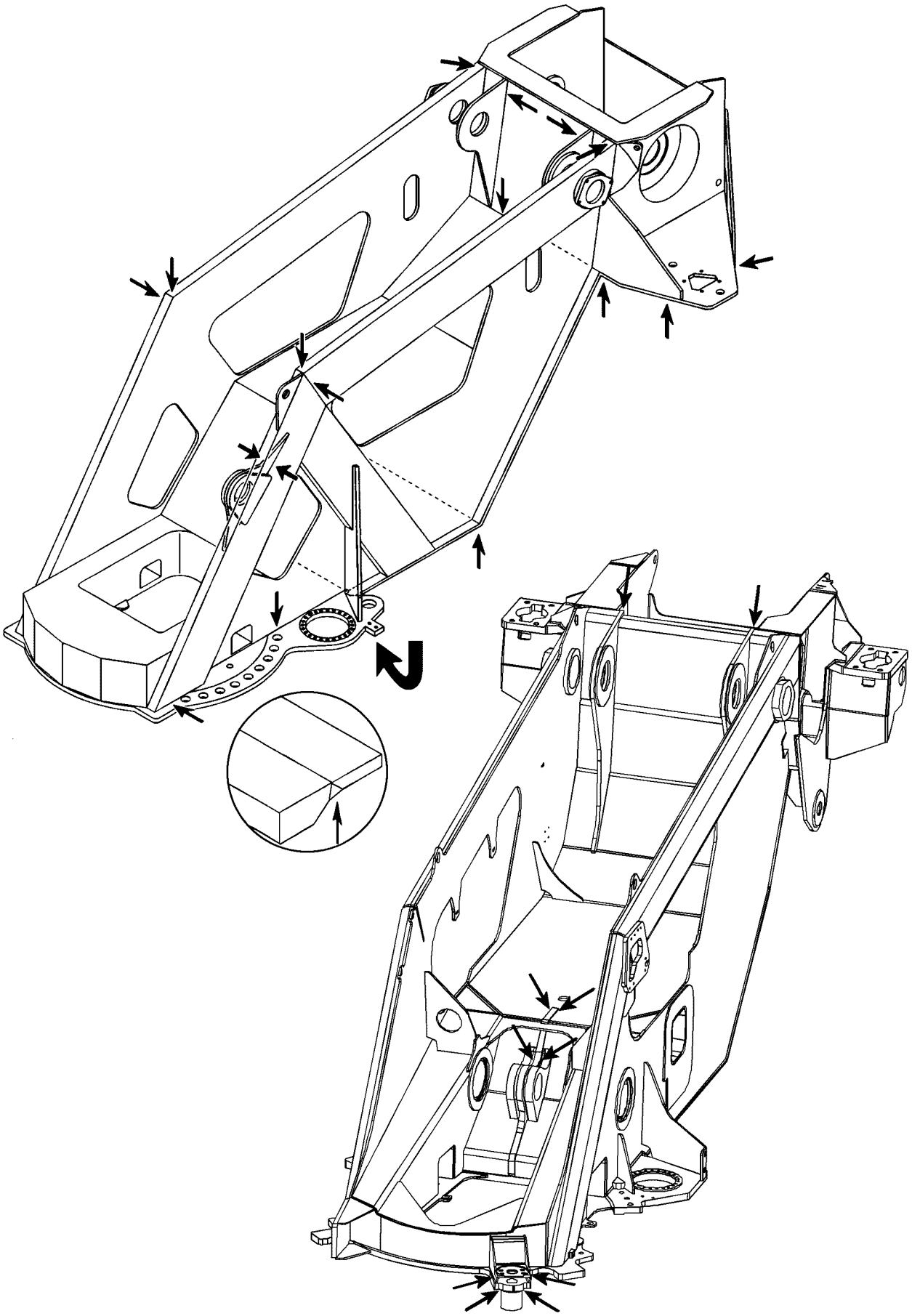

Fig.185048: Example for turntable frame

LWE/ab Muli 010/24201-02-02/en

copyright © Liebherr-Werk Ehingen GmbH 2016

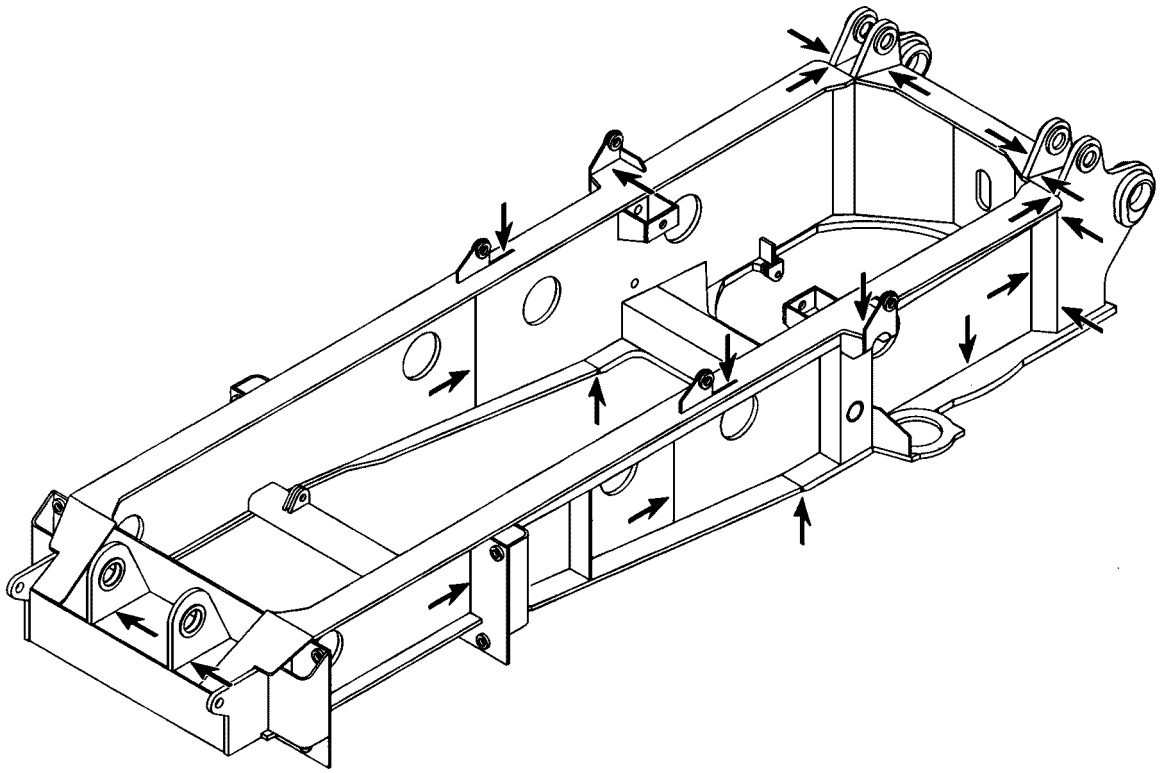

Fig.185049: Example for turntable frame

LWE/ab Muli 010/24201-02-02/en

copyright © Liebherr-Werk Ehingen GmbH 2016

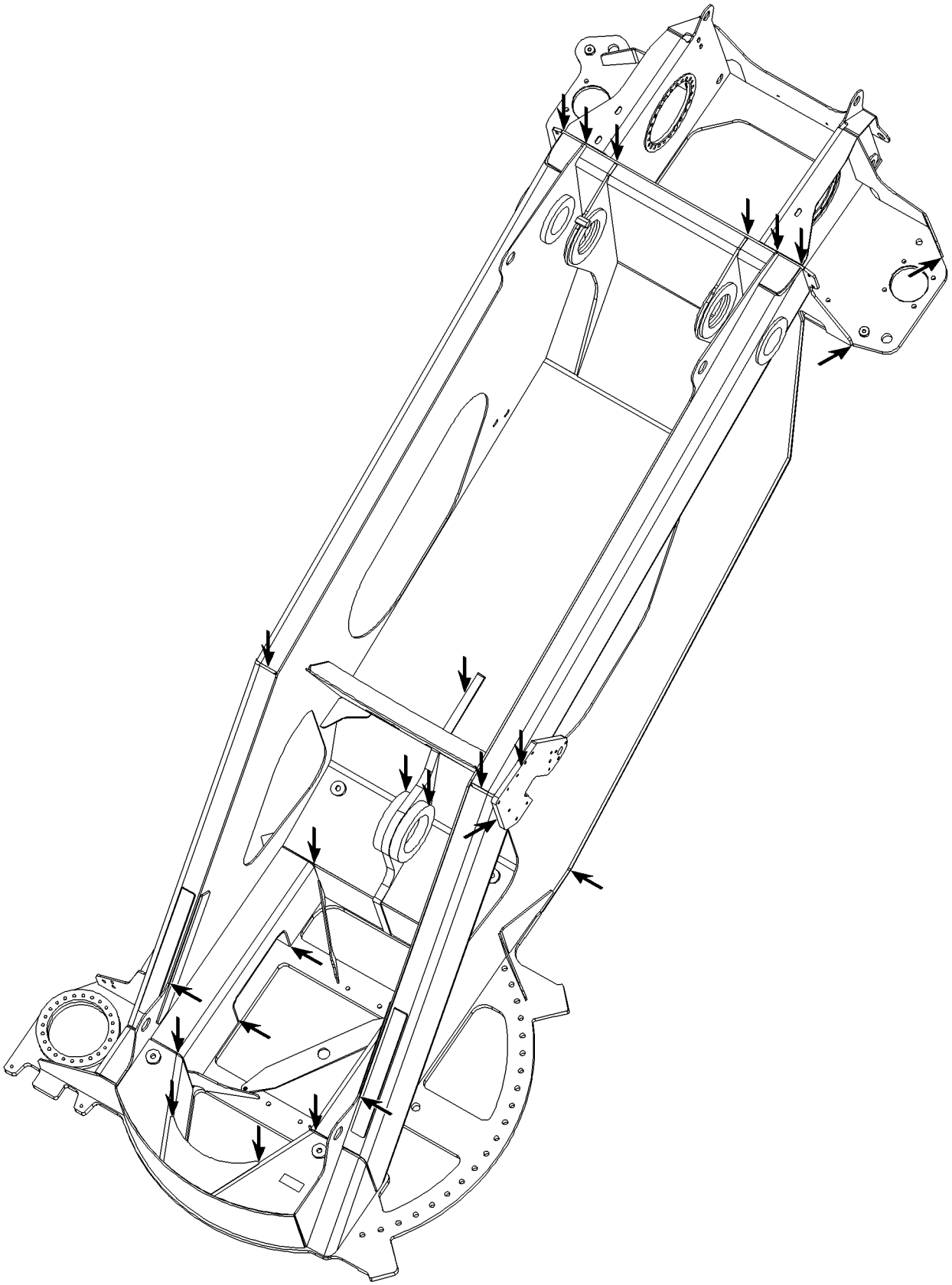

LWE/ab Muli 010/24201-02-02/en

Fig.105700: Example for turntable frame

copyright © Liebherr-Werk Ehingen GmbH 2016

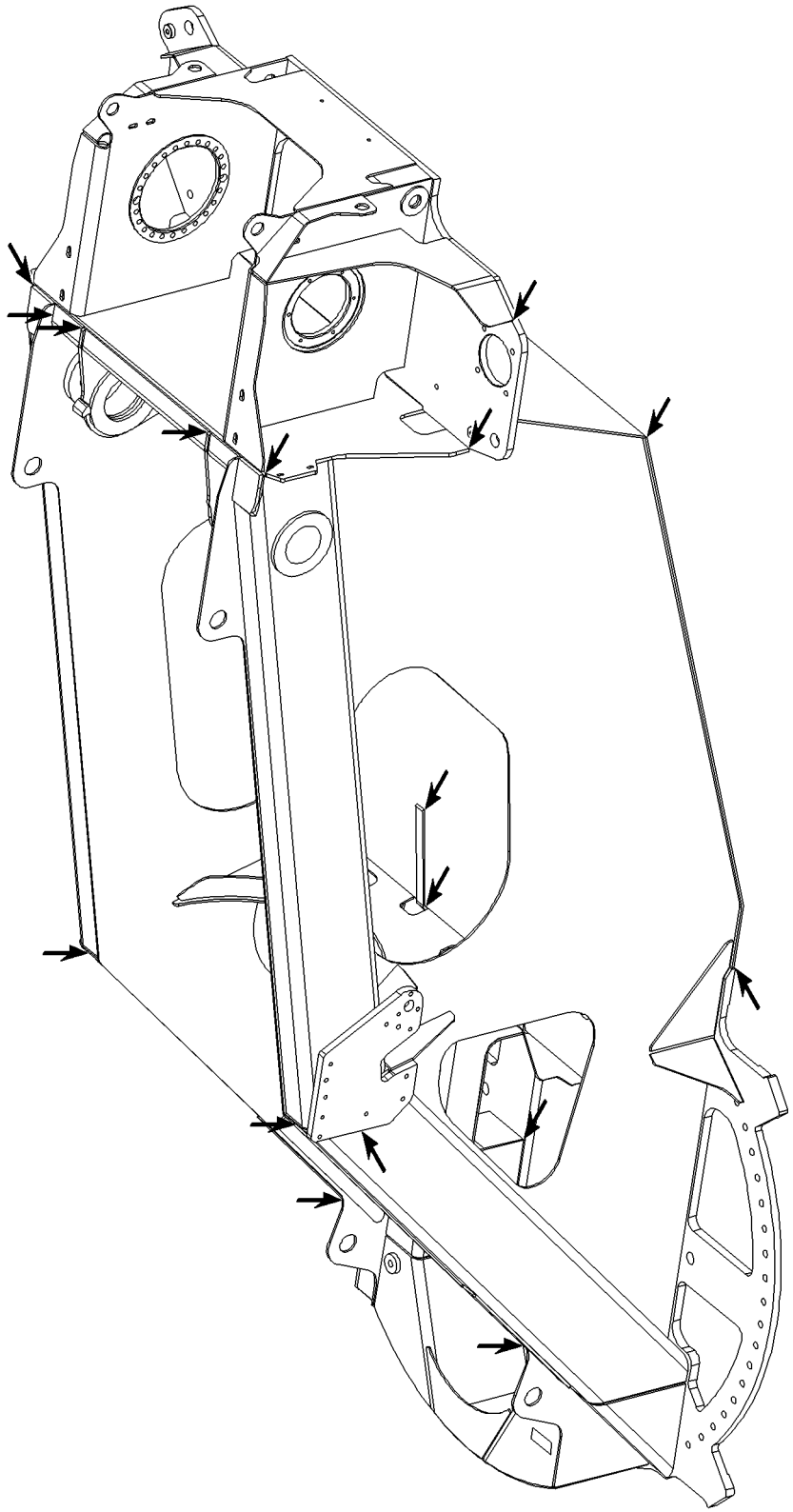

Fig.105701: Example for turntable frame

LWE/ab Muli 010/24201-02-02/en

copyright © Liebherr-Werk Ehingen GmbH 2016

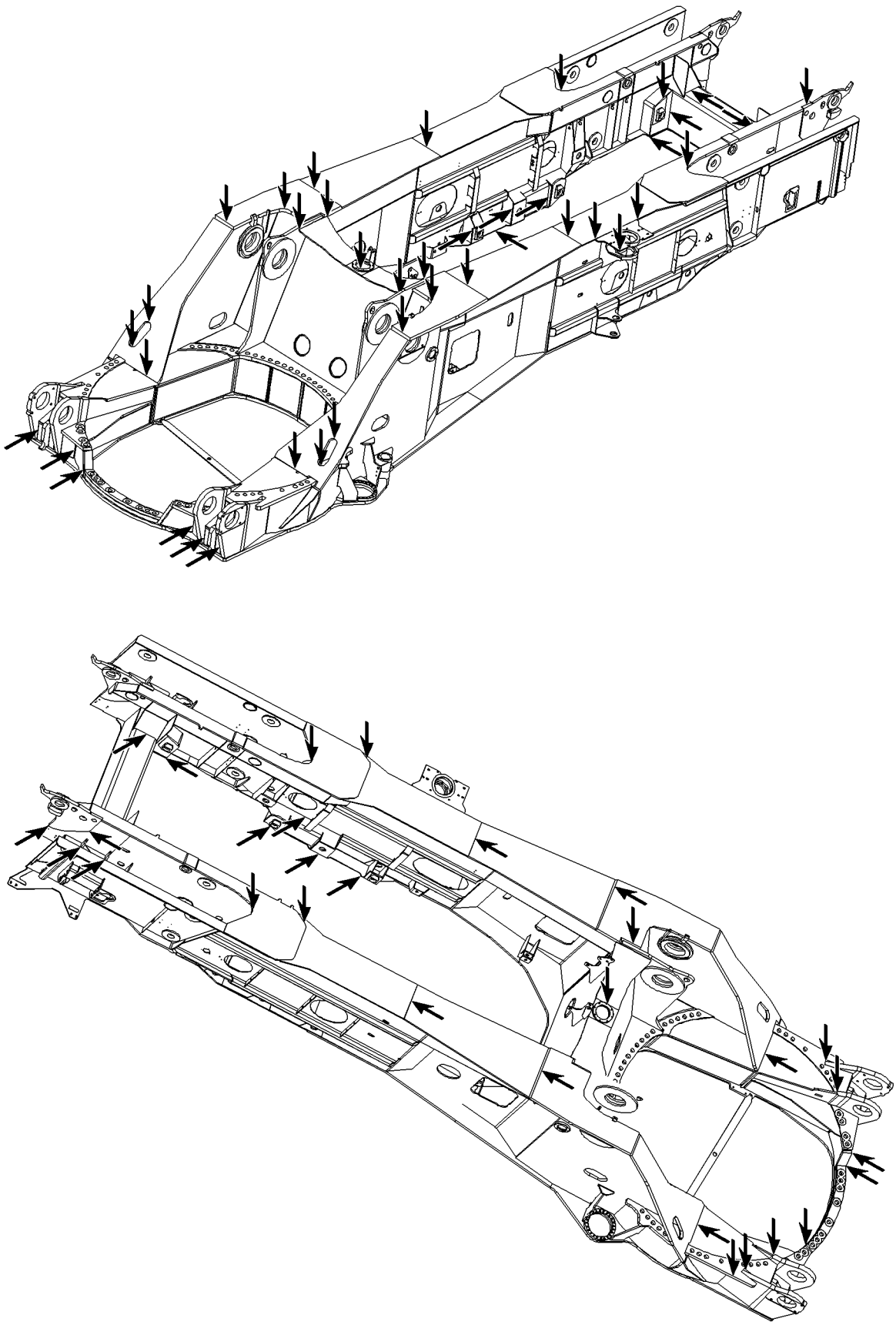

Fig.105706: Example for turntable frame

LWE/ab Muli 010/24201-02-02/en

copyright © Liebherr-Werk Ehingen GmbH 2016

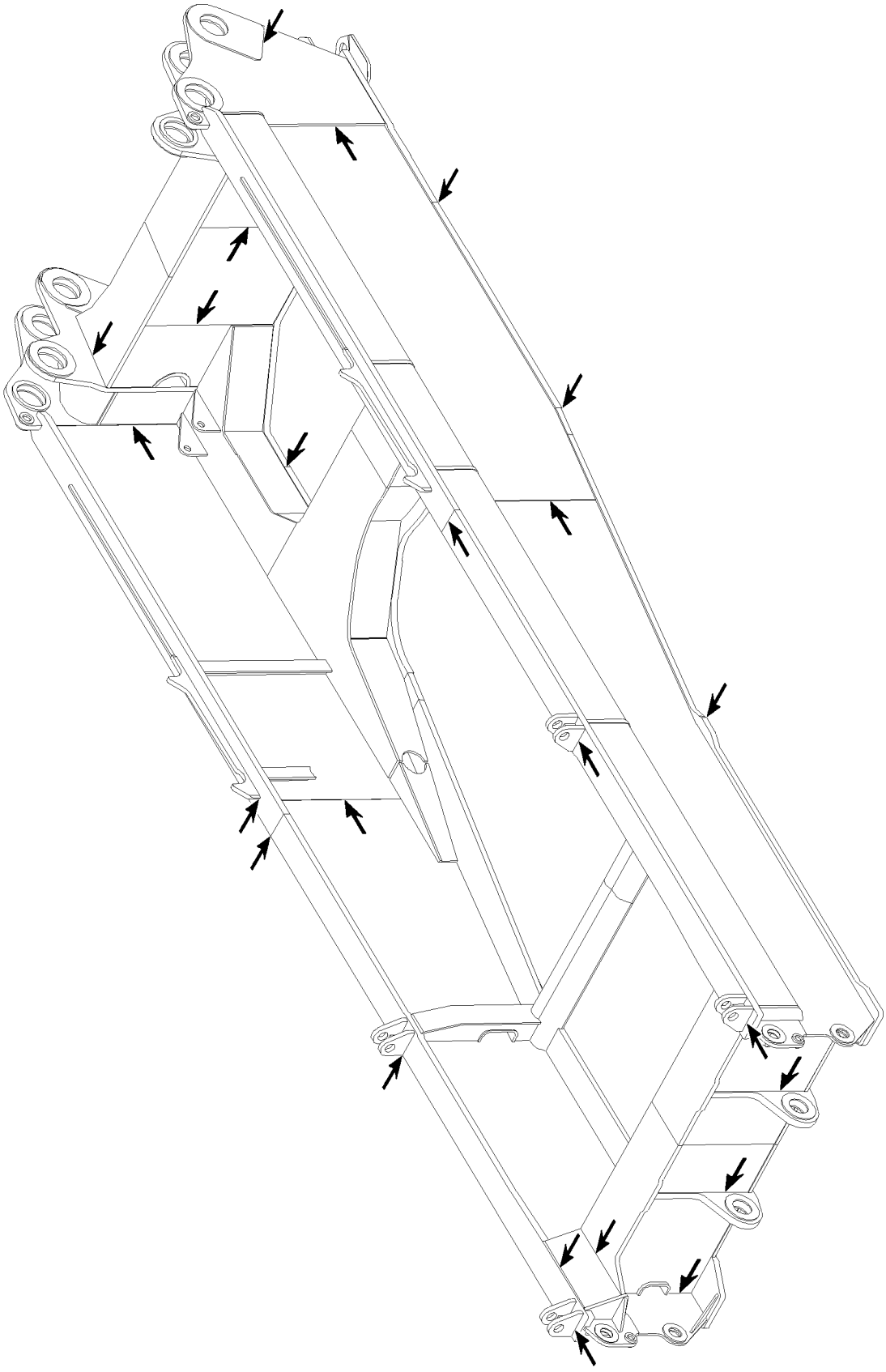

LWE/ab Muli 010/24201-02-02/en

Fig.105694: Example for turntable frame

copyright © Liebherr-Werk Ehingen GmbH 2016

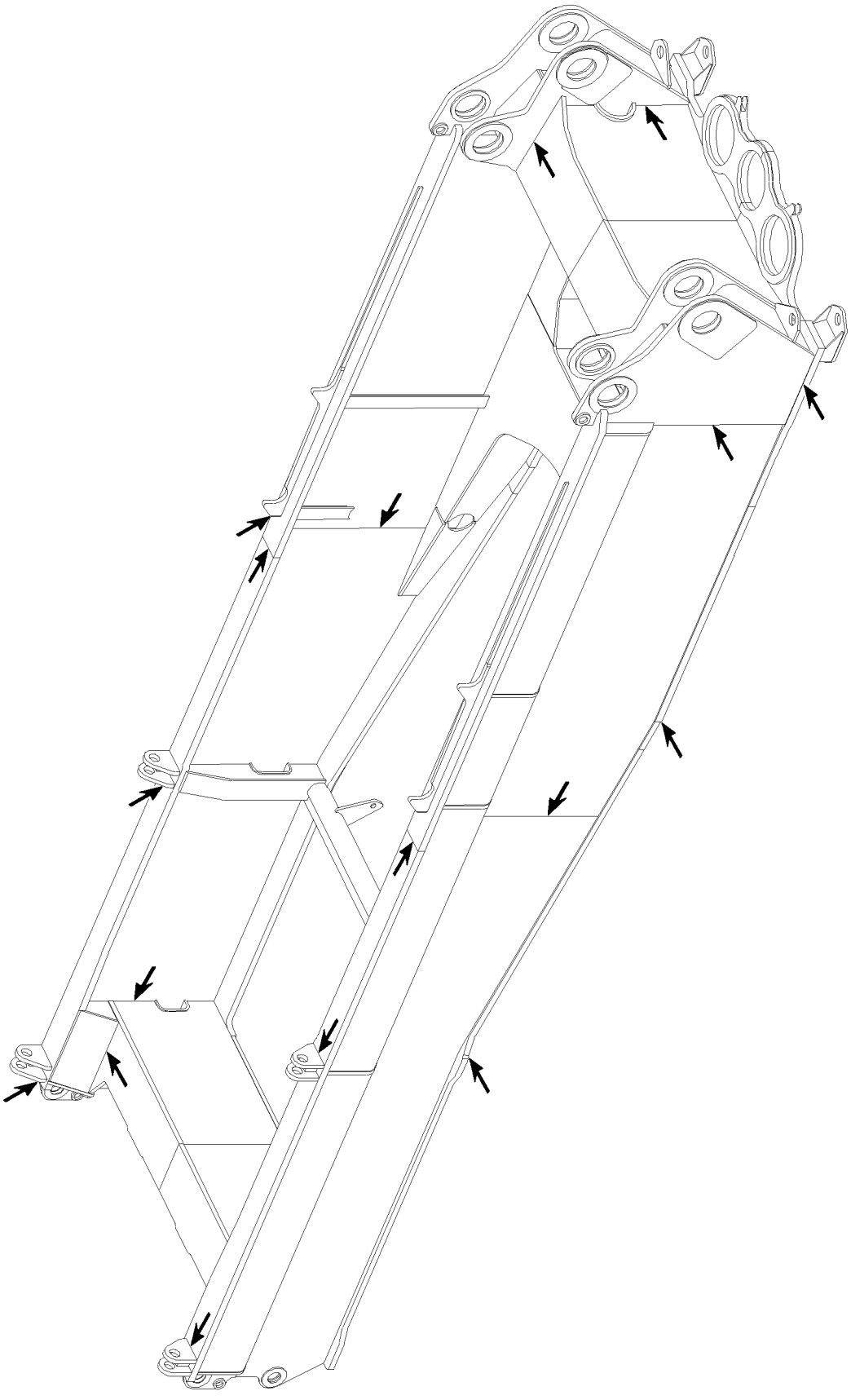

Fig.105695: Example for turntable frame

copyright © Liebherr-Werk Ehingen GmbH 2016

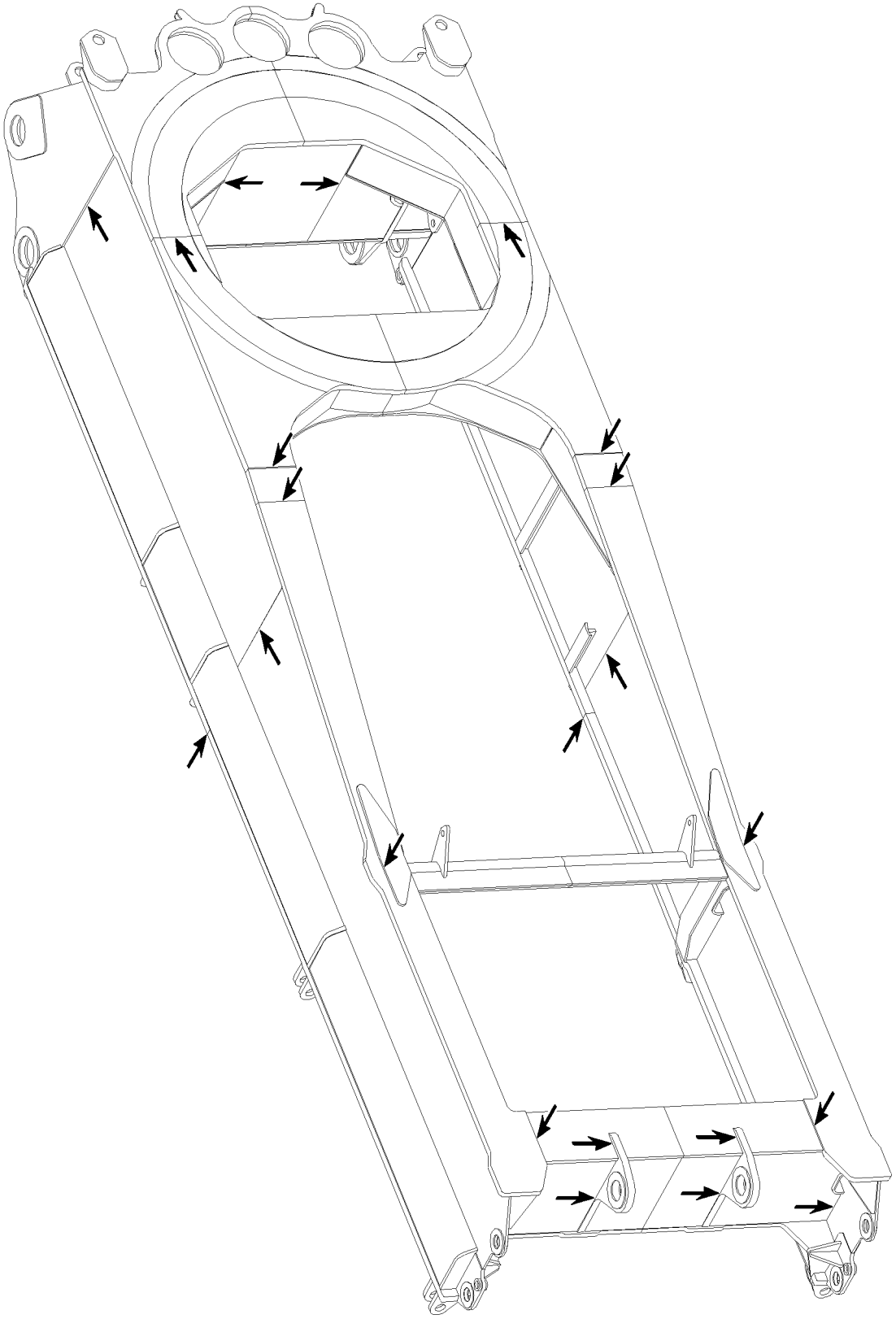

LWE/ab Muli 010/24201-02-02/en

Fig.105696: Example for turntable frame

copyright © Liebherr-Werk Ehingen GmbH 2016

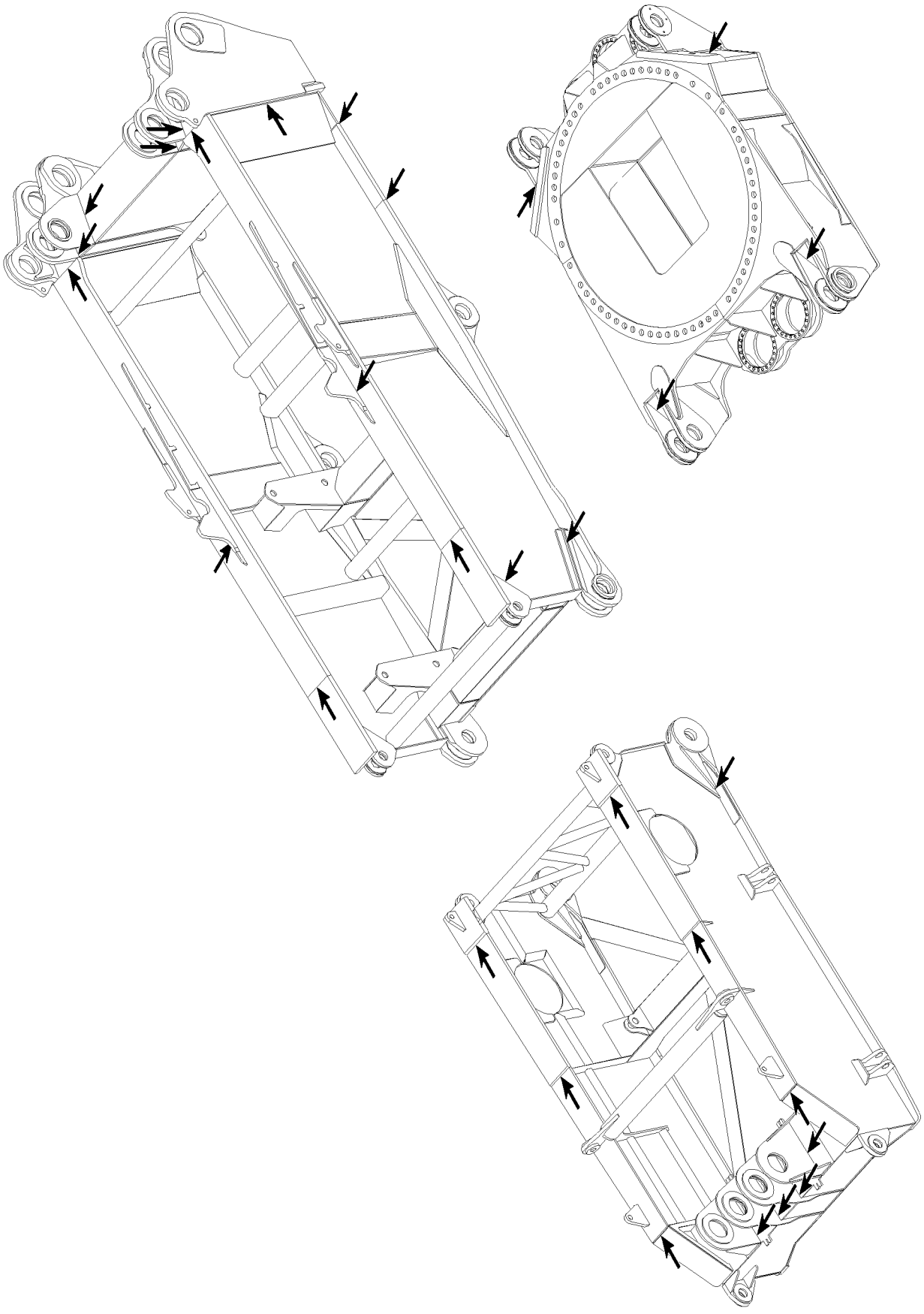

Fig.105691: Example for turntable frame

LWE/ab Muli 010/24201-02-02/en

copyright © Liebherr-Werk Ehingen GmbH 2016

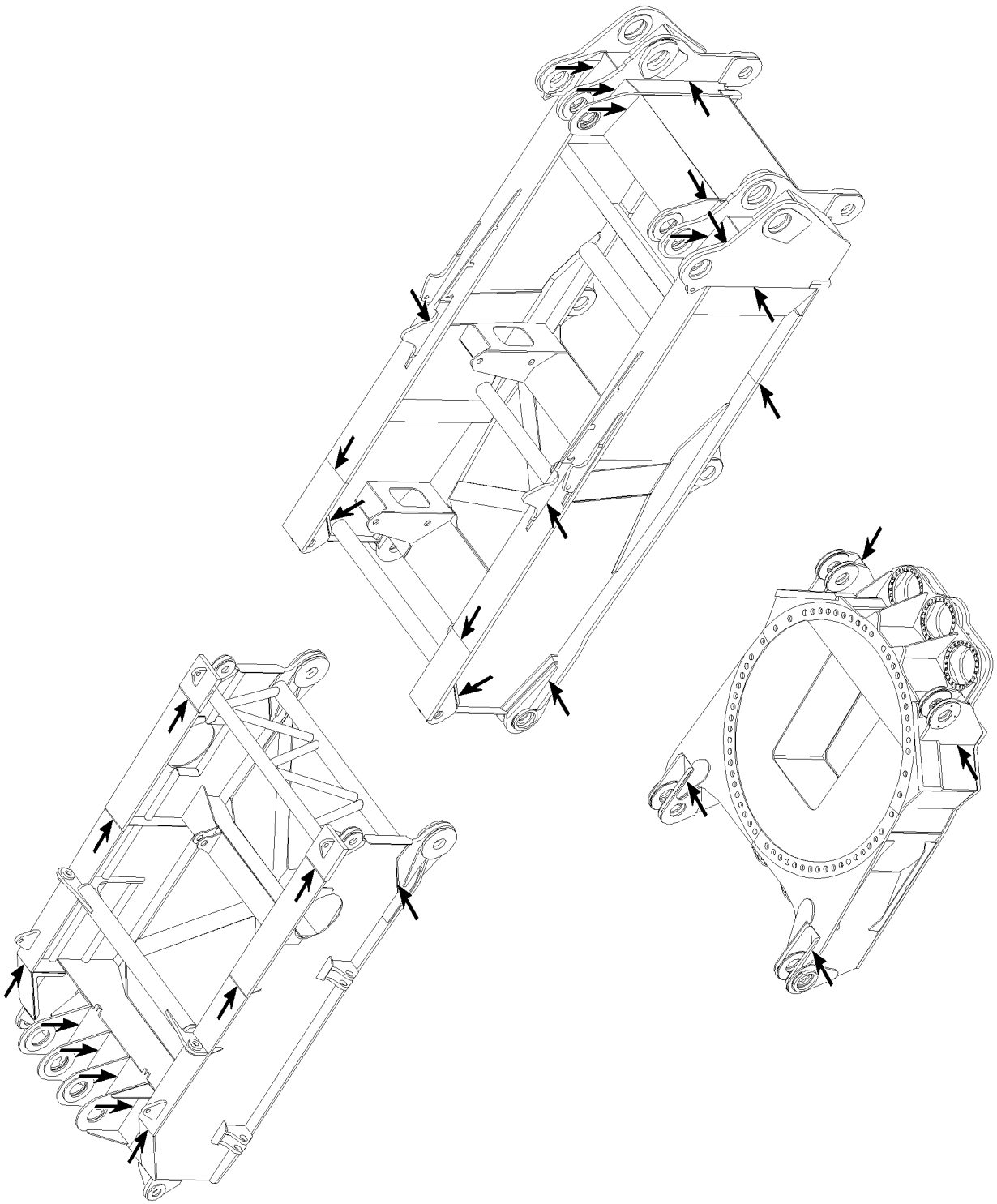

LWE/ab Muli 010/24201-02-02/en

Fig.105692: Example for turntable frame

copyright © Liebherr-Werk Ehingen GmbH 2016

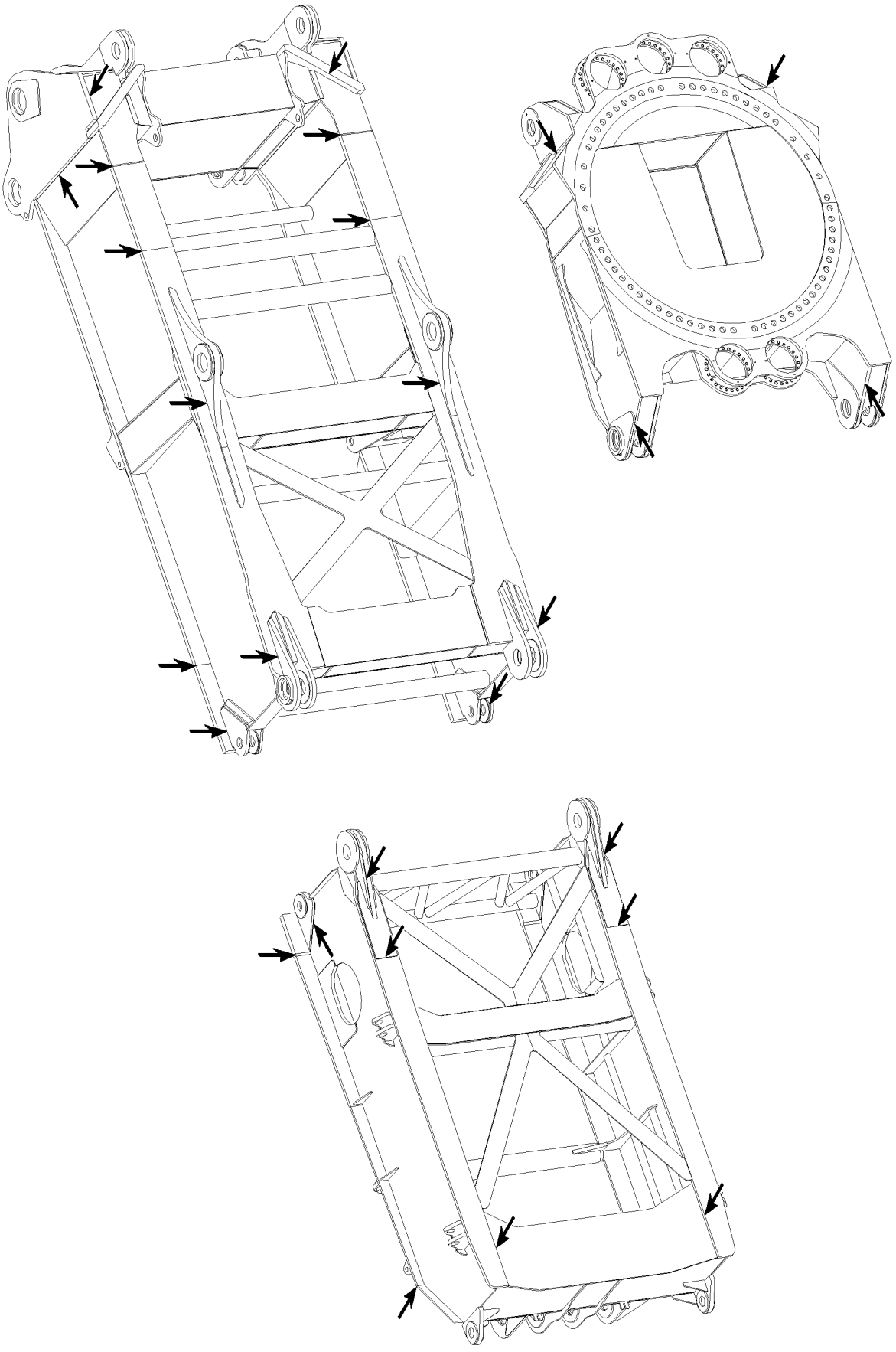

Fig.105693: Example for turntable frame

copyright © Liebherr-Werk Ehingen GmbH 2016

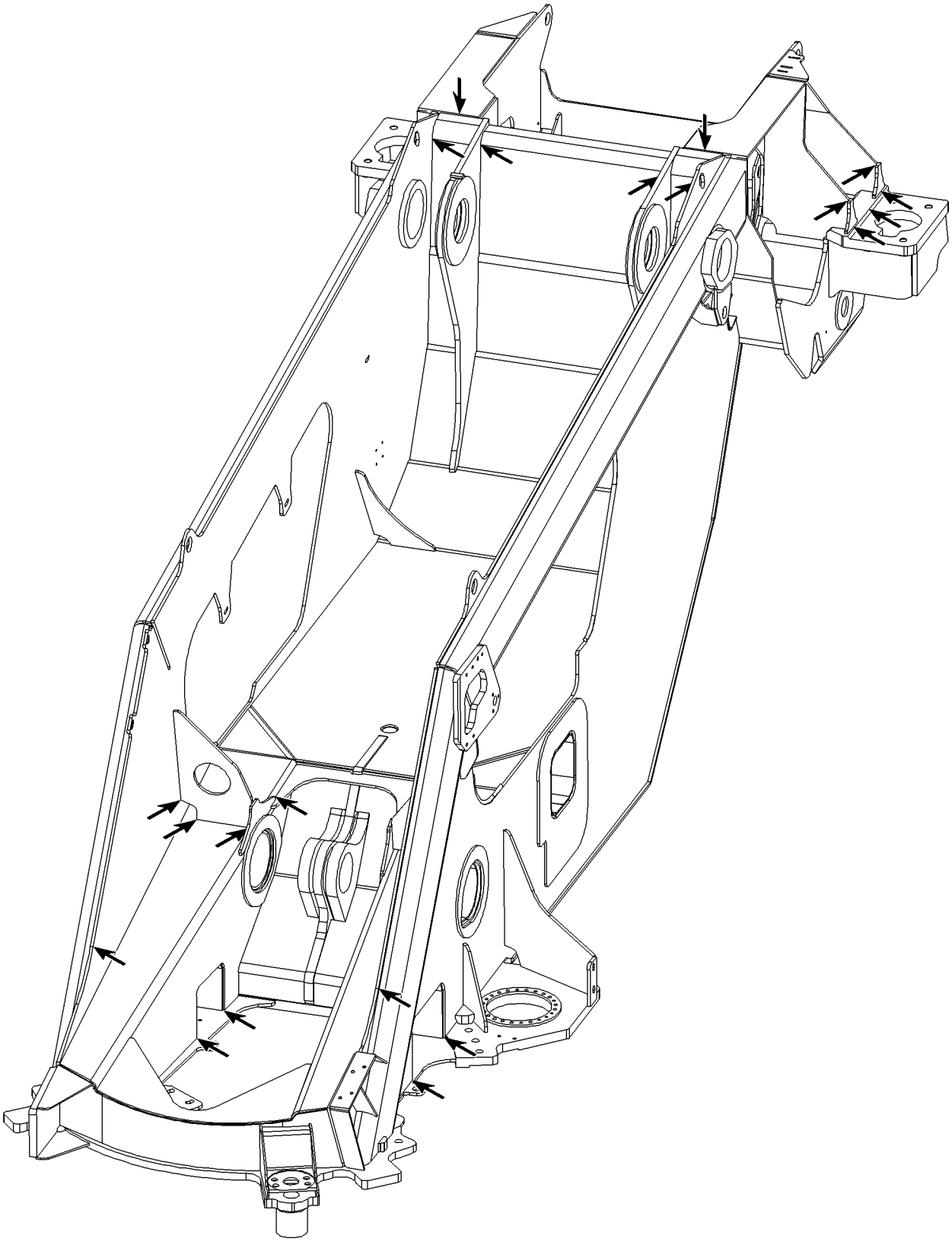

LWE/ab Muli 010/24201-02-02/en

Fig.105722: Example for turntable frame

copyright © Liebherr-Werk Ehingen GmbH 2016

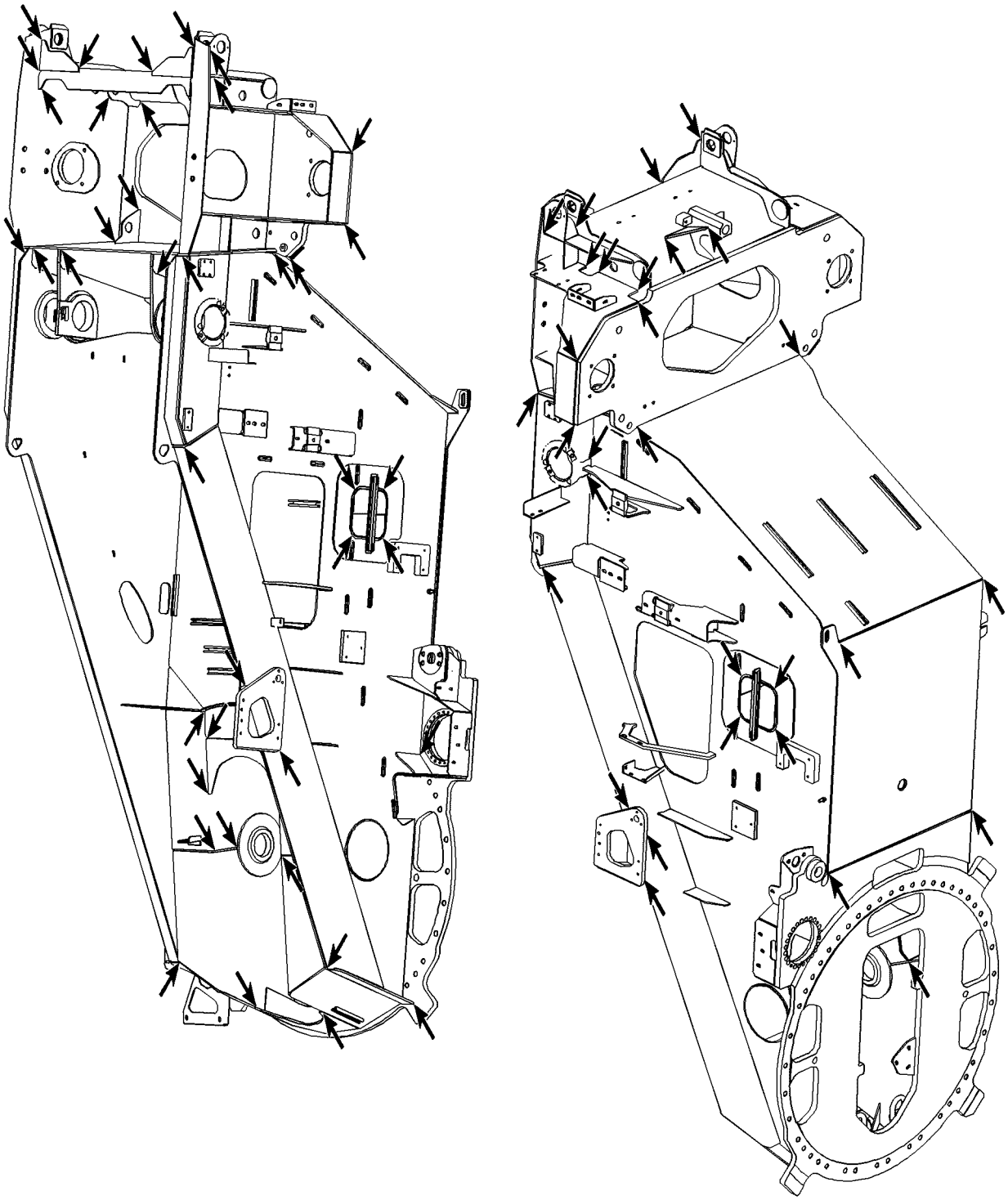

Fig.105932: Example for turntable frame

LWE/ab Muli 010/24201-02-02/en

copyright © Liebherr-Werk Ehingen GmbH 2016

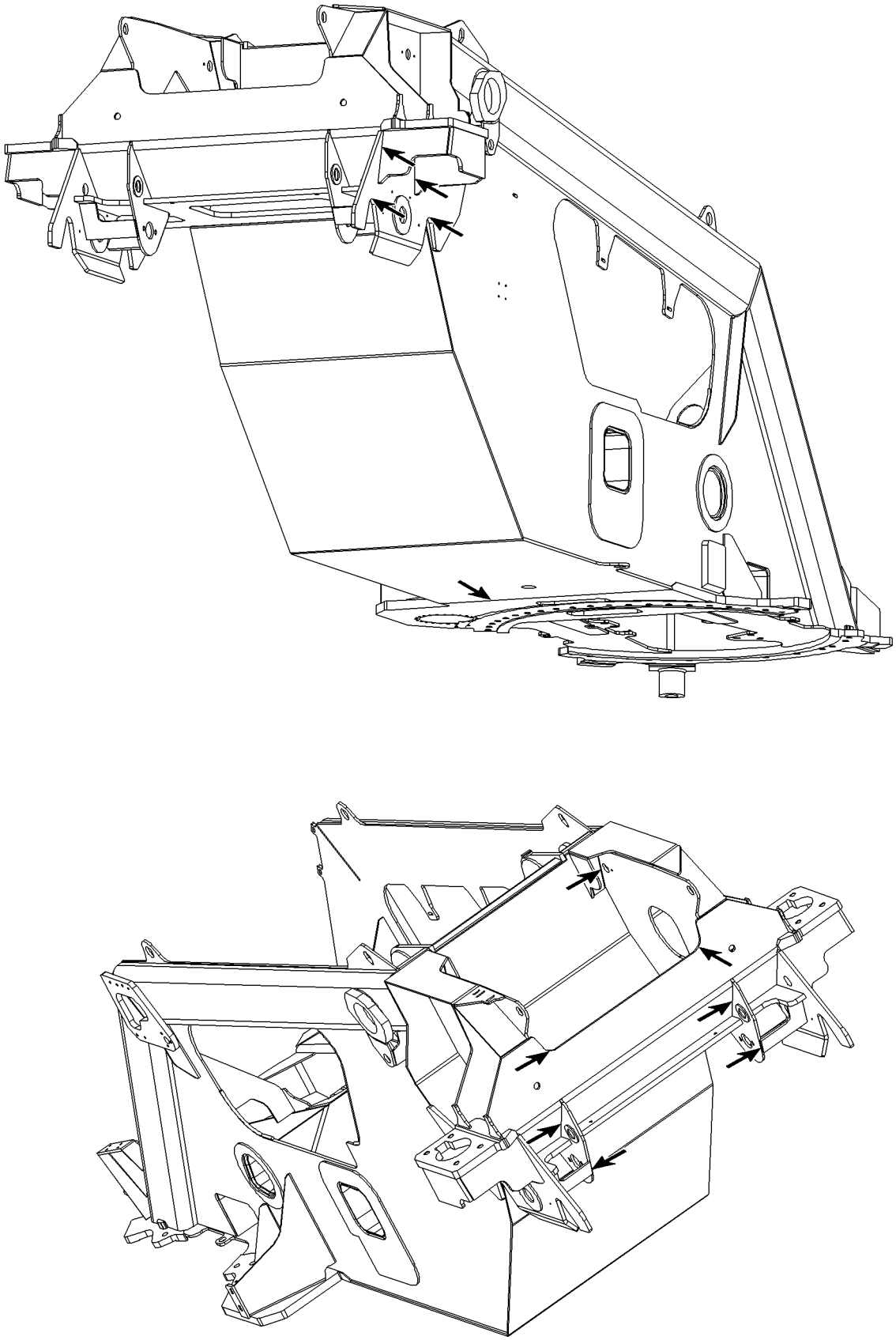

Fig.105723: Example for turntable frame

LWE/ab Muli 010/24201-02-02/en

copyright © Liebherr-Werk Ehingen GmbH 2016

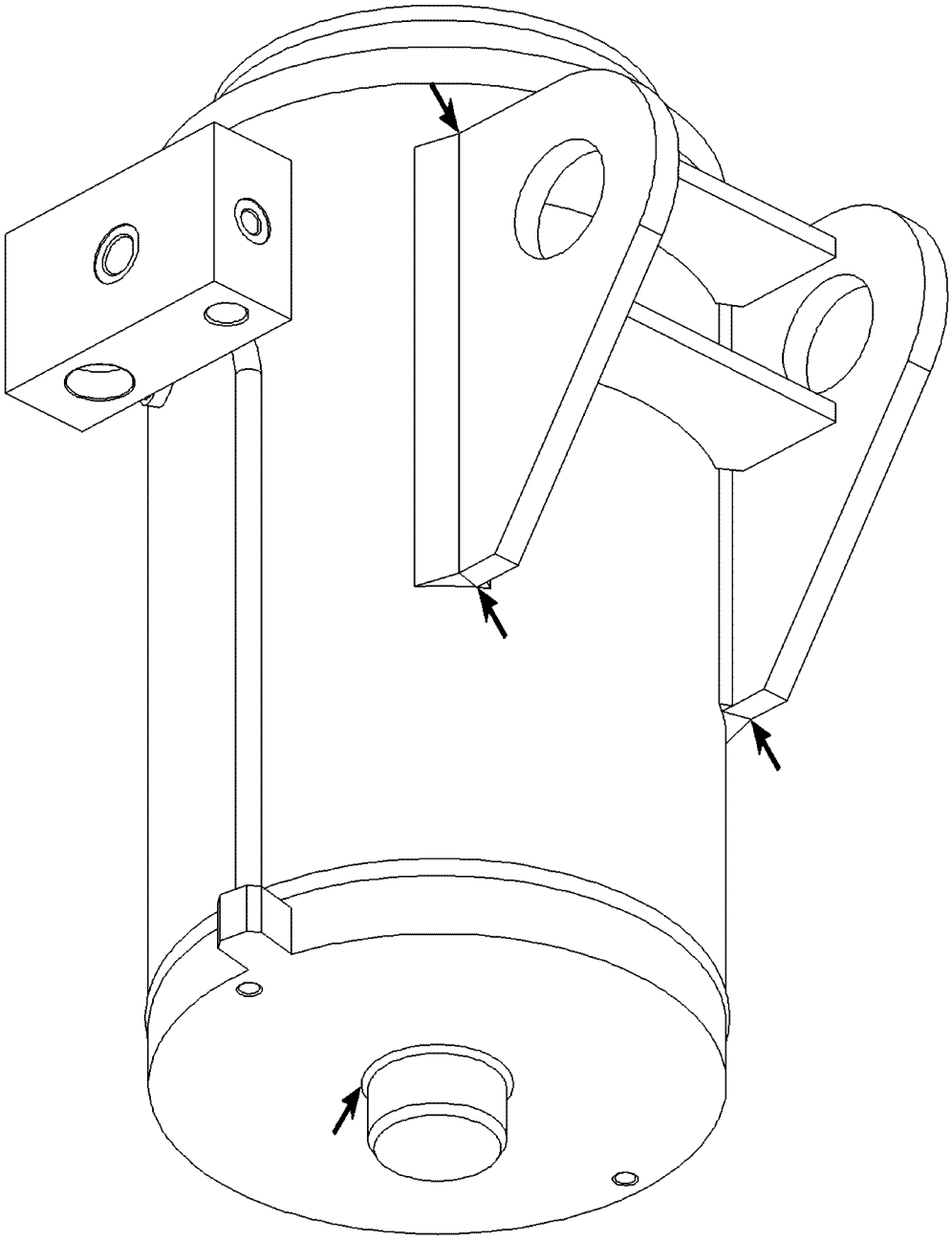

Fig.105801: Example for ballasting cylinder

copyright © Liebherr-Werk Ehingen GmbH 2016

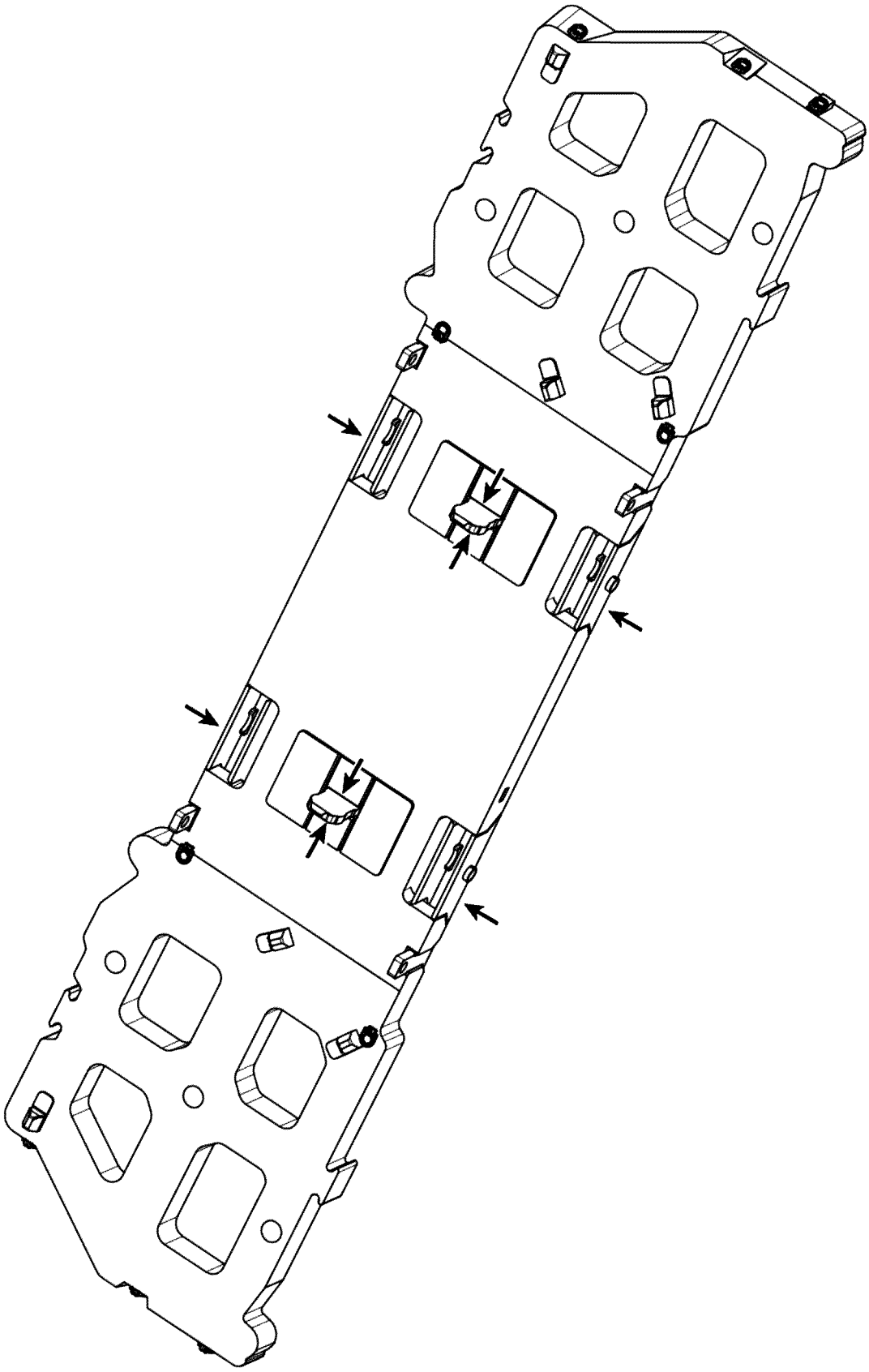

Fig.105705: Example for mounting plate

LWE/ab Muli 010/24201-02-02/en

copyright © Liebherr-Werk Ehingen GmbH 2016

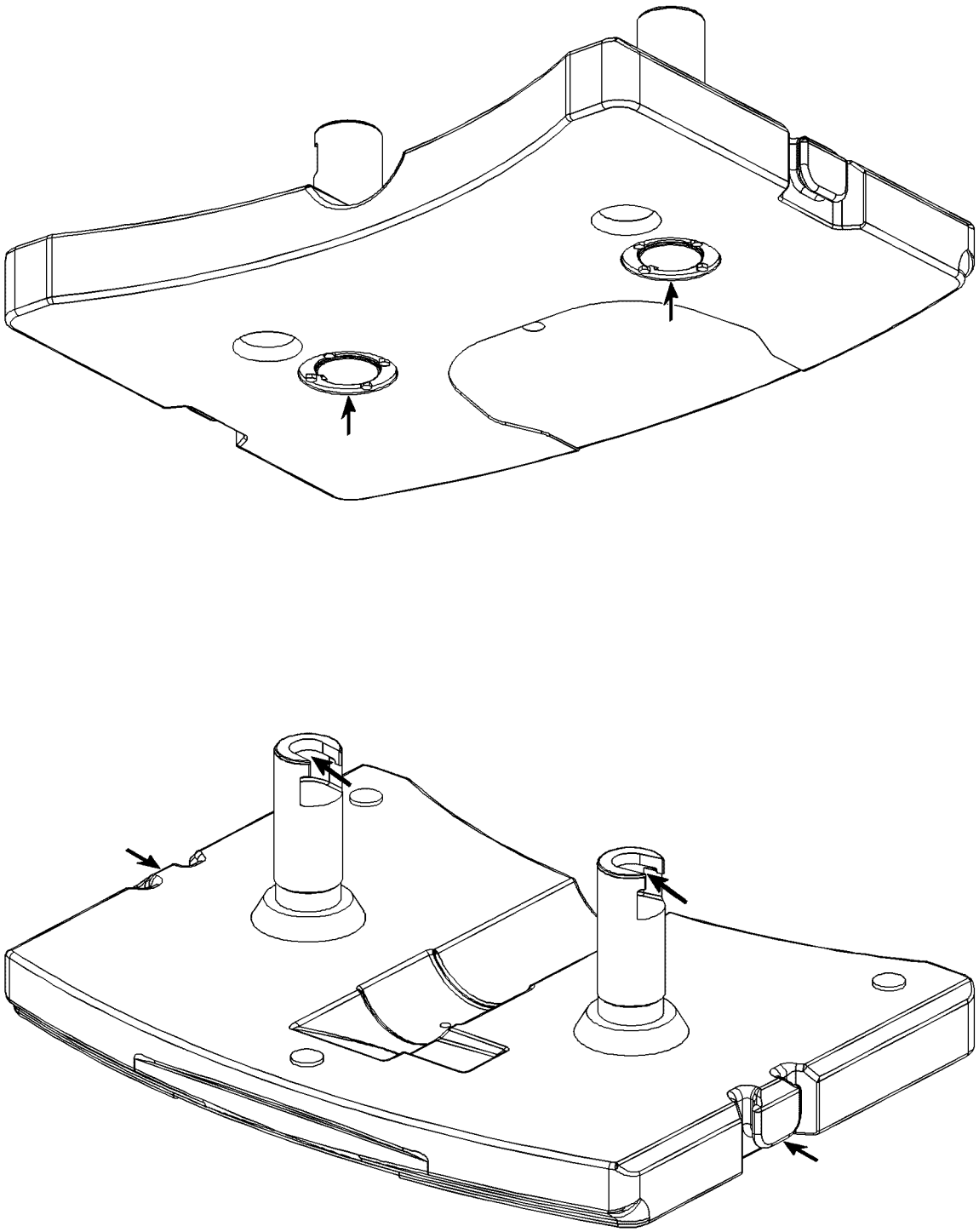

Fig.105807: Example for base plate

LWE/ab Muli 010/24201-02-02/en

copyright © Liebherr-Werk Ehingen GmbH 2016

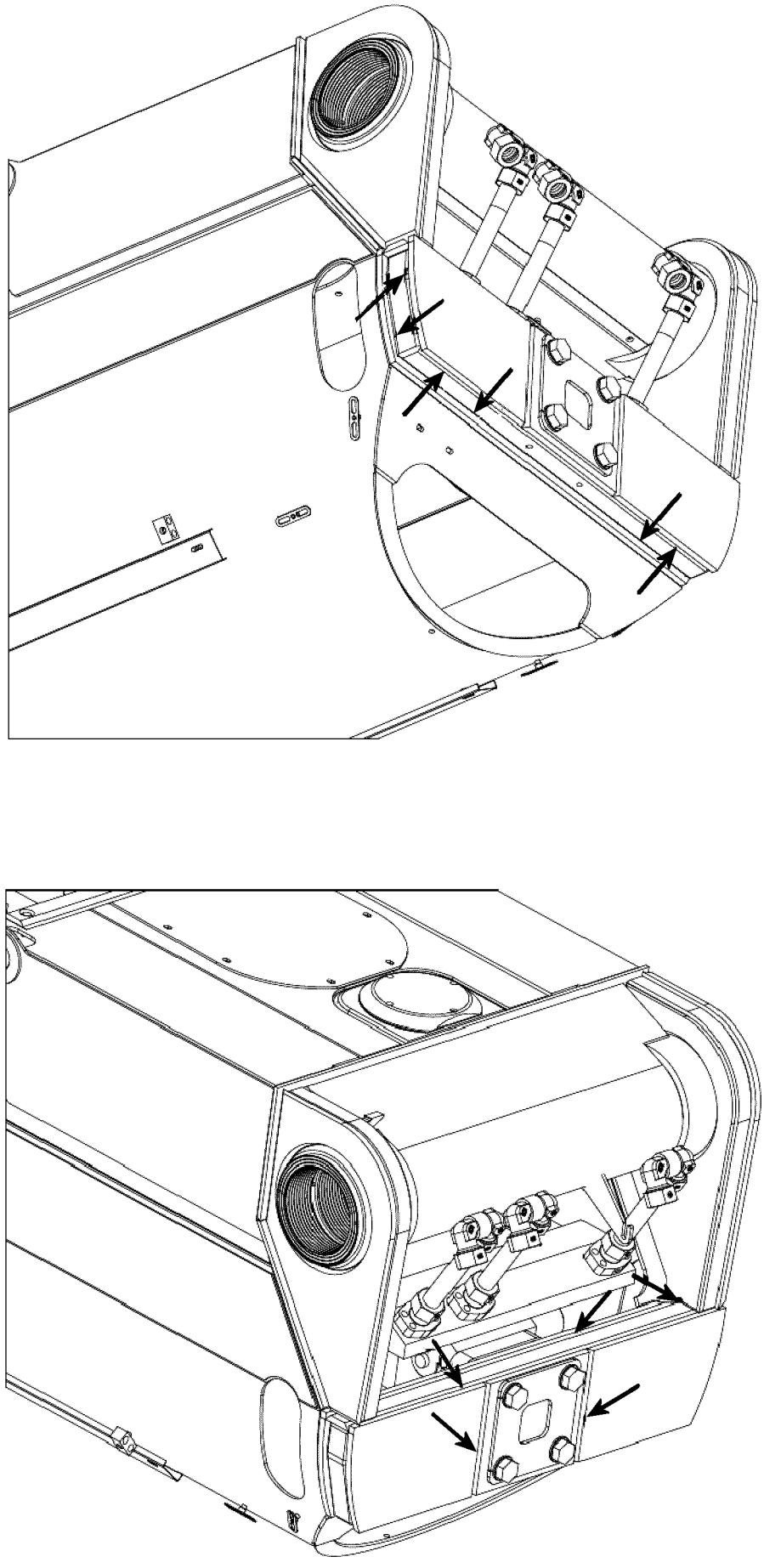

Fig.120273: Example for pivot section

LWE/ab Muli 010/24201-02-02/en

copyright © Liebherr-Werk Ehingen GmbH 2016

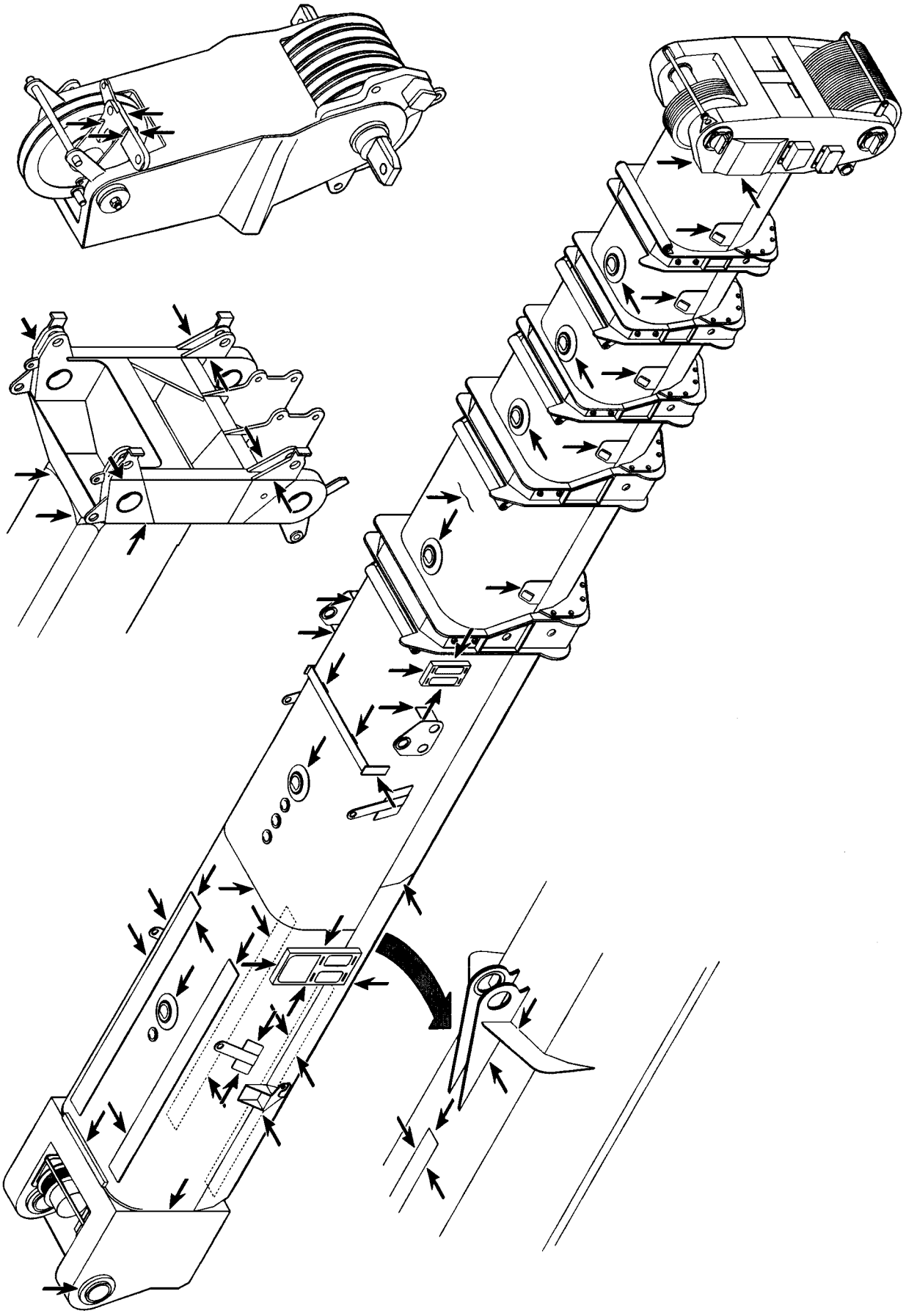

LWE/ab Muli 010/24201-02-02/en

Fig.185050: Example for telescopic boom

copyright © Liebherr-Werk Ehingen GmbH 2016

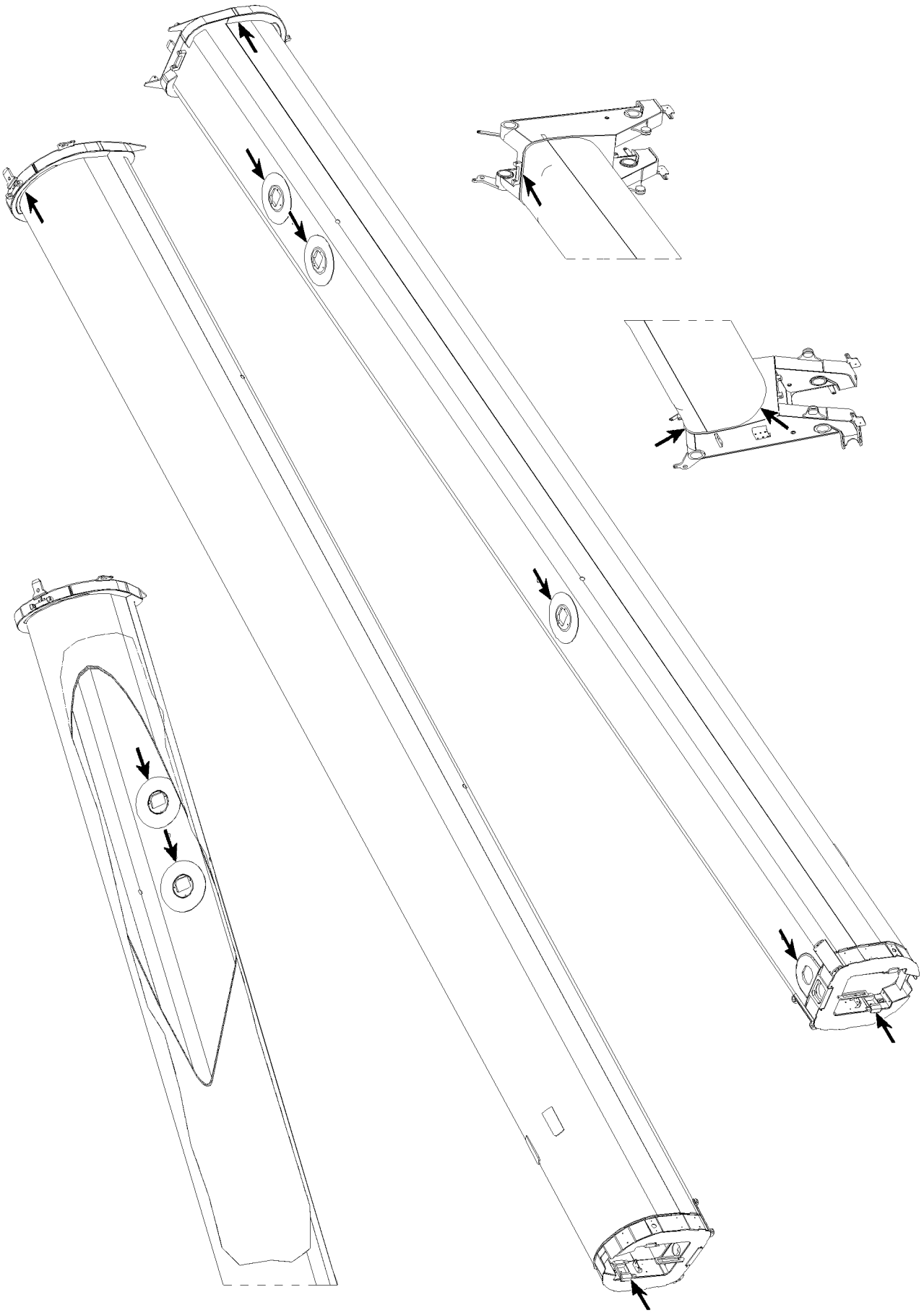

Fig.105710: Example for telescopic boom

LWE/ab Muli 010/24201-02-02/en

copyright © Liebherr-Werk Ehingen GmbH 2016

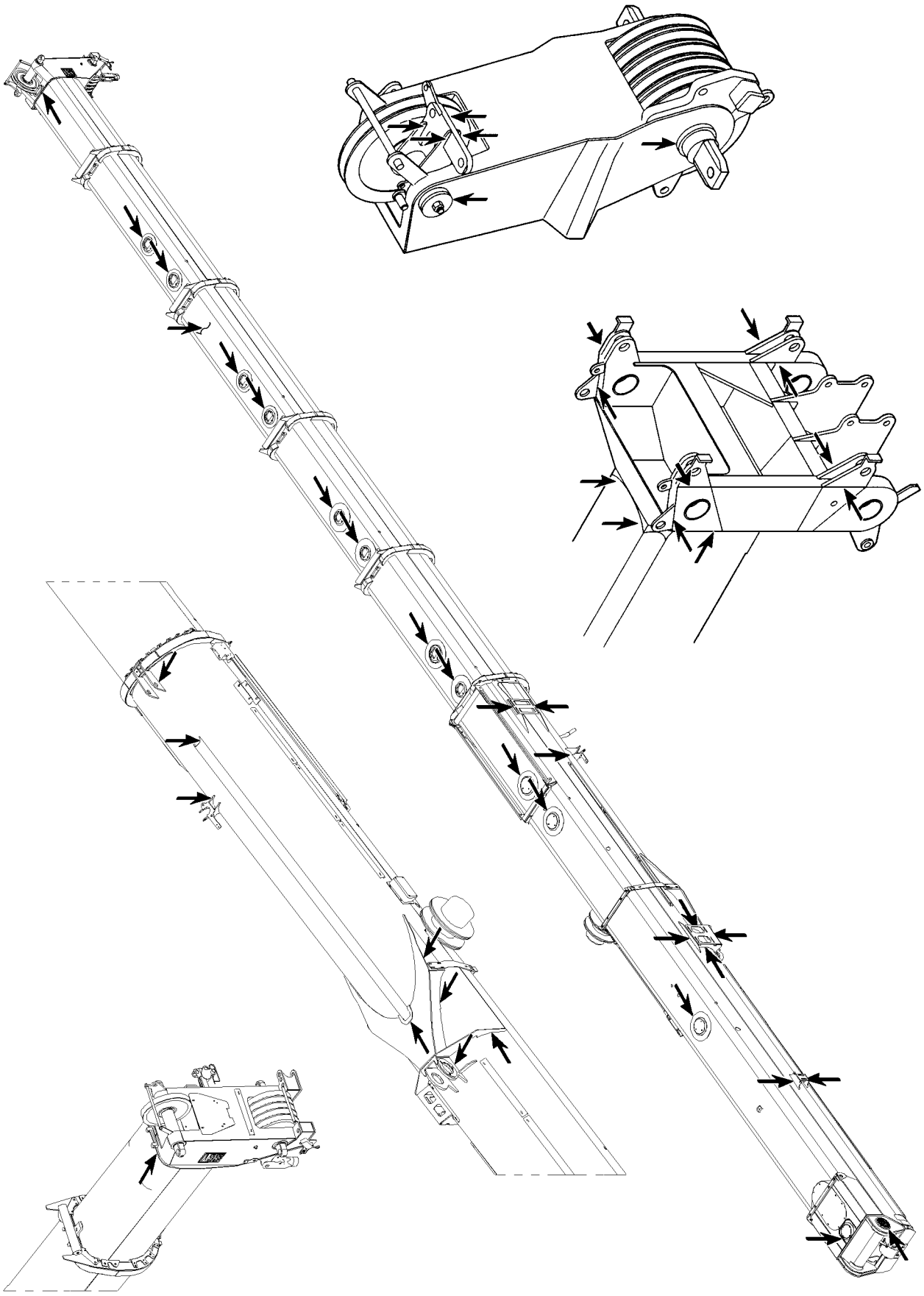

LWE/ab Muli 010/24201-02-02/en

Fig.105711: Example for telescopic boom

copyright © Liebherr-Werk Ehingen GmbH 2016

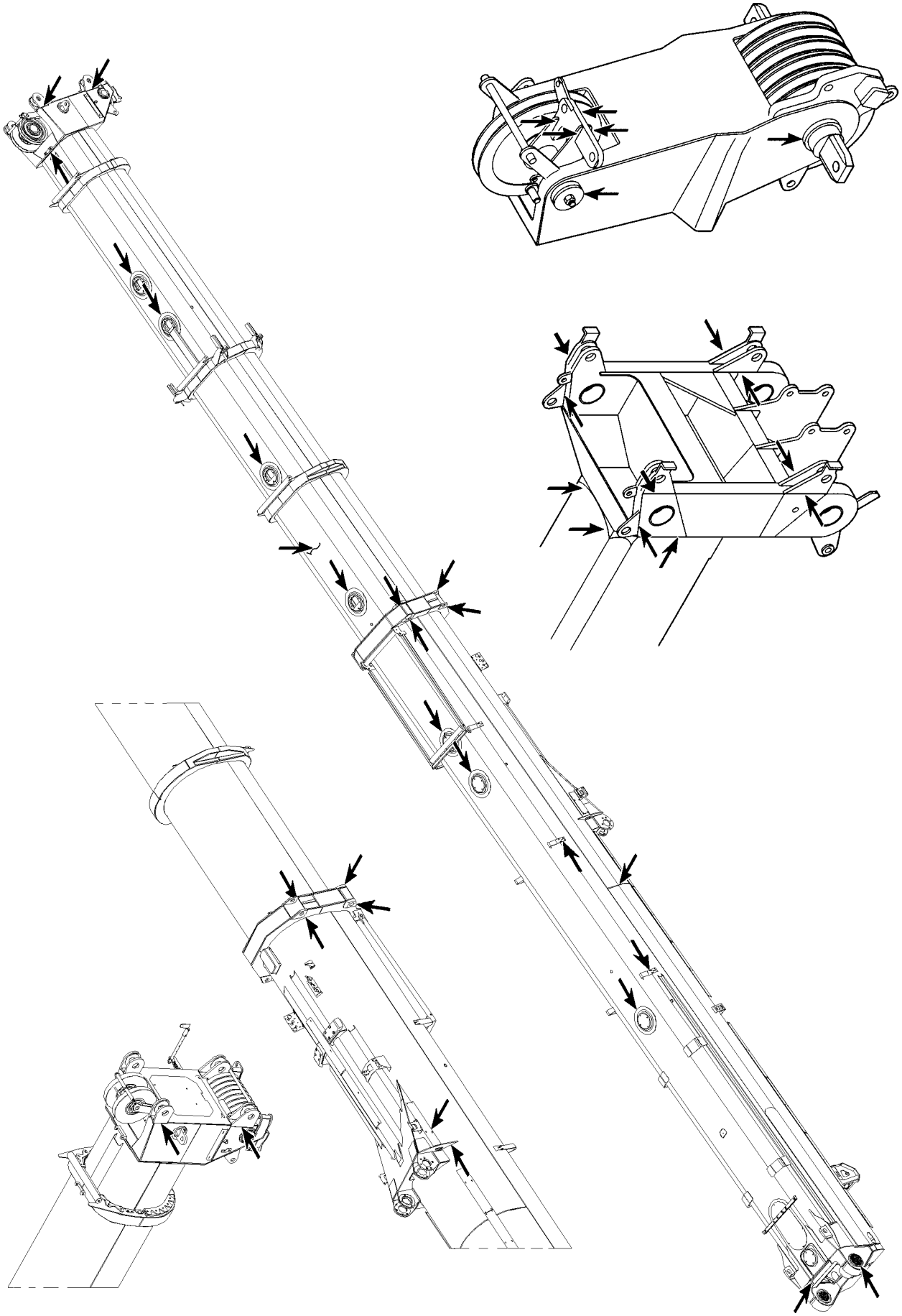

Fig.105720: Example for telescopic boom

LWE/ab Muli 010/24201-02-02/en

copyright © Liebherr-Werk Ehingen GmbH 2016

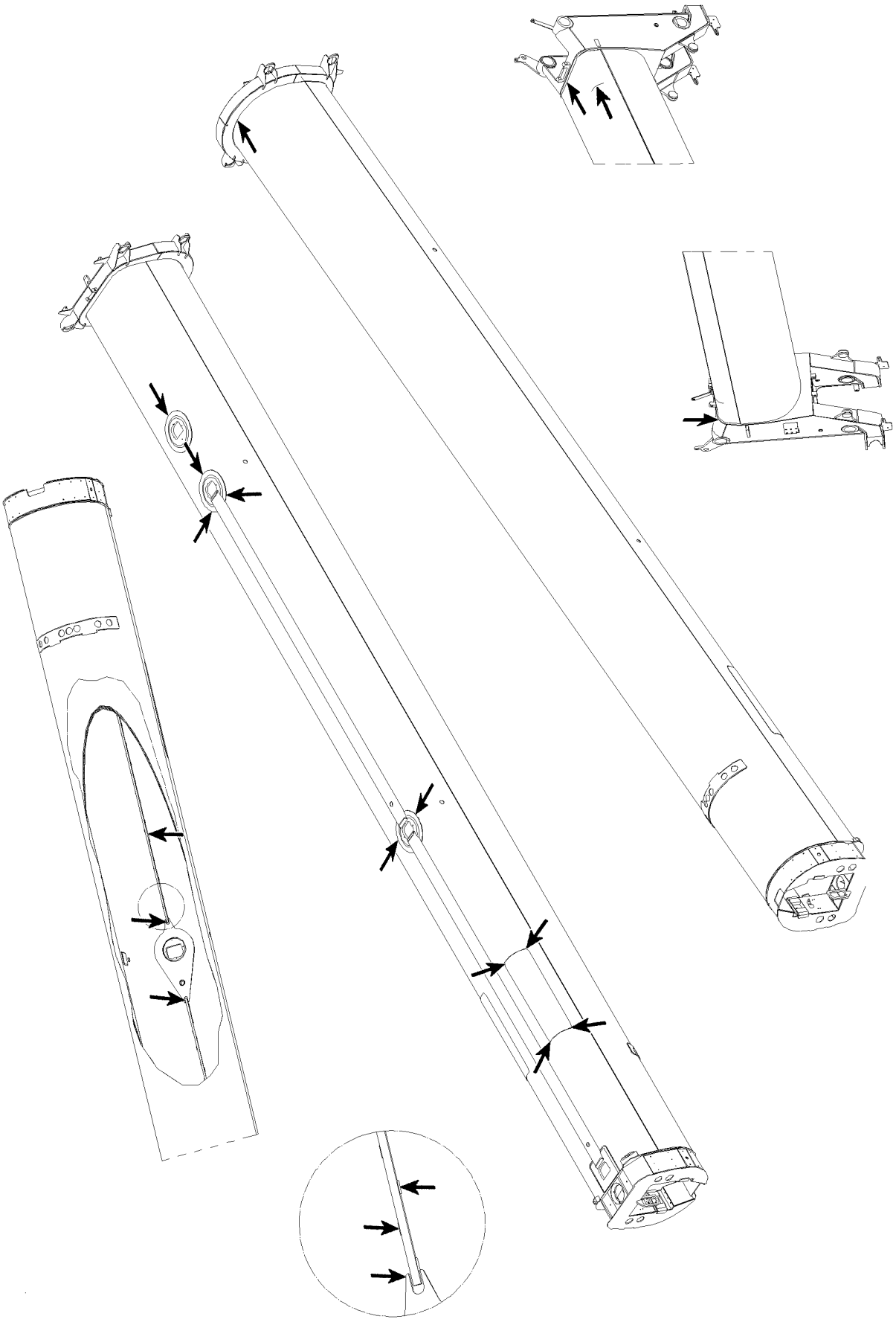

Fig.105721: Example for telescopic boom

copyright © Liebherr-Werk Ehingen GmbH 2016

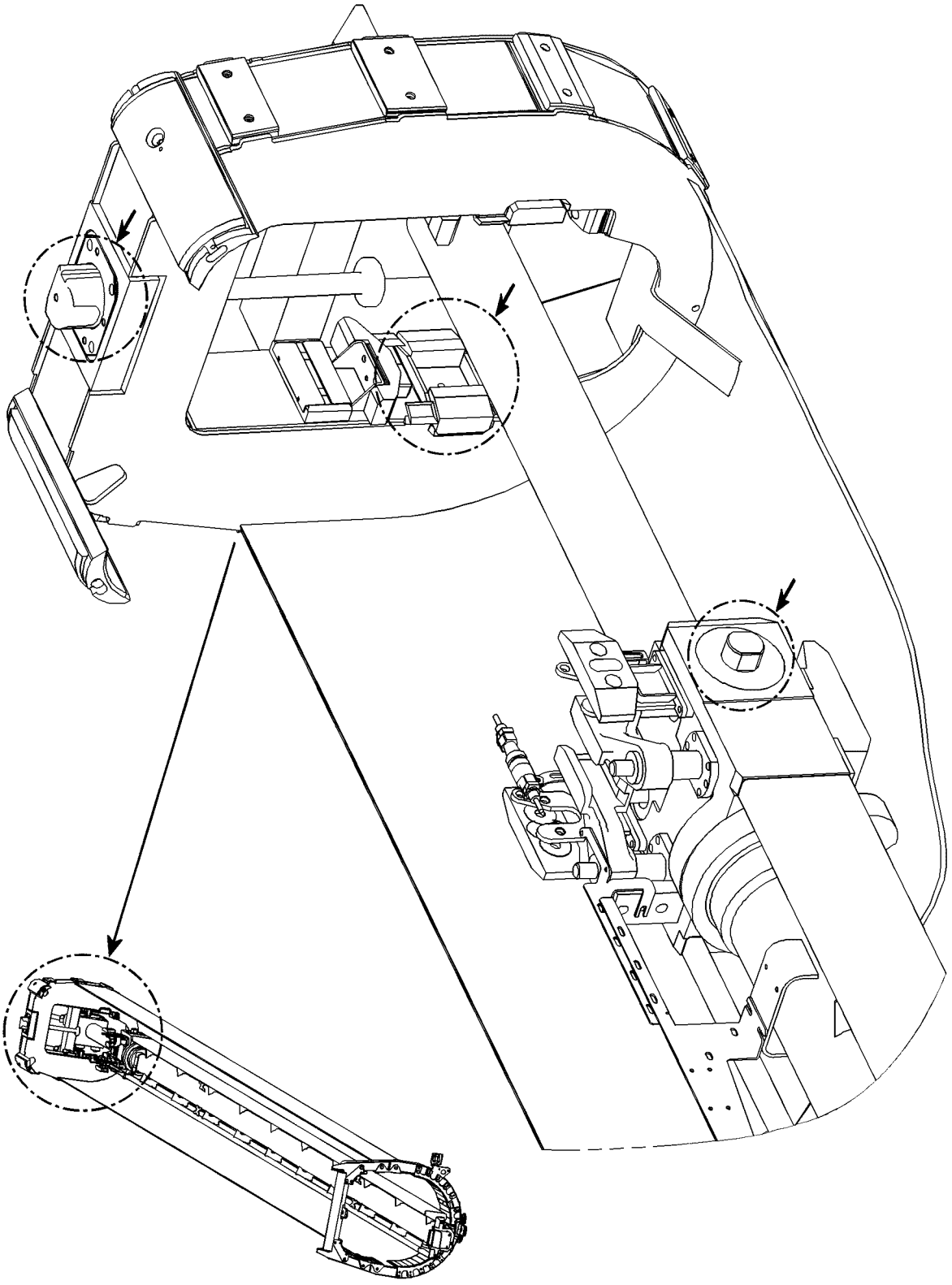

LWE/ab Muli 010/24201-02-02/en

Fig.105891: Example for push out mechanics telescopic boom

copyright © Liebherr-Werk Ehingen GmbH 2016

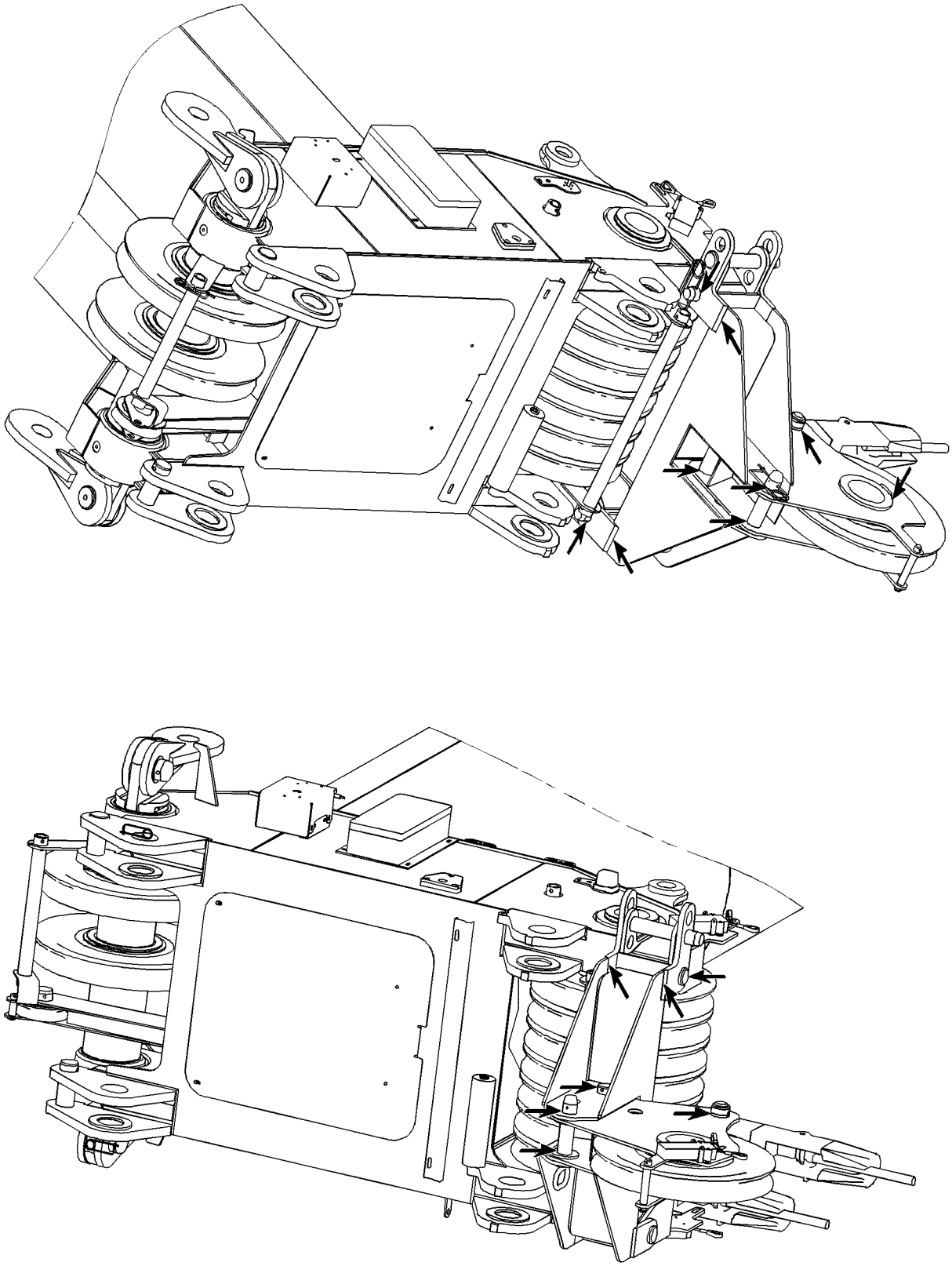

Fig.105892: Example for boom nose

LWE/ab Muli 010/24201-02-02/en

copyright © Liebherr-Werk Ehingen GmbH 2016

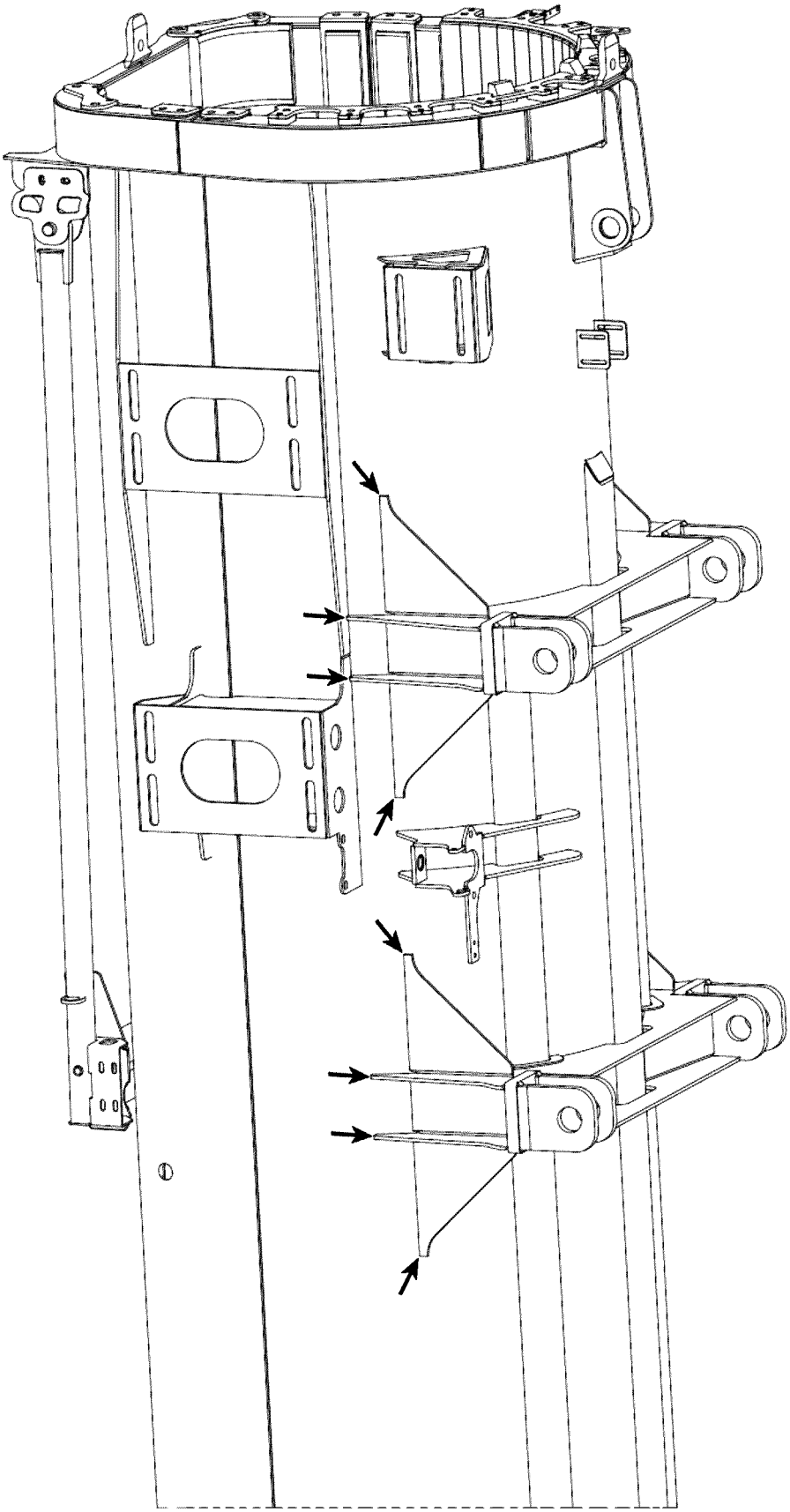

Fig.105689: Example for dolly console

LWE/ab Muli 010/24201-02-02/en

copyright © Liebherr-Werk Ehingen GmbH 2016

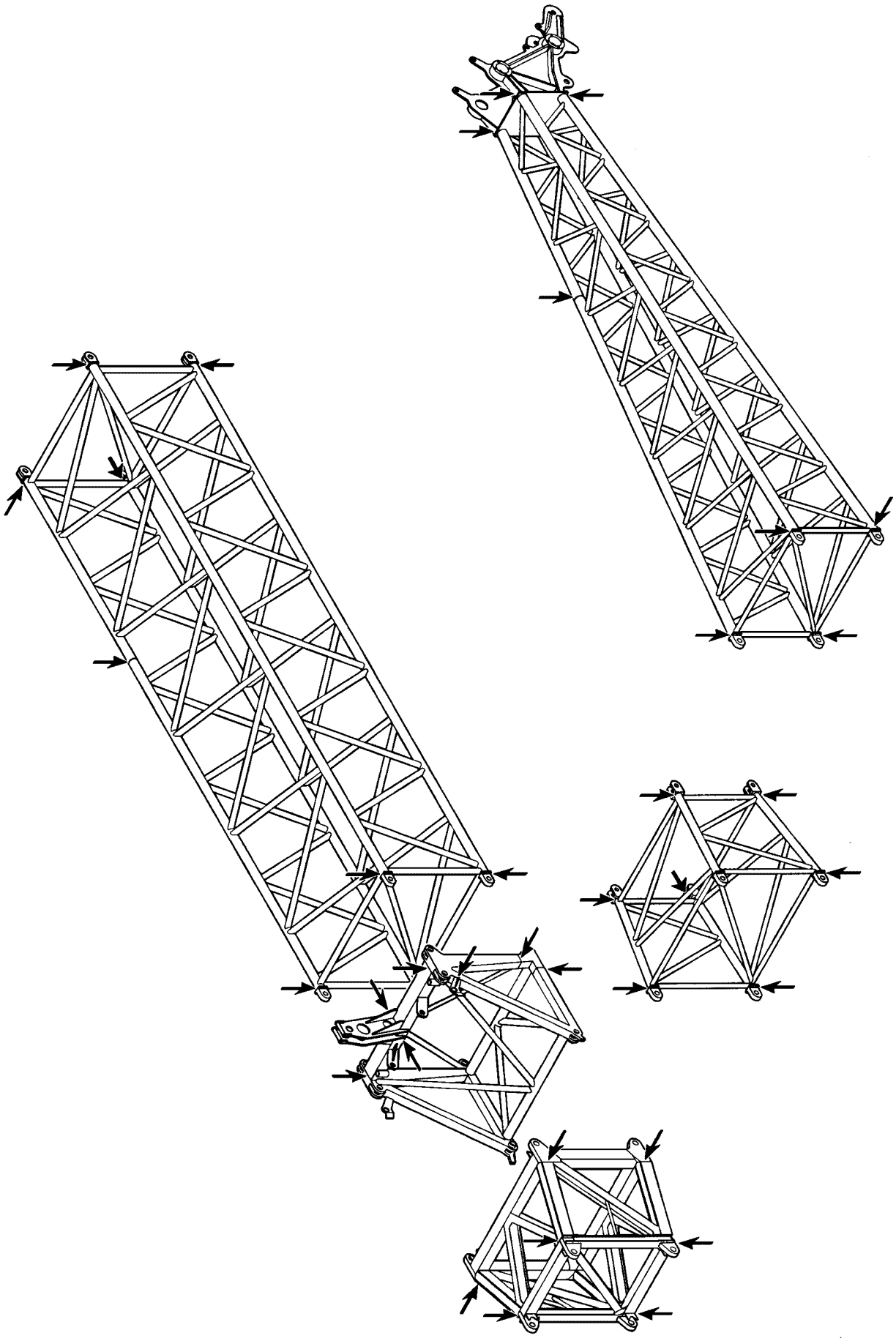

Fig.185051: Example for lattice jib

copyright © Liebherr-Werk Ehingen GmbH 2016

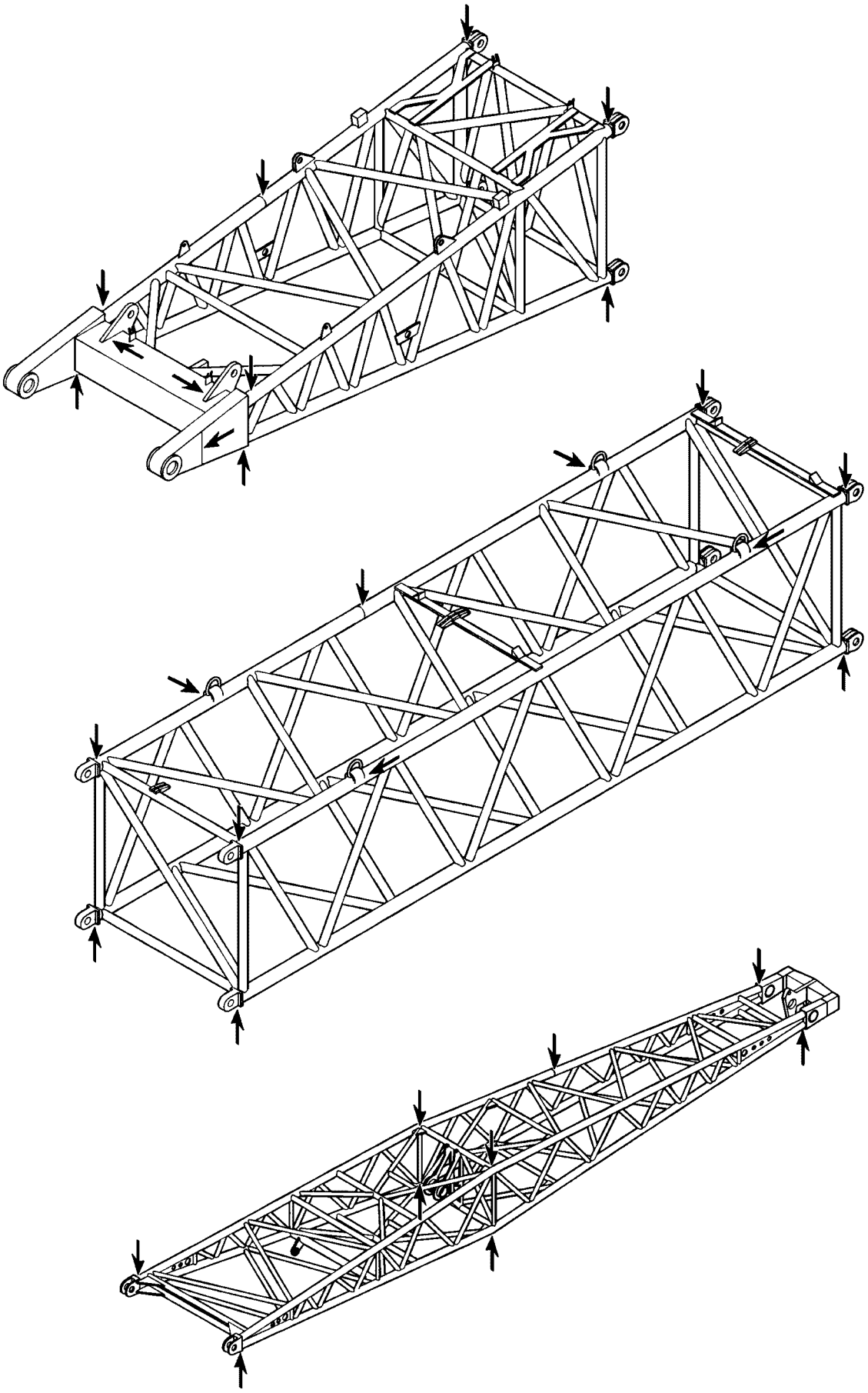

Fig.185052: Example for NA / WA-frame

LWE/ab Muli 010/24201-02-02/en

copyright © Liebherr-Werk Ehingen GmbH 2016

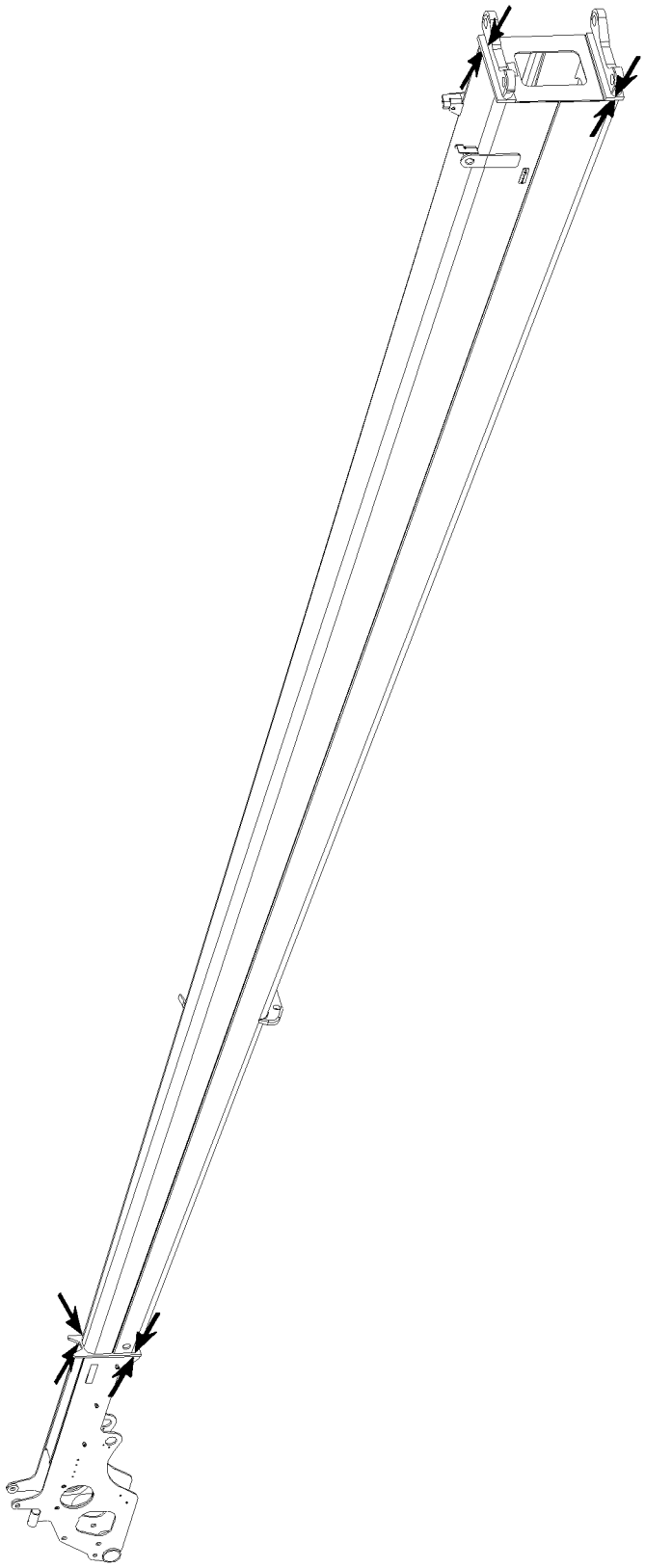

Fig.105713: Example for end section

LWE/ab Muli 010/24201-02-02/en

copyright © Liebherr-Werk Ehingen GmbH 2016

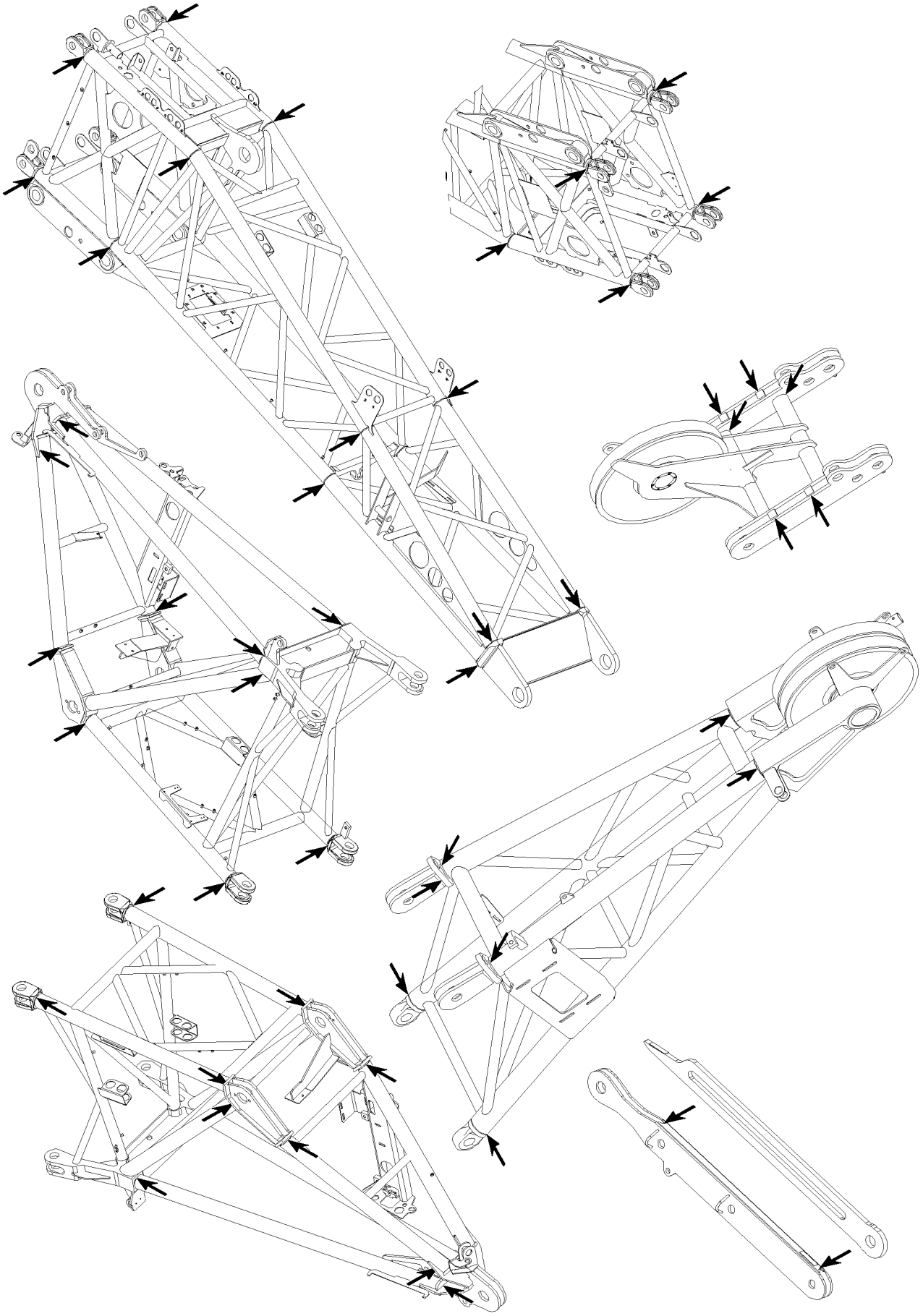

Fig.105836: Example for pivot section, adapter and boom nose

LWE/ab Muli 010/24201-02-02/en

copyright © Liebherr-Werk Ehingen GmbH 2016

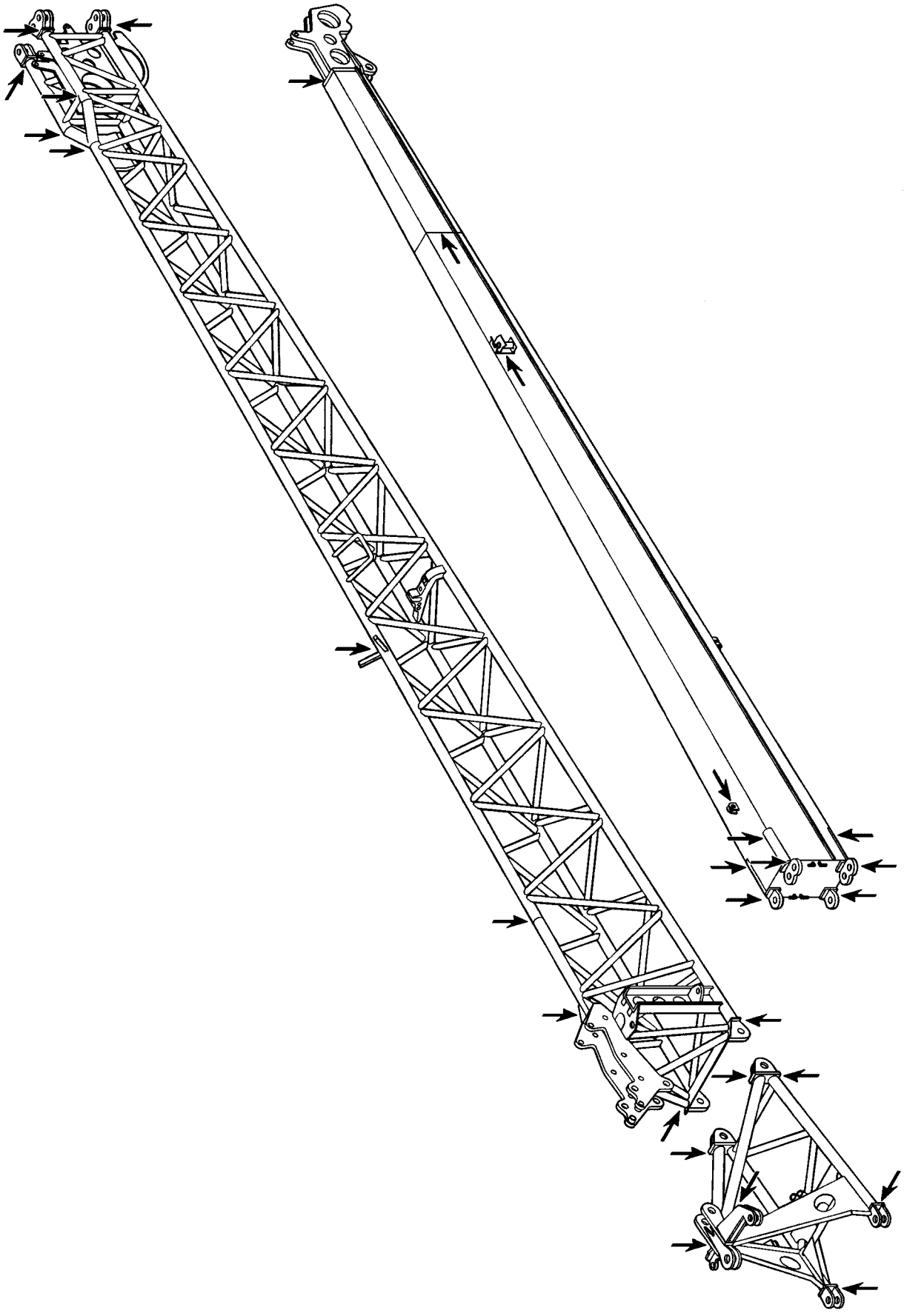

LWE/ab Muli 010/24201-02-02/en

Fig.185058: Example for folding jib

copyright © Liebherr-Werk Ehingen GmbH 2016

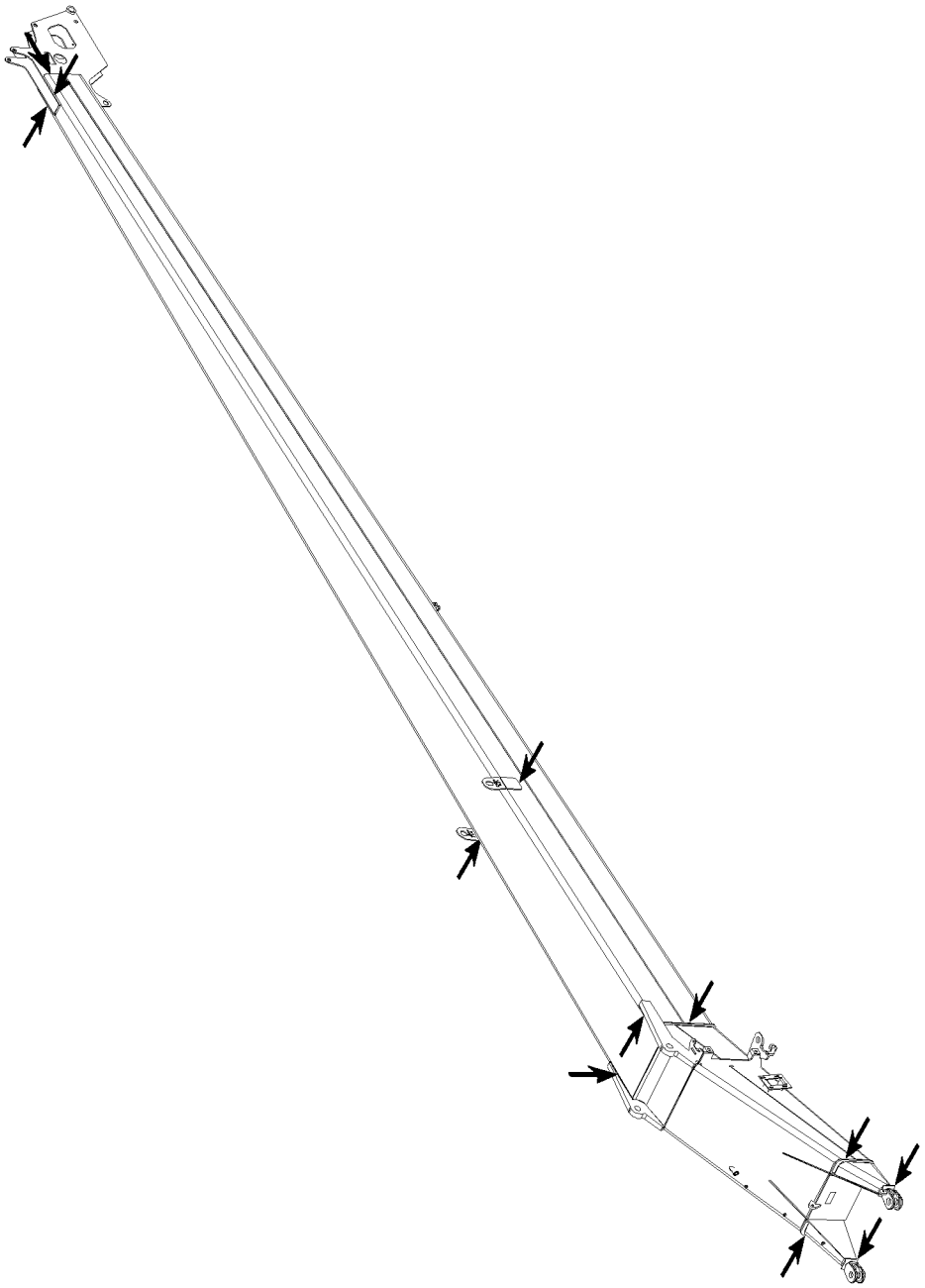

LWE/ab Muli 010/24201-02-02/en

Fig.105697: Example for folding jib

copyright © Liebherr-Werk Ehingen GmbH 2016

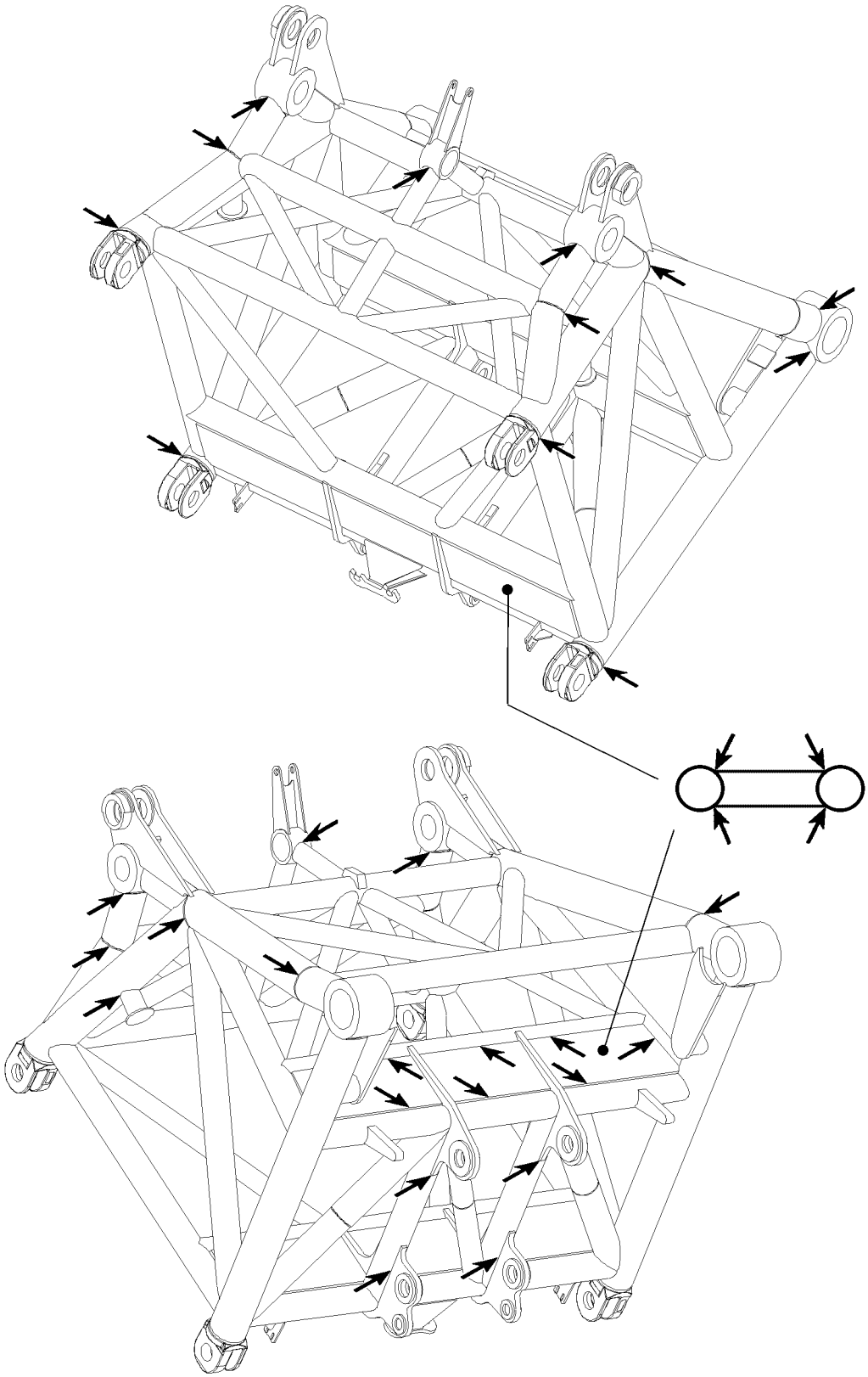

Fig.105732: Example for W-connector head

LWE/ab Muli 010/24201-02-02/en

copyright © Liebherr-Werk Ehingen GmbH 2016

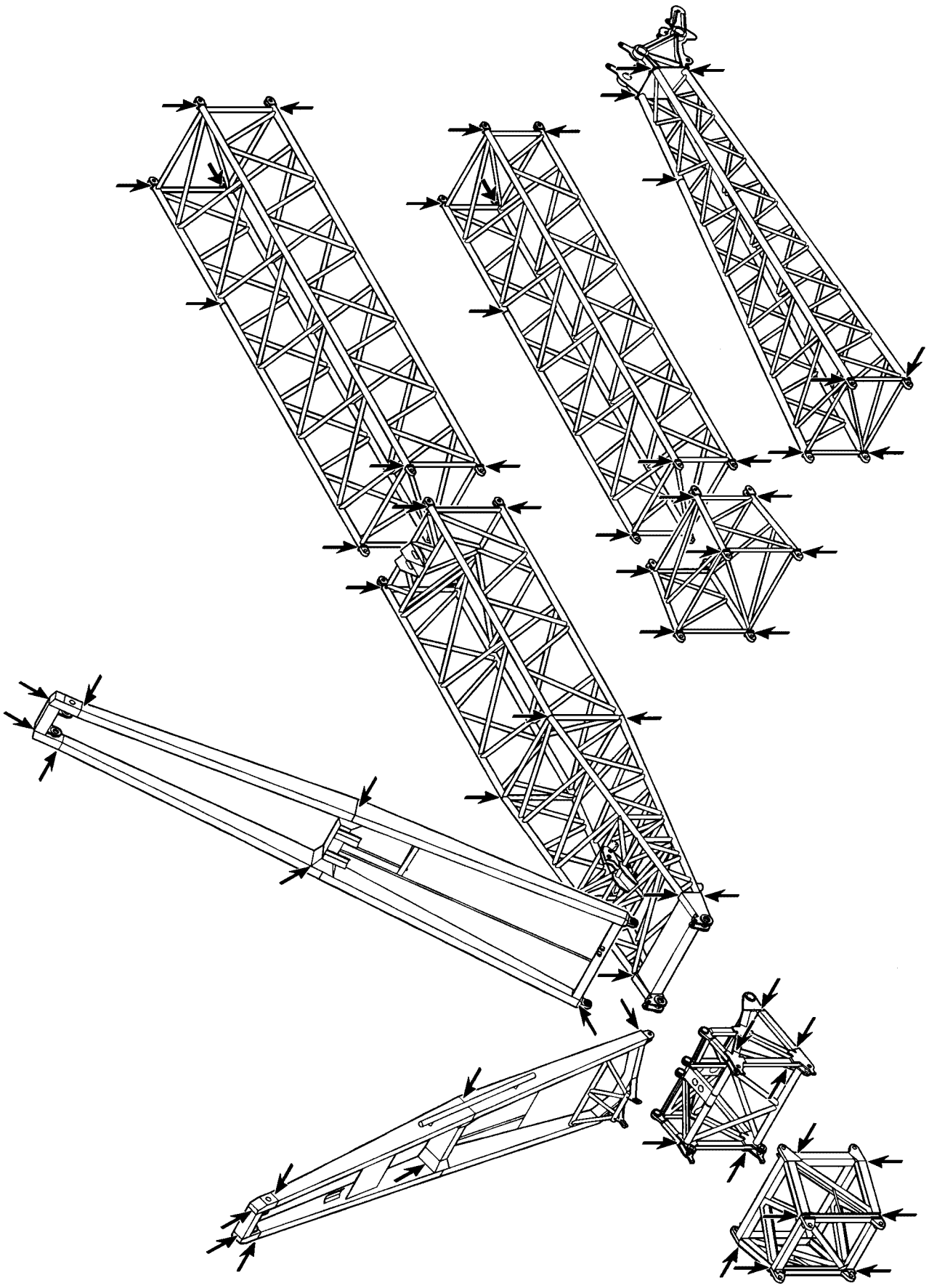

LWE/ab Muli 010/24201-02-02/en

Fig.185053: Example for assembly unit with lattice jib

copyright © Liebherr-Werk Ehingen GmbH 2016

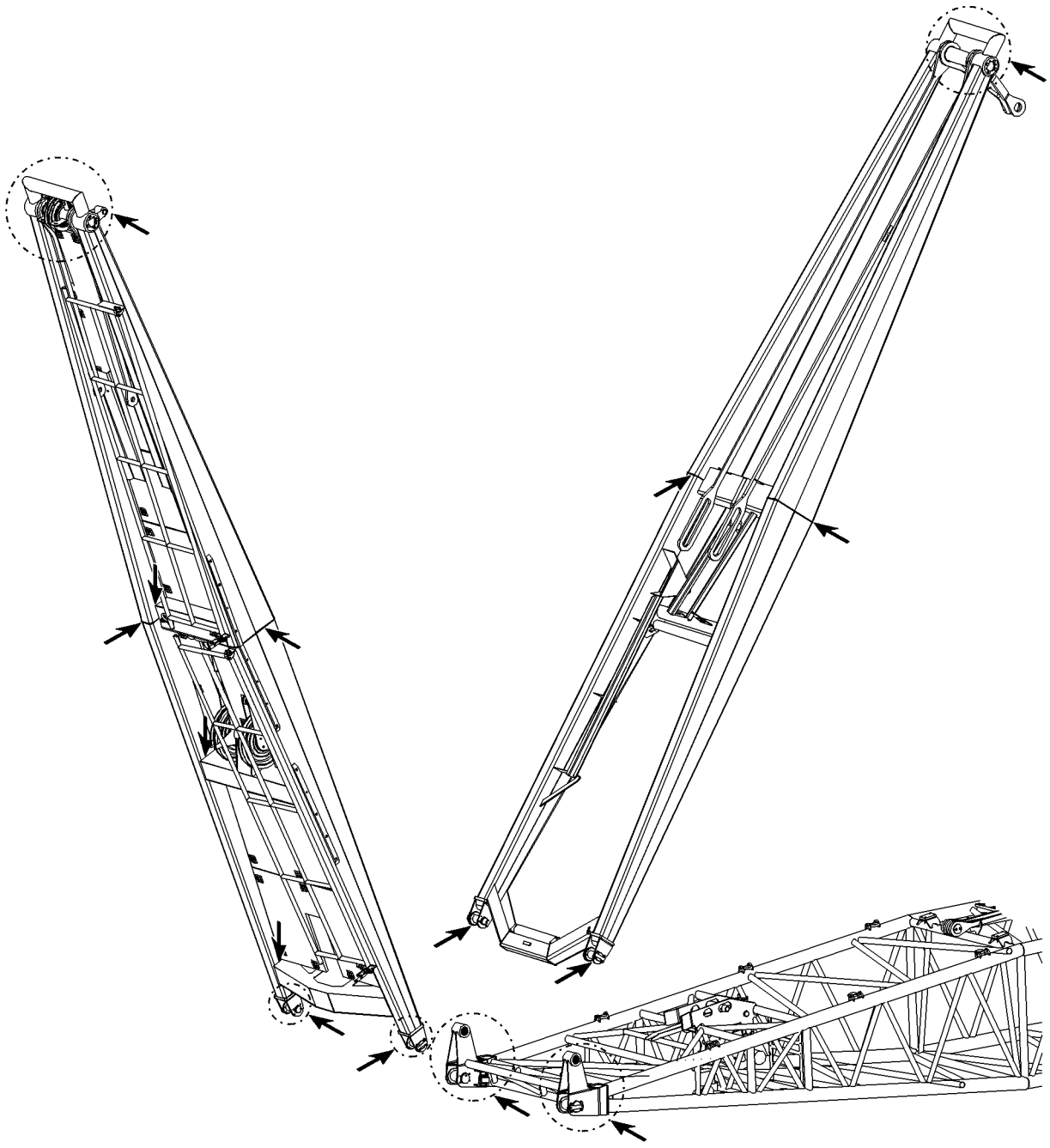

LWE/ab Muli 010/24201-02-02/en

Fig.105838: Example for NA frames

copyright © Liebherr-Werk Ehingen GmbH 2016

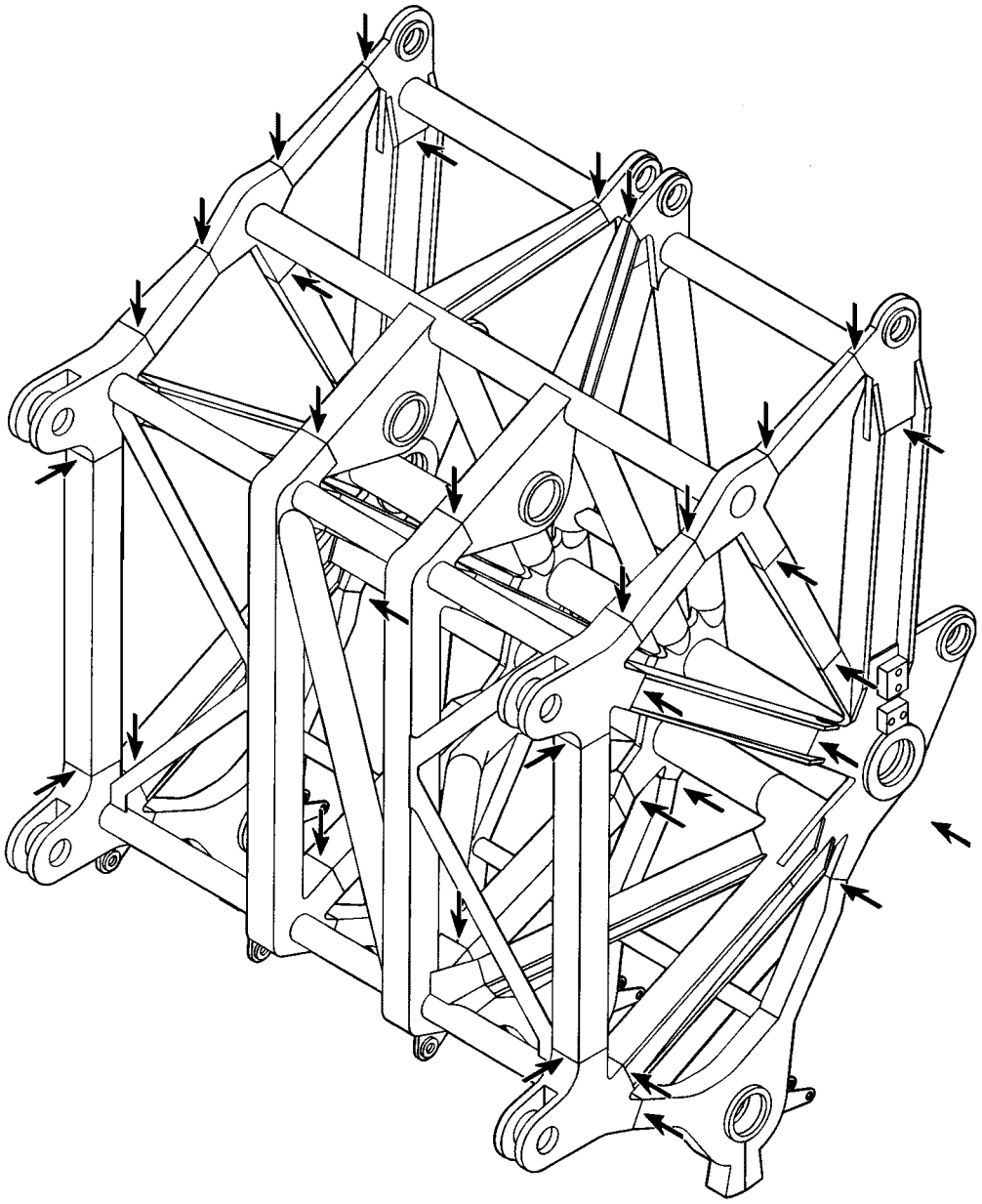

Fig.185054: Example for pulley head

LWE/ab Muli 010/24201-02-02/en

copyright © Liebherr-Werk Ehingen GmbH 2016

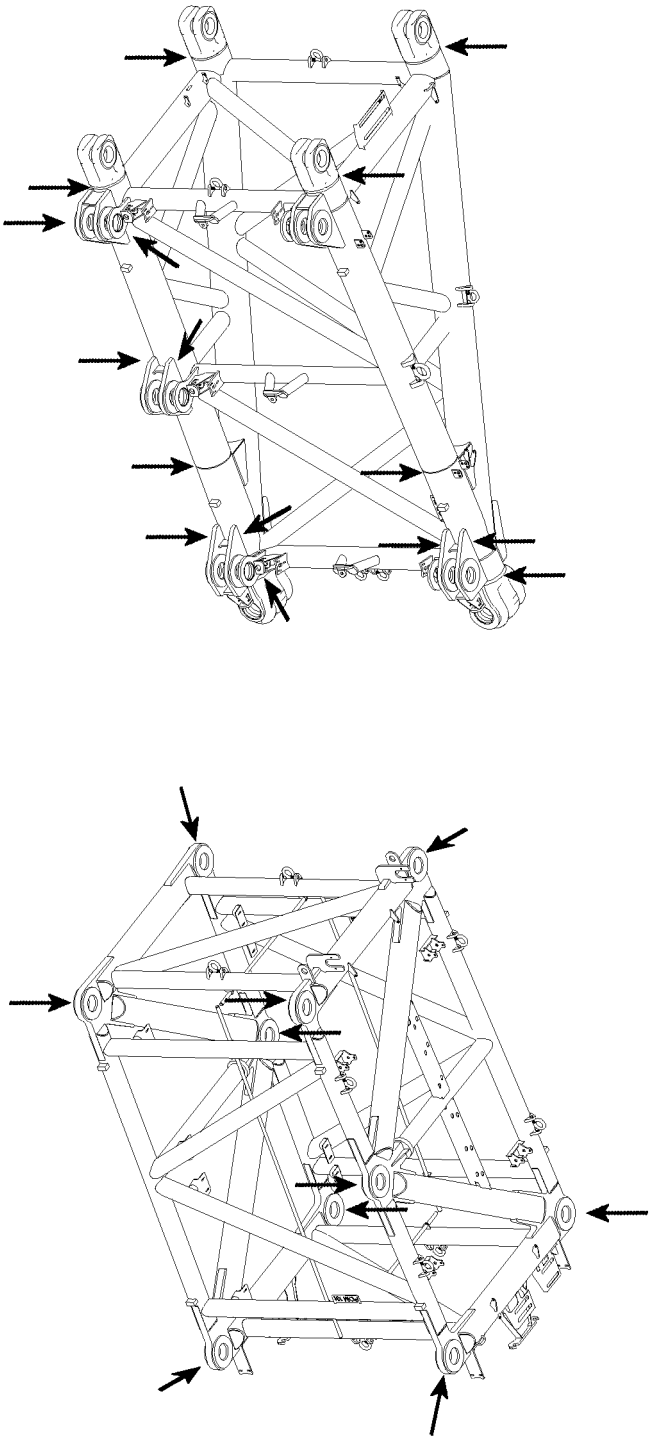

Fig.116609: Example for P-adapter

LWE/ab Muli 010/24201-02-02/en

copyright © Liebherr-Werk Ehingen GmbH 2016

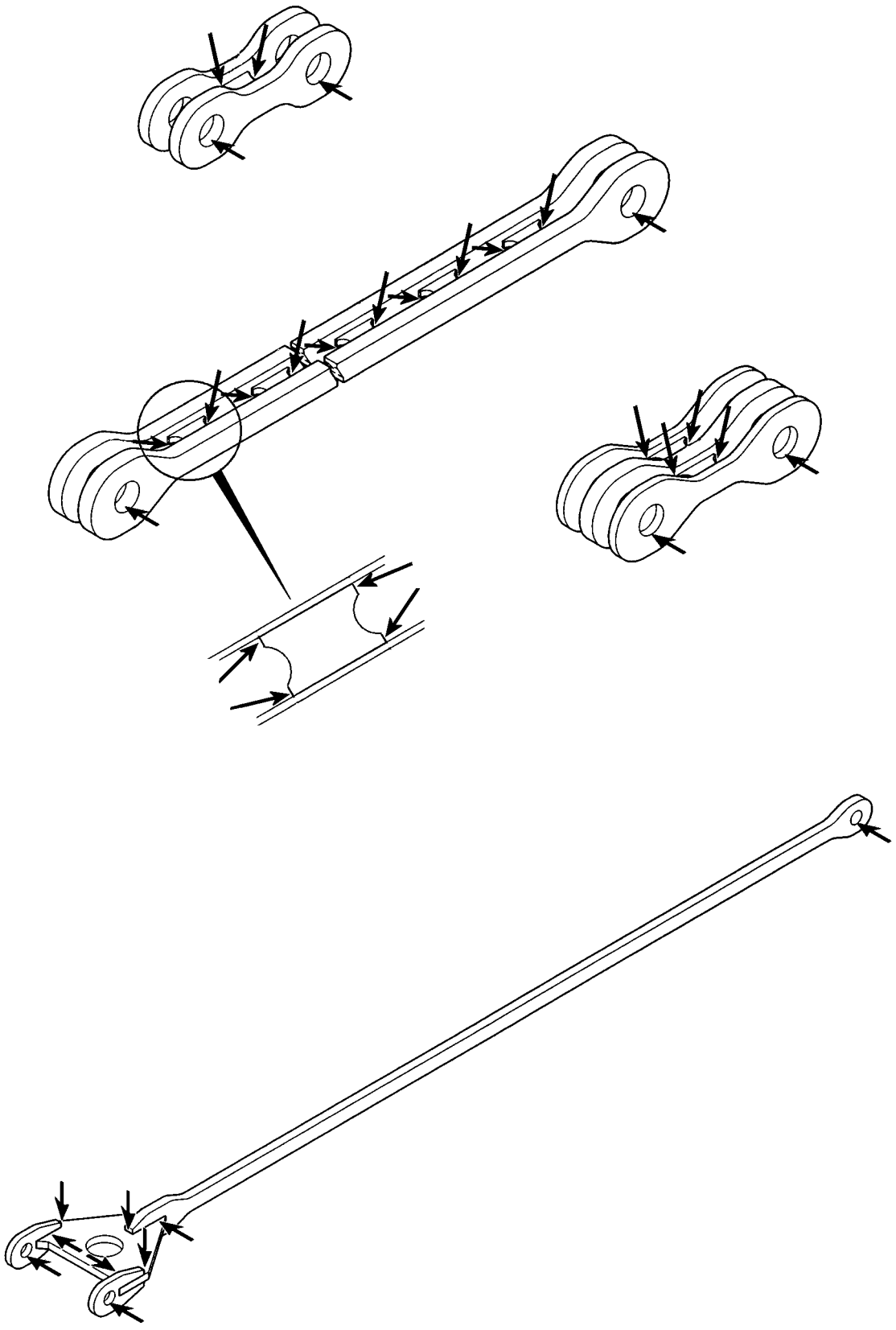

Fig.185055: Example for guy rod

LWE/ab Muli 010/24201-02-02/en

copyright © Liebherr-Werk Ehingen GmbH 2016

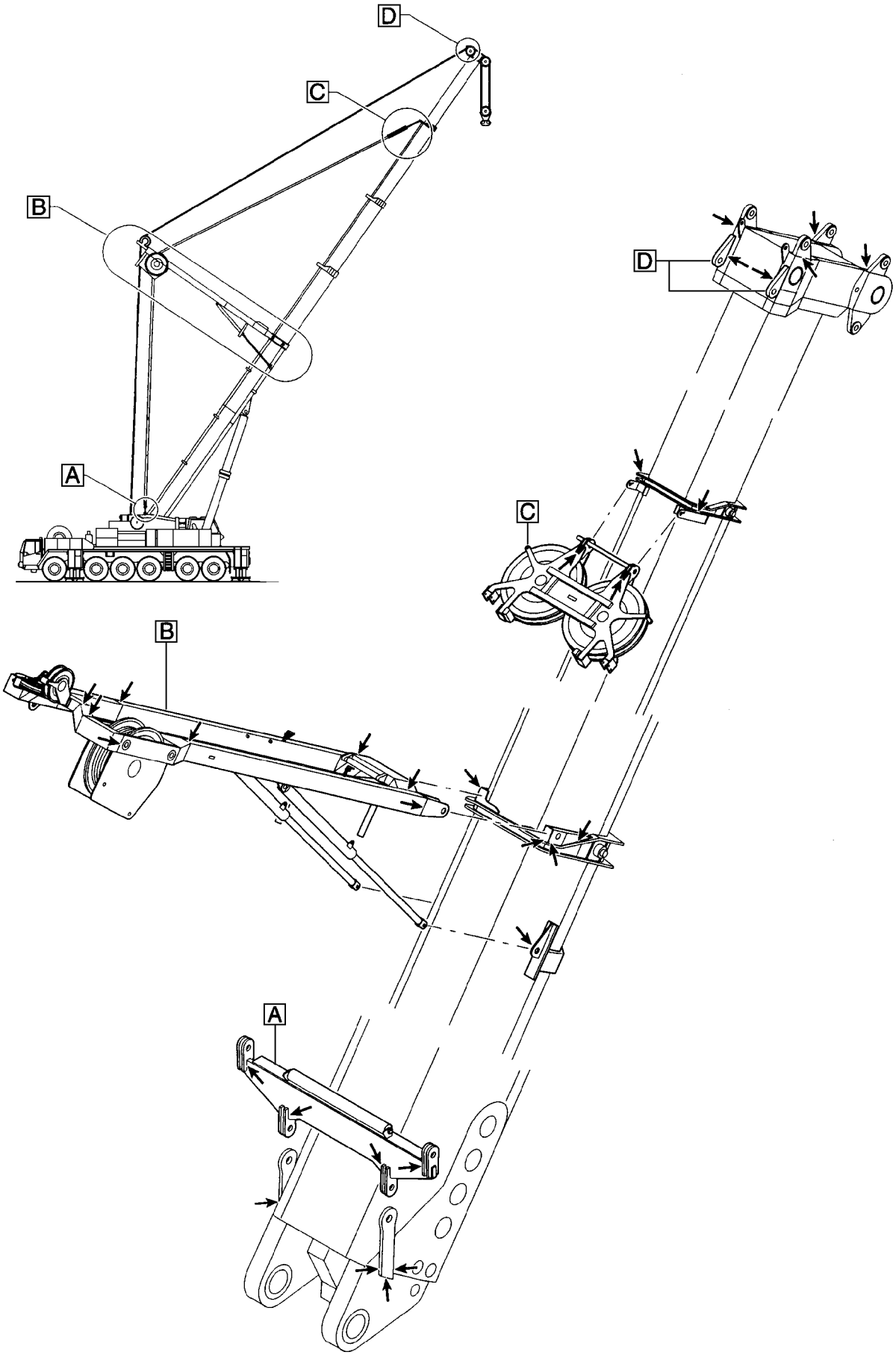

Fig.185059: Example for TA-guying

LWE/ab Muli 010/24201-02-02/en

copyright © Liebherr-Werk Ehingen GmbH 2016

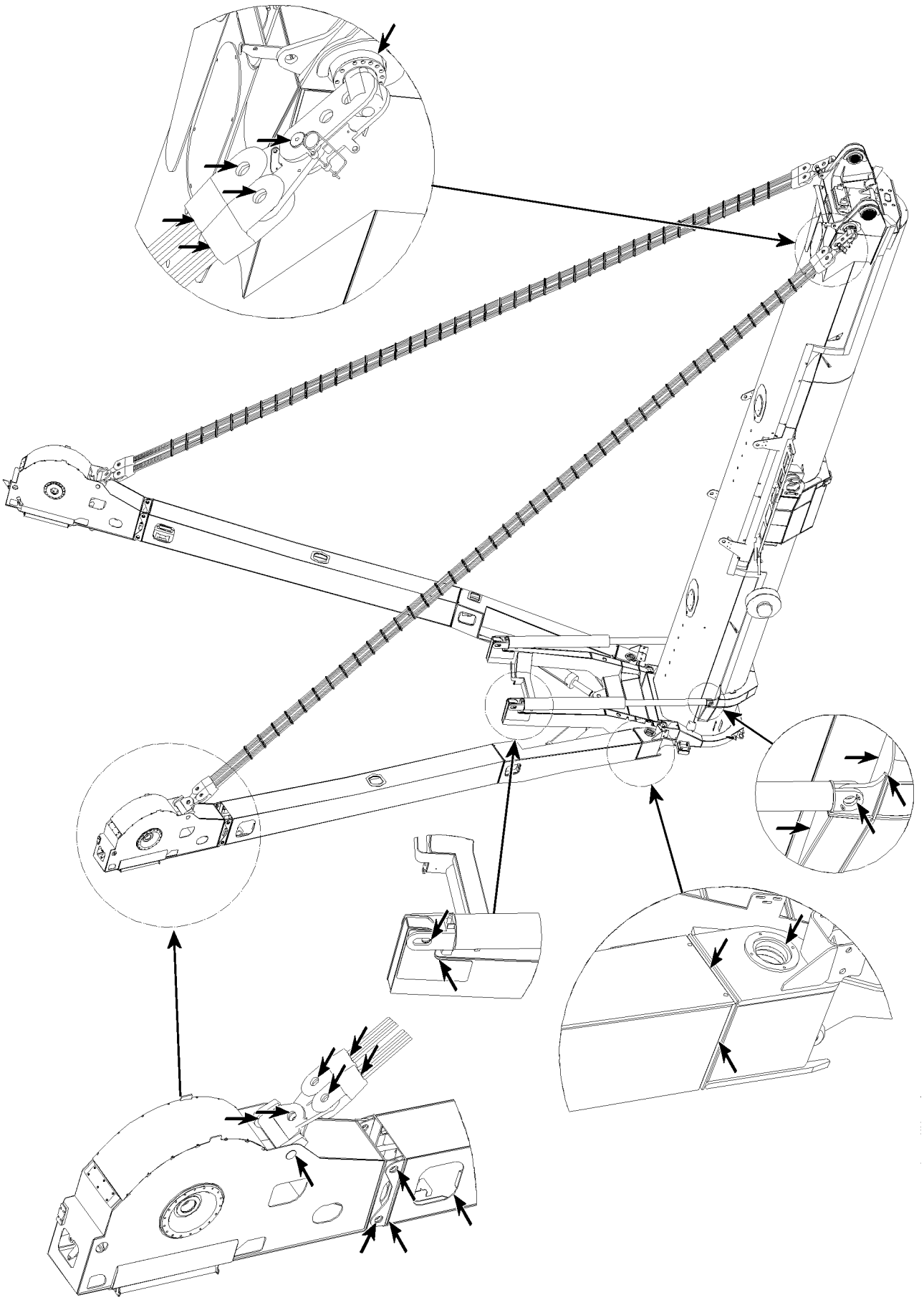

Fig.105707: Example for TY-guying

LWE/ab Muli 010/24201-02-02/en

copyright © Liebherr-Werk Ehingen GmbH 2016

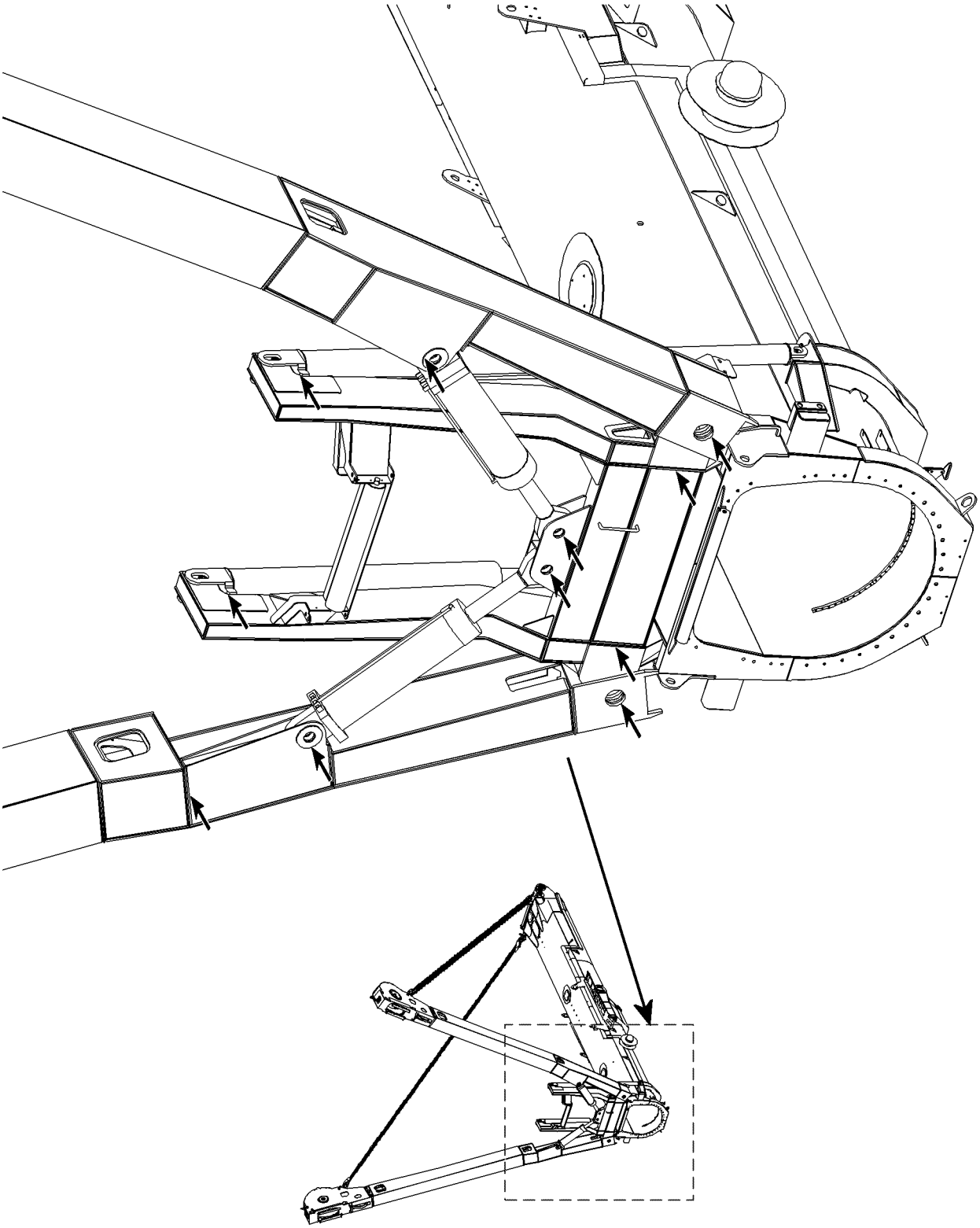

LWE/ab Muli 010/24201-02-02/en

Fig.105708: Example for TY-guying

copyright © Liebherr-Werk Ehingen GmbH 2016

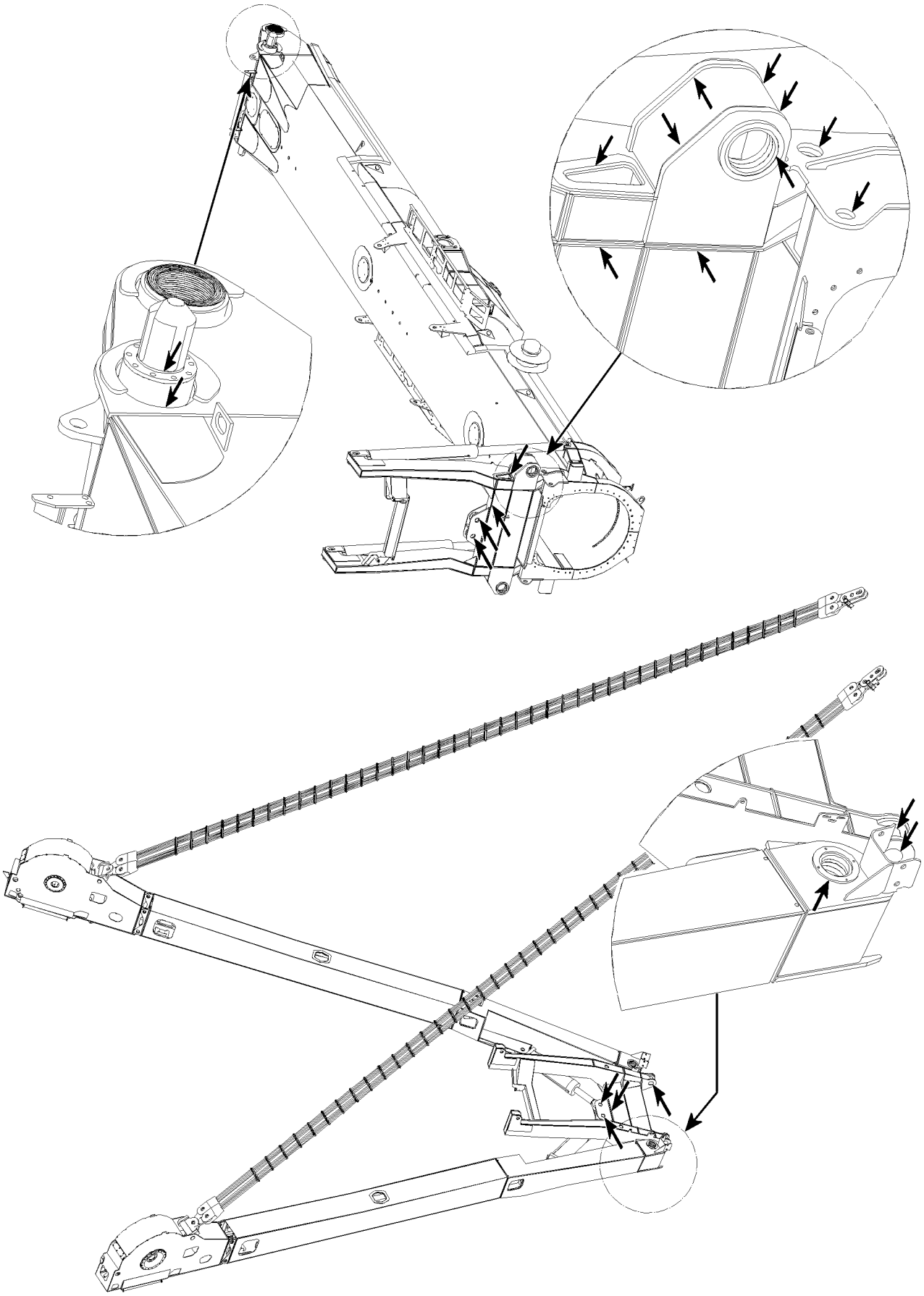

Fig.105709: Example for TY-guying

LWE/ab Muli 010/24201-02-02/en

copyright © Liebherr-Werk Ehingen GmbH 2016

2.4 Inspection of lattice sections

Note

- ▶ The illustration is only an example and is valid for all lattice sections!
- ▶ Check all diagonal and frame pipe connections!
- ▶ Check all bores of the fork - finger connections!

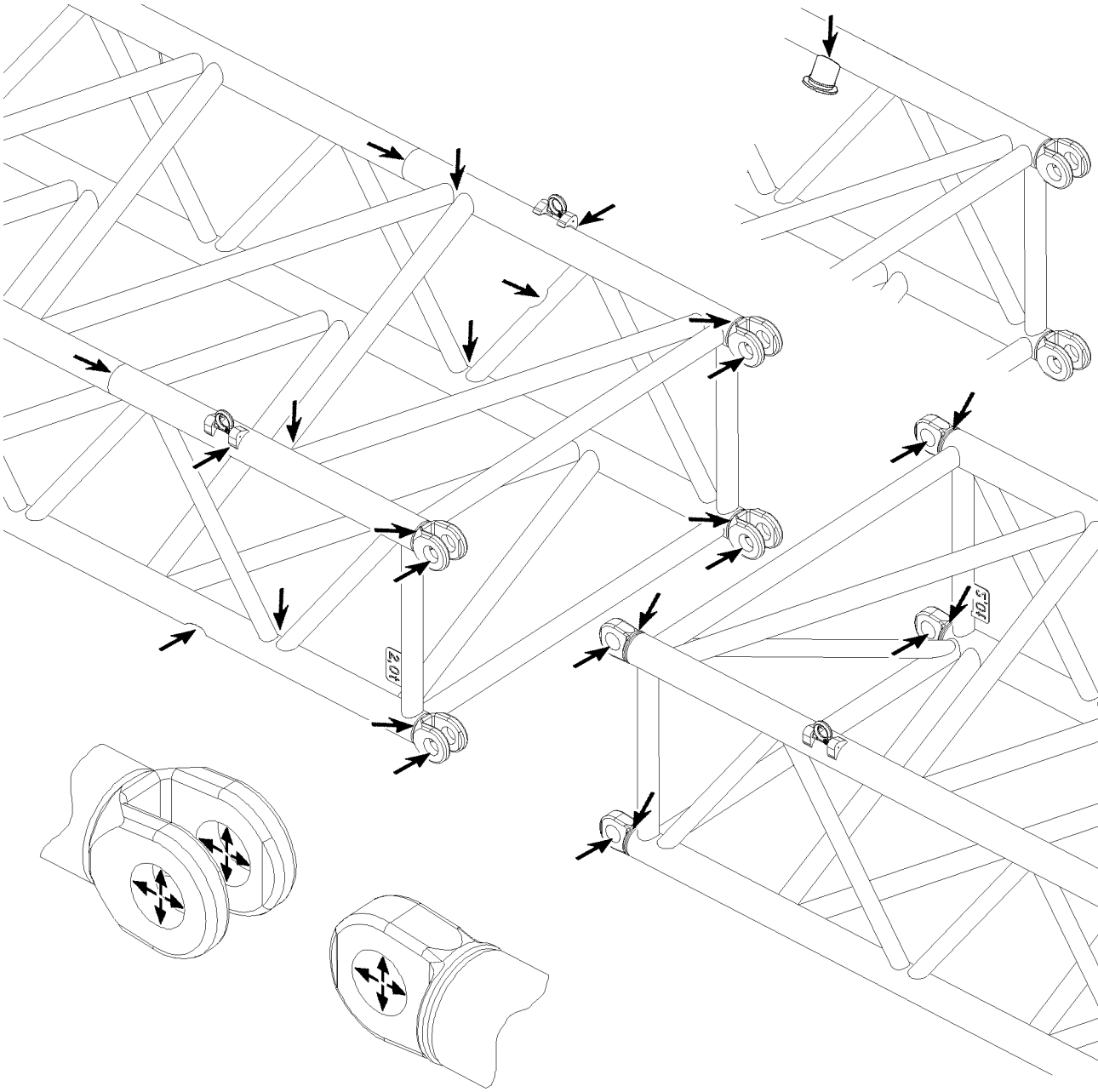

Fig.121023: Example for lattice sections

LWE/ab Muli 010/24201-02-02/en

copyright © Liebherr-Werk Ehingen GmbH 2016

3 Inspection of the rope feed mechanism in the telescopic boom

3.1 Checking the ropes of the rope feed mechanism

- For inspection of rope end mounts, see Crane operating instructions, chapter 7.05.
- For inspection of the pretension on the retraction ropes, see Crane operating instructions, chapter 7.05.
- Inspection of ropes for damage according to ISO 4309, see Crane operating instructions, chapter 8.04.

3.2 Checking the change over pulleys of the rope feed mechanism

DANGER
Danger of accident in case of damage or cracks!
▶ Replace the change over pulley immediately!

Check the entire change over pulley assemblies for damage and cracks once a year.

Also check for wear in the rope groove. Replace the change over pulley if the bottom of the rope groove has been run down up to 1/4 of the rope diameter.

LWE/ab Muli 010/24201-02-02/en

copyright © Liebherr-Werk Ehingen GmbH 2016

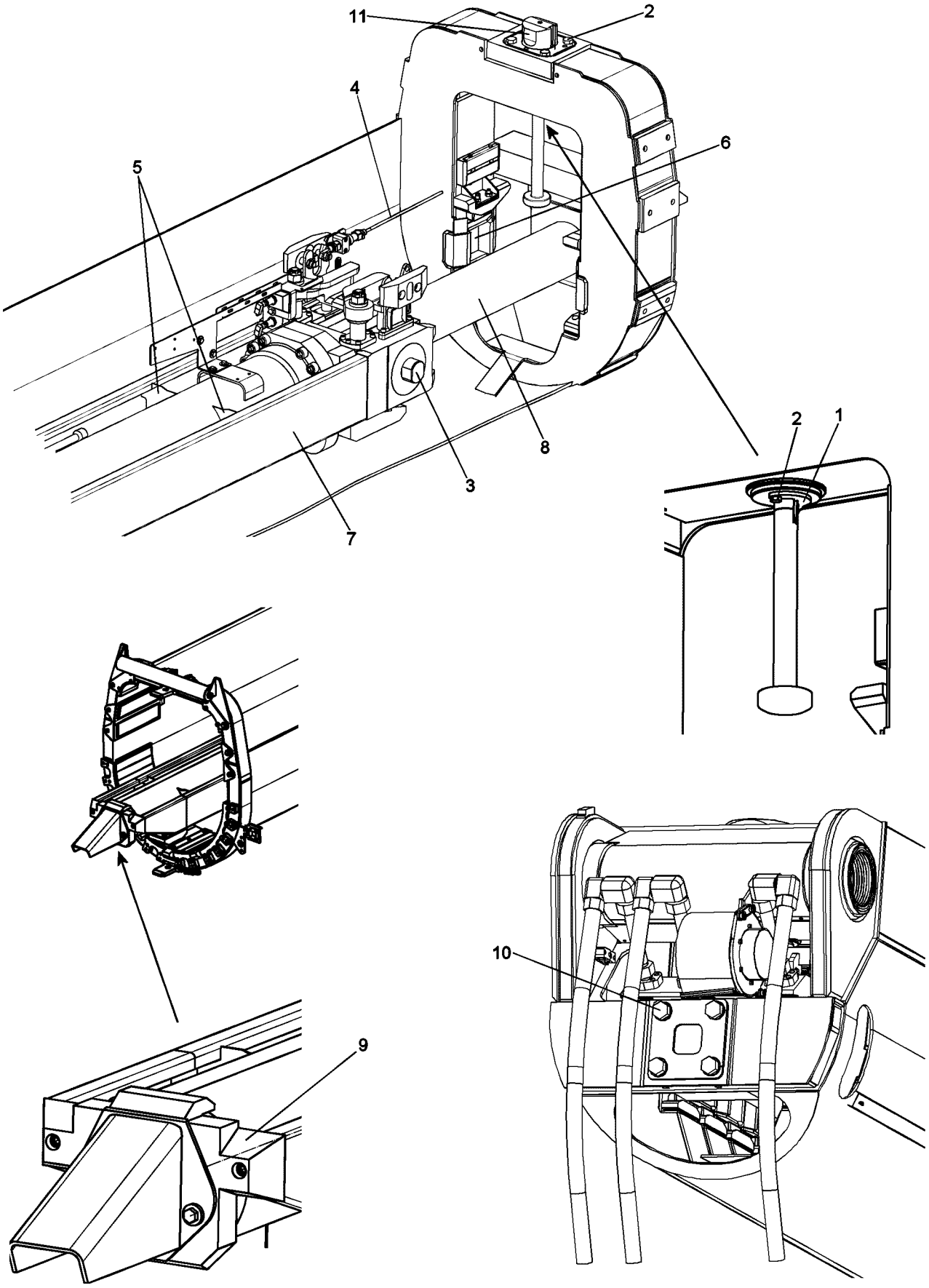

LWE/ab Muli 010/24201-02-02/en

Fig.109286

copyright © Liebherr-Werk Ehingen GmbH 2016

4 Inspection of locking system of telescopic boom

4.1 For cranes with pneumatic boom locking system

- To check the function, see Crane operating instructions, chapter 8.11.
- To check the pin wear pattern, see Crane operating instructions, chapter 8.11.
- To check the wear, see Crane operating instructions, chapter 8.11.
- To check the safety control, see Crane operating instructions, chapter 8.11.

4.2 For cranes with telescopic boom system Telematik

- Inspection of the pull knob safety **1** and all mounting screws **2** for tight seating
- Inspection of twist guards of cylinder pinning **3** and the telescopic boom pinning **11**
- Inspection of the length sensor rope **4** for damage
- Inspection of the cylinder barrel in the area of all welding seams **5** for crack formation
- Inspection of the locking pockets **6** for damage
- Grease the guide rail **7**
- In case of leakage: Inspection of the piston rod **8** for grooves
- Inspection of the wear pattern on the cylinder pinning **3** and the telescopic boom pinning **11**
- Inspection of guide rail **7** for distortion of contour
- Inspection of plastic guide **9** on cylinder bottom for damage
- Inspection of all mounting screws **10** on the push out cylinder for tight seating

LWE/ab Muli 010/24201-02-02/en

copyright © Liebherr-Werk Ehingen GmbH 2016

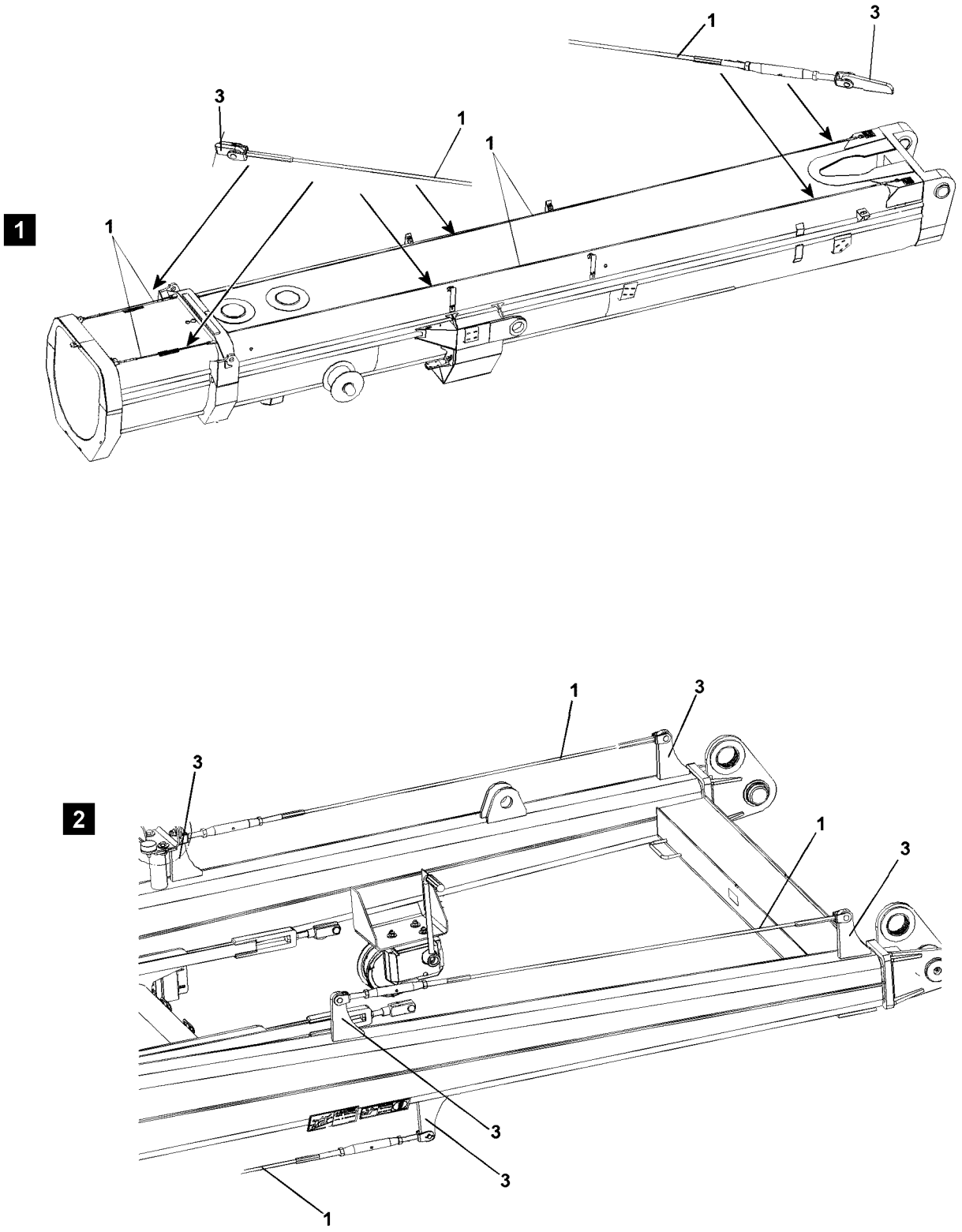

LWE/ab Muli 010/24201-02-02/en

Fig.112739

copyright © Liebherr-Werk Ehingen GmbH 2016

5 Inspection of safety ropes and anchor points

WARNING
Danger of falls due to damaged safety ropes or anchor points!
The safety ropes **1** and anchor points **3** must be checked **at least once a year** by **expert personnel** for safety and damage!
If any defects are found on the safety ropes **1** or anchor points **3** during the inspections, then the safety ropes **1** or anchor points **3** must be replaced immediately by **expert personnel**! If this is not observed, assembly personnel could be killed or fatally injured in a fall!

- ▶ The rope pretension on the safety ropes must be 800 N !
- ▶ Have damaged safety ropes **1** or anchor points **3** replaced immediately by **expert personnel**!

Note
Document the inspections in writing!

- ▶ The scope and results of tests should be documented to permit reproducibility. This documentation forms part of the crane records and should be safely stored during the entire service life of the crane.

5.1 Check of rope pretension on telescopic booms, illustration 1

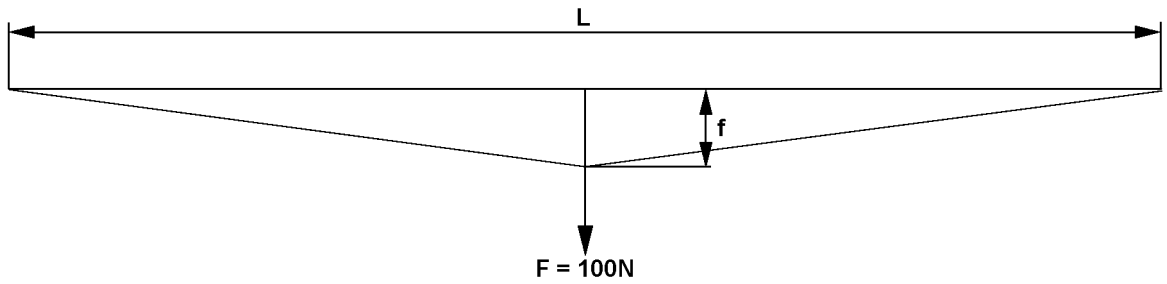

Fig.112738

The rope pretension must be 800 N. This can be checked with the aid of a spring balance, which is pulled centered on the safety rope. If the specified deflection (f) depending on the rope length (L) according to the following charts results for the raised load F = 100 N then the rope pretension of 800 N is set correctly.

Rope pretension is 800 N if:					
Rope length (L)	1.0 m	1.5 m	2.0 m	2.5 m	3.5 m
Deflection (f)	15 mm	25 mm	30 mm	40 mm	55 mm

Rope pretension is 800 N if:					
Rope length (L)	5.5 m	7.5 m	9.5 m	11.5 m	13.5 m
Deflection (f)	85 mm	115 mm	145 mm	180 mm	215 mm

LWE/ab Muli 010/24201-02-02/en

copyright © Liebherr-Werk Ehingen GmbH 2016

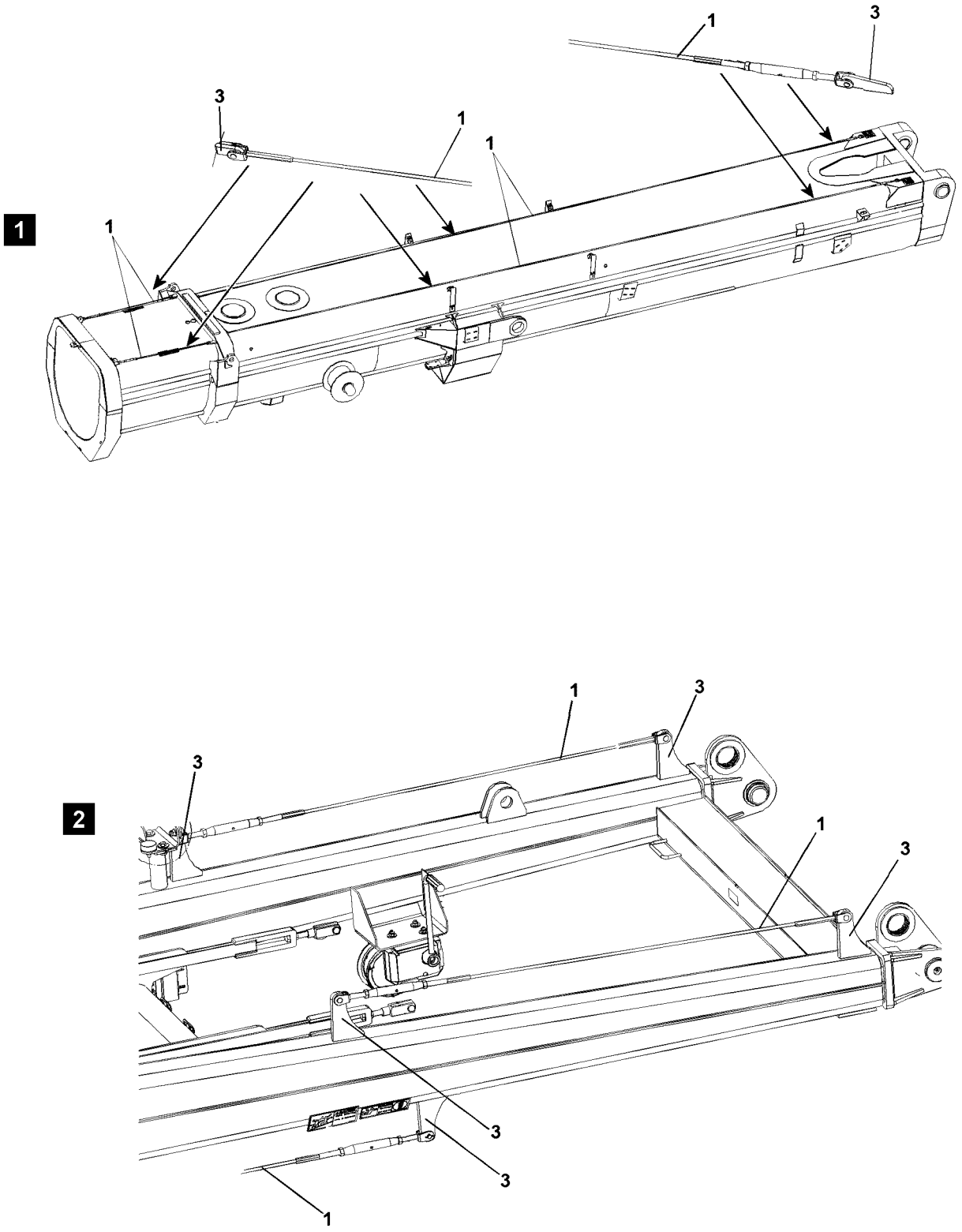

LWE/ab Muli 010/24201-02-02/en

Fig.112739

copyright © Liebherr-Werk Ehingen GmbH 2016

5.2 Inspection of rope pretension on lattice sections, illustration 2

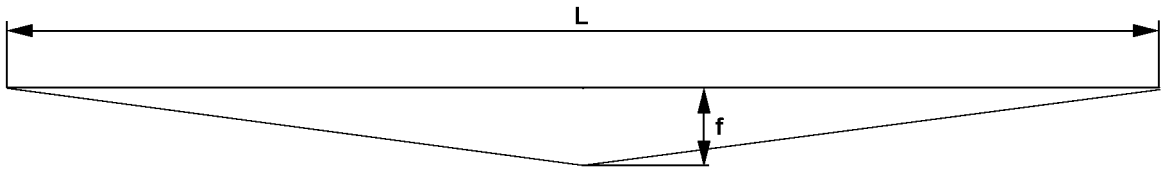

Fig.117747

The rope pretension is 800 N , if a sag (f) according to the chart is present on the safety rope according to the rope length (L).

Rope pretension is 800 N if:					
Rope length (L)	1.0 m	1.5 m	2.0 m	2.5 m	3.5 m
Deflection (f)	0	1 mm	2 mm	3 mm	6 mm

Rope pretension is 800 N if:					
Rope length (L)	5.5 m	7.5 m	9.5 m	11.5 m	13.5 m
Deflection (f)	15 mm	28 mm	45 mm	66 mm	90 mm

6 Inspection of load handling equipment and assembly aids

WARNING
Load handling equipment and / or assembly aids **not** inspected!
Death, severe bodily injuries, property damage.
▶ Inspect load handling equipment and / or assembly aids at least once a year.

The recurring inspection of the load handling equipment and / or assembly aids must be carried out once a year.

The inspections of load handling equipment and / or assembly aids must be recorded.

The welding seams must be subjected to a visual inspection.

Inspect load handling equipment and assembly aids for:
- Damage
- Wear
- Cracks

Replace damaged, worn or ripped load handling equipment and assembly aids immediately.

Repairs on load handling equipment and assembly aids may solely be made in consultation and under the instructions of the Customer Service at **Liebherr-Werk Ehingen GmbH** by authorized and trained expert personnel.

Note
▶ Document the scope of the inspection and the results in writing and comprehensibly.
▶ Save the documentation as a part of the crane records for the entire service life of the crane.

LWE/ab Muli 010/24201-02-02/en

copyright © Liebherr-Werk Ehingen GmbH 2016

7 Inspection of fastening equipment

WARNING
Fastening equipment **not** inspected!
Death, severe bodily injuries, property damage.
▶ Inspect the fastening equipment at least once a year.

The recurring inspection of the fastening equipment must be carried out once a year.

The inspections of the fastening equipment must be recorded.

The welding seams must be subjected to a visual inspection.

Inspect the fastening equipment according to the specifications of the corresponding regulations and standards.

Replace damaged, worn or ripped fastening equipment immediately.

Note
▶ Document the scope of the inspection and the results in writing and comprehensibly.
▶ Save the documentation as a part of the crane records for the entire service life of the crane.

8 Inspection of membrane accumulator

Note
▶ The national regulations for pressurized container inspection must be observed!

The inspection of the membrane accumulators for specified gas pressure must be carried out by authorized and trained expert personnel, see Crane operating instructions, chapter 7.04, 7.05.

9 Inspection of relapse cylinders

WARNING
Fatal accidents due to defective relapse cylinders!
Loss of oil or corrosion can damage the relapse cylinders!
Safe crane operation is no longer ensured!
▶ Crane operation with defective relapse cylinders is prohibited!

9.1 Pressure test of relapse cylinders

The relapse cylinders must be inspected annually by an authorized expert. The purpose of the inspections is to avoid accidents by detecting deficiencies early on.

9.2 Checking the gas pressure and oil fill before operation

WARNING
Fatal accidents due to defective relapse cylinders!
Loss of oil or corrosion can damage the relapse cylinders!
Safe crane operation is no longer ensured!
▶ Before every operation: Carry out a visual inspection for leaks, damage and corrosion on the relapse cylinders.
▶ If any defects are found, the relapse cylinders must be inspected by the cylinder manufacturer!

LWE/ab Muli 010/24201-02-02/en

copyright © Liebherr-Werk Ehingen GmbH 2016

The gas pressure and the oil fill must be checked by authorized and trained expert personnel for pressure tanks.

9.3 Inspection of the safety controls on the relapse cylinders

For inspection of the safety control or limit switches on the relapse cylinders and the boom A-frames, see Crane operating instructions, chapter 8.12.

10 Inspection of rope pulleys

10.1 Check for damage and cracks

DANGER
Danger of accident in case of damage or cracks!
▶ Replace rope pulley immediately!

Check the entire rope pulley assemblies for damage and cracks once a year.

If rope pulleys are subjected to any impacts (e.g., with buildings) or are otherwise overloaded, they must be visually inspected for damage or cracks immediately.

10.2 Checking the groove diameter

NOTICE
Worn rope pulleys!
The functionality and service life of the rope is reduced. Damage on rope.
▶ Before placing the rope, check the groove diameter of rope pulleys.

Visible wear on rope pulleys:
– Reduced groove diameter
– Negative impressions of the rope profile in the groove

Make sure that the following tools are available:
– Groove caliber

Make sure that the following prerequisites are met:
– All components to be inspected are cleaned
– The rope does **not** obstruct the inspection of the components

Note
▶ The actual groove diameter **must** be larger than the actual diameter of the rope.

The groove diameter of rope pulleys and winches must be at least 6 % larger than the nominal rope diameter.

Check the rope pulleys with a groove caliber for wear. When wear exists on the rope grooves: Fix the rope pulleys or replace.

LWE/ab Muli 010/24201-02-02/en

copyright © Liebherr-Werk Ehingen GmbH 2016

11 Inspection of carrier rollers

11.1 Check visually

DANGER
Damaged carrier rollers!
Breakage and falling components. Death, severe bodily injuries, property damage.
▶ Carry out a visual inspection according to the maintenance intervals.
▶ Replace the carrier roller immediately.

The visual inspection must be carried out according to the following criteria:
– Wear
– Damage
– Cracks

Visible wear on carrier rollers:
– Negative imprints of the rope profile on the circumference of the carrier rollers
– Lead-in tracks

11.2 Checking the depth of the lead-in tracks

DANGER
Worn carrier rollers!
Breakage and falling components. Damage to ropes. Death, severe bodily injuries, property damage.
▶ Check the depth of the lead-in tracks.
▶ Replace worn carrier rollers immediately.

Make sure that the following prerequisites are met:
– All components to be inspected are cleaned.
– The rope does **not** obstruct the inspection of the components.

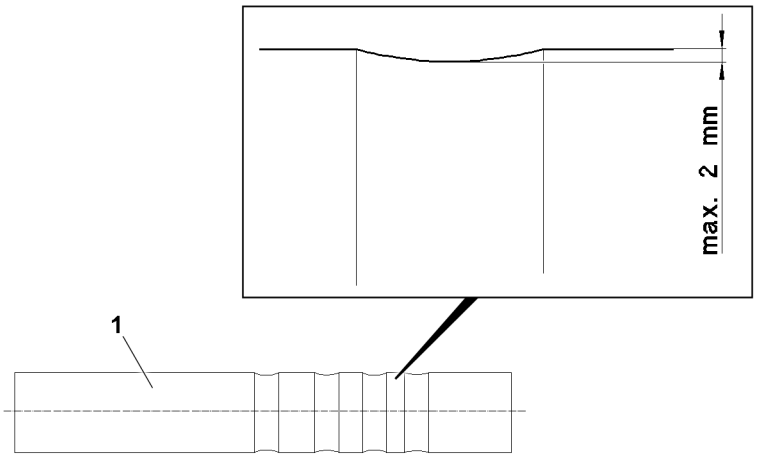

Fig.124864: Permissible depth of the lead-in tracks

1 Carrier roller

The depth of the lead-in tracks may be maximum 2 mm.

11.3 Checking the bearings for easy movement

Stiff or blocked carrier rollers wear unevenly and cause serious rope abrasion.

Ineffective carrier rollers can lead to irregular rope tension.

copyright © Liebherr-Werk Ehingen GmbH 2016

Tasks to check the carrier rollers:
- Check the carrier rollers for proper movement in their bearings.
- When carrier rollers are **not** easily moveable in their bearings: Fix the bearings.

11.4 Checking the tightening torque

The tightening torque of screws must be checked according to maintenance interval.

12 Inspection of extension conditions of sliding beams

The extension conditions of the sliding beams must be checked annually by an expert.

Check the extension conditions on every sliding beam:
- Check if the position 0 % of the LICCON display matches the actual condition of the sliding beam.
- Check if the position 100 % of the LICCON display matches the actual condition of the sliding beam.

13 Inspecting the function of the overload protection

Position the longest boom at minimum and maximum radius: Check the load indicator, using the hook block as a test load.

The indicator reading may not deviate by more than 10 % off the true load value at these two extreme positions.

Measure the indicated radius for the longest boom at its minimum radius and at a boom angle of 45°.

The indicator readings may not deviate more than 10 % off the measured radius.

14 Inspecting the roller slewing ring connection

For tilt play measurement, see Crane operating instructions, chapter 7.05

15 Inspection of the mounting of the load bearing equipment

Check that the mounting bolts for the roller slewing ring, winches, slewing gears and hitch are properly seated.

The slewing ring connection mounting bolts are pre-stressed at the factory, so that no loosening of the screw connections will occur during normal crane operation.

However, the screw connection may become overloaded and the bolts may be permanently stretched if the crane is overloaded or if the load is pulled free. It is therefore important to check these screws for tight seating during the annual crane inspection or after an overload.

Remove loose screws completely as well as the two adjacent screws on the right and left and check them for damage closely. Inspect the screws especially for cracks or permanent distortion. If a screw has been stretched by more than 0.2 % (in relation to its original length) or if cracks or other damage are detected, then the damaged screws must be replaced. If the screws have been stretched or there is other damage, then the adjacent screws must also be replaced.

LWE/ab Muli 010/24201-02-02/en

copyright © Liebherr-Werk Ehingen GmbH 2016

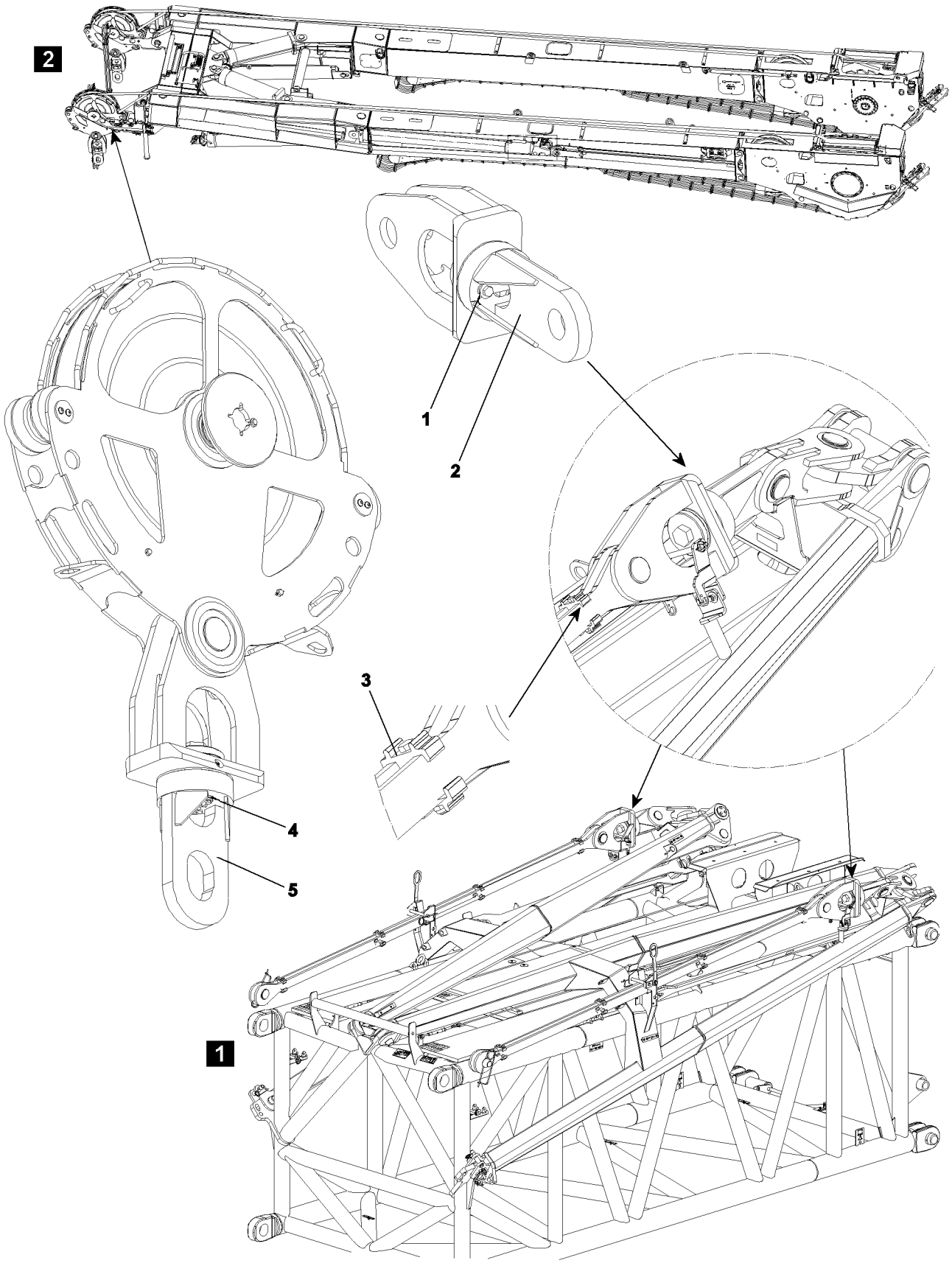

Fig.109096

LWE/ab Muli 010/24201-02-02/en

copyright © Liebherr-Werk Ehingen GmbH 2016

16 Inspection of the tele extension with eccentric, illustration 1

- Inspection of twist guard **1** for damage and loose screw connection.
- Inspection of rotator **2** for easy turnability.
- Inspection of all clamps **3** for damage and function.

17 Inspection of change over pulleys, illustration 2

- Inspection of twist guard **4** for damage and loose screw connection.
- Inspection of rotator **5** for easy turnability.

18 Inspection of the oil and fuel reservoirs

Visually check the oil and fuel tanks at least once a year for leaks and safe mounting.

Repairs may only be carried out by trained and knowledgeable specialists.

Improper repairs; e.g., welding, hard or soft soldering is not permitted, particularly if the Service department at Liebherr-Werk Ehingen GmbH has not been consulted!

LWE/ab Muli 010/24201-02-02/en

copyright © Liebherr-Werk Ehingen GmbH 2016

8.03 Inspection of winches

1	Inspecting the hoist and retracting winches	3
2	Inspection of the auxiliary reeving winch, recovery winch and spare wheel winch	5
3	Monitoring the winches	5

LWE/ab Muli 010/24201-02-02/en

copyright © Liebherr-Werk Ehingen GmbH 2016

LWE/ab Muli 010/24201-02-02/en

Fig.195219

copyright © Liebherr-Werk Ehingen GmbH 2016

1 Inspecting the hoist and retracting winches

The hoist and retracting winches are designed in sealed planetary gear version. These gears are sized for long service life and the drive shafts and gears are rated for endurance.

Even though the hoist and retracting winches are designed for long life, an external visual inspection is not adequate, since their life can be significantly affected by bad maintenance (insufficient oil), using oil that does not meet specification requirements, defective seals, improper operation or overloading.

The annual inspection must therefore be carried out by an **expert** in accordance with the following requirements.

The winches must be inspected by an **authorized inspector** every four years after the initial license.

Within the territorial validity of the BGV D6, after the 10th year in operation, counted from the first day of initial license, when the theoretical utilization time is not over, the winches must be checked annually by an **authorized inspector**.

1.1 Checking the groove diameter

WARNING
Worn winches!
Damage of flanged disks, high rope wear, operational problems. Broken rope, falling load.
▶ Before placing the rope, check the groove diameter of winches.

Visible wear on winches:
- Reduced groove diameter
- Mechanical damage, for example scrub marks or scouring on flanged disks

Make sure that the following tools are available:
- Groove caliber

Make sure that the following prerequisites are met:
- All components to be inspected are cleaned
- The rope does **not** obstruct the inspection of the components

Note
▶ The groove radius may **not** be smaller than the actual diameter of the rope.

The groove diameter of rope pulleys and winches must be at least 6 % larger than the nominal rope diameter.

Check winches with a groove caliber for wear. When wear is present: Fix the winch or replace.

1.2 Inspection intervals

At least once a year, see Crane operating instructions, chapter 7.03.

1.3 Checking the oil level

Check the oil level with the dipstick.

For hoist and retracting winches **without** a dipstick, we recommend that the oil is drained and the amount compared to the specified oil quantity.

1.4 Evaluating oil color

Assume that the oil has been overheated if it is black and / or a burnt oil smell is detected. Change the oil.

LWE/ab Muli 010/24201-02-02/en

copyright © Liebherr-Werk Ehingen GmbH 2016

1.5 Checking for solid foreign substances

As a rule, a qualified laboratory should carry out an oil analysis.

For simple testing, the following procedure can be used:

Drip the used oil on a specified filter fleece. Visual inspection with a magnifying glass may reveal coarse particles. If particles are detected, all the oil's properties must be examined by a qualified laboratory.

Note

- ▶ The evaluation of the foreign particles found in the oil must be made by a qualified laboratory!
- ▶ The maximum permissible quantity of foreign material measured by weight is 0.15 % of total oil weight!
- ▶ Maximum permissible foreign particle size from fine abrasion is 0.25 microns!
- ▶ If the above value have been exceeded, remove the gear and search for the cause of the increased abrasion!
- ▶ Damaged components must be replaced and the gear refilled with fresh oil!

NOTICE

Danger of property damage!

- ▶ Repairs may only be carried out by specialists with appropriate technical knowledge!

1.6 Visual inspection for leaks

The gears must be checked for leaks, since oil losses - in addition to polluting the environment - can lead to gear failure.

1.7 Inspecting the gear brakes

Check the brakes each time the gears are inspected.

In order to do so, proceed as follows:

- – Attach a load, which creates 40 % of the maximum rope pull in the uppermost layer of the coil and raise it just off the ground.
- – Remove the plug on the brake vent magnet.
  This means the brake remains applied when activated.
- – Activate the winch in the lowering direction.

Note

- ▶ The brake may not slip, in other words, the winch may not turn. If the brake slips, contact the Service department at Liebherr-Werk Ehingen GmbH!
- ▶ Only operate the crane after it has been checked and approved for use by the Service department at Liebherr Werk Ehingen GmbH!

NOTICE

Danger of property damage!

- ▶ Only qualified personnel with specialized knowledge may be used to evaluate gears and brakes!

1.8 Documenting the completed inspection

The results of the annual inspections and maintenance work, including the steps taken, must be documented by the competent or authorized inspector, including attachments from the inspection labs and qualified service companies if applicable.

This documentation must be filed in the crane inspection log under the heading "Periodic inspections".

LWE/ab Muli 010/24201-02-02/en

copyright © Liebherr-Werk Ehingen GmbH 2016

2 Inspection of the auxiliary reeving winch, recovery winch and spare wheel winch

The inspection of the auxiliary reeving winch, recovery winch and spare wheel winch regarding scope and content is made according to the manufacturer's instructions.
- Inspect the auxiliary reeving winch, recovery winch and spare wheel winch according to the manufacturer's instructions.
- Request data about the service life of the auxiliary reeving winch, recovery and spare wheel winch from the respective manufacturer.

3 Monitoring the winches

3.1 Theoretical service life

The designer of your crane used a theoretical total operating time when designing and sizing the winches. This resulted in the theoretical service life of the equipment.

The winches of your crane are classified according to ISO 4301/1 as follows:

Winches	Classification
Power train group:	M3
Load spectrum:	L1
Load spectrum factor Km:	0,125
Theoretical service life D:	3200 h

Note

▶ The „theoretic service life“ is not equal to the real (true) service life of a winch!

The actual life of the winch is affected by many additional outside factors; for example:
- Overloads caused by unapproved use of the crane.
- Inadequate maintenance: Oil is not changed in a timely manner
- Improper operation:
  - Extreme acceleration or deceleration of the load
  - Load falling into the ropes
- Maintenance errors:
  - Using the wrong type of oil
  - Too much or too little oil
  - Contamination during oil change
- Assembly errors during repair and maintenance
- Undetected leakage
- Incorrectly set safety devices
- Hidden damage from accidents
- Extreme environmental conditions:
  - Extreme low or high temperatures
  - Corrosive atmosphere
  - Dust and dirt

3.2 Used proportion of the theoretical service life.

The crane operator is obligated to carry out an inspection of the crane at least once a year.

LWE/ab Muli 010/24201-02-02/en

copyright © Liebherr-Werk Ehingen GmbH 2016

At this time, the actually used part of the theoretical service life must also be calculated. If necessary, the crane operator must contract an authorized inspector.

For the determination of the used part of the theoretical service life, the actual operating conditions (load spectrum) and the hoist gear operating hours for each inspection interval are to be determined. The operator is responsible for the documentation in the crane inspection log.

3.2.1 Determining the operating conditions (load spectrum)

The load spectrum of the crane is divided into groups, please refer to ISO 4301/1.

Select one of the following load spectrums and record it in the crane inspection log for the respective inspection interval based on the actual operating conditions. A more precise determination of the load spectrum is permissible.

Load spectrum class: Light L1

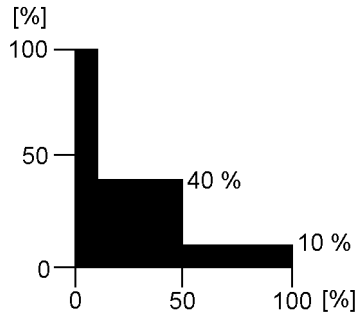

Fig.195234: Graphic illustration Load spectrum L1

Definition:

Power train or parts thereof are subjected to maximum stress only in exceptional cases, but normally only operate at very light loads.

Operating time rates:

10 % of the time at maximum load (dead load and 1/1 working load)
40 % of the time with dead load and 1/3 working load
50 % of the time only with dead load

Factor of load spectrum:

Km = 0.125

Note

▶ Load spectrum L1 with load spectrum factor Km = 0.125 is normally applied to cranes used for assembly operations!

copyright © Liebherr-Werk Ehingen GmbH 2016

Load spectrum class: Medium L2

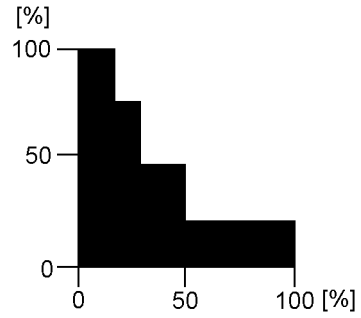

Fig.195235: Graphic illustration Load spectrum L2

Definition:

Power train or parts thereof are subjected to maximum load relatively often, but normally only operate at light load.

Operating time rates:

1/6 of the time at maximum load (dead load and 1/1 working load)
1/6 of the time with dead load and 2/3 working load
1/6 of the time with dead load and 1/3 working load
50 % of the time only with dead load

Factor of load spectrum:

Km = 0.25

Load spectrum class: Heavy L3

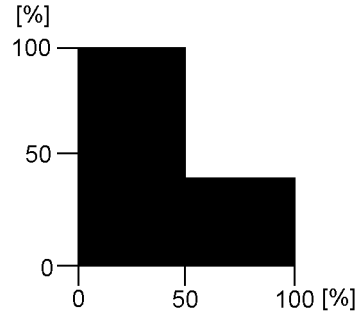

Fig.195236: Graphic illustration Load spectrum L3

Definition:

Power train or parts thereof are frequently subjected to maximum load and normally operate at medium load.

Operating time rates:

50 % of the time at maximum load (dead load and 1/1 working load)
50 % of the time only with dead load

Factor of load spectrum:

Km = 0.5

LWE/ab Muli 010/24201-02-02/en

copyright © Liebherr-Werk Ehingen GmbH 2016

Load spectrum class: Very heavy L4

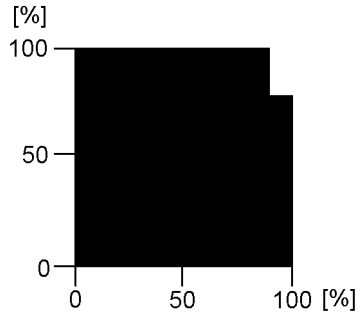

Fig.195237: Graphic illustration Load spectrum L4

Definition:
Power train or parts thereof are regularly subjected to near maximum loads.

Operating time rates:
90 % of the time at maximum load (dead load and 1/1 working load)
10 % of the time only with dead load

Factor of load spectrum:
Km = 1

3.2.2 Determining the effective operating hours T_i

The effective operating hours calculated as follows must be entered into the crane inspection log for the respective inspection interval.

There are four different scenarios:

1. Operating hour meter installed on every winch.
   If an operating hour meter is installed on every winch, the effective operating hours T_i can be read directly during each inspection.
2. Operating hour meter installed for the overall crane drive.
   The winch proportion of the total superstructure operating hours must be estimated.
   For cranes used in assembly operations, the operating time for the hoist winches can be estimated generally at 20 % of the total operating hours of the superstructure.
3. One operating hours meter is used for both the crane engine and the crane drive
   The winch proportion of the total crane operating hours must be estimated.
   For cranes used in assembly operations, the operating time for the superstructure can be estimated at 60 % of the total operating hours of the crane. If the hoist winch proportion is estimated at 20 % of the superstructure operating hours (see previous item), then the result in relation to the **total** operating hours of the crane is: 12 %.
4. No operating hour meter installed.
   In this case, the operator must estimate and document the actual operating hours of the winch.
   The approximate percentages stated above normally apply to main hoist winches. For auxiliary hoist winches or boom control winches, the proportion of the total operating hours can be significantly less and should therefore be estimated by the operator.

3.2.3 Determining the used proportion of the theoretical service life

For an inspection interval i (max. 1 year), the actually used proportion S_i of the theoretical Service life is derived from the formula:

LWE/ab Muli 010/24201-02-02/en

copyright © Liebherr-Werk Ehingen GmbH 2016

$$S_i = \frac{Km_i}{Km} \times T_i$$

Fig.195230

Abbreviation	Explanation
S_i	Used proportion of the theoretical service life.
Km	Load spectrum factor that was used to calculate the winch rates. This factor is provided in the Operating instructions.
Km_i	Load spectrum factor for inspection interval i according to section „Determining the operating conditions“.
T_i	Effective operating hours for inspection interval i according to section „Determining the effective operating hours T_i“.

The actually used proportion is subtracted from the remaining theoretical service life D_i after each inspection interval (see example).

If the remaining theoretical service life is not long enough to cover the next projected operating period, a general overhaul of the winch is required.

If the theoretical service life D has been reached (see chapter on „Theoretical service life“), then the winch may only be operated after conducting a general overhaul.

A general overhaul of the winch is required not later than 10 years after commissioning.

The general overhaul must be arranged by the operator and carried out by the manufacturer or the manufacturer's authorized representatives and must be documented in the inspection log. After the general overhaul, the manufacturer or the manufacturer's authorized representative will define a new theoretical service life D.

When the design life has not been reached after 10 years, continued operation of the winch without a general overhaul is acceptable, when the crane's authorized inspector has confirmed the accuracy of the actual usage calculation by signing the crane inspection log at each authorized inspection interval.

In such a case, the authorized crane inspector must thoroughly inspect the winch. This comprises at least:
- External visual inspection (leakage, damage, deformation, etc.).
- Oil check, especially for metal residues.
- Load test at minimum and maximum rope tension and at maximum possible speed in both cases. At least one layer must be spooled up. Pay particular attention to any unusual noises during this load test.

The authorized crane inspector must confirm this inspection in the crane inspection log and must make a statement regarding suitability of the winch for continued operation. The next inspection must take place at the end of the 12th operating year and annually thereafter.

3.3 Example

According to the manufacturer's operating manual, a mobile crane with a separate operating hour meter for the crane engine and the crane drives is classified as follows:
- Power train group: M3
- Load spectrum: Light L1
- Factor of load spectrum: Km = 0.125
- Theoretical service life: D = 3200 h

Actual usage proportion S of the theoretical service life is calculated using the individual inspection intervals as follows:

copyright © Liebherr-Werk Ehingen GmbH 2016

3.3.1 First inspection (first year)

The crane was used for assembly work during the past year:

Load spectrum L1, in other words $Km_1 = 0.125$.

The superstructure hour meter indicates 800 h. The winch was operated about 20 % of the time; i.e. $T_1 = 160$ h.

The actual usage proportion S of the theoretical service life at the time of the first inspection is therefore:

$$S_1 = \frac{0{,}125}{0{,}125} \times 160\ h = 160\ h$$

Fig.195231

Remaining theoretical service life:

$D_1 = 3200\ h - 160\ h = 3040\ h$

The above values are recorded in the crane inspection log.

3.3.2 Second inspection (second year)

The crane was used at a harbor for unloading work:

Load spectrum L3, in other words $Km_2 = 0.5$.

The superstructure hour meter indicates 2000 h ; i.e., during this period:

2000 h – 800 h = 1200 h (800 h were used in the first year of operation)

The winch was operated about 40 % of the time; i.e. $T_2 = 480$ h.

The actual usage proportion S_2 of the theoretical service life at the time of the second inspection is therefore:

$$S_2 = \frac{0{,}5}{0{,}125} \times 480\ h = 1920\ h$$

Fig.195232

Remaining theoretical service life:

$D_2 = 3040\ h - 1920\ h = 1120\ h$

3.3.3 Third inspection (third year)

The crane was used for assembly work and occasionally at a harbor for unloading work:

Load spectrum L2, in other words $Km_3 = 0.25$.

The superstructure hour meter indicates 3000 h ; i.e., during this period:

3000 h – 2000 h = 1000 h (2000 h were used in the first two years of operation)

The winch was operated about 30 % of the time; i.e. $T_3 = 300$ h.

The actual usage proportion S_3 of the theoretical service life at the time of the third inspection is therefore:

LWE/ab Muli 010/24201-02-02/en

copyright © Liebherr-Werk Ehingen GmbH 2016

$$S_3 = \frac{0{,}25}{0{,}125} \times 300\ h = 600\ h$$

Fig.195233

Remaining theoretical service life:

D_3 = 1120 h – 600 h = 520 h

3.4 Chart for determining the theoretically remaining service life

Chart 1 includes an example.

The remaining theoretical service life is to be documented in chart 2.

LWE/ab Muli 010/24201-02-02/en

copyright © Liebherr-Werk Ehingen GmbH 2016

Chart to determine the remaining theoretical service life of winch No. 1 (Main hoist winch)

Crane type:	LTM 1050
Fabrication No.:	0010 540 08
Put in service :	12345
Serial number of winch according to data tag:	0815
Last general overhaul performed on:	.....
Configuration data of winch (see Operating Manual):	
Drive gear group:	M 3
Load collective:	L 1
Factor of load collective Km:	0.125
Theoretical service life D:	3200 hrs.

S_i = Used part of theoretical service life since last inspection
D_i = Remaining theoretical service life
D_{i-1} = Remaining theoretical service life after previous inspection
Km = Factor of load collective, which was taken for calculation of winch. This factor is to be taken from the Operating Manual
Km_i = Factor of load collective in inspection interval i
T_i = Effective operating hours in inspection interval i

(*) In the following pages, carry over the last line from the previous page.

Inspection interval No. (max. annually) i	Date of initial service / data of inspection	Operating conditions since last inspection (load collective)	Factor of load connective Km_i	Total crane operating hours [h]	Operating hours of super-structure [h]	Operating hours of super-structure since last inspection [h]	Operating hours of winch [h]	Operating hours of winch since last inspection T_i [h]	Used part of theoretical service life D: $S_i = \frac{Km_i}{Km} \times T_i$ [h]	Remaining theoretical service life $D_i = D_{i-1} - S_i$ [h]	Name of inspector	Signature	Remarks	Name of expert	Signature
(*) 0	10.06.90	-	-	-	0				0	3200					
1	05.06.91	L1	0,125	-	800	800	-	160 (20 % of 800)	160	3040	Müller				
2	20.05.92	L3	0,5	-	2000	1200	-	480 (40 % of 1200)	1920	1120	Huber				
3	18.05.93	L2	0,25	-	3000	1000	-	300 (30 % of 1000)	600	520	Maier				
4															

C A U T I O N : **Perform general overhaul at least once every 10 years!** In case of deviation, see guidelines in this chapter.

General overhaul last performed on : .....

Fig. 121551-en: Chart 1

copyright © Liebherr-Werk Ehingen GmbH 2016

Chart to determine the remaining theoretical service life of winch No. ....

Crane type: .....
Fabrication No.: .....
Put in service: .....
Serial number of winch according to data tag: .....
Last general overhaul performed on: .....
Configuration data of winch (see Operating Manual): .....
Drive gear group: M.....
Load collective: L.....
Factor of load collective Km: .....
Theoretical service life D: .....

S_i = Used part of theoretical service life since last inspection
D_i = Remaining theoretical service life
D_{i-1} = Remaining theoretical service life after previous inspection
Km = Factor of load collective, which was taken for calculation of winch. This factor is to be taken from the Operating Manual
Km_i = Factor of load collective in inspection interval i
T_i = Effective operating hours in inspection interval i

*) In the following pages, carry over the last line from the previous page.

Inspection interval No. (max. annually) i	Date of initial service data of inspection	Operating conditions since last inspection (load collective)	Factor of load connective Km_i	Total crane operating hours [h]	Operating hours of super-structure [h]	Operating hours of super-structure since last inspection [h]	Operating hours of winch [h]	Operating hours of winch since last inspection T_i [h]	Used part of theoretical service life D: $S_i = \frac{Km_i}{Km} \times T_i$ [h]	Remaining theoretical service life $D_i = D_{i-1} - S_i$ [h]	Name of inspector	Signature	Remarks	Name of expert	Signature
(*)															

C A U T I O N : **Perform general overhaul at least once every 10 years!** In case of deviation, see guidelines in this chapter.

General overhaul last performed on : .....

Fig. 121552-en: Chart 2

copyright © Liebherr-Werk Ehingen GmbH 2016

LWE/ab Muli 010/24201-02-02/en

copyright © Liebherr-Werk Ehingen GmbH 2016

8.04 Inspection of crane wire ropes

1	Importance of inspection	3
2	Personal protective equipment	3
3	Qualification Inspection personnel	3
4	Unscheduled inspection	3
5	Intervals	3
6	Areas	4
7	Documentation of inspection results	5
8	Wire ropes and rope end connections	5
9	Degree of severity	7
10	Abbreviations Rope diameter	7
11	Distortions and mechanical damage	7
12	Removal criteria Overview	7
13	Checking for broken strands	8
14	Determining the number of broken wires	9
15	Checking of rope diameter	13
16	Checking for corrosion	16
17	Corkscrew-like distortion	18
18	Basket formation	19
19	Protruding, distorted insert or strand	20
20	Loop formation	21
21	Kinking or rope loops pulled closed	22
22	Buckles	23
23	Effects of heat, arcs	24
24	Combined degree of severity	24
25	Flattenings	24
26	Current checklist	27

LWE/ab Muli 010/24201-02-02/en

copyright © Liebherr-Werk Ehingen GmbH 2016

LWE/ab Muli 010/24201-02-02/en

Fig.195219

copyright © Liebherr-Werk Ehingen GmbH 2016

1 Importance of inspection

Rope removal criteria: If severe damage reduces the operational safety, then the rope can reached the removal criteria.

The importance of regular inspections is demonstrated by:
- Evaluation of operational safety of ropes
- Determination of rope removal criteria
- Determination of next inspection

2 Personal protective equipment

WARNING
Wires and lubricant!
Severe injury and skin irritation.
▶ When working with ropes, always wear work gloves.

WARNING
Protective equipment **not** worn!
Severe injuries.
▶ Wear hard hat, safety shoes and safety glasses.

3 Qualification Inspection personnel

Make sure that the following prerequisites are met:
- Inspection personnel are **expert personnel for crane rope inspection**.
- **Expert personnel for crane rope inspection:**
  - Are trained in the inspection of crane ropes according to **DIN ISO 4309** and have practical experience in the evaluation of rope removal criteria.
  - Have practical experience in the evaluation of rope removal criteria according to **DIN ISO 4309**.
- The inspection personnel is assigned (authorized) for the maintenance by the crane operator.

4 Unscheduled inspection

In the following situations the rope must be inspected:
- after unusual strain
- if non-visible damage is suspected
- when a rope or the end connection is damaged
- when the rope has been placed again after removal
- when the rope has been out of service for longer than three months

5 Intervals

Intervals for crane inspection:
- according to determination by **expert personnel for crane rope inspection**
- or **at least once a year**

LWE/ab Muli 010/24201-02-02/en

copyright © Liebherr-Werk Ehingen GmbH 2016

Note
▶ Shortening the inspection interval: The older a rope is the more frequently will wire breaks occur.

Determining factors for determination of inspection intervals are:
- Legal regulations in the country where the crane is operated
- Climate conditions under which the rope drive is utilized
- Power train group
- Results of previous inspections on current or comparable machine and under comparable operating conditions
- Frequency and type of use of a rope
- Service life of rope

6 Areas

WARNING
Broken wires and distortions on ropes in cross over areas!
Rope performance can decrease significantly. Rope rupture. Death, severe injuries, property damage.
▶ Inspection rope cross over areas especially diligently.

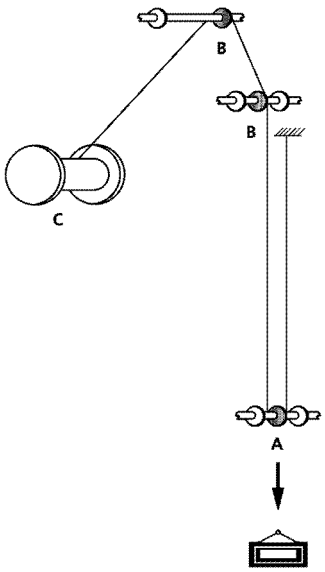

Fig.120969: Important inspection areas for multi layer spooled up ropes

A Rope sections, which run in the area of the load rise into the lower rope pulleys (the load is raised here).
B Rope intake on the first rope pulley in the area of the load rise
C Rope sections, which are subjected in the cross over areas to the strongest effects (maximum deflection angle).

The following areas must be checked with special diligence:
- Rope end connections
- Safety coils and fixed point on the winch
- Areas of the rope which run through the hook block
- Areas of the rope which run over the rope pulleys or laying on the rope pulleys
- Areas of the rope which are spooled on the winch, especially cross over areas
- Areas of the rope which are laying above the compensation pulleys
- Areas of the rope which are subjected to abrasion due to external components
- All areas of the rope which are subjected to temperatures above 60 °C

LWE/ab Muli 010/24201-02-02/en

copyright © Liebherr-Werk Ehingen GmbH 2016

7 Documentation of inspection results

Note
- ▶ Document the results of the inspections in an inspection checklist.
- ▶ Form for an inspection checklist, see section „Current checklist“.

8 Wire ropes and rope end connections

DANGER
Danger of accident!
- ▶ Correct choice and use of the wire rope and the rope end connections are a decisive precondition for proper and accident-free crane operation.

The wire ropes and rope end connections are selected according to their application. It must be determined if a rotation-resistant or non-rotation resistant rope is required for the application. The type of rope that is selected then determines the corresponding rope end connections.

8.1 Rotation-resistant ropes and their rope end connections

Rotation-resistant ropes are special ropes that produce extremely little torque and twisting at the rope end connection when they are under strain.

Note
- ▶ Use rotation-resistant ropes as **hoist ropes**.

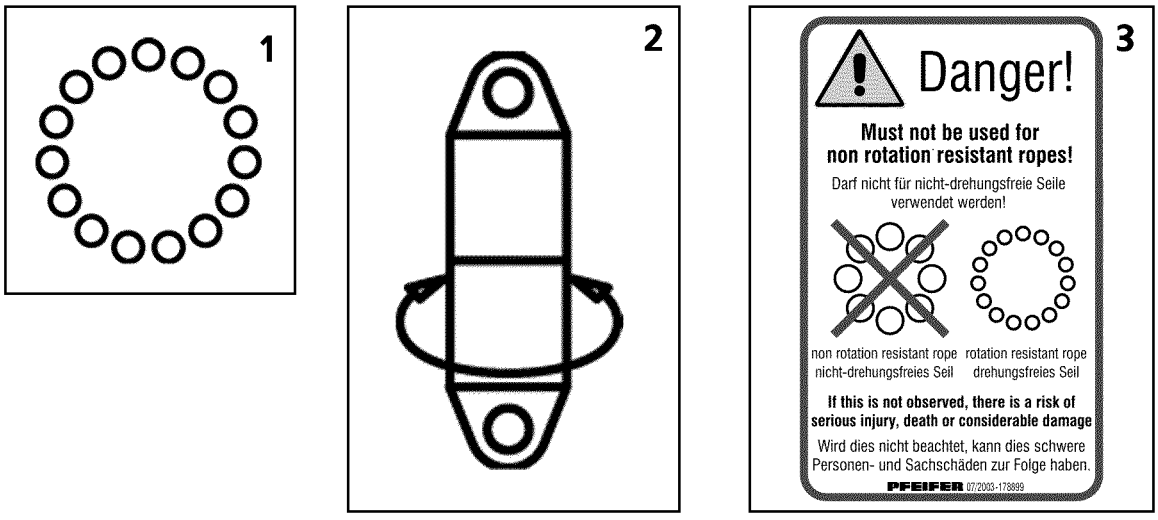

Fig.195653

Typical rotation-resistant wire rope structures are ropes with 15 to 18 outer strands. Rotation-resistant ropes are symbolically depicted with 15 outer strands (circles) (see table **1**).

Rotation-resistant ropes can be optionally used with the following rope end connections:
- **Rotating** rope end connection in the form of a PFEIFER pouch socket **with** swivel or twist compensator / swivel.
- **Non-rotation resistant** rope end connection in the form of a PFEIFER pouch socket **without** swivel or gib and cotter.

On non-rotation resistant ropes, on a one to one basis and after consultation with Liebherr Service, a rotating rope end connection can be utilized to reduce problematic turning behavior of the hoist rope (see table **2**).

copyright © Liebherr-Werk Ehingen GmbH 2016

DANGER
Danger of severe injuries to personnel and property damage!
▶ **Never** use rotating rope end connections with non-rotation resistant ropes.

Note
Application warning notes
▶ The application warning note on the rotating PFEIFER pouch socket with swivel indicates that this rope end connection is impermissible for non-rotation resistant ropes (see table **3**).

8.2 Non-rotation resistant ropes and their rope end connections

Non-rotation resistant ropes generate high torque levels on the rope end connection under strain. For this reason, the rope ends must be protected from twisting using an appropriate rope end connection to prevent the rope from unscrewing under strain.

Note
▶ Use non-rotation resistant ropes as **guy ropes** or **control ropes**, **auxiliary ropes** or **assembly ropes**.

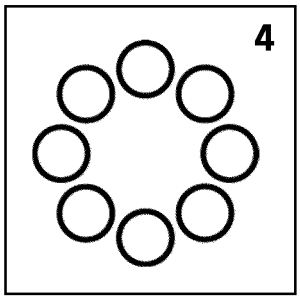

Fig.195654

Typical non-rotation resistant wire rope structures are ropes with 8 or ten outer strands. Non-rotation resistant ropes are symbolically depicted with 8 outer strands (circles) (see table **4**).

Non-rotation resistant ropes can only be used with the following rope end connections:
– **Non-rotation resistant** rope end connection in the form of a PFEIFER pouch socket **without** swivel or gib and cotter.
A non-rotation resistant rope end connection is also the mounting of the rope on the fixed point of the winch drum.

DANGER
Danger of severe injuries to personnel and property damage!
▶ **Never** use rotating rope end connections with non-rotation resistant ropes.
▶ Never install a twist compensator / swivel.

Note
Usage warning:
▶ The application warning note on PFEIFER pouch sockets without swivel and cotter indicates that this rope end connection is impermissible for non-rotation resistant ropes **in combination** with a twist compensator / swivel (see table **5**).

copyright © Liebherr-Werk Ehingen GmbH 2016

9 Degree of severity

The deciding factor for the removal criteria is which removal criteria are resent and to which degree they occur.

When various removal criteria are **not** present to a full degree, then the removal criteria must be evaluated as a total entity. For every individual removal criteria a degree of severity must be determined (percentage value).

For a certain rope section the sum of individual degrees of severity results in a **combined degree of severity**, see section „Combined degree of severity“.

When the combined degree of severity is more than 100 %, then the rope must be taken down.

10 Abbreviations Rope diameter

Abbreviations	Description
Rope nominal diameter **d**	Rope diameter, identification of rope
Reference diameter $\mathbf{d}_{ref}$	Measured rope diameter of a straight rope section, directly after placing the rope
6d	Length of 6-fold rope nominal diameter
30d	Length of 30-fold rope nominal diameter

Abbreviations Rope diameter

11 Distortions and mechanical damage

WARNING
Distortions and mechanical damage!
Operational safety significantly disturbed, uneven load distribution within the rope.
▶ Have the manufacturer check if the distorted and damaged area can be severed.

Visible form changes often occur localized or in short rope sections.

When a safe operation of the rope is ensured, a distorted and damaged area can be severed.

12 Removal criteria Overview

The following chart provides an overview between removal criteria and the respective method for inspection. The degree is described, when the removal criteria is reached.

The removal criteria is described in detail in the subsequent sections.

LWE/ab Muli 010/24201-02-02/en

copyright © Liebherr-Werk Ehingen GmbH 2016

Removal criteria	Degree for removal criteria	Inspection method
Broken strands	One strand is broken	Visual check
Broken wires on ropes, which run over rope pulleys and are spooled in multiple layers	Maximum number of broken wires reached, see Section Determining the number of broken wires	Count
Broken wires in the strand valleys	Two or more broken wires in strand valleys, on the contact points of two neighboring strands within an angular length (corresponds approx. to 6d)	Count
Broken wire nests	On occurrence	Visual check
Reduction rope diameter at even diameter reduction	Maximum reduction of rope diameter reached	Measurement, calculation
Localized increase of rope diameter	Maximum increase of rope diameter reached	Measurement
Significant corrosion	Surface of rope is significantly affected or rust film emerges, according to decision of **expert personnel for crane rope inspection**	Visual check
Corkscrew-like distortion	Maximum permissible distortion reached	Measurement, calculation
Basket formation	On occurrence	Visual check
Wires or bunches of wires protruding from the rope	On occurrence, if more than one wire protrudes from the rope	Visual check
Flattenings	Larger than half of the diameter of the outer strand, according to decision of **expert personnel for crane rope inspection**	Visual check
Loop formation	Loops on several wires	Visual check
Kinking or remaining distortion	On occurrence	Visual check
Buckles or contusions	On occurrence, according to decision of **expert personnel for crane rope inspection**	Visual check
Heat influence, electric voltage	Bluish discoloration, broken or melted wires	Visual check
Combined degree of severity	Degree of severity 100 % or above, according to decision of **expert personnel for crane rope inspection**	Calculation of individual degrees of severity

Removal criteria Overview

13 Checking for broken strands

A strand consists of several individual wires.

If a complete strand is broken:

▶ Take the rope down.

LWE/ab Muli 010/24201-02-02/en

copyright © Liebherr-Werk Ehingen GmbH 2016

14 Determining the number of broken wires

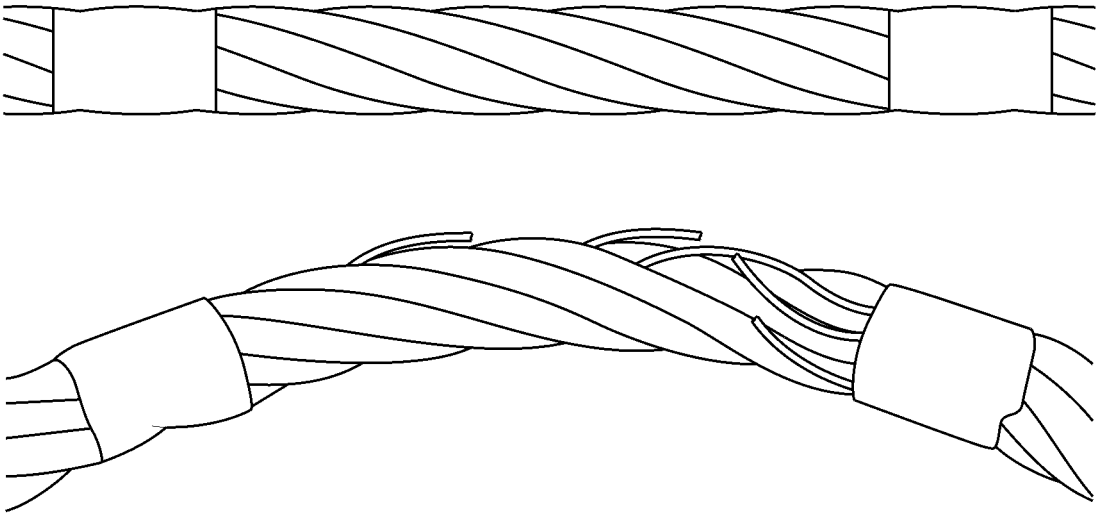

Fig.120980: Determine broken wires by bending

By bending the rope, broken wires can be recognized better.

Make sure that the following prerequisites are met:

- The rope is clean.
- Inspection checklist is on hand.

14.1 Scattered occurring broken wires

The following different rope types each have their own chart for the permissible number of broken wires:

- Single layer and parallel roped ropes
- Rotation resistant ropes

The charts in this section are valid exclusively for **scattered occurring broken wires**.

14.1.1 Wire break increase rate

The wire break increase rate is an increase of broken wires, which can skyrocket with increasing use of the rope.

▶ Include the inspection checklists for the previous inspection and use it to draw a conclusion for the wire break rate increase.

LWE/ab Muli 010/24201-02-02/en

copyright © Liebherr-Werk Ehingen GmbH 2016

14.1.2 Single layer and parallel roped ropes

Rope category number RCN	Total number of load carrying wires in the outer strand layer of rope[1] n	Number of visible outer wire breaks[2]					
		Rope sections, which run over steel pulleys and / or spool up on a single layer spooling drum (coincidental distribution of broken wires)				Rope sections, which spool up on a multi layer drum Spool up[3]	
		Class M1 to M4, or class unknown[4]				All classes	
		Lang lay		Even lay		Lang lay and even lay	
		Over a length of 6d[5]	Over a length of 30d[5]	Over a length of 6d[5]	Over a length of 30d[5]	Over a length of 6d[5]	Over a length of 30d[5]
01	n ≤ 50	2	4	1	2	4	8
02	51 ≤ n ≤ 75	3	6	2	3	6	12
03	76 ≤ n ≤ 100	4	8	2	4	8	12
04	101 ≤ n ≤ 120	5	10	2	5	10	20
05	121 ≤ n ≤ 140	6	11	3	6	12	22
06	141 ≤ n ≤ 160	6	13	3	6	12	26
07	161 ≤ n ≤ 180	7	14	4	7	14	28
08	181 ≤ n ≤ 200	8	16	4	8	16	32
09	201 ≤ n ≤ 220	9	18	4	9	18	36
10	221 ≤ n ≤ 240	10	19	5	10	20	38
11	241 ≤ n ≤ 260	10	21	5	10	20	42
12	261 ≤ n ≤ 280	11	22	6	11	22	44
13	281 ≤ n ≤ 300	12	24	6	12	24	48
	n > 300	0.04 x n	0.08 x n	0.02 x n	0.04 x n	0.08 x n	0.16 x n
Note: Ropes with outer strands in Seale type, number of wires per strand 19 or less (for example 6 × 19 Seale), are classified in this chart as two lines over the line, which would be defined due to the number of load carrying wires in the outer strands.							

*Maximum number of broken wires for **single layer** and **parallel** roped ropes according to **DIN ISO 4309***

1) For the purpose of this international standard, fill wires are not considered to be load carrying wires and are not included in the value for n.
2) A broken wire has two ends (counted as one wire).
3) The values apply for damage in the cross over areas and the layers of coils due to deflection angles (not for rope sections, which run only over rope pulleys and do not spool up on the winch).
4) For ropes on drive gears of groups M5 to M8 twice the number of broken wires listed can be used.
5) d = Rope nominal diameter

▶ Check the rope over the entire length for visible broken wires.

When visible broken wires are scattered present:
▶ On the point of a broken wire, mark the rope sections on a length of 30d in both directions.
▶ Count visible broken wires in the marked rope sections and record them.
▶ Take the RCN (Rope category number) from the manufacturer's documentation of the rope.

When the make for rotation-resistant ropes is **not** listed in the chart:
▶ Determine the total number of load carrying wires in the rope: Add all wires in the strands of the outer layer, do **not** count fill wires.

LWE/ab Muli 010/24201-02-02/en

copyright © Liebherr-Werk Ehingen GmbH 2016

▶ Compare the number of broken wires of each marked rope section 30d with the number of broken wires in the chart.

When the number of visible broken wires is smaller than listed in the chart:
▶ Within the rope section with the most broken wires: Mark the rope section with the most broken wires on a length of 6d.
▶ Count visible broken wires in the marked rope sections 6d and record them.
▶ Compare the number of broken wires of the marked rope section with the number of broken wires in the chart.

When the number of visible broken wires is larger than listed in the chart:
▶ Take the rope down.
▶ Enter the results in the inspection checklist.

14.1.3 Rotation resistant ropes

Rope category number RCN	Total number of load carrying wires in the outer strands of rope[1] n	Number of visible outer wire breaks[2]			
		Rope sections, which run over steel pulleys and / or spool up on a single layer spooling drum (coincidental distribution of broken wires)		Rope sections, which spool up on a multi layer drum Spool up[3]	
		Over a length of 6d[4]	Over a length of 30d[4]	Over a length of 6d[4]	Over a length of 30d[4]
21	4 strands n ≤ 100	2	4	2	4
22	3 or 4 strands n ≥ 100	2	4	4	8
	At least 11 strands in the outer layer				
23–1	71 ≤ n ≤ 100	2	4	4	8
23–2	101 ≤ n ≤ 120	3	5	5	10
23–3	121 ≤ n ≤ 140	3	5	6	11
24	141 ≤ n ≤ 160	3	6	6	13
25	161 ≤ n ≤ 180	4	7	7	14
26	181 ≤ n ≤ 200	4	8	8	16
27	201 ≤ n ≤ 220	4	9	9	18
28	221 ≤ n ≤ 240	5	10	10	19
29	241 ≤ n ≤ 260	5	10	10	21
30	261 ≤ n ≤ 280	6	11	11	22

LWE/ab Muli 010/24201-02-02/en

copyright © Liebherr-Werk Ehingen GmbH 2016

Rope category number RCN	Total number of load carrying wires in the outer strands of rope[1] n	Number of visible outer wire breaks[2]			
		Rope sections, which run over steel pulleys and / or spool up on a single layer spooling drum (coincidental distribution of broken wires)		Rope sections, which spool up on a multi layer drum Spool up[3]	
		Over a length of 6d[4]	Over a length of 30d[4]	Over a length of 6d[4]	Over a length of 30d[4]
31	281 ≤ n ≤ 300	6	12	12	24
	n > 300	6	12	12	24
Note: Ropes with outer strands in Seale type, number of wires in each strand 19 or less (for example 18 × 19 Seale - WSC), are classified in this chart as two lines over the line, which would be defined due to the number of load carrying wires in the outer strands.					

*Maximum number of broken wires for **rotation-resistant** ropes according to **DIN ISO 4309***

1) For the purpose of this international standard, fill wires are not considered to be load carrying wires and are not included in the value for n.
2) A broken wire has two ends (counted as one wire).
3) The values apply for damage in the cross over areas and the layers of coils due to deflection angles (not for rope sections, which run only over rope pulleys and do not spool up on the drum).
4) d = Rope nominal diameter

▶ Check the rope over the entire length for visible broken wires.

When visible broken wires are scattered present:
▶ On the point of a broken wire, mark the rope sections on a length of 30d in both directions.
▶ Count visible broken wires in the marked rope sections and record them.
▶ Take the RCN (Rope category number) from the manufacturer's documentation of the rope.

When the make for rotation-resistant ropes is **not** listed in the chart:
▶ Determine the total number of load carrying wires in the rope: Add all wires in the strands of the outer layer, do **not** count fill wires.
▶ Compare the number of broken wires of each marked rope section 30d with the number of broken wires in the chart.

When the number of visible broken wires is smaller than listed in the chart:
▶ Within the rope section with the most broken wires: Mark the rope section with the most broken wires on a length of 6d.
▶ Count visible broken wires in the marked rope sections 6d and record them.
▶ Compare the number of broken wires of the marked rope section with the number of broken wires in the chart.

When the number of visible broken wires is larger than listed in the chart:
▶ Take the rope down.
▶ Enter the results in the inspection checklist.

14.2 Broken wires in the strand valleys

The broken wires in these areas point to the fact that the condition in the inside of the rope is deteriorating.

LWE/ab Muli 010/24201-02-02/en

copyright © Liebherr-Werk Ehingen GmbH 2016

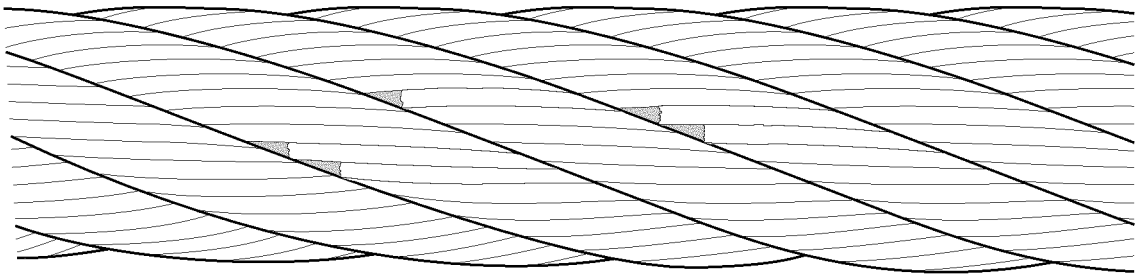

Fig.121005: Broken wires in the strand valleys

When two or more broken wires occur within a 6d long rope section:

▶ Take the rope down.

14.3 Broken wires on rope end connections

When broken wires are near an end connection and two or more wires are affected:

▶ Take the rope down.

14.4 Broken wires in rope sections, which are not spooled up on the winch

When the broken wires are concentrated on one or two strands, the removal criteria can be present at fewer broken wires as noted in the chart (rope section in length of 6d).

▶ Have the rope removal criteria determined by **expert personnel for crane rope inspection**.

14.5 Broken wire nests

When broken wires are very close to each other or when the broken wires are concentrated on one strand, then the rope must be taken down, even at fewer broken wires than noted in the chart (rope section 6d).

▶ Have the rope removal criteria determined by **expert personnel for crane rope inspection**.

15 Checking of rope diameter

15.1 Even reduction of rope diameter

WARNING

Spooling problems due to reduced rope diameter!

▶ Take the rope down even when the removal criteria according to **DIN ISO 4309** has not yet been reached.

The values in this section do **not** apply for rope sections, which were damaged in cross over areas due to multi layer spooling on a winch.

copyright © Liebherr-Werk Ehingen GmbH 2016

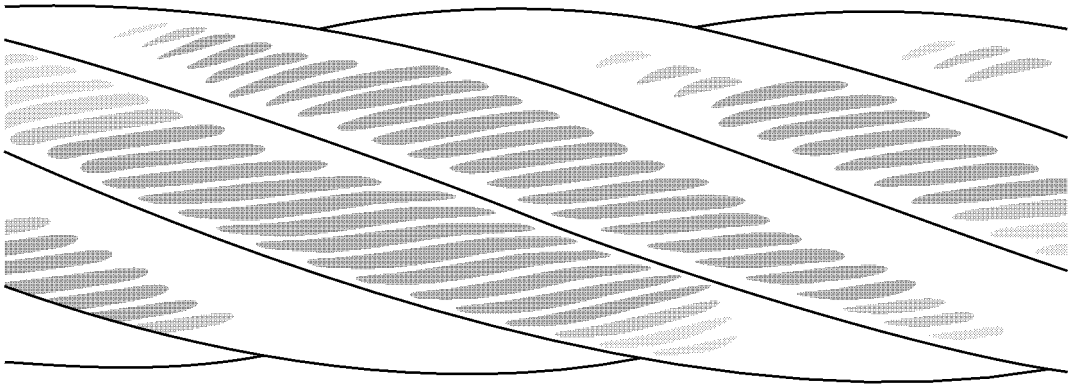

Fig.121001: External abrasion on the rope

The rope diameter changes due to abrasion, settling and external influences.

Abrasion of cover wires of outer strands of rope due to frictional contact. Especially in those areas where ropes are in contact with the rope pulleys during start up or slow down of the load.

Wear is increased by lack of or incorrect lubrication and the effect of dust.

Abrasion reduces the tensile strength of steel ropes because the cross section of the steel is reduced.

Additional possible causes for reduction of rope diameter:
- Wear in the inside of the rope
- Wear of fiber insert
- Breakage of a steel insert
- Broken inner strands

This section is valid solely for the following ropes:
- Ropes, which spool up on single layer winches
- Ropes, which run through a steel rope pulley

$$d_V = \frac{d_{ref} - d_m}{d} \times 100\ \%$$

Fig.121372: Formula Reduction of rope diameter

d_V = even reduction of rope diameter
d_{ref} = rope diameter, which was determined before placement
d_m = measured rope diameter
d = rope nominal diameter: Take value from inspection checklist

The following chart applies exclusively for ropes, which spool up on single layer winches and / or run through a steel rope pulley.

Rope type	Even reduction of diameter d_V (in percentages of rope nominal diameter d)	Classification of degree of severity	
		Description	%
	Less than 6 %	—	0
Single layer rope with fiber insert	6 % and above, but less than 7 %	Light	20
	7 % and above, but less than 8 %	Medium	40
	8 % and above, but less than 9 %	High	60
	9 % and above, but less than 10 %	Very high	80
	10 % and above	**Rope removal criteria**	**100**

LWE/ab Muli 010/24201-02-02/en

copyright © Liebherr-Werk Ehingen GmbH 2016

Rope type	Even reduction of diameter d_v (in percentages of rope nominal diameter d)	Classification of degree of severity	
		Description	%
Single layer rope with steel insert or parallel roped rope	Less than 3.5 %	—	0
	3.5 % and above, but less than 4.5 %	Light	20
	4.5 % and above, but less than 5.5 %	Medium	40
	5.5 % and above, but less than 6.5 %	High	60
	6.5 % and above, but less than 7.5 %	Very high	80
	7.5 % and above	**Rope removal criteria**	**100**
Rotation-resistant rope	Less than 1 %	—	0
	1 % and above, but less than 2 %	Light	20
	2 % and above, but less than 3 %	Medium	40
	3 % and above, but less than 4 %	High	60
	4 % and above, but less than 5 %	Very high	80
	5 % and above	**Rope removal criteria**	**100**

Degree of severity and removal criteria depending on rope type and even diameter reduction according to ***DIN ISO 4309***

The medium value from the smallest and the largest measured diameter results in the value for $\mathbf{d}_m$.

- ▶ Measure rope diameter on several locations and calculate measured diameter $\mathbf{d}_m$.
- ▶ Calculate even reduction $\mathbf{d}_v$ of rope diameter with formula.
- ▶ Read the degree of severity in the chart, depending on the rope type.
- ▶ Document the degree of severity in the inspection checklist.

When the degree of severity has reached 100 %:

- ▶ Take the rope down.

15.2 Localized reduction of rope diameter

Localized reductions of rope diameter point to the fact that a rope insert may have failed, for example.

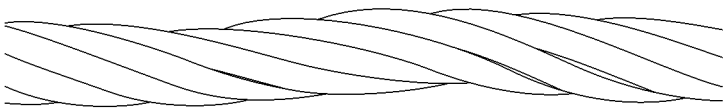

Fig.120983: Localized reduction of rope diameter

- ▶ Check the rope for localized reduction of rope diameter.

When a localized reduction of the rope diameter is found:

- ▶ Take the rope down.

LWE/ab Muli 010/24201-02-02/en

copyright © Liebherr-Werk Ehingen GmbH 2016

15.3 Localized increases of rope diameter

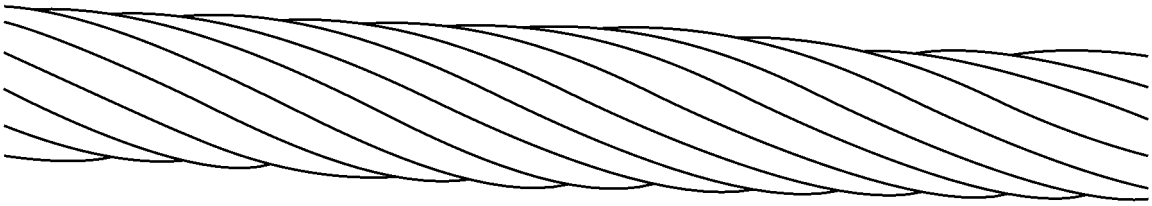

Fig.120992: Localized increase of rope diameter

An increase over a longer area of the rope can be caused by absorption of moisture in the fiber insert or due to corrosion in the inside of the rope.

Rope insert	Maximum increase of rope diameter during operation
Steel	5 %
Fiber	10 %

▶ Check the rope for localized increases of rope diameter.

When the increases exceed the maximum values:
▶ Take the rope down.

16 Checking for corrosion

Corrosion occurs due to insufficient lubrication, in maritime climates and in an atmosphere polluted by industrial fumes.

External corrosion is indicated by a rough wire surface. A superficial rust film can be wiped off.

Significant corrosion reduces the strength and elasticity of the rope due to the reduction of the rope diameter.

Inner corrosion is hard to detect.

Do **not** use solvents to clean the rope.

Make sure that the following prerequisite is met:
– Rope is cleaned (wiped and brushed).

16.1 External corrosion

The various types of corrosion are classified and noted with the classification for removal criteria in percentages:

LWE/ab Muli 010/24201-02-02/en

copyright © Liebherr-Werk Ehingen GmbH 2016

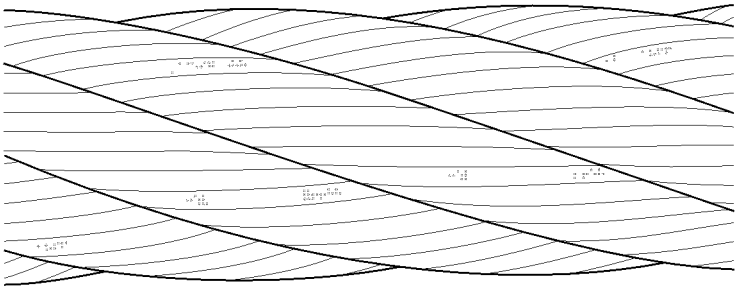

Fig.120984: Surface light corrosion: Classification 0 % of removal criteria

Superficial light corrosion (rust film) can be wiped off.

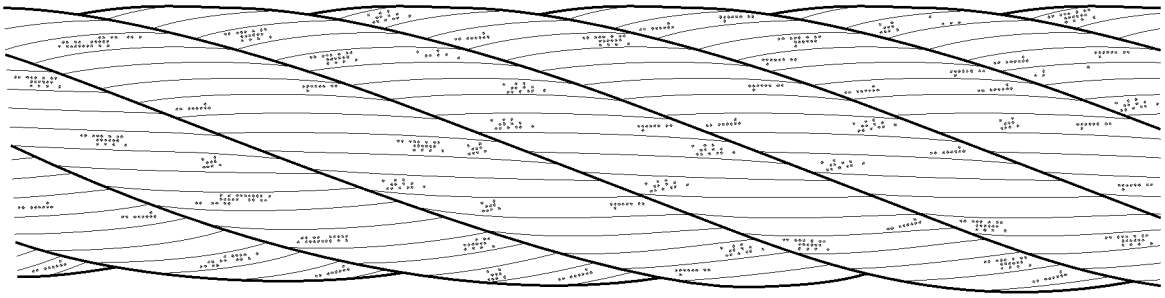

Fig.120985: Surface feels rough: Classification 20 % of removal criteria

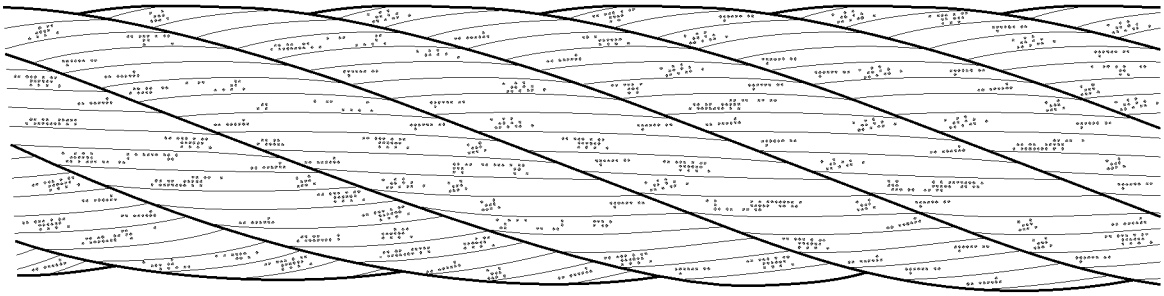

Fig.120986: Surface feels very rough: Classification 60 % of removal criteria

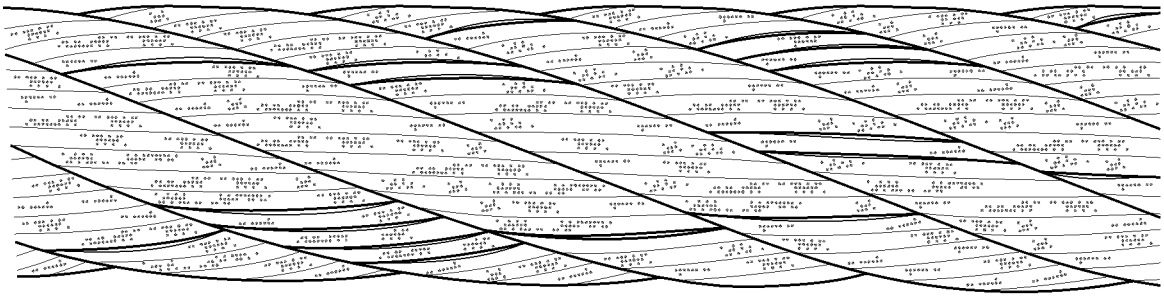

Fig.120987: Surface very decayed, spaces between individual wires can be easily recognized: Classification 100 % of removal criteria

copyright © Liebherr-Werk Ehingen GmbH 2016

When 100 % of removal criteria is reached:
▶ Take the rope down.

16.2 Internal corrosion

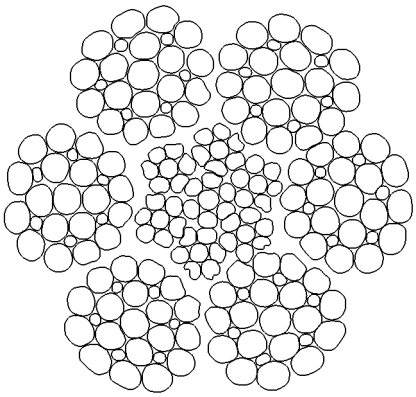

Fig.120982: Corrosion in the inside of the rope

Internal corrosion is present when clearly visible corrosion particles migrate between the valleys of the outer strands: Classification 100 % removal criteria.

When internal corrosion is found:
▶ Have the rope removal criteria evaluated by **expert personnel for crane rope inspection** or place the rope down.

16.3 Friction corrosion

Friction corrosion occurs as a type of brown powder, which migrates from the inside of the rope to the outside: Classification 100 % of removal criteria.

▶ Check the rope diligently for friction corrosion.

If friction corrosion is found:
▶ Have the rope removal criteria evaluated by **expert personnel for crane rope inspection** or place the rope down.

17 Corkscrew-like distortion

Fig.120988: Corkscrew-like distortion

Distortion where the rope is in the form of a corkscrew along its longitudinal axis.

Effects of corkscrew-like distortion:
- Irregular rope drive
- Rope wear
- Broken wire
- Bearing damage on rope pulleys

LWE/ab Muli 010/24201-02-02/en

copyright © Liebherr-Werk Ehingen GmbH 2016

If the distortion is very pronounced, then other components can be affected in their function when the affected rope section runs through in crane operation.

▶ Check the entire rope for corkscrew-like distortion.

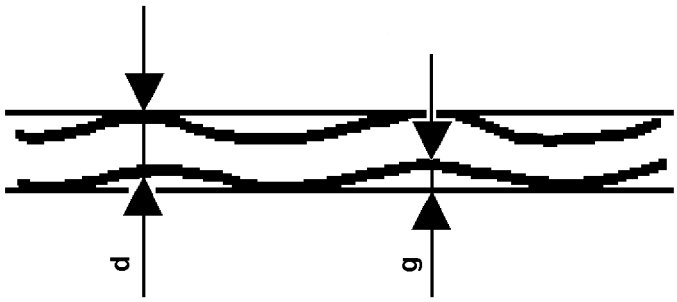

Fig.123988: Example for corkscrew-type distortion

d Rope nominal diameter **g** Distance

Rope section	Conditions for removal criteria, formula
Straight rope section, which does **not** run through or around a rope pulley or spools up on a winch	$g \geq \frac{1}{3} \times d$
Straight rope section, which runs through or around a rope pulley or spools up on a winch	$g \geq \frac{1}{10} \times d$

When corkscrew-like distortion is present:
▶ Determine the rope nominal diameter **d** and distance **g** on the rope.
▶ Check the removal criteria with the formula.

When the removal criteria is reached:
▶ Take the rope down.

18 Basket formation

This distortion occurs due to different layers between the outer strand layers and the inside of the rope.

Causes for basket formation are high angular pull angles during the run over the rope pulleys and run-in rope pulleys. Even load distribution over the entire cross section is not possible.

LWE/ab Muli 010/24201-02-02/en

copyright © Liebherr-Werk Ehingen GmbH 2016

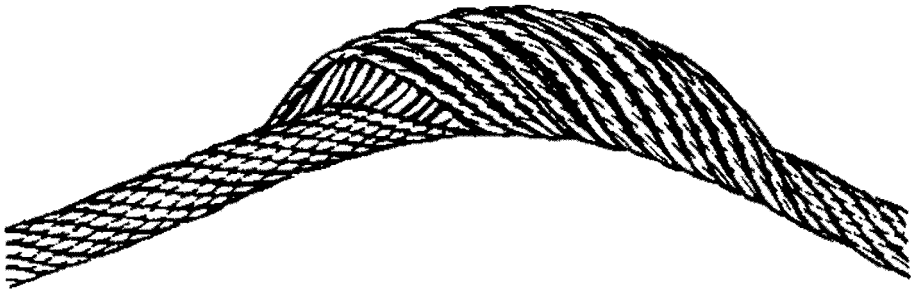

Fig.120989: Basket formation

▶ Check the entire rope for basket formation.

When basket formation is present:
▶ Take the rope down.

19 Protruding, distorted insert or strand

This distortion is a special form of basket formation. The insert or the core of the rope protrudes between the outer strands or an outer strand protrudes from the rope banding.

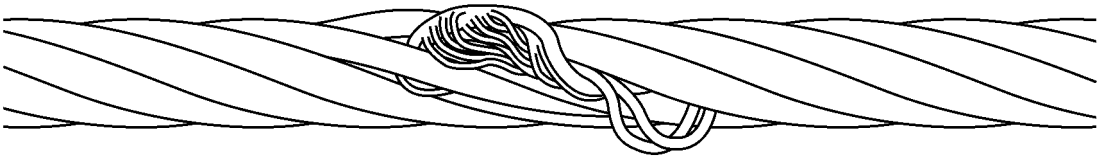

Fig.120990: Protrusion of an insert (rope single layer)

Fig.120991: Distorted or protruding strand

LWE/ab Muli 010/24201-02-02/en

copyright © Liebherr-Werk Ehingen GmbH 2016

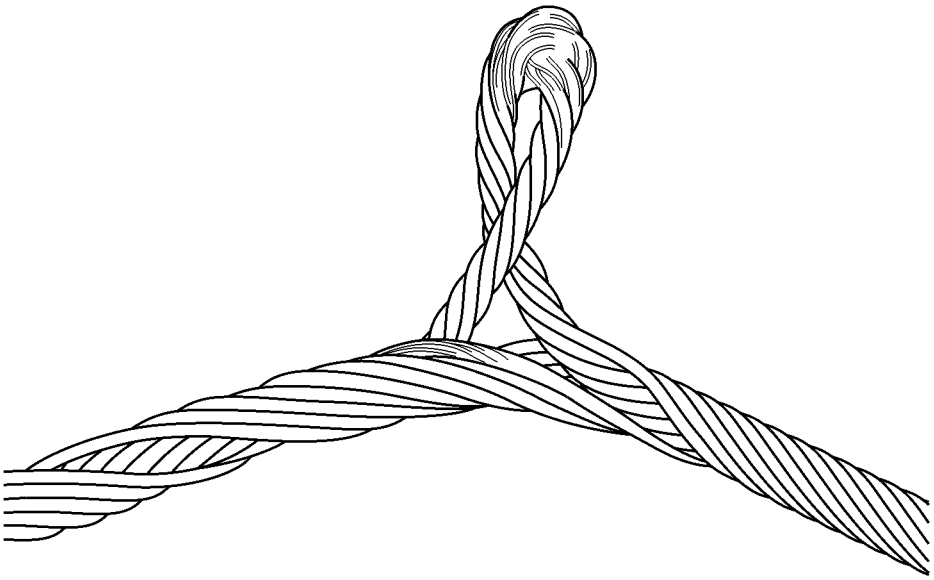

Fig.121373: Protrusion of rope insert on rotation-resistant rope

When the insert or a strand protrudes or is distorted, place the rope down. Have authorized inspector for crane rope inspection check if the rope area with the distortion can be removed.

▶ Check the entire rope for protruding, distorted insert or strand.

When protruding, distorted insert or braid is present:
▶ Take the rope down.
▶ Have **expert personnel for crane rope inspection** check if the rope area with the distortion can be removed.

20 Loop formation

At loop formation individual or several wires protrude from the rope and bulge upward (bird-caging).

These areas are most often on the opposite side of the rope pulley groove.

Make sure that the following prerequisite is met:
– There are **no** broken wire ends present.

If only a core wire of the rope insert protrudes through the outer strands, then the rope does not have to be taken down when:
– The wire can be removed.
– The wire does not disturb other elements of the rope drive.

LWE/ab Muli 010/24201-02-02/en

copyright © Liebherr-Werk Ehingen GmbH 2016

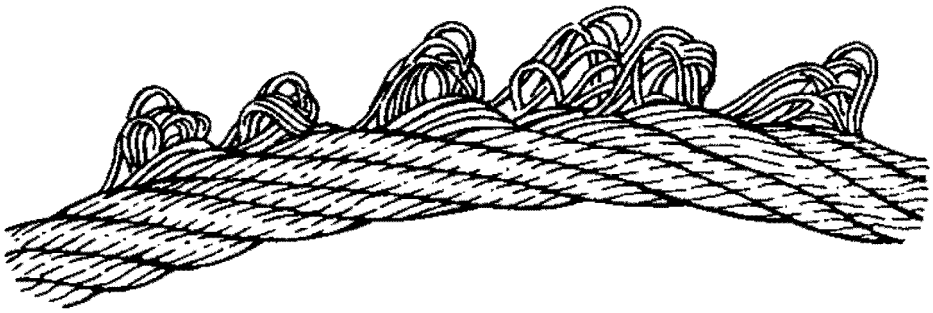

Fig.120993: Emergence of individual wires

▶ Check rope for loop formation.

When solely a core wire protrudes:
▶ Remove the core wire.

When several wires are affected from the loop formation:
▶ Take the rope down.

21 Kinking or rope loops pulled closed

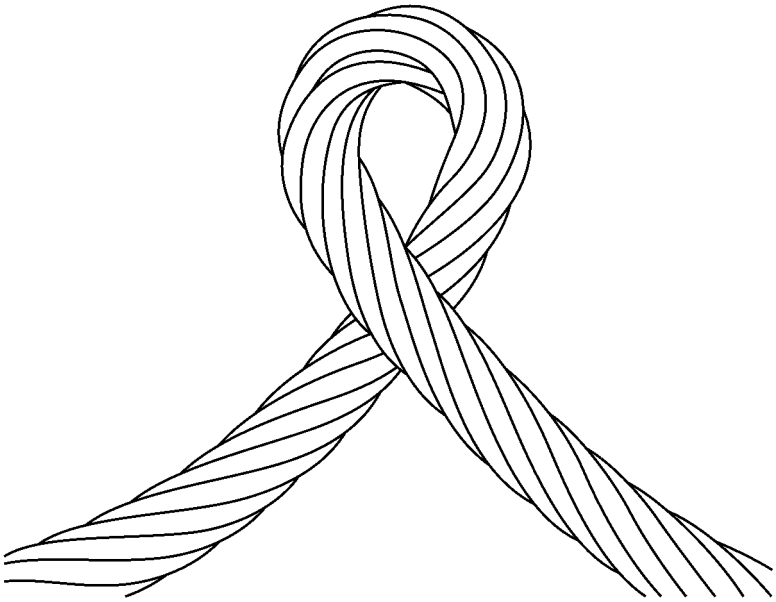

Fig.121007: Kinking or rope loop pulled closed

At this deformation a loop has formed in the rope, without the possibility to rotate around its own axis during a load. The rope is subjected to more wear.

The rope is significantly distorted. The strength remains only in part.

LWE/ab Muli 010/24201-02-02/en

copyright © Liebherr-Werk Ehingen GmbH 2016

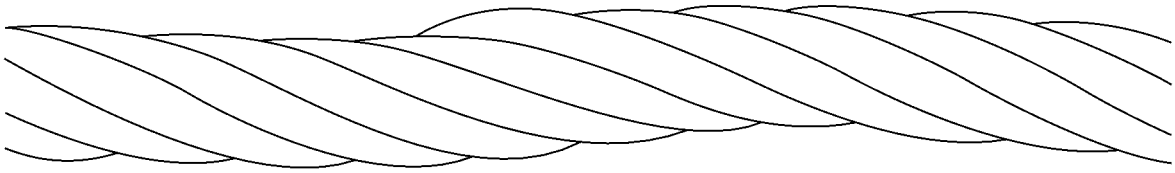

Fig.121002: Positive Kinking

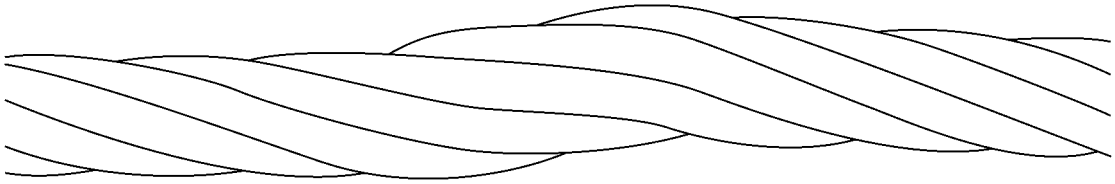

Fig.121003: Negative Kinking

▶ Check the rope for kinking or rope loops pulled closed.

When kinking or rope loops pulled closed occur:
▶ Take the rope down.

22 Buckles

Buckles are angular deformations. The rope was damaged due to external influences. Strong deformations of the rope cause stronger wear.

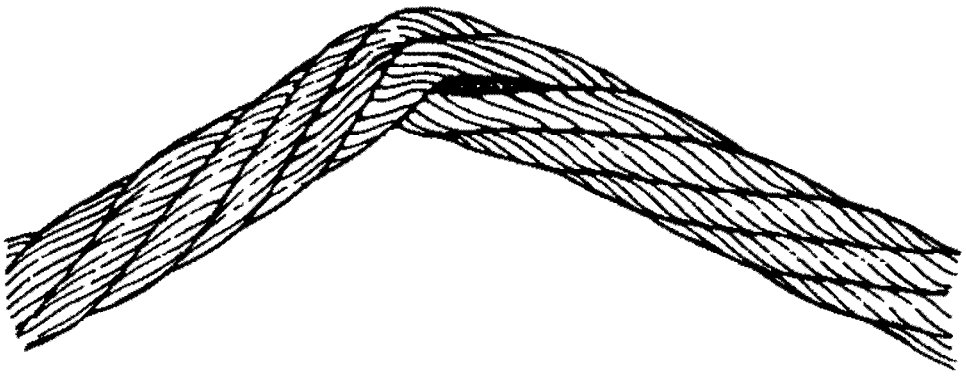

Fig.120999: Severe buckle

A buckle is a serious matter if a fold is visible on the underside of the rope.

When buckles are present:
▶ Have the rope inspected by **expert personnel for crane rope inspection**.

When a distortion and degree of severity permits further operation:
▶ Shorten the inspection interval.

copyright © Liebherr-Werk Ehingen GmbH 2016

When the removal criteria is reached:
▶ Take the rope down.

23 Effects of heat, arcs

Damage caused to the rope by welding work, for example.

Exceptional thermal effect is visible through tempering colors, the loss of lubricant and by localized melting of wires.

When thermal effect has occurred on the rope:
▶ Take the rope down.

24 Combined degree of severity

Note
▶ For a method to determine the effect of a combined degree of severity and damage on the rope, see **DIN ISO 4309**.

When the condition of the rope deteriorates, then often a combination of various causes occurs.

To determine the degree of severity, the **expert personnel for crane rope inspection** must:
- take different damage within a rope section into account
- evaluate the entire effect of the damage and the distortions
- decide about the operational safety of the rope
- evaluate if inspection intervals must be adjusted
- decide if the rope must be taken down

When the combined degree of severity is more than 100 %, then the rope must be taken down.

25 Flattenings

Effects of flattenings on the rope:
- Rope sections with flattenings, which move **over the rope pulleys** tend to higher wear and a higher number of broken wires.
- Rope pulleys can be damaged.
- Flattenings on **stationary ropes** (guy ropes boom) promote quicker corrosion, especially in the areas where the outer strands have opened.

Flattened rope sections must be checked in shorter intervals for broken wires and corrosion.

25.1 Shorting the intervals

▶ Check the entire rope for flattenings.

When flattenings are present on stationary ropes:
▶ Shorten the intervals for rope inspection.

When it is **not** possible to shorten the intervals for the rope inspection:
▶ Take the rope down.

25.2 Improper mechanical damage

An improper mechanical damage occurs, for example, when the rope is pinched.

▶ Take the rope down immediately or shorten it, see Crane operating instructions, chapter 7.05.50.

LWE/ab Muli 010/24201-02-02/en

copyright © Liebherr-Werk Ehingen GmbH 2016

25.3 Operational transverse pressure

Operational transverse pressure causes flattenings, for example in the incline range of multi layer spooling.

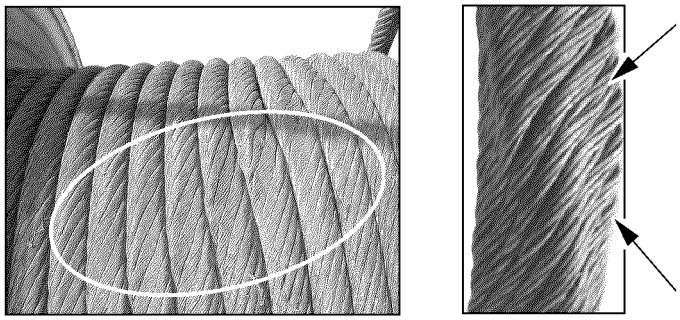

Fig.114002: Flattenings, for example on control ropes

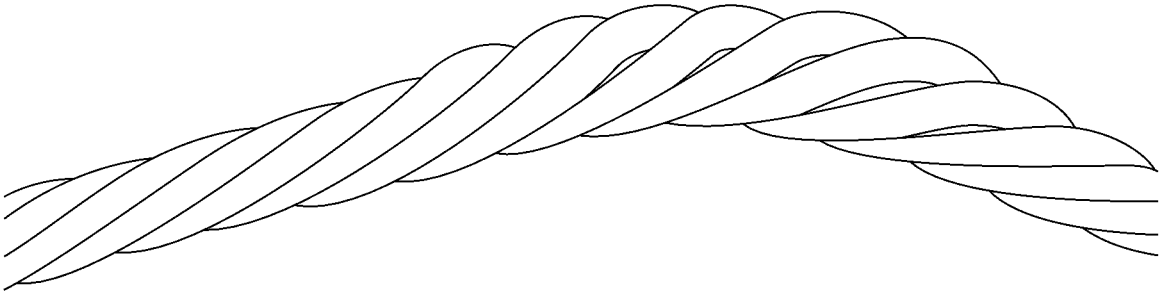

Fig.120996: Flattenings on multi layer spoolings

▶ Check the first rope layer of the winches for crushed areas and distortions.

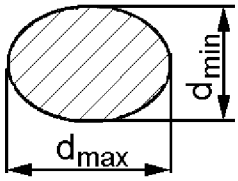

Fig.121006: Largest and smallest diameter on the distortion area

$$V = \frac{d_{max} - d_{min}}{d} \times 100\ \%$$

Fig.121374: Formula to calculate the distortion

V	Rope distortion in percentages	**dmax**	Largest diameter of distortion area
d	Control rope nominal diameter	**dmin**	Smallest diameter of distortion area

When distortions are present:

▶ Determine the number of broken wires See section „Determining the number of broken wires“.

copyright © Liebherr-Werk Ehingen GmbH 2016

When the number of permissible broken wires is exceeded:
- ▶ Take the rope down.
- ▶ Calculate the distortion **V** with the formula and document it in the inspection checklist.

When distortion **V** is larger than 5 %:
- ▶ Check the rope before every assembly and erection procedure.

When distortion **V** is larger than 10 %:
- ▶ Document the degree of severity of 50 % in the inspection checklist.

When distortion **V** is larger than 20 %:
- ▶ The degree of severity of 100 % is reached: Take the control rope down.

LWE/ab Muli 010/24201-02-02/en

copyright © Liebherr-Werk Ehingen GmbH 2016

26 Current checklist

Crane and use:

Rope application:		RCN[3]:	Installation date:
Brand name:		Nominal diameter:	Take-down date:
Make[1]:	O Right hand	O Left hand	Minimum tensile strength
Direction of lay[1]:	O Lang's lay	O Ordinary lay	Permissible number of visible external broken wires
Intermediate layer[1]:	O IWRC	O FC O WSC	Datum diameter
Wire surface[1]:	O Bare	O Galvanized	Permissible diameter reduction: 6d: 30d:

Date	Visible external broken wires						Diameter				Corrosion				Damage, deformation				Combined severity level[2]	Name of expert for the wire rope inspection	Signature
	Number in length of		Position in the rope		Severity level[2]		Measured	Actual reduction to datum diameter	Position in the rope	Severity level[2]	Position in the rope	Severity level[2]			Position in the rope	Severity level[2]					
JJ/MM/TT	6d	30d	6d	30d	6d	30d															

[1] Check where applicable.
[2] State extent of damage; slight or 20%; medium or 40%; high or 60%; very high or 80%; take-down or 100%
[3] RCN = Rope Category Number

LWE/ab Muli 010/24201-02-02/en

Fig.121369-en: Form for current checklist

copyright © Liebherr-Werk Ehingen GmbH 2016

LWE/ab Muli 010/24201-02-02/en

copyright © Liebherr-Werk Ehingen GmbH 2016

8.05 Inspection of load hooks

1	Safety guidelines	3
2	Inspection intervals	3
3	Inspecting and monitoring the load hook	3

LWE/ab Muli 010/24201-02-02/en

copyright © Liebherr-Werk Ehingen GmbH 2016

LWE/ab Muli 010/24201-02-02/en

Fig.195219

copyright © Liebherr-Werk Ehingen GmbH 2016

1 Safety guidelines

DANGER
Death, severe injury, property damage due to welding on load hooks!
- ▶ Do **not** weld load hooks to repair wear.
- ▶ Replace the load hook in case of impermissible wear.
- ▶ Contact Liebherr Service.

Make sure that the following regulation is followed:
- – Do **not** carry out any welding work on load hooks, for example to repair wear.

2 Inspection intervals

By recognizing defects in time, accidents are prevented.

An inspection must be made before operation.

Load hooks must be inspected as needed, but at least once a year by an expert.

The load hook must be inspected very 4 years by an expert.

3 Inspecting and monitoring the load hook

Any defects found must be remedied and documented.

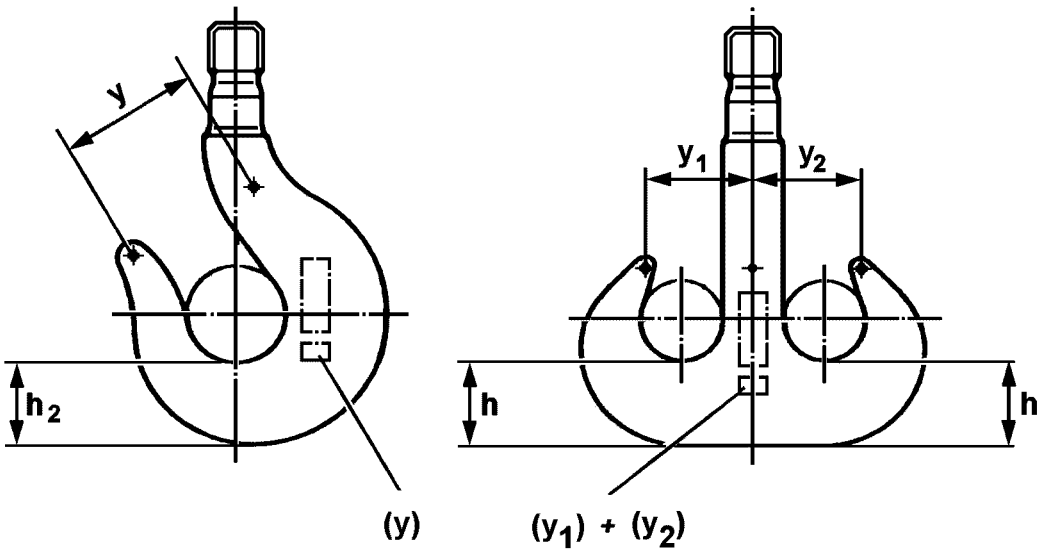

Fig.121531: Description of measured distances of load hooks

LWE/ab Muli 010/24201-02-02/en

copyright © Liebherr-Werk Ehingen GmbH 2016

3.1 Checking the load hook for distortion

DANGER
Death, severe injury, property damage due to expansion of hook jaw!
- ▶ Replace the load hook in case of impermissible expansion.
- ▶ Contact Liebherr Service.

The initial dimension **(y)** for the single hook is marked on the load hook.

The initial dimension **(y_1)** and the initial dimension **(y_2)** for the double hook is marked on the load hook.

The expansion of the hook jaw may not exceed more than 10 % in reference to the initial dimension **(y)** or the initial dimension **(y_1)** and the initial dimension **(y_2)**.

- ▶ Measure dimension **y** or dimension **y_1** and dimension **y_2** from center punch to center punch.
- ▶ Check for dimensional accuracy within the permissible tolerance.

3.2 Checking the load hook for surface cracks

DANGER
Death, severe injury, property damage due to surface cracks and damage on the load hook!
- ▶ Replace the load hook in case of surface cracks and damage.
- ▶ Contact Liebherr Service.

When distortions are found on the hook jaw:
- ▶ Check the load hook for surface cracks with a suitable procedure.
- ▶ Check the load hook for damage

3.3 Checking the load hook for wear

DANGER
Death, severe injury, property damage due to wear on the hook base!
- ▶ Replace the load hook in case of impermissible wear.
- ▶ Contact Liebherr Service.

The wear on the hook base may be no more than 5 % of the initial nominal dimension **h_2** for single hooks or initial nominal dimension **h** for double hooks.

The initial nominal dimensions **h_2** for single hooks and **h** for double hooks are listed in the chart.

Hook Number	Single hook h_2 [mm]	Double hook h [mm]
4	67	—
5	75	—
6	85	75
8	95	85
10	106	95
12	118	106
16	132	118
20	150	132
25	170	150
32	—	170

LWE/ab Muli 010/24201-02-02/en

copyright © Liebherr-Werk Ehingen GmbH 2016

Hook Number	Single hook h_2 [mm]	Double hook h [mm]
40	—	190
50	—	212
63	—	236
80	—	265
100	—	300
125	—	335
160	—	375
200	—	425
250	—	475
320	—	545

Initial nominal dimensions $\mathbf{h_2}$ for single hooks and **h** for double hooks

- ▶ Measure dimension $\mathbf{h_2}$ for single hooks or dimension **h** for double hooks.
- ▶ Check for dimensional accuracy within the permissible tolerance.

3.4 Checking load hooks for corrosion and wear

DANGER
Death, severe injury, property damage due to corrosion and wear on the thread!
- ▶ Replace load hooks which are **not** dimensionally accurate.

When wear or impermissible axial play on the hook nut is present:
- ▶ Replace the hook nut.
- ▶ Contact Liebherr Service.

To check the threads regarding corrosion and wear, the hook nut must be unscrewed from the hook shaft.

- ▶ Check the load hook thread and hook nut for corrosion and wear.

When reconditioning work is required to remove corrosion notches:
- ▶ Carry out a test for dimensional accuracy.

LWE/ab Muli 010/24201-02-02/en

copyright © Liebherr-Werk Ehingen GmbH 2016

Empty page!

copyright © Liebherr-Werk Ehingen GmbH 2016

8.06 Inspection of hydraulic hose lines

1	Safety guidelines	3
2	Inspection intervals	3
3	Checking the end of the service life	3
4	Inspecting the hydraulic hose lines for damage	4
5	Inspecting the hydraulic hose lines for leaks	5
6	Documenting the inspection	5
7	Replacing hydraulic hose lines	5

LWE/ab Muli 010/24201-02-02/en

copyright © Liebherr-Werk Ehingen GmbH 2016

Fig.195219

LWE/ab Muli 010/24201-02-02/en

copyright © Liebherr-Werk Ehingen GmbH 2016

1 Safety guidelines

WARNING
Damaged and leaky hydraulic hose lines!
Fire, accidents, death, severe injury, property damage.

If leaky areas are found:
▶ Have these leaky areas inspected immediately by authorized and trained expert personnel and remedied.

If damage is found:
▶ Have the hydraulic hose lines replaced exclusively by authorized and trained expert personnel.

If it is determined that the service life is over:
▶ Have the hydraulic hose lines replaced exclusively by authorized and trained expert personnel.

Make sure that the following prerequisite is met:
– A **competent person for hydraulic hose lines** inspects the hydraulic hose lines.

A **competent person for hydraulic hose lines** has the following knowledge:
– Knowledge and experience in hydraulic and mechanics
– Knowledge of all requirements regarding valid standards:
  • ISO 8331
  • ISO 2230
  • ISO 1402
  • ISO/TR
  • EN 853 to EN 857
  • National regulations
– **or:** Knowledge of all requirements regarding the valid German standards, for example:
  • DIN 20066:202-10
  • BGR 237 Feb 2008, BG-Regulation

2 Inspection intervals

The inspection of hydraulic hose lines must be carried out in the following intervals:
– when the crane is **up to 10 years** old, at least one inspection every twelve months
– when the crane is **older than 10 years**, at least one inspection every six months

3 Checking the end of the service life

Hydraulic hose lines have a limited service life.

When hydraulic hose lines are properly stored, installed and used, then the manufacturer guarantees a service life of at least 10 years.

The life expectancy of hydraulic hose lines can deviate significantly from the noted service life of hydraulic hose lines.

Note
Special case: Active rear axle steering!
▶ The life expectancy of hydraulic hose lines is six years, including a storage period of maximum two years.

The life expectancy of a hydraulic hose line depends on various factors:
– Environmental influences, for example: Temperature, humidity, corrosive air
– Use

copyright © Liebherr-Werk Ehingen GmbH 2016

- Working cycles
- Number of bending cycles
- Friction
- Fluid

The following factors reduce the life expectancy significantly:
- Heat
- Repeated bending under pressure

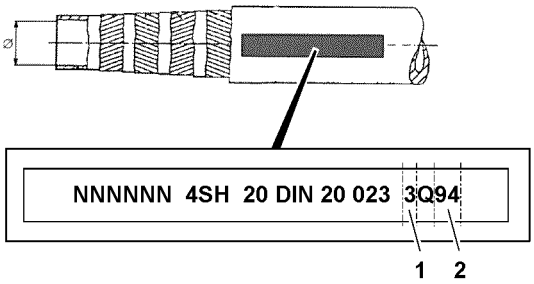

Fig.120159: Example for identification of hydraulic hose lines

The manufacturing date is marked on the fixtures or fittings.

▶ Read the quarter **1** of manufacture.
▶ Read the year **2** of manufacture.

When the life expectancy of a hydraulic hose line has been exceeded, then a **competent person** can decide **not** to replace the hydraulic hose line. Document the decisions, see section „Documenting the inspection“.

When the end of the service life is determined:
▶ Have the hydraulic hose lines replaced exclusively by authorized and trained expert personnel.

4 Inspecting the hydraulic hose lines for damage

Hydraulic hose lines must be replaced when one of the following damage is present:
– Damage on outer surface, such as chafe marks, cuts and cracks
– Brittleness due to aging of outer layer (cracks)
– Distortion, such as splitting of hose layers, bubbles, crushed areas, kinks, rotational stress
– Leakages
– Damage or distortion of hose fixtures or hose fitting (seal is endangered)
– Movement between hose and hose line, hose working itself loose from the fixture or the fitting
– Requirements for installation **not** observed
– Corrosion of fixture or fitting (solidness or function of fitting is endangered)

When the hydraulic hose line is **not** completely accessible:
▶ Remove the hydraulic hose line.

When the hydraulic hose line is protected with a protective hose:
▶ Check the hose protection for abrasion Abrasion on a hose protective hose can indicate abrasion on the hydraulic hose line.
▶ Check hydraulic hose lines for distortion in pressureless and pressurized status and during bending.

When the hydraulic hose line is slightly damaged, then a **competent person** can decide **not** to replace the hydraulic hose line. Document the decisions, see section „Documenting the inspection“.

If damage is found:
▶ Have the hydraulic hose lines replaced exclusively by authorized and trained expert personnel.

LWE/ab Muli 010/24201-02-02/en

copyright © Liebherr-Werk Ehingen GmbH 2016

5 Inspecting the hydraulic hose lines for leaks

▶ Check the crane for escaped hydraulic oil.
▶ Check the crane for leaks by visually checking the ground under the crane.

When the hydraulic system leaks:
▶ Have these leaks inspected immediately by authorized and trained expert personnel and remedied.
or
Contact Liebherr Service.

6 Documenting the inspection

Make sure that the following prerequisite is met:
– A **competent person for hydraulic hose lines** documents noticeable observations.

The following data about hydraulic hose lines is documented:
– Installation location
– Condition
– Date
– Time

▶ Document noticeable observations comprehensibly.

When the life expectancy of a hydraulic hose line has been exceeded of if the hydraulic hose line is slightly damaged, then a **competent person** can decide **not** to replace the hydraulic hose line.

When the hydraulic hose line is **not** replaced:
▶ Document decisions and replacements comprehensibly.
▶ Document the date for the next inspection comprehensibly.

7 Replacing hydraulic hose lines

To ensure maximum safety, sealing and service life, the following guidelines apply for replacement of hydraulic hose lines.

WARNING
Impermissible spare parts!
Death, severe injury, property damage.
▶ Do **not** use repaired or used hydraulic hose lines.
▶ Use exclusively Original Liebherr spare parts.
▶ Use exclusively hydraulic hose lines according to manufacturer's specification (including fixtures, rubber piece goods and manufacturing process).

NOTICE
Routing of hydraulic hose lines changed!
Abrasion. Incorrect bending radius. Stress. Shortened service life.
▶ Keep the routing of hydraulic hose lines.
▶ Inspect the hydraulic hose lines according to intervals.

▶ Adhere to the hose bending radii according to the manufacturer's specifications.
▶ Ensure the routing of hydraulic hose lines according to manufacturer's specifications (pressureless and pressurized condition).
▶ Ensure the distance between lines and structures.

If necessary:
▶ Check moving parts in the area of hydraulic hose lines.

LWE/ab Muli 010/24201-02-02/en

copyright © Liebherr-Werk Ehingen GmbH 2016

When the hydraulic hose line is installed in straight direction:

- ▶ Ensure a sag of the hose.
- ▶ Avoid mechanical tension and twisting of the hose during installation.
- ▶ Fasten the hydraulic hose line according to manufacturer's specification.
- ▶ Do not cross hydraulic hose lines for high pressure and low pressure.
- ▶ Keep hydraulic hose lines away from hot components.

When hydraulic hose lines are in a surrounding with high temperatures:

- ▶ Install protective insulation according to manufacturer's specifications.

LWE/ab Muli 010/24201-02-02/en

copyright © Liebherr-Werk Ehingen GmbH 2016

8.17 Inspection of ladders

1	Safety guidelines	3
2	Inspection intervals	3
3	Inspecting ladders	3
4	Inspection sheet and check list	3

LWE/ab Muli 010/24201-02-02/en

copyright © Liebherr-Werk Ehingen GmbH 2016

LWE/ab Muli 010/24201-02-02/en

Fig.195219

copyright © Liebherr-Werk Ehingen GmbH 2016

1 Safety guidelines

WARNING
Damaged ladders!
Accident. Death, severe injury, property damage.

If damage is found:
▶ Have ladders repaired by authorized and trained expert personnel.

If it is determined that the ladder cannot be repaired:
▶ Scrap the ladder immediately.

Make sure that the following prerequisite is met:
– **Authorized and trained expert personnel** checks the ladders.

The authorized and trained expert personnel has the following expertise:
– Knowledge, experience and abilities in repairing ladders
– Is familiar with the necessary prerequisites as determined by the contractor for the inspection of ladders
– Has the knowledge about the type, scope and intervals for the required inspections as determined by the contractor

2 Inspection intervals

The inspection of ladders must be carried out in the following intervals:
– The contractor determines the **required** intervals
– But there must be at least one inspection every **12 months**

Intervals depend on:
– Operating conditions
– Frequency of use
– Operational demands during use
– Frequency and severity of defects found during previous inspections

3 Inspecting ladders

Make sure that the following prerequisites are met:
– Ladder inspection sheets are on hand. For blank form, see section „Inspection form for the inspection of ladders and steps“
– Check lists are on hand. For blank form, see section „Check list for the inspection of ladders and steps“

▶ For every ladder and every step: Enter the data in the ladder inspection form.
or
Get the ladder inspection form for ladders or steps.
▶ Check the ladders and steps according to the check list and document the results.
▶ Collect the ladder inspection forms and check lists in the crane documentation.

4 Inspection sheet and check list

The following is shown, as an example: Inspection form and check list for the inspection of ladders and steps.

LWE/ab Muli 010/24201-02-02/en

copyright © Liebherr-Werk Ehingen GmbH 2016

4.1 Inspection form for the inspection of ladders and steps

Ladder control sheet		
Stock no. of the ladder/steps		
Location/installation location		
Ladder type		Stepladder
		Leaning ladder
		Leaning ladder with overshoot
		Vertical ladder
		Vertical ladder with overshoot aid
		Platform ladder
		Steps
		Other
Material of the ladder		Aluminium
		Plastic
		Steel
		Stainless steel
Number of rungs/stairs		
Ladder length/ladder shortened to		
Manufacturer/dealer		
Article/type number		
Date of purchase		
Date of discard		
Name of representative		
Next inspection		

Control sheet for inspecting ladders and steps

Fig.121361-en

LWE/ab Muli 010/24201-02-02/en

copyright © Liebherr-Werk Ehingen GmbH 2016

4.2 Check list for the inspection of ladders and steps

Inspection criteria	1st Inspection	2nd Inspection	3rd Inspection	4th Inspection	5th Inspection
1. Beams					
Deformation					
Damage (for example cracks)					
Sharp edges, splinters, burrs					
Wear					
Protective treatment					
2. Rungs/stairs/platform					
Deformation					
Damage					
Sharp edges, splinters, burrs					
Connection to the beam (for example, flanging, screw/rivet connections, welding seam)					
Wear (for example, stepping surfaces, platform overlay)					
3. Spreader safety					
Completeness/fastening					
Functionality					
Damage					
4. Fitting parts					
Damage/corrosion					
Completeness/fastening					
Functionality					
Wear					
Lubrication (mechanical parts)					

LWE/ab Muli 010/24201-02-02/en

Fig.121362-en

copyright © Liebherr-Werk Ehingen GmbH 2016

Inspection criteria	1st Inspection	2nd Inspection	3rd Inspection	4th Inspection	5th Inspection
5. Ladder/stands/pulleys					
Completeness/fastening					
Wear/damage					
Functionality					
6. Accessories (for example, beam extension, base expansion, wall support)					
Completeness/fastening					
7. Identification					
Operating instructions (for example, pictogram)					
8. Inspection result					
Ladder OK and usable					
Repair necessary					
Discard ladder immediately					
Comments					
Next inspection (month/year)					
Ladder inspected					
Date					
Signature					

Check list for inspecting ladders and steps

Fig.121363-en

LWE/ab Muli 010/24201-02-02/en

copyright © Liebherr-Werk Ehingen GmbH 2016

8.90 Inspection chart for cranes

1 Inspection chart for recurring inspections of Liebherr cranes 3

LWE/ab Muli 010/24201-02-02/en

copyright © Liebherr-Werk Ehingen GmbH 2016

LWE/ab Muli 010/24201-02-02/en

Fig.195219

copyright © Liebherr-Werk Ehingen GmbH 2016

1 Inspection chart for recurring inspections of Liebherr cranes

The following is a checklist to assist the inspector during the periodic inspections of Liebherr mobile and crawler cranes.

Company:	**Inspector:**
Crane manufacturer: Liebherr	**Crane type:**
Serial number:	**Stock number:**
Year of construction:	**Date:**
Inspector's signature for No. 1 to 22:	

1. Inspection category: Crane document						
Component to be inspected	**A**	**B**	**C**	**D**	**E**	**Comments**
Crane inspection log						
Operating and installation instructions						
Crane control log						
Load chart manual						
Job planner						

2. Inspection category: Signs / identification						
Component to be inspected	**A**	**B**	**C**	**D**	**E**	**Comments**
Factory tag						
Load data						
Operating instruction label						
Prohibition and command signs						
Other safety signs						

3. Inspection category: Travel gear[1]						
Component to be inspected	**A**	**B**	**C**	**D**	**E**	**Comments**
Frame[2]						
Supports[3]						
Axles						
Wheels						
Tires						
Bearings						
Transmission						
Universal drive shaft						
Leaf springs / springs						
Shock absorbers						

LWE/ab Muli 010/24201-02-02/en

copyright © Liebherr-Werk Ehingen GmbH 2016

3. Inspection category: Travel gear[1]						
Component to be inspected	**A**	**B**	**C**	**D**	**E**	**Comments**
Steering						
Brakes						
Hydraulic axle suspension						

4. Inspection category: Chassis[1]						
Component to be inspected	**A**	**B**	**C**	**D**	**E**	**Comments**
Coverings						
Accessible surfaces						
Counterweight holders[2]						
Towing devices						
Accesses, ladders						
Holding devices, handles						
Platforms, railings						
Retainer for hook block[2]						
Boom support[2]						

5. Inspection category: Chassis - driver's cab[1]						
Component to be inspected	**A**	**B**	**C**	**D**	**E**	**Comments**
Doors						
Windows / windshields						
Windshield wipers						
Mirrors						
Seat						
Heater						
Ventilation						
Sound absorber						
Trip recorder						
First aid kit						
Spare bulbs						
Hazard warning triangle						
Safety vest						

6. Inspection category: Chassis - drive[1]						
Component to be inspected	**A**	**B**	**C**	**D**	**E**	**Comments**
Combustion engine						
Exhaust system						
Fuel tank						

LWE/ab Muli 010/24201-02-02/en

copyright © Liebherr-Werk Ehingen GmbH 2016

6. Inspection category: Chassis - drive[1]						
Component to be inspected	**A**	**B**	**C**	**D**	**E**	**Comments**
Urea container						
Fuel container						
Filters						
Sound absorber						
Engine mount						
Oil levels						
Fuel lines						
Urea lines						
Fuel lines						

7. Inspection category: Chassis - hydraulics[1]						
Component to be inspected	**A**	**B**	**C**	**D**	**E**	**Comments**
Oil container						
Filter with maintenance indicator						
Pumps						
Motors						
Valves						
Lines						
Hoses						
Cylinder						
Pressure limiting valves						

8. Inspection category: Chassis - pressurized air system[1]						
Component to be inspected	**A**	**B**	**C**	**D**	**E**	**Comments**
Compressor						
Filters						
Air tanks						
Valves						
Lines						
Hoses						
Cylinder						

9. Inspection category: Chassis - electrical system[1]						
Component to be inspected	**A**	**B**	**C**	**D**	**E**	**Comments**
Motors						
Generators						
Battery						

LWE/ab Muli 010/24201-02-02/en

copyright © Liebherr-Werk Ehingen GmbH 2016

9. Inspection category: Chassis - electrical system[1]						
Component to be inspected	**A**	**B**	**C**	**D**	**E**	**Comments**
Switches / buttons						
Lines						
Fuses						
Resistors						
Lighting						
Brake lights						
Blinkers						
Tail lights						
Working lights						
Signaling systems						
Indicator lights						
Battery switch						
Limit switches: Transmission, steering, drive train						
Support pressure indicator[2]						

10. Inspection category: Chassis - control devices[1]						
Component to be inspected	**A**	**B**	**C**	**D**	**E**	**Comments**
Engine regulation						
Transmission						
Couplings						
Circuits						
Brakes						
Steering						
Indicator displays						
Engine shut off line						
Control of supports[2]						
Axle suspension						
Crane leveling						
Rear axle steering						

11. Inspection category: Superstructure						
Component to be inspected	**A**	**B**	**C**	**D**	**E**	**Comments**
Frame						
Coverings						
Treads						
Bearings						

LWE/ab Muli 010/24201-02-02/en

copyright © Liebherr-Werk Ehingen GmbH 2016

11. Inspection category: Superstructure						
Component to be inspected	**A**	**B**	**C**	**D**	**E**	**Comments**
Counterweights						
Relapse retainer						
Slewing ring connection: Tilt play						
Slewing ring connection: Mounting screws						
Slewing ring connection: Gears						
Slewing gear: Mounting screws						
Slewing gear: Gears						

12. Inspection category: Superstructure - crane operator's cab						
Component to be inspected	**A**	**B**	**C**	**D**	**E**	**Comments**
Doors						
Windows / windshields						
Windshield wipers						
Mirrors						
Seat						
Heater						
Ventilation						
Sound absorbers						
Joystick for working functions						
Gear shifts						
Safety: Crushing / shear locations						

13. Inspection category: Superstructure - Retaining and protection devices						
Component to be inspected	**A**	**B**	**C**	**D**	**E**	**Comments**
Accesses, ladders						
Handles						
Coverings						
Covers						
Hatches						
Treads						

14. Inspection category: Superstructure - drive train						
Component to be inspected	**A**	**B**	**C**	**D**	**E**	**Comments**
Combustion engine						
Exhaust system						
Fuel tank						
Urea container						

copyright © Liebherr-Werk Ehingen GmbH 2016

14. Inspection category: Superstructure - drive train						
Component to be inspected	**A**	**B**	**C**	**D**	**E**	**Comments**
Fuel container						
Filters						
Sound absorber						
Engine mount						
Fuel lines						
Urea lines						
Fuel lines						

15. Inspection category: Superstructure - hydraulic system						
Component to be inspected	**A**	**B**	**C**	**D**	**E**	**Comments**
Oil container						
Filters						
Pumps						
Motors						
Valves						
Lines						
Hoses						
Cylinder						
Pressure limiting valves						
Lowering brake valves						
Brake control: Hoist gear						
Brake control: Slewing gear						

16. Inspection category: Superstructure - electrical system						
Component to be inspected	**A**	**B**	**C**	**D**	**E**	**Comments**
Motors						
Generators						
Batteries						
Switches / buttons						
Lines						
Fuses						
Resistors						
Lighting						
Signal lights						

LWE/ab Muli 010/24201-02-02/en

copyright © Liebherr-Werk Ehingen GmbH 2016

17. Inspection category: Superstructure - control systems						
Component to be inspected	**A**	**B**	**C**	**D**	**E**	**Comments**
Engine regulation						
Transmission						
Flexible couplings						
Circuits						
Engine shut off line						
Indicator displays						

18. Inspection category: Superstructure - rope drives						
Component to be inspected	**A**	**B**	**C**	**D**	**E**	**Comments**
Winch 1[3]						
Winch 2[3]						
Winch 3[3]						
Winch 4[3]						
Winch 5[3]						
Winch 6[3]						
Assembly winches [3]						
Rope pulleys						
Rope end connection						
Rope for winch 1						
Rope for winch 2						
Rope for winch 3						
Rope for winch 4						
Rope for winch 5						
Rope for winch 6						
Rope for assembly winches						
Guy ropes						

19. Inspection category: Superstructure - hook						
Component to be inspected	**A**	**B**	**C**	**D**	**E**	**Comments**
Pulleys						
Rope guards on pulleys						
Axle support						
Load hook						
Load hook mounting						
Hook retention						

LWE/ab Muli 010/24201-02-02/en

copyright © Liebherr-Werk Ehingen GmbH 2016

20. Inspection category: Superstructure - safety and switch systems						
Component to be inspected	**A**	**B**	**C**	**D**	**E**	**Comments**
Hoist emergency limit switch I						
Hoist emergency limit switch II						
Lowering emergency limit switch I						
Lowering emergency limit switch II						
Boom emergency limit switch I						
Boom emergency limit switch II						
Luffing jib: Boom limit switch I						
Luffing jib: Boom limit switch II						
Load moment limiter						
Angle display: Boom						
Angle display: Luffing jib						
Angle display: Slewing gear						
Safety devices: Control						
Working range limitation						
Pressure sensors						
Speed sensor						
Wind sensor						
Sliding beam monitoring						
Support pressure indicator						
Incline display						
Length indicator: Radius, boom length						
Emergency off system						
Engine stop						

21. Inspection category: Boom						
Component to be inspected	**A**	**B**	**C**	**D**	**E**	**Comments**
Weld structure						
Rope pulleys						
Change over pulleys feed mechanism						
Luffing cylinder						
Telescoping cylinder						
Boom extension ropes						
Boom retraction ropes						
Boom bearings						
Boom pinning						
Guy rods						
Guy ropes						

LWE/ab Muli 010/24201-02-02/en

copyright © Liebherr-Werk Ehingen GmbH 2016

21. Inspection category: Boom						
Component to be inspected	**A**	**B**	**C**	**D**	**E**	**Comments**
Control ropes						
Guide ropes						
Safety ropes						
Relapse cylinders						

22. Inspection category: Equipment						
Component to be inspected	**A**	**B**	**C**	**D**	**E**	**Comments**
Weld structure						
Rope pulleys						
Relapse cylinder						
Relapse support						
Oscillation guard						
A-frame bearings						
Pinning of components						
Guy rods with pinning						
Rods with guide rail on A-frame 2 and A-frame 3						
All limit switches with switch mechanism						

Inspection chart for periodic inspections of Liebherr mobile and crawler cranes

Inspection criteria:

A = present / complete
B = Condition / maintenance
C = Function
D = Repair / replace
E = Re-inspection required

Evaluation:

Satisfactory = x
Unsatisfactory = -
Not required = 0

Comments:

[1] Inspection of the crane carrier vehicle road worthiness is also fulfilled if it has already been certified by the road traffic department certification authority. For cranes that are not certified for use on public roads, an expert or authorized inspector must conduct the required tests to validate the vehicle's road worthiness.

[2] These inspections must be carried out by an authorized inspector even if it has passed the road traffic department test and is certified.

[3] Inspection of the winches regarding the used portion of the theoretical service life.

LWE/ab Muli 010/24201-02-02/en

copyright © Liebherr-Werk Ehingen GmbH 2016

Empty page!

copyright © Liebherr-Werk Ehingen GmbH 2016

90 Attachment

LWE/ab Muli 010/24201-02-02/en

copyright © Liebherr-Werk Ehingen GmbH 2016

copyright © Liebherr-Werk Ehingen GmbH 2016

90.01 Foreword to attachment

1 Foreword 3

LWE/ab Muli 010/24201-02-02/en

copyright © Liebherr-Werk Ehingen GmbH 2016

LWE/ab Muli 010/24201-02-02/en

Fig.195219

copyright © Liebherr-Werk Ehingen GmbH 2016

1 Foreword

This crane may only be used in a flawless technical condition and according to its mission as well as with constant awareness of safety and dangers. Any problems, which could affect safety, must be fixed immediately.

Note

▶ Modifications on the crane may only be made with written approval by Liebherr-Werk Ehingen GmbH.

1.1 Change to the operating instructions

Changes to the operating instructions are received in the form of chapters. The chapter to be replaced must be removed from the operating instructions and replaced with the new chapter in the same location.

When you receive a change to the operating instructions:

▶ Remove the chapter to be replaced from the operating instructions.
▶ File the new chapter in the same location in the operating instructions.
▶ Destroy the replaced chapter.
▶ Fill out the change confirmation form in chapter 90.05 of the operating instructions.

1.2 Update to the operating instructions

Updates to the operating instructions, which you receive in the circular as Customer information, must be filed in the operating instructions in chapter 90.05.

Fig.113870: Customer information decal

When you receive an update to the operating instructions:

▶ Attach the decals **1**, which are enclosed in the customer information to the footer of the respective chapter. See the following example.

Note

Example: Update to the operating instructions!

If there is an update that concerns the operating instructions, chapter 2.04:

▶ Attach the decal **1** in the footer of chapter 2.04.

▶ File the update in chapter 90.05 of the operating instructions.
▶ Fill out the update confirmation form in chapter 90.05 of the operating instructions.

LWE/ab Muli 010/24201-02-02/en

copyright © Liebherr-Werk Ehingen GmbH 2016

Empty page!

copyright © Liebherr-Werk Ehingen GmbH 2016

90.05 Update confirmation

1	Change confirmation form	3
2	Update confirmation	3
3	Customer information	4

LWE/ab Muli 010/24201-02-02/en

copyright © Liebherr-Werk Ehingen GmbH 2016

LWE/ab Muli 010/24201-02-02/en

Fig.195219

copyright © Liebherr-Werk Ehingen GmbH 2016

1 Change confirmation form

Chapter	Change	Completed	
		on	by

2 Update confirmation

Chapter	Update	Completed	
		on	by

LWE/ab Muli 010/24201-02-02/en

copyright © Liebherr-Werk Ehingen GmbH 2016

3 Customer information

LWE/ab Muli 010/24201-02-02/en

copyright © Liebherr-Werk Ehingen GmbH 2016

Index

3

3-piece folding jib, see illustration 3 **5.02 - 5**
3-point support **2.04.10 - 9**

4

4-piece folding jib, see illustration 4 **5.02 - 5**

7

7725039 – Warning of high voltage **2.05 - 3**
772564008 – Swing range **2.05 - 3**
772580408 – Limitation of maximum travel speed **2.05 - 4**

9

9412158 – Read operating instructions **2.05 - 5**
97001802 – Falling platform **2.05 - 30**
97003109 – Access of step ladder **2.05 - 13**
97003110 – Fold the step ladder in and out **2.05 - 14**
97003112 – Maximum suspended load **2.05 - 19**
97004046 – Safety harness, maximum two persons **2.05 - 6**
97006167 – Identification of support base **2.05 - 14**, **2.05 - 14**
97008514 – Warning of head injuries **2.05 - 15**
97009799 – Data logger **2.05 - 15**
97011336 - Transport weights of the components **2.05 - 30**
97011689 – Warning of crushing danger **2.05 - 16**
97011690 – Overload of cab is prohibited **2.05 - 17**
97012095 – Maximum load **2.05 - 16**
97012737 – Danger of accident **2.05 - 18**
97012949 – Maximum load **2.05 - 16**
97016304 – Notice sign for refueling **2.05 - 17**
97016392 – Crushing danger for feet **2.05 - 17**
97016911 – Risk of collision **2.05 - 25**
97017585 – Falling telescopic boom during disassembly / assembly **2.05 - 6**
97018351 – Falling telescopic boom during transport! **2.05 - 7**
97018564 – Falling telescopic boom during transport! **2.05 - 7**
97023034 – Disassembly **2.05 - 18**
97027147 – Overloading of combi box is prohibited **2.05 - 7**
97036732 – Access via 3-point support **2.05 - 18**
97036733 – Fastening point **2.05 - 8**
97036734 – Rigging point **2.05 - 28**
97036735 – Fastening point for lattice section **2.05 - 10**
97036736 – Fastening point for lattice sections **2.05 - 10**
97036917 – Maximum suspended load **2.05 - 19**
97037383 – Notice sign for urea **2.05 - 20**
97037625 – Suspended load Fastening points / rigging points **2.05 - 10**
97037871 – Fastening points for lattice sections **2.05 - 12**
97037952 – Warning of fatal electric shock **2.05 - 20**
97038442 – Fastening point for lattice section **2.05 - 11**
97038452 – Fastening point for lattice sections **2.05 - 11**
97038454 – Fastening point for lattice sections **2.05 - 11**
97039035 – Suspended load Assembly unit **2.05 - 13**
97039753 – Danger of stumbling **2.05 - 25**
97041305 – Warning of overload of components **2.05 - 21**
97042730 – Falling luffing cylinder **2.05 - 20**
97042797 – Warning of overload of components **2.05 - 21**
97047566 – Center of gravity Counterweight **2.05 - 33**, **2.05 - 34**, **2.05 - 34**, **2.05 - 34**, **2.05 - 35**, **2.05 - 35**
97047810 – Pin brackets **2.05 - 21**
97057097 – Fastening point to turn the component **2.05 - 13**
97057524 – Fastening point for assembly of lattice sections **2.05 - 12**
97057767 – Fastening points for lattice sections **2.05 - 12**
97070905 – Removing the auxiliary jib (boom nose) **2.05 - 22**
971494208 – Limitation of maximum travel speed **2.05 - 23**
971539808 – Warning notice for unpinning the auxiliary boom on the pulley head **2.05 - 23**
971539908 – Warning notice for unlocking the auxiliary boom **2.05 - 24**
973974408 - Transport weights of the components **2.05 - 30**
973974608 - Transport weights of the components **2.05 - 30**
976624808 – Fasten the load **2.05 - 32**
977055908 – Fastening point for swingable sliding beam **2.05 - 22**
978673908 – Warning of suspended load **2.05 - 24**
978674008 – Access for unauthorized personnel prohibited **2.05 - 24**
978674108 – Warning of crushing danger **2.05 - 25**
978674308 – Radio remote control **2.05 - 26**
978674408 – Danger of burning hands **2.05 - 26**
978674508 – Warning of rotating parts **2.05 - 26**
978674608 - Crushing danger for hands **2.05 - 27**
978674808 – Personal protective equipment **2.05 - 27**
978674908 – Walking on the area is prohibited **2.05 - 27**
978675008 – Access prohibited **2.05 - 28**
978687408 – Rigging point **2.05 - 28**

LWE/ab Muli 010/24201-02-02/en

copyright © Liebherr-Werk Ehingen GmbH 2016

978867108 – Warning of fatal electric shock **2.05 - 29**
979383308 – Notice sign for oil change **2.05 - 29**
979561108 – Counterweight **2.05 - 29**

A

Abbreviations Rope diameter **8.04 - 7**
Aborting telescoping **4.05 - 47**
Accessible walking and stepping surfaces Crane chassis **2.07 - 13**
Access to lattice sections or booms **2.04 - 13**
Access to the crane **2.07 - 1**
Acoustic / visual warnings outside the crane operator's cab **4.20 - 15**
Acoustic / visual warnings within the crane operator's cab **4.20 - 13**
Acoustic and optical warning devices **4.04 - 11**
Acoustic and optical warning signals **4.02 - 3**
Acoustic warnings on the LICCON monitor **4.02 - 26**
Activating the bypass at assembly and disassembly **5.01 - 18**
Activating the bypass at crawler assembly and crawler disassembly **5.01 - 17**
Actual load **4.02 - 3**
Actual load (current load) / net load **4.02 - 15**
Actuating the hoist limit switch mechanically, illustration 1 **5.12 - 19**
Adapting the consoles to the crane driver **4.03 - 13**
Adding diesel fuel **7.05 - 14**
Adding service fluids **2.07 - 3**
Adding Urea solution **2.07 - 3**, **7.05 - 16**
Additional controls for certain crawler cranes **5.01 - 6**
Additional controls for cranes on tires on the front and supported on the rear **5.01 - 6**
Additional controls for cranes supported on the front and on tires on the rear **5.01 - 6**
Additional controls for cranes with crane support **5.01 - 5**
Additional controls for cranes with derrick boom **5.01 - 6**
Additional controls for cranes with luffing auxiliary boom / accessories **5.01 - 6**
Additional controls for freestanding crane operation (on tires) **5.01 - 6**
Additional emergency operating modes **4.02 - 30**
Additional notes **0.01 - 2**
Additional risks **2.04 - 62**
Adjusting the brightness level of the BTT display **5.31 - 15**
Adjusting the consoles **4.03 - 11**
Adjusting the contrast of the BTT display **5.31 - 15**
Adjusting the crane operator's seat **4.03 - 9**
Adjusting the folding jib angle hydraulically * **5.02 - 73**
Adjusting the heater / ventilation **4.03 - 15**
Adjusting the track width **4.03.50 - 11**
Adjusting the track width from the crane operator's cab **4.03.50 - 11**
Adjusting the track width with the Bluetooth™ Terminal **4.03.50 - 17**
Adjusting the track width with the radio remote control * **4.03.50 - 23**
Adjustment of track width **4.03.50 - 1**, **4.03.50 - 3**
After replacement of components **7.01 - 7**
Air distribution **6.02 - 8**
Air filter system **7.05 - 8**
Air supply **6.02 - 6**
Alarm functions **4.02 - 20**, **4.02 - 56**
Aligning the crane **2.04 - 33**
Aligning the moveable back pulley **4.06 - 7**
Angle adjustment on the fixed lattice jib **5.01 - 27**
Angle display for folding jib **5.02 - 73**
Angle setting 22.5° **5.02 - 51**, **5.02 - 53**
Angle setting 45° **5.02 - 51**, **5.02 - 53**
Angular pulling **4.08 - 11**
Antifall guards on the crane **2.06 - 1**
Applying the parking brake **4.05 - 31**
Areas **7.05.50 - 14**, **8.04 - 4**
Armrests **4.03 - 13**
Ascent and descent on the crane chassis **2.07 - 5**
Assembling / disassembling the wedge lock **4.06 - 21**
Assembling / disassembly of hydraulic lines **5.01 - 16**
Assembling the crawler carrier **3.01 - 3**, **3.01 - 45**, **3.03 - 13**
Assembling the cross carrier with installed extension cylinder **3.01.20 - 15**
Assembling the fixed lattice jib on the TF-adapter **5.01 - 24**
Assembling the folding jib **5.02 - 13**
Assembling the hose couplings in operating position (illustration 1) **5.02 - 57**
Assembling the hose couplings in resting position (illustration 2) **5.02 - 57**
Assembling the hydraulic folding jib * **5.31 - 49**
Assembling the load hook * **4.06 - 16**
Assembling the separately transported auxiliary boom **5.12 - 15**
Assembling the separately transported folding jib for crane operating position **5.02 - 39**
Assembling the separately transported folding jib on the crane **5.02 - 39**
Assembling Winch 2 * **5.09 - 5**, **5.09 - 9**
Assembly **5.10 - 5**, **5.25 - 5**
Assembly / disassembly **5.01 - 12**
Assembly / disassembly of booms **5.01 - 19**
Assembly / disassembly of boom systems for supporting on ascending terrain (assembly / disassembly schematic) **5.01 - 51**
Assembly / disassembly of boom systems for supporting on descending terrain (assembly / disassembly schematic) **5.01 - 54**
Assembly / disassembly of electrical lines **5.01 - 15**
Assembly / disassembly of lattice sections for lattice mast cranes **5.01 - 41**
Assembly / disassembly of lattice sections on telescopic cranes with guyed auxiliary boom with an auxiliary crane **5.01 - 29**

LWE/ab Muli 010/24201-02-02/en

copyright © Liebherr-Werk Ehingen GmbH 2016

Assembly / disassembly of lattice sections on telescopic cranes with self-supporting auxiliary boom, without an auxiliary crane **5.01 - 37**
Assembly / disassembly of lattice sections on telescopic cranes with self-supporting auxiliary boom with an auxiliary crane **5.01 - 33**
Assembly / disassembly procedures **4.20 - 4**
Assembly Cross carrier with installed extension cylinder **3.01.20 - 14**
Assembly drawings **5.01 - 14**
Assembly of boom systems on ascending terrain **5.01 - 51**
Assembly of boom systems on descending terrain **5.01 - 54**
Assembly of counterweight **4.07 - 11**
Assembly of cross carrier with bracket **3.01.20 - 8**
Assembly of end section **5.02 - 29**
Assembly of lattice sections **5.01 - 41**
Assembly of lattice sections for guyed auxiliary boom with an auxiliary crane **5.01 - 29**
Assembly of lattice sections on self-supporting auxiliary booms, without auxiliary crane **5.01 - 37**
Assembly of lattice sections on self-supporting auxiliary boom with an auxiliary crane **5.01 - 33**
Assembly of reducer section, part 1 **5.02 - 25**
Assembly of reducer section, part 2 **5.02 - 29**
Assembly of the 3-piece folding jib **5.02 - 31**
Assembly of the 4-piece folding jib **5.02 - 35**
Assembly of the auxiliary boom carried on the crane **5.12 - 9**
Assembly of the double folding jib carried on the crane **5.02 - 25**
Assembly of the single folding jib carried on the crane **5.02 - 19**
Assembly of winch 2 with auxiliary crane **5.09 - 9**
Assembly procedure **5.25 - 5**
Assembly procedure, part 1 **5.02 - 19**
Assembly procedure, part 2 **5.02 - 23**
Assembly winch 2 **5.09 - 5**
Assignment of the crane superstructure to the travel direction **4.10 - 27**
Attaching / removing the hoist limit switch weight **4.06 - 19**
Attaching and removing the load hook * **4.06 - 16**
Attaching the hoist limit switch weight **4.06 - 19**
Automatic operation **6.02 - 4**
Automatic support * **5.31 - 45**
Automatic telescoping **4.05 - 41**
Auxiliary block * on telescopic boom **4.06 - 23**
Auxiliary boom **1.01 - 7**, **4.12 - 3**, **5.12 - 1**
Auxiliary boom (THK) * **1.01 - 7**
Auxiliary counterweight **1.02 - 5**
Auxiliary equipment **1.02 - 5**
Auxiliary guying **5.01 - 9**
Auxiliary heater * **6.02 - 12**, **7.05 - 33**
Auxiliary heater * icons **6.02 - 14**
Auxiliary heater * with ignition off **6.02 - 16**
Auxiliary jib **1.02 - 5**, **4.12 - 4**
Auxiliary jib on fixed lattice jib **4.12 - 18**
Auxiliary jib on luffing lattice jib **4.12 - 21**
Auxiliary jib on telescopic boom **4.12 - 13**

B

Ballasting / turntable lock **5.31 - 51**
Ballasting the counterweight plates **4.07 - 17**
Ballast plate **1.03 - 8**
Ball valve positions during emergency operation **6.05 - 3**
Bar diagram Utilization (dynamic utilization bar display) **4.02 - 16**
Basic principles and procedure **8.01 - 4**
Basket formation **7.05.50 - 11**, **8.04 - 19**
Batteries **7.01 - 10**, **7.05 - 44**
Before starting to work **2.04 - 63**
Bleeding by separate actuation of the grease pump **7.04 - 25**
Bleeding by simulating crawler operation **7.04 - 23**
Bleeding repaired lubrication lines **7.04 - 25**
Bleeding the central lubrication system **7.04 - 23**, **7.05 - 23**
Bleeding the fuel line **6.02 - 21**
Bleeding the fuel preliminary filter **7.05 - 9**
Bleeding the heater **6.02 - 19**
Block position of relapse cylinders when setting down the load **5.01 - 7**
Bluetooth Terminal (BTT) **5.31 - 1**
Boom limitations **4.02 - 21**
Boom nose on fixed lattice jib **4.12 - 17**
Boom nose on lattice jib **4.12 - 4**
Boom nose on luffing lattice jib **4.12 - 20**
Boom nose on telescopic boom **4.12 - 3**, **4.12 - 11**
Boom nose - telescopic boom **5.10 - 1**
Breaking away fixed loads **4.08 - 13**
Broken strands **7.05.50 - 8**
Broken wire **7.05.50 - 8**
Broken wire nests **8.04 - 13**
Broken wires in rope sections, which are not spooled up on the winch **8.04 - 13**
Broken wires in the strand valleys **8.04 - 12**
Broken wires on rope end connections **8.04 - 13**
Buckles **7.05.50 - 13**, **8.04 - 23**
Bulbs and fuses **7.05 - 44**
Bypass at assembly / disassembly **5.01 - 17**
Bypass at assembly / disassembly Crawler **5.01 - 16**
Bypass at assembly and disassembly **5.01 - 18**
Bypassing the hoist top shut off **4.20 - 45**, **5.01 - 11**
Bypassing the LICCON overload protection **5.01 - 10**
Bypassing the overload protection **5.01 - 9**
Bypassing the PAT overload protection **5.01 - 11**
Bypassing the radio connection **5.31 - 67**
Bypassing the track width monitoring **4.02 - 74**
Bypass of hoist limit switch **4.02 - 30**
Bypass of overload protection **4.04 - 5**
Bypass of overload protection: Emergency situation (according to EN 13000:2010) **4.04 - 6**
Bypass of overload protection: Failure of overload protection (according to EN 13000:2010) **4.04 - 5**

copyright © Liebherr-Werk Ehingen GmbH 2016

Bypass of overload protection: Failure of the overload protection **4.04 - 5**

C

Calculation example **4.10 - 6**
Calculation of required length of transfers in uphill / downhill inclines **4.10 - 5**
Calling up / closing the system screen **5.31 - 15**
Calling up manual telescoping **4.05 - 49**
Calling up the individual control displays **4.03 - 34**
Calling up the monitoring functions **4.02 - 32**, **4.03 - 33**
Call up the Working range limitation program **4.02 - 63**
Carrying out an intermediate lubrication **7.05 - 22**
Carrying out erection procedures **4.20 - 51**
Carrying out take down procedures **4.20 - 53**
Carrying out the assembly procedures **4.20 - 55**
Carrying out the erection / take down procedures **4.20 - 49**
Catch bar **4.04 - 18**
CE marking **0.01 - 5**
Central ballast **1.02 - 3**, **3.03 - 1**
Central ballast 10t **1.03 - 8**
Central ballast combinations **3.03 - 3**
Central ballast during operation **3.03 - 3**
Central lubrication system **7.05 - 20**
Chain bushing **7.04 - 16**
Chain link **7.04 - 15**
Chain pitch **7.04 - 16**
Change confirmation form **90.05 - 3**
Change to the operating instructions **90.01 - 3**
Changing angle with folding jib supported **5.02 - 53**
Changing oil on the planetary gear **7.04 - 7**
Changing over mechanical folding jib from 0° to 22.5° or 45° **5.02 - 45**
Changing over mechanical folding jib from 22.5° or 45° to 0° **5.02 - 75**
Changing the angle with the hoist rope **5.02 - 51**, **5.02 - 79**
Changing the folding jib by supporting it **5.02 - 53**, **5.02 - 81**
Changing the folding jib with the hoist rope **5.02 - 47**, **5.02 - 75**
Charging batteries with the Liebherr charger * **7.05 - 47**
Charging the batteries externally **7.05 - 48**
Charging the battery while installed **7.05 - 47**
Charging the battery while removed **7.05 - 48**
Charging the battery with an external charger **7.05 - 47**
Chart for determining the theoretically remaining service life **8.03 - 11**
Check for damage and cracks **8.01 - 86**
Check for wear and distortion **7.05.50 - 14**
Checking and accepting the new set up configuration and hoist rope reeving **4.03 - 39**
Checking and replacing the return filter **7.05 - 41**
Checking components on the crane superstructure **2.07 - 3**
Checking for broken strands **8.04 - 8**
Checking for corrosion **7.05.50 - 15**, **8.04 - 16**
Checking for flattenings **7.05.50 - 16**
Checking for leaks **7.04 - 5**
Checking for mechanical damage **7.05.50 - 6**
Checking for solid foreign substances **8.03 - 4**
Checking load hooks for corrosion and wear **8.05 - 5**
Checking of rope diameter **8.04 - 13**
Checking pretension pressure for the diaphragm reservoir **7.05 - 42**
Checking the batteries **7.05 - 46**
Checking the bearings for easy movement **7.05.50 - 7**, **8.01 - 87**
Checking the central ballast blocks **3.03 - 6**
Checking the central lubrication system **4.03 - 6**
Checking the change over pulleys of the rope feed mechanism **8.01 - 78**
Checking the connection type **5.31 - 15**
Checking the control rope for distortions **7.05.50 - 16**
Checking the coolant level **4.03 - 5**, **7.05 - 6**
Checking the coolant level in the expansion tank **2.07 - 3**
Checking the crane condition **4.03 - 3**
Checking the depth of the lead-in tracks **8.01 - 87**
Checking the end of the service life **8.06 - 3**
Checking the engine oil level **2.07 - 3**, **4.03 - 5**
Checking the fuel preliminary filter **2.07 - 3**
Checking the fuel reserve **4.03 - 4**
Checking the function **7.05 - 22**
Checking the gas pressure and oil fill before operation **8.01 - 85**
Checking the groove diameter **8.01 - 86**, **8.03 - 3**
Checking the horn **4.03 - 25**
Checking the instruments after starting the engine **4.03 - 32**
Checking the instruments on LICCON monitor **4.03 - 32**
Checking the load hook for distortion **8.05 - 4**
Checking the load hook for surface cracks **8.05 - 4**
Checking the load hook for wear **8.05 - 4**
Checking the lubrication **7.05.50 - 14**
Checking the monitoring functions **4.03 - 3**
Checking the oil level **7.04 - 5**, **7.05 - 38**, **8.03 - 3**
Checking the oil level and filter on the hydraulic oil tank **2.07 - 3**
Checking the oil level and filter on the hydraulic tank **4.03 - 6**
Checking the oil level on the Diesel engine with the dipstick **4.03 - 5**
Checking the oil level on the LICCON monitor **7.05 - 3**
Checking the oil level with the dipstick **7.05 - 4**
Checking the position **7.05.50 - 15**
Checking the retaining elements **5.01 - 3**
Checking the rigging points **3.80 - 5**
Checking the rope drive for spooling problems **7.05.50 - 15**

LWE/ab Muli 010/24201-02-02/en

copyright © Liebherr-Werk Ehingen GmbH 2016

Checking the ropes **5.01 - 3**, **7.05.50 - 13**
Checking the ropes of the rope feed mechanism **8.01 - 78**
Checking the safety measures **2.04 - 34**
Checking the tightening torque **8.01 - 88**
Checking the urea reserve **4.03 - 4**
Checking the vent filter / breather filter **7.05 - 40**
Checking the window cleaning fluid **4.03 - 6**
Check list for the inspection of ladders and steps **8.17 - 5**
Check of rope pretension on telescopic booms, illustration 1 **8.01 - 82**
Checks before starting to work with the crane **4.08 - 3**
Checks before start up **4.03 - 3**
Check the oil level **7.05 - 19**, **7.05 - 27**, **7.05 - 31**, **7.05 - 33**
Check the tilt play **7.05 - 26**
Check visually **8.01 - 87**
Cleaning **7.01 - 9**
Climate control **6.02 - 4**
Climate control system * **6.02 - 11**
Climate control systems **6.02 - 3**
Closing the end section **5.01 - 21**
Closing the fixed lattice jib **5.01 - 26**
Closing the settings window **4.02 - 71**
Closing the windows **2.04 - 18**
Code calibration **5.31 - 7**
Combined degree of severity **8.04 - 24**
Comparison **4.02 - 3**
Completing emergency control **6.05 - 5**
Component description **3.01.20 - 3**
Component overview **5.12 - 3**
Components **7.04 - 15**
Components on the crane **2.07 - 3**
Compressed air system * **7.05 - 43**
Connecting the BTB and BTT **5.31 - 7**
Connecting the supply lines **5.09 - 7**, **5.09 - 9**
Control **1.02 - 4**
Control elements **4.01 - 9**
Control measures **5.01 - 4**
Control of crane movement „Telescoping“ **4.05 - 35**
Control release **4.04 - 17**
Control Working floodlight * **5.31 - 59**
Conversion chart **0.01 - 7**
Conversion chart for wind force **2.04 - 41**
Coolant system **7.06 - 3**
Cooling system **7.05 - 6**
Corkscrew-like distortion **7.05.50 - 11**, **8.04 - 18**
Corrosion **7.05.50 - 9**
Counterrotation to the left (counterclockwise direction) **4.10 - 37**
Counterrotation to the right (clockwise direction) **4.10 - 37**
Counterweight **1.02 - 5**, **4.07 - 1**
Counterweight and / or ballast **2.04 - 57**
Counterweight combinations **4.07 - 5**
Crane **2.04 - 62**
Crane cab with incline adjustment **2.04 - 16**
Crane cab with retractable / extendable step **2.04 - 15**
Crane components **1.01 - 3**
Crane documentation **0.01 - 2**
Crane drive **1.02 - 4**
Crane geometry and load information **4.02 - 14**
Crane incline **4.02 - 44**
Crane movement - Telescoping **4.08 - 4**
Crane operation **2.04 - 57**, **4.05 - 1**, **4.08 - 13**
Crane operation in case of thunderstorms **2.04 - 38**
Crane operation with a load **2.04 - 56**
Crane operation with auxiliary block * **4.06 - 23**
Crane operator's cab **1.02 - 4**
Crane operator responsibilities **2.04 - 20**
Crane ropes **7.05.50 - 7**
Crane speeds **1.03 - 4**
Crane start up and taking the crane out of service **4.03 - 1**
Crane superstructure **1.01 - 5**, **1.02 - 3**, **4.05 - 3**
Cranes with cam limit switch **5.01 - 4**
Cranes with winch turn sensor **5.01 - 4**
Crane utilization lattice mast cranes **2.08 - 7**
Crane utilization telescopic cranes **2.08 - 7**
Crawler, complete, 2-grouser pads 1000mm **1.03 - 6**
Crawler carrier assembly **3.01 - 1**
Crawler carrier on incorrect position **4.02 - 72**, **4.02 - 73**
Crawler center section **1.03 - 5**, **1.03 - 6**
Crawler crane **1.03 - 4**
Crawler crane in crawler operation **4.10 - 20**
Crawler track **1.01 - 3**
Crawler travel gear **1.02 - 3**, **4.02 - 47**, **7.04 - 9**
Crawler travel gear menu **5.31 - 19**
Current checklist **8.04 - 27**
Customer information **90.05 - 4**

D

Damage on rope **7.05.50 - 8**
Danger of crushing **4.08 - 13**
Danger of falling! **4.08 - 14**
Dangerous conditions without shut off **5.01 - 7**
Danger zone of crane **2.04 - 3**
Data recording device **0.01 - 1**
Deactivating the bypass at crawler assembly and crawler disassembly **5.01 - 17**
Defect at track width monitoring **4.02 - 72**, **4.02 - 74**
Definition of directional data for crawler cranes **0.01 - 7**
Definition of directional data for mobile cranes **0.01 - 7**
Definition of „Checking“ **7.01 - 3**
Defrosting the window **6.02 - 7**
Degree of severity **8.04 - 7**
Descending from lattice sections or booms **2.04 - 13**
Description of acoustic / visual warnings **4.20 - 11**
Description of function **7.05 - 21**
Description of intervals and tasks **7.01 - 3**
Destined use **0.01 - 5**, **2.04 - 59**, **2.04 - 60**

copyright © Liebherr-Werk Ehingen GmbH 2016

Detaching / attaching the hook block on the fastening point **5.31 - 57**
Detaching the hoist rope **4.06 - 15**, **4.06 - 18**
Determining the effective operating hours Ti **8.03 - 8**
Determining the exact charge condition of the rechargeable battery **5.31 - 15**
Determining the number of broken wires **8.04 - 9**
Determining the operating conditions (load spectrum) **8.03 - 6**
Determining the used proportion of the theoretical service life **8.03 - 8**
Diagnostics and problem remedy **7.05 - 23**
Did an error message occur? **5.31 - 65**
Diesel engine **7.05 - 3**, **7.06 - 3**
Diesel particle filter * **7.05 - 17**
Dimensions **1.03 - 3**
Disassembling the central ballast **3.01 - 67**, **3.03 - 15**
Disassembling the crawler carriers **3.01 - 53**, **3.01 - 65**
Disassembling the cross carrier with installed extension cylinder **3.01.20 - 12**
Disassembly **5.10 - 11**, **5.25 - 9**
Disassembly Cross carrier with installed extension cylinder **3.01.20 - 11**
Disassembly of boom systems on ascending terrain **5.01 - 52**
Disassembly of boom systems on descending terrain **5.01 - 55**
Disassembly of counterweight **4.07 - 23**
Disassembly of cross carrier with bracket **3.01.20 - 5**
Disassembly of lattice sections **5.01 - 43**
Disassembly of lattice sections for guyed auxiliary boom with an auxiliary crane **5.01 - 31**
Disassembly of lattice sections on self-supporting auxiliary booms, without auxiliary crane **5.01 - 39**
Disassembly of lattice sections on self-supporting auxiliary boom with an auxiliary crane **5.01 - 35**
Disassembly of reducer section, part 1 **5.02 - 97**
Disassembly of reducer section, part 2 **5.02 - 99**
Disassembly of separately transported auxiliary boom **5.12 - 35**
Disassembly of the 3-piece folding jib **5.02 - 101**
Disassembly of the 4-piece folding jib **5.02 - 105**
Disassembly of the auxiliary boom **5.12 - 29**
Disassembly of the auxiliary boom carried on the crane **5.12 - 31**
Disassembly of the separately transported folding jib **5.02 - 109**
Disassembly of winch 2 with auxiliary crane **5.09 - 17**
Disassembly procedure **5.25 - 11**
Disassembly winch 2 **5.09 - 11**
Disconnecting the connections of the central lubrication system to the crawler carrier **3.01 - 63**
Disconnecting the connections to the crawler carrier **3.01 - 63**
Disconnecting the electrical connections to the crawler carrier **3.01 - 63**
Disconnecting the hydraulic connections to the crawler carrier **3.01 - 63**
Disengage / engage the coupling control on the pump distributor gear **4.03 - 29**
Disengage the coupling control **4.03 - 29**
Display / operating element BTT **5.31 - 3**
Display areas in the Set up program **4.02 - 8**
Display areas in the Telescoping program **4.02 - 55**
Display for surface pressure and incline in the LICCON monitor **4.10 - 9**
Display for the center of gravity in the LICCON monitor **4.10 - 8**
Display for the incline in the LICCON monitor **4.10 - 10**
Displaying the hydraulic oil temperature **4.03 - 25**
Displaying the settings windows **4.02 - 70**, **4.02 - 78**
Displays ECO mode in crane operating screen **4.02 - 77**
Displays ECO mode in settings window **4.02 - 77**
Displays for center of gravity, surface pressure and incline in the LICCON monitor **4.10 - 7**
Displays on control element **7.05 - 21**
Disposal **7.01 - 10**
Disposing of the oil **7.05 - 33**
Distortions and mechanical damage **8.04 - 7**
Distribution of surface pressure **4.10 - 13**
Documentation Fall arrest systems and Height rescue system **2.04 - 12**
Documentation of inspection results **8.04 - 5**
Documentation of rope condition **7.05.50 - 14**
Documenting the completed inspection **8.03 - 4**
Documenting the inspection **8.06 - 5**
Double folding jib, see illustration 10 **5.02 - 11**
Double folding jib, see illustration 2 **5.02 - 3**
Double folding jib, see illustration 7 **5.02 - 9**
Double folding jib, see illustration 8 **5.02 - 9**
Draining the fuel preliminary filter **7.05 - 13**
Driver's cab and crane cab **7.01 - 10**
Driving forward **4.10 - 33**, **4.10 - 39**
Driving from the crane operator's cab **4.10 - 1**
Driving in curves forward to the left **4.10 - 35**, **4.10 - 41**
Driving in curves forward to the right **4.10 - 35**, **4.10 - 41**
Driving in curves reverse to the left **4.10 - 35**, **4.10 - 41**
Driving in curves reverse to the right **4.10 - 35**, **4.10 - 43**
Driving in reverse **4.10 - 33**, **4.10 - 39**
Driving the crane: Load chart available **4.10 - 15**
Driving the crane: No load chart is available **4.10 - 17**
Driving the crawler crane in normal travel **4.10 - 33**
Driving the crawler crane in parallel travel **4.10 - 39**
Driving the transport vehicle out **3.01 - 43**
Driving two-engine cranes in low temperature application **2.08 - 6**
Driving uphill / downhill **4.10 - 18**
Driving uphill / downhill by changing the angle of the boom system **4.10 - 18**
Driving with load on the hook **4.10 - 16**
Driving without load on the hook **4.10 - 17**

LWE/ab Muli 010/24201-02-02/en

copyright © Liebherr-Werk Ehingen GmbH 2016

During crane operation **2.04 - 63**

E

ECO-Mode **4.02 - 76**
Effects of heat, arcs **7.05.50 - 13**, **8.04 - 24**
Electrical connections **5.02 - 63**, **5.12 - 19**
Electrical connections on auxiliary boom **5.12 - 19**
Electrical system **1.02 - 5**, **7.05 - 44**
Emergency control **6.05 - 3**, **6.05 - 5**
Emergency exist crane cab **2.04 - 5**
Emergency exit **2.04 - 4**
Emergency exit - driver's cab **2.04 - 4**
Emergency exit through front window **2.04 - 5**
Emergency exit through the roof window **2.04 - 5**
Emergency exit with EMERGENCY hammer * **2.04 - 6**
Emergency operation LICCON overload protection (EN 13000:2010 active) **4.02 - 29**
Emergency operation LICCON overload protection (EN 13000:2010 not active) **4.02 - 30**
Emergency operation unit **6.05 - 5**
Emergency operation with emergency operation unit **6.05 - 5**
Emergency situations **4.20 - 5**
Emergency stop (quick stop) **2.04 - 49**
EMERGENCY STOP switch / EMERGENCY OFF switch **4.04 - 17**
Emergency take-down **6.05 - 1**
Endangering air traffic **2.04 - 3**
Ending crane operation **2.04 - 66**
End operation, no longer follow my instructions **2.04 - 49**
Engaging the coupling control **4.03 - 31**
Engaging the rapid gear **4.05 - 5**
Engine **1.02 - 3**
Engine regulation **4.10 - 23**
Engine speed **4.05 - 5**
Engine type D 944 A7-03 without exhaust aftertreatment system **1.02 - 4**
Engine type D 944 A7-04 with exhaust aftertreatment system SCR **1.02 - 3**
Entering / exiting a swung crane superstructure **2.04 - 16**
Entering / exiting of crane superstructure alignment length axis crane chassis **2.04 - 16**
Entering the maximum permissible surface pressure **4.10 - 10**
Equipment and spare parts **0.01 - 6**
Erection **5.02 - 71**, **5.12 - 25**, **5.25 - 7**
Erection / take down **5.01 - 57**
Erection / take down for crawler cranes **5.01 - 58**
Erection / take down for mobile cranes **5.01 - 57**
Erection procedure **5.02 - 71**, **5.12 - 25**
Error messages **4.02 - 3**
Establishing the connections of the central lubrication system to the crawler carrier **3.01 - 49**
Establishing the connection to the crawler carrier **3.01 - 49**
Establishing the electrical / hydraulic connections **5.25 - 7**
Establishing the electrical connection **5.25 - 7**
Establishing the electrical connections on the double folding jib **5.02 - 65**
Establishing the electrical connections on the single folding jib **5.02 - 63**
Establishing the electrical connections to the crawler carrier **3.01 - 49**
Establishing the electrical connection to the hoist limit switch **5.02 - 63**, **5.02 - 65**
Establishing the electrical connection to the LED continuous light * or flashing beacon * **5.02 - 63**, **5.02 - 65**, **5.12 - 19**, **5.12 - 21**
Establishing the electrical connection to the wind speed sensor * **5.02 - 63**, **5.02 - 65**, **5.12 - 19**, **5.12 - 21**
Establishing the hydraulic connection **5.25 - 7**
Establishing the hydraulic connections **5.02 - 57**
Establishing the hydraulic connections to the crawler carrier **3.01 - 49**
Evaluating oil color **8.03 - 3**
Even reduction of rope diameter **8.04 - 13**
Example **8.03 - 9**
Example for test points **8.01 - 7**
Examples for the distribution of surface pressure **4.10 - 13**
Exceeding the shut off limits of the LICCON overload protection **4.02 - 29**
Exhaust system **7.01 - 9**, **7.05 - 17**
Extending / retracting the crawler carriers **4.01 - 37**, **4.03.50 - 13**, **4.03.50 - 19**, **4.03.50 - 25**, **5.31 - 23**
Extending the boom **2.04 - 55**
Extending the cross carriers **3.01 - 9**, **3.01 - 10**, **3.01 - 14**, **3.01 - 18**
Extending the cross carriers from the crane operator's cab **3.01 - 13**, **3.01 - 91**
Extending the cross carriers with the radio remote control * **3.01 - 17**
Extending the cross carrier with the BlueTooth™Terminal **3.01 - 9**
Extending the piston rod from the crane operator's cab **3.01 - 27**, **3.01 - 75**
Extending the piston rod with the BlueTooth™Terminal **3.01 - 25**, **3.01 - 71**
Extending the piston rod with the radio remote control * **3.01 - 29**, **3.01 - 77**
Extend the step **4.03 - 15**
External corrosion **8.04 - 16**

F

Failure of components **4.20 - 5**
Failure of sensor / limit switch **4.02 - 22**
Failure of the overload protection **4.04 - 5**
Fan stage **6.02 - 10**
Fastening counterweight plates **4.07 - 7**
Fastening device **2.04 - 62**

copyright © Liebherr-Werk Ehingen GmbH 2016

Fastening point **5.10 - 3**, **5.12 - 3**
Fastening points **3.01.20 - 4**
Fastening points winch 2 **5.09 - 3**
Fastening points „folding jib complete“ **5.02 - 7**
Fastening points „separated folding jib“ **5.02 - 11**
Fastening positions for assembly / disassembly of the lattice jib **5.01 - 20**
Fastening the central ballast blocks **3.03 - 6**, **3.03 - 16**
Fastening the counterweight plate **4.07 - 7**
Fastening the counterweight plates and receptacle plate **4.07 - 7**
Fastening the counterweight with cross beam **4.07 - 9**
Fastening the hoist rope **4.06 - 17**
Fastening the hook block **5.31 - 55**
Fastening the load **4.08 - 7**
Fastening the load hook * **4.06 - 16**
Fast mode (Rapid gear) **4.02 - 31**, **4.05 - 5**
Filling the grease container **7.04 - 21**, **7.05 - 22**
Filling the lubrication lines **7.05 - 23**
Fill quantities **7.06 - 3**
Fill quantities, lubrication schedule **7.06 - 1**
First aid measures after rescue **2.04 - 14**
First inspection (first year) **8.03 - 10**
Fixed lattice jib **4.12 - 6**, **4.12 - 15**
Flattening **7.05.50 - 10**
Flattenings **8.04 - 24**
Flying assembly / disassembly of lattice sections **5.01 - 45**
Flying assembly of lattice sections **5.01 - 45**
Flying disassembly of lattice sections **5.01 - 47**
Folding jib **1.02 - 5**, **4.12 - 5**, **4.12 - 14**
Folding jib (TK) * **1.01 - 7**
Folding jib extension, see illustration 11 **5.02 - 11**
Folding jib - TK **5.02 - 1**
Folding jib variations **5.02 - 3**
Folding jib with extension (TVK) * **1.01 - 7**
Folding jib with hydraulic * angle adjustment **5.02 - 73**
Folding the boom nose into operating position, illustrations 3 and 4 **5.10 - 7**
Folding the boom nose into transport position, illustrations 5 and 6 **5.10 - 11**
Folding the end section into operating position **5.12 - 13**
Folding the end section into transport position **5.12 - 31**
For cranes with pneumatic boom locking system **8.01 - 80**
For cranes with telescopic boom system Telematik **8.01 - 80**
Foreword **90.01 - 3**
Foreword to attachment **90.01 - 1**
Frame **1.02 - 3**, **1.02 - 3**
Friction corrosion **8.04 - 18**
Fuel system **7.05 - 9**
Function check **5.02 - 67**, **5.02 - 69**, **5.10 - 9**, **5.12 - 23**
Function description of Telematik **4.05 - 39**
Function key line (crane operation) **4.02 - 52**
Function key line (Set up) **4.02 - 9**
Function key line (telescoping): Automatic operation Telescoping **4.02 - 59**
Function key line (telescoping): Manual telescoping **4.02 - 60**
Function key line (working range limitation) **4.02 - 66**
Function key line (working range limitation) for variation V1 **4.02 - 66**
Function key line (working range limitation) for variation V2 **4.02 - 67**
Function keys in the crawler travel gear menu **5.31 - 21**
Function keys in the support menu **5.31 - 41**
Function keys in the „Test system“ menu **5.31 - 61**
Function keys Menu Control Working floodlight * **5.31 - 58**
Function test **6.02 - 20**

G

General control measures before crane operation **5.01 - 5**
General information line **4.02 - 9**
General notes for the BTT **5.31 - 9**
General notes regarding the acoustic / optical warnings to the crane surrounding area **4.20 - 9**
General safety technical guidelines **2.04 - 1**
Gravity actuated relapse retainer **4.04 - 19**
Grounding **2.04 - 35**
Grounding the crane **2.04 - 35**
Grounding the load **2.04 - 36**
Guiding crane structures, lattice sections or crane components **5.01 - 14**
Guiding the load **4.08 - 13**
Guying the pivot section in flying mode with the derrick boom **5.01 - 49**
Guying the pivot section in flying mode with the SA-frame **5.01 - 47**
Guy rods **5.01 - 8**

H

Handling of hook blocks **5.19 - 5**
Hand signals **2.04 - 48**
Hand signals for guidance **2.04 - 47**
Heated crane components **2.04 - 20**
Heater / engine preheating / Air conditioning system Crane operator’s cab **6.02 - 1**
Height dependent wind speeds according to EN 13000:2010 **2.04 - 42**
Hoist gear **1.02 - 4**, **7.05 - 31**
Hoist gear, hoist rope **2.04 - 57**
Hoist gear(s) **7.05 - 31**
Hoist gear 2 **5.09 - 1**
Hoist gear 2 with rope **1.03 - 9**
Hoist gear brake **7.05 - 33**

LWE/ab Muli 010/24201-02-02/en

copyright © Liebherr-Werk Ehingen GmbH 2016

Hoist limit
switch **4.02 - 23**, **5.02 - 67**, **5.02 - 69**, **5.10 - 9**, **5.12 - 23**
Hoist limit switch „Hoist top“ **4.04 - 11**
Hoist rope guide on telescopic boom **4.06 - 4**
Hoist rope lug * **4.06 - 3**
Hoist rope routing Folding jib / fixed lattice jib **4.06 - 5**
Hoist rope routing for operation with luffing lattice jib **4.06 - 6**
Hoist rope routing with one hoist rope **4.06 - 5**
Hoist rope routing with two hoist ropes **4.06 - 5**
Holding the luffing lattice jib **5.01 - 24**
Hook block overview **5.19 - 5**
Hook blocks **1.03 - 11**, **5.19 - 1**
Hook operation **4.12 - 7**
Hook operation depending on the load **4.12 - 8**
Hook points on the crane superstructure **2.06 - 7**
Hook points on the folding jib, the folding jib extension and the telescope extension **2.06 - 11**
Hook points on the telescopic boom **2.06 - 8**
Hook the hoist rope on the rope lock **4.06 - 14**
Horizontal movements **2.04 - 51**
Hydraulically adjustable folding jib (TNZK) * **1.01 - 7**
Hydraulically adjustable folding jib with extension (TVNZK) * **1.01 - 7**
Hydraulic connections **5.02 - 57**
Hydraulic hose lines **7.04 - 27**, **7.05 - 43**
Hydraulic oil preheating * **4.03 - 25**
Hydraulic safety valves **4.04 - 18**
Hydraulic system **7.05 - 38**, **7.06 - 4**
Hydraulic track width adjustment **1.02 - 3**

I

Icon explanation in assembly function menu **5.31 - 47**
Icon explanation in crawler travel gear menu **5.31 - 19**
Icon explanation in engine operation menu **5.31 - 27**
Icon explanation in support menu **5.31 - 39**
Icon explanation Menu Control Working floodlight * **5.31 - 58**
Icon explanation start screen BTT **5.31 - 11**
Identification of protective equipment **2.04 - 9**
Identification of sliding beam **2.05 - 31**
Identifications on auxiliary weights **2.05.10 - 5**
Identifications on auxiliary weights at delivery **2.05.10 - 6**
Identifications on auxiliary weights for reorder **2.05.10 - 6**
Identifications on single hook or double hook **2.05.10 - 4**
Identifications on the hook block or load hooks **2.05.10 - 3**
Identification Track width retracted **2.05 - 32**
Idler **7.04 - 17**
Importance of inspection **8.04 - 3**
Important check before swinging out the hydraulic folding jibs (TNZK operation) **5.02 - 17**
Important information for BTT **5.31 - 5**
Improper mechanical damage **8.04 - 24**
Inching gear or very slow movement **2.04 - 49**
Increasing the hook block - hook block weight **2.08 - 5**
Indicator lights on the BKE „652“ **4.01 - 45**
Individual control display Battery voltage **4.02 - 38**
Individual control display Charge air temperature **4.02 - 37**
Individual control display Coolant temperature **4.02 - 36**
Individual control display Engine oil level **4.02 - 38**
Individual control display Engine oil pressure **4.02 - 36**
Individual control display Fuel reserve **4.02 - 36**
Individual control display Hydraulic oil level **4.02 - 39**
Individual control display Hydraulic oil temperature **4.02 - 37**
Individual control display Urea reserve **4.02 - 37**
Inspecting and monitoring the load hook **8.05 - 3**
Inspecting ladders **8.17 - 3**
Inspecting the function of the overload protection **8.01 - 88**
Inspecting the gear brakes **8.03 - 4**
Inspecting the hoist and retracting winches **8.03 - 3**
Inspecting the hydraulic hose lines for damage **7.04 - 28**, **8.06 - 4**
Inspecting the hydraulic hose lines for leaks **7.04 - 28**, **8.06 - 5**
Inspecting the roller slewing ring connection **8.01 - 88**
Inspection before operation **2.04 - 60**
Inspection chart for cranes **8.90 - 1**
Inspection chart for recurring inspections of Liebherr cranes **8.90 - 3**
Inspection form for the inspection of ladders and steps **8.17 - 4**
Inspection intervals **8.03 - 3**, **8.05 - 3**, **8.06 - 3**, **8.17 - 3**
Inspection of carrier rollers **8.01 - 87**
Inspection of carrying crane structures, especially steel structures **8.01 - 4**
Inspection of change over pulleys, illustration 2 **8.01 - 90**
Inspection of crane wire ropes **8.04 - 1**
Inspection of extension conditions of sliding beams **8.01 - 88**
Inspection of fastening equipment **8.01 - 85**
Inspection of hydraulic hose lines **8.06 - 1**
Inspection of ladders **8.17 - 1**
Inspection of lattice sections **8.01 - 77**
Inspection of load handling equipment and assembly aids **8.01 - 84**
Inspection of load hooks **8.05 - 1**
Inspection of locking system of telescopic boom **8.01 - 80**
Inspection of membrane accumulator **8.01 - 85**
Inspection of relapse cylinders **8.01 - 85**

copyright © Liebherr-Werk Ehingen GmbH 2016

Inspection of rope pretension on lattice sections, illustration 2 **8.01 - 84**
Inspection of rope pulleys **8.01 - 86**
Inspection of safety ropes and anchor points **8.01 - 82**
Inspection of the auxiliary reeving winch, recovery winch and spare wheel winch **8.03 - 5**
Inspection of the mounting of the load bearing equipment **8.01 - 88**
Inspection of the oil and fuel reservoirs **8.01 - 90**
Inspection of the rope feed mechanism in the telescopic boom **8.01 - 78**
Inspection of the safety controls on the relapse cylinders **8.01 - 86**
Inspection of the tele extension with eccentric, illustration 1 **8.01 - 90**
Inspection of winches **8.03 - 1**
Inspections and maintenance work **6.02 - 20**
Inspection sheet and check list **8.17 - 3**
Installation of the track pads **7.04 - 17**
Installing separately transported folding jib for transport position **5.02 - 41**
Installing the auxiliary boom **5.12 - 5**
Installing the auxiliary weights **5.19 - 9**
Installing the batteries **7.05 - 48**
Installing the boom nose on the telescopic boom **5.10 - 5**
Installing the central ballast **3.01 - 45**, **3.03 - 5**
Installing the central ballast block on the front **3.03 - 13**
Installing the central ballast block on the rear **3.03 - 9**
Installing the chassis platform **2.06 - 13**
Installing the cross carrier **3.01.20 - 9**
Installing the cross carrier on the crawler center section **3.01.20 - 1**
Installing the hoist gear 2 * **4.07 - 15**
Installing the hook device on the ladder **2.06 - 5**
Installing the hose couplings in operating or neutral position **5.02 - 57**
Installing the hydraulic hose drum **5.02 - 61**
Installing the retaining pipes in transport position **2.06 - 6**
Installing the retaining pipes in working position **2.06 - 6**
Installing the single blocks **5.19 - 9**
Installing the steps in ascent and descent position at an asymmetric track of 4.9m (0 % / 100 %) (retracted / wide) **2.07 - 9**
Installing the steps in ascent and descent position at a track of 6.3m (100 %) (wide) **2.07 - 9**
Installing the steps in ascent or descent position at a track of 4.9m (50 %) (reduced) and track of 3.5m (0 %) (retracted) **2.07 - 7**
Installing the steps in transport position **2.07 - 11**
Installing the support plates **3.01 - 23**
Installing the wedge lock **4.06 - 22**
Instructions to resume the crane movement **4.20 - 19**
Insulation (sound insulation) **7.01 - 9**
Intermediate lubrication of crawler carriers **7.04 - 25**
Intermediate section **1.02 - 5**
Internal corrosion **8.04 - 18**
Interrupting crane operation **2.04 - 63**
Interruption of crane operation. **2.08 - 5**
Intervals **7.05.50 - 14**, **8.04 - 3**
Is the radio connection faulty? **5.31 - 66**

J

Job planning **2.03 - 1**

K

Kinking, rope loops (grommets) pulled closed **7.05.50 - 12**
Kinking or rope loops pulled closed **8.04 - 22**

L

Labeling of load lifting equipment **2.05.10 - 1**
Ladder access **2.04.10 - 8**
Ladder inspection **2.04.10 - 7**
Ladders **2.04.10 - 1**, **7.01 - 10**, **7.04 - 28**, **7.05 - 48**
Ladder safeguards **2.04.10 - 8**
Leaning (extension) ladder **2.04.10 - 11**
Leaning (extension) ladder with transition **2.04.10 - 13**
Legal prerequisites **2.04 - 59**
Leveling instrument in the BTT **4.04 - 9**
Leveling instruments **4.04 - 9**
Leveling instruments in the LICCON monitor **4.04 - 9**
LICCON computer system **4.02 - 1**, **4.04 - 3**, **4.05 - 9**
LICCON computer system after engine start **4.03 - 37**
LICCON job planner **2.04 - 31**
LICCON monitor at system start **4.02 - 5**
LICCON overload protection **4.04 - 3**
Liebherr Service **7.01 - 7**
Lifting / lowering **4.05 - 17**
Lifting / lowering a load with even speed **2.04 - 50**
Lifting / lowering on cranes with one winch **4.05 - 17**
Lifting / lowering on cranes with two winches **4.05 - 19**
Lifting / lowering the hydraulic folding jib * **5.31 - 53**
Lifting / lowering winch 1 **4.05 - 19**
Lifting / lowering winch 2 **4.05 - 21**
Lifting a joint load **4.12 - 23**
Lifting a joint load solely with auxiliary boom **4.12 - 23**
Lifting a load with two cranes **2.04 - 45**
Lifting heights **1.03 - 12**
Lifting joint load with two booms **4.12 - 25**
Lifting of personnel **2.04 - 59**
Lifting slowly **2.04 - 50**
Lifting the boom **2.04 - 54**
Lifting the boom and lower the load at the same time **2.04 - 56**
Lifting the counterweight from the central ballast **4.07 - 31**

LWE/ab Muli 010/24201-02-02/en

copyright © Liebherr-Werk Ehingen GmbH 2016

Lifting the load **4.08 - 11**
Lifting with auxiliary winch **2.04 - 54**
Lifting with main winch **2.04 - 54**
Light and / or heavy work **2.04.10 - 9**
Limiting Motordrehzahl im ECO-Mode **4.02 - 79**
Limit sign auxiliary boom / accessory **4.02 - 22**
Limit signs main boom **4.02 - 21**
Limit switch Boom system **4.04 - 18**
Limit switch Luffing accessories **4.04 - 18**
Limit switch Telescopic boom **4.04 - 18**
Limit switch winch spooled out **4.04 - 13**
Lines **7.05 - 44**
LMB emergency operation for crane control „EN 13000:2010 active“ **4.01 - 8**
Load bearing crane structures **2.08 - 7**
Load hook **1.03 - 10**
Loading the crane onto the transport vehicle **3.01 - 69**, **3.03 - 23**
Loading the preassembled lattice jib **5.01 - 27**
Load spectrum class: Heavy L3 **8.03 - 7**
Load spectrum class: Light L1 **8.03 - 6**
Load spectrum class: Medium L2 **8.03 - 7**
Load spectrum class: Very heavy L4 **8.03 - 8**
Load take up with cross bar **4.08 - 9**
Localized increase of rope diameter **7.05.50 - 9**
Localized increases of rope diameter **8.04 - 16**
Localized reduction of rope diameter **8.04 - 15**
Locking the crane superstructure **4.05 - 3**
Locking the engine rpm **4.05 - 5**
Loop formation **7.05.50 - 12**, **8.04 - 21**
Lowering slowly **2.04 - 51**
Lowering the boom **2.04 - 55**
Lowering the boom and lift the load at the same time **2.04 - 56**
Lowering the crane **3.01 - 51**, **3.01 - 69**
Lowering the hoist gear **6.05 - 3**
Lowering the hook block **4.06 - 15**, **5.19 - 3**
Lowering the hook block if slack rope forms **5.19 - 3**
Lowering the load hook **4.06 - 18**
Lowering the load while stationary **2.04 - 51**
Lube cycle **7.05 - 22**
Lubricate the bearings **7.05.50 - 7**
Lubricate the locking pins **7.05.50 - 6**
Lubricating ladders **7.04 - 29**
Lubricating the gear ring and the slewing gear pinion **7.05 - 25**
Lubricating the inner gliding surfaces **7.05.50 - 4**
Lubricating the outer gliding surfaces **7.05.50 - 3**
Lubricating the rope **7.05.50 - 17**
Lubricating the slewing ring connection **7.05 - 24**
Lubrication and service items **2.08 - 7**, **2.08 - 10**
Lubrication schedule **7.06 - 4**
Luffing **4.05 - 11**
Luffing gear **1.02 - 4**
Luffing in with suspended load **4.20 - 35**
Luffing lattice jib **4.12 - 6**, **4.12 - 19**
Luffing the boom down **5.19 - 3**
Luffing the hydraulic folding jib * on cranes with one winch, see illustration 3 **4.05 - 15**
Luffing the hydraulic folding jib * on cranes with two winches, see illustration 4 **4.05 - 15**
Luffing the telescopic boom **4.05 - 11**
Luffing the telescopic boom on cranes with one winch, illustration 1 **4.05 - 11**
Luffing the telescopic boom on cranes with two winches, illustration 2 **4.05 - 13**
Luffing with „hydraulic angle adjustment“ **5.02 - 73**
Luff the telescopic boom down **6.05 - 3**
Luff the telescopic boom up **6.05 - 3**

M

Machine related movements **2.04 - 54**
Main boom length **4.02 - 18**
Maintanance intervals - Crane superstructure **7.03 - 1**
Maintenance and inspection schedule **7.02 - 3**, **7.03 - 3**, **7.03.50 - 3**
Maintenance and service - General **7.01 - 1**
Maintenance Auxiliary heater * **6.02 - 20**
Maintenance guidelines - Crane boom **7.05.50 - 1**
Maintenance guidelines - Crane chassis **7.04 - 1**
Maintenance guidelines - Crane superstructure **7.05 - 1**
Maintenance Heater **6.02 - 19**
Maintenance intervals **7.01 - 3**
Maintenance intervals - Crane boom **7.03.50 - 1**
Maintenance intervals Crawler chassis **7.02 - 1**
Manual operation **6.02 - 5**
Manual rope winches for assembly support of components **5.01 - 8**
Manual support **5.31 - 43**
Manual telescoping **4.05 - 49**
Manual telescoping on cranes with one winch **4.05 - 51**
Manual telescoping on cranes with two winches **4.05 - 57**
Master switch assignment for machines with one winch **4.01 - 15**
Master switch assignment for machines with two winches **4.01 - 21**
Maximum climbing ability **4.10 - 18**
Maximum load **4.02 - 15**
Maximum load according to load chart and reeving **4.02 - 3**
Maximum surface pressure **1.03 - 3**
Maximum values of F-load display reached **4.20 - 57**
Measurement of wind speed **2.04 - 40**
Measures and notices for maintenance **2.08 - 7**, **2.08 - 10**
Measures before crane operation **2.08 - 3**, **2.08 - 9**
Measures for crane operation **2.08 - 5**, **2.08 - 9**
Measures in case of problems **5.31 - 65**
Mechanically actuating the hoist limit switch, illustration X **5.02 - 63**
Menu Assembly functions **5.31 - 47**
Menu Control Working floodlight * **5.31 - 57**
Menu Engine operation **5.31 - 27**

copyright © Liebherr-Werk Ehingen GmbH 2016

Menu Support **5.31 - 37**
Menu Test system **5.31 - 61**
Monitored auxiliary functions **4.02 - 43**
Monitoring functions **4.03 - 32**
Monitoring functions during crane operation **4.02 - 31**
Monitoring functions for engine **5.31 - 31**
Monitoring of surface pressure and center of gravity **4.02 - 40**
Monitoring the winches **8.03 - 5**
Moveable back pulley * **4.06 - 7**
Movement on the crane **2.04 - 4**
Moving / swinging in specified direction **2.04 - 51**
Moving away from me **2.04 - 52**
Moving both track chains **2.04 - 52**
Moving one track chain **2.04 - 53**
Moving the transport vehicle in **3.01 - 69**
Moving toward me **2.04 - 52**

N

Negative longitudinal incline **4.10 - 19**
No load chart is available **4.02 - 29**
Non-accessible surfaces **2.07 - 13**
Non-destined use **0.01 - 5**
Non-rotation resistant ropes and their rope end connections **8.04 - 6**
Note for assembly aid **2.05 - 5**
Notice sign regarding vehicle height **2.05 - 4**
Notice Weight sliding beams **2.05 - 33**

O

Obligations of the crane operator **2.04 - 21**
Occurrence of an advance warning **4.02 - 24**
Occurrence of a shut off in the working range limitation **4.02 - 67**
Oil and lubricant analysis **7.01 - 8**
One hook operation **4.12 - 7**
Opening / closing the front window of the cab **4.03 - 23**
Opening / closing the front window of the crane operator's cab **4.03 - 23**
Opening / closing the roof window **4.03 - 23**
Opening the end section **5.01 - 23**
Operating and control instruments **4.01 - 3**
Operating and control instruments on the crane superstructure **4.01 - 1**
Operating buttons on the BKE for release control „654“ **4.01 - 49**
Operating buttons on the BKE „653“ **4.01 - 46**
Operating console **4.01 - 45**
Operating element Bluetooth™ Terminal **4.07 - 33**
Operating elements **4.01 - 9**
Operating elements, General **4.01 - 5**, **4.01 - 8**
Operating elements at speed reduction of master switches **4.02 - 68**
Operating elements for seat adjustment **4.01 - 3**
Operating elements for special cases at operation of the LICCON overload protection **4.20 - 3**
Operating elements for the crawler operation **4.10 - 23**
Operating elements in ECO-Mode **4.02 - 76**
Operating elements - instrument panel - roof **4.01 - 8**
Operating elements in the Crane operation program **4.02 - 53**
Operating elements in the Set up program **4.02 - 12**
Operating elements LMB emergency operation **4.01 - 7**
Operating elements of the LICCON computer system **4.02 - 5**
Operating elements on control consoles **4.01 - 11**
Operating elements on control platform **4.01 - 3**
Operating elements on the operating and control unit (BKE) **4.01 - 45**
Operating elements pedals **4.01 - 7**
Operating interface **4.02 - 56**
Operating interface in ECO-Mode **4.02 - 77**
Operating interface Working range limitation program **4.02 - 64**
Operating status of crane **4.20 - 6**
Operating the ECO-Mode **4.02 - 78**
Operating the test system **5.31 - 61**
Operating the window washer system **4.03 - 21**
Operating the window wiper / window washer system **4.03 - 19**
Operating the window wipers **4.03 - 19**
Operational transverse pressure **8.04 - 25**
Operation BTT **5.31 - 63**
Operation with two hooks **5.12 - 21**
Optimizing measures for travel route **4.10 - 5**
Optional equipment and functions **0.01 - 7**
Orienting the BTT to the crane **5.31 - 17**
Overflow container **7.05 - 33**
Overload protection **4.02 - 2**
Overview Load chart **4.20 - 19**
Overview of acoustic / optical warnings **4.20 - 9**
Overview of counterweight **4.07 - 3**
Overview of function key assignment **4.02 - 39**
Overview of icons for monitoring functions **4.02 - 32**
Overview of individual control displays **4.02 - 36**

P

Pairing process **5.31 - 7**
Parking brake Slewing gear **4.05 - 29**
Parking the mobile crane **2.04 - 67**
Pedal carrier **4.10 - 23**
Periodic crane inspections **8.01 - 1**
Permissible ground pressures **2.04 - 29**
Permitted ground pressure for crawler cranes **2.04 - 29**
Permitted ground pressure for mobile cranes **2.04 - 30**
Personal protective equipment **2.04 - 7**, **7.05.50 - 7**, **8.04 - 3**
Personnel **7.01 - 4**
Personnel and qualification **2.04 - 61**
Pin connections **5.01 - 14**

LWE/ab Muli 010/24201-02-02/en

copyright © Liebherr-Werk Ehingen GmbH 2016

Pinning / unpinning the cross carriers **4.01 - 37**
Pinning the assembly device with the crawler carrier **3.01 - 45**, **3.01 - 65**
Pinning the ballasting device **4.07 - 21**
Pinning the crawler carrier **3.01 - 47**
Pinning the cross carrier **4.03.50 - 14**, **4.03.50 - 20**, **4.03.50 - 26**
Pinning the cross carriers **3.01 - 11**, **3.01 - 14**, **3.01 - 19**, **3.01 - 89**, **3.01 - 92**, **3.01 - 97**
Pinning the support cylinders **3.01 - 33**, **3.01 - 78**
Pinning the turntable with the Bluetooth™ Terminal **4.07 - 33**
Placing the counterweight as an assembly with the cross beam on the central ballast **4.07 - 15**
Placing the counterweight down with the crane **4.07 - 13**
Placing the counterweight plates on the central ballast **4.07 - 15**, **4.07 - 27**
Placing the hoist / control ropes **5.01 - 3**
Placing the lattice jib into the pulley cart **5.01 - 21**
Placing the receptacle plate on the central ballast **4.07 - 13**
Planning Crane operation **2.03 - 3**
Platform ladder **2.04.10 - 15**
Platforms on the crane chassis **2.06 - 13**
Pneumatic springs for assembly support of components **5.01 - 7**
Positioning the folding jib **5.02 - 51**, **5.02 - 55**
Positioning the support cylinders in operating position **3.01 - 33**
Positioning the support cylinders in transport position **3.01 - 71**
Positive longitudinal incline **4.10 - 19**
Power-Save mode **4.02 - 80**
Power-Save mode and Stand-by mode in the LICCON computer system **4.02 - 80**
Preface **0.01 - 1**
Preheating hydraulic cylinders / hydraulic system on lattice mast cranes **2.08 - 4**
Preheating hydraulic cylinders / hydraulic system on telescopic cranes **2.08 - 4**
Preheating the hydraulic components **4.03 - 26**
Preparatory work **5.02 - 47**, **5.02 - 53**, **5.02 - 71**, **5.02 - 77**, **5.12 - 25**
Preparatory work before swinging in hydraulic folding jibs **5.02 - 87**
Preparing a ladder **2.06 - 5**
Preparing for driving the crane **4.10 - 13**
Preparing the assembly device **3.01 - 45**, **3.01 - 65**
Preparing the crane for emergency operation **6.05 - 5**
Preparing the hook block **4.06 - 14**
Preparing the hook block for crane operation **5.19 - 11**
Preparing the hook block for removal **5.19 - 13**
Preparing the pin pulling device **3.01 - 47**
Preparing the support plates for assembly **3.01 - 23**
Prerequisite for assembly **5.02 - 15**
Prerequisite for disassembly **5.02 - 87**
Prerequisites **2.04 - 61**
Prerequisites for crane equipment and accessories **2.04 - 60**
Prerequisites for driving the crane (crawler operation) **4.10 - 3**
Prerequisites for driving uphill / downhill without changing the angle of the boom system **4.10 - 19**
Prerequisites for lifting of personnel **2.04 - 59**
Prerequisites for operation with crane LTM 1220 **5.02 - 15**, **5.02 - 89**
Prerequisites for operation with crane LTR 1220 **5.02 - 15**, **5.02 - 89**
Prerequisites for operation with lifting cage (cherry picker) **2.04 - 60**
Preselection of slewing speed **4.05 - 23**
Pressure test of relapse cylinders **8.01 - 85**
Pretension pressures of pressure accumulators **2.08 - 7**
Preventing fires **7.01 - 5**
Priority acoustic signal **4.02 - 27**
Problem signals on control element **7.05 - 23**
Problems on central lubricating system **7.05 - 23**
Procedure **4.02 - 70**
Procedure for shut off of crane movements **4.20 - 1**
Procedure for special cases at operation of the LICCON overload protection **4.20 - 31**
Procedure in case of slack rope **5.19 - 3**
Processing the speed reduction **4.02 - 70**
Product description **1.02 - 1**
Programming the timer **6.02 - 17**
Protecting from aggressive environmental conditions **7.01 - 6**
Protecting from burns **7.01 - 5**
Protecting from scalding **7.01 - 6**
Protruding, distorted inlay, braiding **7.05.50 - 12**
Protruding, distorted insert or strand **8.04 - 20**
PSAgA, rescue equipment and tools **2.04 - 61**
Pulley head height **4.02 - 19**
Pump distributor gear **7.05 - 18**

Q

Qualification Inspection personnel **8.04 - 3**
Qualification Maintenance personnel **7.05.50 - 8**
Quick test Crane geometry **4.04 - 3**
Quick test EMERGENCY STOP switch / EMERGENCY OFF switch **4.04 - 17**
Quick test Hoist limit switch **4.04 - 11**
Quick test Leveling instrument **4.04 - 9**
Quick test Limit switch winch **4.04 - 15**
Quick test Overload protection **4.04 - 3**
Quick test Wind speed sensor **4.04 - 13**

R

Radius **4.02 - 17**
Raising the hoist gear **6.05 - 3**

LWE/ab Muli 010/24201-02-02/en

copyright © Liebherr-Werk Ehingen GmbH 2016

Ram work or pulling sheet piles **4.08 - 14**
Receptacle plate **1.03 - 7**
Reducing hoist ropes - rope / strand pull **2.08 - 5**
Reducing the maximum permissible wind speed * **4.02 - 46**
Reduction of rope diameter **7.05.50 - 9**
Reeving in the hoist rope **5.10 - 9**
Reeving in the hoist rope with the assembly winch * **4.06 - 11**
Reeving in the hook block **4.06 - 14**
Reeving out the hoist rope on the telescopic boom head **5.02 - 17**, **5.12 - 7**
Reeving the hoist rope **4.06 - 8**, **5.02 - 43**, **5.02 - 43**, **5.12 - 17**
Reeving the hoist rope with the auxiliary reeving rope **4.06 - 9**
Reeving the hook block in and out **4.06 - 13**
Refueling **2.07 - 3**
Refueling fuel **7.05 - 37**
Refueling fuel * **2.07 - 3**
Release of the button block on the BTT **5.31 - 5**
Release procedure **7.04 - 13**
Releasing the crane operator's cab **7.05 - 36**
Releasing the engine rpm lock **4.05 - 5**
Releasing the parking brake **4.05 - 31**
Releasing the supply lines **5.09 - 11**, **5.09 - 17**, **5.09 - 17**
Releasing the turntable lock **4.07 - 21**, **4.07 - 29**
Relieving the track chain **7.04 - 13**
Removal criteria Overview **8.04 - 7**
Removing broken wires **7.05.50 - 17**
Removing hoist gear 2 * **4.07 - 23**
Removing the auxiliary weights **5.19 - 13**
Removing the batteries **7.05 - 48**
Removing the boom nose on the telescopic boom **5.10 - 15**
Removing the central ballast block on the front **3.03 - 19**
Removing the central ballast block on the rear **3.03 - 23**
Removing the chassis platform **2.06 - 13**
Removing the cross carrier **3.01.20 - 6**
Removing the double folding jib carried on the crane **5.02 - 95**
Removing the end section **5.02 - 95**
Removing the folding jib **5.02 - 85**
Removing the hoist limit switch weight **4.06 - 20**
Removing the hydraulic hose drum **5.02 - 59**
Removing the load hook * **4.06 - 17**
Removing the single blocks **5.19 - 13**
Removing the single folding jib carried on the crane, part 1 **5.02 - 91**
Removing the single folding jib carried on the crane, part 2 **5.02 - 93**
Removing the support plates **3.01 - 81**
Removing the wedge lock **4.06 - 22**
Removing winch 2 **5.09 - 11**
Removing winch 2 * **5.09 - 17**
Renewing the pretension of hoist ropes **7.05.50 - 19**
Repair welding **8.01 - 6**
Replace the coolant **7.05 - 7**
Replace the gear oil **7.05 - 19**, **7.05 - 27**
Replacing damaged crane components **7.01 - 6**
Replacing hydraulic hose lines **8.06 - 5**
Replacing parts **6.02 - 21**
Replacing the air filter **7.05 - 8**
Replacing the filter **7.05 - 38**
Replacing the filter insert **7.05 - 33**, **7.05 - 35**
Replacing the fuel preliminary filter insert **7.05 - 11**
Replacing the granular cartridge of the air dryer **7.05 - 43**
Replacing the oil **7.05 - 31**, **7.05 - 33**
Replacing the pressure filter elements **7.05 - 42**
Required auxiliary equipment * **2.08 - 3**
Rescue **2.04 - 62**
Rescuing the assembly personnel **2.04 - 14**
Resetting a problem **7.05 - 24**
Resuming crane operation **2.04 - 66**
Retaining pipes on the crane superstructure **2.06 - 6**
Retract / extend the ballasting cylinders with the Bluetooth™ Terminal **4.07 - 33**
Retracting the boom **2.04 - 55**
Retracting the cross carriers **3.01 - 85**, **3.01 - 88**, **3.01 - 92**, **3.01 - 96**
Retracting the cross carriers with the radio remote control * **3.01 - 95**
Retracting the cross carrier with the BlueTooth™Terminal **3.01 - 87**
Retracting the support cylinders **3.01 - 33**
Retract the step **4.03 - 15**
Rigging and fastening points **2.04 - 19**
Rigging and securing the crane **3.80 - 9**, **3.80 - 13**
Rigging the crane on the transport vehicle **3.01 - 99**
Rigging the guy rods on lattice booms on placed down boom system **5.01 - 58**
Rope end connections **4.06 - 3**
Rope pulleys **5.01 - 3**
Rope pulleys and guide pulleys **7.05.50 - 6**
Rope pulleys and hydraulic cylinders **2.08 - 7**
Rope reeving **4.06 - 1**, **4.06 - 24**
Ropes **1.03 - 4**
Rotating parts **7.01 - 6**
Rotation resistant ropes **8.04 - 11**
Rotation-resistant ropes and their rope end connections **8.04 - 5**

S

Safe and problem-free operation **7.05.50 - 7**
Safety and warning notes **0.01 - 1**
Safety bar **2.04 - 17**
Safety devices on the crane **4.04 - 9**
Safety equipment **1.02 - 4**, **4.04 - 1**
Safety guidelines in case of external power supply **2.04 - 35**
Safety signs **2.04.10 - 3**
Safety systems **0.01 - 6**

LWE/ab Muli 010/24201-02-02/en

copyright © Liebherr-Werk Ehingen GmbH 2016

Safety technical instructions for working with a load **4.08 - 3**
Safety technical notes for assembly and disassembly **5.01 - 1**
Scattered occurring broken wires **8.04 - 9**
Second inspection (second year) **8.03 - 10**
Securing against falls **7.01 - 4**
Securing against operation **7.01 - 4**
Securing personnel on shut off crane **2.04 - 60**
Securing persons to prevent them from falling **2.04 - 12**
Securing the crane **3.80 - 6**
Securing the crane operator's cab for maintenance work **7.05 - 35**
Securing the crane properly on the transport vehicle **3.80 - 9**
Selecting the Auxiliary heater * menu **6.02 - 13**
Selecting the crawler carrier **4.03.50 - 13**, **4.03.50 - 19**, **4.03.50 - 25**
Selecting the cross carrier **3.01 - 10**, **3.01 - 13**, **3.01 - 17**, **3.01 - 87**, **3.01 - 91**, **3.01 - 95**
Selecting the hoist winch **5.31 - 55**
Selecting the operating site **2.04 - 22**
Service fluids and lubricants **7.07 - 1**
Service items and lubricants **7.01 - 10**
Servicing ladders **7.05 - 48**
Servicing the central lubrication system of the crawler carrier **7.04 - 21**
Servicing the cooling system according to the information from the manufacturer **7.05 - 7**
Servicing the diesel engine according to the information from the manufacturer **7.05 - 5**
Servicing the fuel system according to the information from the manufacturer **7.05 - 14**
Servicing the travel gear **7.04 - 3**
Setting a new hoist rope reeving **4.03 - 39**
Setting a new set up configuration and new hoist rope reeving **4.03 - 39**
Setting a new set up configuration with short code **4.03 - 39**
Setting a new set up configuration with the function keys **4.03 - 39**
Settings and condition displays on the BTT **5.31 - 15**
Setting the cab to horizontal position **4.03 - 17**
Setting the counterweight with the ballasting device down **4.07 - 25**
Setting the operating mode and set up configuration **4.02 - 7**
Setting the operating mode and set up configuration via the function keys **4.02 - 7**
Setting the operating mode and set up configuration with the short code **4.02 - 8**
Set up for auxiliary jib on telescopic boom **4.12 - 14**
Set up for boom nose on telescopic boom **4.12 - 12**
Set up for operation with auxiliary jib on fixed lattice jib **4.12 - 19**
Set up for operation with auxiliary jib on luffing lattice jib **4.12 - 22**
Set up for operation with boom nose on fixed lattice jib **4.12 - 18**
Set up for operation with boom nose on luffing lattice jib **4.12 - 21**
Set up for operation with fixed lattice jib **4.12 - 16**
Set up for operation with folding jib **4.12 - 15**
Set up for operation with luffing lattice jib **4.12 - 20**
Short description - „Assembling the crane“ **3.01 - 5**
Shortening the rope **7.05.50 - 19**
Shorting the intervals **8.04 - 24**
Showing the horizontal distance **2.04 - 53**
Showing the vertical distance **2.04 - 50**
Shut off Crane movement with danger of tipping to the rear **4.20 - 26**
Shut off due to error message **4.20 - 28**
Shut off hoist top **4.20 - 25**
Shut off luffing the auxiliary boom / accessory up / down **4.20 - 22**
Shut off Luffing the telescopic boom up / down **4.20 - 21**
Shut off Maximum value F-load display **4.20 - 26**
Shut off of crane movement **4.02 - 25**, **4.20 - 19**
Shut off of overload **4.20 - 20**
Shut off spooling the winch up / out **4.20 - 25**
Shut off Telescoping cylinder (pressure too high) **4.20 - 27**
Shut off Telescoping the telescopic boom in **4.20 - 24**
Shut off Telescoping the telescopic boom out (limit length) **4.20 - 24**
Sign Hook points **2.06 - 3**
Signs **2.05 - 3**
Signs on the crane **2.05 - 1**
Single folding jib, see illustration 1 **5.02 - 3**
Single folding jib, see illustration 5 **5.02 - 9**
Single folding jib, see illustration 6 **5.02 - 9**
Single folding jib, see illustration 9 **5.02 - 11**
Single hook operation **5.10 - 9**, **5.12 - 19**
Single layer and parallel roped ropes **8.04 - 10**
Slewing gear **1.02 - 4**, **4.05 - 27**
Slewing gear(s) **7.05 - 26**
Slewing gear brake **4.10 - 25**
Slewing gear brake (pedal) **4.05 - 27**
Slewing range **4.02 - 48**
Slewing ring connection **7.05 - 24**
Sliding the protective plate on the cross carrier into assembly position **3.01 - 47**, **3.01 - 63**
Sliding the protective plate on the cross carrier into operating position **3.01 - 49**
Slip-resistant mats **7.01 - 9**
Slopes and ditches **2.04 - 26**
Special auxiliary boom **1.03 - 10**
Special cases at operation of the LICCON overload protection **4.20 - 3**
Special functions **4.02 - 27**
Special functions LICCON overload protection **4.02 - 28**
Special function TELEMATIK Emergency operation **4.02 - 61**

copyright © Liebherr-Werk Ehingen GmbH 2016

Special operating conditions **4.20 - 4**
Specified service items and lubricants for Liebherr cranes **7.07 - 3**
Speed reduction master switch **4.02 - 67**
Speeds **1.03 - 3**
Spinning out by turning out the hook block **7.05.50 - 18**
Spinning out with single strand reeving **7.05.50 - 18**
Spooling up loose hoist rope **5.19 - 3**
Stand-by mode **4.02 - 81**, **4.05 - 9**
Starting and stopping the engine **4.03 - 29**
Starting operation, follow my instructions **2.04 - 48**
Starting the engine from the crane operator's cab **4.03 - 31**
Starting the slewing movement in strong side wind **4.05 - 27**
Starting up the LICCON Computer system and the touch displays **4.01 - 13**
Start menu of BTT **5.31 - 12**
Start screen BTT **5.31 - 11**
Start the Telescoping program **4.02 - 56**
Steering ability **4.10 - 15**
Step **4.03 - 15**
Stepladder **2.04.10 - 10**
Stop (normal stop) **2.04 - 48**
Stopping the slewing movement in strong side wind **4.05 - 27**
Suitable distribution of surface pressure **4.10 - 15**
Supplied fall arrest system (safety harness and height safety equipment) **2.04 - 10**
Support **2.04 - 31**
Supporting the crane **2.04 - 31**, **3.01 - 35**, **3.01 - 55**
Supporting the crane from the crane operator's cab **3.01 - 39**, **3.01 - 59**
Supporting the crane with the Bluetooth™ Terminal **3.01 - 37**, **3.01 - 57**
Supporting the crane with the radio remote control * **3.01 - 41**, **3.01 - 61**
Supporting the crane with variable support **2.04 - 32**
Suspended load fastening point **2.05 - 8**, **2.05 - 9**, **2.05 - 9**
Swinging the auxiliary boom into operating position **5.12 - 9**
Swinging the auxiliary boom into the transport position **5.12 - 33**
Swinging the boom nose into operating position, illustrations 1 and 2 **5.10 - 5**
Swinging the boom nose into transport position, illustrations 7 and 8 **5.10 - 13**
Swinging the folding brackets in **3.01 - 83**
Swinging the folding brackets out **3.01 - 21**
Swinging the rope guide pulley into operating position **5.02 - 43**
Swinging the rope guide pulley into transport position **5.02 - 83**
Switching the slewing gear to freewheeling **4.05 - 33**
System start of the LICCON computer system **4.02 - 4**

T

Taking an oil sample **7.01 - 8**
Taking on a load **4.08 - 7**
Taking over the previously selected set up configuration and hoist rope reeving **4.03 - 37**
Taking up the counterweight with the ballasting device **4.07 - 17**
Target selection via the set up screen **4.05 - 41**
Target selection via the telescoping screen **4.05 - 43**
Technical data **1.03 - 1**
Technical safety instructions **7.01 - 3**, **7.05 - 21**
Tele extension 7m **1.03 - 9**
TELEMATIK emergency operation (EN 13000:2010 active) **4.02 - 62**
TELEMATIK emergency operation (EN 13000:2010 not active). **4.02 - 61**
Telescopeable load **4.02 - 49**
Telescopic boom **1.02 - 4**, **7.05.50 - 3**
Telescopic boom (T) **1.01 - 5**
Telescopic boom distortion because of sunshine on one side **4.08 - 4**
Telescopic boom extension **1.02 - 5**, **5.25 - 1**
Telescopic boom extension fastening points **5.25 - 3**
Telescoping **4.05 - 35**
Telescoping screen **4.02 - 57**
Telescoping to the selected target **4.05 - 45**
Telescoping via the operating screen **4.05 - 45**
Telescoping via the telescoping screen **4.05 - 47**
Temperature operating limits **7.05.50 - 8**
Tensioning procedure **7.04 - 11**
Tensioning the track chain **7.04 - 9**
Terminology **1.01 - 1**
Terms and abbreviations **2.04 - 60**
The crane engine is running **4.05 - 9**
The Crane operation program **4.02 - 13**
The displays remain dark? **5.31 - 66**
The function key line (Telescoping) **4.02 - 59**
The function keys **5.31 - 29**
The function keys in the assembly functions menu **5.31 - 47**
The menus (operating functions) **4.01 - 29**
The menu „Hydraulic oil preheating / telescopic boom disassembly“ * (left touch display) **4.01 - 43**
Theoretical service life **8.03 - 5**
The set up program **4.02 - 7**
The Telescoping program **4.02 - 54**
The Touch displays **4.01 - 11**
The Working range limitation program * **4.02 - 63**
The „climate control“ menu (left touch display) **4.01 - 41**
The „Master switch configuration“ menu (left touch display) **4.01 - 19**, **4.01 - 25**
The „Master switch configuration“ menu (right touch display) **4.01 - 15**, **4.01 - 21**
The „Support“ menu (right touch display) **4.01 - 29**
The „Track width adjustment“ menu (right touch display) **4.01 - 35**

LWE/ab Muli 010/24201-02-02/en

copyright © Liebherr-Werk Ehingen GmbH 2016

The „Working floodlight“ * menu (left touch display) **4.01 - 39**
Third inspection (third year) **8.03 - 10**
Three hook operation **4.12 - 8**
Tilting the cab upward **4.03 - 17**
Tilting the crane cab * **4.03 - 17**
Tilting the crane operator's cab up **7.05 - 33**
To exceed the maximum permissible load moment. **4.20 - 37**
To exceed the maximum value of the F-load display in crane operation **4.20 - 41**
Track adjustment by changing the center of gravity **4.03.50 - 5**
Track adjustment by turning the crane superstructure **4.03.50 - 6**
Track pad **7.04 - 16**
Track roller **7.04 - 17**
Tracks **1.02 - 3**
Track width monitoring without shut off of crane movement **4.02 - 71**
Track width monitoring with shut off of crane movement * **4.02 - 73**
Track widths and extension conditions **4.03.50 - 4**
Traffic endangerment and environmental damage **2.04 - 3**
Transfer (between two cranes or two hooks) **2.04 - 53**
Transmission **7.06 - 4**
Transport condition **3.80 - 11**
Transporting components **5.01 - 7**
Transporting lattice sections **5.01 - 7**
Transporting the crane **3.80 - 5**
Transporting the crane by rail **3.80 - 11**
Transporting the crane safely **3.80 - 5**
Transporting the hook block **4.08 - 9**
Transporting the hook block / load hook **5.19 - 7**
Transporting the hook block / load hook with the crane **5.19 - 7**
Transporting the hook block / load hook with the forklift **5.19 - 7**
Transport of crane and crane components **3.80 - 1**
Travel and crane operation **2.04 - 63**
Travel drive **1.02 - 3**
Travel gears / hydraulic motors / track rollers **4.10 - 6**
Travel route **4.10 - 4**
Travel speeds **1.03 - 3**
Troubleshooting on the central lubrication system of the crawler carrier **7.04 - 27**
Turning **4.05 - 23**
Turning / driving in reverse **2.04 - 67**
Turning an extremely rotation-resistant hoist rope out **7.05.50 - 18**
Turning backward to the left **4.10 - 37**, **4.10 - 45**
Turning backward to the right **4.10 - 37**, **4.10 - 45**
Turning crawler operating modes on / off **4.10 - 29**
Turning ECO-Mode off **4.02 - 79**
Turning ECO-Mode on **4.02 - 78**
Turning forward to the left **4.10 - 37**, **4.10 - 43**
Turning forward to the right **4.10 - 37**, **4.10 - 43**
Turning normal travel crawler operation on / off **4.10 - 29**
Turning parallel travel crawler operation on / off **4.10 - 29**
Turning the auxiliary heater * on / off **6.02 - 15**, **6.02 - 16**
Turning the BTT on via the ignition switch **5.31 - 63**
Turning the BTT on via the ON / OFF button **5.31 - 63**
Turning the climate control system * on / off **6.02 - 11**
Turning the crane superstructure **4.05 - 25**
Turning the engine off **4.03 - 35**
Turning the engine off after operation **4.03 - 35**
Turning the engine off in the event of danger **4.03 - 35**
Turning the hydraulic oil preheating * on **4.03 - 26**
Turning the rapid gear off **4.05 - 7**
Turning the rapid gear on / off **4.10 - 31**
Turning the timer off when the ignition is off **6.02 - 19**
Turning the timer off when the ignition is on **6.02 - 18**
Turning the turntable to the left **6.05 - 3**
Turning the turntable to the right **6.05 - 3**
Turning the warning sound off **4.02 - 27**
Two hook operation **4.12 - 1**, **4.12 - 7**, **5.10 - 9**
Two hook operation monitored **4.12 - 10**
Two hook operation monitored / Two hook operation not monitored **4.12 - 9**
Two hook operation not monitored **4.12 - 10**
Two hook operation on individual loads **4.12 - 9**
Two hook operation on joint load **4.12 - 8**
Types of ladders **2.04.10 - 10**

U

Unlocking the crane superstructure lock **4.05 - 3**
Unpinning / pinning the rope retaining pin **5.02 - 83**
Unpinning the ballasting device **4.07 - 17**, **4.07 - 25**
Unpinning the crawler carrier **3.01 - 67**
Unpinning the lattice components **5.01 - 51**
Unpinning the support cylinders **3.01 - 33**, **3.01 - 71**
Unreeving the hoist rope **5.02 - 83**, **5.12 - 27**, **5.12 - 27**
Unreeving the hook block **4.06 - 15**
Unscheduled inspection **8.04 - 3**
Update confirmation **90.05 - 1**, **90.05 - 3**
Update to the operating instructions **90.01 - 3**
Urea system * **7.05 - 15**
Used proportion of the theoretical service life. **8.03 - 5**
Use of double strand height safety equipment **2.04 - 12**
Use of insertion plates into the track chains **4.10 - 7**
Use of single strand height safety equipment **2.04 - 11**
User guidelines **2.04.10 - 7**
User platform in settings window for speed reduction of master switches **4.02 - 69**
Use suitable operating fluids **7.01 - 6**

copyright © Liebherr-Werk Ehingen GmbH 2016

V

Ventilation **7.05 - 38**
Vertical ladder with transition aid **2.04.10 - 14**
Vertical movements **2.04 - 50**
Vibrations **1.03 - 3**
Vibration sensor **4.05 - 7**
Visual check for damage **4.08 - 4**
Visual inspection for leaks **8.03 - 4**

W

Waiting for the boot up phase **4.03 - 37**
Walking and stepping surfaces **2.07 - 13**
Walking on lattice sections or booms **2.04 - 13**
Walking on the telescopic boom **2.04 - 13**
Warning sound Horn **4.02 - 27**
Warning sound Short horn **4.02 - 27**
Warranted maximum sound power level **2.05 - 22**
Warranty and coverage **7.01 - 7**
Wear data for crawler travel gear **7.04 - 15**
Weight **3.01.20 - 3**
Weight of crane **3.80 - 9**
Weights **1.03 - 4**, **5.01 - 8**
Welding work on the load **2.04 - 62**
Winch 1 **4.05 - 7**
Winch 2 **1.02 - 5**
Winch 2 or slewing gear **4.05 - 7**
Winch display **4.02 - 50**
Wind influences **2.04 - 39**
Wind influences during erection and take down **2.04 - 43**
Wind influences for „Crane out of operation“ **2.04 - 45**
Wind influences in crane operation **2.04 - 44**
Wind sensor **5.02 - 69**, **5.12 - 23**
Wind speed **4.02 - 45**
Wind speed, wind gust speed and wind direction **2.04 - 40**
Wind speed charts for variable support **2.04 - 40**
Wind speed sensor **4.04 - 13**
Wire break increase rate **8.04 - 9**
Wire ropes **4.06 - 3**
Wire ropes and rope end connections **4.06 - 3**, **8.04 - 5**
Working in ambient temperatures below -40°C **2.08 - 9**
Working in ambient temperatures up to -40°C **2.08 - 3**
Working in low temperatures **2.08 - 1**, **2.08 - 3**
Working in the vicinity of electricity transmission lines **4.08 - 14**
Working in the vicinity of transmitters **2.04 - 37**
Working on lattice sections or booms **2.04 - 13**
Working on the crane superstructure or boom **2.04 - 21**
Working on the telescopic boom head and / or auxiliary boom **2.04 - 12**
Working ranges overlap **2.04 - 47**
Working with a load **4.08 - 1**
Workplace-related emission value **1.03 - 3**
Work station - Crane operator's cab **4.03 - 9**

„

„Telescoping“ on cranes with one winch **4.05 - 35**
„Telescoping“ on cranes with two winches **4.05 - 37**

LWE/ab Muli 010/24201-02-02/en

copyright © Liebherr-Werk Ehingen GmbH 2016

copyright © Liebherr-Werk Ehingen GmbH 2016