LIEBHERR

Crawler crane with telescopic boom

LTR 1220

ab Muli 001

Operating instructions

BAL-No.: 24200-01-02

Pages: 1645

Works-Number	
Date	

ORIGINAL OPERATING MANUAL

The operating manual is part of the crane!

It must always be available within reach!

The regulations for crane operation must be observed!

Liebherr-Werk Ehingen GmbH
Postfach 1361
D-89582 Ehingen / Donau
✆: +49 (0) 7391 502–0
Fax: +49 (0) 7391 502–3399
✉: info.lwe@liebherr.com
www.liebherr.com

Foreword

General

This crane was built according to the state of technology and recognized safety technical regulations. Despite that, dangers to body and life for the user and / or third persons or damage to the crane and / or other material assets can occur.
This crane may only be used:
– in impeccable technical condition.
– for destined use.
– by trained personnel, which acts in a safety and danger conscious way.
– when no safety relevant problems are present.
– when no modifications were made on the crane.

Any problems, which could affect safety must be fixed immediately.
Modifications on the crane may only be made with written approval by Liebherr-Werk Ehingen GmbH.

Data recording device

This crane is equipped with a data recording device. Among others, the following data is recorded:
– Date and time of day
– Entered configuration of the crane
– Actual load
– Percentage of utilization of the crane
– Working radius
– Main boom angle, luffing jib angle
– Total telescopic boom length, length of each telescopic section
– Every actuation of bypass devices

The recorded data can be read with a respective software.

Safety and warning notes

Safety and warning notes are directed to all persons who work with the crane.
The terms **DANGER**, **WARNING**, **CAUTION** and **NOTICE** used in the crane documentation are intended to point out certain rules of conduct to all persons working with the crane.

Warn-ing signs	Signal word	Explanation
⚠	**DANGER**	Designates a dangerous situation which will lead to death or serious injury if it is not prevented [1]
⚠	**WARNING**	Designates a dangerous situation, which can lead to death or serious injury if it is not prevented.[1]
⚠	**CAUTION**	Designates a dangerous situation, which can lead to slight or medium-grade injuries if it is not prevented.[1]
	NOTICE	Designates a dangerous situation, which can lead to property damage if it is not prevented.

[1] This could also result in property damage.

Additional notes

The term **Note** is used in the crane documentation to make all persons working with the crane aware of useful information and tips.

Sign	Signal word	Explanation
ⓘ	**Note**	Designates useful information and tips.

Crane documentation

The crane documentation is comprised of:
- all supplied documents on paper and in digital form.
- all supplied programs and applications.
- all subsequently supplied information, updates and addenda for the crane documentation.

The crane documentation:
- makes it possible for you to operate the crane safely.
- supports you to utilize the permissible application possibilities of the crane.
- provides you with information about the functionality of important components and systems.

ⓘ **Note**
Terminology in the crane documentation.
Certain expressions are used in the crane documentation.
▶ In order to avoid misunderstandings, the same expressions should always be used.

Translations from the German version of the crane documentation: The crane documentation has been translated to be best of one's knowledge. Liebherr-Werk Ehingen GmbH assumes no liability for translation errors. The German version of the crane documentation is solely applicable for factual accuracy. If you find any errors or if any misunderstandings arise when reading the crane documentation, please contact Liebherr-Werk Ehingen GmbH immediately.

WARNING
Danger of accident due to incorrect operation of the crane!
Incorrect operation of the crane can lead to accidents!
Personnel can be killed or seriously injured!
This could result in property damage!
- ▶ Only authorized and trained expert personnel are permitted to work on the crane.
- ▶ The crane documentation is part of the crane and must be accessible on the crane.
- ▶ The crane documentation and on-site regulations and specifications (such as accident prevention regulations) must be observed.

Using the crane documentation:
- **makes it easier** to become familiar with the crane.
- **avoids** problems due to improper operation.

Observing the crane documentation:
- **increases** reliability in use.
- **extends** the service life of the crane.
- **minimizes** repair costs and downtime.

Place the crane documentation accessible in the driver's cab or in the crane cab.

WARNING
Outdated version of crane documentation!
If subsequently supplied information, updates and addenda to the crane documentation are not observed and added, there is a danger of accidents!
Personnel can be killed or seriously injured!
This could result in property damage!
- ▶ Observe and add all subsequently supplied information, updates and addenda for the crane documentation.
- ▶ Make sure that all affected persons always know and understand the latest version of the crane documentation.

WARNING
Crane documentation is not understood!
If parts of the crane documentation are not understood and the tasks are carried out on or with the crane, then there is a danger of accidents!
Personnel can be killed or seriously injured!
This could result in property damage!
- ▶ Clear up open questions regarding the crane documentation with Liebherr Service before carrying out the respective task.

This documentation may not be reproduced or duplicated, distributed or used for purposes of competition, neither in part nor in excerpts. All rights are expressly reserved in accordance with copyright laws.
All accident prevention guidelines, operating instructions, load charts etc. are based on destined use of the crane.

blank page!

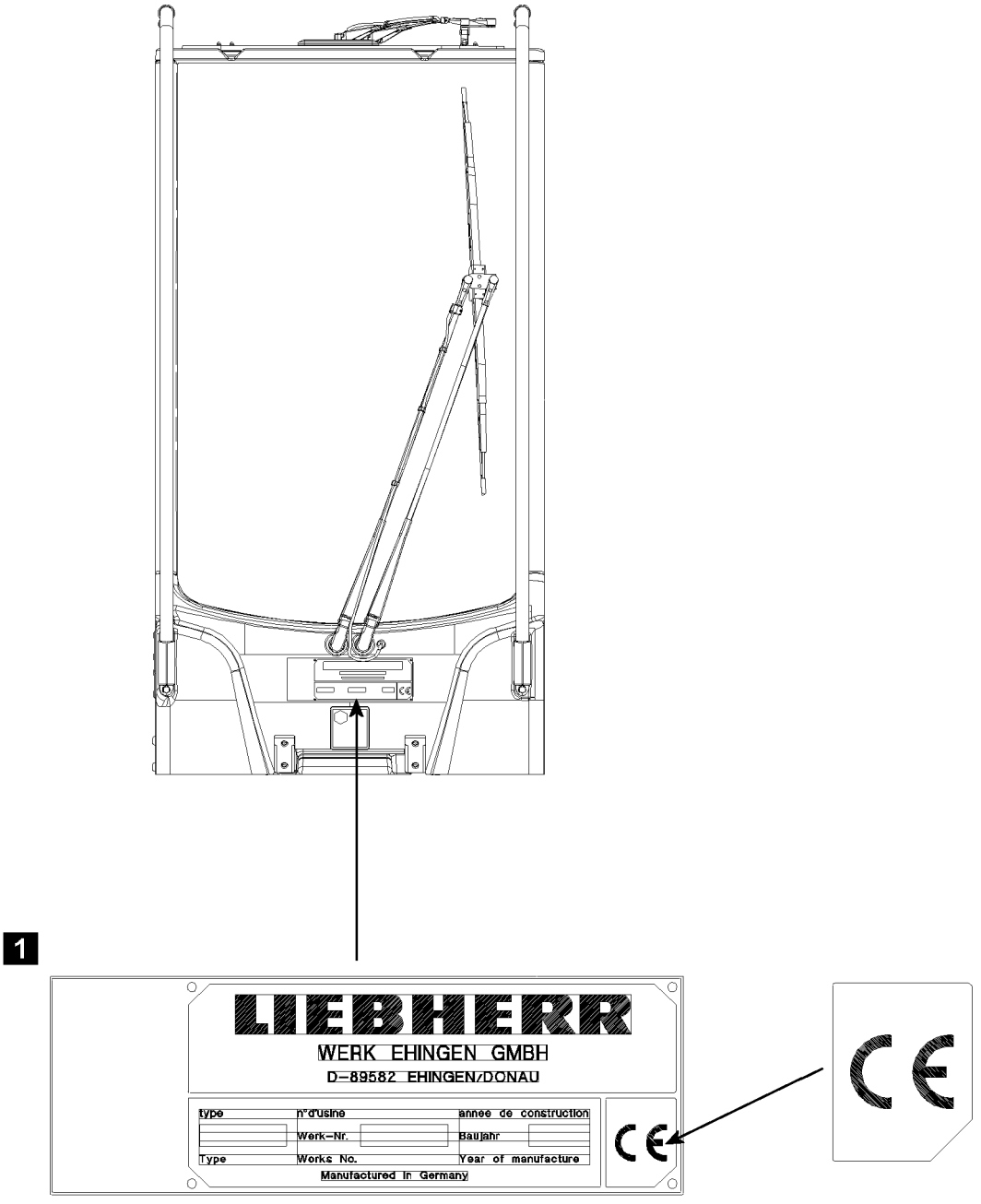
1
LIEBHERR
WERK EHINGEN GMBH
D-89582 EHINGEN/DONAU
type
n°d'usine
annee de construction
Werk-Nr.
Baujahr
Type
Works No.
Year of manufacture
Manufactured in Germany
CE

2
LIEBHERR
WERK EHINGEN GMBH
D-89582 EHINGEN/DONAU
type
n°d'usine
annee de construction
Werk-Nr.
Baujahr
Type
Works No.
Year of manufacture
Manufactured in Germany

B110001

CE marking

The CE marking is a mark according to EU laws:

– Cranes with CE-marking according to the European machinery directive 2006/42/EC and the EN 13000! Data tag Crane with CE-marking, see illustration **1**.
– Cranes which are operated outside the respective area of application do not require a CE marking. Data tag Crane without CE marking, see illustration **2**.
– It is prohibited to market and operate cranes without CE marking, which do not meet the product-specific regulations valid in Europe, when a CE marking is specified for the country.
– It is prohibited to operate cranes with a tipping load utilization of 85 % which are programmed according to ASME B30.5 within the European Union or in countries which permit a lower stationary stability utilization (for example ISO 4305)! The national regulations apply. These cranes may not have a CE marking!

Destined use

The destined use of the crane consists solely in vertical lifting and lowering of free and non-adhered loads, whose weight and center of gravity are known.
To do so, a hook or hook block approved by Liebherr must be reeved on the hoist rope and it may only be operated within the permissible crane configurations.
Driving with the crane, with or without an attached load is only permissible if a corresponding driving or load chart is available. The set up configurations intended for it and the safety conditions must be observed according to the corresponding crane documentation.
Any other use or any other exceeding utilization is **not** destined use.
Destined use also includes the adherence of the required safety guidelines, conditions, prerequisites, set up conditions and working steps in the crane documentation (for example: Operating instructions, load charts, erection and take down charts, job planner).
The manufacturer is **not** liable for damages, which are caused by non-destined use or improper use of the crane. Any associated risk it is carried solely by the owner, the operator and the user of the crane.

Non-destined use

Non -destined use is:

- Working outside the permissible set up configurations according to the load chart.
- Working outside the permissible boom radii and slewing ranges according to the load chart.
- Selecting load charts, which do not correspond to the actual set up configuration.
- Selection of a set up configuration via code or via manual entry, which does not correspond to the actual set up configuration.
- Working with bypassed / deactivated safety devices, for example bypassed load moment limitation or with bypassed hoist limit switch.
- Increasing the radius of the lifted load after a LMB shut off, for example by diagonally pulling the load.
- Using the support pressure display as a safety function against tipping over.
- Use of equipment parts which are not approved for the crane.
- Using the crane at sports and recreational events, especially for "Bungee" jumps and / or "Dinner in the sky".
- Driving on a public road in non-permissible driving condition (axle load, dimension).
- Driving with the equipment in place in a non-permissible driving condition.
- Pushing, pulling or lifting loads with the leveling regulation, the sliding beams or the support cylinders.
- Pushing, pulling or lifting loads by actuating the slewing gear, the luffing gear or the telescoping gear.
- Ripping stuck objects loose with the crane.
- Utilizing the crane for a longer period of time for material handling tasks.
- Releasing the crane suddenly (grapple or dumping operation).
- Utilizing the crane when the weight of the load, which is suspended on the crane is changed, for example by filling a container suspended on the load hook, except:
  - The load moment limiter was checked before for function with a known load.
  - The crane cab is occupied.
  - The crane is operational.
  - The container size is selected in such a way that an overload of the crane with full load is eliminated within the valid used load chart.

The crane may **not** be used for:

- Attaching a stuck load for which the weight and center of gravity are not known and which is released only by flame cutting, for example.
- Letting persons drive along outside the driver's cab.
- Transporting personnel in the crane cab while driving.
- Transporting personnel with the lifting equipment and on the load.
- Transporting of persons with work baskets (cherry pickers), if the national regulations of the responsible work safety organization are not observed.
- Transporting loads on the chassis.
- Two hook operation without auxiliary equipment.
- Extended material handling operation.
- Crane operation on a barge if the conditions are not determined and the written release by **Liebherr Werk Ehingen GmbH** is not present.

The crane documentation must be read and used by all persons who are involved in use, operation, assembly and maintenance of the crane.

Safety systems

Special attention must be paid to the safety systems built into the crane. The safety systems must constantly be checked for functionality. The crane may not be operated if the safety systems are not working or not working correctly.

Note
Your motto must always be:
▶ **Safety first!**

The crane has been built in accordance with the applicable crane operation and driving regulations and has been approved by the relevant authorities.

Equipment and spare parts

WARNING
Danger to life if original equipment parts are **not** used!
If the crane is operated with equipment parts, which are **not** original, then the crane can fail and cause fatal accidents!
Crane components can be damaged!
▶ Operate the crane only with original equipment parts!
▶ Crane operation with equipment parts, which do **not** belong to the crane is prohibited!
▶ If there is any doubt about the origin of equipment parts, contact Liebherr Service!

WARNING
The crane permit and the manufacturer's warranty will become void!
If any original installed parts are modified, manipulated or replaced (e.g. removal of parts, installation of non-original Liebherr parts), both the crane permit and the manufacturer's warranty will become void.
▶ Leave installed original parts unchanged!
▶ Do not remove installed original parts!
▶ Use only Original Liebherr spare parts!
▶ If there is any doubt about the origin of spare parts, contact Liebherr Service!

For ordering equipment and spare parts, always keep the crane number handy and provide it.

Definition of directional data for mobile cranes

Driving forwards: Driving with the driver's cab on the front.
Driving in reverse: Driving with the taillights of the crane chassis on the front.
Front, **rear**, **right**, **left** in the **driver's cab** refer to the crane chassis. The driver's cab is always in the front.
Front, **rear**, **right**, **left** in the **crane operator's cab** refer to the superstructure. Front is always in direction of the placed down boom.

Definition of directional data for crawler cranes

Driving forwards: Driving forward from the view of the crane operator seated in the crane cab. Turntable in 0° or 180° position.
Driving in reverse: Driving backward from the view of the crane operator seated in the crane cab. Turntable in 0° or 180° position.
Front, **rear**, **right**, **left** always orient themselves on the **crawler track** from the position of the chain tension devices. The chain tension devices on the crawler track are always on the front.
Front, **rear**, **right**, **left** refer to the direction of view of the crane operator seated in the **crane cab**. Front is always in direction of the placed down boom.

Optional equipment and functions

The equipment marked with ***** and the functions are optionally available and are **not** part of the standard crane (optional equipment).

Conversion chart

Note
▶ If the crane is used in countries where US-units are customary, you can use the conversion factors in this chart for conversion of metric measuring units into US-units!

	Unit of Measure	Multiply by	To optain
Length	millimeter (mm)	0.03937	inch (in)
	millimeter (mm)	0.00328084	foot (ft)
	meter (m)	39.37	inch (in)
	meter (m)	3.28084	foot (ft)
	meter (m)	1.09361	yard (yd)
	kilometer (km)	0.62137	mile (mi)
Area	square centimeter (cm^2)	0.155	square inch (in^2)
	square meter (m^2)	10.7639	square foot (ft^2)
	square meter (m^2)	1.196	square yard (yd^2)
	square kilometer (km^2)	0.3861	square mile (mi^2)
Volume	cubic centimeter (cm^3)	0.06102	cubic inch (in^3)
	cubic meter (m^3)	35.3147	cubic foot (ft^3)
	cubic meter (m^3)	1.308	cubic yard (yd^3)
	liter (L)	61.024	cubic inch (in^3)
	liter (L)	0.035	cubic foot (ft^3)
	liter (L)	0.264	gallon (U.S.) (gal)
Weight	gram (g)	0.03527	ounce (oz)
	kilogram (kg)	2.20462	pound (lb)
	metric ton (t)	2204.62262	pound (lb)
	metric ton (t)	1.102	short tons (U.S.)
Mass divided by length	kilogram per meter (kg/m)	0.055998	pound per inch (lb/in)
	kilogram per meter (kg/m)	0.67197	pound per foot (lb/ft)
Force	newton (N)	0.2248	pound-force (lbf)
	kilonewton (kN)	224.809	pound-force (lbf)
	kilonewton (kN)	0.2248	kip (1 kip = 1000 lbf)
Torque	newton meter (N·m)	8.85075	pound-force inch (lbf·in)
	newton meter (N·m)	0.73756	pound-force foot (lbf·in)
Power	horsepower (metric)	0.73549	kilowatt (kW)
	horsepower (metric)	0.98632	horsepower (U.K.)
	kilowatt (kW)	1.34102	horsepower (U.K.)
Pressure	kilopascal (kPa)	0.01	bar (bar)
	kilopascal (kPa)	0.1450377	pound-force per square inch (psi)
	bar (bar)	14.50377	pound-force per square inch (psi)
	newton per square centimeter (N/cm^2)	1.450377	pound-force per square inch (psi)
	newton per square meter (N/m^2)	0.0001450377	pound-force per square inch (psi)
Speed	meter per second (m/s)	39.37	inch per second (in/s)
	meter per second (m/s)	3.28084	foot per second (ft/s)
	kilometer per hour (km/h)	0.62137	mile per hour (mi/h)

	Unit of Measure	Multiply by	To optain
	liter per minute (l/min)	0.26417	gallon per minute (gal/min)
Temperature	degree Celsius (°C)	([°C] · 1.8) + 32	degree Fahrenheit (°F)
	kelvin (K)	([K] · 1.8) - 459.67	degree Fahrenheit (°F)

Conversion chart version 1

Contents

1 Description of crane 25

1.01 Terminology 26

1 Crane components 27

2 Auxiliary boom 31

1.02 Product description 32

1 Crawler track 33

2 Crane superstructure 33

3 Auxiliary equipment 34

1.03 Technical data 36

1 Dimensions 37

2 Maximum surface pressure 37

3 Workplace-related emission value 37

4 Vibrations 37

5 Speeds 37

6 Rope diameter 38

7 Weights 38

8 Lifting heights 45

2 Safety 49

2.03 Job planning 50

1 Crane operation planning 51

2.04 General safety technical guidelines 52

1 General 53

2 Emergency exit 61

3 Checking the rigging and fastening points 65

4 Personal protective equipment 67

5 Use of single-stranded height safety equipment, illustration 1 73

6 Use of double-stranded height safety equipment, illustration 2 73

7 Securing the assembly personnel against falling 73

8 Rescuing the assembly personnel 75

9 Documentation 75
10 Identification 75
11 Crane operator responsibilities 75
12 Selecting the location, illustrations 1 to 3 81
13 Slopes and excavations, illustrations 4 and 5 84
14 Permissible ground pressures 84
15 Support 87
16 Checking the safety measures 89
17 Endangering air traffic 89
18 Grounding 90
19 Consideration of wind conditions 90
20 Working in the vicinity of transmitters 101
21 Dangers when working together with several cranes 103
22 Hand signals for guidance 104
23 Crane operation with a load 112
24 Lifting of personnel 115
25 Crane operation in case of thunderstorms 116
26 Safety notes for external power feed (100 V AC to 400 V AC) 116
27 Welding work on the load 117
28 Interruption of crane operation. 118
29 Resumption of crane operation 119
30 Ending crane operation 119
31 Turning / driving in reverse 120
32 Parking the vehicle 120
33 Safety guidelines for ladders 123
2.05 Signs on the crane 130
1 Signs 131
2.06 Antifall guards on the crane 156
1 Personal protective equipment 157
2 Preparing a ladder 159
3 Retaining pipes on the crane superstructure 161
4 Fastening and hook points 163
5 Platforms on the crane chassis 169
2.07 Access to the crane 172

1 Components on the crane 173
2 Ascent and descent on the crane chassis 175
3 Walking and stepping surfaces 183

3 Crane assembly 185

3.01 Crawler carrier assembly 186
1 Assembling the crawler carrier 187
2 Disassembling the crawler carriers 237
3.03 Central ballast 284
1 Central ballast combinations 285
2 Central ballast during operation 285
3 Installing the central ballast 287
4 Disassembling the central ballast 297

4 Operation of crane superstructure 307

4.01 Operating and control instruments on the crane superstructure 308
1 Operating and control instruments 309
2 Operating elements on camera - monitor* 317
3 Operating elements on control consoles 319
4 Operating elements on the operating and control unit (BKE) 353
4.02 LICCON computer system 360
1 General 361
2 Error messages 363
3 System start of the LICCON computer system 365
4 Operating elements LICCON Monitor 367
5 “Set up” program 371
6 “Crane operation” program 389
7 “Telescoping” program 467
8 The “Working range limitation” program* 471
9 The setting window “Speed reduction master switch” 473
10 Power-Save and Stand-by mode in the LICCON computer system 481
4.03 Crane start up and taking the crane out of service 488
1 Checks before start up 489
2 Work station - Crane operator's cab 495
3 Preheating the hydraulic oil with the Hydraulic oil preheating* 515

4 Starting and stopping the engine 519
5 LICCON computer system after engine start 531
4.03.50 Adjustment of track width 534
1 Adjusting the track width 535
4.04 Safety equipment 555
1 General 557
2 Quick test Crane geometry 557
3 Quick test Overload protection 557
4 LICCON computer system 558
5 Safety devices on the crane 563
4.05 Crane operation 574
1 General 575
2 LICCON computer system 581
3 Luffing 583
4 Lifting / lowering 589
5 Turning 595
6 Telescoping 607
4.06 Rope reeving 634
1 Wire ropes and rope end connections 635
2 Reeving the hoist rope with the auxiliary reeving rope 637
3 Reeving the hook block in and out 641
4 Securing and removing the load hook* 647
5 Attaching / removing the hoist limit switch weight 651
6 Assembling / disassembling the wedge lock 655
7 Crane operation with auxiliary block* on the telescopic boom 657
8 Rope reeving 657
4.07 Counterweight 658
1 Overview of counterweight 659
2 Counterweight combinations 661
3 Fastening the counterweight plates and receptacle plate 663
4 Assembly of counterweight 667
5 Disassembly of counterweight 679
6 Operating element Bluetooth™ Terminal 689
4.08 Working with a load 690

1 Safety technical instructions for working with a load 691
2 Checks before starting to work with the crane 692
3 Crane movement - Telescoping 693
4 Taking on a load 695
5 Crane operation 701
4.10 Driving from the crane operator's cab 703
1 Prerequisites for driving the crane (crawler operation) 705
2 Displays for center of gravity, surface pressure and incline in the LICCON monitor 710
3 Preparing for driving the crane 717
4 Driving the crane: Load chart available 719
5 Driving the crane: No load chart is available 721
6 Crawler crane in crawler operation 724
4.12 Two hook operation 750
1 Operating modes 751
2 Operation with boom nose* on the telescopic boom 751
3 Operation with boom nose* on lattice jib 753
4 “Two hook operation” with auxiliary boom* 755
4.15 Reeving plans 760
1 Reeving plans 761
4.20 Procedure for shut off of crane movements 774
1 General 775
2 Instructions to resume the crane movement 791

5 Equipment 831
5.01 Safety technical notes for assembly and disassembly 832
1 Checking the retaining elements 833
2 Rope pulleys 833
3 Checking the ropes 833
4 Control measures 834
5 Dangerous conditions without shut off 836
6 Transporting components 837
7 Pneumatic springs for assembly support of components 837
8 Manual rope winches for assembly support of components 837
9 Weights 838

10 Guy rods 838
11 Auxiliary guying 839
12 Bypassing the overload protection 839
13 Bypassing the hoist top shut off 841
14 Assembly / disassembly 843
15 Erection / take down 880
5.02 Folding jib - TK 882
1 General 883
2 Assembling the folding jib 893
3 Reeving in the hoist rope 923
4 Changing over mechanical folding jib from 0° to 22.5° or 45° 925
5 Hydraulic connections 937
6 Electrical connections 943
7 Erection 951
8 Adjusting the folding jib angle hydraulically* 953
9 Changing over mechanical folding jib from 22.5° or 45° to 0° 955
10 Unreeving the hoist rope 963
11 Removing the folding jib 965
5.09 Hoist gear 2 990
1 General 991
2 Assembly winch 2 993
3 Assembly of winch 2 with auxiliary crane 997
4 Disassembly winch 2 999
5 Disassembly of winch 2 with auxiliary crane 1005
5.10 Boom nose - telescopic boom 1007
1 General 1009
2 Assembly 1011
3 Disassembly 1017
5.12 Auxiliary boom 1022
1 General 1023
2 Installing the auxiliary boom 1025
3 Erection 1045
4 Unreeving the hoist rope 1047
5 Disassembly of the auxiliary boom 1049

5.19 Hook blocks 1056
1 Minimum required hook block weight 1057
2 Procedure in case of slack rope 1060
3 Hook block overview 1063
4 Installing the single blocks 1065
5 Removing the single blocks 1069
5.25 Telescopic boom extension 1072
1 General 1073
2 Assembly 1075
3 Establishing the electrical / hydraulic connections 1077
4 Erection 1077
5 Disassembly 1079
5.31 Bluetooth™ Terminal (BTT) 1082
1 Display / operating element Bluetooth™ Terminal 1083
2 Start menu of the BTT 1093
3 Settings and status displays on the BTT 1097
4 Aligning the BTT to the crane 1099
5 Crawler travel gear menu 1101
6 Menu Engine operation 1109
7 Menu Support 1123
8 Menu Assembly functions 1133
9 Menu Test system 1145
10 Operation Bluetooth™ Terminal 1147
11 Measures in case of problems 1149

6 Additional equipment 1153
6.02 Heater / engine preheating / Air conditioning system Crane operator’s cab 1154
1 Heating the crane cab 1155
2 Menu “Climate control settings” 1155
3 Operating the engine-independent auxiliary heater 1183
4 Bleeding the heating system 1199
5 Maintaining the engine independent heater 1199
6.05 Emergency take-down 1202
1 Emergency control 1203

6.08 Radio remote control 1206

1 General 1207

2 Operating and control instruments 1209

3 Start menu of the radio remote control 1211

4 Settings and status displays on the BTT 1215

5 Aligning the radio remote control to the crane 1217

6 Crawler travel gear menu 1219

7 Menu Engine operation 1229

8 Menu Support 1243

9 Operating screen radio remote control 1253

10 Menu Assembly functions 1295

11 Menu Test system 1307

12 Start up of radio remote control 1309

13 Crane operation with radio remote control 1315

14 Travel operation with radio remote control 1343

15 Measures in case of problems 1367

16 Inspection and maintenance 1373

7 Service and maintenance 1375

7.01 Maintenance and service - General 1376

1 Liebherr Service 1377

2 General specifications 1377

3 Cleaning and care of the crane 1378

4 Measures for work interruption or transport 1379

5 Maintenance work on gear components 1379

6 Maintenance work on the crane superstructure or boom 1380

7 Maintenance and inspection guidelines 1381

7.02 Maintenance intervals Crawler chassis 1385

1 Crane chassis maintenance and inspection schedule 1387

7.03 Maintanance intervals - Crane superstructure 1390

1 Crane superstructure maintenance and inspection schedule 1391

7.04 Maintenance guidelines - Crane chassis 1400

1 Servicing the travel gear 1401

2 Servicing the central lubrication system of the crawler carrier 1407

3 Crawler travel gear 1415

7.05 Maintenance guidelines - Crane superstructure 1425

1 Diesel engine 1427

2 Securing the tiltable cab for maintenance work 1431

3 Fuel system 1435

4 Urea system* 1439

5 Fuel container* 1441

6 Pump distributor gear 1443

7 Hydraulic system 1445

8 Central lubrication system 1451

9 Slewing ring connection 1459

10 Hoist gears 1461

11 Slewing gear 1465

12 Air dryer of the compressed air system of the crane superstructure 1467

13 Electrical system - Lighting 1467

14 Telescopic boom 1471

7.06 Fill quantities, lubrication schedule 1474

1 Fill quantities 1475

2 Lubrication schedule 1476

7.07 Service fluids and lubricants 1477

1 Specified service items and lubricants for Liebherr cranes 1479

8 Inspections of cranes 1489

8.01 Periodic crane inspections 1490

1 General 1491

2 Inspection of carrying crane structures, especially steel structures 1492

3 Inspection of tires and disk wheels 1565

4 Inspecting the hoist and retracting winches 1567

5 Inspecting the load hooks 1579

6 Inspection of the rope feed mechanism in the telescopic boom 1579

7 Inspection of locking system of telescopic boom 1581

8 Inspection of retaining ropes and anchor points 1583

9 Inspection of membrane accumulator 1585

10 Inspection of relapse cylinders 1585

11 Inspection of the safety controls on the relapse cylinders 1586
12 Inspection of rope pulleys 1586
13 Inspecting the function of the overload protection 1586
14 Inspecting the roller slewing ring connection 1586
15 Inspection of the mounting of the load bearing equipment 1587
16 Inspection of the tele extension with eccentric, illustration 1 1589
17 Inspection of change over pulleys, illustration 2 1589
18 Inspection of the oil and fuel reservoirs 1589
19 Inspection of the auxiliary reeving winch, recovery winch and spare gear winch 1589
20 Appendix 1590
8.04 Inspection of crane wire ropes 1600
1 Introduction 1601
2 Wire rope 1601
3 Operating behavior of steel ropes 1607
4 Condition of equipment that is functionally associated with the rope 1608
5 Rope inspection log 1608
6 Rope storage and marking 1608
7 Wire ropes and rope end connections 1608
8 Twisting caused by stretching in rotation-resistant ropes and its remedy 1613
9 Appendix 1 1617
10 Appendix 2 1619
11 Appendix 3 1621
12 Appendix 4 1621

9 General notes 1625
9.02 Supplementary service work 1626
1 Checks before start up 1627
2 Repair and maintenance tasks 1627
3 Important servicing 1627
4 Maintenance notes for replacement parts 1628
5 Recommendations for travel operation 1628
6 Disposal of fuels and greases 1628

90 Appendix 1629

90.01 Foreword to appendix 1630

1 Preface 1631

90.05 Update confirmation 1632

1 Update confirmation 1633

2 Customer information 1633

Index 1635

1 Description of crane

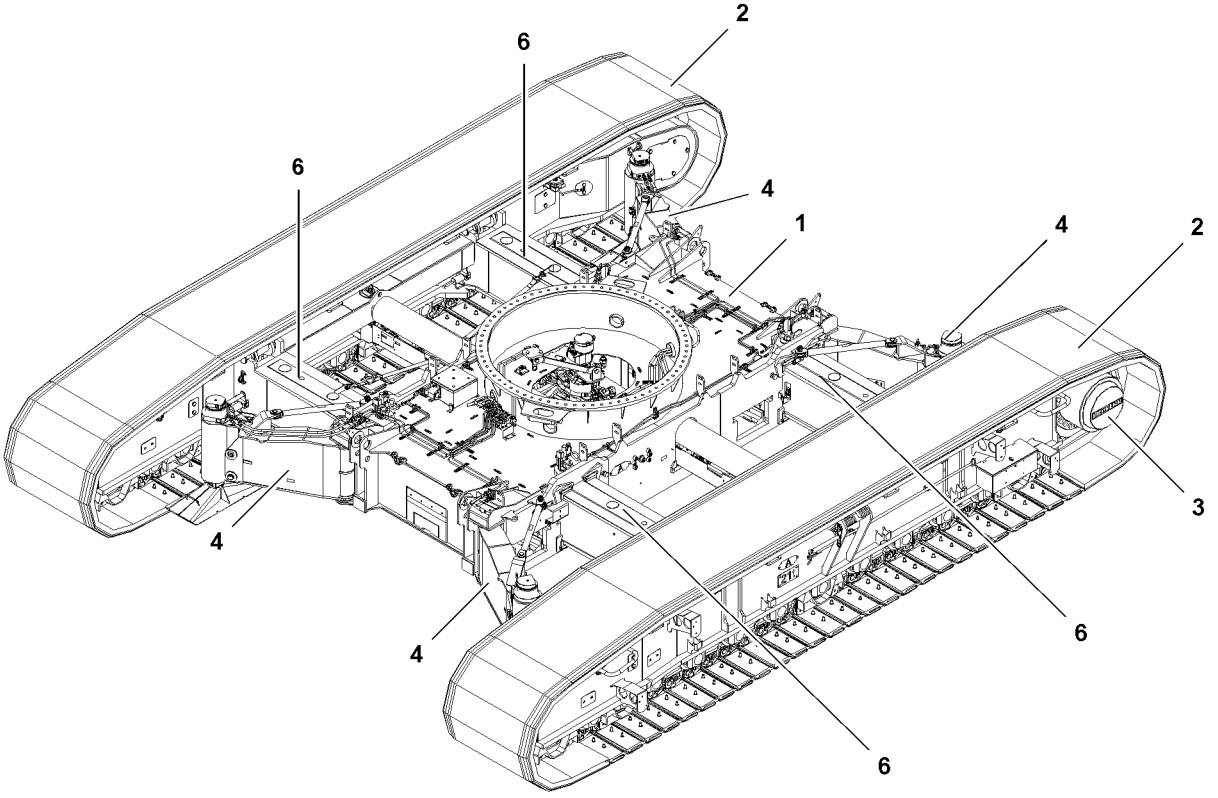

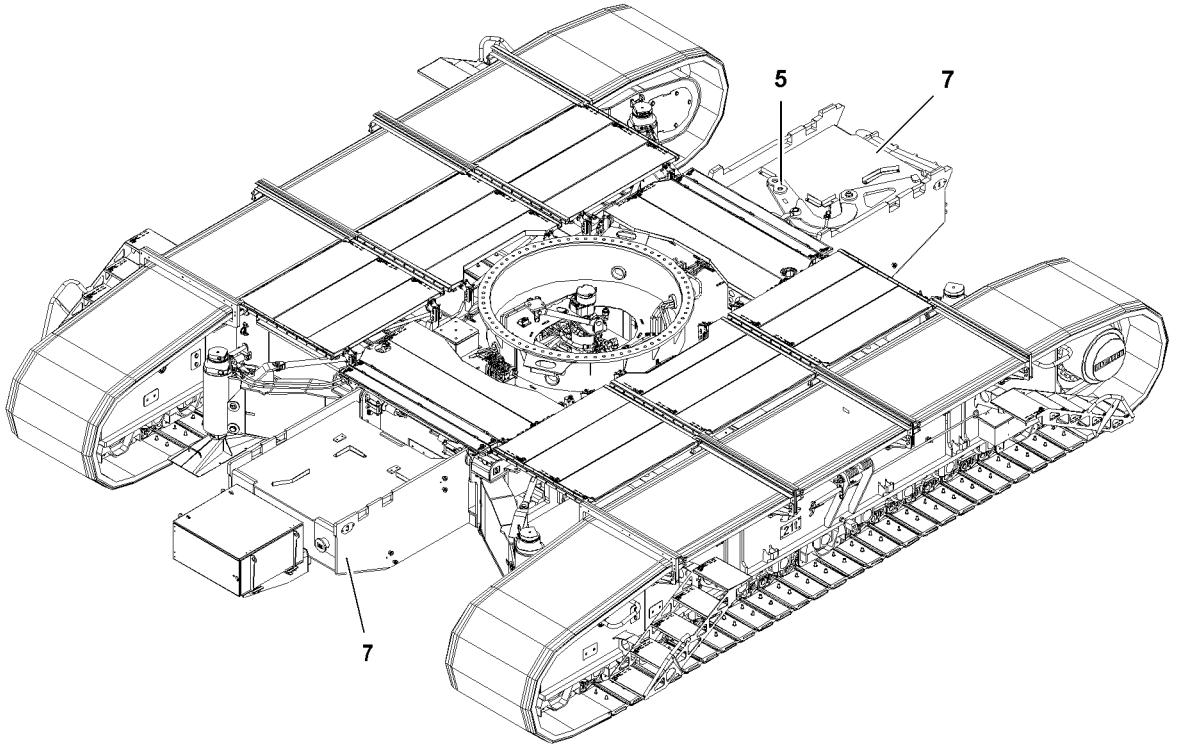

B116848

1 Crane components

1.1 Crawler track

1 Crawler center section
2 Crawler carrier
3 Travel gear
4 Hydraulic assembly support*
5 Assembly device*
6 Beams for track adjustment
7 Central ballast

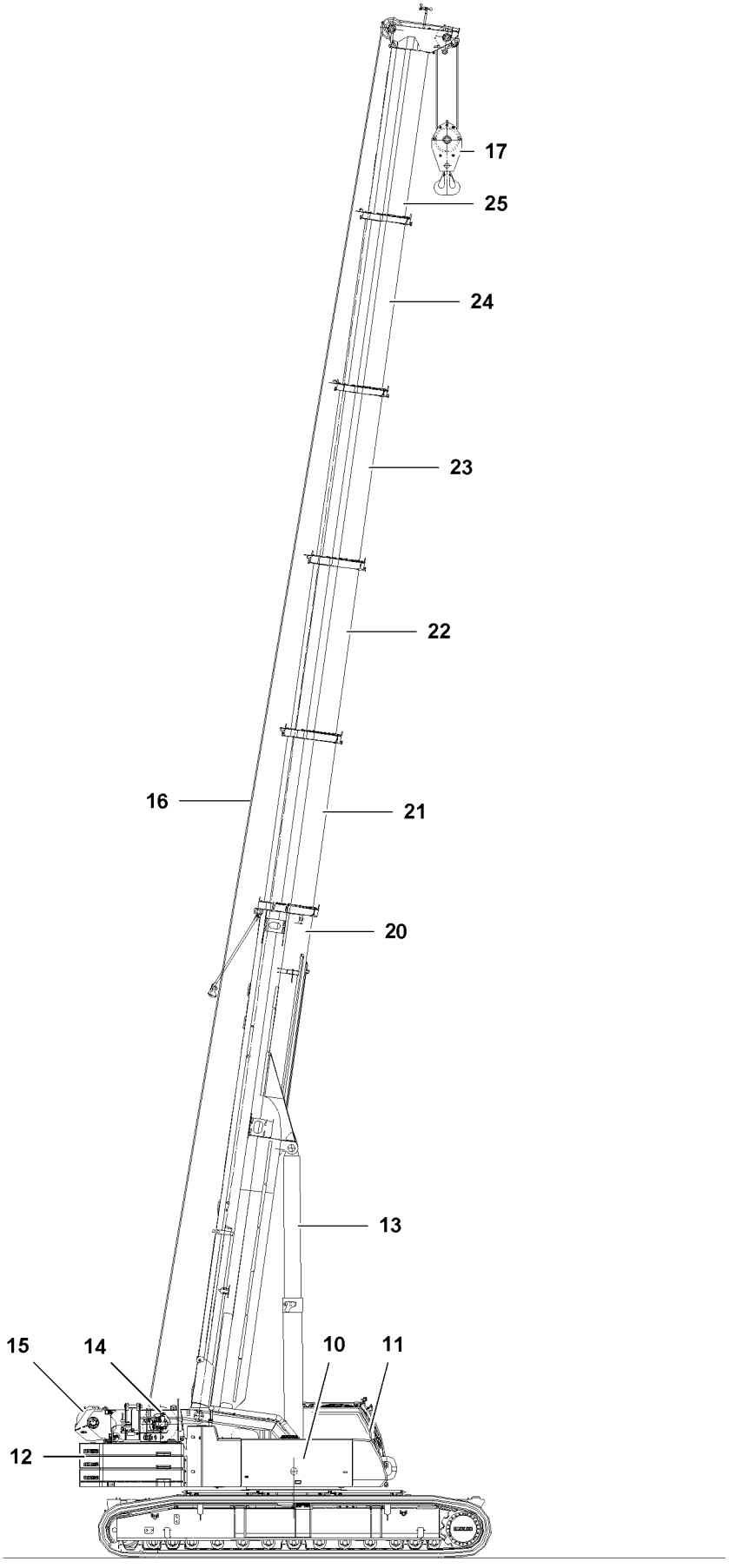

B116849

1.2 Crane superstructure

10 Crane engine
11 Crane operator's cab
12 Counterweight
13 Luffing cylinders • For telescopic boom adjustment
14 Winch 1
15 Winch 2*
16 Hoist rope
17 Hook block

1.3 Telescopic boom (T)

20 Pivot section
21 Telescopic section 1
22 Telescopic section 2
23 Telescopic section 3
24 Telescopic section 4
25 Telescopic section 5

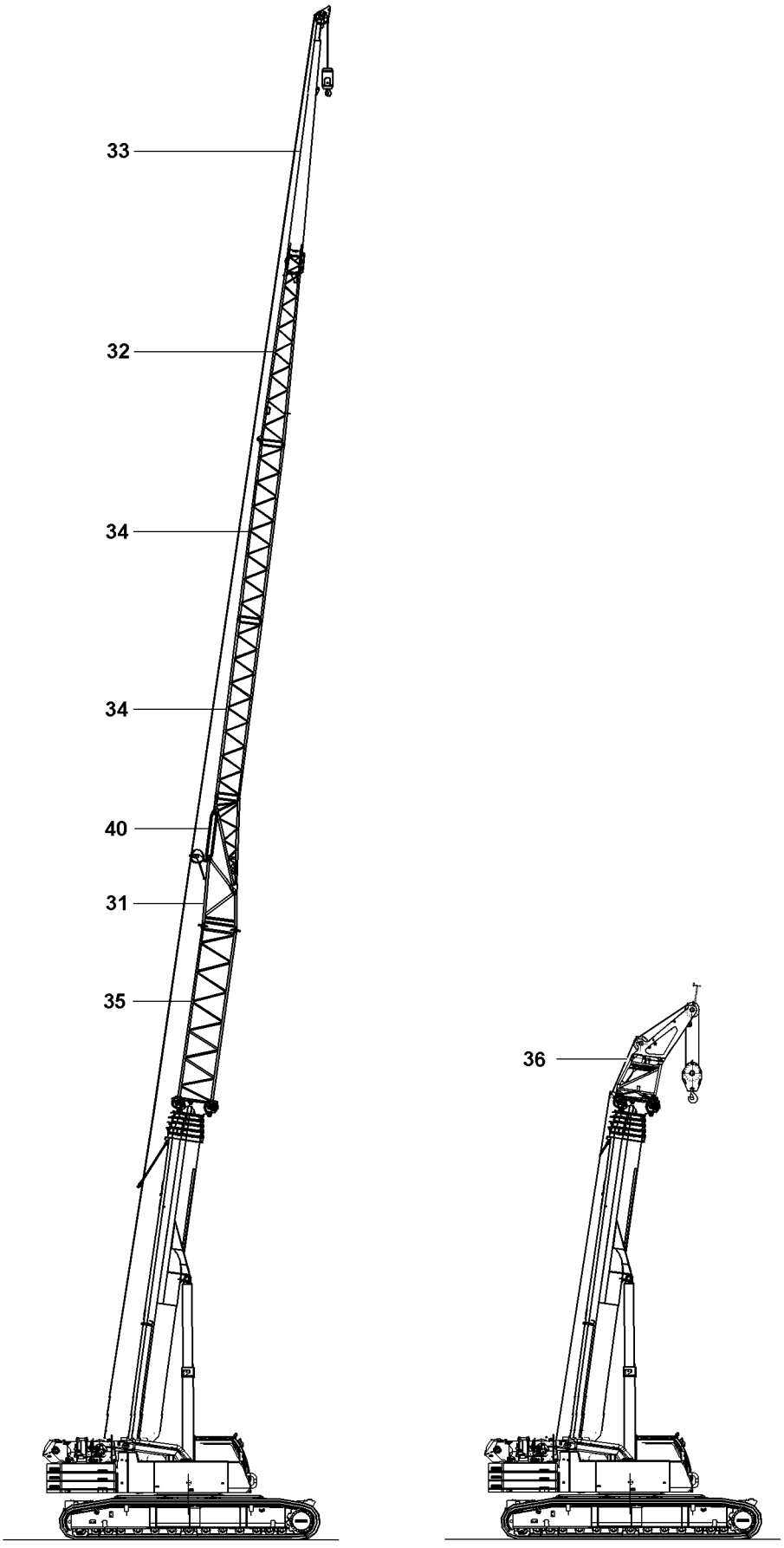

B117322

2 Auxiliary boom

2.1 Folding jib (TK)*

31 Adapter
32 Pivot section
33 End section
34 Intermediate section

2.2 Folding jib with extension (TVK)*

31 Adapter
32 Pivot section
33 End section
34 Intermediate section
35 Extension

2.3 Hydraulically adjustable folding jib (TNZK)*

31 Adapter
32 Pivot section
33 End section
34 Intermediate section
40 Control cylinder

2.4 Hydraulically adjustable folding jib with extension (TVNZK)*

31 Adapter
32 Pivot section
33 End section
34 Intermediate section
35 Extension
40 Control cylinder

2.5 Auxiliary boom (THK)*

36 Auxiliary boom

B195219

1 Crawler track

1.1 Frame

Torsion resistant box construction, consisting of crawler center section, two cross carriers and two crawler carriers. The crawler carriers can be removed from the telescoping beams. Hydraulic track width adjustment Hydraulic assembly support

1.2 Hydraulic track width adjustment

The track width adjustment is made via two independent, hydraulic cylinders.

1.3 Tracks

Crawler tracks with 1000 mm wide double grouser track pads.

1.4 Travel drive

Per crawler carrier, a hydraulic travel drive consisting of an axial piston motor, planetary gear with spring-loaded hydraulically-releasable travel brake. The crawler chains can be controlled synchronously as well as independently and counterrotating.
Travel speed: 0 -2.3 km/hr

1.5 Central ballast

20.0 t, hook ballast at 10.0 t, mounting on the crawler center section.

2 Crane superstructure

2.1 Frame

In-house manufactured, weight-optimized and distortion-resistant welded structure made from high-strength, close-grained structural steel. A 3-row slewing ring connection is used as the connecting element to the crawler travel gear, providing unlimited rotation.

2.2 Travel / crane engine

6-cylinder diesel, manufactured by Mercedes-Benz, water-cooled.
Fully electronic engine management.
Engine type, see also separate Operating instructions for the Diesel engine.

2.2.1 Engine type OM 926 LA with exhaust aftertreatment system SCR

Performance: 230 KW at 1800 rpm
Maximum torque: 1300 Nm at 1200 -1600 rpm

2.3 Crane drive

Diesel hydraulic with 5 axial piston adjustment pumps with servo control and power control, 1 dual gear pump.
Hydraulic drive in a compact design is flanged directly onto the Diesel engine, complete drive assembly encased for noise reduction.

2.4 Control

Electric “Load-Sensing” control, 4 working movements simultaneously controllable.
2 self-centering 4-way manual control levers.
Infinitely variable control of all crane movements by adjusting the hydraulic pumps, additional speed control by adjusting the diesel engine rpm.

2.5 Hoist gear

Axial piston variable displacement motor.
Liebherr rope winch with built-in planetary gear and spring-loaded stop brake.

2.6 Luffing gear

1 differential cylinder with safety check valves.

2.7 Slewing gear

Axial piston fixed displacement motor, planetary gear, spring-loaded stop brake.

2.8 Crane driver's cab

Corrosion resistant steel cab, large field of visibility, safety glass, comfort design
The crane operator's cab can be tilted back by 20° to improve visibility.

2.9 Safety equipment

LICCON2 overload system, hoist limitation, safety valves to prevent pipe and hose breakage, test system for service tasks.

2.10 Telescopic boom

Dent and distortion-resistant design made from high-strength, close-grained structural steel with oval boom profile, 1 pivot section and 5 telescopic sections. All telescopic sections are hydraulically extendable, independent of each other. Rapid-cycle telescoping system “Telematik”.
Boom length: 13.3 m to 60.0 m

2.11 Counterweight

Maximum 70.0 t counterweight*

2.12 Electrical system

Modern data bus technology

3 Auxiliary equipment

3.1 Folding jib

12.2 m to 22.0 m long, can be installed below 0°, 22.5° or 45° to the telescopic boom.
Hydraulic cylinder for stepless adjustment of folding jib from 0° to 45°.

3.2 Auxiliary jib

3.4 m

3.3 Telescopic boom extension

7 m long lattice section, as a result a 7 m higher pivot point for the folding jib.

3.4 Intermediate section

Two 7 m long lattice sections to extend the folding jib.

3.5 Winch 2

For 2-hook operation or for operation with folding jib if the main hoist rope is to remain reeved.

3.6 Auxiliary counterweight

Two additional ballast plates with one of 10.0 t for a total counterweight of 70.0 t.

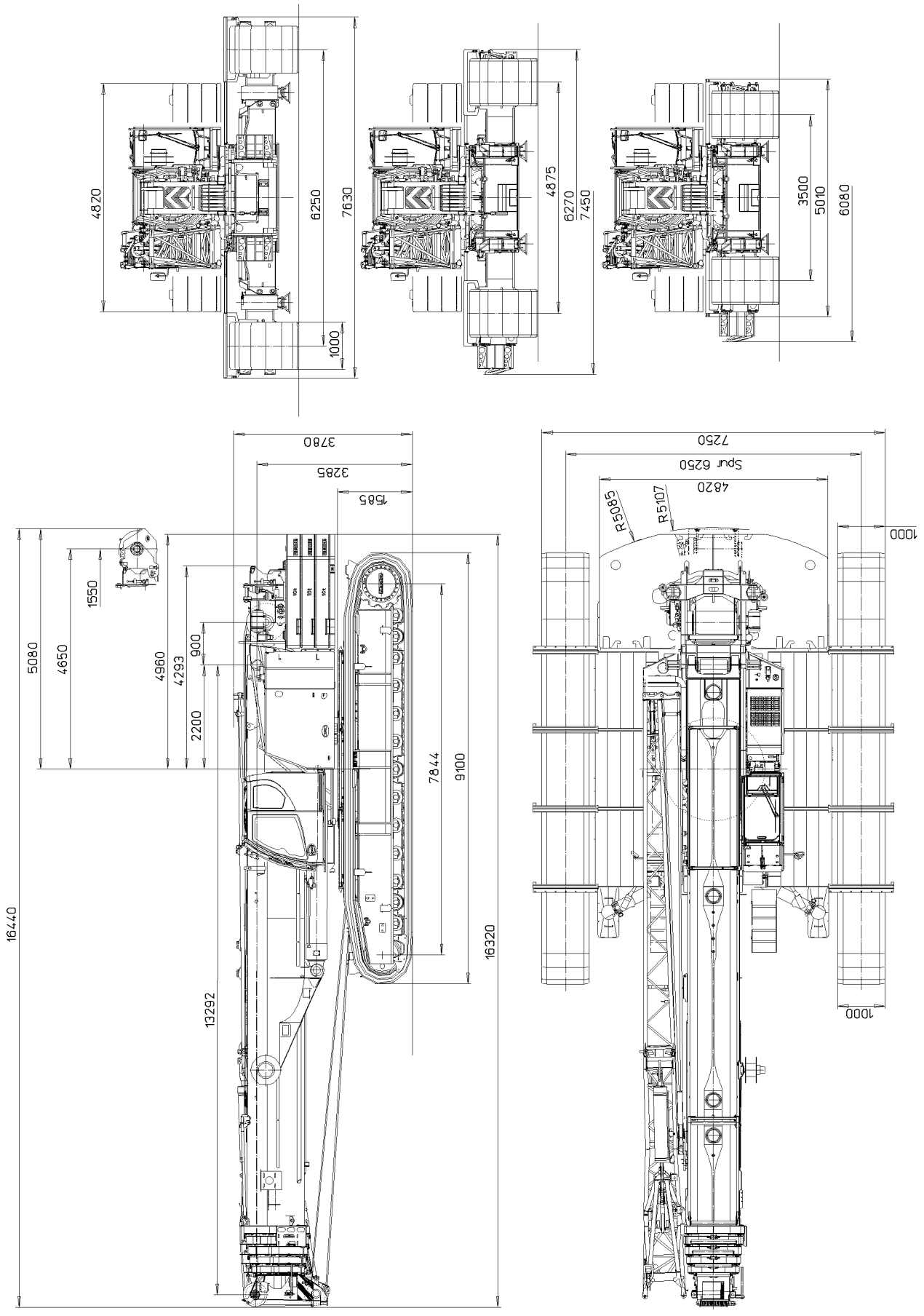
4820
6250
7630
1000
4875
6270
7450
3500
5010
6080
3780
3285
1565
1550
5080
4650
4960
4293
900
2200
7844
9100
16440
16320
13292
7250
Spur 6250
4820
R5085
R5107
1000
1000

B116835

1 Dimensions

Note
▶ Please refer to the left illustration.

2 Maximum surface pressure

	2–grouser pads 1.0 m	2–grouser pads 1.2 m *
Maximum surface pressure at nominal load	750 kN/m^2	620 kN/m^2

3 Workplace-related emission value

Sound pressure level at nominal engine rpm	Stationary noise L_{pA}
Crane operator's cab	77 db(A)

4 Vibrations

Vibrations transferred to the operator	Value
Total vibration value to which the upper body limbs are exposed	Not more than 2.5 m/s^2
Effective value of weighted acceleration to which the entire body is exposed to	Not more than 0.5 m/s^2

5 Speeds

5.1 Travel speeds

Crane data	Value
Travel speeds	0 - 2.3 km/h
Maximum permitted gradeability	47 %
Total propelling force	1130 kN

5.2 Crane speeds

Drives	Infinitely variable	Rope / rope length
Hoist gear 1	0 m/min - 130 m/min for single strand	23 mm /280 m
Hoist gear 2	0 m/min - 130 m/min for single strand	23 mm /280 m
Slewing gear	0 rpm - 1.5 rpm	
Luffing gear	Approx 50 sec. 0.9 ° to 82 ° boom position	
Telescoping	Approx. 420 sec. for boom length 13.3 m - 60 m	

6 Rope diameter

Type of rope	Rope diameter
Hoist rope 1	23 mm
Hoist rope 2	23 mm

7 Weights

7.1 Crawler crane

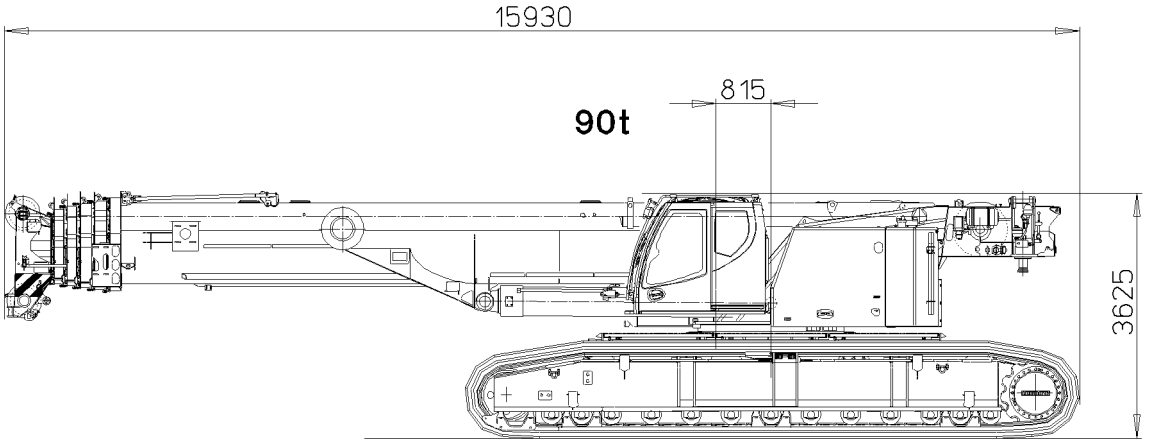

B116840

Crawler crane

Component	Weight	Width
Crawler, complete, 2-grouser 1000 mm	90 t	5010 mm
Crawler center section		
Hydraulic support		
Cross carrier		

Component	Weight	Width
Superstructure		
Telescopic boom 60 m		
Narrow track		

7.2 Crawler center section

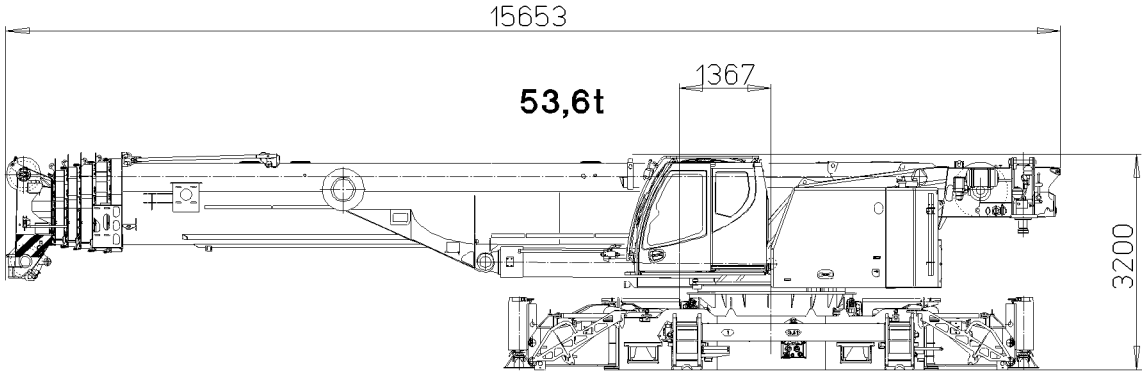

B116841

Crawler center section

Component	Weight	Width
Crawler center section	53.6 t	3000 mm
Hydraulic support		
Cross carrier		
Superstructure		
Telescopic boom 60 m		

7.3 Crawler center section

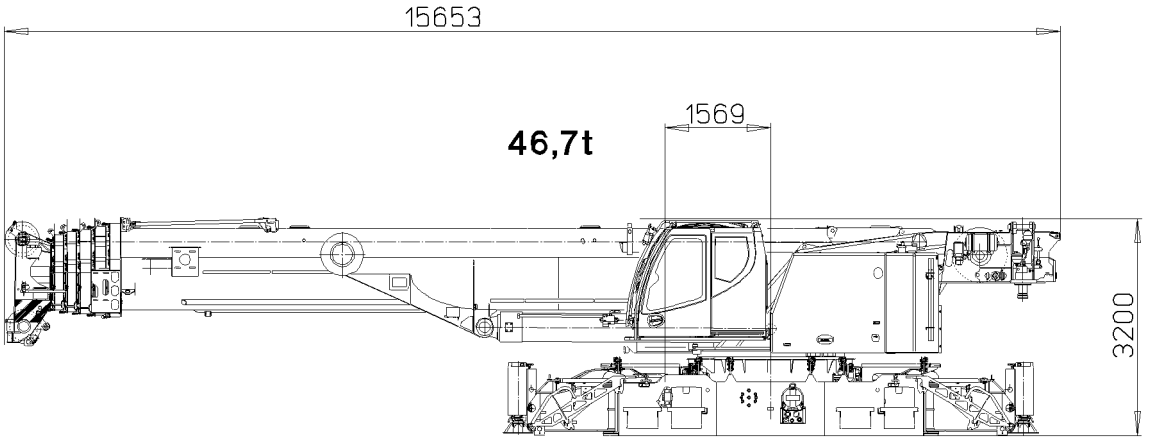

B116842

Crawler center section

Component	Weight	Width
Crawler center section	46.7 t	3000 mm
Hydraulic support		
Superstructure		
Telescopic boom 60 m		

7.4 Crawler, complete, 2-grouser pads 1000 mm

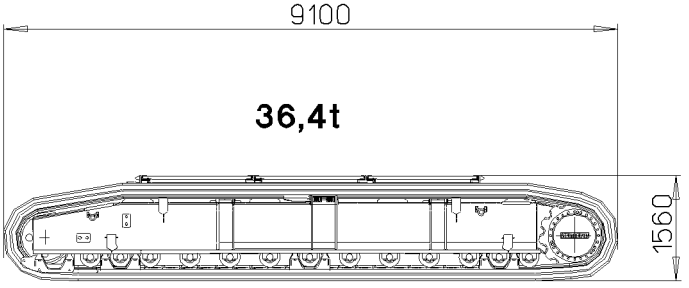

B116843

Crawler, complete, 2-grouser 1000 mm

Component	Weight	Width
Crawler, complete, 2-grouser 1000 mm	36.4 t	1000 mm

7.5 Receptacle plate

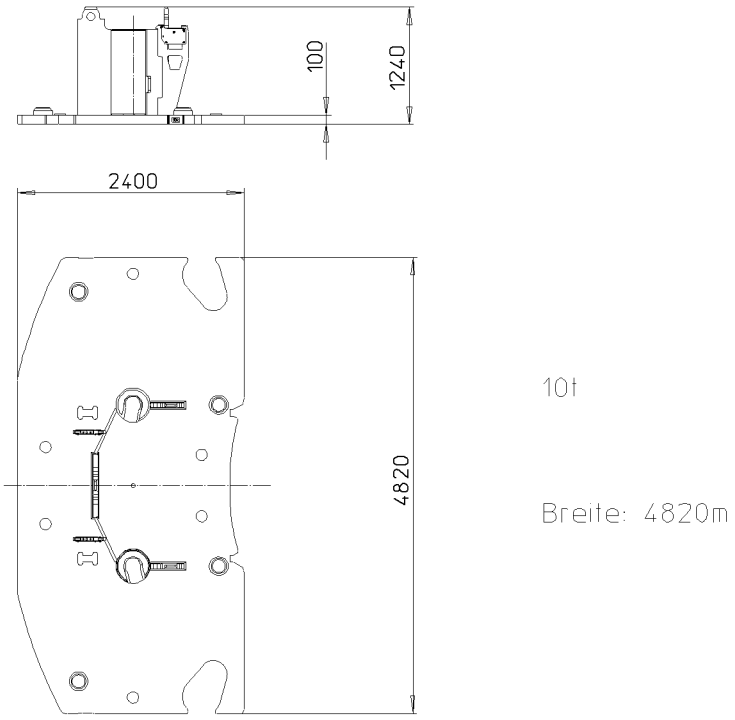

B116836

Receptacle plate

Component	Weight
Receptacle plate	11.0 t

7.6 Ballast plate

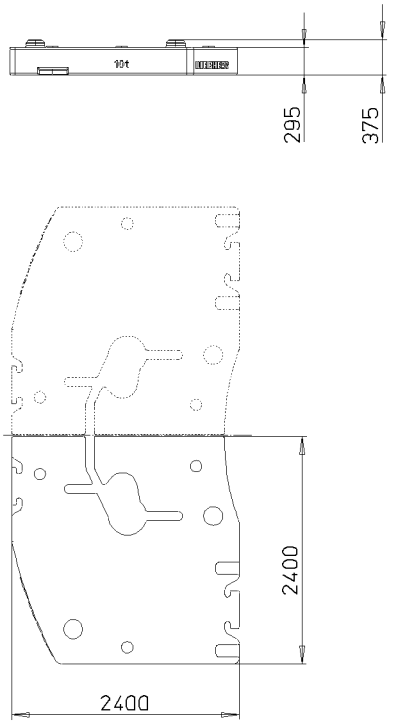

B116837

Counterweight plate

Component	Weight
Counterweight plate 5 t	10.0 t

7.7 Central ballast 10 t

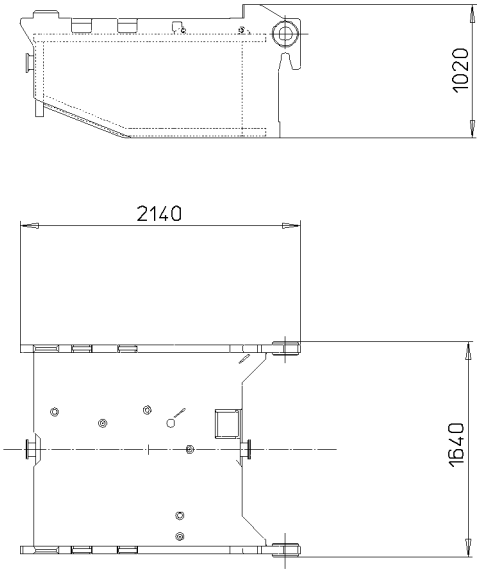

B116839

Central ballast 10 t

Component	Weight
Central ballast 10 t	10.0 t

7.8 Hoist gear 2 with rope

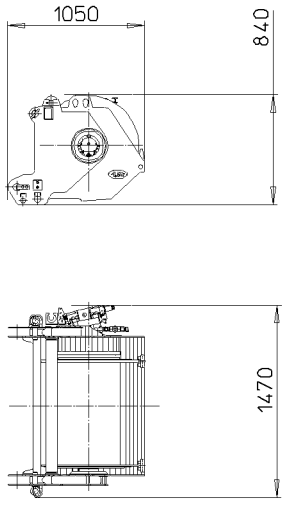

B116838

Hoist gear 2 with rope

Component	Weight
Hoist gear 2 with rope	1.90 t

7.9 Tele extension 7 m

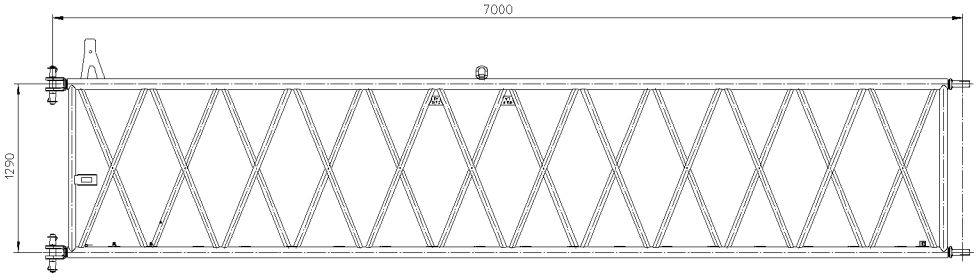

B116847

NA-intermediate section 7 m

Component	Weight	Width
Tele extension 7 m	0.7 t	0.82 m

7.10 Special auxiliary boom

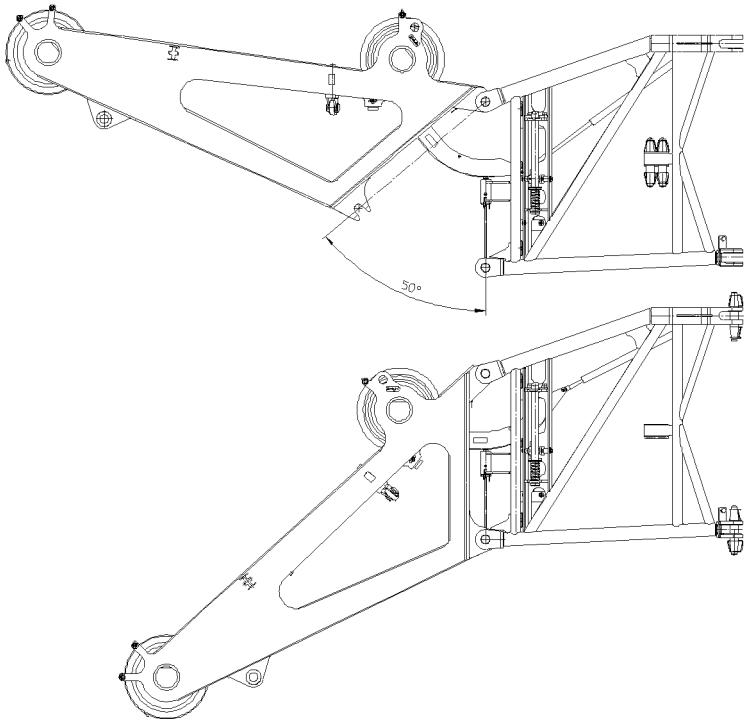

B116844

Special auxiliary boom

Component	Weight	Width
Special auxiliary boom	0.750 t	0.82 m

7.11 Lifting hook

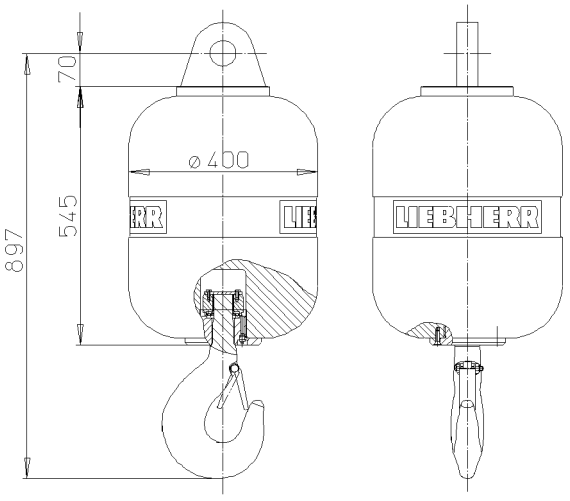

B116845

Lifting hook

Component	Weight	Width
Lifting hook	0.5 t	0.4 m

7.12 Hook blocks

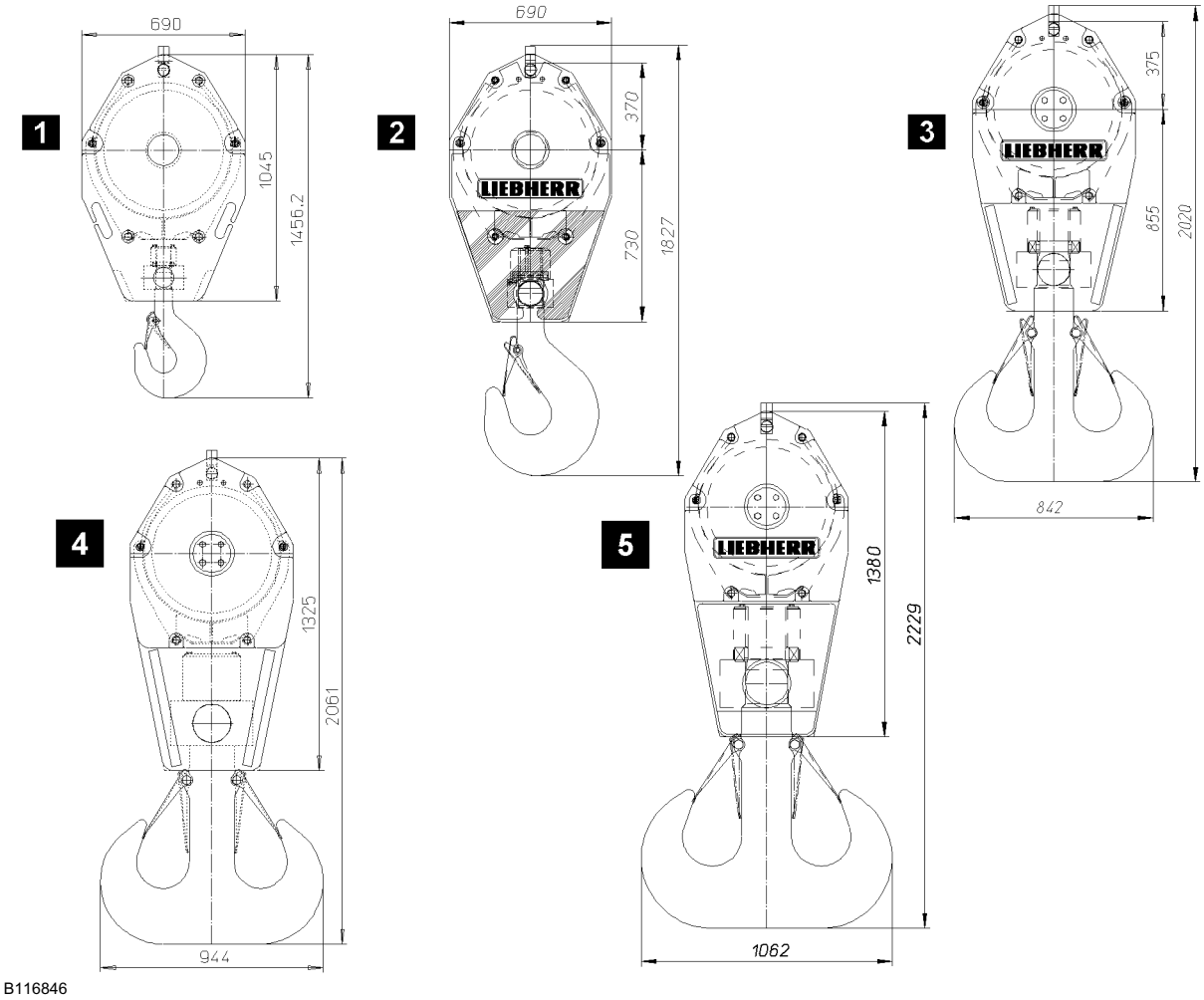

Hook blocks

	Component	Weight	Width
1	Hook block, 1-pulley	0.87 t	0.340 m
2	Hook block, 3-pulley	1.45 t	0.503 m
3	Hook block, 7-pulley	1.50 t	0.707 m
4	Hook block, 9-pulley	2.0 t	0.900 m
5	Hook block, 12-pulley	3.4 t	1.209 m

8 Lifting heights

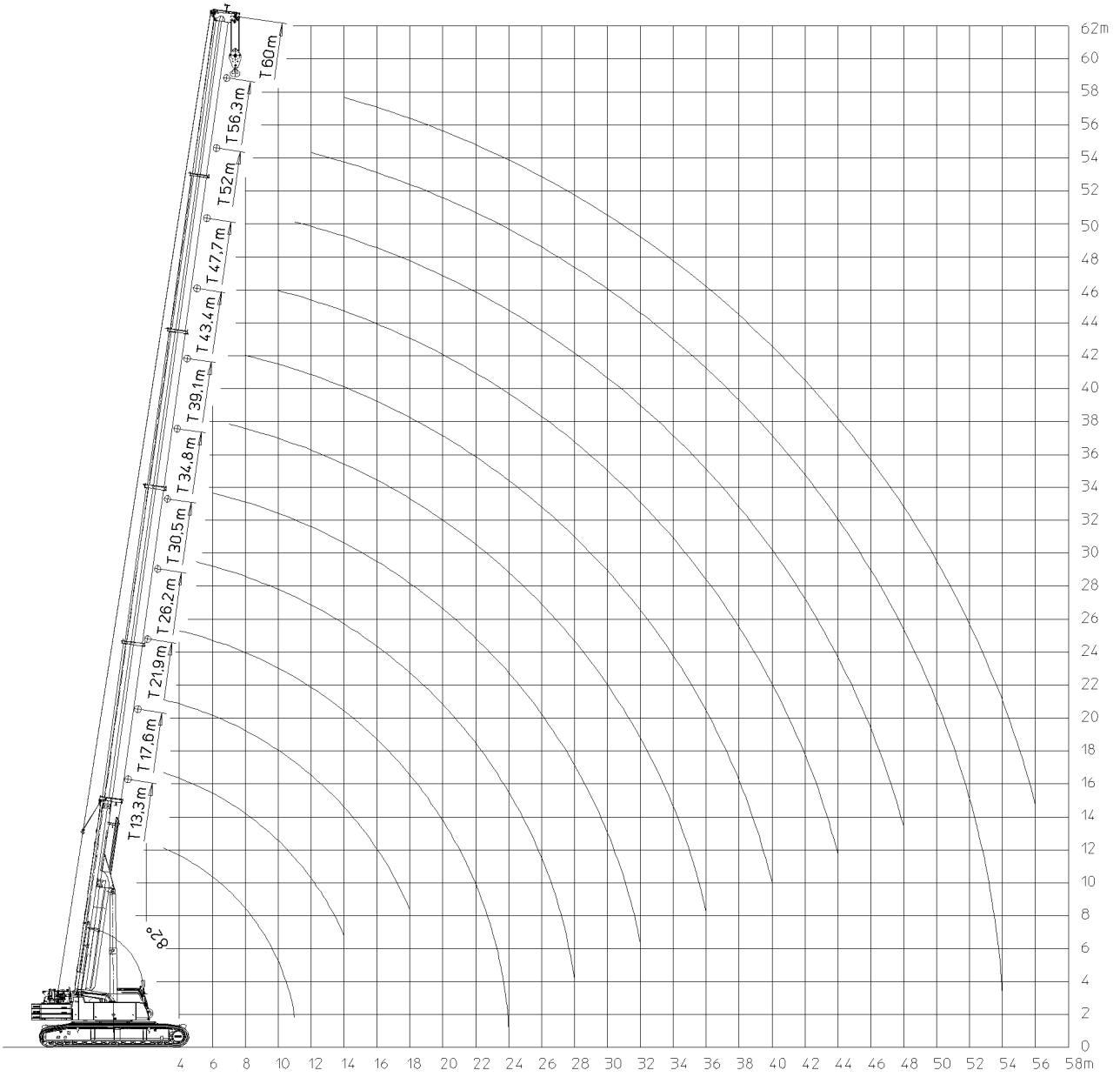

B116832

Telescopic boom (T)

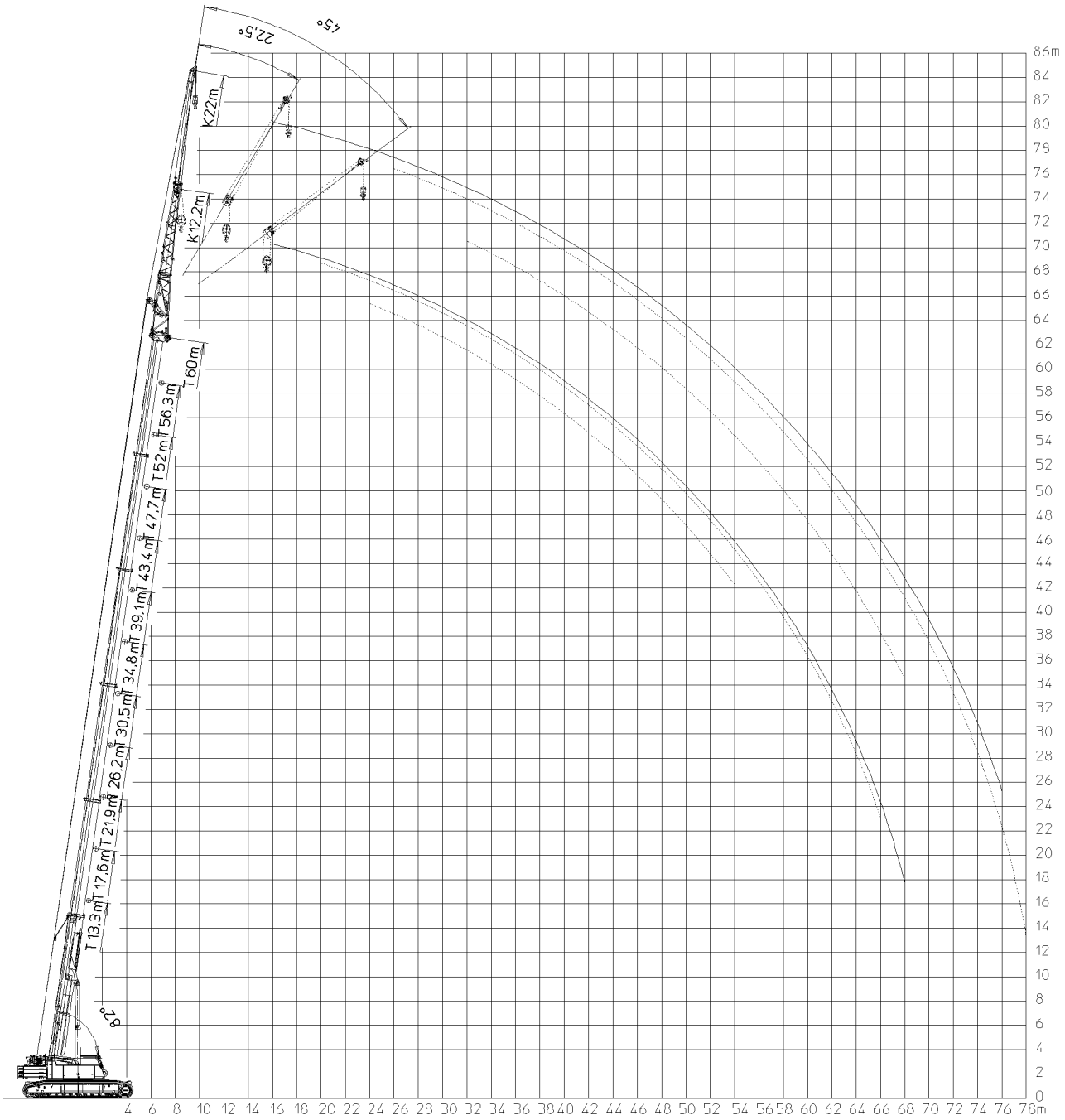

B116833

Telescopic boom with folding jib (TK)

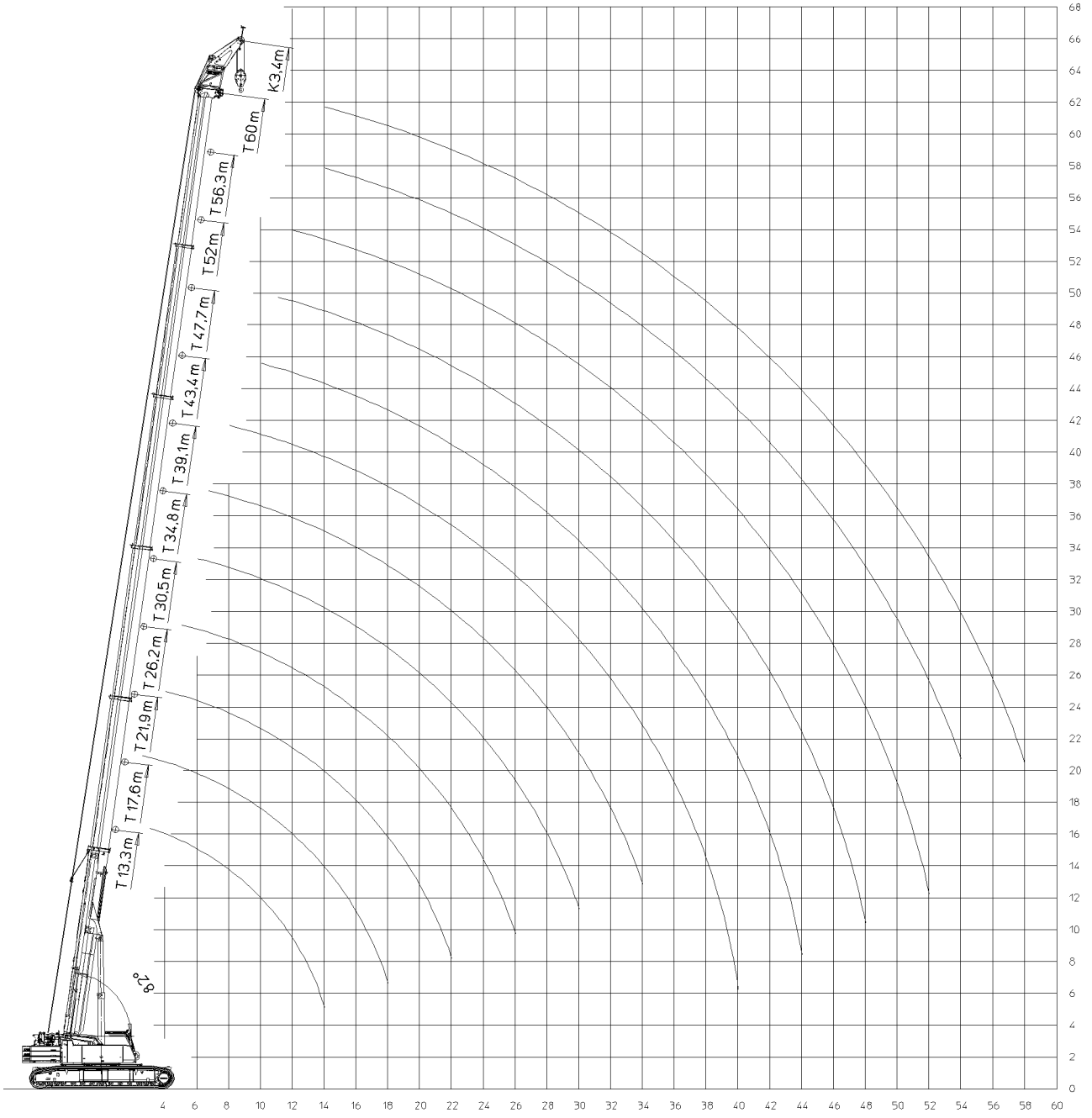

B116834

Telescopic boom with auxiliary boom (THK)

2 Safety

B195219

1 Crane operation planning

In addition to a perfectly working crane and a well-trained crew, **crane operation planning** is an important principle of safe crane operation.

DANGER
Missing information increases the risk of accidents!
Crane operation may not be possible or improvisation can result if a crane operator does not have all the required data.
▶ A crane operator must have exact data before starting any work!

The crane operator must obtain or receive the necessary information in a timely fashion before driving to the work site. In particular:
– type of crane operation
– height and width clearance measurements
– electrical transmission lines (including voltages)
– space restrictions at the work site
– movement restrictions caused by buildings
– weight and dimensions of the load(s) to be hoisted
– required hoisting height and boom projection
– ground bearing capacity at the work site

Based on the above information, the crane operator must assemble the equipment required to operate the crane:
– hook block / load hook
– auxiliary boom
– fastening equipment
– counterweight

B195219

1 General

Note

▶ The illustrations in this chapter are only examples. The illustrations may differ depending on the crane model.

1.1 Danger zone of crane

The danger zone of the crane is made up of the areas which are accessed during crane operation by the load or by movements of the crane or the crane components.

WARNING

Do not stay in danger zone!

Personnel within the danger zone cane be hit by falling loads or components!

Personnel in the danger zone can be caught by moving crane components or loads!

Fatal or severe injuries can be the result!

▶ Warn any personnel within the danger zone with the warning device of the crane!
▶ After the warning is issued, wait and ensure that no personnel remains within the danger zone!
▶ If required, block off the danger zone with a safety distance!

1.2 Danger of crushing when closing the windows

WARNING

Danger of crushing!

Never close the windows carelessly or uncontrolled. Significant crushing injuries can occur!

▶ During closing, watch the windows as it moves up!
▶ Make sure that no personnel or objects are wedged in!

1.3 Exhaust systems and other crane components with high temperatures

WARNING

Danger of burns!

You can get severely burnt on the surfaces of hot components!

This applies especially to exhaust systems, the engines and the respective gears in the crane chassis and in the crane superstructure!

▶ Let the components cool off before touching them!
▶ Proceed with special caution near heated crane components!

1.4 Movement on the crane

WARNING

Danger of slipping and falling!

The traction of steps, walkways and hand rails changes due to effects of the weather, such as wetness, snow, frost and dirt!

Personnel can be severely injured or killed!

The crane can be damaged!

▶ Step on the walkways and steps by taking the present conditions into account!
▶ Step or place a load only on the approved walkways and steps!
▶ Observed the signage!
▶ Replace damaged safety signs (warning signs) immediately!

1.5 Traffic endangerment and environmental damage

WARNING
Danger of slipping and skidding!
If the roadway becomes contaminated due to technical defects, open tank covers or leaking hydraulic oil, then this would pose a severe traffic endangerment!
Fatal accidents can result!
▶ Remove oil immediately and thoroughly!

blank page!

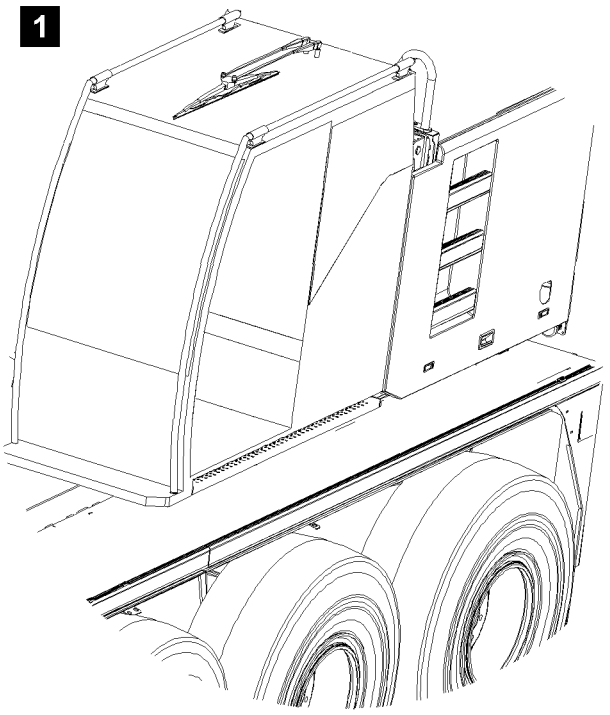

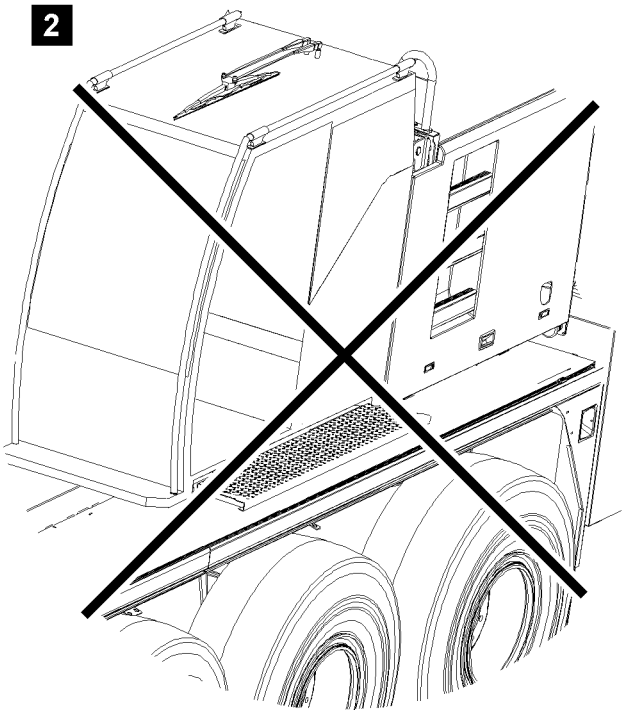

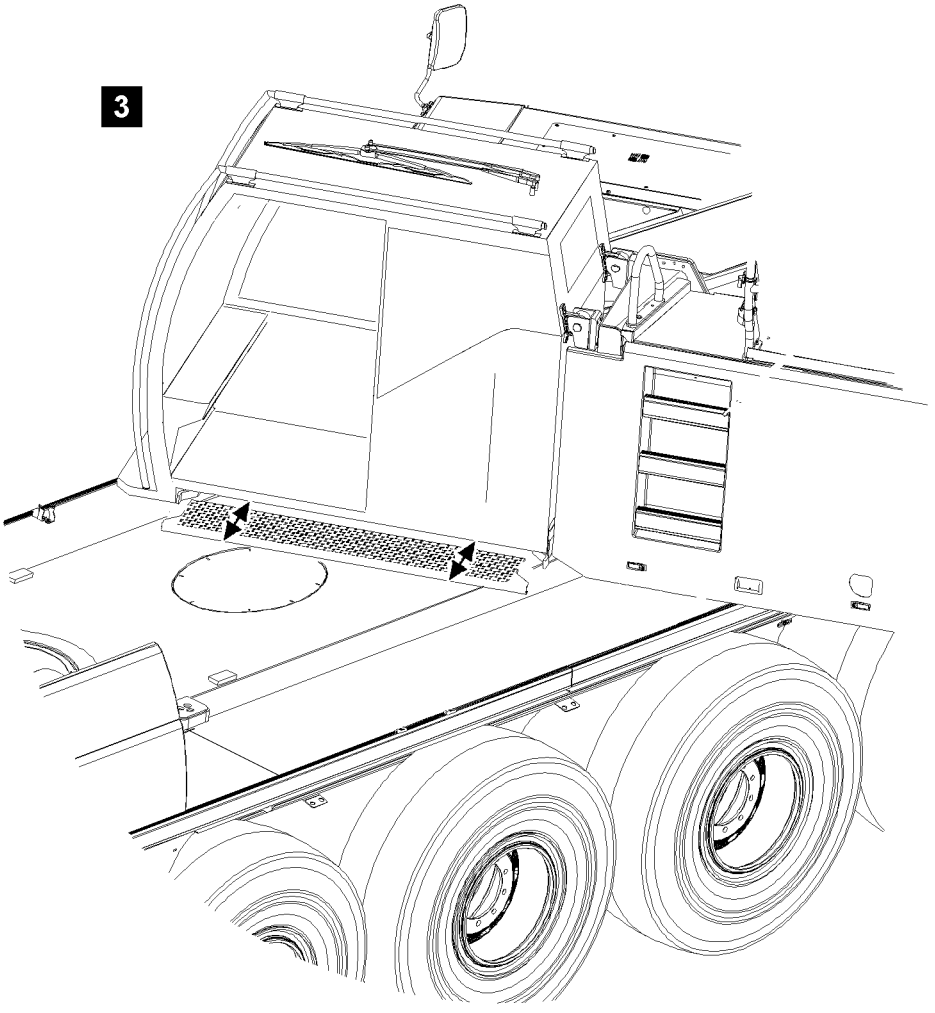

B109287

1.6 Crane cab with retracted / extended step

1.6.1 Entering / exiting of crane superstructure alignment length axis crane chassis

See illustration **1**

Before entering the crane cab or existing from the crane cab, the following prerequisites must be met:

– The crane superstructure is aligned in length axis of the crane chassis.
– The step under the crane cab is retracted.
– The crane cab with incline adjustment is in 0° position.
– All folding ladders are folded into the ascent and descent position.

Note

▶ When all folding ladders are folded into the ascent and descent position, then a safe descent is possible from every position. See Crane operating instructions, chapter 2.07.

WARNING

Danger of falling!

If the crane superstructure is aligned in length axis of the crane chassis and the step can **not** be moved in, then there is a danger of falling when entering / exiting! See illustration **2**.

Personnel can be severely injured or killed!

▶ Set up a suitable access, such as a ladder or pedestal, to ensure safe entry into the crane cab!
▶ When exiting the crane cab in position crane superstructure in length axis crane chassis, always move the step in completely!

1.6.2 Entering / exiting a swung crane superstructure

See illustration **3**

Before entering the crane cab or existing from the crane cab, the following prerequisites must be met:

– The crane superstructure is swung to the point where a safe access to walkable surfaces of the crane chassis is ensured.
– For the crane cab with incline adjustment, the crane is in 0° position.
– All folding ladders are folded into the ascent and descent position.

Note

▶ Use extendable step!
▶ The extended step allows comfortable entry into the crane cab as well as safe exit from the crane to the crane chassis!
▶ When all folding ladders are folded into the ascent and descent position, then a safe descent is possible from every position. See Crane operating instructions, chapter 2.07.

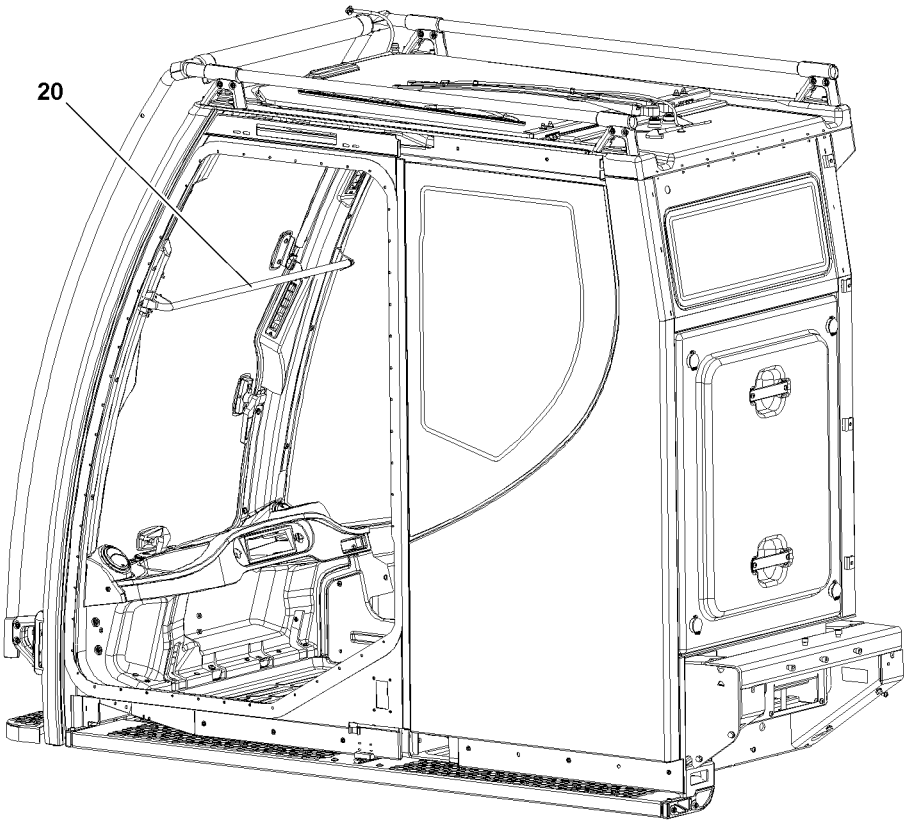

B114885

1.7 Crane cab with incline adjustment

WARNING
Danger of falling!
If the crane cab cannot be swung from an inclined position (for example 20° position) to the 0° position, for example due to a problem, then utmost caution must be used when entering / exiting the crane cab!
There is a danger of falling. Personnel can be severely injured or killed!
- ▶ For safety reasons, we recommend to take advantage of outside help!
- ▶ If necessary, have pedestals or other suitable entry aids set up to ensure safe exit from the crane cab!

WARNING
Danger of accident!
If the door of the crane cab is opened in inclined position, then the door can move back suddenly!
Hands can be crushed or injured!
- ▶ When the crane cab is in inclined position, open the door carefully!

1.8 Safety bar

Note
- ▶ The safety bar **20** is installed to protect the crane operator from a danger of falling when the front windshield is open.
- ▶ Do not use the safety bar **20** as a handle.

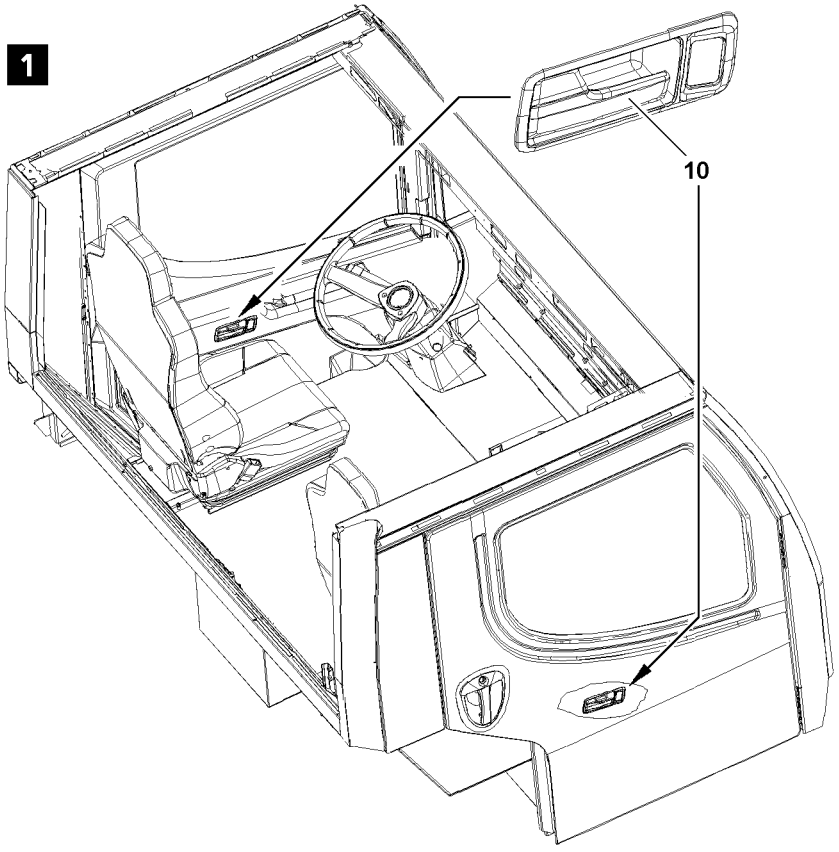

B112864

2 Emergency exit

2.1 Emergency exit - driver's cab

The driver's cab can be exited through the “left driver's door” or the “right passenger door”, see illustration **1**.

Note

▶ Exit the driver's cab through the “left driver's door” or the “right passenger door”, see illustration **1**: Pull and open the door handle **10** on the “left driver's door” or the “right passenger door”.

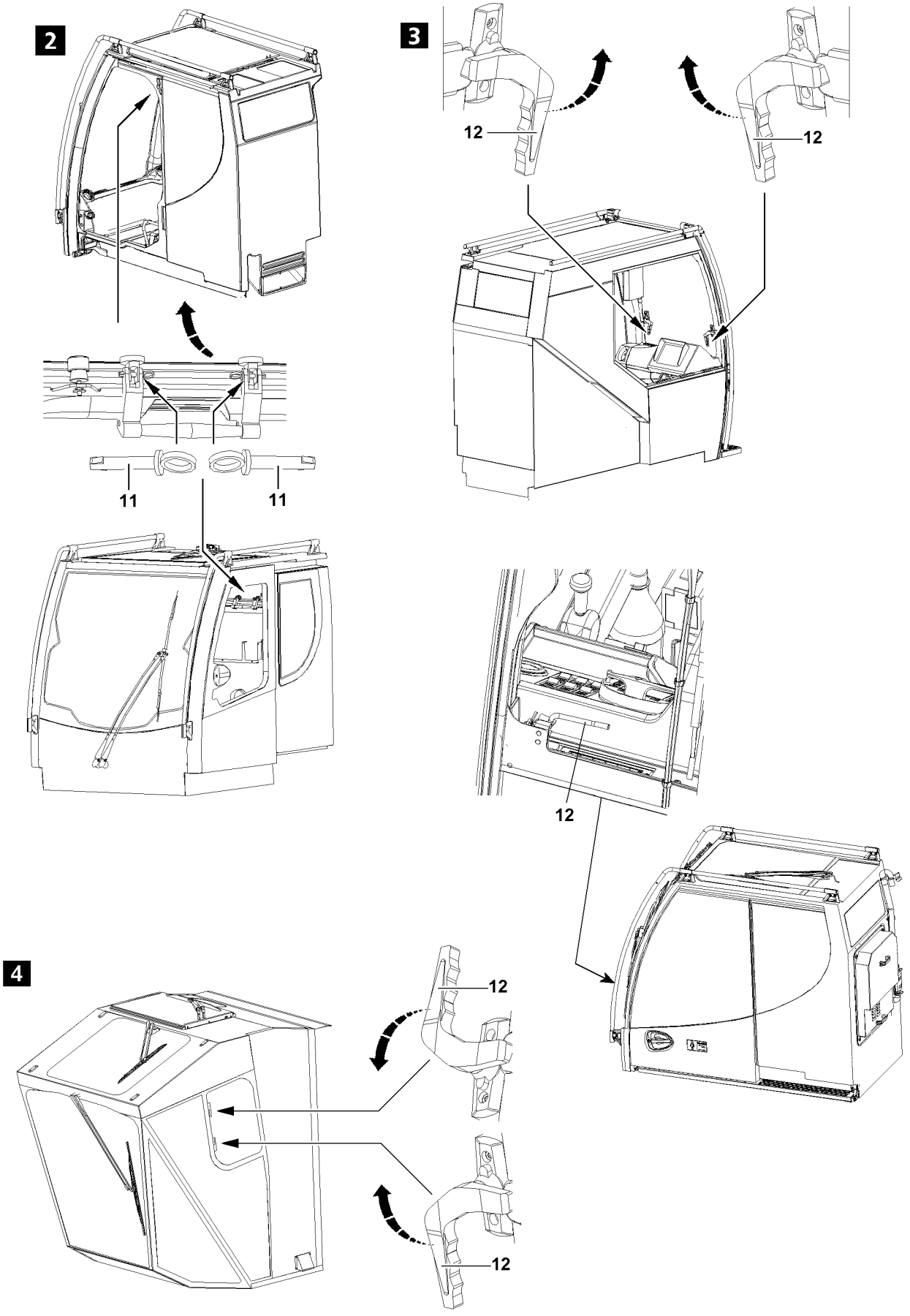

B112865

2.2 Emergency exist crane cab

WARNING
Danger of falling!
If it is not possible to safely leave the crane cab through the door or to reset the crane cab from inclined position to horizontal position, then the crane operator can fall from the crane cab during the emergency exit and be severely injured!
▶ Be especially careful when exiting at emergency exit!
▶ If the crane cab cannot be exited safely, use outside aid!

In case of an emergency, if it is not possible to leave the crane cab through the door, the crane cab can be exited through one of the following openings, depending on the model:
– **Roof window**, see illustration **2**: Pull the pins **11** on the left and right and open the roof window upward.
– **Rear window**, see illustration **2**: Pull the pins **11** on the left and right and open the rear window upward.
– **Front window**, see illustration **3**: Unlock the left and right handles **12** and open the front window.
– **Side window**, see illustration **4**: Unlock the top and bottom handles **12** and open the side window.

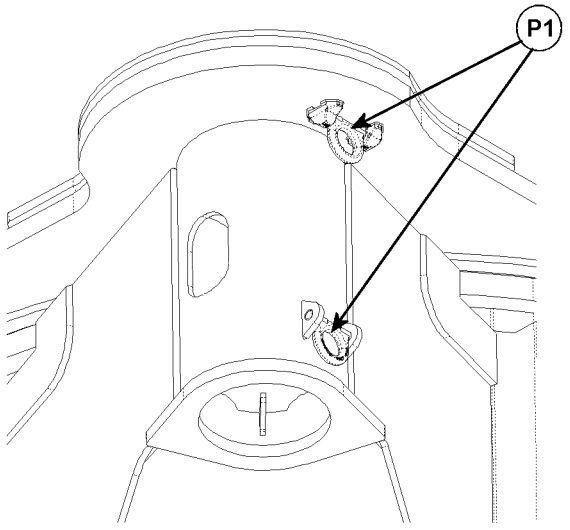

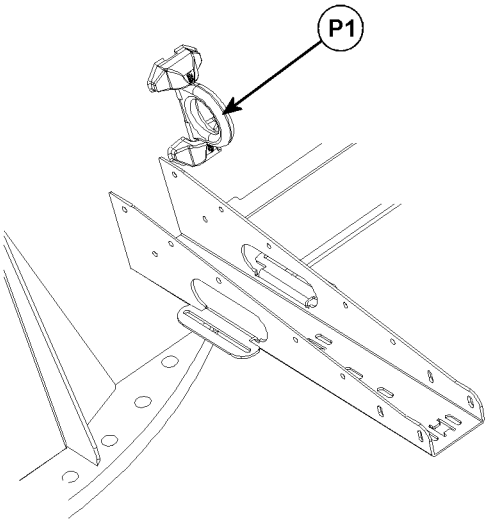

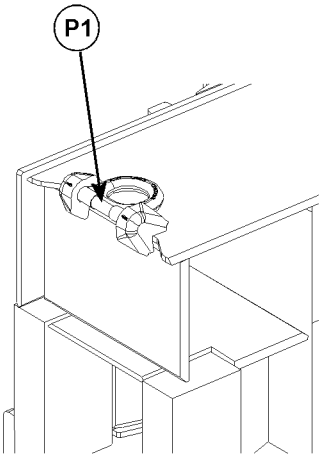

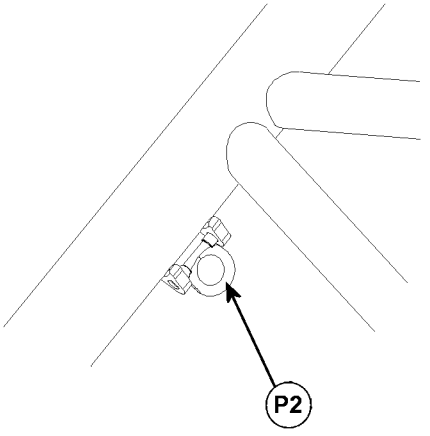

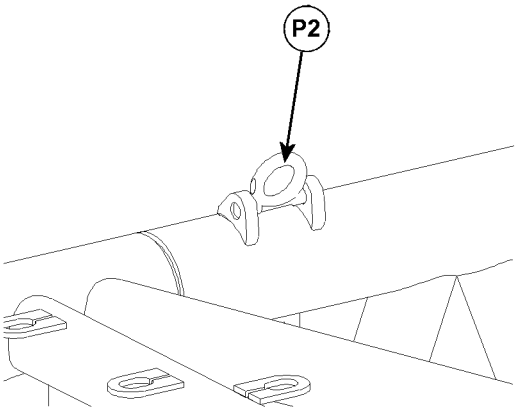

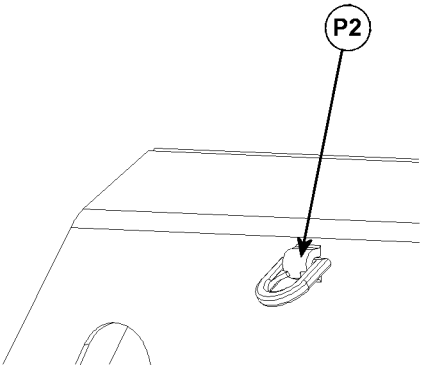

B111681

3 Checking the rigging and fastening points

The rigging and fastening points are marked as follows:
P1: Rigging points
P2: Fastening points

Before every operation and at regular intervals, check the rigging points **P1** and the fastening points **P2** for cracks of the welding seam, significant corrosion, wear and distortion.
The inspection criteria are:
– Completeness of rigging points **P1** and fastening points **P2**.
– Distortion of carrying parts.
– Mechanical damage such as severe nicks.
– Changes in diameter due to wear.
– Significant corrosion (pitting).
– Cracks on carrying parts.
– Cracks or other damage on the welding seam.

WARNING
Danger of accident!
When using rigging and fastening points which are not operationally safe, severe personal and property damage can occur!
▶ Have rigging and fastening points, which are not operationally safe replaced with new rigging and fastening points by authorized and trained expert personnel!
▶ When hooking and unhooking the rigging and fastening equipment, handle carefully to avoid crushing, sheering, catch and impact points!
▶ Eliminate damage of rigging and fastening equipment due to sharp edged stress loads!

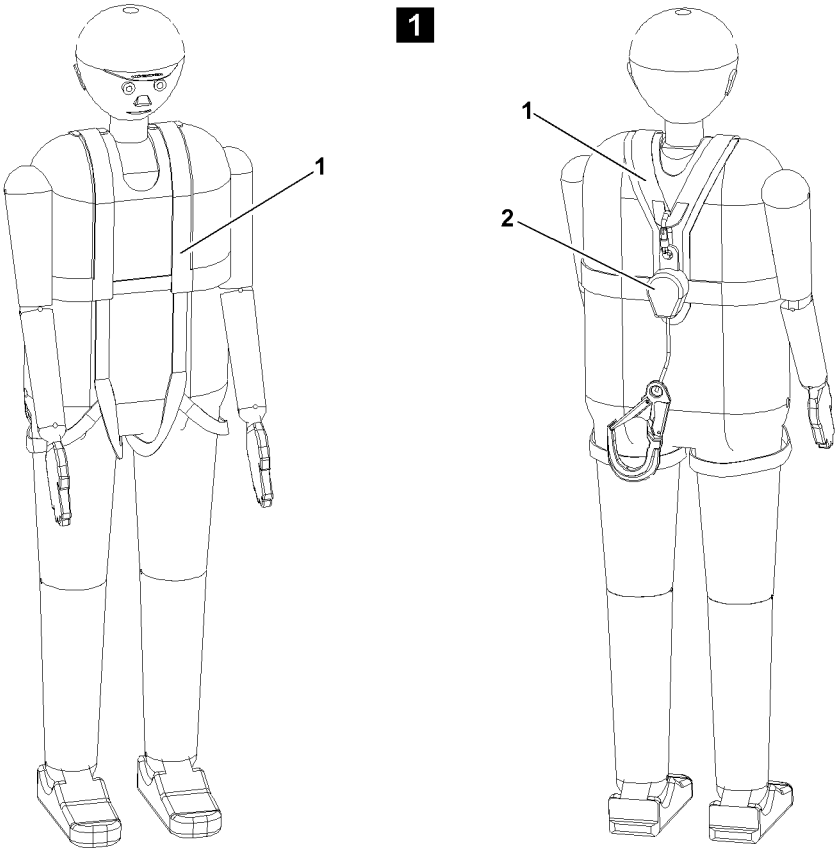

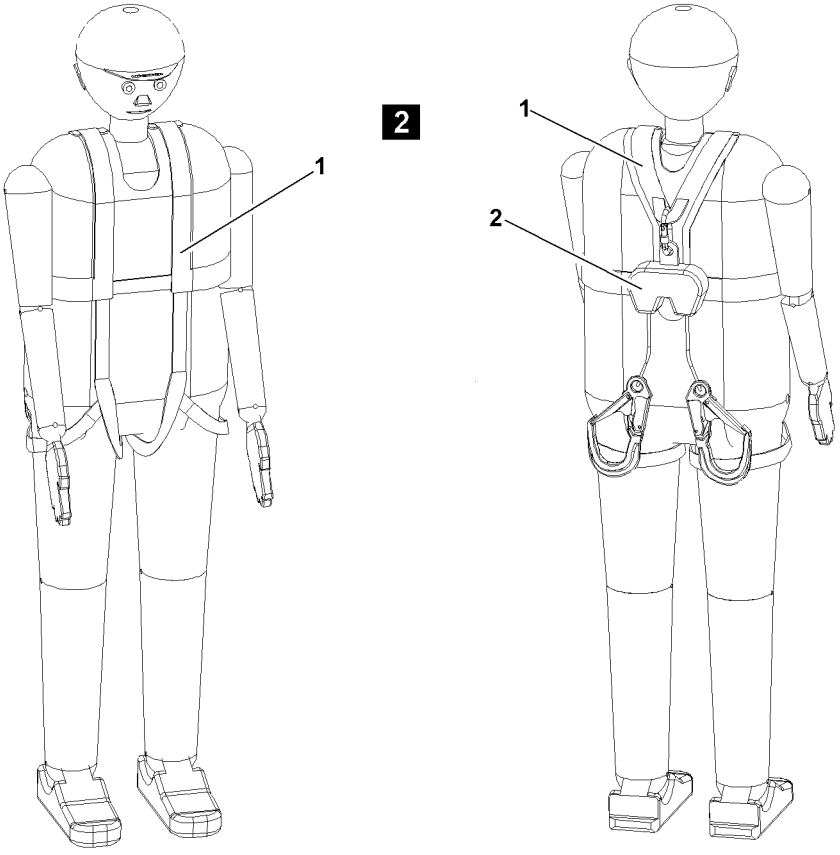

B111691

4 Personal protective equipment

WARNING
Danger of falling!
If personal protective equipment is not worn during assembly or maintenance work, then the assembly personnel can be killed or severely injured!
- ▶ Observe and adhere the operating instructions and maintenance instructions of the manufacturer for the personal protective equipment!
- ▶ Ensure through regular inspections that the product identification is not damaged!
- ▶ The crane operator must make personal protective equipment available for the assembly personnel!
- ▶ The crane operator must ensure that the personal protective equipment is worn by the assembly personnel!
- ▶ The assembly personnel is obligated to carry the personal protective equipment and to wear it!
- ▶ Check personal protective equipment before use for damage and completeness!
- ▶ Replace defective or damaged personal protective equipment with functioning protective equipment!

WARNING
Impermissible fall arrest system!
If a fall arrest system is used, which was not obtained via Liebherr-Werk Ehingen GmbH, there is a danger of falling! Another fall arrest system is **NOT** designed for the crane structure!
Personnel can be severely injured or killed!
- ▶ Utilize exclusively fall arrest systems from Liebherr-Werk Ehingen GmbH!

The personal protective equipment includes the following equipment:
- Supplied fall arrest systems (safety harness **1** and height safety equipment **2**).
- Head protection with chin strap: Protection from falling parts at assembly and disassembly. Hitting the head at assembly and disassembly of lattice mast equipment.
- Non-slid and slip resistance safety gloves.
  As a rule, when working with ropes, penetration safe safety gloves must be used.
- Safety shoes: Protection from falling parts at assembly and disassembly.
- Warning apparel.

WARNING
Danger of fatal injury!
Even personal protective equipment does not provide 100 % protection!
A helmet can protect against small falling objects, but not against falling loads!
Personnel can be killed or seriously injured!
- ▶ Always remain alert!
- ▶ Always be safety conscious!
- ▶ Standing under suspended loads is prohibited!

WARNING
Danger of accident!
If the following measures are not carried out, personnel can be killed or severely injured!
- ▶ A plan for rescue actions, taking all possible emergencies into account, must be on hand!
- ▶ The following points can endanger the safe function of the personal protective equipment: For example extreme temperatures, routing of connecting devices, routing over or around sharp edges, chemical influences, electrical effects, cuts, abrasion, climatic influences or swing movements during falls!
- ▶ For that reason, safety preparations must be made!

WARNING
Important for the safety of the user!
- ▶ If the personal protective equipment is sold to another country, then the purchaser must make the manufacturer's operating instructions as well as the inspection and maintenance documents available in the language of the user country!

blank page!

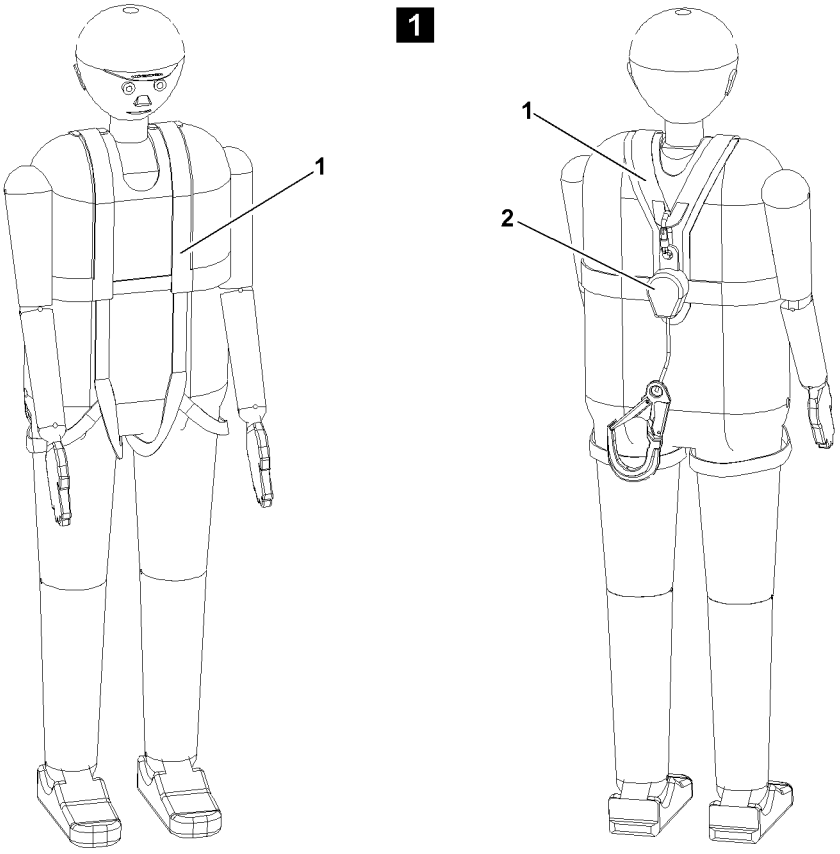

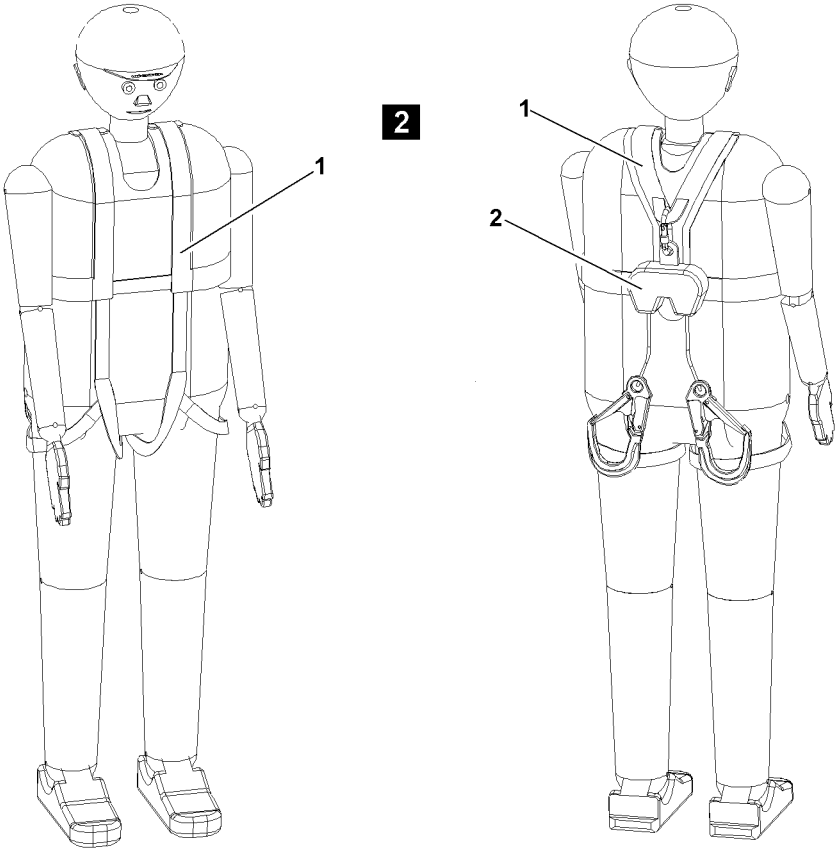

B111691

4.1 Supplied fall arrest system (safety harness and height safety equipment)

The supplied fall arrest system, consisting of safety harness **1** and height safety equipment **2** must be worn where no other fall protection equipment, such as railings, can be installed for technical reasons. In these cases, marked fastening and hook points for the fall arrest systems are provided on the components.

Note

▶ For cranes, which do not include the fall arrest system and the height rescue system as part of the scope of delivery can purchase the fall arrest system, consisting of safety harness **1** and height safety equipment **2** as well as the height rescue system at the Liebherr-Werk Ehingen GmbH.

Part of the category “Aids for working aloft” are, for example:

– Lifting platforms
– Scaffolding
– Auxiliary cranes

WARNING

Danger of falling!

If the fall arrest system is not worn during assembly or maintenance work, then the assembly personnel can fall down and be killed or severely injured!

▶ All work aloft, where there is a danger of falling must be carried out with suitable aids!
▶ If fall protection equipment is available, then the fall protection equipment must be used, see Crane operating instructions, chapter 2.06!
▶ If aids are not available and work cannot be carried out from the ground, then the assembly personnel must secure themselves with the supplied fall arrest system to prevent falling!
▶ The supplied fall arrest system must be fastened on the fastening and hook points as well as on the safety ropes. For safety points, see Crane operating instructions, chapter 2.06!
▶ The assembly personnel must be instructed in practice on how to wear the supplied fall arrest system (safety harness **1** and height safety equipment **2**)! Annual practice instructions and drills must be carried out!
▶ The supplied fall arrest system must be used!
▶ The fall arrest system consists of a safety harness **1**, approved according to **EN 361** and a height safety equipment **2**, approved according to **EN 360** (for horizontal application and sharp edges)!
▶ The supplied fall arrest system may not be changed in its configuration! Extending or shortening the fall arrest rope is prohibited!
▶ The fall absorber is integrated in the height safety device **2**. The utilization of an additional fall absorber is prohibited!
▶ The supplied fall arrest system is effective from a height of 2.5 m!
▶ The fall space must be free of obstacles!
▶ The intended safety points designed for this purpose on the crane must be used!
▶ The operating instructions of the manufacturer for the supplied fall arrest systems (safety harnesses **1** and height safety equipment **2**) must be observed and adhered to!
▶ Only step on the aids, ladders and catwalks with clean shoes!
▶ Keep aids, ladders and catwalks free of heavy dirt, snow and ice!
▶ The safety harness **1** and the height safety equipment **2** must be inspected annually by authorized and trained expert personnel and the results must be documented in the inspection log book!
▶ After every fall, the safety harness **1** and the height safety equipment **2** must be removed and inspected by an authorized and trained expert and the results must be documented in the inspection log book!
▶ The results must be documented in the inspection log book!
▶ Only after written release by expert personnel may be fall arrest system be reused!

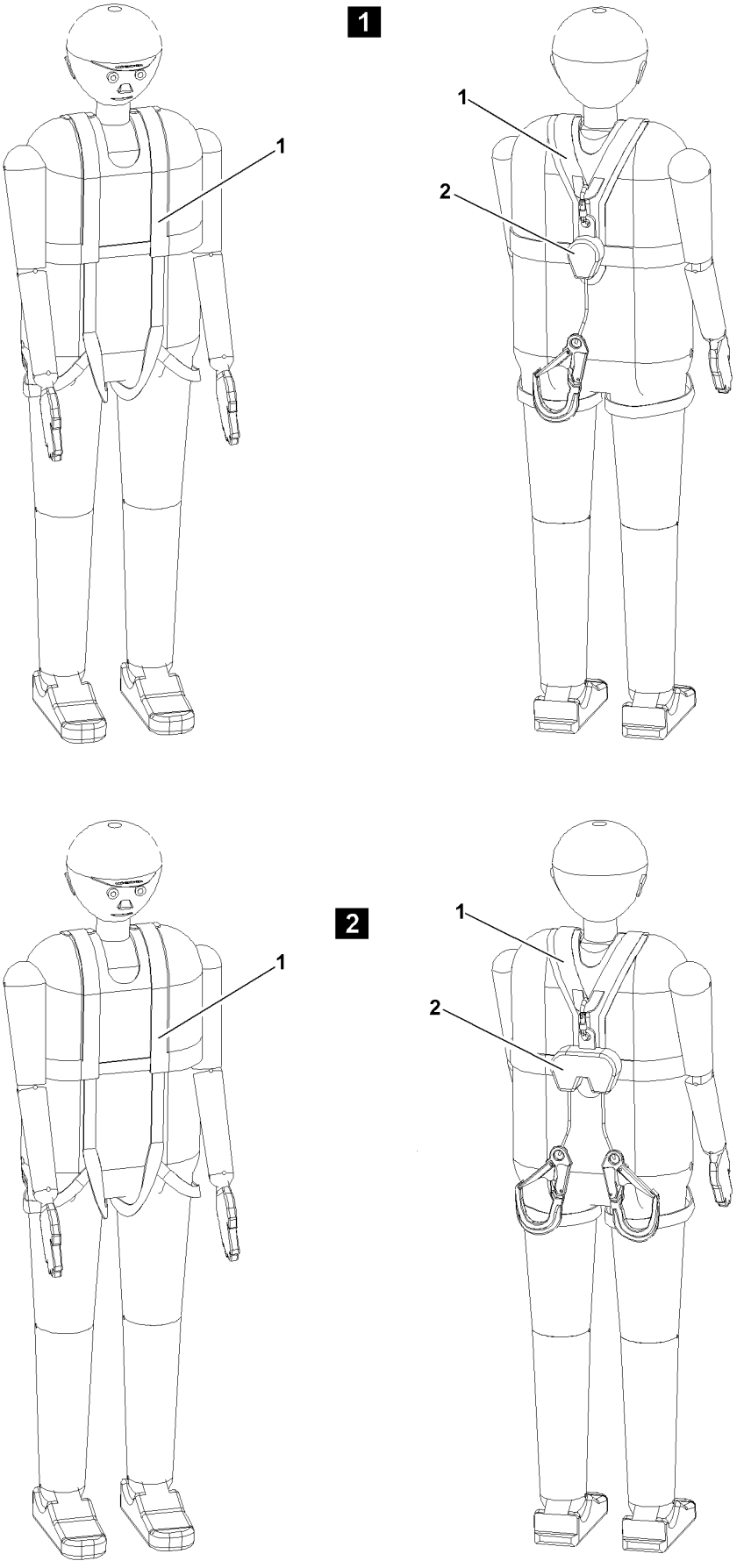

B111691

5 Use of single-stranded height safety equipment, illustration 1

Height safety equipment with a belt strap is intended for all cranes which have no catwalks with safety ropes. Use the supplied height safety equipment with extendable belt strap and snap hook (**EN 362 Class A**) with link.

6 Use of double-stranded height safety equipment, illustration 2

Height safety equipment with two belt straps are intended for cranes with catwalks, which are equipped with two ropes as fastening device on the left and right hand side of the catwalk. For example lattice sections, lattice booms, possibly telescopic booms or assembly units. Use the supplied height safety equipment with two extendable belt straps and snap hooks (**EN 362 Class A**) with links.

WARNING
Danger of falling!
▶ If two safety ropes are installed on the booms, lattice sections and other components, then the height safety equipment with two belt straps must always be used and one belt strap per safety rope must be hooked!

7 Securing the assembly personnel against falling

Make sure that the assembly personnel is wearing the supplied fall arrest systems (safety harnesses and height safety equipment) correctly.
A 3-point support is ensured when:
– Two legs are standing safely and one hand has a safe hold.
– Two hands have a safe hold and one leg is standing safely.

WARNING
Danger of falling in case of missing 3-point support!
▶ When accessing a ladder, do not hold any objects in your hands!

7.1 Working on the telescopic boom head

Reeve the hoist rope in or out on the pulley head:
– When working on a ladder, always use the supplied ladder with hook device. For fastening and hook points, see Crane operating instructions, chapter 2.06.
– When ascending, the assembly personnel must ensure a 3-point support.
– When working on the ladder, the assembly personnel must hook themselves with the snap hooks of the fall arrest system on the fastening points and secure themselves against falling.

7.2 Working on the auxiliary boom

Assembling or disassembling the auxiliary boom:
– When working on a ladder, always use the supplied ladder with hook device. For fastening and hook points, see Crane operating instructions, chapter 2.06.
– When ascending, the assembly personnel must ensure a 3-point support.
– When working on the ladder, the assembly personnel must hook themselves with the snap hooks of the fall arrest system on the fastening points and secure themselves against falling.

7.3 Walking on the telescopic boom

WARNING
Danger of falling!
The assembly personnel can fall down by slipping on the telescopic boom and be killed or severely injured!
- ▶ The telescopic boom may only be accessed if the assembly personnel is protected with suitable safety measures to prevent them from falling!
- ▶ If safety ropes are present on the telescopic boom, then the assembly personnel must hook themselves with the supplied fall arrest system on the safety ropes of the telescopic boom on the left and right with both snap hooks and secure themselves against falling!
- ▶ Without safety measures, it is **strictly** prohibited to step on the telescopic boom!

Assembly of the hoist rope or the TY-guying:
- During assembly, the assembly personnel must hook themselves on the fastening devices on the left and right with both snap hooks of the fall arrest system and secure themselves against falling.

7.4 Access to lattice sections or booms

Climbing the ladder:
- When ascending, the assembly personnel must ensure a 3-point support.

Changing from ladder to catwalk:
- Before changing over, the assembly personnel must hook at least one snap hook of the fall arrest system on a safety rope and secure themselves against falling.

7.5 Walking on lattice sections or booms

Walking on catwalks:
- When walking on catwalks, the assembly personnel must hook themselves on the safety ropes on the left and right with both snap hooks of the fall arrest system and secure themselves against falling.
- When changing the fall arrest system over to a new lattice section, the assembly personnel must be hooked with at least one snap hook of the fall arrest system one safety device.

7.6 Working on lattice sections or booms

Pinning, unpinning the lattice sections of pull rods:
- During pinning, unpinning of lattice sections or pull rods, the assembly personnel must hook themselves on the safety ropes on the left and right with both snap hooks of the fall arrest system and secure themselves against falling.

Attaching the lattice sections:
- When attaching the lattice sections, the assembly personnel must hook themselves on the safety ropes on the left and right with both snap hooks of the fall arrest system and secure themselves against falling.

7.7 Descending from lattice sections or booms

Stepping on the ladder:
- Before stepping on the ladder, the assembly personnel must hook at least one snap hook of the fall arrest system on a safety rope and secure themselves against falling.
- When stepping on the ladder, the assembly personnel must ensure a 3-point support.
- The snap hook of the fall arrest system may only be unhooked after standing safely on the ladder (3-point support).

Climbing down the ladder:
- When descending, the assembly personnel must ensure a 3-point support.

8 Rescuing the assembly personnel

The height rescue system, consisting of the rappelling rescue device, is an evacuation and rescue device. With the height rescue system, one or more persons can rappel down in an oscillating procedure from a higher to a lower location with limited speed. In addition, one person can be pulled up by a helper from a lower to a higher location.

WARNING
Danger of falling!
- ▶ The assembly personnel must be instructed and trained properly in the correct handling of the height rescue system! Annual practice instructions and drills must be carried out!
- ▶ The supplied height rescue system must be kept available!
- ▶ The operating instructions of the manufacturer for the height rescue system must be observed and adhered to!
- ▶ The height rescue system must be inspected annually by authorized and trained expert personnel and documented in the inspection log book!

8.1 First aid measures after rescue

WARNING
Danger of fatal injury!
- ▶ After the rescue, the patient must be positioned with the upper body raised (in seated or squatting position)!
- ▶ Immediate flat position or even shock position can be fatal!

9 Documentation

Note
- ▶ The documentation of the fall arrest systems (safety harnesses and height safety equipment) and the height rescue system must be carried out according to the operating instructions of the respective manufacturer.
- ▶ The crane operator, who employs the user, is responsible for the creation of documentation and entry of the required data.

10 Identification

Every personal protective equipment or other equipment must be marked clearly and permanently in the language of the user country.
If the identification is no longer legible, then the personal protective equipment must be handed to an expert for inspection.

11 Crane operator responsibilities

11.1 General

The crane operator's primary responsibility is to use and operate the crane in a manner that is safe for both himself and others.
The following important safety guidelines will help you achieve this.
Many crane accidents are caused by incorrect crane operation.

WARNING
Danger due to operating error!
▶ In your interest and in the interest of others, make sure that you know your crane. Also learn to recognize all dangers connected with the work to be carried out.

The main **operating errors**, which are made again and again while operating or driving a crane, are as follows:
- Not paying careful attention while working, for example:
  - Slewing too quickly
  - Stopping the load too quickly
  - Angular pulling
  - Slack rope formation
- Overloading
- Driving too fast with a load and / or equipment on an uneven roadway
- Attaching the load incorrectly
- Unsuitable operation; especially angular pulling, breaking away stuck loads
- Wind action on suspended loads
- Mistakes when driving on a road, for example:
  - Overspeeding the engine when driving downhill
  - Driving with turned on differential lock
- Crashing into bridges, roofs or high voltage wires due to insufficient headroom
- Inadequate support; support base, support under the support plates
- Mistakes during assembly or disassembly of booms

In many cases, crane damage is caused by improper maintenance:
- Insufficient oil, grease or antifreeze
- Contamination
- Broken cable wires, defective tires, worn parts
- Emergency limit switch or load torque limiter (LMB) not operating properly
- Brake and clutch failure
- Hydraulic defects; for example cracked hoses
- Loose bolts

11.2 Working on the crane superstructure or boom

WARNING
Danger of falling!
When working on the crane superstructure or boom, personnel must be secured with appropriate safety measures to prevent them from falling! If this is not observed, working personnel can fall and be killed or severely injured!
▶ For all work on the crane where there is a danger of falling, suitable safety measures must be taken!
▶ The crane superstructure or boom may not be accessed without suitable aids!
▶ Suitable aids are, for example: Lifting platforms, scaffoldings, ladders, assembly platforms, auxiliary crane.
▶ If railing are present on the crane superstructure, then they must be swung into operating position and secured for all work, see Crane operating instructions, chapter 2.06!
▶ Only step on such aids with clean shoes!
▶ Keep aids clean and free of snow and ice!
▶ If the work cannot be carried out with such aids nor from the ground, then the assembly personnel must secure themselves with supplied fall arrest systems to avoid falling, see section “Personal protective equipment”!
▶ It is prohibited to step on the driver's cab or crane cab roof and specially marked surfaces, see Crane operating instructions, chapter 2.05!

11.3 Obligations of the crane operator

1.) Before starting to work, the crane operator must check the brake function and the emergency shut off devices. He must monitor the condition of the crane for obvious defects. On wireless controlled cranes, he must check the assignment of control unit and crane.
2.) The crane operator must cease crane operation in case of problems endangering the safety.
3.) The crane operator must report all defects on the crane to the appropriate supervisor, also to his replacement in case of crane change.
4.) The crane operator must make sure that:
   - All control devices are set to neutral or idle position before release of the energy supply to the drive components.
   - The control devices are set to neutral or idle position and the energy supply is shut off before leaving the control platform.
   - When taking down the control unit for wireless control, the control unit is secured to prevent unauthorized operation.
5.) The crane operator must ensure that cranes subjected to wind are not operated past the limits which were set by the crane manufacturer, and that the boom is taken down at least when the critical wind speeds for the crane are reached and at the end of the work.
6.) The crane operator must monitor the load at all crane movements or the load tackle devices when moving the crane without a load, if they could cause a dangerous situation. If observation is not possible, then the crane operator may move the crane only with the aid of a guide.
7.) The crane operator must give warning signs when necessary.
8.) The crane operator may not move loads over personnel.
9.) Any loads attached by hand may only be moved by the crane operator after he received a clear sign from the person who attached the load, the guide or any other responsible party which was assigned to that task by the contractor. If signals must be used to communicate with the crane operator, then these signals must be agreed upon before use between the responsible party and the crane operator. If the crane operator determines that the loads are not properly attached, then he may not move these loads.
10.) As long as a load is suspended on the crane, the crane operator must keep the control devices within reach. This does not apply for towing of vehicles with towing cranes.
11.) The crane operator may not run up to end positions operationally, if they are limited by the emergency limit switches.
12.) After a load moment limiter was triggered, the crane operator may not take on an overload by pulling in / raising the boom.
13.) The crane operator may **not** bypass the overload protection to increase the hoisting power of the crane.

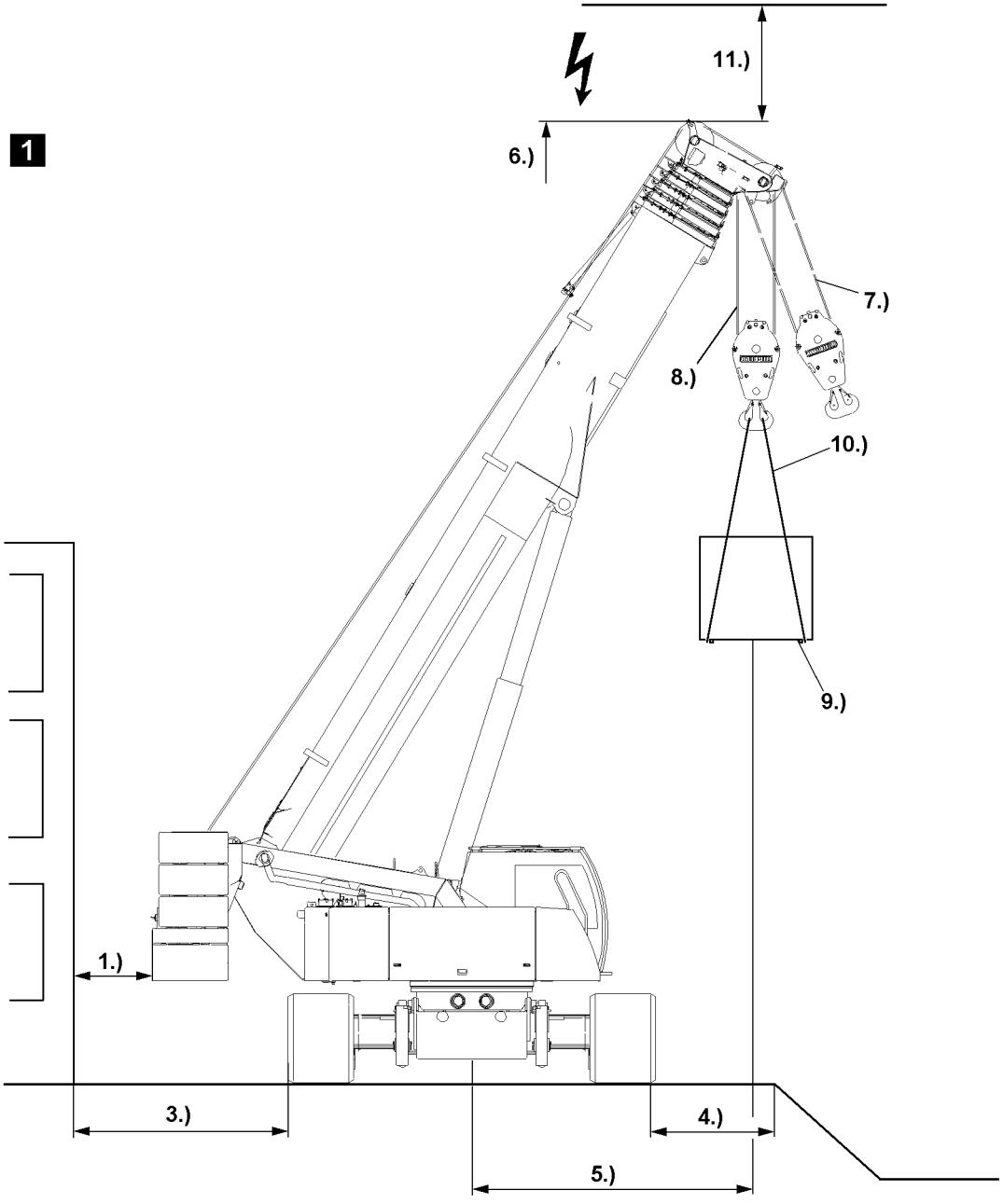

B104101 *Example for crawler crane with telescopic boom*

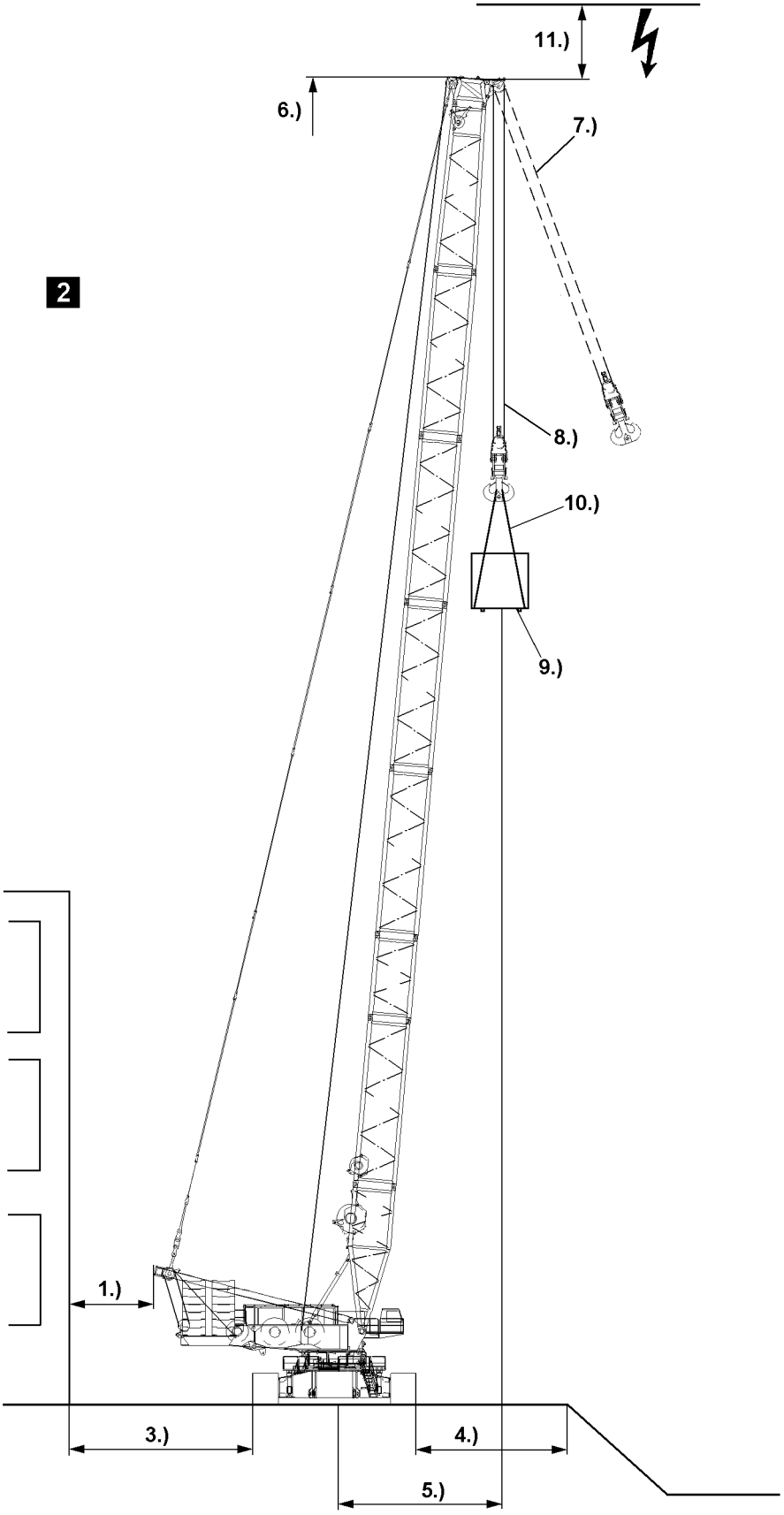

B104102 *Example for crawler crane with lattice mast boom*

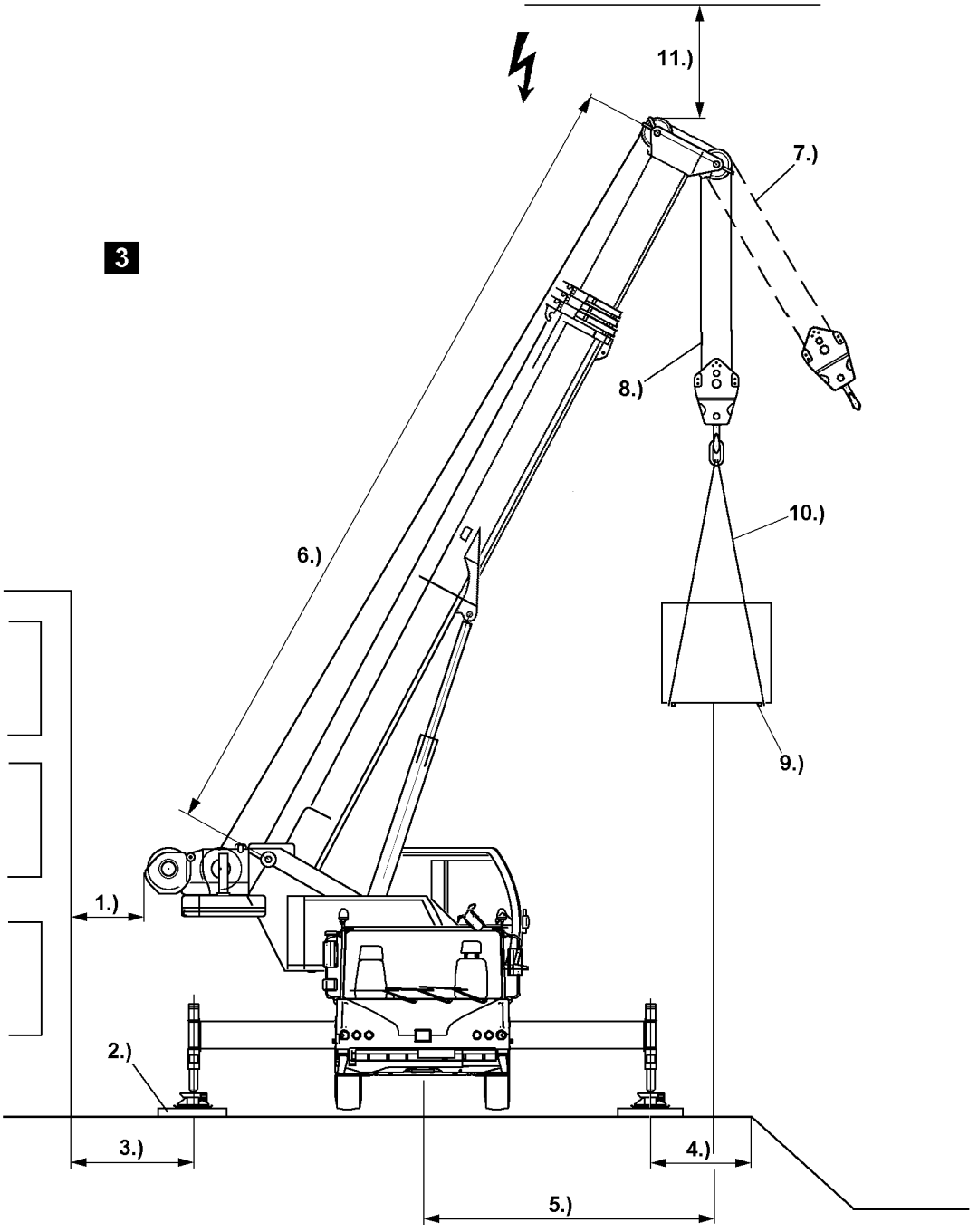

B104103

Example for mobile cranes

12 Selecting the location, illustrations 1 to 3

It is very important to choose an appropriate location for crane operation in order to minimize accident risks.

DANGER
Risk of accidents due to ground with **insufficient** load bearing capacity!
If the crane is supported or driven on ground with **insufficient** load bearing capacity, then the crane can topple over and kill personnel!
- ▶ Only support or drive the crane on ground with the required load-bearing capacity!
- ▶ Act responsibly when planning and selecting the crane location and route.
- ▶ Note the following points!

When selecting the location for the crane, observe the following:

1.) Select the placement location in such a way that crane movements can be carried out without collision and that the supports can be extended to the support base specified in the load charts. Make sure that no personnel is injured or killed!
Always keep a safety distance of 0.5 m. If this is not possible, block the danger zone off.
2.) On mobile cranes:
Support the crane correctly and support the support plates according to the load bearing capacity of the ground on the placement location.
3.) Keep a safety distance to basements or similar.
4.) Keep a safety distance to slopes or similar.
5.) Keep the radius to as low as possible.
6.) Select the correct boom length to the load case.
7.) Angular pull is prohibited!
8.) Select the correct reeving of the hoist rope to the load case.
9.) Bear in mind the weight and the wind exposure surface of the load.
10.) Select tackle according to the weight of the load, the type of attachment and the incline angle.
11.) Keep sufficient distance to electrical overhead wiring.

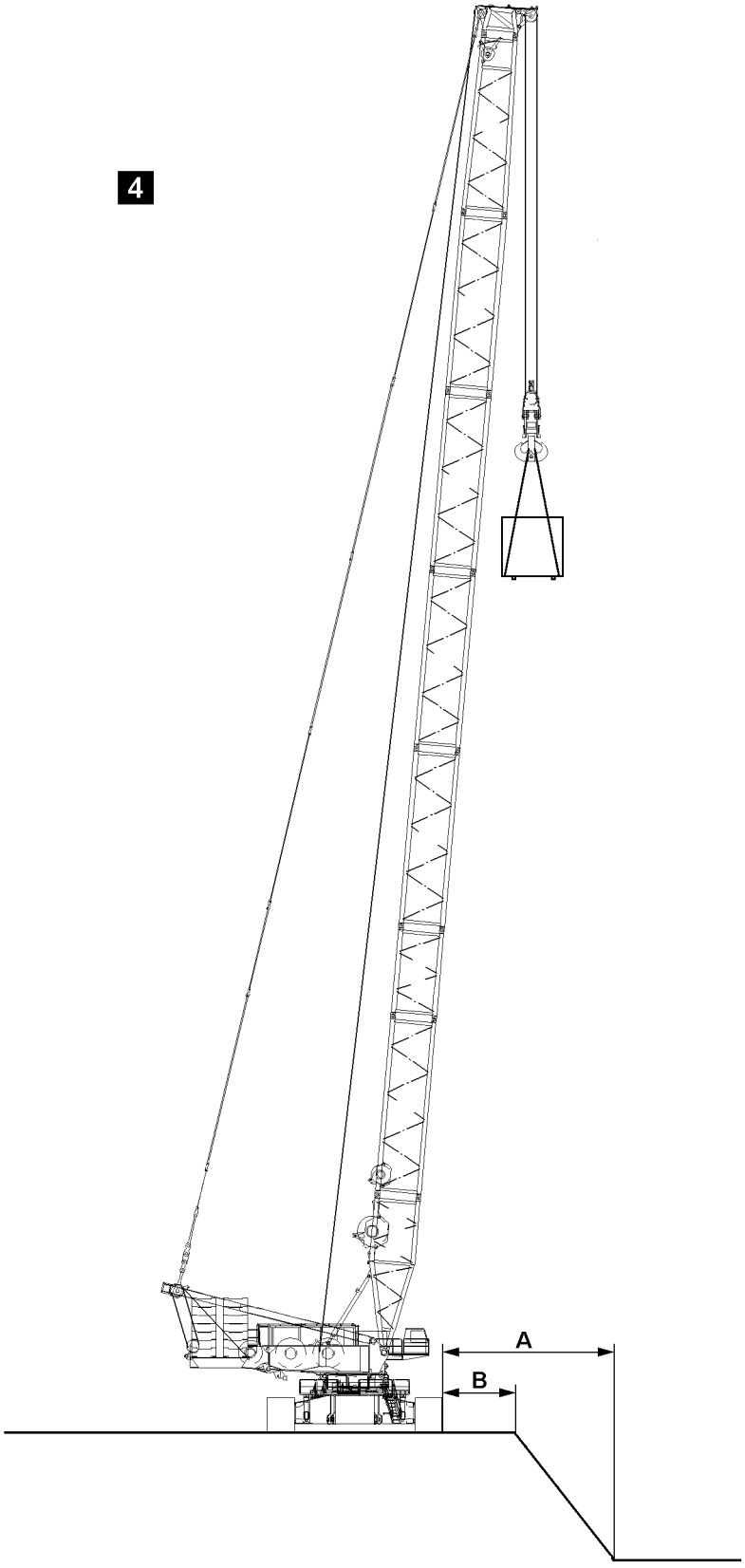

B108387

Example for crawler cranes

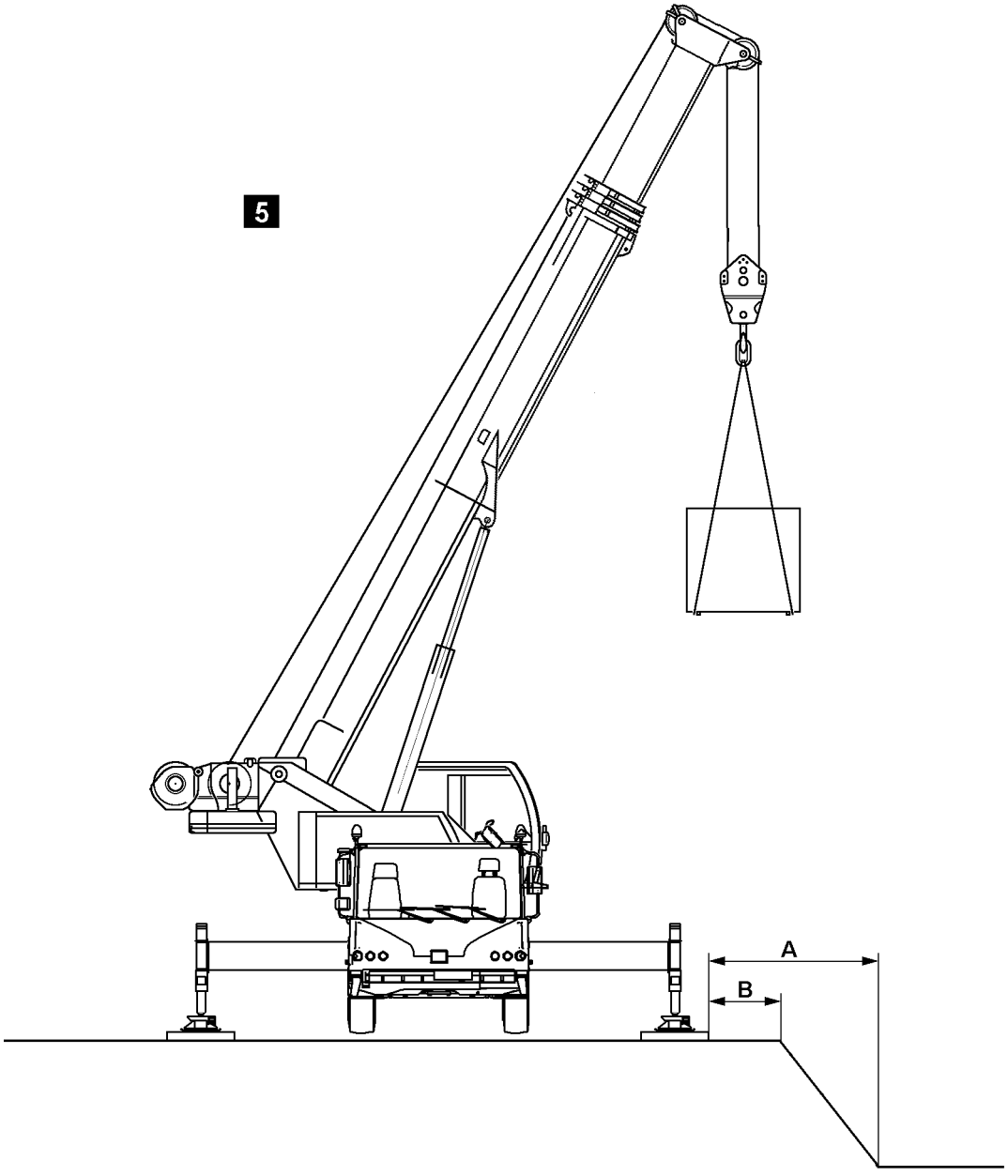

B108388

Example for mobile cranes

13 Slopes and excavations, illustrations 4 and 5

The crane may not be set up too close to slopes or excavations. Maintain adequate safety distance **A** and safety distance **B** in accordance with the type of soil.

WARNING
The crane can topple over!
The edge of the slope or excavation can break in if safety distance **A** or safety distance **B** is too small.
If the edge of the slope or excavation breaks in, the crane can topple over and kill personnel!
▶ Always maintain the required safety distance **A** and safety distance **B**!

Abbreviation	Term
A	Distance to bottom of excavation
B	Distance to excavation

14 Permissible ground pressures

Permissible ground pressures		
	Soil type	**[N/cm²]**
1.	Organic ground:	
	Peat, sludge, muck	0
2.	Uncompacted fill:	
	Construction debris	0 to 10
3.	Non-cohesive ground:	
	Sand, gravel, rocks and mix	20
4.	Cohesive soil:	
	a) Clayed silt, mixed with topsoil	12
	b) Silt, consisting of poor clay and coarse clay	13
	c) Plastic clay, consisting of potter's clay and fill	
	Stiff	9
	Semi-solid	14
	Solid	20
	d) Mixed granular ground, clay to sand, gravel and rocky areas	
	Stiff	15
	Semi-solid	22
	Solid	33
5.	Rock in evenly solid condition:	

Permissible ground pressures		
	Soil type	[N/cm²]
a)	Brittle, with traces of decomposition	150
b)	Not brittle	400

If there is any doubt about the load bearing capability of the ground at the site, soil tests should be carried out by specialists using, for example, a penetrometer.

14.1 Permitted ground pressure for crawler cranes

In crane operation, significant forces are transferred to the ground. The ground must be able to safely withstand the pressure. If the crawler area is inadequate, then the crawlers must be supported from below according to the load bearing capacity of the ground.

WARNING
The crane can topple over!
If the crane is not properly supported, the crane can topple over and fatally injure personnel!
- ▶ The foundation support must be large enough for the ground conditions and constructed from solid materials, such as wood or steel plates!

14.2 Permitted ground pressure for mobile cranes

When the crane is supported, the support cylinders transmit significant forces to the ground.
In any case, the ground must be able to safely withstand this pressure. If the support pad area is inadequate, the support pads must be supported from below according to the load bearing capacity of the ground.
The required support area can be calculated from the load bearing capability of the ground and the crane support force.

Note
- ▶ Consider that the support force, due to the counterweight, can be higher without a load than with a load.

WARNING
The crane can topple over!
If the crane is not properly supported, the crane can topple over and fatally injure personnel!
- ▶ Only strong materials may be used for the support pad bases; for example properly dimensioned wooden timbers!
- ▶ In order to ensure that pressure is evenly distributed over the base surface, the support plates must be positioned in the center of the support base!

Note
- ▶ The following are general calculation examples. The values are used only to explain the calculation steps. The crane specific values are in chapter 1.03 of the crane operating instructions.

Example: Calculation of specific support pressure	
Maximum support force according to crane operating instructions, chapter 1.03 for example: 720 kN	720000 N
Surface of square support plate with 550 mm side length according to chapter 1.03, for example: 302500 mm^2	3025 cm^2
80 % as carrying surface of support plate: 302500 mm^2 x 0.8 = 242000 mm^2	2420 cm^2
Specific support pressure = Support force / surface support plate	720000 N / 2420 cm^2 = 297.52 N/cm^2
Specific support pressure:	**298 N/cm^2**

The value of the specific support pressure is far higher than the permissible ground pressure for all types of granular soil. If this crane is utilized on bedrock, type of ground gravel, permissible ground pressure 20 N/cm^2 , then the support surface must be increased.

Example: Calculation of required support surface	
Maximum support force according to crane operating instructions, chapter 1.03 for example: 720 kN	720000 N
Permissible ground pressure, for example: 20 N/cm^2	20 N/cm^2
Required support surface = Support force / permissible ground pressure	720000 N / 20 N/cm^2 = 36000 cm^2
Required support surface:	36000 cm^2 = **3.6 m^2**

The surface of the support for each support plate must be at least **3.6 m^2** .

Note

▶ The corresponding support forces can be determined with the crane job planer.

14.3 LICCON job planer

The calculation of support forces and ground pressures of tracks with the LICCON job planner are based on idealized assumptions.
Side deformations of the boom system due to wind, inclined position and elastic compliancy of the steel structure are not taken into account in the LICCON job planner.
These influences can lead to an increase of support forces or increase of ground pressures of the tracks.

15 Support

15.1 Supporting the crane

DANGER
The crane can topple over!
When actuating the supports with attached load and / or at loaded derrick ballast guying, the incline and the force conditions of the entire boom system change!
There is **no** shut off by the LICCON overload system!
The crane can topple over!
Personnel can be severely injured or killed!
- ▶ When a load is suspended, it is prohibited to actuate the support!
- ▶ When the derrick ballast guying is loaded, it is prohibited to actuate the support!

It is absolutely essential that the crane be supported exactly in accordance with the load charts to ensure safe crane operation.
The match of the sliding beams placement surfaces must be observed to ensure proper force transfer between the sliding beams.
The crane may only be supported in these extension conditions.

WARNING
Danger of tipping over!
If only the load side sliding beams are extended, the crane can tip over when turning or setting down the load!
- ▶ Move all 4 sliding beams and support cylinders out according to the data in the load chart!
- ▶ In intermediate positions between the support bases supporting is prohibited!
- ▶ Pin the sliding beams to support base according to the load chart!
- ▶ Fully insert and secure the pins!

WARNING
Risk of toppling the crane due to incorrect extension of the sliding beams!
The load suspended on the hook causes tension and deformation of the hoist rope and telescopic boom. The same applies for operation with lattice jib and guy ropes. If the load is dropped from the fastening ropes or if the fastening or hoist rope breaks in this situation, a sudden relief occurs. The boom snaps back quickly. This can cause the crane to topple over.
Despite previous assumption, it might become necessary to swing the load to the opposite side. This can cause the crane to topple over.
The boom and / or counterweight momentum may cause the crane to topple when slewing from the longitudinal vehicle direction.
- ▶ Move all 4 sliding beams and support cylinders out according to the data in the load chart!

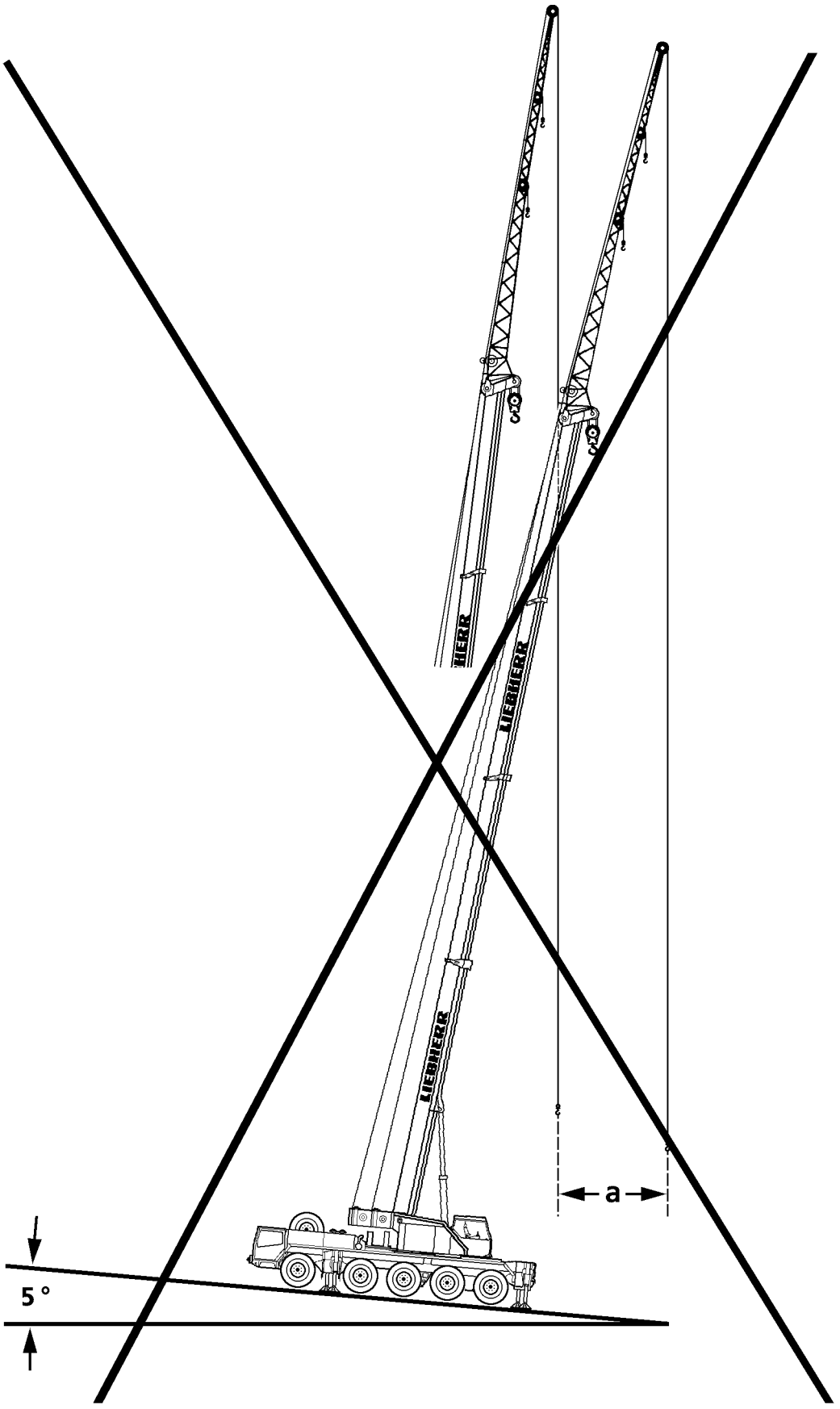

B180001

General example

15.2 Aligning the crane

In addition to the proper foundation for the supports, the horizontal alignment of the crane is of utmost importance for safe crane operation.

DANGER
The crane can topple over due to the incline position!
If the crane is positioned at an incline and if the boom is turned towards the slope, then the boom radius is increased as a result!
It is possible that the slewing gear can no longer hold the crane superstructure and, in extreme cases, the crane can topple over!
Personnel can be severely injured or killed!
▶ Align the crane horizontally before starting crane operation!
If the horizontal alignment of the crane has to be readjusted:
▶ Set the load down on the ground before readjusting the crane!

Example: At a boom length of 50 m, a side incline of the crane by only 5° at a radius of 10 m causes an increase of the radius of a = 4 m.

16 Checking the safety measures

- The placement location has been selected in such a way that the crane can be operated with the least possible boom radius.
- The load bearing capacity of the ground is adequate.
- There is sufficient distance to excavations and slopes.
- There are no live transmission wires within the working range of the crane.
- There are no obstacles that will hinder required crane movements.
- The crane is horizontally aligned.
- On mobile cranes:
  - The axle suspension is blocked.
  - All four sliding beams and support cylinders have been extended according to the support base given in the load chart.
  - The sliding beams have been secured with pins to prevent them from moving.
  - The support plates are pinned and secured in the operating position.
  - The axles are relieved, which means the tires do not touch the ground.

17 Endangering air traffic

When working with cranes, heights are reached which could endanger air traffic. This applies especially to areas near airports.

WARNING
Endangering air traffic!
If no protective measures are taken, this can result in endangerment to air traffic!
▶ Get the approval from agency responsible for air traffic!
▶ Assemble the airplane warning light on the boom head and turn it on!
▶ If the airplane warning lights is operated for a longer period of time, with the engine turned off, then the battery can be discharged and as the result the airplane warning light turns off. To prevent the battery from discharging, an external electrical power supply must be established!

18 Grounding

18.1 Grounding the crane

WARNING
Danger of fatal injury due to electrical shock!
There is a risk of electrical shock, if the crane is not properly grounded.
▶ Properly ground the crane!
▶ Make sure that there is a potential equalization between the crane and the ground!

The crane must be grounded before operation:
– Near transmitters (radio and TV transmitters, radio stations, etc.).
– Near high frequency switching stations.
– In case of severe possibility of thunderstorms or potential thunderstorms.

The crane can become electrostatically charged, especially if the crane is equipped with synthetic support mats or if the support mats are placed on insulating materials (such as wooden planks).

18.2 Grounding the load

WARNING
Danger of fatal injury due to electrical shock!
There is a risk of electrical shock, if the load is not properly grounded!
▶ Properly ground the load!
▶ Make sure that there is a potential equalization between the load and the ground!

The load must be grounded before operation:
– Near transmitters (radio and TV transmitters, radio stations, etc.).
– Near high frequency switching stations.
– In case of severe possibility of thunderstorms or potential thunderstorms.

The load can become electrostatically charged, even if the crane is grounded. This applies in particular if a hook block with pulleys made of synthetic material and non-conductive fastening equipment (for example plastic or manila ropes) are used.

19 Consideration of wind conditions

Note
▶ The wind speeds are valid for a 360° wind direction for a 3-second wind gust at the highest point of the crane!

WARNING
Disregard of permissible wind speeds!
If the permissible wind speeds are disregarded, the crane can topple over! Personnel can be severely injured or killed!
▶ It is prohibited to erect the crane to measure the wind speed!
▶ Observe the permissible wind speeds depending on the assembly / crane conditions and act accordingly, see following chart!

Assembly / crane conditions	Reference for permissible wind speed
Erection and take down of various boom configurations	Wind speed charts
Crane operation	Load chart manual
When the permissible wind speed according to the load charts is exceeded in crane operation, then **crane operation is prohibited!**	Wind speed charts
Interruption of crane operation when crane remains equipped	Wind speed charts
Crane out of operation, when crane remains equipped	Wind speed charts

WARNING
Increase of support force and exceedance of permissible ground pressure!
The wind load on the crane boom has **not** been taken into account for the planning of crane operation with the LICCON job planner!
As a result, the actual values of the support forces and the ground pressure can be significantly higher than the values determined with the LICCON job planner!
The wind striking the crane and the load, the elastic distortion of the crane structure, incline position as well as wind exposure surface (A_W) per ton of hoist load larger than 1.2 m^2/t can significantly increase the support force!
The ground pressure is increased!
▶ Do not exceed the permissible ground pressure!

Note
▶ The determining factor for all crane work in the actual wind speed at the job site of the crane!
▶ The current wind speed can be checked at the nearest weather bureau!
▶ Be aware that the wind speed on the boom jib is higher than near the ground!
▶ Always observe the national valid regulations!

19.1 Wind speed, wind gust speed and wind direction

The depiction of the wind is made by statement of wind speed (wind force), wind gust speed and wind direction.
High above the ground, the wind is less influenced by the surface condition of the ground. In the lower layers of the atmosphere, the wind speed is reduced by the ground friction. One differentiates between roughness of terrain, influence of obstacles and influence of terrain contours. Vegetation, buildings etc have great influence on the wind speed, wind gust speed and wind direction.
The site selection is thus especially important for wind measurement.
The wind speed, wind gust speed and wind direction are subject to significant time and local fluctuations. For that reason it is important to have reliable information regarding the expected wind speed, wind gust speed and wind direction during a load lift and to carry out exact wind measurements.
For mobile cranes, always assume a wind load of 360°. The determining factor is the “3 second gust speed” on the highest point of the boom.

19.2 Measurement of wind speed

The anemometer installed on the crane boom measures the wind speed on the tip of the boom and shows the current wind speed in the crane cab.
The function of the anemometer must be checked every time before erection of the boom by manually actuating the shell start for easy movement and proper function.
Before lifting a load, especially with large wind exposure surface, the wind speed and the wind direction expected during the lift must be known. Information can be obtained for example at the local weather bureau. The determining factor is the “3 second gust speed” on the highest point of the boom.

WARNING
Overload of crane!
The acoustic wind warning is only issued if the standard wind exposure surface in the load chart is exceeded (wind surface per ton load: 1 m^2 , drag: 1.2) given wind speed!
If the permissible wind speed must be reduced for loads due to large wind exposure surfaces, no acoustic wind warning is issued!
There is no shut off of crane movement!

- ▶ The wind exposure surface and the wind resistance coefficient for the load to be lifted must be known!
- ▶ The maximum permissible wind speed specified in the load chart must be reduced for large wind exposure surfaces as described in the load chart manual chapter „Wind influences during crane operation“!

For safe determination of wind speed, the crane must be turned before application by 360°. The highest measured value while doing so must be compared with the “maximum permissible wind speed” for the load according to the load chart. Thus the possibility that the result of the measurement is distorted due to nearby buildings, cranes or components is eliminated.
In gusty wind conditions, the probability of sudden high wind speed increases. In gusty wind conditions no large surface loads may be lifted.

Note

- ▶ If in doubt and in case of questions for further information and / or training in the area of “Wind influences in crane operation” please contact the Customer Service at Liebherr-Werk Ehingen GmbH!

blank page!

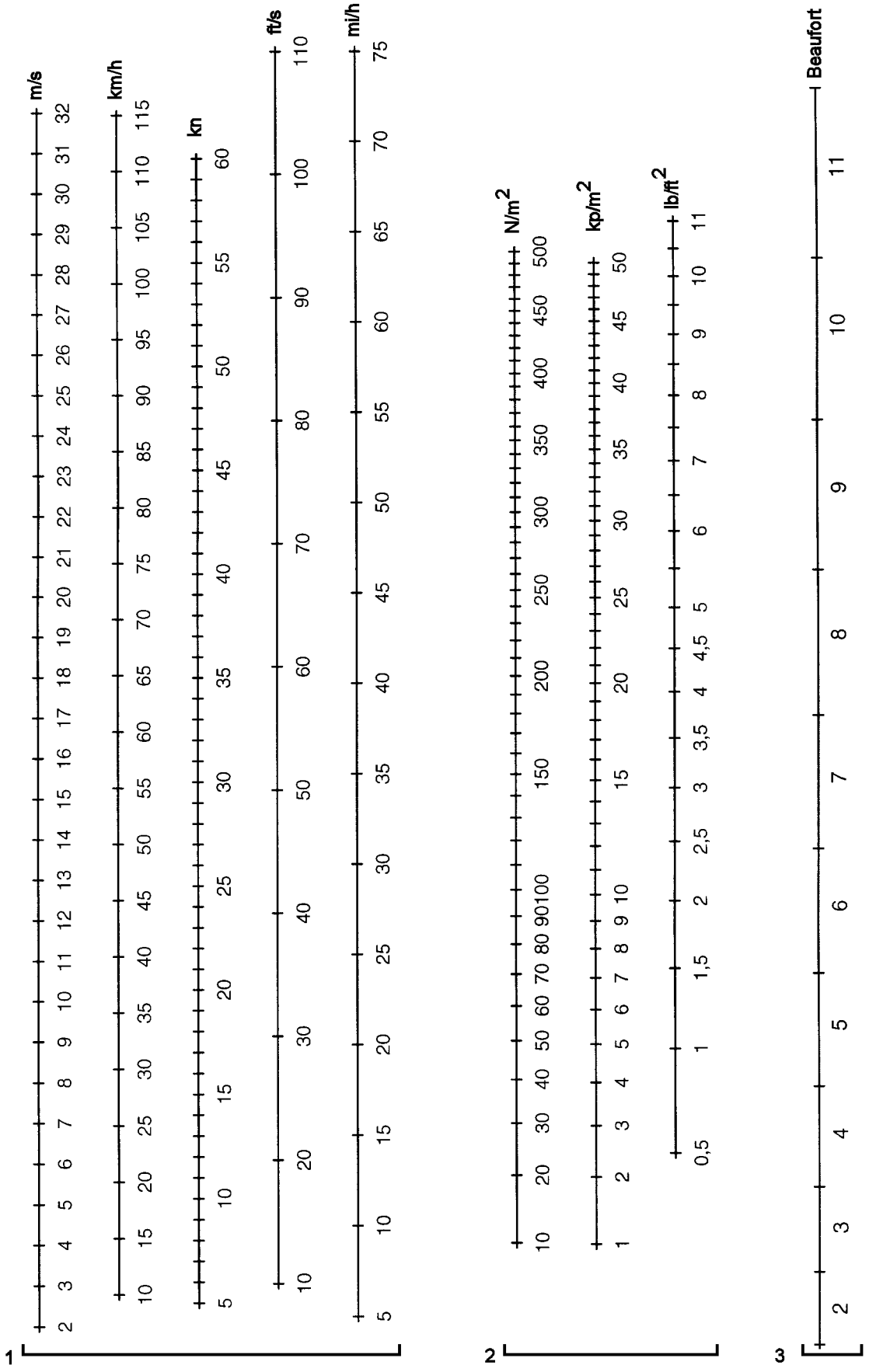

B106876

1 Wind speeds 2 Dynamic pressure 3 Wind velocity

19.3 Conversion chart for wind speed and dynamic pressure

Note

▶ The wind scales for the following conversion charts are in the adjacent graphic!

Wind speed					Dynamic pressure		
[m/s]	[km/h]	[kn]	[ft/s]	[mi/h]	[N/m^2]	[kp/m^2]	[lb/ft^2]
2	7.2	3.9	6.6	4.5	2.5	0.25	0.05
4	14.4	7.8	13.1	8.9	9.8	1.00	0.20
6	21.6	11.7	19.7	13.4	22.1	2.25	0.46
8	28.8	15.6	26.2	17.9	39.2	4.00	0.82
10	36.0	19.4	32.8	22.4	61.3	6.25	1.28
12	43.2	23.3	39.4	26.8	88.3	9.00	1.84
14	50.4	27.2	45.9	31.3	120.2	12.25	2.51
16	57.6	31.1	52.5	35.8	157.0	16.00	3.28
18	64.8	35.0	59.1	40.3	198.7	20.25	4.15
20	72.0	38.9	65.6	44.7	245.3	25.00	5.12
22	79.2	42.8	72.2	49.2	296.8	30.25	6.20
24	86.4	46.7	78.7	53.7	353.2	36.00	7.37
26	93.6	50.5	85.3	58.2	414.5	42.25	8.65
28	100.8	54.4	91.9	62.6	480.7	49.00	10.04
30	108.0	58.3	98.4	67.1	551.8	56.25	11.52
32	115.2	62.2	105.0	71.6	627.8	64.00	13.11

19.4 Conversion chart for wind force

Note

▶ The influence of the wind onto the surrounding is described clearly in the Beaufort wind chart below to provide an orientation for the crane operator!

Wind force		Wind speed		Effect of the wind
Beaufort	Description	[m/s]	[km/h]	Inland
0	Calm	0 to 0.2	1	Calm, smoke rises vertically
1	Slight air movement (draft)	0.3 to 1.5	1 to 5	Wind direction is shown only by observing the trail of smoke, not by the wind sock
2	Light breeze	1.6 to 3.3	6 to 11	Wind can be felt on the face, the leaves rustle, wind sock moves slightly
3	Gentle breeze	3.4 to 5.4	12 to 19	Leaves and small twigs in constant motion Wind extends a flag

Wind force		Wind speed		Effect of the wind
Beaufort	Description	[m/s]	[km/h]	Inland
4	Moderate breeze	5.5 to 7.9	20 to 28	Swirls up dust and loose paper, moves twigs and thin branches
5	Fresh breeze	8.0 to 10.7	29 to 38	Small deciduous trees begin to sway, whitecaps form at sea
6	Strong breeze	10.8 to 13.8	39 to 49	Thicker branches move; telephone lines begin to whistle, umbrellas are difficult to use
7	Near gale	13.9 to 17.1	50 to 61	Entire trees swaying; difficult to walk into wind
8	Gale force wind	17.2 to 20.7	62 to 74	Breaks branches off trees, impedes walking in open areas considerably
9	Gale	20.8 to 24.4	75 to 88	Minor damage to property (chimney caps and roofing tile are blown off)
10	Severe storm	24.5 to 28.4	89 to 102	Trees are uprooted, significant damage to property
11	Violent storm	28.5 to 32.6	103 to 117	Extensive, widespread storm damage
12	Hurricane	32.7 and more	118 and more	Major destruction

19.5 Height dependent wind speeds according to EN 13000:2010

Note

- The maximum permissible wind speed (v_{max}) and the maximum permissible wind speed according to the load chart (v_{max_TAB}) always refers to the 3 second wind gust speed, which is present in the maximum hoist height.
- Instead of the 3 second wind gust speed, weather information services often report a wind speed (v_m), which is averaged within a time period of 10 minutes (so-called 10 minute average). It refers to the wind force on the Beaufort scale, normally to the medium value of the wind speed, which is determined within a time from of 10 minutes at a height of 10 m above ground or above sea level.
- The determining factor for the calculation of the 3 second wind gust speed in maximum height is significantly higher than the medium value of the wind speed, which is determined over a time of 10 minutes at a height of 10 m above ground!
- The following chart shows the 3 second wind gust speed depending on the medium wind speed according to the Beaufort Scale and the height!

3 second wind gust speed depending on the medium wind speed according to the Beaufort Scale and the height

Beaufort number	3	4	5[a]	5	6	7[a]	7	8	9	10
v_m [m/s[b]]	5.4	7.9	**10.1**	10.7	13.8	**14.3**	17.1	20.7	24.4	28.4
z [m]	v(z) [m/s]									
10	7.6	11.1	**14.1**	15.0	19.3	**20.0**	23.9	29.0	34.2	39.8
20	8.1	11.9	**15.2**	16.1	20.7	**21.5**	25.7	31.1	36.6	42.7

Beaufort number	**3**	**4**	**5[a]**	**5**	**6**	**7[a]**	**7**	**8**	**9**	**10**
30	8.5	12.4	**15.8**	16.8	21.6	**22.4**	26.8	32.4	38.2	44.5
40	8.7	12.8	**16.3**	17.3	22.3	**23.1**	27.6	33.4	39.4	45.8
50	8.9	13.1	**16.7**	17.7	22.8	**23.6**	28.3	34.2	40.3	46.9
60	9.1	13.3	**17.0**	18.0	23.3	**24.1**	28.8	34.9	41.1	47.9
70	9.3	13.5	**17.3**	18.3	23.6	**24.5**	29.3	35.5	41.8	48.7
80	9.4	13.7	**17.6**	18.6	24.0	**24.8**	29.7	36.0	42.4	49.4
90	9.5	13.9	**17.8**	18.8	24.3	**25.1**	30.1	36.4	42.9	50.0
100	9.6	14.1	**18.0**	19.1	24.6	**25.4**	30.4	36.9	43.4	50.6
110	9.7	14.2	**18.2**	19.2	24.8	**25.7**	30.8	37.2	43.9	51.1
120	9.8	14.3	**18.3**	19.4	25.1	**25.9**	31.1	37.6	44.3	51.6
130	9.9	14.5	**18.5**	19.6	25.3	**26.2**	31.3	37.9	44.7	52.0
140	10.0	14.6	**18.7**	19.8	25.5	**26.4**	31.6	38.2	45.1	52.5
150	10.0	14.7	**18.8**	19.9	25.7	**26.6**	31.8	38.5	45.4	52.9
160	10.1	14.8	**18.9**	20.1	25.9	**26.8**	32.1	38.8	45.7	53.2
170	10.2	14.9	**19.1**	20.2	26.0	**27.0**	32.3	39.1	46.0	53.6
180	10.3	15.0	**19.2**	20.3	26.2	**27.1**	32.5	39.3	46.3	53.9
190	10.3	15.1	**19.3**	20.4	26.4	**27.3**	32.7	39.5	46.6	54.2
200	10.4	15.2	**19.4**	20.6	26.5	**27.4**	32.8	39.8	46.9	54.6

[a] Wind stages for the crane in operation:

1 light	v_m = 10.1 m/s	at z = 10 m	v(z) = 14.1 m/s	q(z) = 125 N/m^2
2 normal	v_m = 14.3 m/s	at z = 10 m	v(z) = 20.0 m/s	q(z) = 250 N/m^2

[b] Upper limit of Beaufort scale

Sign [Unit]	**Definition**
v_m [m/s]	Wind speed determined over 10 minutes at a height of 10 m (Upper limit of Beaufort Scale)
z [m]	Height above level ground
v(z) [m/s]	Speed effective at height z, decisive for the calculation of a 3 second gust
q(z) [N/m^2]	At a height z effective quasi-static back pressure, determined from v(z)

19.6 Wind influences during erection and take down

WARNING
The crane can topple over!
If a boom or a boom system is erected or taken down and the expected wind speeds are larger than the maximum permissible wind speeds according to the wind speed chart, then the crane can topple over and fatally injure personnel!
- ▶ If wind speeds are expected which are larger than the maximum permissible wind speeds for erection, then erection of the boom or erection of the boom system is prohibited!
- ▶ If wind speeds are expected, which are larger than the maximum permissible wind speeds for take down, then the boom or the boom system must be taken down immediately!

19.7 Wind influences in crane operation

WARNING
The crane can topple over!
Unforeseeable factors, such as sudden gusts of wind onto the crane and the load cannot be considered exactly in advance!
- ▶ Carry out a professional job planning with authorized and trained expert personnel!
- ▶ The authorized and trained expert personnel must have sufficient knowledge in the area of “Wind influences in crane operation”!

Note
- ▶ Calculation examples are included in the load charts. If you need further information, contact Liebherr-Werk Ehingen GmbH.

Depending on crane application, for example:
1.) Lifting of large surfaced loads.
2.) Working with long boom combinations.
3.) Erection and take down of boom combinations.

The crane operator must check with appropriate information sources about the expected wind speeds, at:
1.) The start of crane operation.
2.) Interruption of crane operation.
3.) Resumption of crane operation

WARNING
The crane can topple over!
If the crane is operated at wind speeds which are larger than the maximum permissible wind speeds according to the load chart, then the crane can topple over and kill personnel!
- ▶ If wind speeds are expected which are larger than the maximum permissible wind speeds for the equipped crane, then the attachments and the boom must be taken down!
- ▶ If wind speeds are expected which are larger than the maximum permissible winds speeds for crane operation, then it is prohibited to lift a load!

19.8 Wind influences when the “Crane is not in service”

WARNING
The crane can topple over!
If the crane is taken out of service in configured condition and the expected wind speeds are larger than the maximum permissible wind speeds according to the wind chart, then the crane can topple over and fatally injure personnel!

- ▶ If wind speeds are expected which are larger than the maximum permissible wind speeds for “Taking the crane out of service”, then the attachments and the boom must be taken down!
- ▶ Always take the boom down for safety reasons if weather conditions are unclear, see Erection and take down charts!

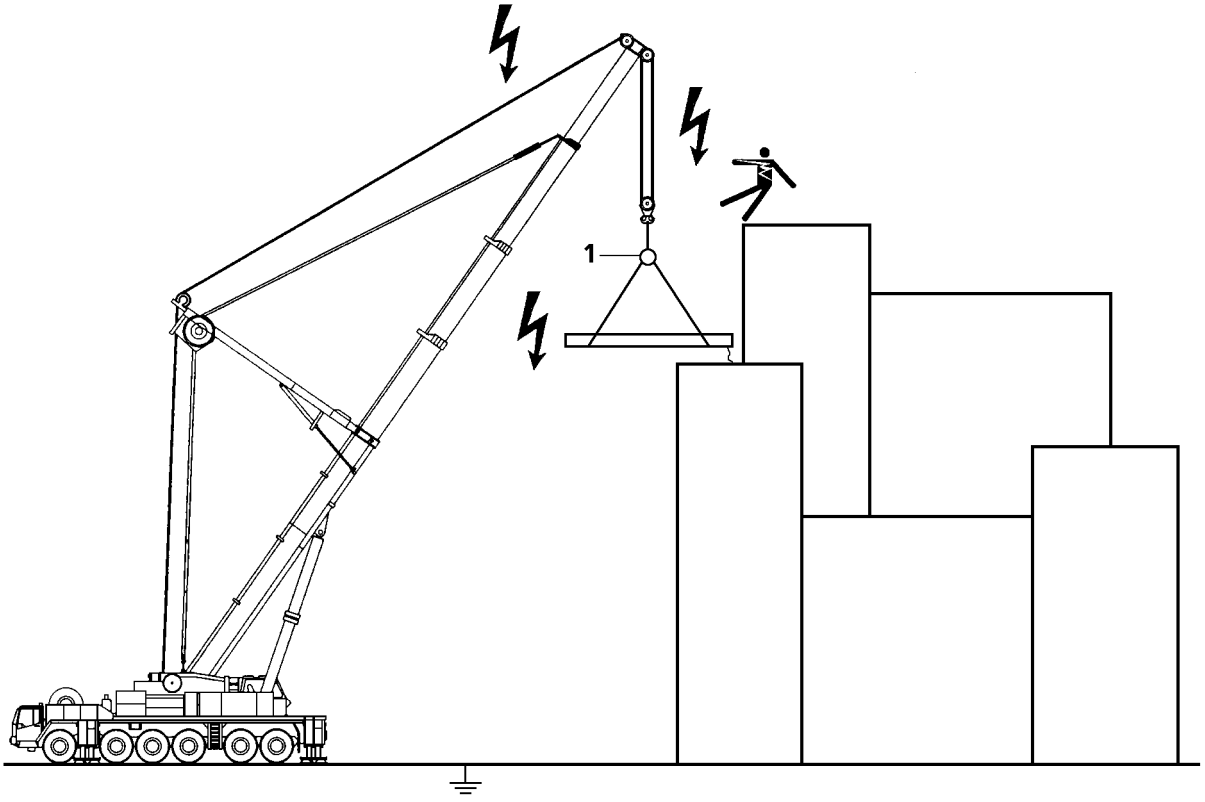

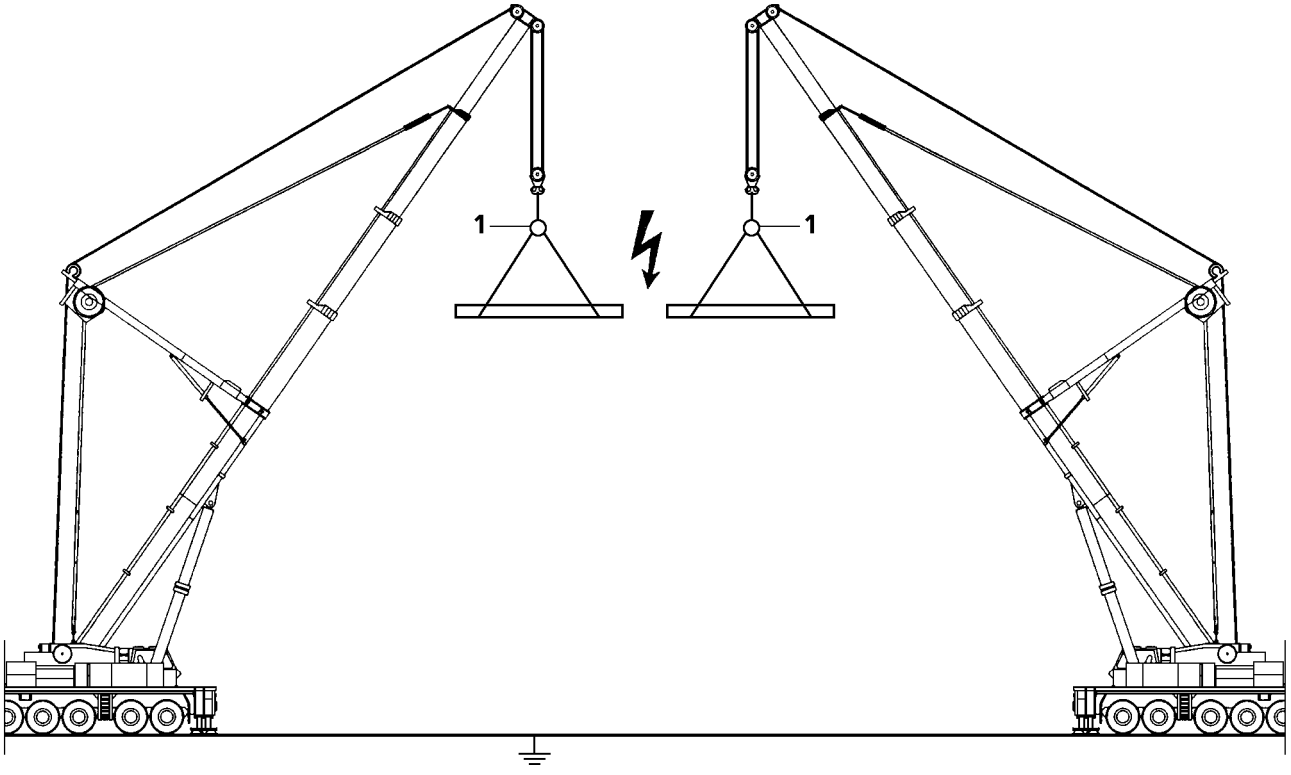

B189640

General example

20 Working in the vicinity of transmitters

Strong electromagnetic fields are likely to be present if the construction site is close to a transmitter. These electromagnetic fields can pose direct or indirect danger to persons or objects, for example:

– Effect on human organs due to temperature increase.
– Combustion and ignition caused by temperature increases.
– Sparks or arcing.

DANGER
Risk due to electromagnetic fields!

▶ Before operating a crane in the vicinity of transmitters, be sure to consult with Liebherr-Werk Ehingen GmbH!
▶ Also consult a high frequency specialist!

High frequency (HF) radiation from a transmitter requires supplementary work safety protection and special environmental specifications for crane operators and personnel:

1.) Each crane must be “fully” grounded. Check visually or with a simple continuity tester to ensure that ladder, crane cab and rope pulleys are grounded.
2.) All personnel working on the crane or with large metal objects must protect themselves from burns by wearing non-conductive synthetic gloves and suitable clothing while working.
3.) There is no need to panic if you feel your hand warm up. Always work under the assumption that the respective workpiece, structural steel member or support is “hot”.
4.) The temperature of objects affected by high frequency radiation depends on their “size”. Cranes, carriers and coverings, for example, are “hotter”.
5.) Contact with other crane loads is not permitted when operating the crane (arcing). Since defects caused by burns considerably reduce rope carrying capacity, any such occurrences must be reported immediately to the foreman so that the ropes can be inspected.
6.) An insulator **1** is required at all times between the crane load hook and fastening equipment. It is strictly prohibited to remove this insulator **1**.
7.) Do not touch the ropes above the insulator **1**.
8.) Loads that are attached to the crane may not be touched by any unprotected parts of the body after the load has been lifted or set down.
9.) Do not work with a bare upper torso or in short pants, this is prohibited.
10.) To minimize absorption of high-frequency radiation, larger loads should be transported horizontally if possible.
11.) Loads must be grounded, or additional insulation used (rubber material between the object and gloves) when manual work is required.
12.) Use a suitable measuring instrument to check the “temperature” of the workpiece.
For example, if 500 V can be measured on a tool at a distance of 1 cm - 2 cm, then the tool may not be touched with bare hands.
The greater the distance, the higher is the voltage on the object:
At 10 cm distance, approx. 600 V are present, at 30 cm distance approx. 2000 V are present.
13.) When refueling the crane, it must be ensured that no sparks are created within a radius of 6 m, neither by handling larger metallic parts nor by other work.
14.) To avoid secondary accidents, use personal protective equipment when working on components that are high off the ground.
15.) Any accidents and unexpected events must immediately be reported to the local construction supervisor and the safety engineer.

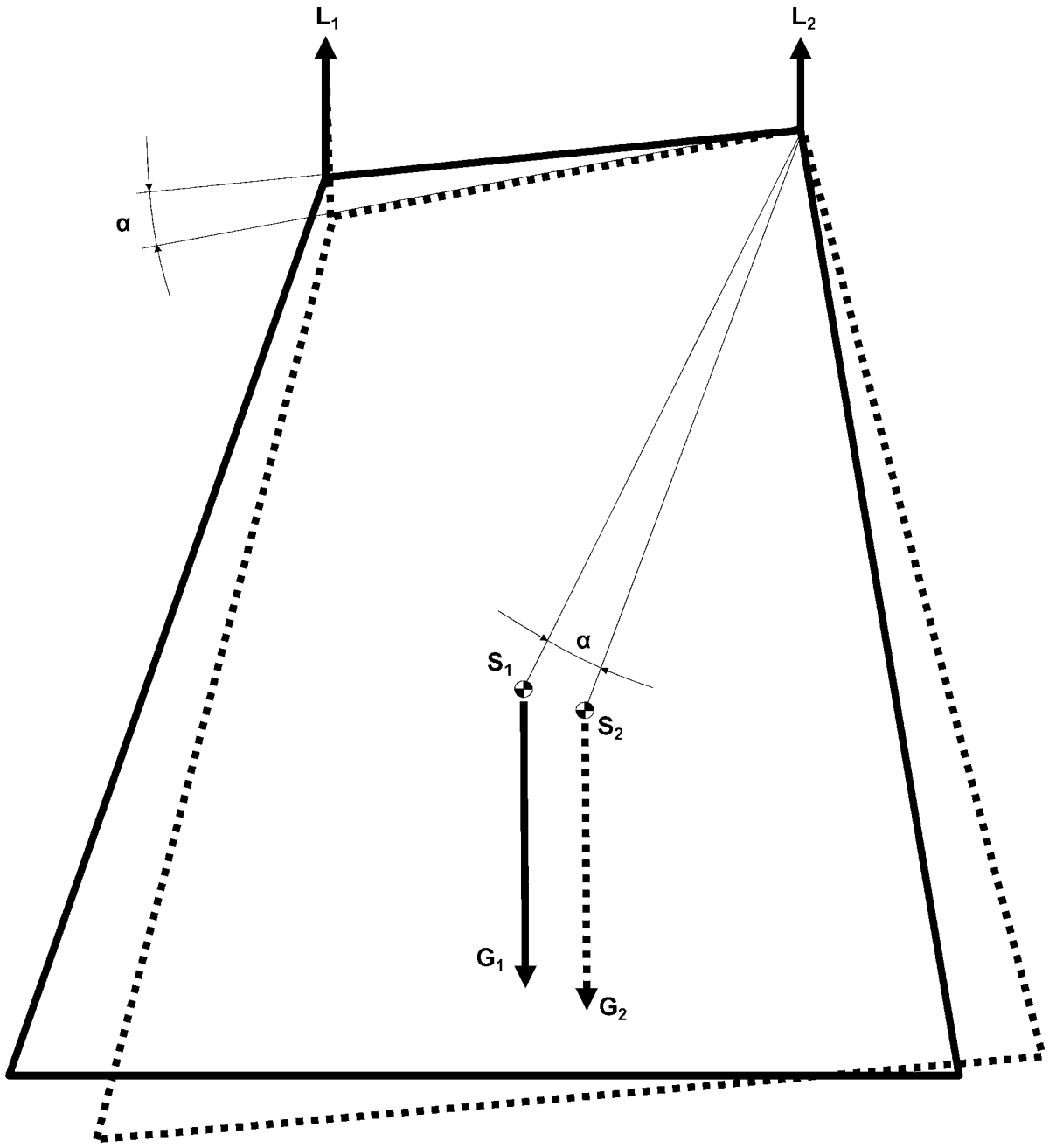

B111731

L_1 = Load on crane 1
L_2 = Load on crane 2
α = Angle of incline position
S_1 = Center of gravity of load
S_2 = Center of gravity of load at incline position

21 Dangers when working together with several cranes

21.1 Joint lifting of a load with two cranes

Before lifting a load jointly with two cranes, the operator of the cranes or a representative of the operator must determine the work sequence and assign a responsible supervisory person for the operation. The responsible supervisory person must monitor the operation.

Note

- ▶ The total weight and the center of gravity of the load must be known exactly!
- ▶ Carry out the job planning in detail and with care!

When the operational conditions or the work to be carried out require:

- ▶ Set up an assembly plan and operating instructions for the operation!

WARNING

Danger of tipping and overload of load carrying components!

If the load is not lifted or lowered exactly evenly by both cranes, then the center of gravity changes. One of the two cranes can be overloaded and topple over!

Personnel can be killed or seriously injured!

- ▶ Observe the national valid standards, regulations and accident prevention guidelines!
- ▶ Determine the utilization degree of the cranes in operation, depending on the complexity of the load lift!
- ▶ Plan for sufficient safety reserves!
- ▶ Utilize the load values given in the load chart manual for the used crane configuration to no more than the utilization degree of maximum 80 %!

In drawing is shown how the center of gravity for the load changes if the load is lifted or lowered unevenly. Already a slight incline of the load can cause the crane to be overloaded!
If the load on crane 1 **(L_1)** is lowered, the load on crane 2 **(L_2)** increases. As a result, crane 2 can be overloaded as a result of the load reduction of crane 1, without any action of its own!

21.2 Working ranges of several cranes overlap

WARNING

Risk of collision!

If the working ranges of several cranes overlap, there is a danger of collision!

Personnel can be injured or killed!

Significant property damage can result!

- ▶ The contractor or his representative must determine the work sequence in detail in advance!
- ▶ The contractor or his representative must ensure flawless communication between crane operators!
- ▶ The crane operators must ensure through calm operating mode, that no collisions occur due to uncontrolled movements! The crane operators must have been trained and instructed accordingly.

If the communication between the crane operators is not ensured by sound or visual connection, then suitable measures must be taken, such as using radio communication, guides or similar.

Note

- ▶ If guides are used, then the signals must be agreed upon between them and the crane operators, see section “Hand signals for guidance”!

22 Hand signals for guidance

For all crane movements, the crane operator must always keep the load as well as the crane hook or load handling equipment when the crane is not loaded, in his field of vision.

WARNING
Danger of accident if standing under suspended loads!
- ▶ Always keep loads in sight!
- ▶ Standing under suspended loads is prohibited!

If this is not possible, the crane operator may only operate the crane if he is signed by an assigned guide.
The operator may be guided by hand signals or a two-way radio. It must be ensured that there are no misunderstandings.

WARNING
Danger of accident caused by misunderstood hand signals!
- ▶ Hand signals must be mutually agreed upon and clearly executed!
- ▶ In any case, **national regulations** must be observed!

22.1 General hand signals

22.1.1 Start operation

(follow my instructions)

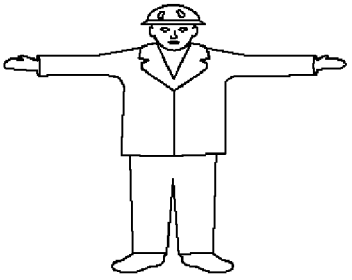

B111700

Both arms stretched out horizontally with hands open and palms directed to the front.

22.1.2 Stop

(normal stop)

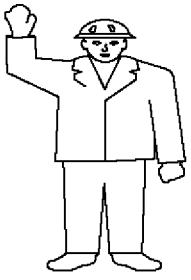

B111701

Lift one arm overhead with open hand and palm directed to the front.

22.1.3 Emergency stop

(quick stop)

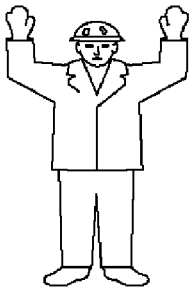

B111702

Lift both arms overhead with open hands and palms directed to the front.

22.1.4 End operation

(no longer follow my instructions)

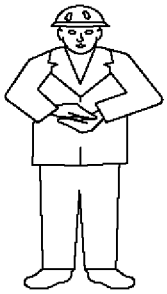

B111703

Fold hands together at chest height in front of body.

22.1.5 Inching gear or very slow movement

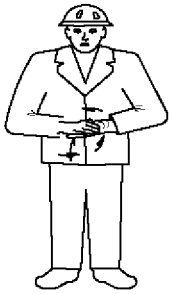

B111704

Rub palms together in circular motion. After this sign, all other applicable hand signals apply.

22.2 Vertical movements

22.2.1 Show the vertical distance

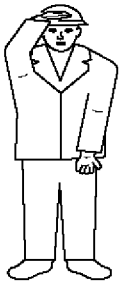

B111705

Both arms stretched out in front of the body one on top of the other, with opposing palms.

22.2.2 Lift / lower a load with even speed

B111706

Lift one arm overhead with closed hand and index finger pointing upward, with small horizontal circular movements with forearm.

22.2.3 Lift slowly

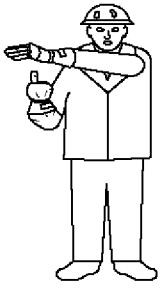

B111707

Give lift signal with one hand, the other palm is not moving and positioned over the hand, which gives the signal.

22.2.4 Lower the load while stationary

B111708

Point one arm away from the body, downward, with hand closed and index finger pointing down. Make small circular movements with forearm.

22.2.5 Lower slowly

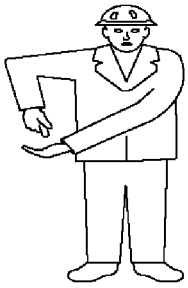

B111709

Give lowering signal with one hand, do not move the other palm and hold it under the hand, pointing to the hand which gives the signal.

22.3 Horizontal movements

22.3.1 Move / swing in given direction

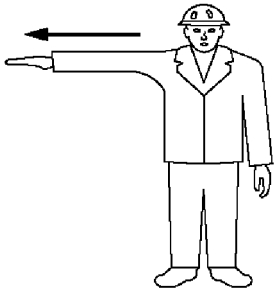

B111710

Hold stretched out arm horizontally into the desired direction, with the hand open and the palm pointing down.

22.3.2 Move away from me

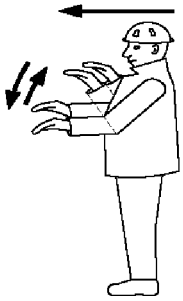

B1117111

Stretch out both arms simultaneously with forearms in front, with both hands open and the palms pointing down. Move the forearms repeatedly between the horizontal and vertical position up and down.

22.3.3 Move toward me

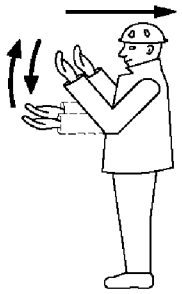

B1117112

Stretch out both arms simultaneously with forearms vertically, with both hands open and the palms pointing to the rear. Move the forearms repeatedly up and down.

22.3.4 Move both track chains

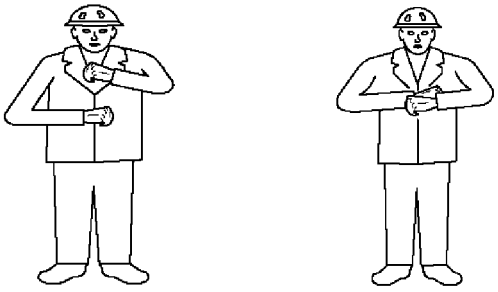

B1117113

Turn both fists around each other in front of the body in direction of the movement (forward or reverse).

22.3.5 Move one track chain

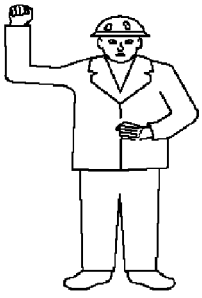

B1117114

Lift one fist to show blockage of chain on one side. Turn the other fist vertically in front of the body to signal movement of the opposite chain.

22.3.6 Show the horizontal distance

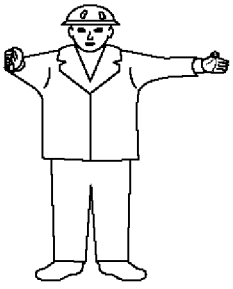

B1117115

Keep both arms stretched out horizontally in front of the body with the palms opposite each other.

22.3.7 Transfer (between two cranes or two hooks)

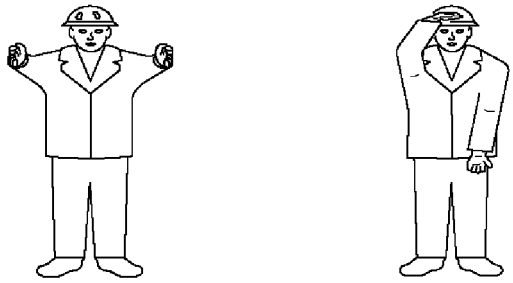

B1117117

Hold both arms stretched out to the front, parallel and horizontally and turn by 90° in direction of the transfer.

WARNING
Danger of toppling the crane!
▶ Make sure that the load carrying capacity of the individual crane and hook is sufficient even if the transfer of the load is suddenly asymmetric!

22.4 Machine related movements

22.4.1 Lift with main winch

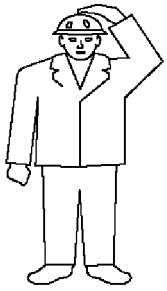

B1117119

Place on hand on your head and hold the other arm on the side of the body.
After this signal all other hand signals apply only for the main winch.

Note
▶ If two or more main winches are present, then the signaller can show the number of the crane by pointing to it or signal with one finger.

22.4.2 Lift with auxiliary winch

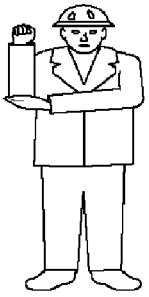

B111720

Hold one forearm vertically with closed hand and touch the elbow of this arm with the other hand. After this signal all other hand signals apply only for the auxiliary winch.

22.4.3 Lift the boom

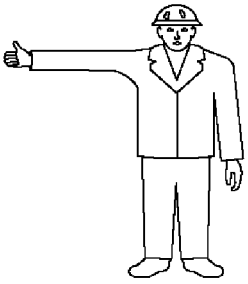

B111721

Hold one arm horizontally with thumb directed upward.

22.4.4 Lower the boom

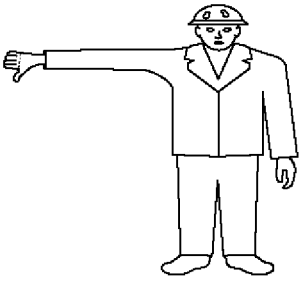

B111722

Hold one arm horizontally with thumb directed downward.

22.4.5 Extend the boom

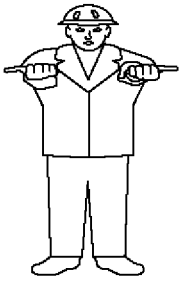

B111723

Hold both hands (with closed fists) stretched out to the front, with both thumbs directed away from each other.

22.4.6 Retract the boom

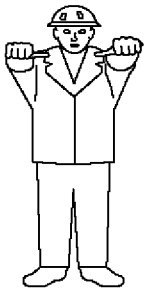

B111724

Hold both hands (with closed fists) stretched out to the front, with both thumbs directed toward each other.

22.4.7 Lift the boom and lower the load at the same time

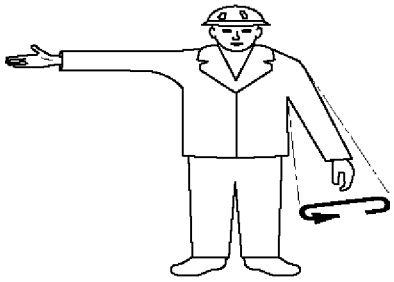

B111725

Hold one arm stretched out horizontally with thumb directed upward and stretch the other arm downward and away from the body, make small flat circles with the forearm.

22.4.8 Lower the boom and lift the load at the same time

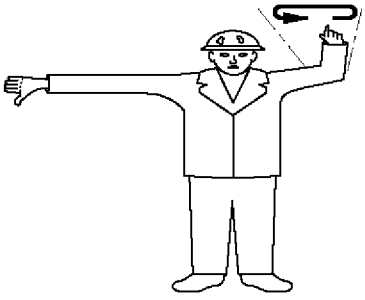

B111726

Hold one arm stretched out with thumb pointing down, stretch the other forearm upward and make small flat circles.

23 Crane operation with a load

WARNING
The crane can topple over!
If the crane is in condition which is **not** operationally safe, the crane can topple over or crane components can fall down!
Personnel can be severely injured or killed!
- ▶ Before starting to work, the crane operator must ensure that the crane is in operationally safe condition!
- ▶ If safe crane operation cannot be ensured by the crane operator, then crane operation is prohibited until an operationally safe condition for the crane is established!
- ▶ Safety devices, for example: Load moment limiter, hoist limit switch, brakes must be fully functioning, otherwise crane operation is prohibited!

Make sure that the following prerequisites are met:
- The load moment limiter must be set according to the current crane configuration.
- The loads given in the load chart may not be exceeded.
- The crane may never be subjected with a load which exceeds those specified in the load charts.
- The weight, center of gravity and dimensions of the load to be lifted must be known.
- Load carriers, lifting equipment and tackle must be in accordance with specified requirements.

Note
- ▶ Make sure that the weight of the hook block and the weight of the fastening equipment is subtracted from the load given in the load chart, see the following chart!

Example:		
Maximum permissible load according to chart		30.000 t
Weight of the hook block	350 kg	- 0.350 t
Weight of the fastening rope	50 kg	- 0.050 t
Actual load capacity of the crane		= **29.600 t**

The weight of the load to be lifted, in this example, may not exceed **29.6 t.**

23.1 Counterweight and / or ballast

The type of counterweight and / or ballast required depends on the weight of the load to be lifted and the radius required for crane operation. The deciding factor for the selection of the counterweight and / or ballast is the data in the corresponding load chart.

WARNING
The crane can topple over!
If the counterweight and / or ballast is not installed according to the load chart, then the crane can topple over and fatally injure personnel!
- ▶ Install the counterweight and / or ballast as specified on the respective load chart!

23.2 Hoist gear, hoist rope

The lifting capability of the crane depends on the pull force of the hoist gear and the number of possible hoist rope reevings. When using a single strand, the crane can only lift a load that is pulled by the hoist gear.
If the load to be lifted is heavier than the pull force if the hoist gear, then the hoist rope must be reeved as needed according to the principle of a pulley between the pulley head on the boom and the hook block.
When reeving, carefully observe the load chart specifications and the operating instructions.

WARNING
Hoist rope failure!
If the maximum pull force of the hoist gear is exceeded, the hoist rope can break or the hoist gear can be damaged!
The load can fall and kill personnel!
▶ Observe the maximum tensile force of the hoist gear!

23.3 Crane operation

DANGER
Not-observation of the following guidelines increases the risk of accident!
▶ Observe the following points.

High accident risk exists if:

1.) The load torque limiter is not set in accordance with the current crane configuration and is therefore not able to provide proper protection.
2.) The load torque limiter is defective or taken out of operation.
3.) The hoist limit switches are defective or not functioning.
4.) On crawler cranes:
The angle sensor and the force test brackets are not functioning.
5.) On mobile cranes:
The sliding beams of the hydraulic supports are not extended to the dimensions specified in the load chart.
6.) On crawler cranes:
The crawlers are not supported with stable base material sufficiently large for the ground conditions.
7.) On mobile cranes:
The support plates are not supported with stable base materials sufficiently large for the ground conditions.
8.) If the load is pulled at an angle.
Angular pulling to the side is particularly dangerous, because the boom has only minimal lateral resistance momentum.
Angular pull is prohibited.
9.) Load attached during disassembly is too heavy and is freely suspended on the crane after release.
10.) The load hook is used to break away stuck loads.
Even if the weight of a stuck load does not exceed the permissible load capacity, the crane can topple over backwards if the load is suddenly released due to the tension of the boom, which can cause it to jerk back violently.
11.) When working when the wind is excessively strong.
Comply with the load chart specifications.
12.) The crane is not aligned horizontally and the load is swung toward the slope.
13.) If improper crane movements cause the suspended load to swing like a pendulum.
14.) The loads and radii specified in the load charts are exceeded.
15.) When working in the vicinity of electricity transmission lines:
- The electricity transmission lines were not turned off by expert electricians
- **or** the danger zone was not covered or blocked off.

WARNING
Danger of current transfer!
If electricity transmission lines are not shut off nor covered nor blocked off, then there is an increased danger due to current transfer!
▶ Adhere to a safety distance of at least 6 m!
If a current transfer occurs, despite having taken all necessary precautions, proceed as follows:
▶ Remain calm!
▶ Do not leave the crane cab!
▶ Warn people outside: Stay in place and do not touch the crane!
▶ Move the crane out from the danger zone!

24 Lifting of personnel

24.1 Destined use

– The destined use of the crane is **lifting of loads**!
– **Lifting of personnel** is **not** considered to be destined use of the crane!

Note

▶ These instructions do **not** apply for work platforms, which are attached on the crane boom and are used to lift personnel. This subject is governed by international standards for mobile aerial work platforms!

WARNING

Non-designated use of the crane!

Personnel can be severely injured or killed!

▶ The crane is **not** intended to lift personnel!
▶ The crane may **not** be used for recreational purposes and exhibitions, such as lifting personnel for shows, bungee jumping or Dinner in the sky!
▶ The crane may **not** be used for lifting of devices with personnel on them or under the device, such as lifting of tents!
▶ Exception: If lifting of personnel for special work situations is the least dangerous possibility to carry out the work, then personnel may be lifted or brought into a suspended position when using lift cages (cherry pickers)!

24.2 Prerequisites for lifting of personnel

Make sure that the following prerequisites are met:

– Lifting personnel with cranes is permissible by national and local laws in the country where this crane application is carried out.

DANGER

Lifting of personnel!

Accidents which occur when lifting personnel often result in severe injuries or even death!

▶ This exceptional application is within the scope of responsibility of the user and is only permitted if the requirements and instructions in the next sections are observed and adhered to!
▶ The company, the supervisor, the crane operator and auxiliary personnel must proceed especially carefully and safety conscious!
▶ Before the lifting procedure, a meeting must be held with all associated personnel!
▶ The following warning notes and safety regulations must be strictly observed!

24.2.1 Legal prerequisites

Make sure that the following prerequisites are met:

– Special arrangements were made for the use of the lifting cage (cherry picker) according to the requirements of national laws!
– If required by national laws: The use of the crane to lift personnel was reported to the state agency for occupational health and safety. The lifting procedure may possibly require a special permit!
– Before the implementation of the lifting procedure with the aid of a work-specific risk analysis for the possibility of rescuing personnel in emergencies was defined!
– To rescue personnel in emergencies, precautionary measures must be present on the crane, if they are required by national laws!
– The measures for safe operation near power lines, depending on the conditions on the job site and the national laws / national regulations were observed and adhered to!

24.2.2 Prerequisites for crane equipment and accessories

Make sure that the following prerequisites are met:

- The hoist gear to lift personnel must also be able to be moved in emergency operation!
- Before lifting personnel, the crane was inspected. No damage was found!
- The lifting cage (cherry picker) is utilized according to national laws and / or standards and according to intended purpose!
- Before lifting personnel, the lifting cage (cherry picker) was carefully inspected. No damage was found!
- Every emergency rescue device was inspected and its operational readiness was determined, if required by national laws!
- Any hooks in use must be equipped with a latch, which prevents the hook mouth to open. According to national laws, the latch must be manually closable or lockable or must automatically close via a spring!

24.2.3 Inspection before operation

Make sure that the following inspections are made before use of the lifting cage (cherry picker):

- On every new construction site and after every modification or repair: To ensure the operating safety of the lifting cage (cherry picker) and the lifting equipment, a test with 125 % of the nominal load carrying capacity of the lifting cage (cherry picker) without personnel must be carried out! During the test, the lifting cage (cherry picker) may only be lifted just above the ground!
- A test lift with loaded lifting cage (cherry picker) without personnel must be carried out! The weight in the lifting cage (cherry picker) for the test lift must be at least as large as the weight of the personnel and the weight with the work equipment carried along! For this test lift, the course of all planned movements of the lifting procedure must be simulated!
- This test lift must be carried out for every location on a construction site, where personnel must be carried!

24.2.4 Prerequisites for operation with lifting cage (cherry picker)

Make sure that the following prerequisites are met for operation with lifting cage (cherry picker):

- The personnel and technical prerequisites for safe use and operation of the emergency control of the crane are present!
- The emergency control for emergency rescue of the person in the lifting cage is functioning!
- The rope pull is limited to 50 % of the maximum rope pull!
- The crane is utilized with 50 % of its maximum load capacity of the valid load chart!

25 Crane operation in case of thunderstorms

In weather conditions, which can include lightning:

- Stop work on the crane.
- If possible, place the load down.
- If possible, telescope the boom in or put it down and bring it into a safe condition.

If this is not possible, the crane cab must remain occupied by the crane operator to keep the crane and the load always under control.

WARNING
Danger of accidents due to lightning strikes!
▶ Make sure that there are no persons near the immediate area of the crane.

26 Safety notes for external power feed (100 V AC to 400 V AC)

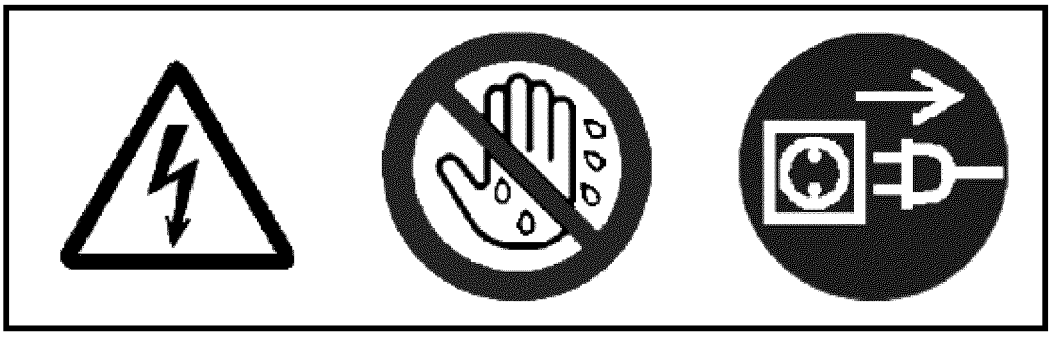

B197720

A potential hazard exists when supplying a crane with an external power supply from a low voltage distribution system (100 V AC to 400 V AC).
A special electrical hazard it present when a protective conductor is interrupted (caused by the mechanical stress on flexible supply lines or the service connection), loose terminal connections, high wire or contact resistance, mixed up conductors, defective or missing protective equipment (FI / fault interrupters) in combination with a body contact on the crane.

WARNING
Danger of fatal injury if the body conducts current!
Water and / or defective devices can cause hazardous stray voltages when touched. The person touching the crane is subject to lethal currents.
▶ The external supply cable must be in good working order!

Make sure that the external flexible supply cable is in good working order.
Where applicable, we recommend the use of a power isolating transformer.

27 Welding work on the load

Note
▶ The load must also be grounded.

In case of welding work on the load, the screw clamp of the welding unit must be attached on the work piece to avoid current flow via hoist rope, crane superstructure or crane chassis.

28 Interruption of crane operation.

28.1 Interrupting crane operation

WARNING
Crane is not supervised!
Situations during interruption of crane operation may occur which could cause the crane to become unsafe if left unsupervised!
The crane can topple over, personnel can be severely injured or killed!
▶ Always keep the crane under control!
If the crane can **not** be constantly kept under control:
▶ Take the equipment and the boom down!
If the crane is in equipped status:
▶ Do not leave the crane!
If wind conditions are present, which are above the permissible values of the wind speed chart:
▶ Do not leave the crane!
If crane operation with a set up crane is interrupted:
▶ Make sure measures are initiated in time by trained, qualified personnel to bring the crane into a safe condition if anything happens!
If an erroneous function of a crane movement is recognized during crane operation (change of cylinder stroke):
▶ The boom must be placed down completely, check the cylinder for internal and external leaks!

WARNING
Set up crane is not supervised!
If the set up crane is left during interruption of crane operation, situations may occur which could cause the crane to become unsafe!
The crane can topple over, personnel can be severely injured or killed!
If the construction site has limited space:
▶ The decision not to take the boom down while the crane is unsupervised can only be made by an authorized and qualified crane operator, who is familiar with the construction site!
▶ Make sure that no danger can occur for the crane and its surroundings should something unforeseen happen!
▶ Make sure for the duration of the interruption of crane operation, that the predicted wind speeds do not exceed the permissible values for the respective set up configuration, see wind speed chart!
If the predicted wind speeds are above the permissible values:
▶ Place the boom and the equipment completely down on the ground in time before the permissible wind speeds occur, telescope the telescopic boom in and luff down to 0°!
▶ To telescope the telescopic boom in / position the boom and the auxiliary boom, see Crane operating instructions and the wind speed chart!
▶ The boom on the crane may only be placed down if the predicted wind speeds according to the wind speed charts are less than the maximum permissible wind speeds during assembly and disassembly!
▶ Place the load completely on the ground and unhook from the crane hook!
▶ Lift the hook block into the highest position!
▶ Remove the fastening ropes from the hook!
▶ Make sure that all measures were taken to keep the crane in a safe condition if something happens!

▶ Make sure that access to the crane and operation for unauthorized personnel is excluded: Lock the driver's cab and the crane!

Incidents which could occur (for example):
- The ground giving way due to severe rain.
- Melting ice under the supports.
- Bad weather and thunderstorms, wind.
- Storm and wind.
- Lightning.
- Flooding.
- Landslides.
- Washouts.
- On mobile cranes:
  Slippage of support cylinders (leakage, temperature changes).
- On cranes with telescopic booms:
  Slippage of luffing cylinders (leakage, temperature changes).
- Vandalism.

Make sure that the following prerequisites are met:
- There is no load on the hook.
- The fastening ropes on the hook were removed.
- The hook block is in the highest position.
- The driver's cab and the crane cab are locked.
- The predicted wind speeds during the time frame of the interruption of crane operation are within the permissible range.
- The crane poses no traffic obstacle.

29 Resumption of crane operation

29.1 Resuming crane operation

When resuming crane operation, the crane operator is required to check the condition of the crane and the safety devices.

WARNING
Danger of accident!
▶ If the crane operator leaves the cab, even for a short time, the operating mode setting must be checked and reset, if necessary, before resuming crane operation.

▶ Check operating mode settings and reset, if necessary.

30 Ending crane operation

30.1 Ending crane operation

Before the crane operator may leave the crane, the following prerequisites must be met:
▶ Place the load fully on the ground and unhook from the crane hook.
▶ On cranes with telescopic booms:
  Telescope the telescopic boom all the way in and place the boom down.
▶ On cranes with lattice mast booms:
  Set down the lattice mast boom and disassemble if necessary.
▶ Bring the control lever (master switch) to 0-position.

- ▶ Apply the parking brake on the crane chassis.
- ▶ Turn the engine off and pull the ignition key.
- ▶ Lock the crane cab.
- ▶ Secure the crane to prevent unauthorized use.
- ▶ On mobile cranes:
  Make sure that the driver's cab is not occupied. Lock the driver's cab. Secure the crane to prevent it from rolling off unintentionally, see section “Parking the vehicle”.

31 Turning / driving in reverse

WARNING
Danger of accidents when turning or driving in reverse!
When turning or driving in reverse, personnel can be overlooked or killed!
Objects can be severely damaged!
- ▶ When turning or driving in reverse, the driver must act in such a way that he does not endanger other traffic participants!
- ▶ The driver may drive only in reverse or move back when it is ensured that persons or equipment are not endangered! If this cannot be ensured, then he must use a guide.
- ▶ An acoustical back up warning device will never replace the guide!
- ▶ Make sure that there are no persons or objects behind the vehicle when driving in reverse!
- ▶ Make sure that no personnel is injured or killed!
- ▶ Make sure that no objects are damaged!
- ▶ Driving in reverse is only permissible at slow driving speed (maneuvering speed)!
- ▶ Adhere to the national regulations!

32 Parking the vehicle

Note
- ▶ The “Parking the vehicle” section is only to be observed for mobile cranes!

WARNING
Danger of accidents if the vehicle rolls off!
If the following points are disregarded by the crane driver, then personnel can be fatally injured.
- ▶ It is prohibited to park the vehicle at a slope or an incline of more than 18 %.
- ▶ The parking brake must always be applied when parking the vehicle.
- ▶ The ground on which the vehicle is parked must be level and have adequate load-bearing capacity.

Make sure that the following prerequisites are met:
- – The vehicle is standing on level ground with sufficient load bearing capacity.
- – The parking brake is applied.

WARNING
The vehicle can roll off uncontrollably!
Under the following conditions, the vehicle must be secured against rolling away by using the specified number of wheel chocks or wedges, in addition to the parking brake:
- ▶ The vehicle is parked on a slope or an incline!
- ▶ The vehicle is defective, particularly if the brake system is defective!

- ▶ If all the specified wheel chocks are not placed directly behind the corresponding wheel, the vehicle may roll off uncontrollably and personnel can be fatally injured.
- ▶ All specified wheel chocks must be placed in such a way that they act against the downdrift force!
- ▶ Place all specified wheel chocks tightly directly under the wheel!
- ▶ Place all specified wheel chocks tightly so that they have an immediate braking action and keep the vehicle in parking position!

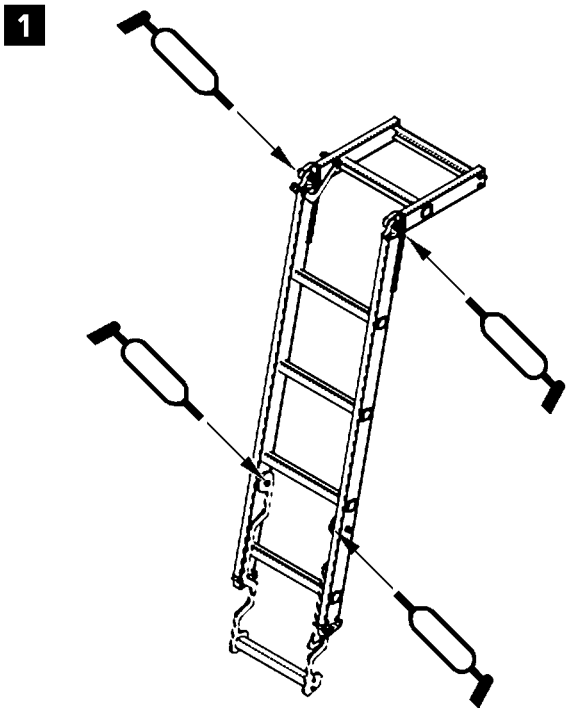

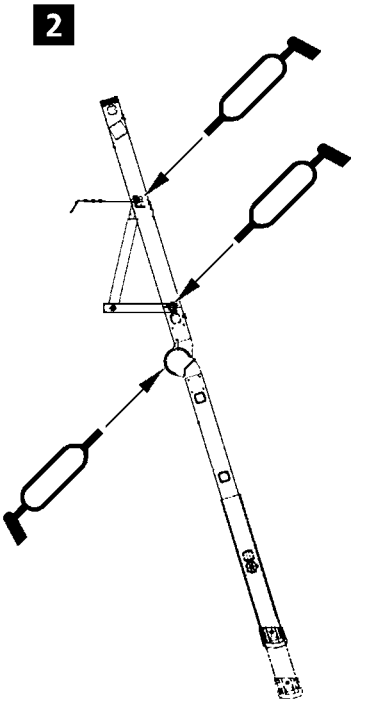

B109766

33 Safety guidelines for ladders

33.1 General

The ladders have been built according to the present level of technology and recognized safety technical regulations. Despite that, during their use dangers to life and physical condition of the user and / or third parties can occur. The ladders may only be used in a flawless technical condition and according to their missions as well as with constant awareness of safety and dangers. Changes on the structure may only be made with written approval of the manufacturer.
The ladders are exclusively designated for the entry and exit of personnel.
Any other use is not as intended.
The manufacturer is **not** liable for damages, which are caused by unintended use or improper usage.

WARNING
Danger of falling!
If the following safety guidelines are not observed, personnel can fall down and be killed or severely injured!
- ▶ Observe and adhere to the installation and safety guidelines for ladders!
- ▶ Observe and adhere to the safety signs on the ladders!
- ▶ Install and secure the ladders properly!
- ▶ Do not use damaged ladders and replace them immediately!
- ▶ Repairs on ladders may only be carried out by authorized expert workshops!

Before using the ladders, make sure that the following prerequisites are met:
- The ladders are hung and secured in the intended locations.
- The ladders are complete and not damaged (visual inspection).
- The legs of the ladders are not worn.
- Check the screws for tight seating and connection.
- The ladder may be subjected to a load of no more than one person or a maximum of 150 kg.

Before starting to drive / before transport, ensure that the following prerequisite is met:
- The ladders are tightly locked and secured in the intended transport retainers.

33.2 Maintenance

Note
- ▶ Grease joints and pivot points on the ladders regularly and check them for easy movement, see illustration **1** and illustration **2**!
- ▶ Remove any dirt on the ladders!
- ▶ The ribbing on the rungs must be clear!
- ▶ Repairs and maintenance work on the ladder must be made by expert personnel.

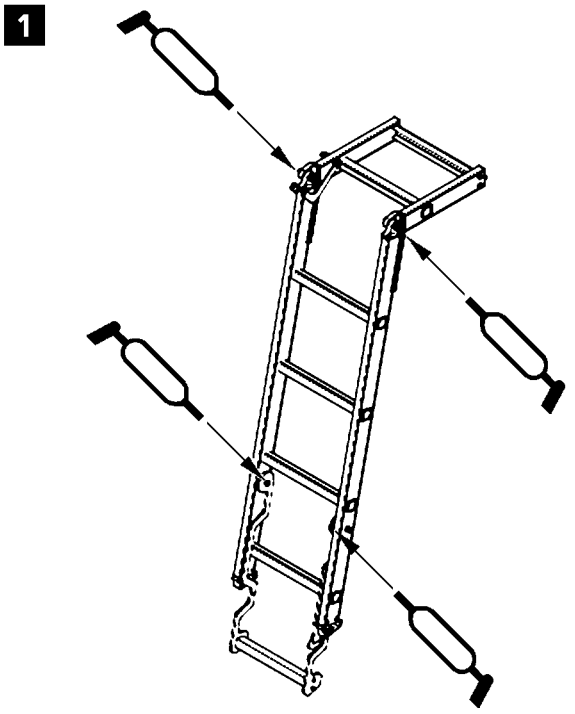

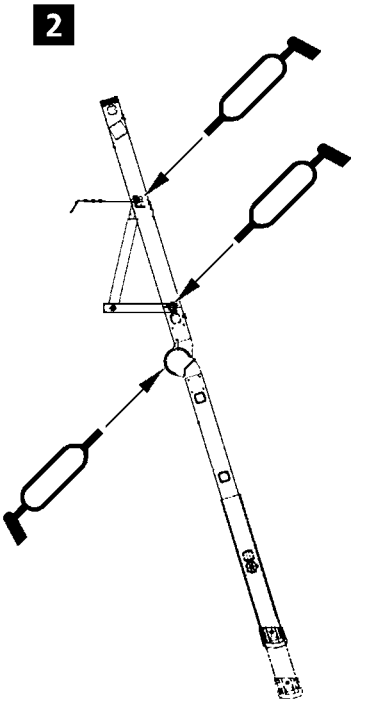

B109766

33.3 Safety signs on the ladders

Note

- ▶ All safety signs on the ladders must be complete and always legible!
- ▶ The operating instructions of the manufacturer must be observed and adhered to.

Sign	Explanation
	Read the operating instructions.
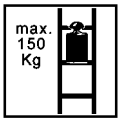	Maximum load.
	Correct set up angle.
	Set up on level ground.
	Avoid leaning out to the side.
	Eliminate any contaminants on the ground.
	Set up on solid ground.

Sign	Explanation
	Ladder overhang over the set up point.
	It is not permitted to step off to the side from the ladder.
	Only one person on every accessible bracket.
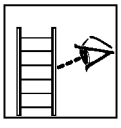	Visual inspection of the ladder before use.
	Do not use the ladder as a bypass.
	Do not stand on the top step.
	Check the legs of the ladder.
	When transporting the ladder, be aware of any danger due to overhead wires.
	Pay attention to correct set up direction.

Sign	Explanation
	Face the ladder when climbing up or down the ladder.
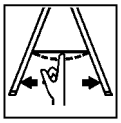	Before use, pay attention that the stepladder opens completely.
	Make sure the upper end of the ladder is placed correctly.
	Make sure that the safety strut engages.
	Maximum number of users on the ladder.
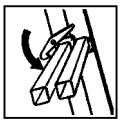	Before use, make sure it is safely engaged.
	Correct access.
	When climbing the ladder, wear suitable shoes.
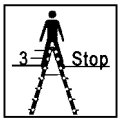	Stepladders: Access the ladder, without railing, to no more than the third step from the top.

Sign	Explanation
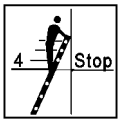	Leaning ladders: Access to no more than the fourth step from the top.
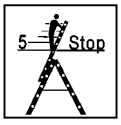	Universal ladders: Access to no more than the fifth step from the top.
	Access the ladder only when sober.
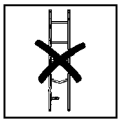	Eliminate damaged ladders immediately.
	Total weight of the ladder.
	Illustration of ladder type with maximum length.
	Secure the upper / lower end of the ladder.
	When folding together, make sure that fingers are not pinched.
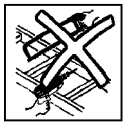	Any modifications on the ladder are impermissible.

Sign	Explanation
	Objects, which are to be transported when accessing a ladder should not be heavy and easy to handle.
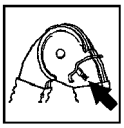	Make sure that the linkages engage safely.
	Tighten the base extension (4 Nm to 5 Nm).
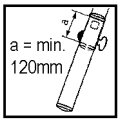	Adhere to a minimum overlap of the base extension of 120 mm .
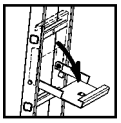	Fold the safety bridge open.
	The ladder must be hung on the vehicle.

B195219

1 Signs

1.1 7725039 – Warning of high voltage

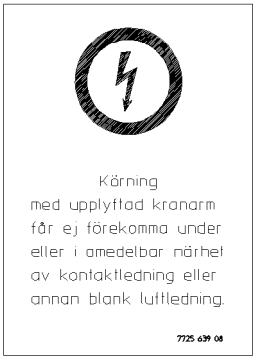

B116269

Note
▶ Only for certain countries.

1.2 772564008 – Swing range

B116270

Note
▶ Only for certain countries.

1.3 772580408 – Limitation of maximum travel speed

B106035

Note
▶ Only for certain countries.

1.4 Notice sign regarding vehicle height

	Notice sign regarding vehicle height
970610408	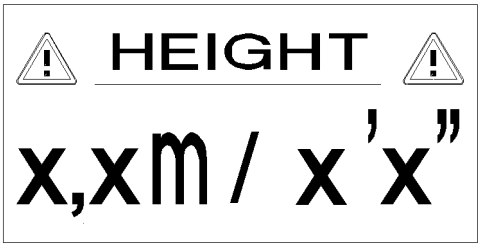
970629508	
970596108	
970608708	
979459108	

Note
▶ Only for certain countries.
▶ Vehicle height x.x m (x.x ft)

1.5 9412158 – Read operating instructions

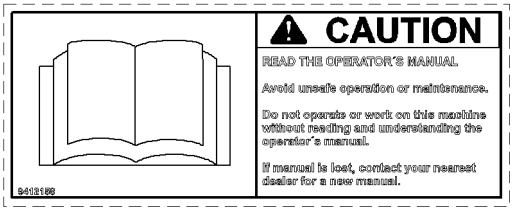

B106048

WARNING
Danger of accident due to non-observance of operating instructions!
If the operating instructions are not read or understood, then this can lead to unsafe operation and improper maintenance.
Accidents with bodily injuries and property damage can result.
- ▶ The crane may only be operated if the contents of the operating instructions have been read and understood.
- ▶ Replace lost or incomplete operating instructions immediately.

1.6 97004046 – Safety harness, maximum two persons

B115119

DANGER
Danger of accidents due to overloaded safety ropes!
If safety ropes are used by more than two persons, then the safety ropes can be overloaded and fail in case of an accident.
Personnel can be severely injured or killed.
- ▶ Safety ropes are designed to secure a maximum of two persons against falling, one on the right and one on the left.

1.7 97027147 – Overloading of combi box is prohibited

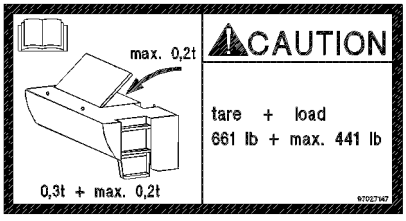

B113829

WARNING
Danger of overload!
If the combi box is subjected to a load of more than 0.2 t, the combi box can be damaged!
- ▶ The own weight of the combi box is 0.3 t and may be loaded with a maximum payload of 0.2 t.
- ▶ Do not subject the combi box to a weight of more than 0.2 t.

1.8 97036733 – Fastening point

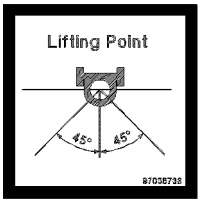

B116268

Note
▶ Notice sign for fastening points.

1.9 Suspended load fastening point

	Suspended load fastening point
97038434	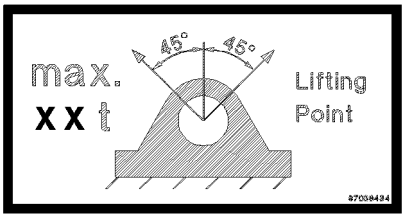
97037482	
97039068	

Note
▶ Observe the maximum permissible suspended load.

1.10 Suspended load fastening point

	Suspended load fastening point
97037221	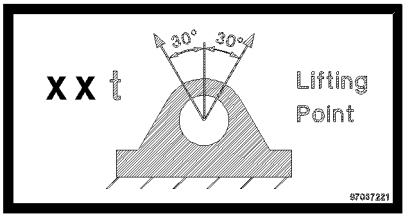
97037219	
97037223	

Note
▶ Observe the maximum permissible suspended load.

1.11 97036735 – Fastening point for lattice section

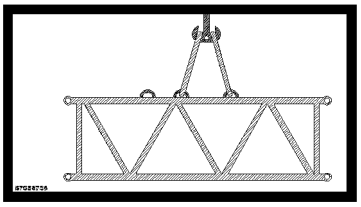

B116266

Note
▶ Notice sign for fastening points for lattice sections.

1.12 97036736 – Fastening point for lattice sections

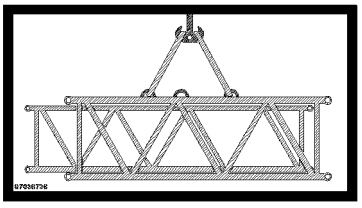

B116267

Note
▶ Notice sign for fastening points for lattice sections.

1.13 97038442 – Fastening point for lattice section

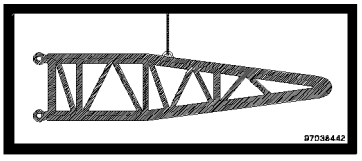

B116288

Note
▶ Notice sign for fastening point for lattice section.

1.14 97038452 – Fastening point for lattice sections

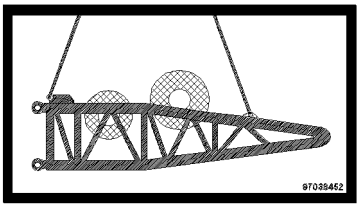

B116289

Note
▶ Notice sign for fastening points for lattice sections.

1.15 97038454 – Fastening point for lattice sections

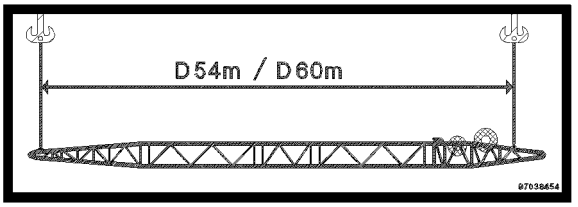

B116290

Note
▶ Notice sign for fastening points for lattice sections.

1.16 97037871 – Fastening points for lattice sections

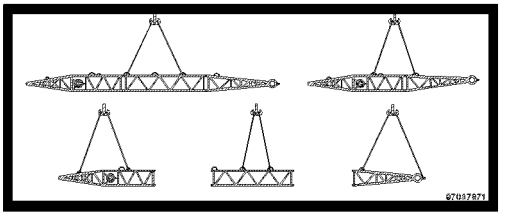

B116292

Note
▶ Notice sign for fastening points for lattice sections.

1.17 97039035 – Suspended load Assembly unit

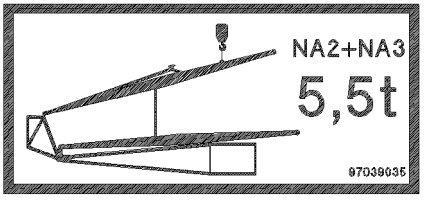

B117348

Note
▶ Notice the suspended load.

1.18 97003109 – Access of step ladder

B109032

WARNING
Danger of falling!
If the step ladder is accessed before it is completely folded out, the assembly personnel can fall and be fatally injured.
▶ Before stepping on the step ladder, fold the lowest step out.

1.19 97003110 – Fold the step ladder in and out

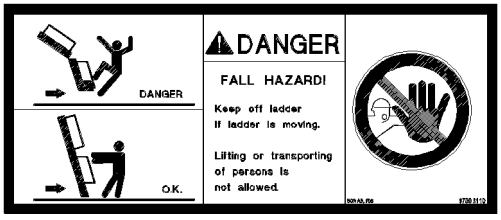

B109033

WARNING
Danger of falling!
When folding the step ladder in or out or when driving the crane, no persons may remain on the step ladder or within the entire danger zone! Persons can fall from the step ladder or be killed as the step ladder folds in or out.
▶ Fold the step ladder in and out only if there are no persons within the danger zone.

1.20 97006167 – Identification of support base

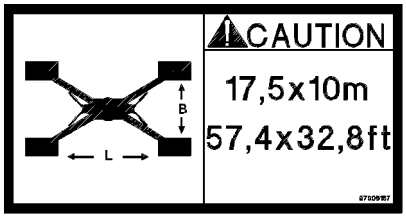

B116285

Note

▶ The support beams are swung out / extended to a support base of 17.50 m x 10.0 m; (57.4 ft x 32.8 ft).

1.21 97006167 – Identification of support base

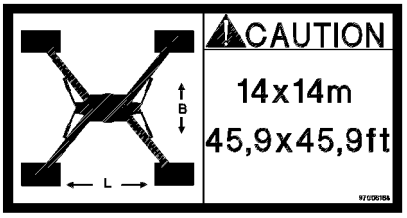

B116286

Note

▶ The support beams are swung out / extended to a support base of 14.0 m x 14.0 m; (45.9 ft x 45.9 ft).

1.22 97008514 – Warning of head injuries

B110550

WARNING

Head injuries!

Due to falling parts, personnel can be killed or severely injured.

Hitting the head can cause injuries.

▶ Protect your head with a hard hat.

▶ Always remain aware of your surroundings and behave in a safe manner.

1.23 97009799 – Data logger

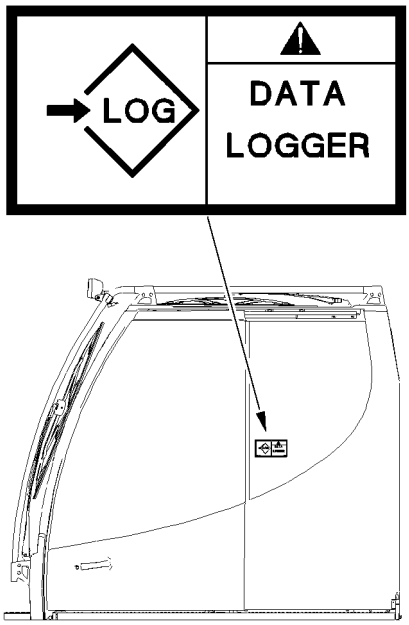

B116261

Note
▶ Notice sign for data logger.

1.24 97012949 – Maximum load

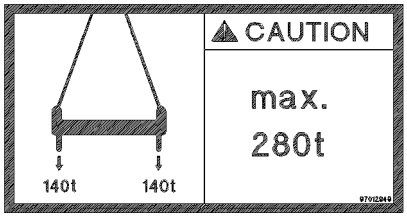

B116263

CAUTION
Property damage due to overload!
If the cross bar is subjected to a higher load than permissible, damage can occur.
▶ Do not overload the cross bar.

1.25 97012095 – Maximum load

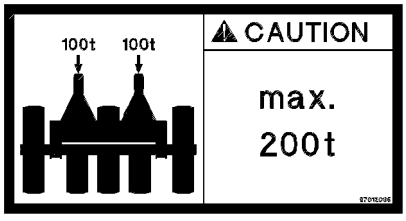

B116265

CAUTION
Property damage due to overload!
If the pulley cart is subjected to a higher load than permissible, damage can occur.
▶ Do not overload the pulley cart.

1.26 97011689 – Warning of crushing danger

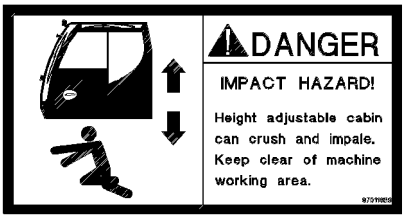

B111047

DANGER
Danger of fatal injury!
▶ It is prohibited to remain within the danger zone of the cab.
▶ Keep away from the movement range of the cab.

1.27 97011690 – Overload of cab is prohibited

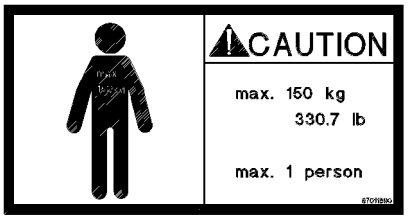

B111048

WARNING
Danger of overload!
If the cab is subjected to a load of more than 150 kg then the cab or the telescoping arm can be damaged!
▶ Only one person at a time may remain in the cab!
▶ Do not subject the cab to a weight of more than 150 kg.

1.28 97016304 – Notice sign for refueling

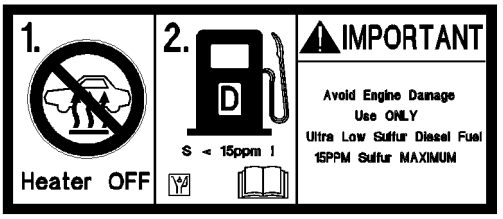

B113766

WARNING
Danger of fire and explosion!
▶ Turn the auxiliary heater* off approx. 3 min before refueling the fuel tank.
▶ Before refueling the fuel tank, turn the engine off.

NOTICE
Property damage to the engine!
If incorrect fuel is added, the engine can be severely damaged.
▶ Refuel with fuel according to the Engine manufacturer's operating instructions.

1.29 97016392 – Crushing danger for feet

B112474

WARNING
Crushing danger for feet!
Feet can be caught or crushed.
▶ Keep feet away.

1.30 97012737 – Danger of accident

B111748

WARNING
Danger of accident!
▶ For driving, the windshield must be closed.

1.31 97023034 – Disassembly

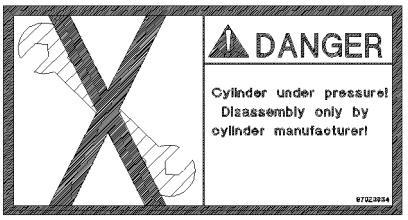

B116264

DANGER
Mortal danger due to repair!
Cylinder is pressurized.
Disassembly of the cylinder can result in death or serious injuries.
▶ The cylinder may only be removed by the manufacturer.

1.32 97036732 – Access via 3-point support

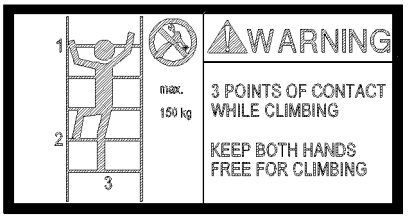

B115172

DANGER
Access via 3-point support!
While climbing up and down via a ladder, the assembly personnel can fall down and be injured severely.
▶ When climbing up and down, a 3-point support must be ensured.
▶ Use ladders only up to a weight of 150 kg.
▶ When climbing up and down, hands must be free.

A 3-point support is ensured when:
– Two legs are standing safely and one hand has a safe hold.
– Two hands have a safe hold and one leg is standing safely.

1.33 97003112 – Maximum suspended load

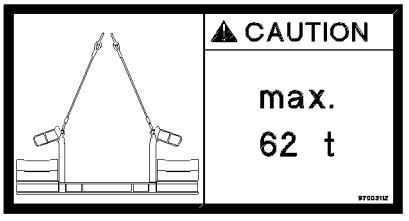

B116282

WARNING
Maximum suspended load!
If the maximum suspended load of 62 t is exceeded, the load can fall down and kill personnel.
▶ Observe the maximum permissible suspended load.

1.34 97036917 – Maximum suspended load

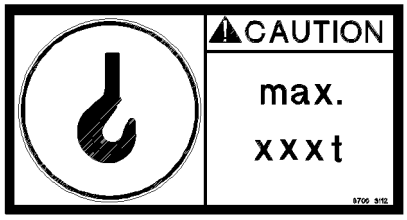

B116262

WARNING
Maximum suspended load!
If the maximum suspended load is exceeded, the load can fall down and kill personnel.
▶ Observe the maximum permissible suspended load.

1.35 97037383 – Notice sign for urea

B115173

CAUTION
Property damage due to incorrect service items!
When refilling urea and the urea is not used which is specified by the engine manufacturer then damage can occur.
▶ Refill **exclusively** urea.
▶ See engine manufacturer's operating instructions.

1.36 97037952 – Warning of fatal electric shock

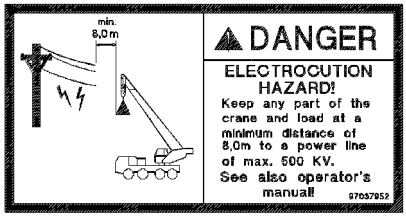

B116280

DANGER
Danger of fatal injury due to electrical shock!
If the boom or the hoist rope is under electric current, then death or severe injuries can occur if anyone touches the crane, the vehicle or the load.
▶ Keep a minimum distance of 6 m to current carrying parts.

1.37 97042797 – Warning of overload of components

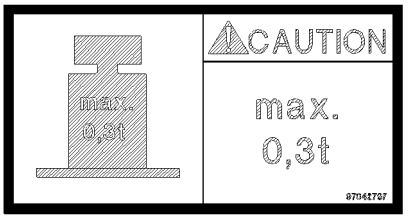

B117347

DANGER
Danger of falling due to overload!
If a component, such as a sliding beam platform, is subjected to a weight of more than 0.3 t, then the sliding beam platform can break.
Personnel can fall down and be severely injured or killed.
▶ Subject the components (sliding beam platform) to no more than maximum 0.3 t.

1.38 97041305 – Warning of overload of components

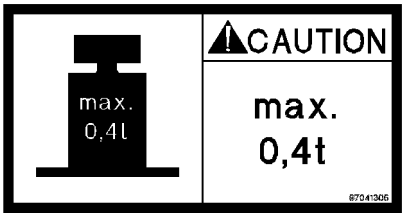

B116792

DANGER
Danger of falling due to overload!
If a component, such as a sliding beam platform, is subjected to a weight of more than 0.4 t, then the sliding beam platform can break.
Personnel can fall down and be severely injured or killed.
▶ Subject the components (sliding beam platform) to no more than maximum 0.4 t.

1.39 Warranted maximum sound power level

	Notice sign for Warranted maximum sound power level
975809508	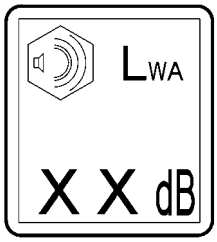
971693308	
971693408	
971693508	
971693608	

1.40 977055908 – Fastening point for swingable sliding beam

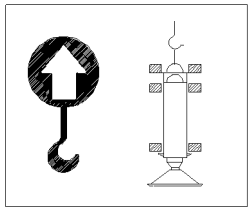

B106894

1.41 971494208 – Limitation of maximum travel speed

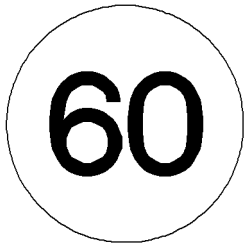

B106034

Note

▶ Only for certain countries.

1.42 971539808 – Warning notice for unpinning the auxiliary boom on the pulley head

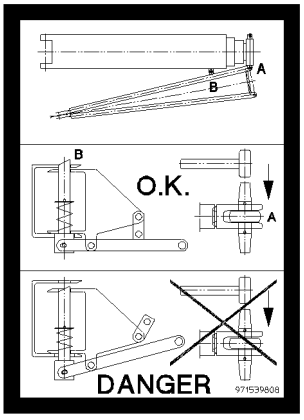

B106040

DANGER
Danger of fatal injury!
If the auxiliary boom is not locked correctly to the pivot section, it can fall down.
Personnel can be severely injured or killed.
▶ Unpinning the auxiliary boom on the pulley head is prohibited.

1.43 971539908 – Warning notice for unlocking the auxiliary boom

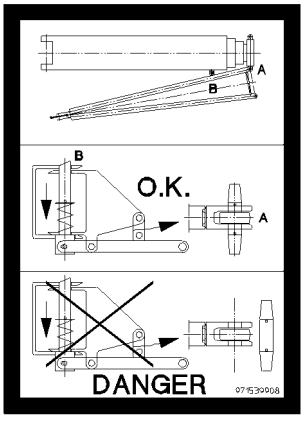

B106041

DANGER
Danger of fatal injury!
If the auxiliary boom is not locked correctly to the pulley head, it can fall down.
Personnel can be severely injured or killed.
▶ Unpinning the auxiliary boom on the pivot section is prohibited.

1.44 978673908 – Warning of suspended load

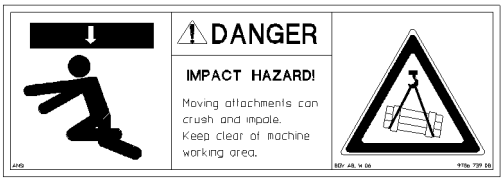

B106026

DANGER
Danger of fatal injury under suspended load!
- ▶ Standing under a suspended load is prohibited.
- ▶ Keep away from the working range of the machine.

1.45 978674008 – Access for unauthorized personnel prohibited

B106037

DANGER
Danger of fatal injury!
If the crane or the working area is accessed by unauthorized personnel, life threatening injuries can occur as a result.
- ▶ It is prohibited for unauthorized personnel to enter the crane or the working area.

1.46 97039753 – Danger of stumbling

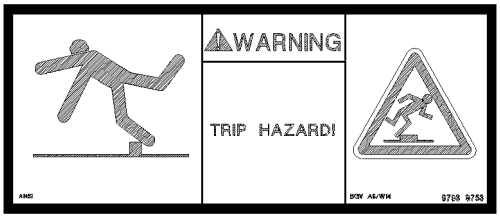

B117346

WARNING
Danger of stumbling!
- ▶ Move carefully.

1.47 978674108 – Warning of crushing danger

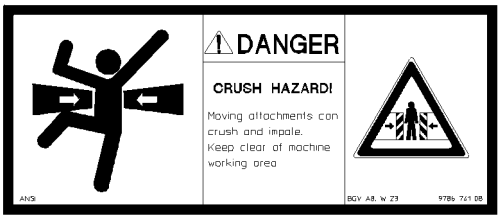

B106027

DANGER
Mortal danger when remaining in areas with crushing danger!
- ▶ It is prohibited for anyone to remain in areas, where there is a crushing danger.
- ▶ Keep away from the working range of the machine.

1.48 97016911 – Risk of collision

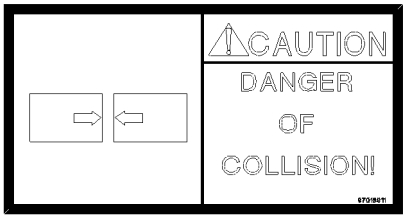

B117344

NOTICE
Risk of collision!
- ▶ Avoid a collision.

1.49 978674308 – Radio remote control

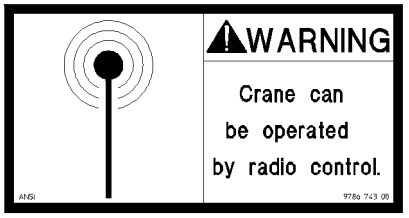

B106047

WARNING
Danger of injury due to crane operation with radio remote control!
- ▶ The crane can be operated with radio remote control!
- ▶ During crane operation, it is prohibited for anyone to remain in the danger zone!

1.50 978674408 – Danger of burning hands

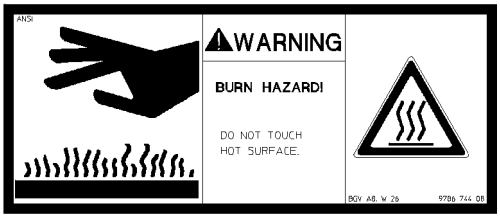

B106028

WARNING
Danger of burns when touching hot surfaces!
▶ Do not touch hot surfaces.

1.51 978674508 – Warning of rotating parts

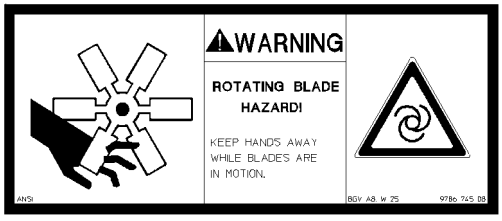

B106029

WARNING
Rotating parts!
The rotating fan blade can cause finger and hand injuries.
▶ Keep your hands away from the rotating fan blade.

1.52 978674608 – Crushing danger for hands!

B106030

WARNING
Danger of injuries for hands!
Hands can be caught, trapped or crushed within the danger zone.
▶ Keep hands away from the danger zone!

1.53 978674808 – Personal protective equipment

B106036

DANGER
Danger of falling!
▶ Use the personal protective equipment.

1.54 978674908 – Walking on the area is prohibited

B106038

WARNING
Danger of accident!
If the prohibited area is accessed, accidents can occur.
Personnel can be severely injured or killed.
▶ Do not access the prohibited area.

1.55 978675008 – Access prohibited

B106039

WARNING
Danger of falling!
If the crane is accessed by unauthorized personnel, life threatening injuries can occur.
▶ Do not get on the crane.

1.56 978687408 – Rigging point

B112475

WARNING
Rigging point!
- ▶ Use the rigging point **only** for rigging.
- ▶ Lifting on the rigging point is prohibited.

1.57 97036734 – Rigging point

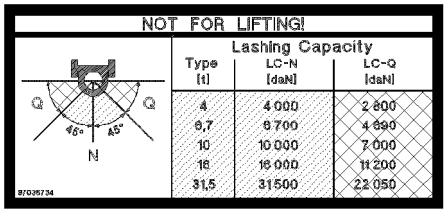

B116287

WARNING
Rigging point!
- ▶ Use the rigging point **only** for rigging.
- ▶ Lifting on the rigging point is **prohibited**.

1.58 978867108 – Warning of fatal electric shock

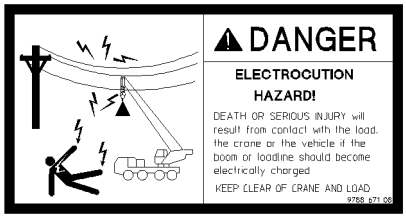

B106814

DANGER
Danger of fatal injury due to electrical shock!
If the boom or the hoist rope is under electric current, then death or severe injuries can occur if anyone touches the crane, the vehicle or the load.
- ▶ Keep away from the crane and the load.

1.59 979383308 – Notice sign for oil change

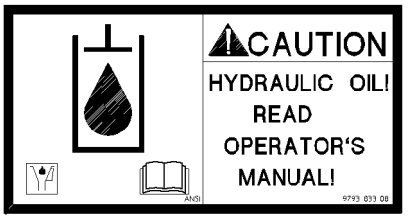

B113827

CAUTION
Property damage through oil change!
If the oil specified in the operating instructions is not used during the oil change, it can lead to damage.
▶ See Crane operating instructions, chapter 7.07.

1.60 979561108 – Counterweight

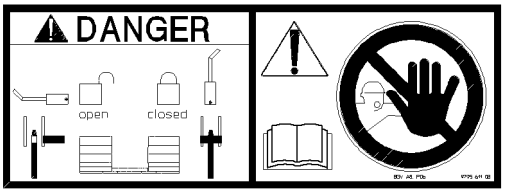

B109026

WARNING
Counterweight can fall down!
If the auxiliary crane is removed on the counterweight before the counterweight is locked on both sides with the turntable, then the counterweight will fall down and can fatally injure assembly personnel.
▶ Do not remove the auxiliary crane until the counterweight is locked and secured on both sides with the turntable. See Crane operating instructions, chapter 4.07.

1.61 97001802 – Falling platform

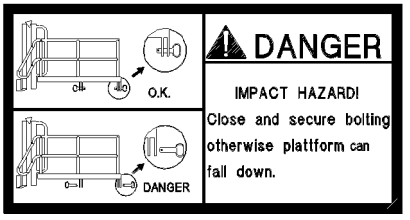

B117345

WARNING
The platform can fall down!
▶ Pin and secure the platform in assembly / disassembly position.

1.62 973974408 – Permissible transport weights of the components

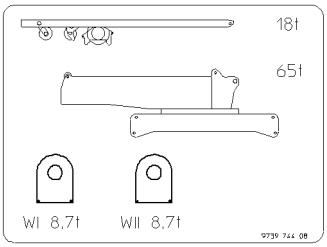

B112440

1.63 973974608 – Permissible transport weights of the components

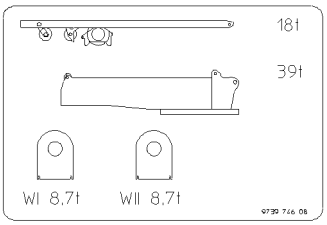

B112441

1.64 97011336 – Permissible transport weights of the components

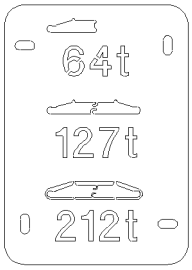

B116271

1.65 Identification of sliding beam

	Identification of sliding beam
978675108	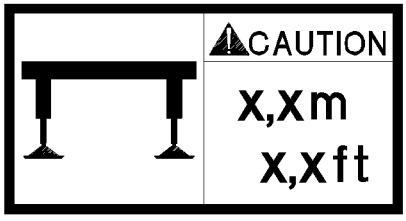
978675208	
978772808	
978772908	
978809308	
978809408	

	Identification of sliding beam
978809508	
978818408	
978818508	
978875908	
978902608	
978903108	
97029203	
978903208	
979126008	
979126108	
979210508	
979210608	
979210608	
979210708	
979309108	
979309208	
97019140	
97003224	
979410808	

Note

▶ Extend the sliding beams to a support width of X.X m (X.X ft).

1.66 Identification Track width retracted

	Track width retracted
97009840	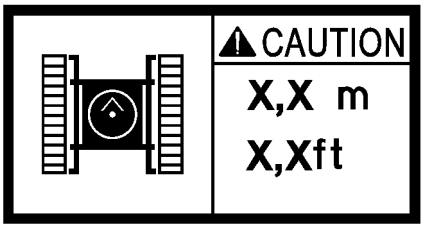
97009841	
97017044	
97017045	
97017046	

Note
▶ Track width retracted to x.xx m (x.x ft)

1.67 976624808 – Fasten the load

B116283

WARNING
Fastening the load is prohibited!
If the load is lifted on this point, the load can fall down and kill personnel.
▶ Lifting the load on unmarked locations is prohibited.

1.68 Notice Weight sliding beam

	Weight of sliding beams
979932008	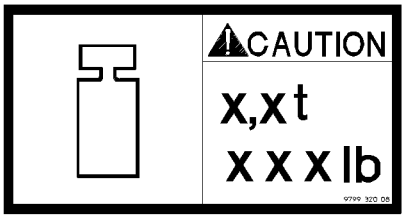
979932108	
979932708	
979932808	

Note
▶ Pay attention to the weight of the sliding beams.

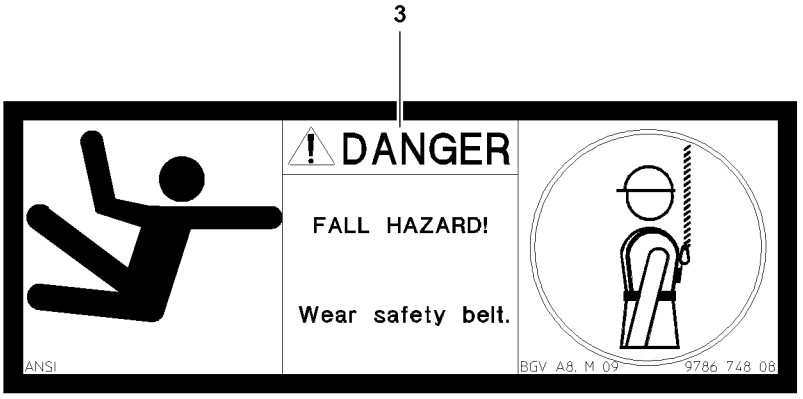
3
DANGER
FALL HAZARD!
Wear safety belt.
ANSI
BGV A8, M 09
9786 748 08

B112104

1 Personal protective equipment

WARNING
Danger of falling!
During assembly / disassembly, inspection and maintenance work, personnel must be secured with appropriate aids to prevent them from falling!
If this is not observed, assembly personnel could fall and suffer life-threatening or fatal injuries!
- ▶ The assembly personnel must always move carefully and anticipatory on the crane, the crane components or lattice sections!
- ▶ All work aloft, where there is a danger of falling must be carried out with suitable aids!
- ▶ If fall protection equipment is available, then it must be used!
- ▶ If aids are not available and work cannot be carried out from the ground, then the assembly personnel must secure themselves with the permissible fall arrest system to prevent falling, see Crane operating instructions, chapter 2.04!
- ▶ The fall arrest system must be attached on the fastening and hook points as well as on the safety ropes!
- ▶ Only step on the aids, ladders and catwalks with clean shoes!
- ▶ Keep aids, ladders and catwalks free of heavy dirt, snow and ice!

WARNING
Danger of accident due to fall arrest system exposed to a fall!
If a fall arrest system is not replaced after a fall, then the fall arrest system can fail in case of a new fall! The assembly personnel can be killed or severely injured!
- ▶ After every fall, the fall arrest system must be removed and inspected by a authorized and trained experts!
- ▶ The results must be documented in the inspection log book!
- ▶ Only after written release by expert personnel may be fall arrest system be reused!

Note
- ▶ The sign **3** marks the fastening points, where assembly personnel must hook in with a fall arrest system to secure themselves against falling!

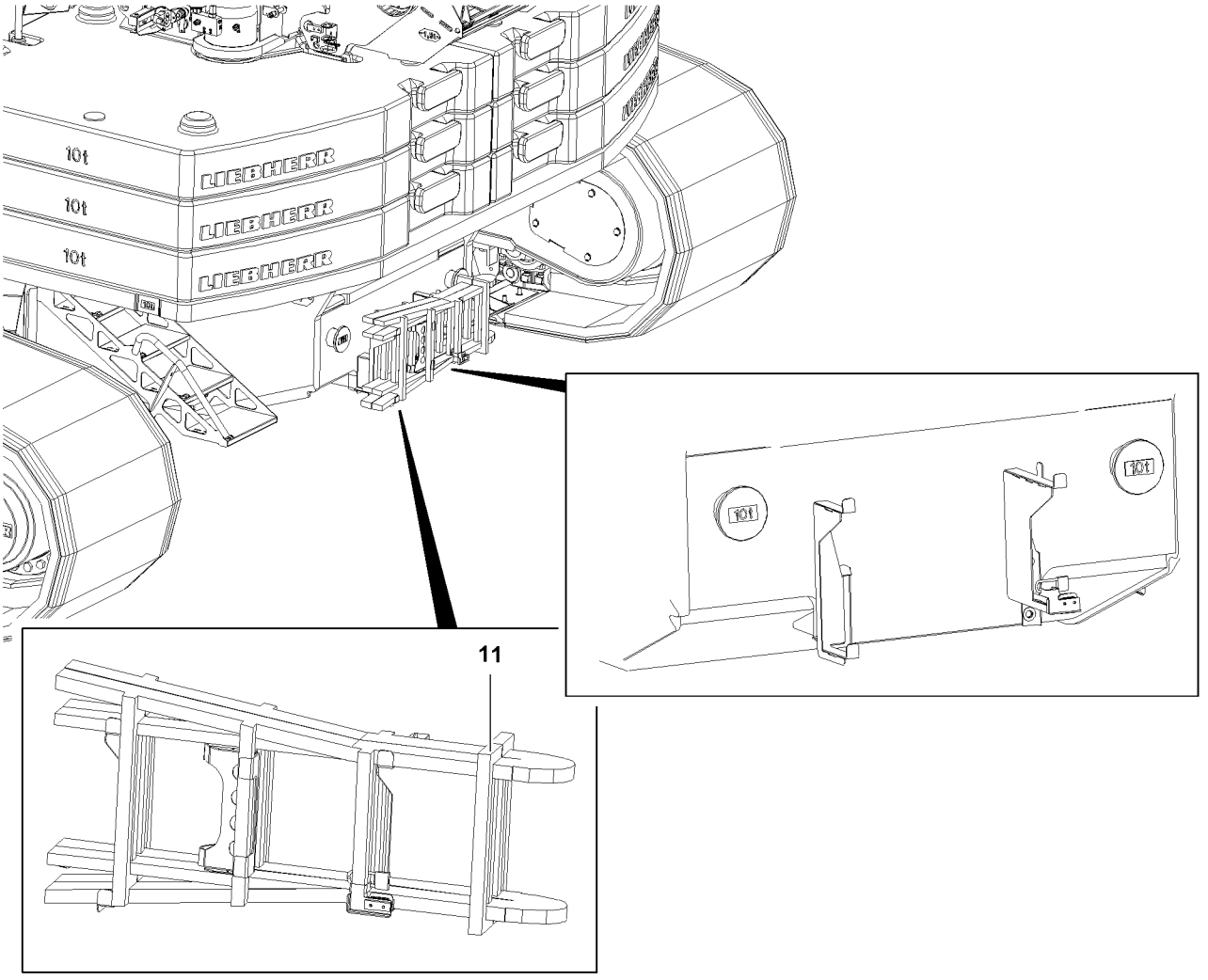
10t
10t
10t
LIEBHERR
LIEBHERR
LIEBHERR
10t
10t
11

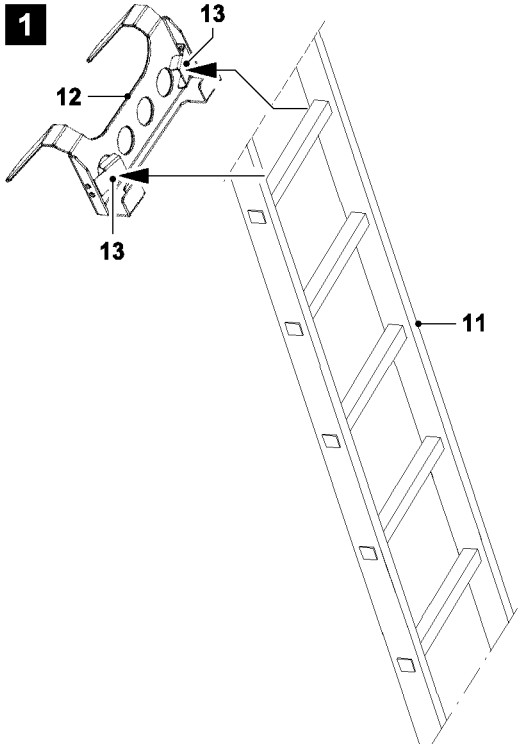
1
13
12
13
11

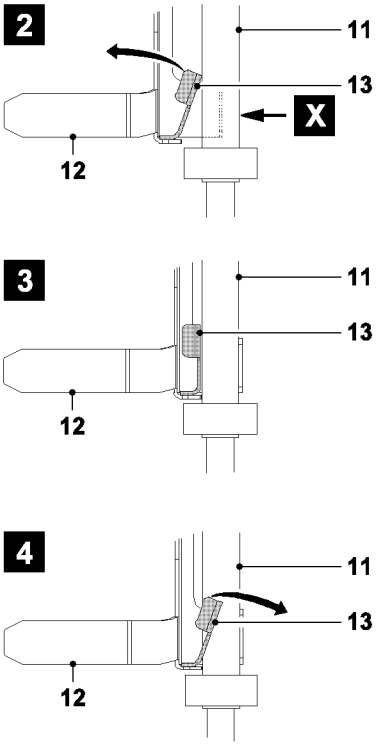
2
11
13
X
12
3
11
13
12
4
11
13
12

B117374

2 Preparing a ladder

Note

- For assembly / disassembly work on the telescopic boom, the folding jib and the folding jib extension, the supplied ladder **11** with hook device **12** must be used.
- The ladder **11** is carried along on the central ballast.

WARNING

Danger of accident!

If the following notes are not observed, the ladder can tip and the assembly personnel can fall from the ladder and sustain life-threatening injuries!

- Replace damaged ladders immediately!
- Use only the supplied ladder **11**!
- The hook device **12** on the ladder serves as protection from falling over. For all assembly / disassembly work on the folding jib, folding jib extension and telescopic boom, the ladder with hook device **12** must be used!
- The ladder must be set up stable and safely accessible.
- For safe handling of the ladder, observe the safety instructions on the ladder!

2.1 Installing the hook device on the ladder

Before using the ladder as a leaning ladder, the hook device **12** must be installed on a rung.

- Push the ladder with the required rung against the locking plates **13** on the hook device **12** (point **X**), see illustration **1**, illustration **2**.

Result:

– The locking plates **13** spring in direction of the arrow and release the receptacle on the hook device **12** for the rung, see illustration **3**

- Push the hook device **12** “upward”.

Result:

– The locking plates **13** spring (arrow) “back” into their original position by themselves and secure the rung, see illustration **4**.

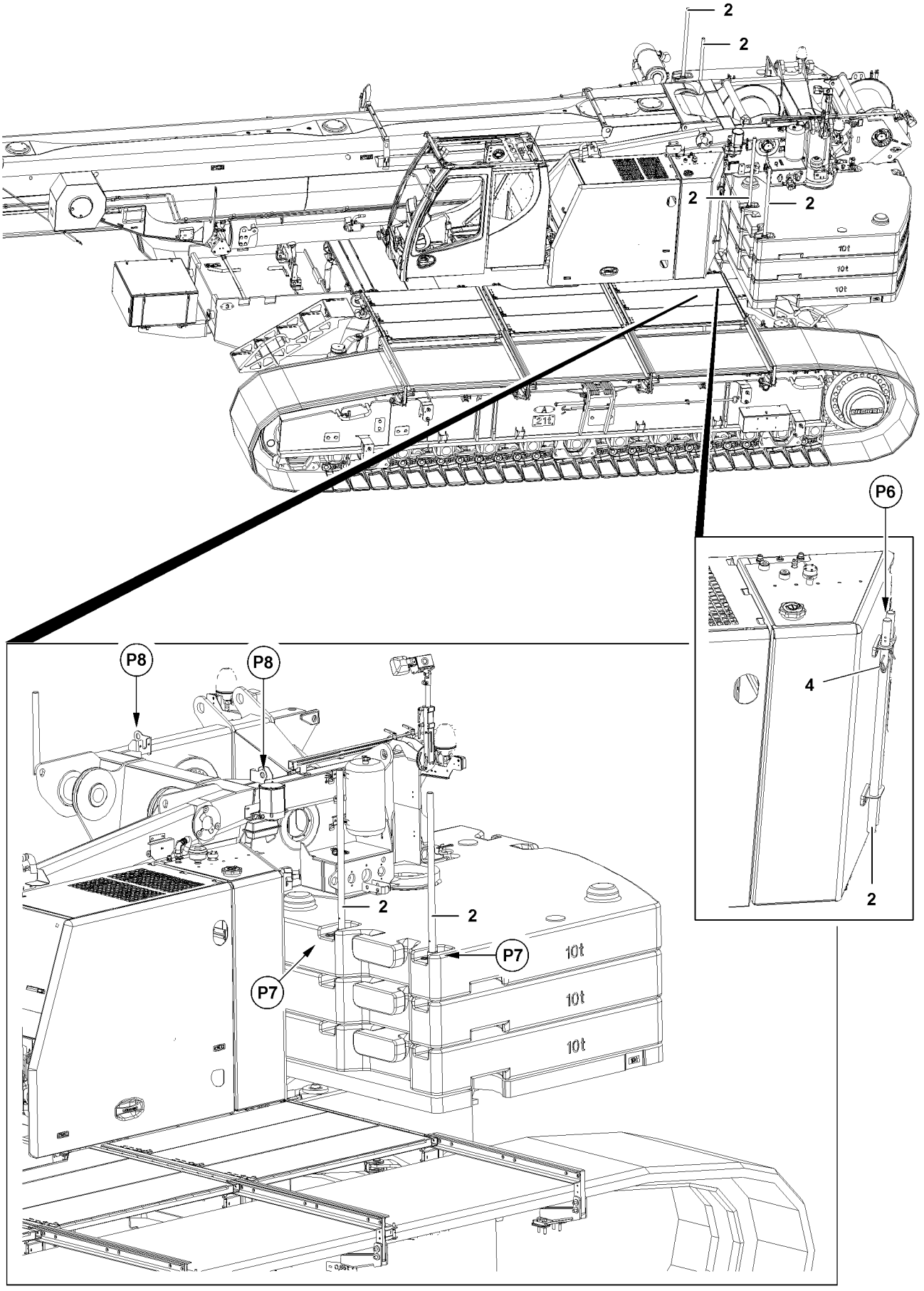

B117375

3 Retaining pipes on the crane superstructure

WARNING
When working aloft, there is a danger of falling!
If the following notes are not observed, the assembly personnel could fall and suffer life-threatening injuries!
- ▶ Assembly / disassembly personnel must wear approved fall arrest system and protective equipment before performing any assembly / disassembly and maintenance work on the crane superstructure!
- ▶ The assembly personnel must hook themselves on the hook points **P8** with an approved fall arrest system to prevent them from falling!

NOTICE
Danger of damage!
- ▶ Never hang loads or objects on the hook points **P8**!

Make sure that the following prerequisite is met:
- The chassis platform is installed.

3.1 Installing the retaining pipes into position for assembly / disassembly

- ▶ Remove the retaining pipes **2** in transport position **P6**.
- ▶ Install the retaining pipes **2** on the assembly / disassembly position **P7** and secure with spring retainer **4**.

3.2 Installing the retaining pipes in transport position

- ▶ Remove the retaining pipes **2** and install in transport position **P6**.
- ▶ Secure the retaining pipes **2** in transport position **P6** with spring retainer **4**.

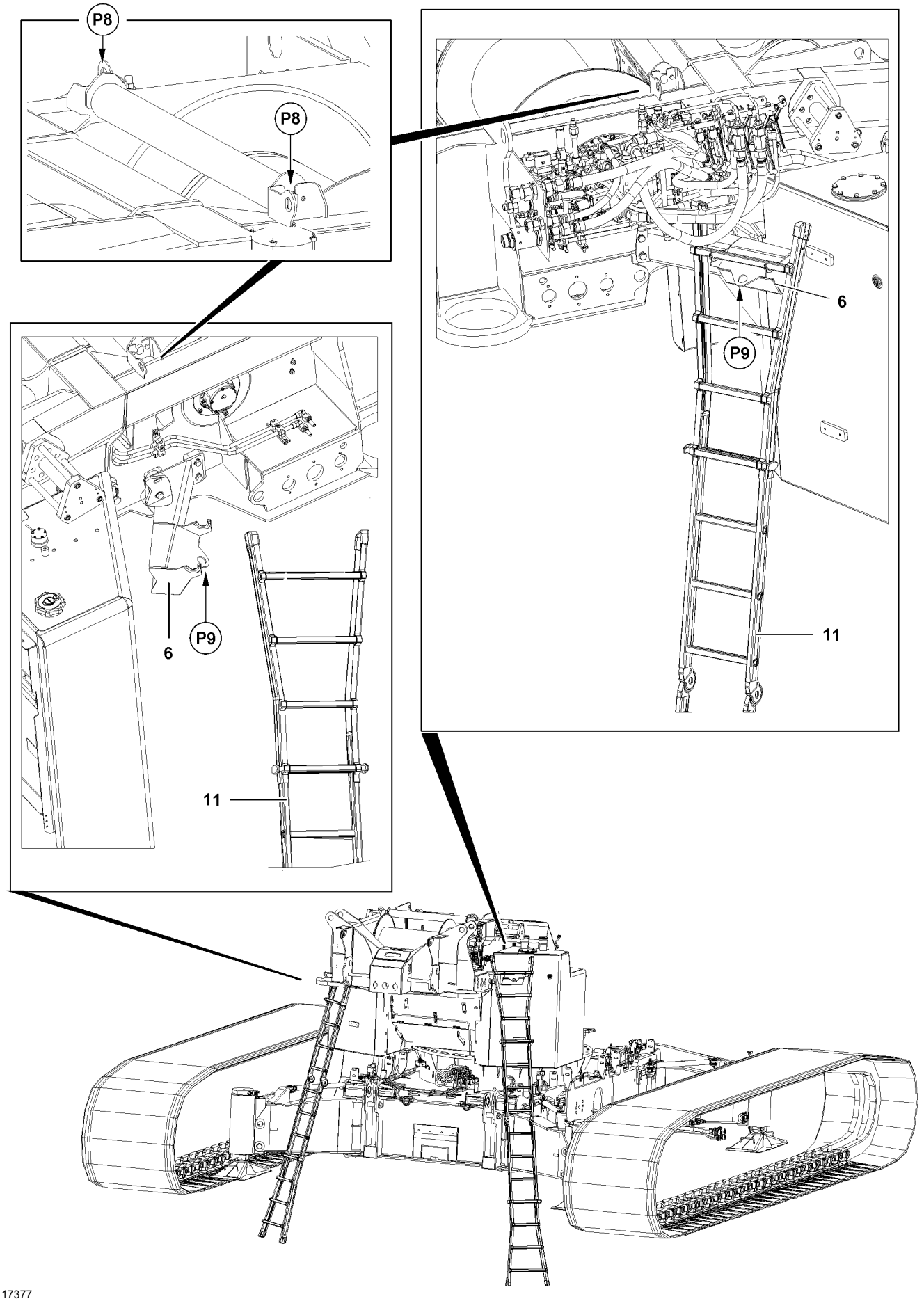

B117377

4 Fastening and hook points

4.1 Fastening and hook points on the crane superstructure

The fastening points are installed on the crane superstructure.

WARNING
Danger of falling!
During assembly and disassembly, assembly personnel must be secured with appropriate aids to prevent them from falling. If this is not observed, assembly personnel could fall and suffer life-threatening or fatal injuries!

- ▶ Any work, where there is a danger of falling, must be carried out with suitable aids (for example: lifting platforms, scaffoldings, ladders, auxiliary crane)!
- ▶ If aids are not available and work cannot be carried out from the ground, then the assembly personnel must secure themselves with the supplied fall arrest system to prevent falling, see Crane operating instructions, chapter 2.04!
- ▶ For assembly / disassembly and maintenance work on the rear of the crane superstructure, hang ladder **11** in plate **6**.
- ▶ Use only the supplied ladder **11**.
- ▶ For safe handling of ladder, observe the safety guidelines on the ladder.
- ▶ Step on the ladder only with “clean shoes”.
- ▶ Keep ladder clean and free of snow and ice!
- ▶ The assembly personnel must secure themselves on the fastening points **P8 / P9** with the supplied fall arrest system to prevent falling!

WARNING
Danger of damage!

- ▶ Never hang loads or objects on the attachment points **P8 / P9**.

- ▶ Only wear approved fall arrest system and protective equipment.
- ▶ Clean dirty shoes.
- ▶ Hang ladder **11** in plate **6** and set it up stable
- ▶ Hook the fall arrest systems on fastening points **P8 / P9**.

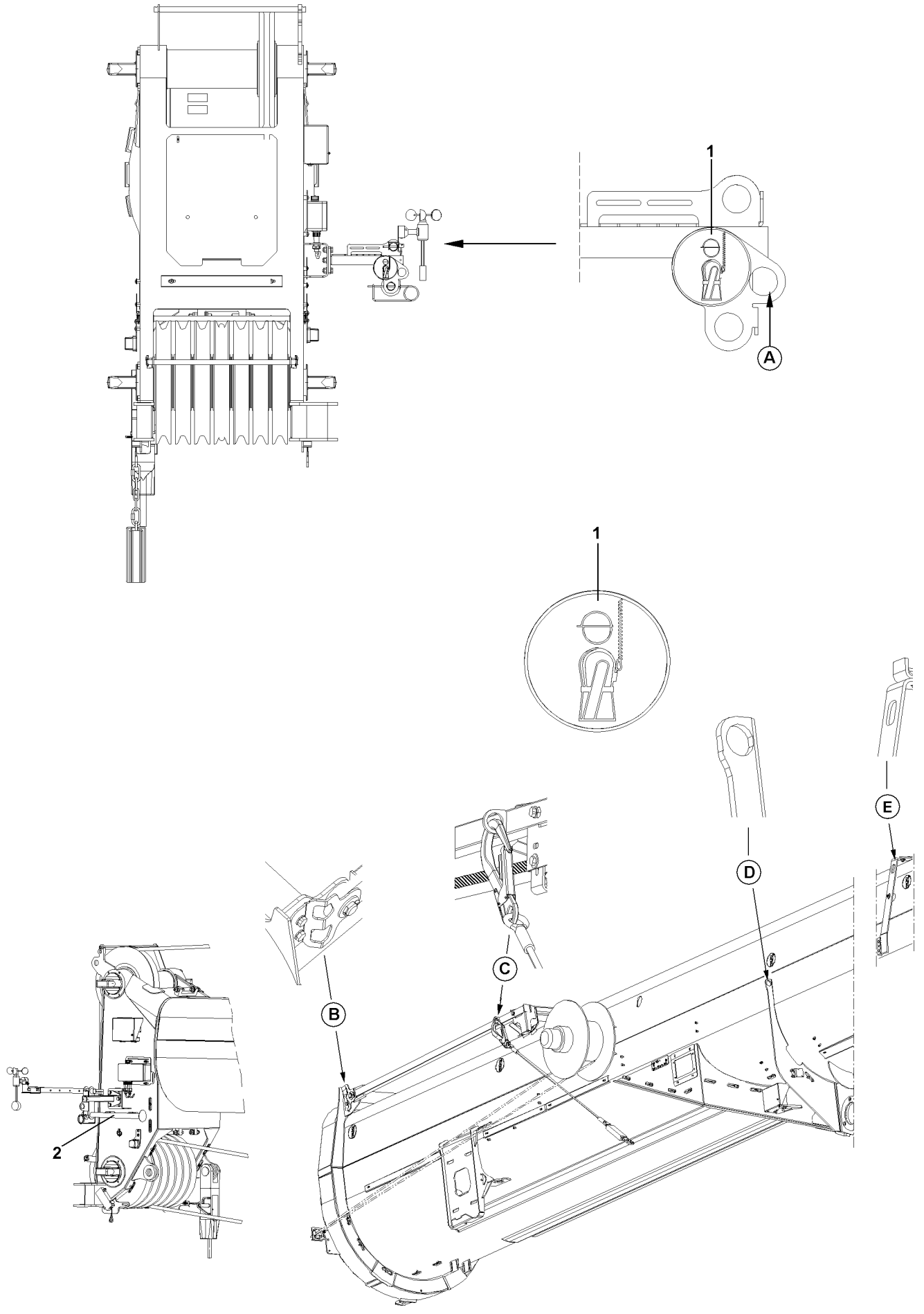

B199896

4.2 Fastening and hook points on the telescopic boom

Fastening point **A**, fastening point **B**, fastening point **C**, fastening point **D** and fastening point **E** are installed on the telescopic boom.

DANGER
When working aloft, there is a danger of falling!
If the following notes are not observed, the assembly personnel could fall and suffer life-threatening injuries!

- ▶ Before any assembly / disassembly work and maintenance work on the crane superstructure and the telescopic boom, the assembly personnel must wear the approved safety harnesses and protective equipment.
- ▶ For assembly / disassembly work, the ladder **with hook device** is hooked on pipe **2**, see also section “Installing the hook device on ladder”.
- ▶ The assembly personnel must secure itself with approved safety harnesses on fastening point **A** or fastening point **B** or fastening point **C** or fastening point **D** or fastening point **E** to prevent falling.

DANGER
Danger of damage!

- ▶ Never hang loads or objects on fastening points **A**, fastening point **B**, fastening point **C**, fastening point **D** or fastening point **E**.

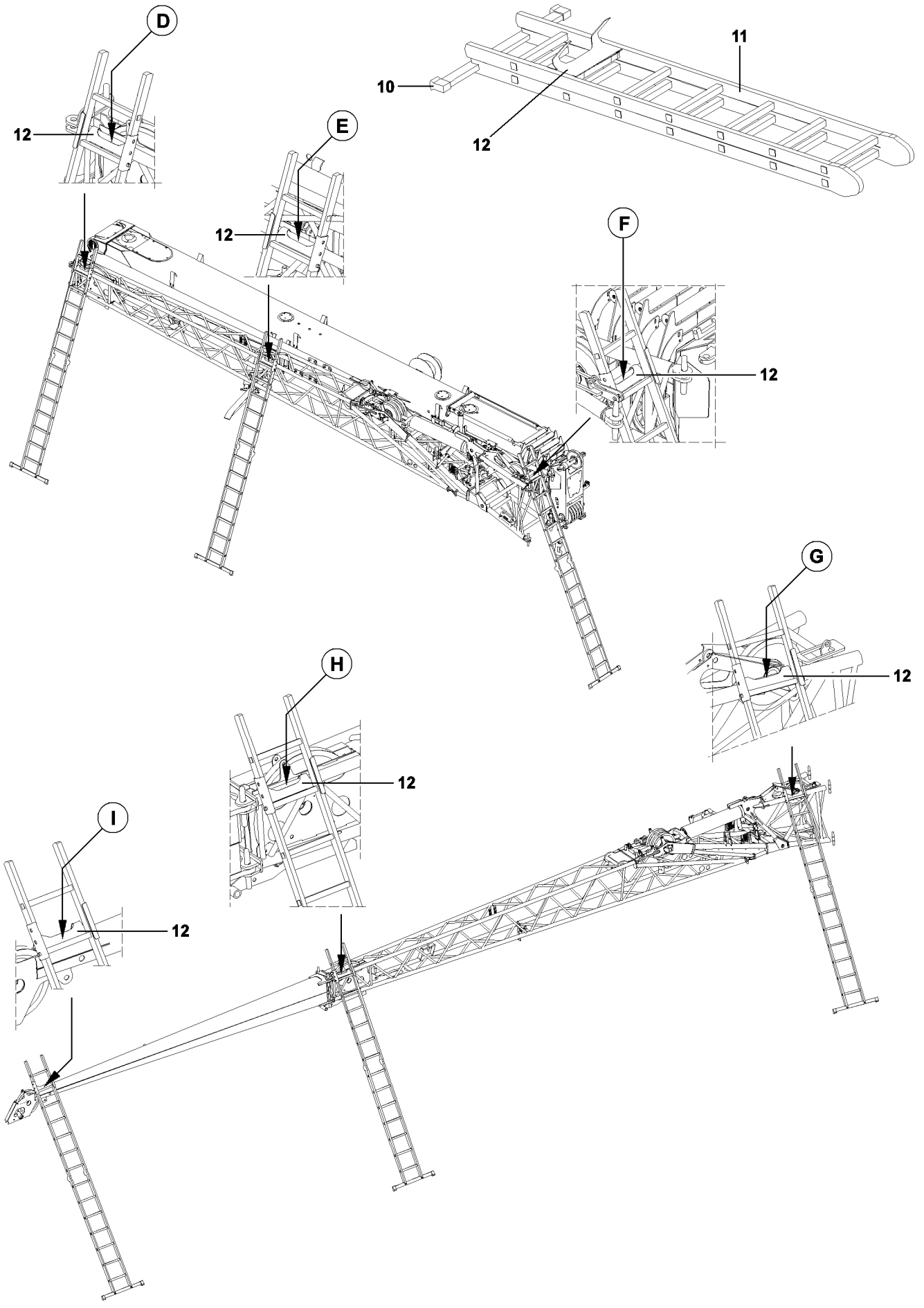

B102242

4.3 Fastening and hook points on folding jib / folding jib extension and telescope extension

WARNING
When working aloft, there is a danger of falling!
If the following notes are not observed, the ladder can tip and the assembly personnel can fall from the ladder and sustain life-threatening injuries!

- ▶ For all assembly / disassembly work on the folding jib, the telescope extension and the folding jib extension, use the ladder **11** with cross brace **10** and hook device **12**, see section “Assembling the hook device on the ladder”.
- ▶ Hang the ladder with hook device **12** on the corresponding hook point and set it up stable.
- ▶ The ladder may not be used as a hang ladder. The ladder must be resting on the ground.
- ▶ For safe handling of ladder, observe the safety guidelines on the ladder.
- ▶ Step on the ladder only with “clean shoes”.
- ▶ Assembly personnel must hook themselves onto the folding jib with approved an fall arrest system **3**, for example on the struts of the folding jib, the telescope extension and the folding jib extension and secure themselves to prevent them from falling.

For assembly / disassembly work on the folding jib and the folding jib extension, use the following hook points for the ladder:

- Hook point **D**
- Hook point **E**
- Hook point **F**
- Hook point **G**
- Hook point **H**
- Hook point **I**

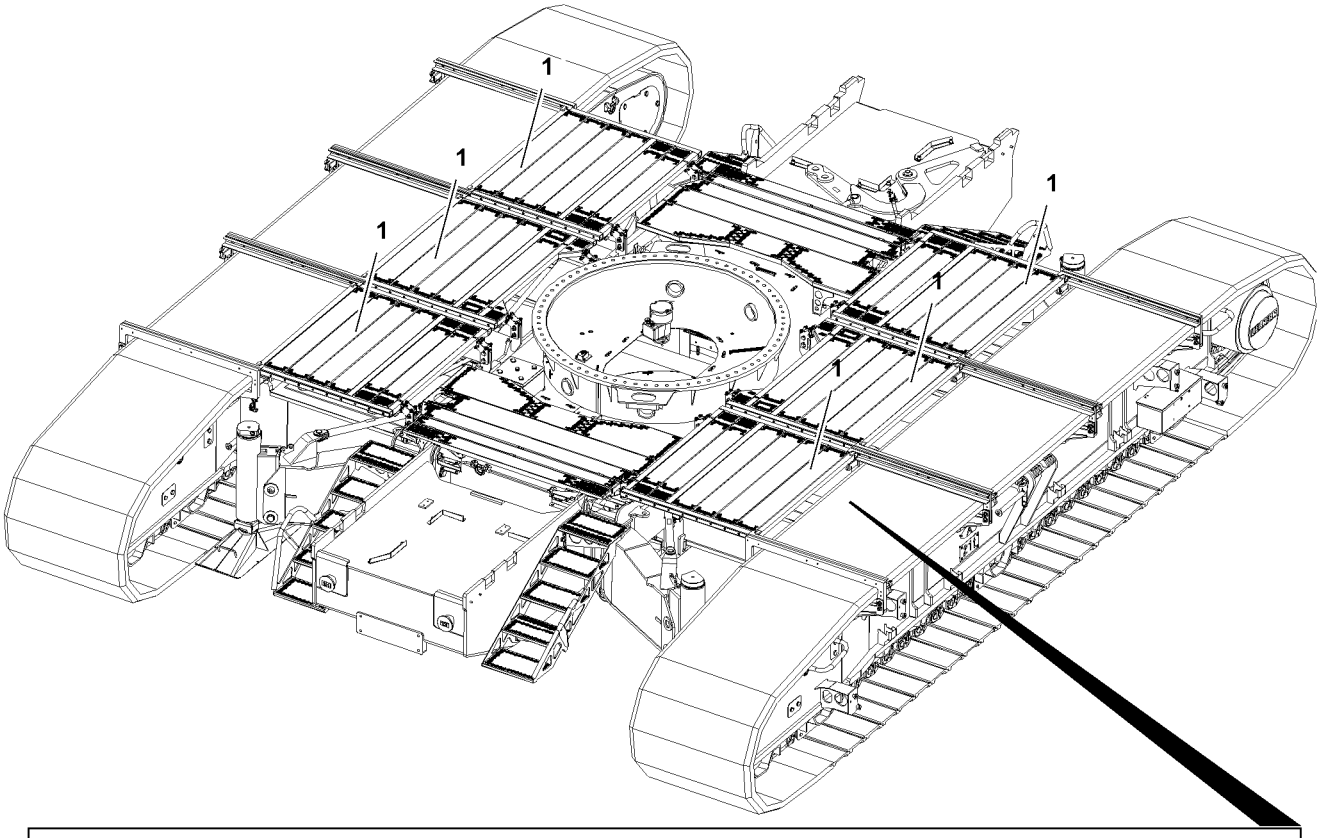

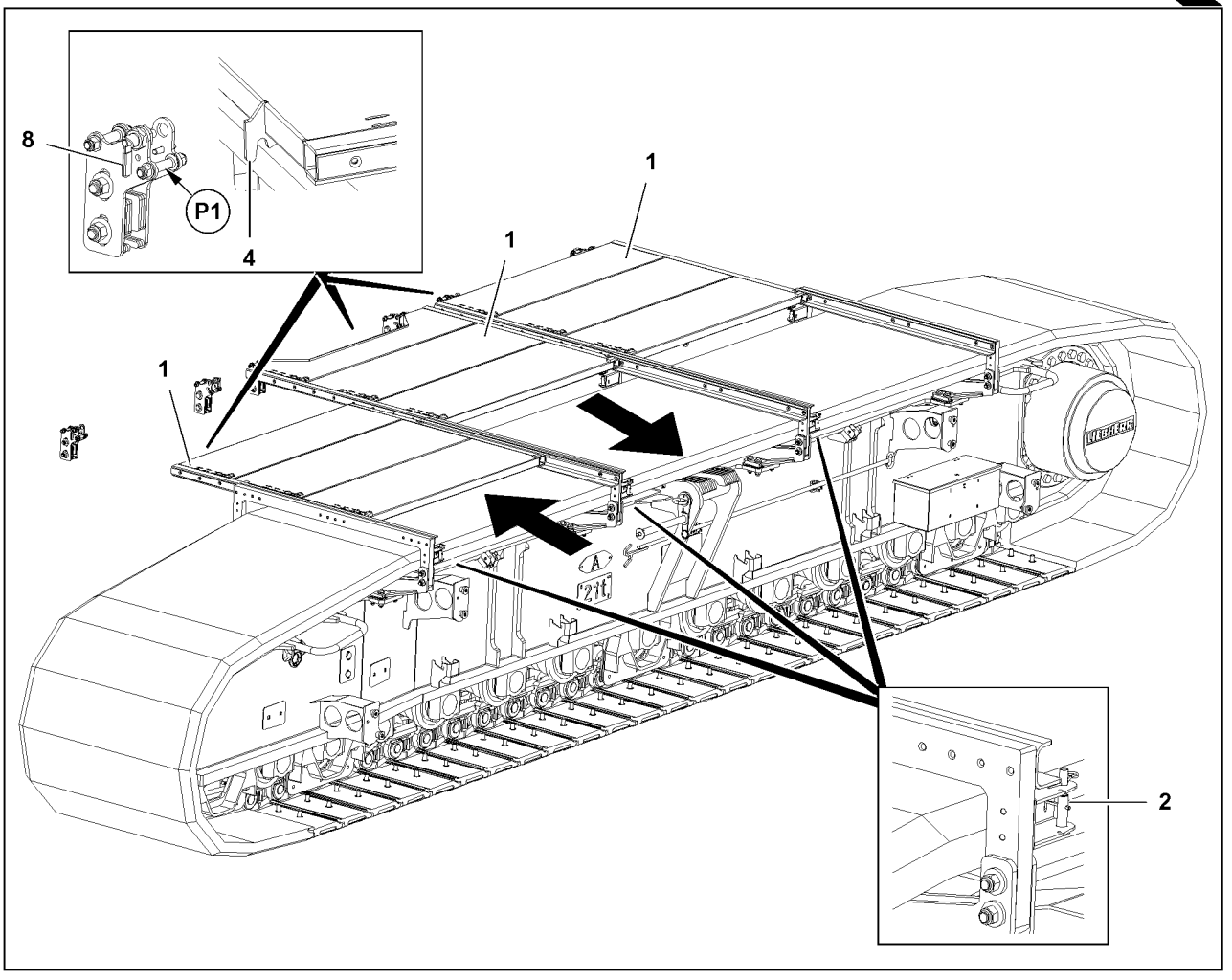

B117380

5 Platforms on the crane chassis

WARNING
When working aloft, there is a danger of falling!
▶ Properly assemble and secure all fall protection equipment, such as platforms, catwalks, ladders and railings on the crane chassis.

WARNING
Danger of falling due to overload!
If the chassis platform is subjected to a weight of more than 0.3 t, then the chassis platform can break!
Personnel can fall and be fatally injured!
▶ Do not subject the chassis platform with a weight of more than 0.3 t!

Note
▶ The chassis platforms are transported together with the crawler carriers.

5.1 Installing the chassis platform

CAUTION
Danger of crushing hands!
When sliding the platforms, hands can be crushed!
▶ Slide the platforms especially carefully!

▶ Release and unpin all retaining pins **2**.
▶ Slide the platforms **1** to the crawler center section and hang it with the hooks **4** in the retainers **P1**.
▶ Secure the platforms **1** with latches **8**.

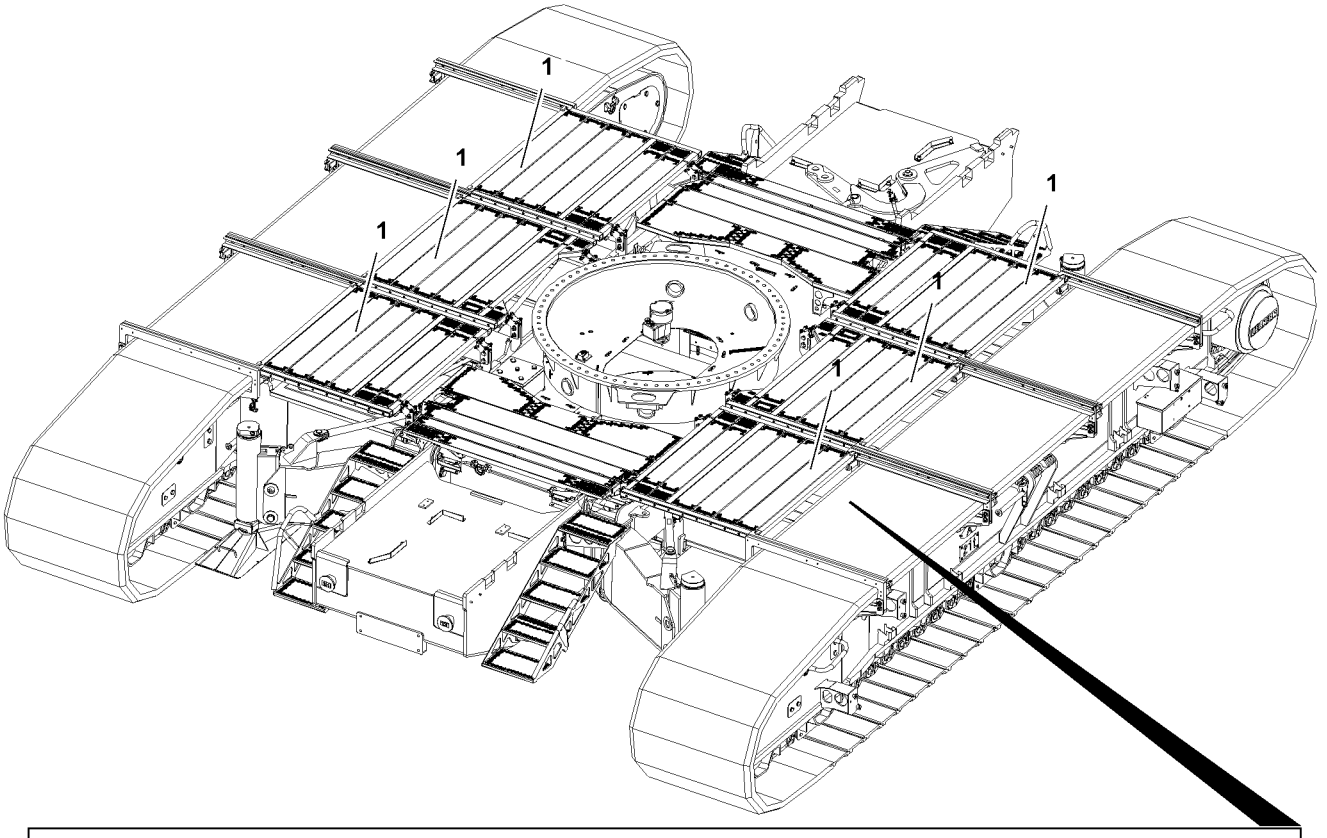

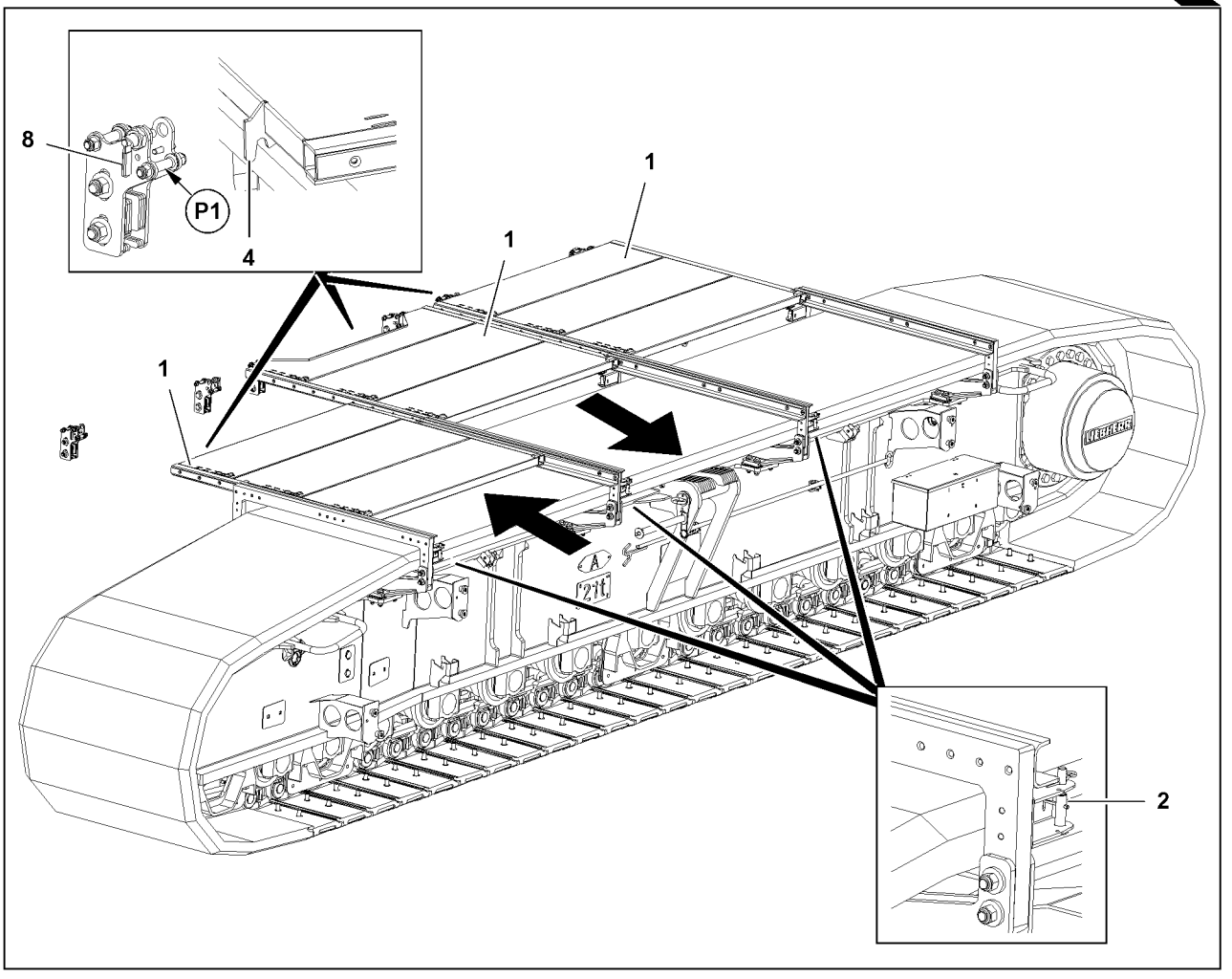

B117380

5.2 Removing the chassis platform

CAUTION
Danger of crushing hands!
When sliding the platforms, hands can be crushed!
▶ Slide the platforms especially carefully!

▶ Release the latches **8**.
▶ Slide all platforms **1** to the crawler travel gear.
▶ Pin and secure all platforms **1** with retaining pins **2** in transport position.

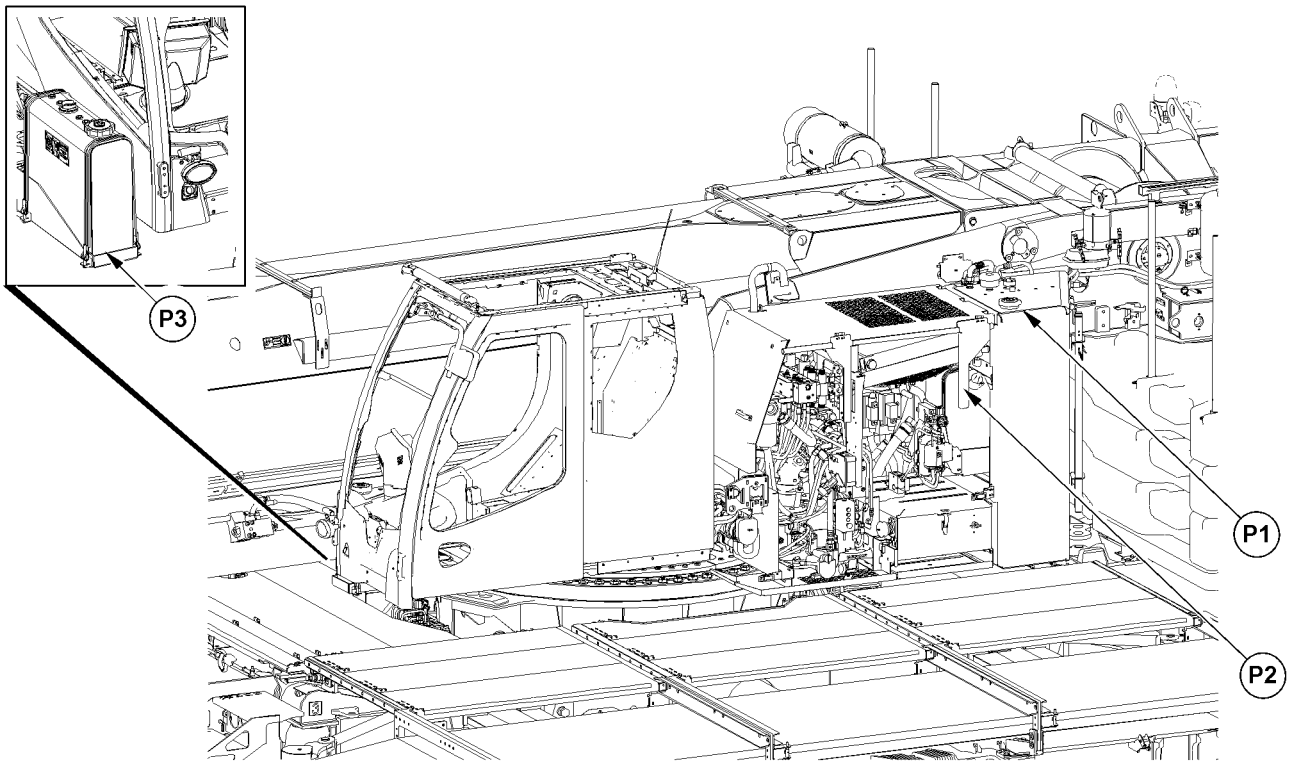

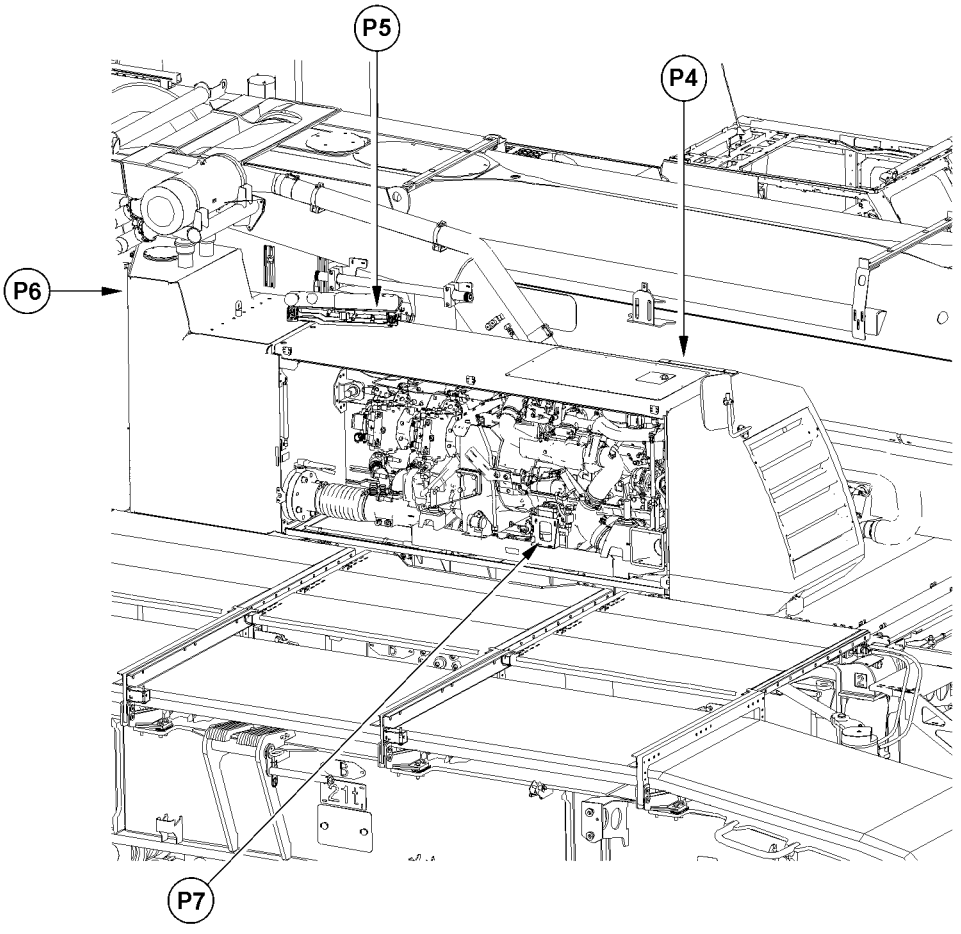

B117376

1 Components on the crane

1.1 Adding service fluids

1.1.1 Refueling

The fuel tanks are installed on both sides on the crane chassis at position **P1**.

▶ Refueling, see Crane operating instructions, chapter 7.05.

1.1.2 Adding Urea solution

The urea tank is installed on the crane chassis at position **P2**.

▶ Adding urea solution, see Crane operating instructions, chapter 7.05.

1.1.3 Refueling fuel*

The fuel tank is installed on the crane chassis at position **P3**.

▶ Refueling fuel, see Crane operating instructions, chapter 7.05.

1.2 Checking components on the crane superstructure

1.2.1 Checking the engine oil level

Note

▶ The oil level on the Diesel engine can be checked comfortably on the display unit in the driver's cab. See Crane operating instructions, chapter 7.04.

The dipstick for the Diesel engine is at position **P4**.

▶ Check the oil level on the Diesel engine, see Crane operator's instructions, chapter 7.05 and separate operating instructions of the engine manufacturer.

1.2.2 Checking the coolant level in the expansion tank

The expansion tank is installed on the crane chassis at position **P5**.

▶ Check the coolant level, see Crane operating instructions, chapter 7.05.

1.2.3 Checking the oil level and filter on the hydraulic oil tank

The hydraulic oil tank with the filters is installed on the crane chassis at position **P6**.

▶ Check the oil level and filter, see Crane operating instructions, chapter 7.05.

1.2.4 Checking the fuel preliminary filter

The fuel preliminary filter is installed on the crane chassis at position **P7**.

▶ Check the fuel preliminary filter, see Crane operating instructions, chapter 7.05.

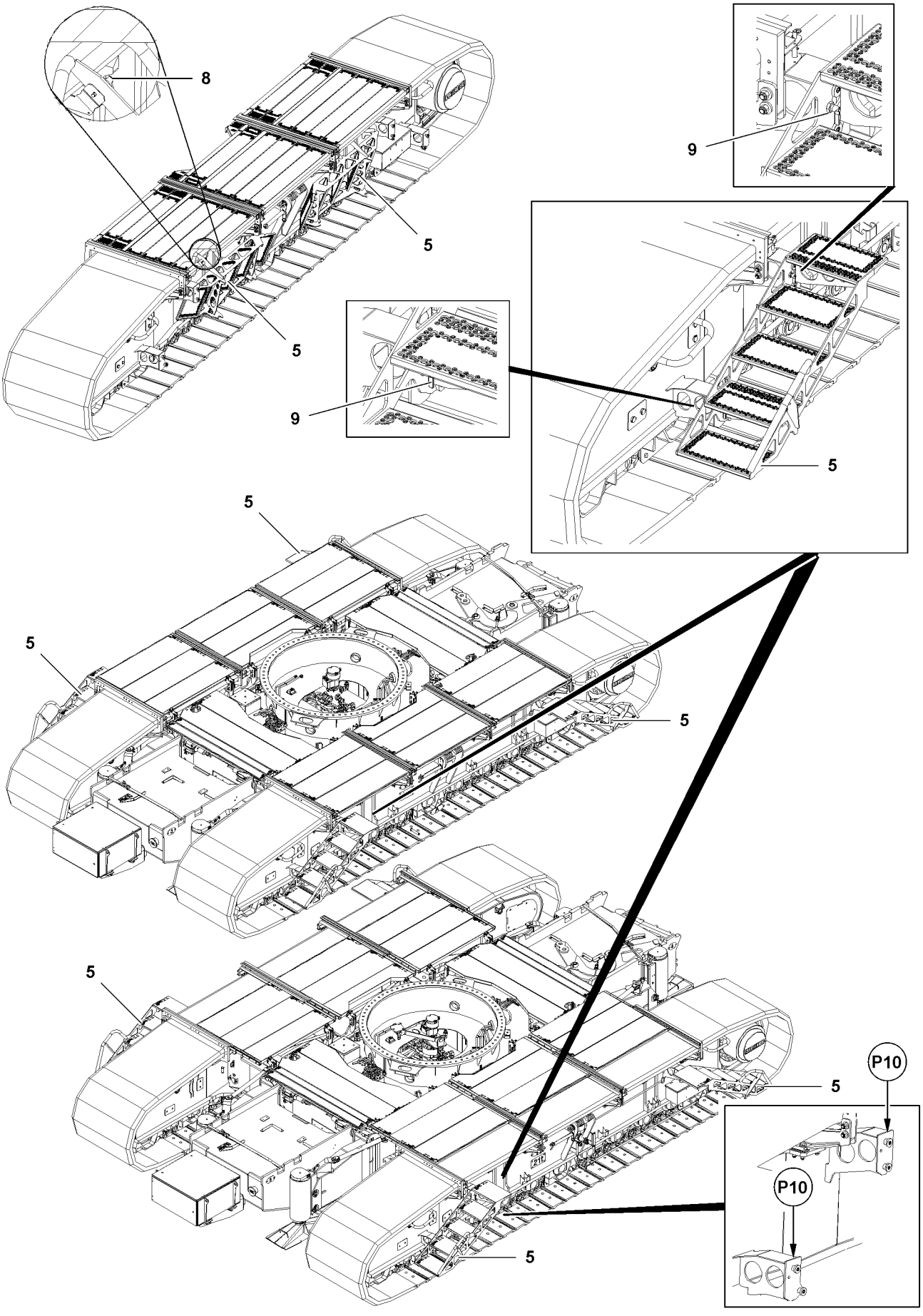

B117378

2 Ascent and descent on the crane chassis

WARNING
Danger of falling!
If the following guidelines are not observed, assembly personnel can fall down and be killed or severely injured!
- ▶ Ladders, walking and stepping surfaces are free of objects and obstacles!
- ▶ Step on ladders, walking and stepping surfaces only with sufficiently clear height!
- ▶ Step on ladders, walking and stepping surfaces only with clean shoes!
- ▶ Keep ladders, walking and stepping surfaces free of heavy dirt, snow and ice!
- ▶ The danger zone is free of personnel and objects during folding and swinging of the folding ladder!
- ▶ When accessing the ladder, do not hold any objects in your hands!
- ▶ Stepping on ladders by persons weighing more than 150 kg is prohibited!
- ▶ Do not use handles as rigging points!
- ▶ Subject the handles with no more than maximum 100 kg!
- ▶ Do not step on damaged ladders, walking and stepping surfaces and replace them immediately!

Note
- ▶ The steps are carried along in transport position on the crawler carrier.

Step installation			
Track	**Width (mm)**	**Extension condition**	**Installation of steps**
Retracted	3500 mm	0 % / 0 %	Crawler carrier
Reduced	4900 mm	50 % / 50 %	Crawler carrier
Wide	6300 mm	100 % / 100 %	Central ballast
Asymmetrical	4900 mm	0 % / 100 %	Crawler carrier / central ballast
		100 % / 0 %	Central ballast / crawler carrier

NOTICE
Damage to steps!
Before changing the track of the crane from wide to reduced or narrow, the steps must be installed on the crawler carrier.
- ▶ Install the steps on the crawler carrier.

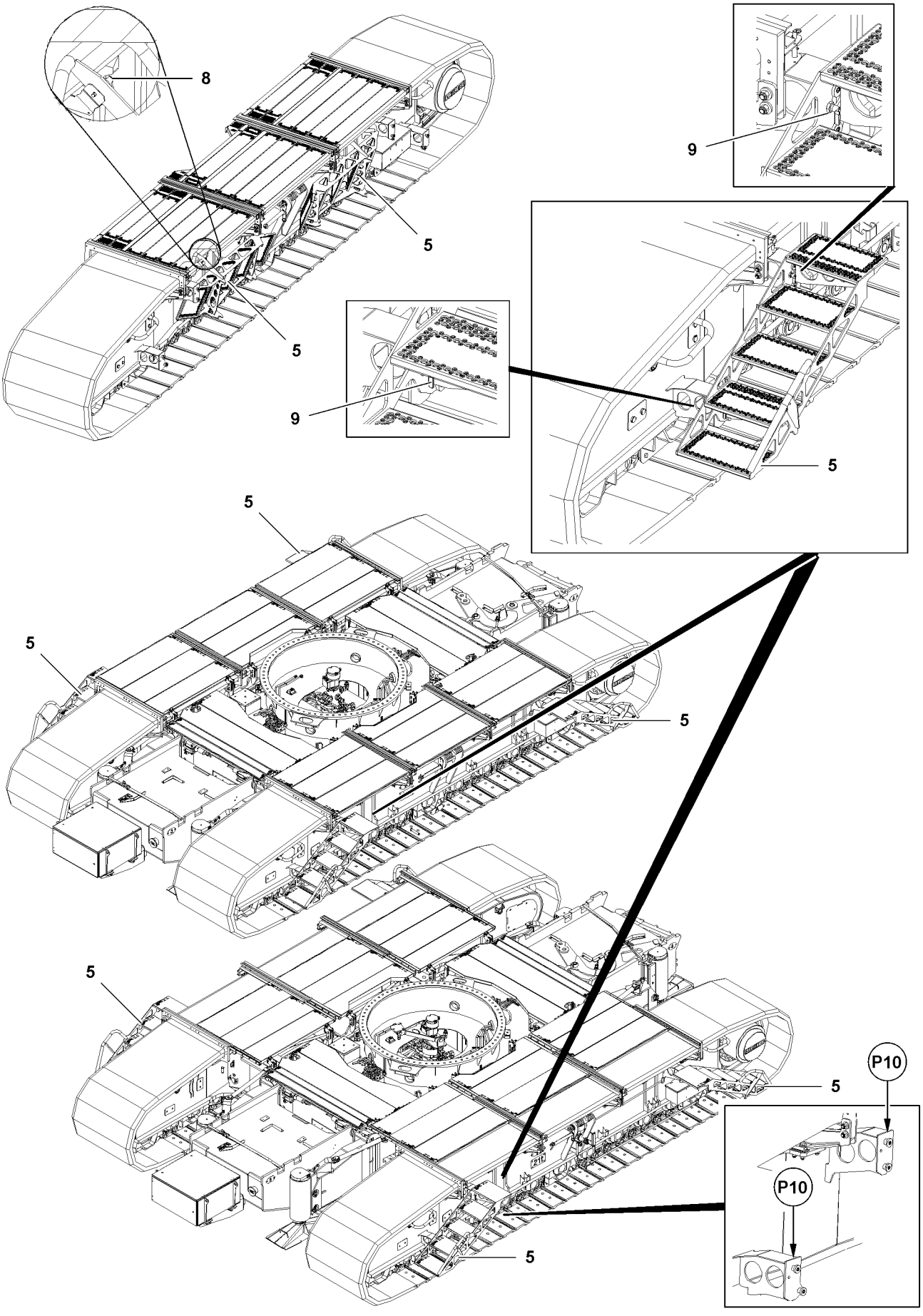

B117378

2.1 Installing the steps in ascent or descent position at a track of 4.9 m (50 %) (reduced) and track of 3.5 m (0 %) (retracted)

CAUTION
Danger of crushing!
During assembly and disassembly of the steps **5** fingers and hands can be crushed!
▶ Do not reach into the retainers!

▶ Unpin the ball locking pin **8** and remove the steps **5** from park position.
▶ Hang the steps **5** at position **P10** on the crawler carrier.
▶ Secure the steps **5** in operating position: Lock the latch **9**.

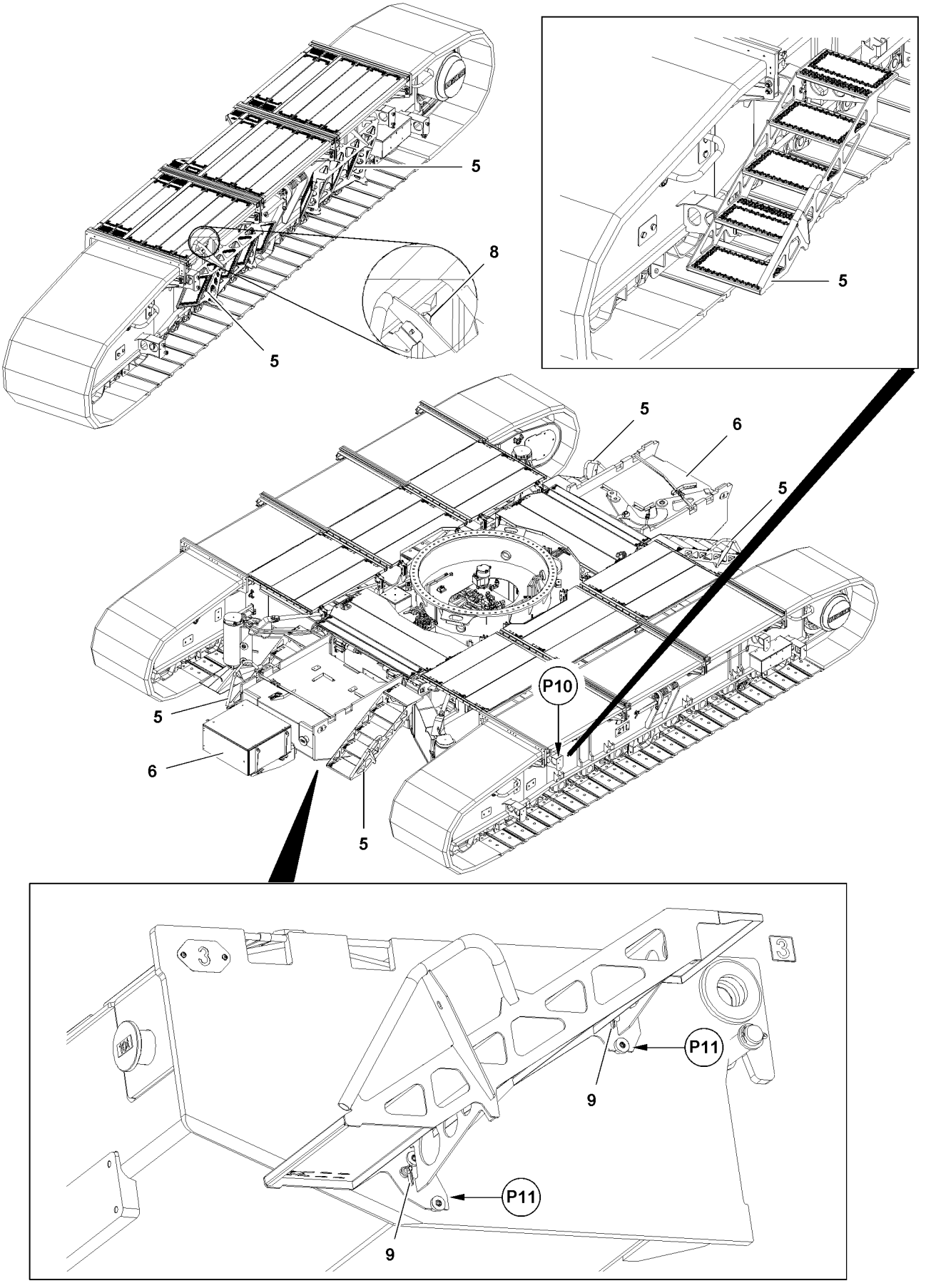

B117379

2.2 Installing the steps in ascent and descent position at a track of 6.3 m (100 %) (wide)

Make sure that the following prerequisites are met:

– The crawler carrier is completely moved out.
– The support beams are swung out.

CAUTION
Danger of crushing!
During assembly and disassembly of the steps **5** fingers and hands can be crushed!
▶ Do not reach into the retainers!

▶ Unpin the ball locking pin **8** and remove the steps **5** from park position.
▶ Hang the steps **5** at position **P11** on the central ballast **6**.
▶ Secure the steps **5** in operating position: Lock the latch **9**.

2.3 Installing the steps in ascent and descent position at an asymmetric track of 4.9 m (0 % / 100 %) (retracted / wide)

Make sure that the following prerequisites are met:

– The crawler carrier is completely moved out on one side.
– The support beams are swung out.

CAUTION
Danger of crushing!
During assembly and disassembly of the steps **5** fingers and hands can be crushed!
▶ Do not reach into the retainers!

▶ Unpin the ball locking pin **8** and remove the steps **5** from park position.
▶ Hang the steps **5** at position **P11** on the central ballast **6**.
▶ Secure the steps **5** in operating position: Lock the latch **9**.
▶ Unpin the ball locking pin **8** and remove the steps **5** from park position.
▶ Hang the steps **5** at position **P10** on the crawler carrier.
▶ Secure the steps **5** in operating position: Lock the latch **9**.

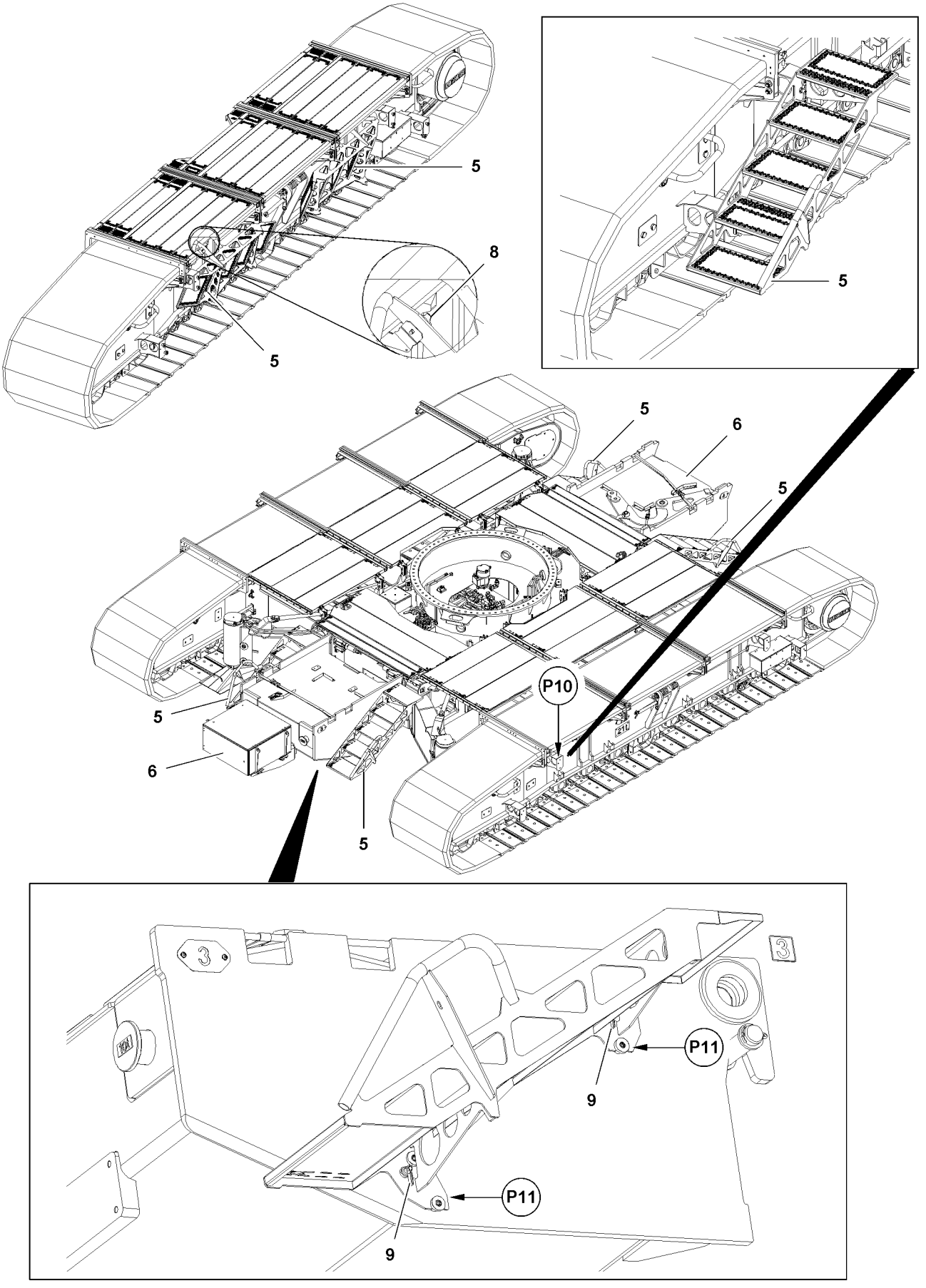

B117379

2.4 Installing the steps in transport position

CAUTION
Danger of crushing!
During assembly and disassembly of the steps **5** fingers and hands can be crushed!
▶ Do not reach into the retainers!

▶ Release the latches **9**.
▶ Take the steps **5** off from operating position.
▶ Install the steps **5** in transport position.
▶ Secure the steps **5**: Insert the ball locking pin **8**.

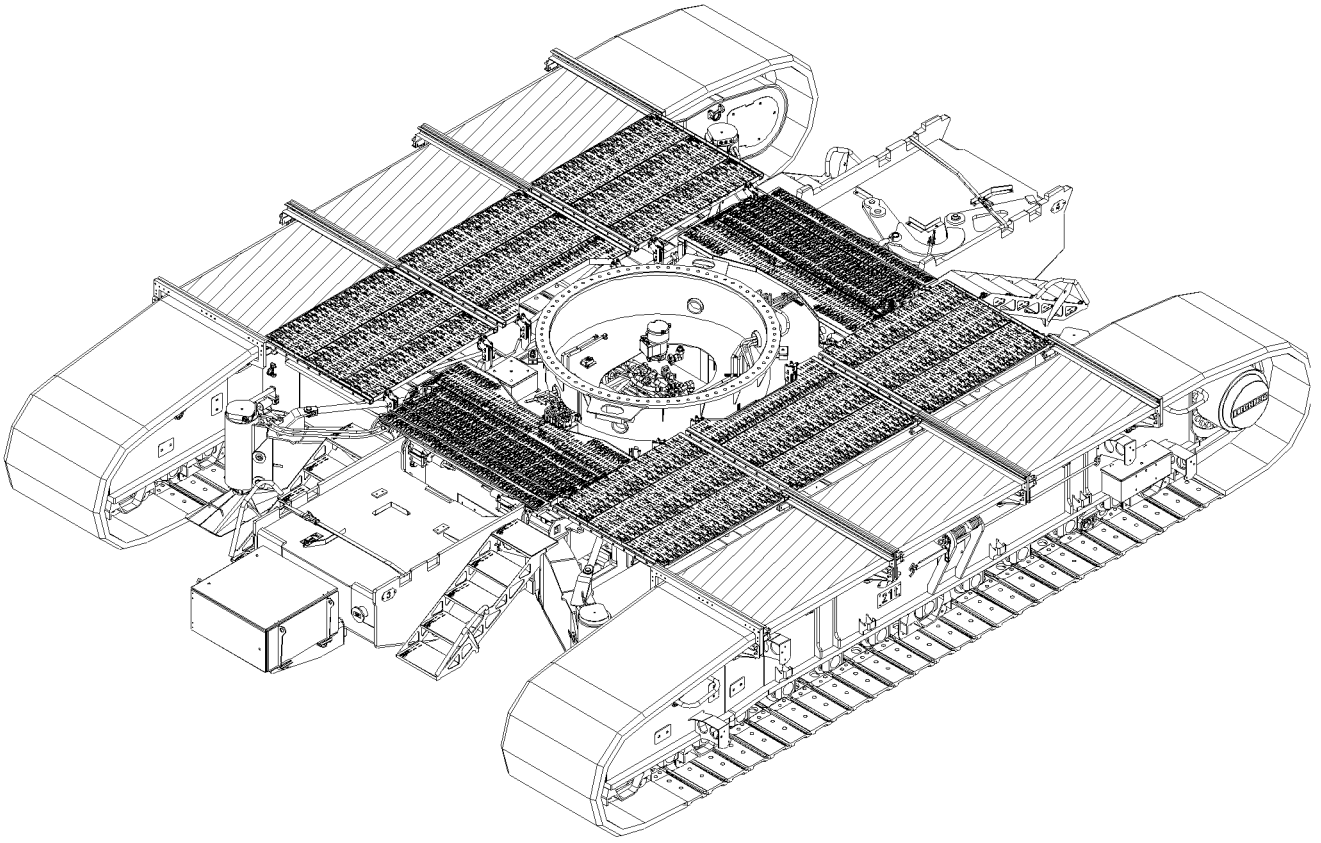

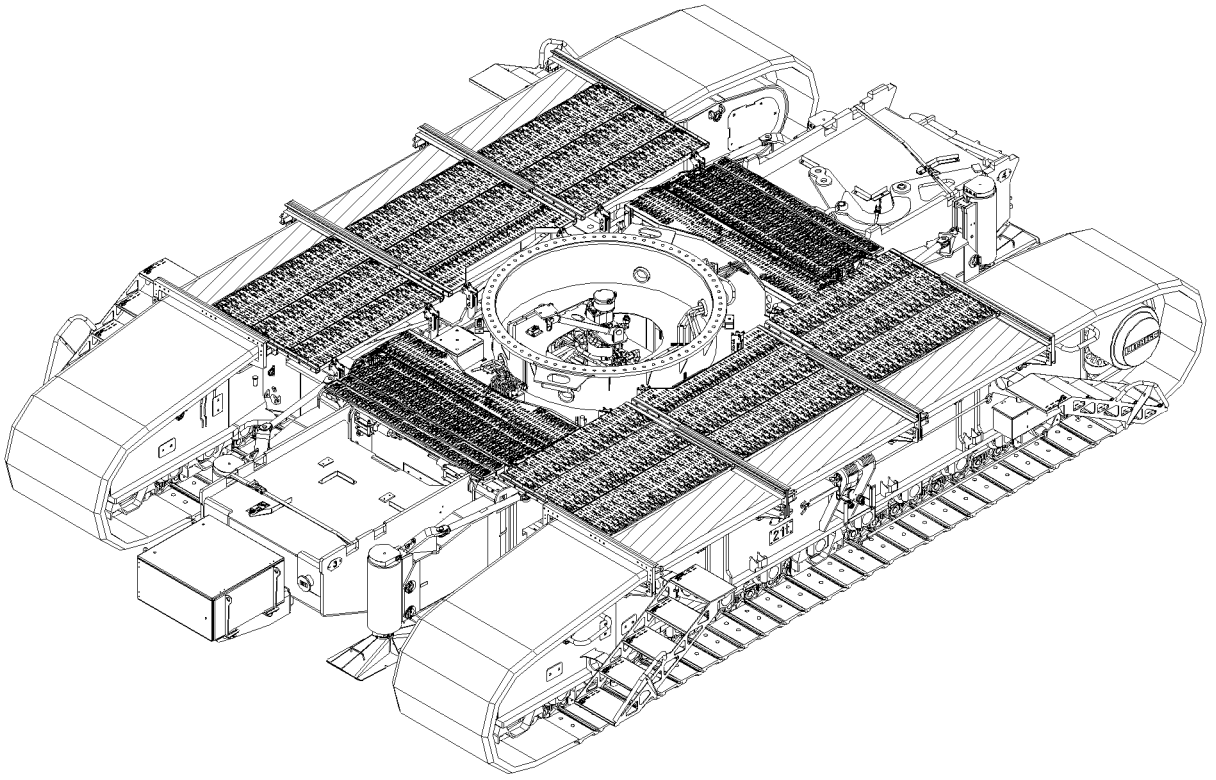

B118011

3 Walking and stepping surfaces

WARNING
Danger of falling!
If the following guidelines are not observed, assembly personnel can fall down and be killed or severely injured!
- ▶ Ladders, walking and stepping surfaces are free of objects and obstacles.
- ▶ Do not set down any loads on the walking and stepping surfaces.
- ▶ Step on ladders, walking and stepping surfaces only with sufficiently clear height.
- ▶ Do not trip over attachment parts.
- ▶ Step on ladders, walking and stepping surfaces only with clean shoes.
- ▶ Keep ladders, walking and stepping surfaces free of heavy dirt, snow and ice.
- ▶ Used only by persons, observe the maximum point load of 3000 N on the walking and stepping surfaces.
- ▶ It is prohibited to step on the roof of the driver's cab.

3.1 Accessible walking and stepping surfaces Crane chassis

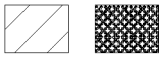
B117610

Note
- ▶ The accessible walking and stepping surfaces are marked with these cross hatches.

3.2 Non-accessible surfaces

WARNING
Danger of falling!
If the surfaces are accessed, which are **not** approved for access, personnel can slip and fall down! Personnel can be killed or injured!
When accessing surfaces, which are **not** approved for access, crane components can be damaged!
- ▶ Only step on accessible walking and stepping surfaces.
- ▶ Access to surfaces, which are **not** approved for access is prohibited.
- ▶ Stepping on surfaces with an incline of more than 5° is prohibited.

B114702

Note
- ▶ The walking and stepping surfaces which are **not** approved for access are marked with these cross hatches.

3 Crane assembly

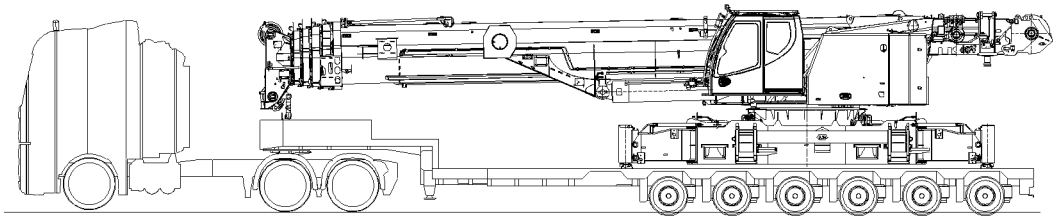

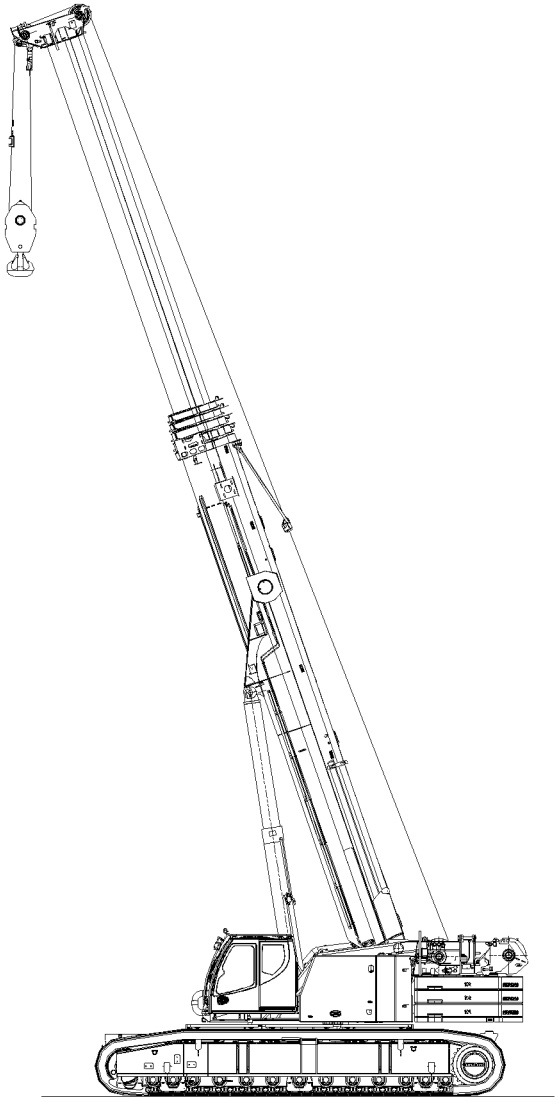

B116874

1 Assembling the crawler carrier

DANGER
Crane movement in **unsupported** status!
If the crane superstructure is turned or the boom erected, then the crane can tip over and severely or fatally injure personnel.
- ▶ Do not turn the crane superstructure when as the crane is resting on the transport vehicle.
- ▶ Do not turn erect the boom when as the crane is resting on the transport vehicle.
- ▶ Before carrying out crane movements, support the crane with the assembly support and align it horizontally.
- ▶ Adhere to the sequence of the assembly steps in this chapter.

WARNING
Danger of falling!
During assembly / disassembly, inspection and maintenance work, personnel must be secured with appropriate aids to prevent them from falling! If this is not observed, assembly personnel could fall and suffer life-threatening or fatal injuries!
- ▶ The assembly personnel must always move carefully and anticipatory on the crane, the crane components or lattice sections!
- ▶ All work aloft, where there is a danger of falling must be carried out with suitable aids!
- ▶ If fall protection equipment is available, then it must be used!
- ▶ If aids are not available and work cannot be carried out from the ground, then the assembly personnel must secure themselves with the permissible fall arrest system to prevent falling, see Crane operating instructions, chapter 2.04!
- ▶ The fall arrest system must be attached on the fastening and hook points as well as on the safety ropes!
- ▶ Only step on the aids, ladders and catwalks with clean shoes!
- ▶ Keep aids, ladders and catwalks free of heavy dirt, snow and ice!

WARNING
Danger of impact / crushing!
When installing / removing counterweight components with the auxiliary crane, crane components can start to swing back and forth!
When lifting / lowering and positioning crane components, there is an increased danger of impacts / crushing!
Personnel can be caught and severely injured or killed!
- ▶ Make sure that personnel cannot be caught by components!
- ▶ When working in danger zones: Use aids to protect limbs!
- ▶ Guide components with suitable aids to minimize oscillation!

WARNING
Improper support!
If the crane is not properly supported from below, it can sink into the ground and cause it to topple over!
- ▶ The support must take on the weight of the crane safely!
- ▶ Use stable materials such as wood, steel plates or concrete slabs of a suitable size for support, depending on the ground conditions!

Note
- ▶ Disassemble the transport devices and remove the transport retainers, see Crane operating instructions, chapter 3.80.

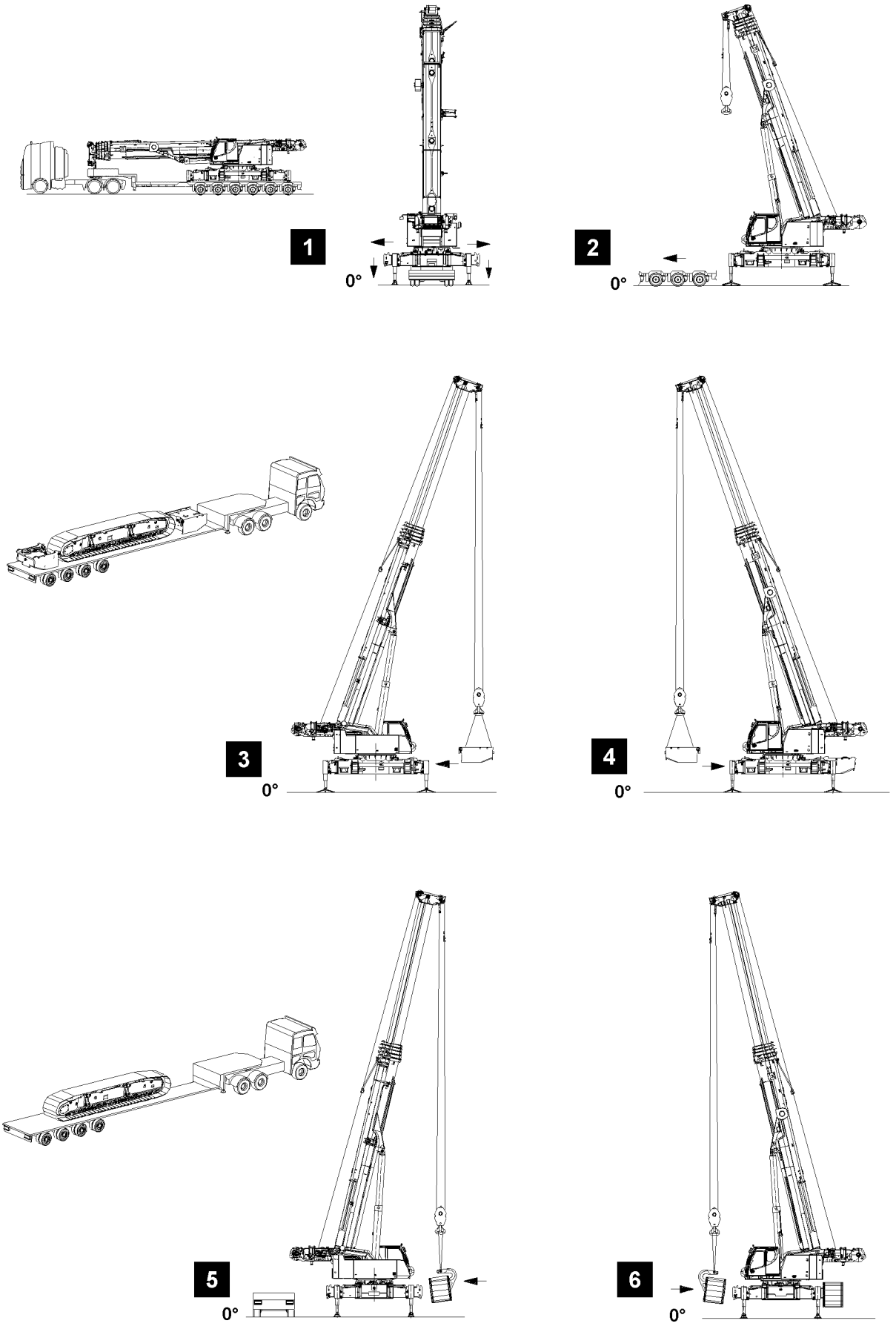

B116872

1.1 Short description - “Assembling the crane”

Note
- ▶ The short description of the assembly procedure is exclusively intended as an overview!
- ▶ The complete assembly description must be read and understood!

Supporting the crane
- ▶ Move the cross carriers out, see illustration **1**.
- ▶ Swing the brackets out, see illustration **1**.
- ▶ Fasten the support plates on the support cylinders.
- ▶ Support the crane and level the crane.
- ▶ Luff the telescopic boom up, see illustration **2**.
- ▶ Remove the transport vehicle, see illustration **2**.

Installing the central ballast

Note
- ▶ Install the central ballast, see Crane operating instructions, chapter 3.03!

- ▶ Install the central ballast on the rear, see illustration **3**.
- ▶ Install the central ballast on the front, see illustration **4**.

Install the crawler carrier “A”

Note
- ▶ Pay attention to the identification on the crawler carrier and the cross carrier at assembly!

- ▶ Fasten the assembly device on the crane.
- ▶ Pin the assembly device with the crawler carrier “A”.
- ▶ Hang the crawler carrier “A” on the cross carrier “A”, see illustration **5**.
- ▶ Pin and secure the crawler carrier “A” with the cross carrier “A”, see illustration **5**.
- ▶ Remove the assembly device.

Install the crawler carrier“B”
- ▶ Pin the assembly device with the crawler carrier “B”.
- ▶ Hang the crawler carrier “B” on the cross carrier “B”, see illustration **6**.
- ▶ Pin and secure the crawler carrier “B” with the cross carrier “B”, see illustration **6**.
- ▶ Remove the assembly device.

Operating the travel gear
- ▶ Establish the hydraulic connections.
- ▶ Test the travel gear.

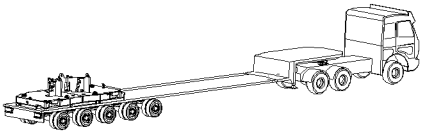

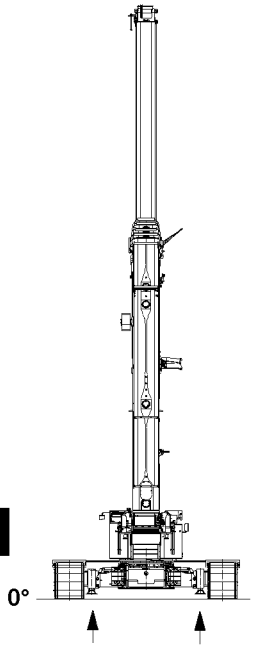

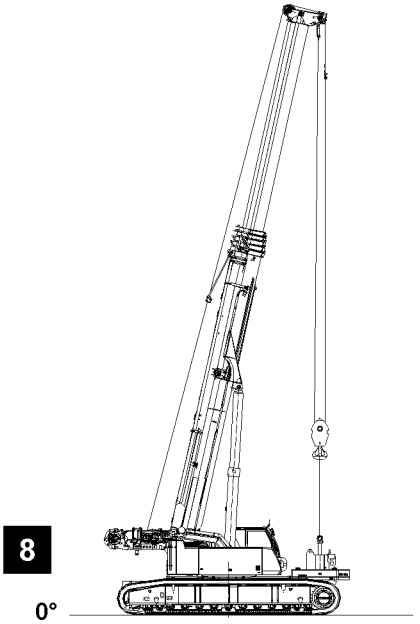

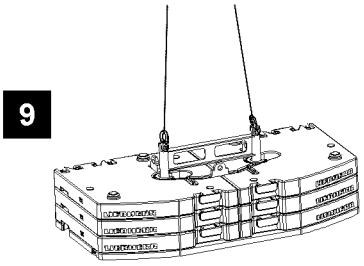

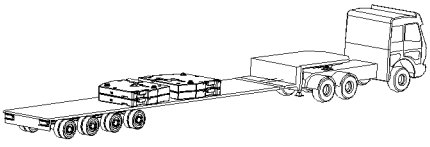

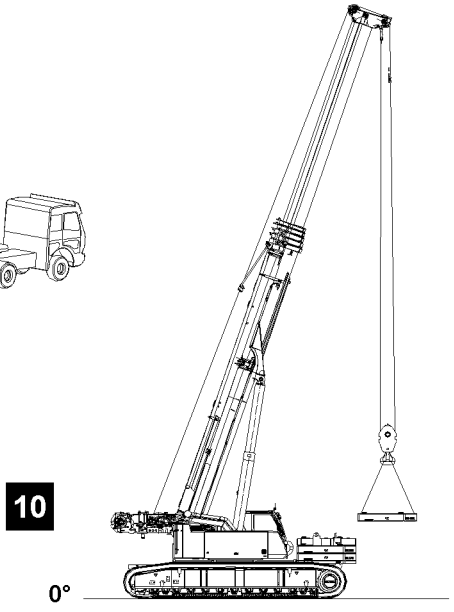

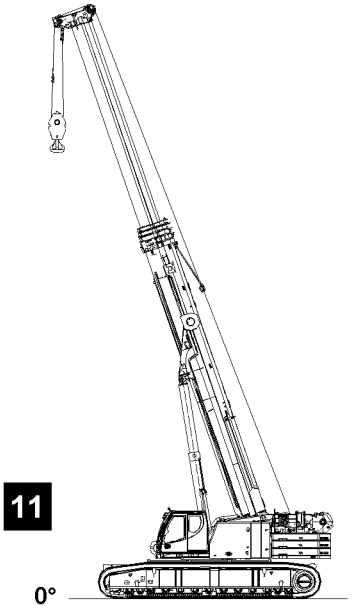

B116873

Retracting the support cylinders

▶ Retract the support cylinders completely, see illustration **7**.

Installing the walking platforms

Note

▶ Install the walking platforms, see Crane operating instructions, chapter 2.06!

▶ Install the walking platforms, see illustration **7**.

Installing the counterweight

Note

▶ Install the counterweight, see Crane operating instructions, chapter 4.07!

▶ Place the ballast base plate down.

▶ Stack the counterweight plates 10 t on the counterweight stack, see illustration **10**.

▶ Turn the turntable and position it over the counterweight, see illustration **11**.

▶ Connect and secure the counterweight with the turntable, see illustration **11**.

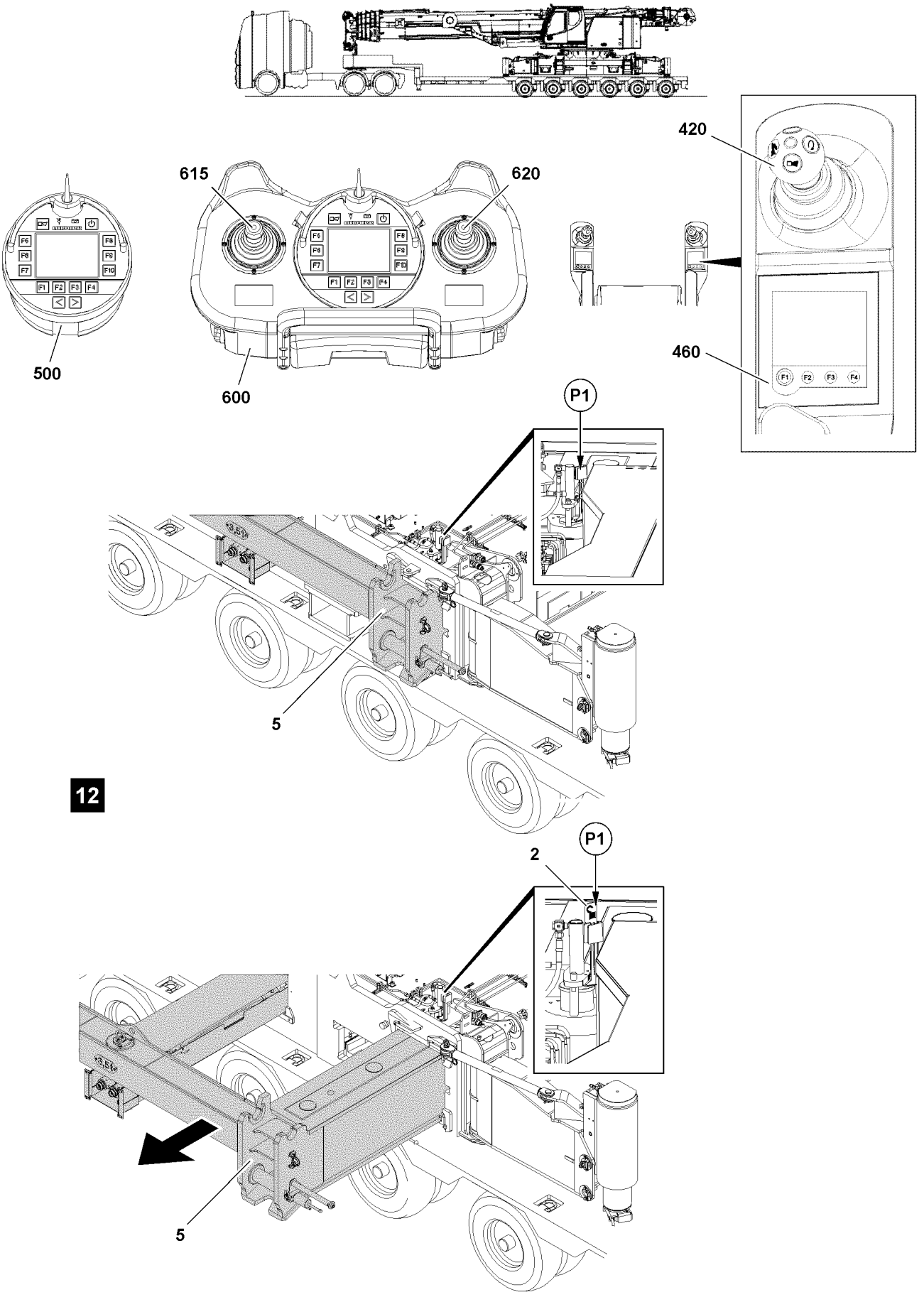

B116891

1.2 Extending the cross carrier

Make sure that the following prerequisite is met:

– No personnel is within the danger zone.

Note

▶ The extension conditions of the cross carrier is displayed as percentage on the display on the Bluetooth™ Terminal (BTT), the radio remote control (BTT-E) and on the LICCON monitor!

▶ The cross carriers are only pinned on extension conditions of 0 %; 50 %; 100 %.

▶ The extension conditions of the cross carriers / crawler carriers are specified in the load chart.

▶ The pin points of the cross carriers are marked in percentages with tags on the cross carriers.

1.2.1 Extending the cross carrier with the BlueTooth™Terminal

Make sure that the following prerequisite is met:

– On the display of the BTT, the menu overview is visible.

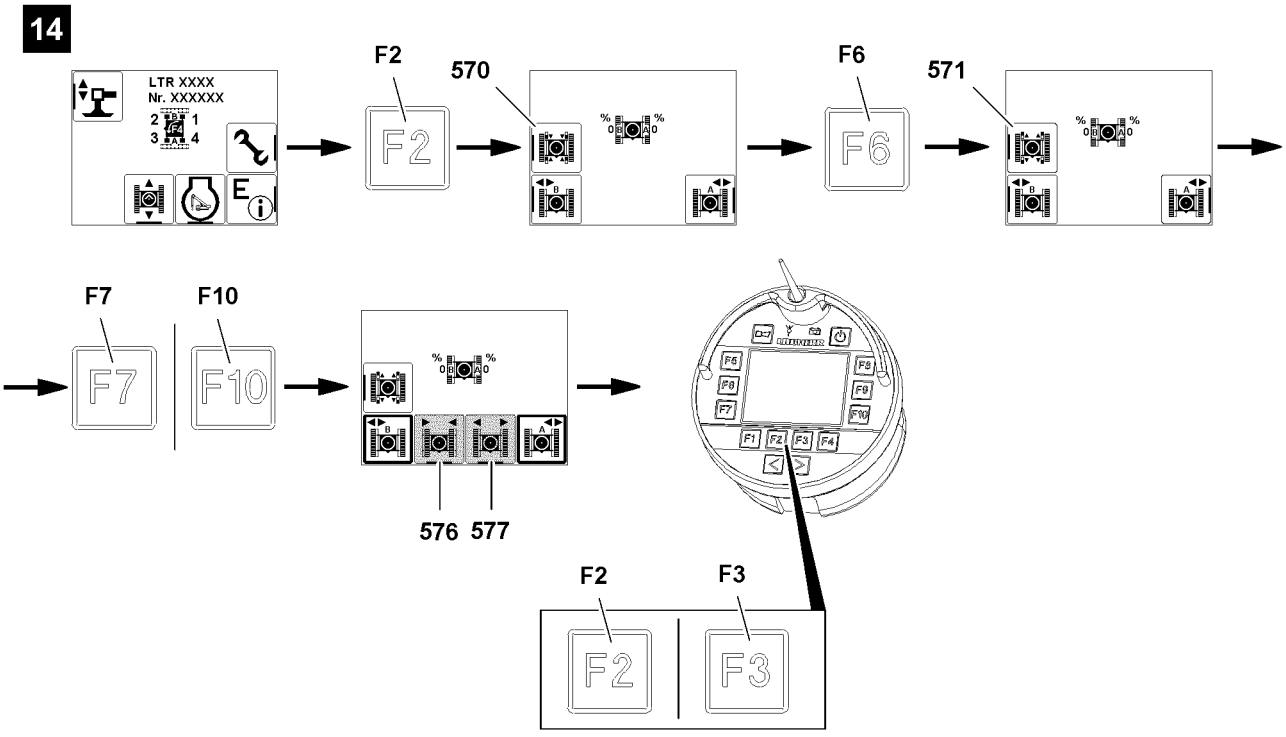

B116896

Unpinning the cross carrier

▶ Call up the “Crawler travel gear” menu: Press the function key **F2**, see illustration **14**.

Result:

– Functions “Track width adjustment” are visible.

▶ When icon “Pin the cross carrier” **570** is visible:
Activate “Unpin the cross carrier”: Press the function key **F6**.

Result:

– Icon “Unpin the cross carrier” **571** appears.

Selecting the cross carrier

Before you retract or extend the cross carrier, select one of the cross carriers or both cross carriers:
– Function key **F7**
– Function key **F10**

In this and the following sections is described how both cross carriers are extended together. Alternatively you can also select and extend the cross carriers individually.
Depending on which cross carriers are selected, different icons for “retract crawler carrier” and “extend crawler carrier” appear, see Crane operating instructions, chapter 5.31.
▶ Select both cross carriers: Press function key **F7** and function key **F10**, see illustration **14**.
Result:
– Icon “Retract crawler carrier” **576** is visible.
– Icon “Extend crawler carrier” **577** is visible.

14

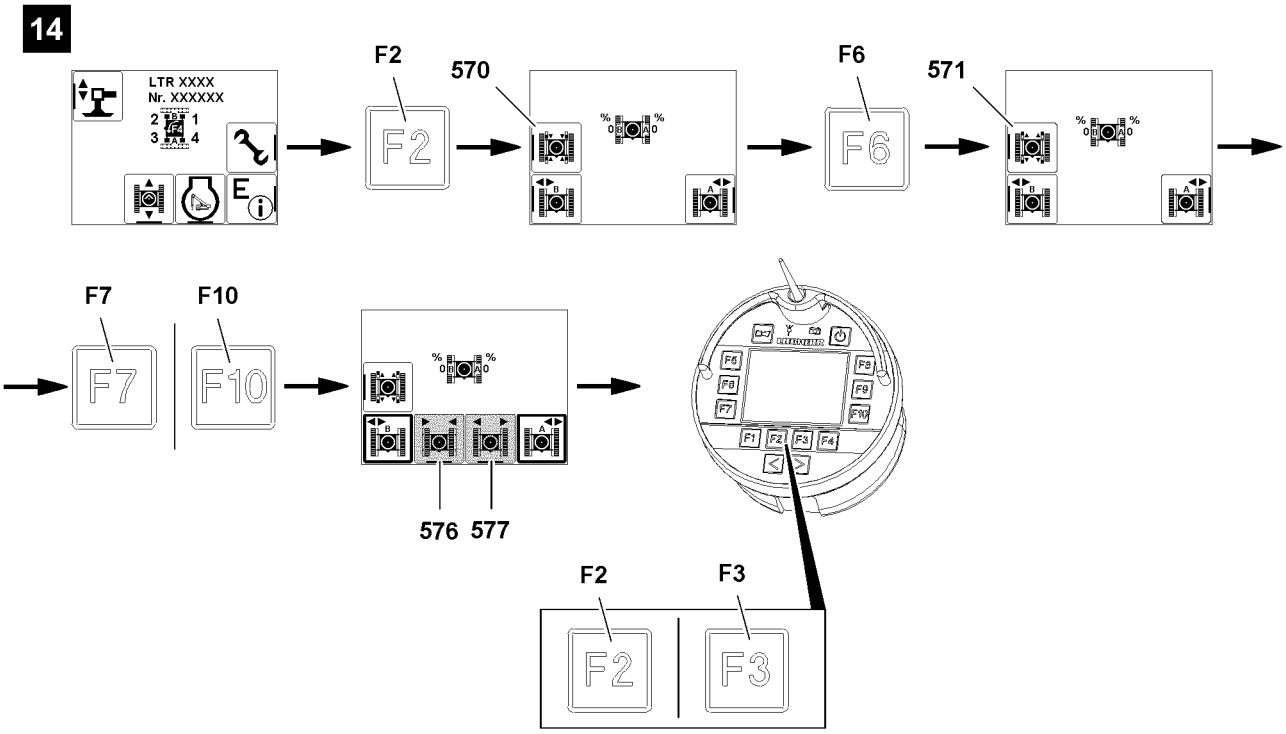

B116896

Extending the cross carrier

To unpin the cross carriers on points **P1**, you have extend the cross carriers, see illustration **12**.
You can check on points **P1** if the pins are completely pinned or unpinned:
– The pins are unpinned: Tags **2** are visible.
– The pins are pinned: Tags **2** are **not** visible.

WARNING
Crushing danger due to adjustment of cross carriers!
- ▶ Make sure that no personnel is within the danger zone of the cross carriers during “track width adjustment”.
- ▶ Differentiation of the cross carriers, see Crane operating instructions, chapter 5.31.

- ▶ When “retracting the cross carrier”:
  Press the function key **F2**.
- ▶ When “extending the cross carrier”:
  Press the function key **F3**.

Result:
- – The pins are unpinned.

Troubleshooting
Pins are not unpinned!
The pin is stuck: The position of the cross carriers prevents the pins from unpinning.
- ▶ Extend and retract the cross carriers again: Press the function keys until the pins are completely unpinned.

- ▶ Make sure that the pins are completely unpinned on points **P1**, see illustration **12**.

Result:
- – The pins are unpinned.
- – The cross carriers extend.

Pinning the cross carriers
- ▶ Before the cross carriers reach the 100 % extension status:
  Activate “Pin the cross carrier”: Press the function key **F6**.

Result:
- – Icon “pin the cross carrier” **570** is visible.
- – The pins are pinned.

Troubleshooting
The pins are not pinned!
The pin is stuck: The position of the cross carriers prevents the pins from pinning.
- ▶ Extend and retract the cross carriers again: Press the function keys until the pins are completely pinned.

- ▶ Make sure that the pins are completely pinned on points **P1**, see illustration **12**.

Result:
- – The pins are pinned.
- – The cross carriers are extended and secured at 100 %.

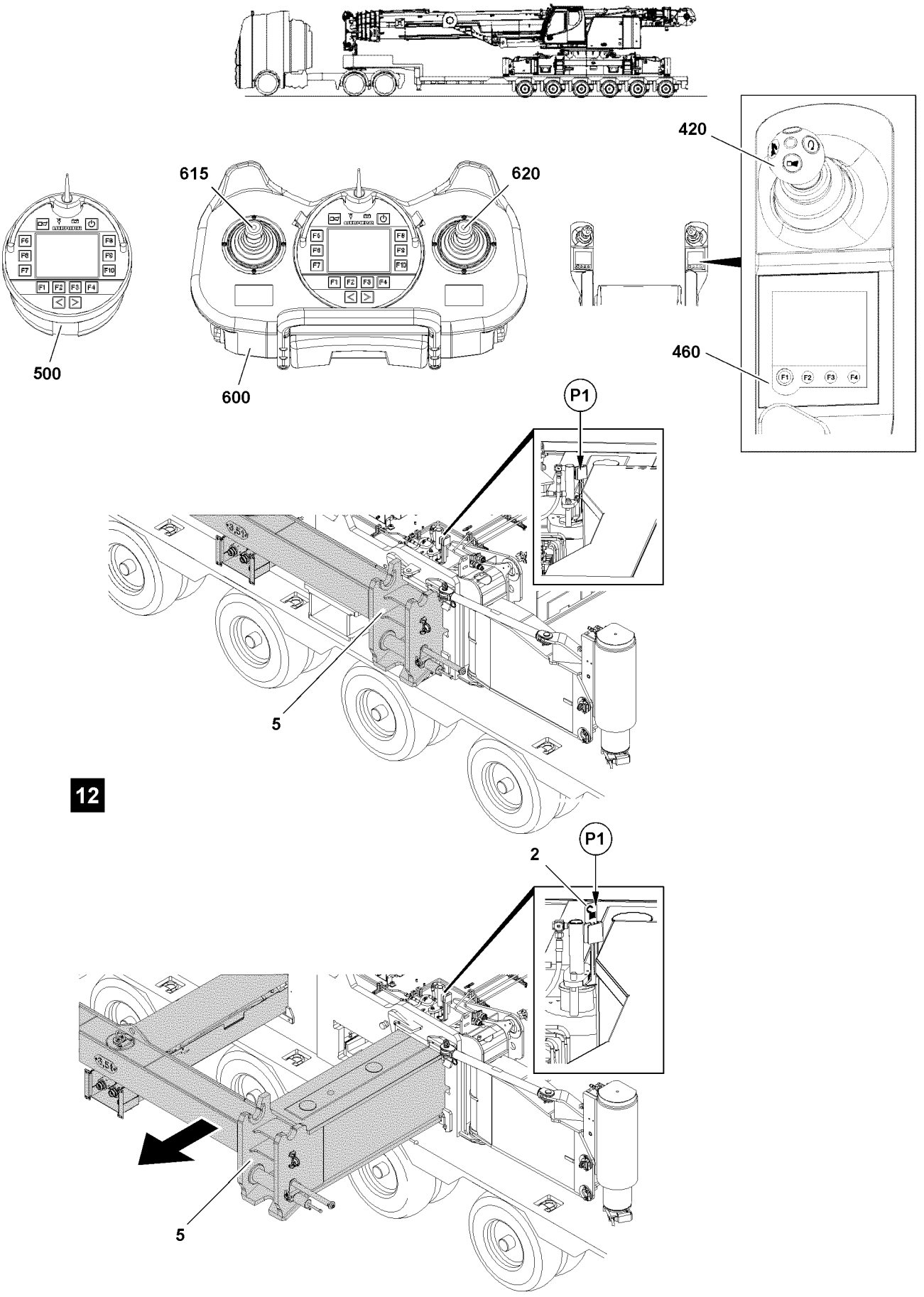

B116891

1.2.2 Extending the cross carriers from the crane operator's cab

Make sure that the following prerequisite is met:

– On the TE1 the “Master switch configuration” menu is visible.

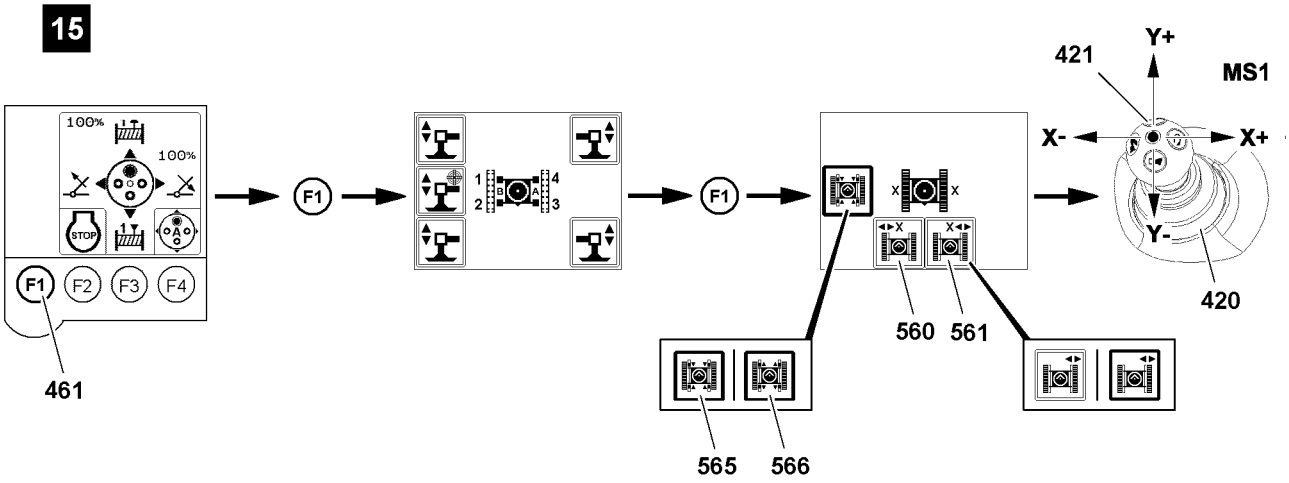

B116897

Unpinning the cross carrier

▶ Press the function key F1 **461**, see illustration **15**.

Result:

– The “Support” menu appears.

▶ Press function key F1 **461**.

Result:

– The “Track width adjustment” menu appears.

▶ When icon **565** “Pin the cross carrier” is visible:
Activate “Unpin the cross carrier”: Select the icon **565** (“touch”).

Result:

– Icon “unpin cross carrier” **566** is visible.

Selecting the cross carrier

Before you retract or extend the cross carrier, select one of the cross carriers or both cross carriers:

– Icon **560**
– Icon **561**

In this and the following sections is described how both cross carriers are extended together. Alternatively you can also select and extend the cross carriers individually.

▶ Pay attention to cross carrier assignment.

▶ Select both cross carriers: Select the icon **560** and icon **561** (“touch”).

Result:

– Selected icons with filled out frames: Cross carriers are selected.

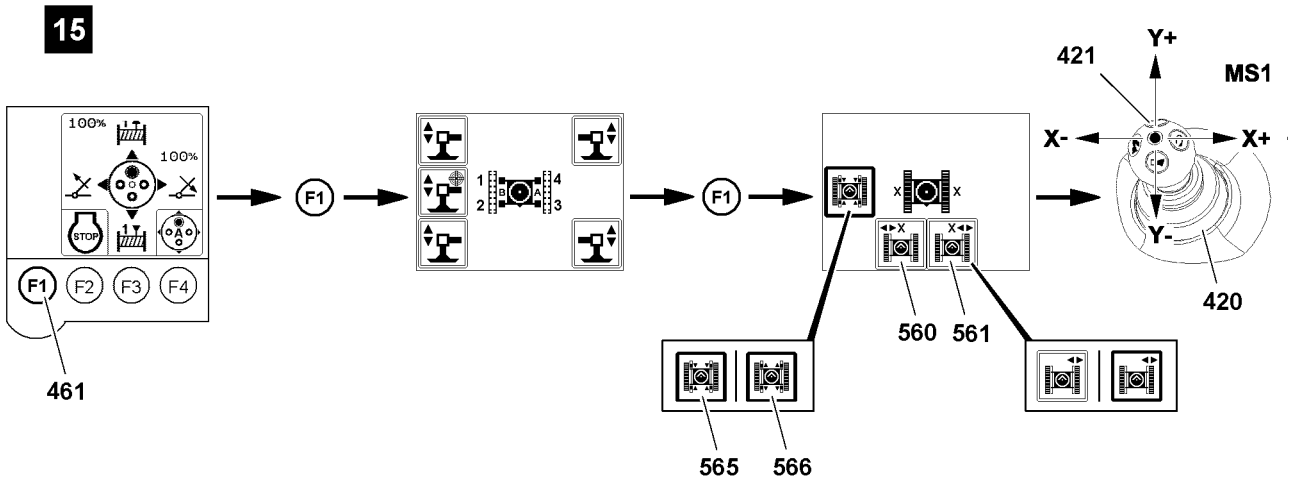

B116897

Extending the cross carrier

To unpin the cross carriers on points **P1**, you have to retract or extend the cross carriers, see illustration **12**:
You can check on points **P1** if the pins are completely pinned or unpinned:
– The pins are unpinned: Tags **2** are visible.
– The pins are pinned: Tags **2** are **not** visible.

WARNING
Crushing danger due to adjustment of cross carriers!
▶ Make sure that no personnel is within the danger zone of the cross carriers during “track width adjustment”.
▶ Differentiation of the cross carriers, see Crane operating instructions, chapter 4.01.

To initiate a movement, you have to release master switch MS1 **420** with the button **421**.
▶ Press the button **421** and hold.
▶ When “retracting the cross carrier”:
Move master switch MS1 **420** in direction X-.
▶ When “extending the cross carrier”:
Move master switch MS1 **420** in direction X+.

Result:
– The pins are unpinned.

Troubleshooting
Pins are not unpinned!
The pin is stuck: The position of the cross carriers prevents the pins from unpinning.
▶ Extend and retract the cross carriers again: Move master switch MS1 **420** in direction X+ or X- until the pins are completely unpinned.

▶ Make sure that the pins are completely unpinned on points **P1**, see illustration **12**.

Result:
– The pins are unpinned.
– The cross carriers extend.

Pinning the cross carriers

▶ Before the cross carrier reaches the 100 % extension status:
Activate “Pin the cross carrier”: Select icon **566** (“touch”), see illustration **15**.

Result:

– Icon **565** “pin cross carrier” is visible.
– The pins are pinned.

Troubleshooting

The pins are not pinned!

The pin is stuck: The position of the cross carriers prevents the pins from pinning.

▶ Extend and retract the cross carriers again: Move master switch MS1 **420** in direction X+ or X- until the pins are completely pinned.

▶ Make sure that the pins are completely pinned on points **P1**, see illustration **12**.

Result:

– The pins are pinned.
– The cross carriers are extended and secured at 100 %.

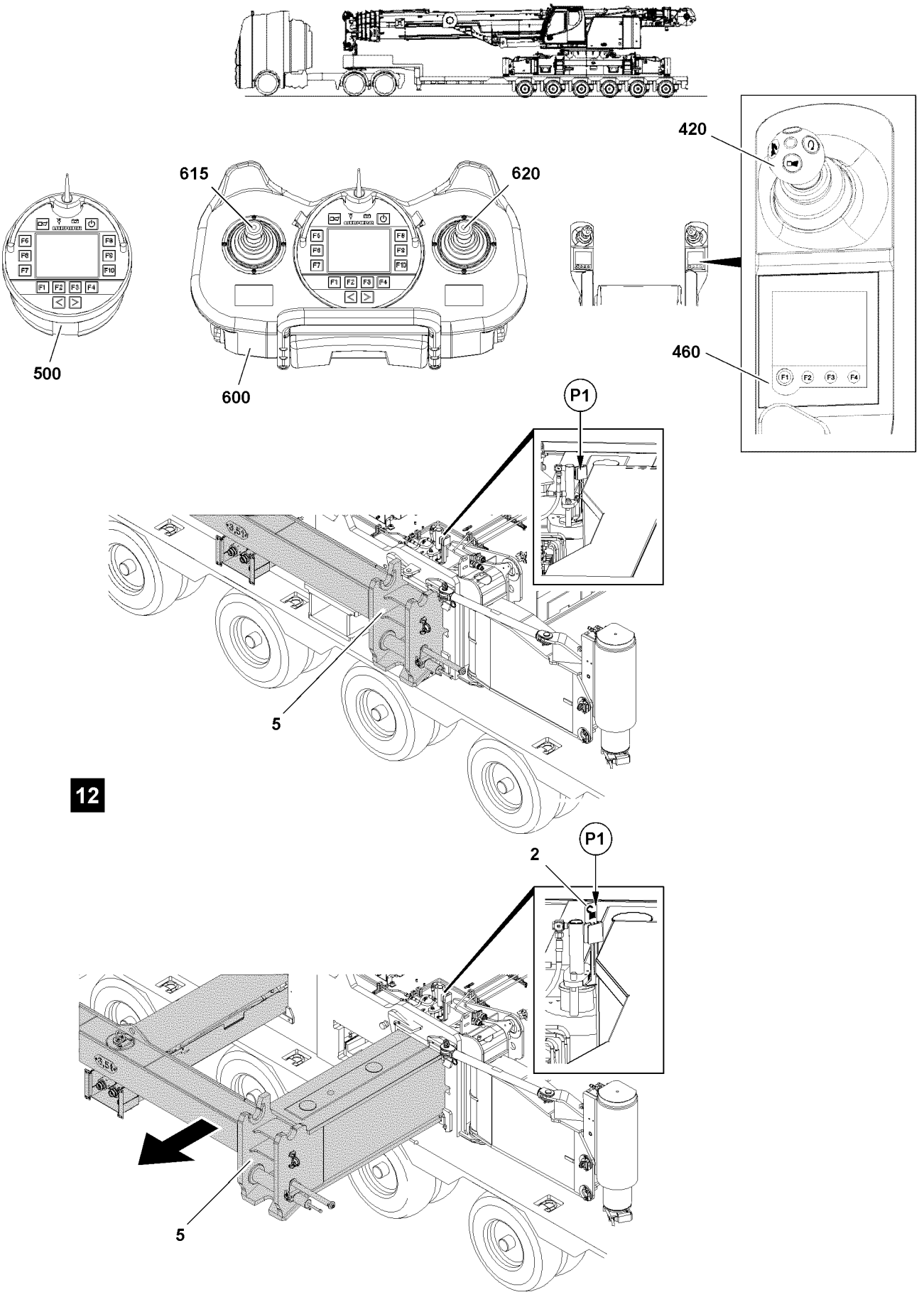

B116891

1.2.3 Extending the cross carriers with the radio remote control*

Make sure that the following prerequisite is met:

– On the display of the BTT-E, the menu overview is visible.

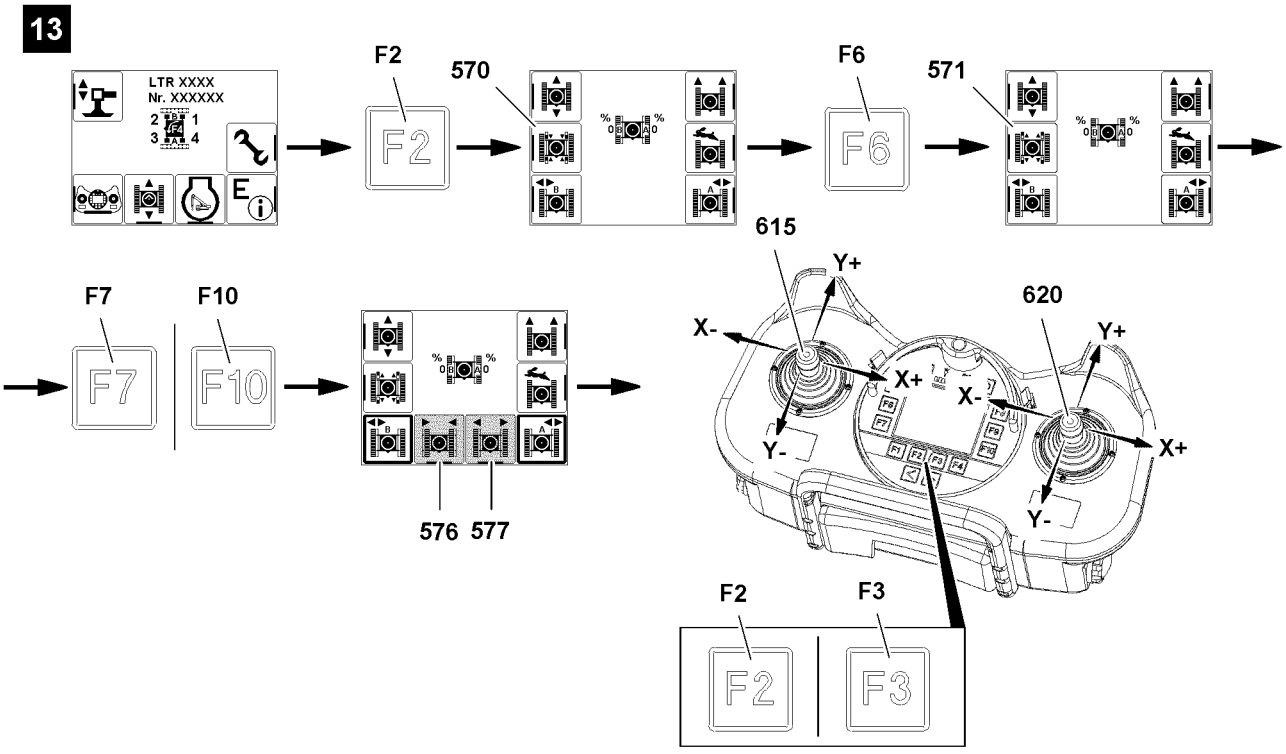

B116893

Unpinning the cross carrier

▶ Call up the “Crawler travel gear” menu: Press the function key **F2**, see illustration **13**.

Result:

– Functions “Track width adjustment” are visible.

▶ When icon “Pin the cross carrier” **570** is visible:
Activate “Unpin the cross carrier”: Press the function key **F6**.

Result:

– Icon “Unpin the cross carrier” **571** appears.

Selecting the cross carrier

Before you retract or extend the cross carrier, select one of the cross carriers or both cross carriers:

– Function key **F7**
– Function key **F10**

In this and the following sections is described how both cross carriers are extended together. Alternatively you can also select and extend the cross carriers individually.

Depending on which cross carriers are selected, different icons for “retract crawler carrier” and “extend crawler carrier” appear, see Crane operating instructions, chapter 6.08.

▶ Select both cross carriers: Press function key **F7** and function key **F10**, see illustration **13**.

Result:
- Icon “Retract crawler carrier” **576** is visible.
- Icon “Extend crawler carrier” **577** is visible.

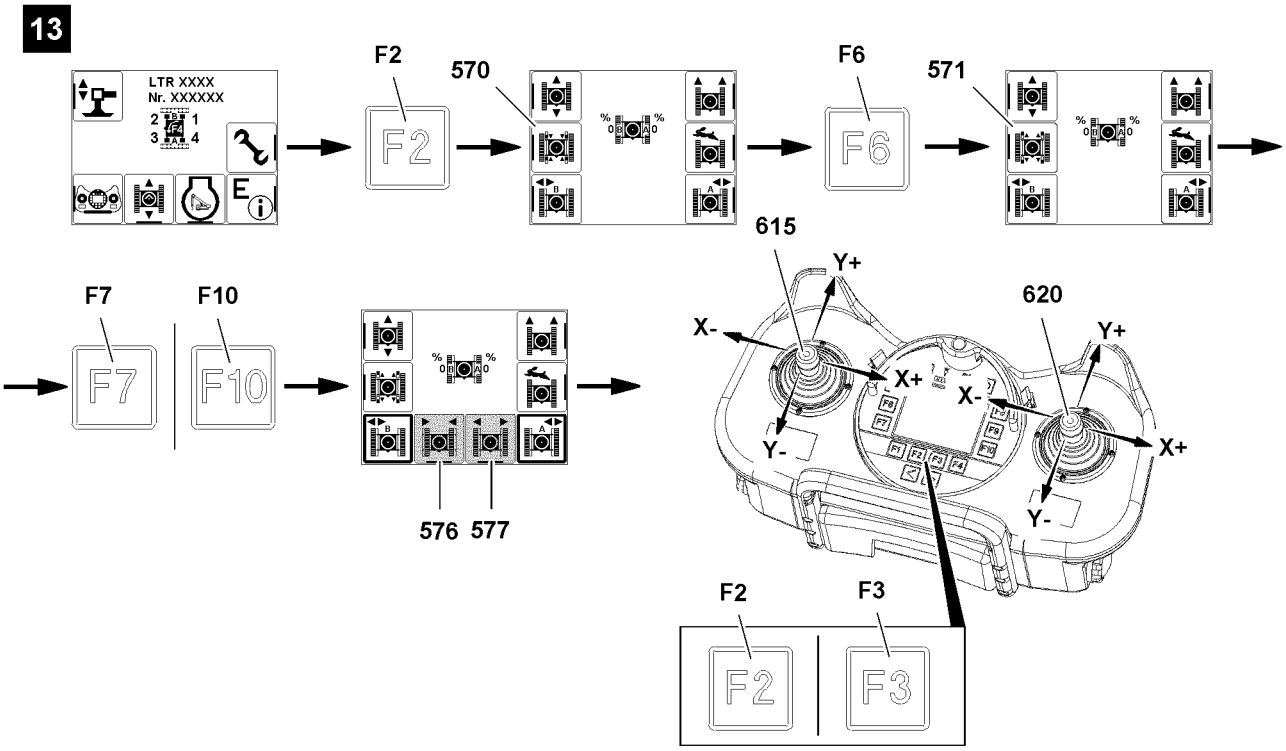

B116893

Extending the cross carrier

To unpin the cross carriers on points **P1**, you have extend the cross carriers, see illustration **12**.
You can check on points **P1** if the pins are completely pinned or unpinned:
- The pins are unpinned: Tags **2** are visible.
- The pins are pinned: Tags **2** are **not** visible.

WARNING
Crushing danger due to adjustment of cross carriers!
▶ Make sure that no personnel is within the danger zone of the cross carriers during “track width adjustment”.
▶ Differentiation of the cross carriers, see Crane operating instructions, chapter 6.08.

When both cross carriers are selected, then the operation is assigned to the following manual control levers on the BTT-E:
- Manual control lever **615** or manual control lever **620**

▶ When “retracting the cross carrier”:
Deflect the manual control lever in direction X-.

or

■ Press the function key **F2**.

▶ When “extending the cross carrier”:
Deflect the manual control lever in direction X+.

or

■ Press the function key **F3**.

Result:

– The pins are unpinned.

Troubleshooting

Pins are not unpinned!

The pin is stuck: The position of the cross carriers prevents the pins from unpinning.

▶ Extend and retract the cross carriers again: Deflect the manual control levers on the BTT-E in direction X+ or X- or press function keys until the pins are completely unpinned.

▶ Make sure that the pins are completely unpinned on points **P1**, see illustration **12**.

Result:

– The pins are unpinned.
– The cross carriers extend.

Pinning the cross carriers

▶ Before the cross carriers reach the 100 % extension status:
Activate “Pin the cross carrier”: Press the function key **F6**.

Result:

– Icon “pin the cross carrier” **570** is visible.
– The pins are pinned.

Troubleshooting

The pins are not pinned!

The pin is stuck: The position of the cross carriers prevents the pins from pinning.

▶ Extend and retract the cross carriers again: Deflect the manual control levers on the BTT-E in direction X+ or X- or press function keys until the pins are completely pinned.

▶ Make sure that the pins are completely pinned on points **P1**, see illustration **12**.

Result:

– The pins are pinned.
– The cross carriers are extended and secured at 100 %.

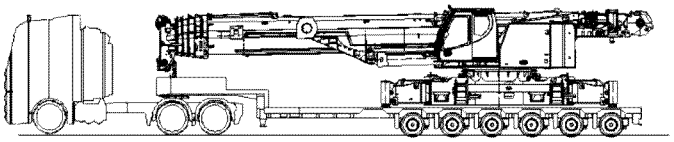

20

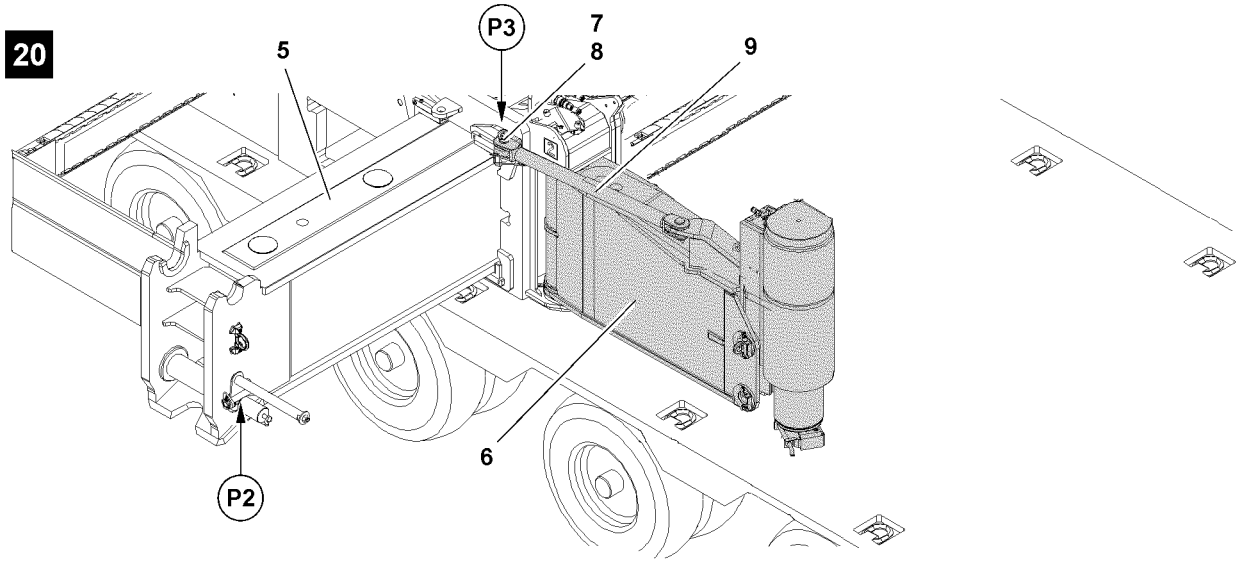

21

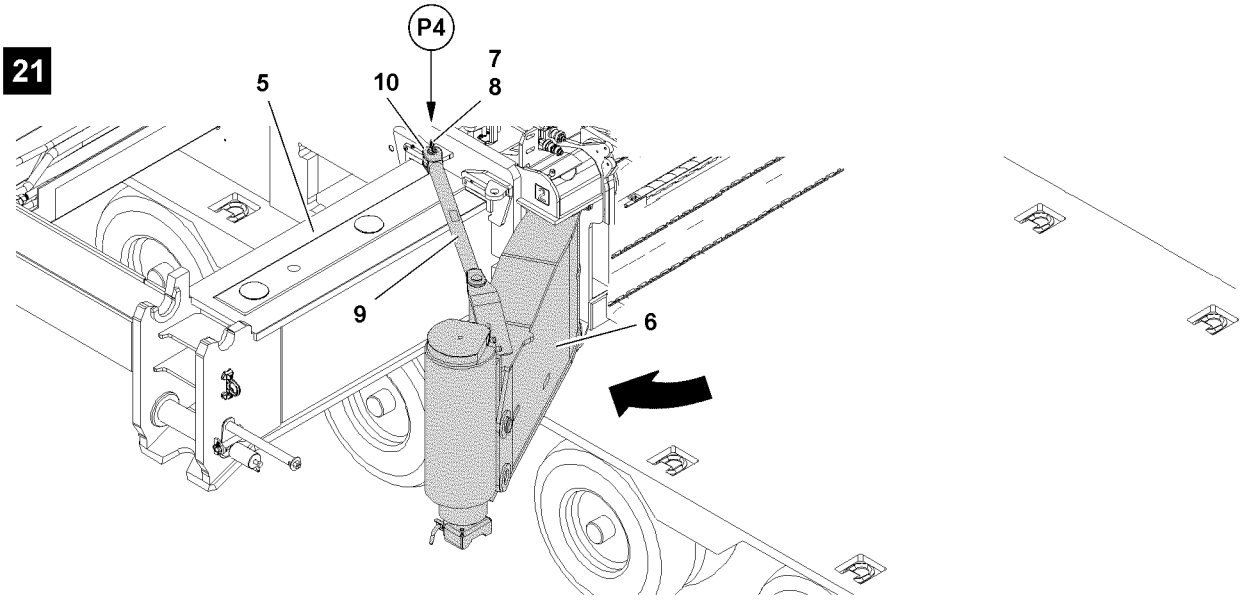

B116875

1.3 Swinging the folding brackets out

Make sure that the following prerequisite is met:

– Both cross carriers **5** are 100 % extended and pinned.

NOTICE

Damage to the pin pulling device!

If the cross carriers **5** are not extended when swinging the folding brackets **6**, then the pin pulling devices will be damaged at point **P2** when swinging the folding brackets!

▶ Make sure that the cross carriers **5** are extended before swinging the folding brackets **6**!

▶ Make sure that no persons or objects are within the danger zone when swinging the folding brackets **6**!

▶ Remove the spring retainer **7** at point **P3**, see illustration **20**.

▶ Unpin the pin **8** at point **P3**, see illustration **20**.

▶ Remove the rod **9** from the connection.

Result:

– The folding bracket **6** is released.

▶ Swing the folding bracket **6** out until the connection fork **10** of the rod can be pinned at point **P4**, see illustration **21**.

▶ When the bores align at point **P4**:
Insert the pin **8** at point **P4**, see illustration **21**.

▶ Insert the spring retainer **7** at point **P4**, see illustration **21**.

Result:

– The folding bracket **6** is secured.

▶ Swinging all folding brackets out

22

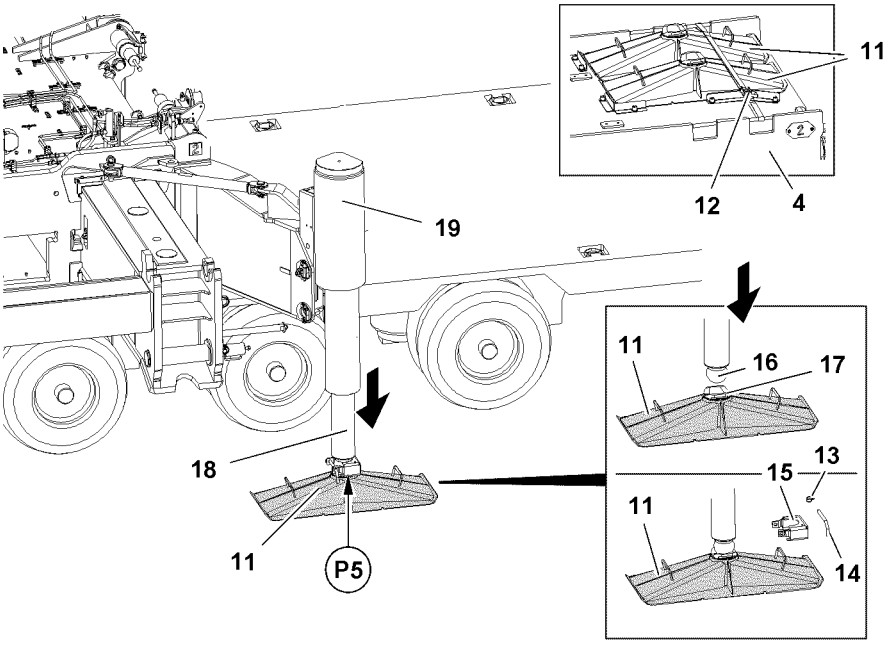

23

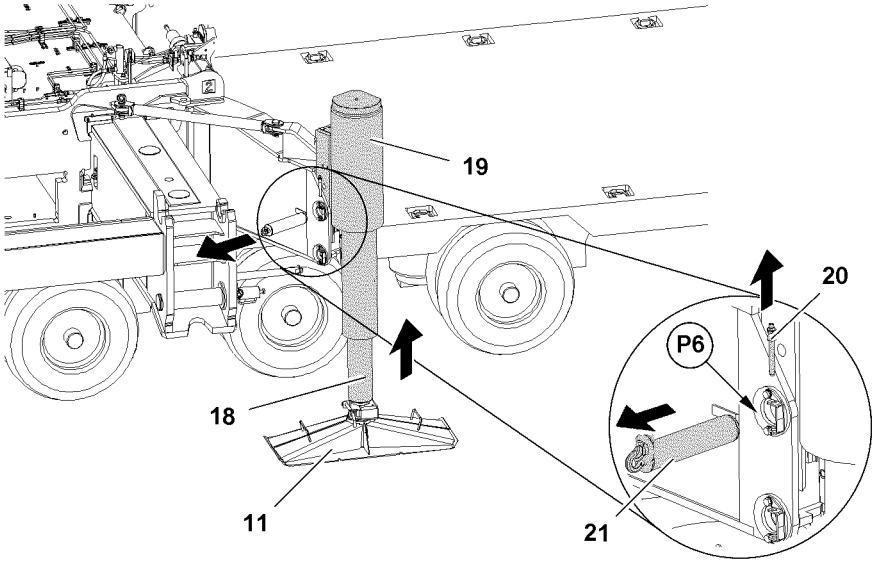

24

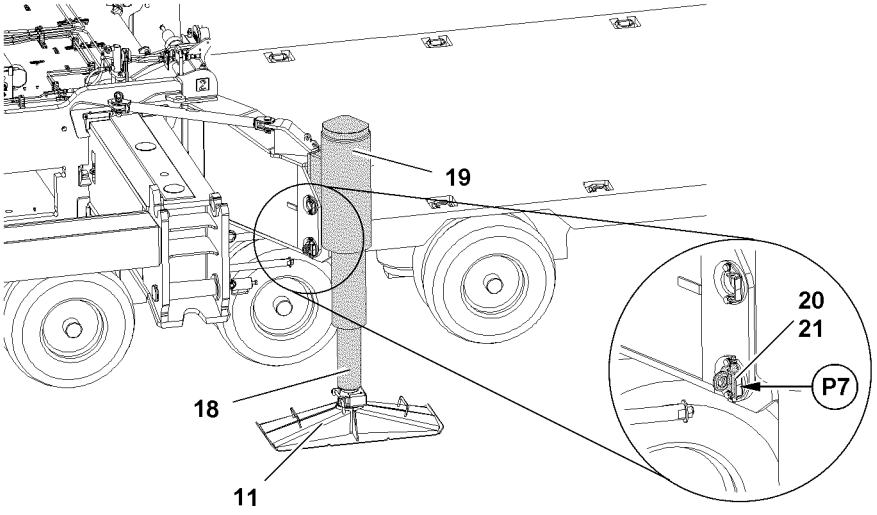

B116876

1.4 Installing the support plates

1.4.1 Preparing the support plates for assembly

Note

- The support plates **11** are positioned for transport on the central ballast **4**!
- The weight of the support plate is 50 kg!
- For safety reasons, assemble the support plates **11** always with two persons!

- Remove the transport belts **12**, see illustration **22**.
- Remove the support plates **11** from the transport receptacle.

DANGER

The crane can topple over!

The crane can topple and fatally injure personnel if the support plates **11** are not properly supported.

- Make sure that the support plates are positioned on load bearing and horizontal ground.
- Only use suitable materials for support!
- Place the support bases under the center of the support plates!
- Support all support plates **11** with the same materials!
- Observe the track width of the flat bed trailer! The support material may not project into the driving track.

- Place stable materials such as wood, steel plates or concrete slabs of a suitable size under the support plates **11**, depending on the ground conditions.
- Place the support plates **11** under the support cylinder **19** and align them lengthwise to the transport vehicle.
- Remove the safety locking pin **13** at point **P5** and unpin the pin **14**, see illustration **22**.
- Pull out the retainer **15** from the ball head **16**, see illustration **22**.

22

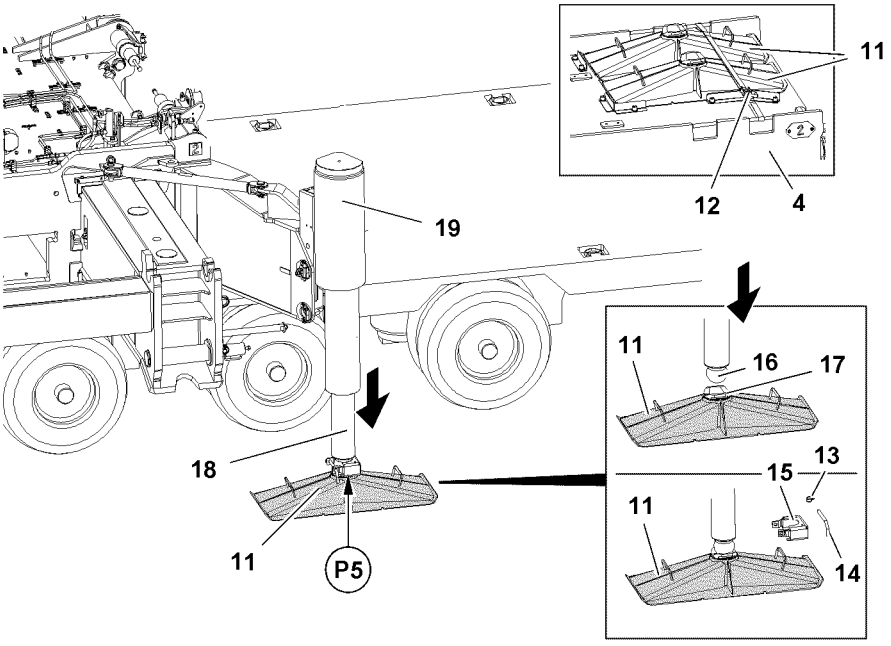

23

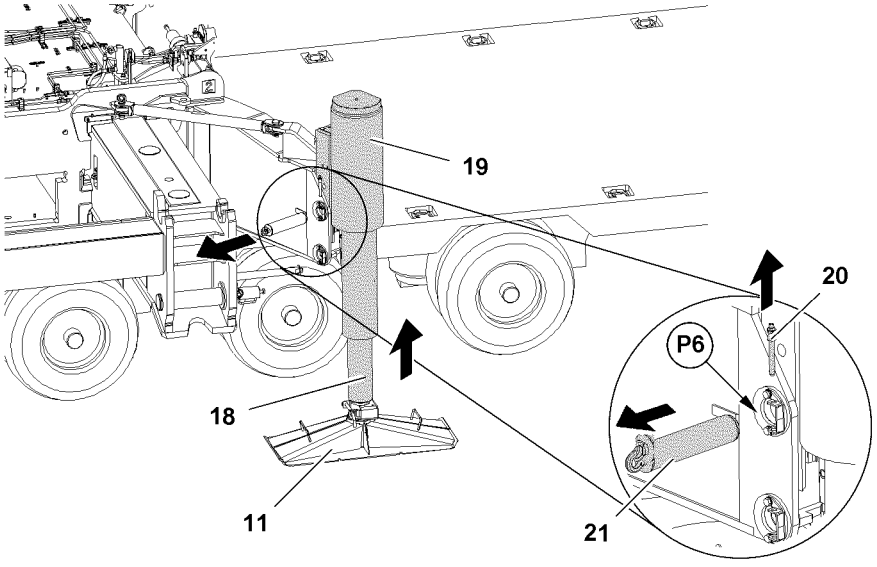

24

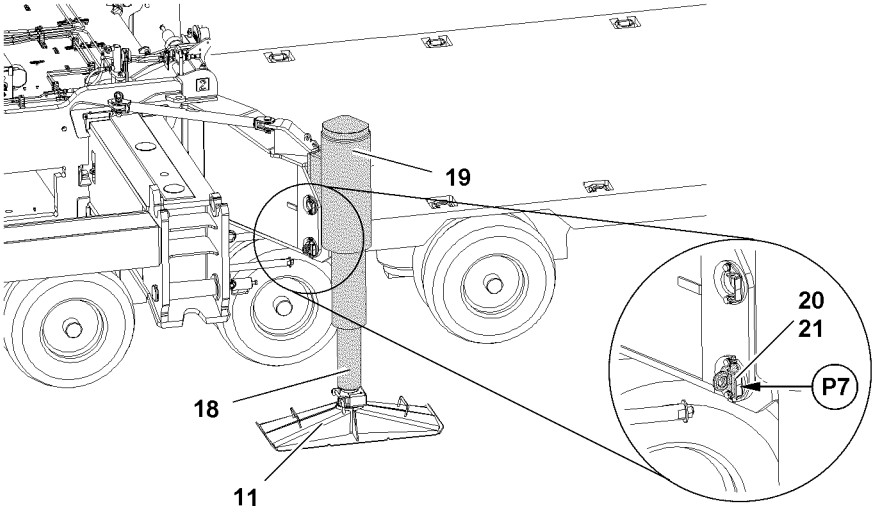

B116876

1.4.2 Extending the piston rod with the BlueTooth™Terminal

Make sure that the following prerequisite is met:

– On the display of the BTT, the menu overview is visible.

26

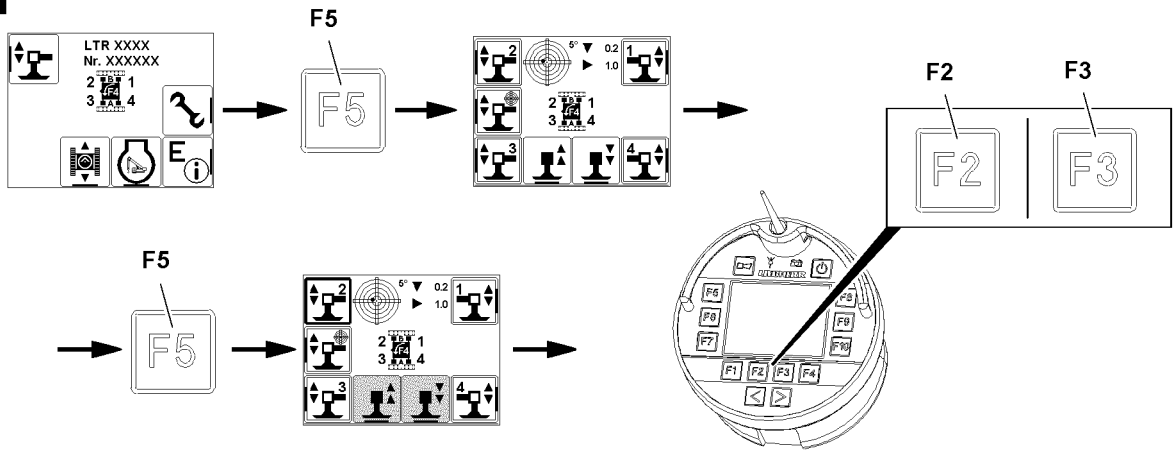

B116899

▶ Press the function key **F5**, see illustration **26**.

Result:

– The “Support” menu is visible.

The support cylinders are marked with numbers depending on the alignment of the BTT.
Support cylinders are selected with function keys:

– Function key **F5**
– Function key **F7**
– Function key **F8**
– Function key **F10**

▶ Select support cylinder: Press the function key.

Result:

– Selected icons are visible with filled out frames: Support cylinders are selected.
– Support cylinders are ready for extension and retraction.

▶ When “retracting the support cylinders”:
Press the function key **F2**.

Result:

– Piston rod **18** retracts.

▶ When “extending the support cylinders”:
Press the function key **F3**.

Result:

– Piston rod **18** extends.

22

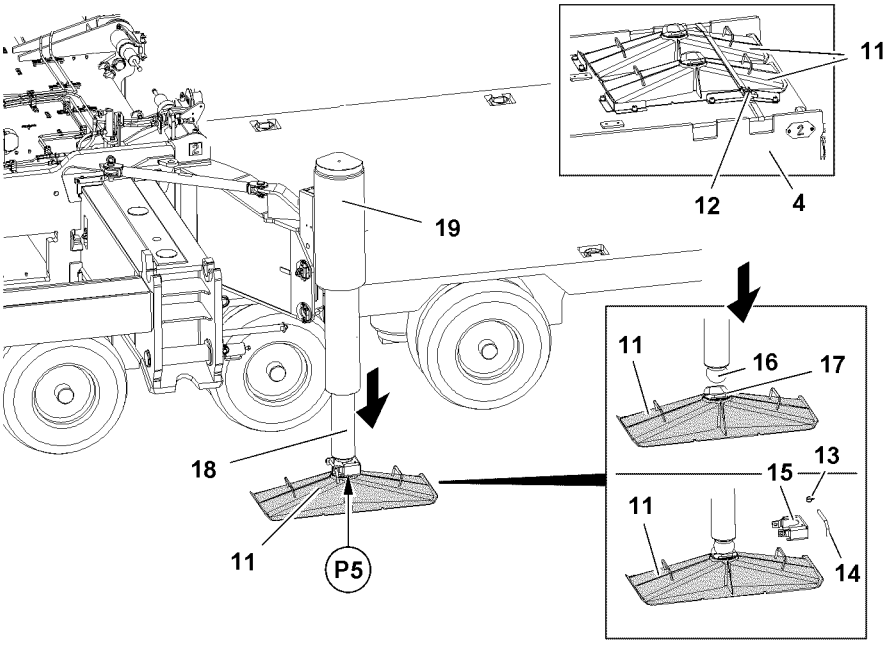

23

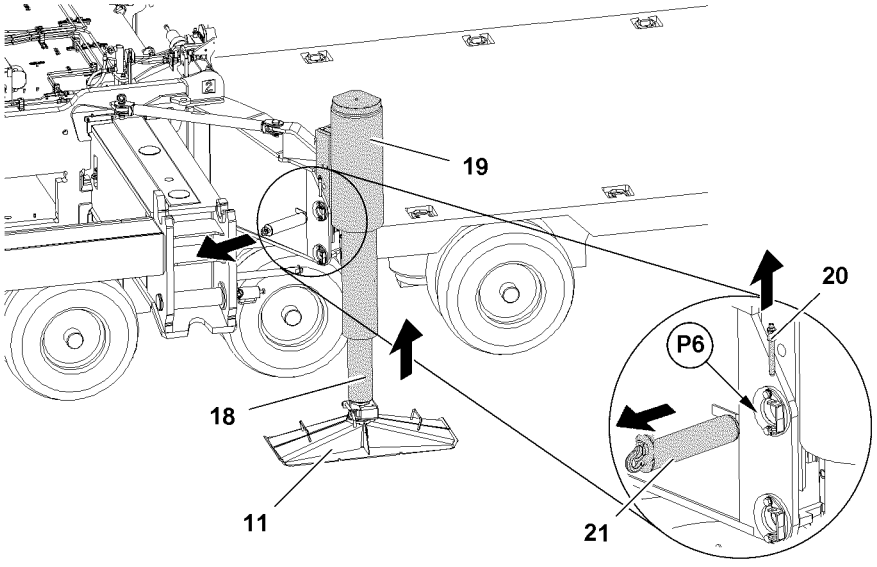

24

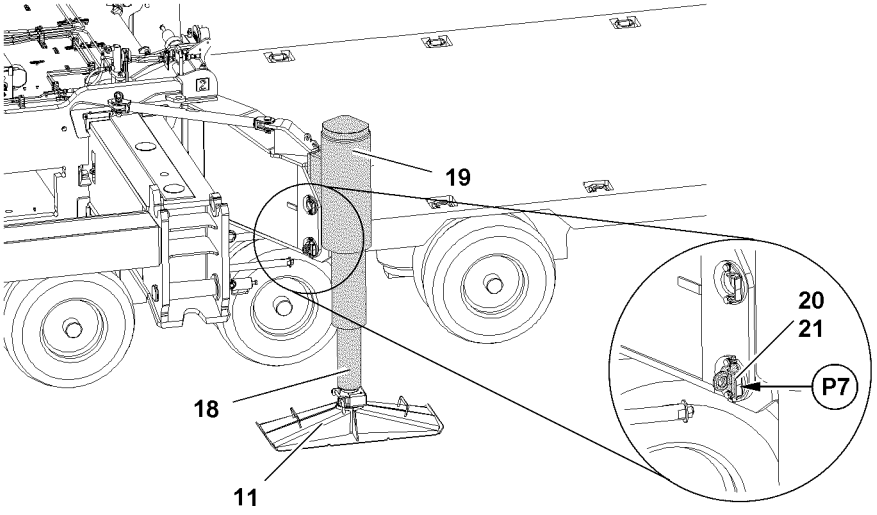

B116876

1.4.3 Extending the piston rod from the crane operator's cab

Make sure that the following prerequisite is met:

– The “master switch assignment” is visible on the touch display right (TE1).

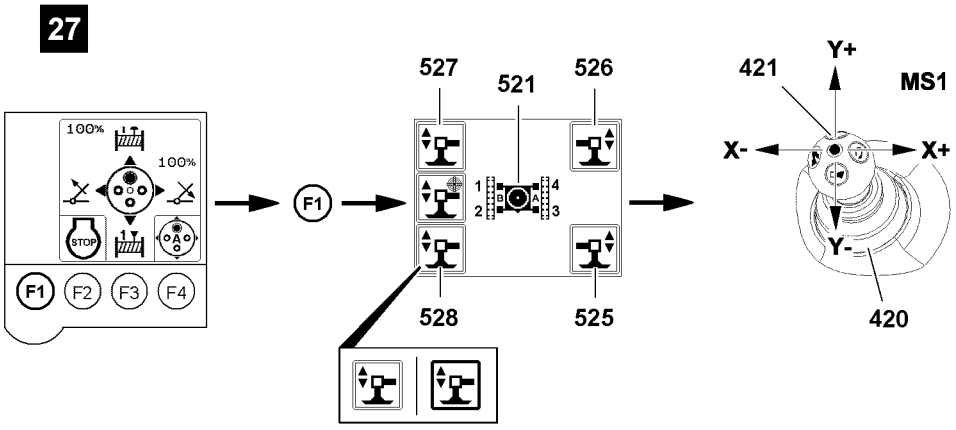

B116900

▶ Press the function key **F1**, see illustration **27**.

Result:

– The “Support” menu is visible.

The support cylinders are marked with numbers depending on the alignment of the turntable, see icon **521**.

Support cylinders are selected via touch functions:

– Icon **525**
– Icon **526**
– Icon **527**
– Icon **528**

▶ Select support cylinder: Select the icon (“touch”).

Result:

– Selected icons are visible with filled out frames: Support cylinders are selected.
– Support cylinders are ready for extension and retraction.

▶ When “retracting the support cylinders”:
Deflect the manual control lever **421** in direction Y+.

Result:

– Piston rod **18** retracts.

▶ When “extending the support cylinders”:
Deflect the manual control lever **421** in direction Y-.

Result:

– Piston rod **18** extends.

22

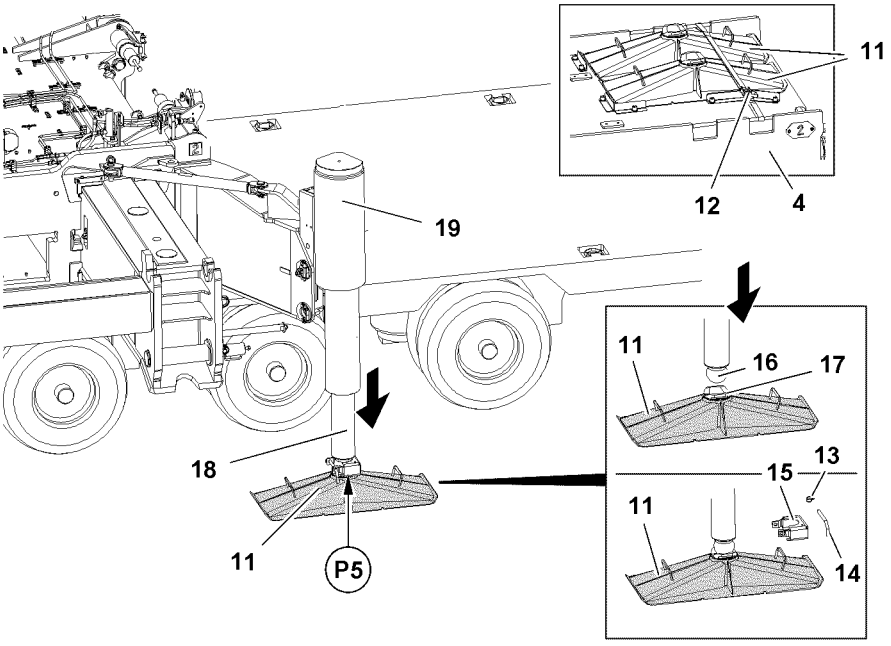

23

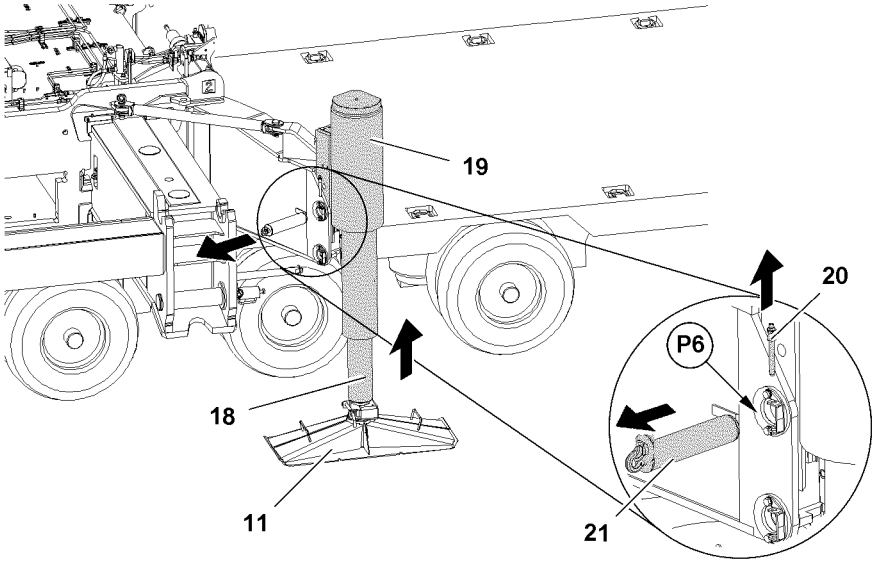

24

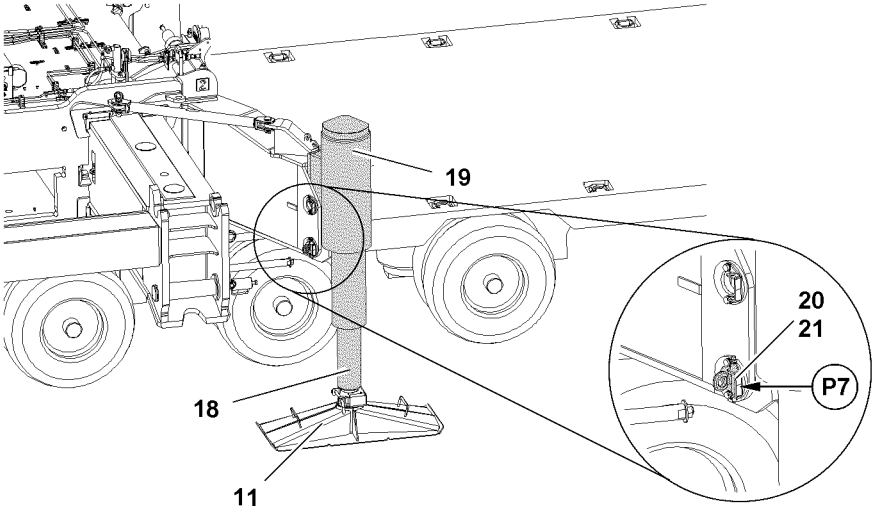

B116876

1.4.4 Extending the piston rod with the radio remote control

Make sure that the following prerequisite is met:

– On the display of the BTT-E, the menu overview is visible.

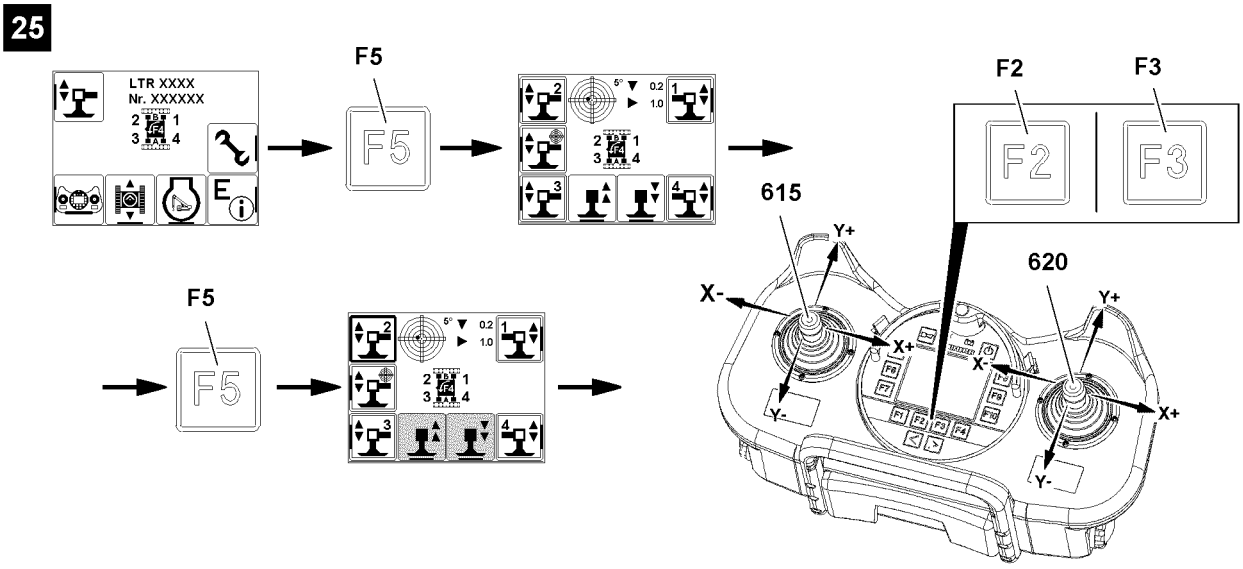

▶ Press the function key **F5**, see illustration **25**.

Result:

– The “Support” menu is visible.

The support cylinders are marked with numbers depending on the alignment of the radio remote control.

Support cylinders are selected with function keys:

– Function key **F5**
– Function key **F7**
– Function key **F8**
– Function key **F10**

▶ Select support cylinder: Press the function key.

Result:

– Selected icons are visible with filled out frames: Support cylinders are selected.
– Support cylinders are ready for extension and retraction.

The support cylinders can be extended or retracted with both manual control levers.

▶ When “retracting the support cylinders”:
Deflect the manual control lever in direction Y+.

or

■ Press the function key **F2**.

Result:

– Piston rod **18** retracts.

▶ When “extending the support cylinders”:
Deflect the manual control lever in direction Y-.

or

■ Press the function key **F3**.

Result:

– Piston rod **18** extends.

blank page!

22

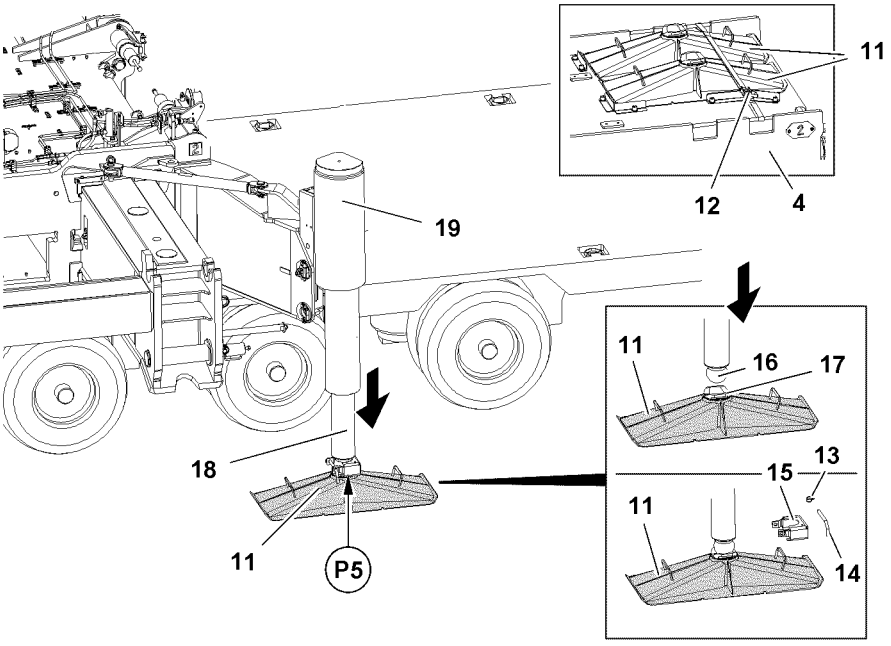

23

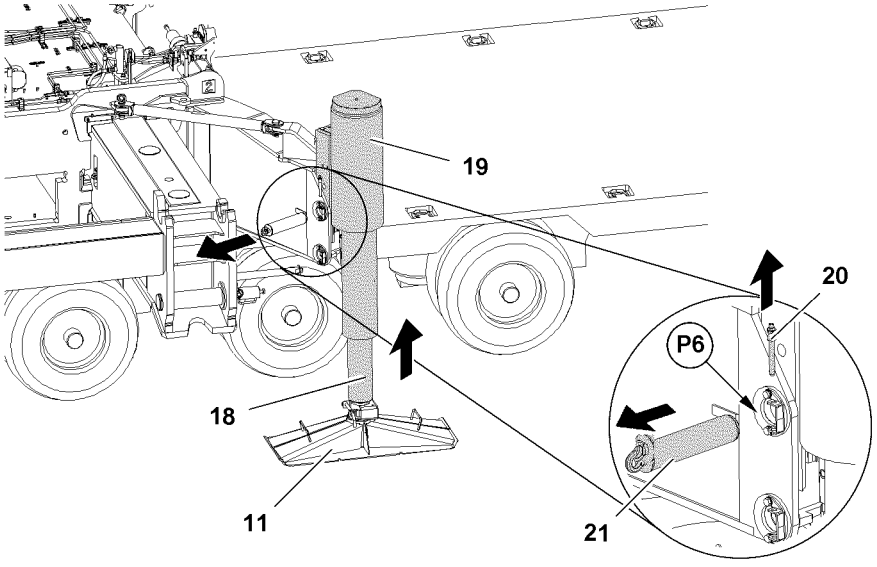

24

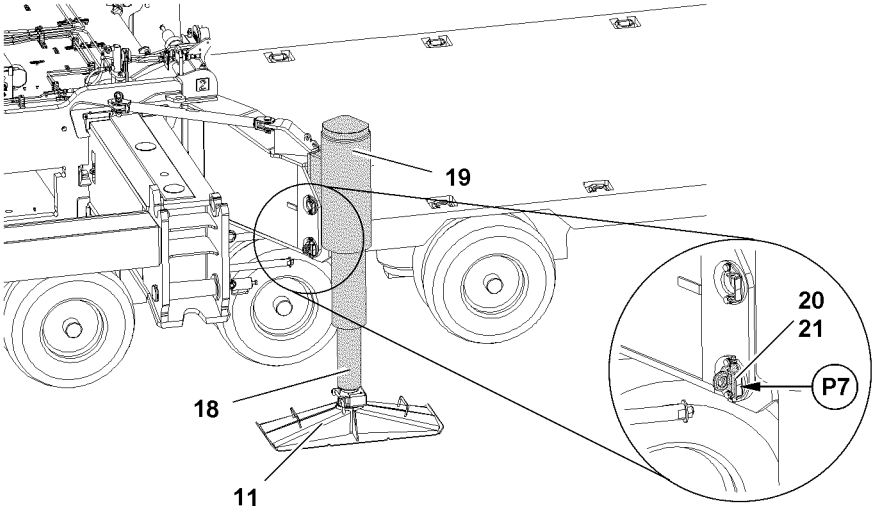

B116876

1.5 Positioning the support cylinders in operating position

Make sure that the following prerequisites are met:

– All support plates **11** are pinned on support cylinders **19** and secured.
– The support cylinders **19** are extended to the ground.

1.5.1 Unpinning the support cylinders

▶ Release the pin **21**: Unpin locking ball pin **20**, see illustration **23**.
▶ Unpin the pin **21** at point **P6**, see illustration **23**.
▶ Retract the piston rod **18** until it can be pinned at point **P7**.
▶ Position all support cylinders in operating position.

1.5.2 Retracting the support cylinders

Note

▶ Retract support cylinders with BTT-E, BTT and TE1, see section “Installing the support plates”.

▶ Retract the support cylinders until the pin bores align at point **P7**.

1.5.3 Pinning the support cylinders

▶ When the bores align at point **P7**:
Insert the pin **21** at point **P7**, see illustration **24**.
▶ Secure the pin **21**: Insert the ball locking pin **20**.

Result:

– The support cylinder **19** is pinned and secured in operating position.

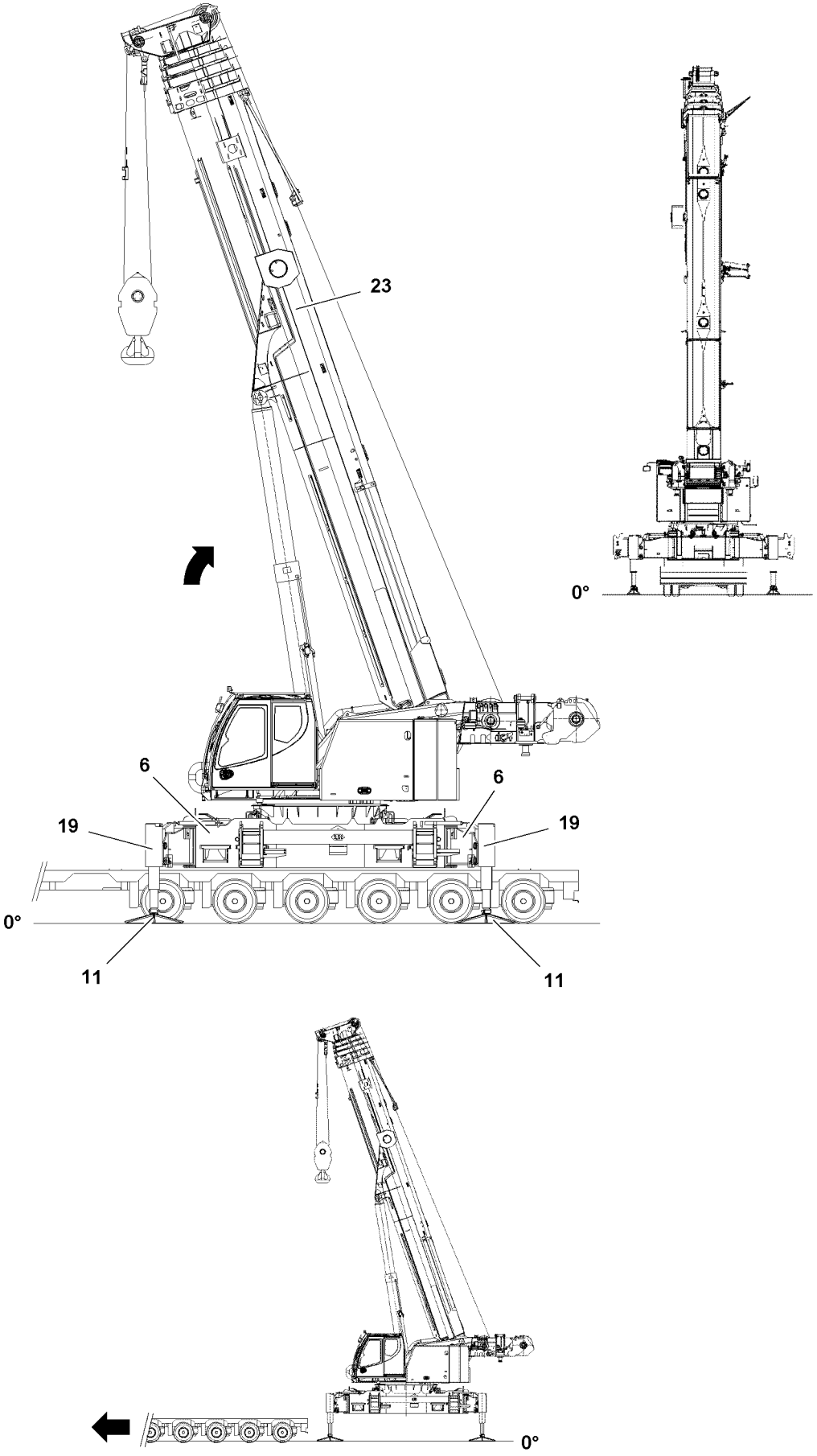

B116877

1.6 Supporting the crane

WARNING
Assembly support monitoring!
The assembly support is not monitored by the control!
The crane operator is obligated to check the assembly support before further assembly steps!
▶ Make sure that all folding brackets are swung and secured with rods!
▶ Make sure that all support plates are supported!

WARNING
The crane can tip over!
If the crane is not aligned horizontally, it can tip over!
Personnel can be severely injured or killed!
▶ Make sure that the crane is horizontally aligned!

Note
▶ The crane can be supported manually or automatically!
▶ At manual support, the support cylinders can be extended individually or all four simultaneously!

WARNING
The crane can tip over!
When the automatic support is operated the crane is aligned automatically in horizontal direction!
▶ Make sure that the alignment is within the permitted tolerance and that all four support plates are touching the ground!

WARNING
The crane can topple over!
At assembly / disassembly of the crawler carriers, if the values of the load chart are not adhered to, the crane can topple over at assembly / disassembly!
Personnel can be severely injured or killed!
This could result in high property damage!
▶ Observe and adhere to the values in the load chart for assembly / disassembly of the crawler carrier.

Make sure that the following prerequisites are met:
– No personnel is within the danger zone.
– The engine is running.
– All folding brackets **6** are folded out (no electronic monitoring).
– All support cylinders **19** are extended.
– All support plates **11** are supported.
– The LICCON overload protection is set:
  • Support base 4.4 m on supports
  • Central ballast 0 t
  • Counterweight 0 t
  • Without auxiliary boom / accessory
  • Slewing range

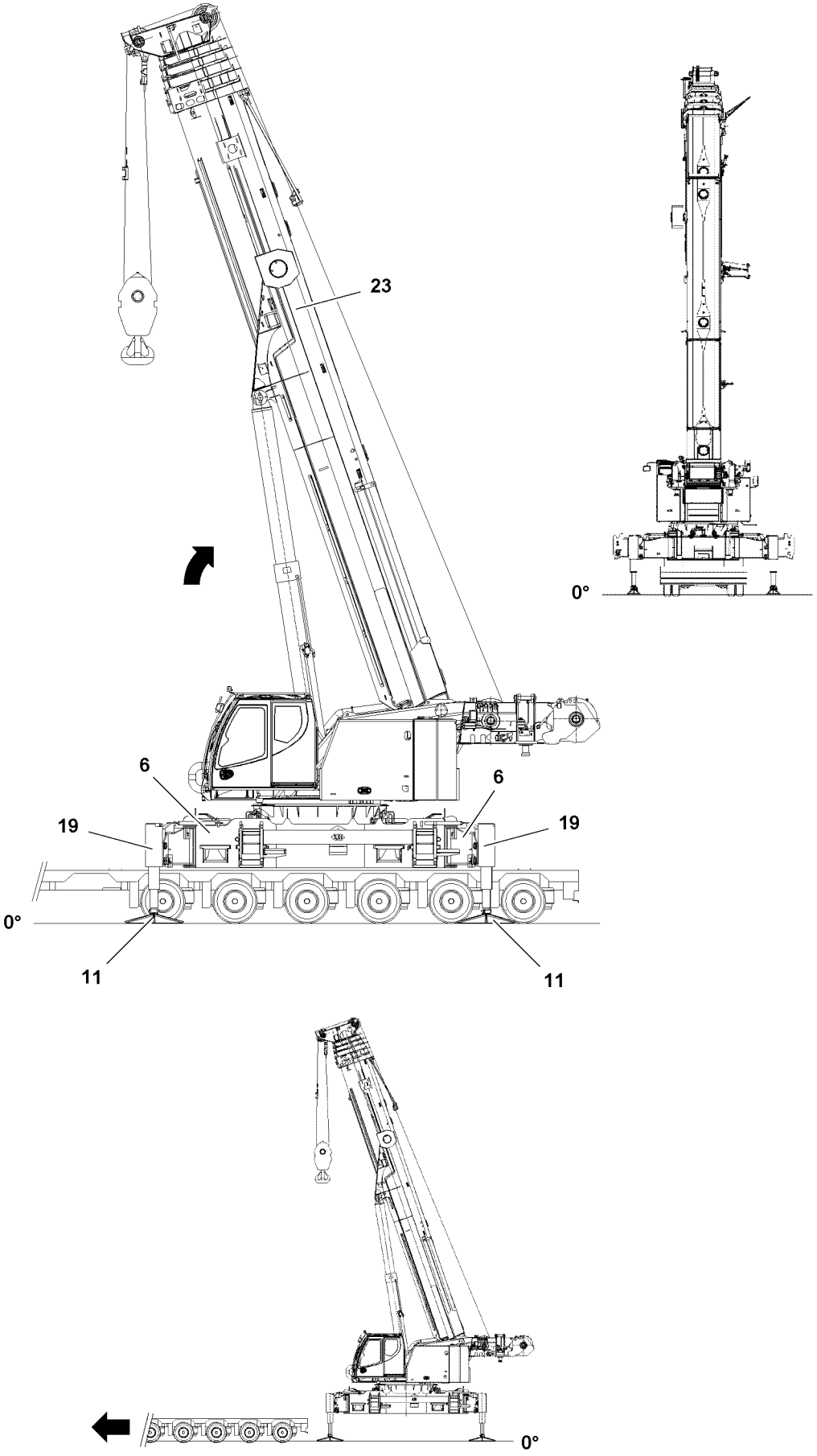

B116877

1.6.1 Supporting the crane with the Bluetooth™ Terminal

Make sure that the following prerequisite is met:

– On the display of the BTT, the menu overview is visible.

29

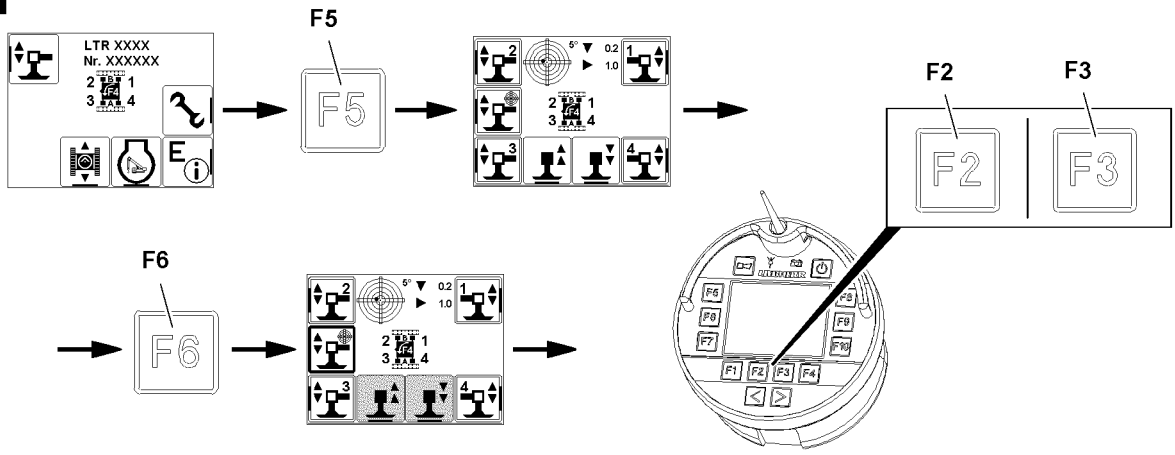

B116904

▶ Press the function key **F5**, see illustration **29**.

Result:

– The “Support” menu is visible.

The support cylinders are marked with numbers depending on the alignment of the radio remote control.

The support automatic extends or retracts all support cylinders simultaneously and levels the crane during the support procedure automatically.

▶ Select the support automatic: Press the function key **F6**.

Result:

– Selected icon is visible with filled out frame: The support automatic is selected.

– Support cylinders are ready for extension and retraction.

▶ When “retracting the support cylinders”:
Press the function key **F2**.

Result:

– The support cylinders **19** retract simultaneously.

– The crane is horizontally aligned.

▶ When “extending the support cylinders”:
Press the function key **F3**.

Result:

– The support cylinders **19** extend simultaneously.

– The crane is horizontally aligned.

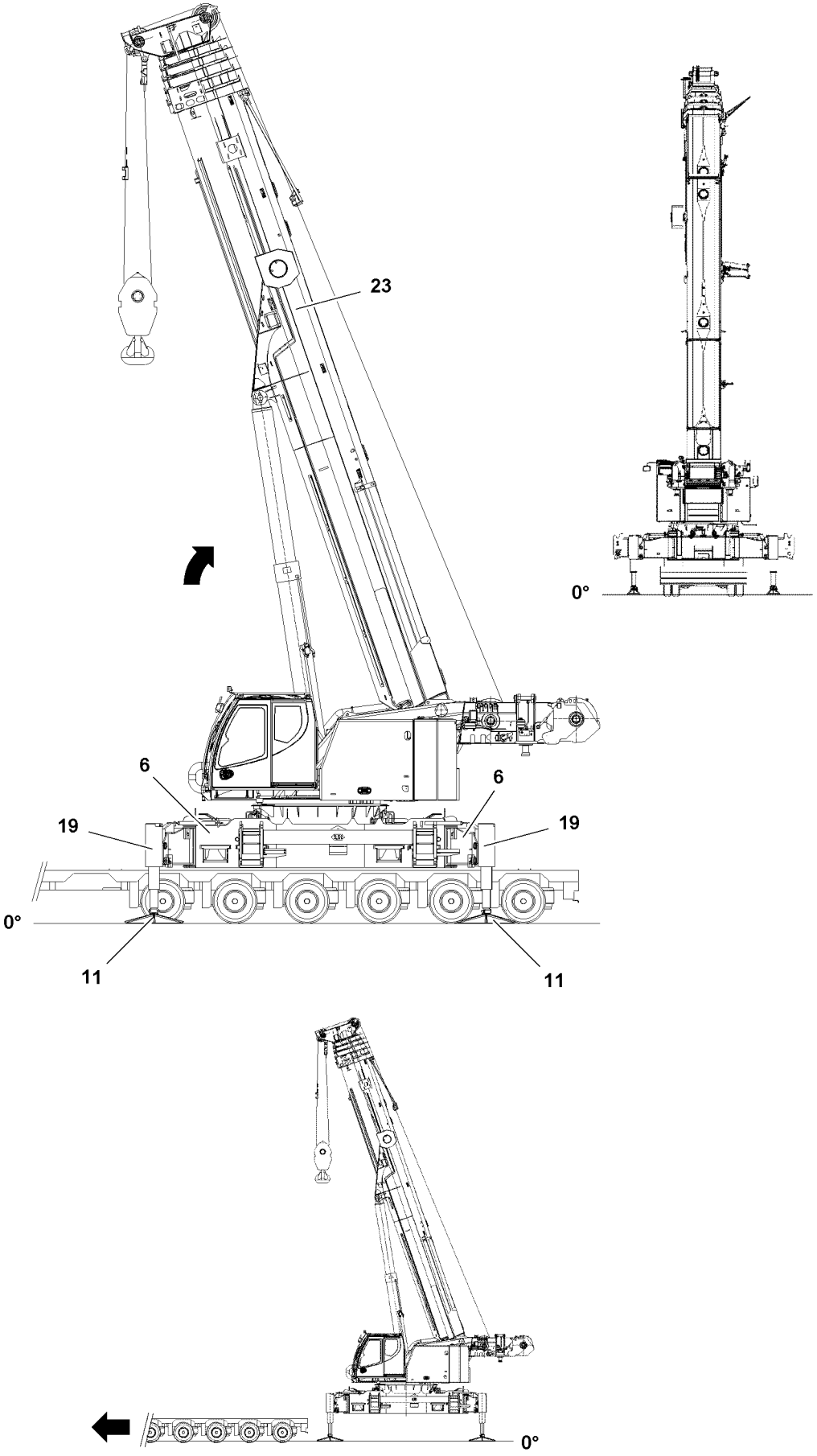

B116877

1.6.2 Supporting the crane from the crane operator's cab

Make sure that the following prerequisite is met:

– The “master switch assignment” is visible on the touch display right (TE1).

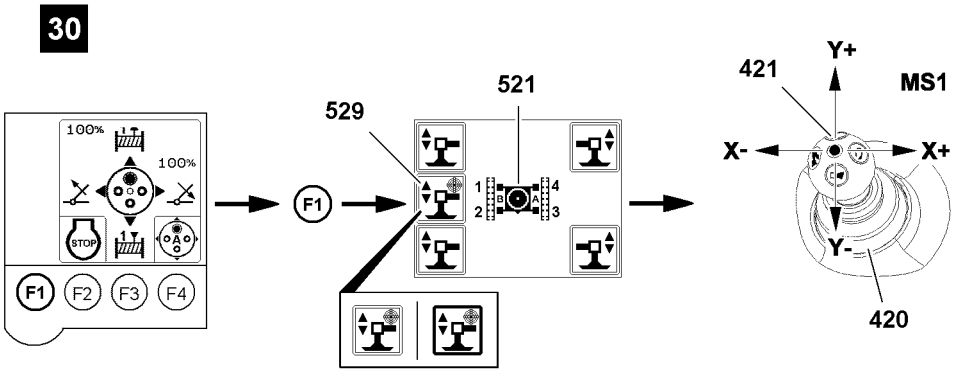

B116905

▶ Press the function key **F1**, see illustration **30**.

Result:

– The “Support” menu is visible.

The support cylinders are marked with numbers depending on the alignment of the turntable, see icon **521**.

The support automatic extends or retracts all support cylinders simultaneously and levels the crane during the support procedure automatically.

▶ Select the support automatic: Select the icon **529** (“touch”).

Result:

– Selected icon is visible with filled out frame: The support automatic is selected.

– Support cylinders are ready for extension and retraction.

▶ When “retracting the support cylinders”:
Deflect the manual control lever **421** in direction Y+.

Result:

– The support cylinders **19** retract simultaneously.

– The crane is horizontally aligned.

▶ When “extending the support cylinders”:
Deflect the manual control lever **421** in direction Y-.

Result:

– The support cylinders **19** extend simultaneously.

– The crane is horizontally aligned.

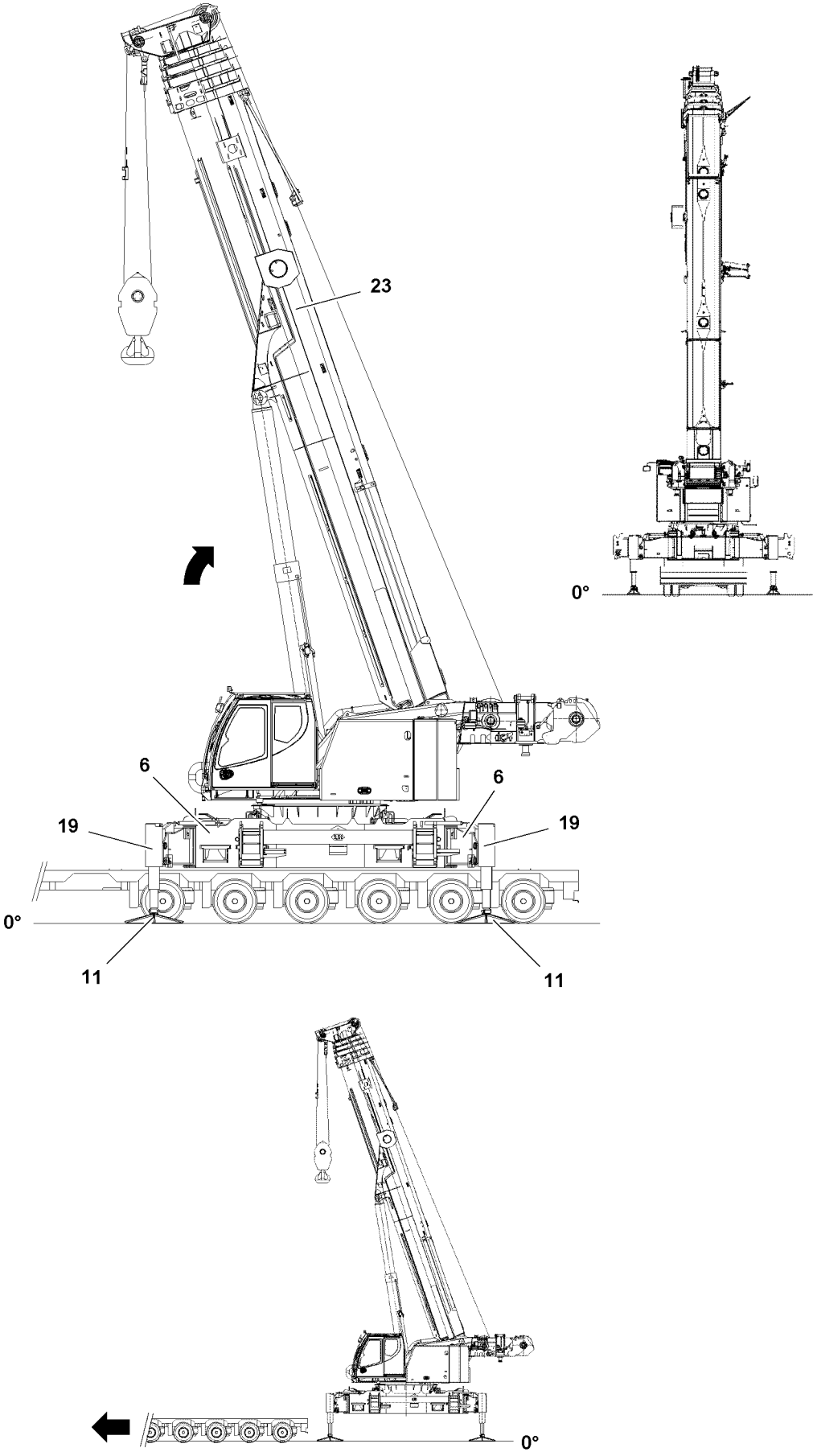

B116877

1.6.3 Supporting the crane with the radio remote control*

Make sure that the following prerequisite is met:

– On the display of the BTT-E, the menu overview is visible.

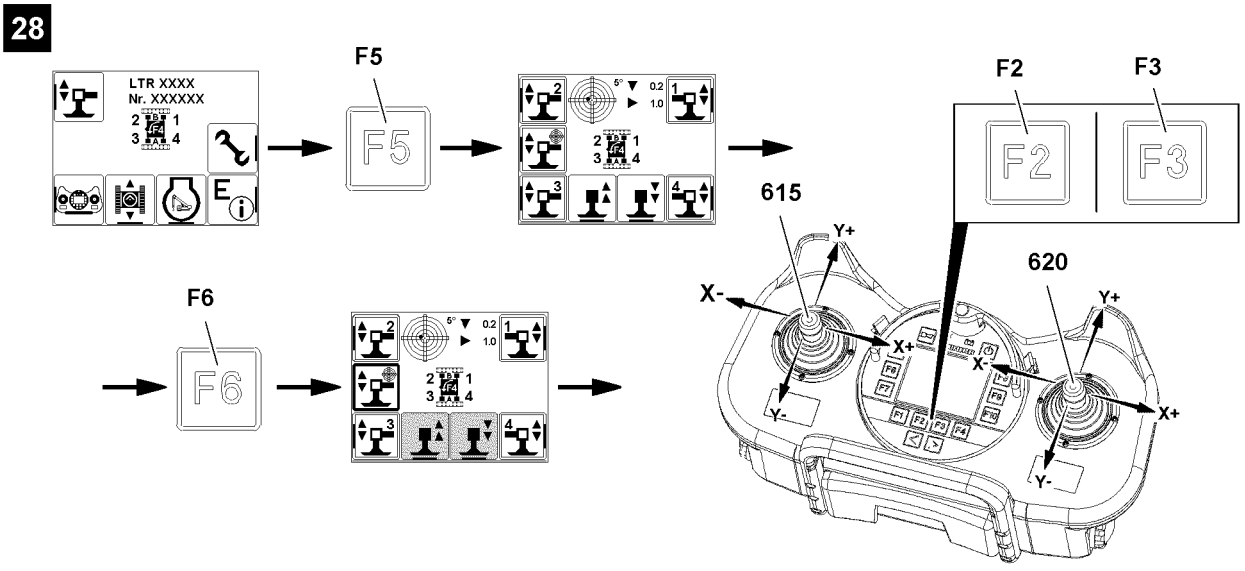

B116903

▶ Press the function key **F5**, see illustration **28**.

Result:

– The “Support” menu is visible.

The support cylinders are marked with numbers depending on the alignment of the radio remote control.

The support automatic extends or retracts all support cylinders simultaneously and levels the crane during the support procedure automatically.

▶ Select the support automatic: Press the function key **F6**.

Result:

– Selected icon is visible with filled out frame: The support automatic is selected.

– Support cylinders are ready for extension and retraction.

▶ When “retracting the support cylinders”:
Press the function key **F2**.

Result:

– The support cylinders **19** retract simultaneously.

– The crane is horizontally aligned.

▶ When “extending the support cylinders”:
Press the function key **F3**.

Result:

– The support cylinders **19** extend simultaneously.

– The crane is horizontally aligned.

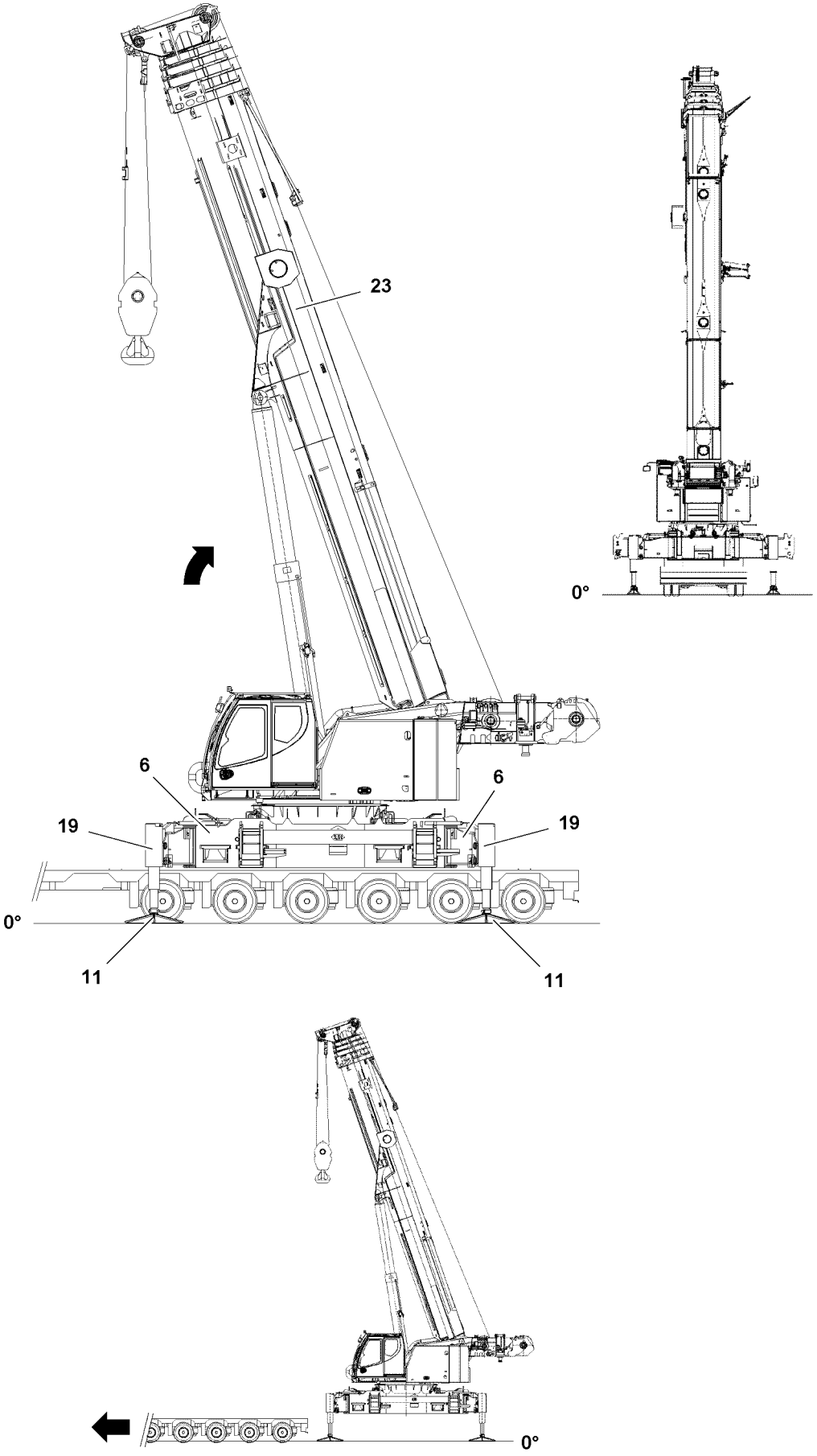

B116877

1.7 Driving the transport vehicle out

Make sure that the following prerequisite is met:

– The crane is horizontally aligned.
– The crane is supported high enough so that the transport vehicle can drive out from under the crane.

▶ Erect telescopic boom.
▶ Drive the transport vehicle out from under the crane.

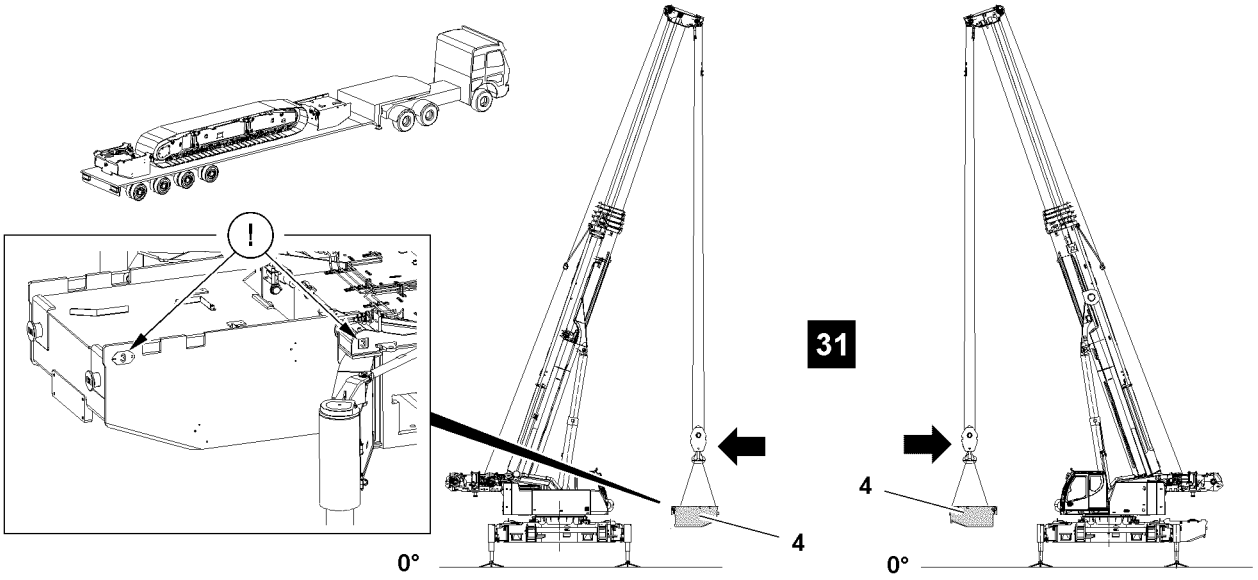

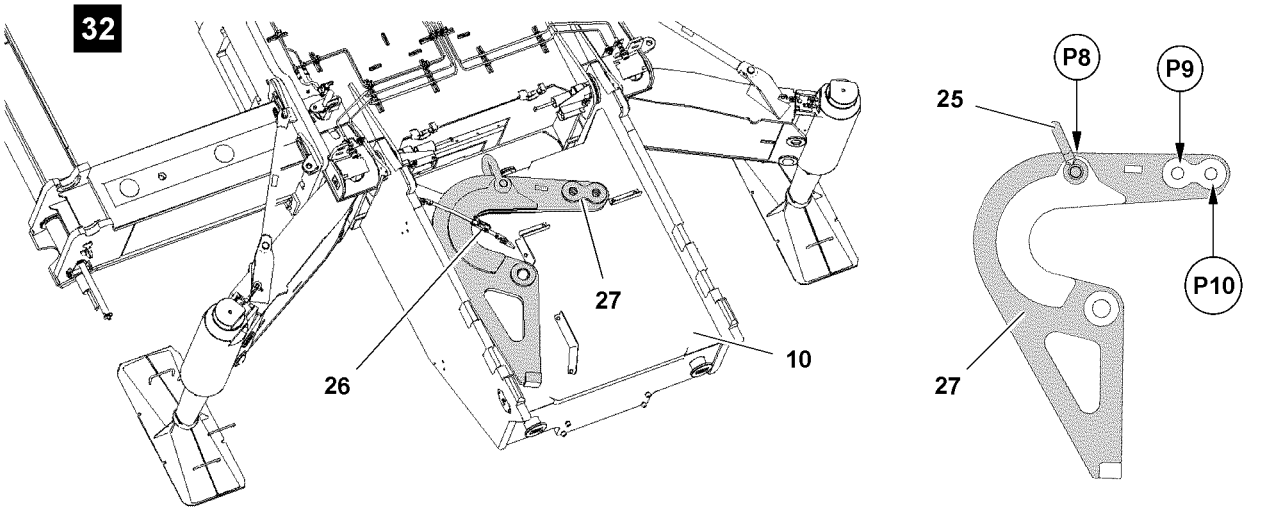

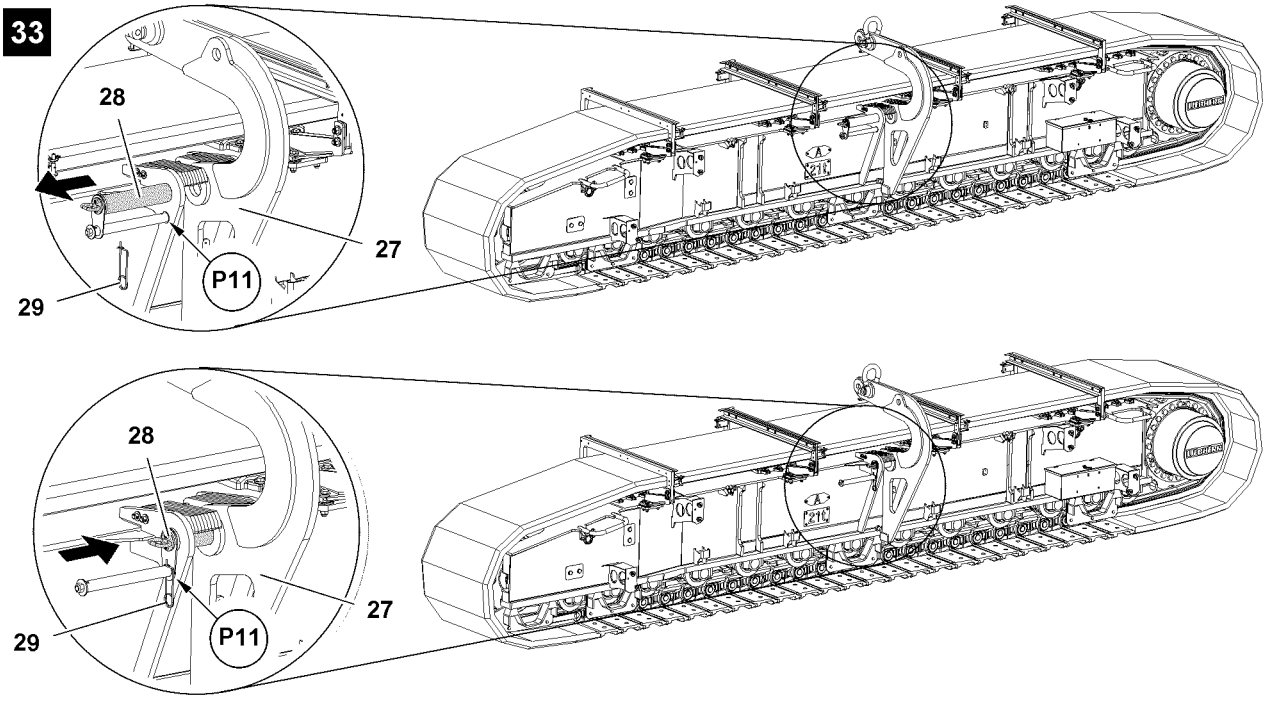

B116878

1.8 Installing the central ballast

Note
▶ Install the central ballast **4**, see Crane operating instructions, chapter 3.03!

▶ Install the central ballast **4**, see illustration **31**.

1.9 Assembling the crawler carrier

Make sure that the following prerequisites are met:
– No personnel is within the danger zone.
– All support cylinders are positioned in operating position.
– The central ballast is installed.
– Drive the crawler carriers are close as possible lengthwise to the crane.
– The LICCON overload protection is set:
  • Support base 4.4 m on supports
  • Central ballast 20 t
  • Counterweight 0 t
  • Without auxiliary boom / accessory
  • Slewing range

Note
▶ For operation crane superstructure, see Crane operating instructions, chapter 4.01!

1.9.1 Preparing the assembly device

▶ Release the transport belt **26**, see illustration **32**.
▶ Fasten the crane at point **P8** on the shackle **25**.
▶ Lift the assembly device **27** with the crane and place it on the ground.
▶ Remove the shackle **25** at point **P8**, see illustration **32**.

Fastening point	Application
P8	Transport
P9	Assembly with incline
P10	Assembly 90°

▶ Fasten the crane at point **P9** on the shackle and lift the assembly device **27**.

1.9.2 Pinning the assembly device with the crawler carrier

▶ Remove the spring retainer **29** at point **P11** and unpin the pin **28**, see illustration **33**.
▶ Swing the assembly device **27** to the pin location.

Note
▶ The position in which the crawler carrier remains balanced when lifting is set by the Liebherr-Werk!

▶ Insert the pin **28** at point **P11** and secure with spring retainer **29**, see illustration **33**.

Result:
– The assembly device **27** is pinned and secured with the crawler carrier.

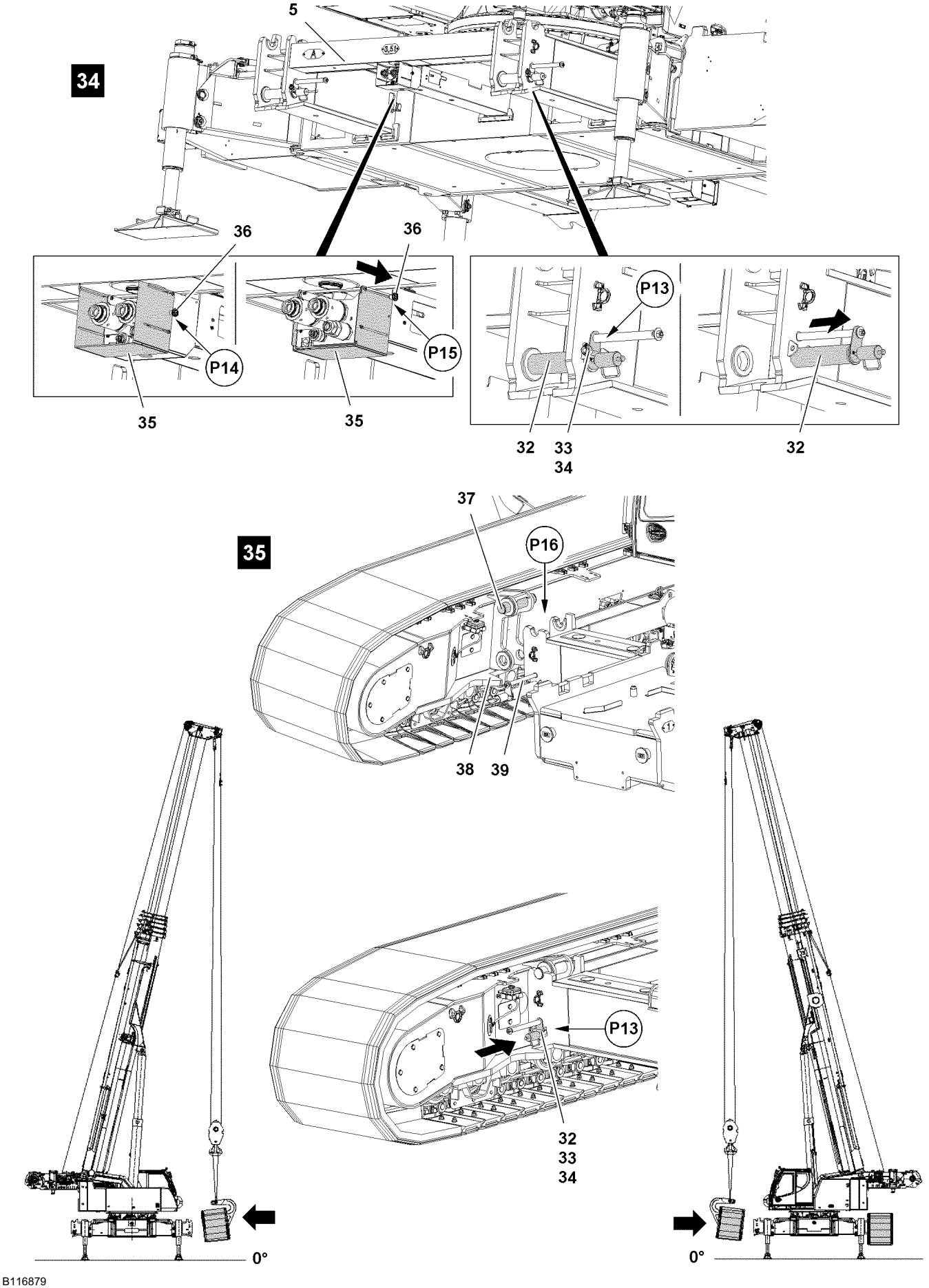
34
5
36
36
P14
P15
35
35
P13
32
33
34
32
35
37
P16
38
39
P13
32
33
34
0°
0°

B116879

1.9.3 Preparing the pin pulling device

NOTICE
Damage to the pin pulling device!
If the pins **32** are not unpinned at assembly of the cross carrier **5** then there is the danger that the pin pulling devices will be damaged!
▶ Make sure that the pins **32** on the cross carrier **5** are unpinned!

▶ Remove the safety locking pins **34** on both sides at point **P13**, see illustration **34**.
▶ Unpin the pins **33** on both sides at point **P13**, see illustration **34**.
▶ Unpin the pins **32** on both sides with the mechanical pin pulling device to the stop, see illustration **34**.

1.9.4 Sliding the protective plate on the cross carrier into assembly position

▶ Push the pin and pull the ball locking pins **36** out at point **P14** on both sides, see illustration **34**.
▶ Slide the protective plate **35**, see illustration **34**.
▶ Push the pin and insert the ball locking pins **36** at point **P15** on both sides, see illustration **34**.

1.9.5 Pinning the crawler carrier

Make sure that the following prerequisites are met:
– The assembly device is pinned and secured on the crawler carrier.
– The pins **32** on the cross carrier are unpinned
– The protective plates **35** are in assembly position.

▶ Lift the crawler carrier “A” and drive away the transport vehicle.

Note
▶ Pay attention to the identification on the crawler carrier and the cross carrier at assembly!

NOTICE
Damage to the pin pulling device!
To avoid damage on the pin pulling device **39** by the guide **38** on the crawler carrier, move the crawler carrier “A” in to just over the edge of the cross carrier “A”!
▶ Do not move the crawler carrier “A” in too high!
▶ The crawler carrier assembly must be carried out exclusively with a guide!
▶ Make sure that the guide is constantly in acoustic and visual contact with the crane operator!

▶ Lower the crawler carrier “A” with the pin **37** at point **P16** on the receptacles of the cross carrier “A”, see illustration **35**.
▶ Swing the crawler carrier “A” to the stop.
▶ Pin the pins **32** on both sides at point **P13** with the mechanical pin pulling device to the stop, see illustration **35**.
▶ Insert the pins **33** on both sides at point **P13** and secure with safety locking pin **34**, see illustration **35**.

Result:
– Crawler carrier “A” is pinned and secured.

Note
▶ The assembly of the crawler carrier “B” is identical with the assembly of the crawler carrier “A”!

▶ Assemble the crawler carrier “B”.
▶ Unpin the assembly device and place it again in transport position on the central ballast.
▶ Secure the assembly device with the transport belt.

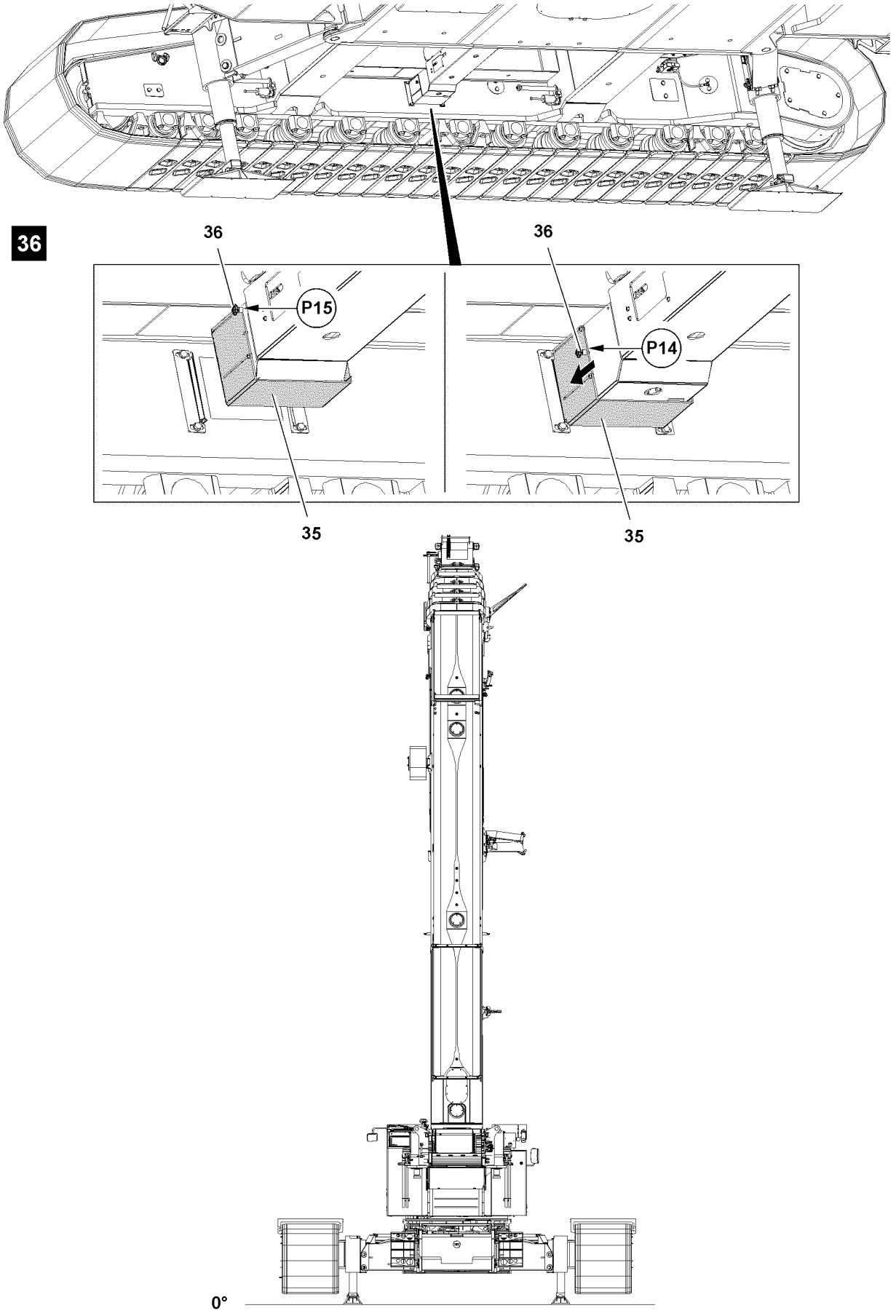

B116880

1.10 Establishing the connection to the crawler carrier

Make sure that the following prerequisite is met:

– The crawler carrier is installed, pinned and secured.

1.10.1 Establishing the hydraulic connections to the crawler carrier

The hydraulic connections of the crawler carrier are made with quick couplings.

When connecting hydraulic lines with quick couplings, make sure that the coupling procedure is carried out correctly.

WARNING
Pressure in the hydraulic lines!
If the pressure supply is not interrupted before connecting / releasing the hydraulic lines, the hydraulic oil can escape with high pressure!
Personnel can be severely injured or killed!

▶ Release the pressure in the hydraulic system before connecting / disconnecting: Interrupt the pressure supply and wait for a short time!

WARNING
Loss of pressure or leakage!
Incorrectly coupled or self-loosening quick-release couplings (particularly return lines) can result in serious accidents due to component failure!

▶ Check that the quick couplings have been properly connected before using the crane!

▶ Connect the coupling components (sleeve and connector) and screw together with the hand-tightened nut.

▶ Tighten the hydraulic coupling by hand. Rotate the hand-tightened nut until it reaches a tangible, fixed stop position.

▶ Establish the hydraulic connections to the crawler carrier.

1.10.2 Establishing the electrical connections to the crawler carrier

▶ Establish the electrical connections to the crawler carrier, see separate electrical wiring diagram.

1.10.3 Establishing the connections of the central lubrication system to the crawler carrier

▶ Establish the connections of the central lubrication system to the crawler carrier.

1.10.4 Sliding the protective plate on the cross carrier into operating position

▶ Push the pin and pull the ball locking pins **36** out at point **P15** on both sides, see illustration **36**.

▶ Slide the protective plate **35**, see illustration **36**.

▶ Push the pin and insert the ball locking pins **36** at point **P14** on both sides, see illustration **36**.

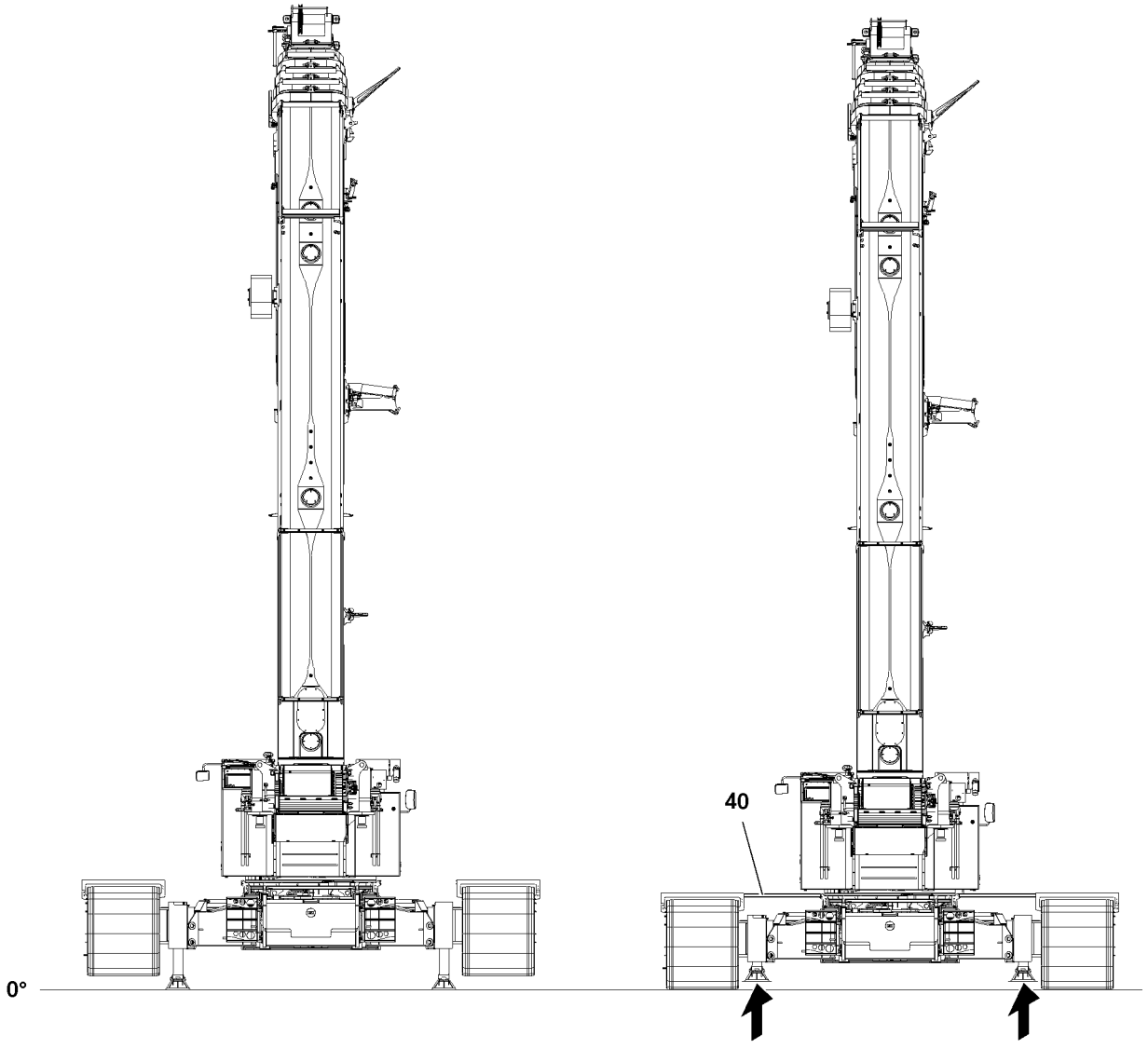

B116881

1.11 Lowering the crane

Make sure that the following prerequisites are met:

– The crawler carriers are pinned and secured.
– The crawler carriers have been checked and tested for function.

WARNING
Danger of crushing!
When lowering the crane, there is an increased danger of accidents due to crushing!
Personnel can be severely injured or killed!
▶ Make sure that there are no persons within the danger zone!

Note
▶ Retract support cylinders with BTT-E, BTT and TE1, see section “Supporting the crane”.

▶ Lower the crane.

WARNING
Danger of falling!
▶ For further assembly steps, install the walking platforms **40** immediately.

▶ Install the walking platforms **40**, see Crane operating instructions, chapter 2.06.

B195219

2 Disassembling the crawler carriers

DANGER
Crane movement in **unsupported** status!
If the crane superstructure is turned or the boom erected, then the crane can tip over and severely or fatally injure personnel.
- ▶ Do not turn the crane superstructure when as the crane is resting on the transport vehicle.
- ▶ Do not turn erect the boom when as the crane is resting on the transport vehicle.
- ▶ Before carrying out crane movements, support the crane with the assembly support and align it horizontally.
- ▶ Adhere to the sequence of the assembly steps in this chapter.

WARNING
Danger of falling!
During assembly / disassembly, inspection and maintenance work, personnel must be secured with appropriate aids to prevent them from falling! If this is not observed, assembly personnel could fall and suffer life-threatening or fatal injuries!
- ▶ The assembly personnel must always move carefully and anticipatory on the crane, the crane components or lattice sections!
- ▶ All work aloft, where there is a danger of falling must be carried out with suitable aids!
- ▶ If fall protection equipment is available, then it must be used!
- ▶ If aids are not available and work cannot be carried out from the ground, then the assembly personnel must secure themselves with the permissible fall arrest system to prevent falling, see Crane operating instructions, chapter 2.04!
- ▶ The fall arrest system must be attached on the fastening and hook points as well as on the safety ropes!
- ▶ Only step on the aids, ladders and catwalks with clean shoes!
- ▶ Keep aids, ladders and catwalks free of heavy dirt, snow and ice!

WARNING
Danger of impact / crushing!
When installing / removing counterweight components with the auxiliary crane, crane components can start to swing back and forth!
When lifting / lowering and positioning crane components, there is an increased danger of impacts / crushing!
Personnel can be caught and severely injured or killed!
- ▶ Make sure that personnel cannot be caught by components!
- ▶ When working in danger zones: Use aids to protect limbs!
- ▶ Guide components with suitable aids to minimize oscillation!

WARNING
Improper support!
If the crane is not properly supported from below, it can sink into the ground and cause it to topple over!
- ▶ The support must take on the weight of the crane safely!
- ▶ Use stable materials such as wood, steel plates or concrete slabs of a suitable size for support, depending on the ground conditions!

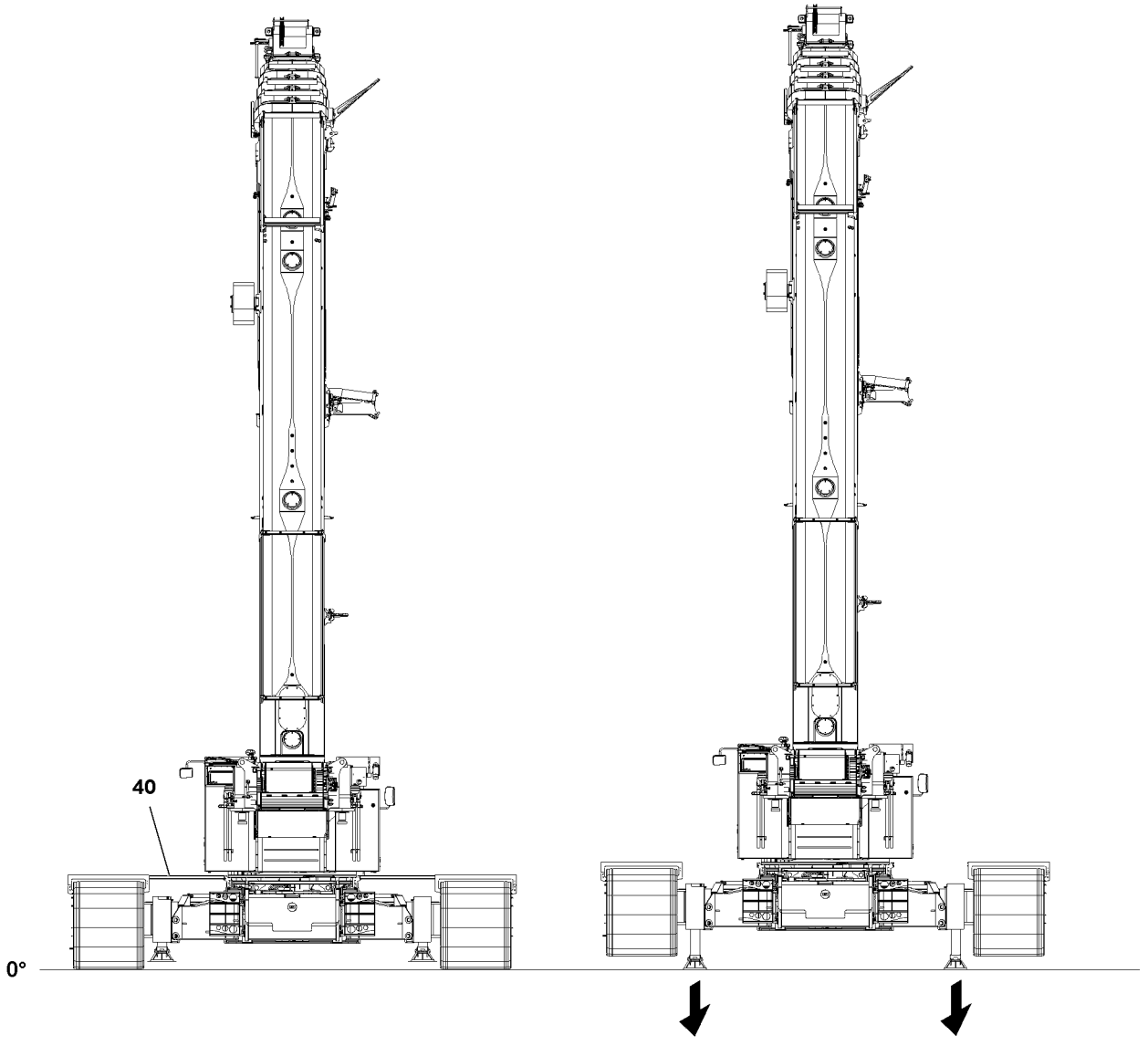

B116882

2.1 Supporting the crane

WARNING
The crane can tip over!
If the crane is not aligned horizontally, it can tip over!
Personnel can be severely injured or killed!
▶ Make sure that the crane is horizontally aligned!

Note
▶ The crane can be supported manually or automatically!
▶ At manual support, the support cylinders can be extended individually or all four simultaneously!

WARNING
Assembly support monitoring!
The assembly support is not monitored by the control!
The crane operator is obligated to check the assembly support before further disassembly steps!
▶ Make sure that all folding brackets are swung and secured with rods!
▶ Make sure that the support plates are positioned on load bearing and horizontal ground!
▶ Make sure that all support plates are supported!

WARNING
The crane can tip over!
When the automatic support is operated the crane is aligned automatically in horizontal direction!
▶ Make sure that the alignment is within the permitted tolerance and that all four support plates are touching the ground!

WARNING
The crane can topple over!
At assembly / disassembly of the crawler carriers, if the values of the load chart are not adhered to, the crane can topple over at assembly / disassembly!
Personnel can be severely injured or killed!
This could result in high property damage!
▶ Observe and adhere to the values in the load chart for assembly / disassembly of the crawler carrier.

Make sure that the following prerequisites are met:
- The set up location is level and has sufficient load bearing capacity.
- The telescopic boom is fully telescoped in.
- The crawlers are extended on wide track (100 %).
- The counterweight on the turntable has been removed.
- The walking platforms **40** have been removed on the turntable.
- No personnel is within the danger zone.
- The engine is running.
- All folding brackets are folded out (no electronic monitoring).
- All support plates are supported.
- The LICCON overload protection is set:
  - Support base 4.4 m on supports
  - Central ballast 20 t
  - Counterweight 0 t
  - Without auxiliary boom / accessory
  - Slewing range

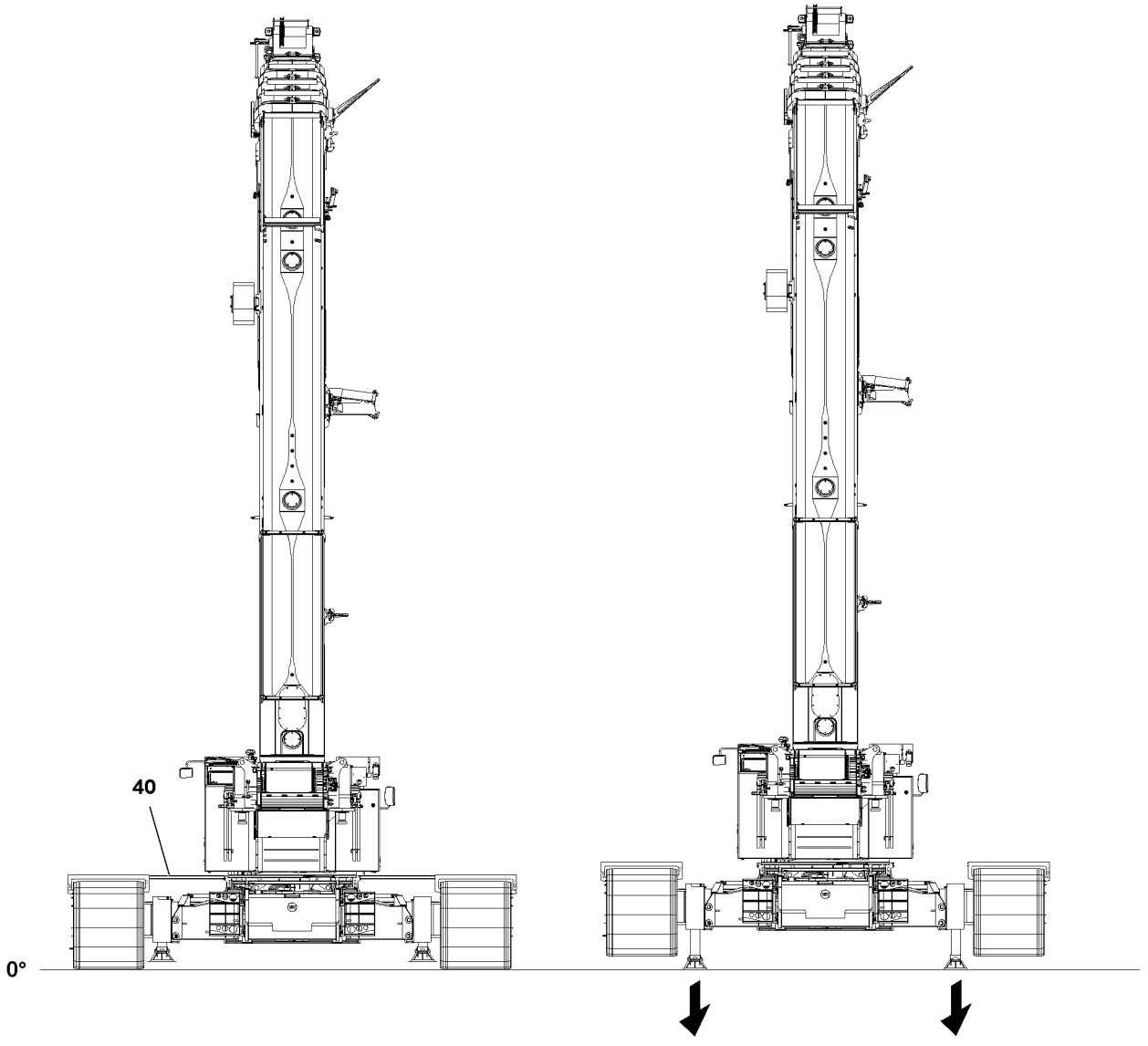

B116882

2.1.1 Supporting the crane with the Bluetooth™ Terminal

Make sure that the following prerequisite is met:

– On the display of the BTT, the menu overview is visible.

29

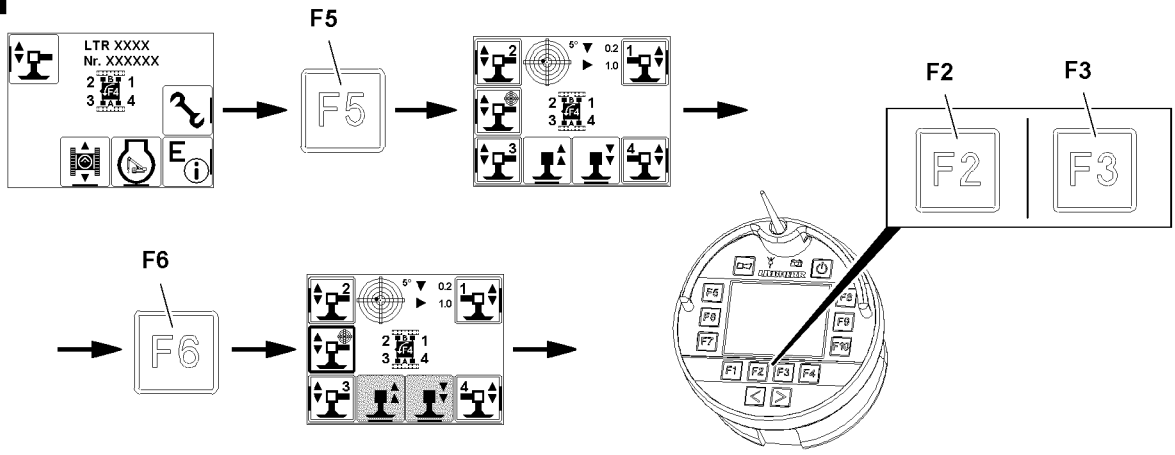

B116904

▶ Press the function key **F5**, see illustration **29**.

Result:

– The “Support” menu is visible.

The support cylinders are marked with numbers depending on the alignment of the radio remote control.

The support automatic extends or retracts all support cylinders simultaneously and levels the crane during the support procedure automatically.

▶ Select the support automatic: Press the function key **F6**.

Result:

– Selected icon is visible with filled out frame: The support automatic is selected.

– Support cylinders are ready for extension and retraction.

▶ When “retracting the support cylinders”:
Press the function key **F2**.

Result:

– The support cylinders retract simultaneously.

– The crane is horizontally aligned.

▶ When “extending the support cylinders”:
Press the function key **F3**.

Result:

– The support cylinders extend simultaneously.

– The crane is horizontally aligned.

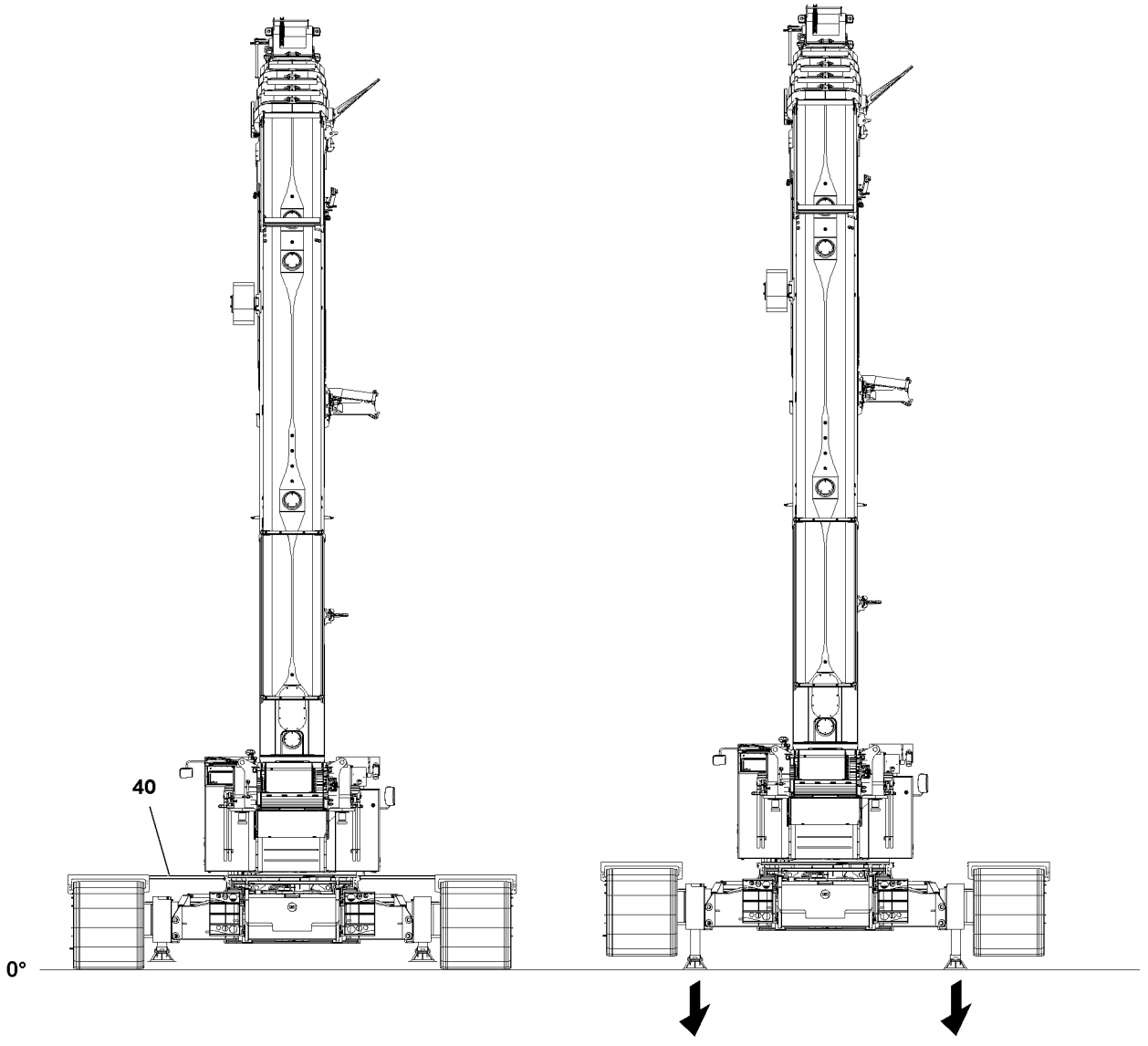

B116882

2.1.2 Supporting the crane from the crane operator's cab

Make sure that the following prerequisite is met:

– The “master switch assignment” is visible on the touch display right (TE1).

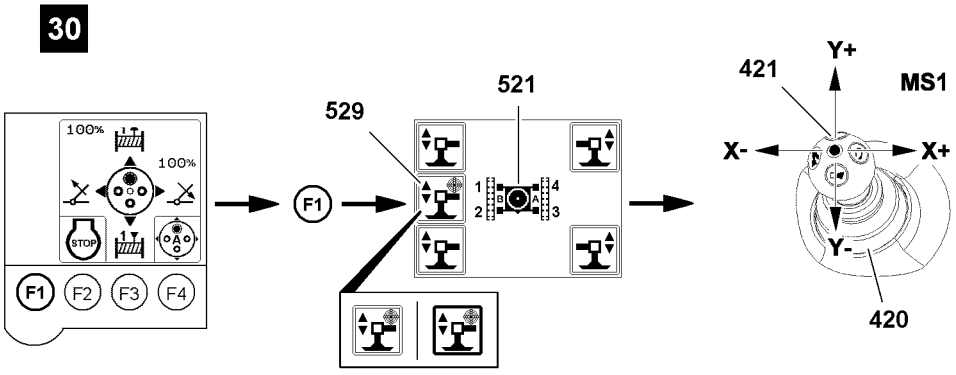

B116905

▶ Press the function key **F1**, see illustration **30**.

Result:

– The “Support” menu is visible.

The support cylinders are marked with numbers depending on the alignment of the turntable, see icon **521**.

The support automatic extends or retracts all support cylinders simultaneously and levels the crane during the support procedure automatically.

▶ Select the support automatic: Select the icon **529** (“touch”).

Result:

– Selected icon is visible with filled out frame: The support automatic is selected.

– Support cylinders are ready for extension and retraction.

▶ When “retracting the support cylinders”:
Deflect the manual control lever **421** in direction Y+.

Result:

– The support cylinders retract simultaneously.

– The crane is horizontally aligned.

▶ When “extending the support cylinders”:
Deflect the manual control lever **421** in direction Y-.

Result:

– The support cylinders extend simultaneously.

– The crane is horizontally aligned.

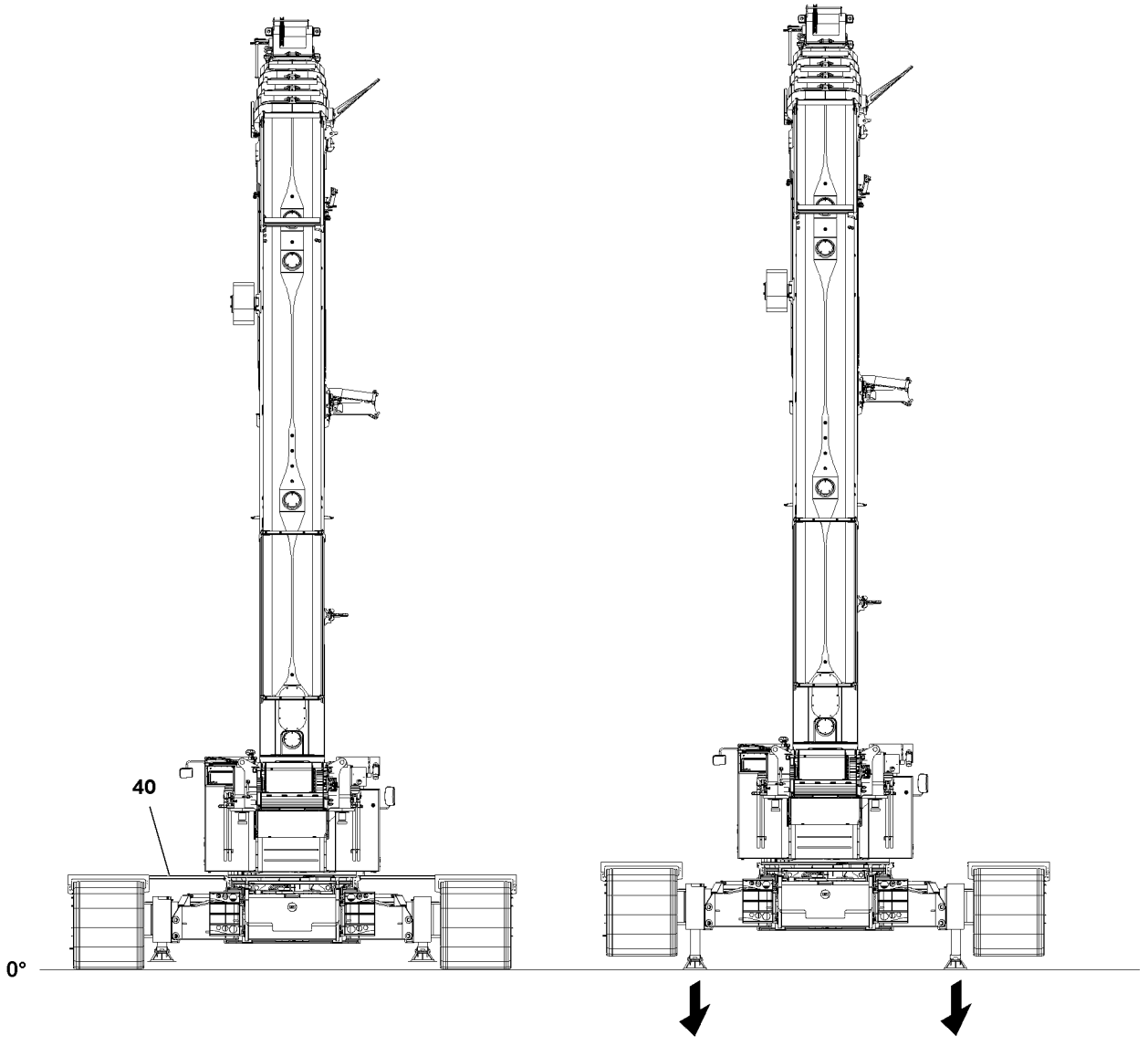

B116882

2.1.3 Supporting the crane with the radio remote control*

Make sure that the following prerequisite is met:

– On the display of the BTT-E, the menu overview is visible.

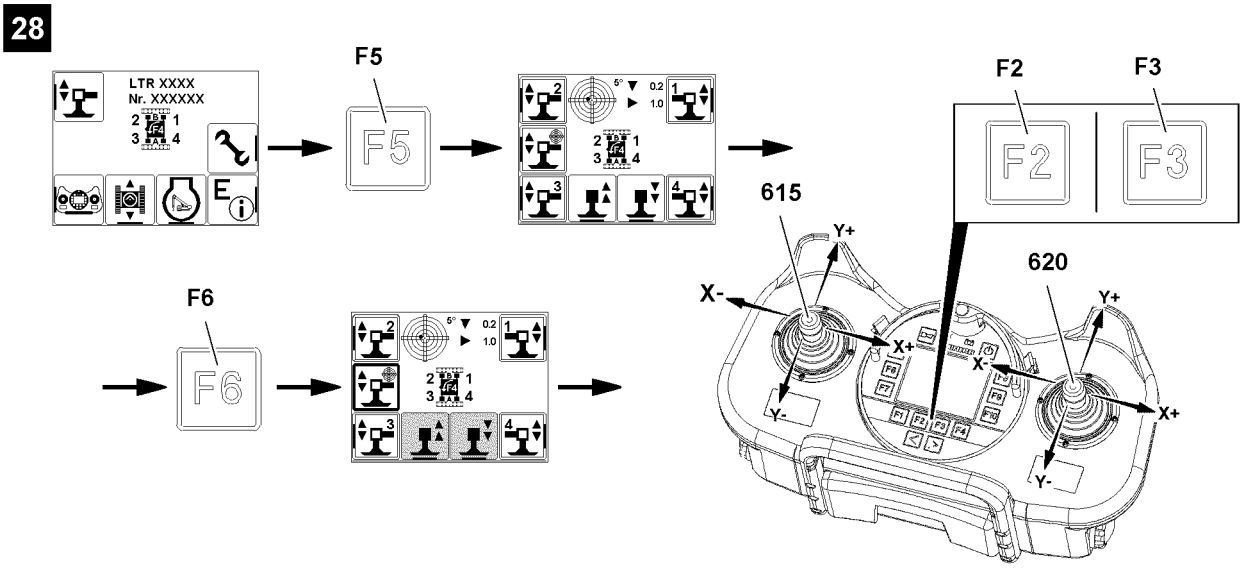

B116903

▶ Press the function key **F5**, see illustration **28**.

Result:

– The “Support” menu is visible.

The support cylinders are marked with numbers depending on the alignment of the radio remote control.

The support automatic extends or retracts all support cylinders simultaneously and levels the crane during the support procedure automatically.

▶ Select the support automatic: Press the function key **F6**.

Result:

– Selected icon is visible with filled out frame: The support automatic is selected.

– Support cylinders are ready for extension and retraction.

▶ When “retracting the support cylinders”:
Press the function key **F2**.

Result:

– The support cylinders retract simultaneously.

– The crane is horizontally aligned.

▶ When “extending the support cylinders”:
Press the function key **F3**.

Result:

– The support cylinders extend simultaneously.

– The crane is horizontally aligned.

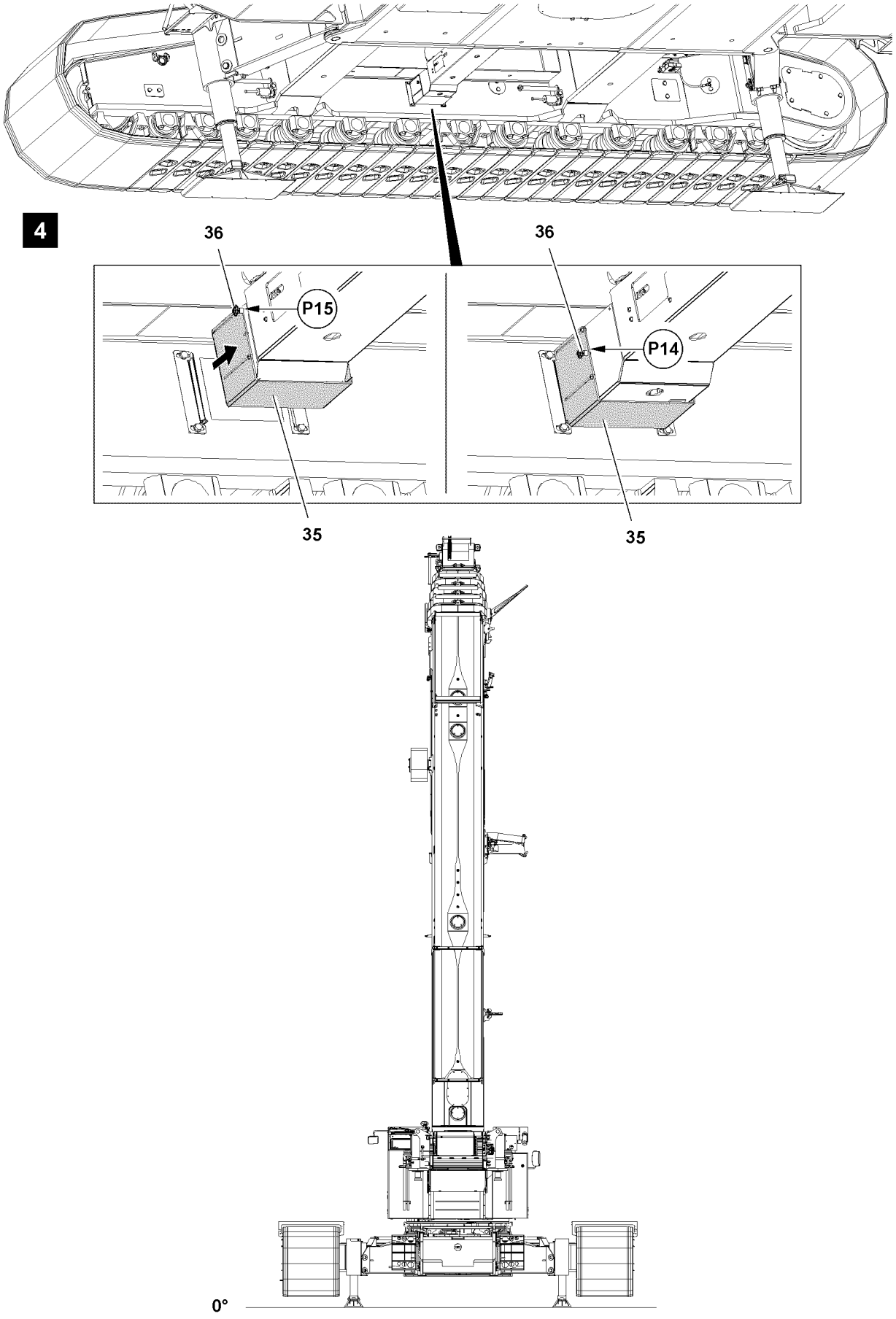

B116901

2.2 Disconnecting the connections to the crawler carrier

Make sure that the following prerequisite is met:

– The crane is supported.

2.2.1 Sliding the protective plate on the cross carrier into assembly position

▶ Push the pin and pull the ball locking pins **36** out at point **P14** on both sides, see illustration **4**.

▶ Slide the protective plate **35**, see illustration **4**.

▶ Push the pin and insert the ball locking pins **36** at point **P15** on both sides, see illustration **4**.

2.2.2 Disconnecting the hydraulic connections to the crawler carrier

The hydraulic connections of the crawler carrier are made with quick couplings.

When disconnecting hydraulic lines with quick couplings, make sure that the coupling procedure is carried out correctly.

WARNING

Pressure in the hydraulic lines!

If the pressure supply is not interrupted before connecting / releasing the hydraulic lines, the hydraulic oil can escape with high pressure!

Personnel can be severely injured or killed!

▶ Release the pressure in the hydraulic system before connecting / disconnecting: Interrupt the pressure supply and wait for a short time!

▶ Release the hydraulic coupling by hand.

▶ Disconnect the hydraulic connections to the crawler carrier.

▶ Protect hydraulic connections with caps from contamination.

2.2.3 Disconnecting the electrical connections to the crawler carrier

▶ Disconnect the electrical connections to the crawler carrier, see separate electrical wiring diagram.

2.2.4 Disconnecting the connections of the central lubrication system to the crawler carrier

▶ Disconnect the connections of the central lubrication system to the crawler carrier.

▶ Protect the connections of the central lubrication system with caps from contamination.

5

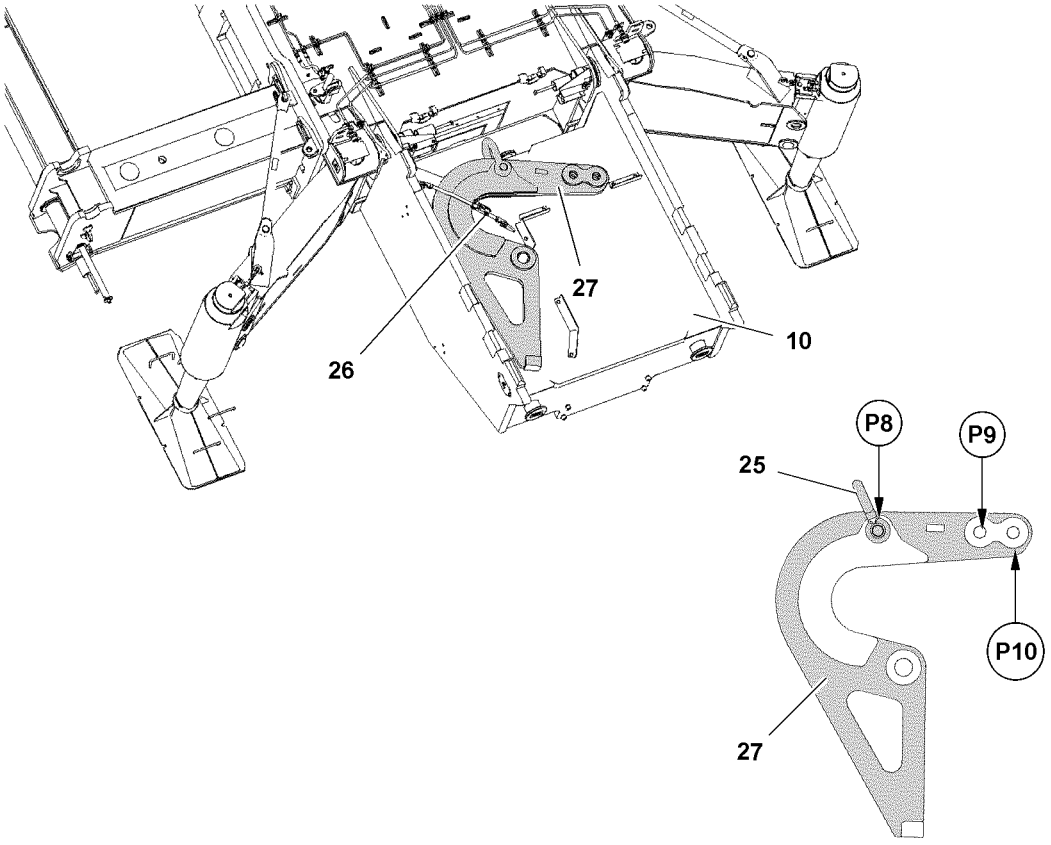

6

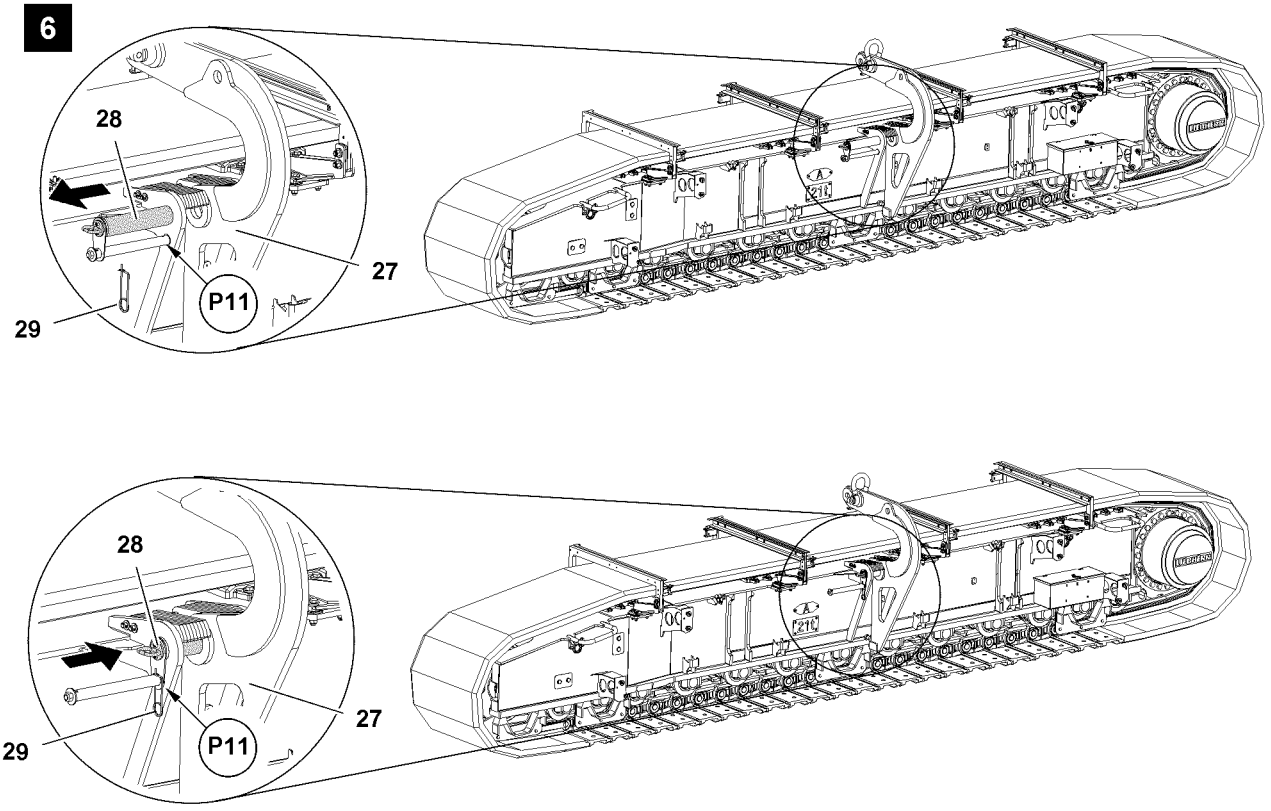

B116883

2.3 Disassembling the crawler carriers

2.3.1 Preparing the assembly device

- ▶ Release the transport belt **26**, see illustration **5**.
- ▶ Fasten the crane at point **P8** on the shackle **25**.
- ▶ Lift the assembly device **27** with the crane and place it on the ground.
- ▶ Remove the shackle **25** at point **P8**, see illustration **5**.

Note

▶ For operation crane superstructure, see Crane operating instructions, chapter 4.00!

Fastening point	Application
P8	Transport
P9	Assembly with incline
P10	Assembly 90°

- ▶ Fasten the crane at point **P9** on the shackle and lift the assembly device **27**.

2.3.2 Pinning the assembly device with the crawler carrier

- ▶ Remove the spring retainer **29** at point **P11** and unpin the pin **28**, see illustration **6**.
- ▶ Swing the assembly device **27** to the pin location.

Note

▶ The position in which the crawler carrier remains balanced when lifting is set by the Liebherr-Werk!

- ▶ Insert the pin **28** at point **P11** and secure with spring retainer **29**, see illustration **6**.

Result:

– The assembly device **27** is pinned and secured.

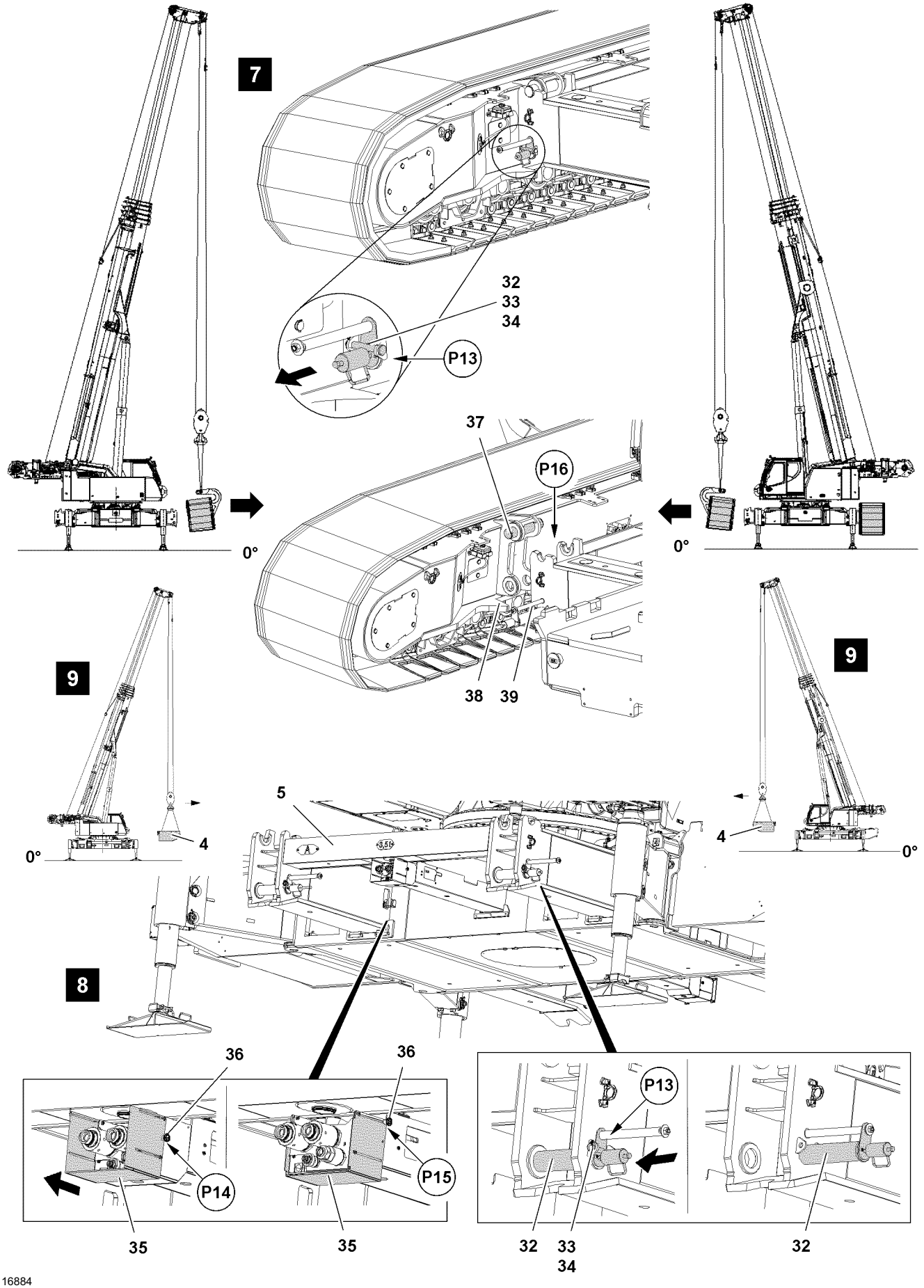
7
32
33
34
P13
37
P16
0°
0°
9
9
38
39
5
4
4
0°
0°
8
36
36
P14
P15
35
35
P13
32
33
34
32

B116884

2.3.3 Unpinning the crawler carrier

Make sure that the following prerequisite is met:

– The assembly device is pinned and secured on the crawler carrier.

▶ Remove the safety locking pin **34** on both sides at point **P13** and unpin the pin **33**, see illustration **7**.

▶ Unpin the pins **32** on both sides at point **P13** with the mechanical pin pulling device to the stop, see illustration **7**.

WARNING

Swinging crawler carriers!

During the lifting procedure, due to the offset center of gravity, the crawler carrier swings away from the cross carrier!

▶ Make sure that there are no persons within the danger zone!

NOTICE

Damage to the pin pulling device!

To avoid damage on the pin pulling device by the guide **38** on the crawler carrier, move the crawler carrier “A” out to just over the edge of the cross carrier “A”!

▶ Do not move the crawler carrier “A” out too high!

▶ The crawler carrier assembly must be carried out exclusively with a guide!

▶ Make sure that the guide is constantly in acoustic and visual contact with the crane operator!

▶ Disengage the crawler carrier “A” with the crane slowly from the receptacles at point **P16** of the cross carrier “A”, see illustration **7**.

▶ Place the crawler carrier “A” with the crane on the transport vehicle.

▶ When the crawler carrier “A” has been removed:
Pin the pins **32** on both sides at point **P13** with the mechanical pin pulling device again to the stop, see illustration **8**.

▶ Insert the pins **33** on both sides at point **P13** and secure with safety locking pin **34**, see illustration **8**.

▶ Slide the protective plate **35**, see illustration **8**.

Note

▶ The disassembly of the crawler carrier “B” is identical with the disassembly of the crawler carrier “A”!

▶ Unpin the crawler carrier “B” and place it with the crane on the transport vehicle.

▶ Unpin the assembly device and place it again in transport position on the central ballast.

▶ Secure the assembly device with the transport belt.

2.4 Disassembling the central ballast

Note

▶ Disassemble the central ballast, see Crane operating instructions, chapter 3.03!

▶ Disassemble the central ballast, see illustration **9**.

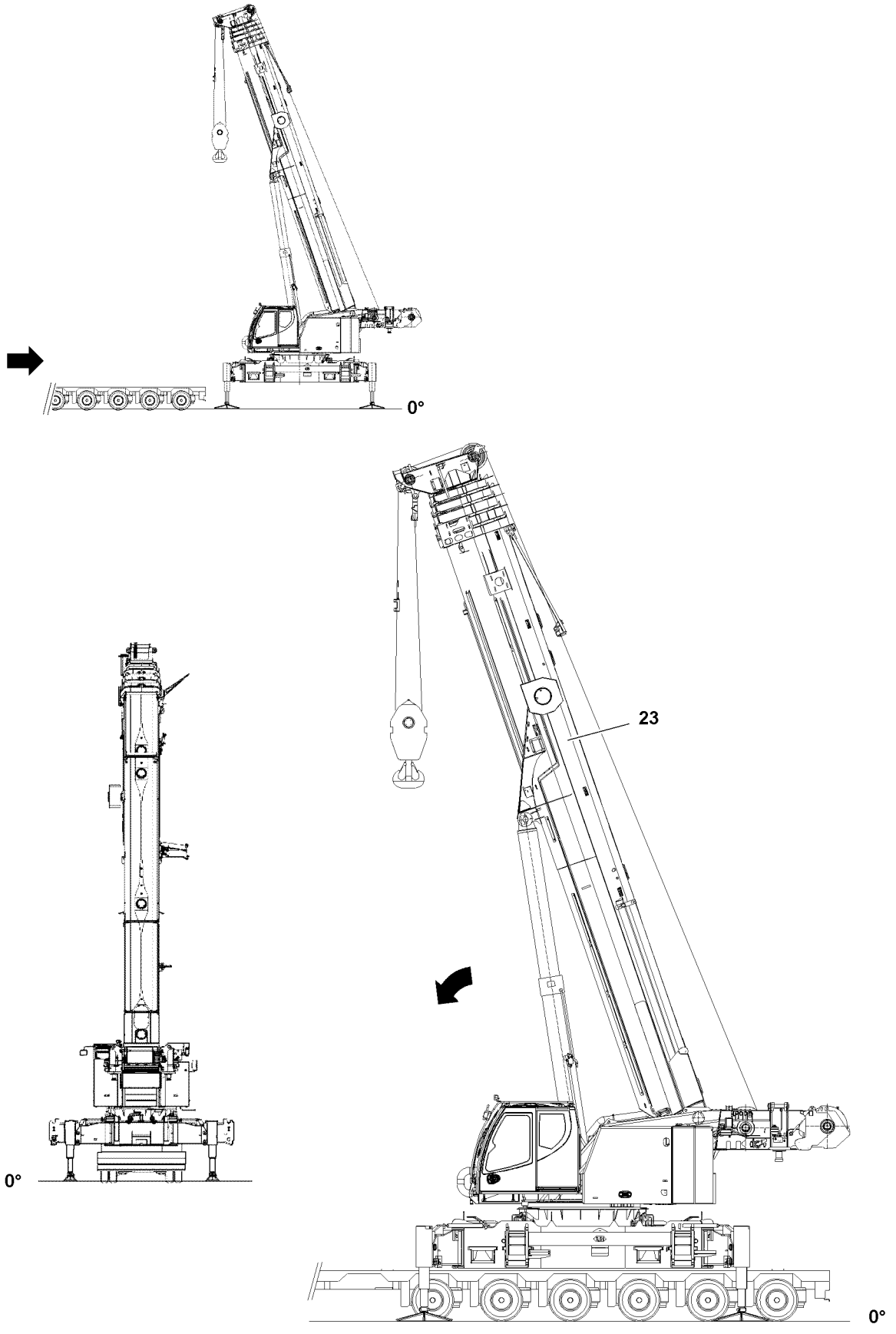

B116885

2.5 Loading the crane onto the transport vehicle

2.5.1 Moving the transport vehicle in

Make sure that the following prerequisite is met:

– The crane is supported at a sufficient height to enable the transport vehicle to drive under the crane.

DANGER

The crane can topple over!

When driving in, the transport vehicle may be caught on a support cylinder and cause the crane to topple over!

▶ Driving the transport vehicle in may exclusively be carried out with a guide.

▶ Make sure that the guide is constantly in acoustic and visual contact with the transport vehicle operator.

▶ Make sure that the transport vehicle does not scrape on a support cylinder when moving it in.

▶ Move the transport vehicle in, see illustration.

▶ Align the telescopic boom **23** lengthwise to the transport vehicle and place it down.

2.5.2 Lowering the crane

Make sure that the following prerequisites are met:

– The crawler carriers have been removed.

– The central ballast has been removed.

– The transport vehicle has been moved in.

– The boom has been placed down.

– Wooden planks have been placed on the transport vehicle for the support.

WARNING

Danger of crushing!

When lowering the crane, there is an increased danger of accidents due to crushing!

Personnel can be severely injured or killed!

▶ Make sure that there are no persons within the danger zone!

Note

▶ Retract support cylinders with BTT-E, BTT and TE1, see section “Supporting the crane”.

▶ Lower the crane.

10

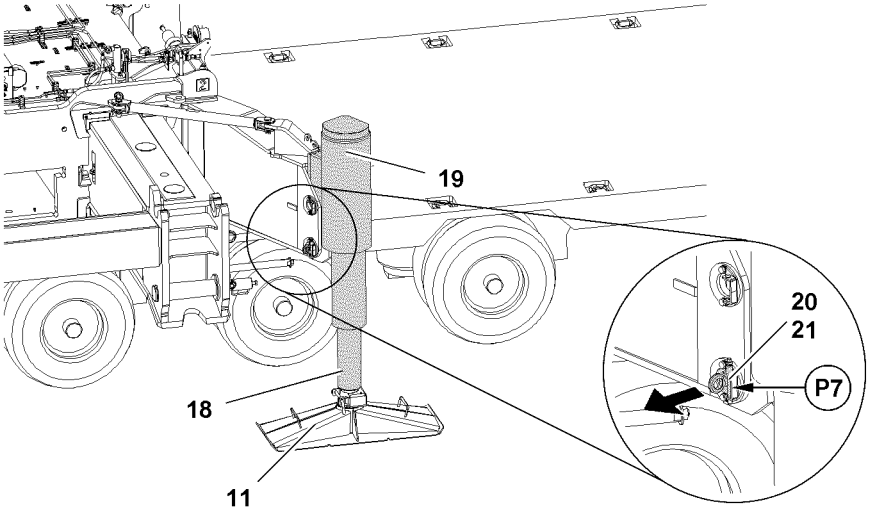

11

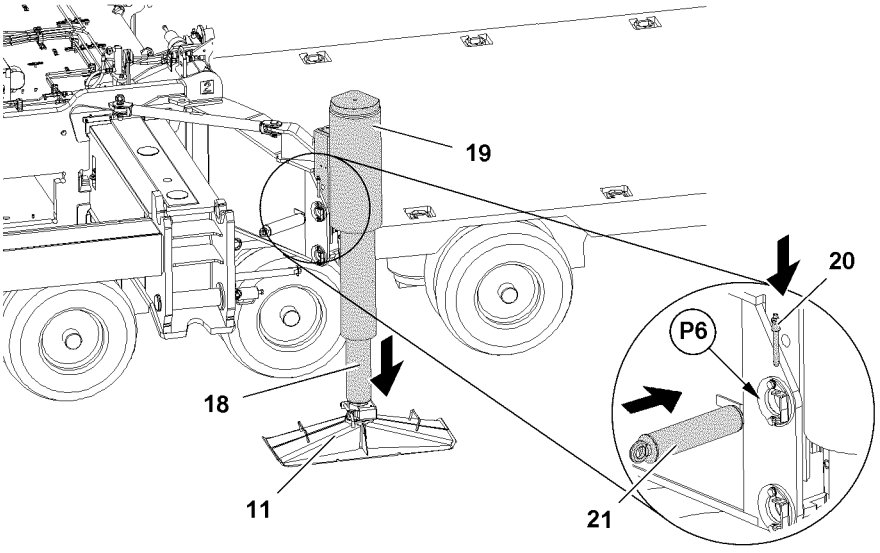

12

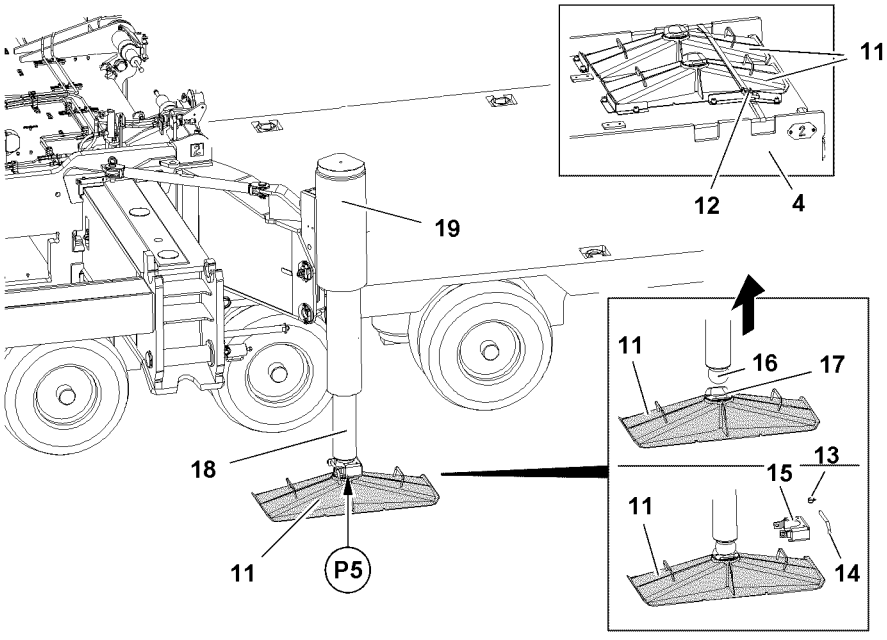

B116886

2.5.3 Positioning the support cylinders in transport position

Make sure that the following prerequisite is met:
– The crane is laying completely on the transport vehicle.

Unpinning the support cylinders

▶ Release the pin **21**: Unpin the ball locking pin **20** on point **P7**, see illustration **10**.
▶ Unpin the pin **21**.

Extending the piston rod with the BlueTooth™Terminal

Make sure that the following prerequisite is met:
– On the display of the BTT, the menu overview is visible.

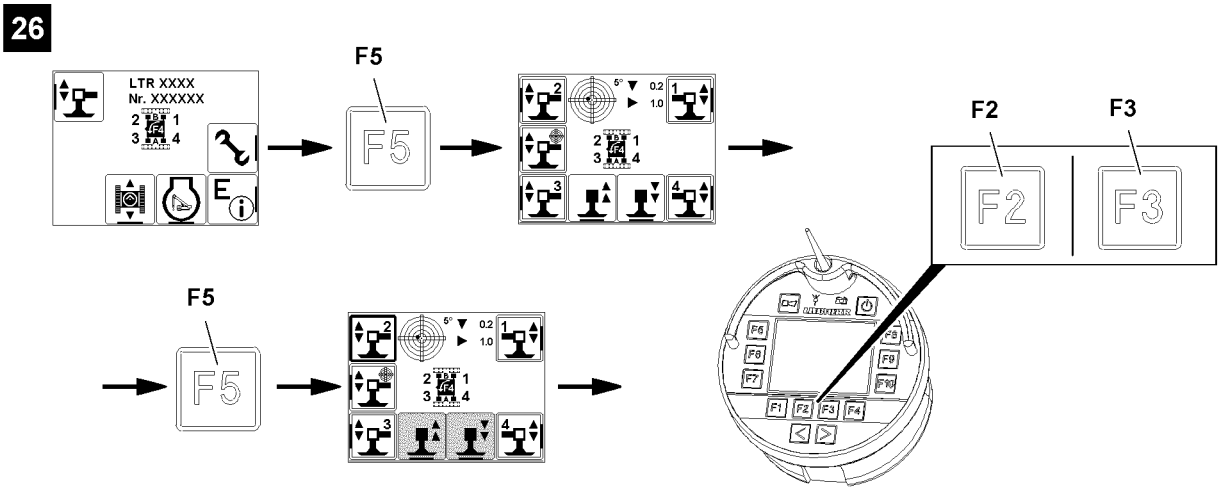

B116899

▶ Press the function key **F5**.

Result:
– The “Support” menu is visible.

The support cylinders are marked with numbers depending on the alignment of the radio remote control.
Support cylinders are selected with function keys:
– Function key **F5**
– Function key **F7**
– Function key **F8**
– Function key **F10**

▶ Select support cylinder: Press the function key.

Result:
– Selected icons are visible with filled out frames: Support cylinders are selected.
– Support cylinders are ready for extension and retraction.

The piston rods **18** extend until the support cylinder can be pinned on point **P6**, see illustration **11**.
▶ When “retracting the support cylinders”:
Press the function key **F2**.

Result:
– Piston rod **18** retracts.

▶ When “extending the support cylinders”:
Press the function key **F3**.

Result:
– Piston rod **18** extends.

blank page!

22

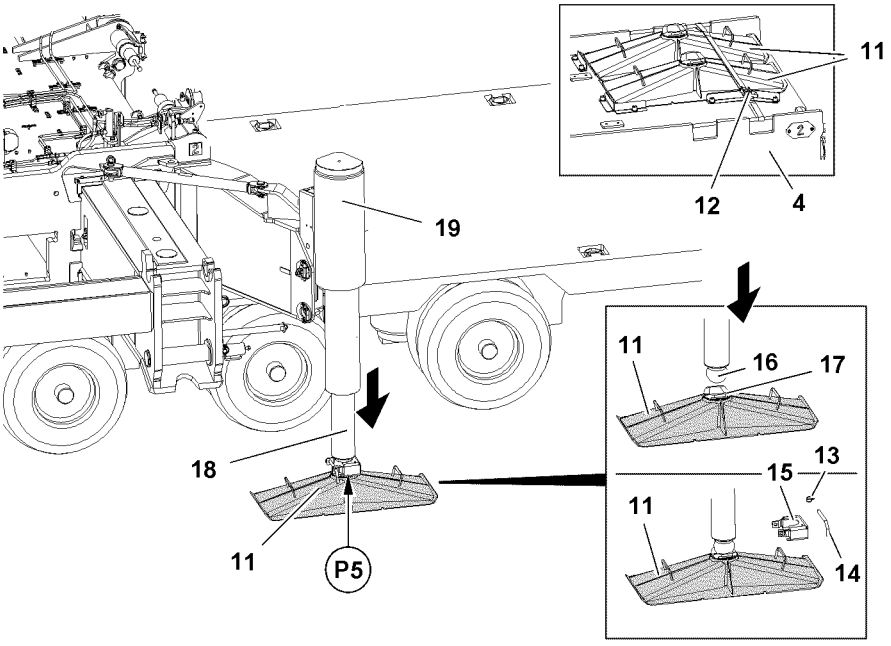

23

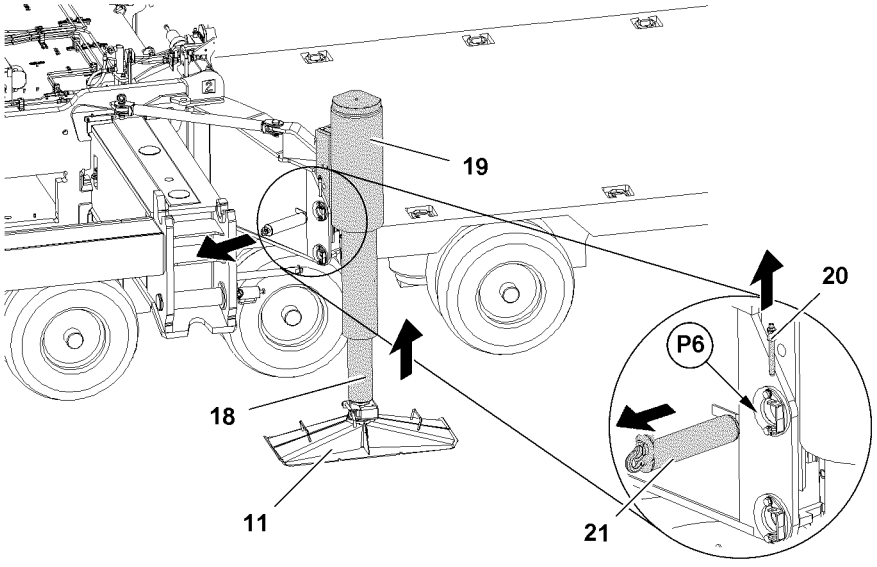

24

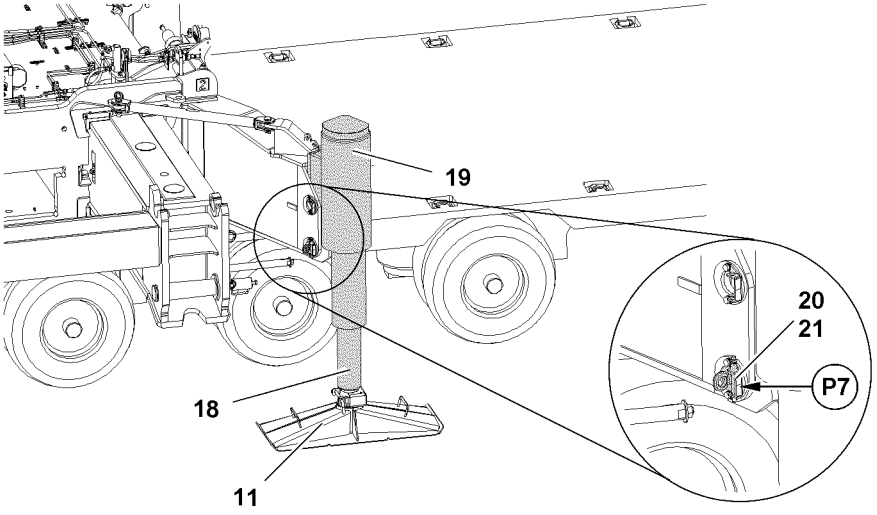

B116876

Extending the piston rod from the crane operator's cab

Make sure that the following prerequisite is met:

– The “master switch assignment” is visible on the touch display right (TE1).

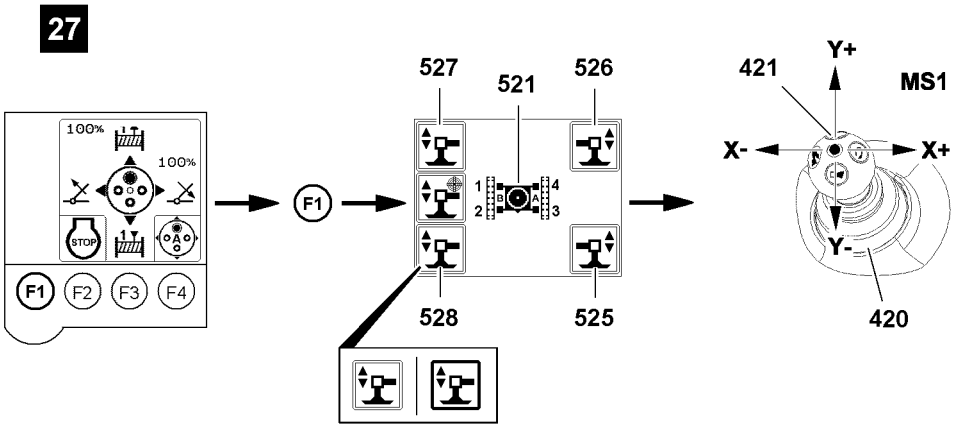

B116900

▶ Press the function key **F1**.

Result:

– The “Support” menu is visible.

The support cylinders are marked with numbers depending on the alignment of the turntable, see icon **521**.

Support cylinders are selected via touch functions:

– Icon **525**
– Icon **526**
– Icon **527**
– Icon **528**

▶ Select support cylinder: Select the icon (“touch”).

Result:

– Selected icons are visible with filled out frames: Support cylinders are selected.
– Support cylinders are ready for extension and retraction.

The piston rods **18** extend until the support cylinder can be pinned on point **P6**, see illustration **11**.

▶ When “retracting the support cylinders”:
Deflect the manual control lever **421** in direction Y+.

Result:

– Piston rod **18** retracts.

▶ When “extending the support cylinders”:
Deflect the manual control lever **421** in direction Y-.

Result:

– Piston rod **18** extends.

22

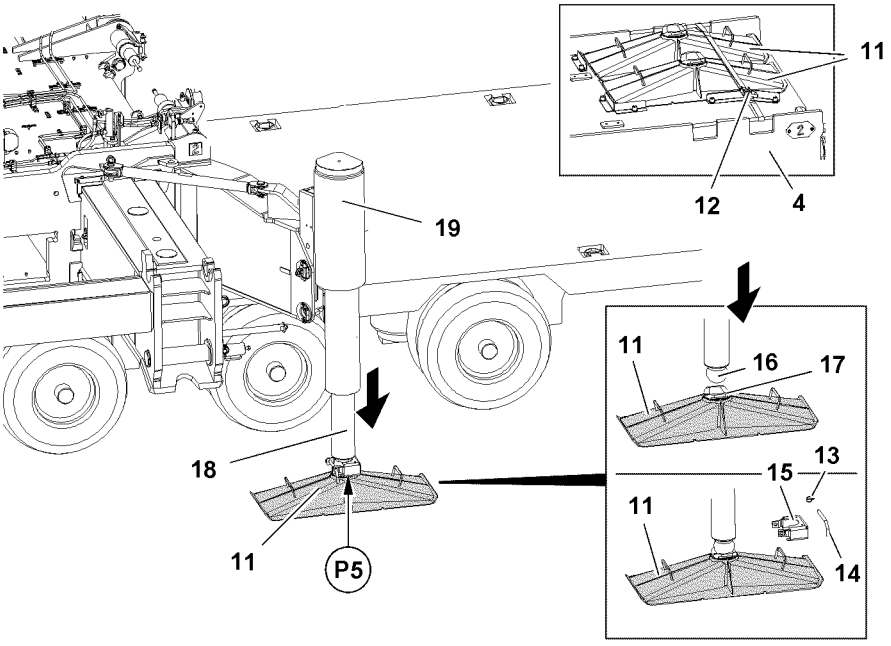

23

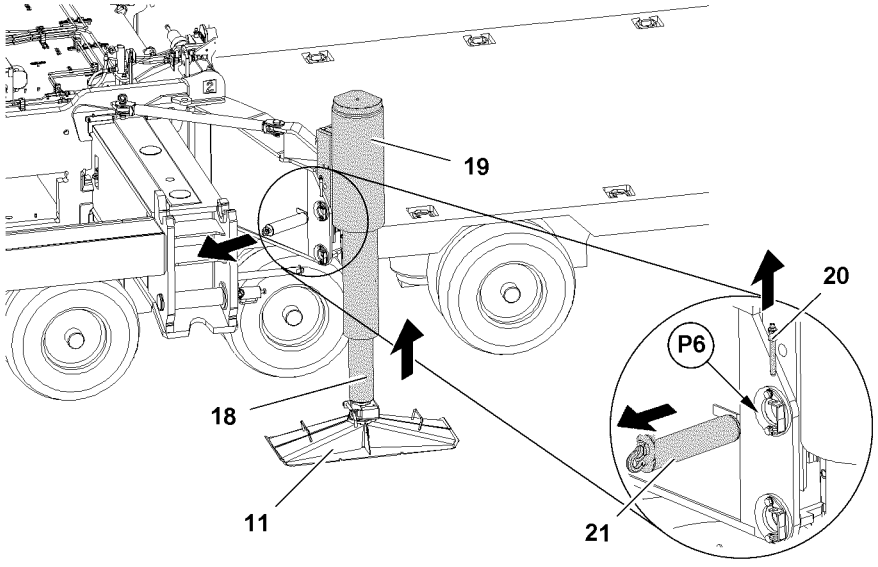

24

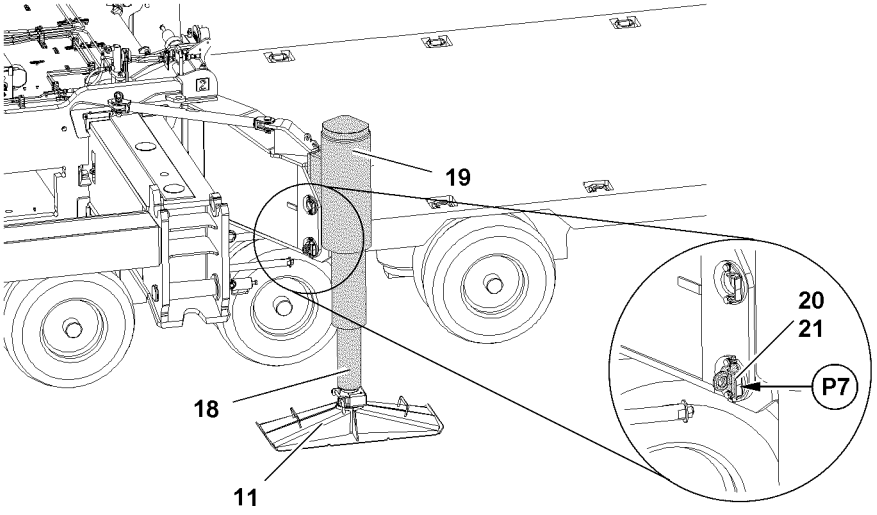

B116876

Extending the piston rod with the radio remote control

Make sure that the following prerequisite is met:

– On the display of the BTT-E, the menu overview is visible.

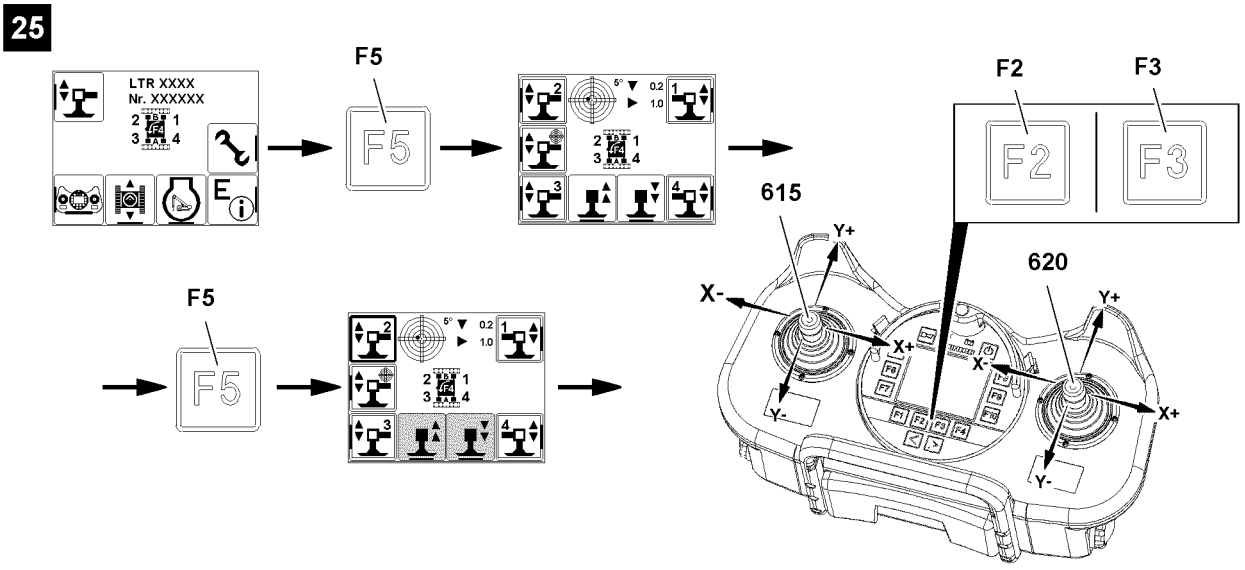

B116898

▶ Press the function key **F5**.

Result:

– The “Support” menu is visible.

The support cylinders are marked with numbers depending on the alignment of the radio remote control.

Support cylinders are selected with function keys:

– Function key **F5**
– Function key **F7**
– Function key **F8**
– Function key **F10**

▶ Select support cylinder: Press the function key.

Result:

– Selected icons are visible with filled out frames: Support cylinders are selected.
– Support cylinders are ready for extension and retraction.

The piston rods **18** extend until the support cylinder can be pinned on point **P6**, see illustration **11**.

The support cylinders can be extended or retracted with both manual control levers.

▶ When “retracting the support cylinders”:
Deflect the manual control lever in direction Y+.

or

■ Press the function key **F2**.

Result:

– Piston rod **18** retracts.

▶ When “extending the support cylinders”:
Deflect the manual control lever in direction Y-.

or

■ Press the function key **F3**.

Result:

– Piston rod **18** extends.

Pinning the support cylinders

– The pin bores align on point **P6**, see illustration **11**.

▶ Insert the pin **21** on point **P6**, see illustration **11**.

▶ Secure the pin **21**: Pin the ball locking pin **20** on point **P7**, see illustration **10**.

blank page!

10

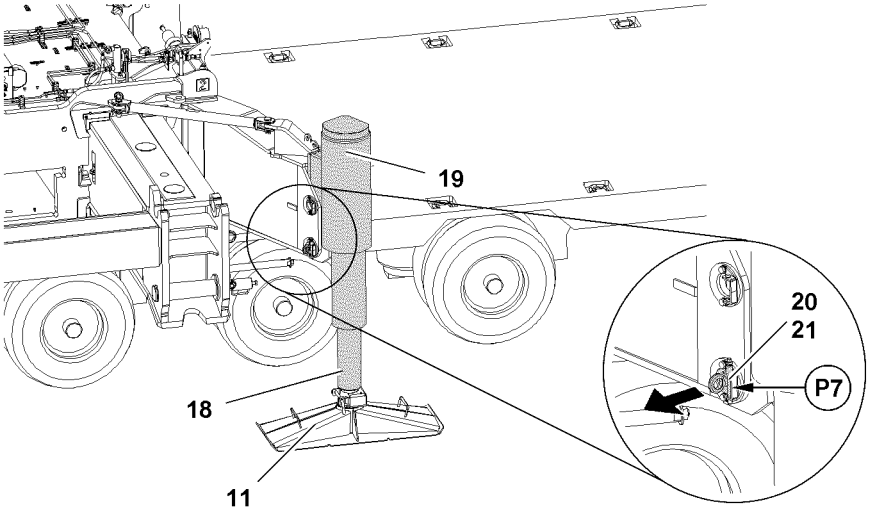

11

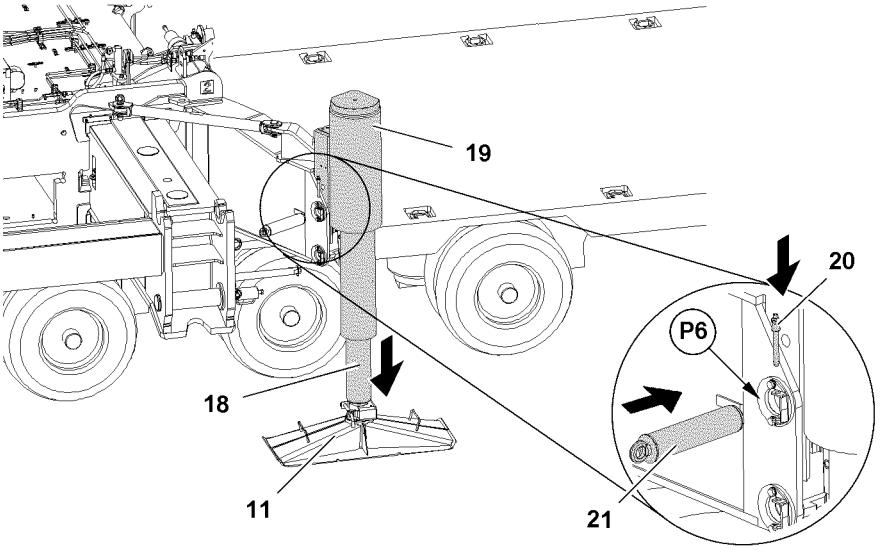

12

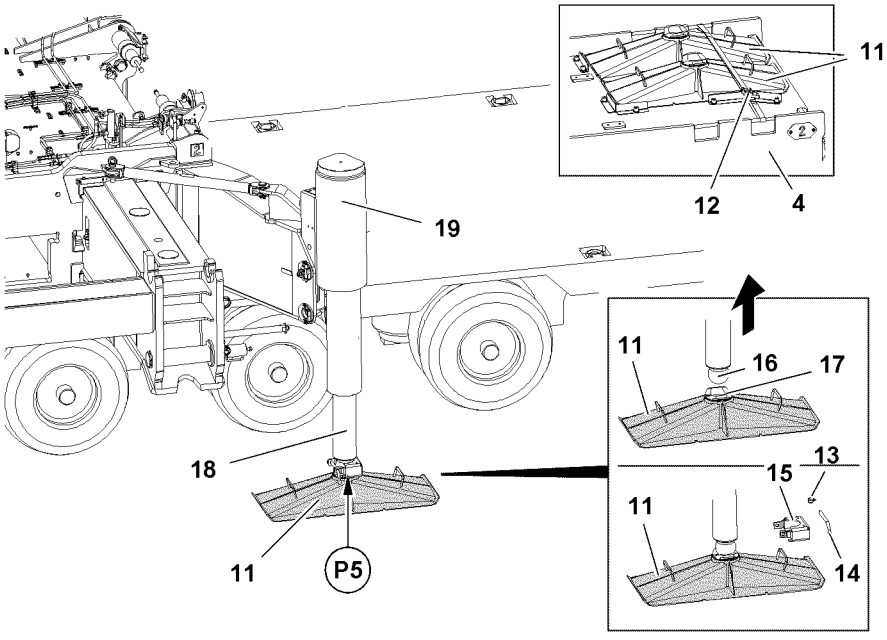

B116886

2.5.4 Removing the support plates

Make sure that the following prerequisite is met:

– The support cylinders **19** are in transport position.

Note

▶ The support plates **11** are positioned for transport on the central ballast **4**!

▶ The weight of the support plate is 50 kg!

▶ For safety reasons, disassemble the support plates **11** always with two persons!

▶ Remove the safety locking pin **13** at point **P5** and unpin the pin **14**, see illustration **12**.

▶ Pull out the retainer **15** from the ball head **16**, see illustration **12**.

Note

▶ Retract the support cylinder with the BTT-E, the BTT and the TE1, see section “Positioning the support cylinders in transport position”!

▶ Move the support cylinder in.

▶ Pull the retainer **15** again on the ball head **16**, see illustration **12**.

▶ Insert the pin **14** at point **P5** and secure with safety locking pin **13**.

▶ Place the support plate **11** in transport position on the central ballast.

▶ Secure the support plate **11** in transport position with the transport belts **12**, see illustration **12**.

▶ Remove all support plates.

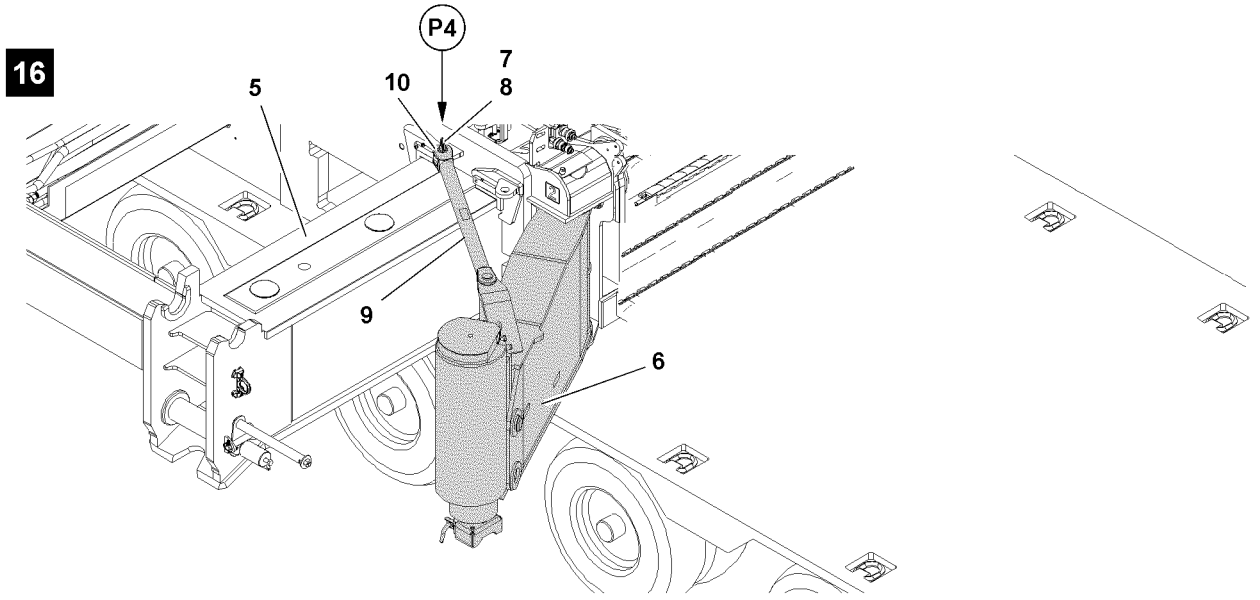

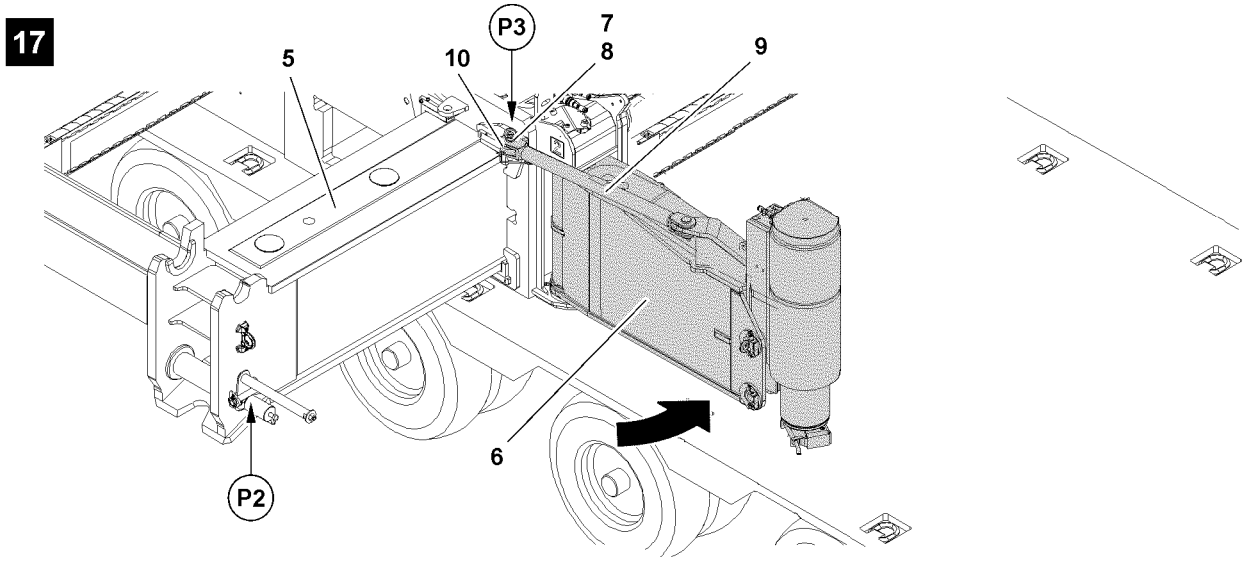

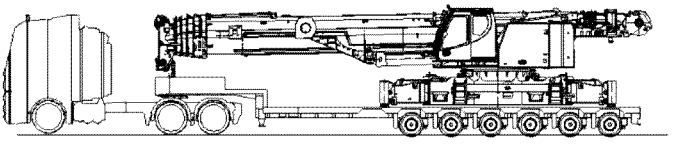

B116887

2.5.5 Swinging the folding brackets in

Make sure that the following prerequisite is met:

– The support plates **11** are removed.

DANGER

Danger of crushing!

▶ Make sure that no persons or objects are within the danger zone when swinging the folding brackets **6**!

▶ Remove the spring retainer **7** at point **P4**, see illustration **16**.

▶ Unpin the pin **8** at point **P4**, see illustration **16**.

▶ Remove the rod **9** from the connection.

Result:

– The folding bracket **6** is released.

▶ Swing the folding bracket **6** in until the connection fork **10** of the rod can be pinned at point **P3**.

▶ When the bores align at point **P3**:
Insert the pin **8** at point **P3**, see illustration **17**.

▶ Insert the spring retainer **7** at point **P3**, see illustration **17**.

Result:

– The folding bracket **6** is secured.

▶ Swing all folding brackets in.

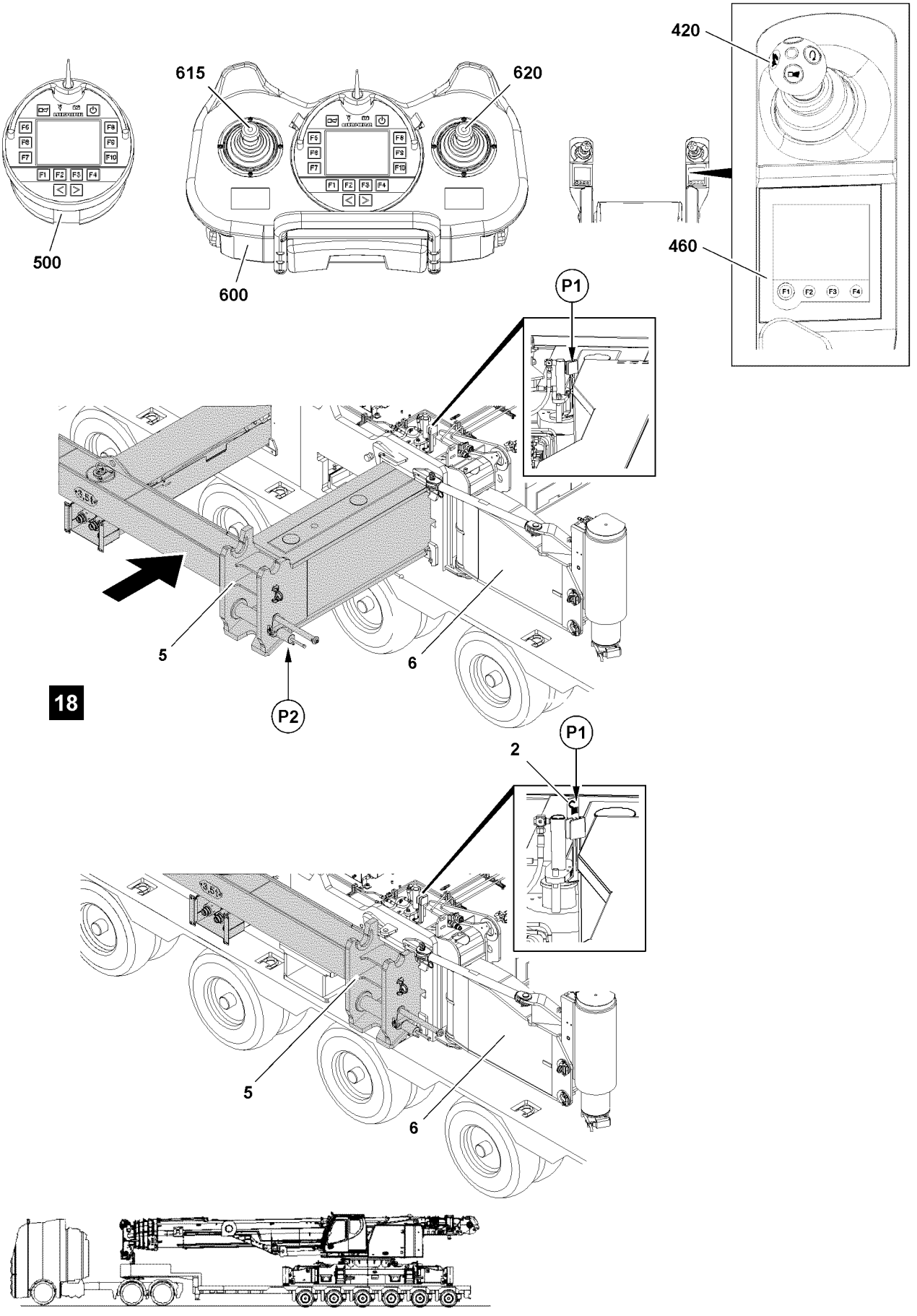

B116892

2.6 Retracting the cross carriers

WARNING
Danger of crushing!
▶ Make sure that no persons are between the crane and the cross carrier during the entire retraction procedure!

NOTICE
Damage to the pin pulling device!
If the folding brackets **6** are not swung in before retracting the cross carrier, then the pin pulling device will be damaged at point **P2** when retracting the cross carrier!
▶ Make sure that the folding brackets **6** are swung into transport position before retracting the cross carrier **5**!

Note
▶ The extension conditions of the cross carrier is displayed as percentage on the display on the Bluetooth™ Terminal (BTT), the radio remote control (BTT-E) and on the LICCON monitor!
▶ The cross carriers are only pinned on extension conditions of 0 %; 50 %; 100 %.
▶ The pin points of the cross carriers are marked in percentages with tags on the cross carriers.

Make sure that the following prerequisites are met:
– No personnel is within the danger zone.
– The folding brackets are swung in.

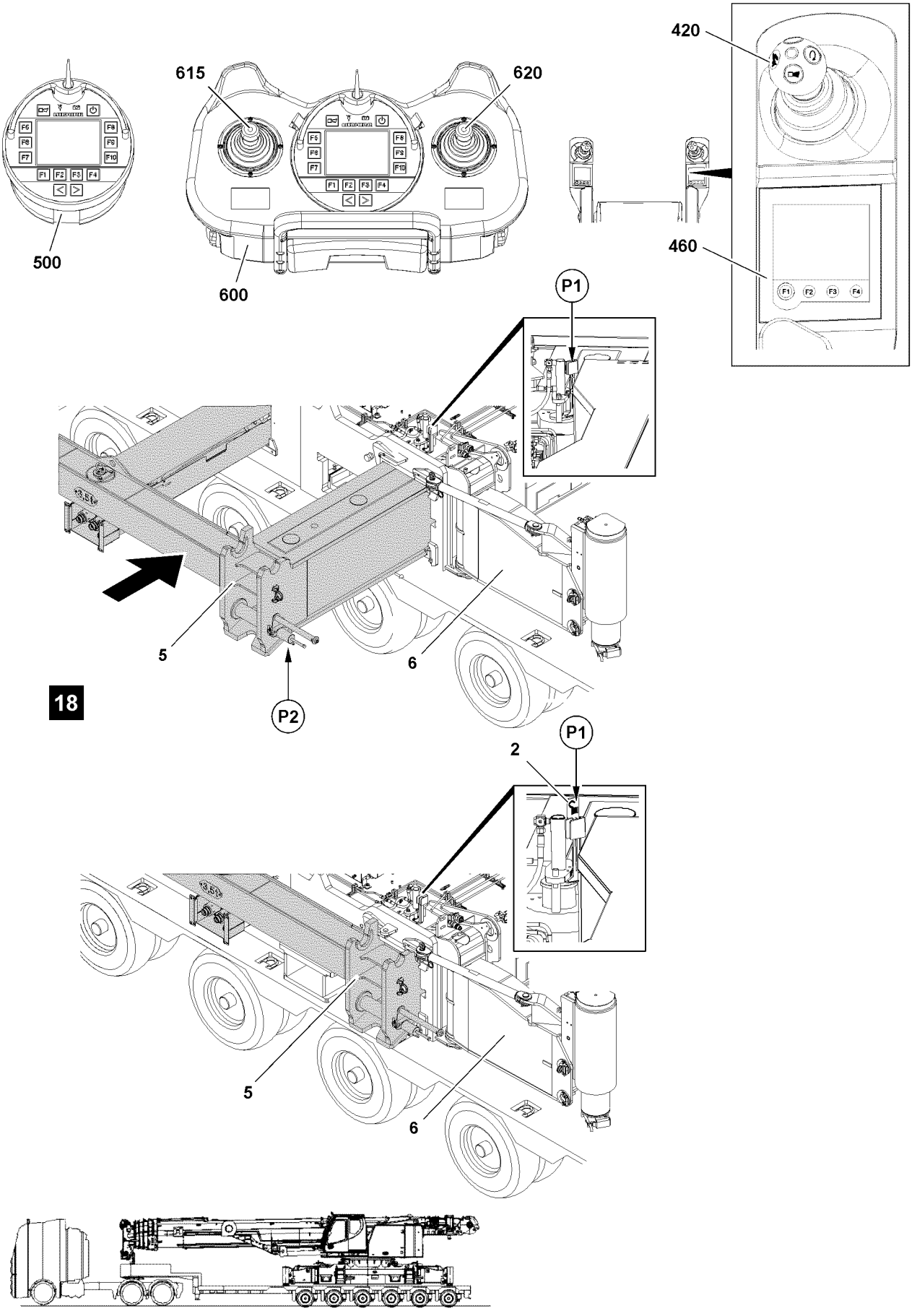

B116892

2.6.1 Retracting the cross carrier with the BlueTooth™Terminal

Make sure that the following prerequisite is met:
– On the display of the BTT, the menu overview is visible.

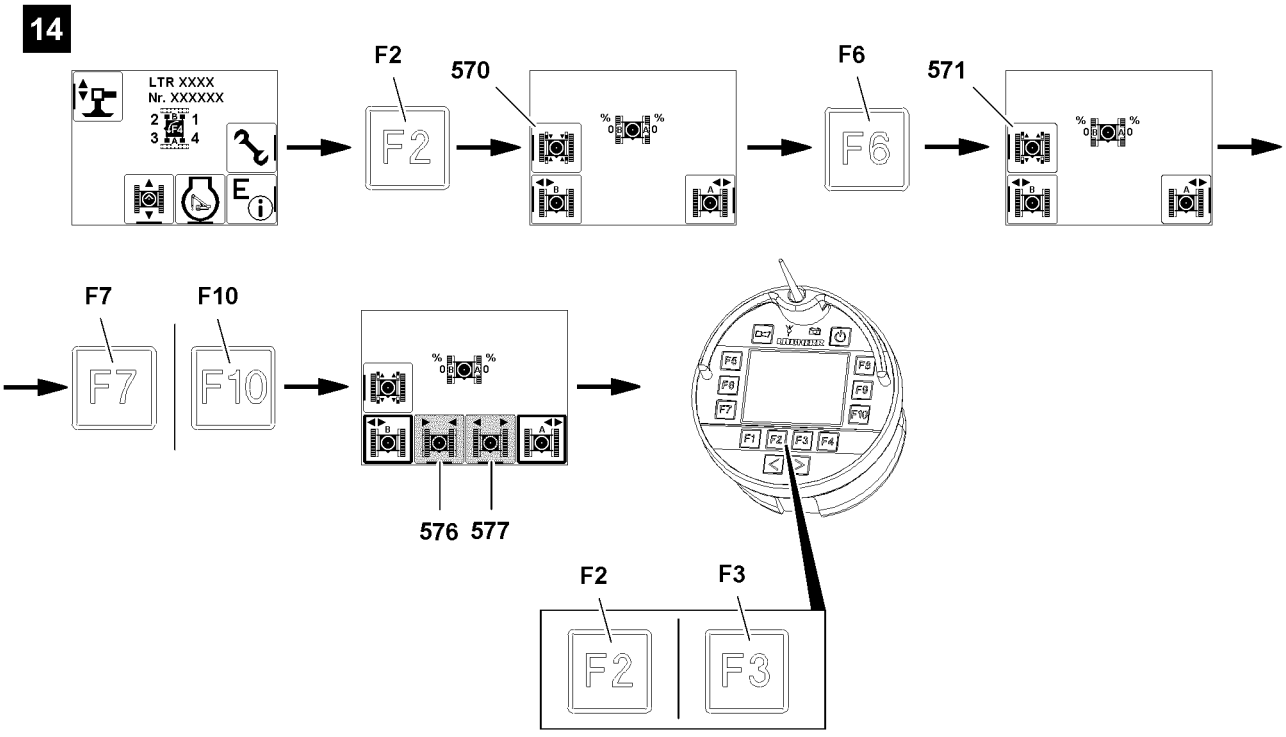

Unpinning the cross carrier

▶ Call up the “Crawler travel gear” menu: Press the function key **F2**, see illustration **14**.

Result:
– Functions “Track width adjustment” are visible.

▶ When icon “Pin the cross carrier” **570** is visible:
Activate “Unpin the cross carrier”: Press the function key **F6**.

Result:
– Icon “Unpin the cross carrier” **571** appears.

Selecting the cross carrier

Before you retract or extend the cross carrier, select one of the cross carriers or both cross carriers:
– Function key **F7**
– Function key **F10**

In this and the following sections is described how both cross carriers are retracted together. Alternatively you can also select and retract the cross carriers individually.
Depending on which cross carriers are selected, different icons for “retract crawler carrier” and “extend crawler carrier” appear, see Crane operating instructions, chapter 5.31.

▶ Select both cross carriers: Press function key **F7** and function key **F10**, see illustration **14**.

Result:
- Icon “Extend crawler carrier” **577** is visible.
- Icon “Retract crawler carrier” **576** is visible.

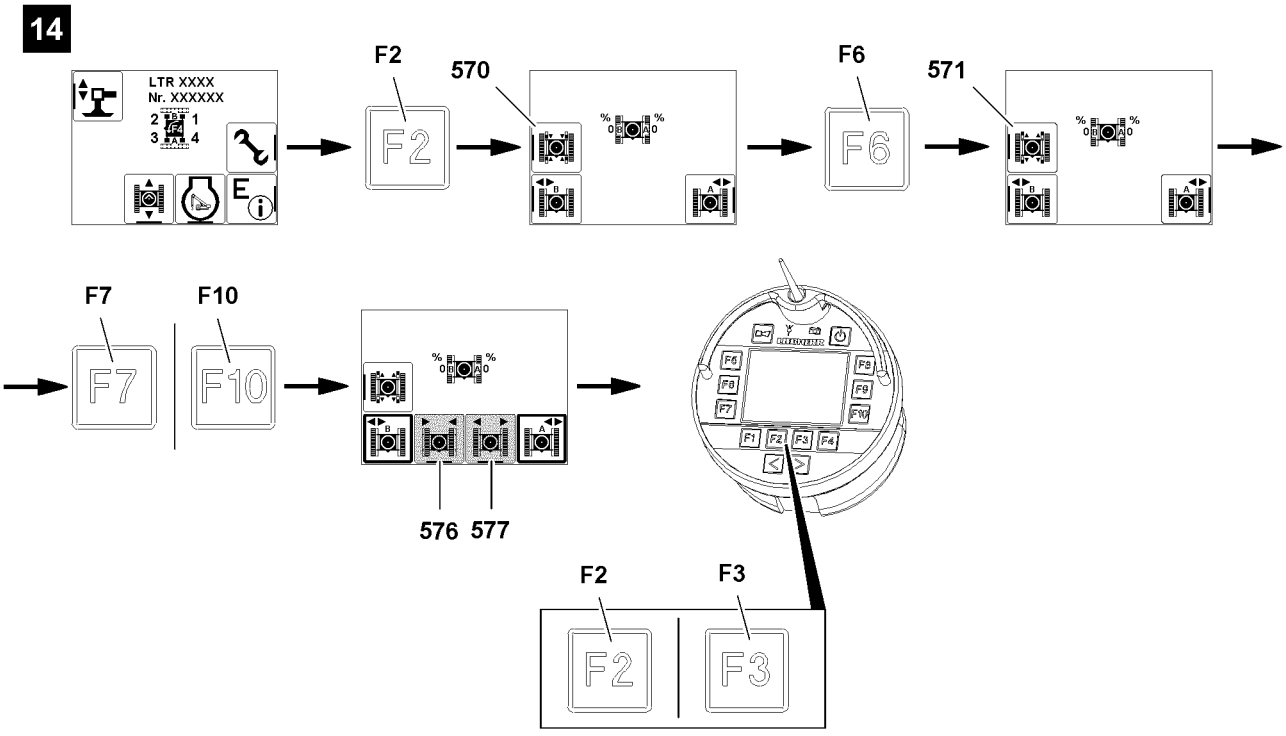

B116896

Retracting the cross carriers

To unpin the cross carriers on points **P1**, you have to retract or extend the cross carriers, see illustration **18**.
You can check on points **P1** if the pins are completely pinned or unpinned:
- The pins are unpinned: Tags **2** are visible.
- The pins are pinned: Tags **2** are **not** visible.

WARNING
Crushing danger due to adjustment of cross carriers!
▶ Make sure that no personnel is within the danger zone of the cross carriers during “track width adjustment”.
▶ Differentiation of the cross carriers, see Crane operating instructions, chapter 5.31.

▶ When “extending the cross carrier”:
Press the function key **F3**.
▶ When “retracting the cross carrier”:
Press the function key **F2**.

Result:
- The pins are unpinned.

Troubleshooting
Pins are not unpinned!
The pin is stuck: The position of the cross carriers prevents the pins from unpinning.
▶ Extend and retract the cross carriers again: Press the function keys until the pins are completely unpinned.

▶ Make sure that the pins are completely unpinned on points **P1**, see illustration **18**.

Result:
– The pins are unpinned.
– The cross carriers retract.

Pinning the cross carriers

▶ Before the cross carriers reach the 0 % extension status:
Activate “Pin the cross carrier”: Press the function key **F6**.

Result:
– Icon “pin the cross carrier” **570** is visible.
– The pins are pinned.

Troubleshooting
The pins are not pinned!
The pin is stuck: The position of the cross carriers prevents the pins from pinning.
▶ Extend and retract the cross carriers again: Press the function keys until the pins are completely pinned.

▶ Make sure that the pins are completely pinned on points **P1**, see illustration **18**.

Result:
– The pins are pinned.
– The cross carriers are retracted and secured at 0 %.

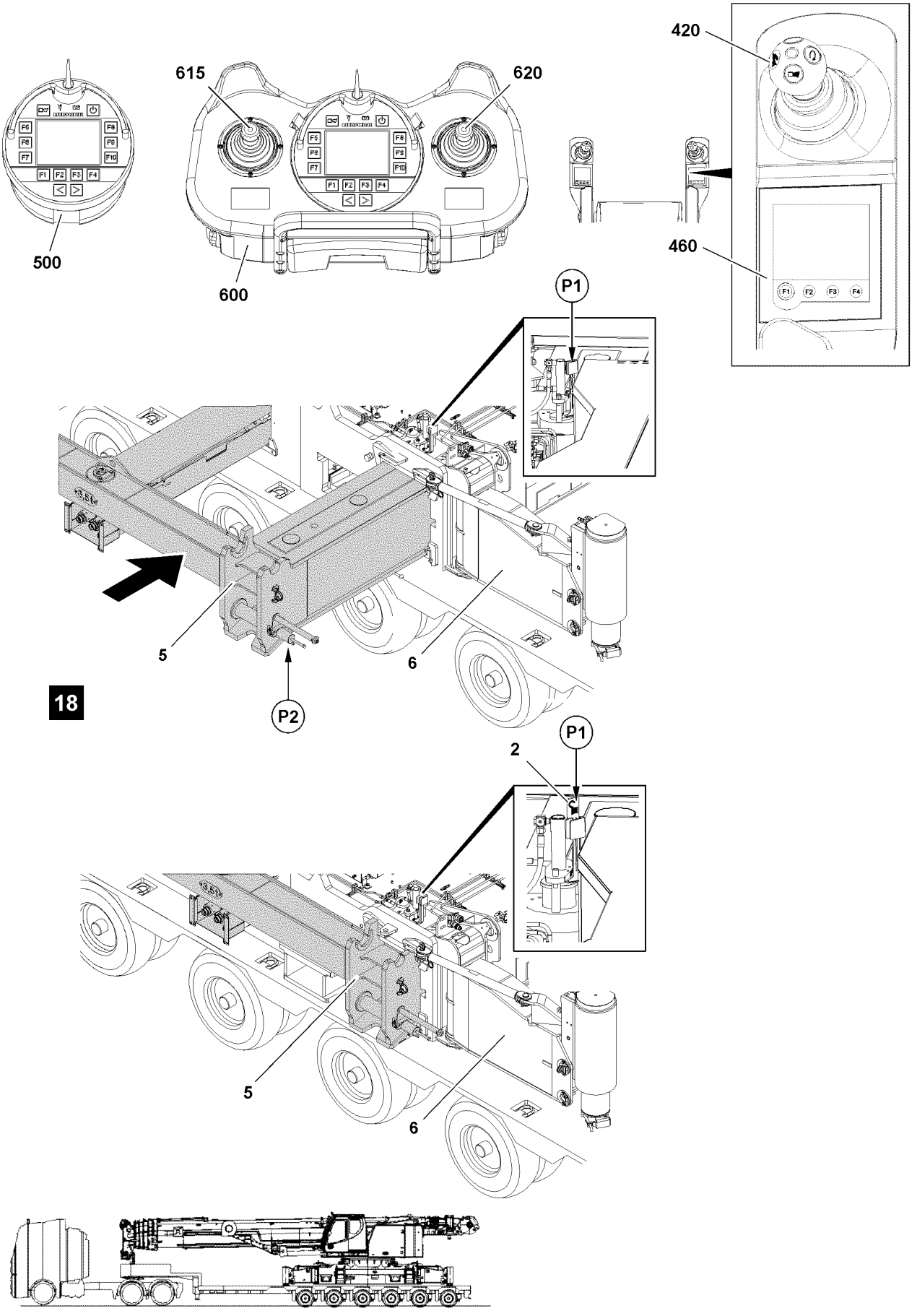

B116892

2.6.2 Extending the cross carriers from the crane operator's cab

Make sure that the following prerequisite is met:

– On the TE1 the “Master switch configuration” menu is visible.

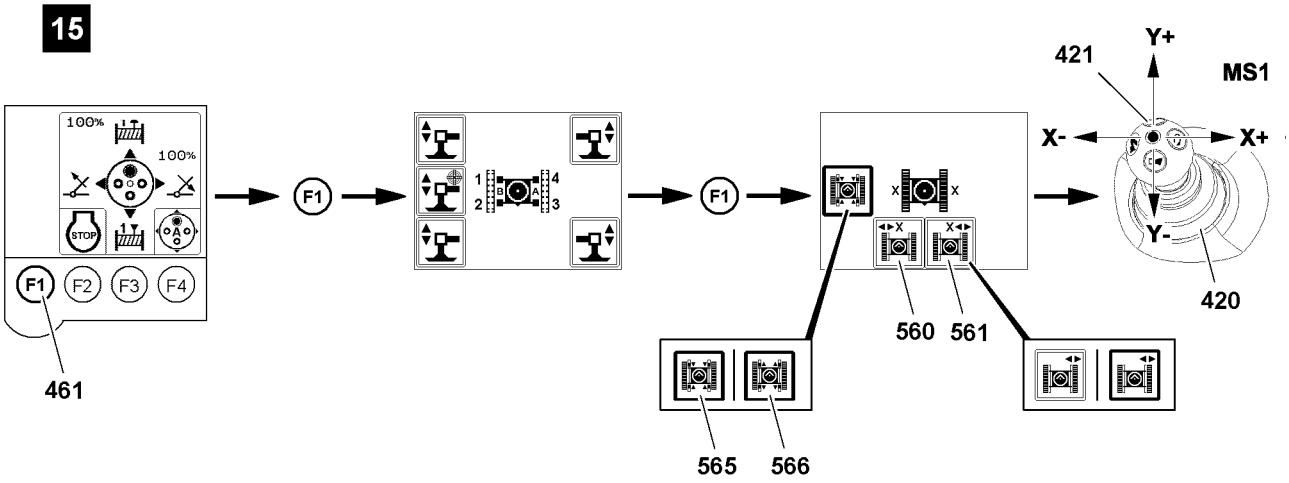

B116897

Unpinning the cross carrier

▶ Press the function key F1 **461**, see illustration **15**.

Result:

– The “Support” menu appears.

▶ Press function key F1 **461**.

Result:

– The “Track width adjustment” menu appears.

▶ When icon **565** “Pin the cross carrier” is visible:
Activate “Unpin the cross carrier”: Select the icon **565** (“touch”).

Result:

– Icon “unpin cross carrier” **566** is visible.

Selecting the cross carrier

Before you retract or extend the cross carrier, select one of the cross carriers or both cross carriers:

– Icon **560**
– Icon **561**

In this and the following sections is described how both cross carriers are retracted together. Alternatively you can also select and retract the cross carriers individually.

▶ Pay attention to cross carrier assignment.

▶ Select both cross carriers: Select the icon **560** and icon **561** (“touch”).

Result:

– Selected icons with filled out frames: Cross carriers are selected.

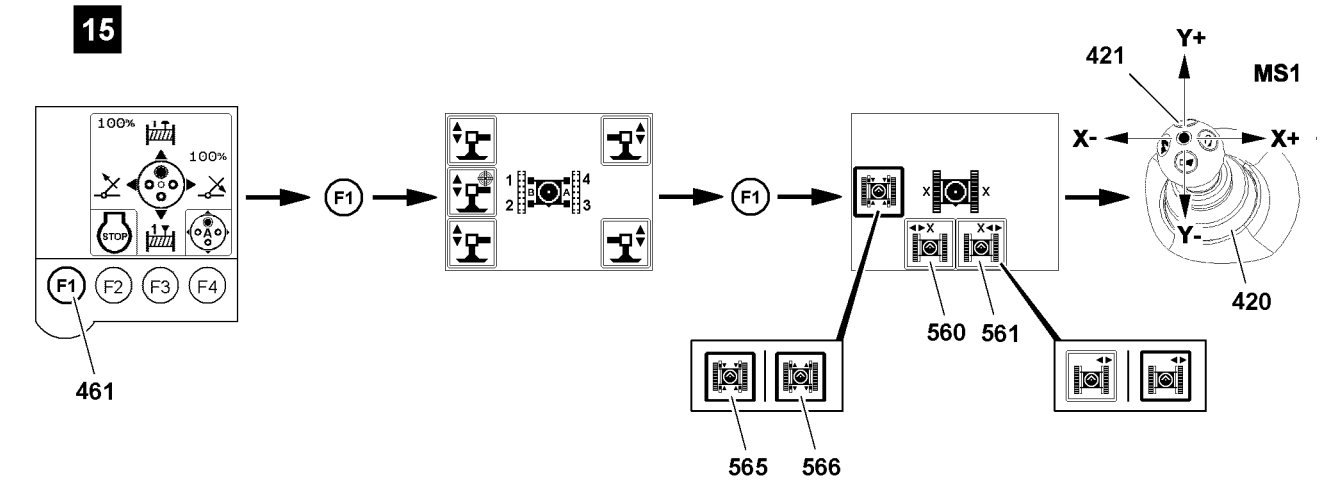

B116897

Retracting the cross carriers

To unpin the cross carriers on points **P1**, you have to retract or extend the cross carriers, see illustration **18**:
You can check on points **P1** if the pins are completely pinned or unpinned:
– The pins are unpinned: Tags **2** are visible.
– The pins are pinned: Tags **2** are **not** visible.

WARNING
Crushing danger due to adjustment of cross carriers!
▶ Make sure that no personnel is within the danger zone of the cross carriers during “track width adjustment”.
▶ Differentiation of the cross carriers, see Crane operating instructions, chapter 4.01.

To initiate a movement, you have to release master switch MS1 **420** with the button **421**.
▶ Press the button **421** and hold.
▶ When “extending the cross carrier”:
Move master switch MS1 **420** in direction X+.
▶ When “retracting the cross carrier”:
Move master switch MS1 **420** in direction X-.

Result:
– The pins are unpinned.

Troubleshooting
Pins are not unpinned!
The pin is stuck: The position of the cross carriers prevents the pins from unpinning.
▶ Extend and retract the cross carriers again: Move master switch MS1 **420** in direction X+ or X- until the pins are completely unpinned.

▶ Make sure that the pins are completely unpinned on points **P1**, see illustration **18**.

Result:
– The pins are unpinned.
– The cross carriers retract.

Pinning the cross carriers

▶ Before the cross carrier reaches the 0 % extension status:
Activate “Pin the cross carrier”: Select icon **566** (“touch”), see illustration **15**.

Result:

– Icon **565** “pin cross carrier” is visible.
– The pins are pinned.

Troubleshooting

The pins are not pinned!

The pin is stuck: The position of the cross carriers prevents the pins from pinning.

▶ Extend and retract the cross carriers again: Move master switch MS1 **420** in direction X+ or X- until the pins are completely pinned.

▶ Make sure that the pins are completely pinned on points **P1**, see illustration **18**.

Result:

– The pins are pinned.
– The cross carriers are retracted and secured at 0 %.

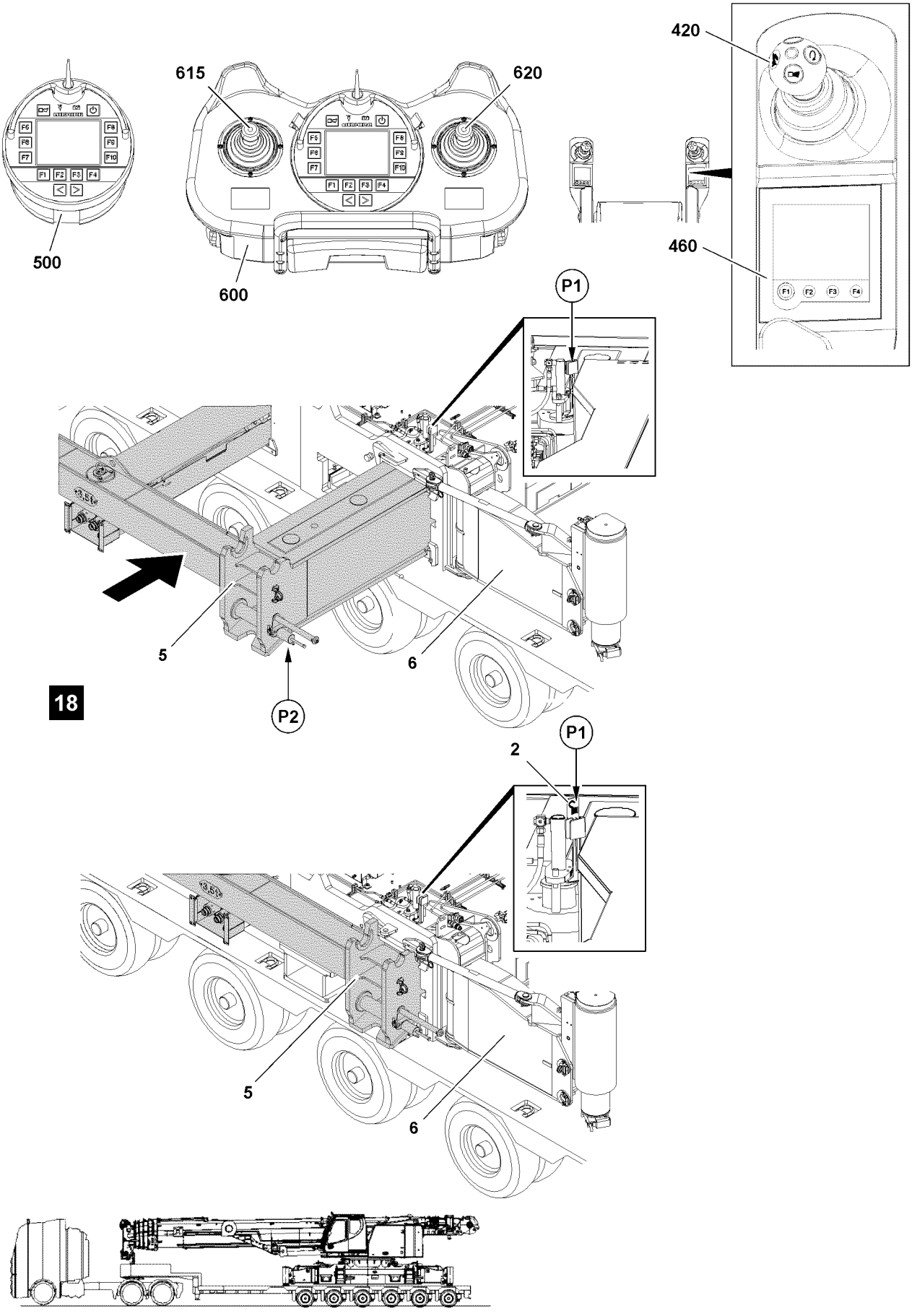

B116892

2.6.3 Retracting the cross carriers with the radio remote control*

Make sure that the following prerequisite is met:

– On the display of the BTT-E, the menu overview is visible.

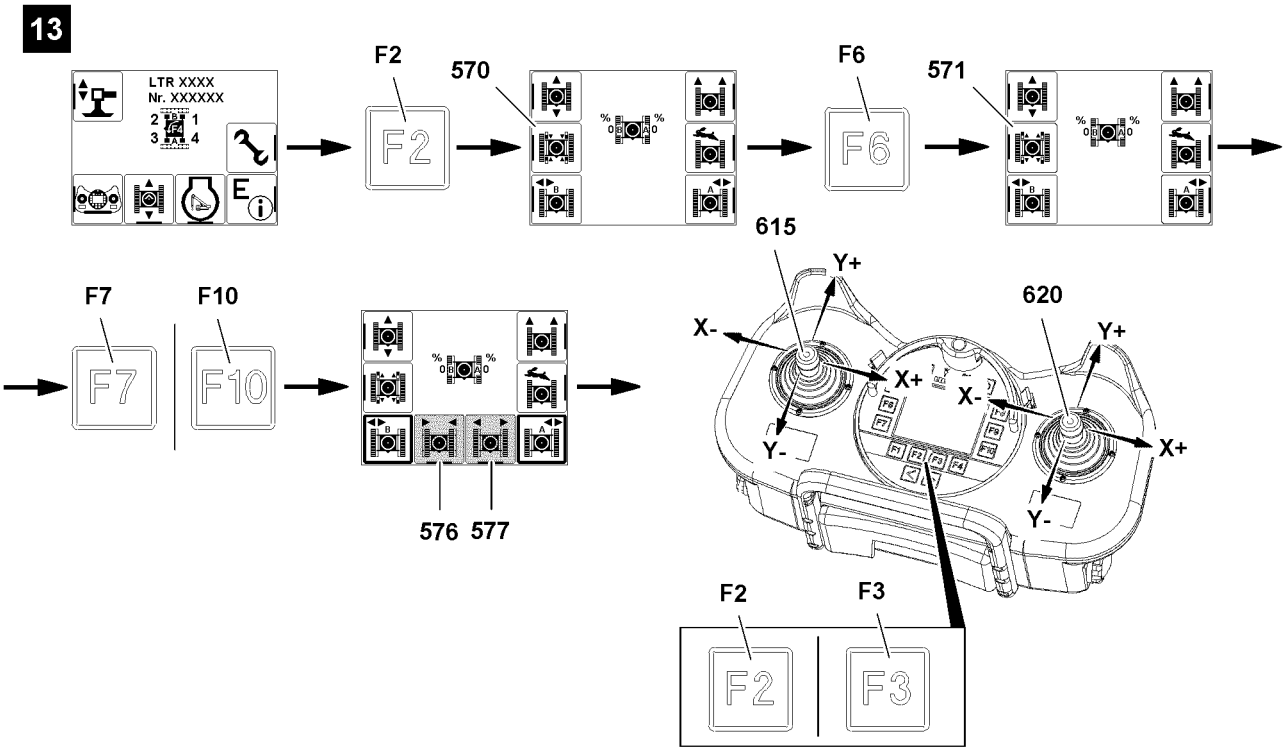

B116893

Unpinning the cross carrier

▶ Call up the “Crawler travel gear” menu: Press the function key **F2**, see illustration **13**.

Result:

– Functions “Track width adjustment” are visible.

▶ When icon “Pin the cross carrier” **570** is visible:
Activate “Unpin the cross carrier”: Press the function key **F6**.

Result:

– Icon “Unpin the cross carrier” **571** appears.

Selecting the cross carrier

Before you retract or extend the cross carrier, select one of the cross carriers or both cross carriers:

– Function key **F7**
– Function key **F10**

In this and the following sections is described how both cross carriers are retracted together. Alternatively you can also select and retract the cross carriers individually.

Depending on which cross carriers are selected, different icons for “retract crawler carrier” and “extend crawler carrier” appear, see Crane operating instructions, chapter 6.08.

▶ Select both cross carriers: Press function key **F7** and function key **F10**, see illustration **13**.

Result:
– Icon “Extend crawler carrier” **577** is visible.
– Icon “Retract crawler carrier” **576** is visible.

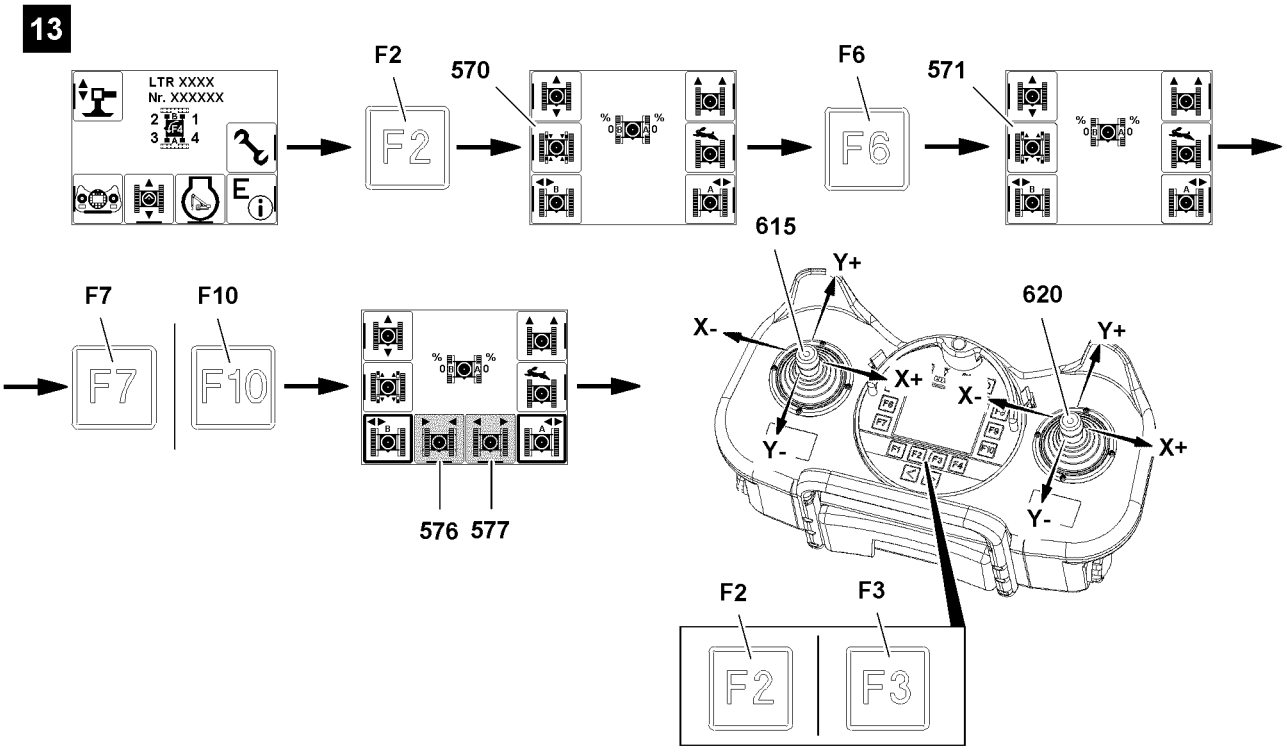

B116893

Retracting the cross carriers

To unpin the cross carriers on points **P1**, you have extend the cross carriers, see illustration **18**.
You can check on points **P1** if the pins are completely pinned or unpinned:
– The pins are unpinned: Tags **2** are visible.
– The pins are pinned: Tags **2** are **not** visible.

WARNING
Crushing danger due to adjustment of cross carriers!
▶ Make sure that no personnel is within the danger zone of the cross carriers during “track width adjustment”.
▶ Differentiation of the cross carriers, see Crane operating instructions, chapter 6.08.

When both cross carriers are selected, then the operation is assigned to the following manual control levers on the BTT-E:
– Manual control lever **615** or manual control lever **620**

▶ When “extending the cross carrier”:
Deflect the manual control lever in direction X+.

or

■ Press the function key **F3**.

▶ When “retracting the cross carrier”:
Deflect the manual control lever in direction X-.

or

■ Press the function key **F2**.

Result:

– The pins are unpinned.

Troubleshooting

Pins are not unpinned!

The pin is stuck: The position of the cross carriers prevents the pins from unpinning.

▶ Extend and retract the cross carriers again: Deflect the manual control levers on the BTT-E in direction X+ or X- or press function keys until the pins are completely unpinned.

▶ Make sure that the pins are completely unpinned on points **P1**, see illustration **18**.

Result:

– The pins are unpinned.
– The cross carriers retract.

Pinning the cross carriers

▶ Before the cross carriers reach the 0 % extension status:
Activate “Pin the cross carrier”: Press the function key **F6**.

Result:

– Icon “pin the cross carrier” **570** is visible.
– The pins are pinned.

Troubleshooting

The pins are not pinned!

The pin is stuck: The position of the cross carriers prevents the pins from pinning.

▶ Extend and retract the cross carriers again: Deflect the manual control levers on the BTT-E in direction X+ or X- or press function keys until the pins are completely pinned.

▶ Make sure that the pins are completely pinned on points **P1**, see illustration **18**.

Result:

– The pins are pinned.
– The cross carriers are retracted and secured at 0 %.

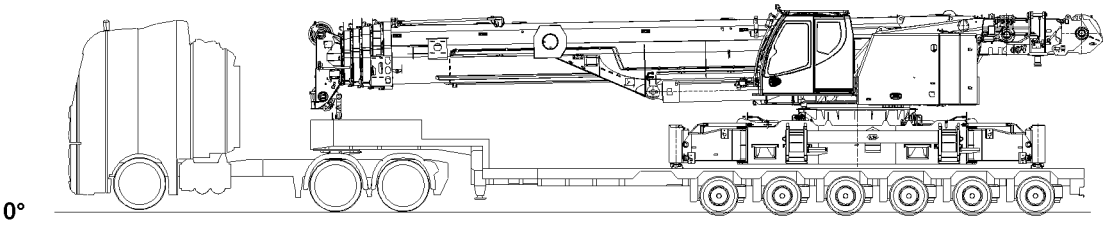

B116888

2.7 Rigging the crane on the transport vehicle

Make sure that the following prerequisites are met:

– The folding brackets are pinned in transport position.
– The cross carriers are retracted in transport position.
– The crane has been placed on the transport vehicle.

▶ Lock the crane superstructure with the crane chassis.

Note

▶ The telescopic boom must be supported on the transport vehicle to ensure the stability of the crane!

▶ Luff down the telescopic boom and place it on the support base.

▶ Fasten the hook block to the crawler center section and lightly tension the hoist rope.

WARNING

Falling crane if insufficiently secured!

▶ The crane must be rigged and secured sufficiently to survive a strong braking maneuver!

▶ Rig and secure the crane properly on the transport vehicle, see Crane operating instructions, chapter 3.80.

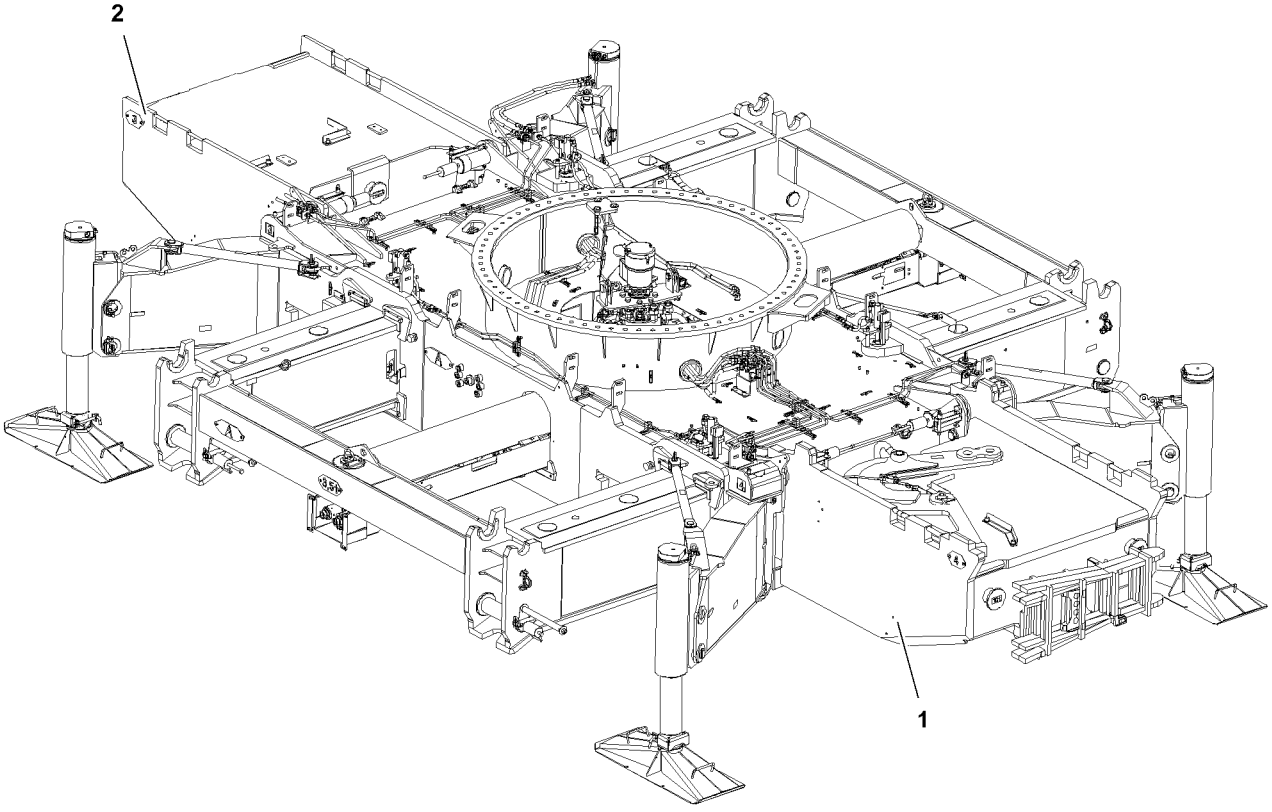

B117547

1 Central ballast combinations

The central ballast is composed of:
– Central ballast block, rear **1**
– Central ballast block, front **2**

WARNING
The crane can topple over!
The crane can topple over if another central ballast combination is used than specified in the charts!
Personnel can be severely injured or killed!
▶ For crane operation, only use central ballast combinations, which are specified in the following charts!

Central ballast	Combination	Individual weight
0.0 t	Without central ballast	0.0 t

Central ballast	Combination	Individual weight
20.0 t	Central ballast block, front **2**	10.0 t
	Central ballast block, rear **1**	10.0 t

2 Central ballast during operation

WARNING
Falling central ballast!
If the central ballast blocks are not properly installed, then they can fall down and cause severe accidents!
Personnel can be severely injured or killed!
▶ Before operation, make sure that the central ballast bock **1** and central ballast block **2** are installed properly!

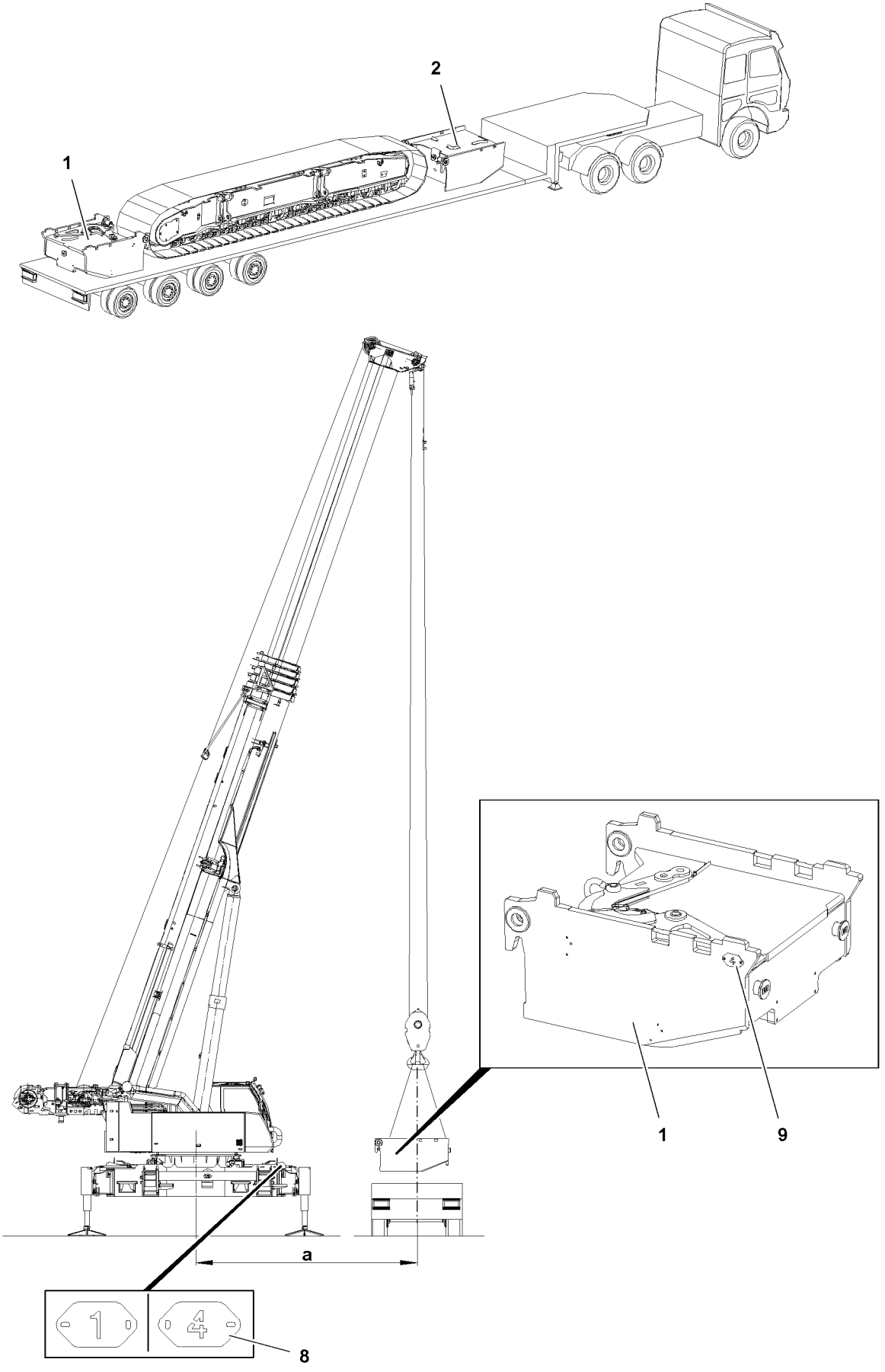

B117541

3 Installing the central ballast

WARNING
Danger of falling!
During assembly and disassembly, personnel must be secured with appropriate aids to prevent them from falling! If this is not observed, assembly personnel can fall and suffer life-threatening or fatal injuries!
- ▶ Any work, where there is a danger of falling, must be carried out with suitable aids (for example: lifting platforms, scaffoldings, ladders, auxiliary crane)!
- ▶ If the work can neither be carried out with such aids nor from the ground, then the assembly personnel must secure themselves with approved catch systems to avoid falling, see chapter 2.04 of the operating instruction!
- ▶ If railings are present on the crane components, then they must be brought into the corresponding position and secured for assembly / disassembly work!
- ▶ Step on aids and fall protection equipment only with clean shoes!
- ▶ Keep aids and fall protection equipment clean and free from snow and ice!
- ▶ During all assembly and disassembly work, maintenance work and inspections, travel or crane operation is prohibited!

WARNING
Danger of impact / crushing!
When installing / removing counterweight components with the auxiliary crane, crane components can start to swing back and forth!
When lifting / lowering and positioning crane components, there is an increased danger of impacts / crushing!
Personnel can be caught and severely injured or killed!
- ▶ Make sure that personnel cannot be caught by crane components!
- ▶ When working in danger zones: Use aids to protect limbs!
- ▶ Guide crane components with suitable aids to minimize oscillation!

WARNING
Falling crane components!
At assembly, the crane components can fall down!
Personnel can be severely injured or killed!
- ▶ Make sure that no persons or objects are within the danger zone!

WARNING
The crane can topple over!
If the central ballast is installed / removed, the set up configuration of the crane changes.
If changes are made on the central ballast, no central ballast may be taken into account as set up configuration of the crane when doing so.
- ▶ Make sure that the LICCON overload protection is set to a set up configuration without central ballast when making changes on the central ballast.
- ▶ Observe and adhere to the values in the load chart for installation of the central ballast.
- ▶ Lift or place down the central ballast block in permissible spacing **a**, see load chart.

Note

▶ When the crane is **not** supported: Support the crane, see Crane operating instructions, chapter 3.01.

Make sure that the following prerequisites are met:

– The crane is horizontally aligned.
– The crane is positioned on a level and load-bearing surface.
– The crane is supported on base 6.0 m x 4.4 m.
– The support cylinders are extended.
– The LICCON overload protection is set:
  - Support base 4.4 m on supports
  - Central ballast 0 t
  - Counterweight 0 t
  - Without auxiliary boom / accessory
  - Slewing range
– Crane is operational.

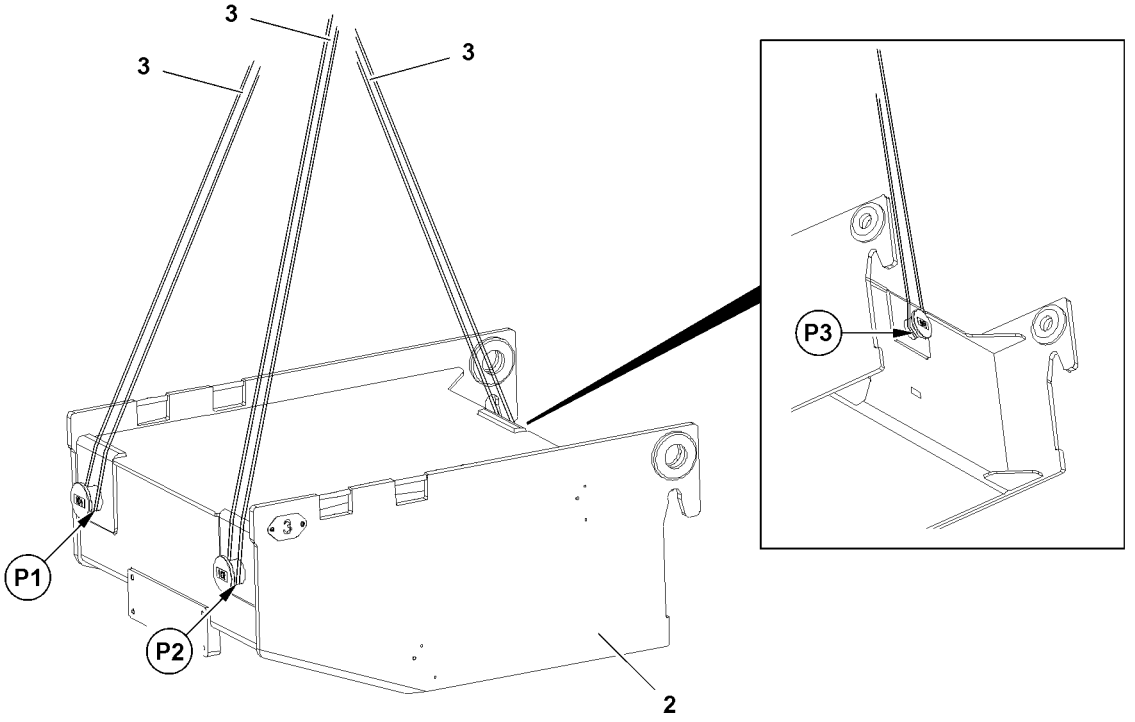

Fastening points central ballast block

3.1 Checking the central ballast blocks

WARNING

Damaged central ballast block!

If a damaged / dirty central ballast block is used, then the tight seating and the operational safety are no longer ensured!

▶ Do not use a damaged central ballast block!
▶ Replace / repair a damaged central ballast block!
▶ Clean the fastening points of the central ballast before installation!

▶ Before assembly / disassembly of the central ballast blocks, carry out a visual inspection for damage or foreign matter.

3.2 Fastening the central ballast blocks

WARNING
Improperly fastened central ballast block!
An improperly fastened central ballast block can slip and fall down when lifting or swinging it!
Personnel can be severely injured or killed!
- ▶ Before lifting, make sure that the central ballast block is properly fastened!
- ▶ Use only approved and suitable fastening equipment **3**!
- ▶ Always keep sufficient distance to the suspended central ballast block!
- ▶ Standing under a raised central ballast block is **prohibited**!
- ▶ Carefully initiate all crane movements with attached central ballast block extremely sensitively and initiate slow down with utmost caution!

WARNING
Swinging central ballast block!
If the fastening equipment is not positioned in the center over the fastening points of the central ballast block **2**, then the central ballast block **2** can start to swing after lifting and fall down!
This could result in serious accidents!
Personnel can be severely injured or killed!
- ▶ Make sure that the fastening equipment **3** is centered over the fastening points of the central ballast block **2**!

Note
- ▶ The central ballast blocks are marked with numbers.
- ▶ Make sure that the numbers on the central ballast block match the numbers on the pin points on the crawler center section.

▶ Fasten the central ballast block **2** on point **P1**, point **P2** and point **P3**, see illustration.

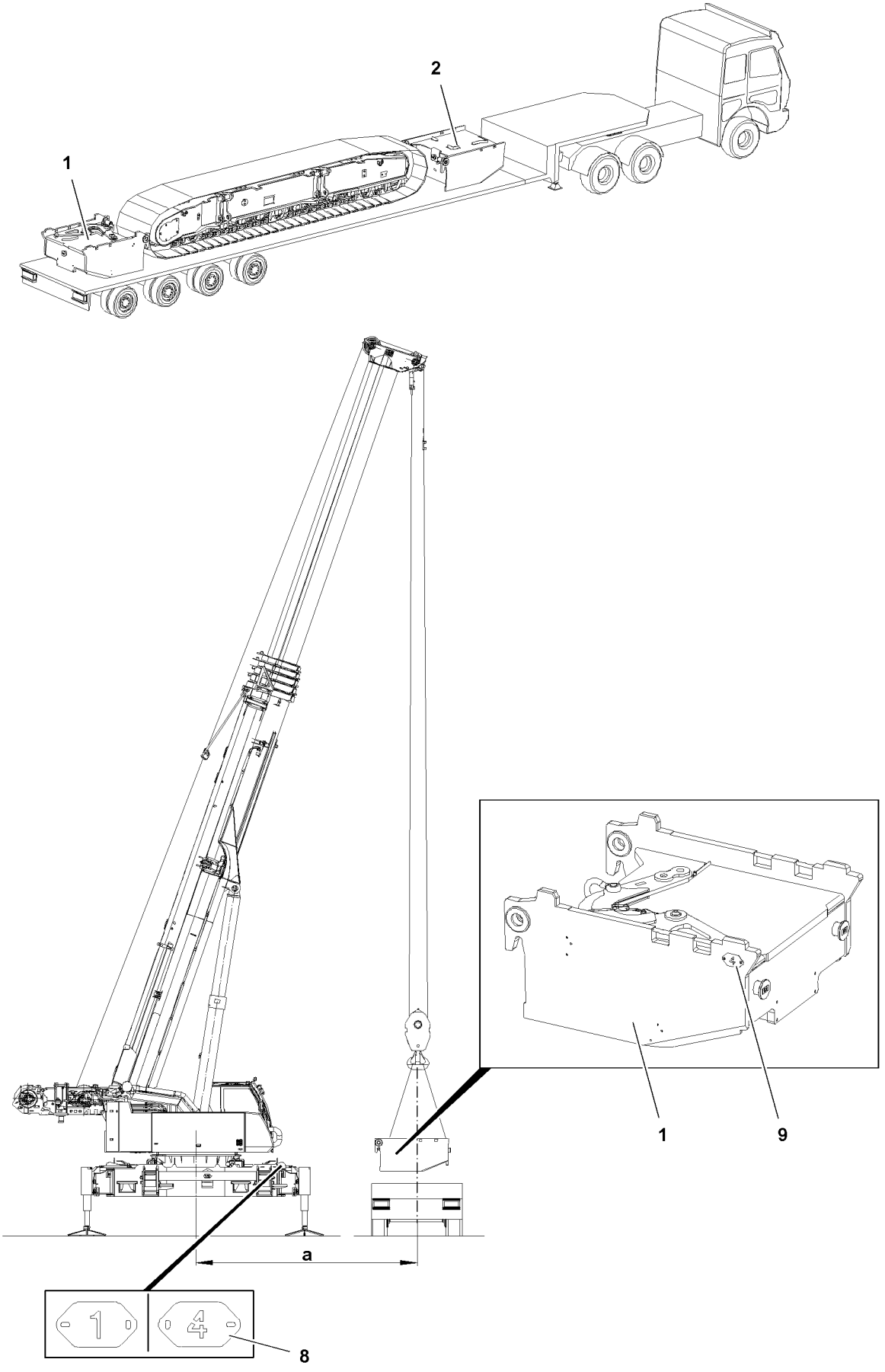

B117541

3.3 Installing the central ballast block on the rear

Note

- ▶ “Rear” on the central ballast block and on the crawler center section is marked with the number **1** and number **4**.
- ▶ The numbers on the central ballast block **1** and crawler center section **5** must be identical at assembly.
- ▶ Positions of numbers, see tag **8** and tag **9**.

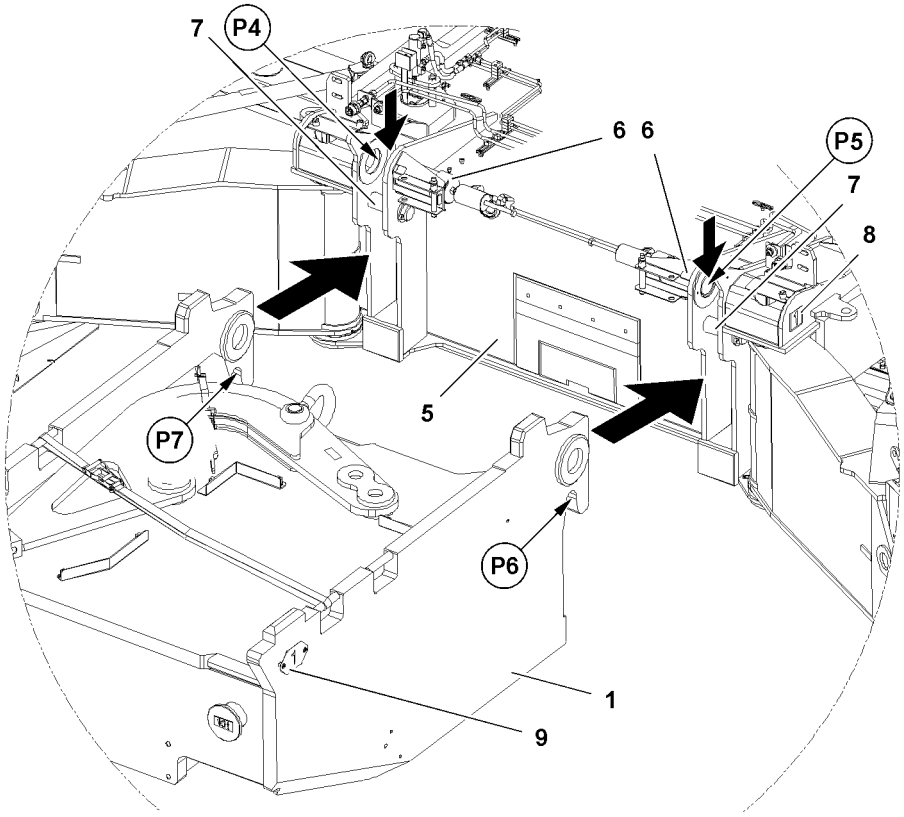

B117545

Central ballast block, rear: Hook and pin points

- ▶ Make sure that the numbers on the central ballast block match the numbers on the pin points on the crawler center section.
- ▶ Fasten the central ballast block **1**.
- ▶ Lift the central ballast block **1**, pay attention to the load torque indicator.
- ▶ Make sure that the pins **6** on point **P4** and on point **P5** are unpinned.
- ▶ Swing the central ballast block **1** in and hang on point **P6** and an point **P7** from top on pin **7**.
- ▶ Lower the central ballast block **1** until the pin bores on point **P4** and on point **P5** align.

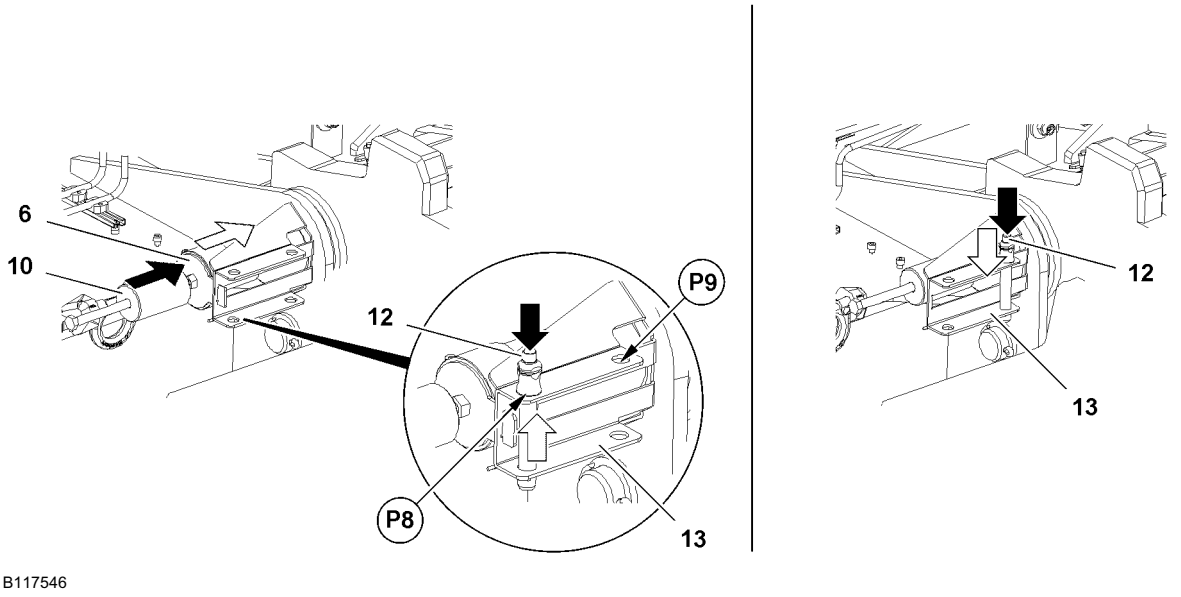

Release, pin and secure the pin.

- ▶ Release the pin **6**: Actuate the ball locking pin **12** and unpin from the retainer **13** on point **P8**.
- ▶ Insert the pin **6**: Insert the pin **6** with the mechanical pin pulling device **10** to the stop.
- ▶ Secure the pin **6**: Actuate the ball locking pin **12** and insert on point **P9** in the retainer **13**.
- ▶ Remove the fastening equipment.

blank page!

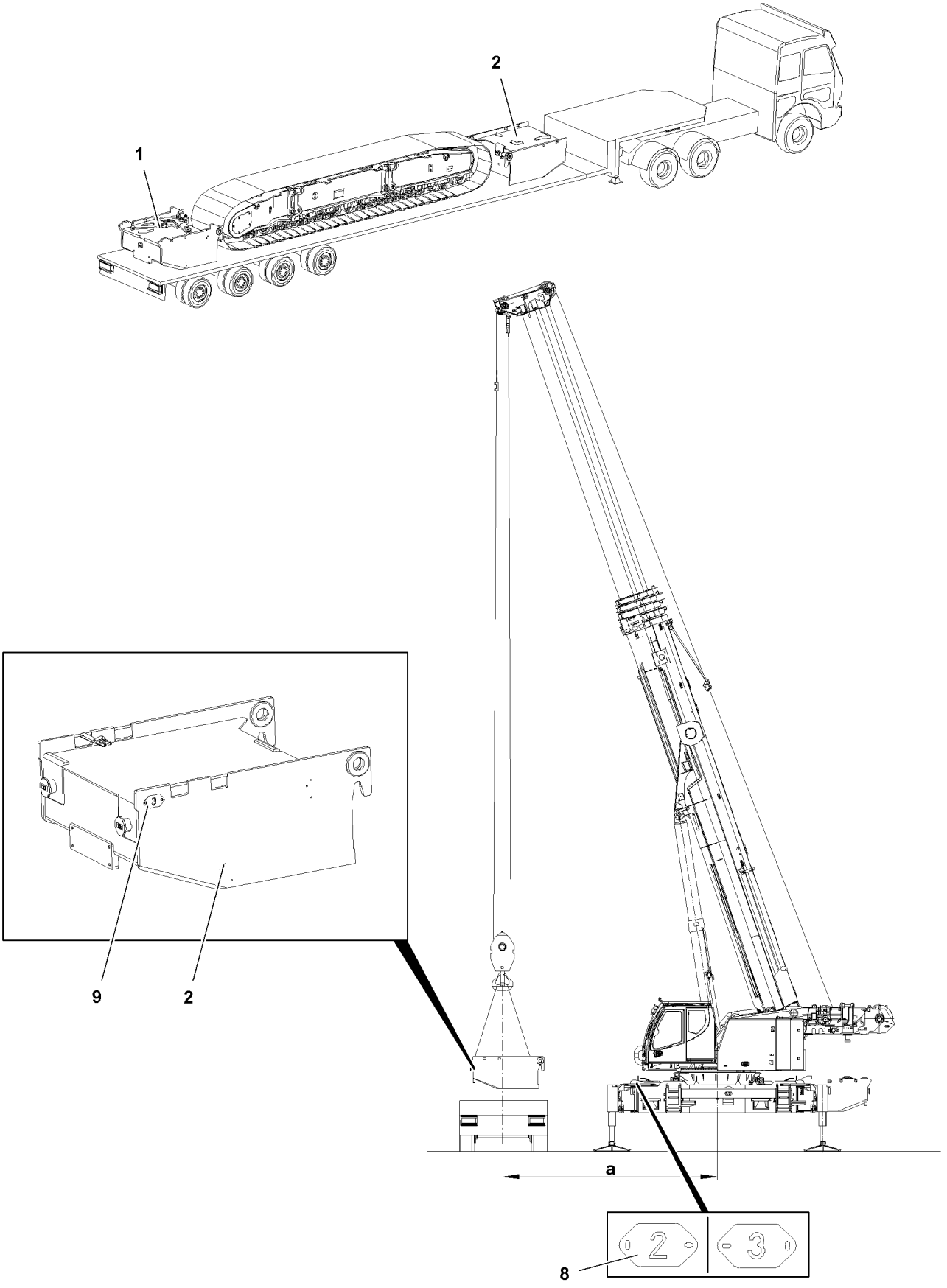

B117544

3.4 Installing the central ballast block on the front

Note

- ▶ “Front” on the central ballast block **2** and on the crawler center section is marked with the number **2** and number **3**.
- ▶ The numbers on the central ballast block **2** and on the crawler center section **5** must be identical at assembly.
- ▶ Positions of numbers, see tag **8** and tag **9**.

- ▶ Fasten the central ballast block **2**.
- ▶ Lift the central ballast block **2**, pay attention to the load torque indicator.
- ▶ Make sure that the pins are unpinned on the pin points on the crawler center section.
- ▶ Hang the central ballast block **2** the same way on the crawler center section and described in section “Installing the central ballast block on the rear”.
- ▶ Lower the crawler center section until the pin bores align.

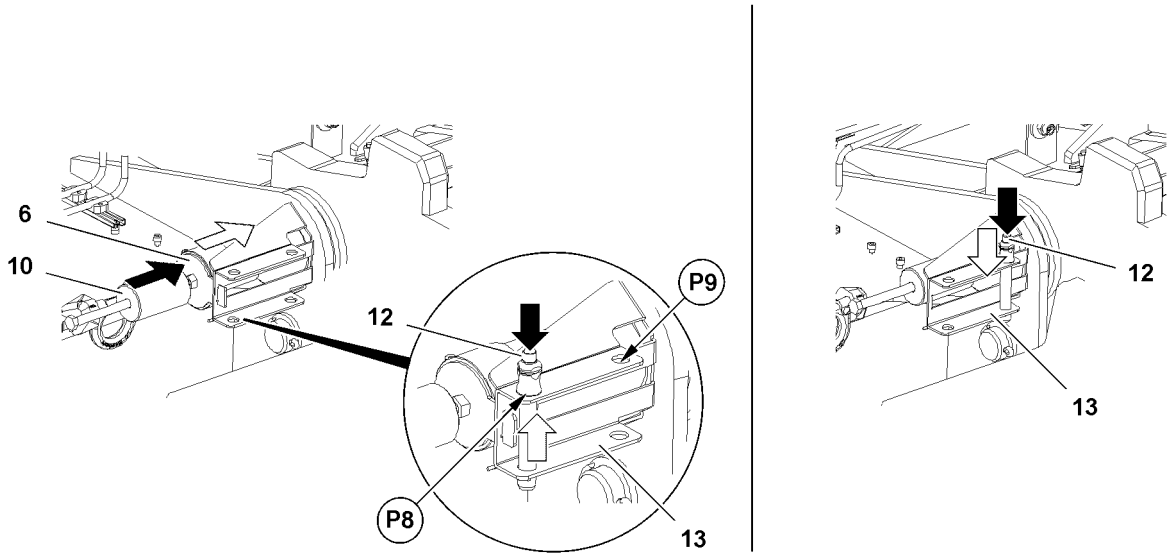

B117546

Release, pin and secure the pin.

- ▶ Release the pin **6**: Actuate the ball locking pin **12** and unpin on point **P8** from the retainer **13**.
- ▶ Insert the pin **6**: Insert the pin **6** with the mechanical pin pulling device **10** to the stop.
- ▶ Secure the pin **6**: Actuate the ball locking pin **12** and insert on point **P9** in the retainer **13**.
- ▶ Remove the fastening equipment.

Result:

– The central ballast blocks are installed.

3.5 Assembling the crawler carrier

Note

- ▶ Assemble the crawler carrier, see Crane operating instructions, chapter 3.01.

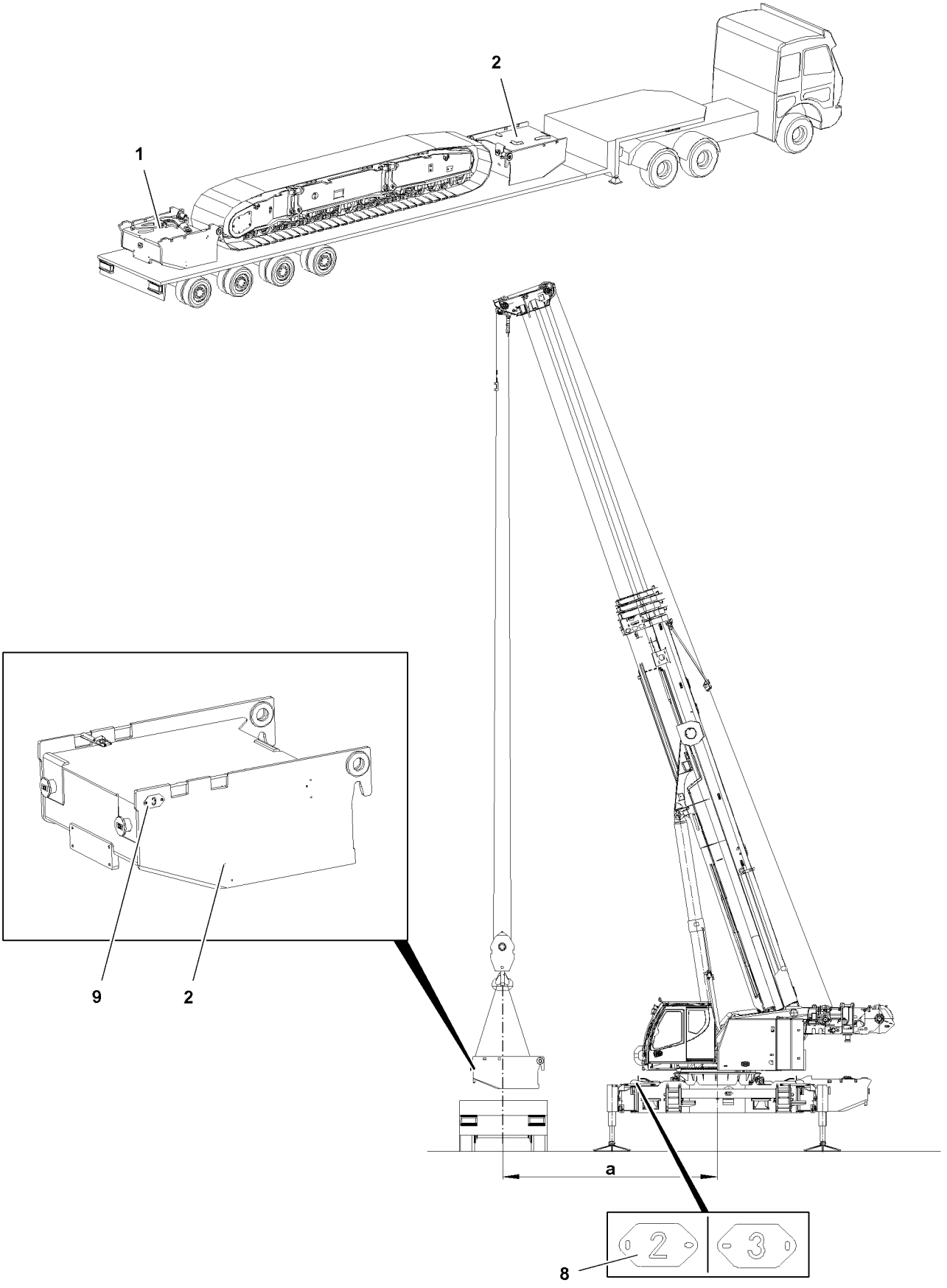

B117544

4 Disassembling the central ballast

WARNING
Danger of falling!
During assembly and disassembly, personnel must be secured with appropriate aids to prevent them from falling! If this is not observed, assembly personnel can fall and suffer life-threatening or fatal injuries!
- ▶ Any work, where there is a danger of falling, must be carried out with suitable aids (for example: lifting platforms, scaffoldings, ladders, auxiliary crane)!
- ▶ If the work can neither be carried out with such aids nor from the ground, then the assembly personnel must secure themselves with approved catch systems to avoid falling, see chapter 2.04 of the operating instruction!
- ▶ If railings are present on the crane components, then they must be brought into the corresponding position and secured for assembly / disassembly work!
- ▶ Step on aids and fall protection equipment only with clean shoes!
- ▶ Keep aids and fall protection equipment clean and free from snow and ice!
- ▶ During all assembly and disassembly work, maintenance work and inspections, travel or crane operation is prohibited!

WARNING
Danger of impact / crushing!
When installing / removing counterweight components with the auxiliary crane, crane components can start to swing back and forth!
When lifting / lowering and positioning crane components, there is an increased danger of impacts / crushing!
Personnel can be caught and severely injured or killed!
- ▶ Make sure that personnel cannot be caught by crane components!
- ▶ When working in danger zones: Use aids to protect limbs!
- ▶ Guide crane components with suitable aids to minimize oscillation!

WARNING
Falling crane components!
At assembly, the crane components can fall down!
Personnel can be severely injured or killed!
- ▶ Make sure that no persons or objects are within the danger zone!

WARNING
The crane can topple over!
If the central ballast is installed / removed, the set up configuration of the crane changes.
If changes are made on the central ballast, no central ballast may be taken into account as set up configuration of the crane when doing so.
- ▶ Make sure that the LICCON overload protection is set to a set up configuration without central ballast when making changes on the central ballast.
- ▶ Observe and adhere to the values in the load chart for installation of the central ballast.
- ▶ Lift or place down the central ballast block in permissible spacing **a**, see load chart.

Note

▶ When the crawler carriers are **not** removed: Disassemble the crawler carrier, see Crane operating instructions, chapter 3.01.

Make sure that the following prerequisites are met:

– The crawler carriers are removed.
– The crane is aligned in horizontal direction.
– The crane is positioned on a level and load-bearing surface.
– The crane is supported on base 6.0 m x 4.4 m.
– The support cylinders are extended.
– The LICCON overload protection is set:
  - Support base 4.4 m on supports
  - Central ballast 0 t
  - Counterweight 0 t
  - Without auxiliary boom / accessory
  - Slewing range
– The crane is operational.

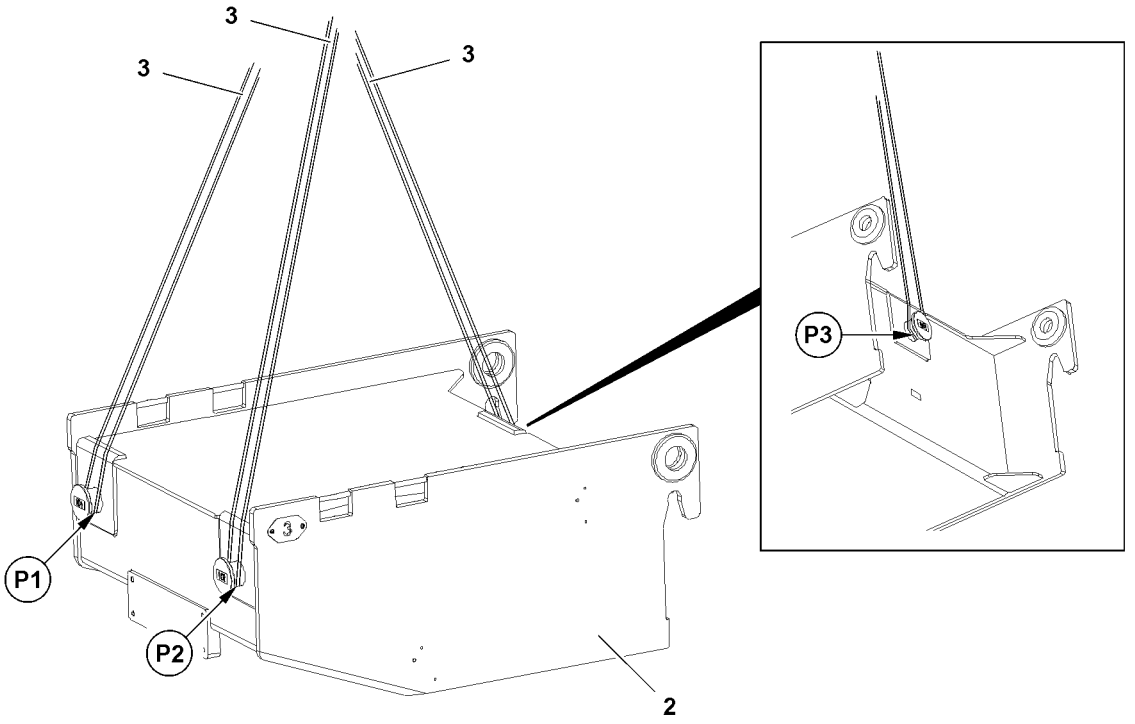

B117543

Fastening points central ballast block

4.1 Fastening the central ballast blocks

WARNING
Improperly fastened central ballast block!
An improperly fastened central ballast block can slip and fall down when lifting or swinging it!
Personnel can be severely injured or killed!
- ▶ Before lifting, make sure that the central ballast block is properly fastened!
- ▶ Use only approved and suitable fastening equipment **3**!
- ▶ Always keep sufficient distance to the suspended central ballast block!
- ▶ Standing under a raised central ballast block is **prohibited**!
- ▶ Carefully initiate all crane movements with attached central ballast block extremely sensitively and initiate slow down with utmost caution!

WARNING
Swinging central ballast block!
If the fastening equipment is not positioned in the center over the fastening points of the central ballast block **2**, then the central ballast block **2** can start to swing after lifting and fall down!
This could result in serious accidents!
Personnel can be severely injured or killed!
- ▶ Make sure that the fastening equipment **3** is centered over the fastening points of the central ballast block **2**!

Note
- ▶ The central ballast blocks are marked with numbers.
- ▶ Make sure that the numbers on the central ballast block match the numbers on the pin points on the crawler center section.

▶ Fasten the central ballast block **2** on point **P1**, point **P2** and point **P3**, see illustration.

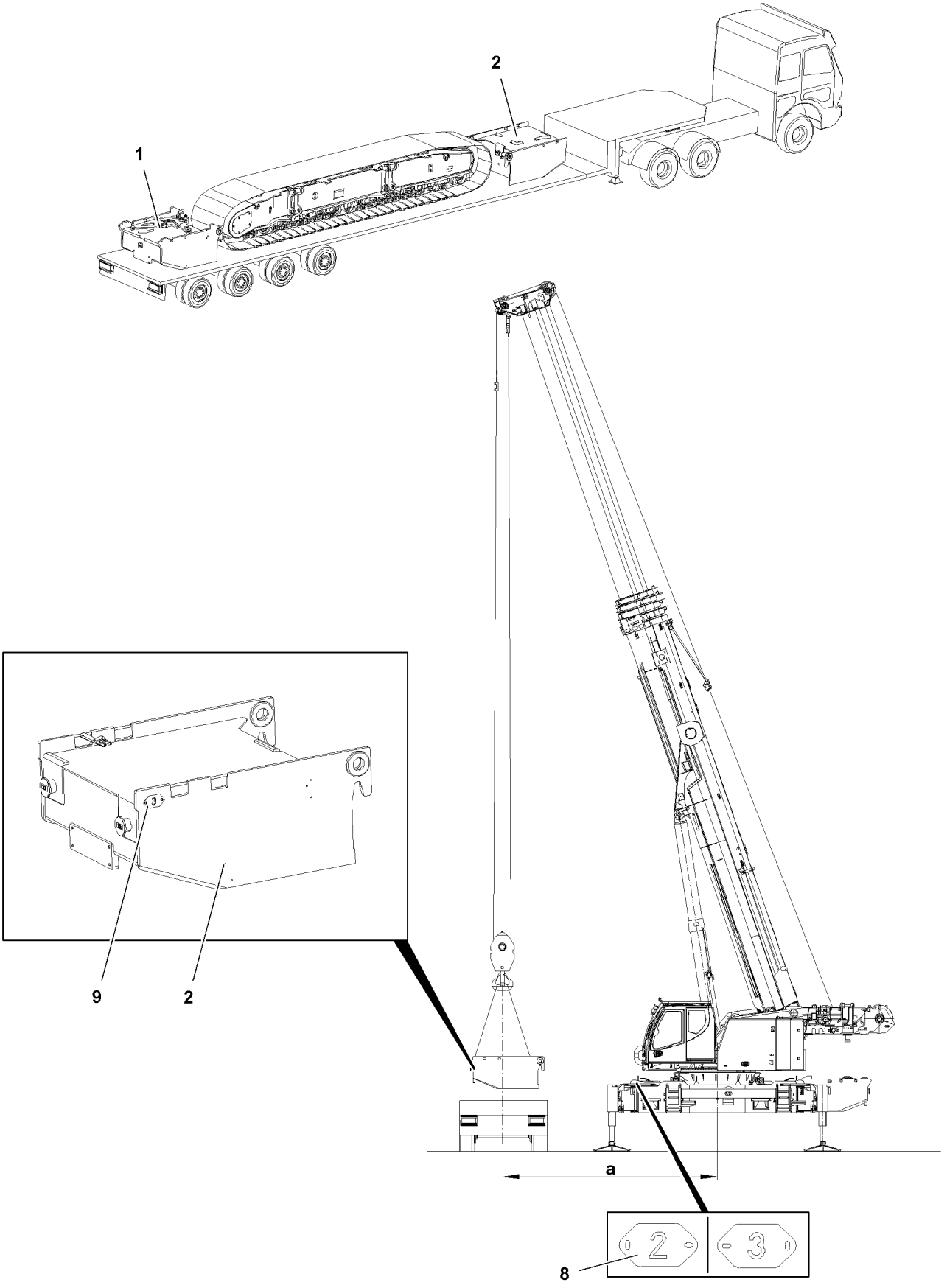

B117544

4.2 Removing the central ballast block on the front

Note

- ▶ “Front” on the central ballast block and on the crawler center section is marked with the number **2** and number **3**.
- ▶ Positions of numbers, see tag **8** and tag **9**.

- ▶ Fasten the central ballast block **2**.
- ▶ Lift the central ballast block **2** until the fastening equipment is tensioned.

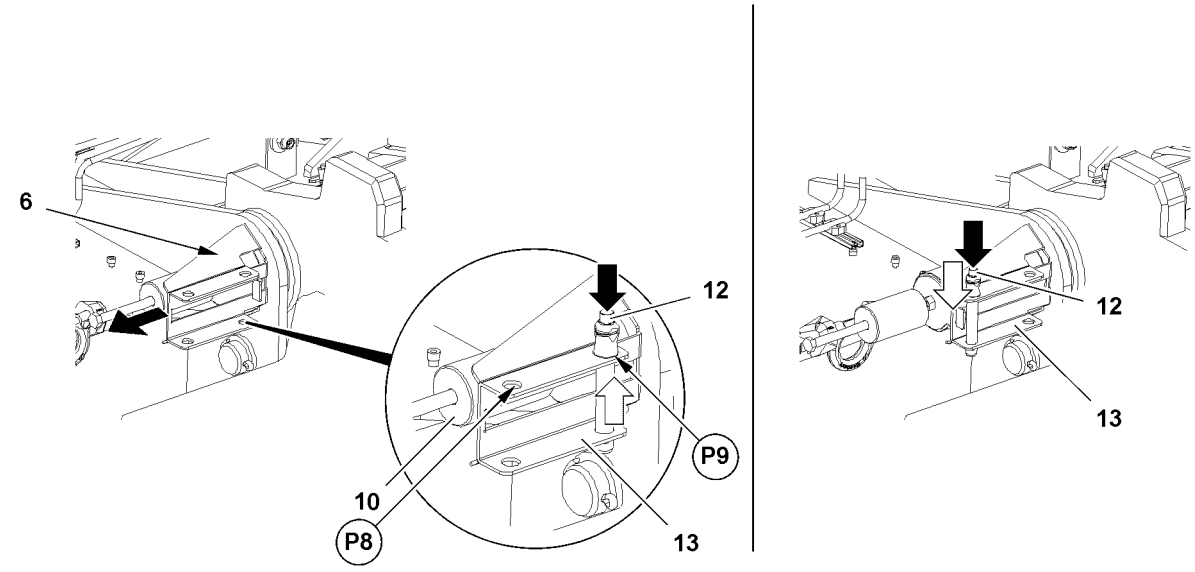

B117549

Release, unpin and secure the pin.

- ▶ Release the pin **6**: Actuate the ball locking pin **12** and unpin on point **P9** from the retainer **13**.
- ▶ Unpin the pin **6**: Unpin the pin **6** with the mechanical pin pulling device **10**.
- ▶ Secure the pin **6**: Actuate the ball locking pin **12** and insert on point **P8** in the retainer **13**.

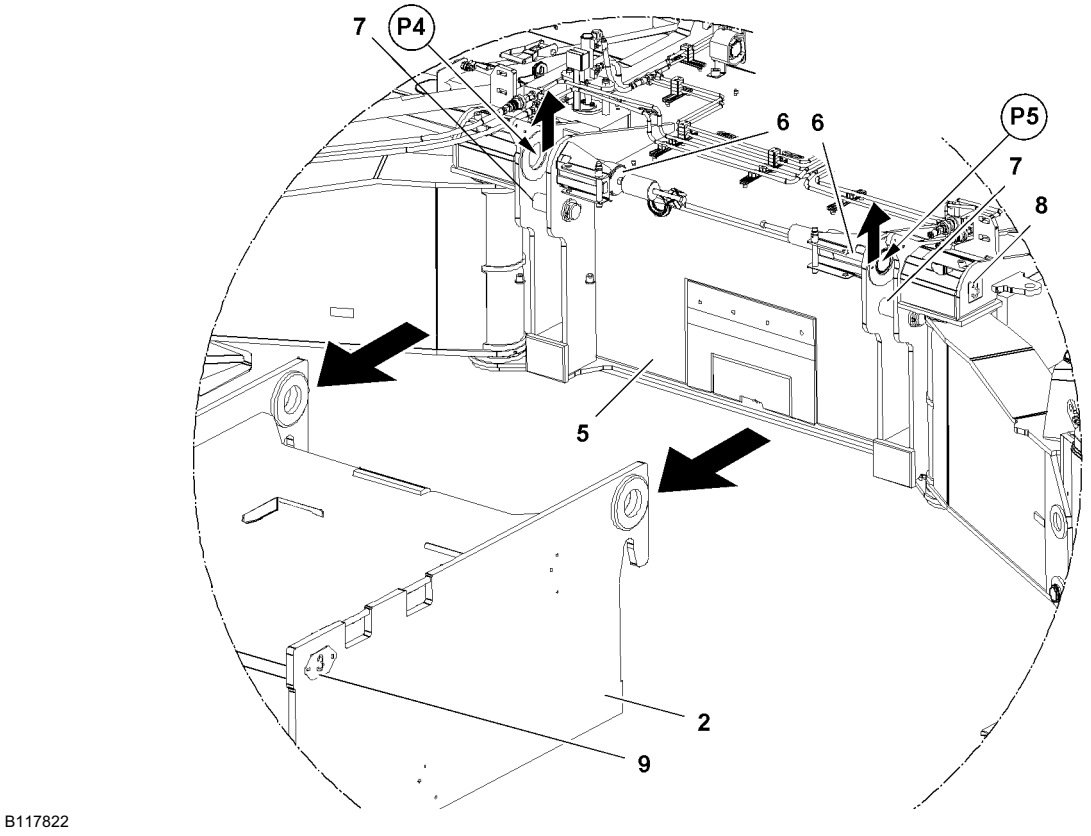

Central ballast block, rear: Hook and unpin points

- ▶ Make sure that the pins **6** on point **P4** and on point **P5** are unpinned.
- ▶ Lift the central ballast block **2** until the central ballast block **2** is completely unhooked on pin **7**.
- ▶ Swing the central ballast block **2** out and place it on the transport vehicle.
- ▶ Remove the fastening equipment.

blank page!

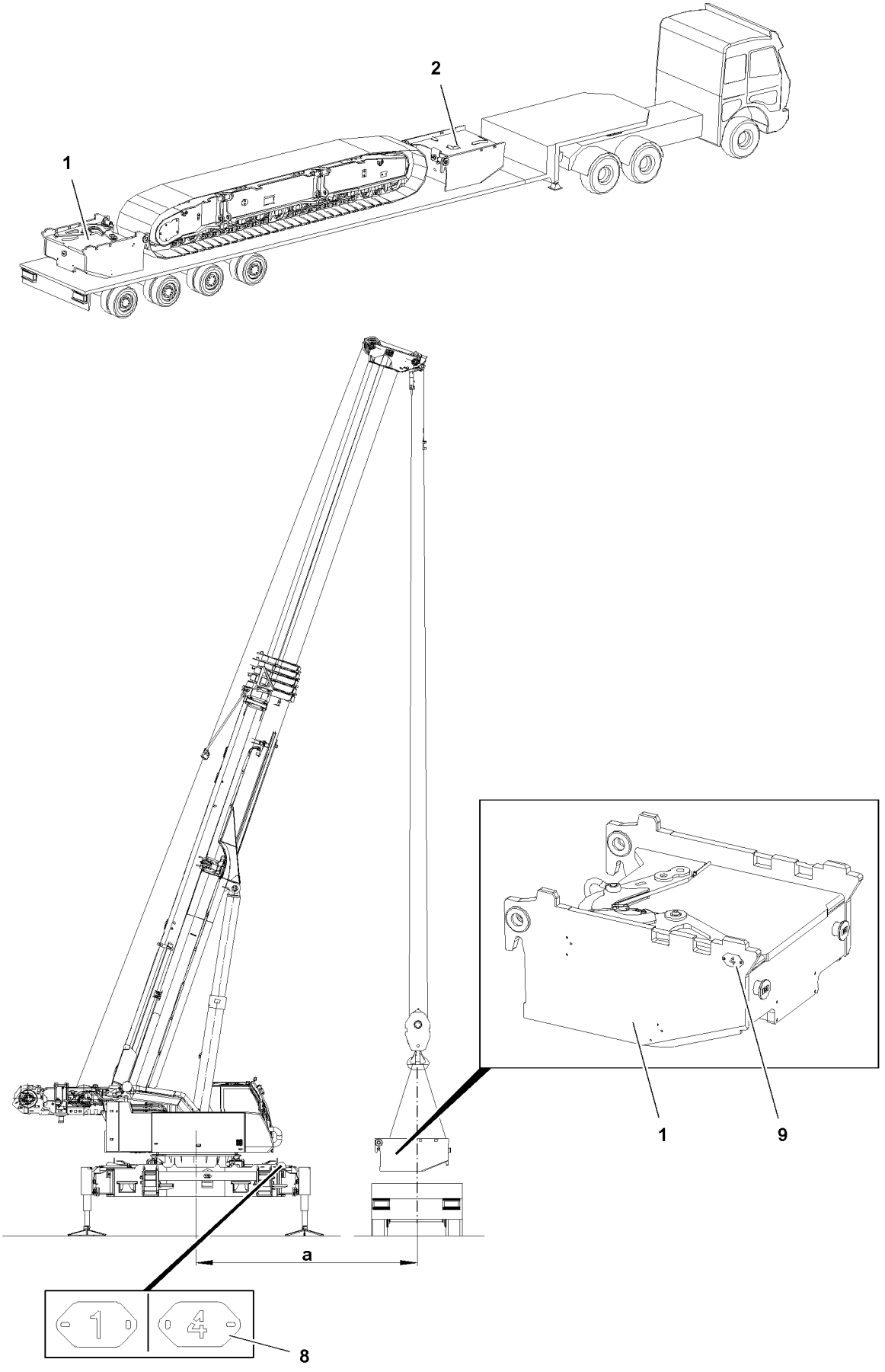

B117541

4.3 Removing the central ballast block on the rear

Note
- ▶ “Rear” on the central ballast block and on the crawler center section is marked with the number **1** and number **4**.
- ▶ Positions of numbers, see tag **8** and tag **9**.

- ▶ Fasten the central ballast block **1**.
- ▶ Lift the central ballast block **1** until the fastening equipment is tensioned.

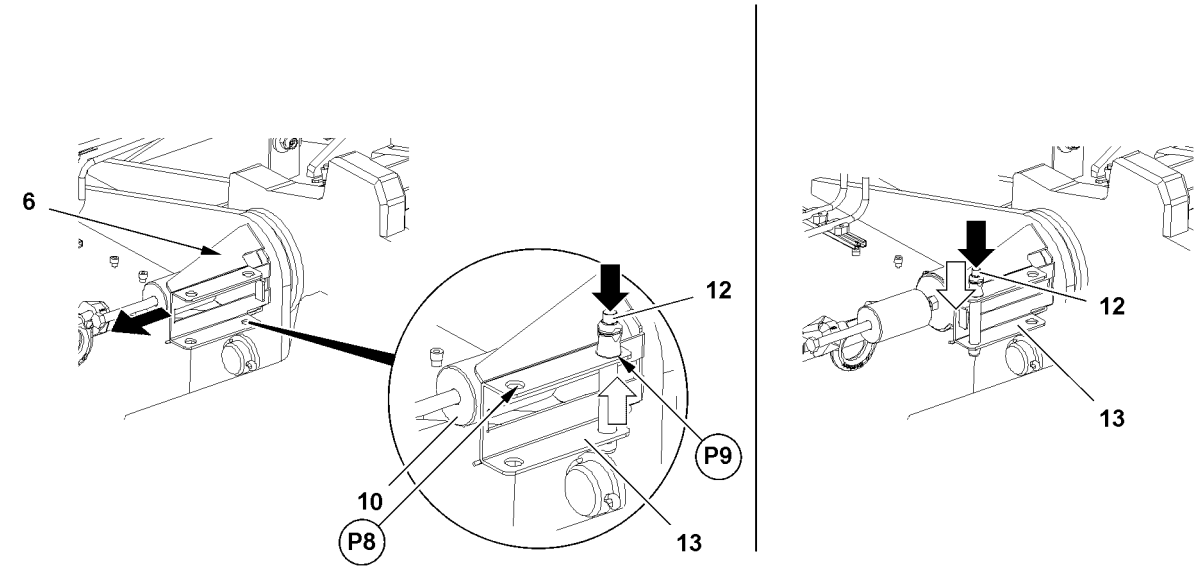

B117549

Release, unpin and secure the pin.

- ▶ Release the pin **6**: Actuate the ball locking pin **12** and unpin on point **P9** from the retainer **13**.
- ▶ Unpin the pin **6**: Unpin the pin **6** with the mechanical pin pulling device **10**.
- ▶ Secure the pin **6**: Actuate the ball locking pin **12** and insert on point **P8** in the retainer **13**.
- ▶ Make sure that the pins on the pinning devices are unpinned.
- ▶ Unhook the central ballast block the same way on the crawler center section and described in section “Removing the central ballast block on the front”.
- ▶ Lift the central ballast block and unhook on the crawler center section.
- ▶ Swing the central ballast block out and place it on the transport vehicle.
- ▶ Remove the fastening equipment.

Result:
- – The central ballast blocks are removed.

4.4 Loading the crane onto the transport vehicle

Note
- ▶ Load the crane on the transport vehicle, see Crane operating instructions, chapter 3.01.

4 Operation of crane superstructure

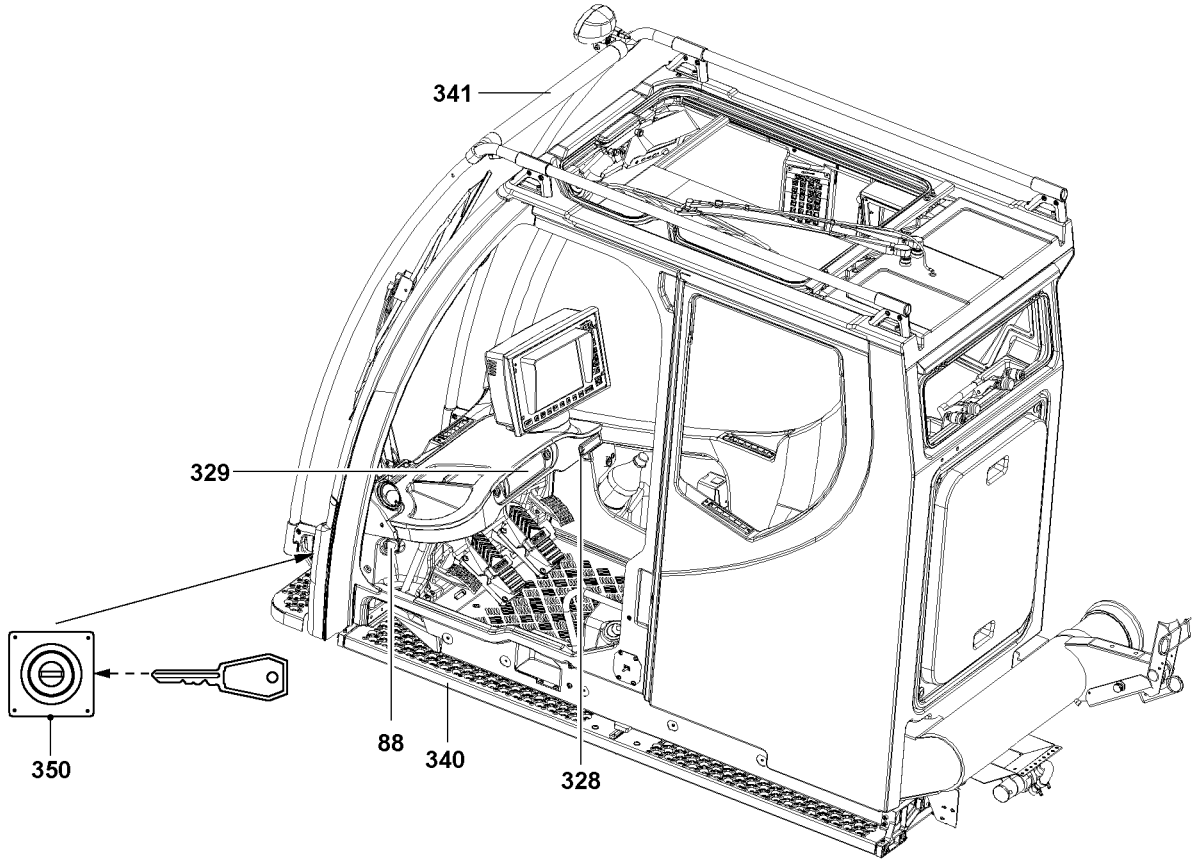
341
329
350
88
340
328

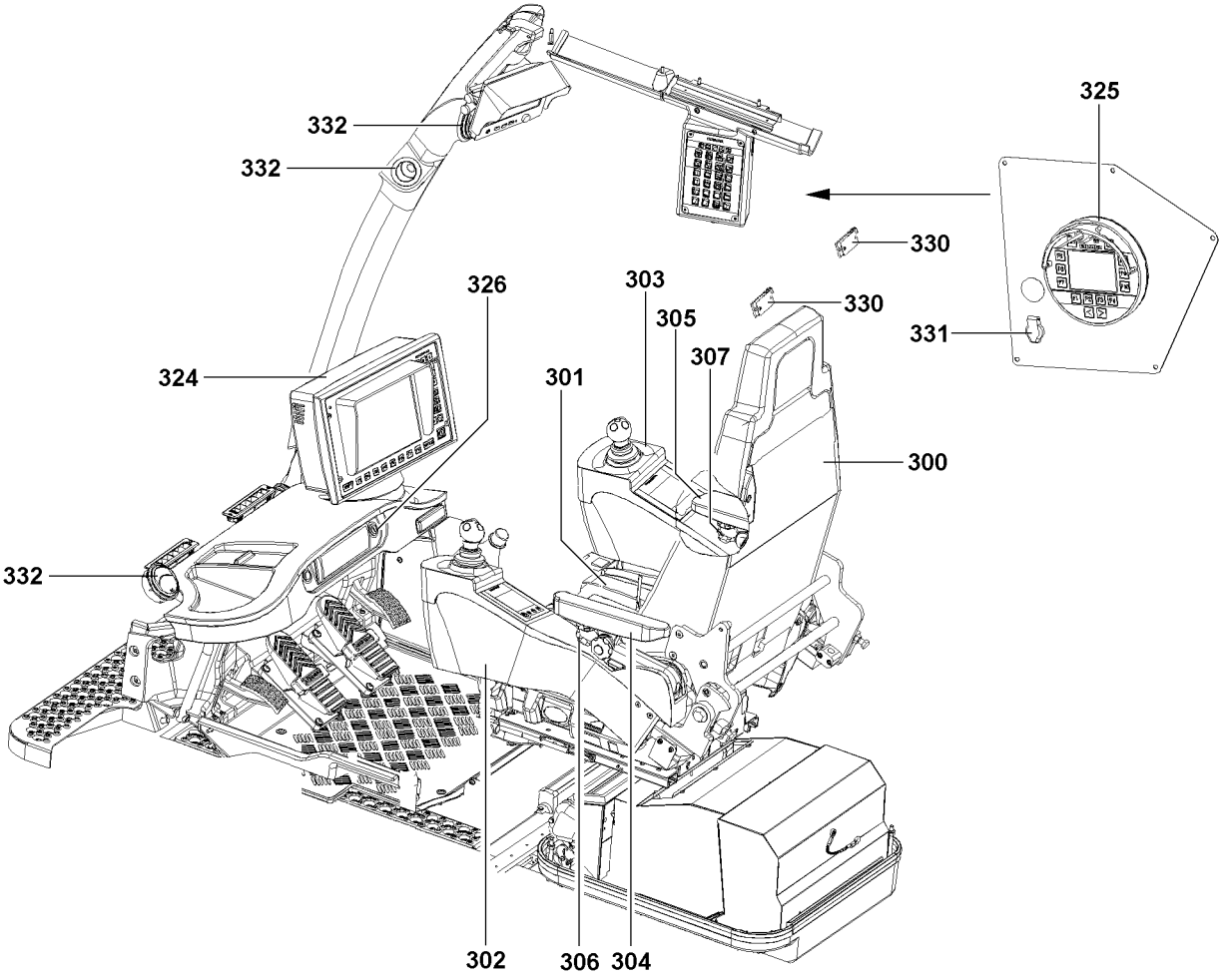
332
332
325
330
330
331
326
303
305
307
324
301
300
332
302
306
304

B117627

1 Operating and control instruments

1.1 Operating elements on control platform

300 Crane operator's seat
301 Seat contact button
302 Left console
- Master switch 2 (MS2)
- Touch display

303 Right console
- Master switch 1 (MS1)
- Touch display

304 Left armrest
305 Right armrest
306 Left notch lever
307 Right notch lever

1.1.1 Operating elements for seat adjustment

Note

▶ For a detailed description of the seat adjustment controls, see Crane operator's instructions, chapter 4.03.

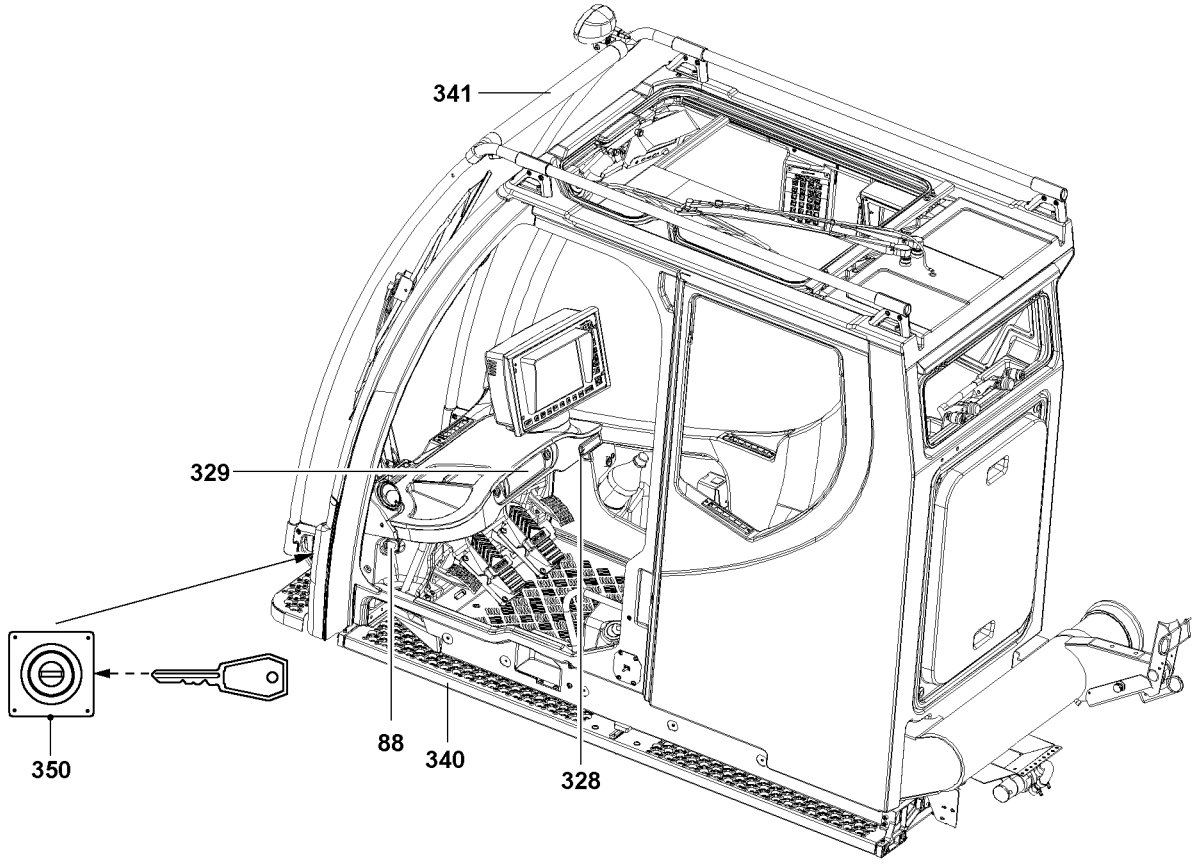
341
329
350
88
340
328

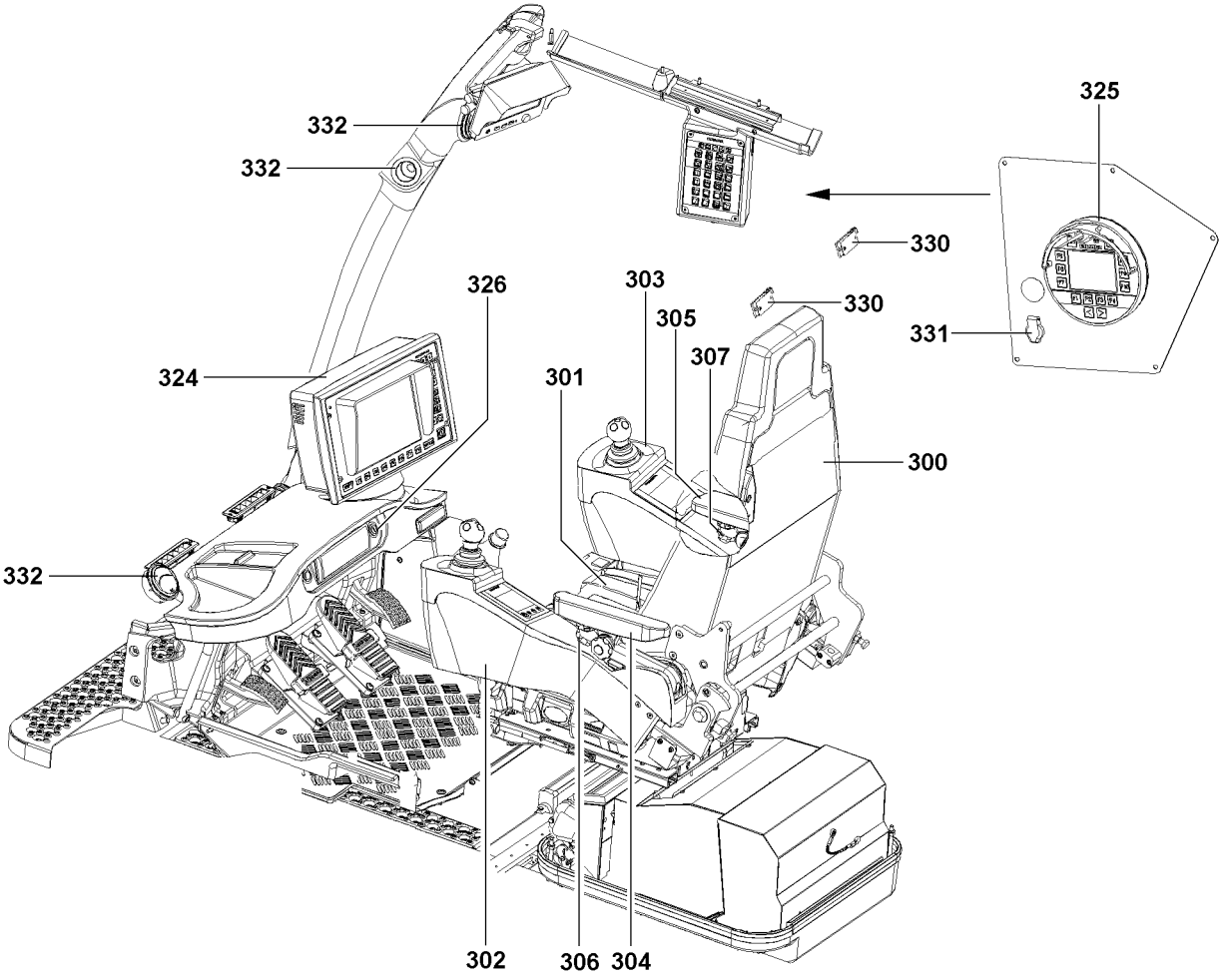
332
332
325
330
330
331
326
303
305
307
324
301
300
332
302
306
304

B117627

1.2 Operating elements, General

324	LICCON monitor	• Display of crane data required for **Crane operation**, see Crane operating instructions, chapter 4.02
325	Charging cradle	• Bluetooth™ Terminal (BTT) **Note:** For a detailed description of the “Bluetooth™ Terminal”, see Crane operating instructions, chapter 5.31.
326	Ignition switch	**Position:** • 0 = Ignition key can be pulled off • 1 = Ignition on • 2 = Start the engine
327	Cigarette lighter	
328	Drink holder	
329	Radio	
330	LED interior lights	• Located above the crane operator's seat • Dimmable
331	Integrated socket 24 V	
332	Outlet nozzles	• For heat / ventilation / Climate control system*
333	Reservoir	• Windshield washer fluid
340	Footboard / step	• **Note:** Refer to section “Operating elements on the operating and control unit (BKE)”.
341	Warning light rod	• LICCON utilization display: • Green: “**Safe range** ” • Yellow: Above a utilization of 90 %, the **“Safe range”** is exceeded. • Red: Above a utilization of 100 %, the **“DANGER ZONE”** is reached! **Note:** Once 100 % utilization is reached, the red warning light lights up and an **“LMB-Stop”** occurs.
350	EMERGENCY STOP switch	• Crane operator's cab (external)

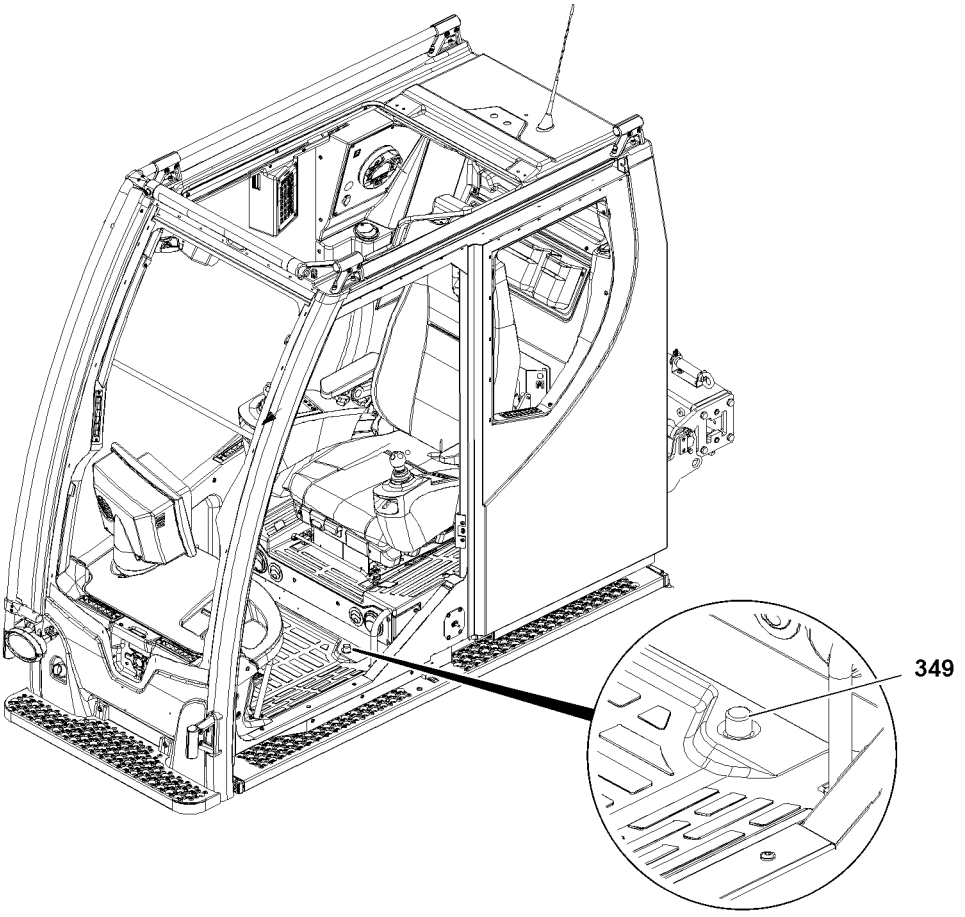

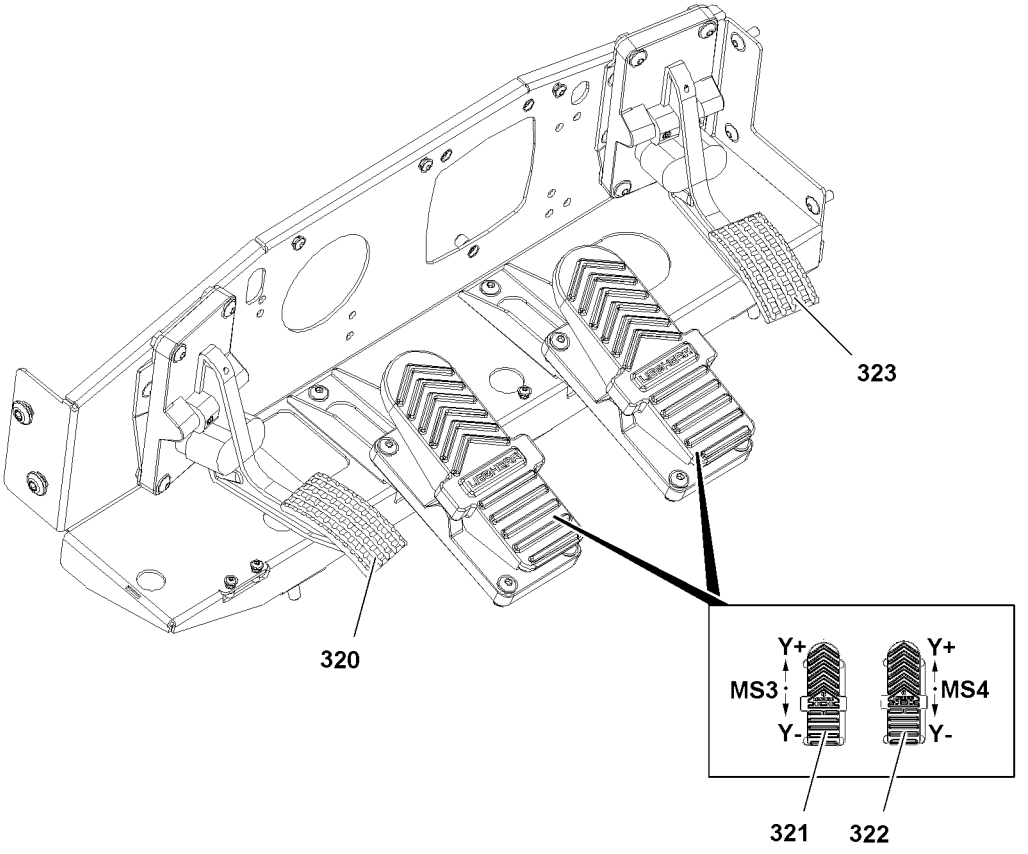

B117626

1.2.1 Operating elements pedals

320	Pedal	• Slewing gear brake
321	Foot rocker left (MS 3)	**Drive left track:** • Move the foot rocker **321** in direction Y+ (forward): The left track drives forward. • Move the foot rocker **321** in direction Y- (backward): The left track drives backward. **Telescoping*:** • Move the foot rocker **321** in direction Y+ (forward): The telescopic boom is telescoped out. • Move the foot rocker **321** in direction Y- (backward): The telescopic boom is telescoped in.
322	Foot rocker right (MS 4)	**Drive right track:** • Move the foot rocker **322** in direction Y+ (forward): The right track drives forward. • Move the foot rocker **322** in direction Y- (backward): The right track drives backward.
323	Pedal	• Engine regulation
349	Foot button	• Slewing gear change over to freewheeling

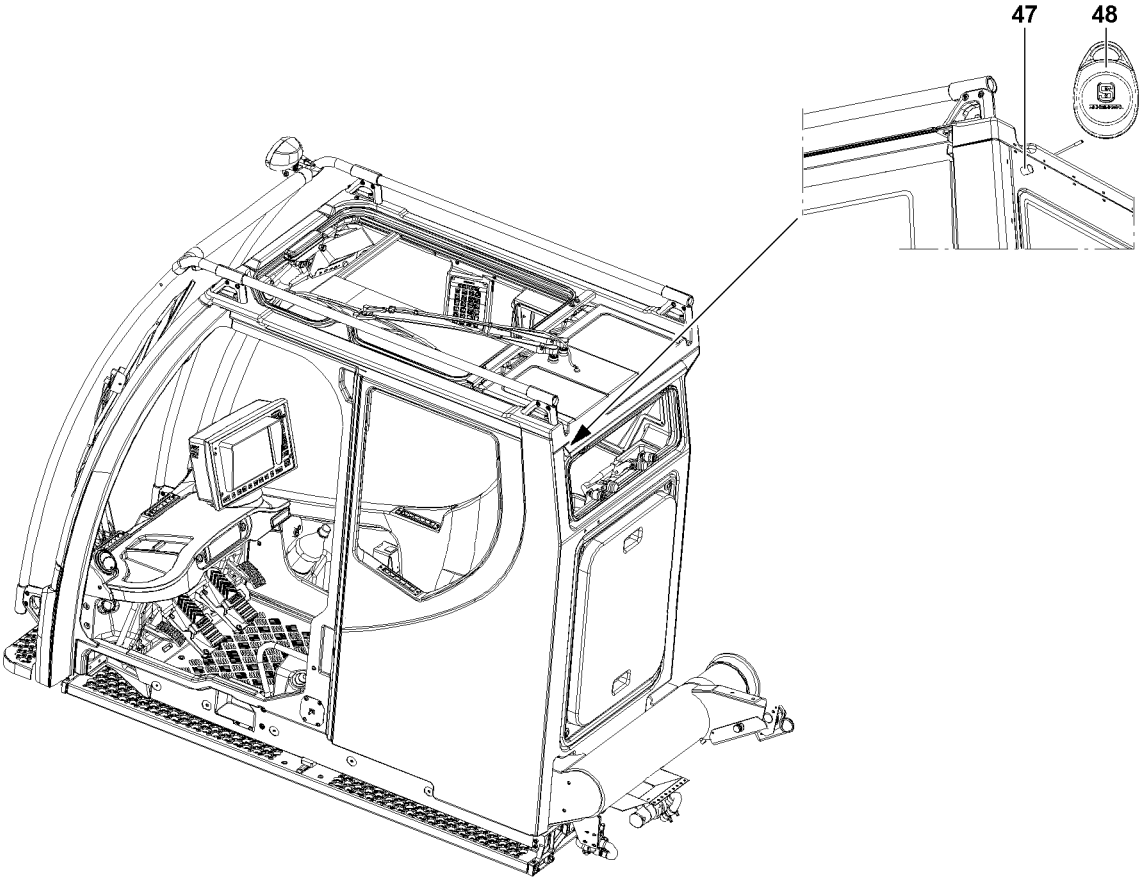

B117628

1.3 Operating elements LMB emergency operation

WARNING
Increased danger of accident during emergency operation of the LICCON overload protection!
In emergency operation, the crane movements are no longer monitored by the LICCON overload protection!

- ▶ If emergency operation of the LICCON overload protection is required, observe Crane operating instructions, chapter 7.15!
- ▶ The emergency operation may only be activated by persons who are aware of the consequences of their actions!
- ▶ A shut off by the LICCON overload protection may not be circumvented by the emergency operation!
- ▶ If normal “crane operation” is possible, then the emergency operation may not be activated!
- ▶ All crane movements must be carried out with extreme caution and anticipatorily!

1.3.1 LMB emergency operation for crane control “EN 13000:2010 active”

Applies only apply for cranes with crane control “EN 13000:2010 active”.
The emergency operation for the LICCON overload protection is activated by the sensor **47** via the transponder **48**.

47 Sensor
48 Transponder

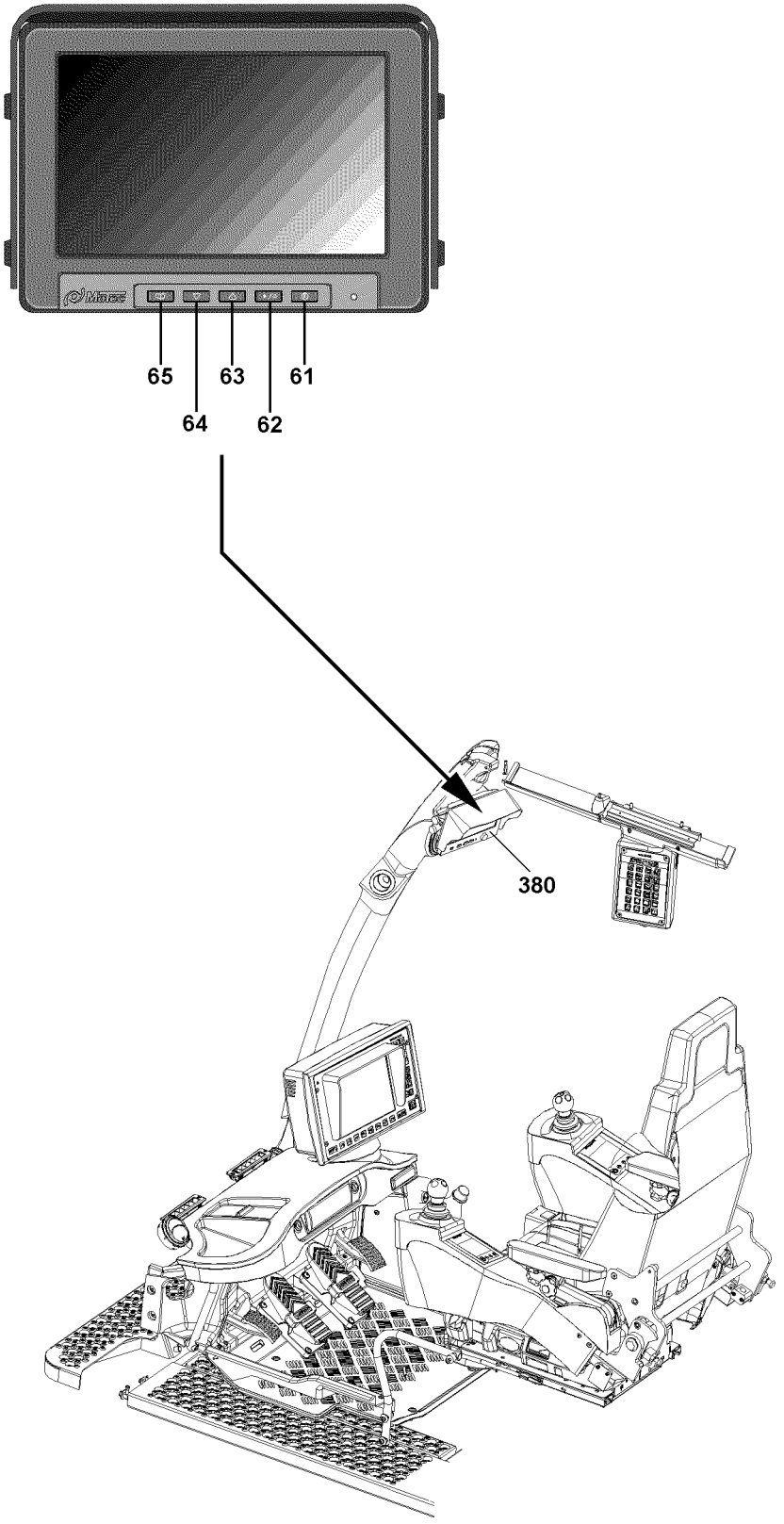

B117629

2 Operating elements on camera - monitor*

380	TFT monitor	
61	Button	• Monitor On / Off
62	Button “Change between day / night”	• Press the “Change between day / night” button to match the brightness of the display to the time of day.
63	Button “Plus”	• By pressing the “Plus” button, the value of a setting is increased.
64	Button “Minus”	• By pressing the “Minus” button, the value of a setting is reduced.
65	Button menu	• By pressing the “Menu” button, menus for various adjustments are called up and changed over, in the following order: – Color: Adjustment of color saturation – Brightness: Brightness adjustment – Contrast: Contrast adjustment – Volume: Volume adjustment – Language: Language adjustment (English, French, German, Spanish, Italian, Portuguese) – Standard: Reset to default settings

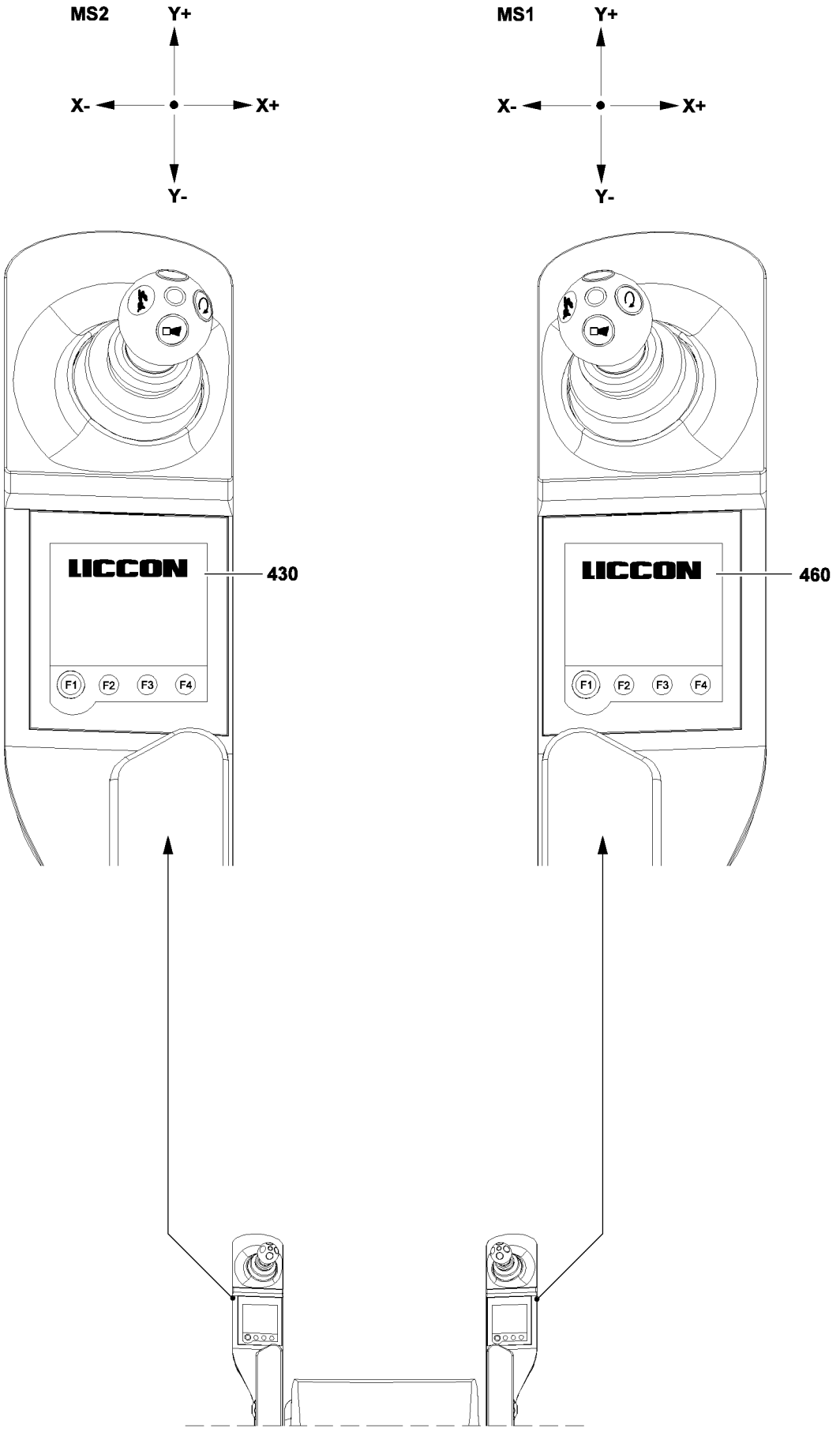

B105575

3 Operating elements on control consoles

3.1 Touch displays

The touch displays are combined display and operating elements. The touch displays are operated using the row of function keys “F1” to “F4” and by direct “touch” (fingertip) on the corresponding display icons.

Note

- ▶ The illustrations or icons in the touch displays are only examples.
- ▶ They may differ from the crane!
- ▶ If the function key **F1** is continuously pressed, the system shifts continuously between the existing menu points.

Via the left touch display **430** and the right touch display **460**, you can call up various menus. Various crane functions can be selected or preselected, turned on or off, or directly activated in these menus.

Note

- ▶ In low temperatures it is possible that the touch displays initially change to the menu items delayed and that the touch functions remain deactivated for that time.
- ▶ Wait a few minutes after ignition “ON” until the menu items are shown on the touch display.

F Function keys	• The function of individual function keys depends on the menu and can vary, depending on the menu selected. Therefore the individual menus will now be described in more detail. The icons on the touch display above the row of function keys with a single border indicate the functions that will be triggered by activating the function keys below them.
460 Right touch display	• Menu “Master switch configuration” • Menu “Support” • Menu “Track width adjustment”
430 Left touch display	• Menu “Master switch configuration” • Menu “Working floodlight” • Menu “Climate control settings” • Menu “Hydraulic oil preheating / telescopic boom disassembly”

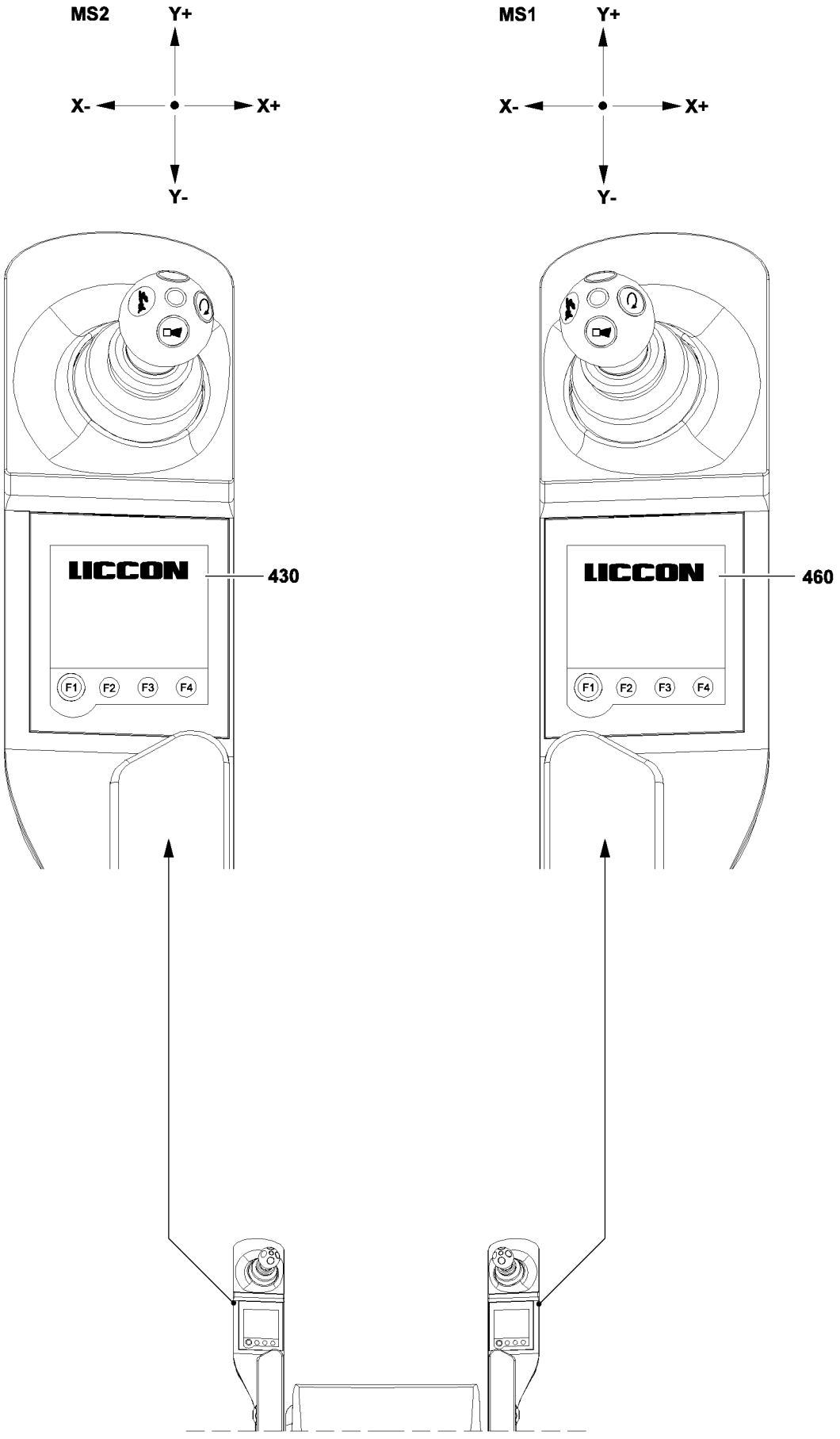

B105575

Touch functions

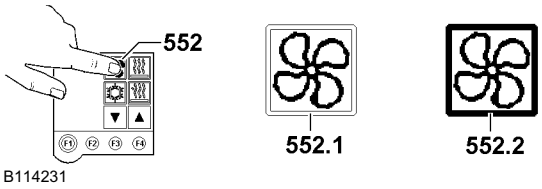

Note
Select / deselect icons in the touch display.
Touch functions are identified by the double border (empty frame) of the touch display icons. The function in the icon is selected / deselected with the press of a finger (“touch)” on the icon.
Example on “Fan / blower” icon **552**:
- ▶ “Fan / blower” icon **552.1**: Fan / blower deselected (not active), double border (empty frame) is visible.
- ▶ “Fan / blower” icon **552.2**: Fan / blower selected (active), double border is filled (frame filled).

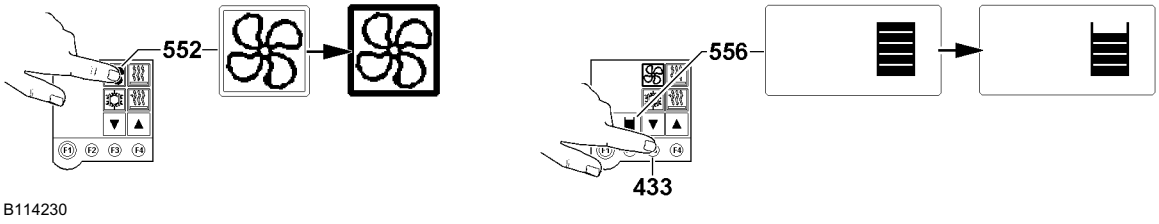

Note
Actuate the function via the touch display.
As an example, the blower stage of the heater is reduced:
- ▶ Select the “Fan / blower” icon **552** in the touch display by “touching”: The double frame area is filled out, the function “Fan / blower” is now active.
- ▶ Press function key F3 **433**: The blower stage is reduced, the status display **556** is updated accordingly.

3.1.1 Starting up the LICCON Computer system and the touch displays

After turn on and correct boot up of the LICCON computer system, a static crane screen appears briefly on the left touch display **430** and the right touch display **460**. From here the system automatically switches to the master switch assignment for the relevant master switch, MS1 (right) or MS2 (left).
The touch display always displays the master switch assignment that was set or “active” before the LICCON computer system was turned off.

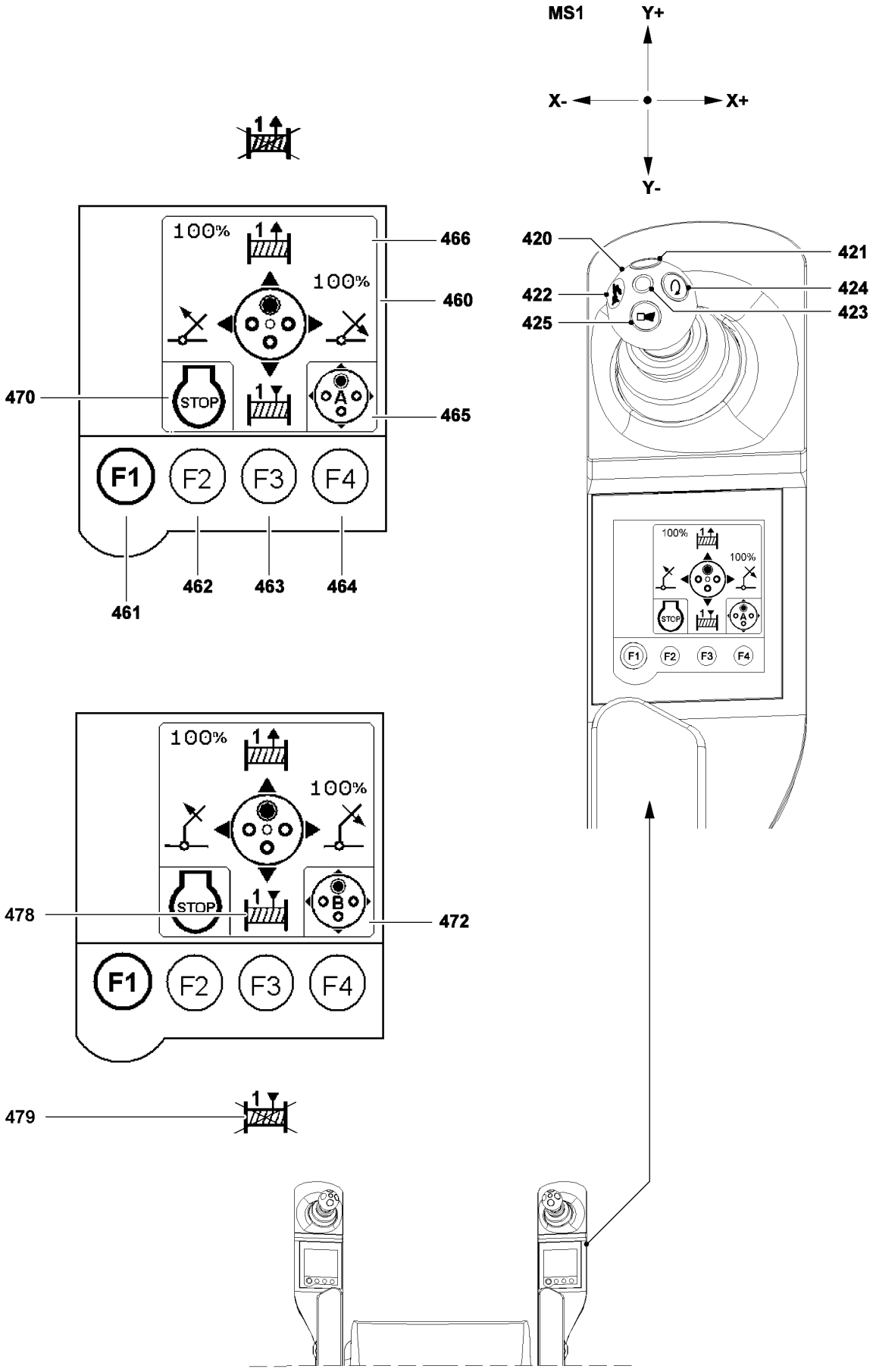
MS1
Y+
X-
X+
Y-
100%
100%
STOP
A
F1
F2
F3
F4
466
460
470
465
461
462
463
464
420
421
422
424
423
425
478
472
479
B
B118096

3.2 Master switch assignment for machines with one winch

3.2.1 The “Master switch configuration” menu (right touch display)

The function key line

461 Function key F1	• Change to next menu
462 Function key F2	• Engine STOP
463 Function key F3	• Winch changeover - Winch 1 Activate / deactivate the winch **Conditions:** Neutral position master switch 1 **420** (MS1) right **Danger of accident!** **Never** activate / deactivate winch 1 while a crane movement is being actuated. The winch status (winch activated / deactivated) can be seen on the touch display: • Winch 1 released **478** • Winch 1 blocked **479**
464 Function key F4	• Change master switch assignment from “A” to “B” **Conditions:** Neutral position master switch 1 **420** (MS1) right An operating mode or configuration with auxiliary boom must be selected and displayed on the LICCON computer system. **Note** If no configuration with auxiliary boom has been set and confirmed, the “luffing auxiliary boom” master switch assignment is **not** available.

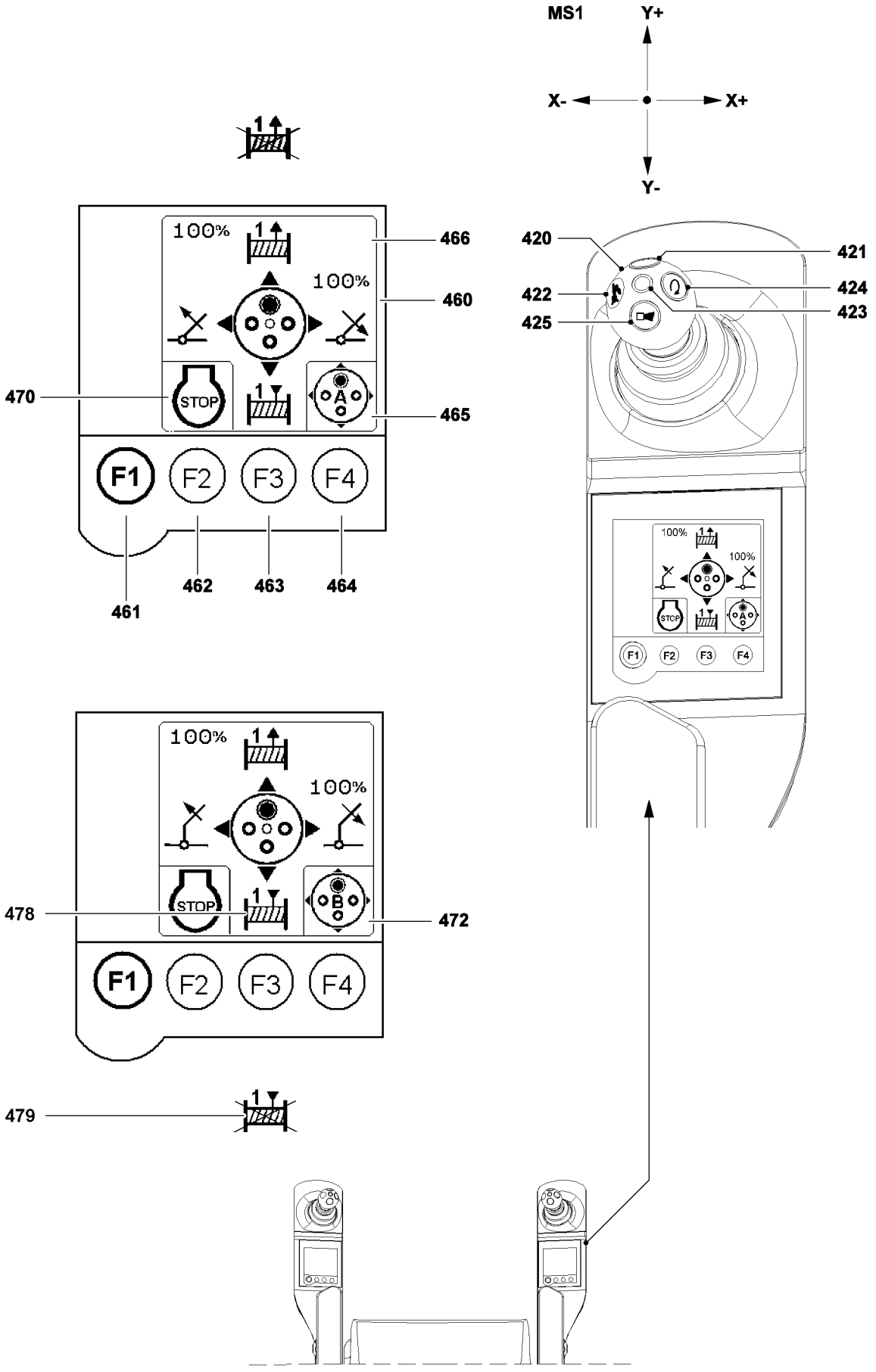
MS1
Y+
X-
X+
Y-
100%
100%
STOP
A
F1
F2
F3
F4
466
460
470
465
461
462
463
464
420
421
422
424
423
425
478
472
479
B
B118096

Right master switch assignment

420	Master switch - right (MS 1)	**Hoist gear 1:** • Move the master switch **420** in direction Y+ (forward): Winch 1 spools out and the load is lowered • Move the master switch **420** in direction Y- (backward): Winch 1 spools up and the load is raised **Luffing gear - telescopic boom:** Master switch assignment “A” **465** is active: • Move the master switch **420** in direction X+ (toward the right): Luff the telescopic boom down • Move the master switch **420** in direction X- (toward the left): Luff the telescopic boom up **Luffing auxiliary boom*:** Master switch assignment “B” **472** is active: • Move the master switch **420** in direction X+ (toward the right): Luff the auxiliary boom down. • Move the master switch **420** in direction X- (toward the left): Luff the auxiliary boom up.
421	Button	• Bypass of seat contact button. **Or** if the seat contact button is actuated: Activation of vibration sensor **423**
422	Button	• Adding rapid mode for the hoist gear(s) and luffing up
423	Vibration sensor	• Winch turn sensor, (vibrator) winch 1
424	Button	• Lock of engine regulation of superstructure engine **Note:** Pressing the button **424** will lock the engine regulation in the current position.
425	Button	• Horn

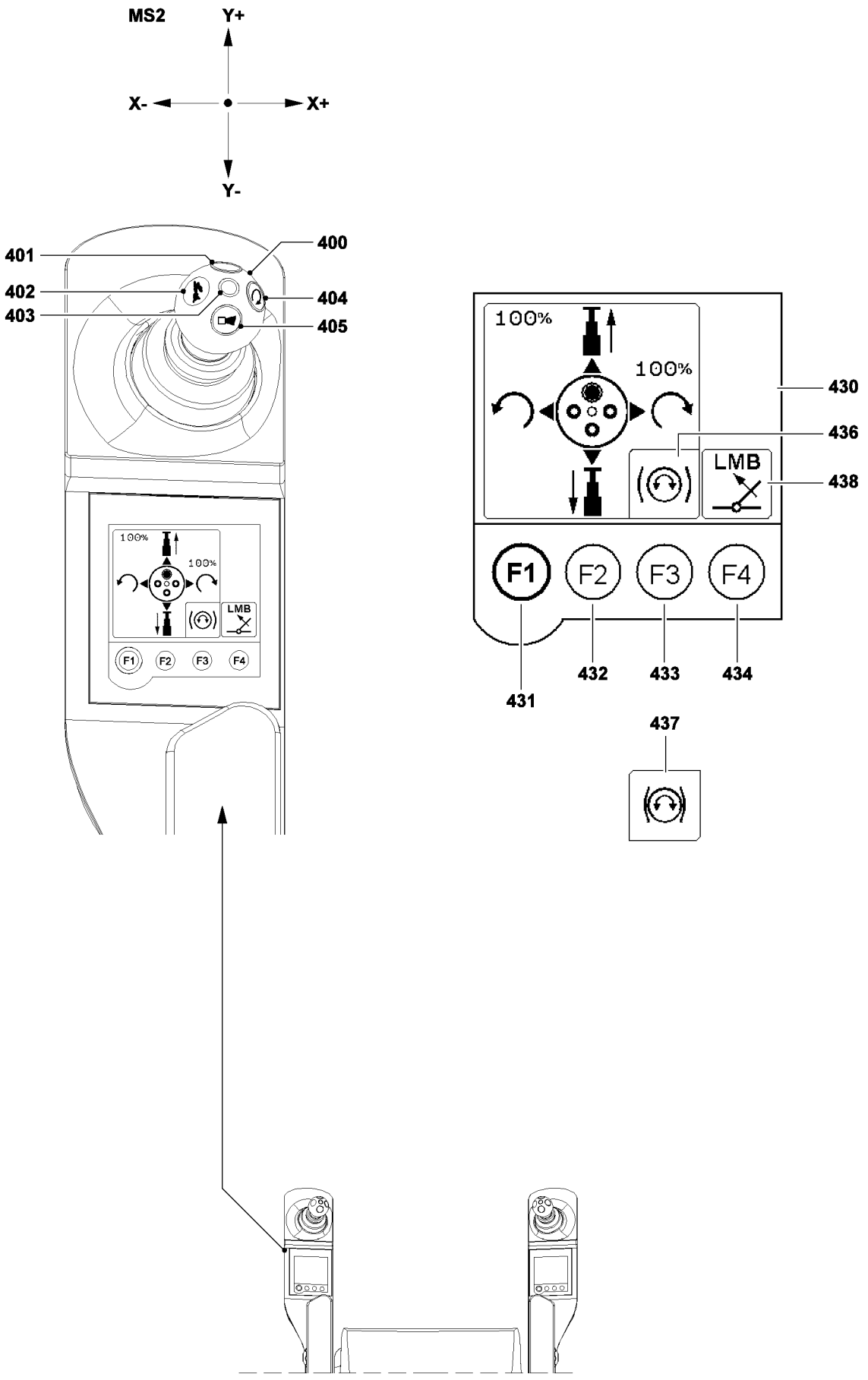
MS2
Y+
X-
X+
Y-
400
401
402
403
404
405
100%
100%
LMB
F1
F2
F3
F4
430
436
438
431
432
433
434
437

B103961

3.2.2 The “Master switch configuration” menu (left touch display)

The function key line

431	Function key F1	• Change to next menu
432	Function key F2	• **No** function

433	Function key F3	• Release / apply the slewing gear brake
		  • Slewing gear brake released **436**
		  • Slewing gear brake applied **437**

434	Function key F4 (touching)	• Exceeding the overload protection (icon **438**), used to luff in with suspended load **Danger:** **The exceedance may only be carried out if the overload was caused by luffing down at freely suspended load and the crane operator is absolutely certain that luffing up the load will take it out of the overload range.**

Left master switch assignment:

400	Master switch left (MS 2)	**Telescoping gear** • Move the master switch **400** in direction Y+ (forward): Telescope out • Move the master switch **400** in direction Y- (backward): Telescope in **Slewing gear:** • Move the master switch **400** in direction X+ (toward the right): Superstructure turns to the right • Move the master switch **400** in direction X- (toward the left): Superstructure turns to the left
401	Button	• Bypass of seat contact button **Or** if the seat contact button is actuated: Activation of vibration sensor **403**
402	Button	• Addition of the rapid gear for winch(es) and luffing up
403	Vibration sensor	• Winch turn sensor, (vibrator) winch 1 or winch 2 **or** turn sensor, (vibrator) slewing gear

404	Button	• Lock of engine regulation of superstructure engine
		Note:
		Pressing the button **404** will lock the engine regulation in the current position.
		• The idling speed can be increased up to the maximum rpm.
		  • Can be “overridden” with the engine regulation (gas pedal)
		  • At continued actuation of the engine regulation (gas pedal), the current rpm is taken over
		  • By pressing the button **404** with the engine regulation (gas pedal) **not actuated**, the manual throttle is cancelled
		  • At locked engine rpm, a **“+”** appears in the “dynamic utilization bar display” (crane operation)

405	Button	• Horn

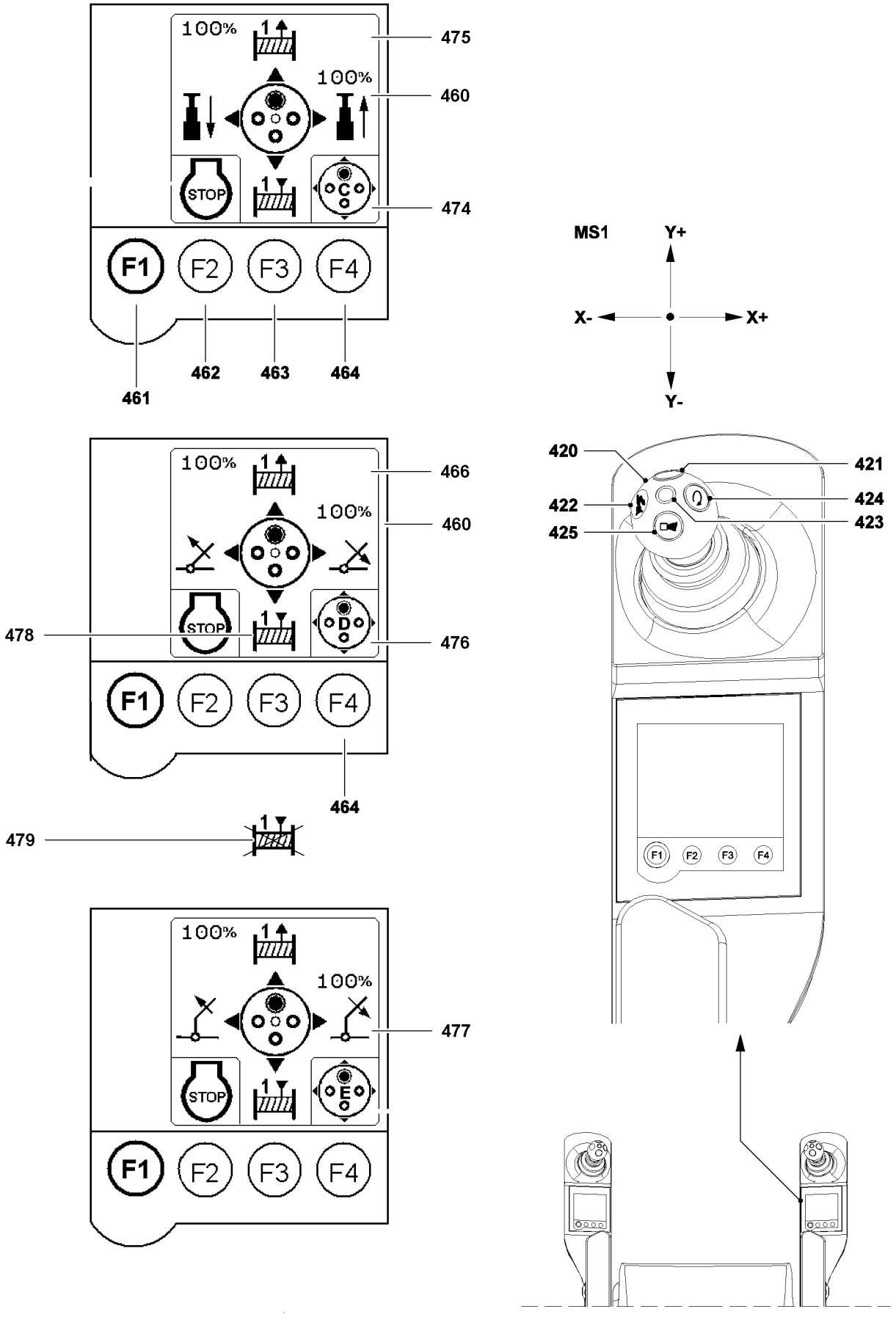
100%
1
100%
STOP
C
F1
F2
F3
F4
475
460
474
461
462
463
464
MS1
Y+
X-
X+
Y-
100%
1
100%
STOP
D
F1
F2
F3
F4
466
460
478
476
464
479
100%
1
100%
STOP
E
F1
F2
F3
F4
477
420
421
422
424
425
423
F1
F2
F3
F4

B118095

3.3 Master switch assignment for machines with two winches

3.3.1 The “Master switch configuration” menu (right touch display)

The function key line

461 Function key F1
- Change to next menu

462 Function key F2
- Engine STOP

Note:
After “Engine STOP”, the engine can be restarted by turning the ignition switch to “position 2”, also see Crane operating instructions, chapter 4.02.

463 Function key F3
- Winch changeover - Winch 1

Activate / deactivate the winch
Conditions:
Neutral position master switch 1 **420** (MS1) right
Crane driving speed = 0 km/h
Danger of accident!
Never activate / deactivate winch 1 while a crane movement is being actuated.
Note:
The winch status (winch activated / deactivated) can be seen on the touch display:
- Winch 1 released **478**
- Winch 1 blocked **479**

464 Function key F4
- Change master switch assignment from “C” to “D” or “E”.

Conditions:
Neutral position master switch 1 **420** (MS1) right
For master switch assignment **E**, an operating mode or configuration with auxiliary boom must be selected and confirmed on the LICCON computer system.
Note
If no configuration with auxiliary boom has been set and confirmed, the “luffing auxiliary boom” master switch assignment is **not** available.

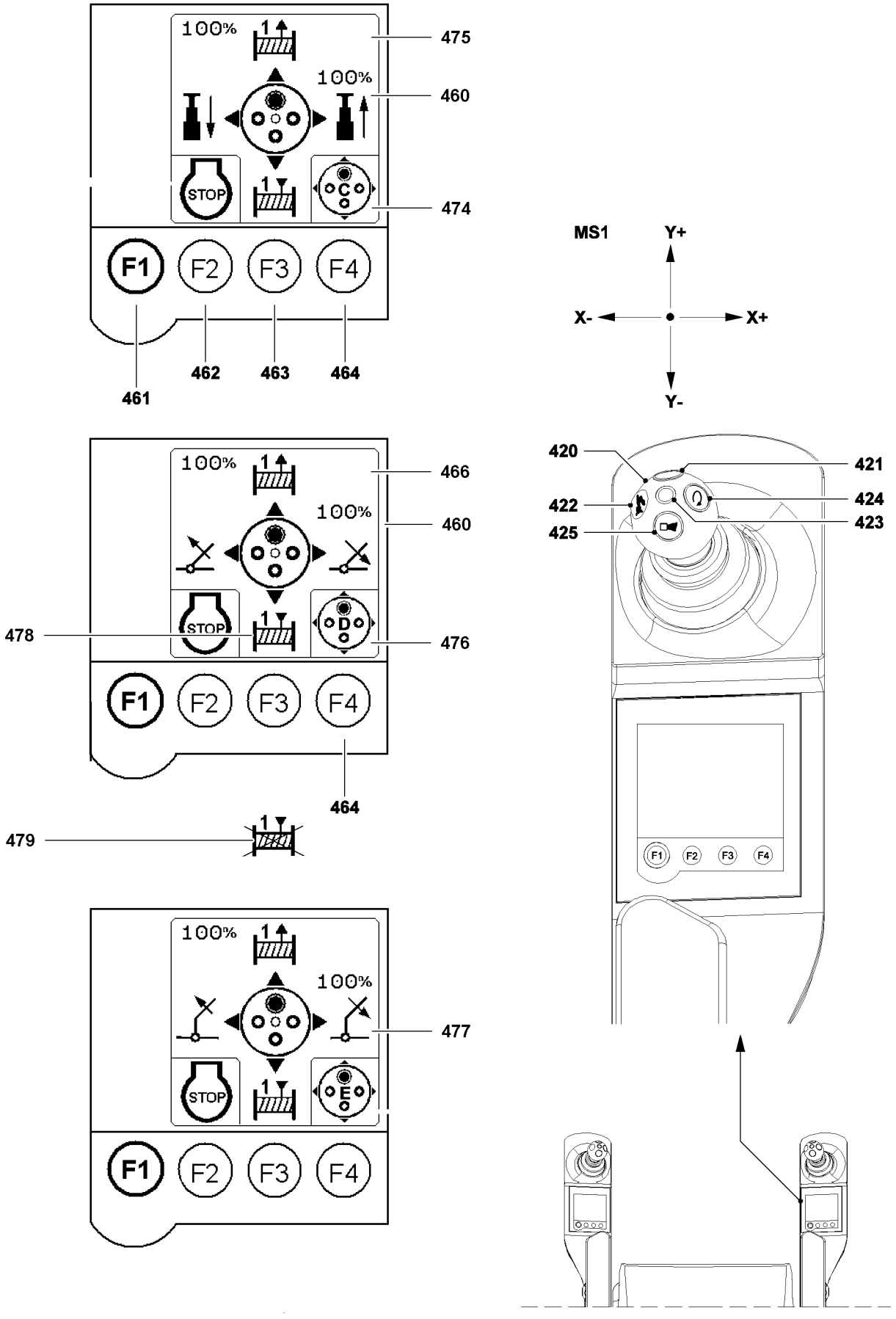
100%
1
100%
STOP
C
F1
F2
F3
F4
475
460
474
461
462
463
464
MS1
Y+
X-
X+
Y-
100%
1
100%
STOP
D
F1
F2
F3
F4
466
460
478
476
464
479
100%
1
100%
STOP
E
F1
F2
F3
F4
477
420
421
422
424
425
423
F1
F2
F3
F4

B118095

Touch functions in the travel operation and Master switch configuration menu

Note

- ▶ To switch between the master switch configurations for one and two winch systems, press function key “F4” **464** for longer than 3 s (continuous actuation) in the “Travel operation and master switch configuration” menu.
- ▶ When the changeover has taken place, a short acoustic signal is heard.

Right master switch assignment

420	Master switch - right (MS 1)	**Hoist gear 1:** • Move the master switch **420** in direction Y+ (forward): Winch 1 spools out and the load is lowered • Move the master switch **420** in direction Y- (backward): Winch 1 spools up and the load is raised **Telescoping gear:** Master switch assignment “C” **474** is active: • Move the master switch **420** in direction X+ (toward the right): Telescope the telescopic boom out • Move the master switch **420** in direction X- (toward the left): Telescope the telescopic boom in **Luffing gear - telescopic boom:** Master switch assignment “D” **476** is active: • Move the master switch **420** in direction X+ (toward the right): Luff the telescopic boom down • Move the master switch **420** in direction X- (toward the left): Luff the telescopic boom up **Luffing the auxiliary boom*:** Master switch assignment “E” **477** is active: • Move the master switch **420** in direction X+ (toward the right): Luff the auxiliary boom down. • Move the master switch **420** in direction X- (toward the left): Luff the auxiliary boom up.
421	Button	• Bypass of seat contact button **Or** if the seat contact button is actuated: Activation of vibration sensor **423**
422	Button	• Adding rapid mode for the hoist gear(s) and luffing up
423	Vibration sensor	• Winch turn sensor, (vibrator) winch 1
424	Button	• Lock of engine regulation of superstructure engine **Note:** Pressing the button **424** will lock the engine regulation in the current position.
425	Button	• Horn

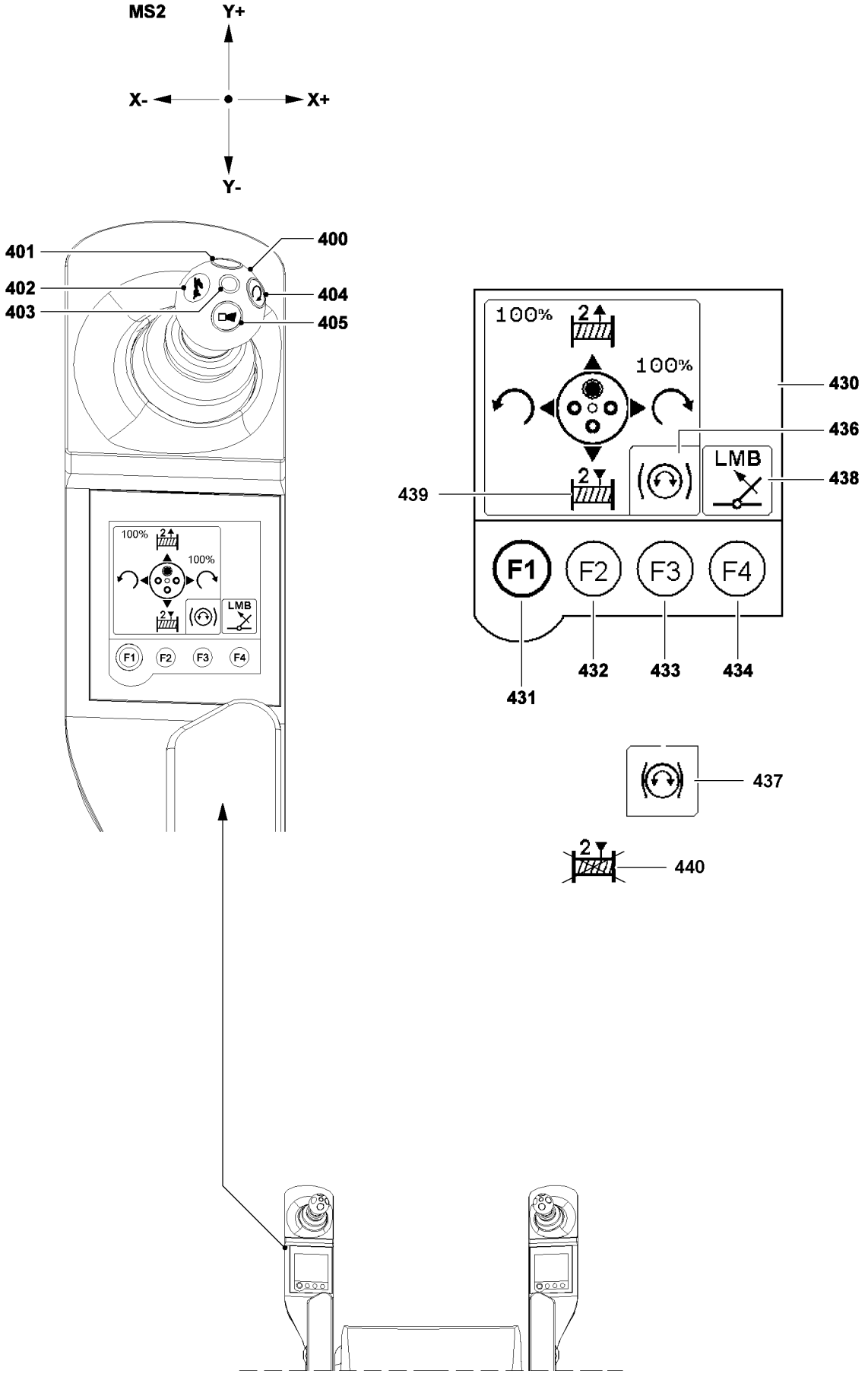
MS2
Y+
X-
X+
Y-
400
401
402
403
404
405
100%
100%
LMB
F1
F2
F3
F4
430
431
432
433
434
436
437
438
439
440

B118094

3.3.2 The “Master switch configuration” menu (left touch display)

The function key line

431	Function key F1	• Change to next menu
432	Function key F2	• Winch changeover - Winch 2 Activate / deactivate the winch **Conditions:** Neutral position master switch 2 **400** (MS2) right Crane driving speed = 0 km/h **Danger of accident!** **Never** activate / deactivate winch 2 while a crane movement is being actuated. **Note:** The winch status (winch activated / deactivated) can be seen on the touch display: • Winch 2 released **439** • Winch 2 blocked **440**
433	Function key F3	• Open / close slewing gear brake (with freely rotating slewing gear) • Slewing gear brake released **436** • Slewing gear brake applied **437**
434	Function key F4 (touching)	• Exceeding the overload protection (icon **438**), used to luff in with suspended load **Danger:** **The exceedance may only be carried out if the overload was caused by luffing down at freely suspended load and the crane operator is absolutely certain that luffing up the load will take it out of the overload range.**

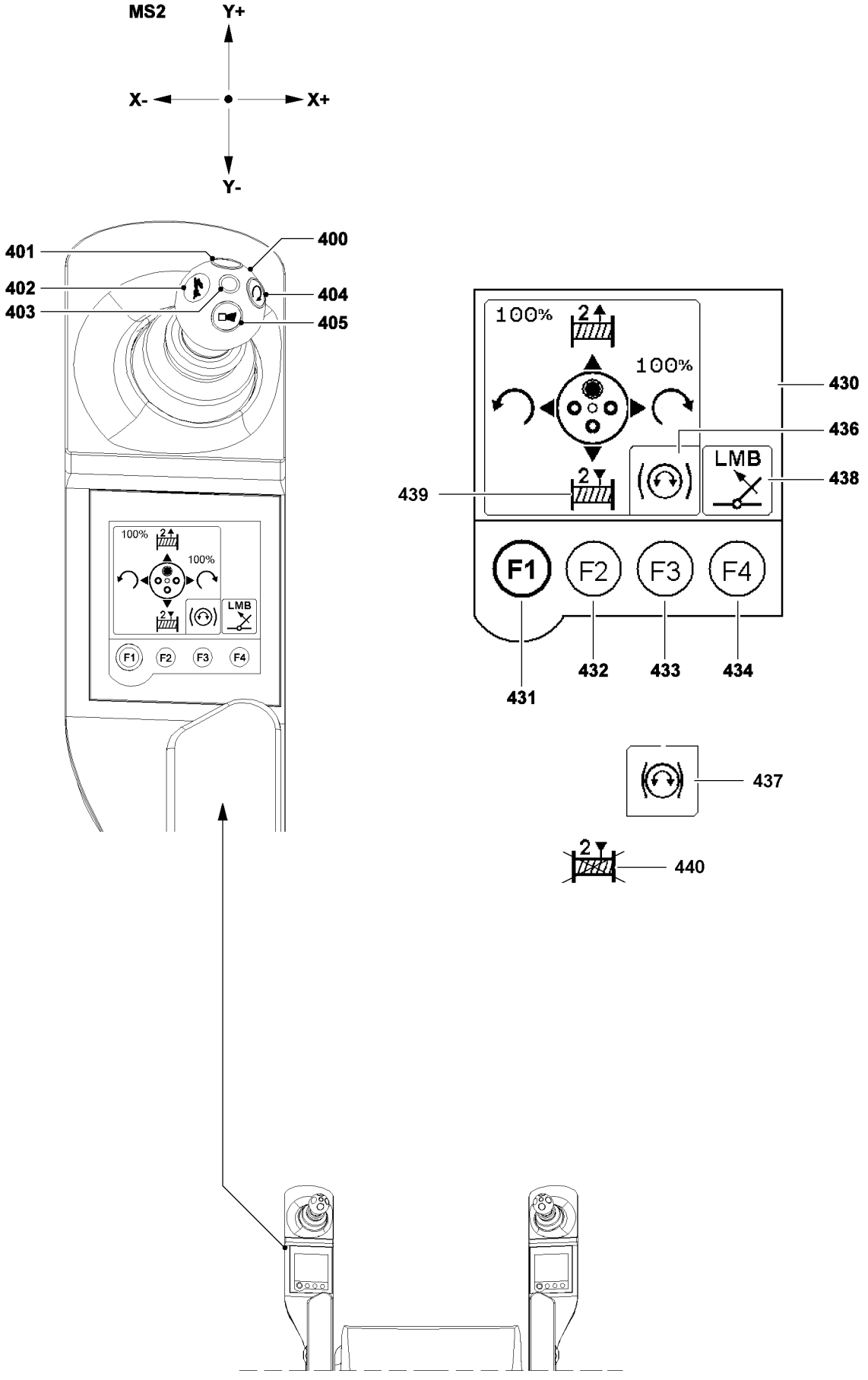
MS2
Y+
X-
X+
Y-
400
401
402
403
404
405
100%
2
100%
2
LMB
F1
F2
F3
F4
430
436
438
439
431
432
433
434
437
440

B118094

Left master switch assignment:

400	Master switch left (MS 2)	**Hoist gear 2:** • Move the master switch **400** in direction Y+ (forward): Winch 2 spools out and the load is lowered • Move the master switch **400** in direction Y- (backward): Winch 2 spools up and the load is raised **Slewing gear:** • Move the master switch **400** in direction X+ (toward the right): Slewing gear turns to the right. • Move the master switch **400** in direction X- (toward the left): Slewing gear turns to the left.
401	Button	• Bypass of seat contact button **Or** if the seat contact button is actuated: Activation of vibration sensor **403**
402	Button	• Addition of the rapid gear for winch(es) and luffing up
403	Vibration sensor	• Winch turn sensor, (vibrator) winch 1 or winch 2 **or** turn sensor, (vibrator) slewing gear
404	Button	• Lock of engine regulation of superstructure engine **Note:** Pressing the button **404** will lock the engine regulation in the current position. The idling speed can be increased up to the maximum rpm. • Can be “overridden” with the engine regulation (gas pedal) • At continued actuation of the engine regulation (gas pedal), the current rpm is taken over • By pressing the button **404** with the engine regulation (gas pedal) **not actuated**, the manual throttle is cancelled • If the engine rpm is locked, the “dynamic engine rpm display” (driving mode) and the “dynamic load utilization bar display” (crane operation) contain a **“+”**
405	Button	• Horn

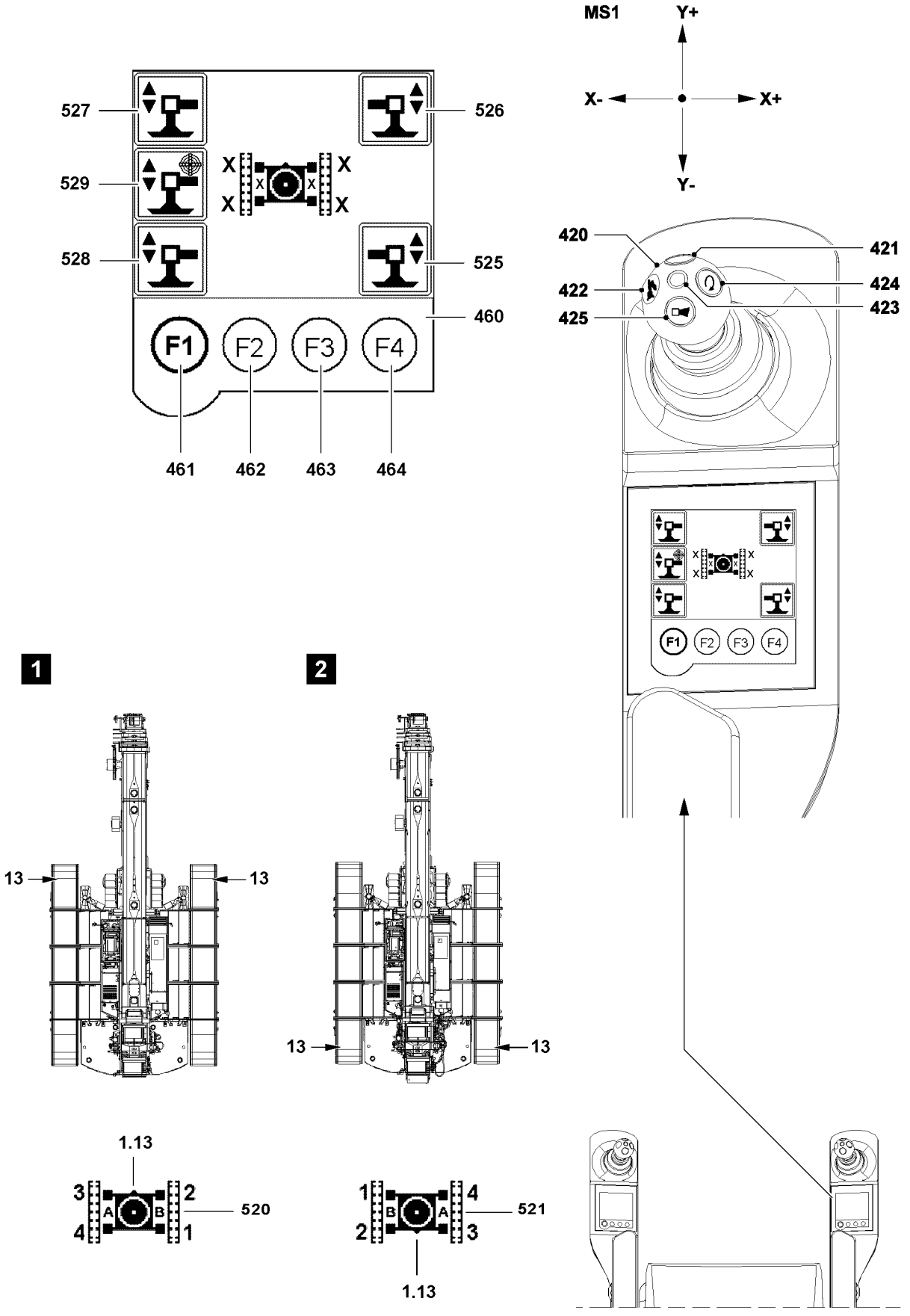
MS1
Y+
X-
X+
Y-
527
526
529
528
525
460
F1
F2
F3
F4
461
462
463
464
420
421
422
424
425
423
1
2
13
13
13
13
1.13
3
2
4
1
520
1
4
2
3
521
1.13

B117631

3.4 The menus (operating functions)

3.4.1 The “Support” menu (right touch display)

Note
Assignment of working direction, support cylinder and crawler carrier!
Illustration **1** and illustration **2** show the assignment.

- ▶ Rear and front on the crawler track can be determined by the chain tension device **13** (chain tension side). The chain tension device **13** is on the front on the crawler track.
- ▶ In the “Support” menu the assignment of the support cylinders and the crawler carriers on the touch display depends on the working direction of the crane. If the working direction of the crane is changed by turning the turntable from working direction “forward” to working direction “backward”, then the crane icon **520** changes to crane icon **521** - or vice versa.
- ▶ Crane icon **520**, turntable turned “to the front”: The triangle **1.3** shows the front on the crane chassis; assignment of the support cylinders and the crawler carriers as seen by the crane operator in the crane operator's cab.
- ▶ Crane icon **521**, turntable turned “to the rear”: The triangle **1.3** shows the front on the crane chassis; assignment of the support cylinders and the crawler carriers as seen by the crane operator in the crane operator's cab.

The function key line

461	Function key F1	• Change to next menu
462	Function key F2	• **No** function
463	Function key F3	• **No** function
464	Function key F4	• **No** function

Touch functions in the Support menu

525	Support cylinder	• Select support
526	Support cylinder	• Select support
527	Support cylinder	• Select support
528	Support cylinder	• Select support
529	Automatic support	• Select automatic mode

Right master switch assignment

420	Master switch - right (MS 1)	**Manual support:** • Move the master switch **420** in direction Y+ (forward): The selected support cylinders extend. • Move the master switch **420** in direction Y- (backward): The selected support cylinders retract. **Automatic support:** • Move the master switch **420** in direction Y+ (to the right): The support cylinders extend (the crane is raised) until the crane is aligned horizontally. • Move the master switch **420** in direction Y- (to the left): The support cylinders retract (the crane is lowered) until the crane is aligned horizontally.
421	Button	• Release of master switch **420**, to retract / extend the support cylinders

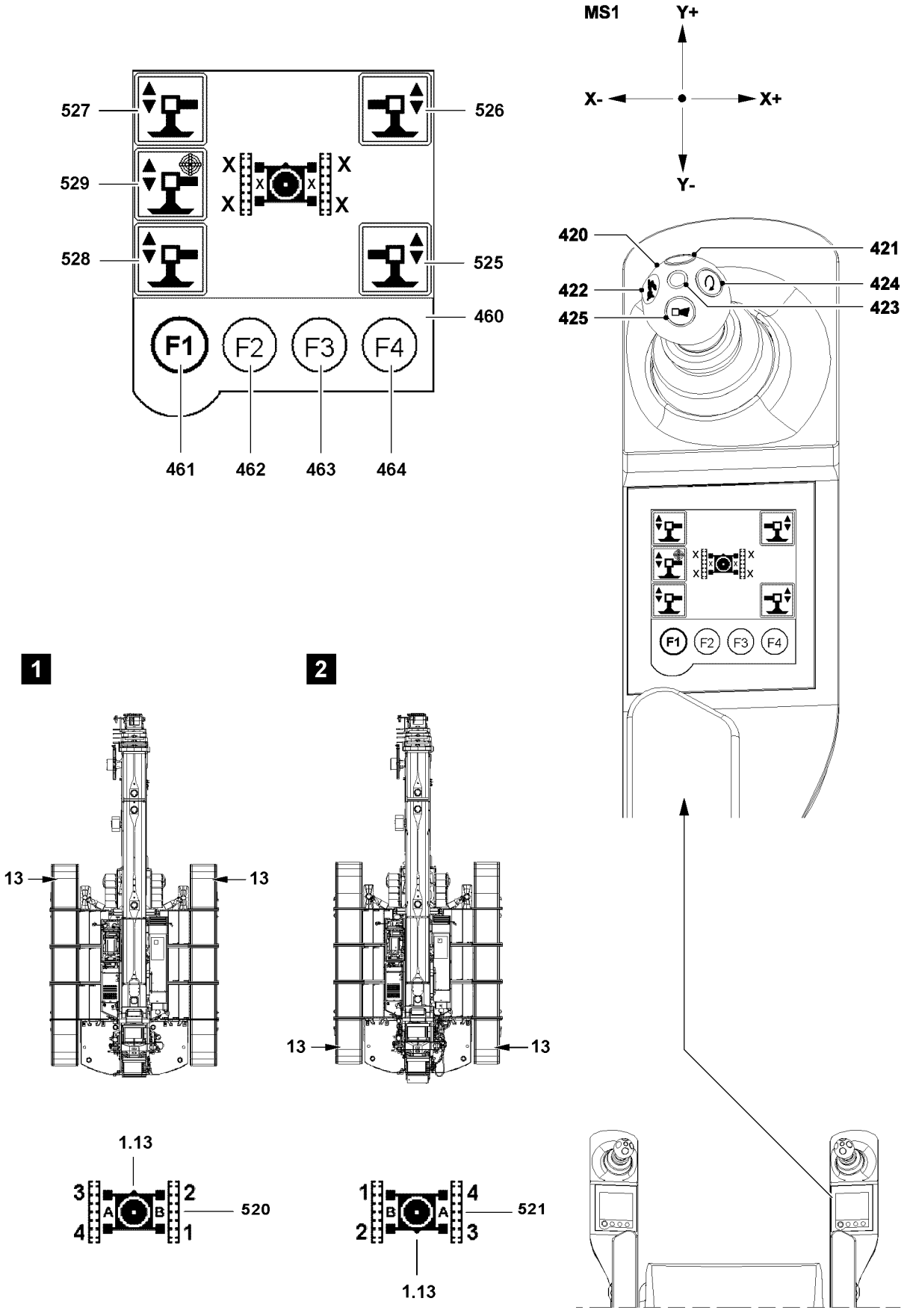
MS1
Y+
X-
X+
Y-
527
526
529
528
525
460
F1
F2
F3
F4
461
462
463
464
420
421
422
424
425
423
1
2
13
13
13
13
1.13
3
2
4
1
520
1
4
2
3
521
1.13

B117631

Support cylinder
In the “Support” menu, the following functions depend on the deflection of the master switch:
– Extension / retraction speed of the support cylinders
– Manual support
– Automatic support

Two extension / retraction speeds of the support cylinder are available:
Master switch deflection < 80 % = slow
Master switch deflection ≥80 % = fast

Note
▶ Release support movement: Press the button **421** (bypass seat contact) and hold it.
▶ Retract or extend the support cylinders: Deflect the master switch (MS1) **420** right in direction Y+ or Y-.

Note
If the master switch deflection is changed from Y+ or Y- to X+ or X- when the selected support cylinders are being retracted or extended, the current movement is shut off.
▶ Move the right master switch (MS1) **420** to the neutral position.
▶ Now you can extend / retract the support cylinders to the required position using the master switch.

Supporting manually
0 - 4 supports can be selected on the touch-display (“touch”) simultaneously and “extended / retracted” using the master switch (MS1). When a support cylinder is selected, the automatic support **529** selection is cancelled.

Note
▶ The extension / retraction of the support cylinders is “coupled” to the Y+ and Y- deflection direction of the right master switch (MS1) **420**.
▶ Moving the MS1 in direction Y+ extends the support cylinder / the support cylinders.
▶ Moving the MS1 in direction Y- retracts the support cylinder / the support cylinders.

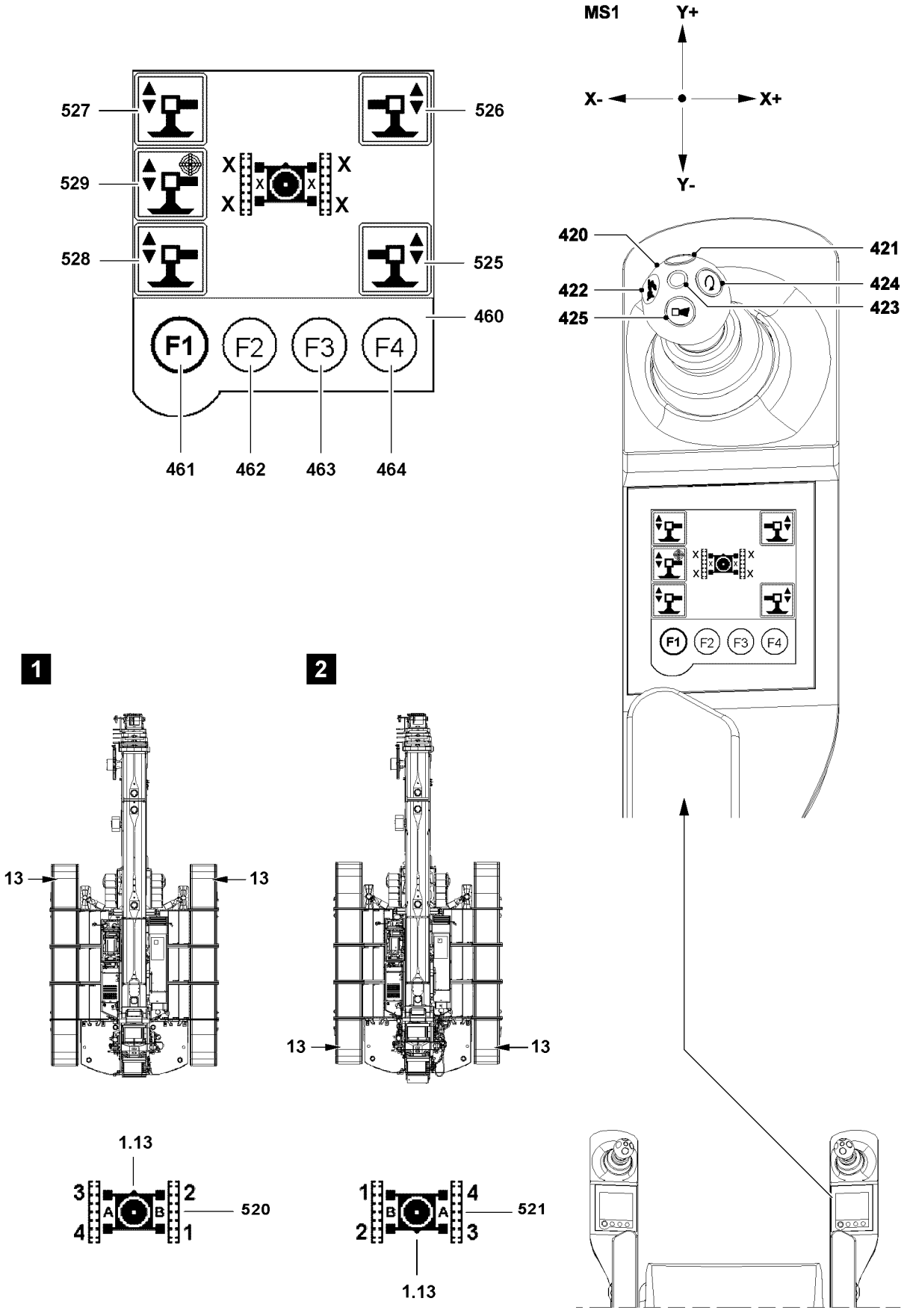
MS1
Y+
X-
X+
Y-
527
526
529
528
525
460
F1
F2
F3
F4
461
462
463
464
420
421
422
424
425
423
1
2
13
13
13
13
1.13
520
521
1.13
B117631

Automatic support

By selecting (“touch”) the automatic support **529** cancels all manual support function selections.

Note

- ▶ The extension / retraction of the support cylinders is “coupled” to the Y+ and Y- deflection direction of the master switch (MS1) **420**.
- ▶ Moving the MS1 in direction Y+ levels the crane by extending the support cylinders.
- ▶ Moving the MS1 in direction Y- levels the crane by retracting the support cylinders.

If the automatic support **529** has been selected, the support function is carried out via the master switch deflection. The automatic support function automatically levels the crane during the support procedure.

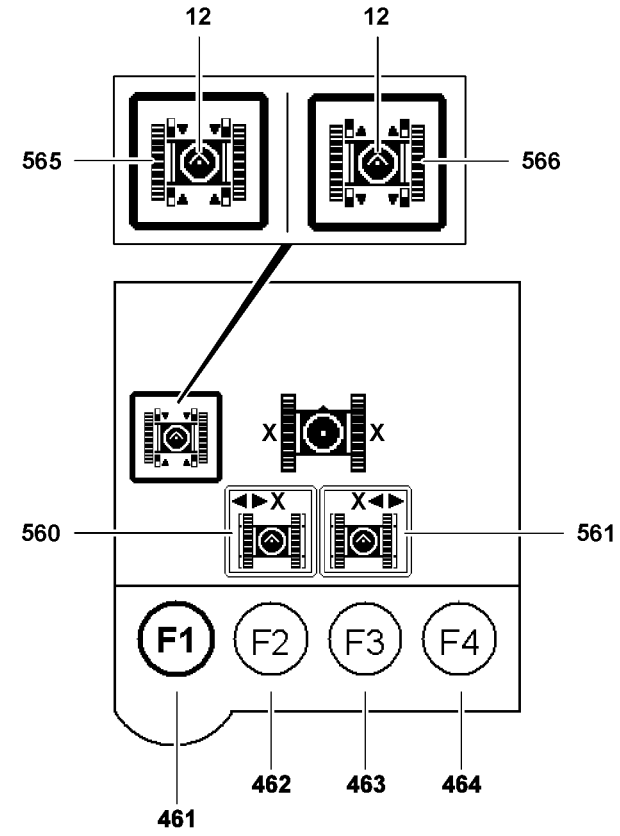
12
12
565
566
X
X
560
561
F1
F2
F3
F4
461
462
463
464

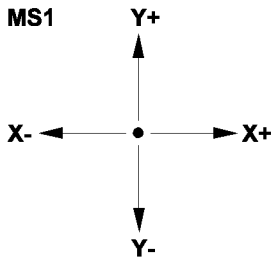
MS1
Y+
X-
X+
Y-

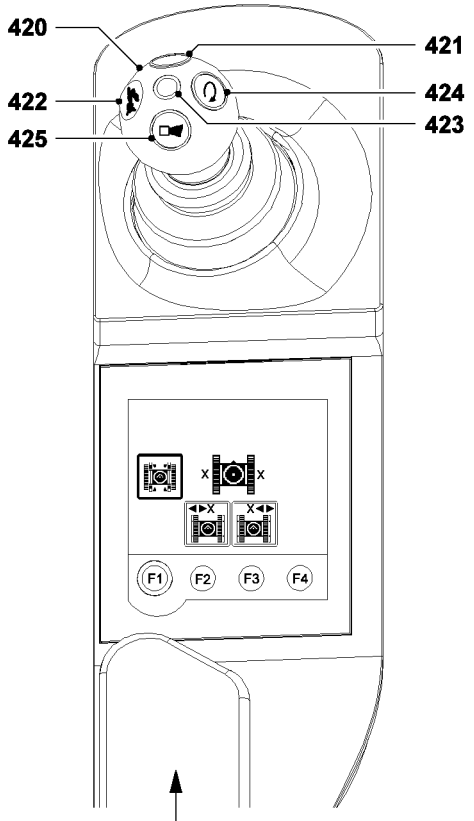
420
421
422
424
423
425
F1
F2
F3
F4

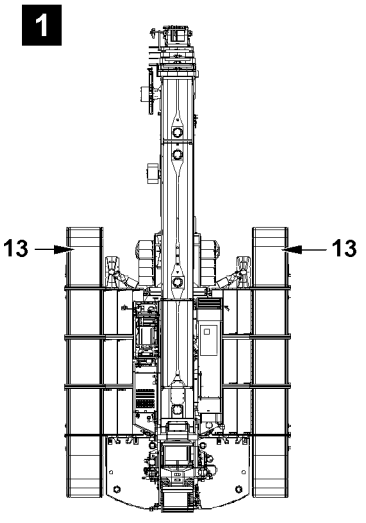
1
13
13

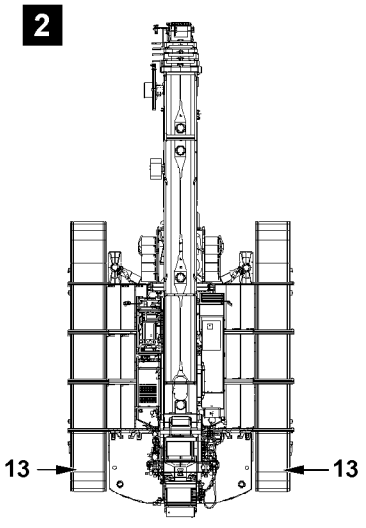
2
13
13

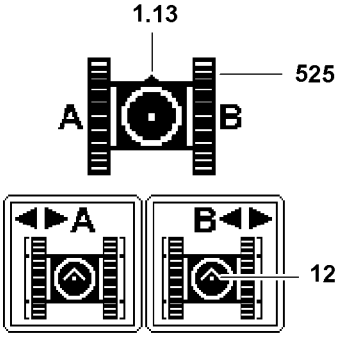
1.13
525
A
B
A
B
12

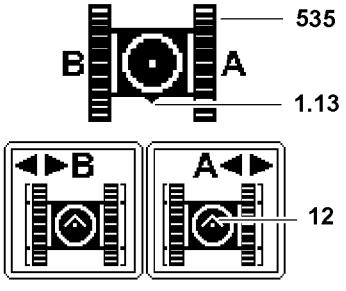
535
B
A
1.13
B
A
12

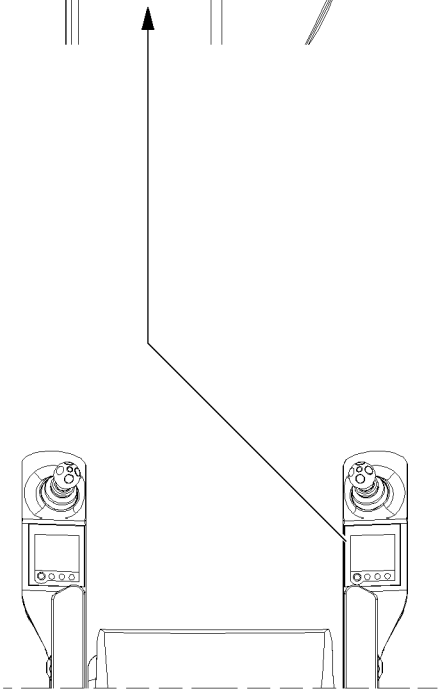

B117634

3.4.2 The “Track width adjustment” menu (right touch display)

In the “Track width adjustment” menu, the crane operator has the possibility to extend the track width of the tracks to a larger track width or retract them to a smaller track width.

Note
Assignment of working direction and crawler carrier!
Illustration **1** and illustration **2** show the assignment.

- ▶ Rear and front on the crawler track can be determined by the chain tension device **13** (chain tension side). The chain tension device **13** is on the front on the crawler track.
- ▶ In the “Track width adjustment” menu the assignment of the crawler carriers on the touch display depends on the working direction of the crane. If the working direction of the crane is changed by turning the turntable from working direction “forward” to working direction “backward”, then the crane icon **525** changes to crane icon **535** - or vice versa.
- ▶ Arrow **12** shows the direction of view of the crane operator in the crane operator's cab: icon **560**, icon **561**, icon **565** and icon **566**.
- ▶ Crane icon **525**, turntable turned “to the front”: The triangle **1.3** shows the front on the crane chassis; assignment of the crawler carriers as seen by the crane operator in the crane operator's cab.
- ▶ Crane icon **535**, turntable turned “to the rear”: The triangle **1.3** shows the front on the crane chassis; assignment of the crawler carriers as seen by the crane operator in the crane operator's cab.

The function key line

461	Function key F1	• Change to next menu
462	Function key F2	• **No** function
463	Function key F3	• **No** function
464	Function key F4	• **No** function

Touch functions in the Track width adjustment menu

565	“Pin” the Track width adjustment	• Icon **565** selected: Pin the cross carrier **Note:** If icon **565** is selected (“touch”), then Icon **566** appears.
566	“Unpin” the Track width adjustment	• Icon **566** selected: Unpin the cross carrier **Note:** When changing to the “Track width adjustment” menu after system start, then the icon **565** is automatically selected. When changing to the “Track width adjustment” menu during operation, then the last active icon is selected.
560	Track “left”	• Select / deselect the “left” track
561	Track “right”	• Select / deselect the “right” track

Right master switch assignment

420	Master switch - right (MS 1)	• Move the master switch **420** in direction X+ (toward the right): The selected crawler carriers extend. • Move the master switch **420** in direction X- (toward the left): The selected crawler carriers retract.
421	Button	• Release of master switch **420**, to retract / extend the crawler carriers.

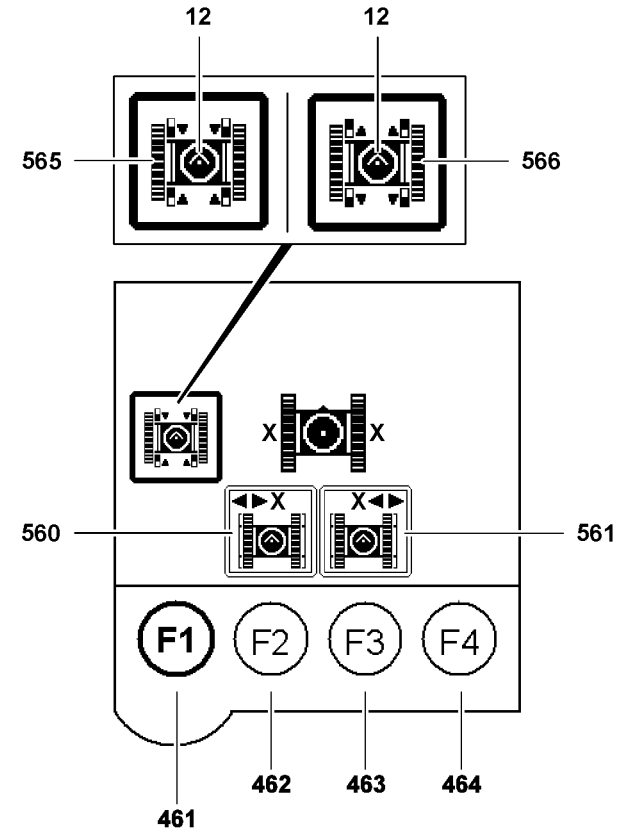
12
12
565
566
X
X
560
561
F1
F2
F3
F4
461
462
463
464

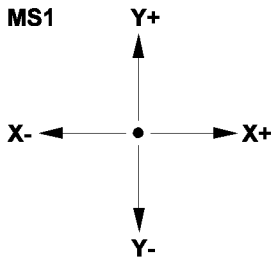
MS1
Y+
X-
X+
Y-

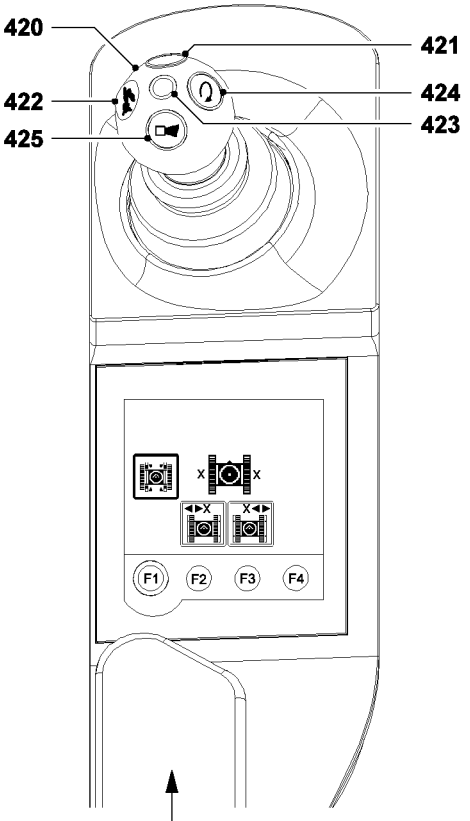
420
421
422
424
423
425
F1
F2
F3
F4

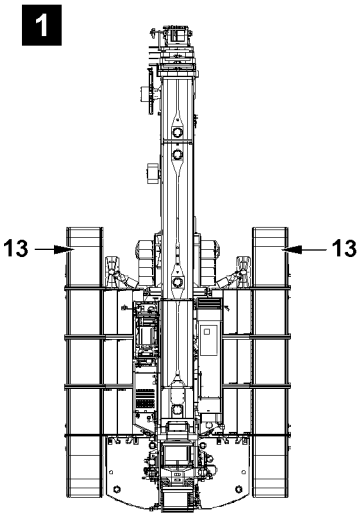
1
13
13

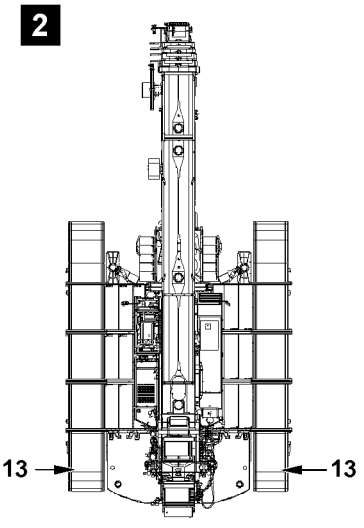
2
13
13

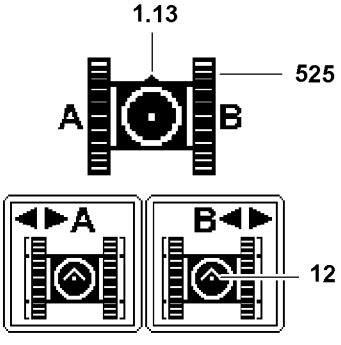
1.13
525
A
B
A
B
12

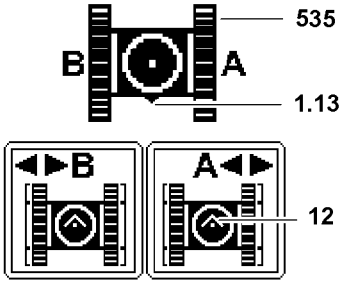
535
B
A
1.13
B
A
12

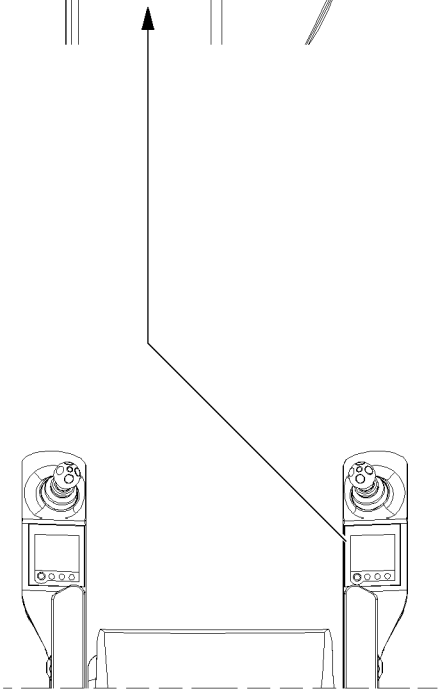

B117634

Pinning / unpinning the cross carriers

Note

- ▶ The cross carriers are only pinned on extension conditions of 0 %; 50 %; 100 %.
- ▶ Asymmetric track width adjustment is reached by pinning on extension conditions of 0 % and 100 %, see Crane operating instructions, chapter 4.03.50

To automatically pin the cross carriers, you have to “pin” the track adjustment, touch function **565** before the pin points at 0 % or 50 % or 100 % are reached.

To be able to extend the crawler carriers, you have to select “unpin” the track adjustment, touch function **566**.

The cross carrier is automatically unpinned as soon as a crawler carrier is extended / retracted.

Extending / retracting the crawler carriers

Note

- ▶ The “left” **or** “right” track **or** the “left” and the “right” track can be selected on the touch display and can be extended or retracted with the master switch 1 **420**.
- ▶ The extension / retraction of the tracks is “coupled” to the X+ and X- deflection direction of master switch (MS1) **420**.
- ▶ Release support movement: Press the button **421** (bypass seat contact) and hold it.
- ▶ Retract or extend the crawler carriers: Move master switch (MS1) **420** in direction X+ or X-.

Note

- ▶ Adjustment of track width, see Crane operating instructions, chapter 4.03.50.

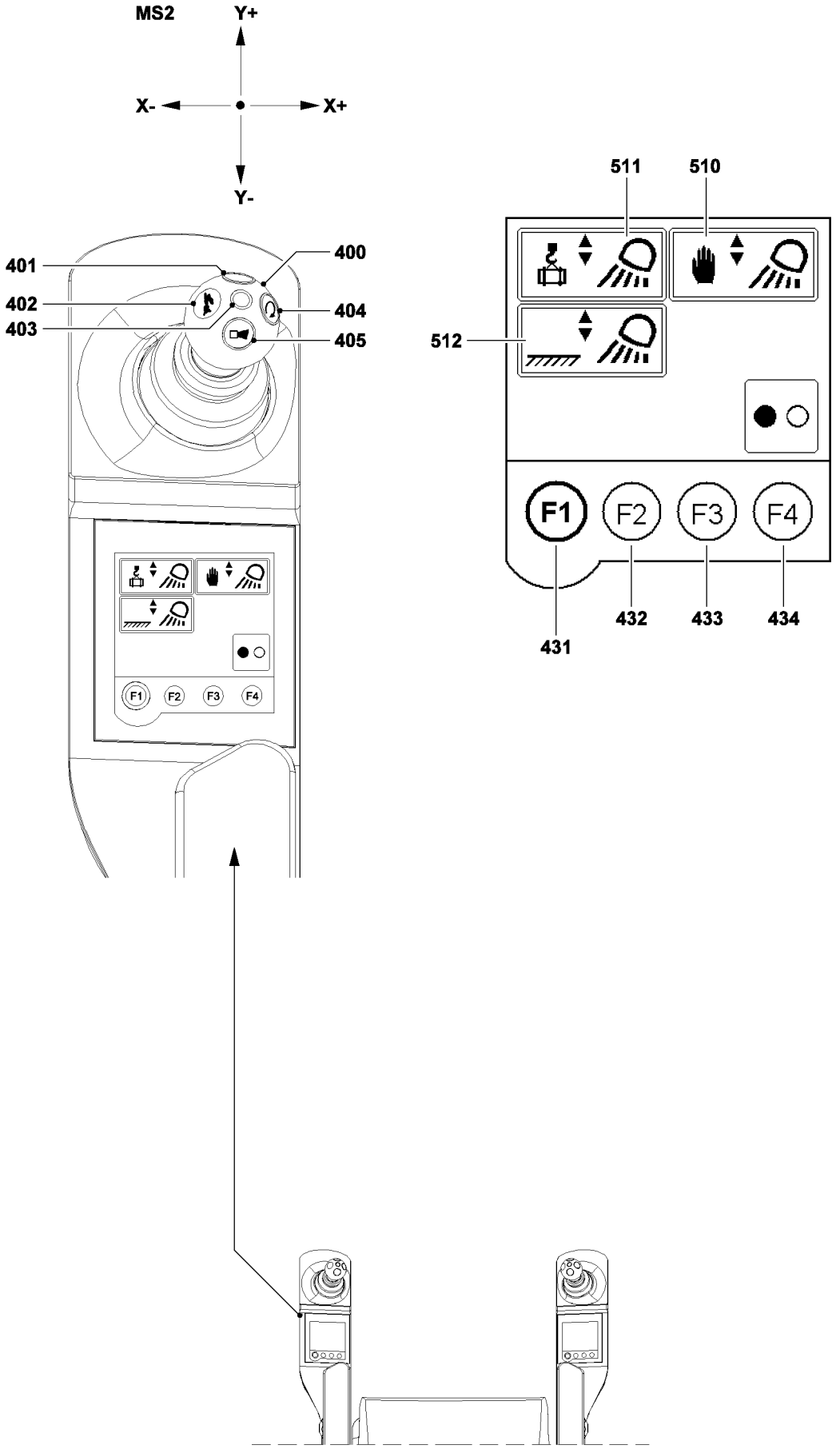
MS2
Y+
X-
X+
Y-
401
402
403
400
404
405
511
510
512
F1
F2
F3
F4
431
432
433
434

B108155

3.4.3 The “Working floodlight” * menu (left touch display)

In the “Working floodlight” * menu the crane operator has the opportunity to manually align the working floodlight to suit the current load or the planned working range. In crane operation, the previously aligned working floodlight changes its position according to the movement direction of the load (load-following) or the working range (fixed to working range).

Note

- ▶ The Working floodlight menu* is only available if the floodlight is installed and connected.
- ▶ “Touching” the desired floodlight function does not directly activate this function, instead it only **selects the function**.
- ▶ Only if a floodlight function has been selected, can function key F4 **434** be used to turn it on or off.

The function key line

431	Function key F1	• Change to next menu
432	Function key F2	• **No** function
433	Function key F3	• **No** function
434	Function key F4	• Working floodlight ON / OFF

Touch functions in the Working floodlight menu*

510	Working floodlights	• Select “Manually”
511	Working floodlights	• Select “Load following”
512	Working floodlights	• Select “Fixed to working range”

Note

- ▶ Before the required operating mode of the working floodlight is selected, the “starting position” of the working floodlight must be manually selected in “Working floodlight manual” operating mode by moving the Master switch 2 **400** (MS2) left in direction Y+ or Y-.

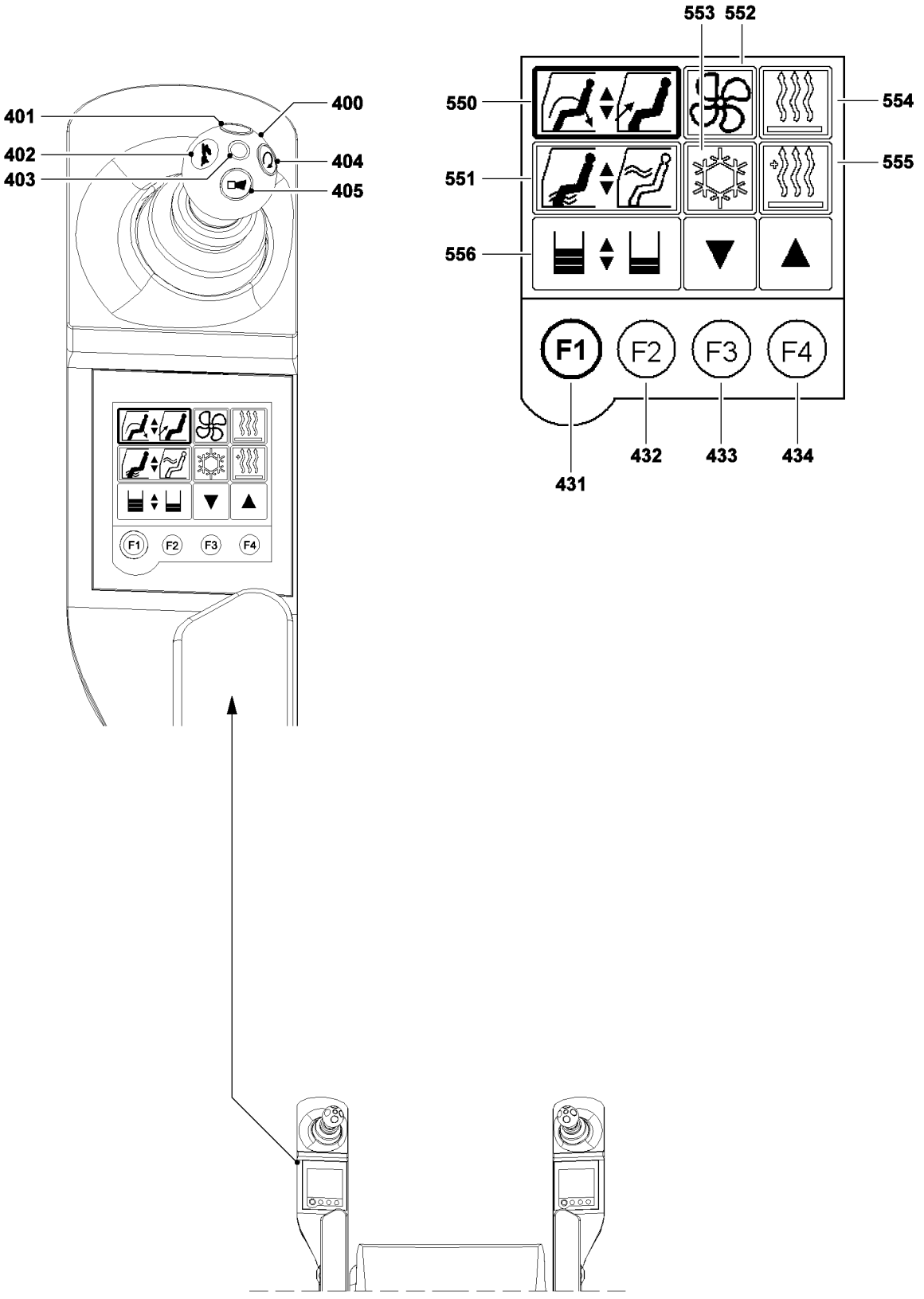
401
402
403
400
404
405
553
552
550
551
556
554
555
F1
F2
F3
F4
431
432
433
434

B103970

3.4.4 The “Climate control settings” menu (left touch display)

In the “Climate control settings” menu the crane driver has the opportunity to make any heater, air conditioning and ventilation settings.

The function key line

431	Function key F1	• Change to next menu
432	Function key F2	• Automatic climate control “ON” / “OFF” • **Note:** The **automatic** climate control can only be turned on if the Climate control system **553** has been selected.
433	Function key F3	• “Minus” - reduce stage / temperature or turn “OFF”
434	Function key F4	• “Plus” - increase stage / temperature or turn “ON”

Touch functions in the Climate control settings menu

Note

Note

▶ “Touching” a function in the “Climate control settings” menu causes a black border to appear around the relevant icon (function selection) and at the same time the current setting, the selected level or the on / off status (“ON” / “OFF”) for a function is displayed in the Status display **556**.

▶ Only one function at a time can be selected or edited in the “Climate control settings” menu.

550	Recirculating air / fresh air	• Function selection
551	Air distribution “up” / “down”	• Function selection
552	Fan / blower	• Function selection
553	Climate control system	• Function selection
554	Heater	• Function selection
555	Auxiliary heater	• Function selection
556	Status display	• Display function The status display **556** shows the following, depending on the selected function: • The adjustment ratios between the overhead area and the floorboard area for recirculating air / fresh air. • The adjustment ratios for air distribution. • The selected stage in manual heating mode. • The temperature setting in automatic heating mode. • Climate control system “ON”. • Climate control system “OFF”. • The programming display for auxiliary heater.

Note

▶ For a detailed description of the heater / air conditioning and ventilation settings, see Crane operating instructions, chapter 6.02.

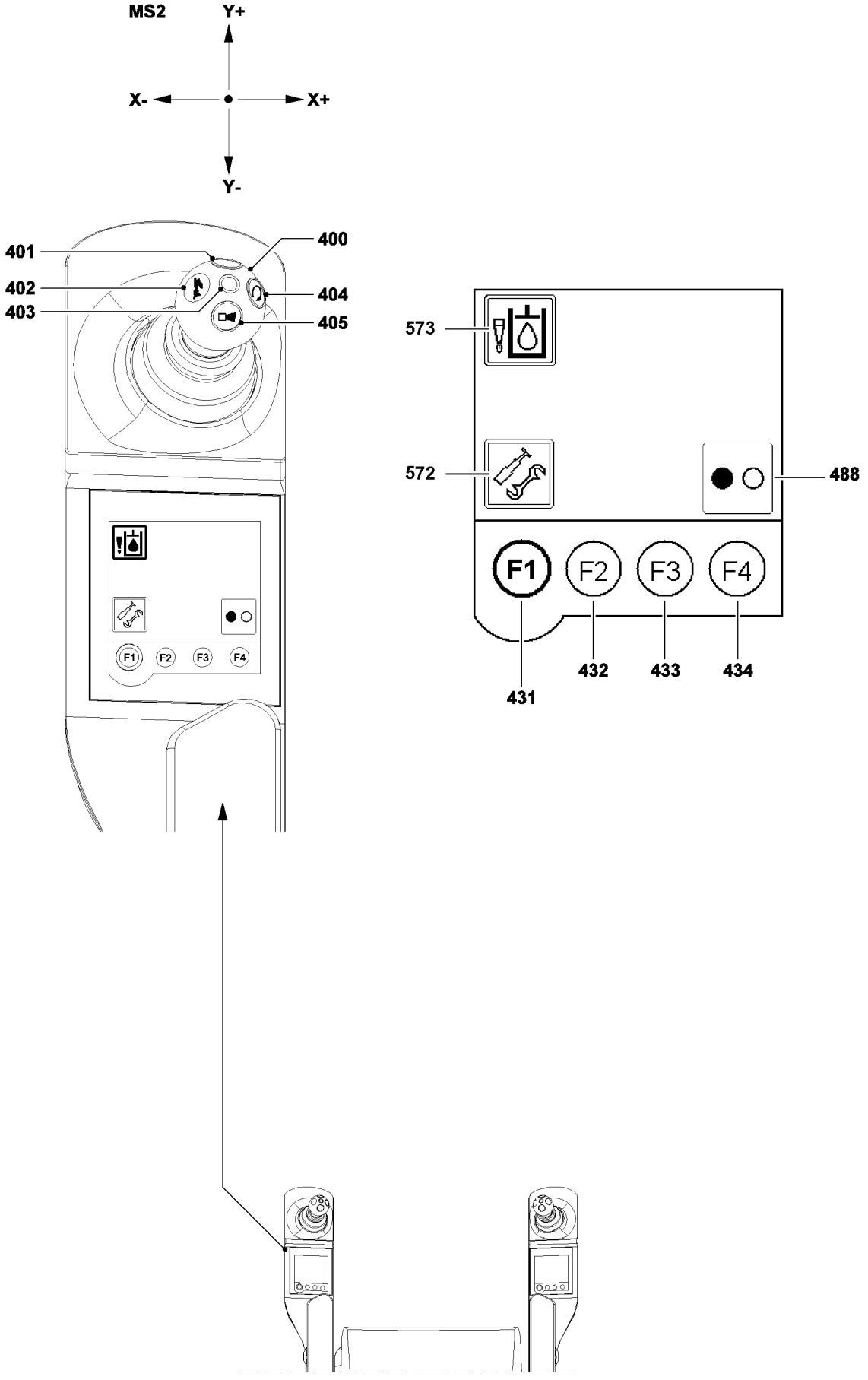
MS2
Y+
X-
X+
Y-
401
402
403
400
404
405
573
572
488
F1
F2
F3
F4
431
432
433
434

B117818

3.4.5 The menu “Hydraulic oil preheating / telescopic boom disassembly” * (left touch display)

The function key line

431	Function key F1	• Change to next menu
432	Function key F2	• **No** function
433	Function key F3	• **No** function
434	Function key F4	• Turn hydraulic oil preheating on / off Turn telescopic boom disassembly on / off

Touch functions

572	Telescopic boom disassembly	• Select / deselect telescopic boom disassembly.
573	Hydraulic oil preheating	• Select / deselect hydraulic oil preheating

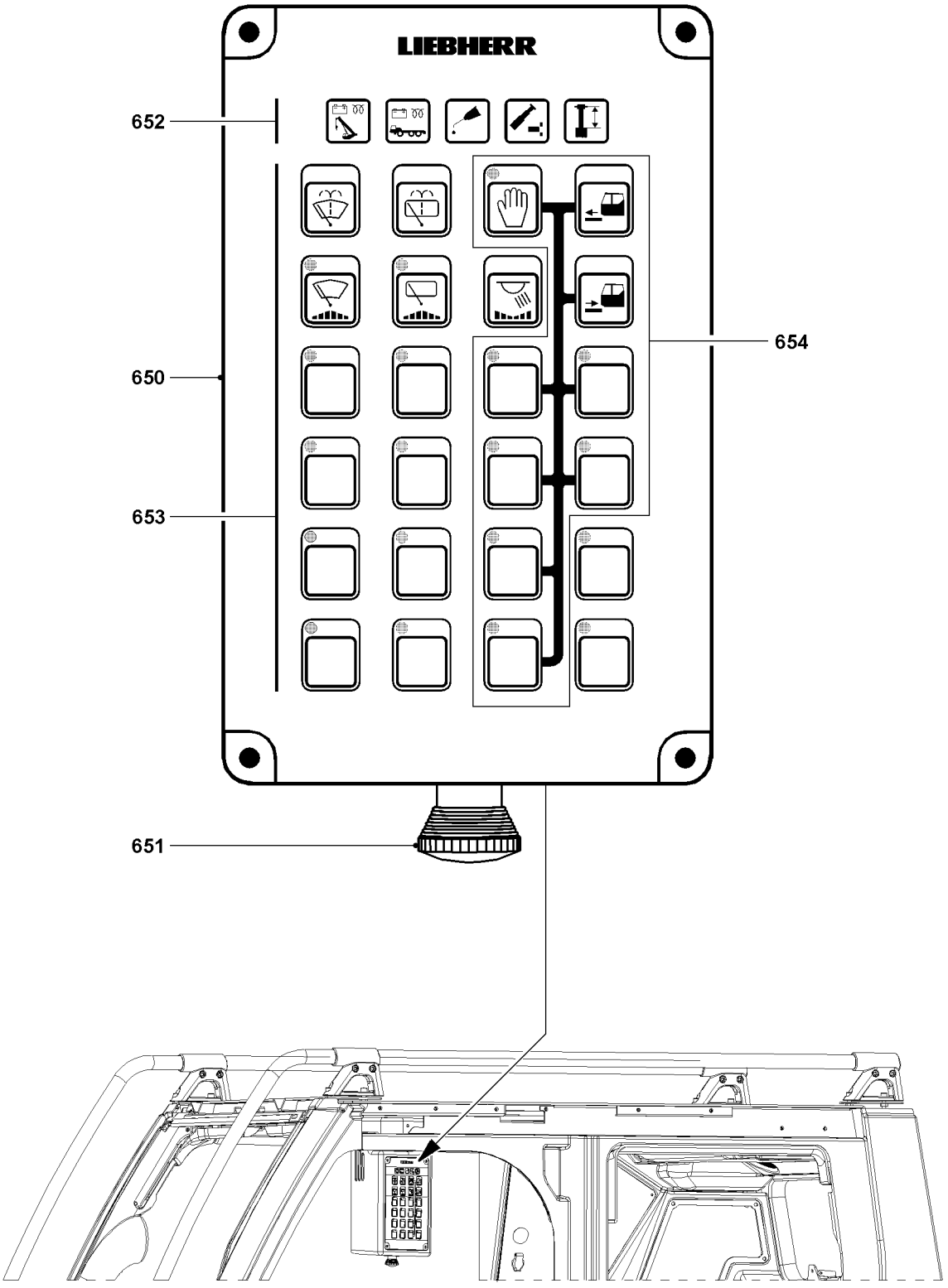

B117632

4 Operating elements on the operating and control unit (BKE)

4.1 Operating console

Note

▶ The indicator lights as well as the operating keys are described in detail in the following sections.

650	Operating console	• Housing with indicator lights and buttons
651	EMERGENCY OFF switch*	• Impact switch
652	Indicator lights on the BKE	
653	Operating buttons on the BKE	• Standard assignment
654	Operating buttons on the BKE for release control	• Standard assignment

4.2 Indicator lights on the BKE “652”

Position	Indicator light	LED condition	Description
660	Engine monitoring superstructure	Yellow:	Engine preheat active
		Yellow blinking (slow)	Engine ready to start
		Yellow blinking (fast)	Engine preheating Error / problem
		Off:	Engine is running (after engine has been started)
		Red:	Engine is running, alternator does not charge
661	Engine monitoring chassis	**Note:**	Indicator light **not** assigned!
662	Central lubrication system	Yellow + red (orange)	Functional readiness (is shown after engine start for 1.5 s)
		Yellow:	Lubrication active
		Red:	Error / problem
		Off:	Central lubrication not active
663		Yellow	Unpin cylinder

Position	Indicator light	LED condition	Description
	Pinning tele / cylinder	Green	Tele unpinned
664	Cylinder in position	Yellow	Gripper in position

4.3 Operating buttons on the BKE “653”

Note

▶ With the LEDs in the operating buttons, the operating conditions and problems can be recognized quickly and reliably by the crane driver.

Position	Button	Function	LED	Description
670	Window washer system front	“On”	–	Clean the window: By pressing and holding the button “Front” or “Roof”
			Note:	After releasing the button “Front” or “Roof” , three additional wipe movements are carried out before the wiper blades return to their original position.
671	Window washer system, roof	“Off”	–	By releasing the button “Front” or “Roof”
672	Windshield wiper Front		**Note:**	There are three different wipe stages.
673	Windshield wiper Roof			1. Wiper “On” : Continuous operation 2. Intermittent 1: Wipe with long pauses 3. Intermittent 2: Wipe with short pauses 4. Wiper “Off” Every time the button “Front” or “Roof” is pressed, the wipe stages change incrementally.
		“On”	Lights up	By pressing the button “Front” or “Roof”
		“Off”	Off	By pressing the button “Front” or “Roof” longer than one second until a “beep” sounds **or**

Position	Button	Function	LED	Description
				By pressing the button “Front” or “Roof” until the LED is off **or** Ignition “Off”
674	 Interior light cab	**Note** :		The interior lighting can also be turned on when the ignition is “off” , by pressing the button longer than 1 s .
		“On” (100 %)	–	By opening the door **or** By pressing the button
		Dim	–	There are three different dimmer stages: 1. 75 % 2. 50 % 3. 25 % 4. “Interior light Off” When the interior light is turned on: Each time the button is pressed, the brightness is reduced incrementally.
		“Off”	–	By pressing the button for longer than one second **or** By pressing the button until the light turns “Off” **or** If the following conditions are present simultaneously for longer than 30 s : - The driver's seat is not occupied - The door is closed - The engine is “Off”
679	 Airplane warning	**Note** :		The airplane warning can also be actuated when the ignition is “Off” , by pressing the button longer than 1 s .
		“Off”	Off	By pressing the button
		“On”	Lights up	By pressing the button
		“On”	Blinks	Error / problem
680		“Off”	Off	By pressing the button

Position	Button	Function	LED	Description
	Crawler operation	“On”	Lights up	Crawler operation is turned on
		“On”	Blinks	Error / problem
681	Rapid gear “crawlers”	“Off”	Off	By pressing the button
		“On”	Lights up	Rapid gear for crawler operation is turned on
		“On”	Blinks	Error / problem
682	Floodlight on front of turntable	“Off”	Off	By pressing the button
		“On”	Lights up	By pressing the button
		“On”	Blinks	Error / problem
683	Floodlight on rear of turntable	“Off”	Off	By pressing the button
		“On”	Lights up	By pressing the button
		“On”	Blinks	Error / problem
684	Floodlight 2 on front of turntable	“Off”	Off	Key **not** assigned, **no function** !
		“On”	Lights up	Key **not** assigned, **no function** !
		“On”	Blinks	Error / problem
685	Boom floodlights	“Off”	Off	By pressing the button
		“On”	Lights up	By pressing the button
		“On”	Blinks	Error / problem
686	Low beam	“Off”	Off	By pressing the button
		“On”	Lights up	Key **not** assigned, **no function** !
		“On”	Blinks	Transmission error to chassis
687	Parking lights	“Off”	Off	By pressing the button
		“On”	Lights up	Key **not** assigned, **no function** !

Position	Button	Function	LED	Description
		“On”	Blinks	Transmission error to chassis
688	Floodlight camera*	“Off”	Off	By pressing the button
		“On”	Lights up	By pressing the button
		“On”	Blinks	Error / problem
695	Crawler “Parallel control”	“Off”	Off	By pressing the button
		“On”	Lights up	Parallel control for crawler operation is turned on
		“On”	Blinks	Error / problem

4.4 Operating buttons on the BKE for release control “654”

Note

- ▶ The following functions require the activation of the “release button”.
- ▶ The “release button” is active for 30 s. If an operating button is pressed during this time, the release time is reset to 30 s. The release stops after 30 s.
- ▶ A function is triggered by activation of the “release button” and then pressing the corresponding operating button.
- ▶ For the listed key combinations, hold the corresponding operating key until the desired end position is reached.

Position	Key combination	Function	LED	Function
675	Release button		**Note** :	After pressing the release button, the functions, which require a release can be activated. The release is indicated by the green LED on the release button.
		“On”	Lights up	Press the release button
		“Off”	Off	By pressing the button **or** as long as no button is pressed, which requires a release: Automatically after 30 s
675+676	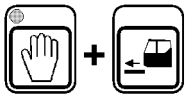 Extend the step	“On”		Activate “release key” and press “Extend step” key
675+677	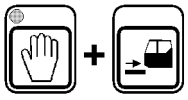	“On”		Activate “release key” and press “Retract step” key

Position	Key combination	Function	LED	Function
	Retract the step			
675+688	Unpin the turntable lock	“Off”	Off	Function inactive
		“On”	Blinks slowly	The unpinning procedure “runs”
		“On”	Blinks fast	Error / problem
		“On”	Lights up	The “top” end position has been reached, an acoustic signal will sound when the end position is reached
675+689	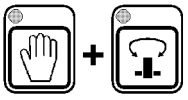 Pin the turntable lock	“Off”	Off	Function inactive
		“On”	Blinks slowly	The pinning procedure “is running”
		“On”	Blinks fast	Error / problem
		“On”	Lights up	The “bottom” end position has been reached, an acoustic signal will sound when the end position is reached
675+690	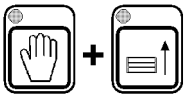 Raise the counter-weight	“Off”	Off	Function inactive
		“On”	Blinks slowly	The counterweight is raised
		“On”	Blinks fast	Error / problem
		“On”	Lights up	The “top” end position has been reached, an acoustic signal will sound when the end position is reached
675+691	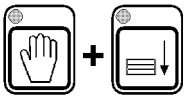 Lower the counter-weight	“Off”	Off	Function inactive
		“On”	Blinks slowly	The counterweight is lowered
		“On”	Blinks fast	Error / problem
		“On”	Lights up	The “bottom” end position has been reached, an acoustic signal will sound when the end position is reached

Position	Key combination	Function	LED	Function
675+692	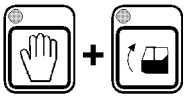 Raise the cab	“Off”	Off	Function inactive
		“On”	Blinks	Error / problem
		“On”	Lights up	The cab is raised
675+693	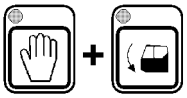 Lower the cab	“Off”	Off	Function inactive
		“On”	Blinks	Error / problem
		“On”	Lights up	The cab is lowered

B197077

1 General

Note

- ▶ The illustrations, icons and monitor illustrations in this chapter are only examples!
- ▶ The numerical values in the individual icons and charts do not have to necessarily match the crane exactly!
- ▶ Numbers and letters can be replaced by place holders!
- ▶ The display and assignment of the icons can deviate, depending on the set up configuration, operating status and configuration of the crane!
- ▶ In addition, many of the illustrations show the maximum configuration of the LICCON monitor with icons!
- ▶ In crane operation, an identical display will **not** appear on the LICCON monitor!

The LICCON computer system is a computer system for controlling and monitoring mobile and crawler cranes. In addition to the use of overload protection and load capacity display there are a number of application programs that can be used for controlling and monitoring the crane movements. Currently the LICCON computer system includes the following application programs:

– “Set up” program
– “Crane operation” program
– “Telescoping” program
– “Working range limitation” program*

The electrical and electronic components are linked via data bus transmission technology (Liebherr System Bus = LSB).

1.1 Overload protection

The overload protection includes limiters and displays (for example load capacity displays), which also alert to danger conditions via acoustical and optical warning signals.
The computer controlled part of the overload protection is called the LICCON overload protection. The LICCON overload protection is set by entering the set up configuration into the LICCON computer system.
The LICCON overload protection works, among others, on the principle of comparing the current and actual load with the maximum load according to the load chart and reeving.

1.1.1 Acoustic and optical warning signals

The crane is equipped with acoustical and optical warning device to warn crane operator, auxiliary personnel and any person nearby.
Overview of acoustical / optical warnings, see Electric wiring diagram

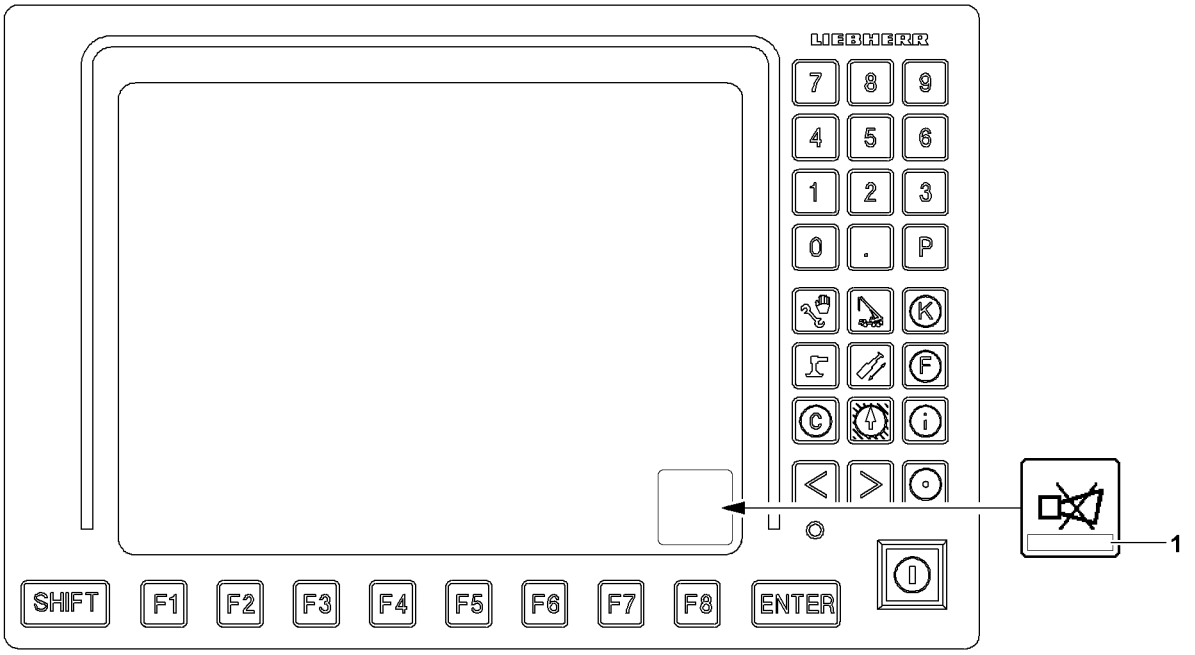
LIEBHERR
7
8
9
4
5
6
1
2
3
0
.
P
K
F
C
i
SHIFT
F1
F2
F3
F4
F5
F6
F7
F8
ENTER
1

B117913

1.1.2 Actual load

The actual load is determined by recording changing dimensions, the set up configuration and situational influences.

The **load on the crane** results from the load momentum, boom momentum as well as environmental and mechanical influences. The occurring momentums and forces are measured and processed by the LICCON computer system.

The **load momentum** results from load and radius. The load includes load, fastening equipment and hook block / load hook. The radius is calculated with aid of the angle sensor information (boom angle) and the length of the boom system. This also takes into account the boom flexation due to its own weight and the weight of the load.

The **boom momentum** is calculated from the length of the boom system, the crane data (boom weights) and angle sensor information (boom angle).

Environmental and mechanical influences are recorded, determined and taken into account individually.

1.1.3 Maximum load according to load chart and reeving

The crane data such as load charts (also called load capacity charts), boom weights and geometry data are stored in the central data memory of the LICCON computer system.

The “maximum load according to the load chart and reeving” is constantly determined, based on the load charts, for the set reeving, the calculated radius and additional influences.

1.1.4 Comparison

The actual load and the “maximum load according to the loading chart and reeving” are compared. When they approach the specified limit, an advance warning is issued by the overload protection. If this limit is exceeded, the overload protection turns the load moment increasing crane movements off.

2 Error messages

The LICCON computer system monitors the crane permanently for operating and system errors.

If operating and / or system errors occur, error messages **1** are issued. Error messages appear in the horn icon of the LICCON monitor.

Note

- ▶ Always pay attention to error messages **1**!
- ▶ For procedure in case of error messages, see Diagnostics Manual

1

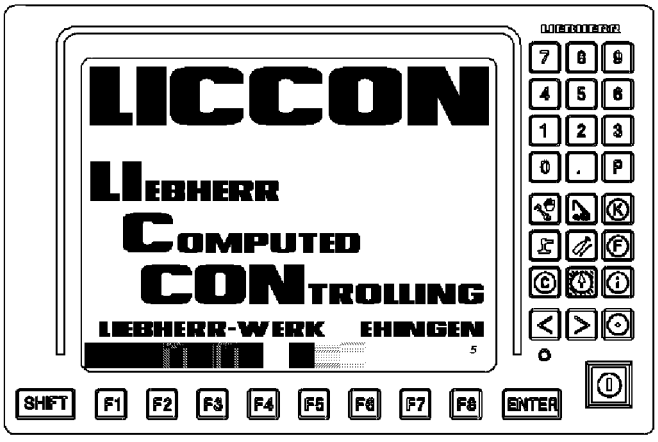
LICCON
LIEBHERR
COMPUTED
CONTROLLING
LIEBHERR-WERK EHINGEN
SHIFT F1 F2 F3 F4 F5 F6 F7 F8 ENTER

2

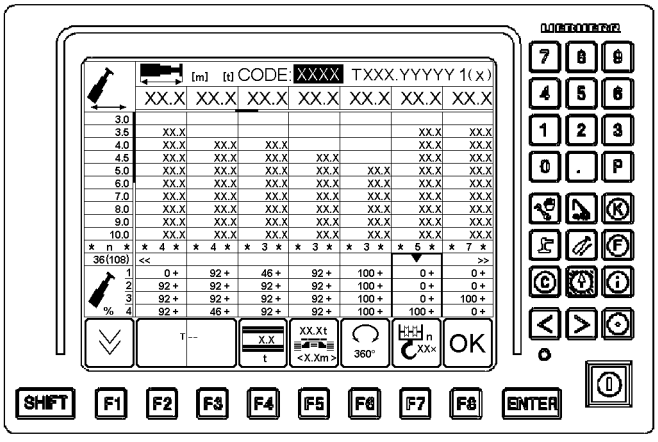
[m] [t] CODE: XXXX TXXX.YYYYY 1(x)
OK
SHIFT F1 F2 F3 F4 F5 F6 F7 F8 ENTER

3

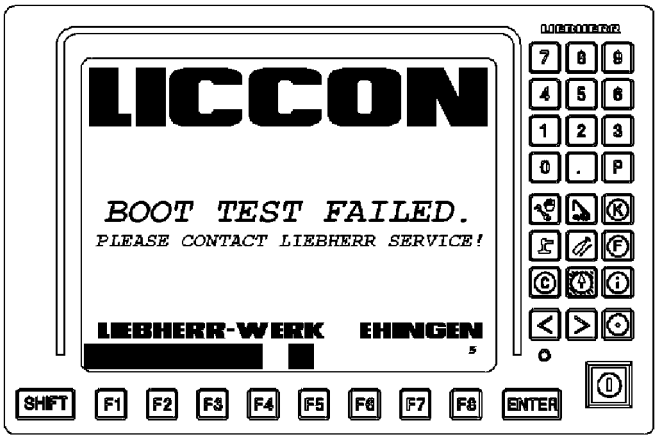
LICCON
BOOT TEST FAILED.
PLEASE CONTACT LIEBHERR SERVICE!
LIEBHERR-WERK EHINGEN
SHIFT F1 F2 F3 F4 F5 F6 F7 F8 ENTER

B117899

3 System start of the LICCON computer system

There are two operating modes for the LICCON computer system:
– LICCON computer system in normal mode (crane engine turned on).
– LICCON computer system in stand-by mode (crane engine turned off).

Starting in normal mode:
– System start of LICCON computer system in connection with a started crane engine.

Starting in stand-by mode:
– See Section “LICCON computer system in stand-by mode”.

All the components of the LICCON computer system run through a self-test after turning the computer on.
During the self test, the start screen of the LICCON computer system appears on all LICCON monitors, see illustration **1**.
When the set up program appears (see example illustration **2**), then the system start on the **LICCON monitor** is completed.

Note
Errors during the system start of the LICCON computer system!
If an error is found during the system start of the LICCON computer system, then the system start procedure is interrupted, see illustration **3**.
▶ Turn the ignition off, turn the battery master switch for a short time and wait for one minute before turning them on again. Then try the starting procedure again.
▶ If the error continues to occur at system start: Consult Liebherr Service for further procedure.

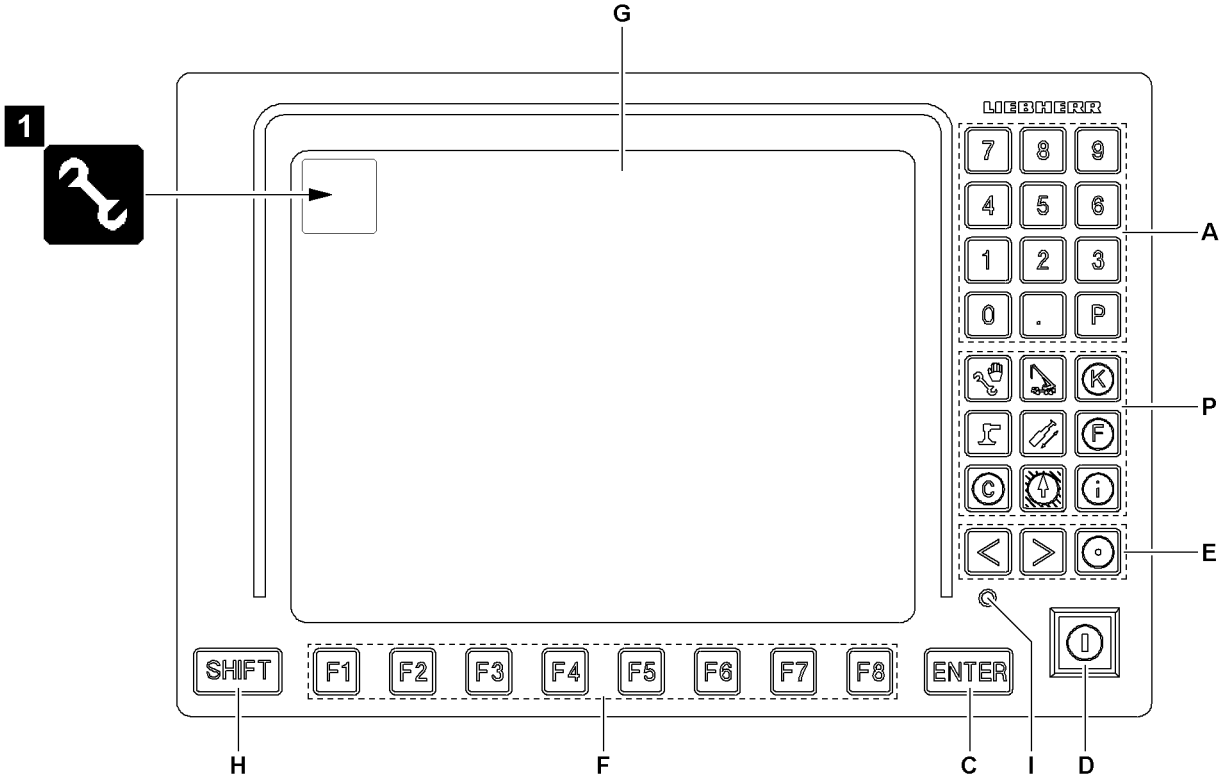
1
G
LIEBHERR
7 8 9
4 5 6
1 2 3
0 . P
A
P
E
SHIFT
F1 F2 F3 F4 F5 F6 F7 F8
ENTER
H
F
C
I
D

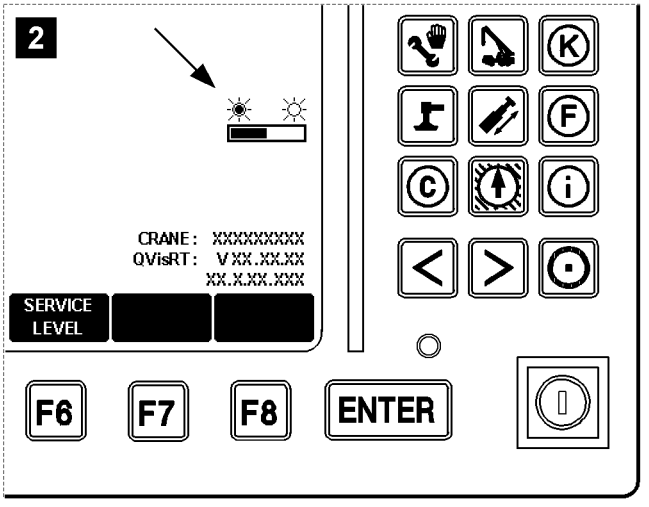
2
CRANE: XXXXXXXXX
QVisRT: V XX.XX.XX
XX.X.XX.XXX
SERVICE LEVEL
F6 F7 F8 ENTER

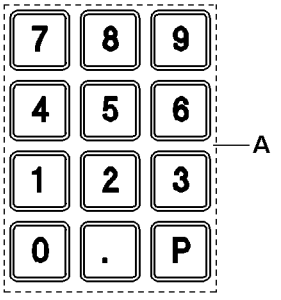
7 8 9
4 5 6
1 2 3
0 . P
A

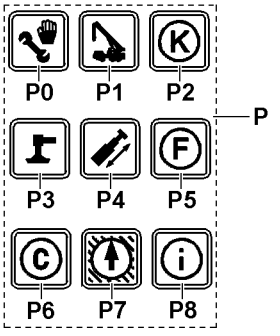
P0 P1 P2
P3 P4 P5
P6 P7 P8
P

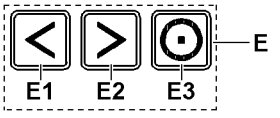
E1 E2 E3
E

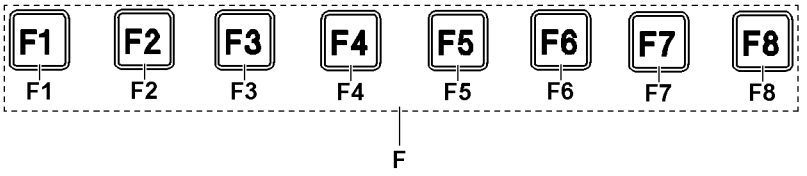
F1 F2 F3 F4 F5 F6 F7 F8
F1 F2 F3 F4 F5 F6 F7 F8
F

B117914

4 Operating elements LICCON Monitor

The functions of the individual monitor operating elements are program-dependent and can differ, depending on the LICCON program which is currently running. This will be described in more detail in the description of the individual LICCON programs.

A	Keypad	• Function is program dependent
P	Program keys	• The program keys are used to select individual programs. • **Note:** If a special case was activated at operation of the LICCON overload protection (illustration **1**) no program change is possible.
P0	Set up	• Call up the set up program
P1	Crane operation	• Call up the crane operation program
P2	-	• Program key not assigned!
P3	-	• Program key not assigned!
P4	Telescoping	• Call up the Telescoping program
P5	-	• Program key not assigned!
P6	-	• Program key not assigned!
P7	Working range limitation	• Call up the Working range limitation* program
P8	BSE Test system	• Call up the BSE test system program • **Note:** Description BSE-Test system, see Diagnostics manual.
C	Input key ENTER	• Confirmation of changes in running program
D	Set up key	• Zero position (not actuated): Normal operation • Touching: Function “Exceedance of shut off limits of LICCON overload protection” is released and / or the hoist limit switch is bypassed.

Note
Double function set up key!
If the crane control “EN 13000:2010 not active” is programmed, then, when actuating the set up key **D**, the release for the “Emergency operation LICCON overload protection” is automatically engaged!

▶ For crane control “EN 13000:2010 not active” take into account that the “Emergency operation LICCON overload protection” is automatically released when pressing the set up key **D**!

Note

▶ By actuating the set up key **D**, all erection / take down procedures can be carried out within the erection / take down charts, for which no load charts are available!

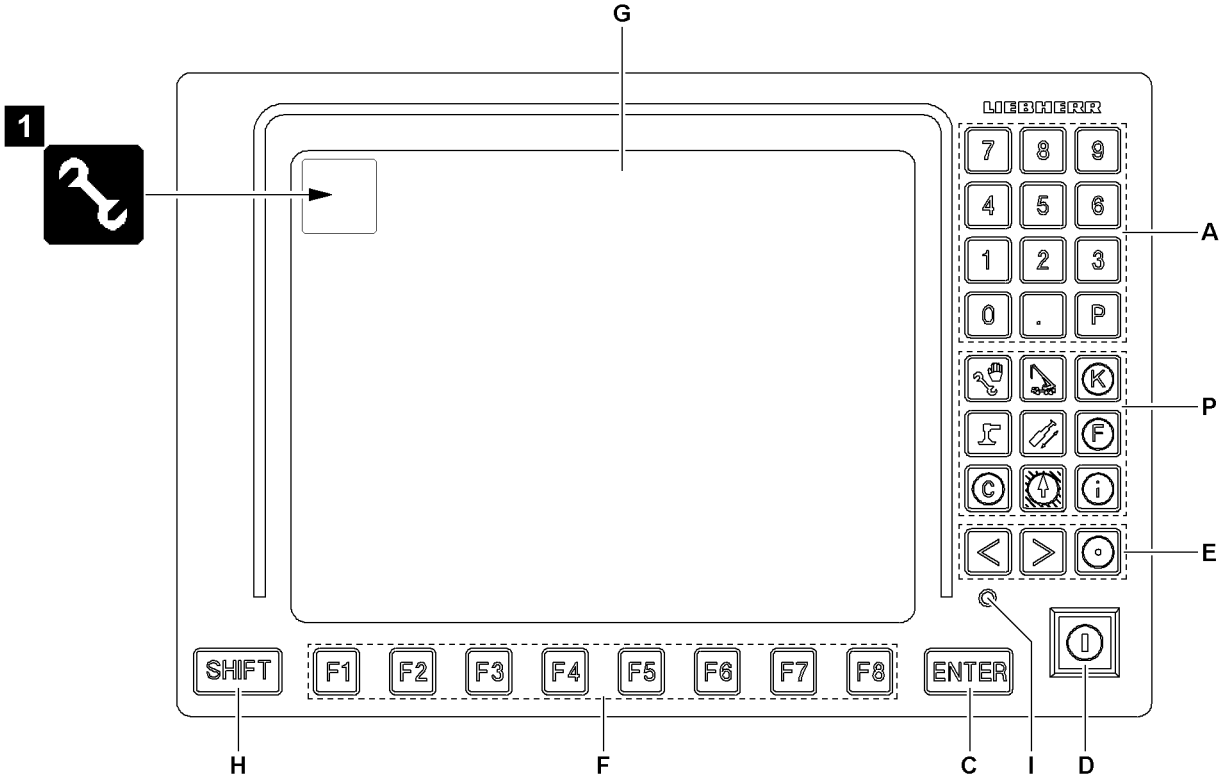
1
G
LIEBHERR
7 8 9
4 5 6
1 2 3
0 . P
A
P
E
SHIFT
F1 F2 F3 F4 F5 F6 F7 F8
ENTER
H
F
C
I
D

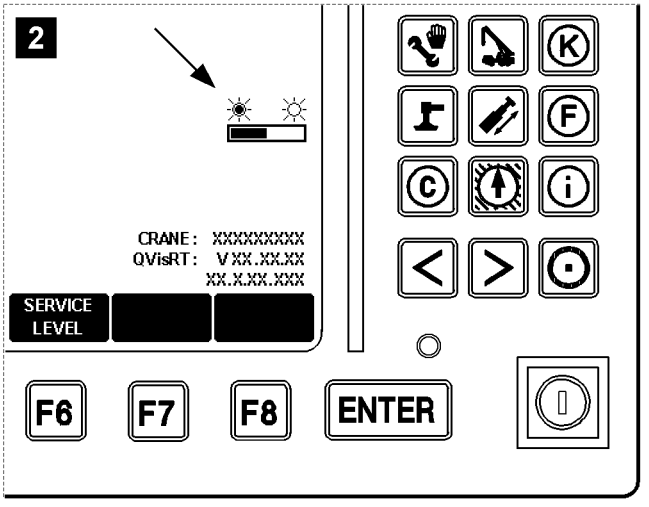
2
CRANE: XXXXXXXXX
QVisRT: V XX.XX.XX
XX.X.XX.XXX
SERVICE LEVEL
F6 F7 F8 ENTER

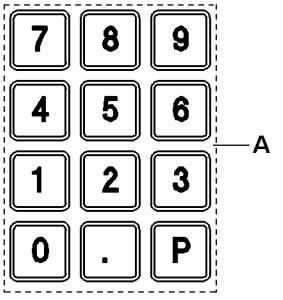
7 8 9
4 5 6
1 2 3
0 . P
A

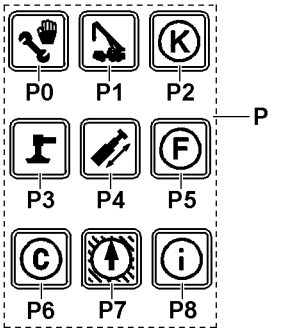
P0 P1 P2
P3 P4 P5
P6 P7 P8
P

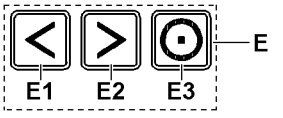
E1 E2 E3
E

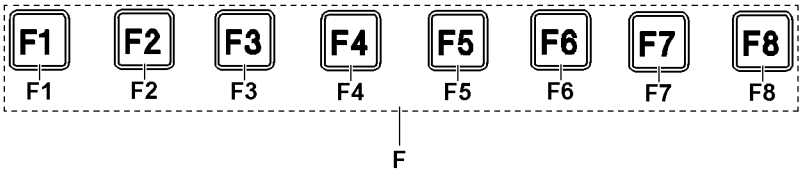
F1 F2 F3 F4 F5 F6 F7 F8
F1 F2 F3 F4 F5 F6 F7 F8
F

B117914

E Special function keys	• Functions of the special function keys are program-dependent and are further explained in the description of the individual LICCON programs. • **Monitor brightness adjustment**: • Press **E3** (hold down) and **E1**: 6-stage night design. • Press **E3** (hold down) and **E2**: Brightness setting in 7 stages. The brightness adjustment can be made from all available programs (for example: Set up, Crane operation).

Note

Automatic brightness adjustment of the LICCON monitor

The LICCON monitor has an automatic brightness adjustment. The brightness of the LICCON monitor is automatically matched to the light conditions. If the LICCON monitor is set to “medium brightness level”, then the regulating spectrum of the adjustment is optimally utilized. If the manual brightness setting of the LICCON monitor is on the “lowest” or the “highest” level, then the automatic brightness adjustment is **ineffective**. The current brightness setting of the LICCON monitor can only be checked in the “BSE Test system”, illustration **2** (arrow).

▶ Press the button BSE Test system **P8** to call up the BSE Test system.

F Function keys	• The function keys should always be viewed in conjunction with the function key icon line displayed on the display **G**.
G Display	• In the display appears a program-dependent operating screen
H SHIFT key	• Second-level key assignments, for example Supervisory function
I LED display	• Indicator light for the supply voltage of the monitor

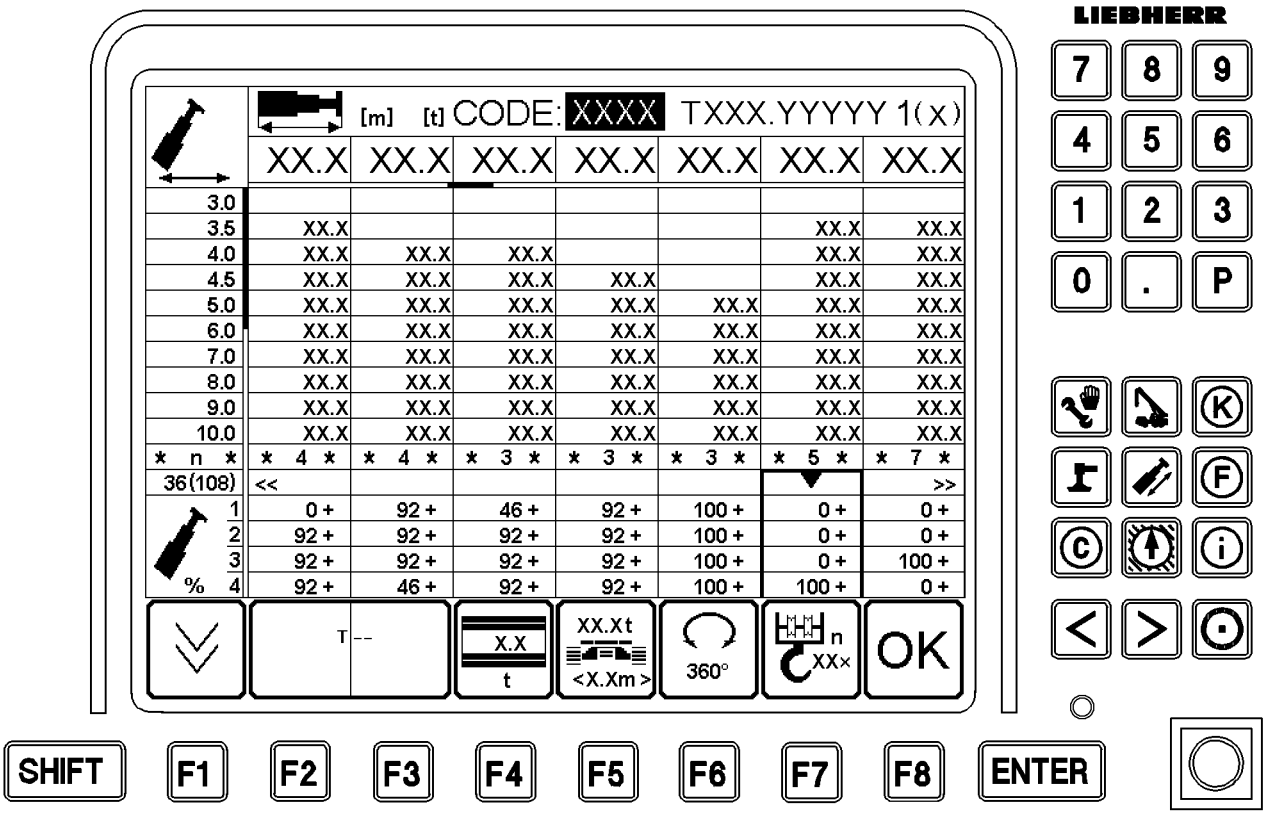
LIEBHERR
[m] [t] CODE: XXXX TXXX.YYYYY 1(x)
XX.X XX.X XX.X XX.X XX.X XX.X XX.X
3.0
3.5 XX.X XX.X XX.X
4.0 XX.X XX.X XX.X XX.X XX.X
4.5 XX.X XX.X XX.X XX.X XX.X XX.X
5.0 XX.X XX.X XX.X XX.X XX.X XX.X XX.X
6.0 XX.X XX.X XX.X XX.X XX.X XX.X XX.X
7.0 XX.X XX.X XX.X XX.X XX.X XX.X XX.X
8.0 XX.X XX.X XX.X XX.X XX.X XX.X XX.X
9.0 XX.X XX.X XX.X XX.X XX.X XX.X XX.X
10.0 XX.X XX.X XX.X XX.X XX.X XX.X XX.X
* n * * 4 * * 4 * * 3 * * 3 * * 3 * * 5 * * 7 *
36(108) << >>
1 0 + 92 + 46 + 92 + 100 + 0 + 0 +
2 92 + 92 + 92 + 92 + 100 + 0 + 0 +
3 92 + 92 + 92 + 92 + 100 + 0 + 100 +
% 4 92 + 46 + 92 + 92 + 100 + 100 + 0 +
T --
X.X
t
XX.Xt
<X.Xm>
360°
n
XXx
OK
7 8 9
4 5 6
1 2 3
0 . P
K
F
C
i
SHIFT
F1
F2
F3
F4
F5
F6
F7
F8
ENTER

B110329

5 “Set up” program

After turning the LICCON computer system on and correct completion of the boot up procedure, the “Set up” program appears automatically.

Note
Adjustment and display of set up configuration and reeving.
▶ Normally, the most recently run set up configuration and the reeving used at that time will be automatically set and displayed. If the computer system is started for the first time, the first valid operating mode, the first valid set up configuration and reeving number “1” appear in the set up screen.

You can see the programmed load charts in the “Set up” program.
You can set the desired operating mode and the desired set up configuration for the crane in the “Set up” program to be able to operate the crane.

5.1 Setting the operating mode and set up configuration

The crane operator can select the operating mode and the set up configuration using the function keys or by entering a short code.

5.1.1 Setting the operating mode and set up configuration via the function keys

The function keys are explained in the section “Function key line” in this chapter.
▶ Select the respective function keys.
▶ Press the **Enter** key to confirm and accept the settings.
Result:
– The data of the selected load chart can be viewed.

5.1.2 Setting the operating mode and set up configuration with the short code

The function keys are explained in the section “Function key line” in this chapter.
▶ Enter a short code using the keypad on the LICCON monitor.
▶ Press the **Enter** key to confirm and accept the settings.
Result:
– The data of the selected load chart can be viewed.

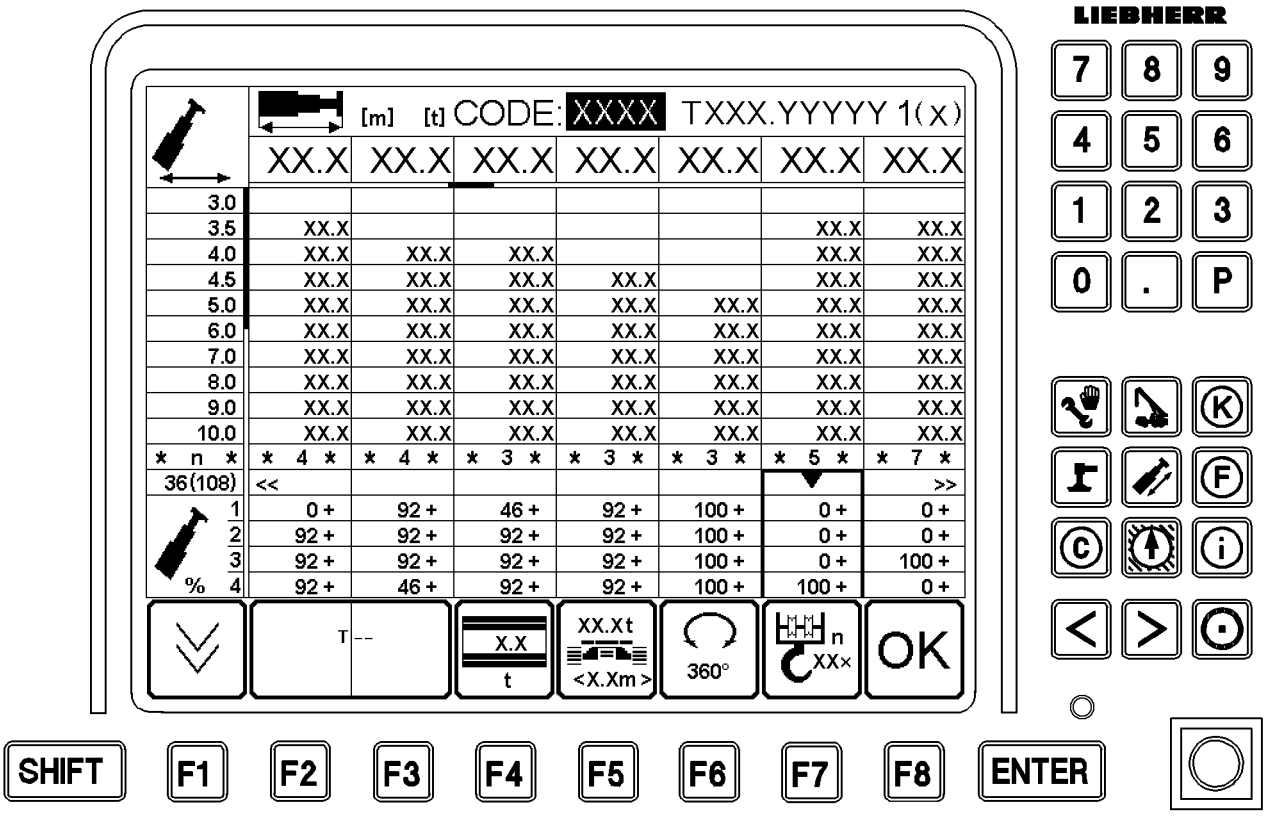
LIEBHERR
[m] [t] CODE: XXXX TXXX.YYYYY 1(x)
XX.X XX.X XX.X XX.X XX.X XX.X XX.X
3.0
3.5 XX.X XX.X XX.X
4.0 XX.X XX.X XX.X XX.X XX.X
4.5 XX.X XX.X XX.X XX.X XX.X XX.X
5.0 XX.X XX.X XX.X XX.X XX.X XX.X XX.X
6.0 XX.X XX.X XX.X XX.X XX.X XX.X XX.X
7.0 XX.X XX.X XX.X XX.X XX.X XX.X XX.X
8.0 XX.X XX.X XX.X XX.X XX.X XX.X XX.X
9.0 XX.X XX.X XX.X XX.X XX.X XX.X XX.X
10.0 XX.X XX.X XX.X XX.X XX.X XX.X XX.X
* n * * 4 * * 4 * * 3 * * 3 * * 3 * * 5 * * 7 *
36(108) << >>
1 0 + 92 + 46 + 92 + 100 + 0 + 0 +
2 92 + 92 + 92 + 92 + 100 + 0 + 0 +
3 92 + 92 + 92 + 92 + 100 + 0 + 100 +
% 4 92 + 46 + 92 + 92 + 100 + 100 + 0 +
T --
X.X
t
XX.Xt
<X.Xm>
360°
n
XXx
OK
7 8 9
4 5 6
1 2 3
0 . P
K
F
C
i
SHIFT
F1
F2
F3
F4
F5
F6
F7
F8
ENTER

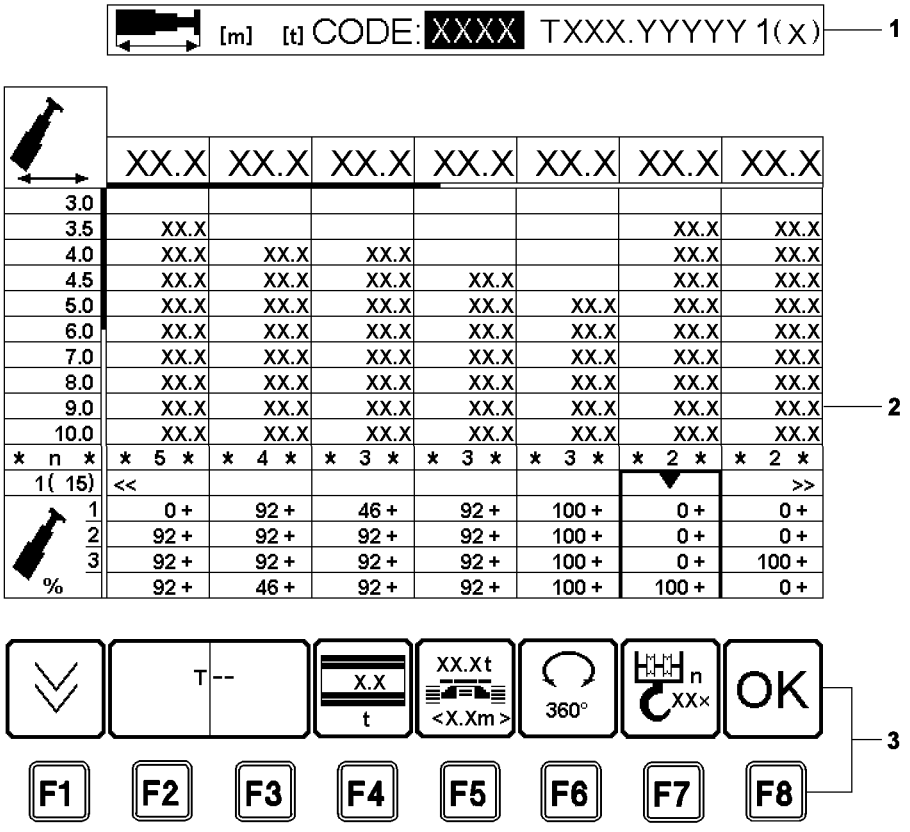
[m] [t] CODE: XXXX TXXX.YYYYY 1(x)
1
XX.X XX.X XX.X XX.X XX.X XX.X XX.X
3.0
3.5 XX.X XX.X XX.X
4.0 XX.X XX.X XX.X XX.X XX.X
4.5 XX.X XX.X XX.X XX.X XX.X XX.X
5.0 XX.X XX.X XX.X XX.X XX.X XX.X XX.X
6.0 XX.X XX.X XX.X XX.X XX.X XX.X XX.X
7.0 XX.X XX.X XX.X XX.X XX.X XX.X XX.X
8.0 XX.X XX.X XX.X XX.X XX.X XX.X XX.X
9.0 XX.X XX.X XX.X XX.X XX.X XX.X XX.X
2
10.0 XX.X XX.X XX.X XX.X XX.X XX.X XX.X
* n * * 5 * * 4 * * 3 * * 3 * * 3 * * 2 * * 2 *
1(15) << >>
1 0 + 92 + 46 + 92 + 100 + 0 + 0 +
2 92 + 92 + 92 + 92 + 100 + 0 + 0 +
3 92 + 92 + 92 + 92 + 100 + 0 + 100 +
% 92 + 46 + 92 + 92 + 100 + 100 + 0 +
T --
X.X
t
XX.Xt
<X.Xm>
360°
n
XXx
OK
3
F1
F2
F3
F4
F5
F6
F7
F8

B110330

5.2 “Set up” program areas

The monitor is divided into three areas in the “Set up” program:

– General information line **1**
– Display area of load chart values **2**
– Function key line (Set up) **3**

Note

▶ The monitor illustrations in this chapter are only examples.
▶ The display values in the individual icons and charts do not have to necessarily match the crane exactly.
▶ The programmed load charts for the crane are binding.

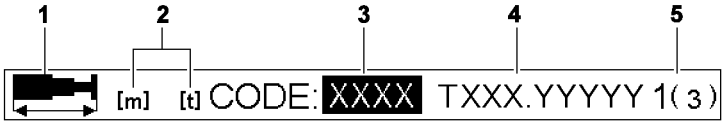

B103988

5.2.1 General information line

1 “Telescopic boom length” icon	• **Note:** The icon is identical for all operating modes.
2 Abbreviations	• For the programmed length units (LE) and weight units (GE) Possible length units are [m] and [ft] Possible weight units are [t] and [lbs]

3 4-digit short code	• Stands next to the word “CODE”
	• Each short code uniquely identifies a crane configuration. The valid set up configuration and their associated short code numbers for the crane can be found in the load chart manual of the crane.
	• If, via the function key line:
	  • An invalid set up configuration is selected, then the short code “0000” is shown in white on red background.
	  • An invalid set up configuration is selected, then the short code is shown in white on blue background. The values are entered into the load value field only after pressing the ENTER key.

4 Organization number	• For internal Liebherr load chart administration
5 Page number	• Relates to the currently displayed part of the load chart • The total number of pages in this load chart is in parentheses

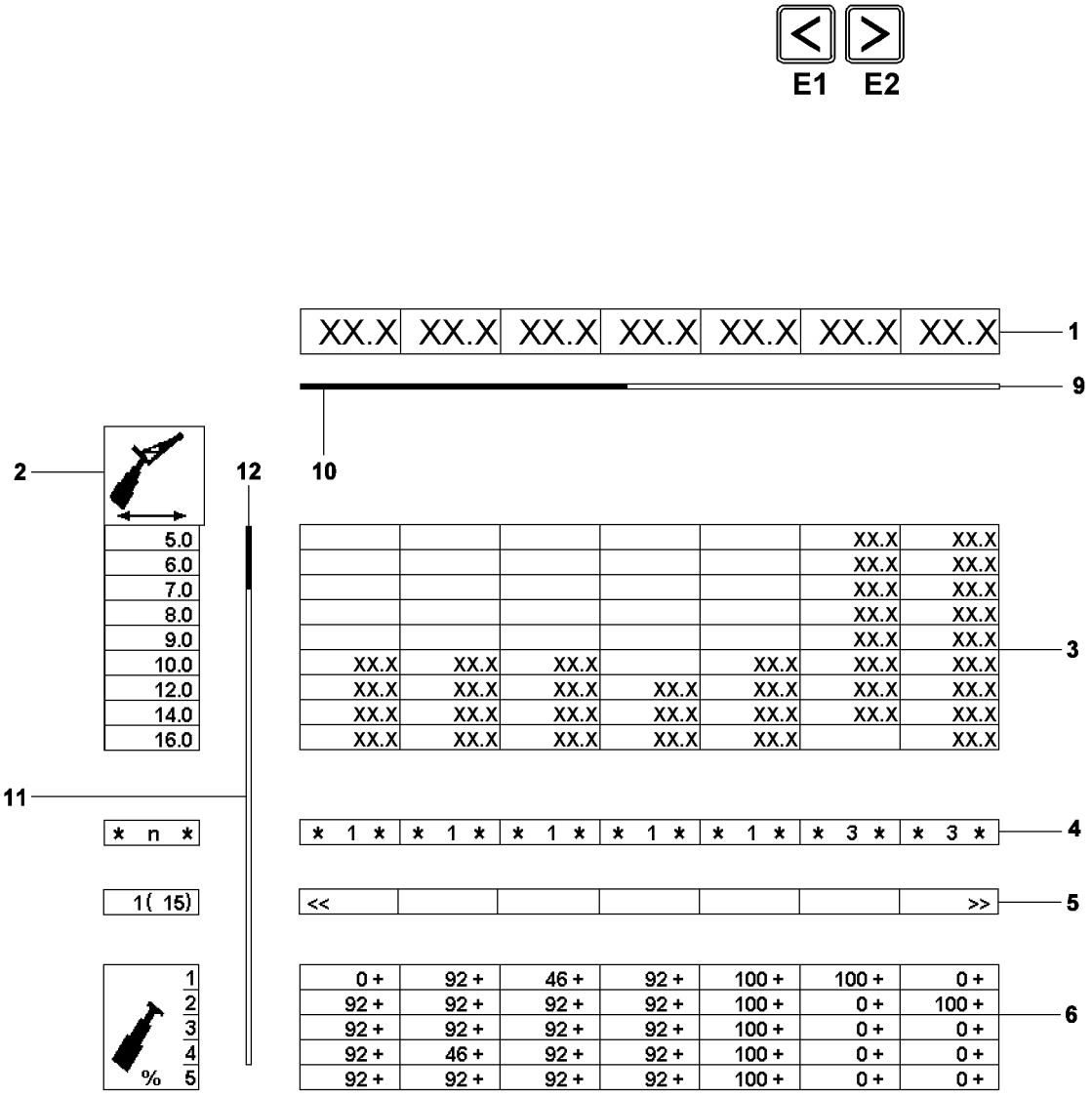
E1
E2
XX.X XX.X XX.X XX.X XX.X XX.X XX.X
1
9
2
12
10
5.0
6.0
7.0
8.0
9.0
10.0
12.0
14.0
16.0
3
11
* n *
* 1 * * 1 * * 1 * * 1 * * 1 * * 3 * * 3 *
4
1(15)
<< >>
5
1
2
3
4
% 5
0 + 92 + 46 + 92 + 100 + 100 + 0 +
92 + 92 + 92 + 92 + 100 + 0 + 100 +
92 + 92 + 92 + 92 + 100 + 0 + 0 +
92 + 46 + 92 + 92 + 100 + 0 + 0 +
92 + 92 + 92 + 92 + 100 + 0 + 0 +
6

B108838

5.2.2 Display area of load chart values

1 Telescopic boom lengths	• In [m] or [ft] Maximum of 7 columns per display page • Displayed as the horizontal axis of the load value field
2 “Boom radius” icon	• Operating mode dependent • In [m] or [ft] • Maximum 9 lines of radius values • Displayed as the vertical axis of the load value field
3 Load value field	• Columns under the telescopic boom lengths and in the lines to the right of the radius values • Load values depending on boom length and radius
4 Reeving number of hoist rope	• * n * n = Reeving number of the hoist rope between the boom head and hook block, in order to be able to lift the maximum load in the corresponding load chart column **Note:** If an exclamation mark (“!”) is next to the reeving number, then an auxiliary device is required for at least for one load value in the column, see Crane operating instructions, chapter 4.06.
5 Line for special displays	• If a load chart consists of more than 7 columns, it cannot be fully displayed due to the size of the monitor. In that case, marking arrows in the first or the seventh field indicate that there are additional columns to the left or right of the displayed chart. They can be shown by pressing the key **E1** or the key **E2**. As supporting information, the currently selected column number and the number of columns in the chart are shown, for example, 1(15) corresponds to the first of 15 columns. • **Note:** By pressing **E1** or **E2** twice in quick succession, you can “browse” left or right by 7 load chart columns (equals the display area of the LICCON monitor). “SHIFT” (hold down) + “E1”: Jump to first column in load chart. “SHIFT” (hold down) + “E2”: Jump to last column in load chart.

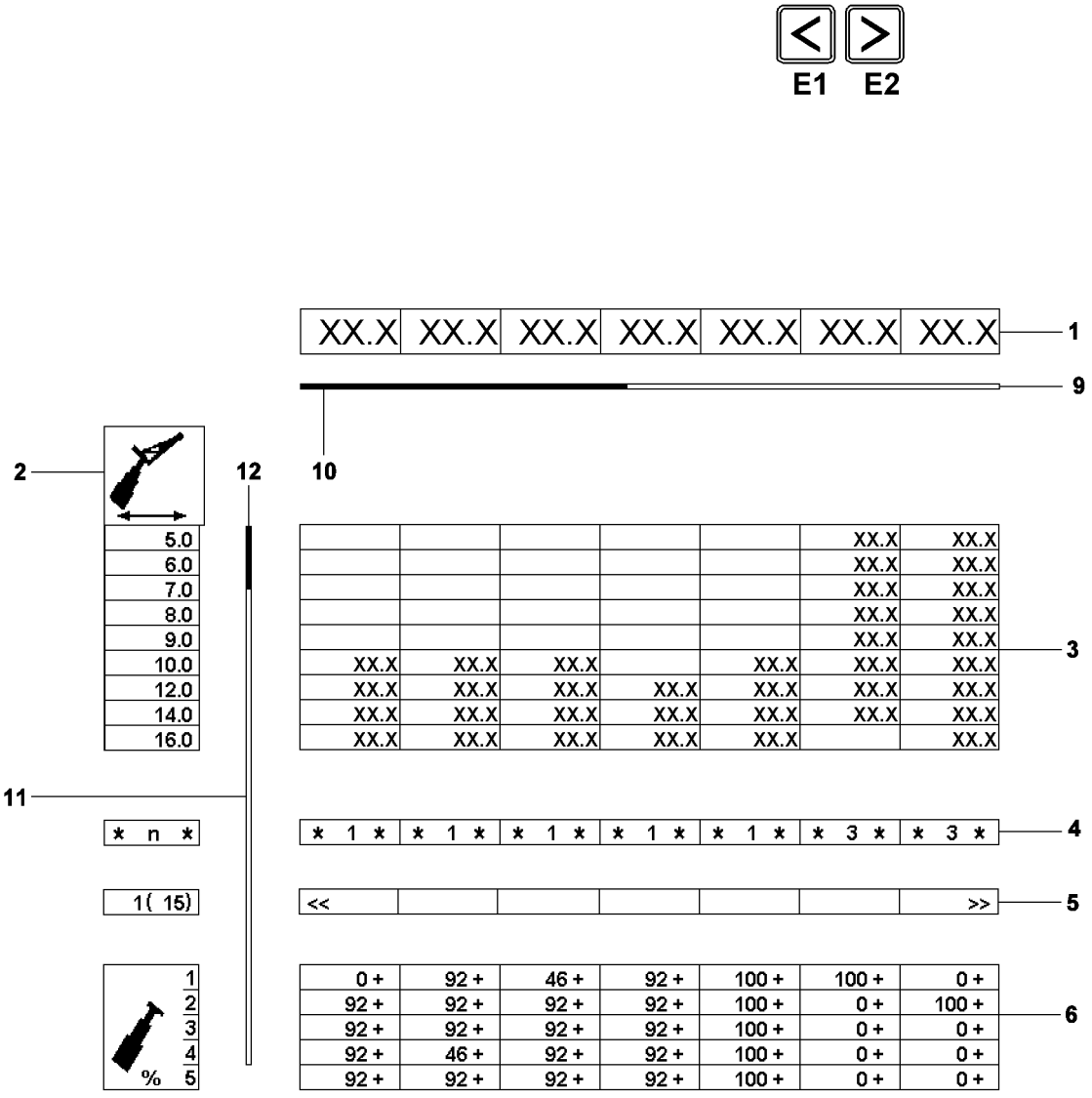
E1
E2
XX.X XX.X XX.X XX.X XX.X XX.X XX.X
1
9
2
12
10
5.0
6.0
7.0
8.0
9.0
10.0
12.0
14.0
16.0
3
11
* n *
* 1 * * 1 * * 1 * * 1 * * 1 * * 3 * * 3 *
4
1(15)
<< >>
5
1
2
3
4
% 5
0 + 92 + 46 + 92 + 100 + 100 + 0 +
92 + 92 + 92 + 92 + 100 + 0 + 100 +
92 + 92 + 92 + 92 + 100 + 0 + 0 +
92 + 46 + 92 + 92 + 100 + 0 + 0 +
92 + 92 + 92 + 92 + 100 + 0 + 0 +
6

B108838

6	Extension condition of telescopic sections	• In percent [%] • The first column contains the “Boom length” icon [%]. Next to that are the lines for the extension condition of the telescopic sections. The number in the icon column describes the corresponding telescopic section (highest number = outermost telescopic section). The value in the boom length column displays the extension condition of the telescope in percentages, which must be maintained for the corresponding boom length. The status indicator “-” next to the percentage extension status value means that the telescopic boom can be telescoped to the percentage extension condition value under load (according to the load chart).
9	Horizontal orientation display	• The “horizontal orientation display” shows the crane driver by the display element **10** (color red), where he is in the load chart in a horizontal direction. **Note:** If the display element **10** in the “horizontal orientation display” **9** is displayed on the left-hand edge, then it is in the first column of page 1 in the load chart of the set operating mode.
11	Vertical orientation display	• The “vertical orientation display” shows the crane driver by the display element **12** (color red), where he is in the load chart in a vertical direction **Note:** If the display element **12** in the “vertical orientation display” **11** is displayed at the top, then it is in the first row of the maximum number of available rows in the load chart of the set operating mode.

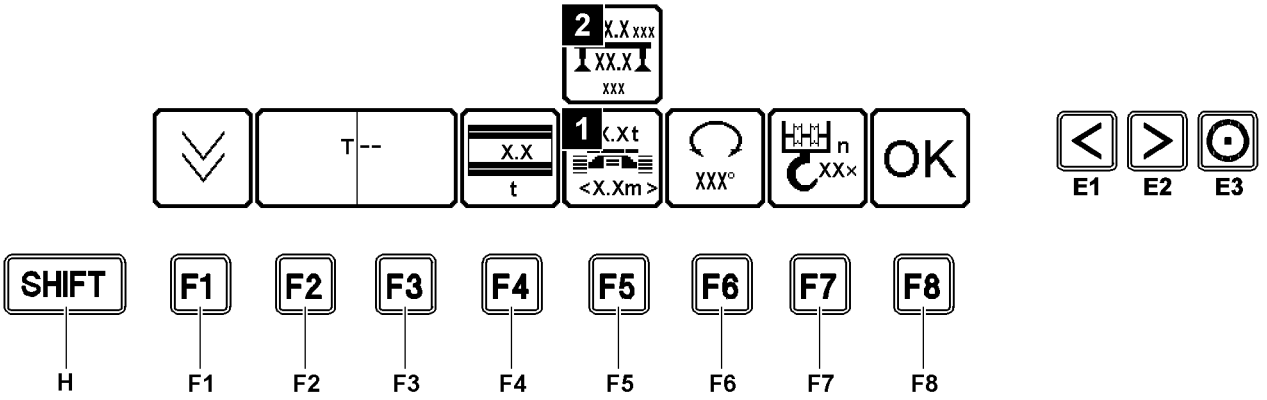
2
X.X xxx
XX.X
xxx
T --
X.X
t
1
X.Xt
<X.Xm>
XXX°
n
XX×
OK
E1
E2
E3
SHIFT
F1
F2
F3
F4
F5
F6
F7
F8
H
F1
F2
F3
F4
F5
F6
F7
F8

B117901

5.2.3 The function key line (Set up)

The function key line consists of function keys **F1** to **F8** and the function key icon bar above it. The function keys correspond to the various function key icons above them.
Various functions are indicated by the function key icons, or they may refer to changes of operating mode and crane configuration.
Not all function keys have to be assigned icons on the LICCON monitor. This depends on the program selection.
Pressing a function key changes the appearance of the icon above, its meaning, or its textual content.

Note

- ▶ By simultaneously actuating the special function key **E3** and the function key **F3**, it is possible to “switch” by groups through the accessories. This allows quicker access to the operating mode required for crane application.
- ▶ See also description “**E3** and **F3** ”, as well as “**E3** and **SHIFT** and **F3** ”.

F1 Vertical paging	• Depending on the size of the monitor, up to 10 load chart lines can be displayed at once. If a chart consists of more than 10 lines, then the display is spread over several pages. When pressing a key, the next page of the load chart will be displayed, and the number of the current page in the “general information line” will be counted up by 1.
SHIFT and **F1**	• Previous page of the load chart (page numbers in the “general information line” are counted backwards 1 at a time)
F2 Main geometry status	• For setting possibility of different main geometry conditions of the crane and information for programming the load chart, see Load chart manual. • Example: **T** for **Telescopic boom**.
SHIFT and **F2**	• Previous main geometry status (if present)

F3 Accessories	• Options for selecting the different accessory geometry conditions of the crane (if available). The types are described using abbreviations, angle and length data in the icon, see Load chart manual.
	• Example:
	TK for **Crane operation with mechanically adjustable folding jib**.
	or
	TNZK * for **Crane operation with a hydraulically adjustable folding jib / auxiliary boom (depending on crane type)**.
	• **Note:**
	Pressing the function key **F2** and / or the function key **F3** deletes all operating mode and set up configuration dependent data from the monitor and sets the short code in the general information line to a new value. The “Code 0000” is displayed in white on red background if the set configuration for function keys **F4**, **F5** and / or **F6** does not exist or has not been programmed. For the existing set up configuration, the short code, more than 0, appears in white on blue background.
	• **Operating mode dependent data:**
	  • Telescopic boom length icon for the general information line
	  • Length units and weight units
	  • Load chart organization number
	  • Boom radius icon
	  • Telescopic boom lengths
	  • Telescopic boom length icon in area “Extension status of telescopic section in percentages [%]”
	  • Extension condition of telescopic section with status indicator in percentages
	• **Set up dependent data:**
	  • Numbering of current page number and total number of pages in load chart
	  • Radius values in length units
	  • Load values in weight units

SHIFT and **F3**	• Previous accessory geometry condition
E3 and **F3**	• Select the accessories in groups forward (“K* ”, “HK* ”) by pressing key combination **E3** (hold down) and then pressing function key **F3** **Note:** The first accessory for the next accessory group it set.
E3 and **SHIFT** and **F3**	• Reverse select the accessories in groups (“HK* ”, “K* ”) by pressing key combination **E3** and **SHIFT** (holding down both) and then pressing function key **F3** **Note:** The first accessory for the previous accessory group it set.
F4 Counterweight	• Adjustment option for the current counterweight, which must be on the superstructure in order to achieve the values in the current chart. When pressing a key, the following icon appears with additional text in the counterweight icon. • Example: “13.3 t ” = total counterweight of 13.3 t
SHIFT and **F4**	• Previous counterweight
F5 Set up configuration Crane chassis	• When working with the present load chart, then the set up configuration of the crane chassis must match. • Crawler travel gear, illustration **1**: Setting possibility for the extension status of the cross carriers, the track width of the crawler and the current central ballast. • Support, illustration **2**: Setting possibility for the support width and the current central ballast.

SHIFT and **F5**	• Previous set up configuration Crane chassis

F6 Slewing range - Superstructure	• Setting option for slewing range
	• Example:
	  • 360° slewing range: Unlimited rotation is possible.
	  • 0° slewing range: Toward the rear (locked).

SHIFT and **F6**	• Previous slewing range
F7 Hoist rope reeving	• Option to set the number of hoist rope strands, which is reeved on the boom in order to reach a certain lifting capacity. The displayed number of hoist rope strands (reeving) in the icon will be increased with every keystroke by one counter, up to a fixed maximum value for the respective operating mode. After that the counter restarts from a fixed minimum value. If the set value is still within the minimum and maximum values when switching to another operating mode within that range, it remains valid. Otherwise it will be set to the minimum value for the new operating mode.
SHIFT and **F7**	• Reduce the reeving number by 1
F8 Function key “OK”	• Accept the selected set up configuration and automatic change over to operating screen **Prerequisites:** The set up mode setting must be completed, i.e. a valid short code is displayed and load capacity values are in the chart field. The external conditions for this set up configuration, if specified, must be met (e.g. locking the superstructure, track width of crawler track). If the crane is equipped with track width monitoring*, then the crawler carriers must be extended to the respective track width. If these preconditions are met, then the “O.K.” key confirms that the chosen set up configuration and the selected reeving are correct and transfers the parameters to the “Crane operation” program. **Note:** Make sure that after switching to the operating screen, the selected set up configuration (short code) and the hoist rope reeving(s) have been accepted correctly. • If the active set up configuration is to be changed, then a certain radius may not be exceeded, otherwise the set up configuration cannot be changed.

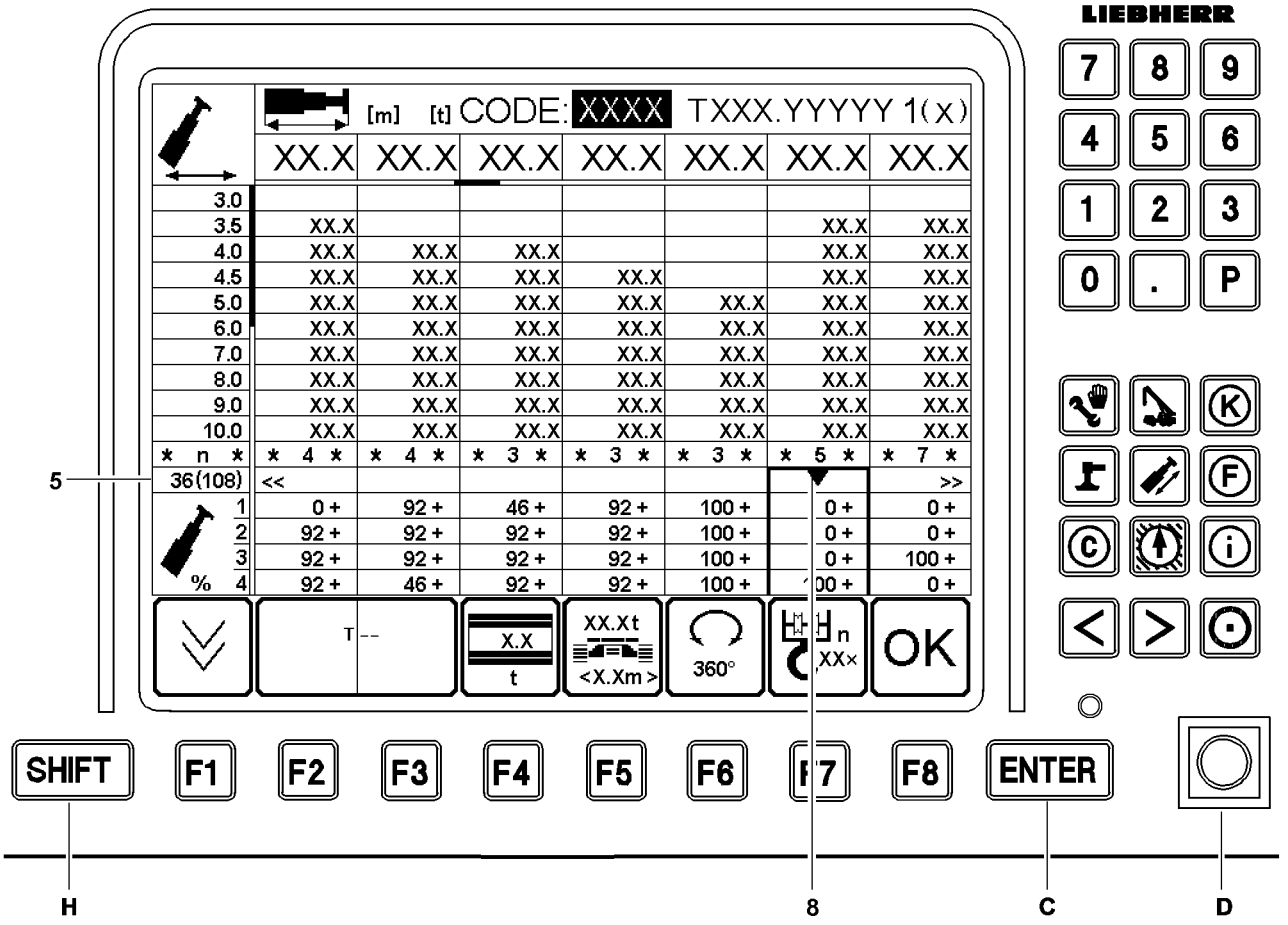
LIEBHERR
[m] [t] CODE: XXXX TXXX.YYYYY 1(x)
XX.X XX.X XX.X XX.X XX.X XX.X XX.X
3.0
3.5 XX.X XX.X XX.X
4.0 XX.X XX.X XX.X XX.X XX.X
4.5 XX.X XX.X XX.X XX.X XX.X XX.X
5.0 XX.X XX.X XX.X XX.X XX.X XX.X XX.X
6.0 XX.X XX.X XX.X XX.X XX.X XX.X XX.X
7.0 XX.X XX.X XX.X XX.X XX.X XX.X XX.X
8.0 XX.X XX.X XX.X XX.X XX.X XX.X XX.X
9.0 XX.X XX.X XX.X XX.X XX.X XX.X XX.X
10.0 XX.X XX.X XX.X XX.X XX.X XX.X XX.X
* n * * 4 * * 4 * * 3 * * 3 * * 3 * * 5 * * 7 *
36(108) << >>
1 0 + 92 + 46 + 92 + 100 + 0 + 0 +
2 92 + 92 + 92 + 92 + 100 + 0 + 0 +
3 92 + 92 + 92 + 92 + 100 + 0 + 100 +
% 4 92 + 46 + 92 + 92 + 100 + 0 + 0 +
T --
X.X
t
XX.Xt
<X.Xm>
360°
n
XXx
OK
5
SHIFT
F1
F2
F3
F4
F5
F6
F7
F8
ENTER
H
8
C
D

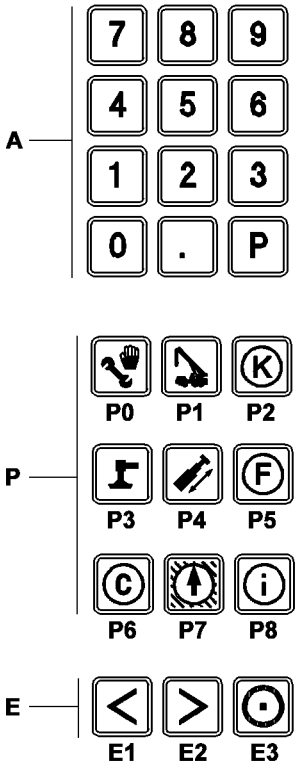
A
7 8 9
4 5 6
1 2 3
0 . P
P
P0 P1 P2
P3 P4 P5
P6 P7 P8
E
E1 E2 E3

B110332

5.2.4 Other operating elements

A Numeric keypad

- Pressing the keypad deletes all operating mode and set up configuration dependent data from the monitor
  - The keys **0** to **9** on the keypad can be used to enter the short code directly into the LICCON monitor. During entry, the short code is displayed in “green”.
  - The key **P** and the key **.** have no function in the “Set up” program.

P Program keys

- Selection among the individual programs. The settings in the set up program are discarded and the set up configuration and reeving most recently confirmed with the **O.K.** key will continue to be used.
  A program that is currently running **cannot** be called up again using its program key.

C Input key “ENTER”

- Confirmation of input both for short codes as well as for any change in the set up configuration via the function keys
- **ENTER** after entering the short code searches for the short code in the programmed load charts. If the relevant load chart has been programmed, it is displayed in full. If the relevant load chart has **not** been programmed, the short code is displayed in white on red background and an acoustic signal from the LICCON monitor is heard.
- **ENTER** after a changing the operating mode using the function key **F2** and / or the function key **F3** displays the load chart (if the chart exists) plus the short code on the LICCON monitor.
  Note:
  If no load chart is defined or available for the changed operating mode, then, after pressing the ENTER key, the first available set up state in this operating mode with the appropriate load chart and short code will be displayed on the set up screen.
- **ENTER** after a change in the set up configuration using the function key **F4**, the function key **F5** and the function key **F6**, displays the load chart (if the chart exists) plus the short code on the LICCON monitor.
  Note:
  If no load chart is defined or available for the changed set up configuration, then, after pressing the ENTER key, the first available set up configuration in the set operating mode with the appropriate load chart and short code will be displayed on the set up screen.

D Set up key

- Has no function in the “Set up” program

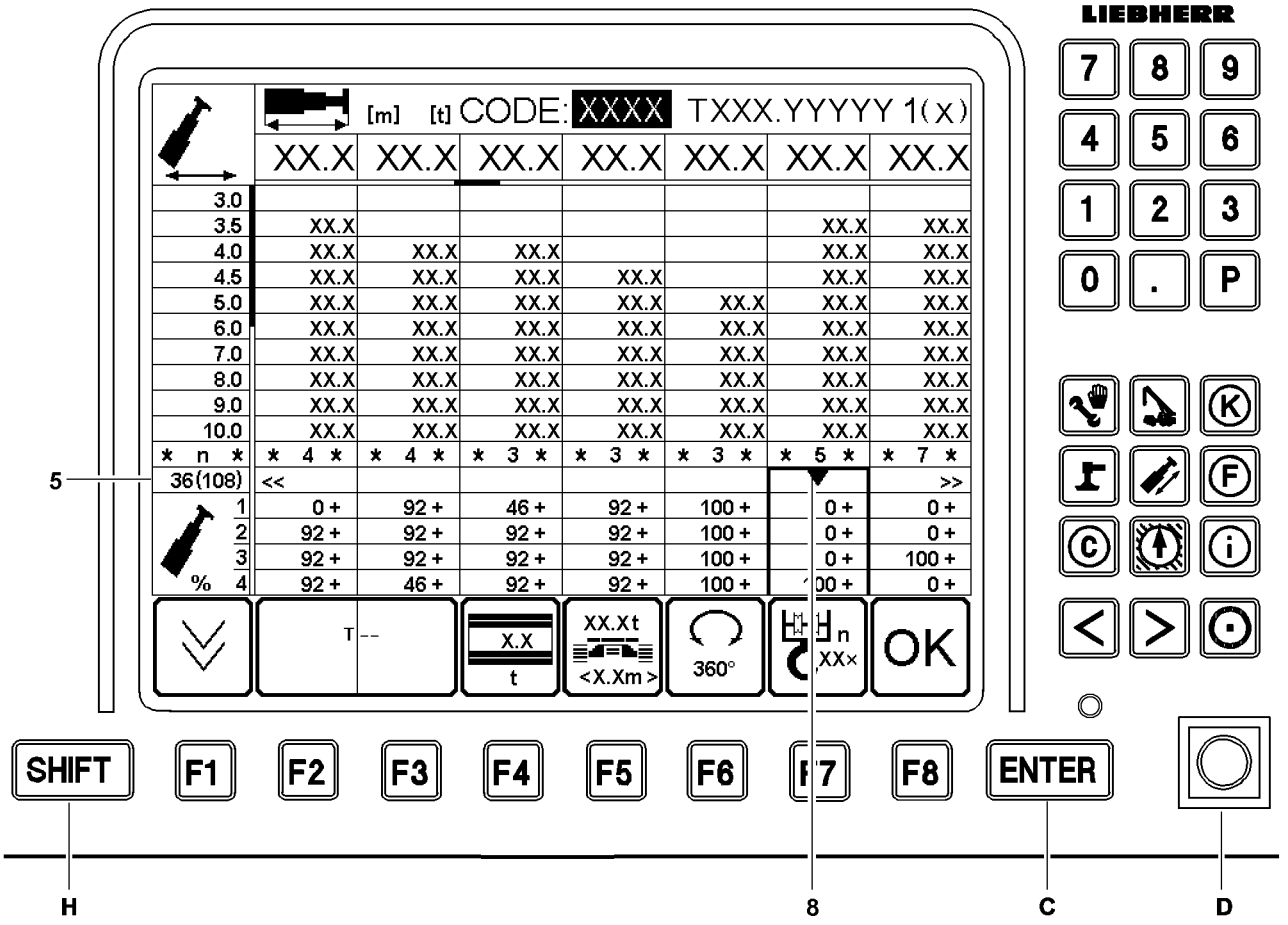
LIEBHERR
[m] [t] CODE: XXXX TXXX.YYYYY 1(x)
XX.X XX.X XX.X XX.X XX.X XX.X XX.X
3.0
3.5 XX.X XX.X XX.X
4.0 XX.X XX.X XX.X XX.X XX.X
4.5 XX.X XX.X XX.X XX.X XX.X XX.X
5.0 XX.X XX.X XX.X XX.X XX.X XX.X XX.X
6.0 XX.X XX.X XX.X XX.X XX.X XX.X XX.X
7.0 XX.X XX.X XX.X XX.X XX.X XX.X XX.X
8.0 XX.X XX.X XX.X XX.X XX.X XX.X XX.X
9.0 XX.X XX.X XX.X XX.X XX.X XX.X XX.X
10.0 XX.X XX.X XX.X XX.X XX.X XX.X XX.X
* n * * 4 * * 4 * * 3 * * 3 * * 3 * * 5 * * 7 *
36(108) << >>
1 0 + 92 + 46 + 92 + 100 + 0 + 0 +
2 92 + 92 + 92 + 92 + 100 + 0 + 0 +
3 92 + 92 + 92 + 92 + 100 + 0 + 100 +
% 4 92 + 46 + 92 + 92 + 100 + 0 + 0 +
T --
X.X
t
XX.Xt
<X.Xm>
360°
n
XXx
OK
5
7 8 9
4 5 6
1 2 3
0 . P
K
F
C
i
SHIFT
F1
F2
F3
F4
F5
F6
F7
F8
ENTER
H
8
C
D

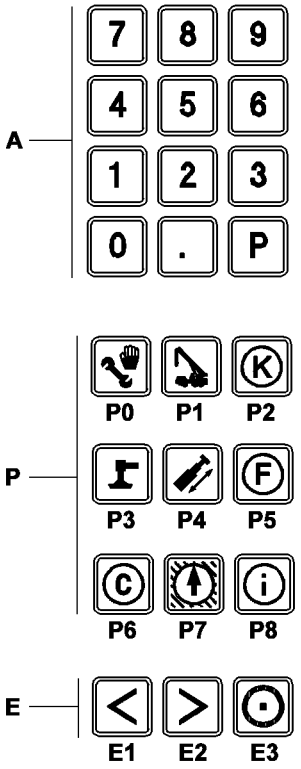
A
7 8 9
4 5 6
1 2 3
0 . P
P
P0 P1 P2
P3 P4 P5
P6 P7 P8
E
E1 E2 E3

B110332

E Horizontal paging	• The key **E1** and key **E2** only have a function if this is indicated in the “line for special displays **5** ”. If a load chart consists of more than seven columns, the first display of the configuration state only shows columns 1 to 7. • With the key **E1**, the cursor **8** can be moved to the left. • With the key **E2**, the cursor **8** can be moved to the right. The double arrow at the right edge of the line points to additional columns in either direction. If the cursor **8** (movement mark) is moved to an edge marked with arrows, then, for example, when pressing the key **E2** again, the chart columns are moved by 3 columns to the left. **Note:** By pressing key **E1** or key **E2** twice in quick succession, you can “page” to the left or right by 7 load chart columns (equals the display area of the LICCON monitor).
H “SHIFT” key	• “SHIFT” (hold down) + “E1”: Jump to first column in load chart. • “SHIFT” (hold down) + “E2”: Jump to last column in load chart.

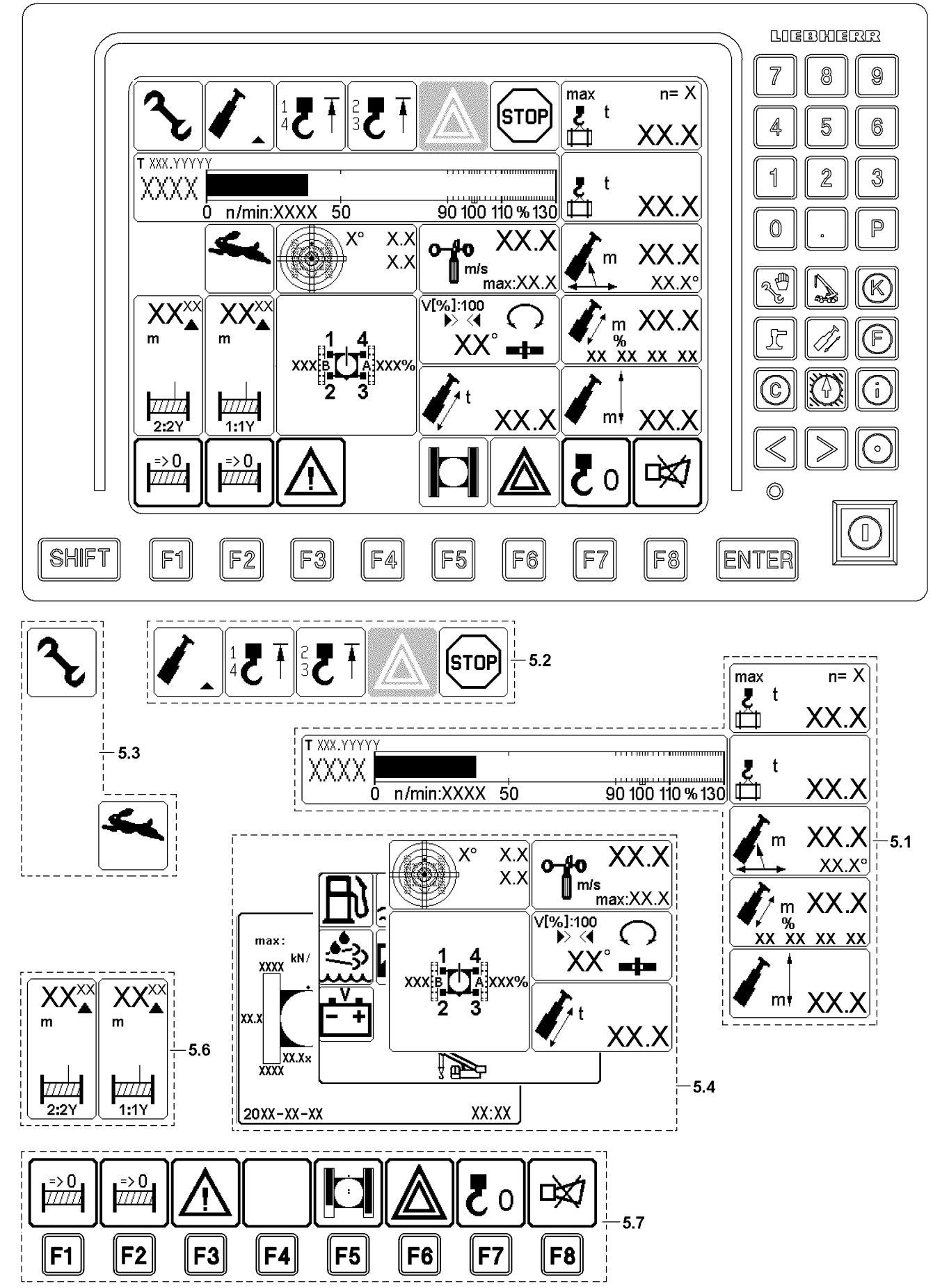
LIEBHERR
STOP
max
n= X
XX.X
T XXX.YYYYY
XXXX
0 n/min:XXXX 50 90 100 110 % 130
X° X.X
X.X
m/s
max:XX.X
m
XX.X°
V[%]:100
XX°
m %
XX XX XX XX
XXXX
m
2:2Y
1:1Y
XXX B A XXX%
=> 0
SHIFT
F1
F2
F3
F4
F5
F6
F7
F8
ENTER
5.1
5.2
5.3
5.4
5.6
5.7
max:
kN/
XXXX
XX.X
XX.Xx
20XX-XX-XX
XX:XX

B117902

6 “Crane operation” program

The LICCON program “Crane operation” assists the crane driver by displaying clearly on the monitor the data needed for operating the crane. An acoustic signal accompanies all critical displays. Depending on the equipment, a range of other icons may also be turned on as additional displays, either as required by the crane operator or automatically in the event of a problem.

It also alerts the crane operator to imminent overload conditions. In the event of overload and many error conditions, which could be hazardous, the system shuts off.

The monitor is divided into seven areas in the “Crane operation” program:

- Crane geometry and load information **5.1**
- Alarm functions **5.2**
- Special functions **5.3**
- Monitoring functions **5.4**
  - Monitoring functions during crane operation
  - Monitoring of surface pressure and center of gravity
  - Monitored auxiliary functions
- Winch display **5.6**
- Function key line (crane operation) **5.7**

Note

▶ The monitor illustrations in this chapter are only examples. The display values in the individual icons and charts do not have to necessarily match the crane exactly. The configuration of the LICCON monitor with icons is only descriptive.

▶ An identical icon display will **not** appear during crane operation!

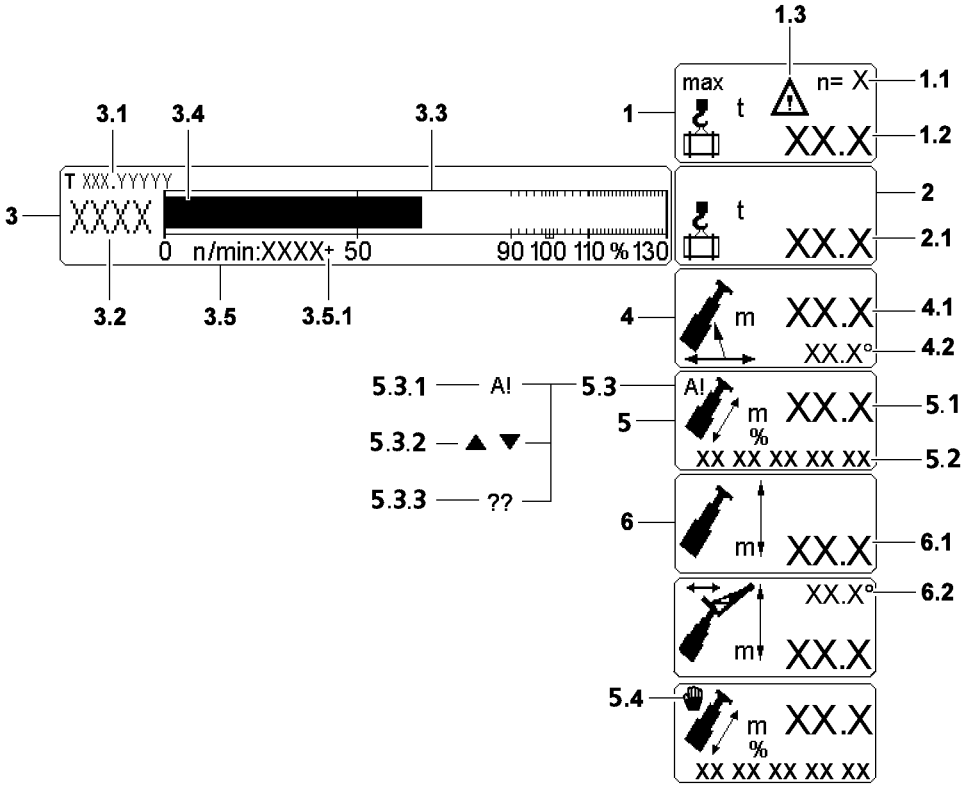
1.3
max
n= X
1.1
1
t
XX.X
1.2
3.1
3.4
3.3
T XXX.YYYYY
3
XXXX
0 n/min:XXXX+ 50 90 100 110 % 130
2
t
XX.X
2.1
3.2
3.5
3.5.1
4
m
XX.X
4.1
XX.X°
4.2
5.3.1
A!
5.3
A!
5
m
%
XX.X
5.1
XX XX XX XX XX
5.2
5.3.2
5.3.3
??
6
m
XX.X
6.1
XX.X°
6.2
m
XX.X
5.4
m
%
XX.X
XX XX XX XX XX

B115202

6.1 Crane geometry and load information

6.1.1 Maximum load

1	“Maximum load” icon	• With text for MU [t] or [lbs]
1.1	Reeving number of hoist rope	• n = Reeving number of hoist rope that is reeved at the pulley head selected via the load chart (previously selected in the “Set up” program)

1.2	Maximum load according to load chart and reeving	• In [t] or [lbs]
		• It depends on:
		  • The selected operating mode
		  • The main boom configuration
		  • The accessory configuration
		  • The selected set up configuration
		  • Counterweight
		  • Track width / support base / central ballast
		  • Slewing range
		  • Reeving
		  • The boom radius

Note

▶ “? ? ? . ?” if a value in the load chart cannot be accessed, for example because the crane is not within the load chart range or one or more sensors are missing or so defective, so that the load cannot be calculated.

1.3	Warning icon	• The warning icon **1.3** is shown when, for example:
		  • The maximum wind speed is exceeded.
		  • The permissible crane incline is exceeded.
		  • The track width does not match the set up configuration.

WARNING

Danger of toppling the crane if the warning icon **1.3** appears!

Personnel can be killed and the crane can be damaged!

▶ If the warning icon **1.3** appears on the LICCON monitor, crane operation is prohibited!

▶ Initiate measures to counteract the warning message and to bring the crane into a safe operating status!

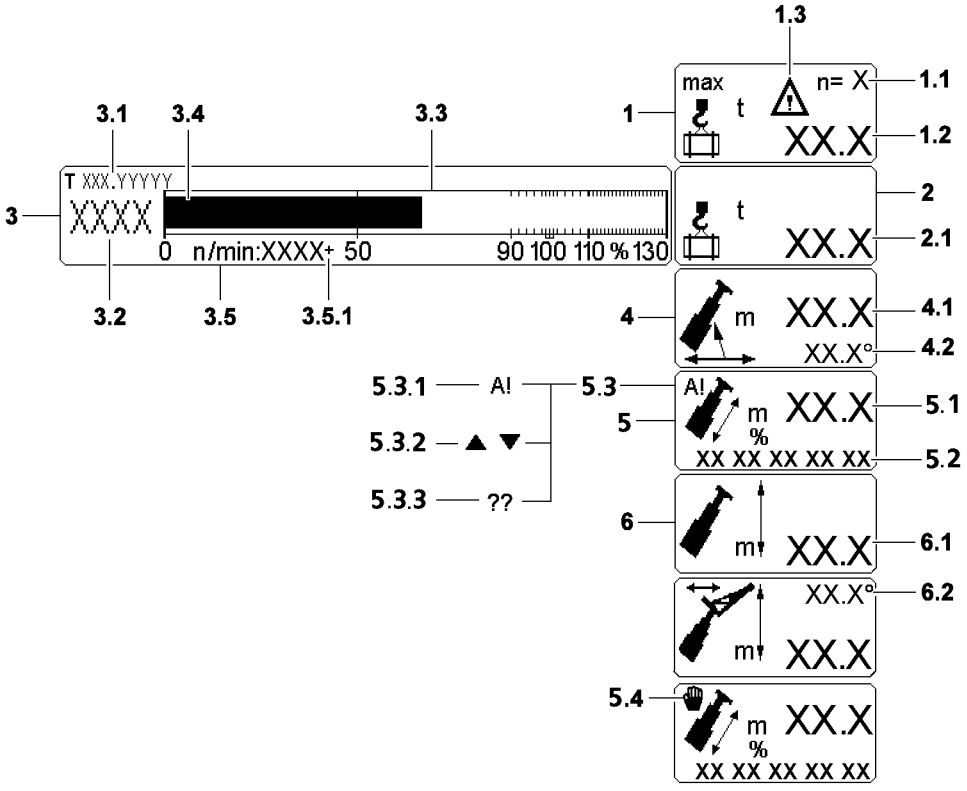
1.3
max
n= X
1.1
1
t
XX.X
1.2
3.1
3.4
3.3
T XXX.YYYYY
3
XXXX
0 n/min:XXXX+ 50 90 100 110 % 130
2
t
XX.X
2.1
3.2
3.5
3.5.1
4
m
XX.X
4.1
XX.X°
4.2
5.3.1
A!
5.3
A!
5
m
%
XX.X
5.1
XX XX XX XX XX
5.2
5.3.2
5.3.3
??
6
m
XX.X
6.1
XX.X°
6.2
m
XX.X
5.4
m
%
XX.X
XX XX XX XX XX

B115202

6.1.2 Current load

2 “Current load” icon	• With text for MU [t] or [lbs]
2.1 Current load on the boom	• Actual load display = Load in [t] or [lbs] that is currently suspended on the selected boom • Display of the calculated total load including the weights of the load carrying, the lifting and / or the fastening equipment. By using the function “Tare” (see description of function key **F7** in section “Function key line (crane operation)”) the display can be changed over to display the net load. The icon is displayed in “red” and the word “net” is also displayed.

Note

▶ “? ? ? . ?” is displayed if one or more sensors are missing or so defective that the “actual load on the boom” **cannot** be calculated. This is always the case if the boom projection radius **4.1** and the pulley head height **6.1** cannot be calculated and / or the sensors to measure the pressure in the luffing cylinder are defective.

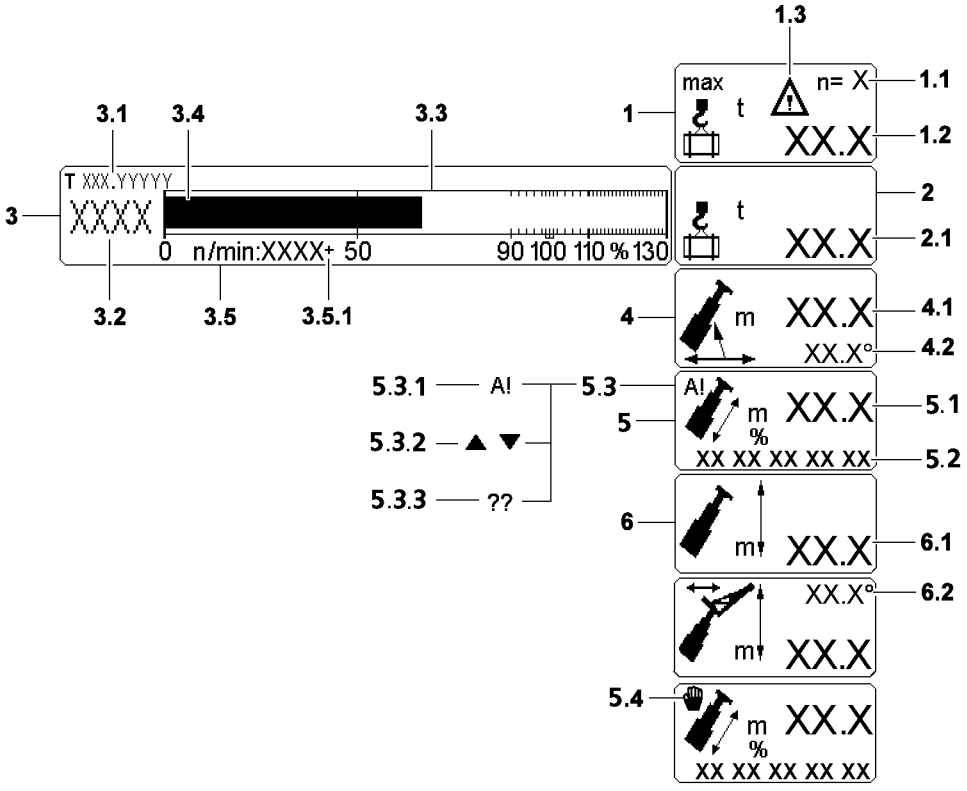
1.3
max
n= X
1.1
1
t
XX.X
1.2
3.1
3.4
3.3
T XXX.YYYYY
3
XXXX
0 n/min:XXXX+ 50 90 100 110 % 130
2
t
XX.X
2.1
3.2
3.5
3.5.1
4
m
XX.X
4.1
XX.X°
4.2
5.3.1
A!
5.3
A!
m
%
XX.X
5.1
5
XX XX XX XX XX
5.2
5.3.2
5.3.3
??
6
m
XX.X
6.1
XX.X°
6.2
m
XX.X
5.4
m
%
XX.X
XX XX XX XX XX

B115202

6.1.3 Dynamic load utilization bar display

3	“Dynamic utilization bar display” icon	
3.1	8-digit organization number	• Identifies the type of load chart that has been selected and the operating mode
3.2	Short code	• Identifies the selected set up configuration

3.3	Utilization scale	• The percentage utilization of the crane is displayed in different colors in the bar display of the utilization scale
		• The utilization scale changes to:
		  • Blue if the load is less than 0.5 t or at a utilization of less than 20 %.
		  Note:
		  The crane can be reconfigured!
		  • Green at a utilization of less than 90 %.
		  • Yellow: At a utilization of less than 100 %, **Advance warning**.
		  • Red at a utilization of more than or equal to 100 %, **LMB-STOP shut off**.

3.4	Utilization bar of crane	• According to load chart and reeving
3.5	Engine speed	• In [rpm] • **Note:** “????” is displayed for an invalid rpm value (for approximately 10 seconds). If there is a problem, it changes to low idle rpm. The digital display blinks, and an error message is displayed.
3.5.1	Engine rpm lock	• The engine rpm can be locked on the master switch. If the engine rpm has been locked, the icon “+” appears behind the rpm display.

6.1.4 Radius

4	“Boom radius” icon	
4.1	Radius	• In [m] or [ft] Identifies the horizontal center of gravity distance of the load (on the load hook selected by the operating mode) from the center of rotation of the superstructure, measured on the ground. This also takes into account the boom flexation due to its own weight and the suspended weight of the load. • **Note:** “? ? ? . ?” is shown if an angle sensor on the main boom or on the accessory or the length sensor on the main boom is defective, so that the radius cannot be calculated.
4.2	Main boom angle to the horizontal	• In [°] • **Note:** “? ? ? . ?” is shown if the angle sensor on the pivot section is defective.

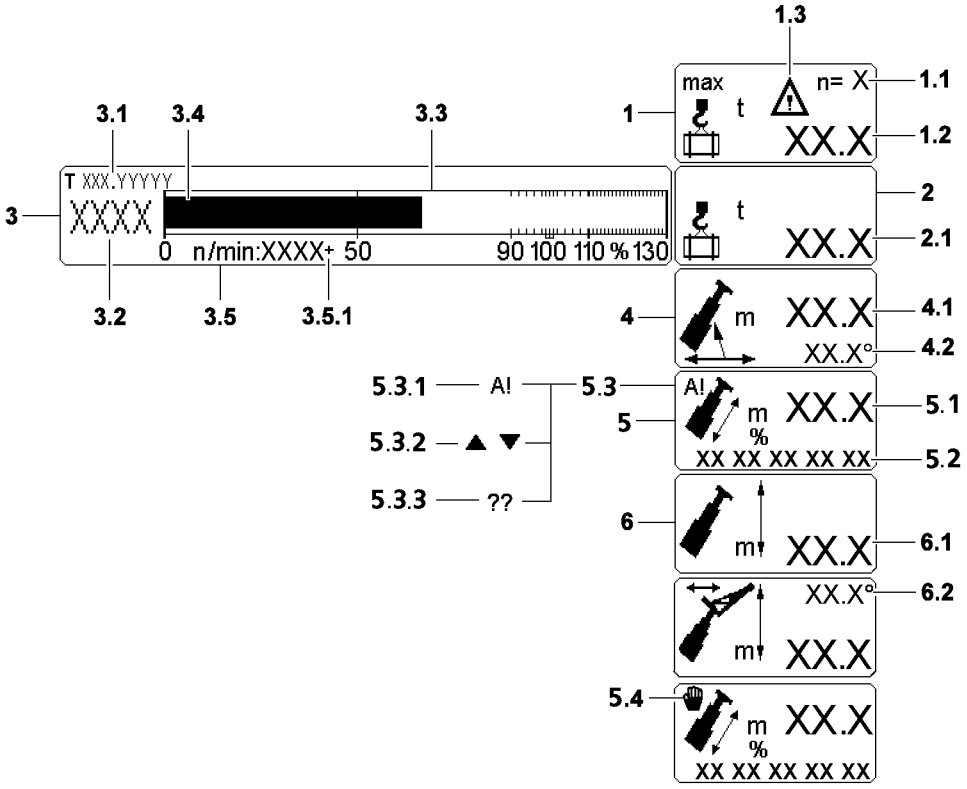
1.3
max
n= X
1.1
1
t
XX.X
1.2
3.1
3.4
3.3
T XXX.YYYYY
3
XXXX
0 n/min:XXXX+ 50 90 100 110 % 130
2
t
XX.X
2.1
3.2
3.5
3.5.1
4
m
XX.X
4.1
XX.X°
4.2
5.3.1
A!
5.3
A!
m
%
XX.X
5.1
5
XX XX XX XX XX
5.2
5.3.2
5.3.3
??
6
m
XX.X
6.1
XX.X°
6.2
m
XX.X
5.4
m
%
XX.X
XX XX XX XX XX

B115202

6.1.5 Main boom length

5	“Main boom length” icon	
5.1	Length of main boom	• In [m] or [ft]
5.2	Extension conditions of individual telescopic sections	• In [%] The extension conditions of telescope 1, telescope 2 etc. are shown from the left to the right
5.3	TELEMATIC	• Special functions in “Operation” program **Note:** In the “Main boom length” icon all the information required is displayed to enable an experienced crane operator to telescope the telescopic boom to a desired length without switching to the “Telescoping” program.
5.3.1	Preselected telescoping target reached	
5.3.2	Nominal deflection direction of master switch	• Request: Telescope in = arrow down • Request: Telescope out = arrow up
5.3.3	Error in system	
5.4	TELEMATIC	• Manual telescoping is activated.

6.1.6 Pulley head height

6	“Pulley head height” icon	
6.1	Pulley head height	• In [m] or [ft] • Identifies the vertical distance from the crane base to the selected pulley head axle, for which the displayed maximum load applies. • **Note:** “? ? ? . ?” is shown if an angle sensor on the main boom or on the accessory or the length sensor on the main boom is defective, that the pulley head height cannot be calculated.

Note

▶ The icon **6.2** “Angle of hydraulically adjustable folding jib” is only shown for certain crane types with hydraulically adjustable folding jib.

6.2	Angle of hydraulically adjustable folding jib*	• In [°] • The display is in the form of the relative angle between the telescopic boom head and the folding jib. • **Note:** “? ? ? . ?” is displayed, when the geometry data or the sensor values are missing, so that the angle of the hydraulically* adjustable folding jib cannot be calculated.

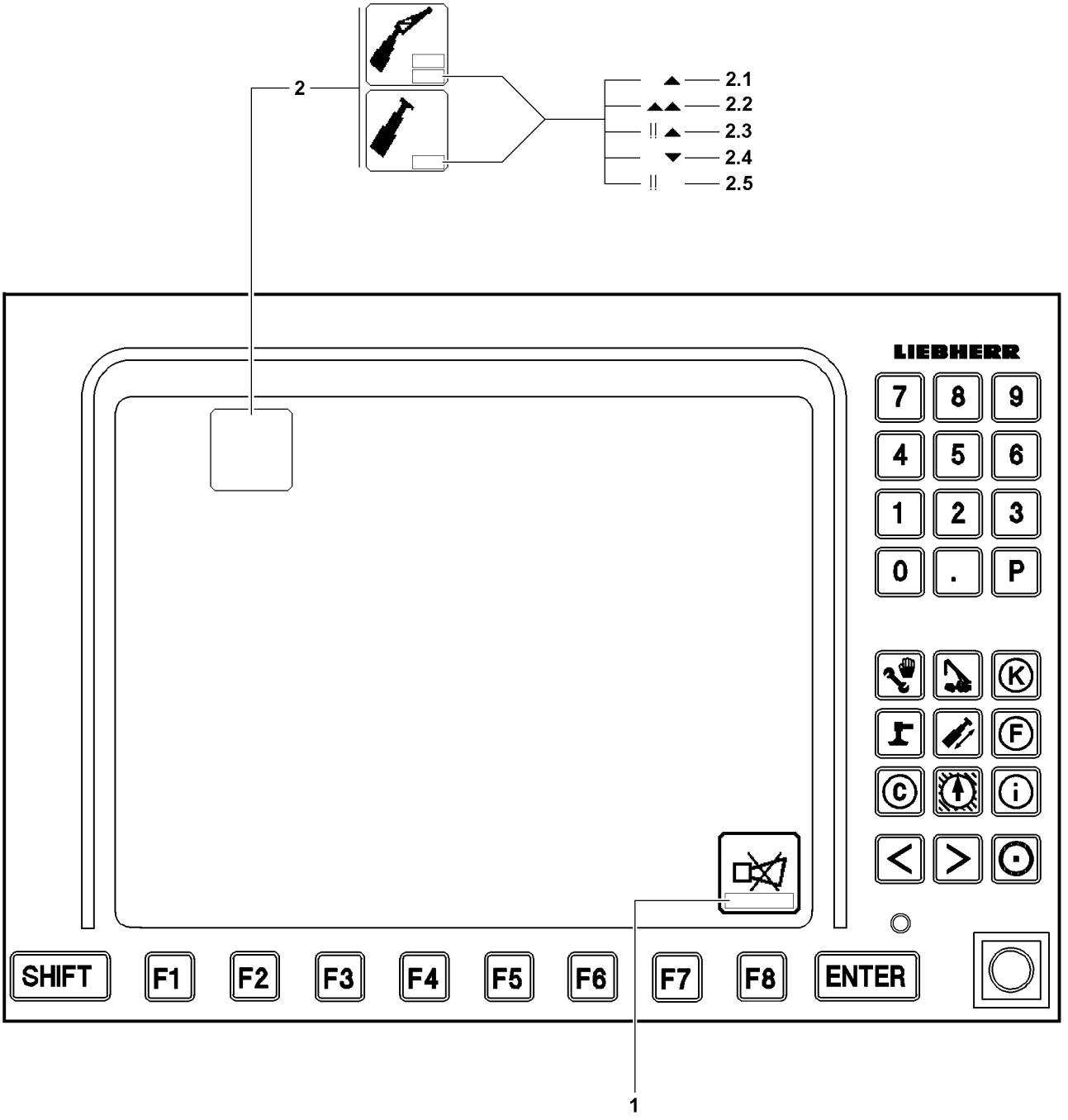
2
2.1
2.2
2.3
2.4
2.5
LIEBHERR
7
8
9
4
5
6
1
2
3
0
.
P
K
F
C
i
SHIFT
F1
F2
F3
F4
F5
F6
F7
F8
ENTER
1

B111387

6.2 Alarm functions

The limit ranges of the crane movements are monitored. The crane operator is alerted that the limits have been reached when the following blinking icons are shown.

Note

▶ If a LICCON error code is shown in the field **1** horn icon, then the present error can be determined through it, see Diagnostics manual.

6.2.1 Boom limitation

2 “Boom limitation” icon

- The luffing range of the boom is limited upward as well as downward. This icon appears if an end position determined by the load chart is reached when luffing the boom or when luffing up the boom is disabled by a proximity switch. Exclamation marks show when an associated sensor is defective.
  Note: The icon “Boom limitation” **2** can change in different operating modes, but it is shown always at the same position in the LICCON monitor.

Position	Icon	Description (main boom)
2.1	▲	The shut off “luffing up the main boom” has been triggered by running against the upper limit. **Note:** Luffing down the main boom is still possible.
2.2	▲▲	The shut off “luffing up the main boom” was triggered by running against the proximity switch (boom steep) on the turntable. **Note:** Luffing down the main boom is still possible.
2.3	!!▲	An associated sensor on the main boom is defective and the shut off “luffing up the main boom” has been triggered by running against the proximity switch (boom steep) on the turntable.
2.4	▼	The shut off “luffing down the main boom” is made by running against the lower limit. **Note:** Luffing up the main boom is still possible.
2.5	!!	An associated sensor on the main boom is defective.

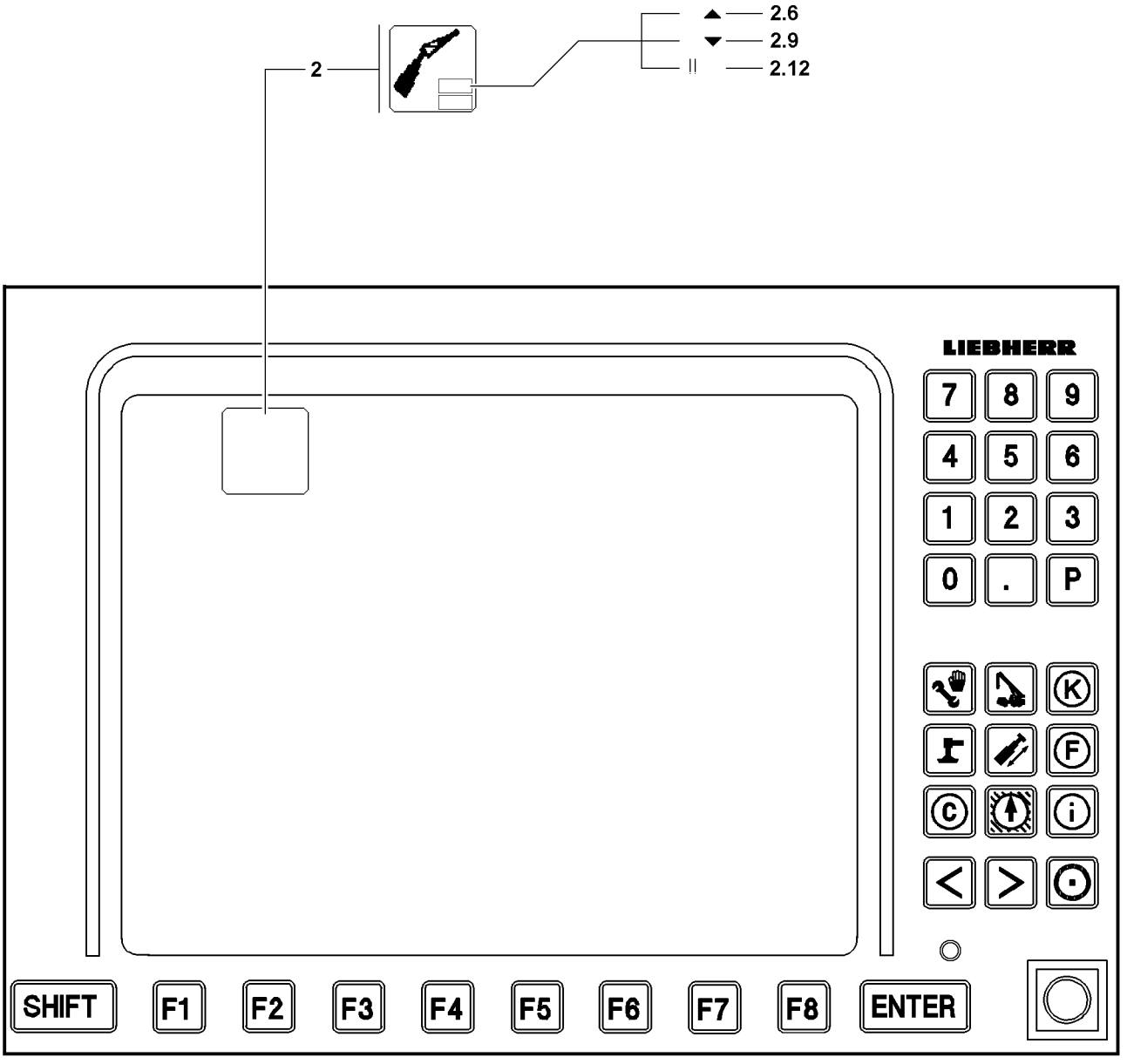
2
2.6
2.9
2.12
LIEBHERR
7
8
9
4
5
6
1
2
3
0
.
P
K
F
C
i
SHIFT
F1
F2
F3
F4
F5
F6
F7
F8
ENTER

B111424

Note

▶ The icon description for the hydraulic folding jib is only shown for certain crane types with hydraulically adjustable folding jib.

Position	Icon	Description of hydraulic* folding jib
2.6	▲	The shut off “luffing up the hydraulic* folding jib” has been triggered by running against the upper limit. **Note:** Luffing down the hydraulic* folding jib remains possible.
2.9	▼	The shut off “luffing down the hydraulic* folding jib” has been triggered by running against the lower limit. **Note:** Luffing up the hydraulic* folding jib remains possible.
2.12	!!	An associated sensor on the hydraulic* folding jib is defective.

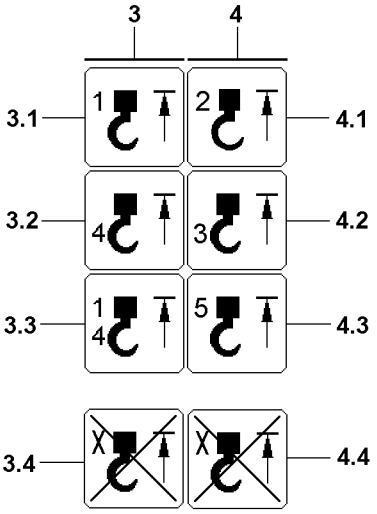

B111425

6.2.2 Hoist top limit switch HES1 and HES4*

3 “Hoist top on HES1 / HES4* icons”	• In order to prevent the crane from being operated without hoist limit switches (HES), the minimum hoist limit switch configuration is continuously monitored. If a hoist limit switch required for a particular operating mode is not plugged in, therefore not active on the LSB bus system, an operating error message is issued. Four hoist limit switches are possible.

3.1 HES1	• Installation location: Telescopic boom head, right
	• The icon appears if:
	  • The hook block moves against the HES1 on the right of the telescopic boom head.
	  • HES1 is not active, although it must be present on the bus.
	  • HES1 has an internal error.
	• **Note:**
	The crane movements spool up hoist winch, luff down telescopic boom, telescope out the telescopic boom are shut off.

3.2 HES4*	• Installation location: Telescopic boom head left or boom nose*
	• The icon appears if:
	  • The hook block moves against the HES4 on the left telescopic boom head or the boom nose*.
	  • HES4 is not active, although it must be present on the bus.
	  • HES4 has an internal error.
	• **Note:**
	The crane movements spool up hoist winch, luff down telescopic boom and telescope out the telescopic boom are shut off.
	The HES4 must be plugged in in operation mode Boom nose*. If this is not the case, an operating error message is issued.

3.3 HES1 and HES4*	• The icon appears when icon HES1 **3.1** and HES4 **3.2** appear simultaneously.
3.4 “Hoist top” icons are bypassed	• If the shut off “hoist top” is bypassed, the icons are shown crossed out, see Crane operating instructions, chapter 4.20.

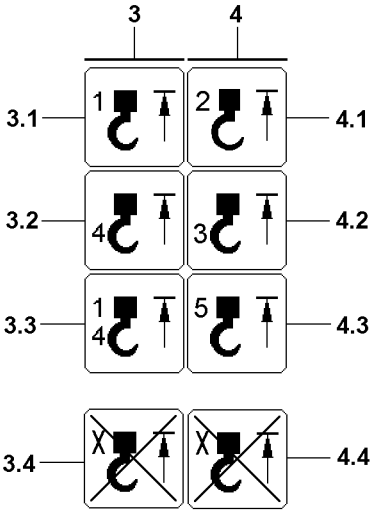

B111425

6.2.3 Hoist top limit switch HES2*, HES3* and HES5*

4	Icons “Hoist top on HES2* / HES3* / HES5* ”	• In order to prevent the crane from being operated without hoist limit switches (HES), the minimum hoist limit switch configuration is continuously monitored. If a hoist limit switch required for a particular operating mode is not plugged in, therefore not active on the LSB bus system, an operating error message is issued.

4.1	HES2*	• Installation location: Single folding jib*
		• The icon appears if:
		  • The hook block is pulled against the HES2.
		  • HES2 is not active, although it must be present on the bus.
		  • HES2 has an internal error.
		• **Note:**
		The crane movements spool up hoist winch, luff down telescopic boom and telescope out the telescopic boom are shut off.
		The HES2 must be plugged in in the “Single folding jib” operating mode. If this is not the case, an operating error message is issued.

4.2	HES3*	• Installation location: Double folding jib*
		• The icon appears if:
		  • The hook block is pulled against the HES3.
		  • HES3 is not active, although it must be present on the bus.
		  • HES3 has an internal error.
		• **Note:**
		The crane movements spool up hoist winch, luff down telescopic boom and telescope out the telescopic boom are shut off.
		The HES3 must be plugged in in operation mode “Double folding jib”. If this is not the case, an operating error message is issued.

4.3	HES5*	• Installation location: Auxiliary boom
		• The icon appears if:
		  • The hook block moves against the HES5 on the left of the boom head or the boom nose.
		  • HES5 is not active, although it must be present on the bus.
		  • HES5 has an internal error.
		• **Note:**
		The crane movements spool up the hoist winch, luff down the telescopic boom, and telescope the telescopic boom out are shut off for **T and THK*** .
		The HES5 must be plugged in for operation mode “Auxiliary boom THK”. If this is not the case, an operating error message is issued.

4.4	“Hoist top” icons are bypassed	• If the shut off “hoist top” is bypassed, the icons are shown crossed out, see Crane operating instructions, chapter 4.20.

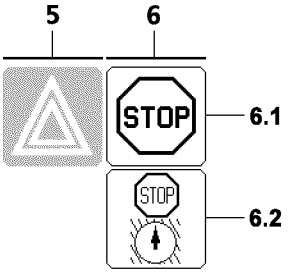

B105406

6.2.4 Advance warning / STOP, Working range limitation*

5	“Advance warning” icon	• Load chart utilization The current load chart utilization is calculated from the “current load” and the “maximum load according to the load chart and the reeving”. The “Advance warning” icon appears, if the current load chart utilization exceeds the **90 %** limit programmed in for advance warning.
6	“STOP” icon	
6.1	Load carrying capacity exceeded	• The “STOP” icon is displayed if the load chart load (“current load” greater than “maximum load according to the load chart and the reeving”) exceeds the **100 % mark** • **Note:** All crane movements that increase the load momentum are shut off.
6.1	Sensor error	• The “STOP” icon appears when a sensor which is required to monitor the load chart has an error • **Note:** All crane movements are shut off.
6.1	No load chart	• The “STOP” icon appears if no load chart is available • **Note:** All crane movements are shut off.
6.2	Working range limitation*	• If a programmed working range limitation* is actuated, then this condition is shown by the “STOP icon Working range limitation* **6.2** ” instead of the normal icon “Load moment limitation STOP” **6.1** **Note:** If a “Load moment limitation STOP” occurs at the same time, the “STOP icon Working range limitation* ” **6.2** continues to be displayed. The “Load moment limitation STOP” is identifiable if the utilization bar exceeds 100 % or if a maximum load of 0 t is shown.

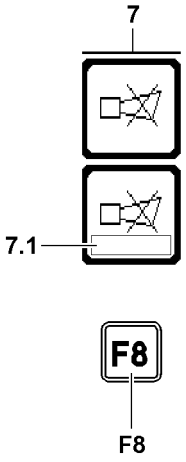

B111270

6.2.5 Acoustic warning on the LICCON monitor

Acoustic warnings on the LICCON monitor are indicated by the warning sound “Horn”.
The warning sound “Horn” is divided into two categories:

– “Horn” is a beeping sound of a duration of approximately 0.5 seconds, which is repeated in a second cycle.
– “Short horn” is a beeping sound of a duration of approximately 0.1 seconds, which is repeated in a second cycle.

7 Horn icon	• When the horn icon is shown in the LICCON monitor, any acoustic signals which will occur can be shut off by pressing the function key **F8**. • If an error message is shown in the horn icon **7** in field **7.1**, then the present error can be determined through it in the diagnostics manual. Pressing the function key **F8** twice, automatically changes to the error determination screen of the test system. The error is displayed there in documentary form.

Acoustic signal “Horn”

1.) Sounds in addition to the visual display of an error message in field **7.1** in case of operational errors are found, which lead to a shut off of a crane movement.
Operational errors are:
- Overload
- Boom outside the angle range of the load chart
- Boom outside radius range of the load chart
- Extension condition of telescopic sections not in accordance with the load chart

2.) In case of application errors with error number (LICCON Error Code LEC). For example sensor errors, which occur due to insufficient sensor signals or a defective sensor.
The following sensors are monitored:
- Hoist limit switch
- Length sensors
- Angle sensors
- Pressure sensors
- Wind sensor
- Battery voltage
- Inductive sensors

Acoustic signal “Short horn”

Sounds in addition to the visual display of error messages without an error number and which do not lead directly to crane movement shut off by the LICCON overload protection.
Monitored error messages are:
- Maximum permissible wind speed exceeded (only for activated wind sensor*).
- Maximum or minimum support force exceeded (only with active support force monitoring*).
- Crane utilization value for “Advance warning” (90 %) reached.

Priority acoustic signal

– The “Horn” alarm has higher priority than the “Short horn” alarm, i.e. “Horn” takes preference over “Short horn”.
– The “Horn”, as well as the “Short horn” immediately become active again if an error recurs!

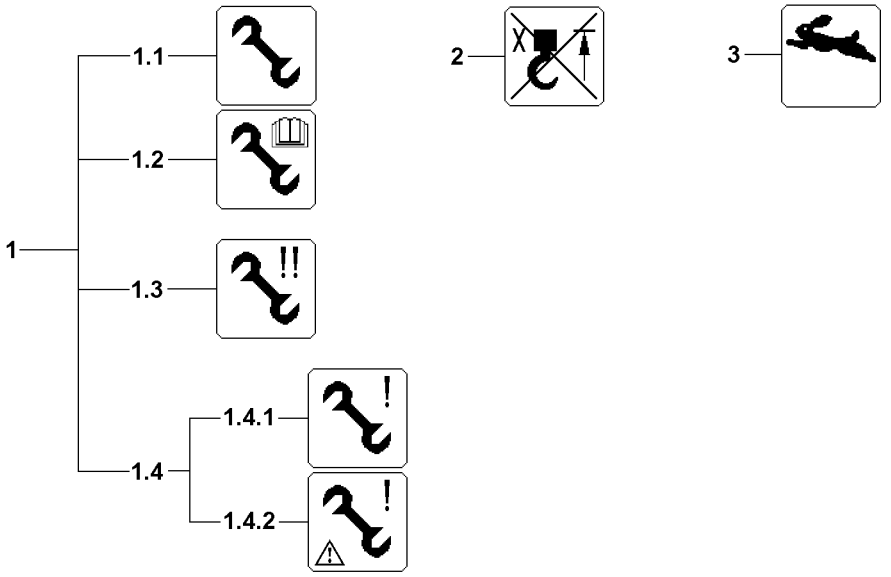
1
1.1
1.2
1.3
1.4
1.4.1
1.4.2
2
3

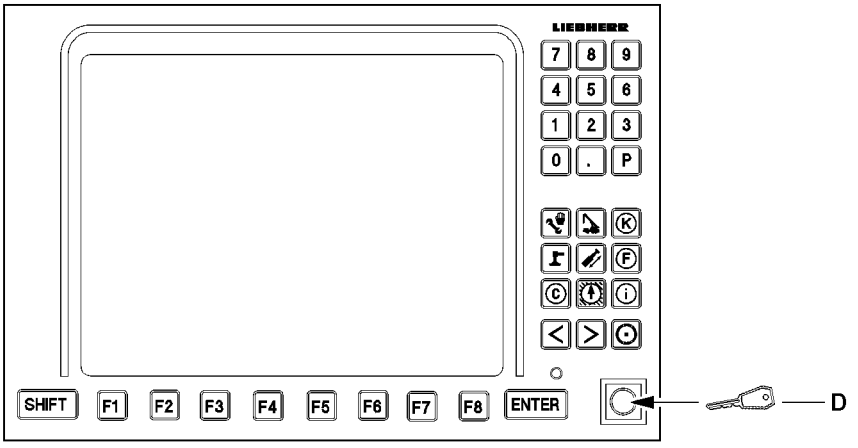
LIEBHERR
7 8 9
4 5 6
1 2 3
0 . P
SHIFT
F1
F2
F3
F4
F5
F6
F7
F8
ENTER
D

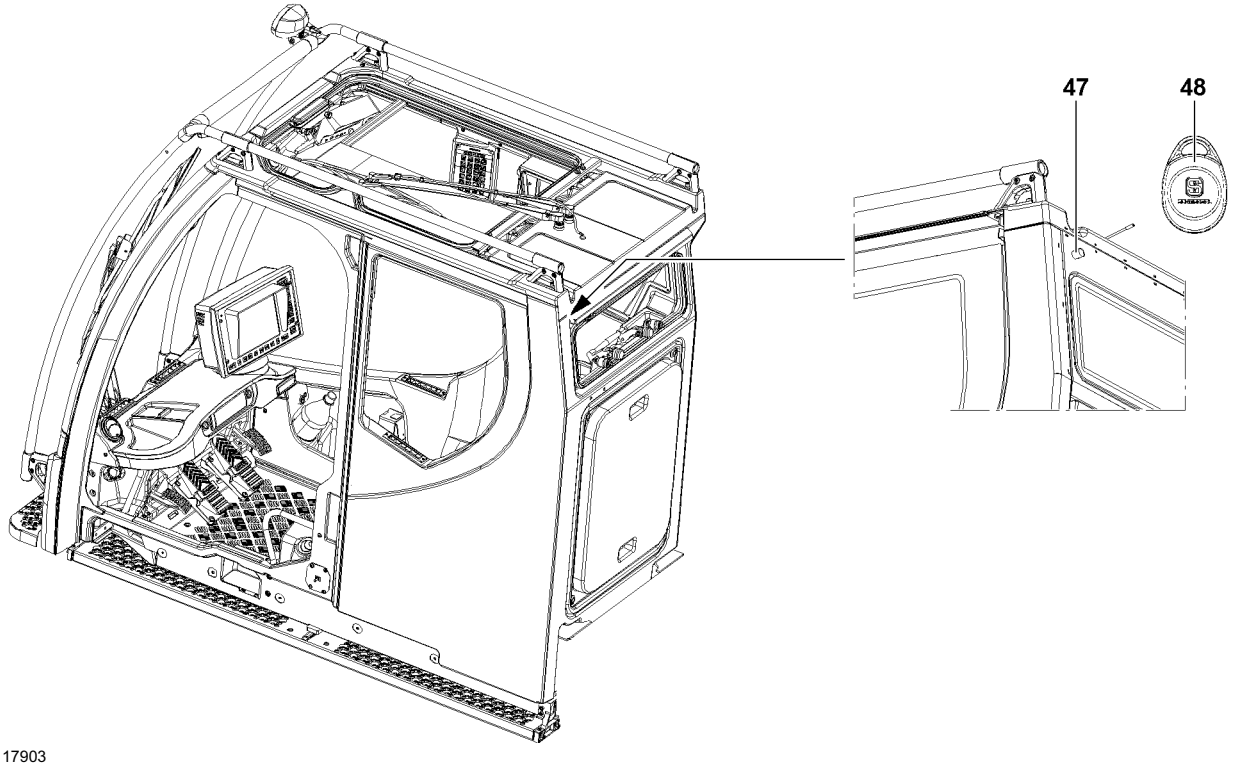
47
48

B117903

6.3 Special functions

WARNING
Danger of accident due to function “Exceedance of shut off limits of the LICCON overload protection”!
If the shut off limits of the LICCON overload protection are exceeded, there is no additional protection against crane overload!
Due to erroneous operation or deliberate misuse, the crane could collapse, the boom can break off or the crane can topple over!
Personnel can be severely injured or killed!

- ▶ The function “Exceedance of shut off limits of the LICCON overload protection” is only permissible in emergencies and for assembly purposes!
- ▶ The set up key **D** may only be actuated by persons who are aware of the effects of their acts regarding the function “Exceedance of shut off limits of the LICCON overload protection”!
- ▶ The function “Exceedance of shut off limits of the LICCON overload protection” requires the presence of an authorized person and must be performed with utmost caution!
- ▶ Crane operation with activated function “Exceedance of shut off limits of the LICCON overload protection” is prohibited!

Note
Double function set up key!
If the crane control “EN 13000:2010 not active” is programmed, then, when actuating the set up key **D**, the release for the “Emergency operation LICCON overload protection” is automatically engaged!

- ▶ Take into account, when actuating the set up key **D**, that the “Emergency operation LICCON overload protection” is automatically released!

Before pressing the set up key **D** make sure that:

– Prerequisites and specifications to use the set up key **D** from the Crane operating instructions, chapter 4.20 and 7.15 are known to the crane operator and have been understood.

Note

- ▶ The various “assembly” icons **1** are shown on the same position in the LICCON monitor, depending on the operating mode, illustration **2**. Two icons **1** variations cannot appear simultaneously.

6.3.1 Exceeding the shut off limits of the LICCON overload protection

1.1 Assembly

- The icon appears when a special case for operation of the LICCON overload protection was activated, for example the shut off limits of the LICCON overload protection were bypassed by the set up key **D**.

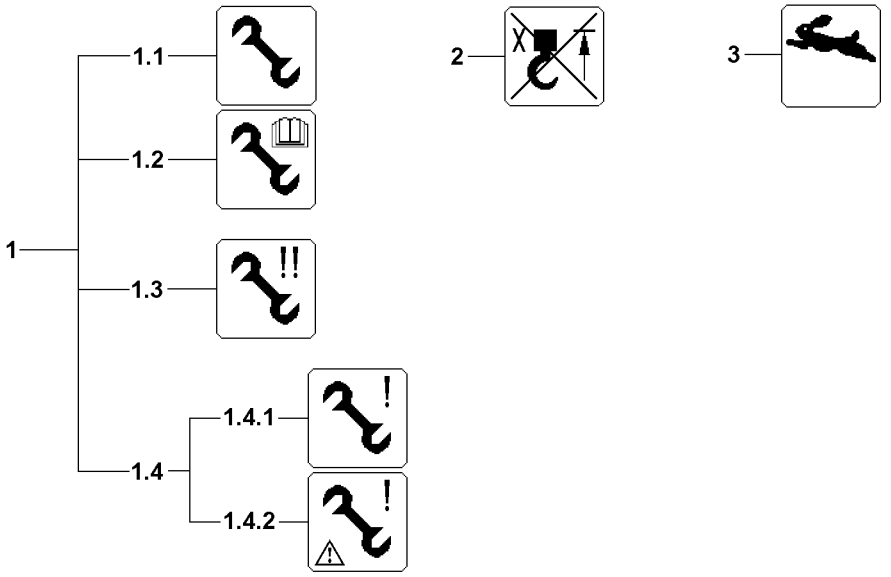
1
1.1
1.2
1.3
1.4
1.4.1
1.4.2
2
3

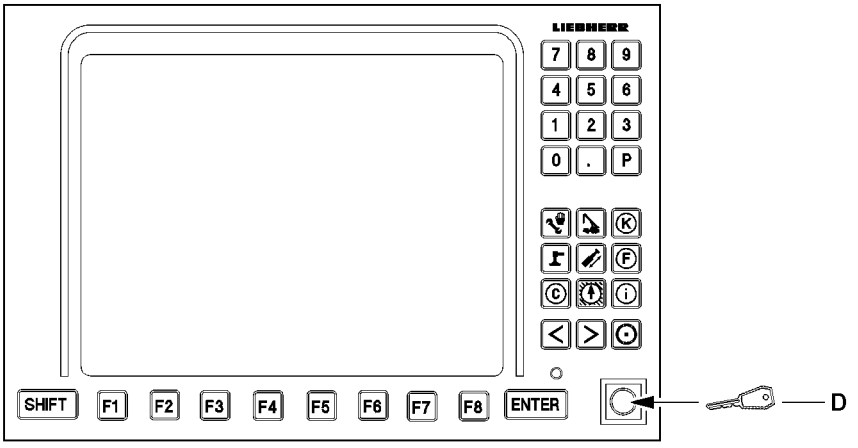
LIEBHERR
7 8 9
4 5 6
1 2 3
0 . P
SHIFT
F1
F2
F3
F4
F5
F6
F7
F8
ENTER
D

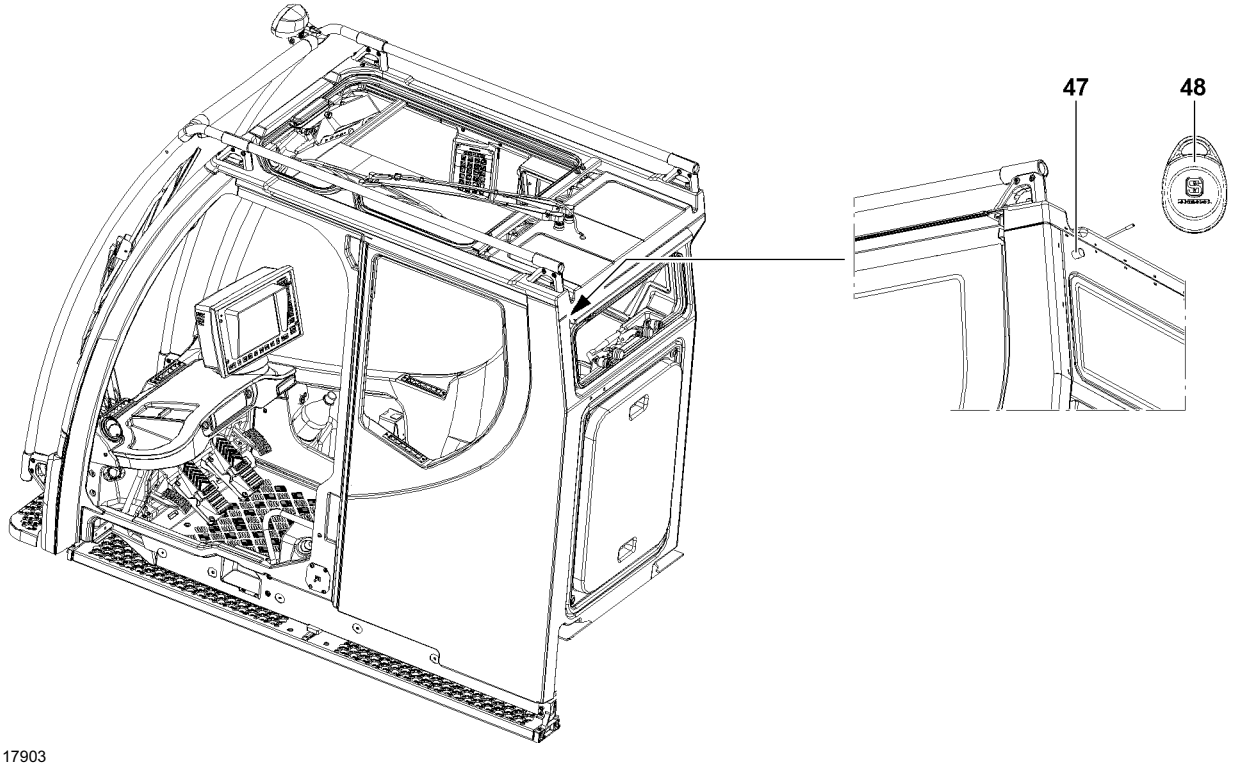
47
48

B117903

6.3.2 No load chart is available

1.2 Assembly - no load chart

- The icon appears when the shut off limits of the LICCON overload protection are bypassed via the set up key **D and** no load chart is available.
- The crane may only be operated according to the specifications of the respective chapter in the Crane operating instructions and / or the erection / take down charts.
- **Note**:
  By actuating the set up key **D**, all erection / take down procedures can be carried out within the erection / take down charts, for which no load charts are available!

6.3.3 Emergency operation LICCON overload protection (EN 13000:2010 active)

WARNING
Increased risk of accident during emergency operation of the LICCON overload protection!
In emergency operation, the crane movements are no longer monitored by the LICCON overload protection!

▶ The emergency operation may only be activated by persons who are aware of the consequences of their actions!
▶ A shut off by the LICCON overload protection may not be circumvented by the emergency operation!
▶ If normal “crane operation” is possible, then the emergency operation may not be activated!
▶ All crane movements must be carried out with extreme caution and anticipatorily!

The emergency operation for the LICCON overload protection is activated by the sensor **47** via the transponder **48**.

1.3 Emergency operation activated

- The icon appears:
  - When the emergency operation of the LICCON overload protection (LMB emergency operation) is activated.

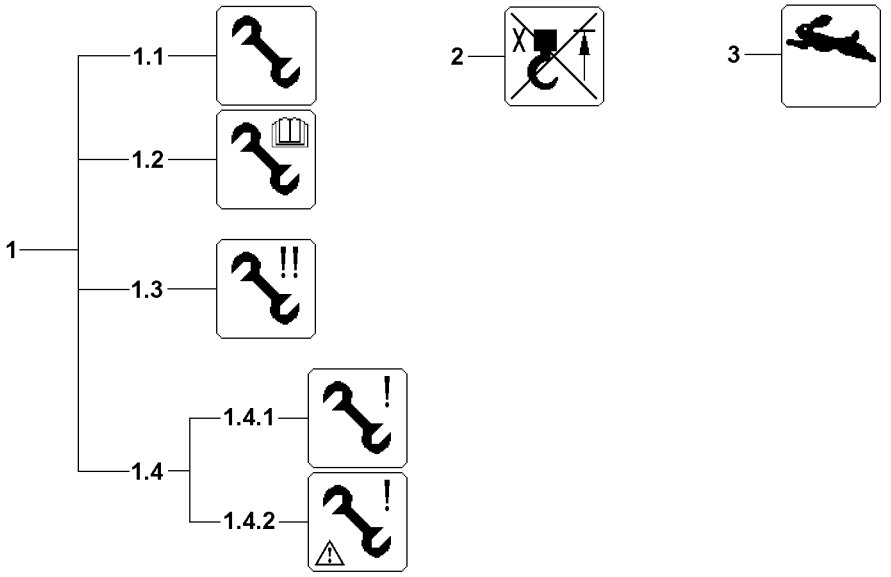
1
1.1
1.2
1.3
1.4
1.4.1
1.4.2
2
3

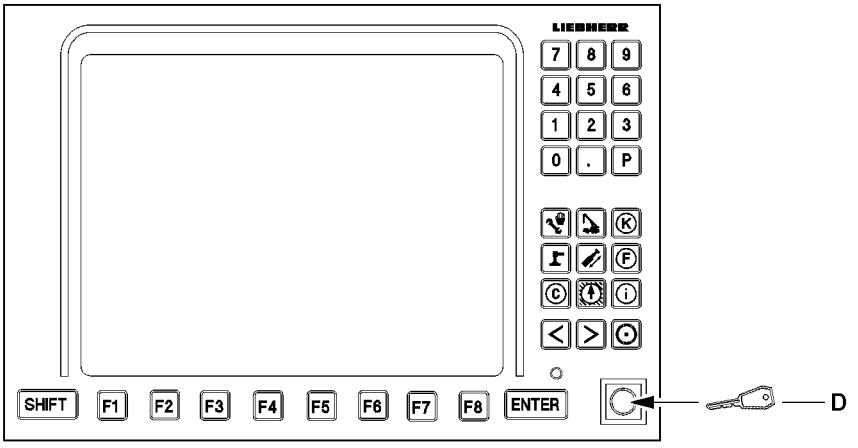
LIEBHERR
7 8 9
4 5 6
1 2 3
0 . P
SHIFT
F1
F2
F3
F4
F5
F6
F7
F8
ENTER
D

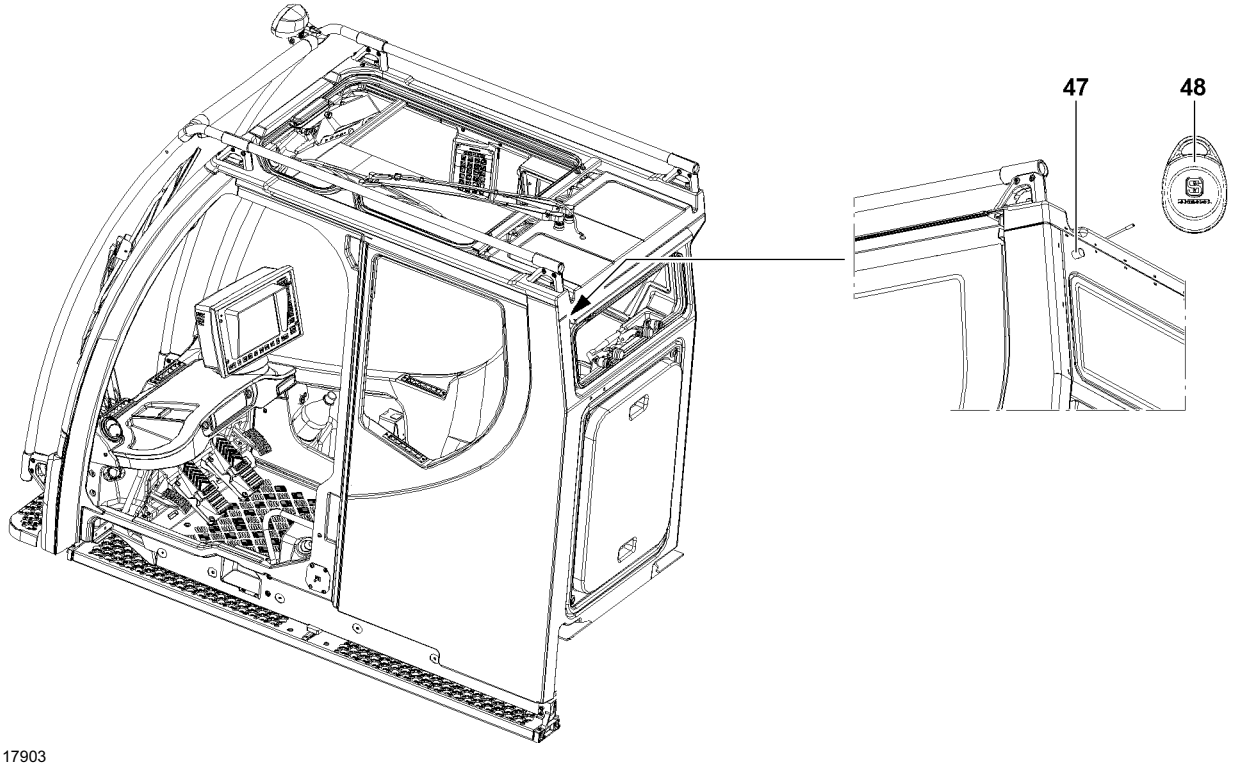
47
48

B117903

6.3.4 Emergency operation LICCON overload protection (EN 13000:2010 not active)

Note
If the crane control “EN 13000:2010 not active” is programmed, then the functions of the “Emergency operation of the LICCON overload protection” are engaged by the set up key **D**!
▶ If the emergency operation LICCON overload protection is needed, press the set up key **D**!

1.3 LMB emergency operation activated	• Icon appears: • When the LMB emergency operation is activated via the set up key **D**. • **Note**: Depending on the reason for the LMB emergency operation, the icon for no load chart available **1.2** can also appear. • **Note**: The Crane operation program is locked, meaning, no other program can be turned on via the program keys.

6.3.5 Additional emergency operating modes

WARNING
Erroneous operation of the crane!
If one of the icons for additional emergency operating modes **1.4** appears, then there is a high risk of accidents due to erroneous operation of the crane!
Safety devices could be deactivated!
Personnel can be killed or injured!
This could result in property damage!
▶ Deactivate additional operating modes **1.4** again or contact Liebherr Service and coordinate further procedure.

1.4 Additional emergency operating modes	• Icon **1.4** appears if additional emergency operating modes were activated.

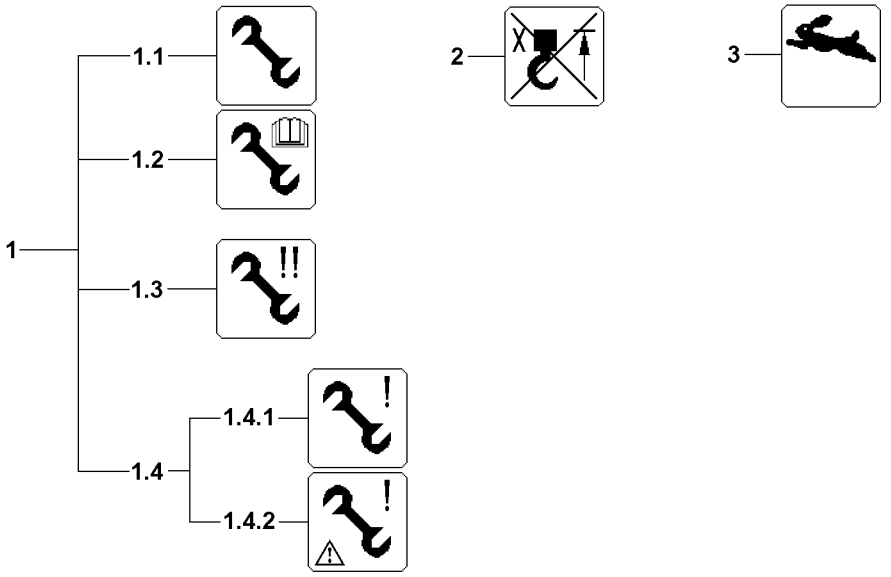
1
1.1
1.2
1.3
1.4
1.4.1
1.4.2
2
3

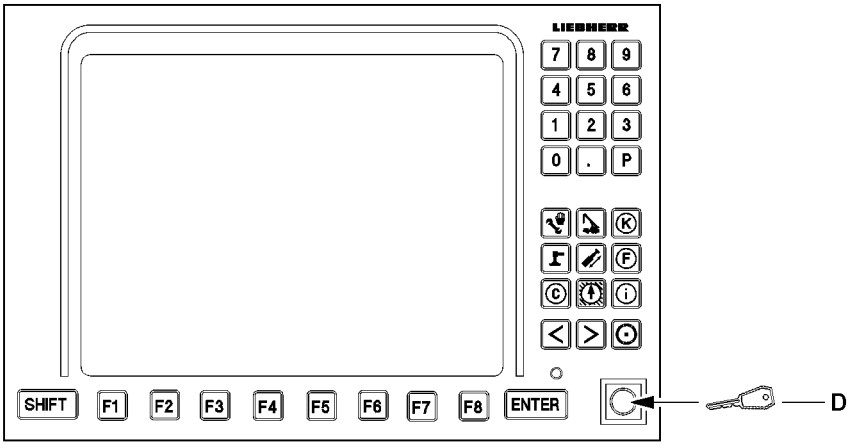
LIEBHERR
7 8 9
4 5 6
1 2 3
0 . P
SHIFT
F1
F2
F3
F4
F5
F6
F7
F8
ENTER
D

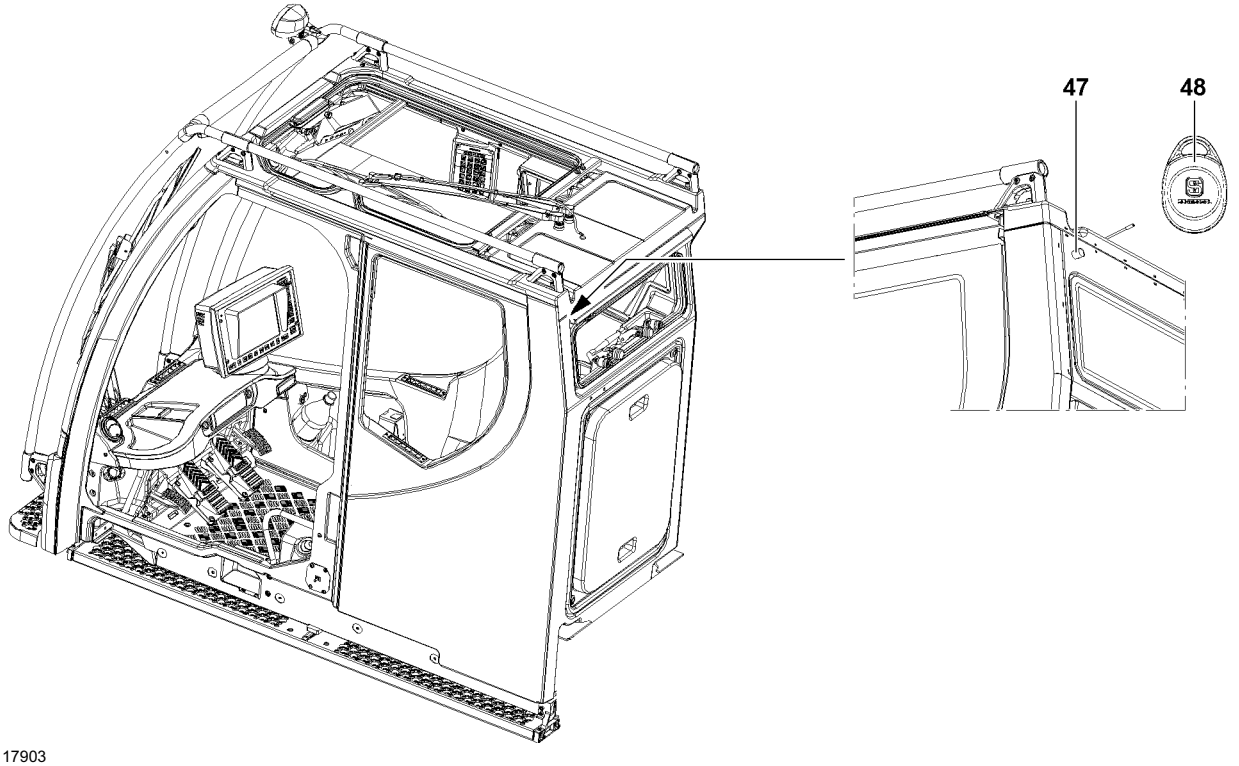
47
48

B117903

6.3.6 Bypass of hoist limit switch

2 Bypass “Hoist top”

- The icon appears:
  - When the shut off “hoist top” is bypassed via the set up key **D**
  - **Note**:
    The Crane operation program is locked, meaning, no other program can be turned on via the program keys.

6.3.7 Rapid gear (Power Plus)

Note

▶ **Crane operation without rapid gear (Power Plus)**: The speeds of the individual crane movements are independent of each other. There is no interference of the movement speeds.

▶ **Crane operation with rapid gear (Power Plus)**: If the rapid gear is added, the individual crane movements can reach the largest possible movement speed. However, this means that all crane movements can be slowed down in case of several crane movements.

Add the rapid gear only when:

– If the highest possible movement speed is to be made possible for individual crane movements **and**

– An interference of the movement speeds among them creates no problem.

3 “Rapid gear” icon

- The icon appears if the rapid gear is enabled for one or several crane movements.

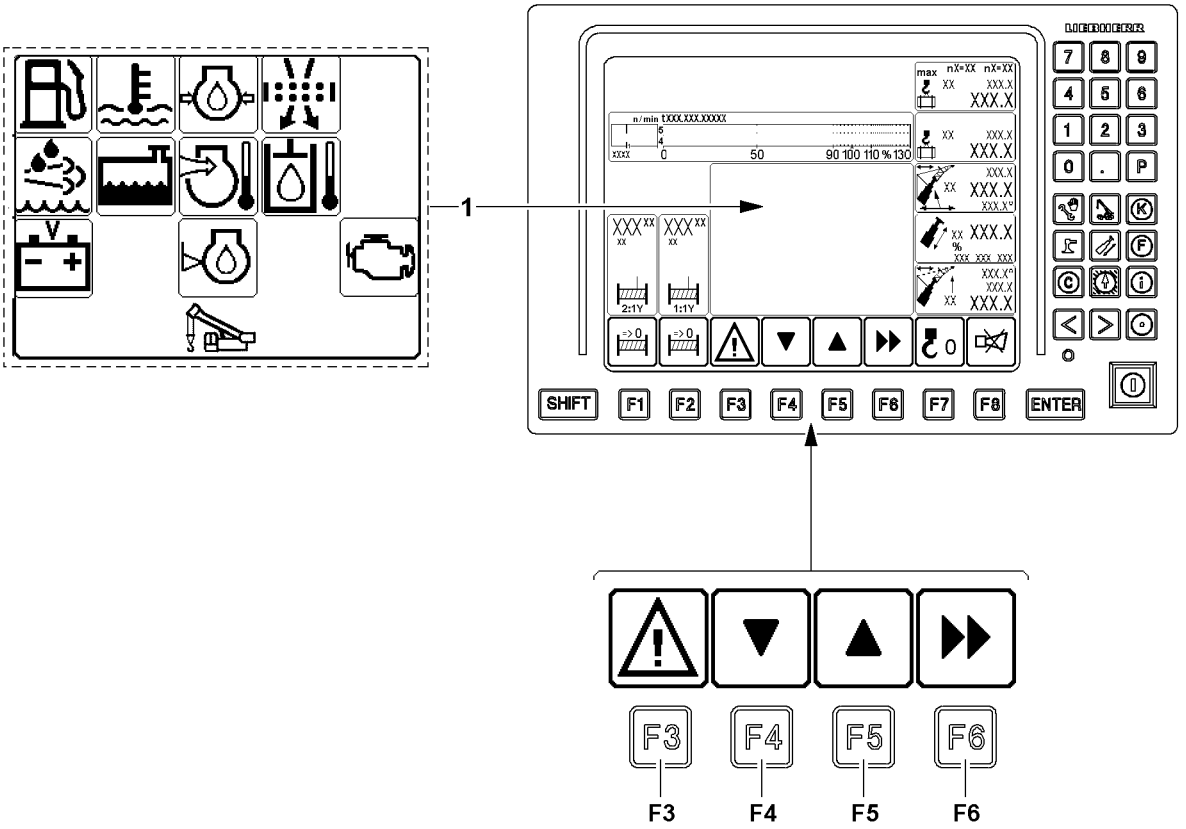

B117904

6.4 Monitoring functions during crane operation

The monitoring functions **1** are always active and can be displayed in the monitoring field, if necessary. Due to the color of the icon over the function key **F3** the crane operator is automatically alerted in case of a warning occurrence.
The monitoring field has its fixed place on the LICCON monitor and can be hidden or assigned with other functions.
By pressing the function key **F3**, the monitoring functions **1** are displayed in the monitoring field.

NOTICE
There is a danger of severe damage to the engine if warnings are ignored!
If other programs are used for extended periods of time, for example the “Set up” or “BSE-Test system”, it is essential to switch to the crane operation screen in order to ensure that no events have occurred, which could lead to damage or destruction of the engine.
▶ Switch continuously into the crane operation screen and check the displays!

NOTICE
Danger of severe engine damage!
If the engine monitoring program reports a problem and / or warning occurrence, then you must react immediately and remedy the problem!
▶ React to problems and / or warning occurrences immediately and remedy the problem!
▶ If necessary, stop crane operation and turn the engine off!

NOTICE
Shut off engine monitoring!
Outside of the crane operation program, the monitoring functions are turned off!
When the engine monitoring is turned off, problems and warning occurrences are not recognized!
This could result in crane failure!
▶ If work is not carried out in the crane operation program, then turn the crane engine off and operate the LICCON computer system in stand-by mode, see section “LICCON computer system in stand-by mode”!
▶ If work has to be carried out for a longer period outside of the crane operation program, with the engine running, then switch continuously into the engine monitoring screen and check the display values!
▶ Register changes in the display values mindfully and proceed anticipatorily, for example, refuel in time!

Color key - Warning icon “**F3** ”:
– Warning icon green: All monitoring functions are ok.
– Warning icon yellow: Advance warning for one or several monitoring functions.
– Warning icon red: Warning for one or several monitoring functions.

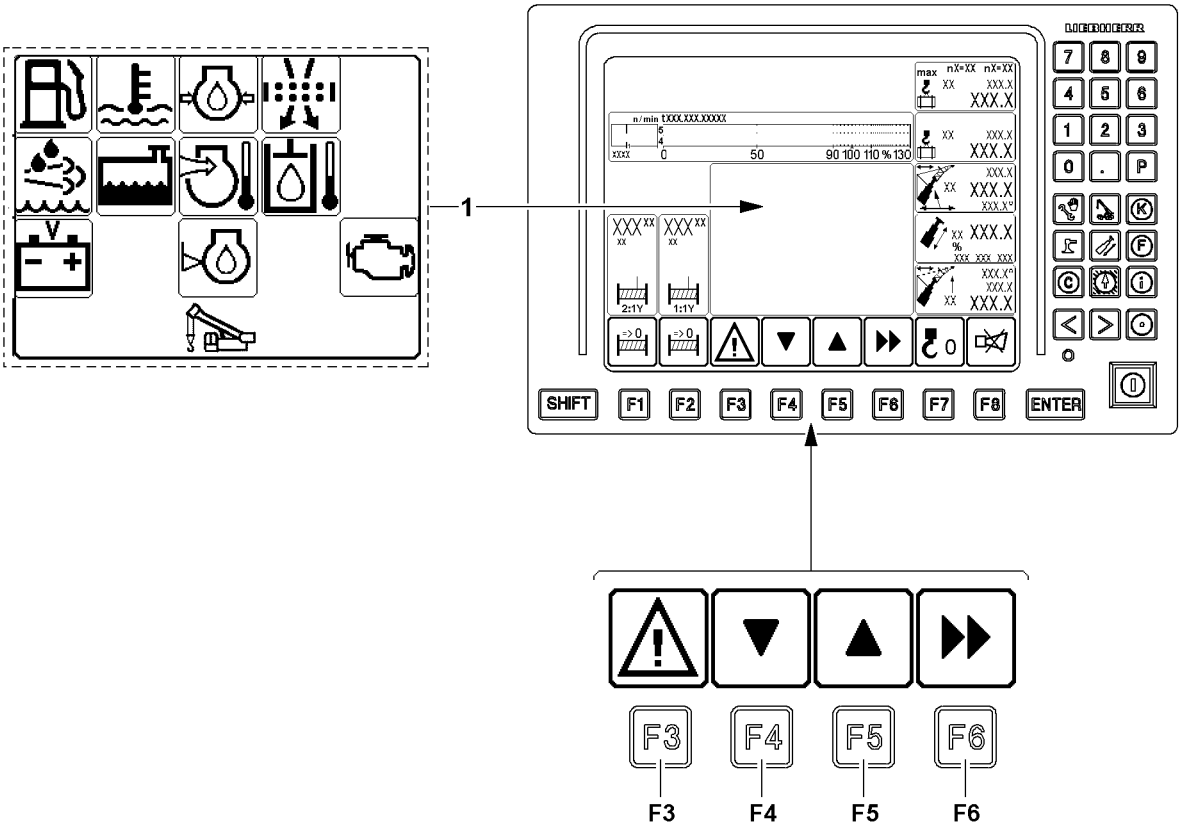

B117904

6.4.1 Calling up the monitoring functions

If a warning event occurs in one or more monitoring functions in the monitoring field, this is indicated by the color of the warning icon “**F3** ” in the function key line. The warning icon is displayed statically and in the color of the monitoring function that triggered the warning event.

▶ Press the function key **F3** until the desired page of the monitoring functions **1** is called up.

Result:

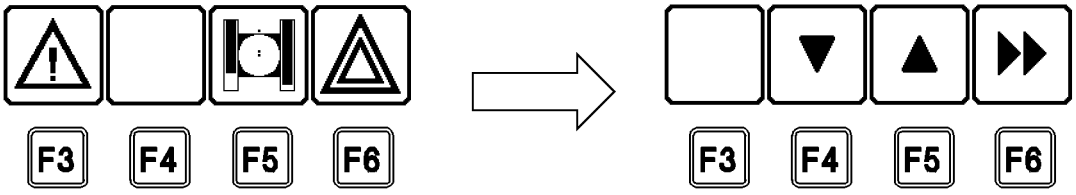

B117905

– The assignment of the function keys **“F4”** to **“F6”** changes.
– The monitoring functions **1** are displayed in the monitoring field on the LICCON monitor.

For color key for the various icons of the monitoring functions **1**, see following section “Overview of monitoring functions”:
– Green: Monitored function ok
– Yellow: Advance warning for the monitored function
– Red: : Warning for the monitored function

For individual monitoring functions, individual control displays with detailed values can be called up:
▶ Press function key **F4** or function key **F5**.

Result:
– The available individual control displays appear and can be called up in sequence, see following section “Overview of individual control displays”.

Mask the monitoring functions **1**:
▶ Press the function key **F6**.

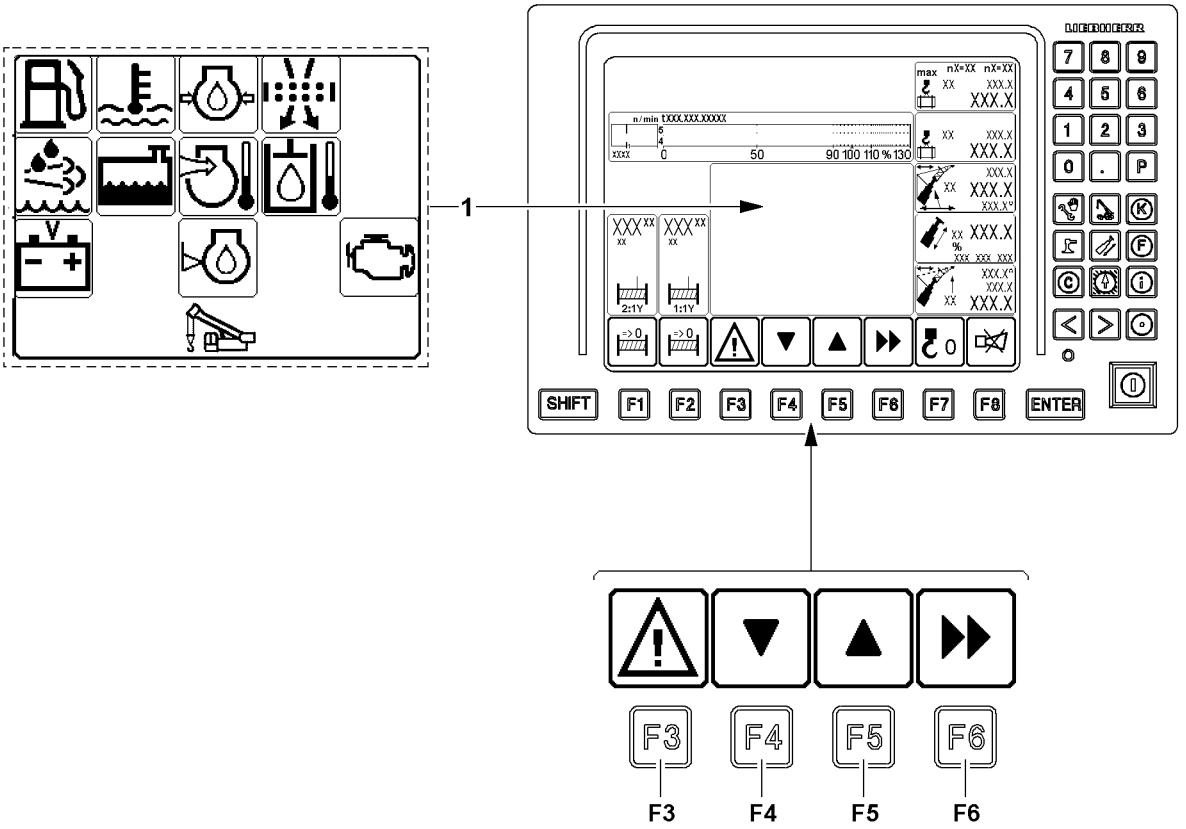

B117904

6.4.2 Overview of monitoring functions

In the monitoring field **1** for the crane superstructure or for the crane vehicle appear the following monitoring functions:

NOTICE
Occurring warning occurrence!
At every change of the icon display, a signal sound and possibly an error message are issued.
▶ Pay attention to the signal sounds and error messages.

Monitoring display	Icon display	Status
Fuel reserve	*Green:*	*Fuel reserve **more** than 5 %*
	Yellow:	Fuel reserve approx. 3 % - 4 %
	Red:	Fuel reserve **less** than 3 % **CAUTION** : Turn the engine off and remedy the problem!

Monitoring display	Icon display	Status
Coolant temperature	*Green:*	*Coolant temperature OK.*
	Red:	Coolant temperature **too high** **CAUTION** : Turn the engine off and remedy the problem!

Monitoring display	Icon display	Status
Engine oil pressure	*Green:*	*Engine oil pressure OK (engine on)*
	Red:	Engine oil pressure too low (engine on) **CAUTION** : Turn the engine off and remedy the problem!

Monitoring display	Icon display	Status
Air filter	*Green:*	*Air filter OK*
	Yellow:	Air filter is dirty **CAUTION** : Turn the engine off and remedy the problem!

Monitoring display	Icon display	Status
Coolant level	*Green:*	*Coolant level OK*
	Red:	Insufficient coolant **CAUTION** : Turn the engine off and remedy the problem!

Monitoring display	Icon display	Status
Charge air temperature	*Green:*	*Charge air temperature OK*
	Red:	Charge air temperature too high **CAUTION** : Turn the engine off and remedy the problem!

Monitoring display	Icon display	Status
Hydraulic oil temperature	*Green:*	*Hydraulic oil temperature crane drive OK*
	Red:	Hydraulic oil temperature crane drive too high **CAUTION** : Turn the engine off and remedy the problem!

Monitoring display	Icon display	Status
Battery voltage	*Green:*	*Battery voltage OK*
	Red:	On-board power supply over / undervoltage **CAUTION** : Turn the engine off and remedy the problem!

Monitoring display	Icon display	Status
Note: Monitoring display only present on certain crane types!		
Engine oil level	*Green:*	*Engine oil level OK*
	Red:	Engine oil level too low or too high **CAUTION** : Call up individual monitoring displays and adjust the engine oil level according to the display, see section “Overview of individual monitoring displays” .

Additional monitoring functions for engines with SCR-system

Note
▶ Valid only for engines which are equipped with an SCR-system with exhaust aftertreatment.

WARNING
Triggers power reduction or start block of engine!
If Urea level is too low or if there is a faulty function in the exhaust aftertreatment, then a power reduction or start block of the engine can be triggered.
The mobile crane can significantly obstruct traffic!
The crane operation and travel operation can be limited or disabled!
▶ Add Urea in time!
▶ Remedy the faulty function of the exhaust aftertreatment immediately!
▶ Observe any valid national / regional regulations and the vehicle configuration!

Monitoring display	Icon display	Status
Urea tank	*Green:*	*Urea available*
	Yellow / red:	Urea level too low or erroneous function of exhaust aftertreatment system **CAUTION** : Add urea or remedy the faulty function of the exhaust aftertreatment. Under some circumstances a power reduction or start block of the engine [1] is triggered, pay attention to the error message!

Monitoring display	Icon display	Status
Exhaust aftertreatment	*Green:*	*Exhaust aftertreatment OK*
	Yellow / red:	Urea level too low or erroneous function of exhaust aftertreatment system **CAUTION** : Add urea or remedy the faulty function of the exhaust aftertreatment. Under some circumstances a power reduction or start block of the engine [1] is triggered, pay attention to the error message!

1) The type and scope of a power reduction of the engine depends on the respectively valid national / regional regulations and the vehicle configuration. The engine can possibly not be started any longer (start block).

6.4.3 Overview of individual control displays

Note

- ▶ Display values, which are saved in the system for some of the monitoring functions in the monitoring field can be displayed by pressing function key **“F4”** (down) or **“F5”** (up).
- ▶ The colors of the displayed icon illustrations are examples and can change, depending on the situation, see section “Overview of monitoring functions”.

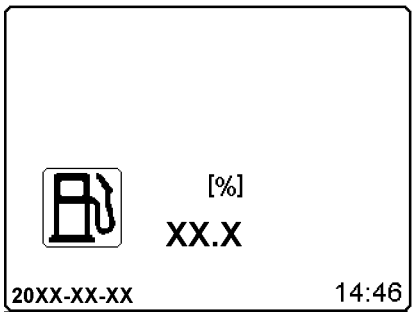

B106120

Fuel reserve

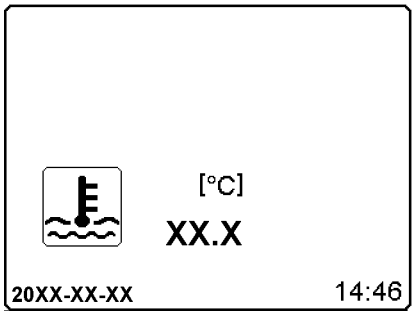

B106152

Coolant temperature

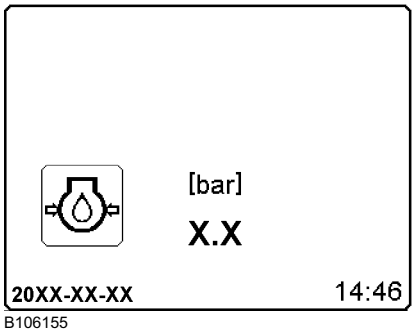

B106155

Engine oil pressure

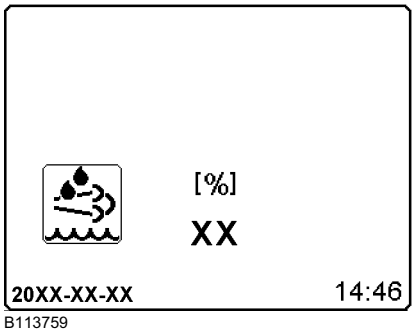

B113759

Urea reserve

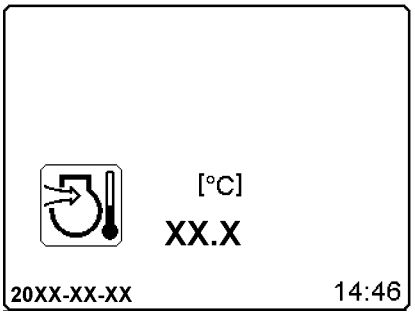

B106159

Charge air temperature

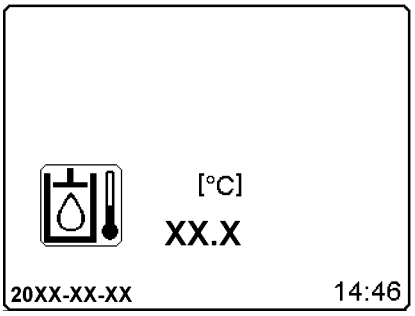

B106158

Hydraulic oil temperature

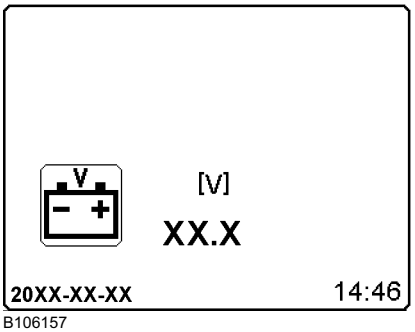

B106157

Battery voltage

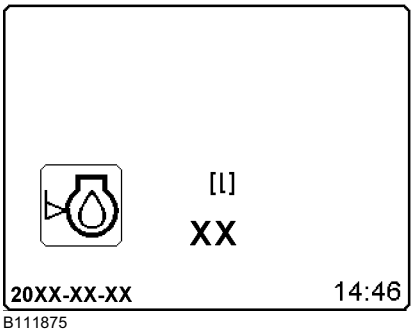

B111875

Engine oil level monitoring display only present on certain crane types!

Note

Engine oil level monitoring display only present on certain crane types!

- The analog display of the engine oil level shows how much engine oil is to be added or drained.
- Example: If -1.0 is shown, then 1 liter of engine oil must be drained. If +1.5 is shown, then 1.5 liter of engine oil must be added.
- The measurement is made when the engine is at a standstill. When filling or draining the engine oil, wait for a few minutes until the engine oil has collected in the oil pan.

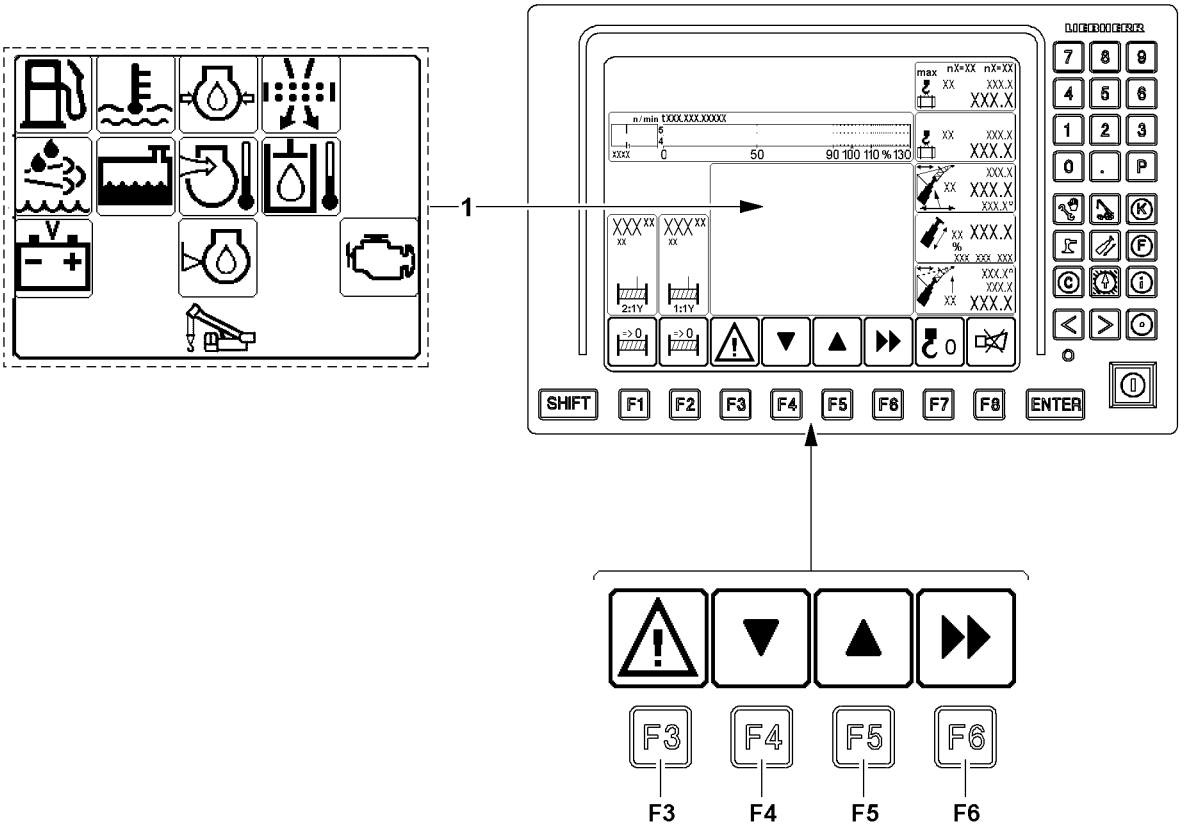

B117904

6.4.4 Overview of function key assignment

Function key	Function / description
F3	By pressing the function key **F3** once, the monitoring functions are displayed. Icon green: All monitoring functions are ok. Icon yellow: Advance warning for one or several monitoring functions. Icon red: Warning for one or several monitoring functions. **CAUTION** : Always pay attention to advance warnings and warnings and act accordingly!

Function key	Function / description
F4	By pressing the function key **F4** , the individual control displays are called up one after the other in sequence from the beginning.

Function key	Function / description
F5	By pressing the function key **F5** , the individual control displays are called up one after the other in sequence from behind.

Function key	Function / description
F6	Change back by one selection level by pressing the function key **F6** .

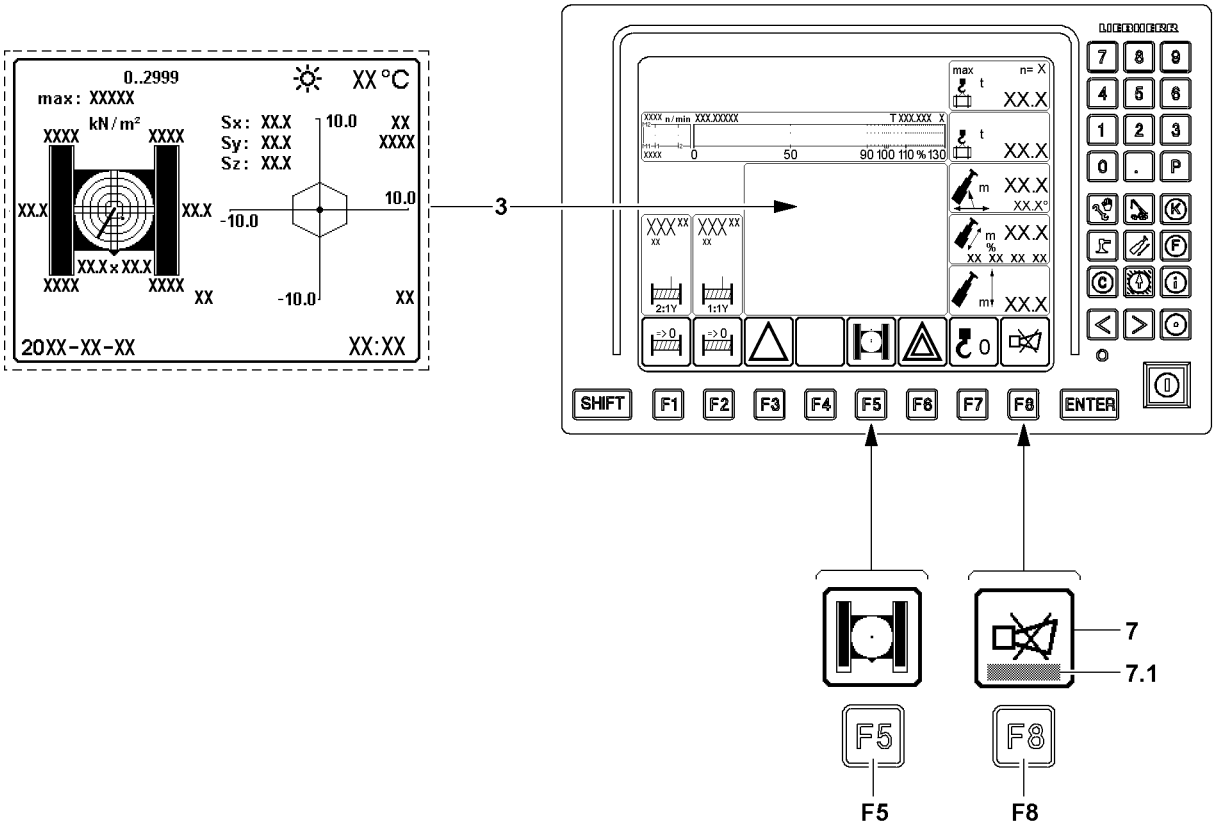
0..2999
XX°C
max: XXXXX
kN/m²
XXXX
XXXX
Sx: XX.X
Sy: XX.X
Sz: XX.X
10.0
XX
XXXX
XX.X
XX.X
10.0
-10.0
XX.X x XX.X
XXXX
XXXX
XX
-10.0
XX
20XX-XX-XX
XX:XX
3
SHIFT
F1
F2
F3
F4
F5
F6
F7
F8
ENTER
7
7.1
F5
F8

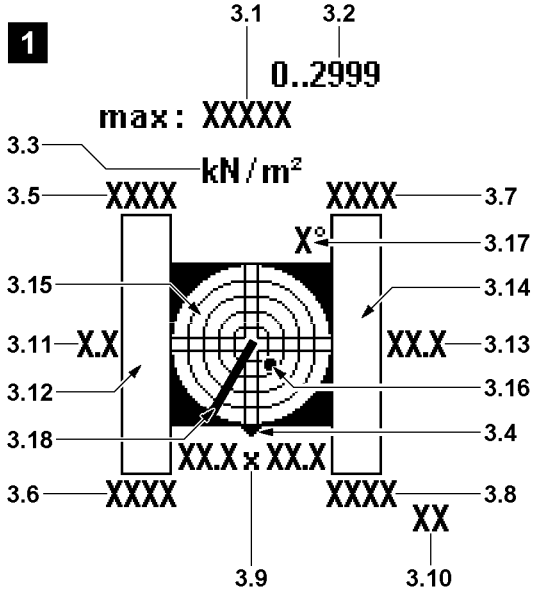
1
3.1
3.2
0..2999
max: XXXXX
3.3
kN/m²
3.5
XXXX
XXXX
3.7
X°
3.17
3.15
3.14
3.11
X.X
XX.X
3.13
3.12
3.16
3.18
3.4
XX.X x XX.X
3.6
XXXX
XXXX
3.8
XX
3.9
3.10

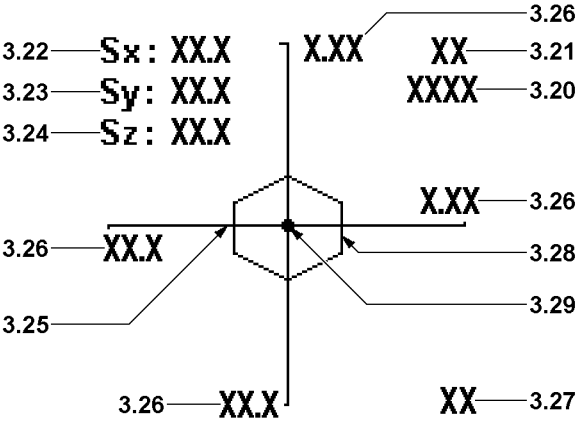
2
3.26
3.22
Sx: XX.X
X.XX
XX
3.21
3.23
Sy: XX.X
XXXX
3.20
3.24
Sz: XX.X
X.XX
3.26
3.26
XX.X
3.28
3.29
3.25
3.26
XX.X
XX
3.27

B117915

6.5 Monitoring of surface pressure and center of gravity

WARNING
The crane can topple over!
When the programmed limit values are reached in the monitoring of surface pressure and center of gravity, there is no automatic shut off of crane movements!
The displayed values are calculated and are informative. Calculated values are below the tolerances and unpredictable influences, for example crane operation, surrounding and environmental influences!
Due to the resulting tolerance field of the values, the monitoring of surface pressure and center of gravity may not be used to determine the limit values of the crane!
If this is disregarded, then the crane can topple over!
Personnel can be severely injured or killed!

- ▶ Do not use the displayed values to determine the limit values of the crane and to utilize the crane to its tipping limit or until it sinks in!
- ▶ Make sure that all values are within the programmed limit values!

WARNING
Increased surface pressure!
The calculation of the values for the display of the surface pressure in the LICCON monitor are based on ideal assumptions.

- ▶ Side deformations of the boom system due to wind, inclined position and elastic resilience of the steel structure are not taken into account but they can lead to an increase of the surface pressure.

WARNING
Shifting of center of gravity!
The calculation of the values for the display of the center of gravity in the LICCON monitor are based on ideal assumptions.

- ▶ Side deformations of the boom system due to wind, inclined position and elastic resilience of the steel structure are not taken into account but they can lead to a shifting of the center of gravity.

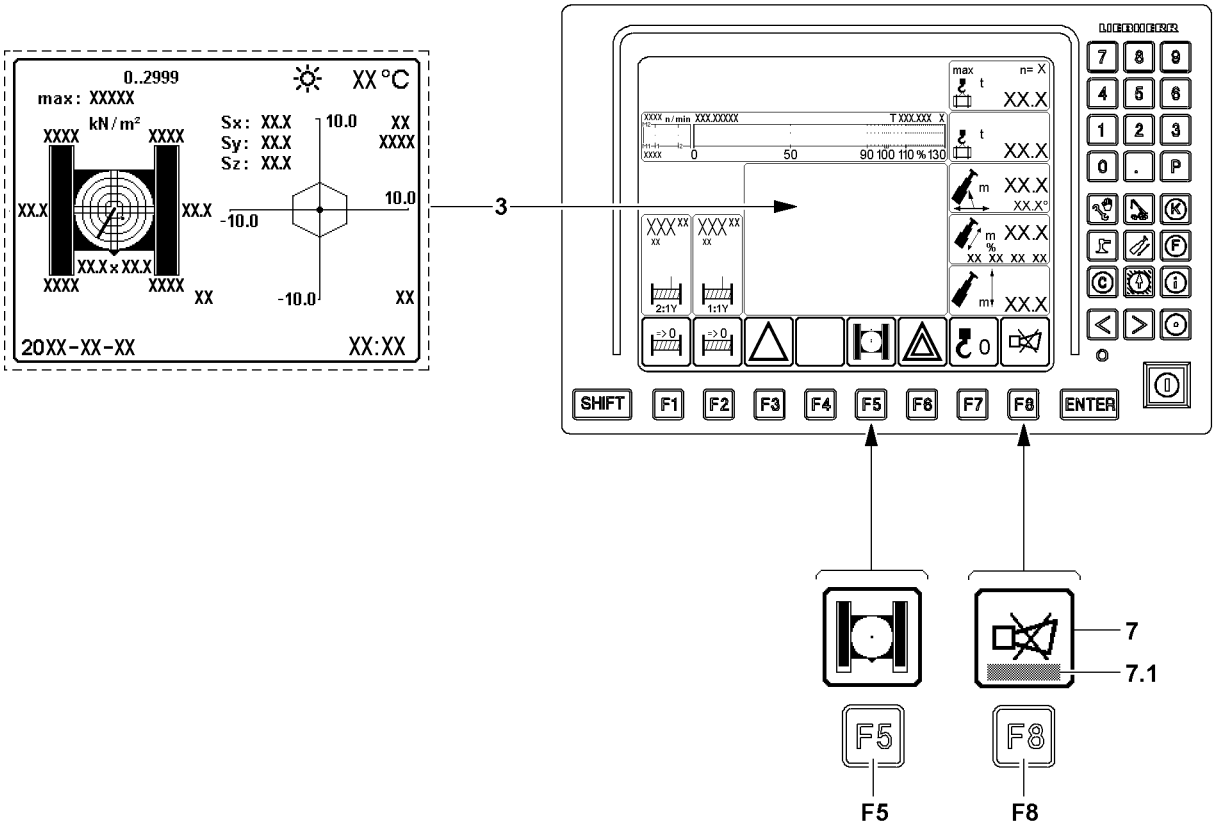
0..2999
XX°C
max: XXXXX
kN/m²
XXXX
XXXX
Sx: XX.X
Sy: XX.X
Sz: XX.X
10.0
XX
XXXX
XX.X
XX.X
10.0
-10.0
XX.X x XX.X
XXXX
XXXX
XX
-10.0
XX
20XX-XX-XX
XX:XX
3
SHIFT
F1
F2
F3
F4
F5
F6
F7
F8
ENTER
7
7.1
F5
F8

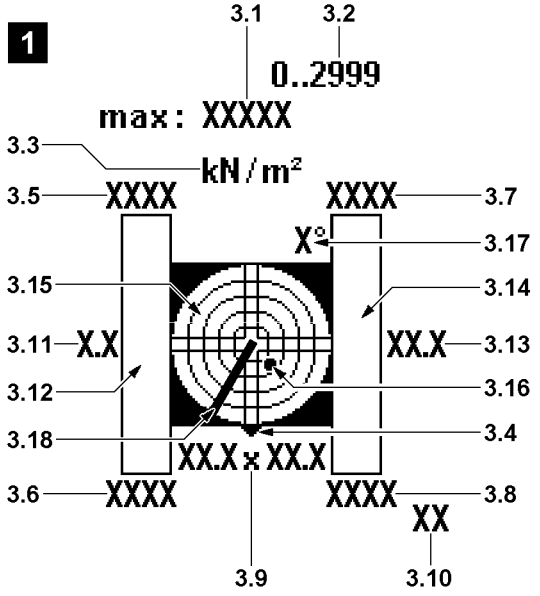
1
3.1
3.2
0..2999
max: XXXXX
3.3
kN/m²
3.5
XXXX
XXXX
3.7
X°
3.17
3.15
3.14
3.11
X.X
XX.X
3.13
3.12
3.16
3.18
3.4
XX.X x XX.X
3.6
XXXX
XXXX
3.8
XX
3.9
3.10

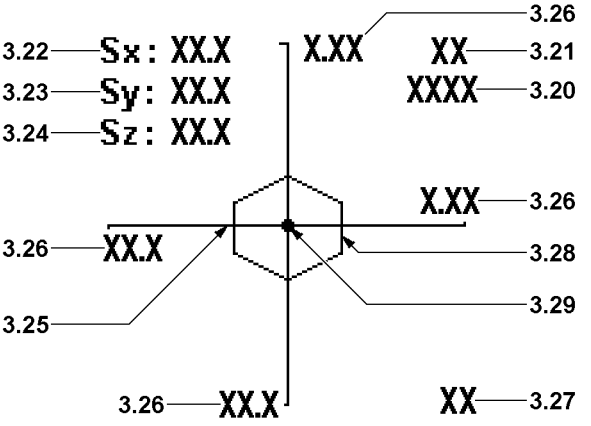
2
3.26
3.22
Sx: XX.X
X.XX
XX
3.21
3.23
Sy: XX.X
XXXX
3.20
3.24
Sz: XX.X
X.XX
3.26
3.26
XX.X
3.28
3.29
3.25
3.26
XX.X
XX
3.27

B117915

The monitoring of surface pressure and center of gravity **3** is always active and can be displayed in the monitoring field, if necessary. Due to the color of the icon over the function key **F5** the crane operator is automatically alerted in case of a warning occurrence.
The monitoring field has its fixed place on the LICCON monitor and can be hidden or assigned with other functions.
By pressing the function key **F5**, the monitoring of surface pressure and center of gravity **3** is displayed in the monitoring field.

Note
Turned off monitoring of surface pressure and center of gravity!
▶ Outside of the crane operation program, the monitoring of surface pressure and center of gravity is turned off!
▶ When the monitoring of surface pressure and center of gravity is turned off, warning events are not recognized!

Color key - Warning icon “**F5** ”:
– Warning icon blue: Monitoring of surface pressure and center of gravity is ok.
– Crawler carrier in warning icon red: Warning for monitoring of surface pressure and center of gravity.
  If a warning occurs, an error message **7.1** is issued in the horn icon **7**.
  The error message **7.1** includes an acoustic signal through the LICCON monitor and an error description.
  Press the function key **F8** once. The acoustic signal is turned off.
  Press the function key **F8** twice: The error description for the error message **7.1** which occurred last is called up.

Note
▶ **Illustration 1**: Display Surface pressure icon
▶ **Illustration 2**: Display of center of gravity icon

3 Display “Monitoring of surface pressure and center of gravity”

• The values are calculated depending on the set up configuration of the crane and the load.

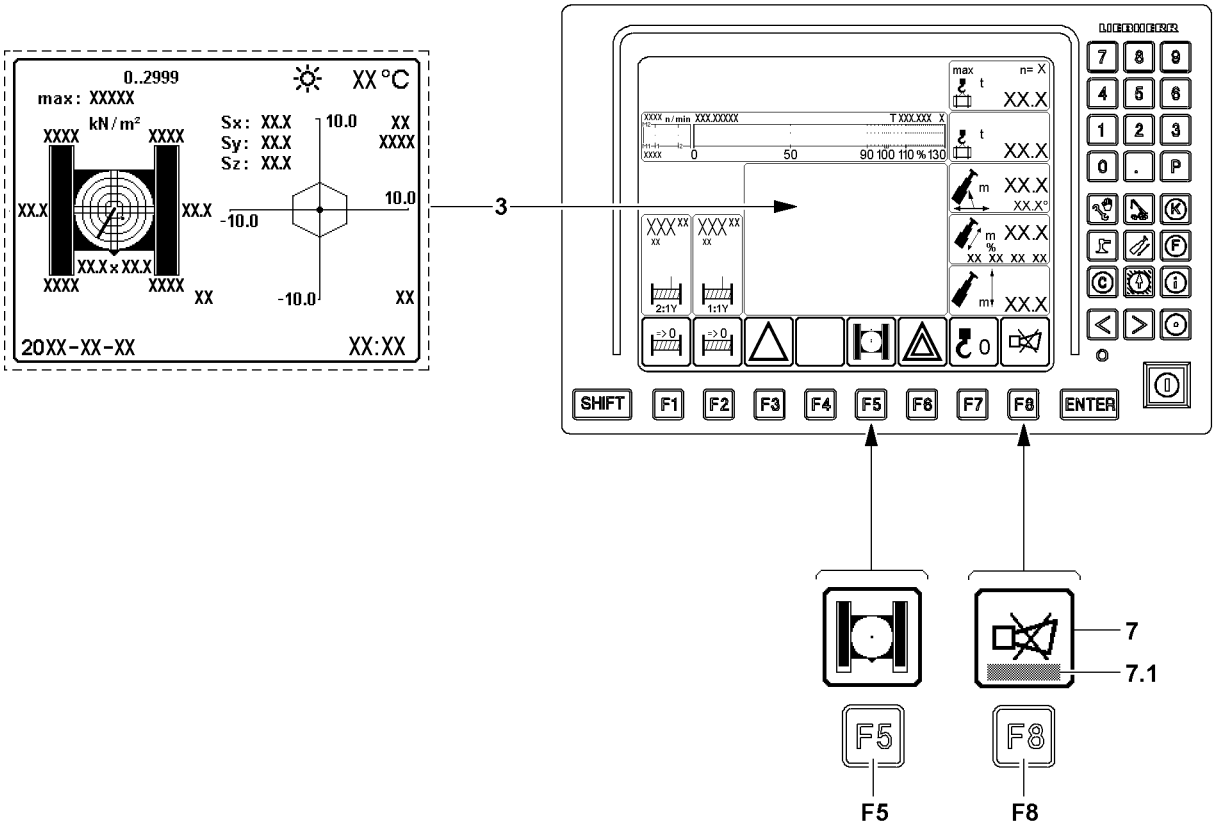
0..2999
XX°C
max: XXXXX
kN/m²
XXXX
XXXX
Sx: XX.X
Sy: XX.X
Sz: XX.X
10.0
XX
XXXX
XX.X
XX.X
10.0
-10.0
XX.X x XX.X
XXXX
XXXX
XX
-10.0
XX
20XX-XX-XX
XX:XX
3
SHIFT
F1
F2
F3
F4
F5
F6
F7
F8
ENTER
7
7.1
F5
F8

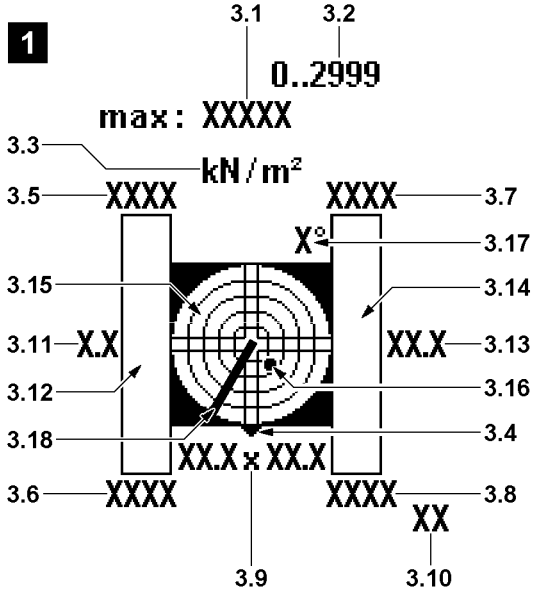
1
3.1
3.2
0..2999
max: XXXXX
3.3
kN/m²
3.5
XXXX
XXXX
3.7
X°
3.17
3.15
3.14
3.11
X.X
XX.X
3.13
3.12
3.16
3.18
3.4
XX.X x XX.X
3.6
XXXX
XXXX
3.8
XX
3.9
3.10

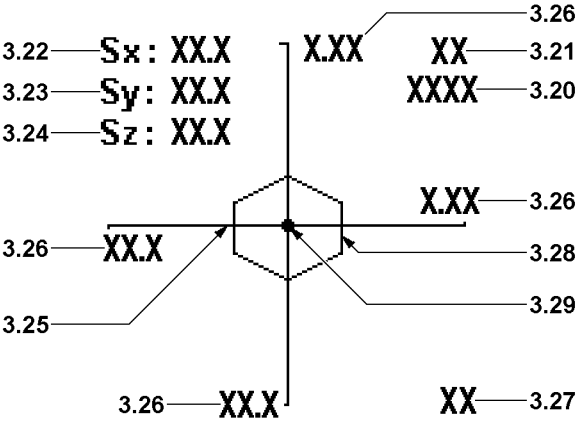
2
3.26
3.22
Sx: XX.X
X.XX
XX
3.21
3.23
Sy: XX.X
XXXX
3.20
3.24
Sz: XX.X
X.XX
3.26
3.26
XX.X
3.28
3.29
3.25
3.26
XX.X
XX
3.27

B117915

Display Surface pressure icon, illustration 1:

3.1	Permissible surface pressure	• The value is entered by the crane operator via the keyboard.
3.2	Input area	• Input area for the permissible surface pressure **3.1**.
3.3	Measuring unit for surface pressure	• Measuring unit for the pressure data in the surface pressure icon (illustration **1**).
3.4	Direction specification	• The triangle symbolizes where the front of the crawler travel gear is in the illustration. • **Note:** The front on the crawler travel gear is always on the side where the chain tension devices for the crawler carriers are located.
3.5	Surface pressure	• Calculated actual value of surface pressure on the travel gear, left rear.
3.6	Surface pressure	• Calculated actual value of surface pressure on the travel gear, left front.
3.7	Surface pressure	• Calculated actual value of surface pressure on the travel gear, right rear.
3.8	Surface pressure	• Calculated actual value of surface pressure on the travel gear, right front.
3.9	Travel gear base	• Base dimensions of the crawler travel gear.
3.10	Measuring unit Length data	• Measuring unit for the measuring data in the surface pressure icon (illustration **1**).
3.11	Placement surface	• Calculated placement surface of crawler carrier right as value.
3.12	Placement surface	• Calculated placement surface of crawler carrier right as graphic.
3.13	Placement surface	• Calculated placement surface of crawler carrier left as value.
3.14	Placement surface	• Calculated placement surface of crawler carrier left as graphic.
3.15	Incline display	• The graphic display is in the form of a spirit level, with a moving dot **3.16** representing the air bubble. • Note: Incline display with number values, see section “Monitored auxiliary functions”.
3.16	Point	• The center of the dot **4.2** shows the incline.
3.17	Resolution of view	• This value describes the resolution of the graphic view. The resolution is matched automatically to the incline.
3.18	Boom direction	• Current boom direction of the crane, in reference to the displayed icon.

WARNING
The crane can topple over!
If the permissible incline of the crane is exceeded, the crane can topple over!
▶ Do not exceed the permissible incline from the load chart!
▶ Do not exceed the permissible incline for driving the crane, see Crane operating instructions, chapter 4.10!

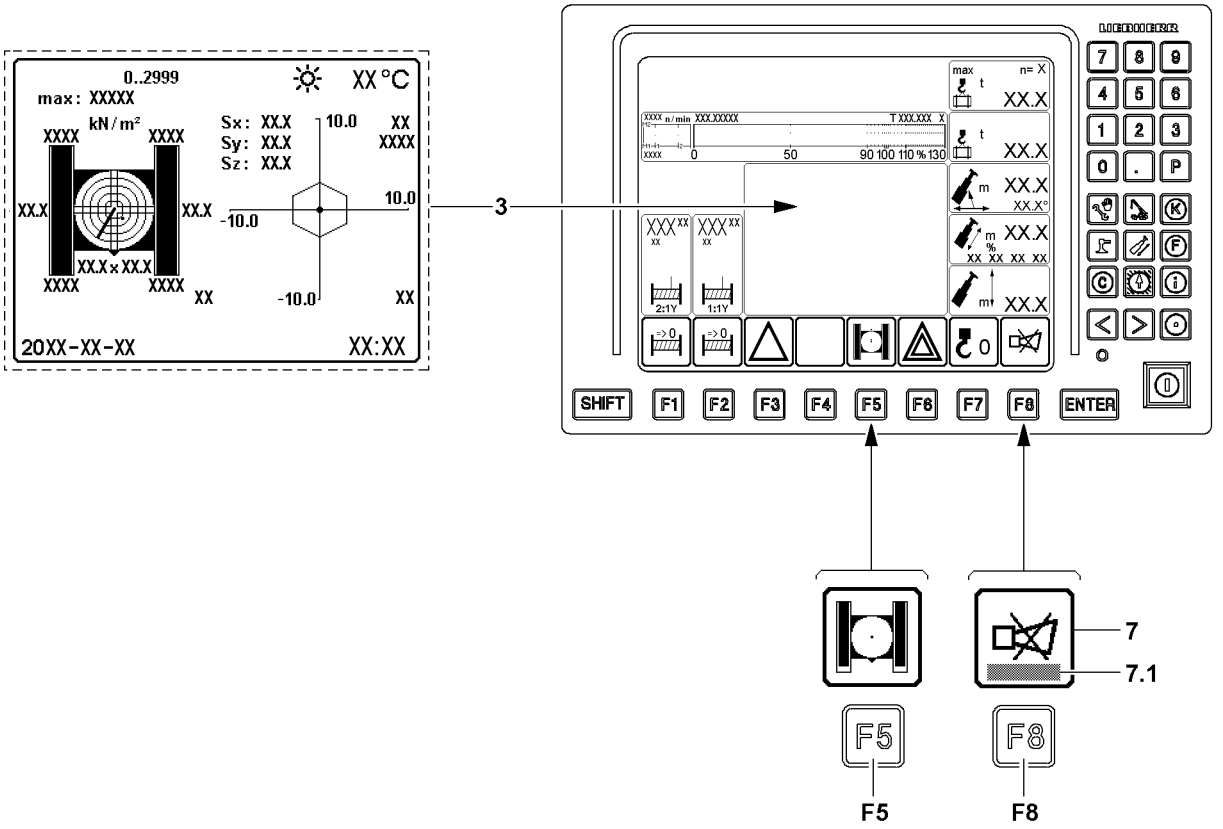
0..2999
XX°C
max: XXXXX
kN/m²
XXXX
XXXX
Sx: XX.X
Sy: XX.X
Sz: XX.X
10.0
XX
XXXX
XX.X
XX.X
10.0
-10.0
XX.X x XX.X
XXXX
XXXX
XX
-10.0
XX
20XX-XX-XX
XX:XX
3
SHIFT
F1
F2
F3
F4
F5
F6
F7
F8
ENTER
7
7.1
F5
F8

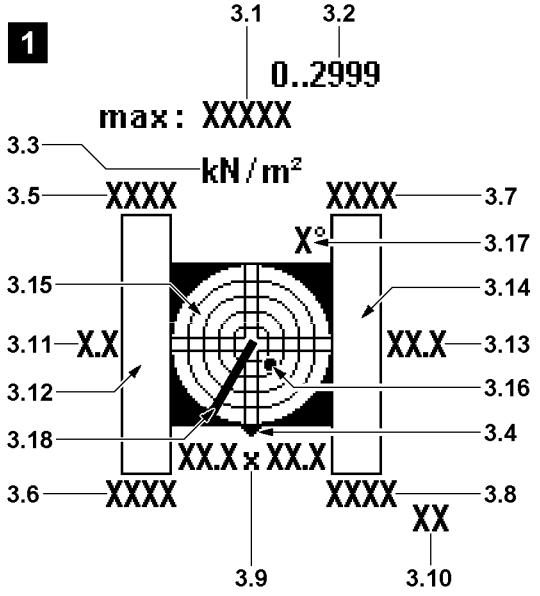
1
3.1
3.2
0..2999
max: XXXXX
3.3
kN/m²
3.5
XXXX
XXXX
3.7
X°
3.17
3.15
3.14
3.11
X.X
XX.X
3.13
3.12
3.16
3.18
3.4
XX.X x XX.X
3.6
XXXX
XXXX
3.8
XX
3.9
3.10

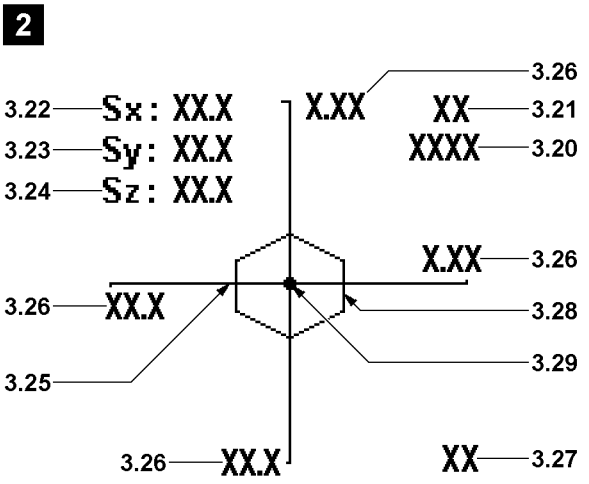
2
3.26
3.22
Sx: XX.X
X.XX
XX
3.21
3.23
Sy: XX.X
XXXX
3.20
3.24
Sz: XX.X
X.XX
3.26
3.26
XX.X
3.28
3.29
3.25
3.26
XX.X
XX
3.27

B117915

Display Center of gravity icon, illustration 2:

3.20 Weight data	• Calculated total weight of the crane including load.
3.21 Weight unit	• Weight unit for the weight data **3.20** in the center of gravity icon (illustration **2**).
3.22 Center of gravity position	• Calculated center of gravity position in direction “Sx”
3.23 Center of gravity position	• Calculated center of gravity position in direction “Sy”
3.24 Center of gravity position	• Calculated center of gravity position in direction “Sz”
3.25 Axis of coordinates	• The axis of coordinates **3.25** is aligned according to the direction of the surface pressure icon (illustration **1**) centered to the slewing ring on the placement surface of the crane.
3.26 Scale value	• Scale value on the axis of coordinates **3.25**
3.27 Measuring unit	• Measuring unit in the center of gravity icon (illustration **2**)
3.28 Core surface	• Calculated core surface of the crane according to the set up configuration, load and ground conditions. • **Note:** The core surface is an important reference point for the center of gravity of the crane.
3.29 Center of gravity Sx/Sy	• Calculated center of gravity displayed graphically in direction Sx/Sy • **Note:** The actual position is in direct relation to the values center of gravity position **3.22** and center of gravity position **3.23**

Note
Additional display values in the Display “Monitoring of surface pressure and center of gravity” **3**
▶ Date, time of day and ambient temperature are also displayed.

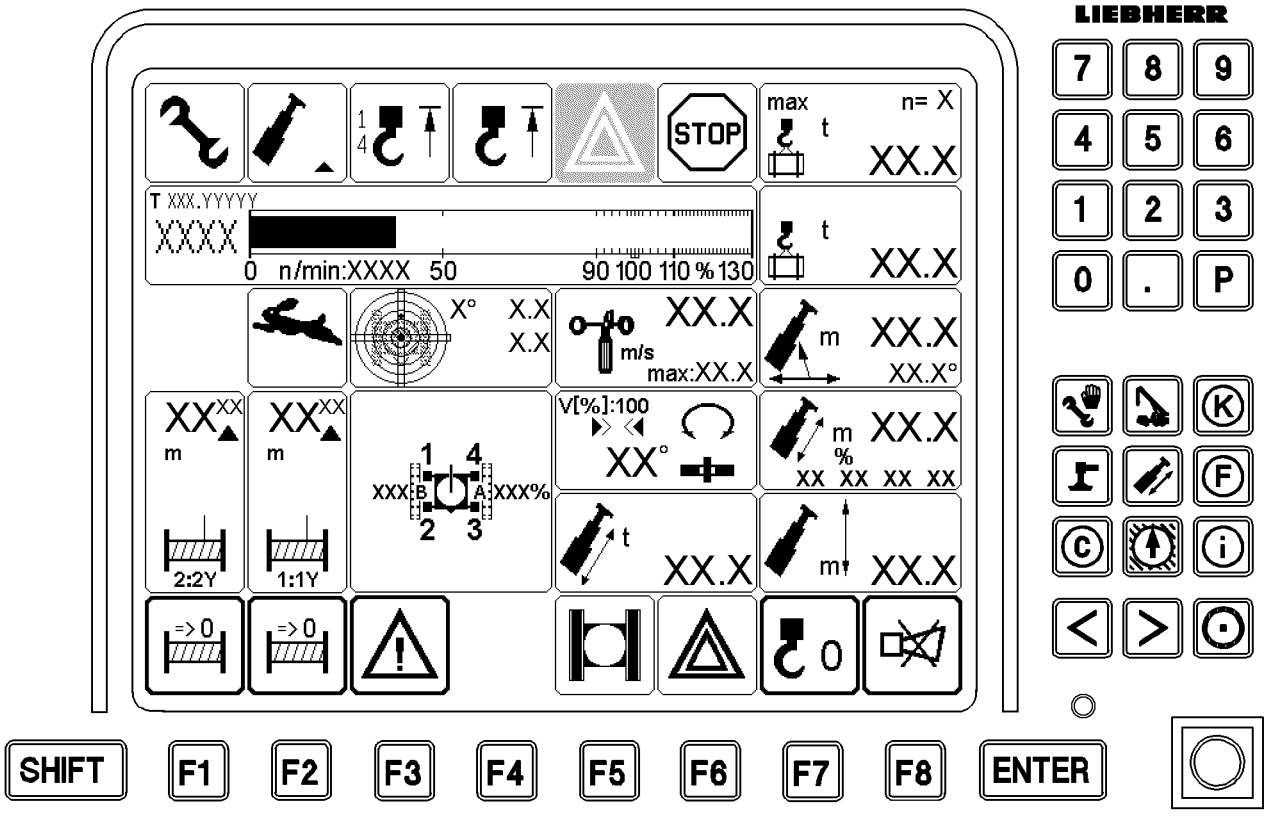
LIEBHERR
STOP
max
n= X
XX.X
T XXX.YYYYY
XXXX
0 n/min:XXXX 50 90 100 110 % 130
X°
X.X
X.X
m/s
max:XX.X
m
XX.X°
V[%]:100
XX°
m
%
XX XX XX XX
XXXX
m
2:2Y
1:1Y
XXX B A XXX%
=> 0
SHIFT
F1
F2
F3
F4
F5
F6
F7
F8
ENTER

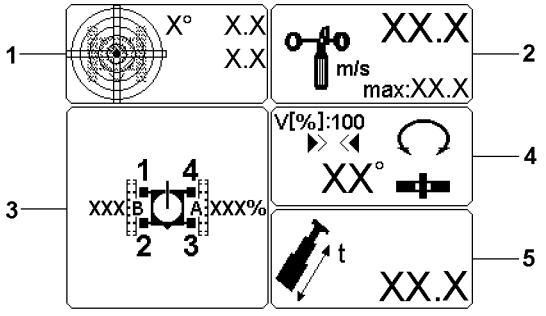
1
2
3
4
5
X°
X.X
X.X
XX.X
m/s
max:XX.X
V[%]:100
XX°
XXX B A XXX%
t
XX.X

B117270

6.6 Monitored auxiliary functions

There are several monitored auxiliary functions, which can be displayed when needed or automatically.
The monitoring of all auxiliary functions is always active during “normal” crane operation, only the icons may be hidden. The icons of the monitored auxiliary functions have their fixed place on the LICCON monitor.
Using the function key **F4**, you can show the icons for the monitored auxiliary functions.
Auxiliary functions:
Crane incline **1**
Wind speed **2**
Crawler travel gear **3**
Slewing range **4**
Telescopeable load **5**

The display changed depending if the monitored auxiliary functions are turned on or off.
Monitored auxiliary functions turned off:
– No error:
  Icons are not shown.
– Error in one function:
  Icon with error message is shown.

Monitored auxiliary functions turned on:
– Optional icons (customer request) are displayed permanently.

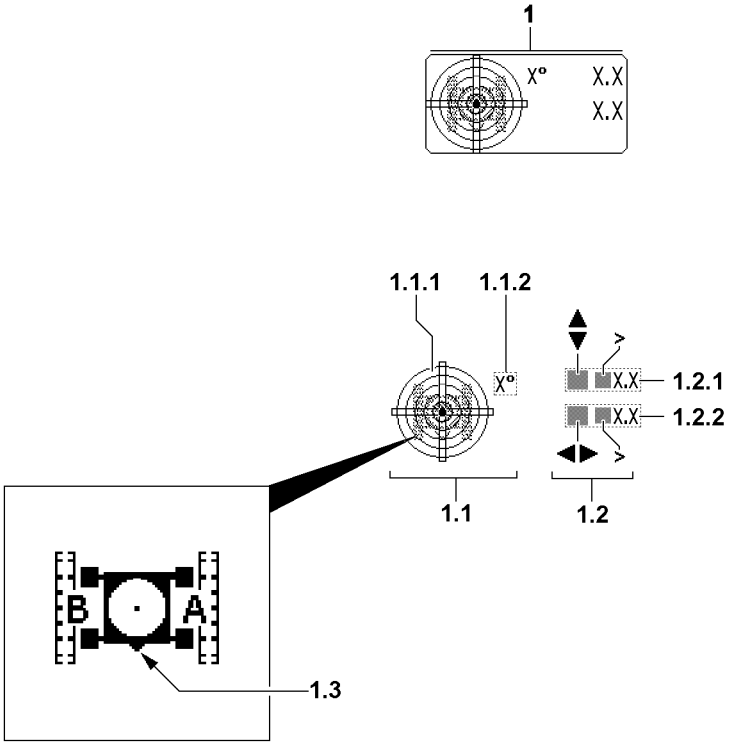

B117910

6.6.1 Crane incline

WARNING
The crane can topple over!
The “larger than symbol” shows that the crane is inclined further than can be shown!
The exact incline can then not be read!
▶ Do not exceed the permissible incline of the crane!

1 “Incline” icon	• Display of the incline of the crane to the horizontal in longitudinal and lateral direction. The display is graphic as well as numeric. • The display of the incline refers to the crawler chassis as viewed from above. Bottom **1.3** in the icon is the front on the crawler travel gear.
1.1 Graphic part	
1.1.1 Graphic illustration	• The graphic display is in the form of a spirit level, with a moving dot representing the air bubble. The center of the dot shows the incline value.
1.1.2 Resolution of view	• This value describes the resolution of the graphic view. The resolution is matched automatically to the incline.
1.2 Numeric part	
1.2.1 Longitudinal direction	• Incline of crane in longitudinal direction in [°] • The arrow shows the direction of the incline • If the “larger than symbol” appears, then the crane is inclined further than can be shown!
1.2.2 Lateral direction	• Incline of crane in lateral direction in [°] • The arrow shows the direction of the incline • If the “larger than symbol” appears, then the crane is inclined further than can be shown!

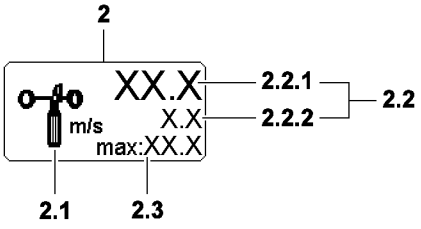

B106976

6.6.2 Wind speed

WARNING
Wind speed too high!
If the maximum permissible wind speed is exceeded with erected boom system, there is a danger of accidents!
Dangerous situations can arise, such as oscillating load or shaking crane!
The crane can topple over, personnel can be severely injured or killed!
- ▶ **The crane movements will not be shut off!**
- ▶ The boom system must be taken down in time before exceeding the maximum permissible wind speed of the crane.

WARNING
Crane operation without display value of wind speed!
If question marks (“?”) appear in the “wind speed” icon **2** instead of display values, then a winch speed sensor which must be present is missing or there is an error in the wind sensor!
- ▶ Before starting to work with the crane, make sure that all wind sensors which must be present are present and functioning.
- ▶ Remedy the error immediately!
- ▶ If an error cannot be remedied, then it must be ensured that the wind speed is monitored otherwise!

2.1 Measuring unit icon	• In [m/s] or [ft/s]
2.2 Current wind speed	• **Note:** If a wind sensor is connected, then the wind speed appears at **2.2.1**. If two wind sensors are connected (example: Crane operation with auxiliary boom / accessory), a second wind speed appears additionally at **2.2.2** • **2.2.1** current wind speed WG1 • **2.2.2** current wind speed WG2

Note
- ▶ If several wind sensors are connected, the installation location of the wind sensor determines the corresponding display in the icon “Wind speed”.
- ▶ The priority depends on the installation location of the wind sensor, from “outside” (auxiliary boom / accessory) to “inside” (main boom). The wind speed for the “outside” wind sensor is shown independent from the “inside” wind sensor.

2.3 Maximum permissible wind speed	• The value depends on the operating mode and the set up configuration • If the current wind speed value exceeds the displayed maximum value, the maximum value starts to blink and the acoustic alarm “Short horn” sounds!

Note
- ▶ If access to a load chart is not possible, then the maximum value starts to blink and the acoustic alarm “Short horn” sounds!

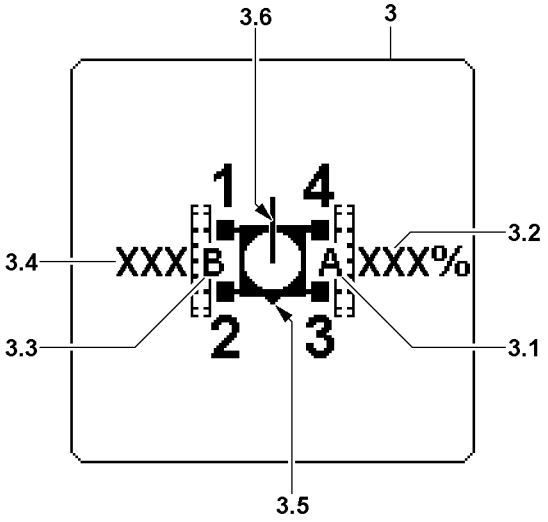

B117911

6.6.3 Crawler travel gear

3	“Crawler travel gear” icon	
3.1	Crawler carrierA	• Marked crawler carrier Ain the icon
3.2	Extension conditionA	• Extension condition of crawler carrier Ain percentages
3.3	Crawler carrierB	• Marked crawler carrier Bin the icon
3.4	Extension conditionB	• Extension condition of crawler carrier Bin percentages
3.5	Front on travel gear	• Shows where the front side of the crawler travel gear is in the icon.
3.5	Front on travel gear	• Shows where the front side of the crawler travel gear is in the icon.
3.6	Alignment of telescopic boom	• The bar shows the direction of the telescopic boom in reference to the crawler travel gear. In the example, the telescopic boom extends to the rear past the crawler travel gear.

Note

▶ The large numbers 1 - 4 correspond to the numbering on the crawler travel gear.

▶ The letters A and B correspond to the signs on the crawler carriers.

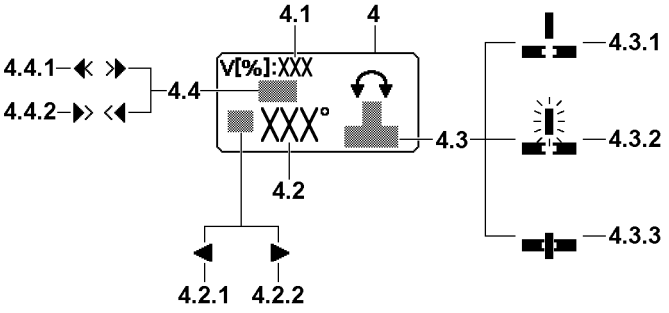
4.1
4
4.4.1
4.4.2
4.4
V[%]:XXX
XXX°
4.3
4.3.1
4.3.2
4.3.3
4.2
4.2.1
4.2.2

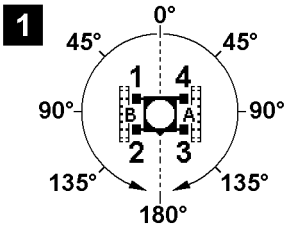
1
0°
45°
45°
90°
90°
135°
135°
180°
1
4
B
A
2
3

B117912

6.6.4 Slewing range

4 “Slewing range” icon

4.1 Maximum rotation speed

- V: [%]
- Identifies the current (selected) “maximum rotation speed” of the slewing gear with a fully deflected master switch, relating to the maximum attainable rotation speed of the slewing gear at a preselected speed of 100 %.
  This value can be infinitely preselected, see section settings window “Speed reduction master switch”.

WARNING
Danger of accident!

▶ Make the preselection of the maximum rotation speed according to the specifications in the load chart manual, see section “Speed reduction master switch”!

▶ The following applies: The longer the boom and / or the greater the load, the smaller the maximum rotation speed must be!

▶ **Never** deflect the master switch for the slewing gear to the stop with a long boom and / or greater load!

4.2 Turning angle

- Turning angle of the superstructure in relation to the working direction “to the rear” (0 [°])
  Increases on both sides to the maximum value of 180°, see illustration **1**
- The direction arrow in front of the value indicates the direction of rotation of the superstructure.
- The direction arrow is in relation to the working direction “to the rear” (0 [°]), see illustration **1**
- **4.2.1** (Arrow to the left): The superstructure is turned to the left from the zero point.
- **4.2.2** (Arrow to the right): The superstructure is turned to the right from the zero point.

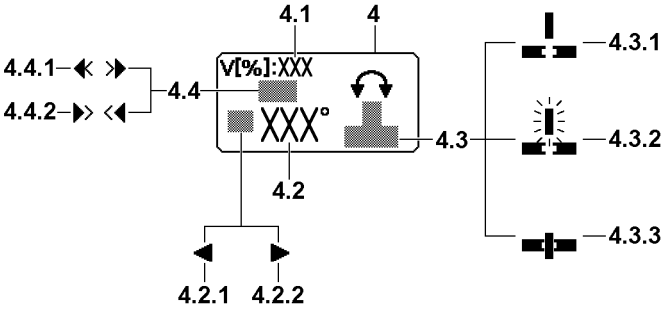
4.1
4
4.4.1
4.4.2
4.4
V[%]:XXX
XXX°
4.3
4.3.1
4.3.2
4.3.3
4.2
4.2.1
4.2.2

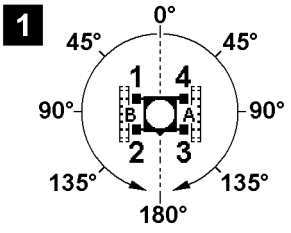
1
0°
45°
45°
90°
90°
135°
135°
180°
1
4
B
A
2
3

B117912

4.3	Status of turntable pinning between superstructure and chassis	
4.3.1	Lock is unpinned and static	• Locking pin on top: Turntable unpinned
4.3.2	Lock is unpinned and blinking	• Locking pin in intermediate position: Error
4.3.3	Lock is pinned and static	• Locking pin on the bottom, turntable pinned

Note

▶ The turntable pinning and unpinning is carried out on the operating and control unit (BKE), see chapter 4.01.

4.4	Operating mode of the slewing gear*
4.4.1	Flexible slewing gear “freely rotating / coasting”
4.4.2	Flexible slewing gear “fixed”

Note

▶ The operating modes of the slewing gear and their settings are described in section “The setting window - Speed reduction master switch”.

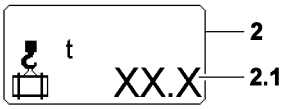

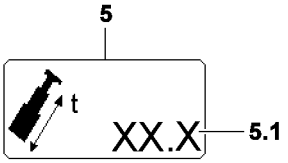

B106979

6.6.5 Telescopeable load

5 “Telescopeable load” icon	• The “telescopeable load” **5.1** with which the boom can be telescoped is shown in the icon. • This icon is automatically shown when the “telescopeable load” **5.1** is “0” or smaller than the “current load” **2.1** (actual load) • The value of the “telescopeable load” **5.1** blinks **Note:** The “Telescopeable load” icon **5** cannot be faded out on the LICCON monitor if the value is blinking. • The “Telescopeable load” **5** icon can be faded out when the “current load” **2.1** (actual load) is smaller or the same as the “telescopeable load”.
5.1 Telescopeable load	• In [t] or [lbs] • The weight unit [t] or [lbs] defined in the load chart is displayed in the icon, under which the telescopic boom can still be telescoped

Note

▶ Exceeding the “Telescopeable load” results in no shut offs.

▶ The icon “Telescopeable load” can be faded in manually via function key “**F3** ”.

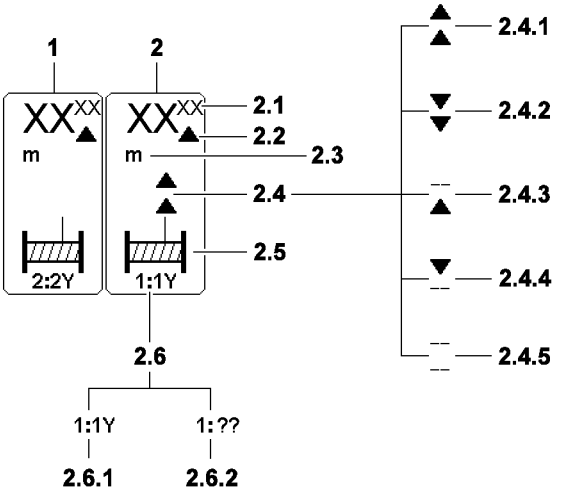
1
2
XXXX
m
2:2Y
XXXX
m
1:1Y
2.1
2.2
2.3
2.4
2.5
2.4.1
2.4.2
2.4.3
2.4.4
2.4.5
2.6
1:1Y
1:??
2.6.1
2.6.2

B106980

6.7 “Winch display” icon

6.7.1 Winch 2

1 “Winch2” icon

- **Note:**
  The meaning of the icons for winch 1 and winch 2* is identical and is explained on icon “winch 1” **2**.

6.7.2 Winch 1

2 “Winch 1” icon

2.1 Rope length spooled up / out

- In [m] or [ft]
  From a zero point to be determined
- For individual operation (all winches individually controllable) with the reeving set in the “Set up” program: Completed hook path
- The digits before the decimal point are displayed with a maximum of 3 large digits. The digits after the decimal point are displayed with small digits. (Also refer to the description of the function keys **F1** and **F2**.)
- A prerequisite for a correct display is that the value entered equals the actual number of rope strands between the boom head and the hook block.
  If the set reeving does not match the reeving of the winch involved (for example, winch on the auxiliary boom at a set load chart for the main boom), then the correct hook path can be calculated from the displayed hook path as follows:

$$s_{Hk} = \frac{s_{Ha} \times n_e}{n_t}$$

B197057

Legend:

- s_{Hk} = correct hook path
- s_{Ha} = displayed hook path
- n_e = selected reeving
- n_t = actual reeving
- The hook path calculation only works accurately if the load is suspended freely and is not luffed during the lifting procedure. Not taken into account are flexation and rope expansion.

2.2 Direction of hook movement

The arrows on the length value show the direction of the hook movement in relation to the zero point:

- Arrow pointing up: Hook has moved upward from the zero point.
- Arrow pointing down: Hook has moved down from the zero point.

2.3 Length unit for hook path display

- In [m] or [ft]

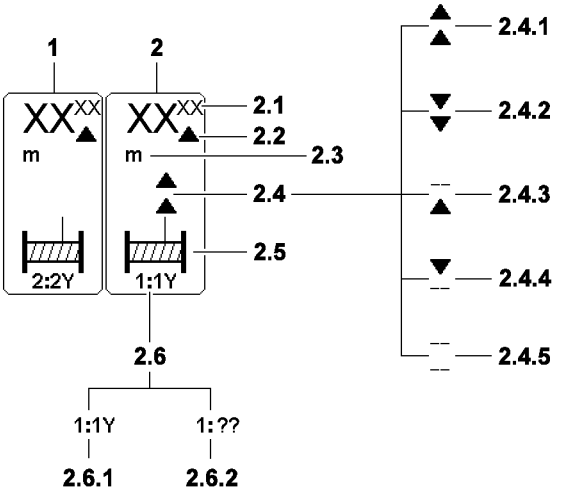
1
2
XXXX
m
2:2Y
XXXX
m
1:1Y
2.1
2.2
2.3
2.4
2.5
2.4.1
2.4.2
2.4.3
2.4.4
2.4.5
2.6
1:1Y
1:??
2.6.1
2.6.2

B106980

2.4	Winch status display	• There are five winch status icons:
2.4.1	Spool out (blinking)	
2.4.2	Spool up (blinking)	
2.4.3	Spooled out	• Spooling out is blocked
2.4.4	Spooled up	• Spooling up is blocked
2.4.5	Winch is deactivated or unplugged, or the turn sensor is defective or not present on the system bus	• Spooling up and spooling out are blocked (deactivate / activate winch(es), see chapter 4.01) • **Note:** If no winch status icon appears, the activated winch is inactive and is neither spooled up nor spooled out.
2.5	Winch icon	• (with rope end for winch status icon)
2.6	Winch number with master switch number and master switch operating direction	
2.6.1	Winch **activated**	• **1 : 1 Y** • First digit (1): Winch number • Second digit (1): Master switch number • Letter (Y): Master switch operating direction
2.6.2	Winch **deactivated**	• **1 : ??** • First digit (1): Winch number • Second digit (??): Winch 1 is deactivated; no operating direction or master switch has been assigned

Note

▶ Activating or deactivating the winches is described in chapter 4.01.

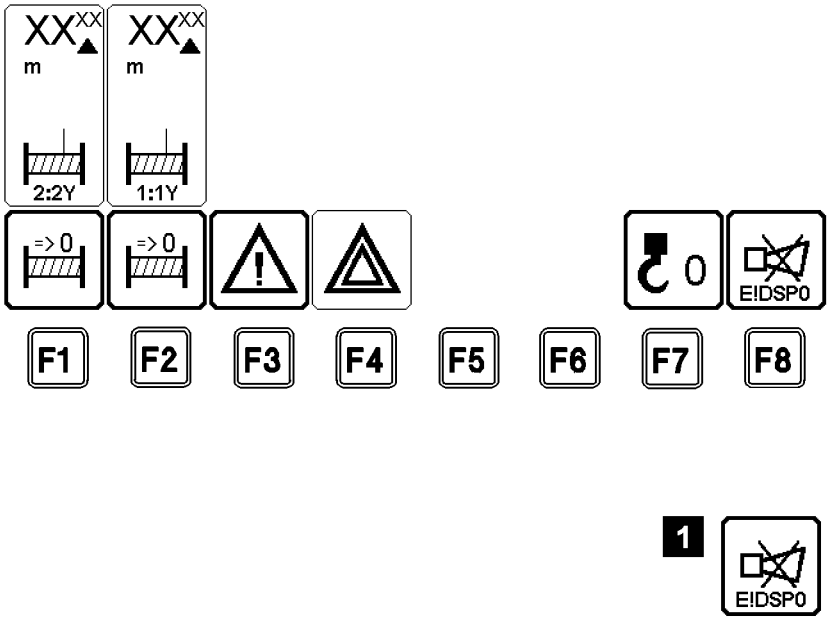

B106981

6.8 The function key line (crane operation)

The function key line consists of function keys **F1** to **F8** and the function key icon bar above it. The function keys correspond to the various function key icons above them.

The function key icons may trigger a function or they change their appearance upon the push of a key (function keys) and thereby their definition.

Not all function keys have icons assigned to them. This depends on the “active” program selection.

Pressing a function key changes the appearance of the icon above, its meaning, or its textual content.

F1 Function key	• Set the current hook position as the zero point for the hook path display Winch 2* • Pressing the function key **F1** causes the “Set winch display to zero” icon to appear, i.e. the winch 2* hook path display in the winch icon above is set to “000.00” when the key is pressed. The path measurement begins here.
F2 Function key	• Set the current hook position as the zero point for the hook path display Winch 1 • Pressing the function key **F2** causes the “Set winch display to zero” icon to appear, i.e. the winch1 hook path display in the winch icon above is set to “000.00” when the key is pressed. The path measurement begins here.
F3 Function key	• Show monitoring field • Using the function key **F3**, the “monitoring field with its monitoring functions” can be shown

Note

▶ The monitoring functions in the monitoring field are always active; only the monitoring field can be hidden.

▶ If a warning event occurs, there is an acoustic warning (horn) and the “monitoring area with a warning icon” is displayed on the LICCON monitor, even if the monitoring area was previously hidden.

▶ Pressing function key **F3** changes to the “monitoring field with monitoring functions”.

F4 Function key	• Fading monitored auxiliary functions in or out
	• The function key **F4** can be used to turn all the monitored auxiliary functions in the crane on or off
	• The appearance of the icon changes according to the status:
	  • “Thick border” = auxiliary function icons turned off
	  • “Thin border” = auxiliary function icons turned on

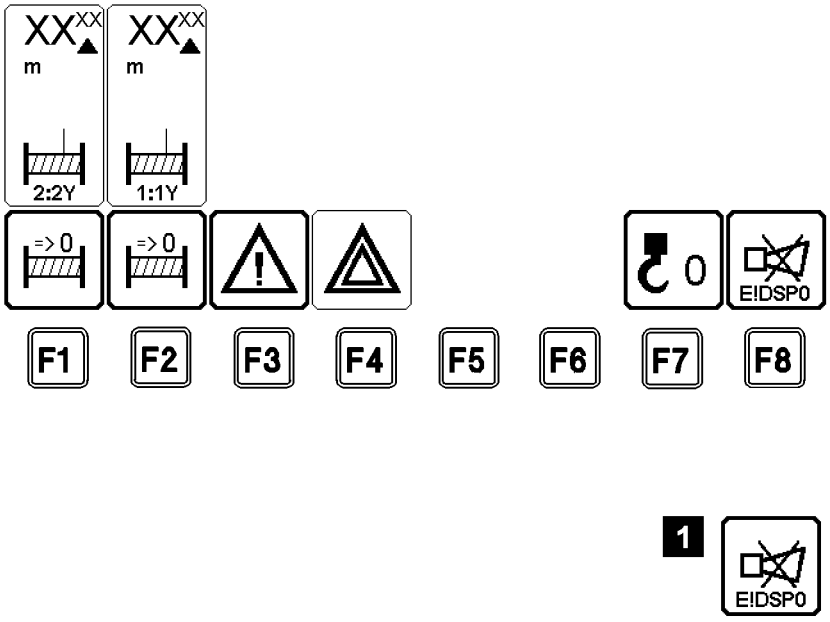

B106981

F5 Function key	• Not assigned
F6 Function key	• Not assigned

F7 Function key	• Turn tare function on or off
	• Pressing the function key **F7** sets the actual load display to “zero” and the icon of function key **F7** is displayed in “red”. At the same time, the word “net” appears in the icon of the actual load display. This function, for example, makes it possible to eliminate the weights of the hoist rope, load carriers, lifting and fastening equipment and only display the weight of the load that must be lifted (net load).
	If the taring is cancelled, the word “net” disappears from the icon “Actual load display” and the gross load value is displayed.
	• The taring is cancelled by one of the following three actions:
	  • By pressing the function key **F7** again.
	  • By telescoping the boom by more than 3 LE (dm or 1/10 ft.)
	  • By luffing by more than ±4°.

F8 Function key	• Turn the horn off / error diagnostics • Turn off the acoustic warning The “Horn” and “Short horn” acoustic warnings can be turned off by pressing the function key **F8**. A new error turns the acoustic warning on again. • Error message in “Horn” icon If a system, application or operating error occurs, an error message appears in the “Horn” icon (refer to illustration **1**). Example: E!DSP0 By pressing the function key **F8** twice, the acoustic warning is turned off and the “Test system” program switches to the error determination screen where the error is documented (**see diagnostics manual**).

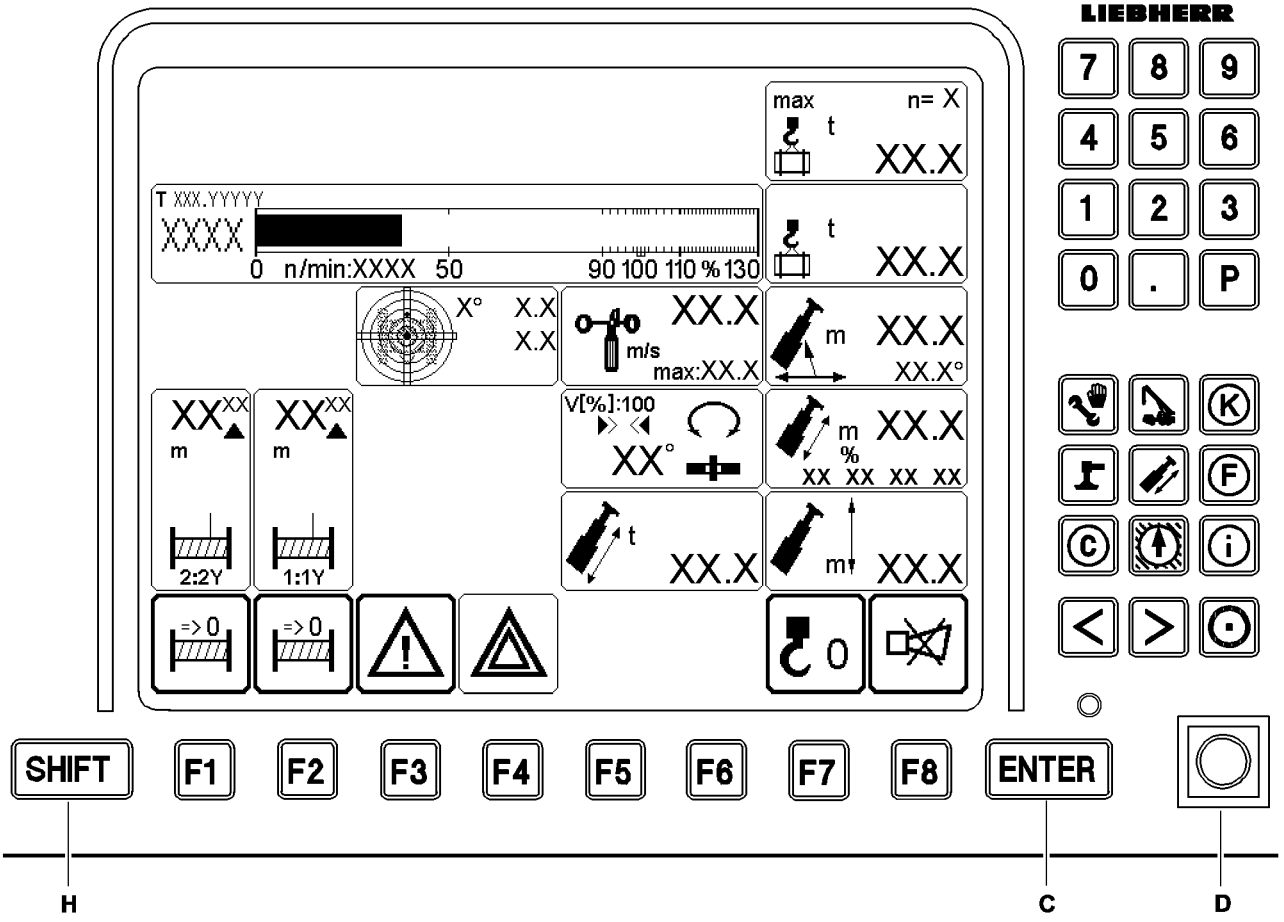
LIEBHERR
max
n= X
t
XX.X
T XXX.YYYYY
XXXX
0 n/min:XXXX 50
90 100 110 % 130
X°
X.X
X.X
m/s
max:XX.X
m
XX.X°
V[%]:100
XX°
%
XX XX XX XX
2:2Y
1:1Y
=> 0
SHIFT
F1
F2
F3
F4
F5
F6
F7
F8
ENTER
H
C
D

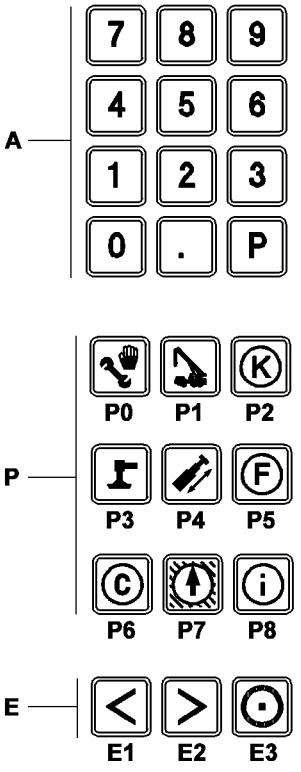
A
P
E
P0
P1
P2
P3
P4
P5
P6
P7
P8
E1
E2
E3

B110338

6.9 Other operating elements

The following functions are assigned to the other operating elements of the display and operating unit of the LICCON computer system in program “Crane operation”.

A Numeric keypad	• Keys “0” to “9” and “P” have no function in the “Crane operation” program.
P Program keys	• The program keys are used to select individual programs. However, the appropriate program-specific features (for example, switching from “Set up” to “Crane operation” using the “O.K.”) must always be observed. **Note:** The program currently running **cannot** be called up again using its program key. The programs can only be called up with the program key when no functions are activated via the set up key **D** at the same time.
C Enter key	• No function in “Crane operation” program

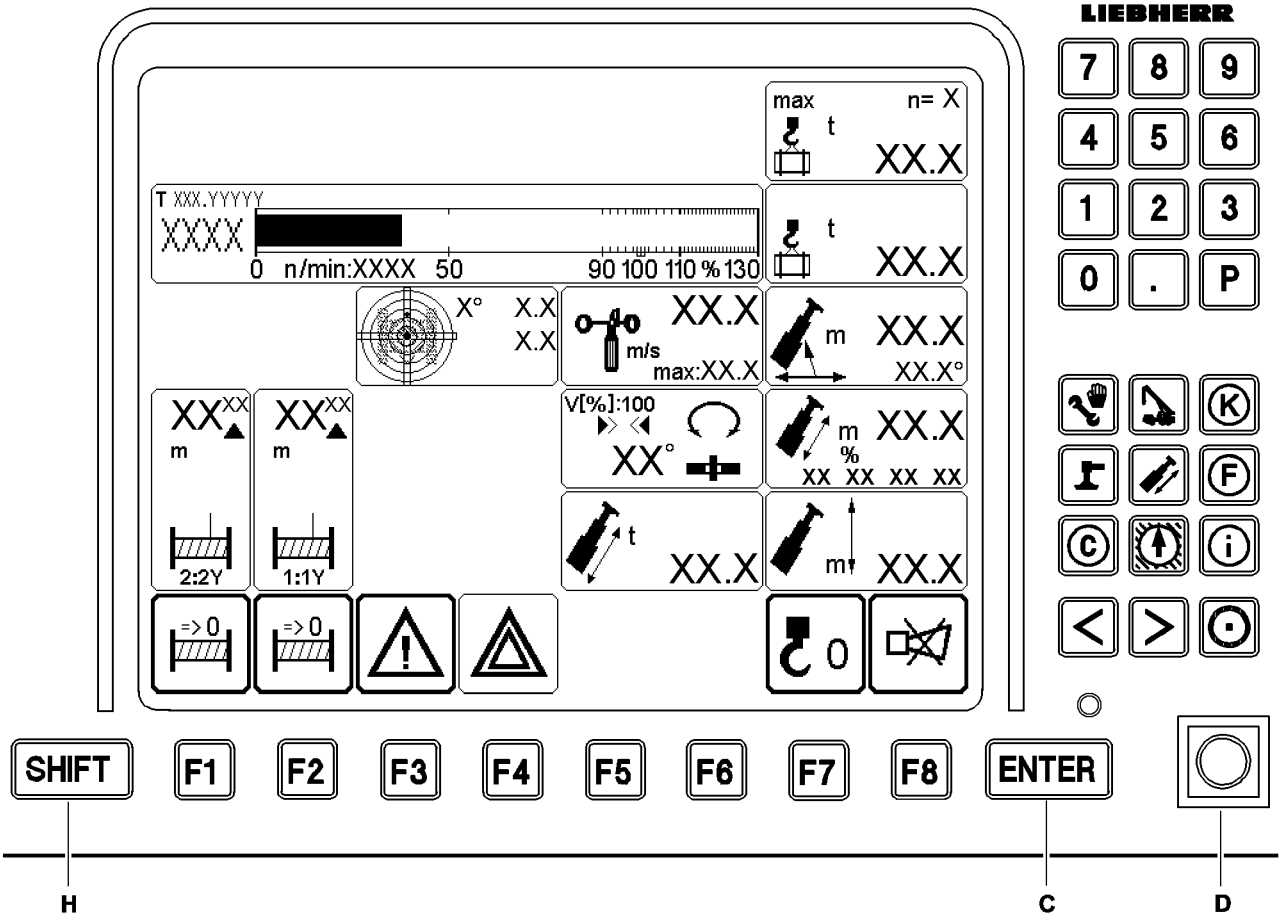
LIEBHERR
max
n= X
t
XX.X
T XXX.YYYYY
XXXX
0 n/min:XXXX 50
90 100 110 % 130
X°
X.X
X.X
m/s
max:XX.X
m
XX.X°
V[%]:100
XX°
%
XX XX XX XX
2:2Y
1:1Y
=> 0
SHIFT
F1
F2
F3
F4
F5
F6
F7
F8
ENTER
H
C
D

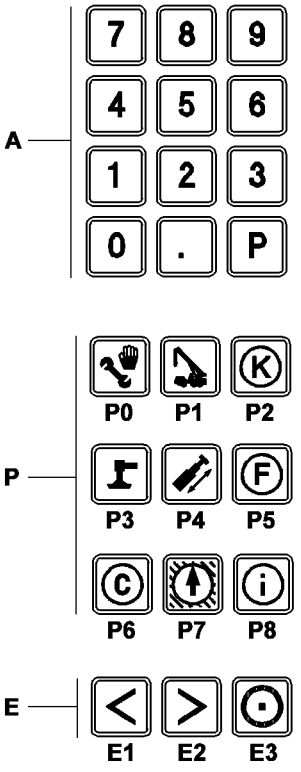
A
P
E
P0
P1
P2
P3
P4
P5
P6
P7
P8
E1
E2
E3

B110338

D Set up key

- Zero position (not actuated):
  Normal operation
- Touching:
  Function “Exceedance of shut off limits of the LICCON overload protection” released.
- **Exceeding the shut off limits of the LICCON overload protection:**
  If the shut off limits of the LICCON overload protection are exceeded, the LICCON overload protection shuts the crane movements off!
  These shut off limits can be exceeded by the set up key **D** in the “right touching” position. To do so, chapter 4.20 in the Crane operating instructions must be observed!

Note
Double function set up key!
If the crane control “EN 13000:2010 not active” is programmed, then, when actuating the set up key **D**, the release for the “Emergency operation LICCON overload protection” is automatically engaged!
▶ Take into account, when actuating the set up key **D**, that the “Emergency operation LICCON overload protection” is automatically released!

Note
Carry out the erection / take down procedures!
▶ By actuating the set up key **D**, all erection / take down procedures can be carried out within the erection / take down charts, for which no load charts are available!

- **Bypass of the hoist top shut off**
  If the hook block contacts the hoist limit switch weight during its upward movement, the hoist limit switch is triggered. The crane movements “Spool up winches”, “Luff telescopic boom down” and “Telescope telescopic boom out” are shut off. This shut off can be bypassed by the set up key **D** in the “right touching” position. To do so, chapter 4.20 in the Crane operating instructions must be observed!

E Special function keys

- Monitor brightness adjustment (see section “Operating elements of the LICCON computer system”)

Note
▶ Additional functions of the special function keys **E** are program-dependent and are further explained in the description of the individual LICCON programs!

H “SHIFT” key

- Second level key assignments

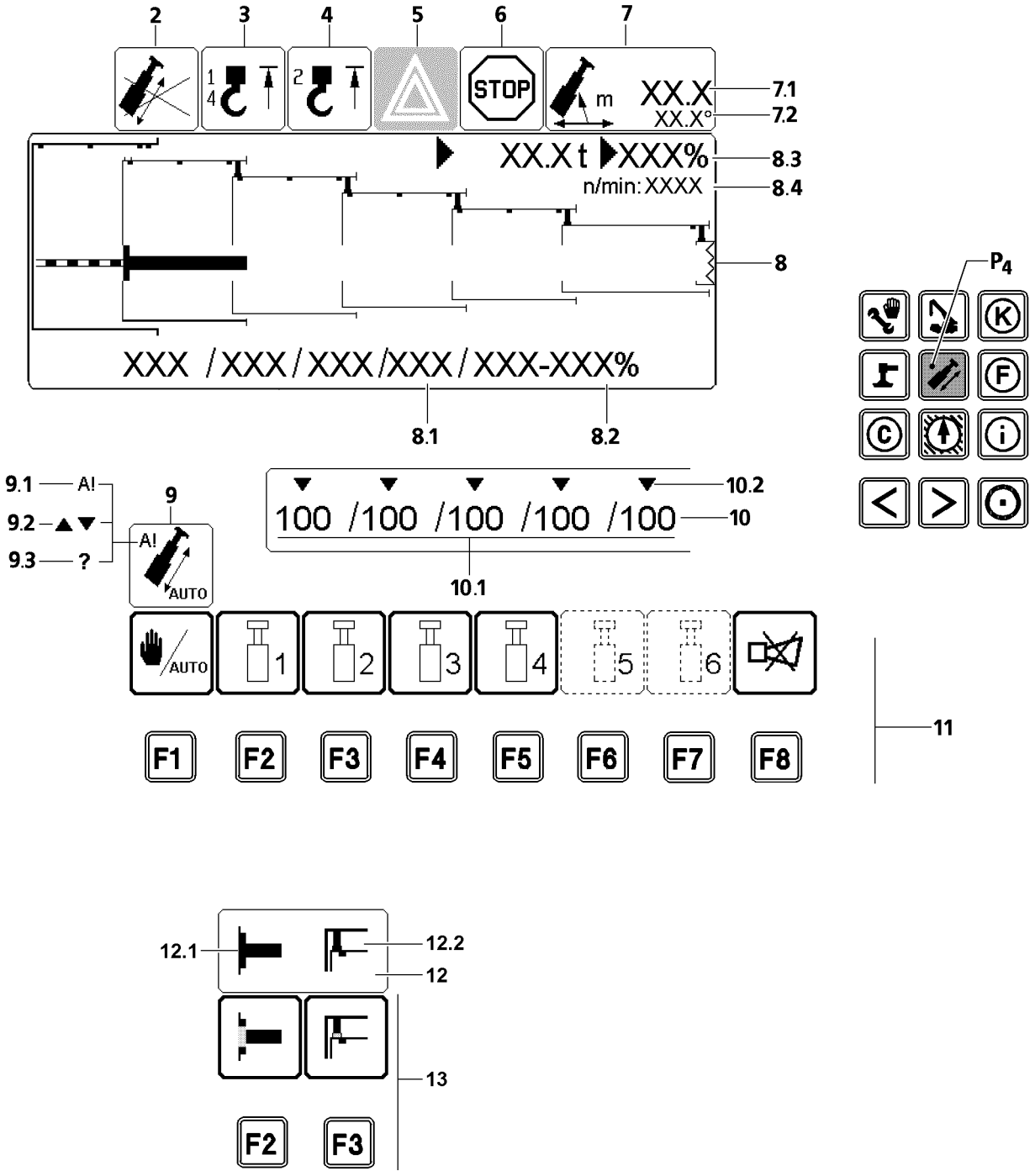
2
3
4
5
6
7
STOP
m
XX.X
XX.X°
7.1
7.2
XX.Xt
XXX%
8.3
n/min: XXXX
8.4
8
XXX /XXX/XXX/XXX/XXX-XXX%
8.1
8.2
P4
9.1
A!
9.2
9.3
?
9
A!
AUTO
100 /100 /100 /100 /100
10.2
10
10.1
AUTO
1
2
3
4
5
6
11
F1
F2
F3
F4
F5
F6
F7
F8

12.1
12.2
12
13
F2
F3

B111451

7 “Telescoping” program

The telescoping screen shows the crane operator the pinned state of the telescopic boom, the position of the individual telescopes and the extension state of the telescopic cylinder, in full dynamic graphics (refer to chapter 4.05 “Crane operation”).

7.1 Starting the program

▶ Press program key **P4**.

or

- Automatic start from “Operation” program when telescoping target (A!) **9.1** is reached and telescoping at master switch.

7.2 User interface

For a description of icons 2 to 7, see section “Alarm functions” in the “Operation” program.

2	Preventing further telescoping processes in relation to the telescoping cylinder	• Due to exceeding the expected load in the unpinned state • **Note:** This is the same program-specific illustration of the same topic as in section “Telescopeable load”.
3	“Hoist top” on HES1 and / or HES4 icon	
4	“Hoist top” icon on HES2 or HES3	
5	“Advance warning” icon	
6	“STOP” icon	
7	“Boom radius” icon	
7.1	Radius	• In [m] or [ft]
7.2	Main boom angle to the horizontal	• In [°]
8	“Stylized illustration of the telescopic boom” icon	
8.1	Current extension condition of the telescopes	• In [%]
8.2	Current extension condition of telescoping cylinder	• In [%]
8.3	Display of actual load and utilization of crane in percentages	• In [t] or [lbs] and in [%]
8.4	Engine speed	• In [rpm]

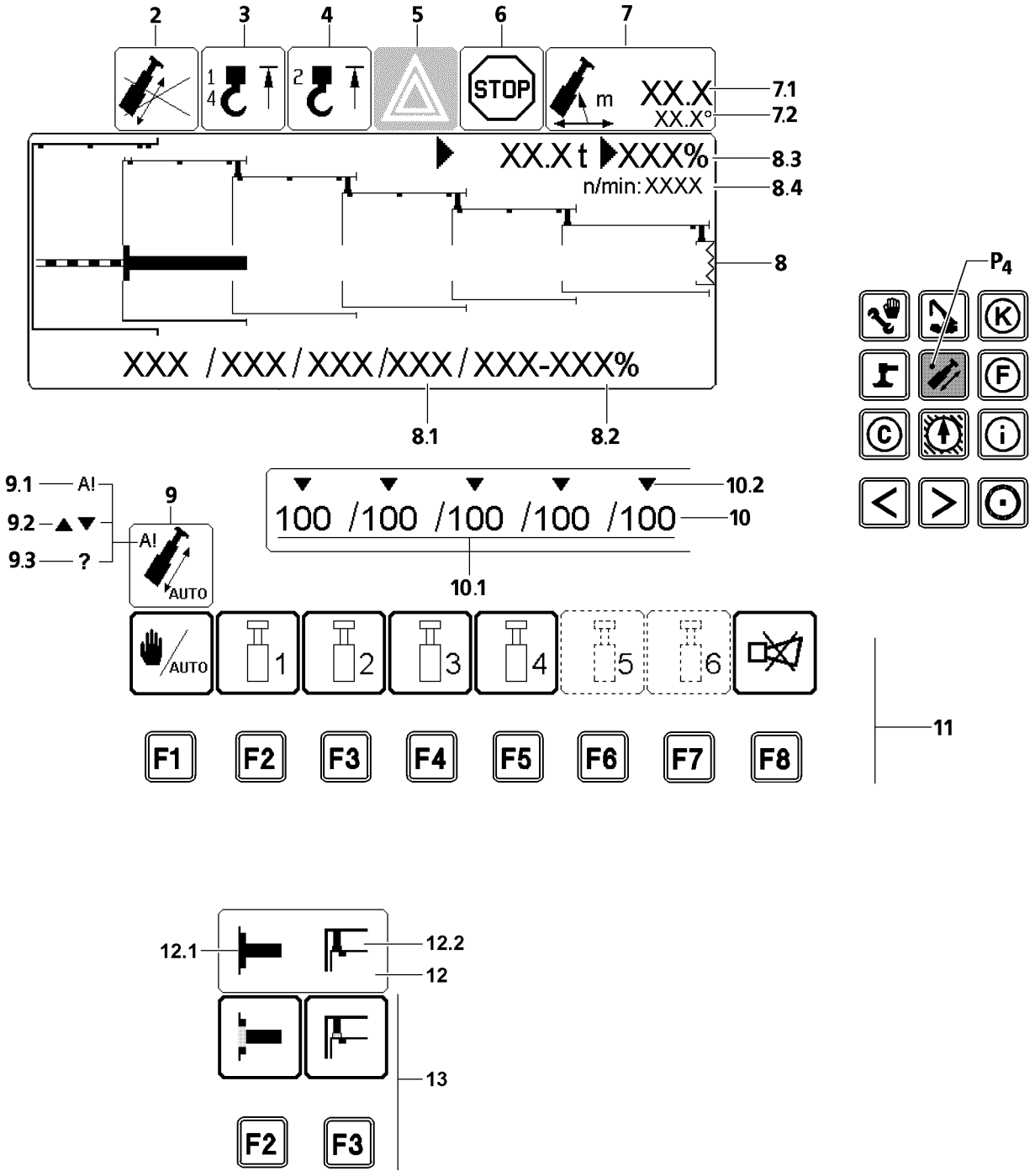
2
3
4
5
6
7
STOP
m
XX.X
XX.X°
7.1
7.2
XX.Xt
XXX%
8.3
n/min: XXXX
8.4
8
XXX /XXX/XXX/XXX/XXX-XXX%
8.1
8.2
P4
9.1
A!
9.2
9.3
?
9
A!
AUTO
100 /100 /100 /100 /100
10.2
10
10.1
AUTO
1
2
3
4
5
6
11
F1
F2
F3
F4
F5
F6
F7
F8

12.1
12.2
12
13
F2
F3

B111451

9	“Automatic telescoping mode” icon	
9.1	Preselected telescoping target reached	
9.2	Nominal deflection direction of master switch	Request: • Telescope in = arrow down • Telescope out = arrow up
9.3	Error in system	
10	“Selected telescoping targets of the individual telescopes” icon	
10.1	Target selection for the individual telescopes	
10.2	Blinking marker (arrows)	• To the selected telescoping target • As a warning in the event of incorrect operation, target already reached, or enter new target
11	Function key line	
F1	Function key	• Switch between automatic operation and manual telescoping
F2	Function key	• Target selection Telescope 1
F3	Function key	• Target selection Telescope 2
F4	Function key	• Target selection Telescope 3
F5	Function key	• Target selection Telescope 4
F6	Function key	• Target selection telescope 5* (only for certain crane types)
F7	Function key	• Target selection telescope 6* (only for certain crane types)
F8	Function key	• Press once: Turn the acoustic signal off. • Press twice: Errors shown in the “Horn” icon are automatically displayed in the error determination screen (see chapter “Diagnostics”).
12	Icon “Reports for manual telescoping”	
12.1	Telescoping cylinder	• Display telescoping cylinder unpinned / pinned
12.2	Telescope pinning	• Display telescope unpinned / pinned
13	Function key bar manual telescoping	
F2	Function key	• Telescoping cylinder unpinned / pinned
F3	Function key	• Telescope pinning unpinned / pinned

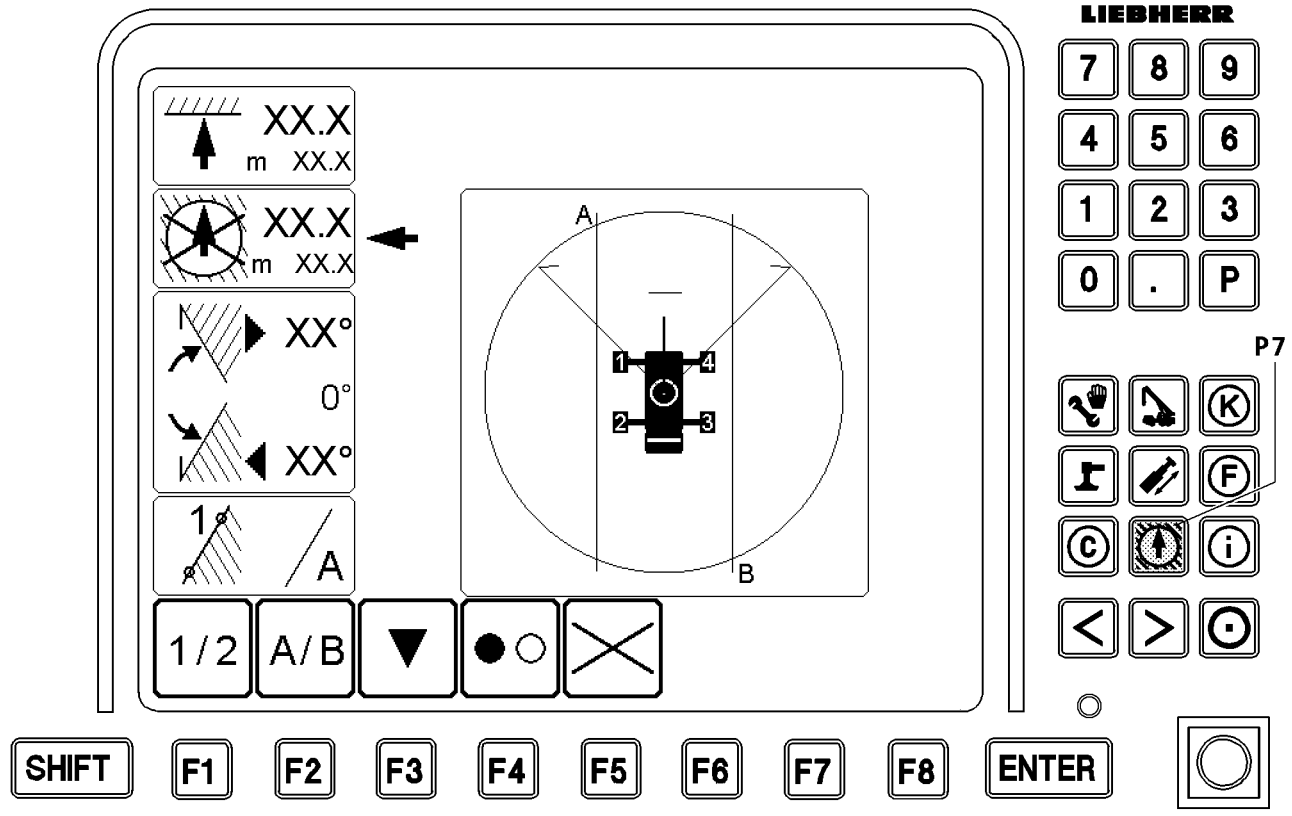
LIEBHERR
XX.X
m XX.X
XX.X
m XX.X
XX°
0°
XX°
1
A
A
B
1
2
3
4
1/2
A/B
7
8
9
4
5
6
1
2
3
0
.
P
P7
K
F
C
i
SHIFT
F1
F2
F3
F4
F5
F6
F7
F8
ENTER

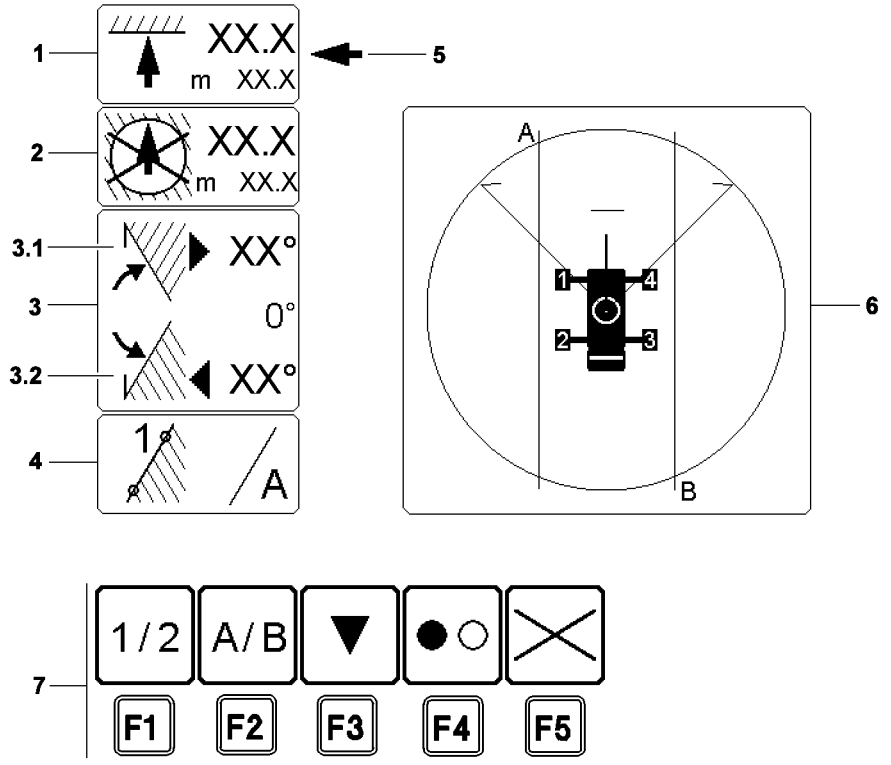
1
2
3.1
3
3.2
4
5
6
7
XX.X
m XX.X
XX.X
m XX.X
XX°
0°
XX°
1
A
A
B
1
2
3
4
1/2
A/B
F1
F2
F3
F4
F5

B106983

8 The “Working range limitation” program*

A detailed description of operating range limitation can be found in the separate operating instructions for “Working range limitation”.

8.1 Starting the program

▶ Press program key **P7**.

8.2 User interface

1	“Limitation of pulley head height” icon	
2	“Radius limitation” icon	
3	“Slewing limit stop” icon	
3.1	Right slewing limit stop	• The right limit stop is shown in black
3.2	Left slewing limit stop	• The left limit stop is shown in red
4	“Edge limit with edge and point selection” icon	• The limit function icons are shown crossed out if they are inactive
5	Function selector	• For selecting limit functions
6	“Graphic display of programmed limits” icon	
7	Function key line	
F1	Function key	• Select point 1 or 2 of selected edge A (red) or B (black)
F2	Function key	• Selected edge A (red) or B (black) that is being programmed
F3	Function key	• The function selector is moved down by one limit function
F4	Function key	• ON / OFF The limit function selected with the function selector changes its status. If previously active, it will now be inactive when the function key **F4** is pressed, and vice versa. An inactive limit function is identified by a crossed out icon. If the function selector shows a slewing limit to the left or the right, then both limits will always be switched. **Note:** For the edge limit, only the preselected edge will be switched. The edge that is not displayed can be active or inactive at the same time.
F5	Function key	• All limit functions become inactive

8.3 Displays in “Crane operation” program

If a programmed working range limit is activated, this condition is indicated in the “Crane operation” program by an alternative STOP icon in the position of the normal load moment limiter STOP icon (see section “Alarm functions” in “Crane operation” program).

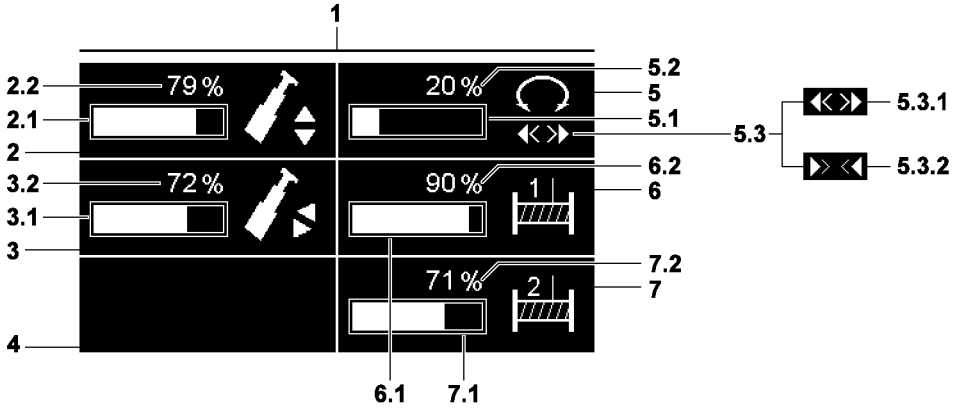
1
2.2
79 %
2.1
2
3.2
72 %
3.1
3
4
20 %
5.2
5
5.1
5.3
5.3.1
5.3.2
90 %
1
6.2
6
71 %
2
7.2
7
6.1
7.1

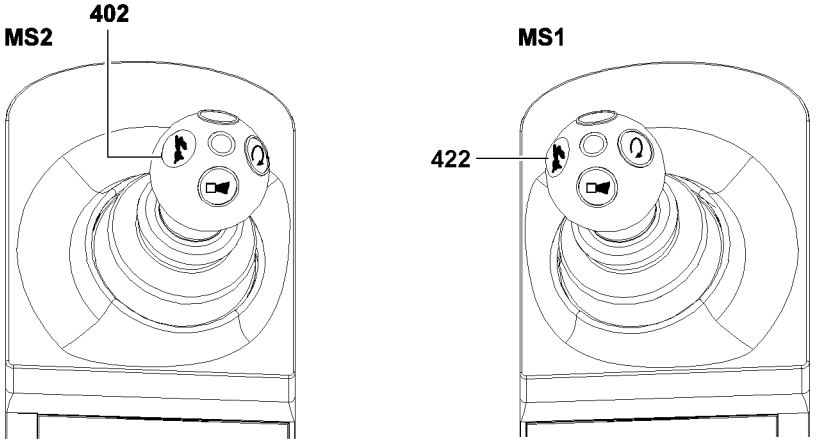
MS2
402
MS1
422

B105926

9 The setting window “Speed reduction master switch”

In the setting window “speed reduction master switch” **1** the speeds of various crane functions can be set from 20 % to 100 % (infinitely variable).
If a crane function is actuated by **maximum deflection** of a master switch, then the speed of the crane function is reduced to the speed sets in the setting window.

Note

- ▶ When the Rapid mode function is turned on, speed reductions of “winch 1”, “winch 2* ” and “luffing up the boom” are ineffective.
- ▶ See chapter 4.05.

9.1 Operating interface “Setting window”

1	Setting window “Speed reduction master switch”	
2	Setting field “Speed reduction luffing tele”	
2.1	Dynamic bar display “Luffing speed tele”	
2.2	Display value “Luffing speed tele”	• In [%]
3	Setting field “Speed reduction telescoping”	
3.1	Dynamic bar display “telescoping speed”	
3.2	Display value “Telescoping speed”	• In [%]
4	Setting field not assigned	

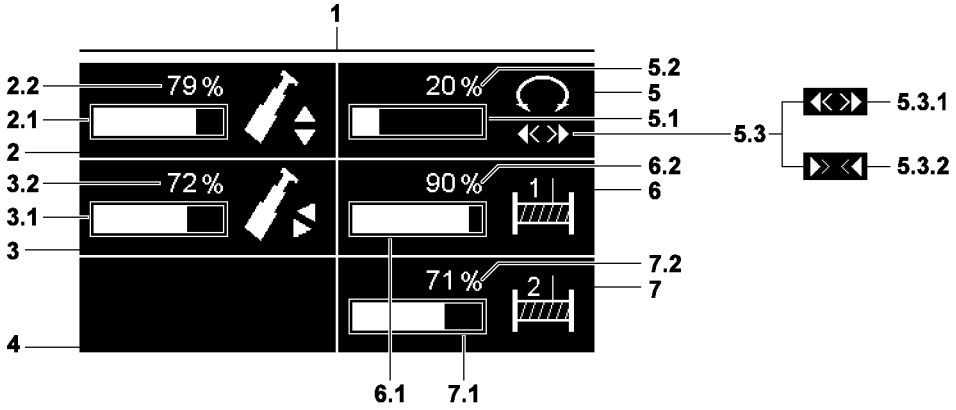
1
2.2
79 %
2.1
2
3.2
72 %
3.1
3
4
20 %
5.2
5
5.1
5.3
5.3.1
5.3.2
90 %
1
6.2
6
71 %
2
7.2
7
6.1
7.1

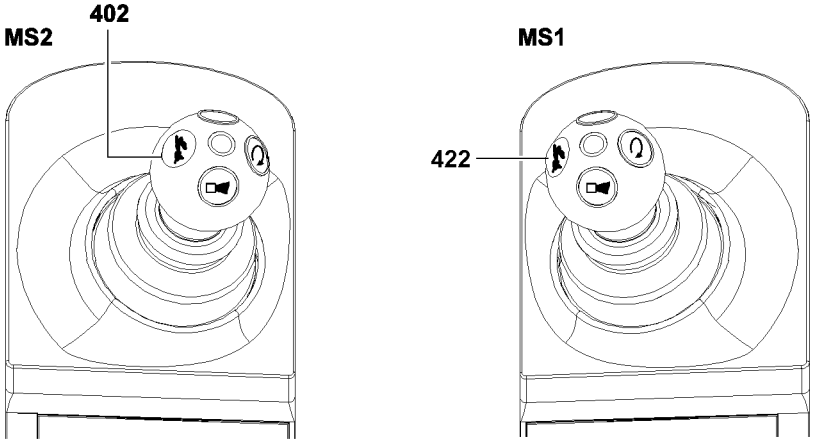
MS2
402
MS1
422

B105926

5	Setting field “Speed reduction turning”	
5.1	Dynamic bar display “Slewing speed”	
5.2	Display value “Slewing speed”	• In [%]
5.3	Slewing gear operating mode	
5.3.1	Flexible slewing gear	• “Freely turning”
5.3.2	Flexible slewing gear	• “Fixed”
6	Setting field “Speed reduction winch 1”	
6.1	Dynamic bar display “Winch speed winch 1”	
6.2	Display value “Winch speed winch 1”	• In [%]
7	Setting field “Speed reduction winch 2”	
7.1	Dynamic bar display “Winch speed winch 2”	
7.2	Display value “Winch speed winch 2”	• In [%]

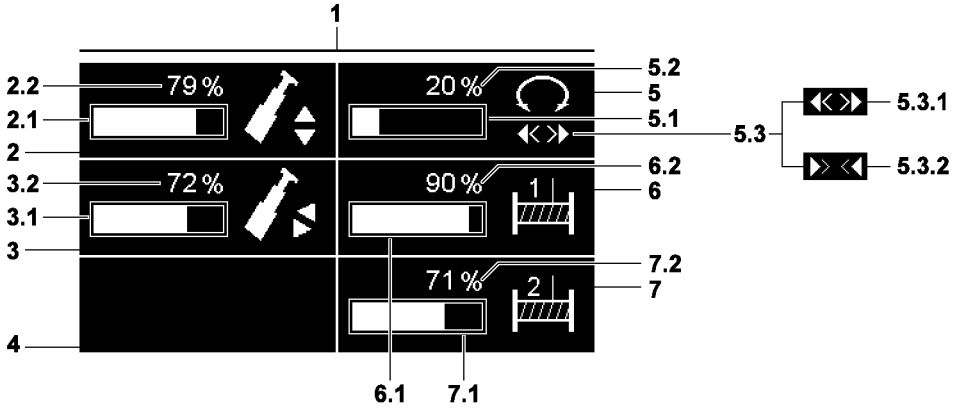
1
2.2
79 %
2.1
2
3.2
72 %
3.1
3
4
20 %
5.2
5
5.1
5.3
5.3.1
5.3.2
90 %
1
6.2
6
71 %
2
7.2
7
6.1
7.1

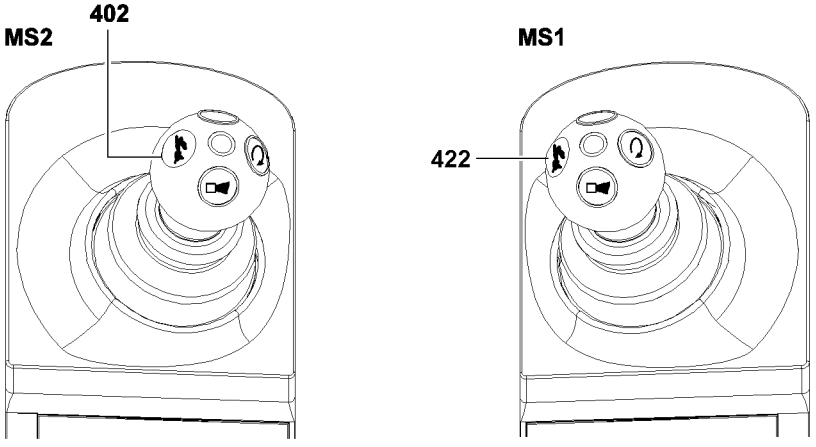
MS2
402
MS1
422

B105926

9.2 Showing the setting window “Speed reduction master switch”

▶ Press the key rapid gear **402** on the master switch **MS1** for longer than 2 seconds.

or

■ Press the key rapid gear **422** on the master switch **MS2** for longer than 2 seconds.

Result:

– The Setting window “Speed reduction master switch” **1** is shown.

Note

▶ The setting window is automatically hidden after 10 s, if during that time there is no access to the speed reduction of a crane function.

▶ Press the key rapid gear **402** on the master switch **MS1** for longer than 2 seconds.

or

■ Press the key rapid gear **422** on the master switch **MS2** for longer than 2 seconds.

Result:

– The Setting window “Speed reduction master switch” **1** is hidden.

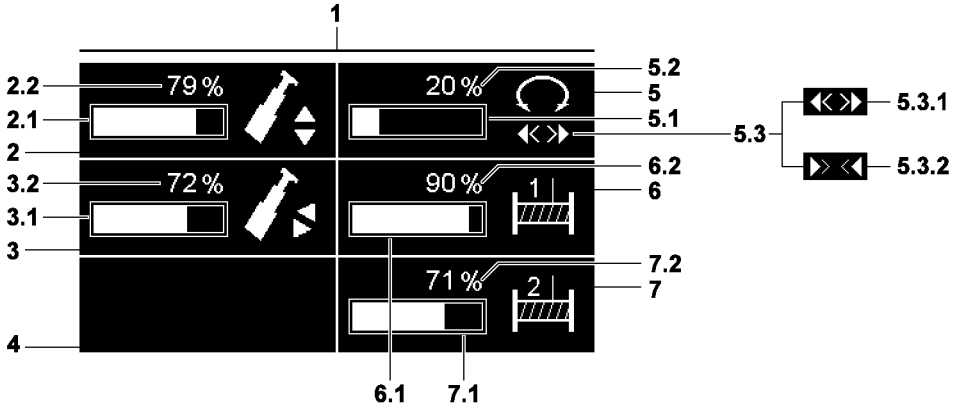
1
2.2
79 %
2.1
2
3.2
72 %
3.1
3
4
20 %
5.2
5
5.1
5.3
5.3.1
5.3.2
90 %
1
6.2
6
71 %
2
7.2
7
6.1
7.1

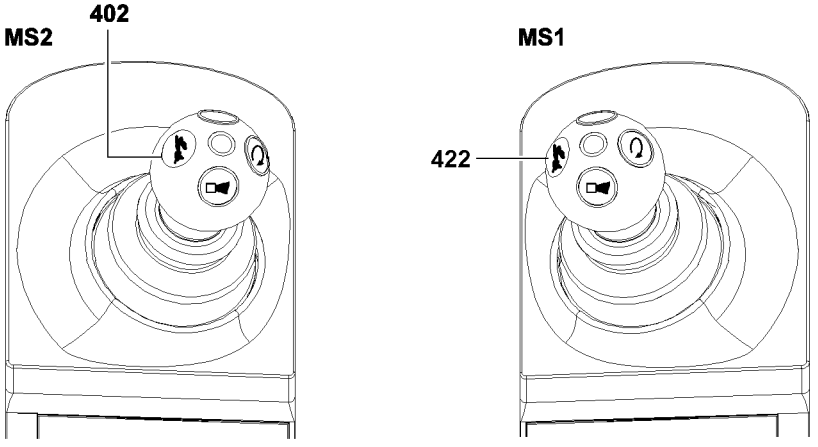
MS2
402
MS1
422

B105926

9.3 Implementing speed reduction

The procedure in the setting window “Speed reduction master switch” is identical for all crane functions.
Using the example “Speed reduction turning”, the individual steps are explained.

Note
- ▶ Before using speed reduction, preselect the master key assignments on the touch display on which the desired crane function is located (see chapter 4.01).
- ▶ Be careful with the master switch assignment for cranes with one or two winches, as the master switch assignment differ.

Make sure that the following prerequisites are met:
– The desired master switch assignment is active on the respective touch display.
– The setting window “Speed reduction master switch” is shown on the LICCON monitor.

9.3.1 Procedure

Note
- ▶ The “speed reduction turning” is set via the master switch.
- ▶ If the master switch is deflected lightly, the value is slowly increased / reduced.
- ▶ If the master switch is deflected strongly, the value is quickly increased / reduced.

▶ Move master switch MS2 in direction X- (to the left).

Result:
– The value of the slewing speed **5.2** is reduced.
– The dynamic bar display **5.1** “moves” to the left.

▶ Move master switch MS2 in direction X+ (to the right).

Result:
– The value of the slewing speed **5.2** is increased.
– The dynamic bar display **5.1** “moves” to the right.

9.4 Changing the operating mode of the slewing gear

9.4.1 Procedure

The settings in the operating mode of the slewing gear **5.3** can only be entered or changed in the setting window “Speed reduction master switch” **1**.
▶ When the setting window **1** is shown on master switch MS2, press the key **402**.

Result: The status of the slewing gear changes between:
– “Freely turning **5.3.1** ”
– “Fixed **5.3.2** ”

Note
- ▶ The status (“freely turning / coasting” or “fixed”) of the “flexible slewing gear” is displayed in the operating screen in “Monitored additional functions”.

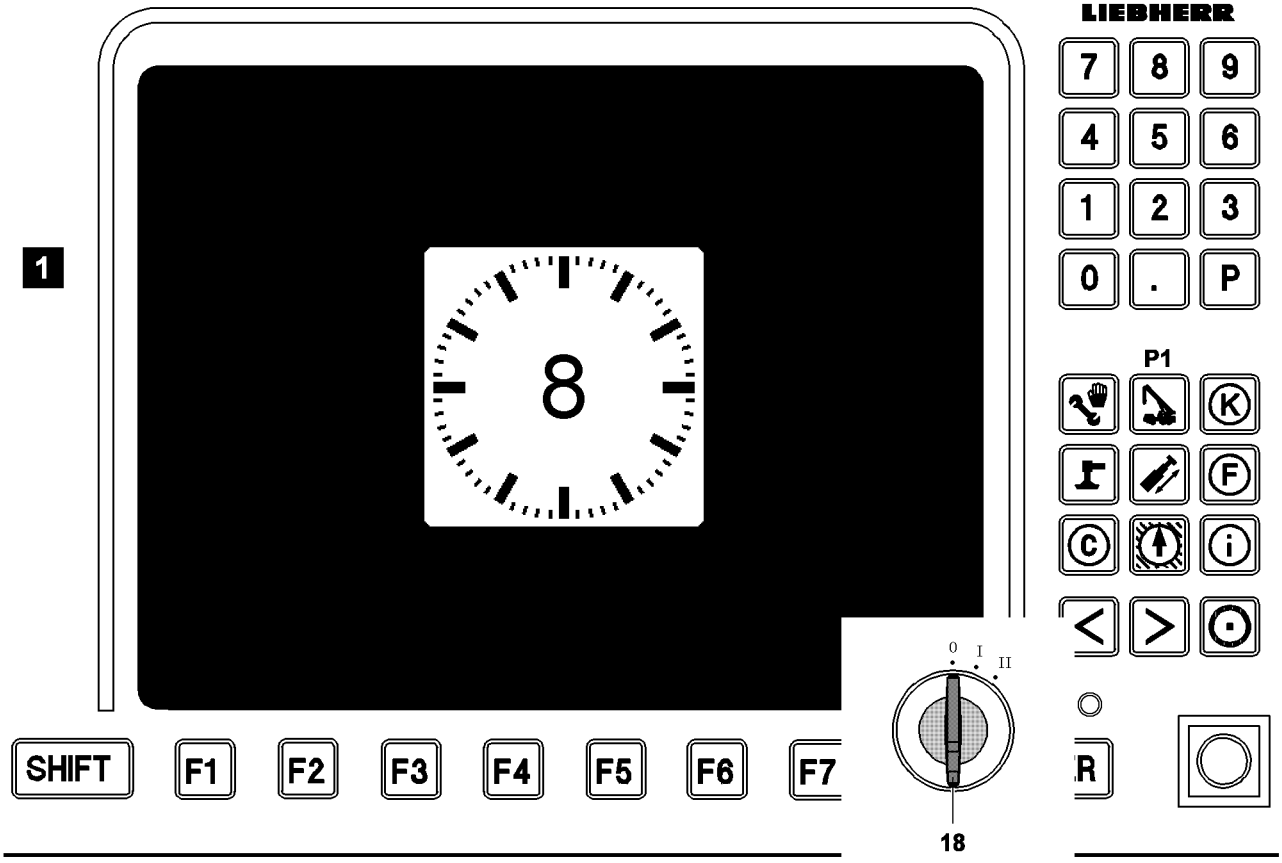
1
LIEBHERR
7 8 9
4 5 6
1 2 3
0 . P
P1
K
F
C
i
8
0 I II
SHIFT F1 F2 F3 F4 F5 F6 F7 R
18

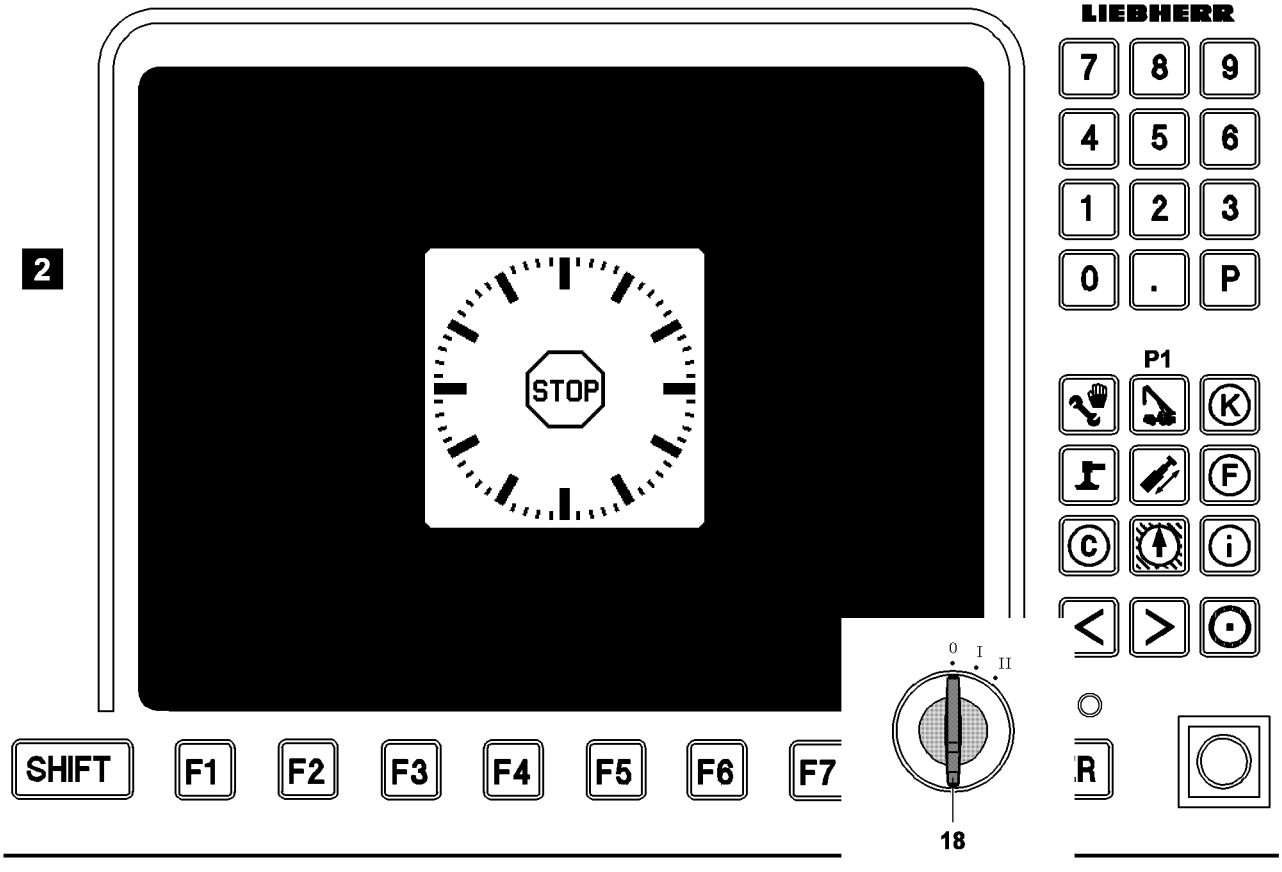
2
LIEBHERR
7 8 9
4 5 6
1 2 3
0 . P
P1
K
F
C
i
STOP
0 I II
SHIFT F1 F2 F3 F4 F5 F6 F7 R
18

B105523

10 Power-Save and Stand-by mode in the LICCON computer system

10.1 The Power-Save mode

If the crane engine - by turning the ignition switch **18** - is turned off to position 0 (ignition **OFF**), the LICCON computer system changes to Power-Save mode.
The Power-Save mode enables the crane driver - within 8 seconds of turning the ignition off - either to change to Stand-by mode or to start the crane engine again without having to start the LICCON computer system again.
If no program key is pressed within 8 seconds, then after 8 seconds are up the LICCON computer system turns off completely.

Note
▶ In the Power-Save mode, no crane movements are possible.

Turn the crane engine off
▶ Turn the ignition switch **18** to position 0 (ignition **OFF**).
Result:
– The crane engine is turned off.
– The **Power-Save mode** is active.
– The display area on the LICCON monitor turns black, illustration **1**.
– The clock with a Power-Save run time (8 seconds) appears, illustration **1**.

Note
▶ After 8 seconds have expired, a clock appears briefly with an integrated STOP icon, which displays the complete turning off of the LICCON computer system.

– The clock with integrated STOP icon appears for a few seconds, illustration **2**.
– All processes on the LICCON computer system are stopped.
– The LICCON computer system turns completely off.

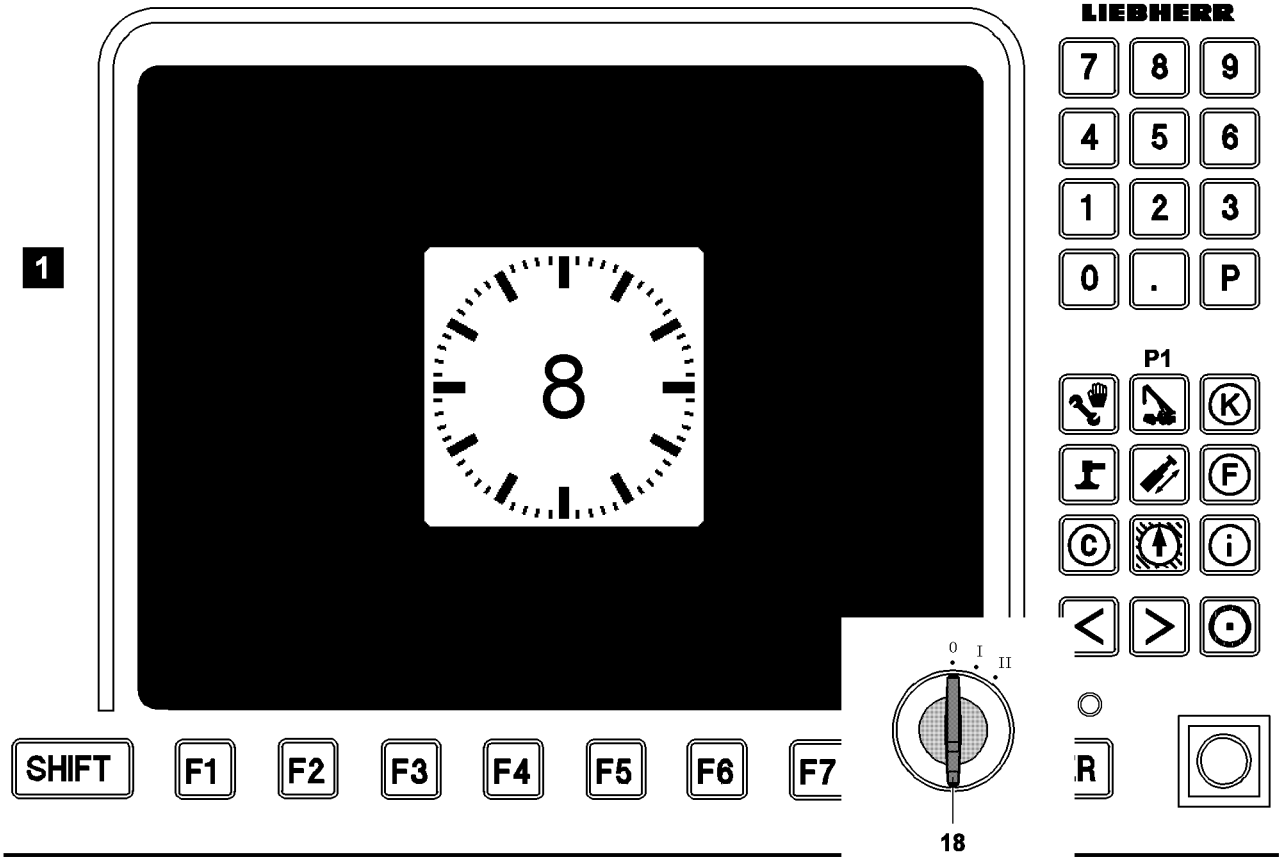
1
LIEBHERR
7 8 9
4 5 6
1 2 3
0 . P
P1
K
F
C
i
8
0 I II
SHIFT F1 F2 F3 F4 F5 F6 F7 R
18

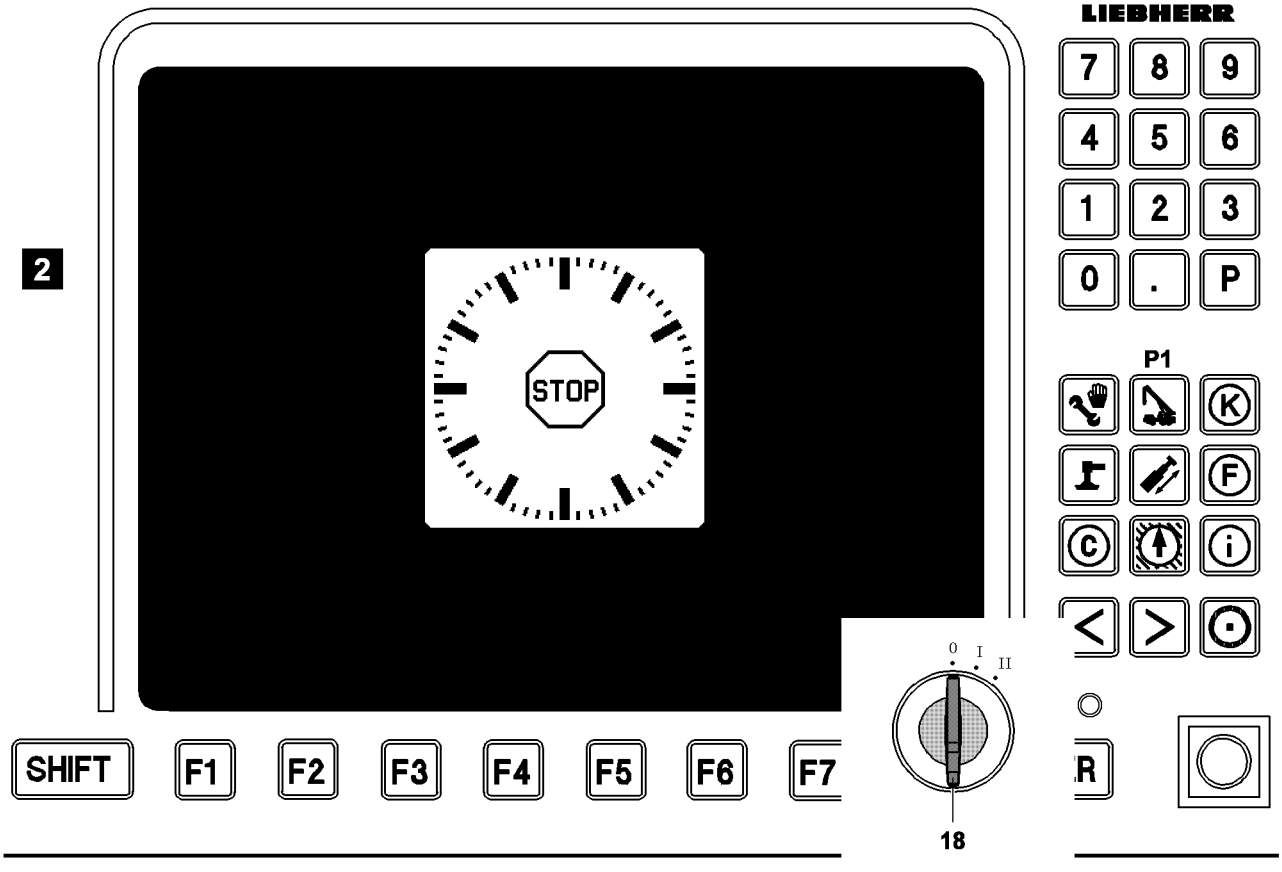
2
LIEBHERR
7 8 9
4 5 6
1 2 3
0 . P
P1
K
F
C
i
STOP
0 I II
SHIFT F1 F2 F3 F4 F5 F6 F7 R
18

B105523

Press any key in Power-Save mode once

Note
▶ Pressing a key in Power-Save mode once shortens the Power-Save alarm time to 5 seconds.

▶ Press any key.

Result:
– The Power-Save alarm time is shortened to 5 seconds.

Press any key in Power-Save mode twice
▶ Press any key twice in succession.

Result:
– The Power-Save alarm time is set to 0.
– The clock with integrated STOP icon appears for a few seconds, illustration **2**.
– All processes on the LICCON computer system are stopped.
– The LICCON computer system turns completely off.

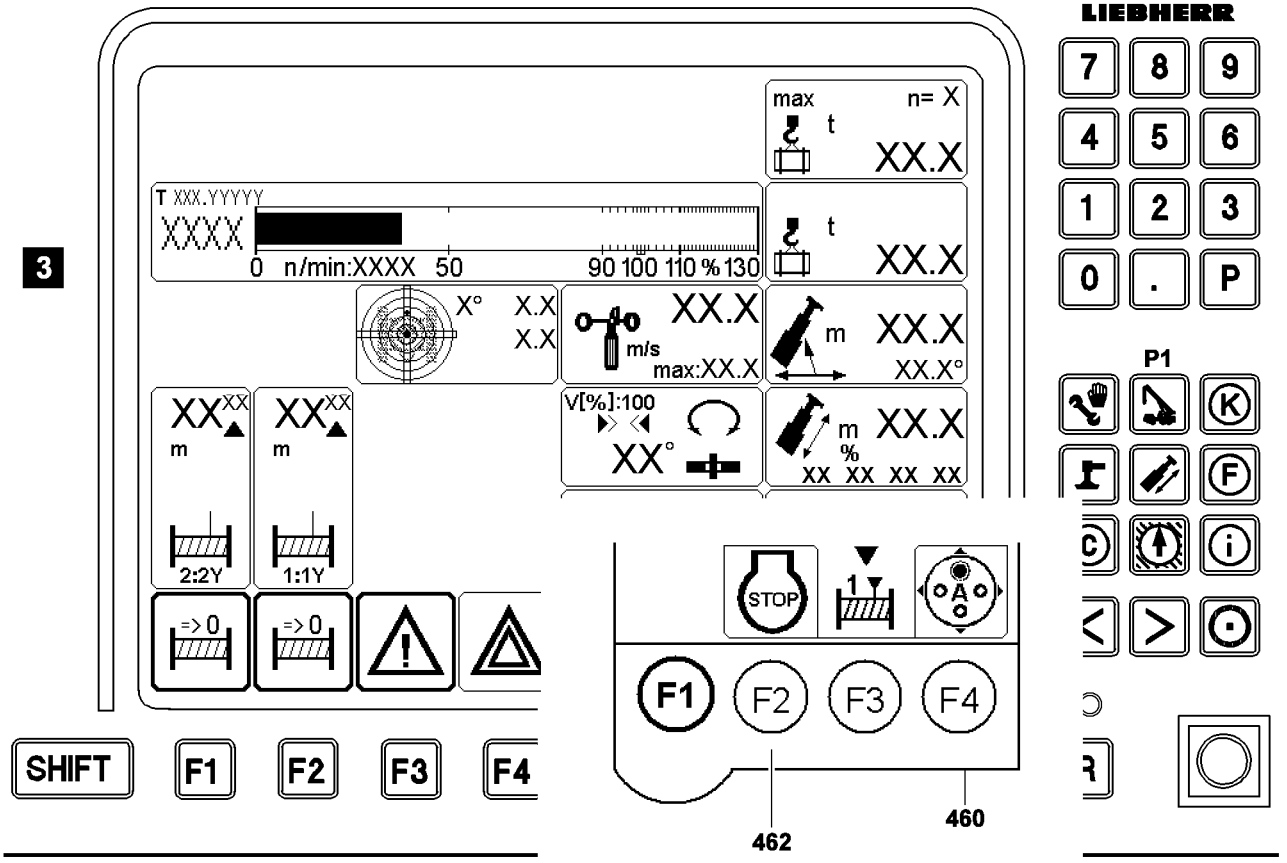
3
LIEBHERR
max
n= X
t
XX.X
T XXX.YYYYY
XXXX
0 n/min:XXXX 50
90 100 110 % 130
X°
X.X
X.X
XX.X
m/s
max:XX.X
m
XX.X
XX.X°
XX
m
2:2Y
1:1Y
=> 0
V[%]:100
XX°
m
%
XX.X
XX XX XX XX
STOP
1
A
F1
F2
F3
F4
SHIFT
7
8
9
4
5
6
1
2
3
0
.
P
P1
K
F
C
i
462
460

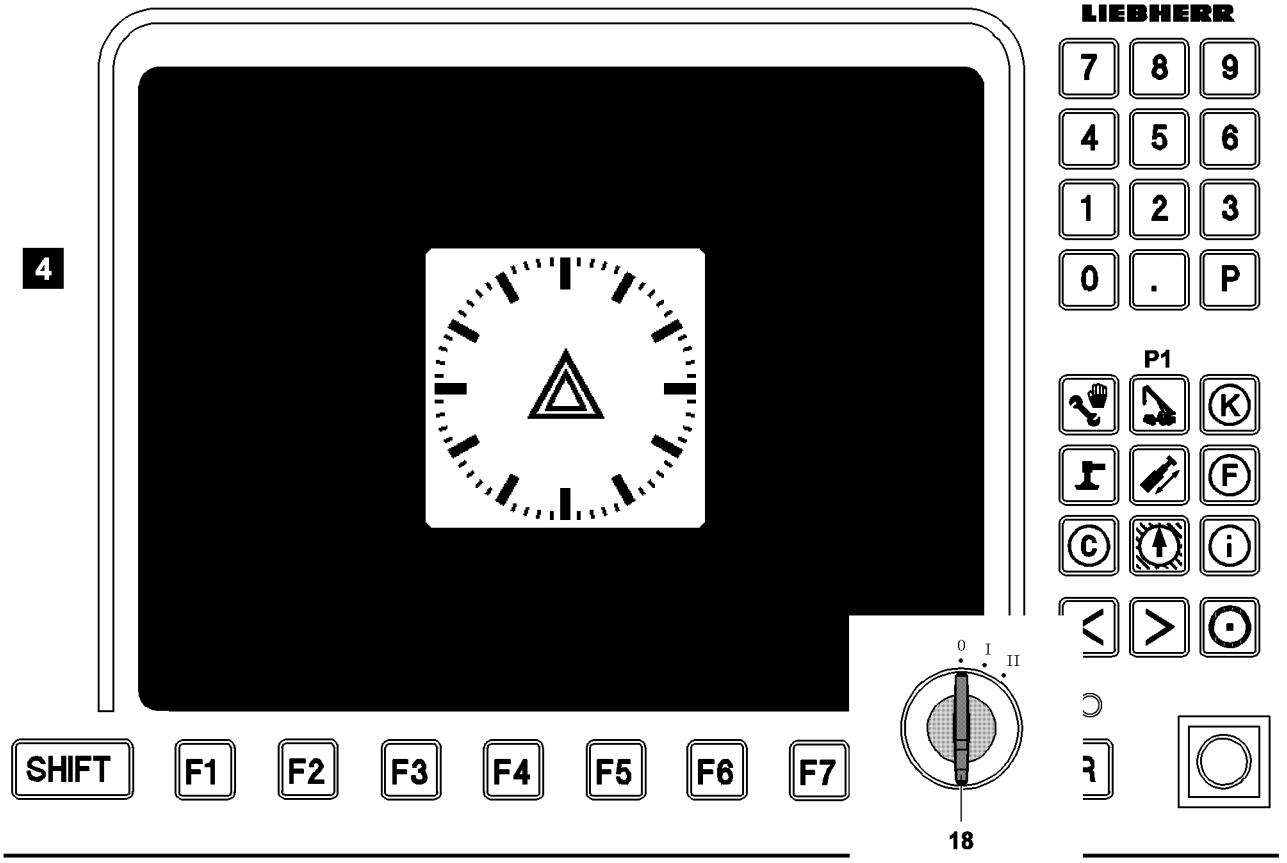
4
LIEBHERR
7
8
9
4
5
6
1
2
3
0
.
P
P1
K
F
C
i
0
I
II
SHIFT
F1
F2
F3
F4
F5
F6
F7
18

B110339

10.2 Stand-by mode

After pressing the Engine STOP key F2 **462** - the crane engine is turned off - on the LICCON monitor, the operating interface of the most recently active application program continues to be displayed (Stand-by delay time 10 minutes), illustration **3**.
After 10 minutes from pressing the Engine STOP key F2 **462**, Stand-by mode is reached. The Stand-by mode is displayed by the Stand-by clock + warning icon on the LICCON monitor, and by a repeated acoustic signal (rhythmic horn).

Note
▶ In the stand by mode, no crane movements are possible.

There are two ways of achieving stand-by mode with the LICCON computer system.
Turn the crane engine off
Turning off the engine with the engine STOP key F2 **462** on the right touch display **460** from menu:
– “Driving mode and master switch configuration”

▶ Press engine-STOP key F2 **463** in menu “Driving mode” + “Master switch configuration” (see chapter 4.01).
▶ Leave the ignition key **18** in position “I”, illustration **4**.
Result:
– The crane engine is turned off.
– Stand-by delay time (10 minutes) expires.

▶ Press **any key** within the Stand-by delay time.
Result:
– The Stand-by time is reset again to 10 minutes.
– The Stand-by delay time starts again.

▶ Press **no key** within the Stand-by delay time.
Result:
– After 10 minutes, **Stand-by mode** is reached.
– The display area on the LICCON monitor turns black.
– The stand-by clock with a warning icon is shown, illustration **4**.
– A recurring acoustic signal sounds (30 s interval).

Note
▶ The stand-by mode does not lead to any automatic turn off of the LICCON computer system.

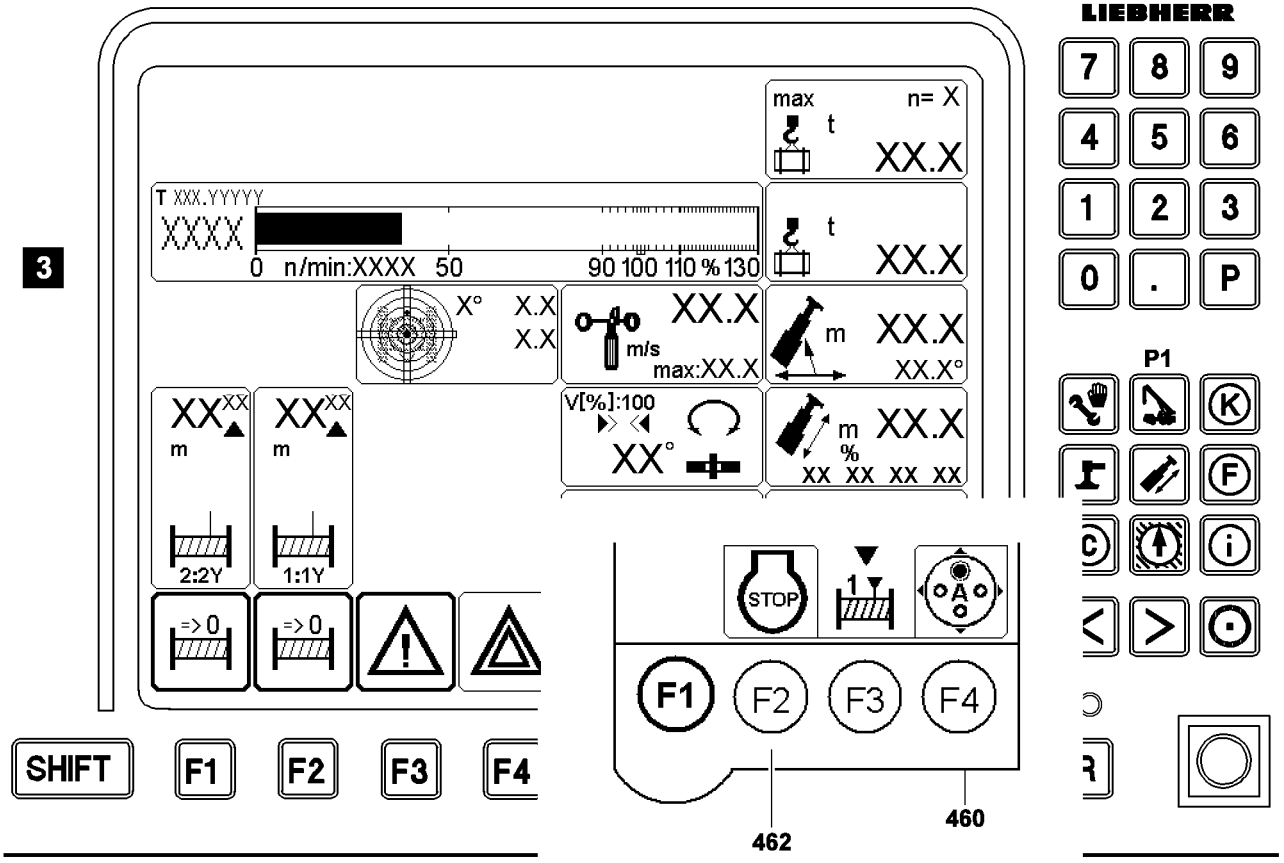
3
LIEBHERR
max
n= X
t
XX.X
T XXX.YYYYY
XXXX
0 n/min:XXXX 50
90 100 110 % 130
X°
X.X
X.X
m/s
max:XX.X
m
XX.X°
V[%]:100
XX°
m
%
XX XX XX XX
2:2Y
1:1Y
=> 0
STOP
F1
F2
F3
F4
SHIFT
7 8 9
4 5 6
1 2 3
0 . P
P1
462
460

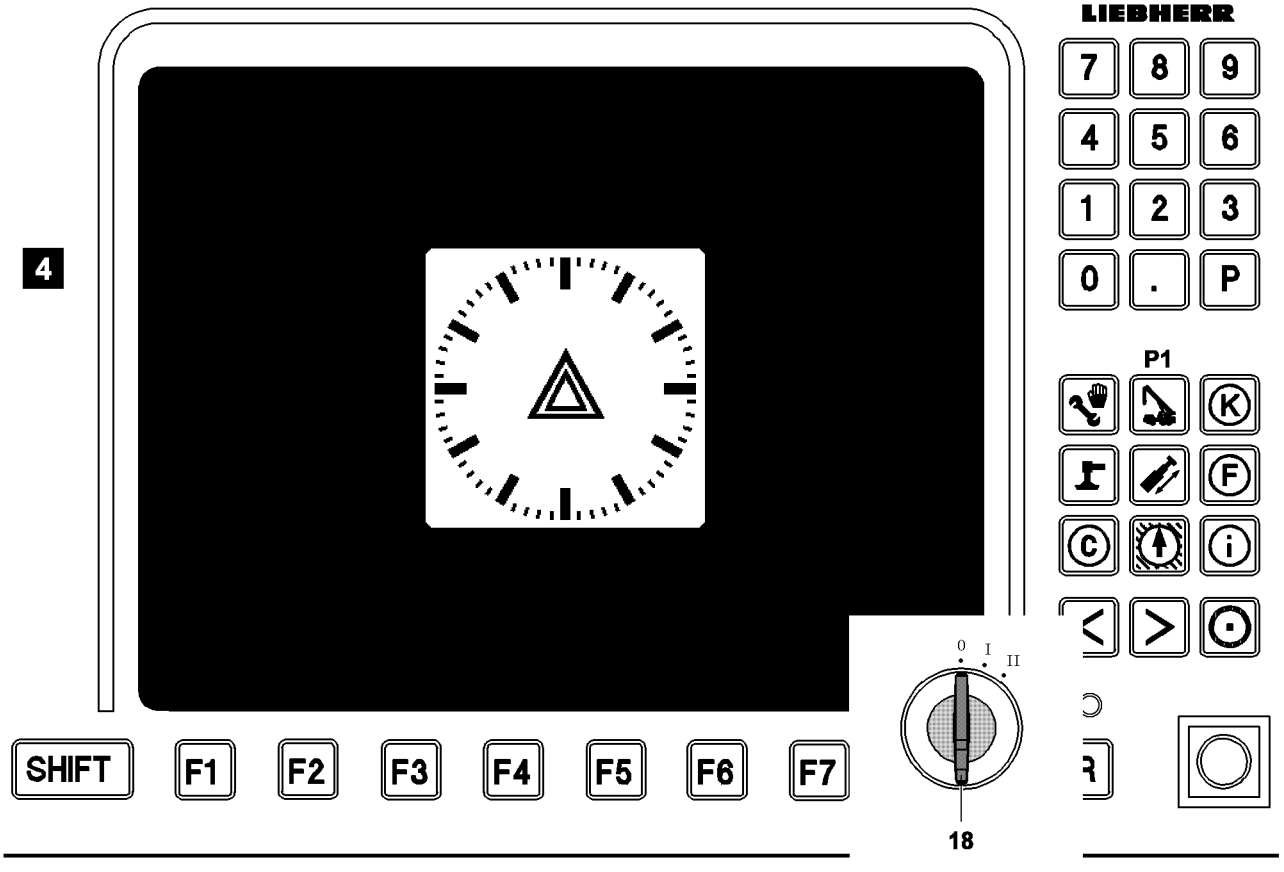
4
LIEBHERR
7 8 9
4 5 6
1 2 3
0 . P
P1
0 I II
SHIFT
F1
F2
F3
F4
F5
F6
F7
18

B110339

Turning the LICCON computer system off from the stand-by mode

▶ Turn the ignition switch to position 0.

Result:

– The Power-Save mode is active.

Note

▶ See section “Power-Save mode”.

B195219

1 Checks before start up

Various checks must be performed every time before operating the crane.

WARNING
Operating safety of the crane!
Defects on components, missing quantities or dirty filters affect the operating safety of the crane!
- ▶ If a defect on a component is found during the check, the defect must be remedied before operating the crane.
- ▶ If an item is low or lacking during an inspection, then it must be refilled or brought to normal status before operating the crane.
- ▶ If the inspection shows a very dirty filter, then it must be replaced before operating the crane.

WARNING
Heated crane components!
When the engine is running, crane components can heat up significantly! This applies especially to exhaust systems, the engines, the coolant circuit and the respective gears in the crane chassis and in the crane superstructure!
Touching heated crane components can cause severe injuries!
- ▶ Carry out the checks before starting the crane, when the crane components are cold!
- ▶ Let already heated components cool off before checking!
- ▶ Proceed with special caution near heated crane components!

Note
- ▶ For detailed description of fill quantities, service items and lubricants, see chapter 7.06 and chapter 7.07 in the Crane operating instructions!

1.1 Checking the general condition of the crane

WARNING
Danger of accident due to falling parts!
Loose parts, such as pins, spring retainers or ice, which are on the boom or crane superstructure can fall down during crane operation and hit personnel!
Personnel can be killed or seriously injured!
- ▶ Before starting crane operation, make sure that there are no loose parts on the boom and crane superstructure!

- ▶ Check the crane for visible damage before starting crane operation.
- ▶ Carry out a function test of available safety devices.
- ▶ Make sure that the crane is standing on level, load bearing ground.
- ▶ Make sure that the crane is properly supported and horizontally aligned.
- ▶ Make sure that the gear ring of the rotary connection is clean and greased.
- ▶ Make sure that the air supply to the oil and water cooler is clear.
- ▶ Make sure that side covers are closed and locked.
- ▶ Make sure that no persons or objects are within the danger zone of the crane.
- ▶ Make sure that the cable / rope drum and the limit switches are free of snow and ice.
- ▶ Make sure that there are no loose parts on the boom and the crane superstructure.

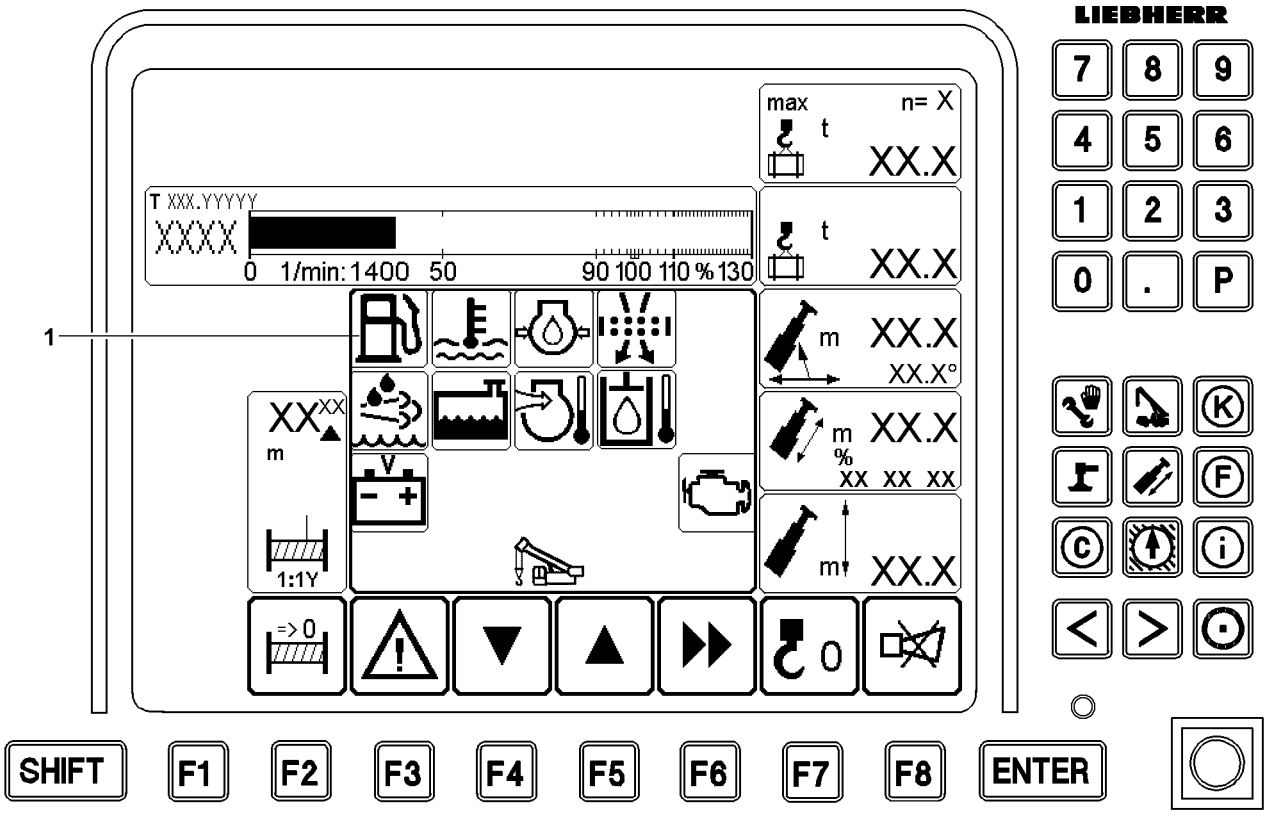
LIEBHERR
max
n= X
t
XX.X
T XXX.YYYYY
XXXX
0 1/min: 1400 50 90 100 110 % 130
m
XX.X°
XX.X
XX XX XX
1:1Y
=> 0
7 8 9
4 5 6
1 2 3
0 . P
SHIFT F1 F2 F3 F4 F5 F6 F7 F8 ENTER

1

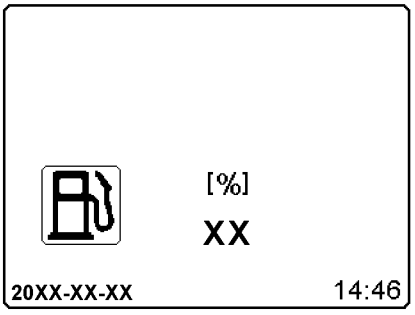
[%]
XX
20XX-XX-XX
14:46

3

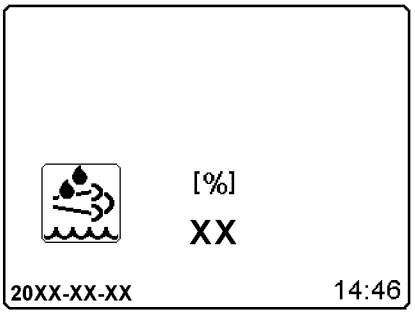
[%]
XX
20XX-XX-XX
14:46

B118098

1.2 Checking the fuel / engine oil level and the urea reserve on the LICCON monitor

WARNING
Danger of fire and explosion!
- ▶ Turn the auxiliary heater* off approx. 3 min before refueling the fuel tank!
- ▶ Before refueling the fuel tank, turn the engine off!

Note
If the fuel tank has been run dry, then the fuel system must be bled.
- ▶ Do not run the fuel tank dry!
- ▶ Display for urea reserve (illustration **3**), only for Diesel engines with exhaust aftertreatment SCR (Selective Catalytic Reduction).

The “fuel and urea reserve” is shown on the LICCON monitor in percentages and the engine oil level is shown in liters.
The “urea reserve” display is only possible for Diesel engines with SCR.

▶ In the “Crane operation” program, press the function key **F3**.

Result:
– The monitoring area **1** with its monitoring functions is displayed on the LICCON monitor.

▶ Press the function key **F5**.

Result:
– The fuel reserve is shown in the LICCON monitor, see illustration **1**.

▶ Add fuel, if necessary.

▶ Press the function key **F5** several times.

Result:
– The urea reserve display is shown in the LICCON monitor, see illustration **3**.

▶ Add urea, if necessary.

▶ Press the function key **F6** several times.

Result:
– The “Crane operation” program is displayed.

Note
- ▶ For a detailed description, see Crane operating instructions, chapter 4.02, section “Individual control displays”.

1.3 Checking the oil level on the Diesel engine with the dipstick

For details on how to check the oil level and filter, see Crane operator's instructions, chapter 7.05 and separate operating instructions of the engine manufacturer.

▶ Check the engine oil level.

1.4 Checking the coolant level

WARNING
Danger of injury due to scalding of the skin!
- ▶ Never open the cap on the coolant reservoir as long as the engine is warm! The cooling system is under pressure!
- ▶ To protect face, hands and arms from hot steam of hot coolant, cover the cap with a large rag when opening!

▶ Check the coolant level.

If the coolant level is too low:
▶ Add coolant, see Crane operating instructions, chapter 7.05.

1.5 Checking the oil level and filter on hydraulic tank

For detailed description of checking the oil level and filter, see Crane operating instructions, chapter 7.05.
- ▶ Check the oil level in the hydraulic tank.
- ▶ Check the filter on the hydraulic tank.

1.6 Checking the central lubrication system

The grease container must be filled at all times with sufficient lubricant.
▶ Check the grease container.

If the lubricant level is too low:
▶ Add lubricant, see Crane operating instructions, chapter 7.05.

1.7 Checking the window cleaning fluid

NOTICE
Frozen window cleaning fluid!
If the window cleaning fluid is not frost resistant, then the windshield washer system can freeze during the cold time of the year!
Failure of the windshield washer system is the result!
The windshield washer system can be damaged!
▶ Change the window cleaning fluid in time to a frost resistant type!

▶ Before the start of the cold season:
Empty the container for the window cleaning fluid and refill it with a commercially available, frost resistant window cleaning fluid.

blank page!

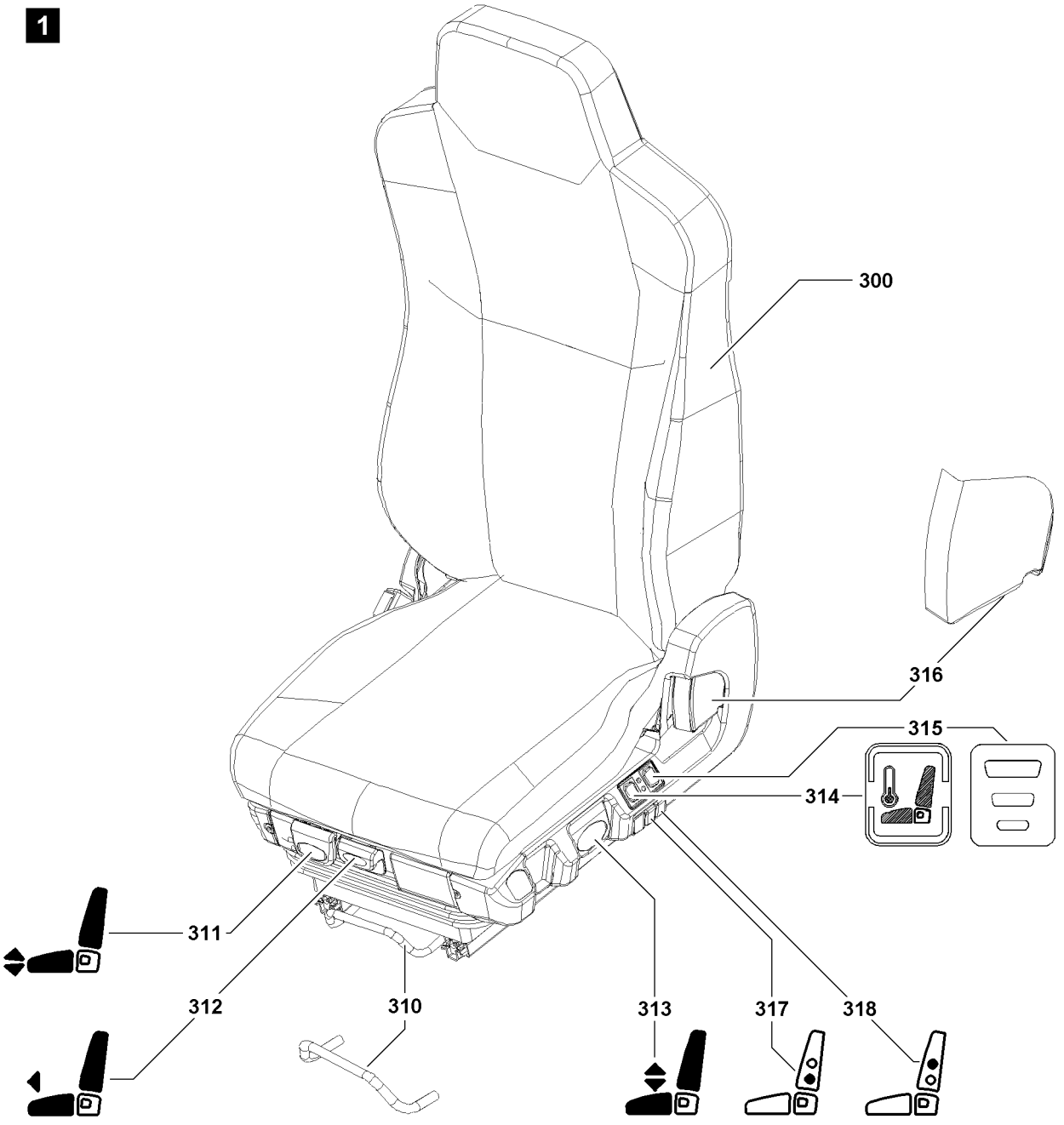

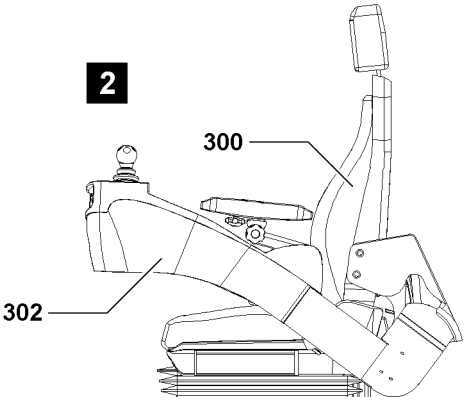

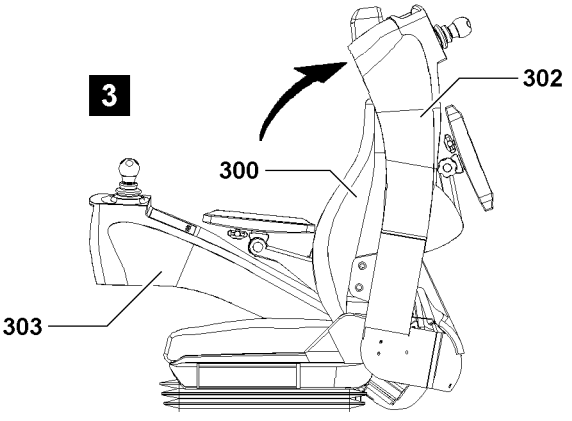

B110462

2 Work station - Crane operator's cab

2.1 Adjusting the crane operator's seat

WARNING
Danger of injury!
At inclined crane operator's cab and when the crane is standing on an incline, the crane operator's seat can move suddenly when adjusting it!
Limbs can be caught and injured!
▶ Carry out adjustments on the crane operator's seat only when the crane operator's cab is in horizontal position!

Adjust the seat position
▶ With the bar **310** adjust the seat in horizontal direction by moving it back or forth.
▶ With the lever **311** adjust the seat incline.
▶ With the lever **312** adjust the position of the seat cushion.
▶ With the lever **313** adjust height of seat.
▶ With the lever **316** adjust the angle of the backrest.
▶ With the button **317** adjust the lumbar area support “on the bottom”.
▶ With the button **318** adjust the lumbar area support “on top”.

Turn the seat heater* / Seat climate control*

The seat heater or climate control is turned on / off with the switch* **314**.
There are three switch positions:
– Center position: Seat heater and seat climate control turned off.
– Pushed on top: Seat heater turned on (red light).
– Pushed on the bottom: Seat climate control turned on (blue light).

▶ Select the seat heater / seat climate control on with switch* **314**.
▶ Adjust the seat heater / seat climate control with switch* **315**.

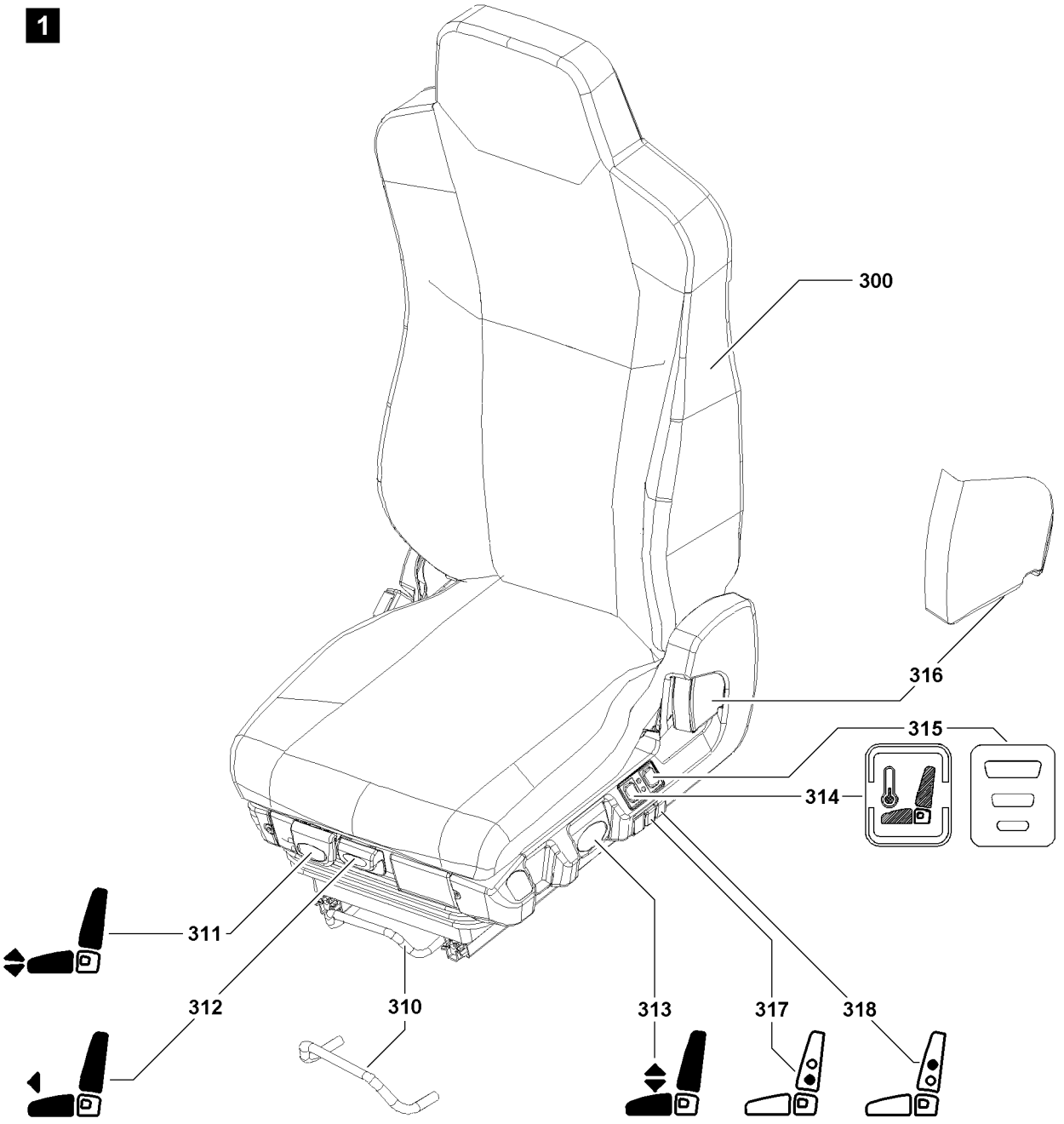

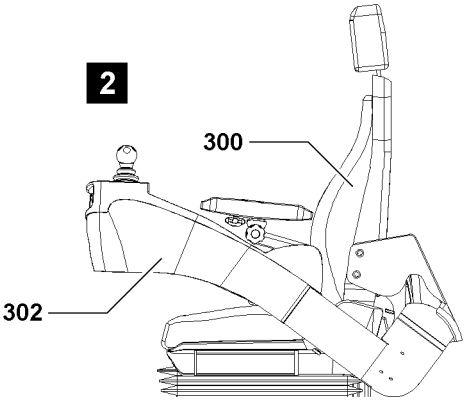

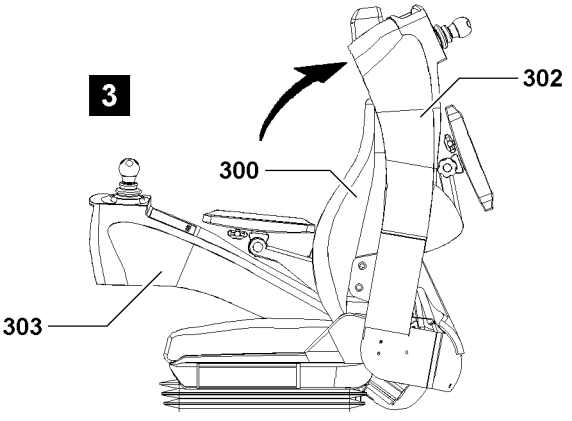

B110462

2.2 Adjusting the consoles

The control platform, with the consoles on the left and right hand side of the crane operator's seat **300** allows the crane operator to adjust the consoles to suit his body size optimally.
Two different console positions are possible:

– Crane operating position (both consoles down), see illustration **2**.
– Position Entering / exiting, see illustration **3**.

WARNING
Danger of accident!
A raised console (for example console **302** in entering / existing position), can swing down uncontrolled in case of jolting (for example due to sudden braking action)!
Injuries to persons and property damage can result!

▶ Driving the crane and crane operation with raised consoles is prohibited!
▶ Always bring the consoles into “Crane operating position” immediately!
▶ Hold the consoles when swinging them until the respective end position is reached!

The consoles can be brought into another position by swinging them up.

– Move the console **302** (left) from “crane operating position” to “enter / exit” position by swinging it up (self-retaining).
– Move the console **303** (right) from “crane operating position” to “Up” position by swinging it up (not self-retaining).

Note
▶ If the consoles are swung down, the last set positions are used.

4

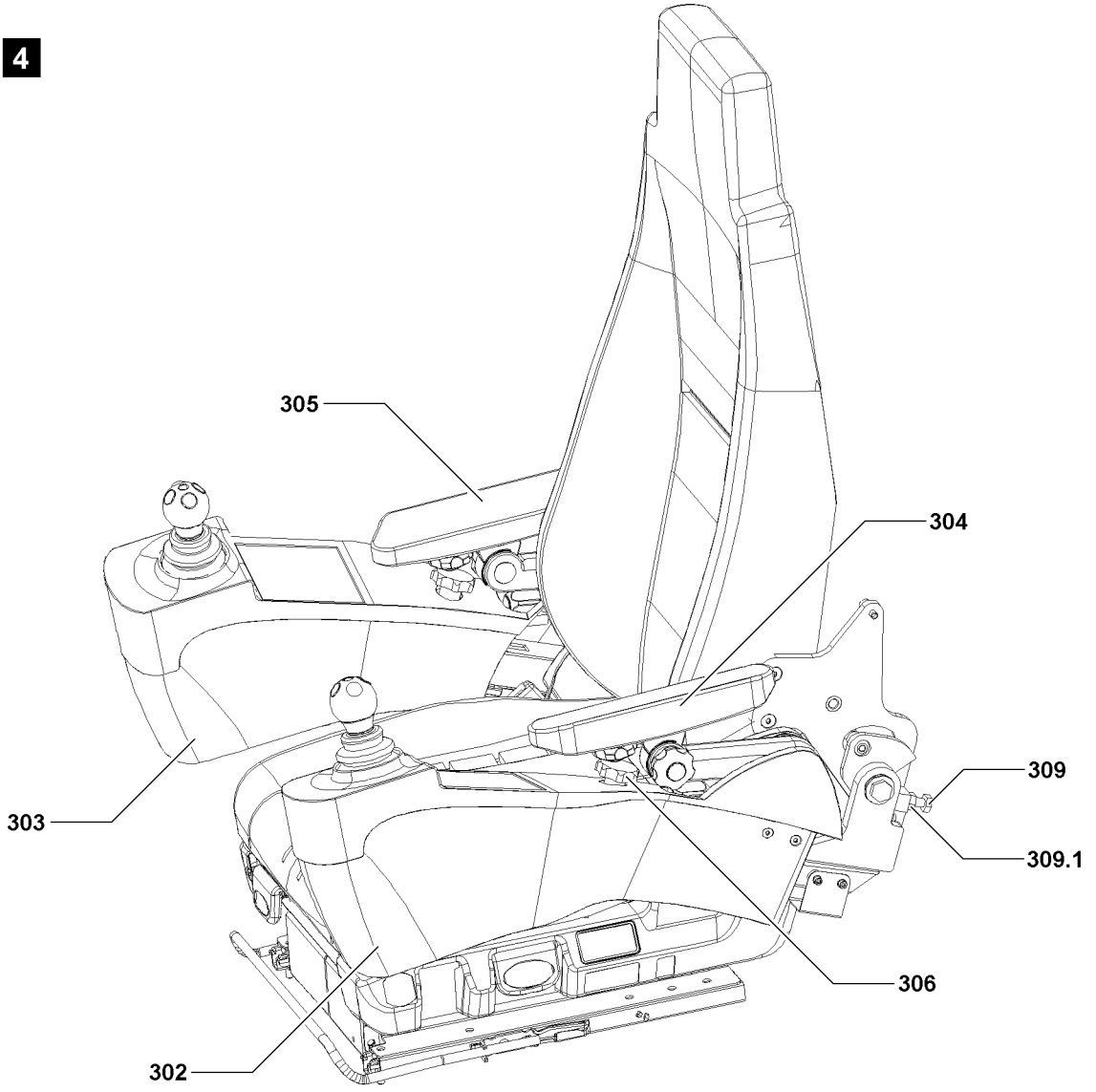

5

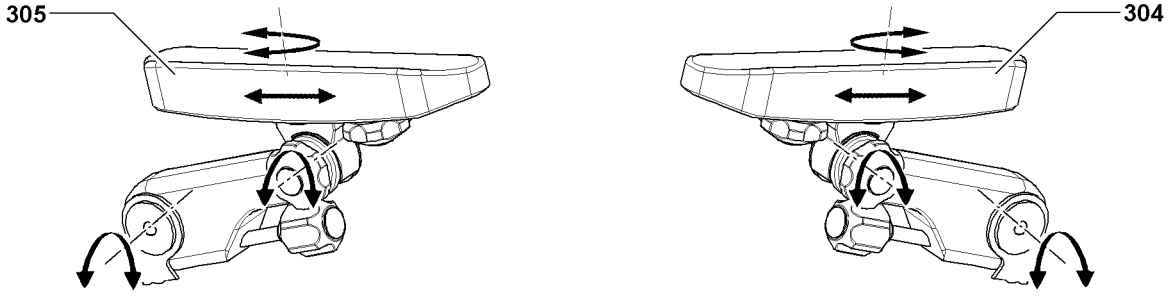

B110463

2.2.1 Adapting the consoles to the crane driver

Note
- ▶ The consoles can be adjusted individually to suit. Every crane operator can set his work place optimally to his body size!
- ▶ The left console **302** and the right console **303** can be adjusted independently of each other!

Note
- ▶ The consoles can be adjusted to suit the crane operator as described for the left console **302**, see illustration **4**!
- ▶ The procedure for the right console **303** is accordingly.

Adjusting the incline of the console
- ▶ Release the nut **309.1**.
- ▶ Adjust the stop screw **309** until the console **302** has reached the desired incline.
- ▶ Secure the stop screw **309** with nut **309.1**.

Move the console horizontally
- ▶ Fold the armrest **304** up.
- ▶ Pull the locking pin **306** until the console **302** can be moved.
- ▶ Adjust the horizontal position of the console **302** by moving it forward / backward.
- ▶ Release the locking pin **306** and let it engage.
- ▶ Fold the armrest **304** down.

Result:
- – The console **302** is adjusted.

2.2.2 Armrests

The left arm rest **304** and the right arm rest **305** offer a multitude of adjustment possibilities, see illustration **5**.

Note
- ▶ To ensure fatigue free and concentrated work with the crane, the armrests should be adjusted in such a way that you can comfortably reach and operate the master switches.

- ▶ The left arm rest **304** and the right arm rest **305** can be adjusted with the adjustment screws, see illustration **5**.

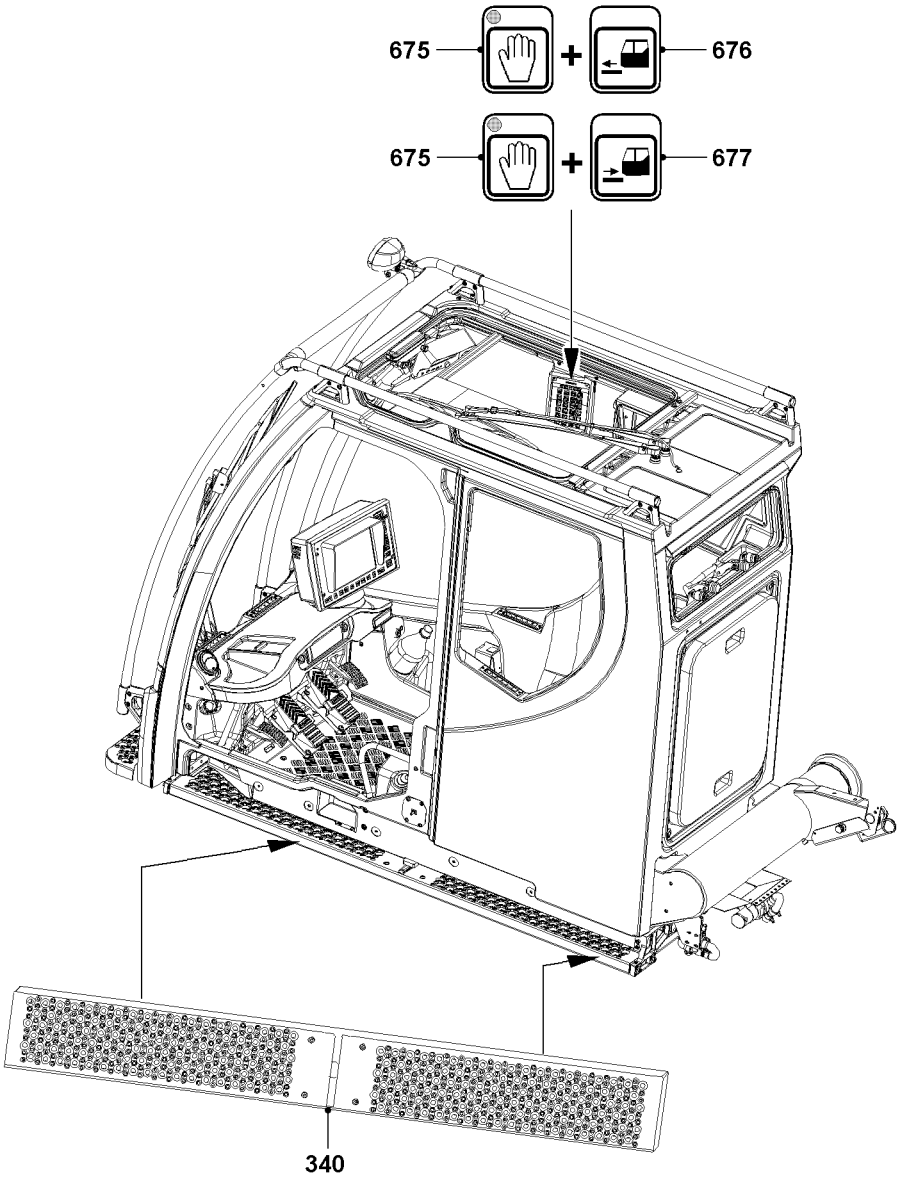

B117470

2.3 Footboard / step

In order to make it easier for the crane operator to enter and leave the crane operator's cab, the footboard **340** can be extended or retracted.
The footboard **340** latches in the end positions.

WARNING
Danger of falling!
If the step is not extended or retracted completely, personnel can fall down!
Personnel can be severely injured or killed!
- ▶ Always retract or extend the step completely!
- ▶ Access on the step only if it is completely extended!

NOTICE
Observe the safety notes!
- ▶ For crane operator's cab with retractable / extendable step, see Crane operating instructions, chapter 2.04.

2.3.1 Extending the step

- ▶ Activate the release button **675** and then actuate the control button **676** until the step **340** is fully extended.

2.3.2 Retracting the step

- ▶ Activate the release button **675** and then actuate the control button **677** until the step **340** is fully retracted.

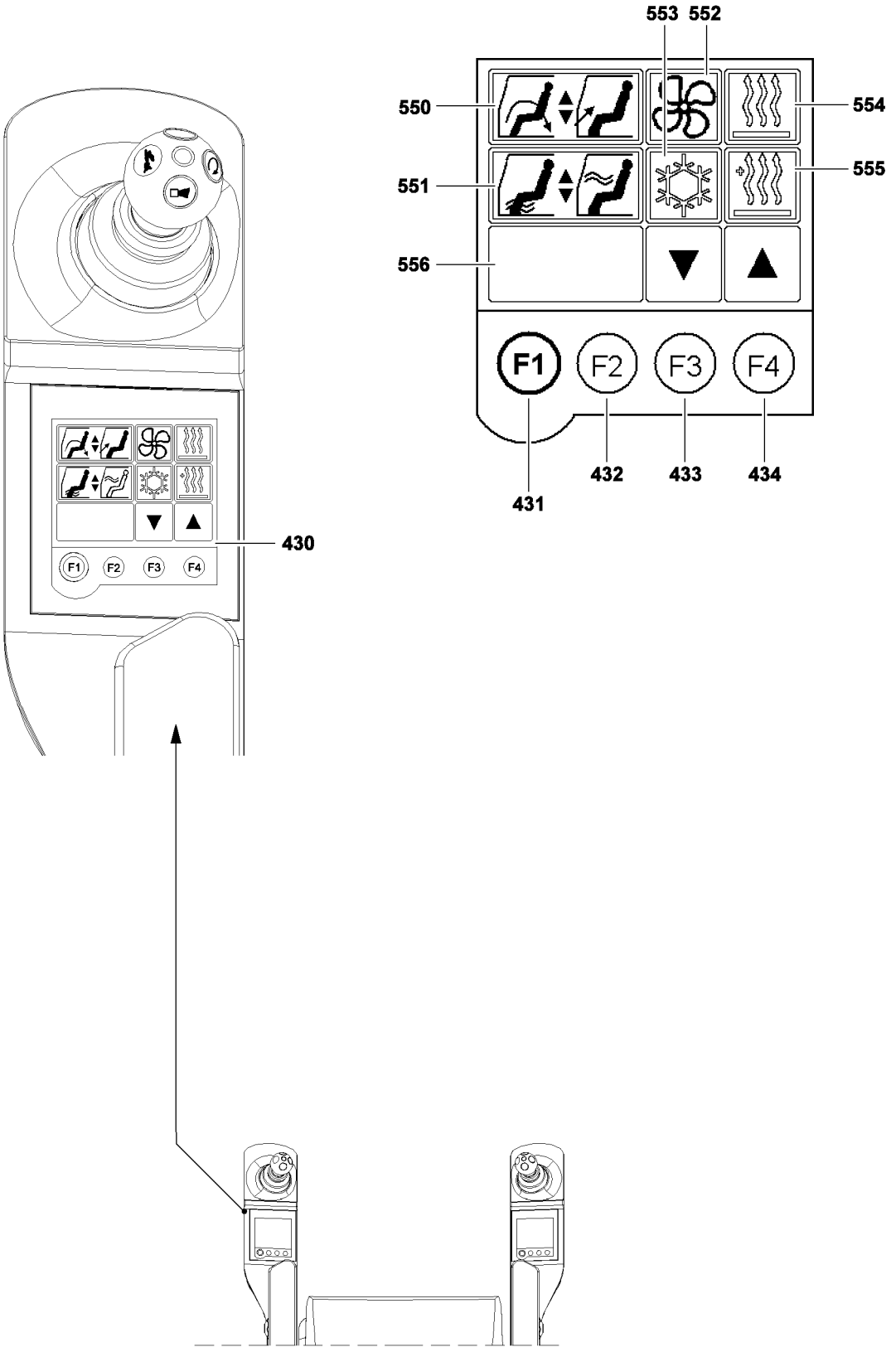

B103973

2.4 Adjusting the heater / ventilation

The crane cab can be heated or ventilated depending on the desired temperature, see detailed description in the Crane operating instructions, chapter 6.02.

Adjust the heater, ventilation and air conditioning system* on the left touch display **430**.

▶ Press the button **431** until the “Climate control settings” menu appears.

The current settings of the individual functions are shown in the status display **556**.

▶ Adjusting the recirculated air / fresh air: Press icon **550** “touch”, wide border appears.

Result:

– The distribution of recirculated / fresh air can be set with button **433** and button **434**.

▶ Set the ventilation distribution: Press icon **551** “touch”, wide border appears.

Result:

– The ventilation distribution can be set with button **433** and button **434**.

▶ Set the blower output, press icon **552** “touch”, wide border appears.

Result:

– The blower output can be set with button **433** and button **434**.

▶ Set the air conditioning system*: Press icon **553** “touch”, wide border appears.

Result:

– The air conditioning system* can be turned off with button **433** and turned on with button **434**.

▶ Set the heater, press icon **554** “touch”, wide border appears.

Result:

– The heater mode can be switched with button **432**.
– The temperature can be set with button **433** and button **434**.

▶ Set the auxiliary heater: Press icon **555** “touch”, wide border appears.

Result:

– The auxiliary heater can be set with button **432**, button **433** and button **434**.

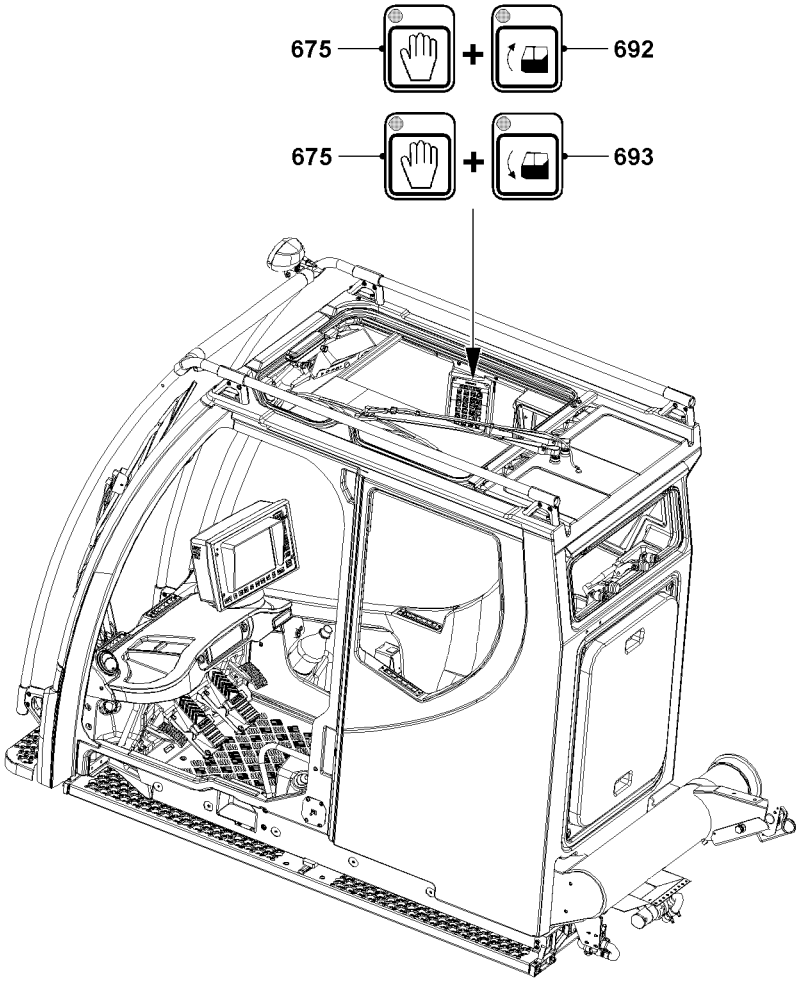

B110293

2.5 Tilting the crane cab*

To give the crane driver a better field of vision, the cab can be tilted upwards.
When you have finished working with the crane, always set the cab to horizontal position.

WARNING
Danger of accident!
When the door is opened and the crane operator's cab tilted, the door can move back suddenly!
Hands can be crushed or injured!
▶ When the crane operator's cab is tilted, open the door carefully!

WARNING
Danger of falling!
If there are persons on the footboard when the crane operator's cab is tilted, then they can fall down!
Personnel can be severely injured or killed!
▶ If the cab is tilted, it is forbidden to stand on the footboard.
▶ Before stepping on the step, set the cab to horizontal position.

2.5.1 Tilting the cab upward

Make sure that the following prerequisite is met:
– The crane engine is running.

▶ Activate the release key **675** and then press the control button **692** to the desired position.

Result:
– The cab swings upward.

2.5.2 Setting the cab to horizontal position

Make sure that the following prerequisite is met:
– The crane engine is running.

▶ Activate the release key **675** and then press the control button **693** to the desired position.

Result:
– The cab swings downward.

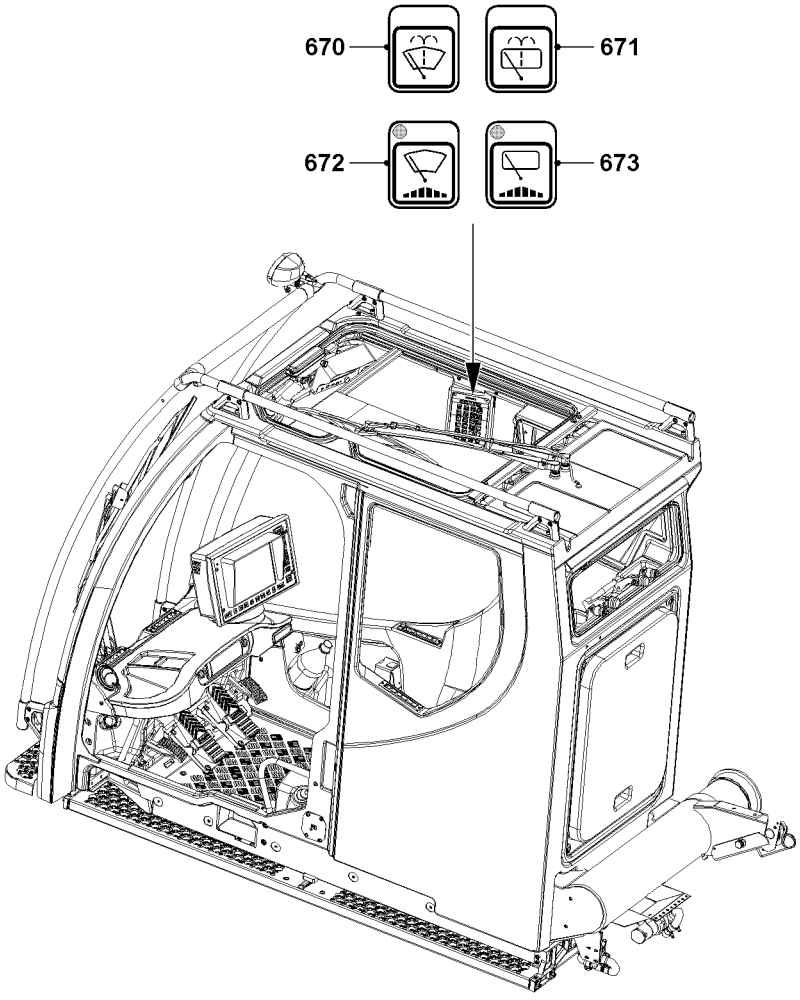

B110294

2.6 Operating the windshield wiper / windshield washer system

2.6.1 Operating the windshield wiper

The windshield wipers are turned on by pressing control button **672** (front window) and control button **673** (roof window). The following description refers to the operation of the windshield wipers for the front window. The operation of the roof window wipers is identical.

▶ To activate the windshield wiper on the front window:
Press the control button **672**.

Result:

– The windshield wiper runs continuously.
– The indicator light on control button **672** lights up.

▶ If the windshield wiper is running continuously:
Press the control button **672**.

Result:

– The windshield wiper is now running at a “long interval”.

▶ If the windshield wiper is running at a “long interval”:
Press the control button **672**.

Result:

– The windshield wiper is now running in “short interval”.

▶ If the windshield wiper is running in “short interval”:
Press the control button **672**.

Result:

– The windshield wiper is turned off.
– The indicator light on control button **672** turns off.

Note

▶ If the control button **672** is pressed longer than one second during “continuous”, “long interval” or “short interval” operation, then the windshield wiper is turned off.

▶ Press control button **672** for longer than 1 second.

Result:

– The windshield wiper is turned off; this is confirmed by a short beep, the indicator light on the control button **672** turns off.

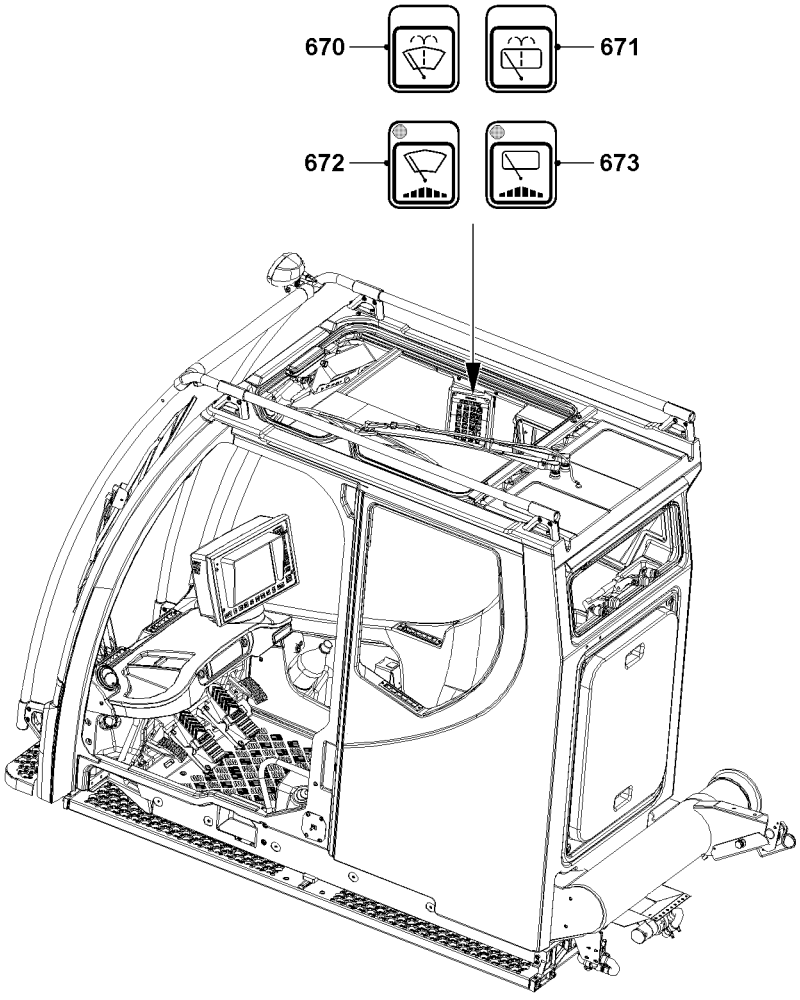

B110294

2.6.2 Operating the windshield washer system

Activate the windshield washer system to support the windshield wipers by pressing control button **670** (front window) and control button **671** (roof window). The following description refers to the operation of the windshield washer system for the front window. The operation of the windshield washer system for the roof window is identical.

Note

▶ Before the start of the cold season, fill the container for the window washer fluid with standard, freeze-proof window cleaning fluid.

▶ To operate the windshield washer system for the front window:
Press the control button **670**.

Result:

– The windshield wipers and water pump will run as long as control button **670** is pressed. After releasing control button **670**, the windshield wiper continues to run three times.

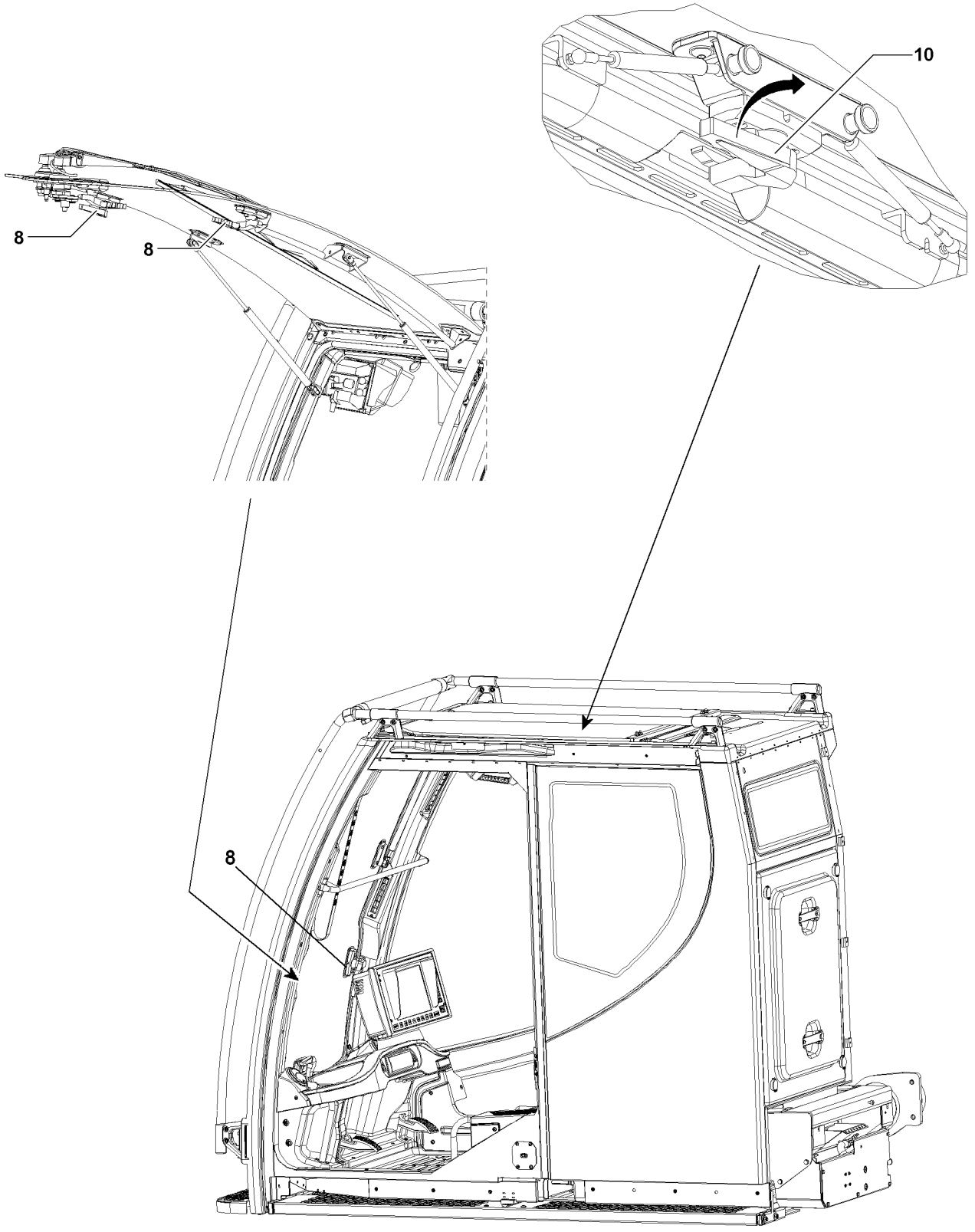

B113817

2.7 Opening / closing the front window of the crane operator's cab

WARNING
Danger of crushing!
Risk of trapping hands when closing the front or roof window.
▶ Watch your hands when closing the front or roof window.

NOTICE
Property damage!
If the crane is driven with open window or open crane door, the crane cab can be damaged!
▶ Before driving the crane, close all windows and the crane door!

2.7.1 Opening / closing the front window of the cab

A pair of nitrogen gas cylinders support the lifting movement of the front window.

Opening the front window:
▶ Unlock the rotary handle **8** on both sides and push on the front window from the inside.

Closing the front window:
▶ Pull the front window closed and lock on both sides with the rotary handle **8**.

2.7.2 Opening / closing the roof window

Use the rotary handle **10** to open / close the roof window.

Open the roof window:
▶ Release the rotary handle **10** and push the roof window up.

Close the roof window:
▶ Pull the roof window closed and lock with the rotary handle **10**.

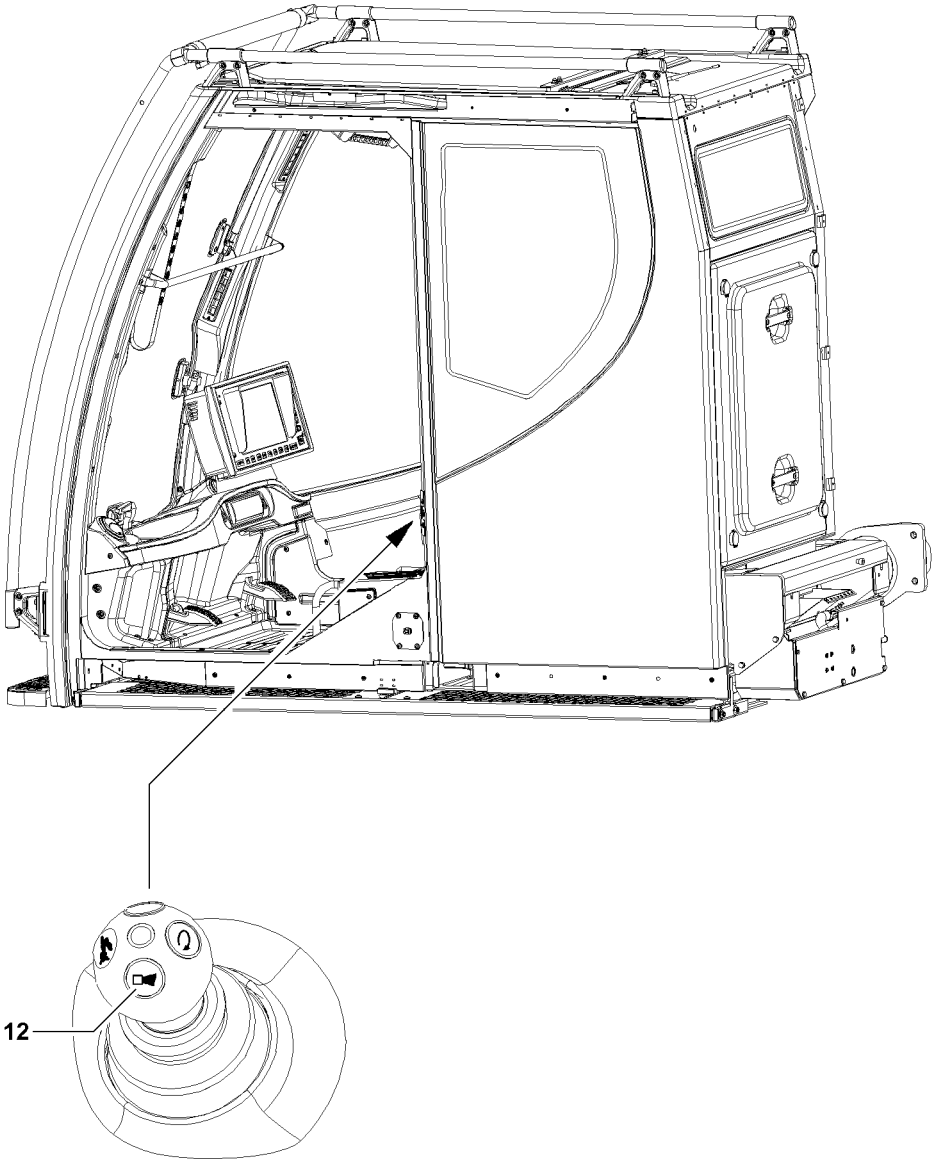

B113818

2.8 Checking the horn

WARNING
Improper use of horn!
If the horn is used outside of danger situations, then it can loose its warning effect!
If the horn looses its warning effect, then severe injuries can occur as a result!
▶ Do not use the horn unnecessarily!

Make sure that the following prerequisite is met:
– Any personnel in the vicinity has been notified that the horn is being checked for function.

▶ Before starting to work, check that the horn is functioning:
Press the button **12**.

Troubleshooting
The horn does not sound?
The horn is not functioning.
▶ Repair the horn before starting crane operation.

After successful testing of the horn:
▶ Notify any personnel in the vicinity that the testing of the horn has been completed.

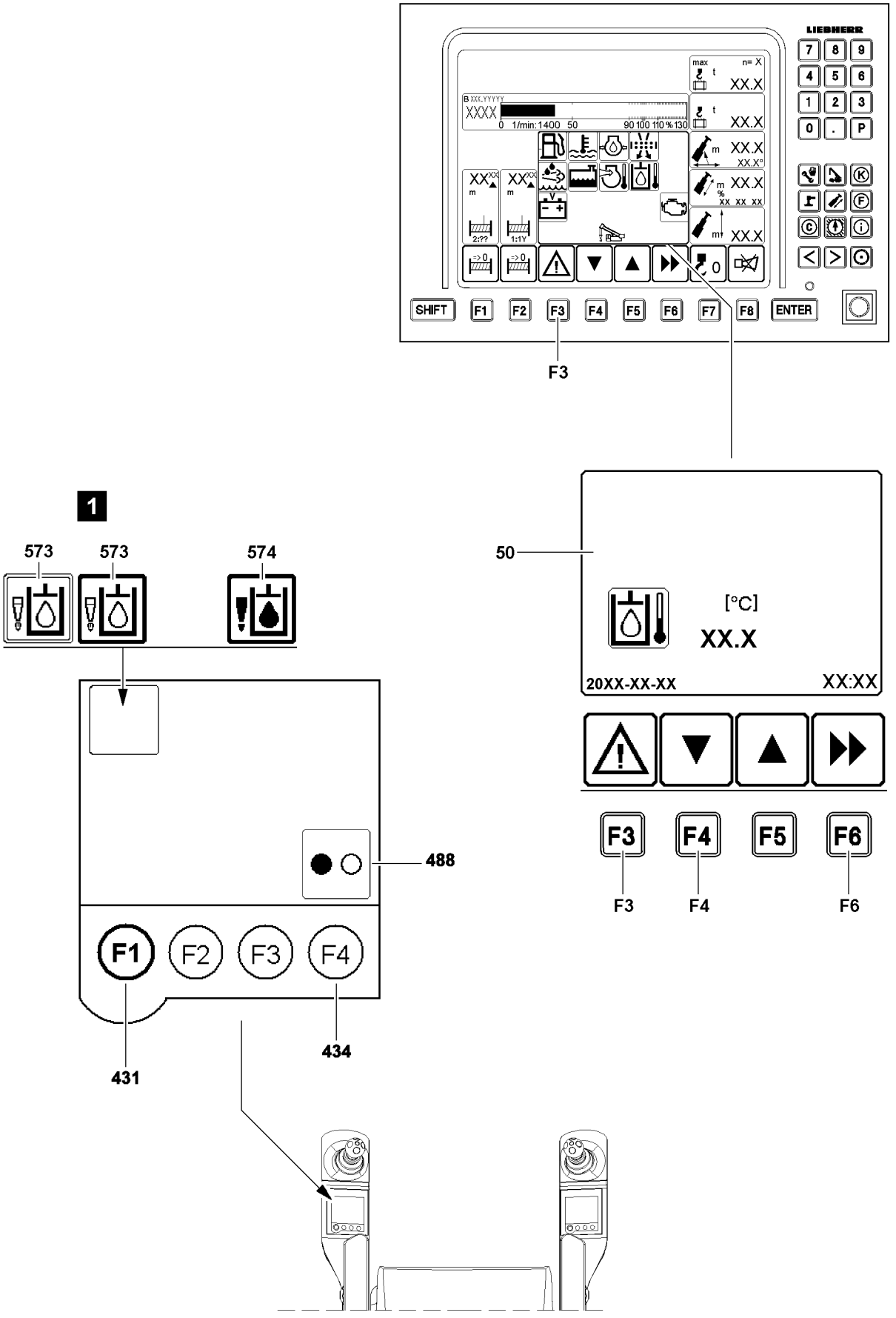
LIEBHERR
SHIFT
F1
F2
F3
F4
F5
F6
F7
F8
ENTER
F3
1
573
573
574
50
[°C]
XX.X
20XX-XX-XX
XX:XX
F3
F4
F5
F6
488
F1
F2
F3
F4
431
434

B117824

3 Preheating the hydraulic oil with the Hydraulic oil preheating*

The hydraulic oil can be preheated with the Hydraulic oil preheating*.

Note
- ▶ Always preheat the hydraulic oil at low ambient temperatures.
- ▶ From a hydraulic oil temperature above 25 °C, do not turn the Hydraulic oil preheating* on.
- ▶ The current hydraulic oil temperature can be called up via the individual control display hydraulic oil temperature **50** on the LICCON monitor.

Note
- ▶ At low ambient temperatures, run through all hydraulic crane functions without a load for approx. 15 minutes. This will warm up cylinders, valves, oil motors and hoses.

3.1 Turning the Hydraulic oil preheating* on

Make sure that the following prerequisite is met:
– The crane engine is running.

Note
When the Hydraulic oil preheating* is turned on, various crane movements are turned off.
- ▶ If necessary, turn the Hydraulic oil preheating* off.

▶ In the “Crane operation” program, press the function key **F3**.

Result:
– The monitoring area with its monitoring functions is displayed on the LICCON monitor.

▶ Press the function key **F4** until the respective individual control display hydraulic oil temperature **50** is shown on the LICCON monitor.

Result:
– The current hydraulic oil temperature can be read.

▶ Press the function key **431** on the left touch display until the “Hydraulic oil preheating” menu appears.

▶ Select “Hydraulic oil preheating” **573** function by “touching”.

Result:
– The icon “Hydraulic oil preheating” **573** is bordered in black, see illustration **1**.

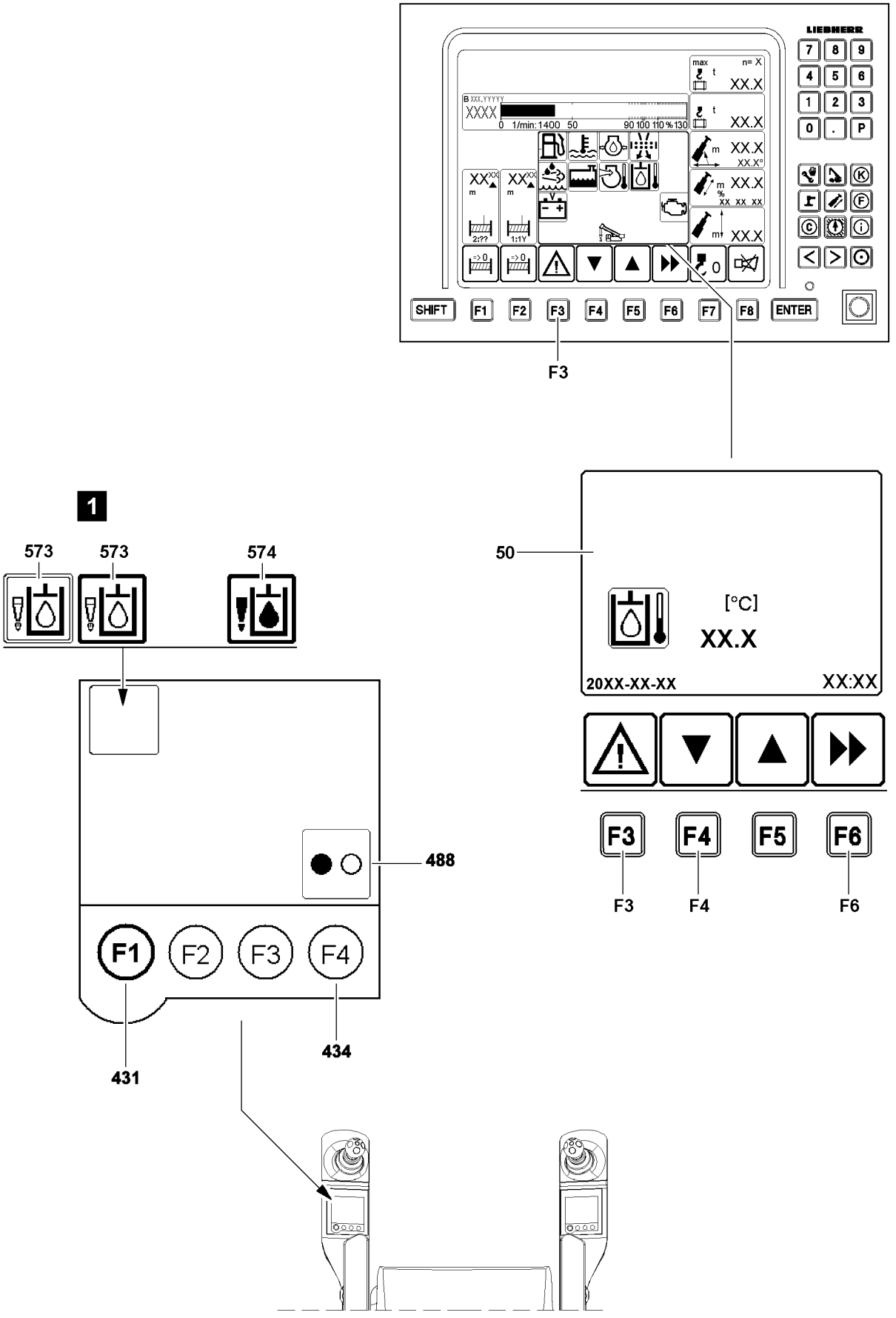
LIEBHERR
SHIFT
F1
F2
F3
F4
F5
F6
F7
F8
ENTER
F3
1
573
573
574
50
[°C]
XX.X
20XX-XX-XX
XX:XX
F3
F4
F5
F6
488
F1
F2
F3
F4
431
434

B117824

▶ Press the function key **434**.

Result:

– The hydraulic oil preheating is turned on.
– Icon “Hydraulic oil preheating” **574** appears.

▶ When the hydraulic oil temperature in the individual control display **50** has reached the operating temperature:
Press the function key **434**.

Result:

– The hydraulic oil preheating is turned off.
– Icon “Hydraulic oil preheating” **573** appears.

▶ Press the function key **F3**.

or

■ Press the function key **F6** twice.

Result:

– The monitoring field with monitoring functions is not displayed.

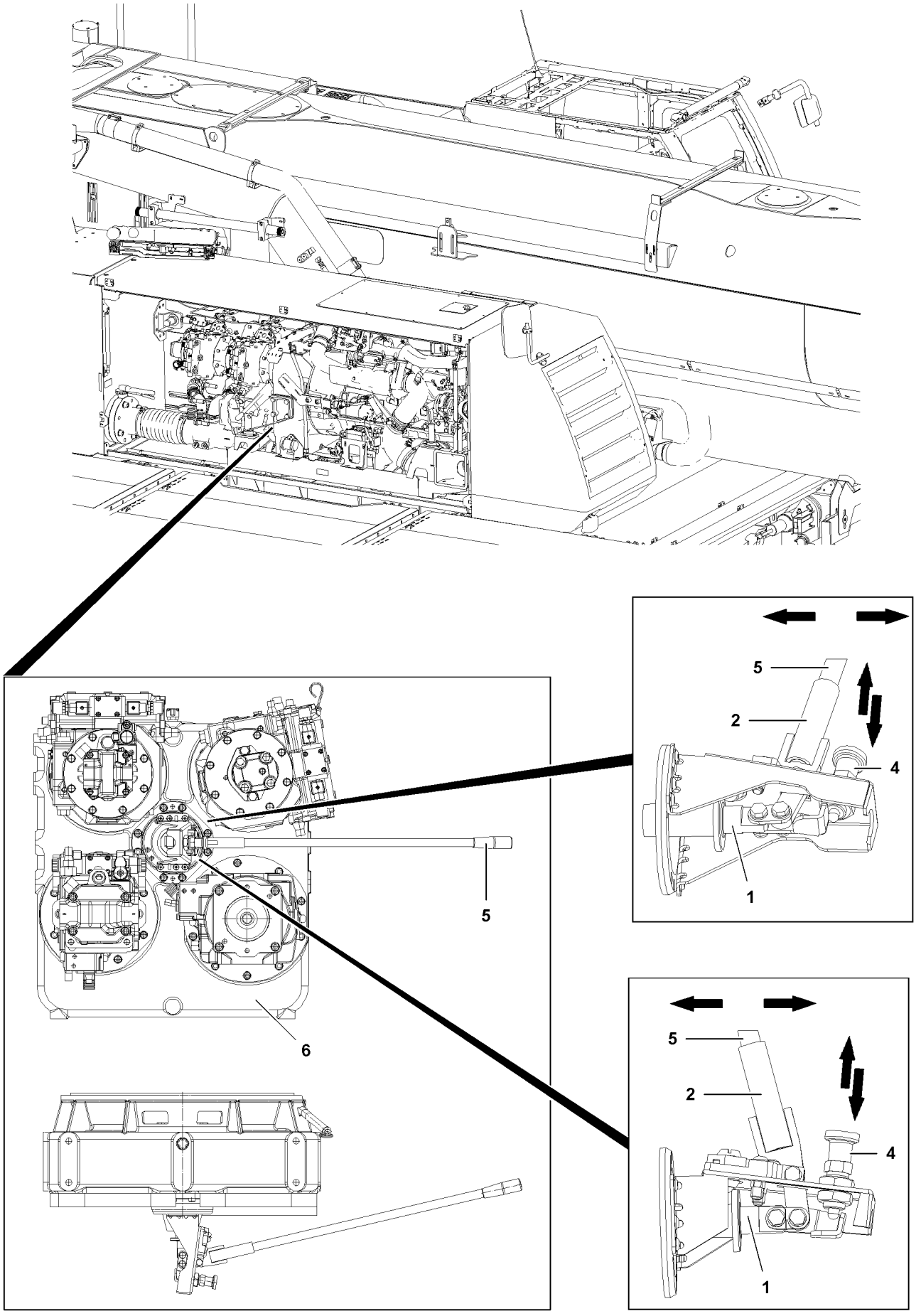

B118023

4 Starting and stopping the engine

The engine can only be subjected to a full load after the operating temperature has been reached.

4.1 Disengage / engage the coupling control on the pump distributor gear

Note

- ▶ In high application and at low ambient temperatures it may be necessary to disengage the coupling control **1** of the pump distributor gear **6** before starting the engine.
- ▶ The cold start behavior of the engine is thereby improved.

NOTICE

Danger of damaging the engine!

When the coupling control **1** is disengaged and the engine temperature is not constantly monitored, the engine can overheat.

This could result in high property damage.

- ▶ Monitor the engine temperature constantly while the engine is running.
- ▶ Make sure that the engine does not overheat.
- ▶ If there is any doubt, turn the engine off.

4.1.1 Disengage the coupling control

Ensure that the following prerequisite is met:

– The engine is turned off.

- ▶ Take the lever extension **5** from park position.
- ▶ Set the lever extension **5** on the linkage **2**.
- ▶ Release and turn the locking pin **4**.
- ▶ Actuate the linkage **2** with the lever extension **5** to the stop.

Result:

– The coupling control **1** is disengaged.

– The pumps on the pump distributor gear **6** are **not** driven at engine start.

- ▶ Secure the coupling control **1**: Engage the locking pin **4**.
- ▶ Remove the lever extension **5** and store it in park position.

WARNING

Danger of accident due to rotating parts!

- ▶ Make sure that there are no persons within the danger zone of the engine.

- ▶ Start the engine, see section “Starting the engine”.

Result:

The engine is warmed up.

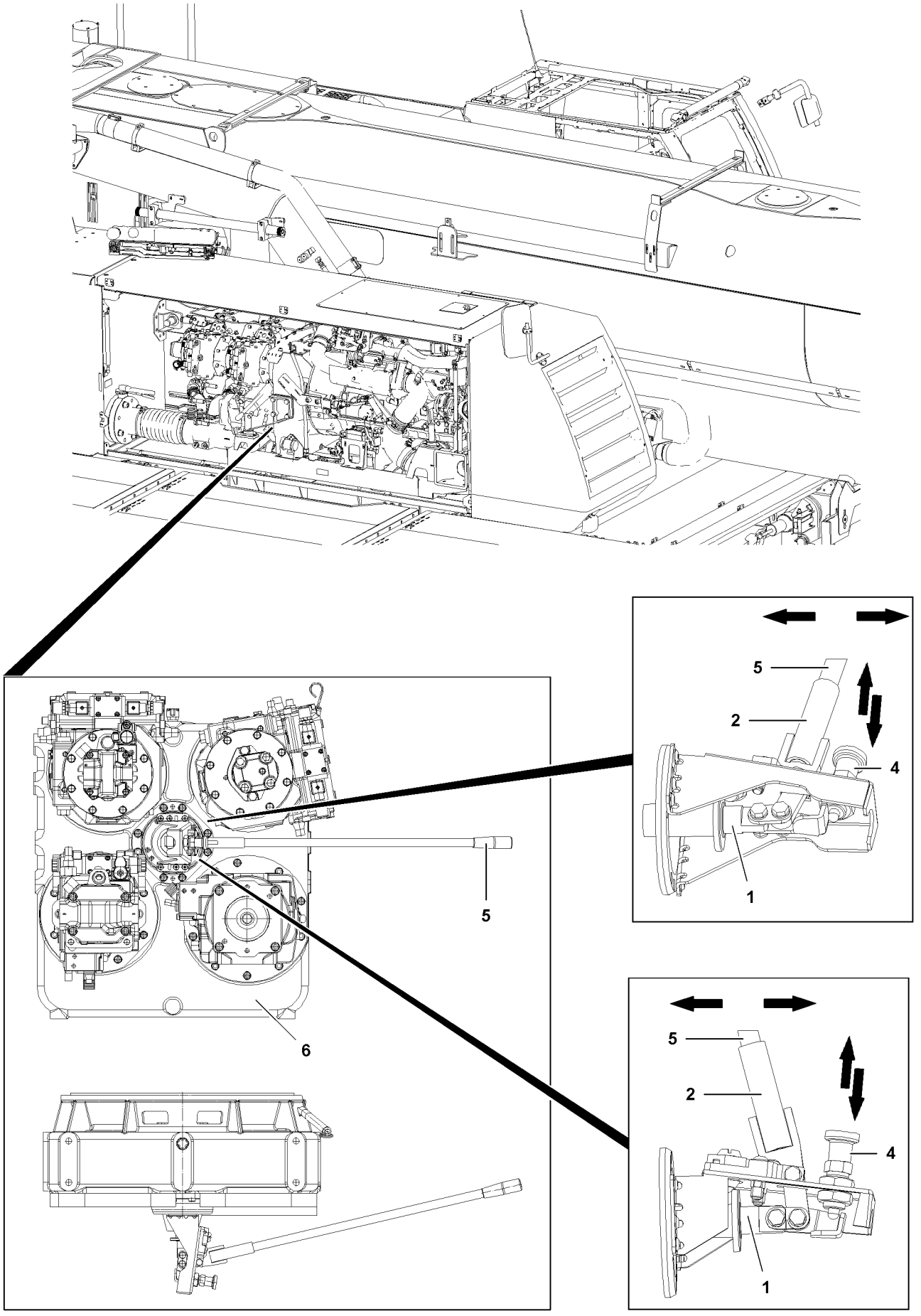

B118023

4.1.2 Engaging the coupling control

NOTICE
Property damage on the pump distributor gear!
▶ Make sure that the coupling control is engaged when the engine is at a standstill.

▶ When the engine has reached operating temperature:
Turn the engine off.
▶ When the engine has come to a complete standstill:
Release and turn the locking pin **4**.
▶ Engage the coupling control **1** with the lever extension **5**.

Troubleshooting
The coupling control **1** cannot be engaged on the pump distributor gear **6**?
▶ Start the engine for a short time and turn it off again until the coupling control **1** can be engaged.

▶ When the coupling control **1** is completely engaged:
Secure the coupling control **1**: Engage the locking pin **4**.
▶ Remove the lever extension **5** and store it in park position.

Result:
– At engine start, the hydraulic pumps on the pump distributor gear **6** are driven.

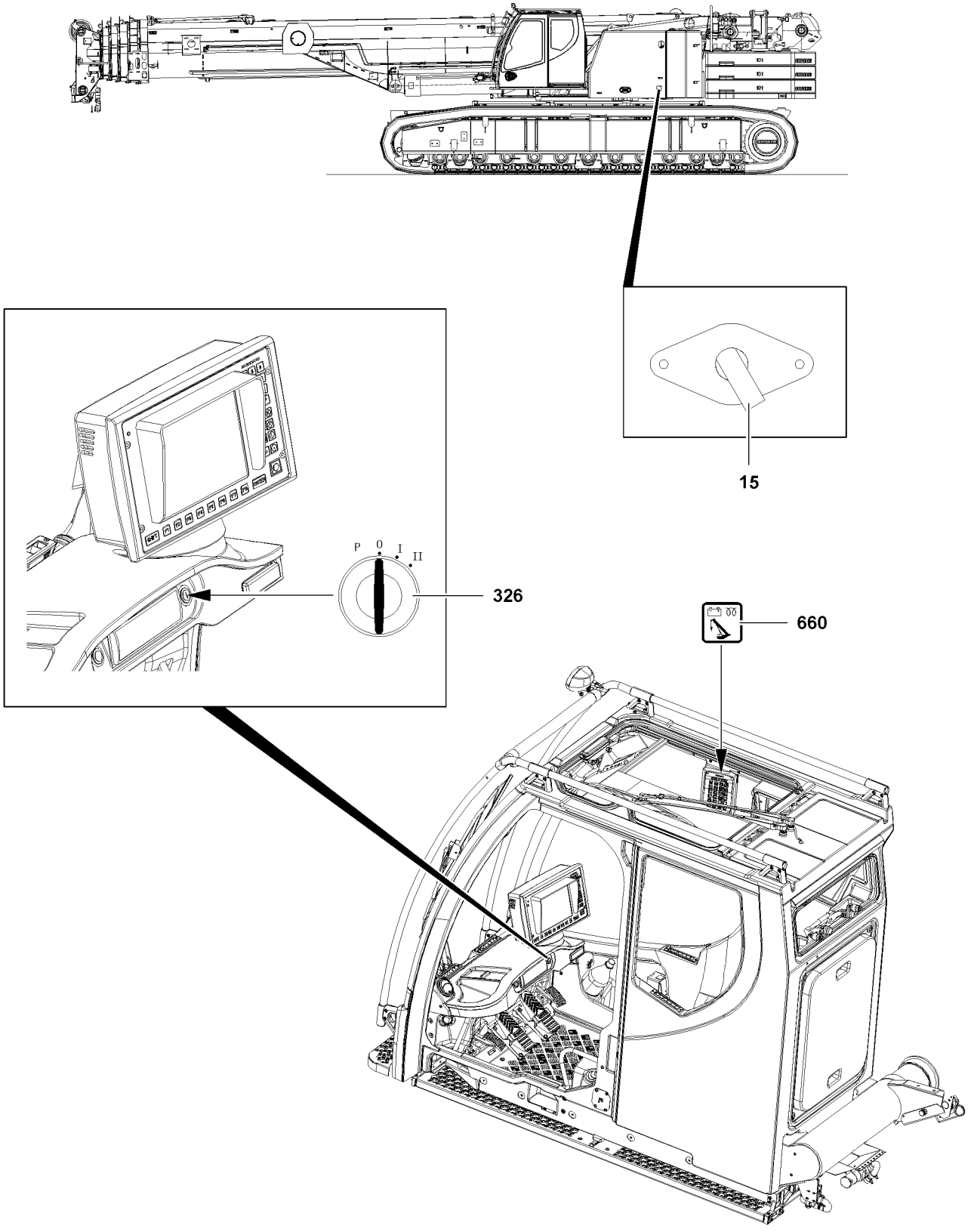

B117825

4.2 Starting the engine from the crane operator's cab

Make sure that the following prerequisite is met:

– The battery master switch **15** is turned on.

▶ Turn the ignition switch **326** to position “I”.

Result:

– The indicator light **660** lights up yellow.
  Engine preheating is active.

NOTICE

Danger of property damage!

▶ Start the engine only if the indicator light **660** blinks yellow (1 Hz).

▶ When the indicator light **660** blinks yellow (1 Hz), the engine is ready to start.
  Turn the ignition switch **326** to position “II”.

Result:

– The engine starts.

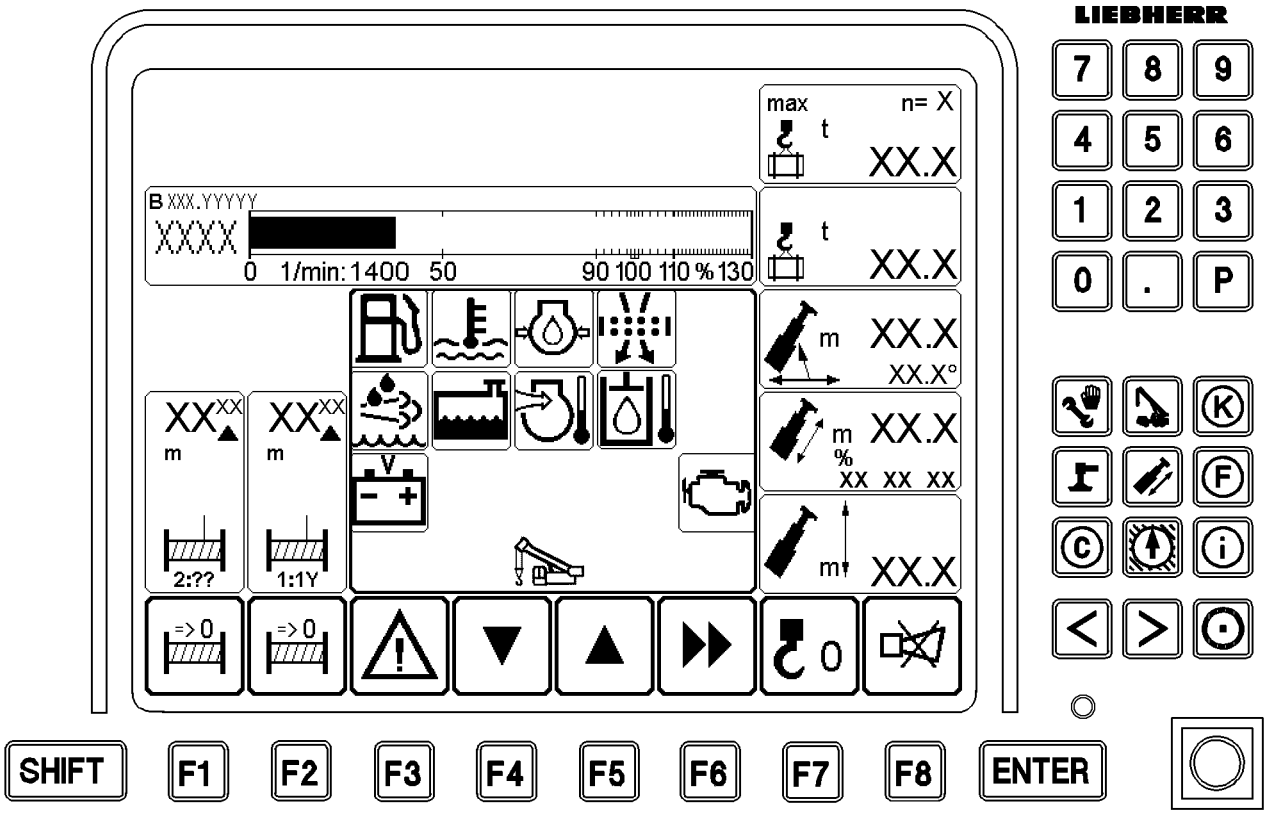

1

F3

2

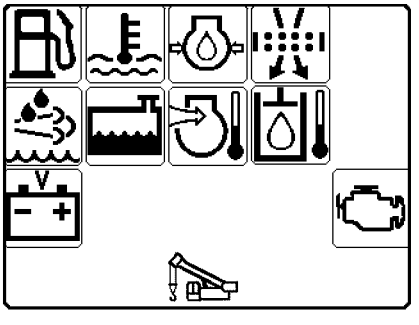

B117826

4.3 Checking the instruments after starting the engine

As soon as a stable voltage is present with the engine running, the electric crane control and the LICCON computer system are turned on automatically. A self test of the LICCON computer system follows and after several seconds the set up condition screen appears on the monitor.

4.3.1 Checking the instruments on LICCON monitor

Note

▶ The monitor illustrations in this chapter are only examples. The numerical values in the individual icons do not need to match exactly to the crane. In addition, many of the illustrations show the maximum configuration of the LICCON monitor with icons. In normal crane operation, an identical display will **not** appear on the LICCON monitor.

▶ Check the LICCON monitor for warning messages.

4.3.2 Warnings on the LICCON monitor

If the warning icon of the function key **F3** turns “yellow” or “red”, illustration **1**, then there is an error on the crane or a critical condition. For detailed description of the individual warnings and error displays, see Crane operating instructions, chapter 4.02.
The warnings are called up using the function key **F3**.

▶ Press the function key **F3**.

Result:

– The “monitoring field with monitoring functions” appears on the LICCON monitor, see illustration **2**.
– The erroneous function is displayed in the monitoring field in “red” or “yellow”.

▶ Turn off the engine immediately and remedy the problem.

3

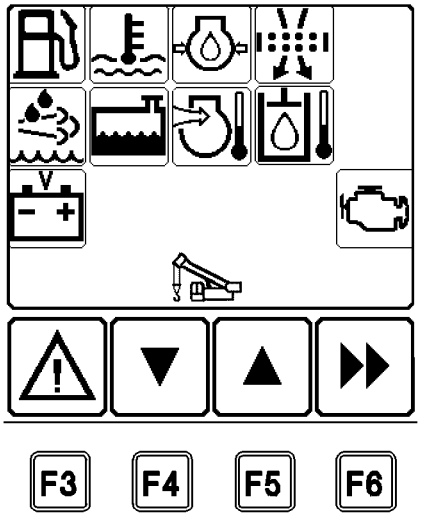

4

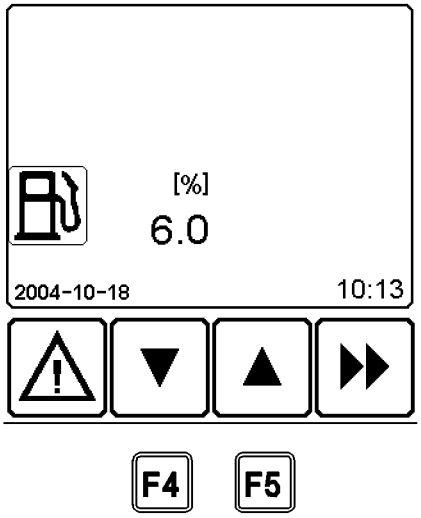

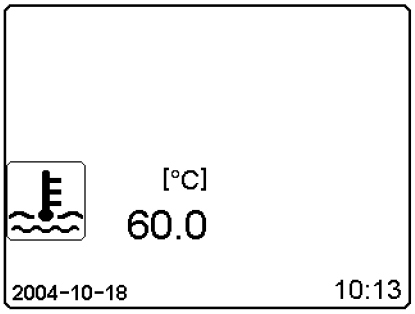

B117827

4.3.3 Displaying monitoring functions with analogue values

Note

▶ For the monitoring functions or individual control displays, see also Crane operating instructions, chapter 4.02.

For some monitoring functions in the monitoring field, the respective values can be displayed as analog values.

▶ Press function key **F4** or function key **F5**, see example in illustration **3**.

Result:

– The individual monitoring function with analog value is displayed, see illustration **4**.

You can change back to the monitoring field with the monitoring functions using the function key **F6**.

▶ Press the function key **F6**.

Result:

– The monitoring field with all the monitoring functions is displayed, see illustration **3**.

The monitoring field can be exited using the function key **F3**.

▶ Press the function key **F3**.

Result:

– The monitoring field is faded out.

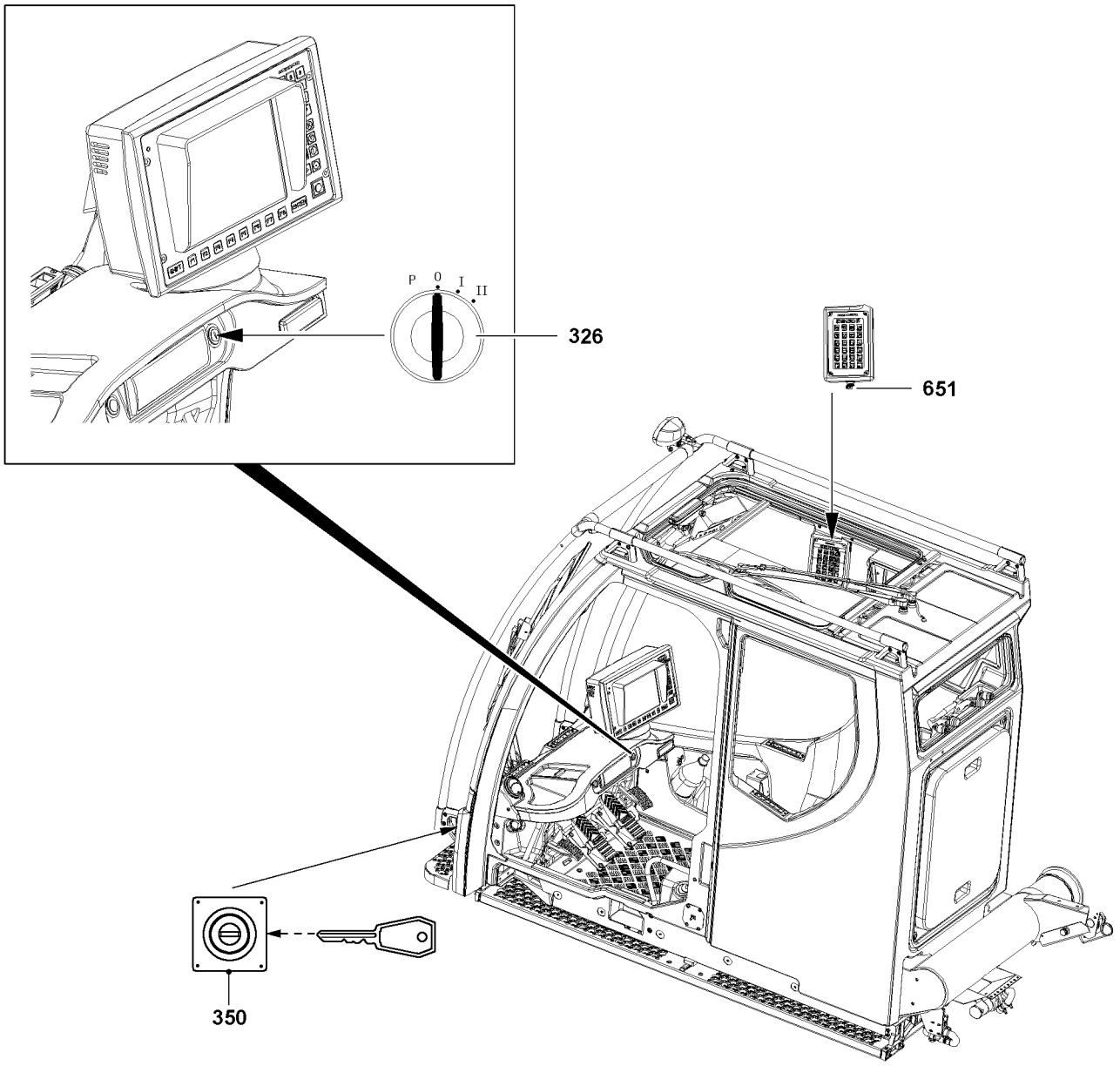

B117828

4.4 Turning the engine off

4.4.1 Turning the engine off after operation

If the crane has been operated at full engine output or with very high coolant temperatures (above 95 °C), let the engine run without a load for 1-2 minutes at low idle speed.

▶ Turn the ignition switch **326** back to the stop.

▶ Pull the ignition switch off and store in a safe place.

4.4.2 Turning the engine off in the event of danger

CAUTION

Operating the emergency off switch.

▶ Only use the emergency off switch **350** or the emergency off switch **651** in case of serious emergency. Use of the emergency off switch **350** or the emergency off switch **651** in normal situations is prohibited!

▶ Press the emergency off switch **350**.

or

■ Press the emergency off switch **651**.

Result:

– The crane will be turned off immediately.

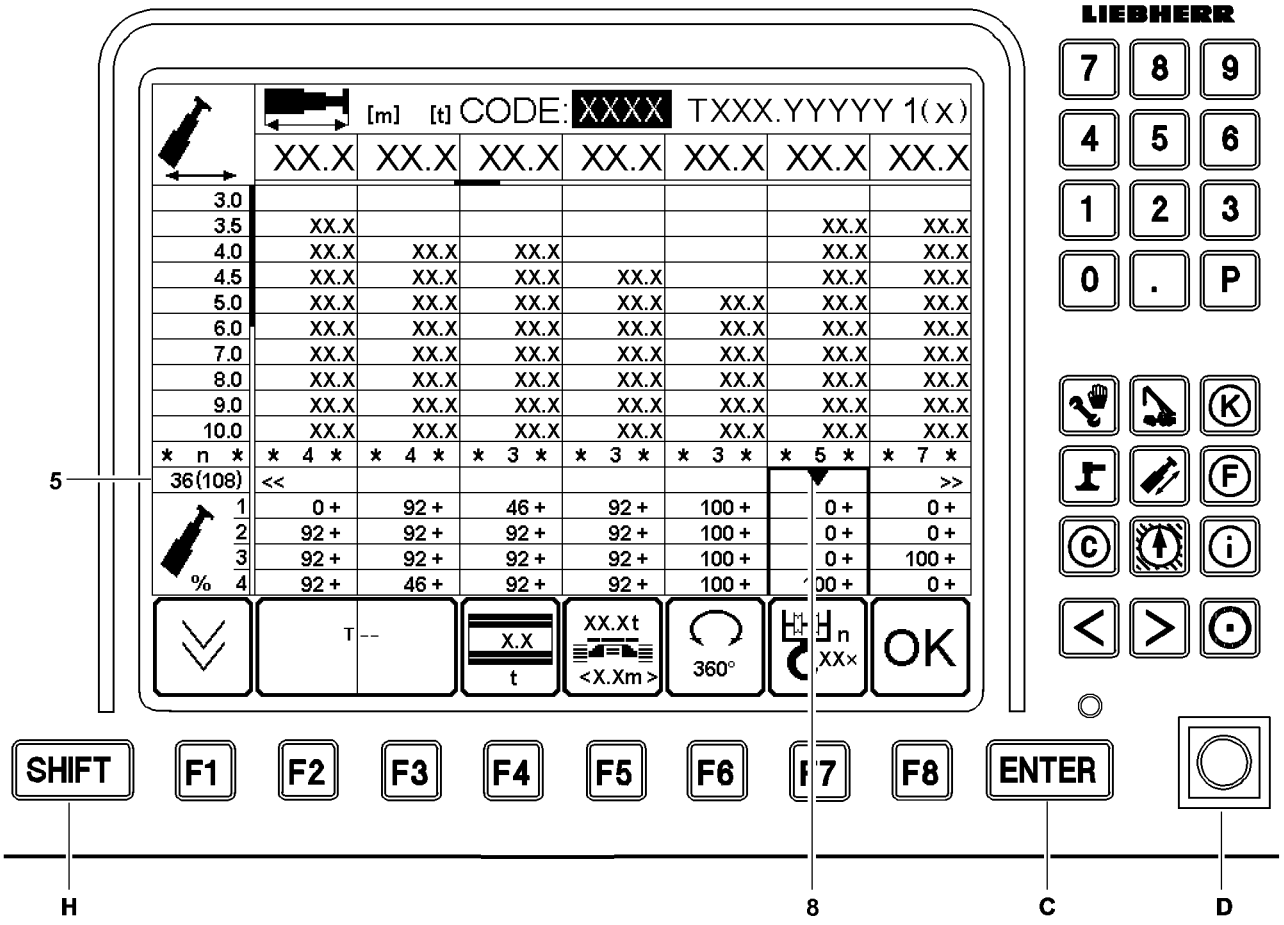
LIEBHERR
[m] [t] CODE: XXXX TXXX.YYYYY 1(x)
XX.X XX.X XX.X XX.X XX.X XX.X XX.X
3.0
3.5 XX.X XX.X XX.X
4.0 XX.X XX.X XX.X XX.X XX.X
4.5 XX.X XX.X XX.X XX.X XX.X XX.X
5.0 XX.X XX.X XX.X XX.X XX.X XX.X XX.X
6.0 XX.X XX.X XX.X XX.X XX.X XX.X XX.X
7.0 XX.X XX.X XX.X XX.X XX.X XX.X XX.X
8.0 XX.X XX.X XX.X XX.X XX.X XX.X XX.X
9.0 XX.X XX.X XX.X XX.X XX.X XX.X XX.X
10.0 XX.X XX.X XX.X XX.X XX.X XX.X XX.X
* n * * 4 * * 4 * * 3 * * 3 * * 3 * * 5 * * 7 *
36(108) << >>
1 0 + 92 + 46 + 92 + 100 + 0 + 0 +
2 92 + 92 + 92 + 92 + 100 + 0 + 0 +
3 92 + 92 + 92 + 92 + 100 + 0 + 100 +
% 4 92 + 46 + 92 + 92 + 100 + 0 + 0 +
T --
X.X
t
XX.Xt
<X.Xm>
360°
n
XXx
OK
SHIFT
F1
F2
F3
F4
F5
F6
F7
F8
ENTER
5
H
8
C
D

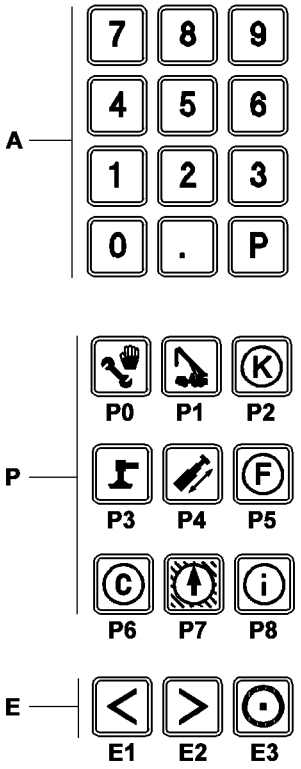
A
7 8 9
4 5 6
1 2 3
0 . P
P
P0 P1 P2
P3 P4 P5
P6 P7 P8
E
E1 E2 E3

B110332

5 LICCON computer system after engine start

The LICCON computer system is only operational when the engine is running.

5.1 Waiting for the boot up phase

After being turned on, the LICCON computer system boots up and carries out a self-test, see Crane operating instructions, chapter 4.02.

▶ Wait for the boot up phase.

Result:

– The set up screen appears on the LICCON monitor.
– Normally the previously selected set up configuration is displayed.

Troubleshooting

The LICCON monitor does not show the most recently set set up configuration and reeving number? If there has been a data loss in the memory (cold start), then the first valid set up configuration appears in the set up screen. The reeving number is set to “0”.

▶ Set the set up configuration and reeving number again.

5.2 Taking over the previously selected set up configuration and hoist rope reeving

Check in the operating screen if the correct short code and the correct reeving number have been set.

▶ If the settings on the operating screen are correct:
Press function key “F8” (O.K.).

Result:

– The “set up” program is terminated and the adjusted parameters are accepted for the newly started “Crane operation” program.

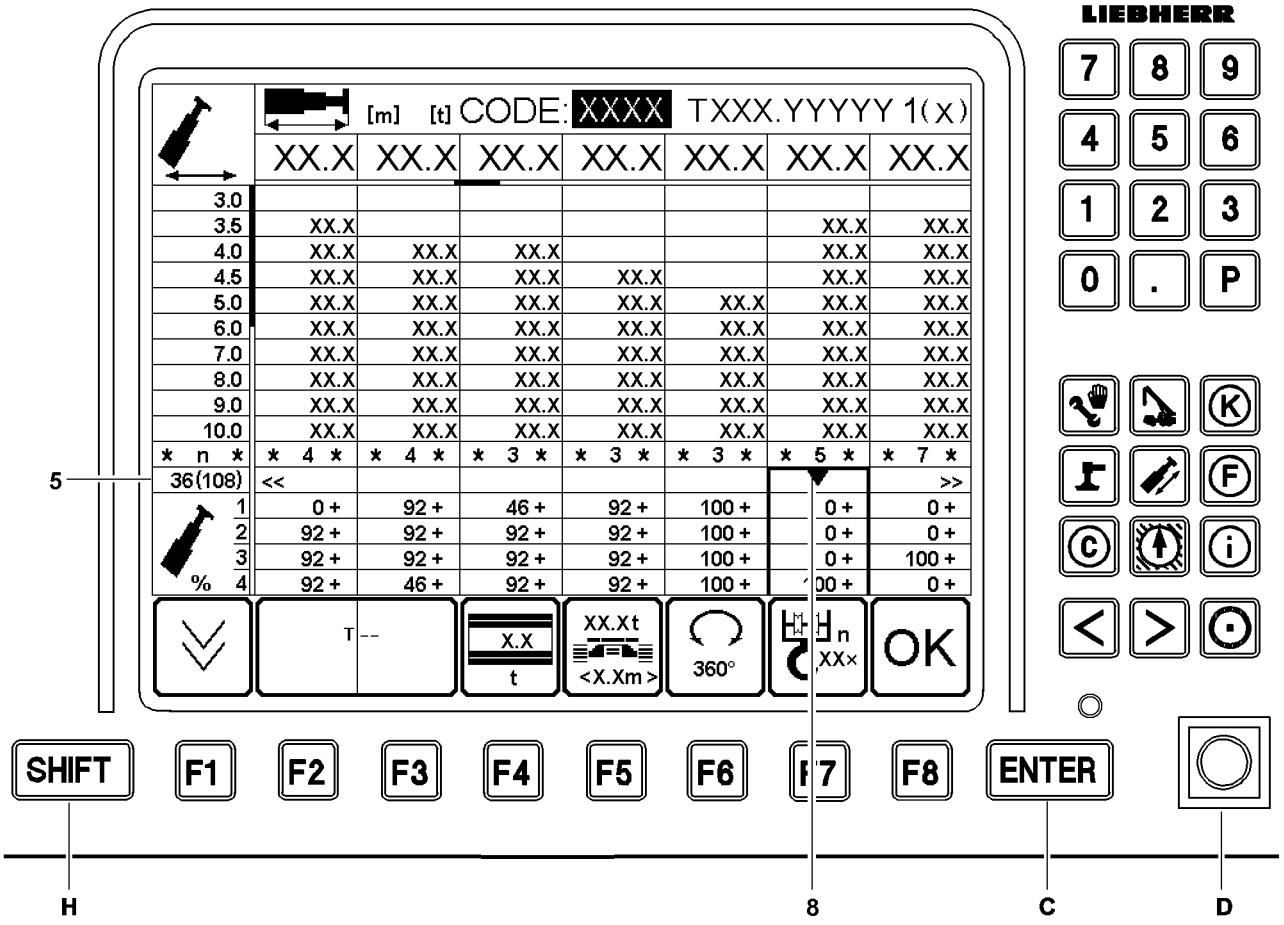
LIEBHERR
[m] [t] CODE: XXXX TXXX.YYYYY 1(x)
XX.X XX.X XX.X XX.X XX.X XX.X XX.X
3.0
3.5 XX.X XX.X XX.X
4.0 XX.X XX.X XX.X XX.X XX.X
4.5 XX.X XX.X XX.X XX.X XX.X XX.X
5.0 XX.X XX.X XX.X XX.X XX.X XX.X XX.X
6.0 XX.X XX.X XX.X XX.X XX.X XX.X XX.X
7.0 XX.X XX.X XX.X XX.X XX.X XX.X XX.X
8.0 XX.X XX.X XX.X XX.X XX.X XX.X XX.X
9.0 XX.X XX.X XX.X XX.X XX.X XX.X XX.X
10.0 XX.X XX.X XX.X XX.X XX.X XX.X XX.X
* n * * 4 * * 4 * * 3 * * 3 * * 3 * * 5 * * 7 *
36(108) << >>
1 0 + 92 + 46 + 92 + 100 + 0 + 0 +
2 92 + 92 + 92 + 92 + 100 + 0 + 0 +
3 92 + 92 + 92 + 92 + 100 + 0 + 100 +
% 4 92 + 46 + 92 + 92 + 100 + 0 + 0 +
T --
X.X
t
XX.Xt
<X.Xm>
360°
n
XXx
OK
SHIFT
F1
F2
F3
F4
F5
F6
F7
F8
ENTER
5
H
8
C
D

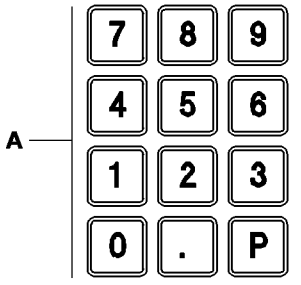
A
7 8 9
4 5 6
1 2 3
0 . P

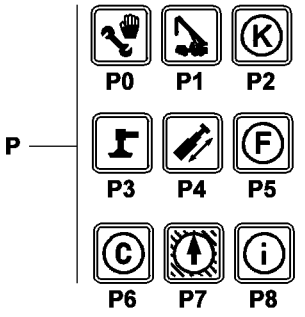
P
P0 P1 P2
P3 P4 P5
P6 P7 P8

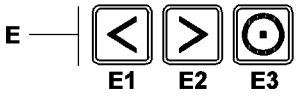
E
E1 E2 E3

B110332

5.3 Setting a new set up configuration and new hoist rope reeving

The selected and displayed set up configuration can be changed with the function keys or by entering the short code.

5.3.1 Setting a new set up configuration with the function keys

- ▶ Press function key “F2” until the desired main geometry status is selected.
- ▶ Press function key “F3” until the desired accessory status is selected.
- ▶ Press function key “F4” until the desired counterweight is selected.
- ▶ Press function key “F5” until the desired support base is selected.
- ▶ Press function key “F6” until the desired turning area of the crane superstructure is selected.
- ▶ Press the “Enter” key.
- ▶ Check the set load chart.

5.3.2 Setting a new set up configuration with short code

The short code can be found in the load chart.

- ▶ Entering the 4-digit short code using the keypad **A**.
- ▶ Press the “Enter” key.

Result:

– The data of the selected load chart can be viewed.

Note:

For a more detailed description of the “Set up” program, see Crane operating instructions, chapter 4.02.

- ▶ Check the set load chart.

5.3.3 Setting a new hoist rope reeving

- ▶ Press function key “F7” until the desired reeving number is selected.

or

- ■ Press function keys “SHIFT” + “F7” until the desired reeving number is selected.

5.3.4 Checking and accepting the new set up configuration and hoist rope reeving

Check in the operating screen if the correct short code and the correct reeving number have been set.

- ▶ If the settings on the operating screen are correct:
  Press function key “F8” (O.K.).

Result:

– The “set up” program is terminated and the adjusted parameters are accepted for the newly started “Crane operation” program.

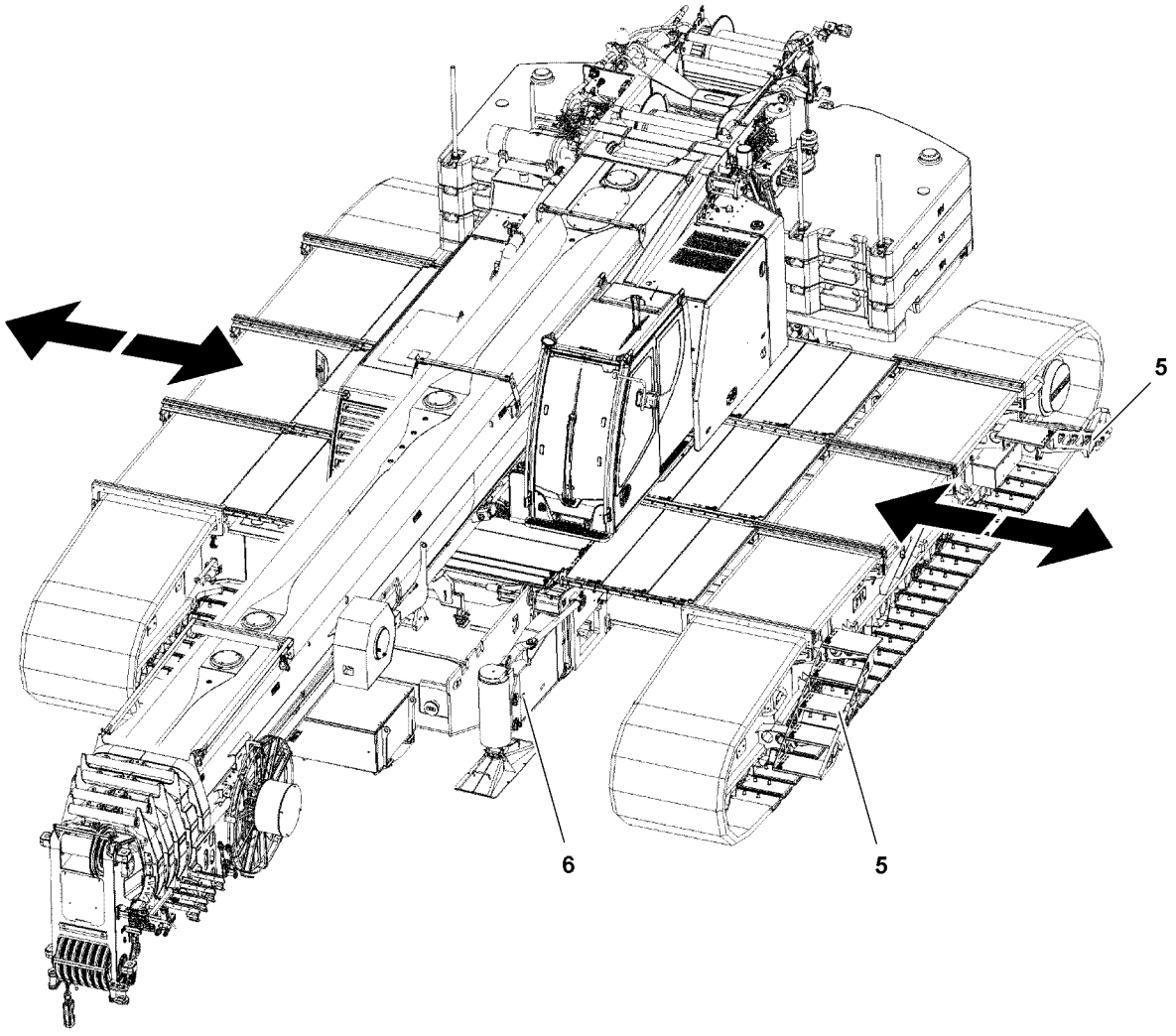

B116889

1 Adjusting the track width

DANGER
The crane can topple over!
The reduced or retracted track reduces the stability of the crawler crane. Due to operational errors during crane operation or driving, the crawler crane can topple over and fatally injure personnel.
- ▶ Crane operation and “driving the crawler with load” is permitted for reduced or retracted track, if **extra load charts** are programmed for this case.
- ▶ Crane operation and “driving the crawler with load” is strictly prohibited for reduced or retracted track, if **no extra load charts** are programmed for this case.

WARNING
Danger of accidents during track width adjustment!
When adjusting the track, the crawler carrier always moves with the lesser ground contact.
It is possible that the other crawler carrier is pushed away instead when extending a crawler carrier.
This can double the space requirement on one side.
Persons and objects standing too close can be caught by the crawler carrier.
In case of insufficient ground condition and ground contact, the crane can topple over.
- ▶ To extend the crawler on both sides, plan for the double sliding range as space requirement.
- ▶ In the adjustment range the ground condition and ground contact must be sufficient.

NOTICE
Danger of corrosion!
If the gliding surfaces of the track adjustment beams are not sufficiently greased, there is a danger of corrosion.
- ▶ If needed, clean and grease the gliding surfaces of the track adjustment beams, see Crane operating instructions, chapter 7.06.

NOTICE
Damage of cross carriers!
If the folding brackets **6** are not swung in before reducing the track width, then the cross carriers will be damaged during retraction.
- ▶ Make sure that the folding brackets **6** are swung in before reducing the track width, see Crane operating instructions, chapter 3.01.

NOTICE
Damage to steps!
Before changing the track of the crane from wide to reduced or narrow, the steps **5** must be installed on the crawler carrier.
When the steps are installed on the central ballast:
- ▶ Install the steps **5** on the crawler carrier, see Crane operating instructions, chapter 2.07.

Note
- ▶ The adjustment of the track width during travel is **not** possible with the Bluetooth™ Terminal (BTT) and radio remote control (BTT-E).
- ▶ The adjustment of the track width during travel is handled exclusively on the touch display (TE1) in the crane operator's cab.

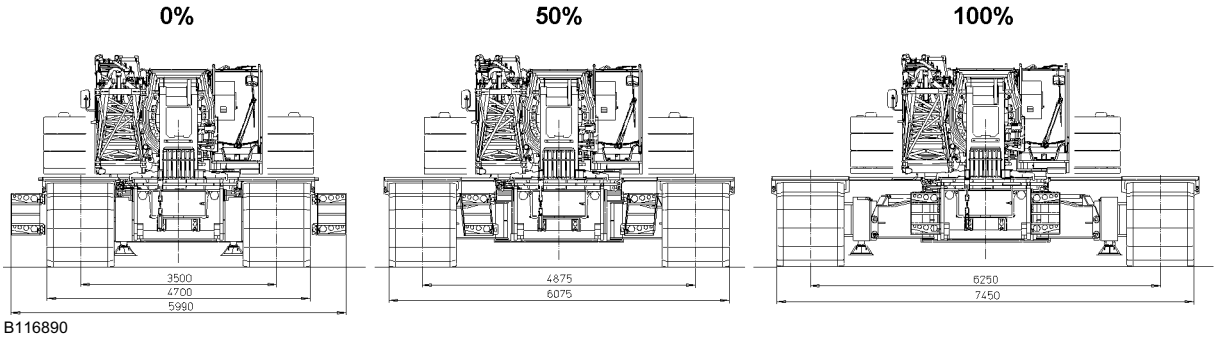

Track width adjustment: Extension conditions of cross carriers

Track width	Track width on LICCON monitor	Extension conditions BTT / LICCON monitor	
		Crawler carrier A	Crawler carrier B
Retracted	3.5 m	0 %	0 %
Reduced	4.9 m	50 %	50 %
Wide	6.3 m	100 %	100 %
Asymmetrical	4.9 m	0 %	100 %
		100 %	0 %

Definition of track width and extension conditions

Note

- ▶ The extension conditions of the cross carrier is displayed as percentage on the display on the Bluetooth™ Terminal (BTT), the radio remote control and on the LICCON monitor.
- ▶ The cross carriers are only pinned on extension conditions of 0 %; 50 %; 100 %.
- ▶ The extension conditions of the cross carriers / crawler carriers are specified in the load chart.
- ▶ Asymmetric extension condition: One crawler carrier is retracted, one crawler carrier is completely extended (wide).
- ▶ The pin points of the cross carriers are marked in percentages with tags on the cross carriers.

Make sure that the following prerequisites are met:

- The crane is within the permissible incline range.
- The crawler carriers may not sink into the ground.
- The ground is sufficiently level and load-bearing over the entire adjustment range.
- The ground is free of obstacles, such as rock edges or ground upheavals over the entire adjustment range.
- The telescopic boom is completely telescoped in and luffed down in the 0° position.
- All loads and lifting equipment have been set down.
- The hook block has been secured.
- The engine is running.

blank page!

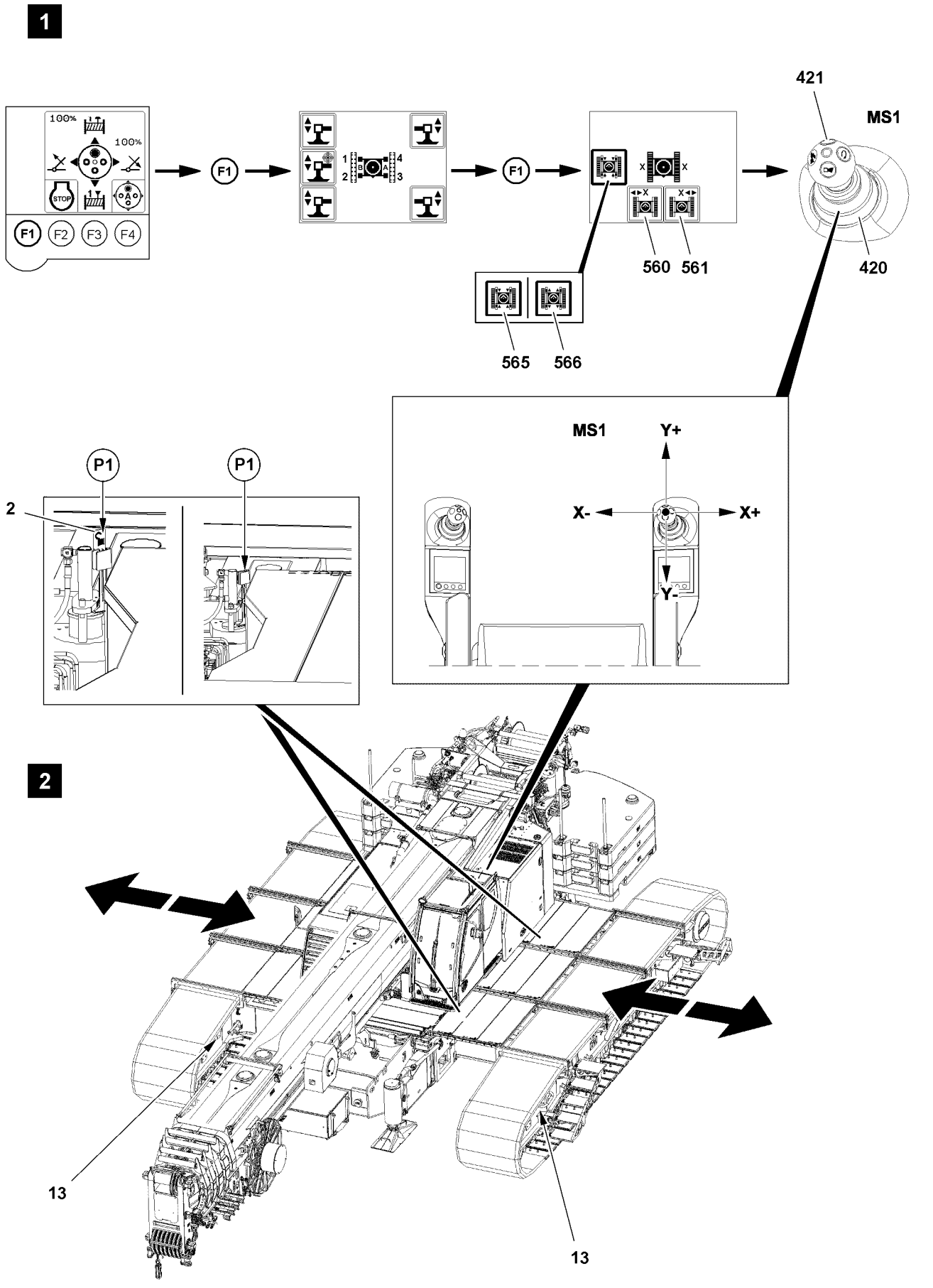
1
100%
100%
STOP
F1
F2
F3
F4
F1
F1
421
MS1
560
561
420
565
566
MS1
Y+
X-
X+
Y-
P1
P1
2
2
13
13

B116914

1.1 Adjusting the track width from the crane operator's cab

This section describes the adjustment of the track width with:

– Master switch MS1 and touch display right (TE1) in the crane operator's cab

Note

▶ While driving the crane from the crane operator's cab, you can adjust the track width simultaneously, see Crane operating instructions, chapter 4.10.

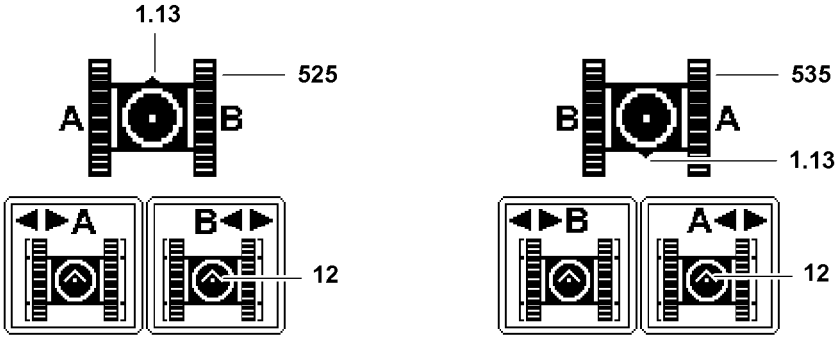

B117820

Note

Assignment of working direction and crawler carrier!

▶ Rear and front on the crawler track can be determined by the chain tension device **13** (chain tension side). The chain tension device **13** is on the front on the crawler track.

▶ In the “Crawler travel gear” menu the assignment of the crawler carriers on the touch display depends on the working direction of the crane. If the working direction of the crane is changed by turning the turntable from working direction “forward” to working direction “backward”, then the crane icon **525** changes to crane icon **535** - or vice versa.

▶ Arrow **12** shows the direction of view of the crane operator in the crane operator's cab: icon **560**, icon **561**, icon **565** and icon **566**.

▶ Crane icon **525**, turntable turned “to the front”: The triangle **1.3** shows the front on the crane chassis; assignment of the crawler carriers as seen by the crane operator in the crane operator's cab.

▶ Crane icon **535**, turntable turned “to the rear”: The triangle **1.3** shows the front on the crane chassis; assignment of the crawler carriers as seen by the crane operator in the crane operator's cab.

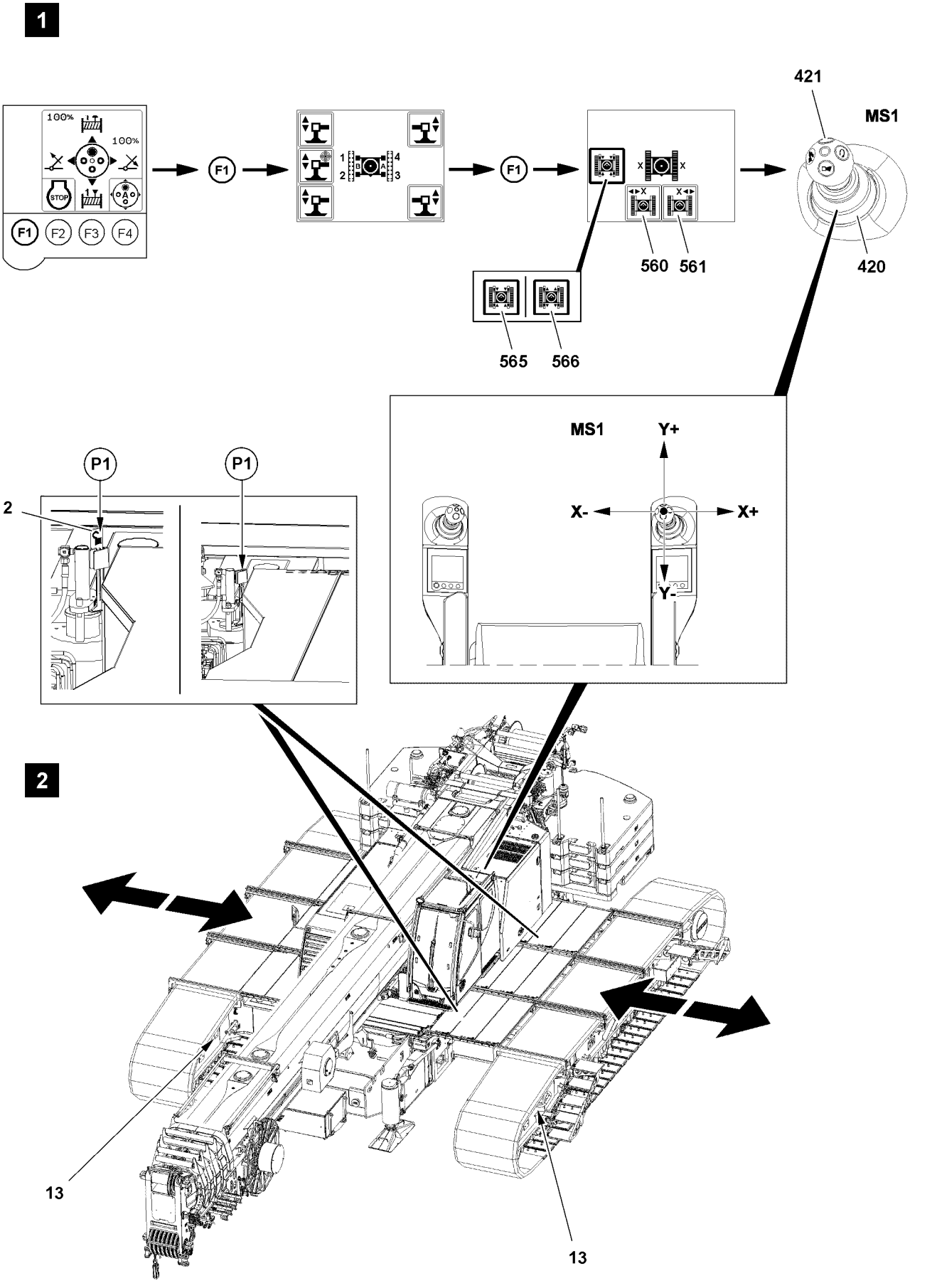
1
100%
100%
STOP
F1
F2
F3
F4
F1
F1
421
MS1
560
561
420
565
566
MS1
Y+
X-
X+
Y-
P1
P1
2
2
13
13

B116914

Note
Select / deselect icons in the touch display.
Touch functions are identified by the double border (empty frame) of the touch display icons. The function in the icon is selected / deselected with the press of a finger (“touch)” on the icon.
Example on the “Left track” icon **560**:
▶ “Left track” icon **560.1**: Left track deselected (not active), double border (empty frame) is visible.
▶ “Left track” icon **560.2**: Left track selected (active), double border is filled (frame filled).

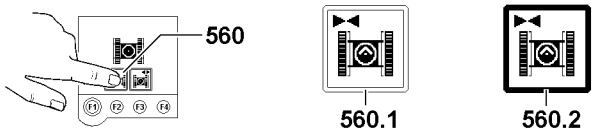

B114229

Ensure that the following prerequisite is met:
– On the TE1 the “Master switch configuration” menu is visible.

1.1.1 Unpinning the cross carrier

▶ Press the function key F1 **461**, see illustration **1**.
Result:
– The “Support” menu appears.

▶ Press the function key F1 **461**, see illustration **1**.
Result:
– The “Track width adjustment” menu appears.

▶ When icon **565** “Pin the cross carrier” is visible:
Activate “Unpin the cross carrier”: Select icon **565** (“touch”), see illustration **1**.
Result:
– Icon “unpin cross carrier” **566** is visible.

1.1.2 Selecting the crawler carrier

Before you retract or extend the crawler carrier, select one of the crawler carriers or both crawler carriers:
– Icon **560**
– Icon **561**

▶ Pay attention to crawler carrier assignment.
▶ Select the crawler carrier: Select icons (“touch”).
Result:
– Selected icon with filled out frame: Crawler carrier is selected.

1.1.3 Extending / retracting the crawler carriers

To unpin the cross carriers on points **P1**, you have to retract or extend the crawler carriers, see illustration **2**:
You can check on points **P1** if the pins are completely pinned or unpinned:
– The pins are unpinned: Tags **2** are visible.
– The pins are pinned: Tags **2** are **not** visible.

WARNING
Crushing danger due to adjustment of crawler carriers!
▶ Make sure that no personnel is within the danger zone of the crawler carriers during “track width adjustment”.

To initiate a movement, you have to release master switch MS1 **420** with the button **421**.
▶ Press the button **421** and hold.
▶ When “extending the crawler carrier”:
Move master switch MS1 **420** in direction X+.
▶ When “retracting the crawler carrier”:
Move master switch MS1 **420** in direction X-.

Result:
– The pins are unpinned.

Troubleshooting
Pins are not unpinned!
The pin is stuck: The position of the cross carrier prevents the pins from unpinning.
▶ Extend and retract the cross carrier again: Move master switch MS1 **420** in direction X+ or X- until the pins are completely unpinned.

▶ Make sure that the pins are completely unpinned on points **P1**, see illustration **2**.

Result:
– The pins are unpinned.
– The crawler carrier extends or retracts.

1.1.4 Pinning the cross carrier

▶ Before the cross carrier reaches one of the extension conditions of 0 %, 50 %, 100 %:
Activate “Pin the cross carrier”: Select icon **566** (“touch”), see illustration **1**.

Result:
– Icon **565** “pin cross carrier” is visible.
– The pins are pinned.

Troubleshooting
The pins are not pinned!
The pin is stuck: The position of the cross carrier prevents the pins from pinning.
▶ Extend and retract the cross carrier again: Move master switch MS1 **420** in direction X+ or X- until the pins are completely pinned.

▶ Make sure that the pins are completely pinned on points **P1**, see illustration **2**.

Result:
– The pins are pinned.
– The crawler carrier is secured.

blank page!

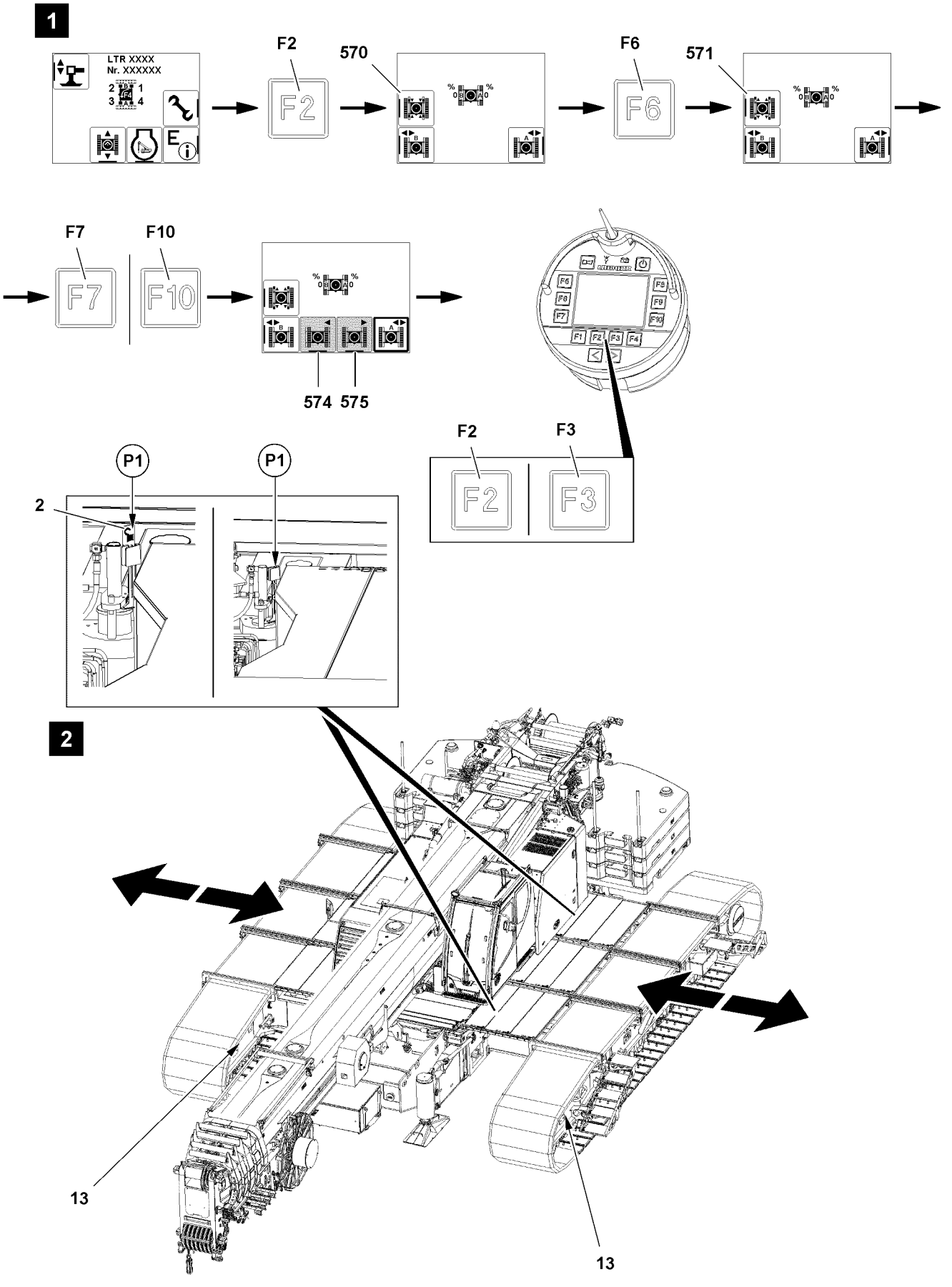
1
LTR XXXX
Nr. XXXXXX
F2
570
F6
571
F7
F10
574 575
F2
F3
P1
P1
2
2
13
13

B118097

1.2 Adjusting the track width with the Bluetooth™ Terminal

This section describes the adjustment of the track width with:

– Bluetooth™ Terminal (BTT)

Note

▶ To be able to carry out the individual functions, the 2-Hand keypad on the rear of the BTT must be pressed simultaneously.

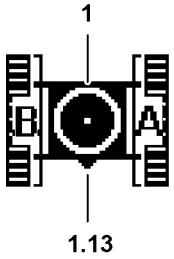

B117819

Note

Assignment of working direction and crawler carrier!

▶ Rear and front on the crawler track can be determined by the chain tension device **13** (chain tension side). The chain tension device **13** is on the front on the crawler track.

▶ The illustration of the crane icon **1** is **independent** from the working direction. Triangle **1.3** shows front on crane chassis.

▶ Crawler carrier **B** is in view “front” right.

▶ Crawler carrier **A** is in view “front” left.

Make sure that the following prerequisites are met:

– On the display of the BTT, the menu overview is visible.

– The BTT is aligned to the crane according to the arrow **1.13** in the crane icon **1**.

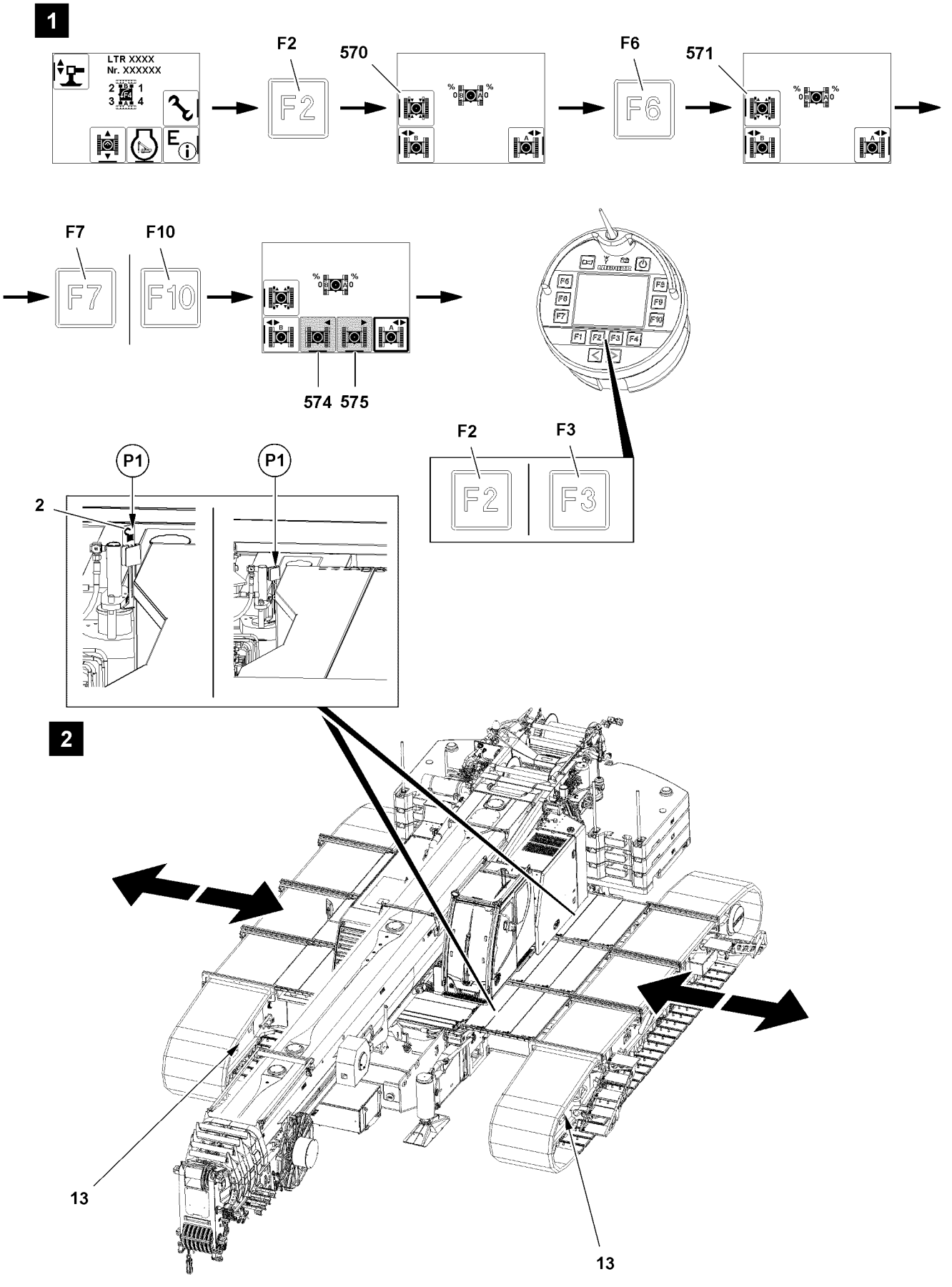
1
LTR XXXX
Nr. XXXXXX
F2
570
F6
571
F7
F10
574 575
F2
F3
P1
P1
2
2
13
13

B118097

1.2.1 Unpinning the cross carrier

▶ Open “Crawler travel gear” menu: Press the function key **F2**.

Result:

– Functions “Track width adjustment” are visible.

▶ When icon “Pin the cross carrier” **570** is visible:
Activate “Unpin the cross carrier”: Press the function key **F6**, see illustration **1**.

Result:

– Icon “Unpin the cross carrier” **571** appears.

1.2.2 Selecting the crawler carrier

Before you retract or extend the crawler carrier, select one of the crawler carriers or both crawler carriers:

– Function key **F7**
– Function key **F10**

Depending on which crawler carriers are selected, different icons for “retract crawler carrier” and “extend crawler carrier” appear, see Crane operating instructions, chapter 5.31.

▶ Select the crawler carrier: Press the function keys, see illustration **1**.

Result:

– Crawler carrier **A** selected: Icon “retract crawler carrier” **574** is visible on function key **F2**.
– Crawler carrier **A** selected: Icon “extend crawler carrier” **575** is visible on function key **F3**.

1.2.3 Extending / retracting the crawler carriers

To unpin the cross carriers on points **P1**, you have to retract or extend the crawler carriers, see illustration **2**.
You can check on points **P1** if the pins are completely pinned or unpinned:

– The pins are unpinned: Tags **2** are visible.
– The pins are pinned: Tags **2** are **not** visible.

WARNING
Crushing danger due to adjustment of crawler carriers!

▶ Make sure that no personnel is within the danger zone of the crawler carriers during “track width adjustment”.

▶ When “extending the crawler carrier”:
Press the function key **F3**.

▶ When “retracting the crawler carrier”:
Press the function key **F2**.

Result:

– The pins are unpinned.

Troubleshooting
Pins are not unpinned!
The pin is stuck: The position of the cross carrier prevents the pins from unpinning.
▶ Extend and retract the cross carrier again: Press the function keys until the pins are completely unpinned.

▶ Make sure that the pins are completely unpinned on points **P1**, see illustration **2**.

Result:
– The pins are unpinned.
– The crawler carrier extends or retracts.

1.2.4 Pinning the cross carrier

▶ Before the cross carrier reaches one of the extension conditions of 0 %, 50 %, 100 %: Activate “Pin the cross carrier”: Press the function key **F6**.

Result:
– Icon “pin cross carrier” **570** is visible.
– The pins are pinned.

Troubleshooting
The pins are not pinned!
The pin is stuck: The position of the cross carrier prevents the pins from pinning.
▶ Extend and retract the cross carrier again: Press the function keys until the pins are completely pinned.

▶ Make sure that the pins are completely pinned on points **P1**, see illustration **2**.

Result:
– The pins are pinned.
– The crawler carrier is secured.

blank page!

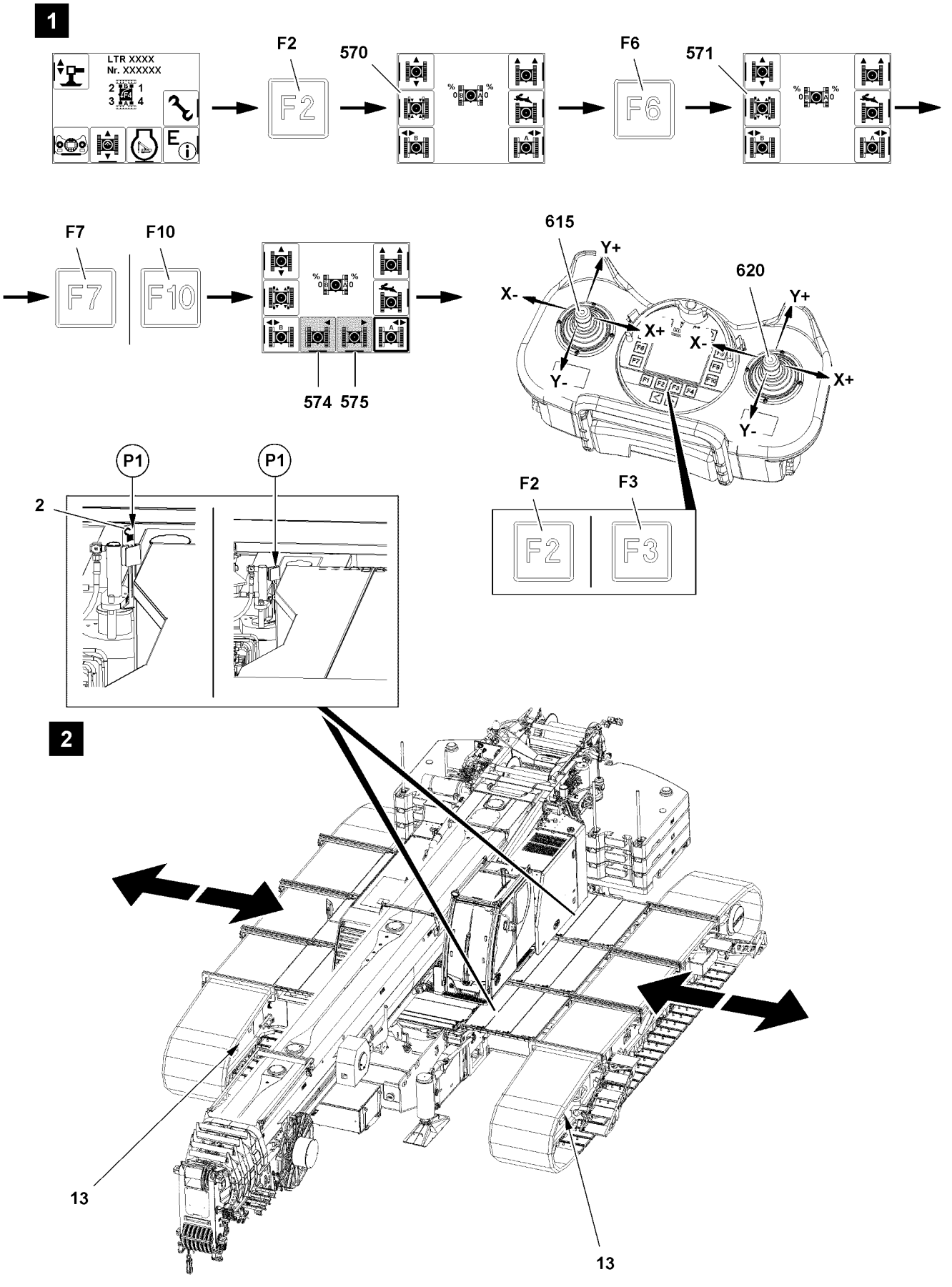
1
LTR XXXX
Nr. XXXXXX
F2
570
F6
571
F7
F10
574 575
615
Y+
X-
X+
Y-
620
Y+
X-
X+
Y-
F2
F3
P1
P1
2
2
13
13

B116913

1.3 Adjusting the track width with the radio remote control

This section describes the adjustment of the track width with:

– Radio remote control (BTT-E)

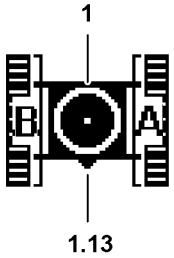

B117819

Note

Assignment of working direction and crawler carrier!

▶ Rear and front on the crawler track can be determined by the chain tension device **13** (chain tension side). The chain tension device **13** is on the front on the crawler track.

▶ The illustration of the crane icon **1** is **independent** from the working direction. Triangle **1.3** shows front on crane chassis.

▶ Crawler carrier **B** is in view “front” right

▶ Crawler carrier **A** is in view “front” left.

Make sure that the following prerequisites are met:

– On the display of the BTT-E, the menu overview is visible.

– The BTT-E is aligned to the crane according to the arrow **1.13** in the crane icon **1**.

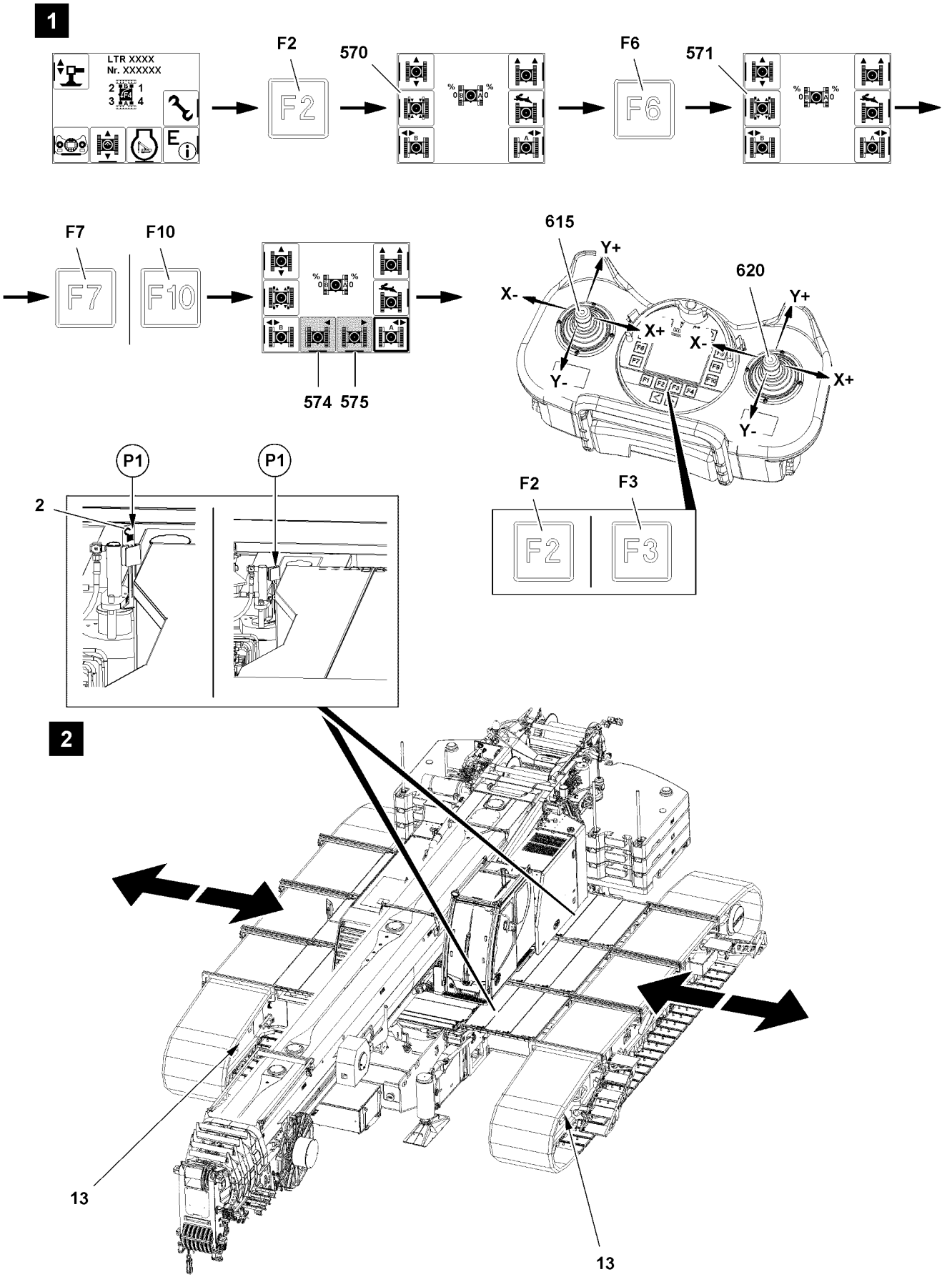
1
LTR XXXX
Nr. XXXXXX
F2
570
F6
571
F7
F10
574 575
615
Y+
X-
X+
Y-
620
Y+
X-
X+
Y-
F2
F3
P1
P1
2
2
13
13

B116913

1.3.1 Unpinning the cross carrier

▶ Open “Crawler travel gear” menu: Press the function key **F2**.

Result:

– Functions “Track width adjustment” are visible.

▶ When icon “Pin the cross carrier” **570** is visible:
Activate “Unpin the cross carrier”: Press the function key **F6**, see illustration **1**.

Result:

– Icon “Unpin the cross carrier” **571** appears.

1.3.2 Selecting the crawler carrier

Before you retract or extend the crawler carrier, select one of the crawler carriers or both crawler carriers:

– Function key **F7**
– Function key **F10**

Depending on which crawler carriers are selected, different icons for “retract crawler carrier” and “extend crawler carrier” appear, see Crane operating instructions, chapter 6.08.

▶ Select the crawler carrier: Press the function keys, see illustration **1**.

Result:

– Icon “retract crawler carrier” **574** is visible on function key **F2**.
– Icon “extend crawler carrier” **575** is visible on function key **F3**.

1.3.3 Extending / retracting the crawler carriers

To unpin the cross carriers on points **P1**, you have to retract or extend the crawler carriers, see illustration **2**.
You can check on points **P1** if the pins are completely pinned or unpinned:

– The pins are unpinned: Tags **2** are visible.
– The pins are pinned: Tags **2** are **not** visible.

WARNING
Crushing danger due to adjustment of crawler carriers!

▶ Make sure that no personnel is within the danger zone of the crawler carriers during “track width adjustment”.

The operation of the following manual control levers on the BTT-E is assigned depending on the selected crawler carriers:

– Both crawler carriers are selected: Manual control lever **615** or manual control lever **620**
– Left crawler carrier is selected: Manual control lever **620**
– Right crawler carrier is selected: Manual control lever **615**

▶ When “extending the crawler carrier”:
Deflect the manual control lever in direction X+.

or

■ Press the function key **F3**.

▶ When “retracting the crawler carrier”:
Deflect the manual control lever in direction X-.

or

■ Press the function key **F2**.

Result:
– The pins are unpinned.

Troubleshooting
Pins are not unpinned!
The pin is stuck: The position of the cross carrier prevents the pins from unpinning.
▶ Extend and retract the cross carrier again: Deflect the manual control levers on the BTT-E in direction X+ or X- or press function keys until the pins are completely unpinned.

▶ Make sure that the pins are completely unpinned on points **P1**, see illustration **2**.

Result:
– The pins are unpinned.
– The crawler carrier extends or retracts.

1.3.4 Pinning the cross carrier

▶ Before the cross carrier reaches one of the extension conditions of 0 %, 50 %, 100 %: Activate “Pin the cross carrier”: Press the function key **F6**.

Result:
– Icon “pin cross carrier” **570** is visible.
– The pins are pinned.

Troubleshooting
The pins are not pinned!
The pin is stuck: The position of the cross carrier prevents the pins from pinning.
▶ Extend and retract the cross carrier again: Deflect the manual control levers on the BTT-E in direction X+ or X- or press function keys until the pins are completely pinned.

▶ Make sure that the pins are completely pinned on points **P1**, see illustration **2**.

Result:
– The pins are pinned.
– The crawler carrier is secured.

blank page!

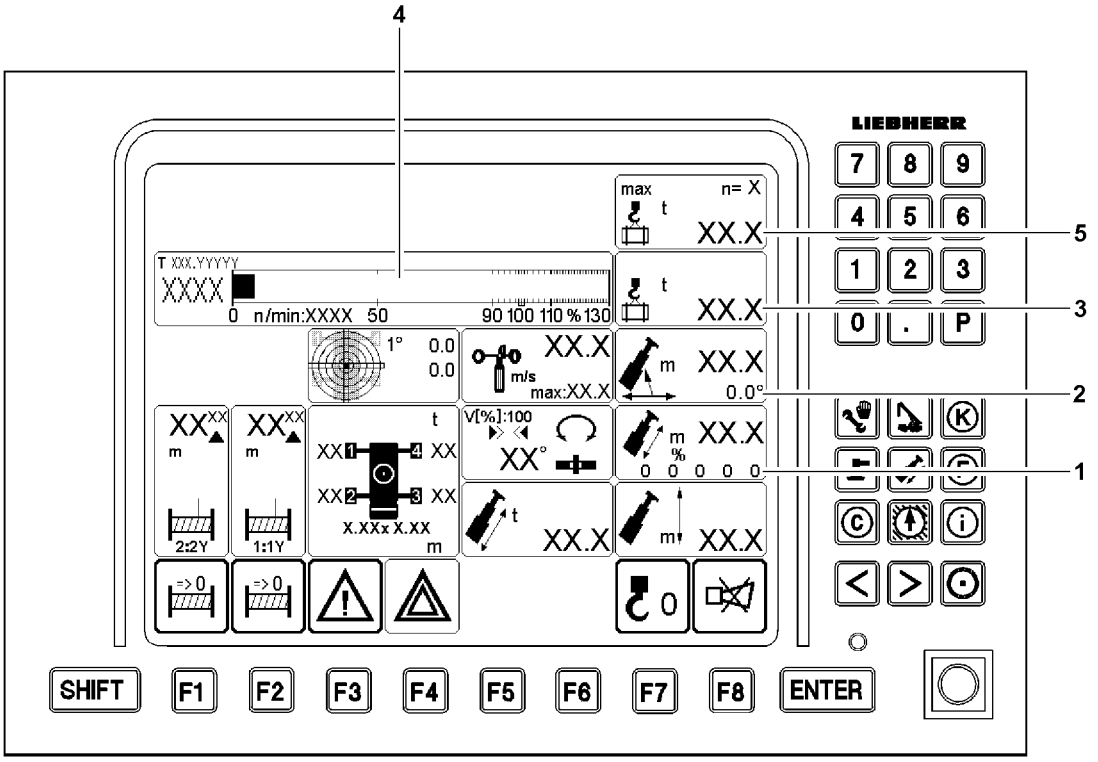
4
5
3
2
1
LIEBHERR
max
n= X
XX.X
T XXX.YYYYY
XXXX
0 n/min:XXXX 50
90 100 110 % 130
1°
0.0
0.0
m/s
max:XX.X
m
0.0°
V[%]:100
XX°
m
%
0 0 0 0 0
2:2Y
1:1Y
X.XXx X.XX
=> 0
SHIFT
F1
F2
F3
F4
F5
F6
F7
F8
ENTER

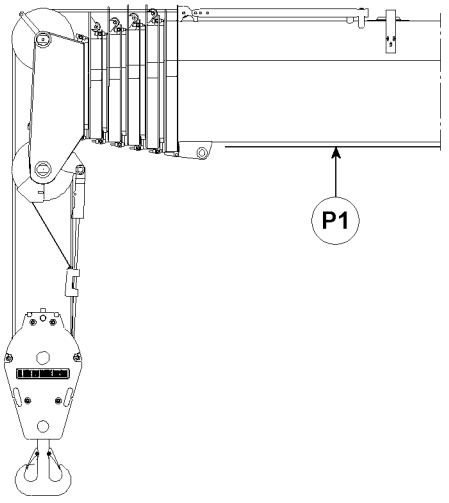
P1

B112697

1 General

The crane operator is obligated before every crane operation to ensure that the warning and safety devices are functioning.

WARNING
Danger of accident due to defective warning and safety systems!
If the crane is operated with defective warning and safety devices, then there is a danger of accidents!
Personnel can be killed or seriously injured!
This could result in property damage!
▶ Make sure that all warning and safety devices are functioning.
▶ Make sure that the overload protection is functioning.

2 Quick test Crane geometry

Make sure that the following prerequisites are met:
– The crane is properly supported and horizontally aligned.
– There is no load on the hook.

Note
▶ The horizontal alignment of the telescopic boom can be checked with a spirit level on point **P1**.

When the telescopic boom is completely telescoped in and horizontally aligned, the LICCON computer system must show the following:
– Display Extension status telescopes **1**: all values on 0 %
– Display Telescopic boom angle **2**: 0°

3 Quick test Overload protection

Lift a known weight completely, such as the hook block or a counterweight plate and then set it down.
Make sure that the following prerequisite is met:
– The crane is properly supported and horizontally aligned.

The respective displayed values must be plausible:
– Actual load display **3**
– Utilization bar **4** (ratio of value Actual load display **3** to maximum load value **5**)

4 LICCON computer system

The LICCON computer system is a system for controlling and monitoring mobile cranes. In addition to the LICCON overload protection (Load torque limiter = LMB), there are a number of application programs that can be used for controlling and monitoring the crane movements. For a detailed description see Crane operating instructions, chapter 4.02 and chapter 4.20.

4.1 LICCON overload protection

The LICCON overload protection is programmed to **shut off** the crane movements if the permissible load moment is exceeded (LMB-STOP).
The LICCON overload protection may not be used as an operational shut off device for crane movements of any kind.
An overload protection cannot detect all occurring conditions by itself. Careful and diligent crane operation by the crane operator is important.
The basis for the calculation of the utilization of the crane are:
– The currently data and values recorded by the crane control.
– The set up configuration entered by the crane operator.

Direct influence has, for example:
– Failure of a test device (for example: length sensor, angle sensor, pressure sensor).
– A set up configuration incorrectly entered by the crane operator.
– Environmental influences not considered (such as wind influence, ground with insufficient load bearing capability).
– Assembly and operating errors.

WARNING
Danger of accident due to assembly and operating errors!
Due to assembly and operating errors it is possible that the overload protection is not effective or shut off is delayed!
A set up configuration which deviates from the load chart cannot be detected by the overload protection!
Environmental influences which are not considered cannot be detected by the overload protection!
Dangerous situations and accidents can result!
Personnel can be killed or seriously injured!
This could result in property damage!
▶ Always assemble and operate the crane carefully!

WARNING
Operational utilization of the overload protection!
If the LICCON overload protection is utilized as an operational shut off device for crane movements, then there is a danger of accidents!
For example, crane movements can be shut off abruptly or uncontrolled!
The behavior of load and crane cannot be foreseen in such a case!
Personnel can be killed or seriously injured!
This could result in property damage!
▶ Do not use the LICCON overload protection as an operational shut off device for crane movements!

WARNING
Lifting of unknown loads!
The presence of the overload protection does not relieve the crane operator of his obligation for care and attention!
The crane may not only be operated according to the displays of the LICCON overload protection!
Lifting of loads with unknown weight and unknown properties can lead to accidents!
Personnel can be killed or seriously injured!

This could result in property damage!
▶ Before lifting a load, its weight and properties must be known to the crane operator!
▶ The crane operator must check with the load chart if the crane is able to carry out the work safely!

The LICCON computer system detects various values, which result in optical and acoustical warnings if exceeded:
Within the crane operator's cab:
– Acoustic warning “Horn / short horn” on the LICCON monitor
– Optical warning “Blinking value / display” on the LICCON monitor

Outside the crane operator's cab:
– Acoustic warning via the horn on the slewing platform
– Optical warning via the warning light on the slewing platform

All warnings, even those which do not lead to an immediate shut off must be noted by the crane operator and personnel within the danger zone.
The overload protection can **not** detect (examples of cases):
– The hooking of the load or the load suspension equipment.
– Excessive retarding forces.
– Loads falling onto the rope.
– Angular pulling.
– Driving the crane on ground with large slope.
– Collapsing ground.

4.1.1 Failure of the overload protection

WARNING
Crane operation without overload protection!
If the LICCON overload protection is no longer functioning properly because of one or more errors, then there is a danger of accidents if crane operation is continued!
Due to operation of the crane with failed LICCON overload protection, the crane can be overloaded and collapse!
Personnel can be killed or seriously injured!
This could result in property damage!
▶ Crane operation without overload protection is prohibited!
▶ Do not take up crane operation again until the overload protection is functioning again!

A failed overload protection:
– Must be repaired before the crane can be operated again.
– May only be bypasses in emergency cases or emergency situations.

4.2 Bypass of overload protection

The overload protection can be bypassed in case of:
– Failure of the overload protection.
– In an emergency situation (according to EN 13000:2010).

4.2.1 Bypass of overload protection: Failure of the overload protection

Note
▶ Does **not** apply for cranes with CE-mark and configuration according to EN 13000:2010!

To bring the crane into safe condition after failure of a component required for the overload protection, it can be necessary that the overload protection has to be bypassed.

WARNING
Bypassed overload protection!
If the overload protection is bypassed, crane movements are no longer monitored!
The crane can be overloaded and collapse!
Personnel can be killed or seriously injured!
This could result in property damage!
▶ Only carry out crane movements within the range of the load chart as well as the erection / take down charts!

Note
▶ For procedure in case of problems, see Crane operating instructions, chapter 7.15.
▶ For procedure of shut off of crane movement, see Crane operating instructions, chapter 4.20.

4.2.2 Bypass of overload protection: Failure of overload protection (according to EN 13000:2010)

To bring the crane into safe condition after failure of a component required for the overload protection, it can be necessary that the overload protection has to be bypassed.
With the specification that:
– The bypass is automatically reset at engine stop.
– The bypass is automatically reset after no later than 30 minutes.
– The bypass of the overload protection limits the working speed to no more than maximum 15 %.

WARNING
Bypassed overload protection!
If the overload protection is bypassed, crane movements are no longer monitored!
The crane can be overloaded and collapse!
Personnel can be killed or seriously injured!
This could result in property damage!
▶ Only carry out crane movements within the range of the load chart as well as the erection / take down charts!

Note
▶ For procedure in case of problems, see Crane operating instructions, chapter 7.15.
▶ For procedure of shut off of crane movement, see Crane operating instructions, chapter 4.20.

4.2.3 Bypass of overload protection: Emergency situation (according to EN 13000:2010)

In an emergency situation, a bypass of the overload protection may become necessary.
With the specification that:

– The bypass is automatically reset at engine stop.
– The bypass is automatically reset after no later than 30 minutes.
– The bypass of the overload protection limits the working speed to no more than maximum 15 %.

DANGER
Overload of crane!
After a bypass of the overload protection, the crane movements are no longer shut off in case of a danger of overload of the crane!
A bypass of the crane can result in severe damage or collapse!
Personnel can be killed or seriously injured!
This could result in property damage!

▶ Do not subject the crane to such a load that it collapses!
▶ Clear and secure the danger zone of the crane!

Note

▶ Location of bypass device, see Crane operating instructions, chapter 4.01 and chapter 4.02.

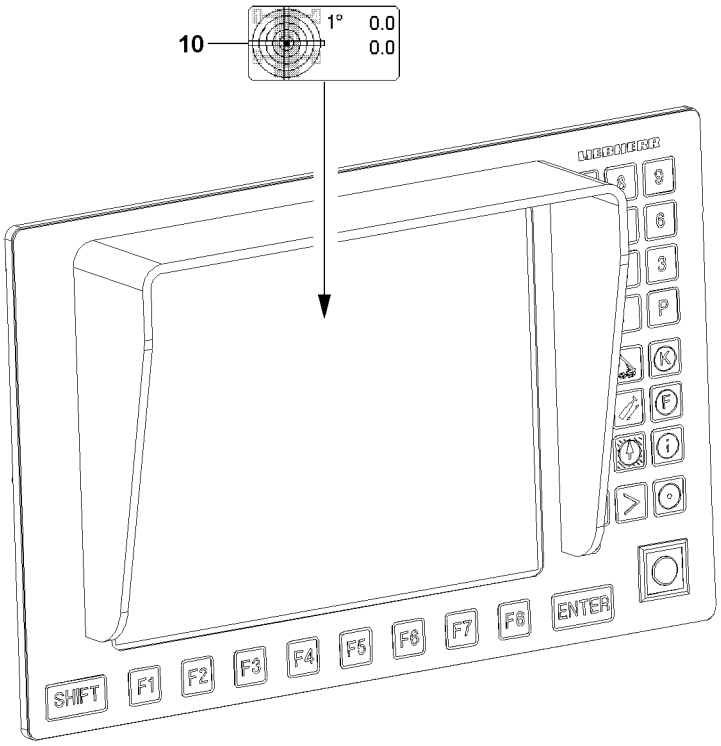
10
1°
0.0
0.0
LIEBHERR
SHIFT
F1
F2
F3
F4
F5
F6
F7
F8
ENTER

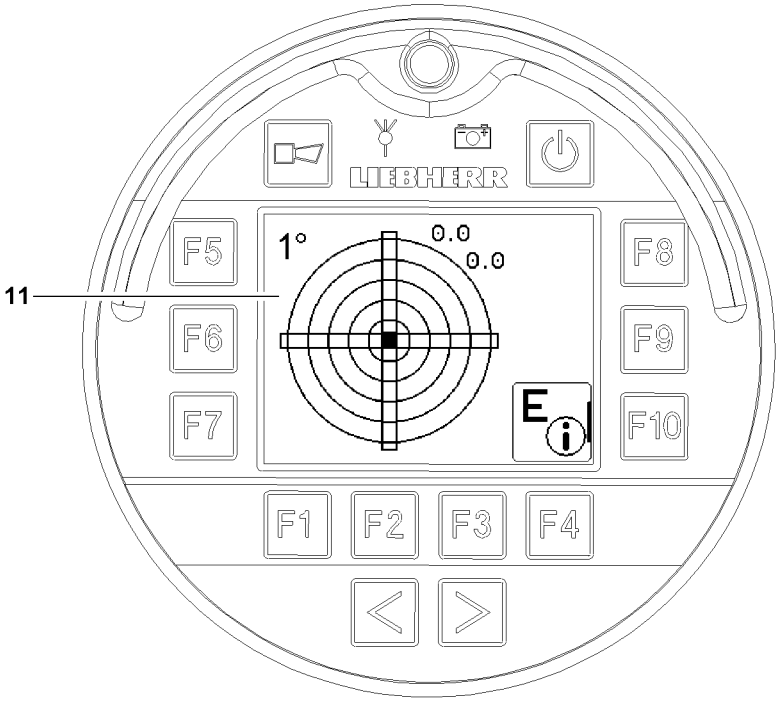
11
LIEBHERR
1°
0.0
0.0
F5
F6
F7
F8
F9
F10
E
F1
F2
F3
F4

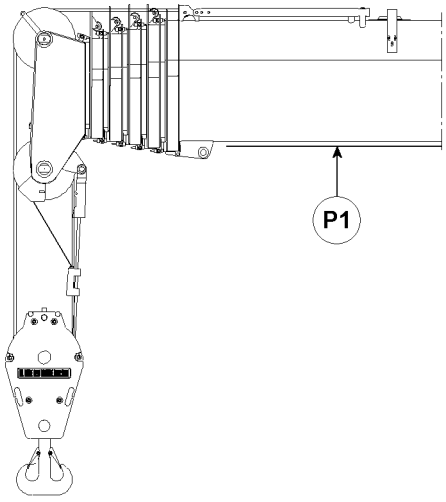
P1

B112699

5 Safety devices on the crane

5.1 Leveling instruments

To ensure the working safety of the crane, the crane must be aligned horizontally on level ground with sufficient load bearing capacity. Alignment of the crane, see Crane operating instructions, chapter 3.05.
The current values are displayed continuously in the leveling instruments, see Crane operating instructions, chapter 4.02 and chapter 5.31.
The maximum permissible deviation from the horizontal position of the crane is ± 0.5 % (± 0.3°).

WARNING
The crane can topple over!
If the leveling instruments are defective, there is a danger that the crane is not horizontally aligned!
A crane which is not horizontally aligned can topple over!
Personnel can be killed or seriously injured!
This could result in property damage!
▶ It is imperative that the crane is aligned in horizontal direction!

5.1.1 Leveling instruments in the LICCON monitor

The incline of the crane is shown in the Incline icon **10** graphically as well as numerically, see Crane operating instructions, chapter 3.05 and 4.02.

5.1.2 Leveling instrument in the BTT

The incline of the crane is shown in the Incline display menu **11** graphically as well as numerically, see Crane operating instructions, chapter 3.05 and 5.31.

5.1.3 Quick test Leveling instrument

Make sure that the following prerequisites are met:
– The crane is properly supported and horizontally aligned.
– There is no load on the hook.

For horizontally aligned crane:
– The telescopic boom must be aligned horizontally at telescopic boom angle 0° over the entire slewing range of the turntable.

Note
▶ The horizontal alignment of the telescopic boom can be checked with a spirit level on point **P1**.

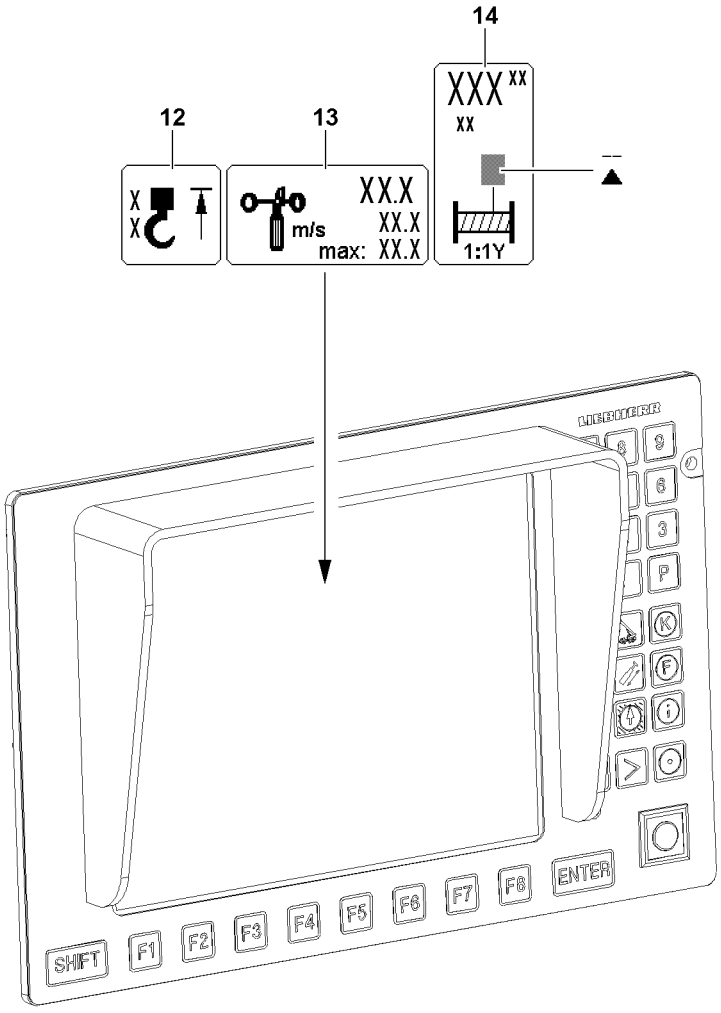
14
12
13
XXX XX
XX
XX
XX
m/s
XX.X
XX.X
max: XX.X
1:1Y
LIEBHERR
SHIFT
F1
F2
F3
F4
F5
F6
F7
F8
ENTER

B112700

5.2 Acoustic and optical warning devices

Note

▶ Overview of acoustic and optical warnings, see Crane operating instructions, chapter 4.20.

– The acoustic and optical warning devices must be functioning and operational.
– Take care of any possible detriments in function, such as snow on the warning lights.

5.3 Hoist limit switch “Hoist top”

The hoist limit switch is intended to prevent the hook block from running against the boom head.
Before every crane application, the function of the hoist limit switch must be checked by running against the switch weight with the hook block.
For installation purposes and in emergency cases, the hoist limit switch can be bypassed, see Crane operating instructions, chapter 4.20.

WARNING

Falling load and property damage!
If the hoist limit switch is defective, there is the danger that the hook block or the load hook is pulled against the pulley head!
Falling load and property damage can result!
Personnel can be severely injured or killed!

▶ Crane operation without or with defective hoist limit switch is prohibited!
▶ Repair or replace a defective hoist limit switch!

The hoist limit switch must actuate when the hoist limit switch weight is lifted by the load hook / hook block:

– When the hoist limit switch is actuated, the icon **12** “Hoist top” appears in the operating screen. The crane movements “Spool up winch”, “Luff telescopic boom down” and “Telescope the telescopic boom out” are shut off.

5.3.1 Quick test Hoist limit switch

When the hoist limit switch weight is lifted:

– The icon **12** “Hoist top” must appear in the operating screen.
– The actuated crane movement must be shut off.

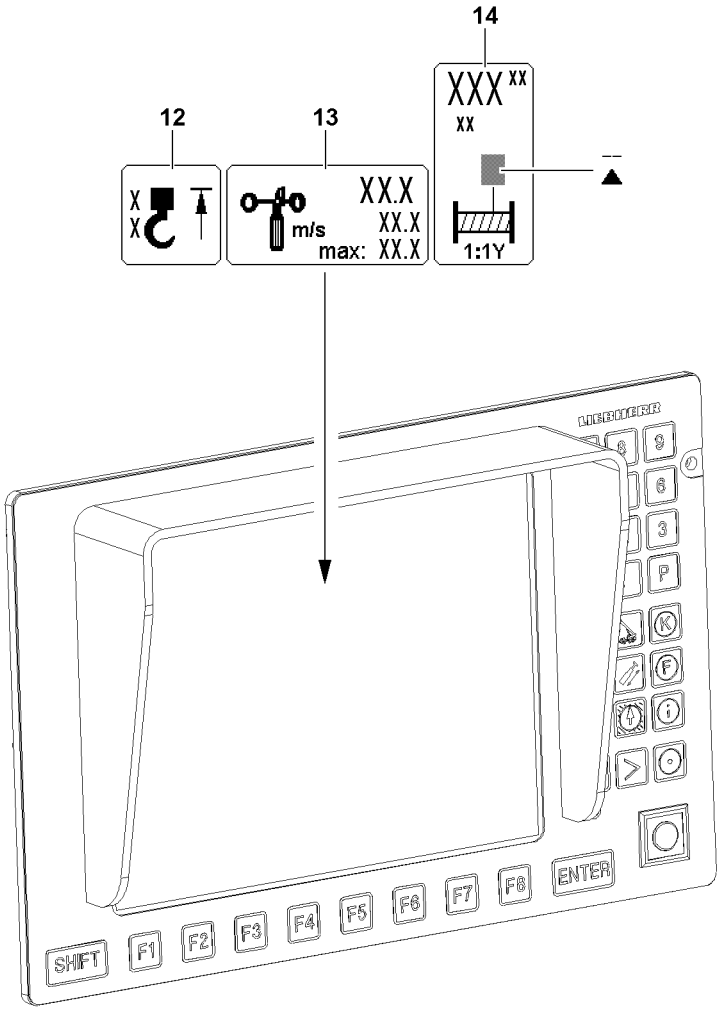
14
12
13
XXX XX
XX
XX
XX
m/s
XX.X
XX.X
max: XX.X
1:1Y
LIEBHERR
SHIFT
F1
F2
F3
F4
F5
F6
F7
F8
ENTER

B112700

5.4 Wind speed sensor

The wind warning by the warning speed sensor appears in the operating screen of the LICCON computer system.

WARNING
The crane can topple over!
If the crane is operated with a defective wind speed sensor, then there is the danger that excessively high wind speeds are not recognized!
The crane can topple over!
Personnel can be killed or seriously injured!
This could result in property damage!
- ▶ Crane operation with a defective wind speed sensor is prohibited!
- ▶ Repair / replace a defective wind speed sensor!

If wind occurs, then the wind speed sensor must report it speed:
- If the actual wind speed value exceeds the displayed maximum value, the value in the icon **13** “Wind speed” starts to blink and the acoustic alarm “Short horn” sounds on the LICCON monitor. But there is **no shut off** of crane movements.

5.4.1 Quick test Wind speed sensor

When blowing in the cups:
- The wind speed sensor must start to move.
- An actual value must be shown in the icon **13** “Wind speed”.

5.5 Limit switch winch spooled out

The winch turn sensor is adjusted in the factory. If used properly, the winch turn sensor will not need readjustment.

Note
Minimum rope coils on the shut off point!
- ▶ For the winches, a minimum of 4 rope coils are set on the winch turn sensor.

WARNING
The load can fall off!
If the winch turn sensor does not turn off when four minimum rope coils are reached, then there is the danger that the rope lock is pulled out and the load falls down when the rope is spooled out further!
Falling load can cause the crane to sway and / or topple over!
Personnel can be severely injured or killed!
This could result in property damage!
- ▶ Crane operation with an incorrectly or non-adjusted winch is strictly prohibited!
- ▶ If the winch falls below the four minimum rope coils, have the winch turn sensor readjusted by **Liebherr Service**!

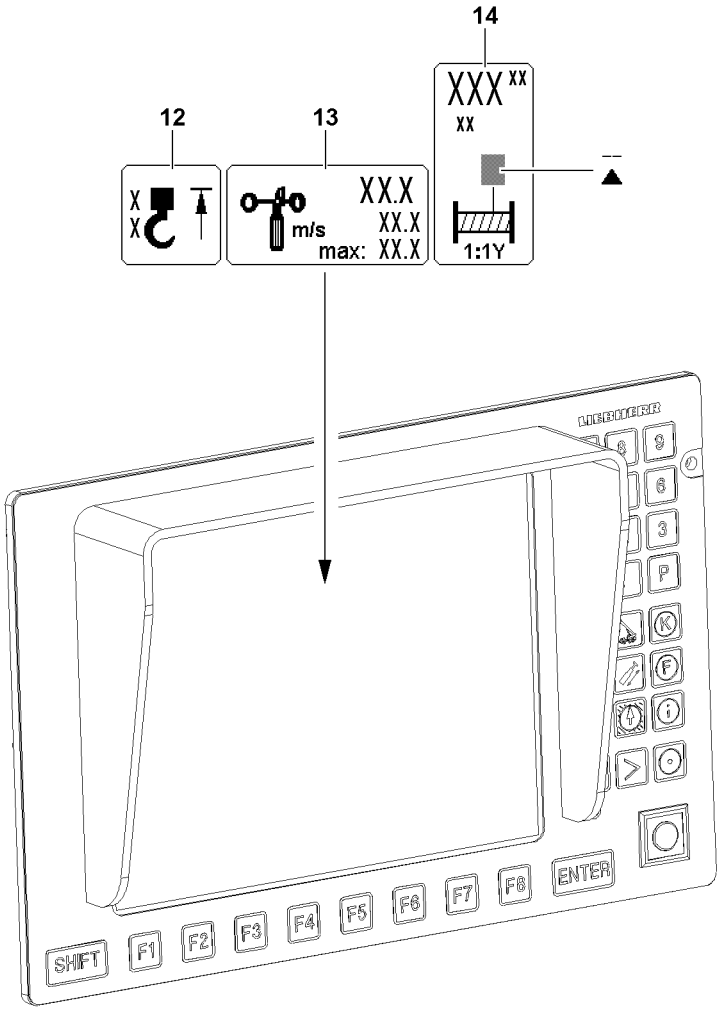
14
12
13
XXX XX
XX
XX
XX
m/s
XX.X
XX.X
max: XX.X
1:1Y
LIEBHERR
SHIFT
F1
F2
F3
F4
F5
F6
F7
F8
ENTER

B112700

WARNING
The load can fall off!
If the rope is not spooled up or out properly, then the adjustment of the winch turn sensor is changed!
If the adjustment of the winch turn sensor has changed, there is a risk that the minimum rope coils are fallen below!
The load call fall down!
Falling load can cause the crane to sway and / or topple over!
Personnel can be severely injured or killed!
This could result in property damage!

- ▶ **Never** pull the end of rope underneath the winch by spooling up the rope winch!
- ▶ **Never** pull the rope from the “stationary” winch!
- ▶ If you suspect that the winch turn sensor adjustment has changed: Check the shut off without a load on the hook!

The limit switch Winch spooled out must shut off when the minimum rope coils for the winch are reached:

– When the minimum rope coil for the winch is reached, then the display “Winch spooled out” appears in the Winch icon **14**. The crane movement “Spool winch out” is shut off.

5.5.1 Quick test Limit switch winch

When the minimum rope coil is reached:

– The display “Winch spooled out” must appear in the Winch icon **14**.
– The crane movement “Spool winch out” must be shut off.

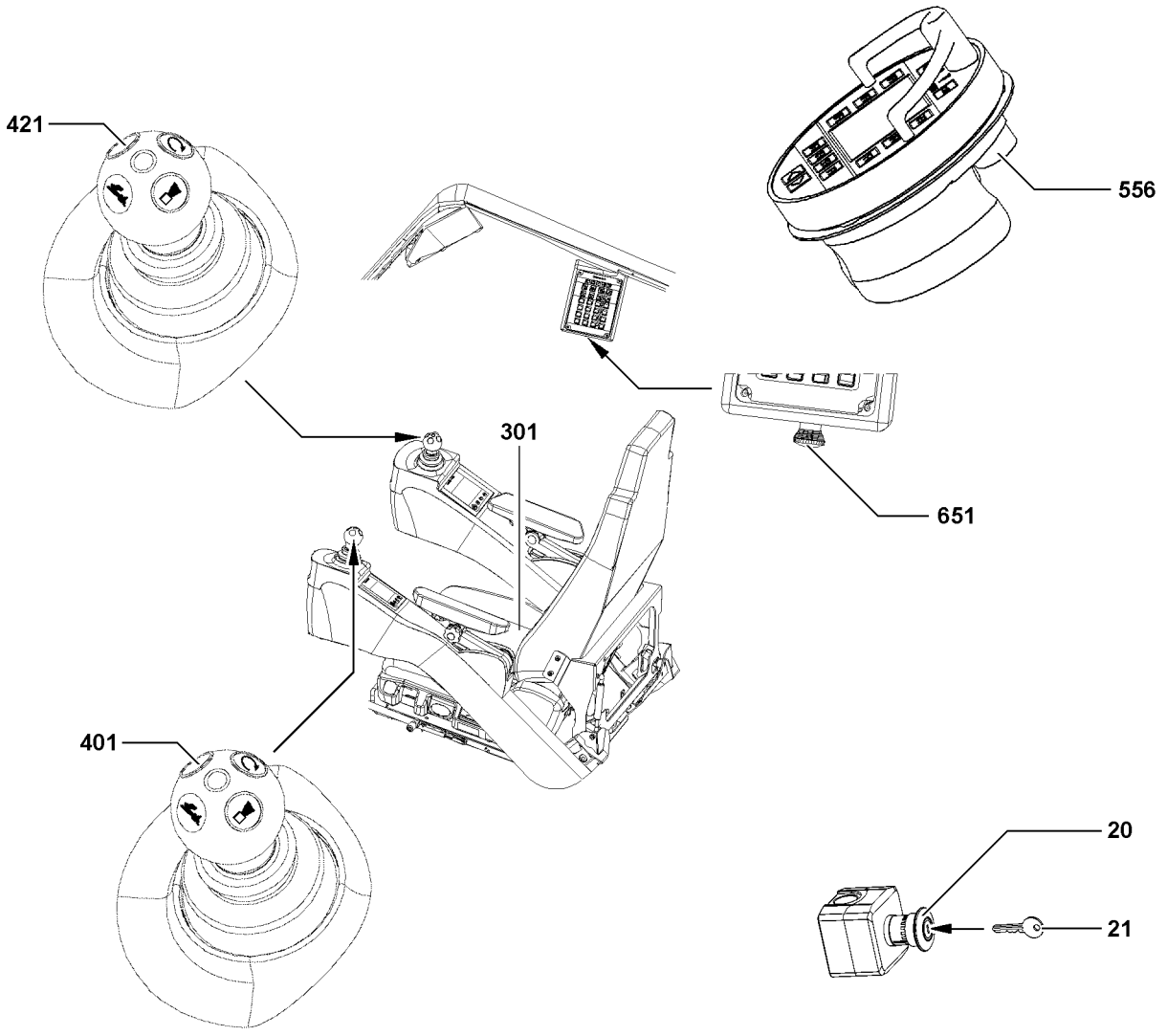

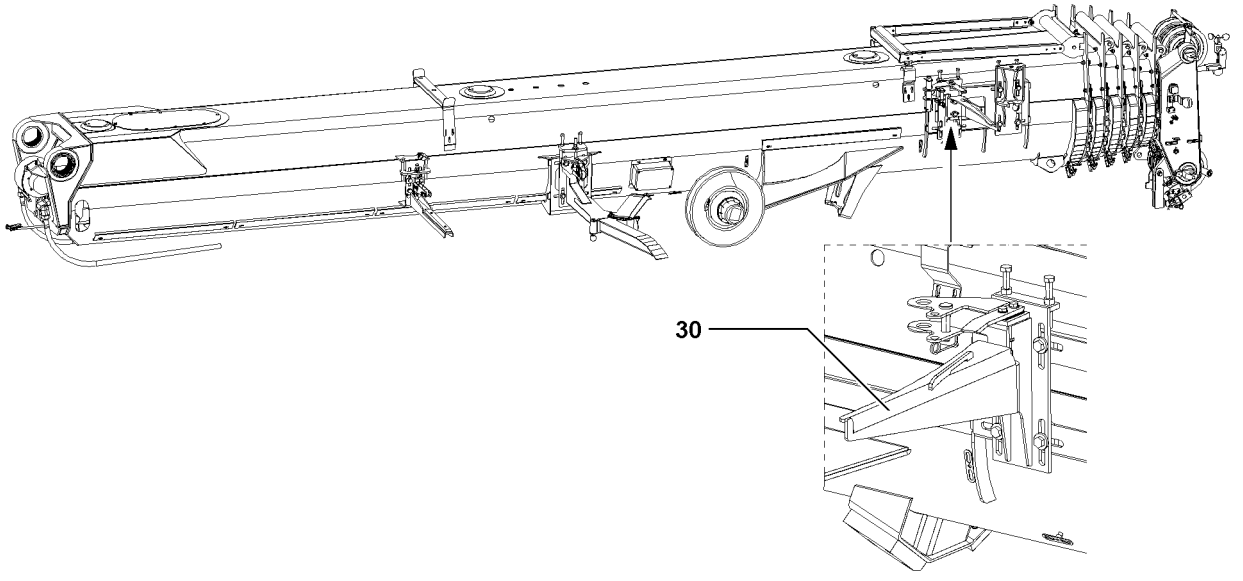

B112698

5.6 EMERGENCY STOP switch / EMERGENCY OFF switch

If an EMERGENCY STOP switch / EMERGENCY OFF switch is actuated, then every carried out movement can be stopped immediately.

WARNING
Defective EMERGENCY STOP switch / EMERGENCY OFF switch!
If the crane is operated with a defective EMERGENCY STOP switch / EMERGENCY OFF switch, then the movement cannot be stopped by actuating the EMERGENCY STOP switch!
This could result in accidents!
Personnel can be killed or seriously injured!
This could result in property damage!
- ▶ Crane operation with a defective EMERGENCY STOP switch / EMERGENCY OFF switch is prohibited!
- ▶ Repair or replace a defective EMERGENCY STOP switch / EMERGENCY OFF switch!

NOTICE
Operational actuation of the EMERGENCY STOP switch / EMERGENCY OFF switch
Actuation of the EMERGENCY STOP switch / EMERGENCY OFF switch causes the crane movement to shut off abruptly!
Abrupt shut off of the crane movement can cause the load to swing!
Swinging loads can cause accidents!
- ▶ Do not use the EMERGENCY STOP switch / EMERGENCY OFF switch operationally!
- ▶ Use the EMERGENCY STOP switch / EMERGENCY OFF switch only in emergency situations!

The EMERGENCY STOP switch / EMERGENCY OFF switch is available in three versions:
- After actuation of a switch of version* **20**, the release is only obtained by an authorized person with key **21** and by subsequently turning the ignition “Off - On” momentarily.
- After actuation of the switch **651**, the release is obtained by turning and unlocking the knob and subsequently turning the ignition “Off - On” momentarily.
- After actuation of the switch **556**, the release is obtained by turning and unlocking the knob and subsequently turning the ignition “Off - On” momentarily.

Note
- ▶ The switch **556** on the BTT is only activated when working with the BTT.

5.6.1 Quick test EMERGENCY STOP switch / EMERGENCY OFF switch

After actuation of the EMERGENCY STOP switch / EMERGENCY OFF switch:
- The crane movements must be shut off.
- No crane movements must be possible until the release was issued by turning and unlocking the knob and then turning the ignition “Off - On” momentarily.

5.7 Control release

The control release can be made via three switches:
- Seat contact button **301**
- Button **401** Master switch MS1 (right control console)
- Button **421** Master switch MS2 (left control console)

The seat contact button **301** shuts down the crane control as soon as the crane operator gets up from the seat.
This prevents unintended crane movements by accidentally touching the master switch, for example when getting in or out of the cab.
The button **401** and button **421** bypass the seat contact button **301** if it becomes necessary for the operator to work standing up.

5.8 Catch bar

Note
▶ Only for cranes with folding jib.

The catch bar **30** on the telescopic boom pivot section is a mechanical safety device!

WARNING
Danger of fatal injuries due to toppling folding jib!
Due to incorrectly installed, damaged or non-existing catch bar **30** on the telescopic boom pivot section, the folding jib can fall down - in case of an installation error!
Personnel can be hit and killed or seriously injured!
This could result in property damage!
▶ Before folding jib assembly make sure that the catch bar **30** has been installed properly on the telescopic boom pivot section and that it is not damaged!
▶ The catch bar **30** is a mechanical safety device. For that reason, it is prohibited to change the catch bar **30** and its installation in any way!

5.9 Hydraulic safety valves

A differentiation is made between three types:
– Pressure relief valves
  • Prevent pipe and hose bursts due to excessive pressure.
– Shut off valves
  • Control and secure the luffing cylinder and the support cylinders.
– Check valves
  • Control and secure the flow direction.

5.10 Limit switch Boom system

WARNING
Danger of toppling or destroying the crane!
If the crane movement is stopped by the block limit switches, then the load forces cannot be absorbed and calculated by the control!
The crane can be overloaded and topple over!
Personnel can be hit and killed or seriously injured!
This could result in property damage!
▶ Do **not** use the hoist limit switch as an operational shut off device!
▶ Do not actuate the block limit switches!

5.11 Limit switch Telescopic boom

On the telescopic boom, the limit switches monitor the “steepest position” and the “lowest position”.

5.12 Limit switch Luffing accessories

Note
▶ Only for cranes with luffing accessories

For operation with luffing accessories (for example a luffing lattice jib) limit switches monitor the “steepest position” and the “lowest position”.

5.13 Gravity actuated relapse retainer

Note

▶ Only for cranes with luffing accessories

The gravity actuated relapse retainer (oscillation guard / flap / relapse support) prevent luffing accessory from tipping to the rear in “steepest position”.

WARNING

The crane can topple over!

If the gravity actuated relapse retainer (oscillation guard / flap / relapse support) is hard to move, then it will no longer function.

Shut off and limit functions can be set out of service!

The crane can be overloaded and topple over!

Personnel can be killed or seriously injured!

This could result in property damage!

▶ Before erecting the crane, check the relapse retainer for easy movement!

▶ Crane operation with hard to move relapse retainer is prohibited!

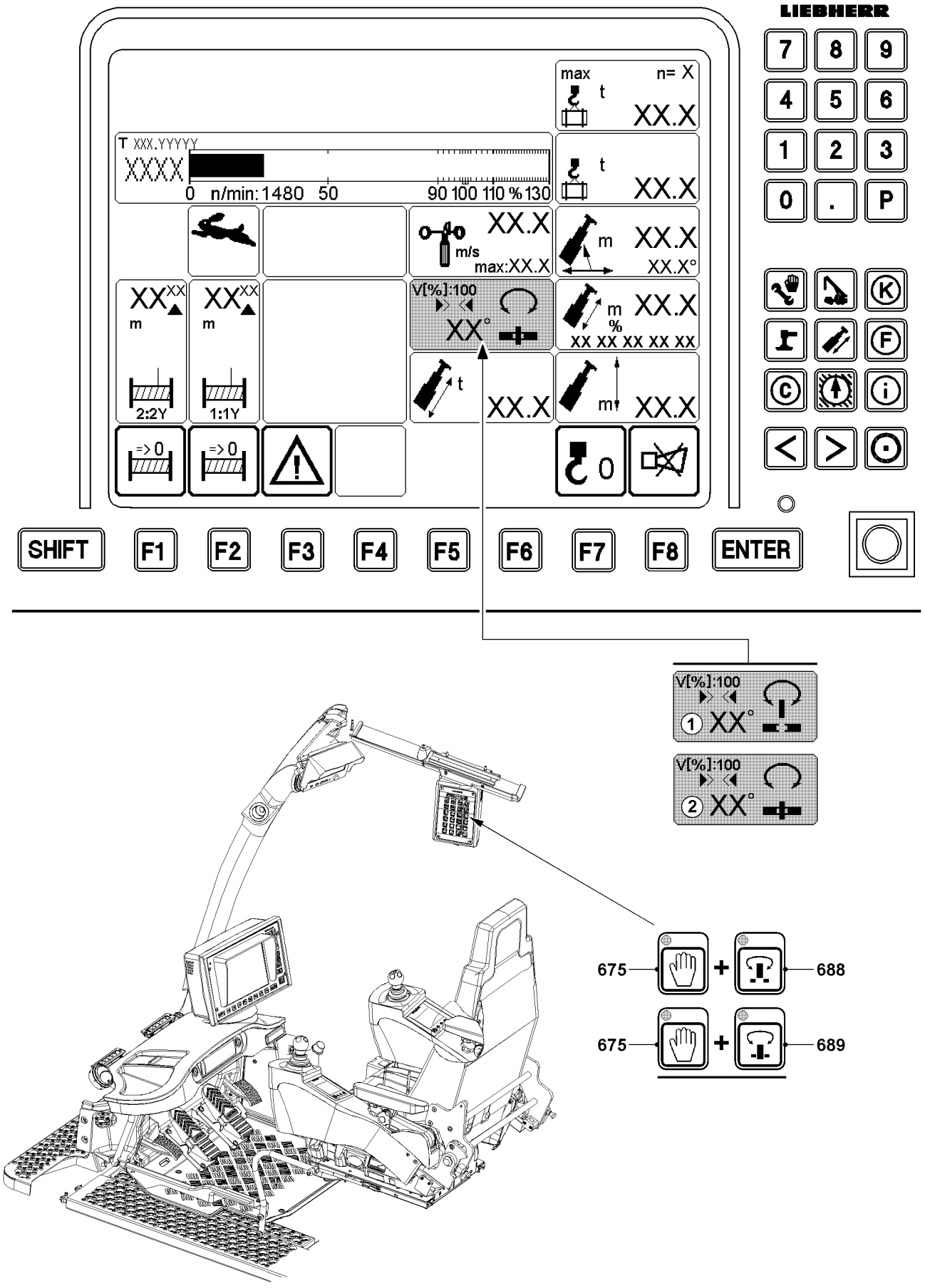
LIEBHERR
7 8 9
4 5 6
1 2 3
0 . P
max
n= X
t
XX.X
T XXX.YYYYY
XXXX
0 n/min: 1480 50 90 100 110 % 130
m/s
max:XX.X
m
XX.X°
V[%]:100
XX°
m
%
XX XX XX XX XX
2:2Y
1:1Y
=> 0
SHIFT
F1
F2
F3
F4
F5
F6
F7
F8
ENTER
675
688
675
689
B118304

1 General

Make sure that the following prerequisites are met:
- The crane is supported and aligned in horizontal direction according to the data in the load chart.
- The step at the entry of the crane operator's cab is moved out.
- The counterweight is attached and secured according to the data in the load chart.
- The crane engine is running.
- The hook block is correctly reeved as shown in reeving plan.
- All safety equipment has been adjusted according to the data in the load chart.
- There are no persons or objects in the danger zone.

Note
- ▶ In order to protect the crane and reduce the danger of accidents always use the master switch slowly and sensitively.
- ▶ Ensure that there are no obstacles in the working range of the crane and that there are no persons within the danger zone.
- ▶ Give a short warning signal (horn) before starting a crane movement.

1.1 Crane superstructure

1.1.1 Locking the crane superstructure

When “driving in equipped condition”, mechanically lock the crane superstructure to the crane chassis.

Note
LICCON overload protection
- ▶ The release of LICCON overload protection is only issued when the crane superstructure is properly locked to the crane chassis.
- ▶ The locking / unlocking procedure the crane superstructure to the crane chassis is carried out with the operating and control unit (BKE) in the crane operator's cab, see Crane operating instructions, chapter 4.01.

- ▶ When the superstructure is unlocked:
  Activate the 2-hand button **675** (hand key) and then press button **689** until the LED on the button **689** continuously lights up and an acoustic signal sounds.

Result:
- The locking mechanism for the crane superstructure is locked.
- The icon **2** appears on the LICCON monitor.

1.1.2 Unlocking the crane superstructure lock

- ▶ When the superstructure is locked:
  Activate the 2-hand button **675** (hand key) and then press button **688** until the LED on the button **688** continuously lights up and an acoustic signal sounds.

Result:
- The locking mechanism for the crane superstructure is unlocked.
- The icon **1** appears on the LICCON monitor.

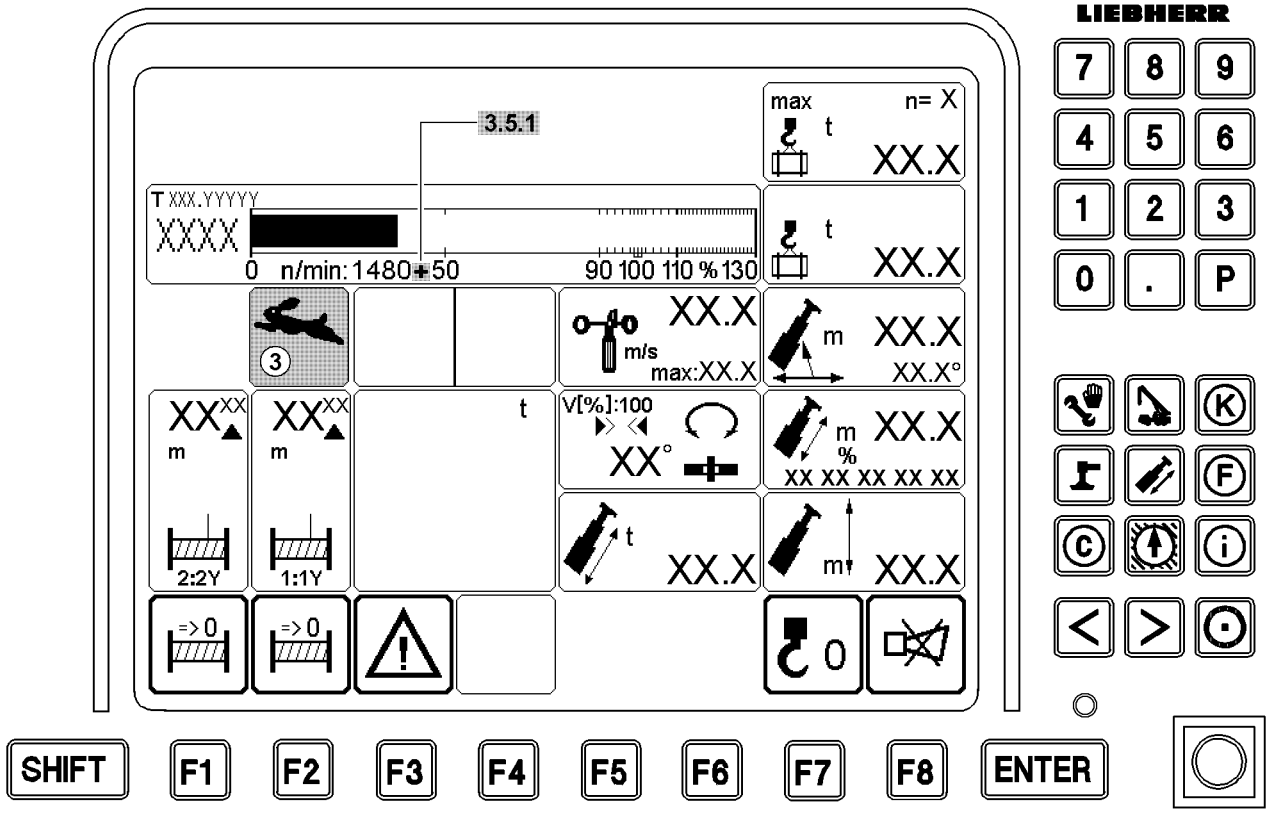
LIEBHERR
3.5.1
max
n= X
t
XX.X
T XXX.YYYYY
XXXX
0 n/min: 1480 50
90 100 110 % 130
m/s
max:XX.X
m
XX.X°
V[%]:100
XX°
%
XX XX XX XX XX
2:2Y
1:1Y
=> 0
7 8 9
4 5 6
1 2 3
0 . P
SHIFT
F1
F2
F3
F4
F5
F6
F7
F8
ENTER

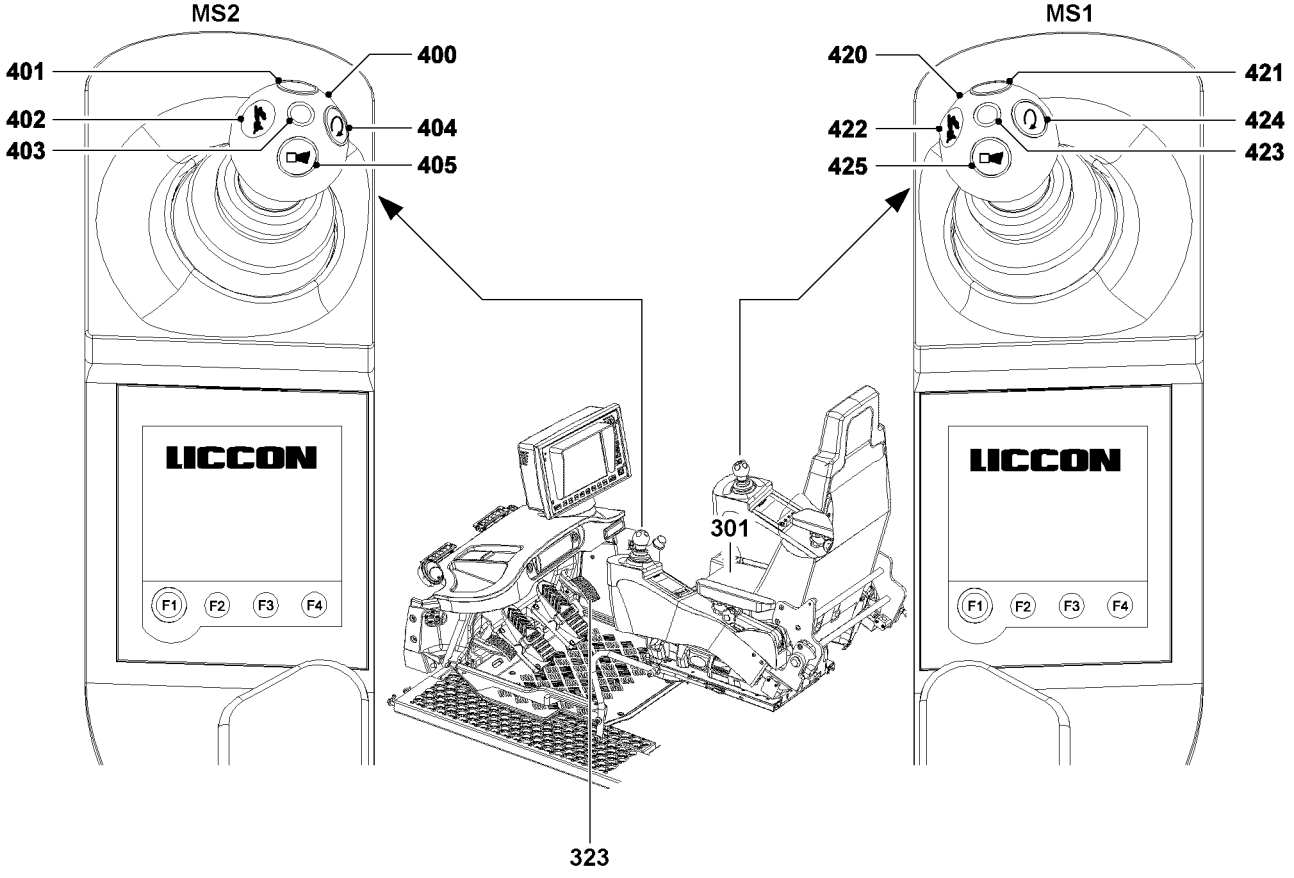
MS2
MS1
401
402
403
400
404
405
420
422
425
421
424
423
LICCON
F1
F2
F3
F4
301
323

B118305

1.2 Engine speed

1.2.1 Locking the engine rpm

Locking the engine rpm relieves the crane operator if he needs to work for an extended period with constant rpm. The engine regulation can be locked in any position.

▶ Press the pedal **323** down for the engine regulation until the desired rpm is reached.

▶ Press the button **404**.

or

■ Press the button **424**.

Result:

– The engine rpm is locked.

– The icon “+” **3.5.1** appears on the LICCON monitor.

1.2.2 Releasing the engine rpm lock

▶ When the engine rpm is locked:
Press the button **404**.

or

■ Press the button **424**.

Result:

– The engine rpm lock is revoked.

– The icon “**+** ” **3.5.1** turns off on the LICCON monitor.

1.3 Fast mode (Rapid gear)

1.3.1 Turning the rapid gear on

Using the button **402** or the button **422** will increase the speed of the crane movement for “luffing up” and “lift / lower”.

DANGER

Danger of accidents with 1 to 3 strand reeving!

▶ Do **not** turn the rapid gear on if the crane is loaded to more than 50 % of its maximum permitted load carrying capacity for the respective radius.

▶ Press the button **402**.

or

■ Press the button **422**.

Result:

– The rapid gear is turned on.

– The icon **3** appears on the LICCON monitor.

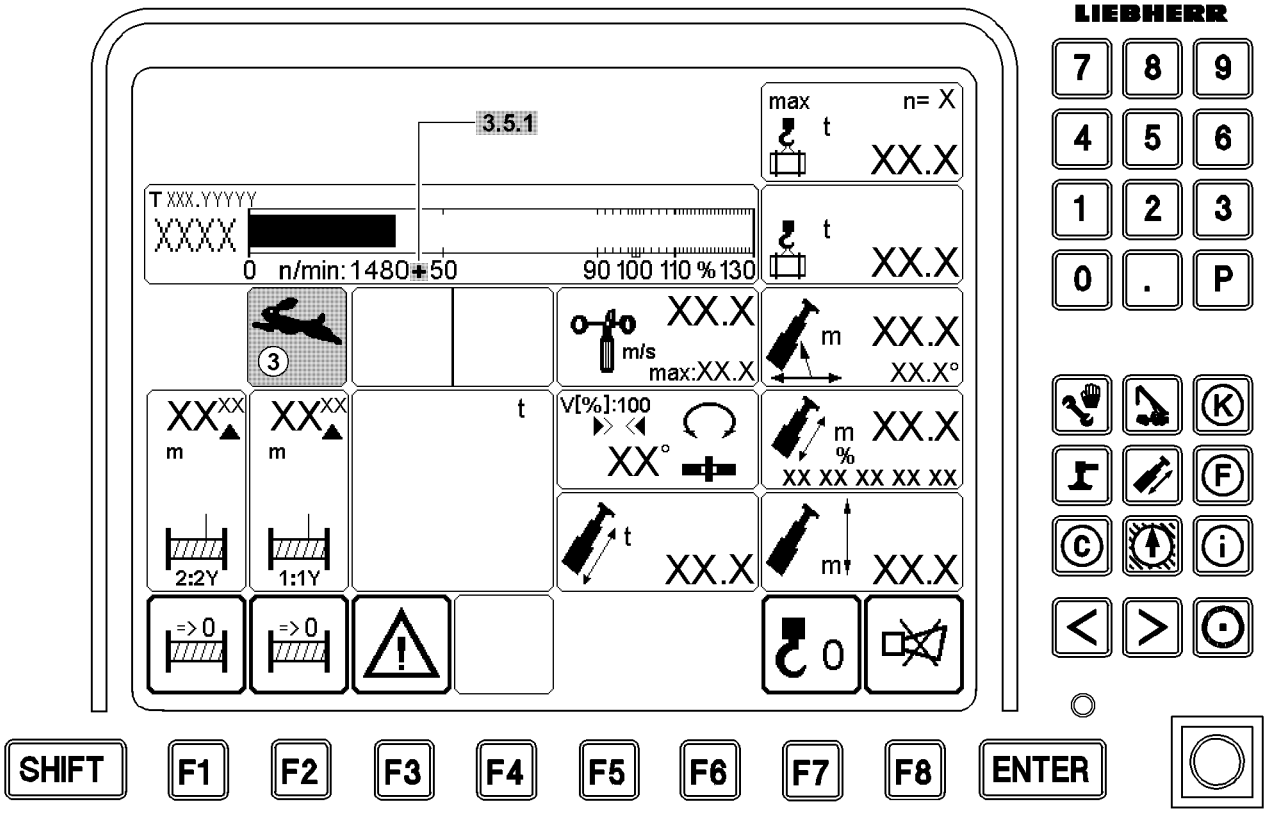
LIEBHERR
3.5.1
max
n= X
t
XX.X
T XXX.YYYYY
XXXX
0 n/min: 1480 50
90 100 110 % 130
m/s
max:XX.X
m
XX.X°
V[%]:100
XX°
%
XX XX XX XX XX
2:2Y
1:1Y
=> 0
SHIFT
F1
F2
F3
F4
F5
F6
F7
F8
ENTER

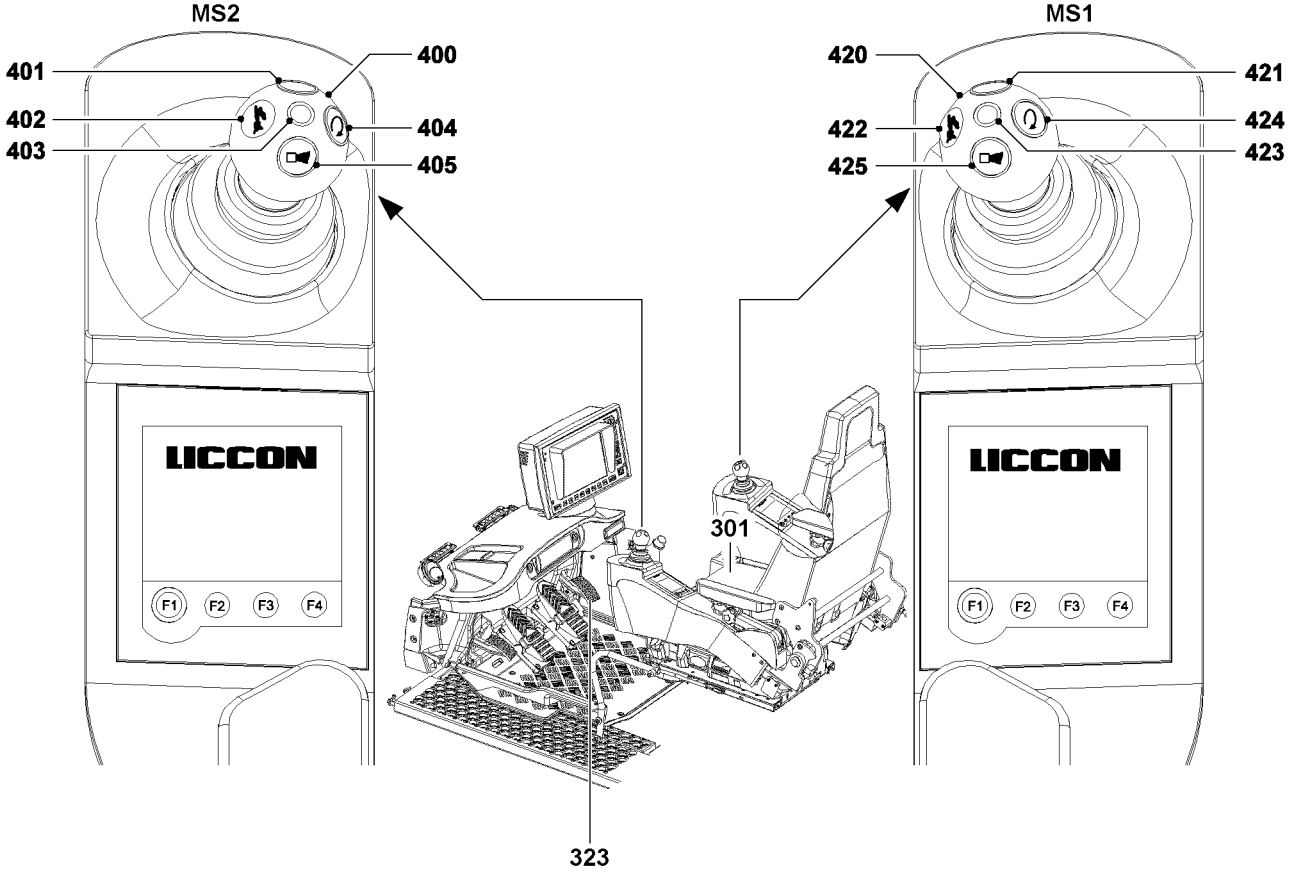
MS2
MS1
401
402
403
400
404
405
420
422
425
421
424
423
LICCON
F1
F2
F3
F4
301
323

B118305

1.3.2 Turning the rapid gear off

▶ When the rapid gear is turned on:
Press the button **402**.

or

■ Press the button **422**.

Result:

– The rapid gear is turned off.
– The icon **3** turns off on the LICCON monitor.

1.4 Vibration sensor

By adding the vibration sensor, a crane movements can be detected by vibration of the master switch. Make sure that the following prerequisite is met:

– The seat contact button **301** is actuated.

1.4.1 Winch 1

▶ Press the button **421**.

Result:

– The vibration sensor **423** is turned on.

▶ When the vibration sensor **423** is turned on:
Press the button **421**.

Result:

– The vibration sensor **423** is turned off.

1.4.2 Winch 2 or slewing gear

If winch 2 and the slewing gear are operated, the vibration sensor **403** will react to the first deflecting movement.

▶ Press the button **401**.

Result:

– The vibration sensor **403** is turned on.

▶ When the vibration sensor **403** is turned on:
Press the button **401**.

Result:

– The vibration sensor **403** is turned off.

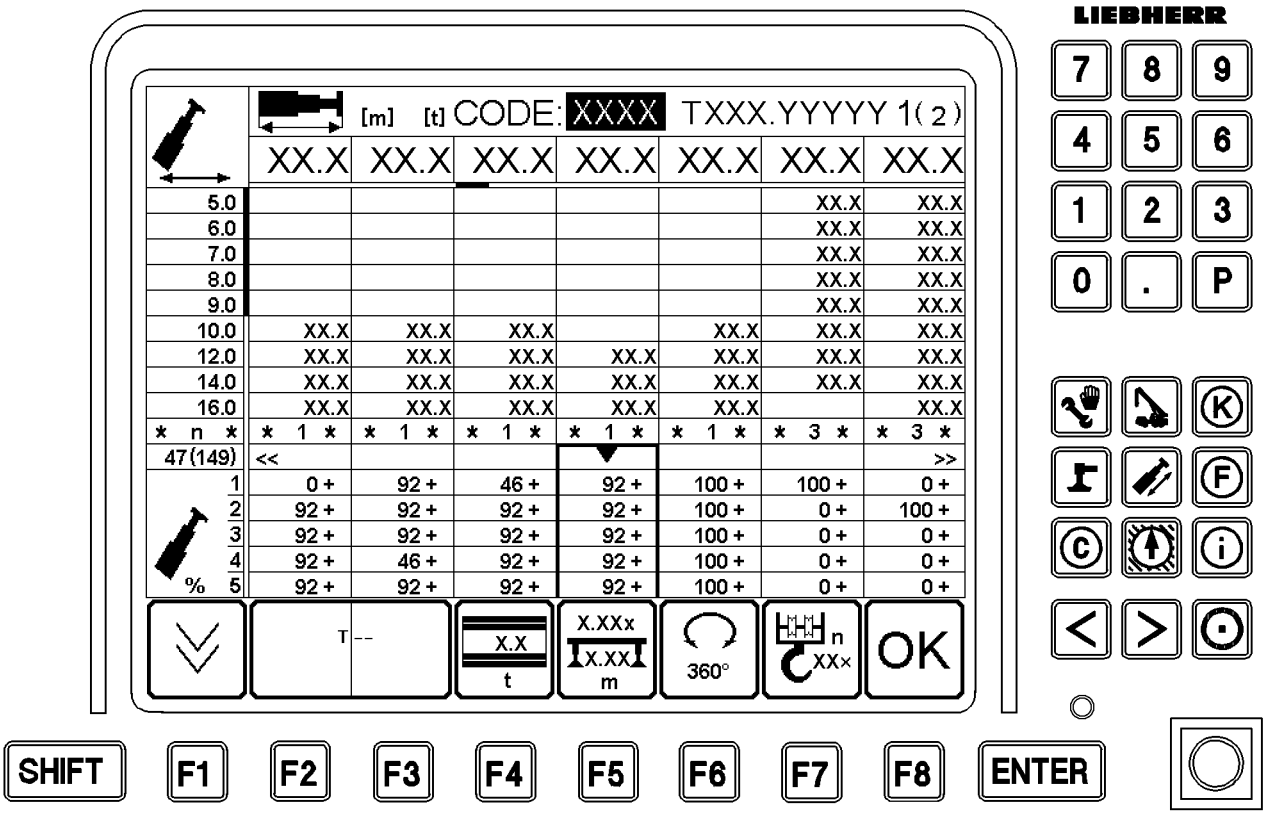
LIEBHERR
[m] [t] CODE: XXXX TXXX.YYYYY 1(2)
XX.X XX.X XX.X XX.X XX.X XX.X XX.X
5.0
6.0
7.0
8.0
9.0
10.0
12.0
14.0
16.0
* n *
47(149)
%
T --
X.X
t
X.XXx
X.XX
m
360°
n
XXx
OK
7 8 9
4 5 6
1 2 3
0 . P
K
F
C
i
SHIFT
F1
F2
F3
F4
F5
F6
F7
F8
ENTER

B108829

2 LICCON computer system

See Crane operating instructions, chapter 4.02.

2.1 The crane engine is running

Make sure that the following prerequisites are met:
– The batteries are charged by the alternator.
– A stable voltage is present.

The electric crane control system and the LICCON computer system are turned on automatically. A self test of the LICCON computer system follows.
▶ Await the self test.

Result:
– After a few seconds the set up screen appears on the monitor.

2.2 Stand-by mode

No crane movements are possible. See Crane operating instructions, chapter 4.02.

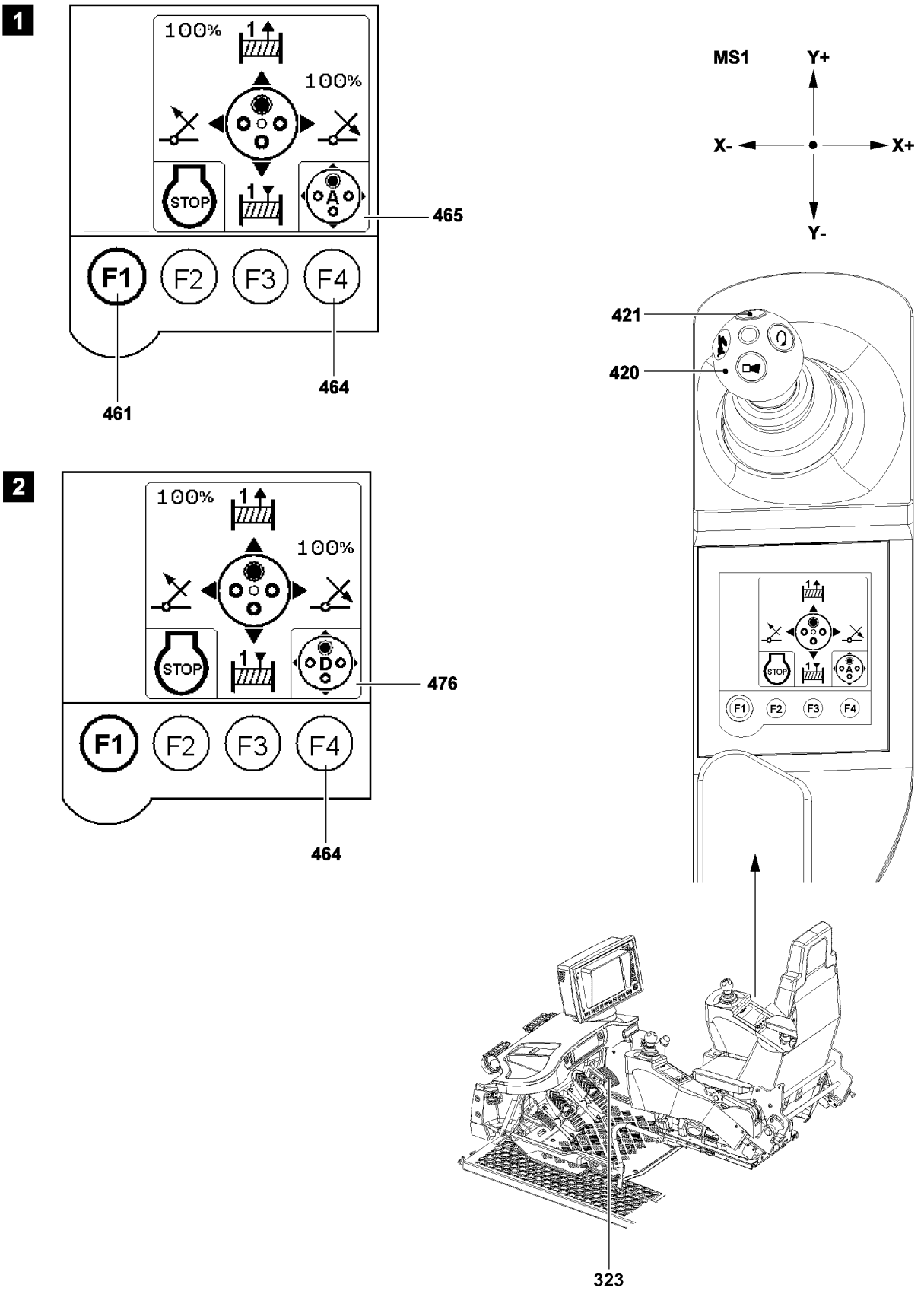
1
100%
1
100%
STOP
1
A
465
F1
F2
F3
F4
461
464
MS1
Y+
X-
X+
Y-
421
420
2
100%
1
100%
STOP
1
D
476
F1
F2
F3
F4
464
323

B118306

3 Luffing

Speed of crane movement “luffing” is controlled by the deflection of master switch **420** and by the pedal **323** of the engine regulation.

NOTICE
Crane can be damaged or topple over!
▶ If an attempt to lift a load with the hoist gear causes the LICCON overload protection to turn off, then the load may not be lifted by luffing up the boom.

3.1 Luffing the telescopic boom

The maximum luffing speed of the telescopic boom can be preselected in the settings window “Speed reduction master switch”.
See Crane operating instructions, chapter 4.02.

3.1.1 Luffing the telescopic boom on cranes with one winch, illustration 1

Make sure that the following prerequisites are met:
– The master switch **420** is in the neutral position.
– The seat contact button is actuated.

▶ Press the function key **461** on the right touch display until the “Master switch configuration” menu appears.
▶ Press the function key **464** until the master switch assignment **476** “**A** ” is active.
▶ Move the master switch **420** in direction X- and simultaneously hold down the button **421**.

Result:
– The telescopic boom is luffed up.

▶ Move the master switch **420** in direction X+ and simultaneously hold down the button **421**.

Result:
– The telescopic boom is luffed down.

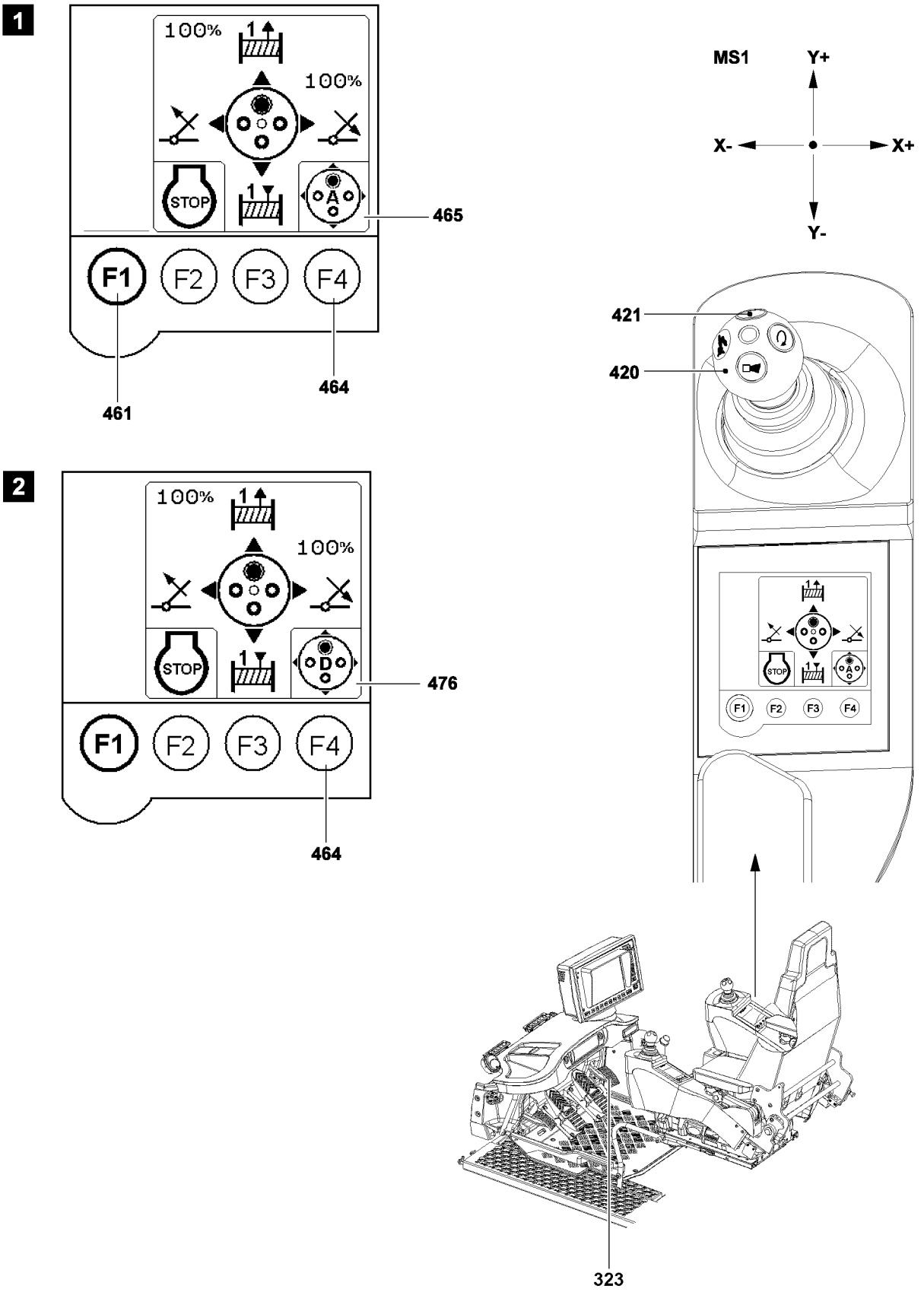
1
100%
1
100%
STOP
1
A
465
F1
F2
F3
F4
461
464
MS1
Y+
X-
X+
Y-
421
420
2
100%
1
100%
STOP
1
D
476
F1
F2
F3
F4
464
323

B118306

3.1.2 Luffing the telescopic boom on cranes with two winches, illustration 2

Make sure that the following prerequisites are met:

– The master switch **420** is in the neutral position.
– The seat contact button is actuated.

▶ Press the function key **461** on the right touch display until the “Master switch configuration” menu appears.
▶ Press the function key **464** until the master switch assignment **476** “**D** ” is active.
▶ Move the master switch **420** in direction X- and simultaneously hold down the button **421**.

Result:

– The telescopic boom is luffed up.

▶ Move the master switch **420** in direction X+ and simultaneously hold down the button **421**.

Result:

– The telescopic boom is luffed down.

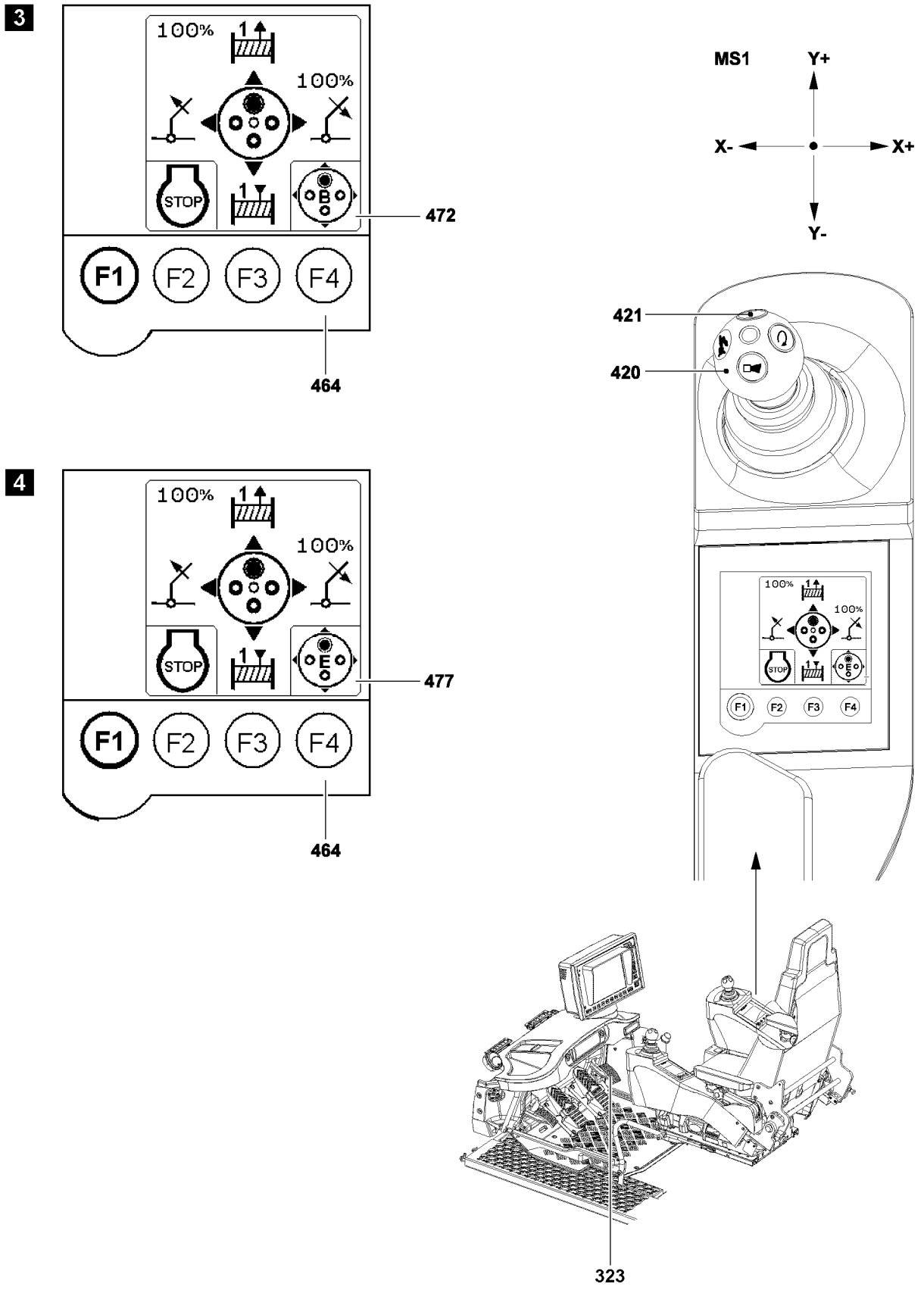
3
100%
1
100%
STOP
1
B
472
F1
F2
F3
F4
464
4
100%
1
100%
STOP
1
E
477
F1
F2
F3
F4
464
MS1
Y+
X-
X+
Y-
421
420
323

B118538

3.2 Luffing the hydraulic folding jib* on cranes with one winch, see illustration 3

Make sure that the following prerequisites are met:
- The master switch **420** is in the neutral position.
- The seat contact button is actuated.
- An operating mode or set up configuration **with** hydraulic folding jib* has been set and confirmed on the LICCON computer system.

▶ Press key **461** on the right Touch display until the “Master switch configuration” menu appears.
▶ Press key **464** until master switch configuration **472** “**B** ” is active.
▶ Move the master switch **420** in direction X- and simultaneously hold down the button **421**.

Result:
- The hydraulic folding jib* is luffed up.

▶ Move master switch **420** in direction X+ and simultaneously hold down button **421**.

Result:
- The hydraulic folding jib* is luffed down.

3.3 Luffing the hydraulic folding jib* on cranes with two winches, see illustration 4

Make sure that the following prerequisites are met:
- The master switch **420** is in the neutral position.
- An operating mode or set up configuration **with** hydraulic folding jib* has been set and confirmed on the LICCON computer system.

▶ Press key **461** on the right Touch display until the “Master switch configuration” menu appears.
▶ Press key **464** until master switch configuration **477** “**E** ” is active.
▶ Move the master switch **420** in direction X- and simultaneously hold down the button **421**.

Result:
- The hydraulic folding jib* is luffed up.

▶ Move master switch **420** in direction X+ and simultaneously hold down button **421**.

Result:
- The hydraulic folding jib* is luffed down.

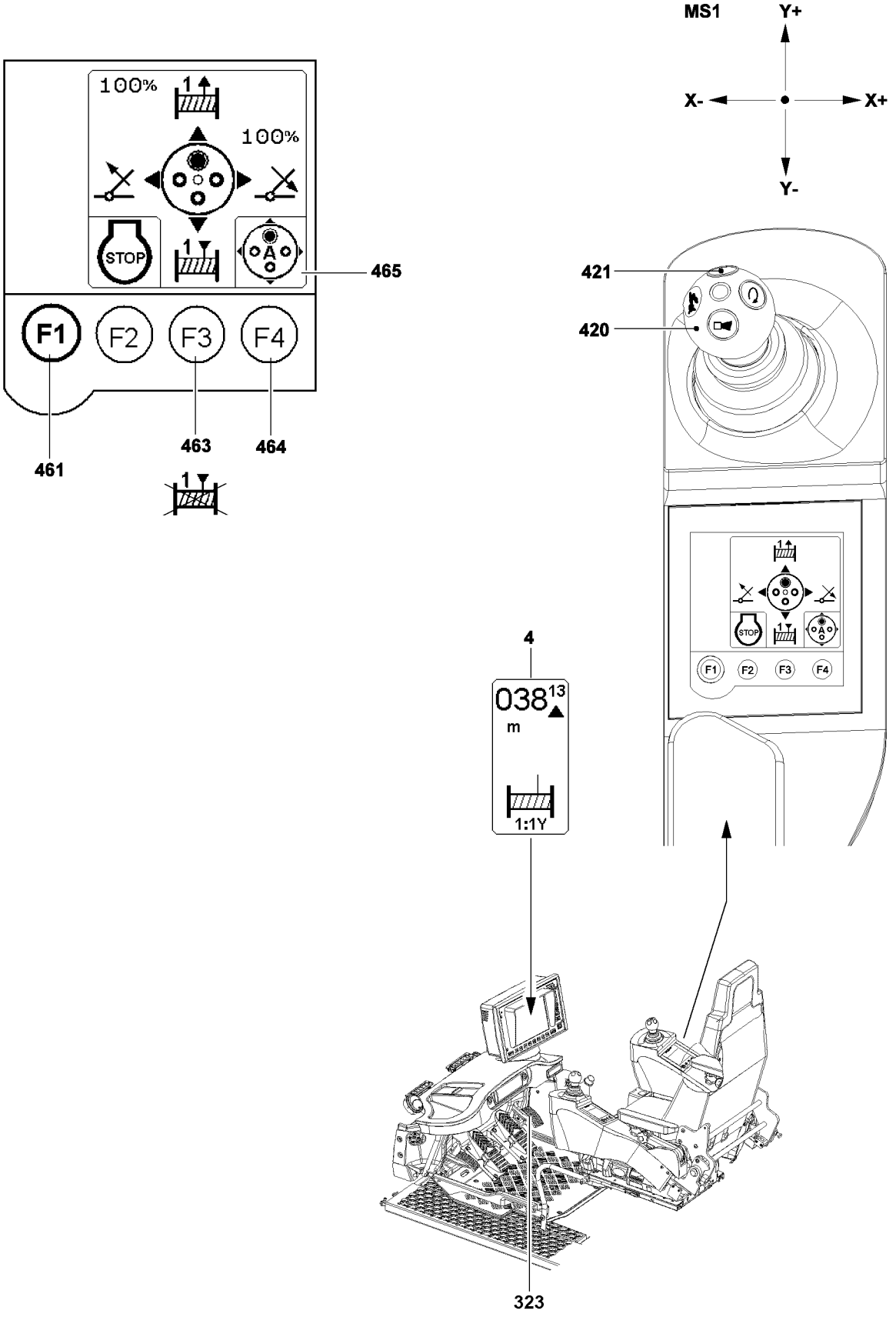
100%
1
100%
STOP
1
A
465
F1
F2
F3
F4
461
463
464
1
MS1
Y+
X-
X+
Y-
421
420
4
038 13
m
1:1Y
323

B118307

4 Lifting / lowering

NOTICE
Danger of damaging the hoist rope when spooling up and / or spooling out!
▶ Do not allow slack rope formation.

The speed of the crane movement “Lifting” is controlled via the deflection of the respective master switch and via the pedal **323** of the engine regulation.
The maximum winch speed can be reduced or increased in the “Speed reduction master switch” menu. It is also possible to deactivate or activate the individual winches.
See chapter 4.02.

4.1 Lifting / lowering on cranes with one winch

The winch icon **4** shows that winch 1 is turning, even when because of multiple reeving and low speed, no hook movement is visible.
Make sure that the following prerequisites are met:
– The master switch **420** is in the neutral position.
– The crane is at a standstill.
– The seat contact button is actuated.

▶ Press the function key **461** on the right touch display until the “Master switch configuration” menu appears.

WARNING
Danger of accident!
▶ During the actuation of a crane movement, **never** deactivate / activate winch 1.

▶ If winch 1 is deactivated:
Press the function key **463** on the right touch display.

Result:
– Winch 1 is activated.
– The winch status is indicated on the right touch display and by the winch icons on the LICCON monitor.

▶ Move the master switch **420** in direction Y+ and simultaneously hold down the button **421**.

Result:
– Winch 1 spools out and the load is lowered.

▶ Move the master switch **420** in direction Y- and simultaneously hold down the button **421**.

Result:
– Winch 1 spools up and the load is lifted.

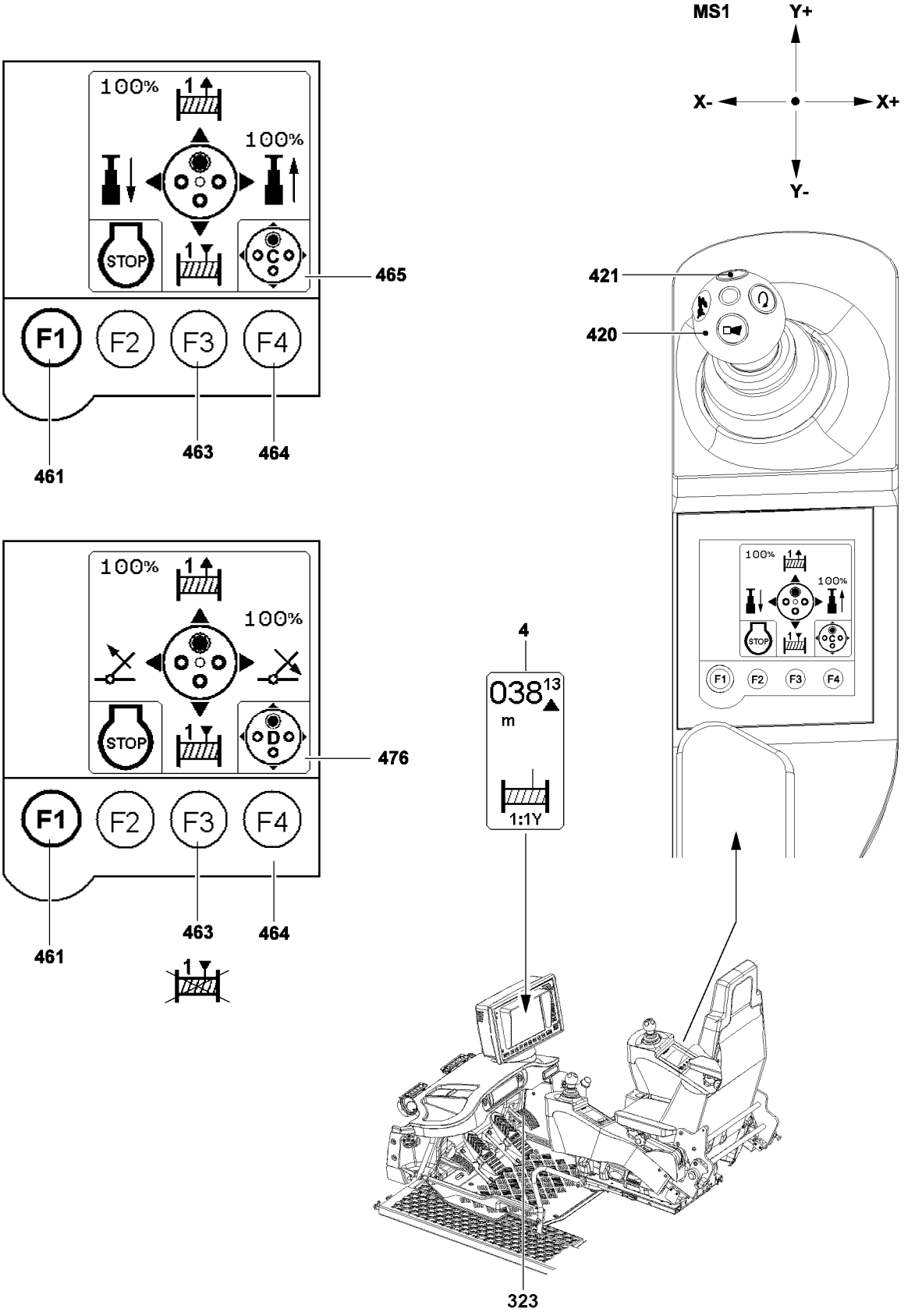
MS1
Y+
X-
X+
Y-
100%
100%
STOP
C
465
F1
F2
F3
F4
461
463
464
421
420
100%
100%
STOP
D
476
4
038 13
m
1:1Y
323

B118308

4.2 Lifting / lowering on cranes with two winches

4.2.1 Lifting / lowering the winch 1

The winch icon **4** shows that winch 1 is turning, even when because of multiple reeving and low speed, no hook movement is visible.
Make sure that the following prerequisites are met:
– The master switch **420** is in the neutral position.
– The seat contact button is actuated.
– The crane is at a standstill.

▶ Press the function key **461** on the right touch display until the “Master switch configuration” menu appears.
▶ Press the function key **464** until the master switch assignment **465** “**C** ” or master switch assignment **476** “**D** ” is active.

WARNING
Danger of accident!
▶ During the actuation of a crane movement, **never** deactivate / activate winch 1.

▶ If winch 1 is deactivated:
Press the function key **463** on the right touch display.

Result:
– Winch 1 is activated.
– The winch status is indicated on the right touch display and by the winch icons on the LICCON monitor.

▶ Move the master switch **420** in direction Y+ and simultaneously hold down the button **421**.

Result:
– Winch 1 spools out and the load is lowered.

▶ Move the master switch **420** in direction Y- and simultaneously hold down the button **421**.

Result:
– Winch 1 spools up and the load is raised.

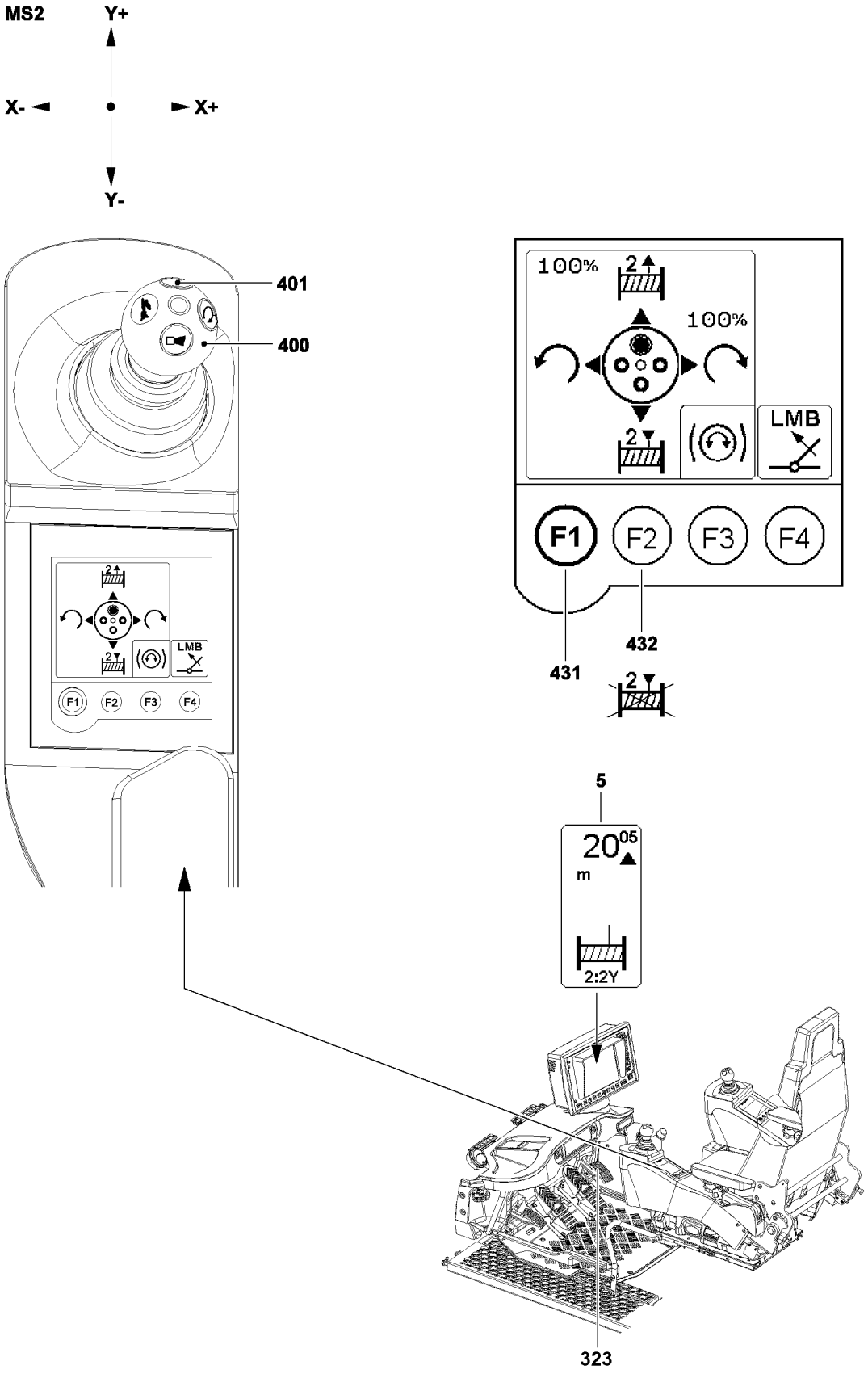
MS2
Y+
X-
X+
Y-
401
400
100%
2
100%
2
LMB
F1
F2
F3
F4
431
432
2
5
20 05
m
2:2Y
323

B118309

4.2.2 Lifting / lowering the winch 2

The winch icon **5** shows that winch 2 is turning, even when because of multiple reeving and low speed, no hook movement is visible.
Make sure that the following prerequisites are met:

– The master switch **400** is in the neutral position.
– The seat contact button is actuated.
– The seat contact button is actuated.

▶ Press the function key **431** on the left touch display until the “Master switch configuration” menu appears.

WARNING
Danger of accident!
▶ During the actuation of a crane movement, **never** deactivate / activate winch 2.

▶ If winch 2 is deactivated:
Press the function key **432** on the left touch display.

Result:

– Winch 2 is activated.
– The winch status is indicated on the left touch display and by the winch icons on the LICCON monitor.

▶ Move the master switch **400** in direction Y+ and simultaneously hold down the button **401**.

Result:

– Winch 2 spools out and the load is lowered.

▶ Move the master switch **400** in direction Y- and simultaneously hold down the button **401**.

Result:

– Winch 2 spools up and the load is raised.

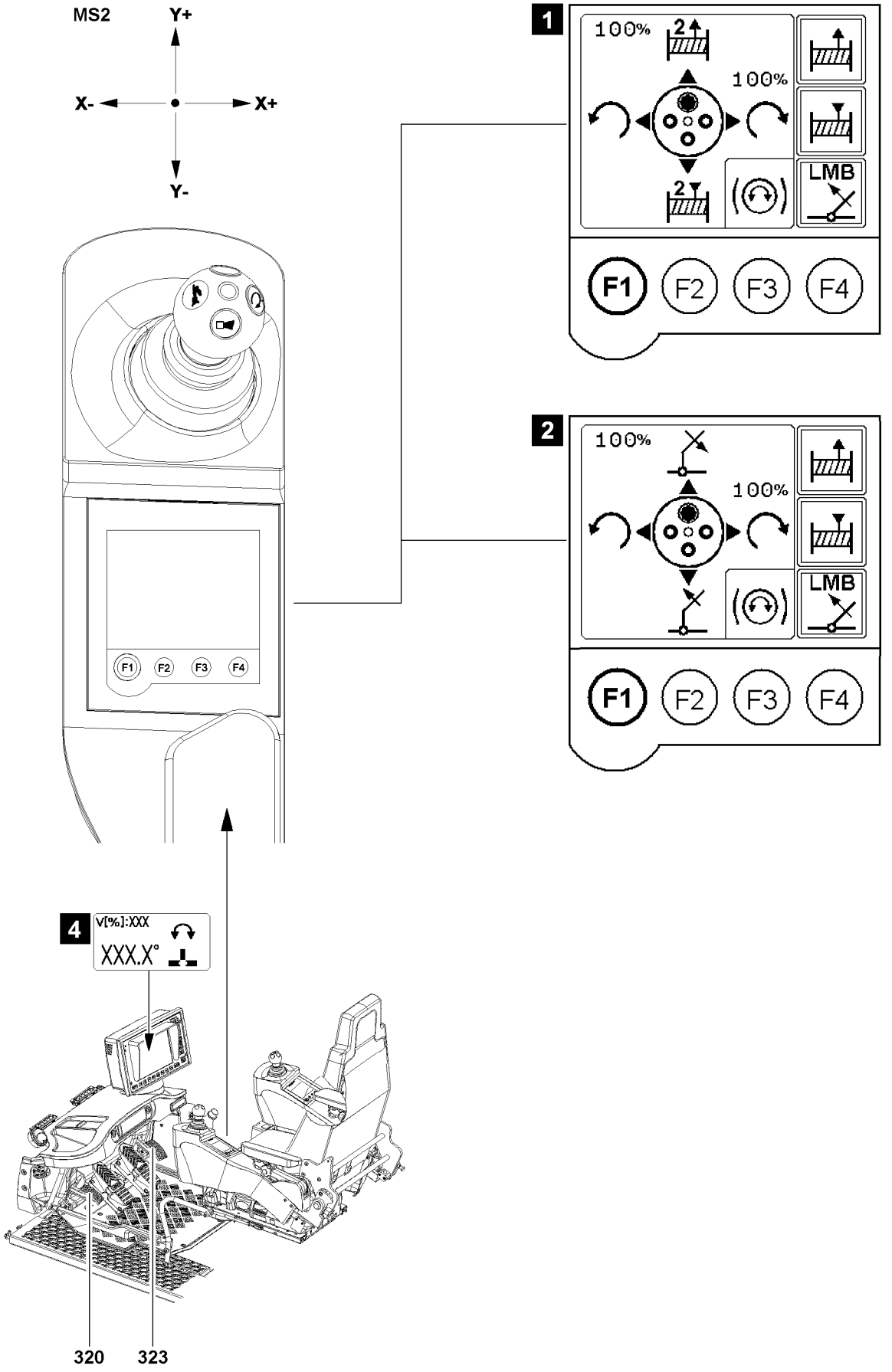
MS2
Y+
X-
X+
Y-
1
100%
2
100%
2
LMB
F1
F2
F3
F4
2
100%
100%
LMB
F1
F2
F3
F4
F1
F2
F3
F4
4
V[%]:XXX
XXX.X°
320
323

B118534

5 Turning

WARNING
Danger of fatal injury!
If there are any personnel on the crane chassis or in any other danger zone of the crane during the rotation movement of the crane superstructure, then there is a danger of accidents.
Personnel can be killed or seriously injured.
- ▶ It is prohibited for personnel to remain in the danger zone.
- ▶ Make sure that there are no obstacles within the working range of the crane.
- ▶ Give a short warning signal (horn) before starting a crane movement.
- ▶ When slewing with a load, initiate the turning movement very carefully, and apply the brakes.

5.1 Preselection of slewing speed

The load chart manual lists the maximum slewing speeds in percentages. The maximum permissible slewing speeds can be set on the LICCON monitor in the settings window “Speed reduction master switch”, see Crane operating instructions, chapter 4.02. Always move at slower speed with a longer boom and a heavier load.

WARNING
The crane can topple over!
If the following instructions are not observed, life threatening situations could arise even causing the crane to topple over.
- ▶ Set the slewing speed specified in the load chart manual and in the crane documentation.
- ▶ Observe additional specifications regarding the slewing speed from the crane documentation.
- ▶ Do **not** exceed the specified maximum speed.
- ▶ Initiate and slow down every turning movement extremely sensitively!

- ▶ Determine the maximum slewing speed according to the load chart manual and additional specifications in the crane documentation, depending on the situation.
- ▶ Make any settings in the setting window “Speed reduction Master switch”, see Crane operating instructions, chapter 4.02

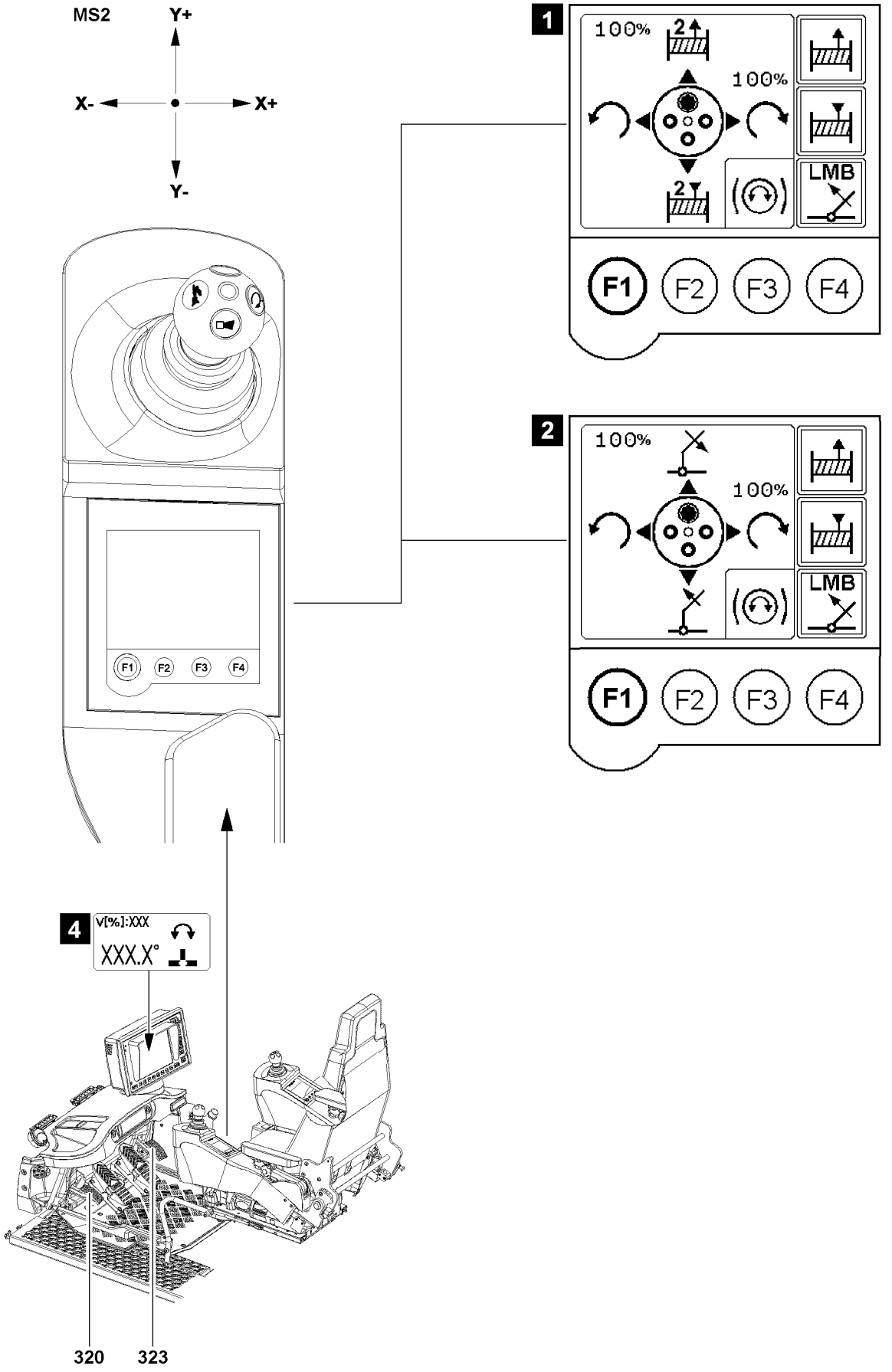
MS2
Y+
X-
X+
Y-
1
100%
2
100%
2
LMB
F1
F2
F3
F4
2
100%
100%
LMB
F1
F2
F3
F4
F1
F2
F3
F4
4
V[%]:XXX
XXX.X°
320
323

B118534

5.2 Turning the crane superstructure

Depending on the set up configuration of the crane, there are various master switch assignments to turn the crane superstructure, see illustration **1** or illustration **2**.

Depending on the set up configuration, not all master switch assignments are always available.

The crane superstructure is always turned with master switch **MS2** in direction of the X-axis.

Make sure that the following prerequisites are met:

– The desired master switch assignment to turn the crane superstructure is active, see illustration **1** or illustration **2**.
– The crane superstructure is **not** locked to the crane chassis.
– The seat contact button is actuated or bypassed, see section “Releasing the crane movement”.
– The crane engine is running.

▶ Deflect the master switch **MS2** in direction X+.

Result:

– The crane superstructure turns to the right.

▶ Deflect the master switch **MS2** in direction X-.

Result:

– The crane superstructure turns to the left.

Note

▶ In the Turning range icon (illustration **4**) the current position of the crane superstructure is always shown.

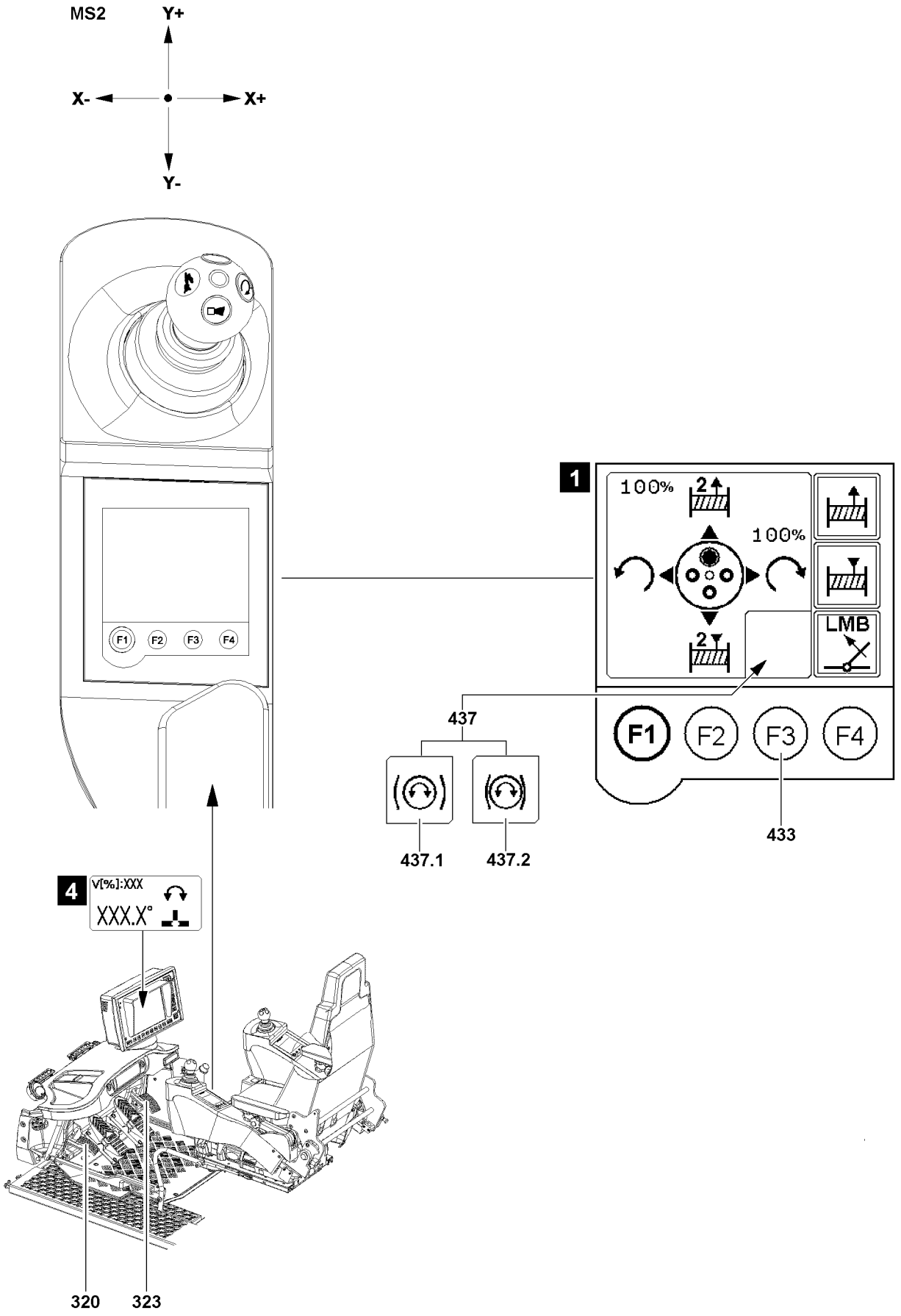
MS2
Y+
X-
X+
Y-
F1
F2
F3
F4
1
100%
2
100%
2
LMB
F1
F2
F3
F4
437
437.1
437.2
433
4
V[%]:XXX
XXX.X°
320
323

B118535

5.3 Slewing gear

There are two ways to brake the slewing gear:

– Slewing gear brake (left pedal)
  Use only for certain applications, see section “Slewing gear brake (pedal)”.
– Parking brake (left touch display)
  The slewing gear can be operated with the parking brake **released** or **applied**, see section “Parking brake slewing gear”.

Freewheeling slewing gear:

– To be able to position the boom easier over the load, the slewing gear can be switched to freewheeling (coasting), see section “Switching the slewing gear to freewheeling”.

5.4 Slewing gear brake (pedal)

CAUTION
Risk of damaging the slewing gear or the roller ring connection!
The slewing gear brake cannot brake the full turning momentum. Failure to comply with the following instructions could damage the slewing gear or roller ring connection.

▶ The pedal **320** may only be used at minimal rotation speeds, in other words with master switch **MS2** almost at the neutral position!
▶ Do not brake the turning movement of the crane by moving the master switch **MS2** back to the neutral position and / or by simultaneously applying the pedal **320**!

Use the pedal **320** only for the following situations:

– Starting the slewing movement in strong side wind
– Stopping the slewing movement in strong side wind

5.4.1 Starting the slewing movement in strong side wind

When turning against the wind in strong side wind and with a long boom system, then the superstructure will turn into the opposite direction due to leakage in the hydraulic motor.
This can be avoided as follows:

▶ Actuate the pedal **320** and deflect the master switch **MS2** into the desired turning direction.
▶ Slowly release the pedal **320** until the superstructure turns in the desired turning direction.

5.4.2 Stopping the slewing movement in strong side wind

▶ Slow down the crane with master switch **MS2** to minimum turning speed.
▶ Apply the pedal **320** carefully, until the crane has come to a standstill at the desired position.

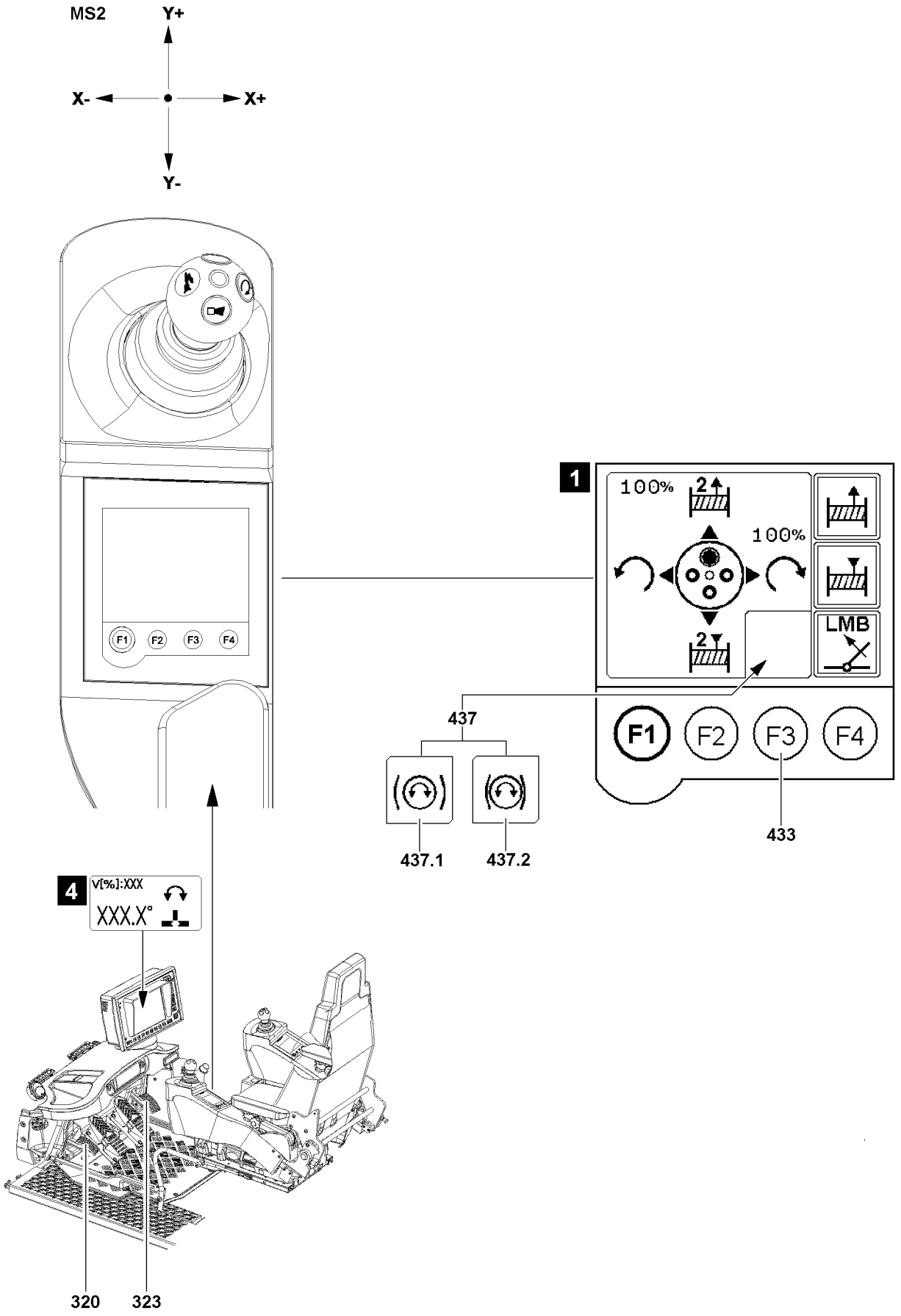
MS2
Y+
X-
X+
Y-
F1
F2
F3
F4
1
100%
2
100%
2
LMB
F1
F2
F3
F4
437
437.1
437.2
433
4
V[%]:XXX
XXX.X°
320
323

B118535

5.5 Parking brake - Slewing gear

Note

- ▶ Once the parking brake is **released**, it **remains released**, regardless of whether the slewing gear is actuated using the master switch **MS2** or if it is not actuated. This is to prevent a sudden stop.
- ▶ If the parking brake is **engaged**, it is released as soon as the master switch **MS2** is deflected and the slewing gear is actuated. The parking brake is **applied** again as soon as the master switch **MS2** is in neutral position again.

NOTICE

Uncontrolled turning of the slewing gear!

As long as the parking brake of the slewing gear **is released**, the slewing gear can turn in an uncontrolled manner due to wind, incline position or diagonal pull!

- ▶ Apply the parking brake of the slewing gear if necessary.

The parking brake of the slewing gear can be applied or released with the function key **433** on the left touch display.

- If the icon **437.1** appears, the parking brake is released.
- If the icon **437.2** appears, the parking brake is applied.

The parking brake can **not** be released if:

- The working range limitation is active.
- A load chart with limited slewing range is selected.
- The seat contact button is neither actuated nor bypassed, see section “Releasing the crane movement”.

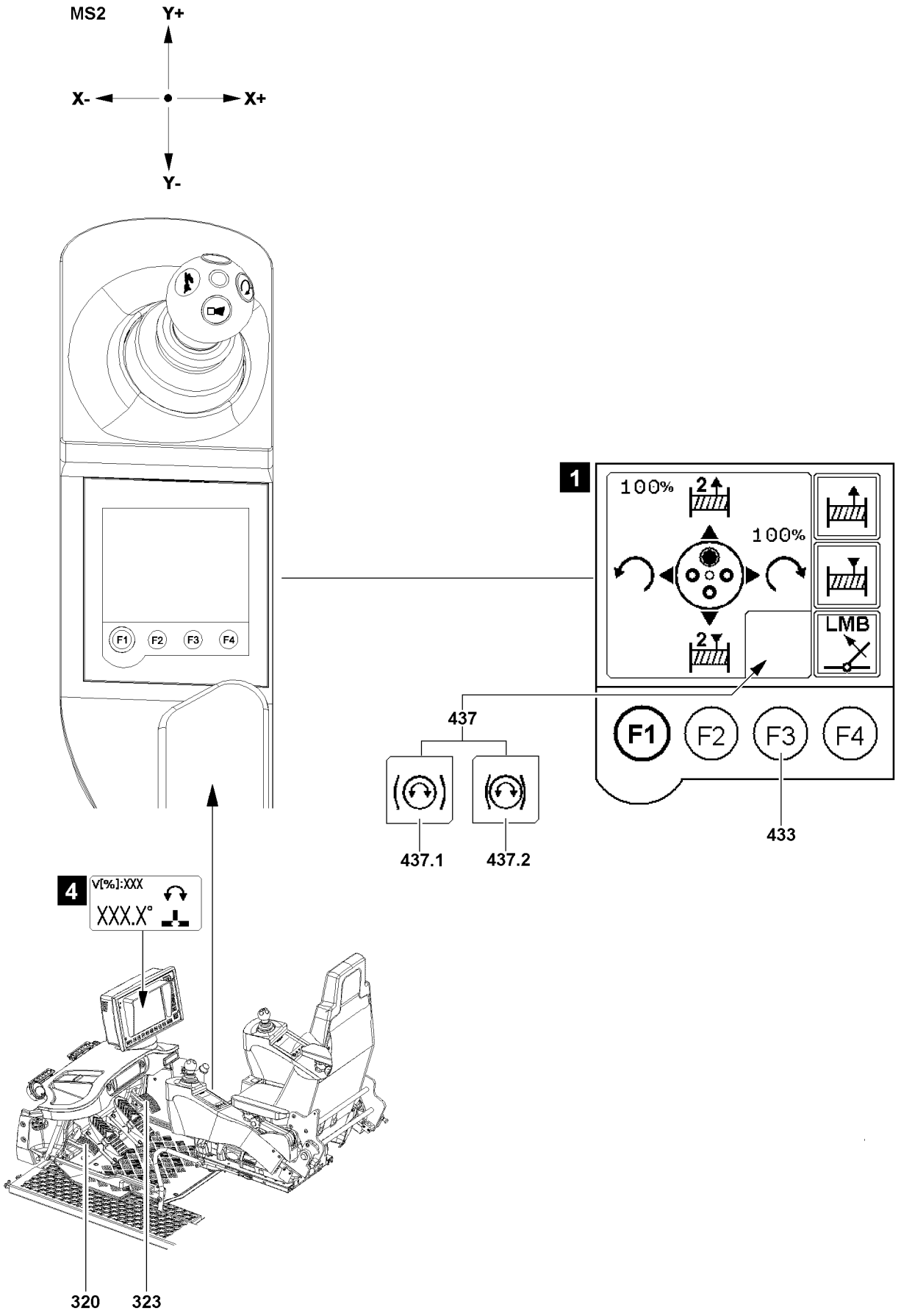
MS2
Y+
X-
X+
Y-
F1
F2
F3
F4
1
100%
2
100%
2
LMB
F1
F2
F3
F4
437
437.1
437.2
433
4
V[%]:XXX
XXX.X°
320
323

B118535

5.5.1 Releasing the parking brake

Make sure that the following prerequisites are met:
- The parking brake is **applied**.
- The icon **437.2** appears on the left touch display.
- The seat contact button is actuated or bypassed, see section “Releasing the crane movement”.
- The crane engine is running.

▶ Press the function key **433**.

Result:
- The parking brake is **released**.
- The icon **437.1** appears on the left touch display.

5.5.2 Applying the parking brake

Make sure that the following prerequisites are met:
- The parking brake is **released**.
- The icon **437.1** appears on the left touch display.

▶ Press the function key **433**.

or

■ Turn the engine off.

or

■ To cancel the release for the crane movement, see section “Releasing the crane movement”

Result:
- The parking brake is **applied**.
- The icon **437.2** appears on the left touch display.

Note

Automatic application of the parking brake

▶ If no crane movement is released (seat contact button neither actuated nor bypassed, see section “Releasing a crane movement”), then the parking brake is automatically applied.

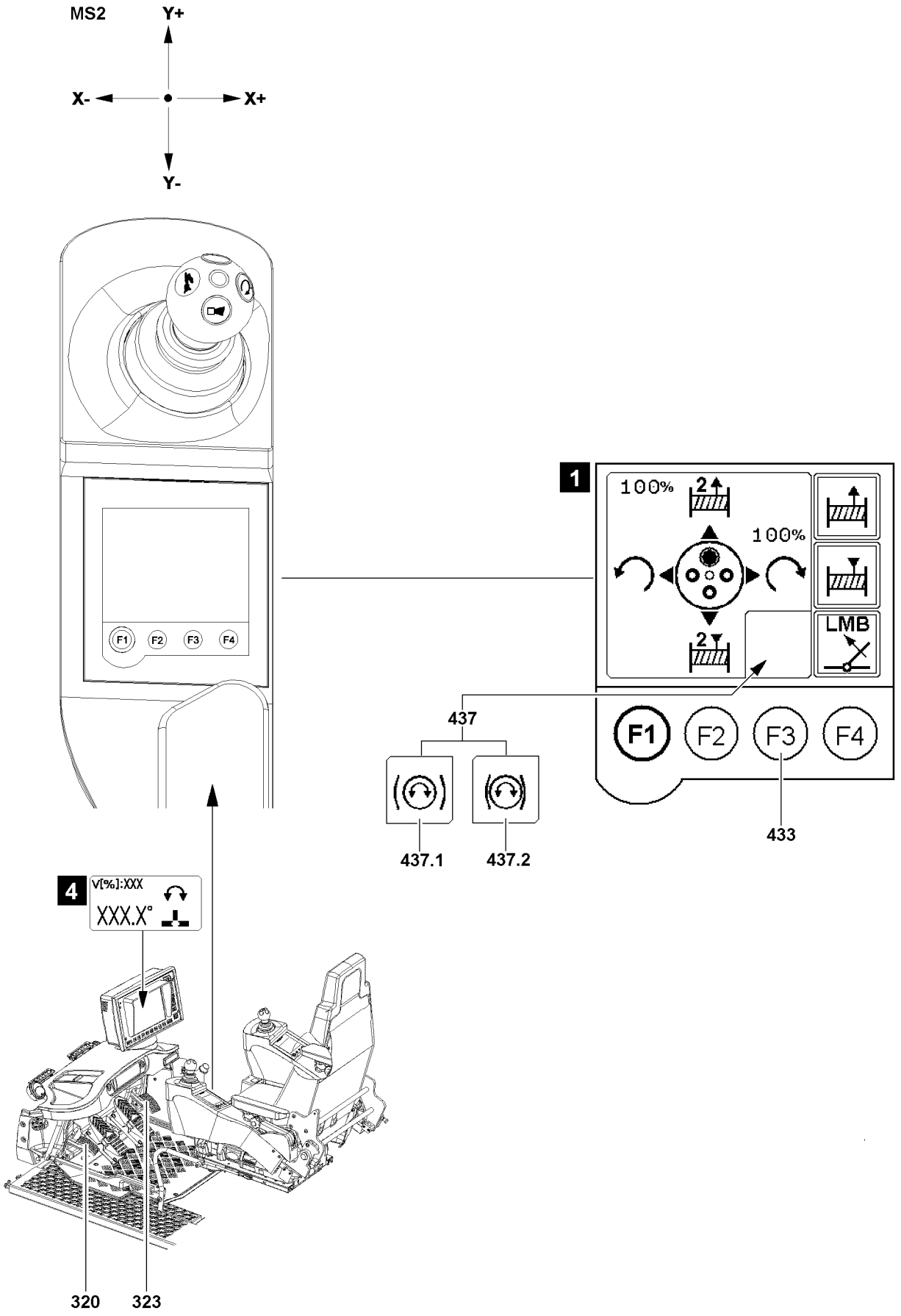
MS2
Y+
X-
X+
Y-
F1
F2
F3
F4
1
100%
2
100%
2
LMB
F1
F2
F3
F4
437
437.1
437.2
433
4
V[%]:XXX
XXX.X°
320
323

B118535

5.6 Switching the slewing gear to freewheeling

In order to position the boom over the load more easily, the slewing gear can be switched to freewheeling.

WARNING
Uncontrolled turning of the crane superstructure!
As long as slewing gear is switched to freewheeling, the crane superstructure can turn in an uncontrolled manner due to wind, incline position or diagonal pull.
▶ Add freewheeling of the slewing gear only when an uncontrolled rotation of the crane superstructure is impossible.

Make sure that the following prerequisites are met:
– The seat contact button is actuated or bypassed, see section “Releasing the crane movement”.
– The crane engine is running.
– The master switch **MS2** is not deflected.

The slewing gear **cannot** be switched to freewheeling if:
– A load chart with limited slewing range is selected.
– The working range limitation is active.

▶ Press the foot button **317**.

Result:
– The slewing gear is switched to freewheeling.

Note
The activation of freewheeling and actuation of the slewing movement via the master switch **MS2** are mutually exclusive!
▶ When the master switch **MS2** is deflected, then the slewing gear cannot be switched to freewheeling via the foot button **317**!
▶ When pressing the foot button **317**, the slewing movement can **not** be carried out by deflecting the master switch **MS2**!

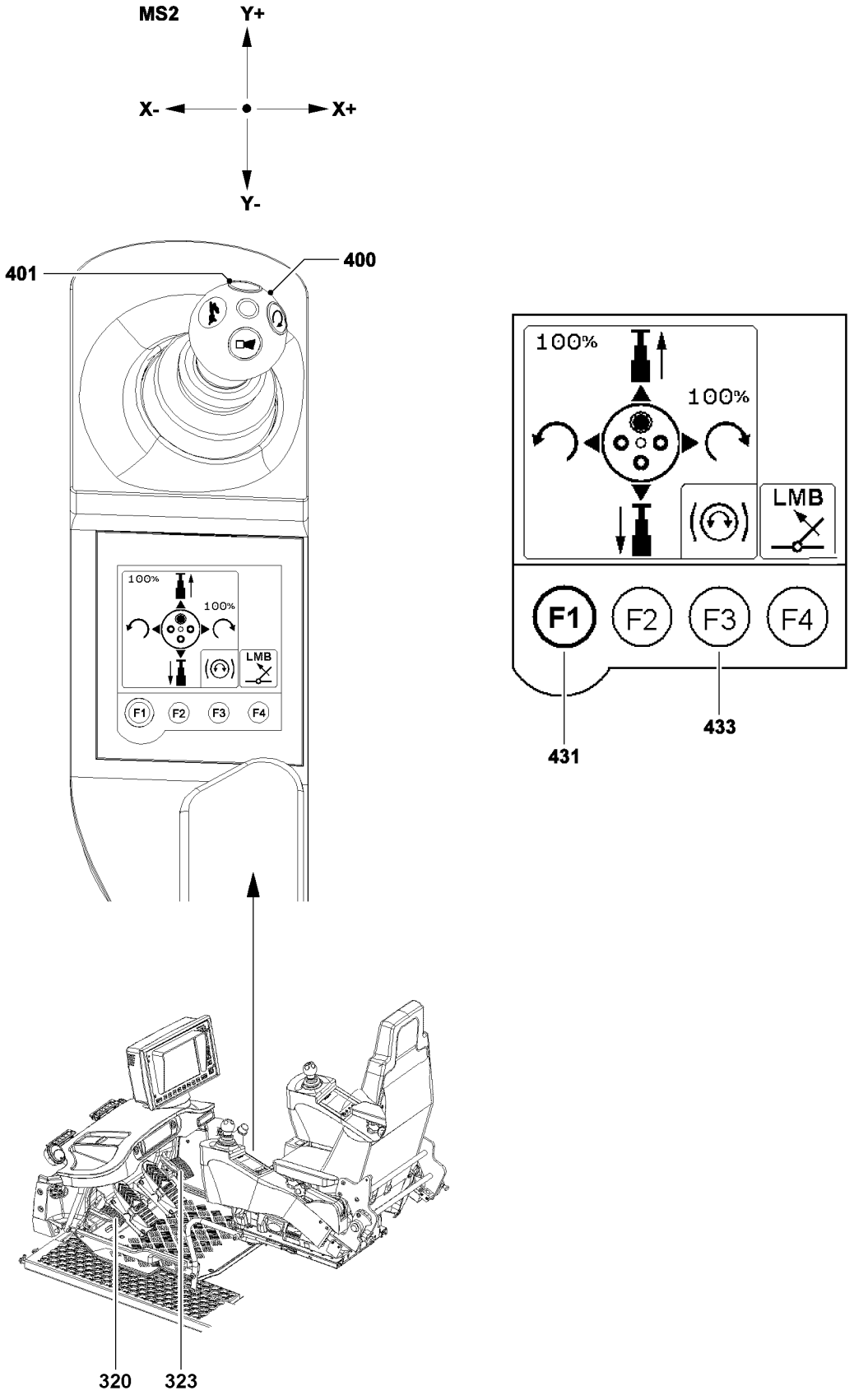

B118536

6 Telescoping

NOTICE
Damage of the push out mechanism on the telescopic boom!
If the following conditions are not observed, there is a danger that the telescopic boom is significantly distorted on the side during the telescoping procedure and that the telescoping cylinder can no longer retract into the corresponding telescope, but hits against the end section on the front.
This can cause damage to the push out mechanism on the telescopic boom!
▶ If the telescopic boom is telescoped, especially with auxiliary boom or telescopic boom extension, then it must be ensured before the telescoping procedure that:
▶ The crane vehicle is supported and horizontally aligned.
▶ The telescopic boom is not significantly heated up on one side due to sun exposure.
▶ There is no strong side wind.

NOTICE
Telescoping has an effect on the hoist rope!
The telescoping procedure has a direct effect on the hoist rope!
▶ During the telescoping procedure, via the crane movement lifting / lowering the hoist gear, make sure that the effect on the hoist rope is compensated for!

The telescopic boom can only be telescoped if:
– The crane is in telescoping mode
or
– a load chart with telescopeable load is selected.

6.1 Control of crane movement “Telescoping”

6.1.1 “Telescoping” on cranes with one winch

Make sure that the following prerequisites are met:
– The master switch **400** is in the neutral position.
– The seat contact button is actuated.

▶ Press function key F1 **431** on the left touch display until the “Master switch configuration” menu appears.
▶ Move the master switch **400** in direction Y+ (forward).

Result:
– The telescopic boom is telescoped out.

▶ Move the master switch **400** in direction Y- (backward).

Result:
– The telescopic boom is telescoped in.

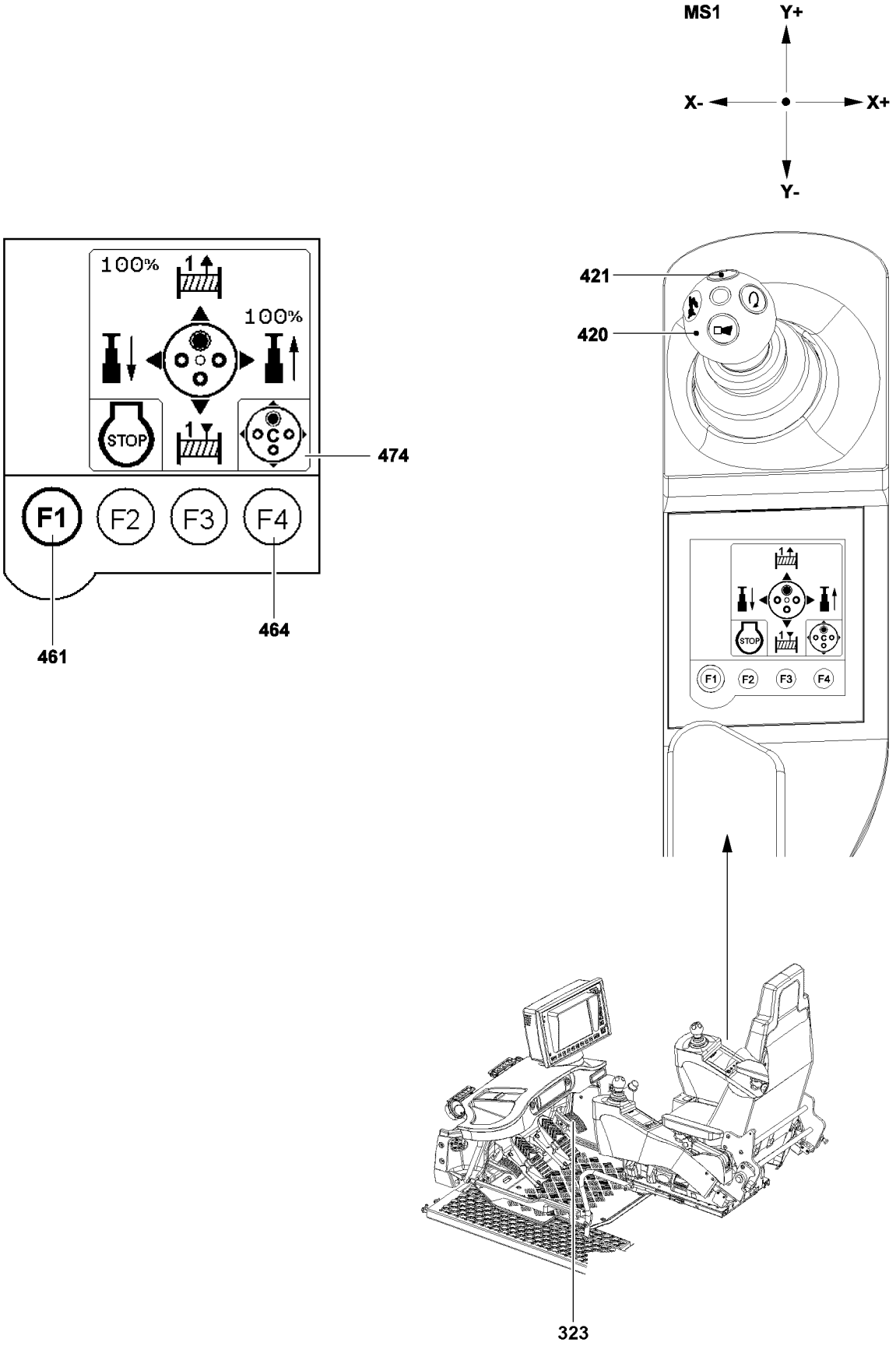

B118537

6.1.2 “Telescoping” on cranes with two winches

Make sure that the following prerequisites are met:

– The master switch **420** is in the neutral position.
– The seat contact button is actuated.

▶ Press the function key F1 **461** on the right touch display until the “Master switch configuration” menu appears.
▶ Press the function key F4 **464** until the master switch assignment **474** “**C** ” is active.
▶ Move the master switch **420** in direction X+ (to the right).

Result:

– The telescopic boom is telescoped out.

▶ Move the master switch **420** in direction X- (to the left).

Result:

– The telescopic boom is telescoped in.

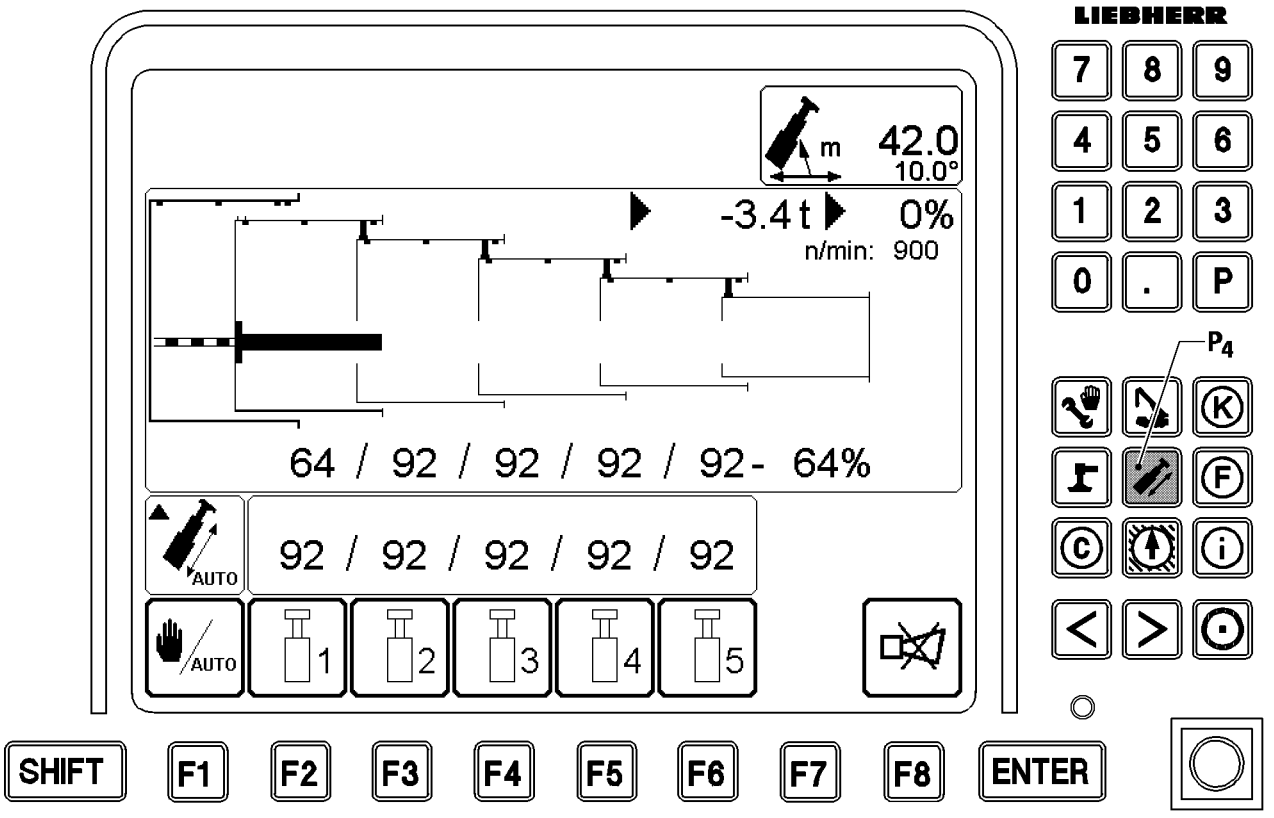
LIEBHERR
m
42.0
10.0°
-3.4 t
0%
n/min: 900
64 / 92 / 92 / 92 / 92 - 64%
AUTO
92 / 92 / 92 / 92 / 92
AUTO
1
2
3
4
5
7
8
9
4
5
6
1
2
3
0
.
P
P4
K
F
C
i
SHIFT
F1
F2
F3
F4
F5
F6
F7
F8
ENTER

B111778

6.2 Function description of Telematik

The “Telematik” automatic telescopic boom control system consists of:
– The dual action telescoping cylinder
– The hydraulically operated gripper pinning
– The hydraulically operated boom pinning.

The gripper and boom pinning is mechanically interlinked, which means a telescope section can only be unpinned when the gripper is locked simultaneously with this telescope section.
In the LICCON telescoping screen the crane operator can see, in dynamic graphics, the pinning state of the telescopic boom, the position of the individual telescopes in relation to each other and the extension status of the telescoping cylinder.
Due to the automatic telescoping procedure, the crane operator can easily telescope the telescoping boom, as he does not have to concern himself with the pinning or unpinning of the telescoping cylinder or the telescopes. The LICCON telescoping control system therefore makes very straightforward telescoping possible, only the desired telescoping target needs to be entered into the system.
The LICCON telescoping control system decides the sequence in which the individual telescopes will be moved in order to achieve the desired end state. After setting the desired telescoping targets, all telescoping movements, as well as locking and unlocking, are carried out fully automatically.
The following procedures are carried out by the system:
– Locking and unlocking of the telescoping cylinder.
– Pinning and unpinning of the telescopes.
– Sequence for the telescopes to be telescoped in order to achieve the desired end state.

This automatic process will however only be carried out as long as the master switch is operated.
The master switch determines the direction and the speed of the telescoping movement. In this way the crane operator has continuous control over the crane.
The direction of the cylinder movement is set by the LICCON computer system.
If the telescopic boom is lengthened, with the result that currently unreachable telescopes must be moved, then they must first be retracted until the last telescope to be moved is reached. In this case, in order to lengthen the telescopic boom (telescope out), telescoping in must first take place.
The LICCON computer system displays the direction in which the next telescoping must be done. The master switch must also be pressed to correspond to this direction setting. In this way the connection between the direction of movement of the appropriate master switch and the telescope continues.
In this way it is possible to move to a telescoping target automatically without an operating screen. It is therefore also not essential to keep watching the LICCON monitor all the time.
If the direction needs to be changed by the master switch, the telescopic boom remains stationary if the current direction is to be maintained. This also means that the master switch must be moved in the other direction. If there is no further movement in the other direction, this means that the telescoping target has been reached. This state is displayed visually on the operating screen. If the master switch is still being pressed, then after 3 to 5 seconds, the system switches to the telescoping screen.

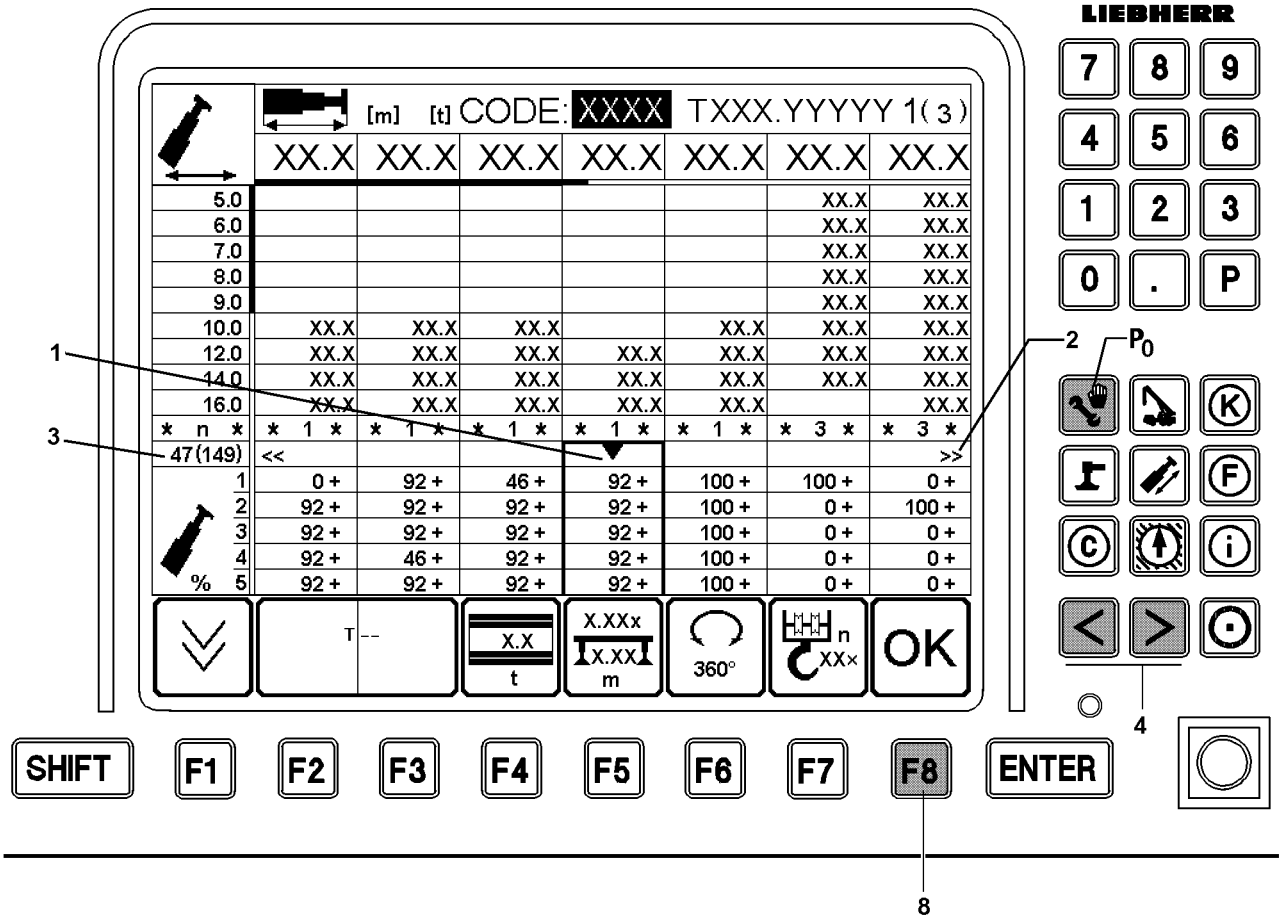
LIEBHERR
[m] [t] CODE: XXXX TXXX.YYYY 1(3)
XX.X XX.X XX.X XX.X XX.X XX.X XX.X
5.0
6.0
7.0
8.0
9.0
10.0
12.0
14.0
16.0
* n * * 1 * * 1 * * 1 * * 1 * * 1 * * 3 * * 3 *
47 (149)
<< >>
%
T --
X.X
t
X.XXx
X.XX
m
360°
n
XXx
OK
SHIFT
F1
F2
F3
F4
F5
F6
F7
F8
ENTER
1
2
3
4
8
P0

B108831

6.3 Automatic telescoping

There are two options for selecting the telescoping target:

1.) Target selection via the set up screen
2.) Target selection via the telescoping screen

6.3.1 Target selection via the set up screen

▶ Press the program key **P0**.

Result:

– The set up screen appears on the LICCON monitor.

▶ Using the arrow keys **4**, move the cursor **1** to the left or the right into the column corresponding to the desired telescopic boom length.

As supporting information, the currently selected column number **3** and the number of columns in this chart are shown. For example, 47(149) means 47 of 149 columns.
The status indicator (±) on the right next to the percentage extension condition value means:

– "**+**" the corresponding telescoping section must be pinned.
– "**-**" the corresponding telescoping section can be telescoped up to the percentage value of the extension status value under load (according to the load chart).

The double arrow **2** at the left and / or right edge of this line points to additional columns in either direction.
If the cursor **1** touches an edge marked with arrows, the next movement in this direction will display the next load chart column(s).
The cursor **1** itself will be set on the next column, if possible in the middle.
A change of the telescoping target is always possible.
If no cursor appears in the set up screen, this means that on the telescoping screen a boom configuration that is not supported in the charts was selected and perhaps even started!

▶ Press function key "F8" **8**.

Result:

– The selected telescoping target will be activated.
– The selected column for the respective telescoping target will be marked in bold along the side.

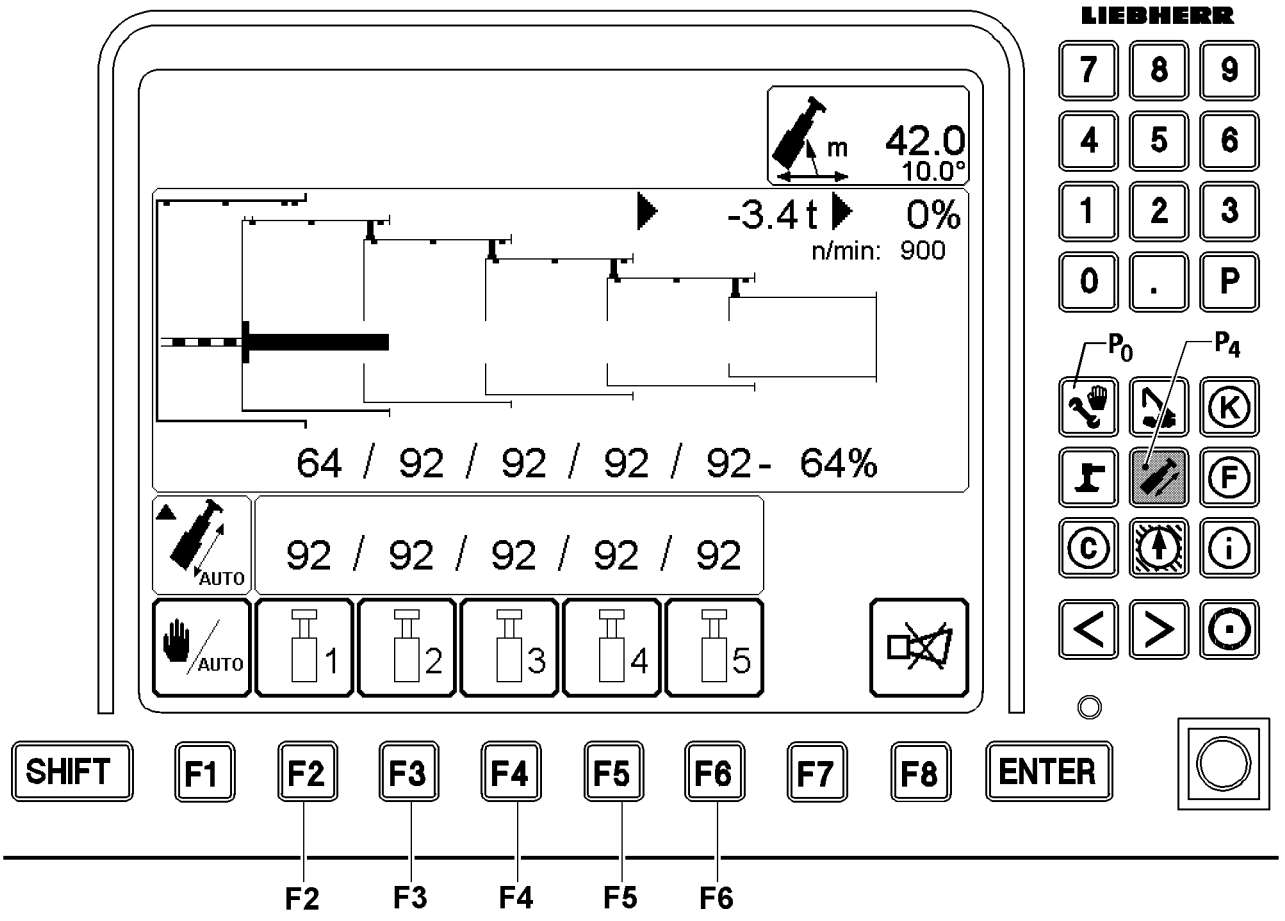
LIEBHERR
7 8 9
4 5 6
1 2 3
0 . P
m 42.0
10.0°
-3.4 t 0%
n/min: 900
64 / 92 / 92 / 92 / 92 - 64%
AUTO
92 / 92 / 92 / 92 / 92
AUTO
1 2 3 4 5
P0
P4
K
F
C
i
SHIFT F1 F2 F3 F4 F5 F6 F7 F8 ENTER
F2 F3 F4 F5 F6

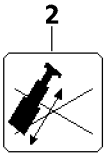
2

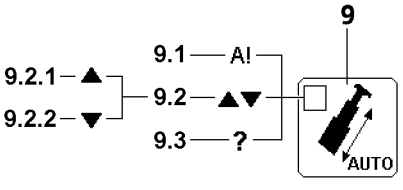
9
9.1 A!
9.2.1 ▲
9.2 ▲▼
9.2.2 ▼
9.3 ?
AUTO

B111779

6.3.2 Target selection via the telescoping screen

▶ Press the program key **P4**.

Result:

– The telescoping screen appears on the LICCON monitor.

The selection of the telescoping target is achieved by pressing the function key assigned to the telescope concerned several times. After every key press, the intended extension status of the associated telescope changes to the next percentage value where there is a pin bore.
In contrast to the set up screen, the telescoping length is displayed immediately as a target, without further confirmation, as soon as the function key is pressed. No confirmation is required, as the assigned function keys do not have any other functions.
The appearance of a direction arrow **9.2** in the automatic symbol immediately after a change in the telescoping target can be interpreted as feedback.
If the icon **2** appears on the LICCON monitor, then:

– The telescoping sections cannot be unpinned.
– The unpinned load is exceeded.
– No load chart present.

▶ Press the function key **F2**.

Result:

– The following appears on telescope 1: 0 %, 46 %, 92 %, or 100 %.

▶ Press the function key **F3**.

Result:

– The following appears on telescope 2: 0 %, 46 %, 92 %, or 100 %.

▶ Press the function key **F4**.

Result:

– The following appears on telescope 3: 0 %, 46 %, 92 %, or 100 %.

▶ Press the function key **F5**.

Result:

– The following appears on telescope 4: 0 %, 46 %, 92 %, or 100 %.

▶ Press the function key **F6**.

Result:

– The following appears on telescope 5: 0 %, 46 %, 92 %, or 100 %.

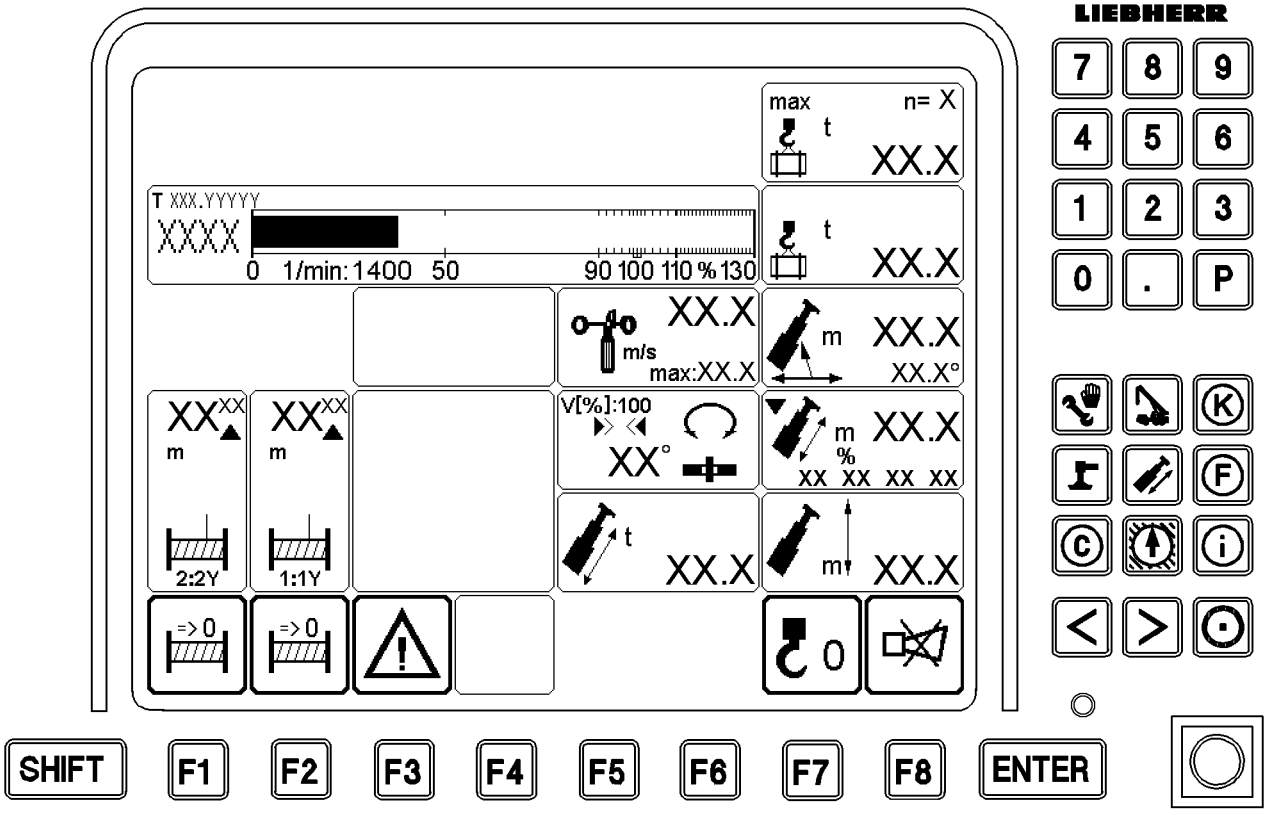
LIEBHERR
max
n= X
t
XX.X
T XXX.YYYYY
XXXX
0 1/min: 1400 50 90 100 110 % 130
m/s
max:XX.X
m
XX.X°
V[%]:100
XX°
%
XX XX XX XX
2:2Y
1:1Y
=> 0
7 8 9
4 5 6
1 2 3
0 . P
SHIFT F1 F2 F3 F4 F5 F6 F7 F8 ENTER

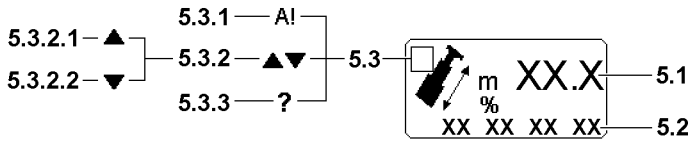
5.3.2.1
5.3.2.2
5.3.1 A!
5.3.2
5.3.3 ?
5.3
m
%
XX.X
XX XX XX XX
5.1
5.2

B118018

6.3.3 Telescoping to the selected target

NOTICE
Telescoping has an effect on the hoist rope!
The telescoping procedure has a direct effect on the hoist rope!
▶ During the telescoping procedure, via the crane movement lifting / lowering the hoist gear, make sure that hook remains in the correct position!

There are two options to telescope to the selected target:
1.) Telescoping via the operating screen
2.) Telescoping via the telescoping screen

Telescoping via the operating screen

The telescoping system is designed so that an experienced crane driver can telescope without the telescoping screen, in other words using just the operating screen.
The crane operator receives information about the direction in which the master switch must be moved from the arrow **5.3.2** in the icon **5**.
If the crane operator attempts further telescoping once the telescoping target has been reached, then there is an automatic changeover from the operating screen to the telescoping screen. If the master switch is still being deflected, then the markings on the set telescoping target blink. This means that the telescoping target has been reached.
Make sure that the following prerequisite is met:
– The seat contact button is actuated.

▶ If the arrow **5.3.2.1** up appears in the icon **5**:
Telescope the telescopic boom out.
▶ If the arrow **5.3.2.2** down appears in the automatic icon **5**:
Telescope the telescopic boom in.

Once the telescoping target is reached, icon A! **5.3.1** appears.
▶ Deflect the master switch for another 3 seconds or so until the telescope is resting on the pin.

Note
▶ Display Actual length Telescopic boom **5.1**.
▶ Display Actual extension status of telescopes **5.2** ascending from left to right (T1...T5) in percentages.
▶ If icon **5.3.3** appears, there is an error in the LICCON computer system.
▶ For detailed description, see Crane operating instructions, chapter 4.02.

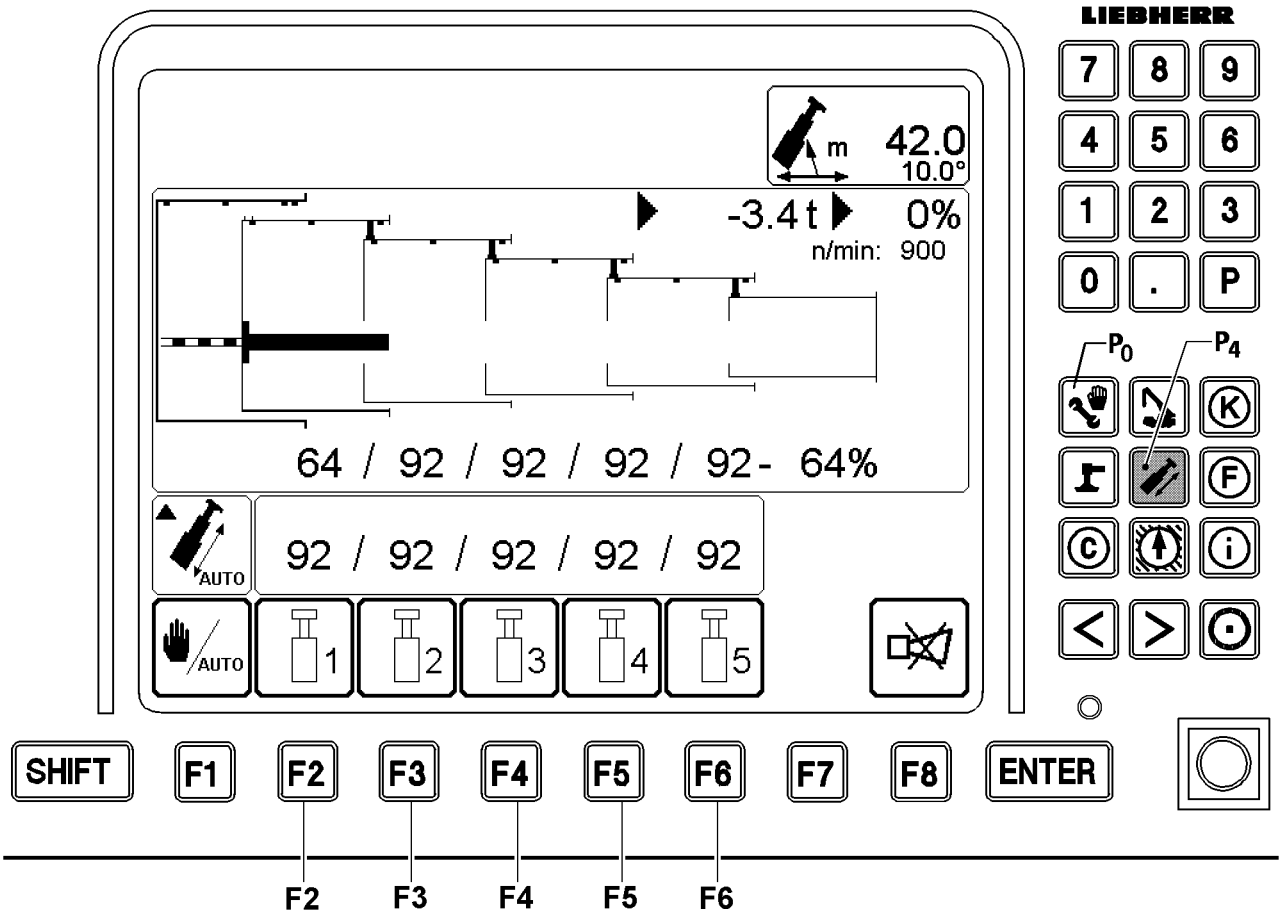
LIEBHERR
7 8 9
4 5 6
1 2 3
0 . P
m 42.0
10.0°
-3.4 t 0%
n/min: 900
64 / 92 / 92 / 92 / 92 - 64%
92 / 92 / 92 / 92 / 92
AUTO
1 2 3 4 5
P0
P4
K
F
C
i
SHIFT F1 F2 F3 F4 F5 F6 F7 F8 ENTER
F2 F3 F4 F5 F6

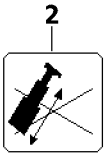
2

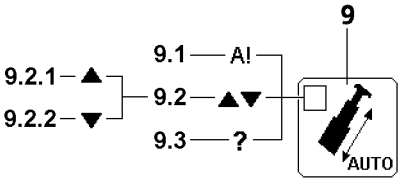
9
9.1 A!
9.2.1 ▲
9.2 ▲▼
9.2.2 ▼
9.3 ?
AUTO

B111779

Telescoping via the telescoping screen

If the desired telescoping target is set, then the direction in which the master switch must be deflected is displayed on the operating screen and on the telescoping screen.
If the master switch is moved against the specified direction, the telescope remains stationary. The default direction remains visible as a possible error criterion.
If the set telescoping target has been reached, then the telescopic boom remains stationary, regardless of any movements of the master switch, and the markings on the set telescoping target begin to blink. The target has thus been reached.
Make sure that the following prerequisite is met:
– The seat contact button is actuated.

▶ If the arrow **9.2.1** up appears in the icon **9**:
Telescope the telescopic boom out.
▶ If the arrow **9.2.2** down appears in the automatic icon **9**:
Telescope the telescopic boom in.

Note
▶ When the icon **9.1** appears, the telescoping target is reached.
▶ If icon **9.3** appears, there is an error in the LICCON computer system.
▶ If icon **2** appears, the telescoping sections cannot be unpinned.
▶ For detailed description, see Crane operating instructions, chapter 4.02.

6.3.4 Aborting telescoping

Telescoping can be aborted at any time.
The pins, the telescoping cylinder and the telescopes remain where they were, in the last state they were in when the master switch was still being pressed.
If desired, a new telescoping target can be set. You can automatically telescope to this telescoping target.
▶ Press the program key **P0** and select a new target selection via the set up screen.

or

Set a new telescoping target:
■ Press the program key **P4** and enter a new target selection in the telescoping screen.

It is also possible to proceed manually by switching over to manual operation.
▶ Change to section “Manual telescoping”.

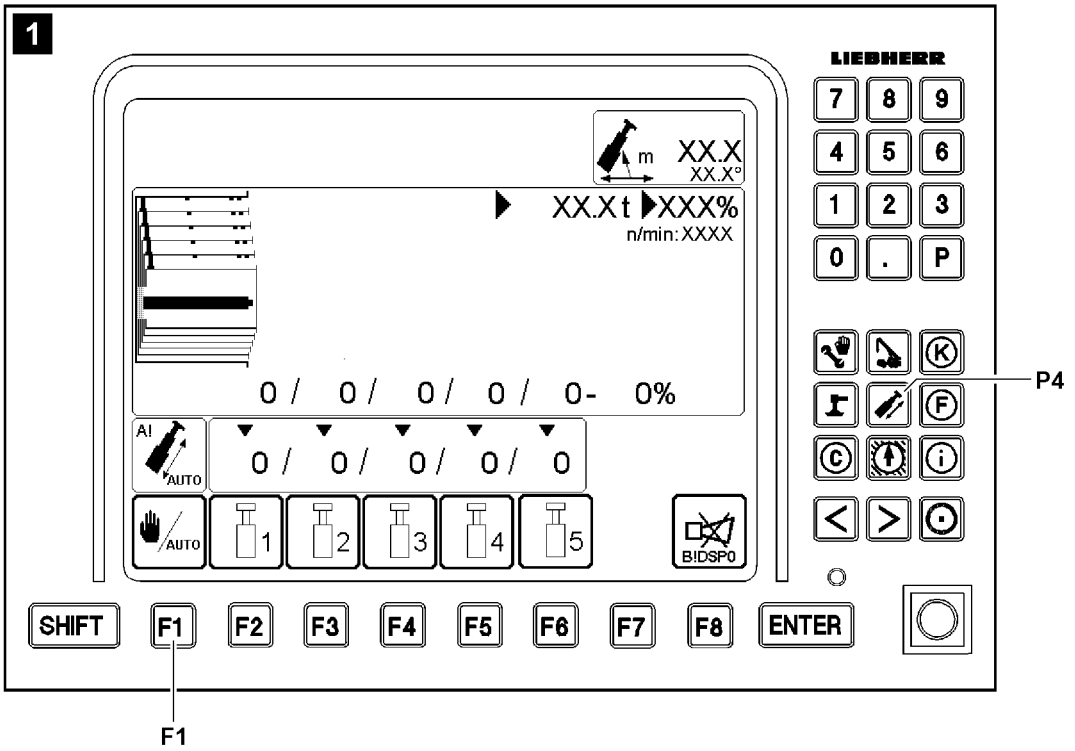
1
LIEBHERR
XX.X
XX.X°
XX.X t XXX%
n/min: XXXX
0 / 0 / 0 / 0 / 0- 0%
0 / 0 / 0 / 0 / 0
AUTO
B!DSP0
SHIFT
F1
F2
F3
F4
F5
F6
F7
F8
ENTER
P4
F1

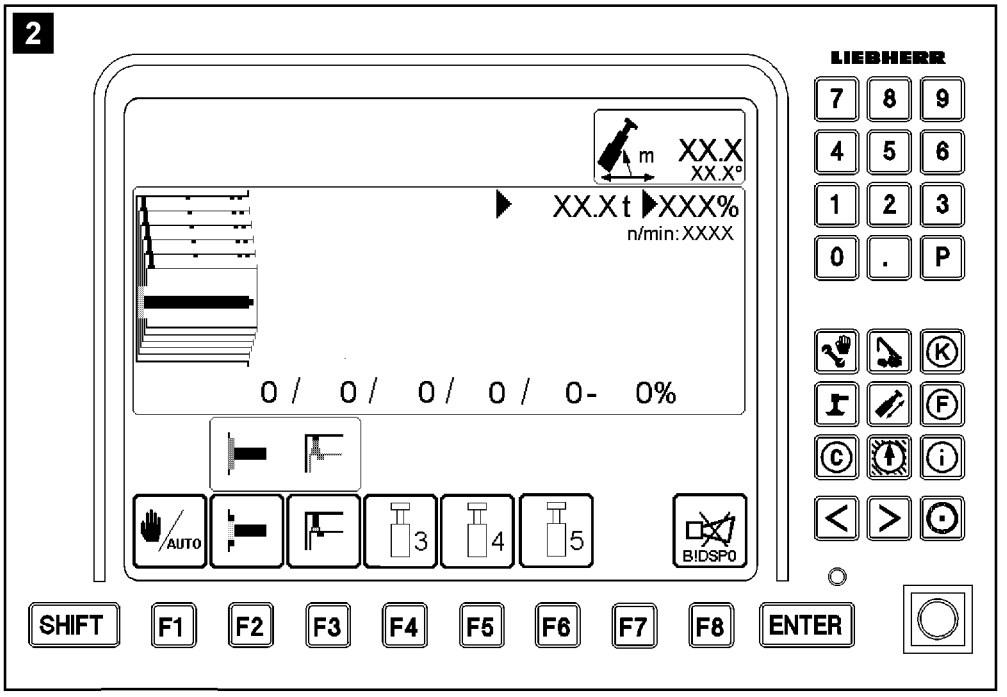
2
LIEBHERR
XX.X
XX.X°
XX.X t XXX%
n/min: XXXX
0 / 0 / 0 / 0 / 0- 0%
AUTO
B!DSP0
SHIFT
F1
F2
F3
F4
F5
F6
F7
F8
ENTER

B112733

6.4 Manual telescoping

NOTICE
Damage to telescoping cylinder!
If the telescoping cylinder is not retracted before starting crane operation, then it can be damaged!
- ▶ After reaching the telescoping target and pinning the telescoping section, the telescoping cylinder must be retracted until the pins for the telescoping section pinning touch on the bores!
- ▶ For manual telescoping, move after pinning to stop (tension) to avoid any stress on the telescoping cylinder.

NOTICE
Telescoping has an effect on the hoist rope!
The telescoping procedure has a direct effect on the hoist rope!
- ▶ During the telescoping procedure, via the crane movement lifting / lowering the hoist gear, make sure that hook remains in the correct position!

Manual telescoping is regarded as an exception mode, as automatic mode makes it possible to reach any chosen extension state.
In manual telescoping, pinning and unpinning of the telescoping cylinder and telescoping must be carried out manually.
The marking on the telescoping screen will indicate in which telescope the pinning equipment of the telescoping cylinder is currently located.
The proximity to a telescope pin bore can be inferred on the telescoping screen to an accuracy of 1 %.

Note
- ▶ To get into manual telescoping mode, you have to switch to “manual telescoping” in the “telescoping” program.
- ▶ Manual telescoping is identical for all telescopes. As an example, manual telescoping of telescope 4 is described.

Make sure that the following prerequisite is met:
– The seat contact button is actuated.

6.4.1 Calling up manual telescoping

▶ Press the program key **P4**.

Result:
– The telescoping screen is called up, see illustration **1**.

▶ Press the function key **F1**.

Result:
– Manual telescoping is activated, see illustration **2**.

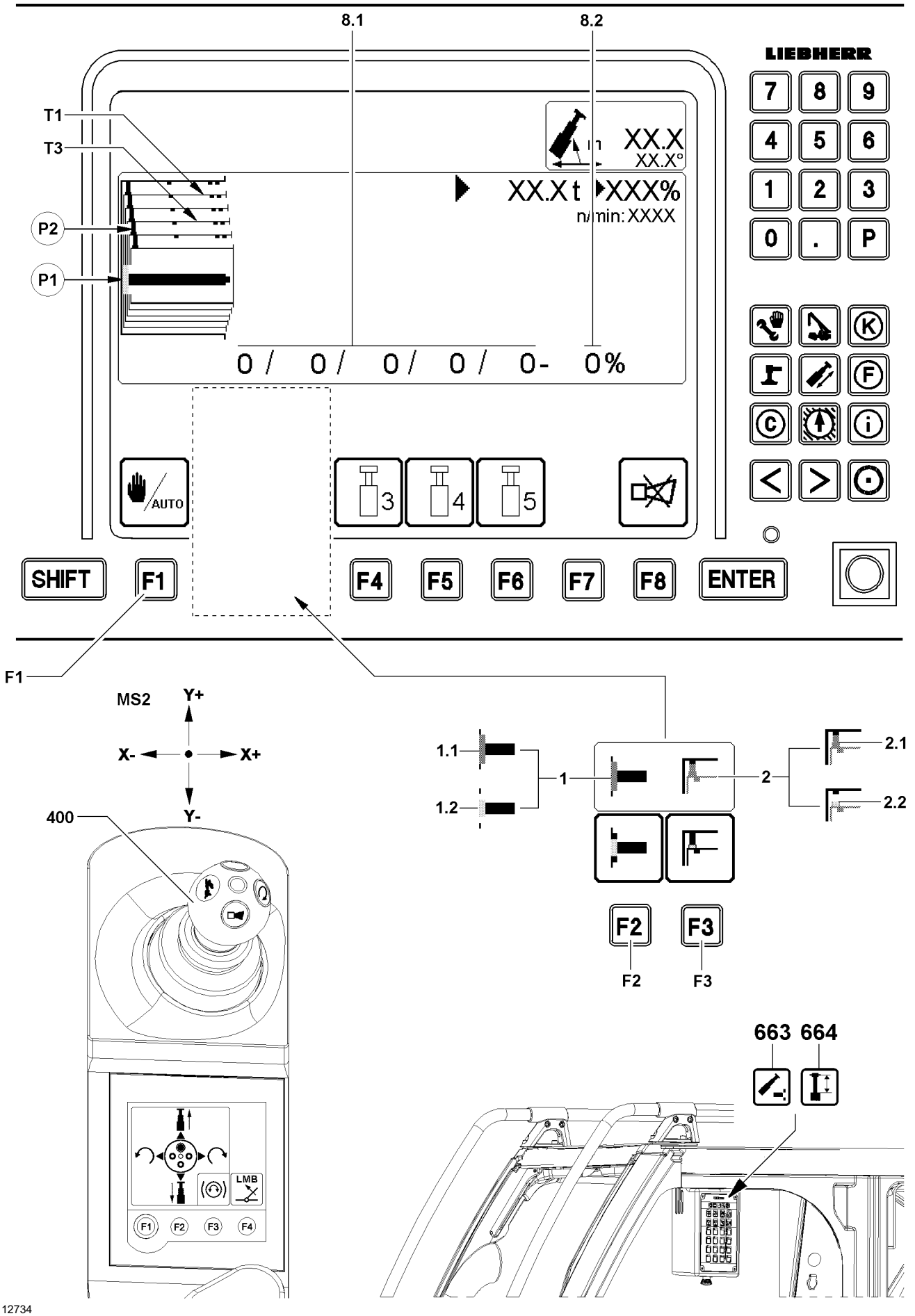
8.1
8.2
LIEBHERR
T1
T3
P2
P1
XX.X
XX.X°
XX.X t
XXX%
n/min: XXXX
0 / 0 / 0 / 0 / 0- 0%
7 8 9
4 5 6
1 2 3
0 . P
AUTO
3
4
5
SHIFT
F1
F4
F5
F6
F7
F8
ENTER
F1
MS2
Y+
X-
X+
Y-
400
1.1
1.2
1
2
2.1
2.2
F2
F3
F2
F3
663 664
LMB
F1
F2
F3
F4
B112734

6.4.2 Manual telescoping on cranes with one winch

Note

▶ In this description is it assumed that all telescopes are retracted and telescope 1 **T1** is selected and pinned.

▶ As an example, the telescope 3 **T3** is to be extended and pinned.

– Manual telescoping is activated.
– The telescoping cylinder is pinned, gripper in icon **1.1** is “green”.
– The telescope 1 **T1** is pinned, pin in icon **2.1** is “green”.
– The indicator light **664** lights up “yellow”.

▶ Press the function key **F2**.

Result:

– The icon above the function key **F2** is bordered in “red”.
– The telescoping cylinder is unpinned, gripper in icon **1.2** is “yellow”.
– Display of gripper on point **P1** is “yellow”.
– The indicator light **663** and indicator light **664** light up “yellow”.

▶ Deflect the master switch **400** (MS2) in direction Y+ (to the front) and extend the telescoping cylinder until the telescope 3 **T3** on the LICCON monitor appears “green”.

Result:

– The telescope 3 **T3** is selected.
– The indicator light **663** and indicator light **664** light up “yellow”.

▶ Press the function key **F2**.

Result:

– The telescoping cylinder is pinned on telescope 3 **T3** and the gripper in icon **1.1** is “green”.
– Display of gripper on point **P1** is “green”.

Troubleshooting

Display of gripper on point **P1** is “yellow”?
Gripper is not in position.

▶ Deflect the master switch **400** (MS2) carefully in direction Y- (to the rear) or in direction Y+ (to the front) until the display of the gripper on point **P1** is “green”.

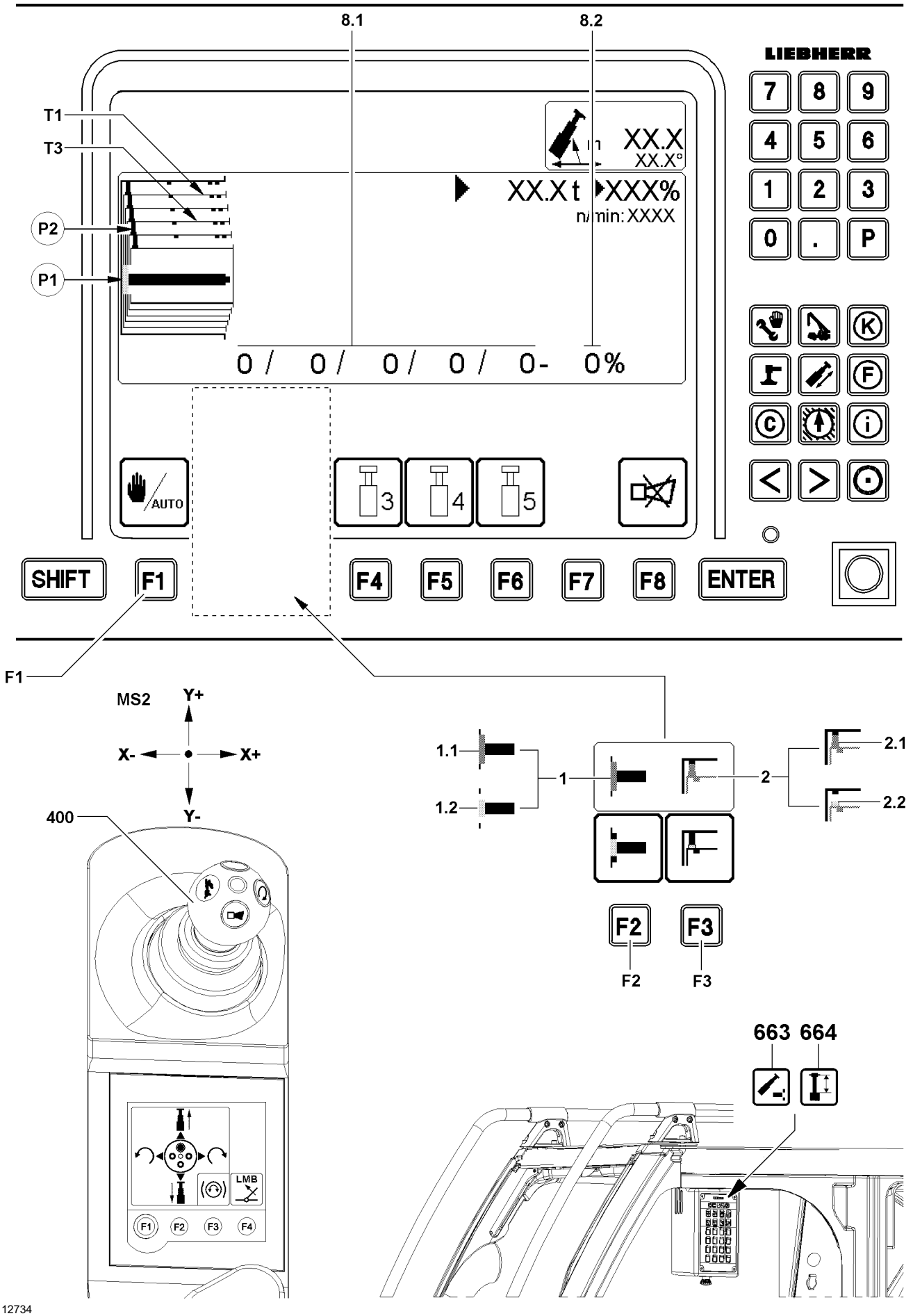
8.1
8.2
LIEBHERR
T1
T3
P2
P1
XX.X
XX.X°
XX.X t
XXX%
n/min: XXXX
0 / 0 / 0 / 0 / 0- 0%
AUTO
SHIFT
F1
F4
F5
F6
F7
F8
ENTER
F1
MS2
Y+
X-
X+
Y-
400
1.1
1.2
1
2
2.1
2.2
F2
F3
F2
F3
663
664
LMB
F1
F2
F3
F4
B112734

Before carrying out any other steps, make sure that the locking pin has latched in audibly.

▶ Press the function key **F3**.

Result:

– The icon above the function key **F3** is bordered in “red”.
– The telescope 3 **T3** is unpinned, pin in icon **2.2** is moved in and “yellow”.
– The indicator light **663** lights up “green”.

Troubleshooting

Pin on point **P2** is moved out and “yellow”?

The pin is stuck.

▶ Deflect the master switch **400** (MS2) carefully in direction Y- (to the rear) or in direction Y+ (to the front) until the pin in icon **2.1** is moved in and is “yellow”.

NOTICE

Risk of damage to the tele locking!

▶ Lock the telescoping cylinder in the intended pin points.
▶ The locking pins must latch in audibly.

Note

▶ Display Extension status of telescopes **8.1** ascending from left to right (T1...T5) in percentages. Pin points are at 0 %, 42 %, 92 % and 100 %.
▶ Display Extension status Telescoping cylinder **8.2** in percentages.
▶ Pin points can also be accessed easily via the graphic illustration in the LICCON monitor.

▶ Deflect the master switch **400** (MS2) in direction Y+ (to the front) and telescope the telescope 3 **T3** out to the desired length.

Result:

– The indicator light **664** lights up “yellow” when a pin point is reached.

Troubleshooting

The indicator light **664** does not light up?

Pin point is not reached.

▶ Deflect the master switch **400** (MS2) in direction Y- (to the rear) or in direction Y+ (to the front) until the indicator light **664** lights up.

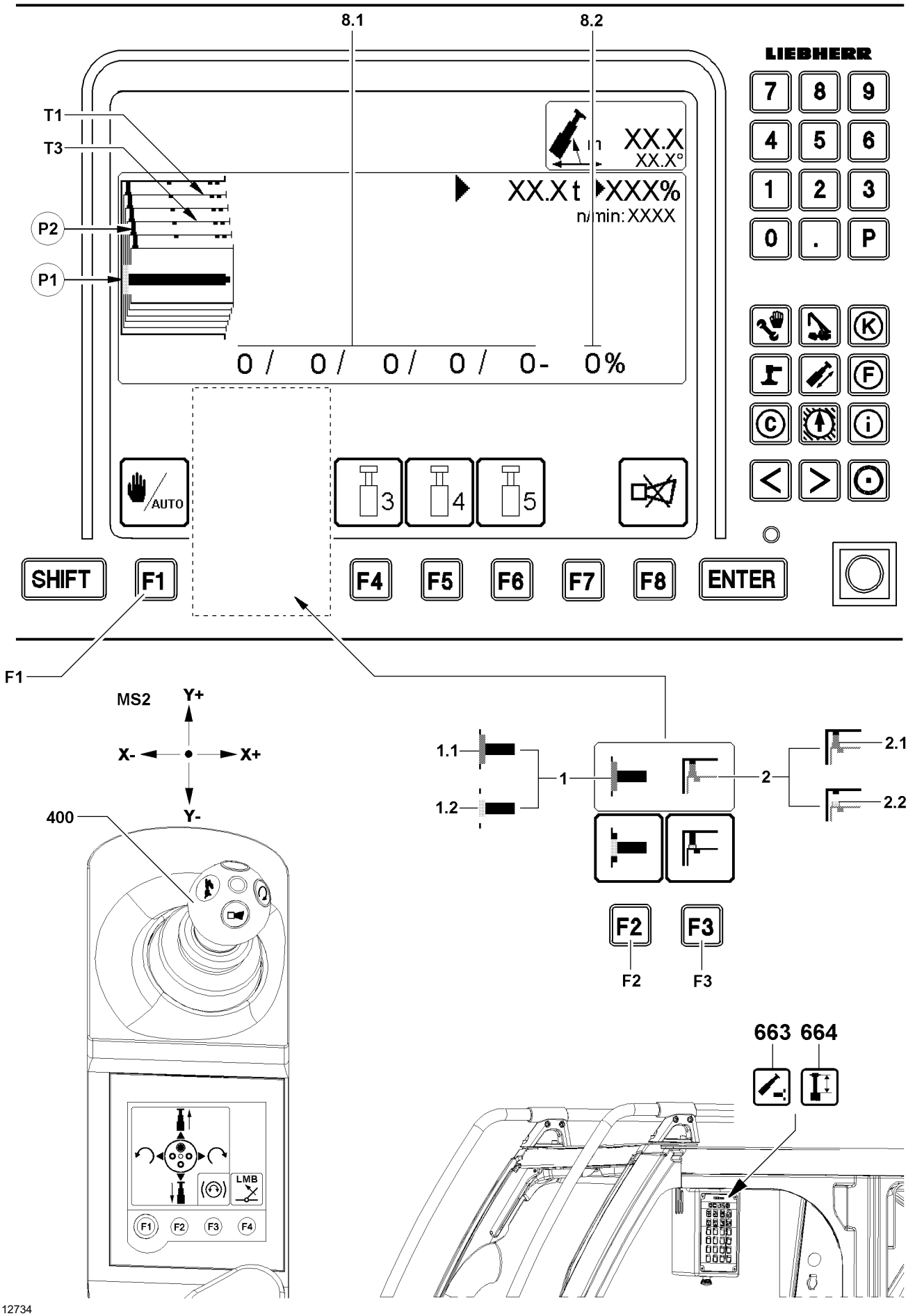
8.1
8.2
LIEBHERR
T1
T3
P2
P1
XX.X
XX.X°
XX.X t
XXX%
n/min: XXXX
0 / 0 / 0 / 0 / 0- 0%
7 8 9
4 5 6
1 2 3
0 . P
AUTO
3
4
5
SHIFT
F1
F4
F5
F6
F7
F8
ENTER
F1
MS2
Y+
X-
X+
Y-
400
1.1
1.2
1
2
2.1
2.2
F2
F3
F2
F3
663 664
LMB
F1
F2
F3
F4
B112734

▶ Press the function key **F3**.

Result:

– The telescope 3 is pinned on the desired length.
– The icon **2.1** appears “green”.
– The indicator light **663** turns off.
– The indicator light **664** lights up “yellow”.

Troubleshooting

Pin on point **P2** is moved out and “yellow”?

Pin is next to the pin point.

▶ Deflect the master switch **400** (MS2) in direction Y- (to the rear) or in direction Y+ (to the front) until the pin on point **P2** is moved out and is “green”.

Note

▶ All telescoping sections can be telescoped out as described above.
▶ The sequence for telescoping must always be adhered to.
▶ Example telescope telescope 3 and telescope 4 out: Telescope telescope 4 out first and then telescope 3. Telescoping out in descending order.
▶ Example telescope telescope 3 and telescope 4 in: Telescope telescope 3 in first and then telescope 4. Telescoping in in ascending order.

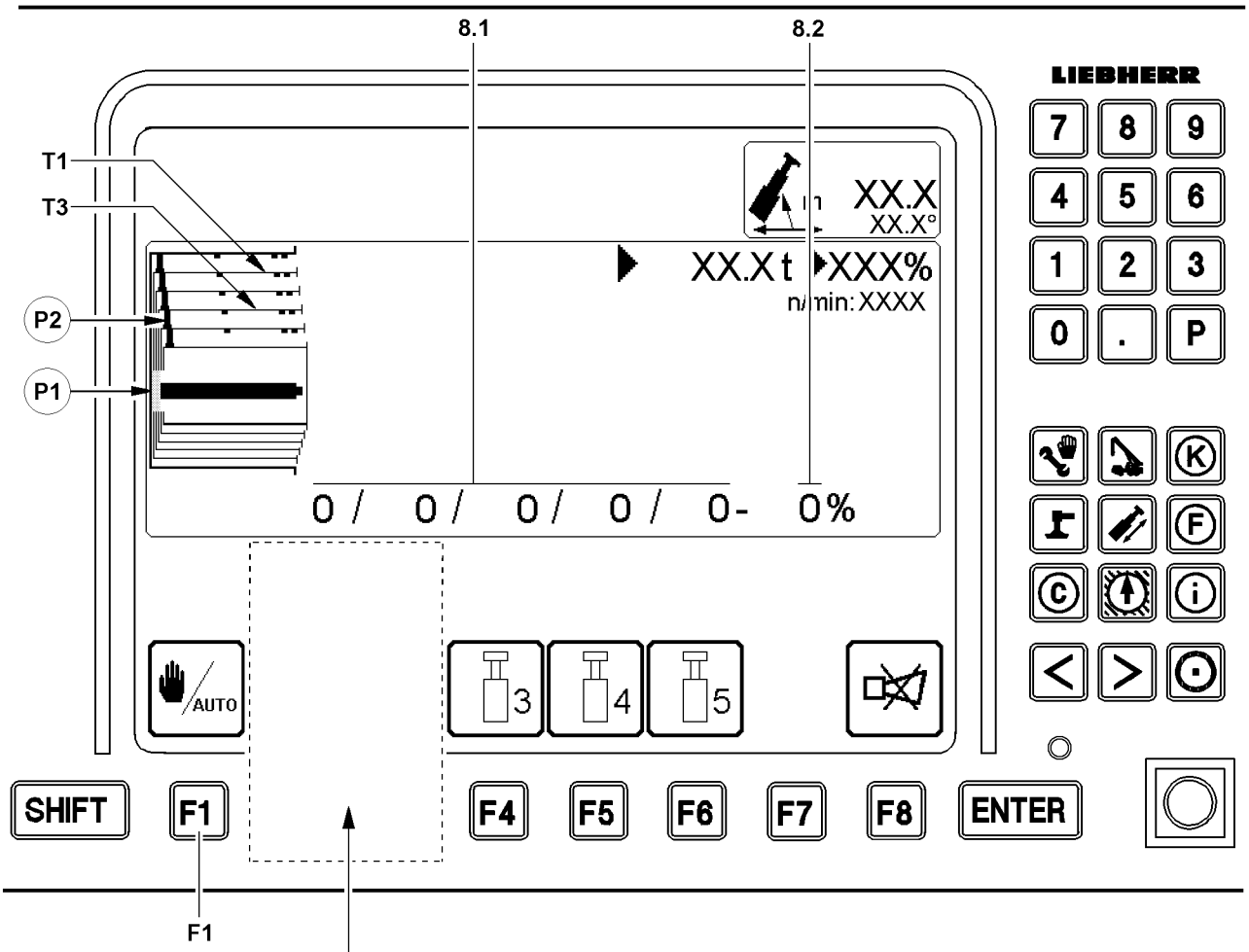
8.1
8.2
LIEBHERR
T1
T3
P2
P1
XX.X
XX.X°
XX.X t
XXX%
n/min: XXXX
0 / 0 / 0 / 0 / 0- 0%
7 8 9
4 5 6
1 2 3
0 . P
AUTO
3
4
5
SHIFT
F1
F4
F5
F6
F7
F8
ENTER
F1

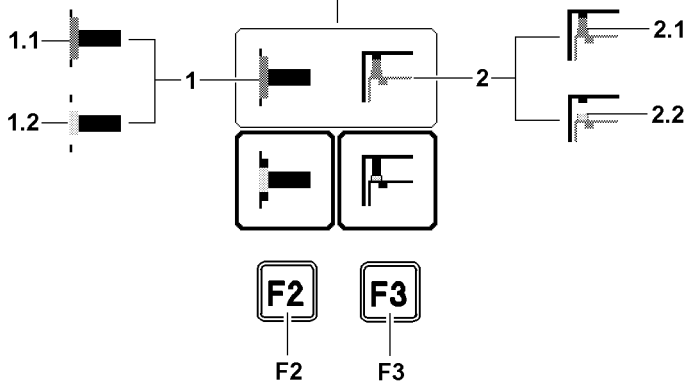
1.1
1.2
1
2
2.1
2.2
F2
F3
F2
F3

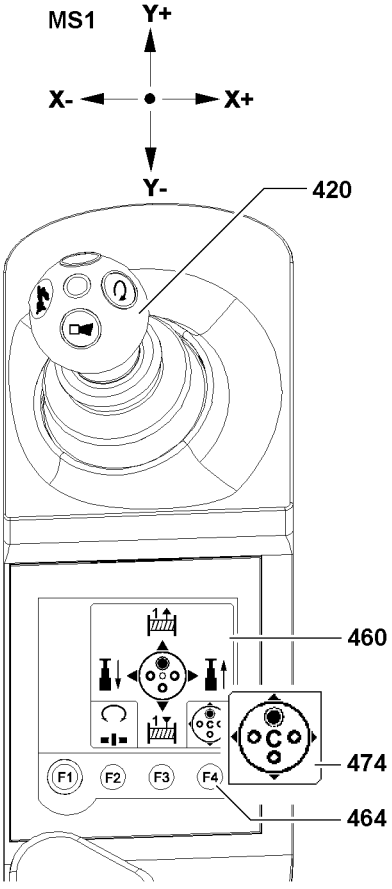
MS1
Y+
X-
X+
Y-
420
460
474
464
F1
F2
F3
F4

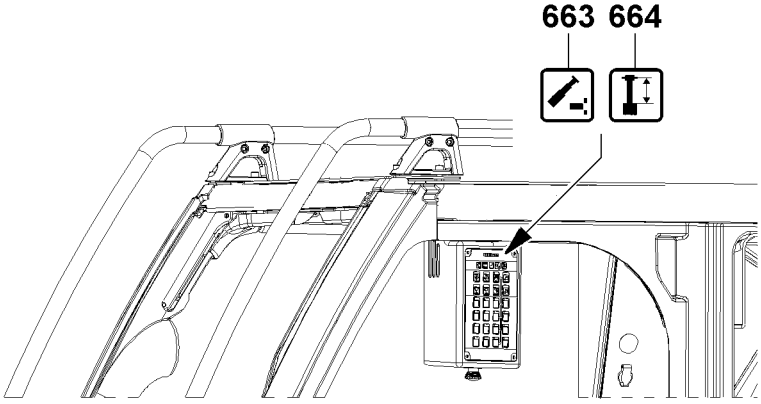
663 664

B112735

6.4.3 Manual telescoping on cranes with two winches

Note

- ▶ In this description is it assumed that all telescopes are retracted and telescope 1 **T1** is selected and pinned.
- ▶ As an example, the telescope 3 **T3** is to be extended and pinned.
- ▶ The master switch assignment can be selected via the function key **464**.

- Manual telescoping is activated.
- On the right touch display **460**, master switch assignment “C” **474** is set.
- The telescoping cylinder is pinned, gripper in icon **1.1** is “green”.
- The telescope 1 **T1** is pinned, pin in icon **2.1** is “green”.
- The indicator light **664** lights up “yellow”.

▶ Press the function key **F2**.

Result:

- The icon above the function key **F2** is bordered in “red”.
- The telescoping cylinder is unpinned, gripper in icon **1.2** is “yellow”.
- Display of gripper on point **P1** is “yellow”.
- The indicator light **663** lights up “yellow”.
- The indicator light **664** lights up “yellow”.

▶ Deflect the master switch **420** (MS1) in direction X+ (to the right) and extend the telescoping cylinder until the telescope 3 **T3** on the LICCON monitor appears “green”.

Result:

- The telescope 3 **T3** is selected.
- The indicator light **663** and indicator light **664** light up “yellow”.

▶ Press the function key **F2**.

Result:

- The telescoping cylinder is pinned on telescope 3 **T3** and the gripper in icon **1.1** is “green”.
- Display of gripper on point **P1** is “green”.

Troubleshooting

Display of gripper on point **P1** is “yellow”?

Gripper is not in position.

▶ Deflect the master switch **420** (MS1) carefully in direction X- (to the left) or in direction X+ (to the right) until the display of the gripper on point **P1** is “green”.

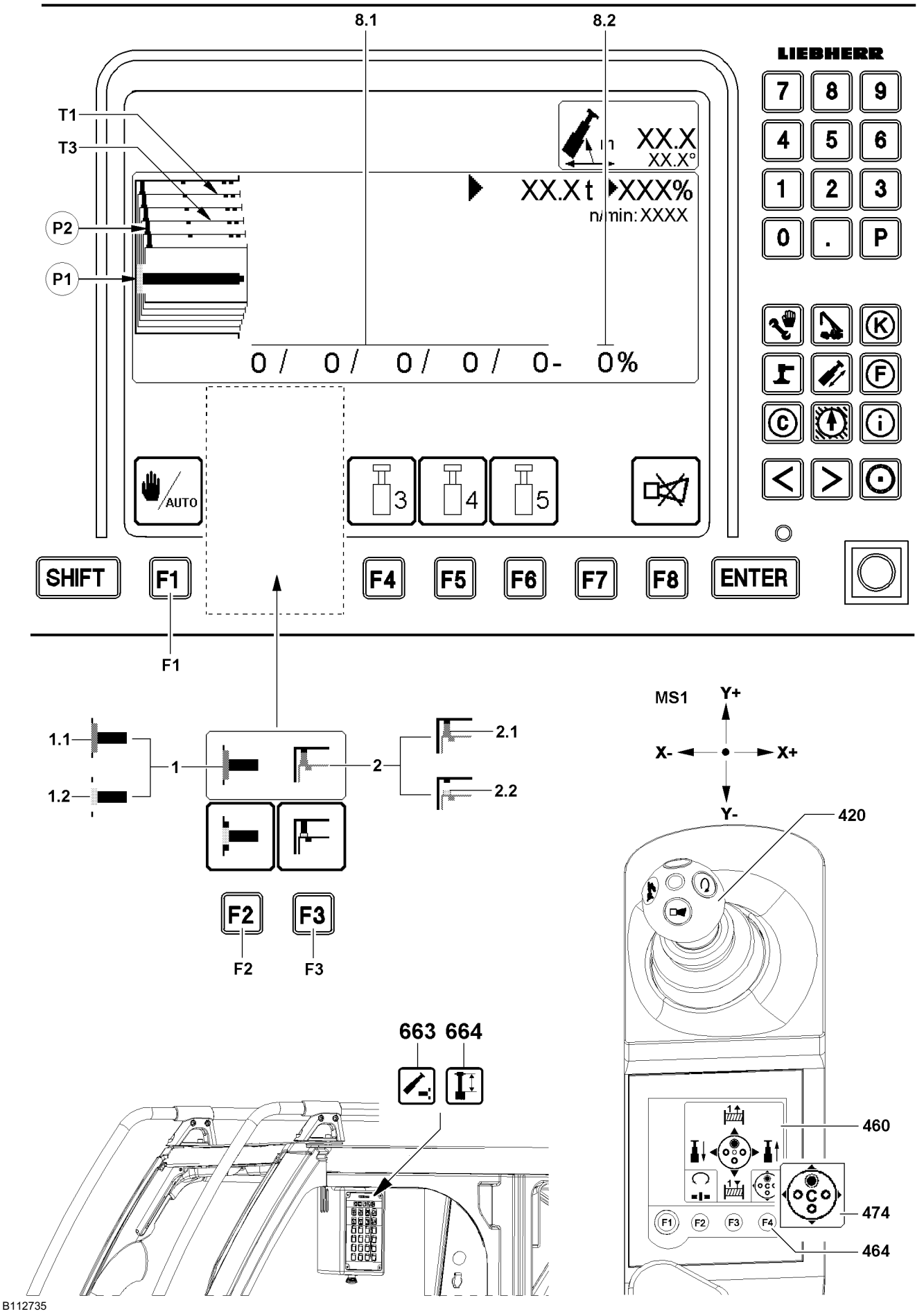
8.1
8.2
LIEBHERR
T1
T3
P2
P1
XX.X
XX.X°
XX.X t
XXX%
n/min: XXXX
0 / 0 / 0 / 0 / 0- 0%
AUTO
3
4
5
7 8 9
4 5 6
1 2 3
0 . P
SHIFT
F1
F4
F5
F6
F7
F8
ENTER
F1
1.1
1.2
1
2
2.1
2.2
F2
F3
F2
F3
MS1
Y+
X-
X+
Y-
420
663 664
460
474
464
F1
F2
F3
F4
B112735

Before carrying out any other steps, make sure that the locking pin has latched in audibly.

▶ Press the function key **F3**.

Result:

– The icon above the function key **F3** is bordered in “red”.
– The telescope 3 **T3** is unpinned, pin in icon **2.2** is moved in and “yellow”.
– The indicator light **663** lights up “green”.

Troubleshooting

Pin on point **P2** is moved out and “yellow”?

The pin is stuck.

▶ Deflect the master switch **420** (MS1) carefully in direction X- (to the left) or in direction X+ (to the right) until the pin in icon **2.1** is moved in and is “yellow”.

NOTICE

Risk of damage to the tele locking!

▶ Lock the telescoping cylinder in the intended pin points.
▶ The locking pins must latch in audibly.

Note

▶ Display Extension status of telescopes **8.1** ascending from left to right (T1...T5) in percentages. Pin points are at 0 %, 42 %, 92 % and 100 %.
▶ Display Extension status Telescoping cylinder **8.2** in percentages.
▶ Pin points can also be accessed easily via the graphic illustration in the LICCON monitor.

▶ Deflect the master switch **420** (MS1) carefully in direction X+ (to the right) and telescope the telescope 3 **T3** out to the desired length.

Result:

– The indicator light **664** lights up “yellow” when a pin point is reached.

Troubleshooting

The indicator light **664** does not light up?

Pin point is not reached.

▶ Deflect the master switch **420** (MS1) carefully in direction X- (to the left) or in direction X+ (to the right) until the indicator light **664** lights up.

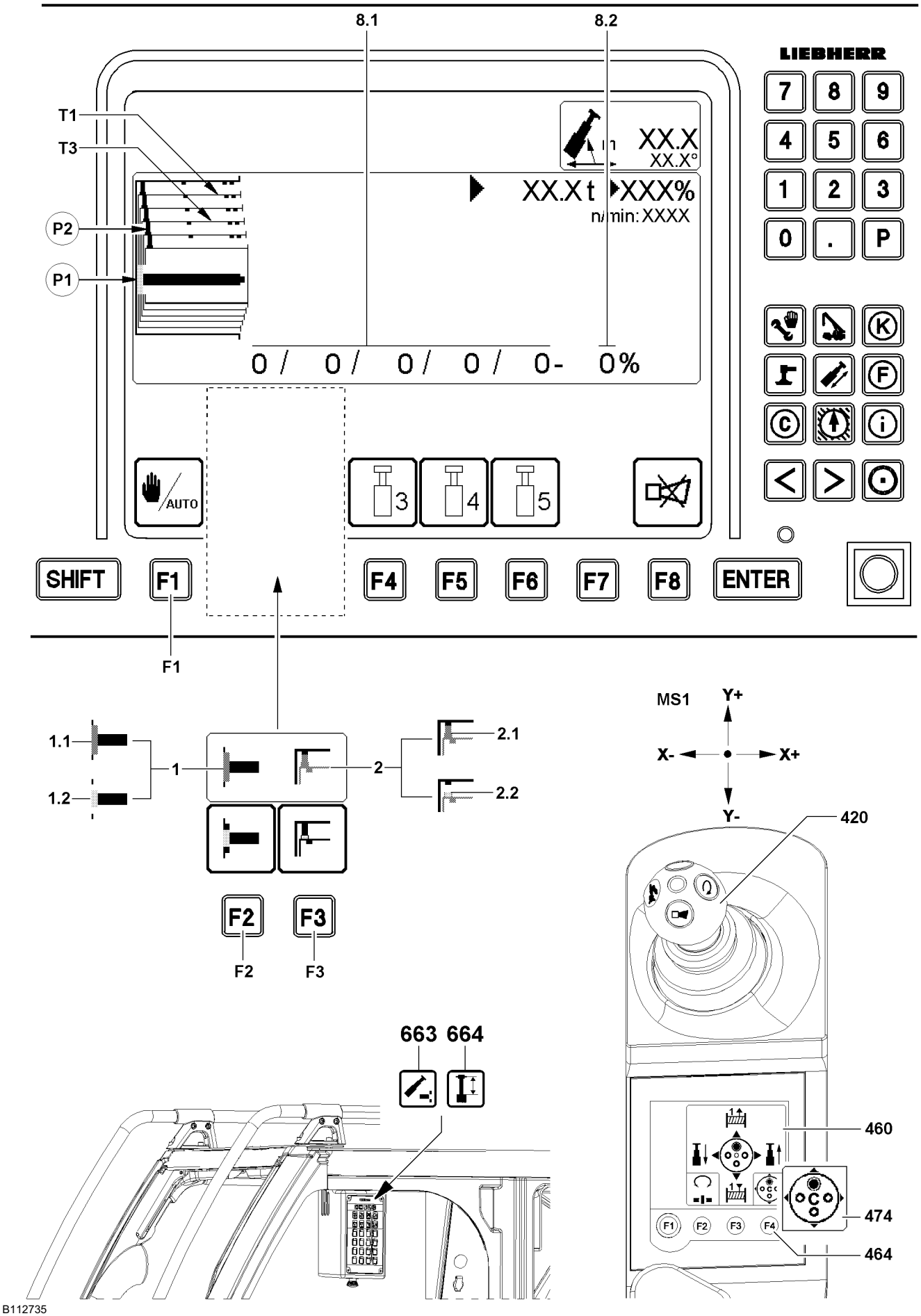
8.1
8.2
LIEBHERR
T1
T3
P2
P1
XX.X
XX.X°
XX.X t
XXX%
n/min: XXXX
0 / 0 / 0 / 0 / 0- 0%
AUTO
SHIFT
F1
F4
F5
F6
F7
F8
ENTER
1.1
1.2
1
2
2.1
2.2
F2
F3
MS1
Y+
X-
X+
Y-
420
663
664
460
474
464
B112735

▶ Press the function key **F3**.

Result:

– The telescope 3 is pinned on the desired length.
– The icon **2.1** appears “green”.
– The indicator light **663** turns off.
– The indicator light **664** lights up “green”.

Troubleshooting

Pin on point **P2** is moved out and “yellow”?

Pin is next to the pin point.

▶ Deflect the master switch **420** (MS1) carefully in direction X- (to the left) or in direction X+ (to the right) until the pin on point **P2** is moved out and is “green”.

Note

▶ All telescoping sections can be telescoped out as described above.
▶ The sequence for telescoping must always be adhered to.
▶ Example telescope telescope 3 and telescope 4 out: Telescope telescope 4 out first and then telescope 3. Telescoping out in descending order.
▶ Example telescope telescope 3 and telescope 4 in: Telescope telescope 3 in first and then telescope 4. Telescoping in in ascending order.

1

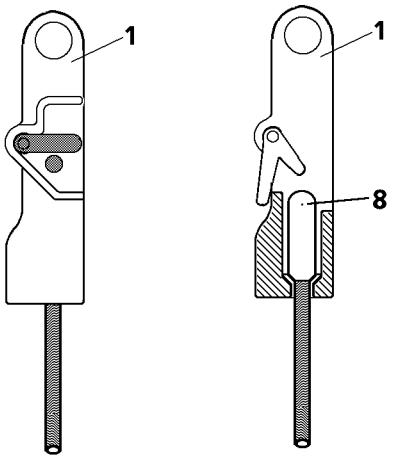

2

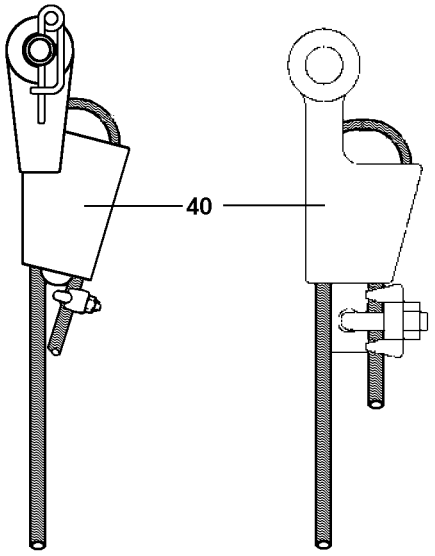

B108118

1 Wire ropes and rope end connections

1.1 Wire ropes

Please check if a **rotating resistant** or a **non-rotating** rope is required for the application. The type of rope that is selected then determines the required type of rope end connections, see Crane operating instructions, chapter 8.04.

Note

▶ The correct choice and use of wire rope and rope end connections are decisive preconditions for proper and accident-free crane operation!

DANGER

Danger of serious personnel injury and equipment damage!

▶ **Never** use rotation-resistant ropes with a rotating rope end connection!

▶ **Never** install a twist compensator / swivel!

1.2 Rope end connections

Rope end connections are grouped into:

– Rope end connections with rope clamp **8**
  For that, use a rope lock **1**, see illustration **1**.
– Rope end connections without rope clamp
  For that, use a wedge lock **40**, see illustration **2**.

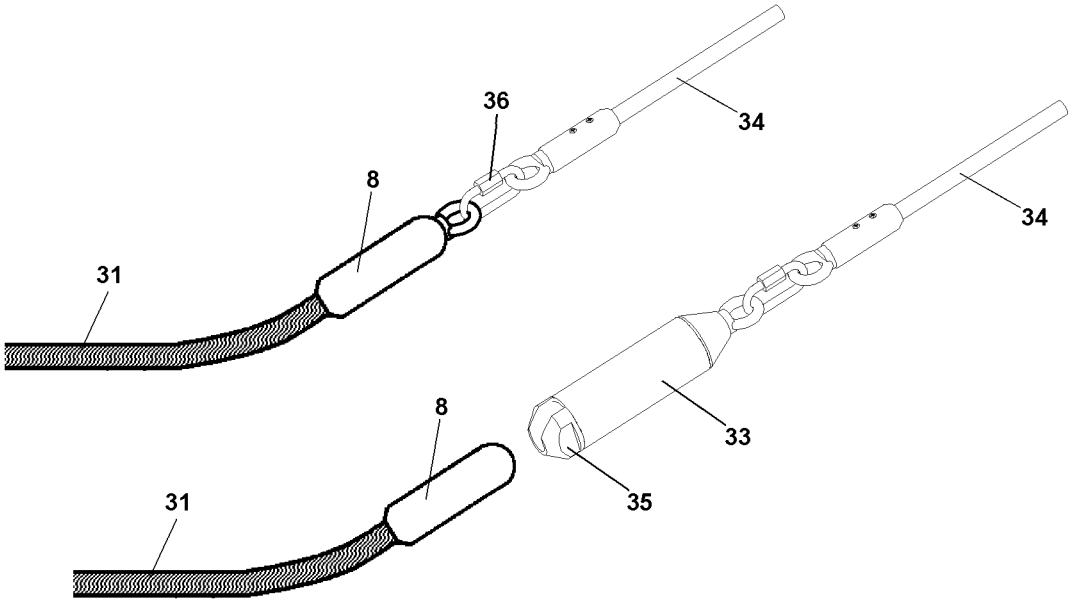

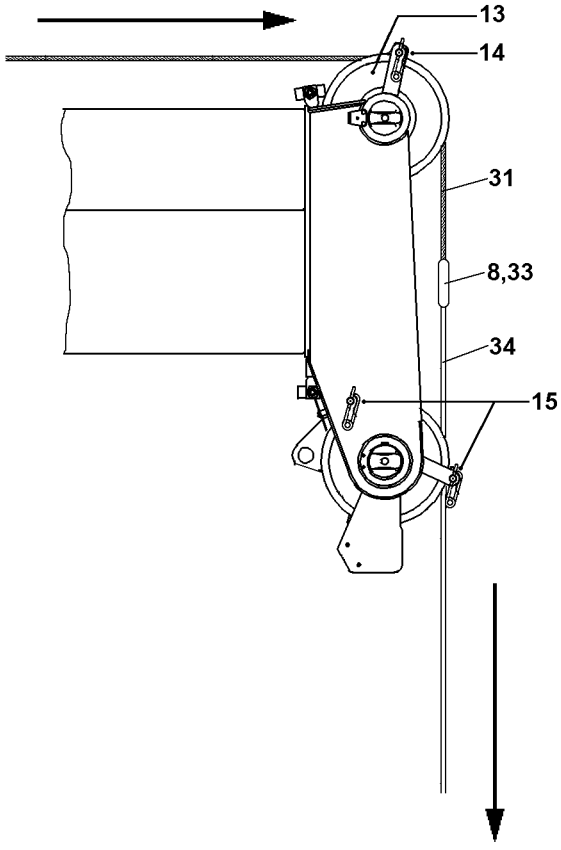

B110411

2 Reeving the hoist rope with the auxiliary reeving rope

WARNING
Risk of falling!
The assembly personnel, due to an erroneous operation of the crane function or slip on the telescopic boom, can fall and be killed!
- ▶ The telescopic boom may only be accessed if the assembly personnel is protected with suitable safety measures to prevent them from falling!
- ▶ If retaining ropes are present on the telescopic boom, then the assembly personnel must hang an approved fall arrest system to the retaining ropes of the telescopic boom on the left and right with both snap hooks and secure themselves in case of falls. See crane operating instructions, chapter 2.04 and chapter 2.06!
- ▶ Without appropriate safety measures, it is **strictly** prohibited to step on the telescopic boom!
- ▶ If railings are present for the crane, then they must be brought into the corresponding position and secured for assembly / disassembly.
- ▶ Carry out all assembly work from a safe place!

2.1 Reeving procedure

Make sure that the following prerequisites are met:
- The crane is properly supported and horizontally aligned.
- The crane is ballasted according to the load chart.
- The LICCON overload protection has been set according to the load chart.
- The telescopic boom is fully telescoped in.
- The telescopic boom has been luffed to the rear or the side.
- The telescopic boom is luffed down in 0° position.

- ▶ Wear approved fall arrest system and protective equipment, see Crane operating instructions, chapter 2.04.
- ▶ Install the hook device on the ladder, see Crane operating instructions, Chapter 2.06.

WARNING
Risk of falling!
- ▶ Hang the ladder in such a way onto the hoist gear and on the telescopic boom that it cannot fall over! See Crane operating instructions, chapter 2.06.

- ▶ If no railing is installed on the crane superstructure:
  Hang the ladder on the hoist gear and set it up safely, see Crane Operating instructions, Chapter 2.06.
- ▶ If a railing is installed on the crane superstructure:
  Set the railing on the crane superstructure into assembly / disassembly position, see Crane operating instructions, chapter 2.06.
- ▶ Secure the assembly personnel from falling: Hook assembly personnel with fall arrest system on the respective fastening points, see Crane operating instructions, chapter 2.06.

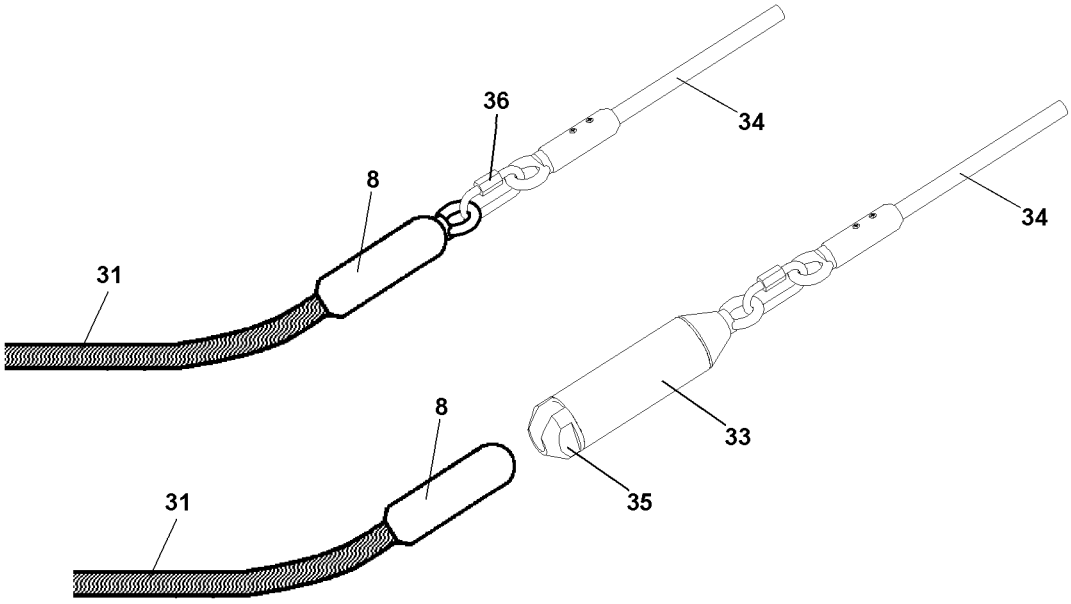

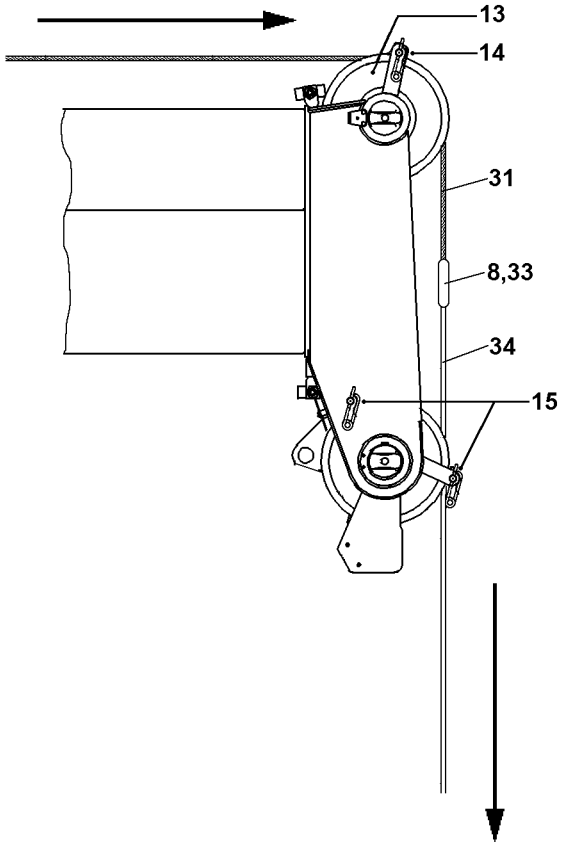

B110411

With the auxiliary reeving rope **34**, the hoist rope **31** can be reeved safely.

- When **a** intake sleeve **33** is installed on the auxiliary reeving rope **34**:
  Connect the auxiliary reeving rope **34** with the hoist rope **31**: Slide the intake sleeve **33** onto the locking clamp **8** and close off with the sleeve plug **35**.
- When **no** intake sleeve **33** is installed on the auxiliary reeving rope **34**:
  Connect the auxiliary reeving rope **34** with the hoist rope **31**: Open the chain lock **36**, connect it with the eyehook of the lock clamp **8** and close the chain lock **36**.
- Place the auxiliary reeving rope **34** forward over the pulley head.
- Hang the ladder on the telescopic boom and set it up safely, see Crane Operating instructions, Chapter 2.06.
- Secure the assembly personnel from falling: Hook assembly personnel with fall arrest system on the respective fastening points, see Crane operating instructions, chapter 2.06.
- Remove the rope retaining pipe **14** and rope retaining pipe **15** on the pulley head.
- Place the auxiliary reeving rope **34** over the upper rope pulley **13**.

NOTICE

Danger of slack rope formation!

If the auxiliary reeving rope **34** is not held tight when spooling the winch out, slack rope can form on the hoist rope **31**!

- Hold the auxiliary reeving rope **34** tight!

- Slowly spool out the winch by deflecting the master switch and pull the auxiliary reeving rope **34** with the hoist rope **31** over the upper rope pulley **13**.
- Detach the auxiliary reeving rope **34** on the hoist rope **31** and reeve the hoist rope **31** into the hook block.
- Insert and secure the rope retaining pipe **14** and the rope retaining pipe **15** on the pulley head.

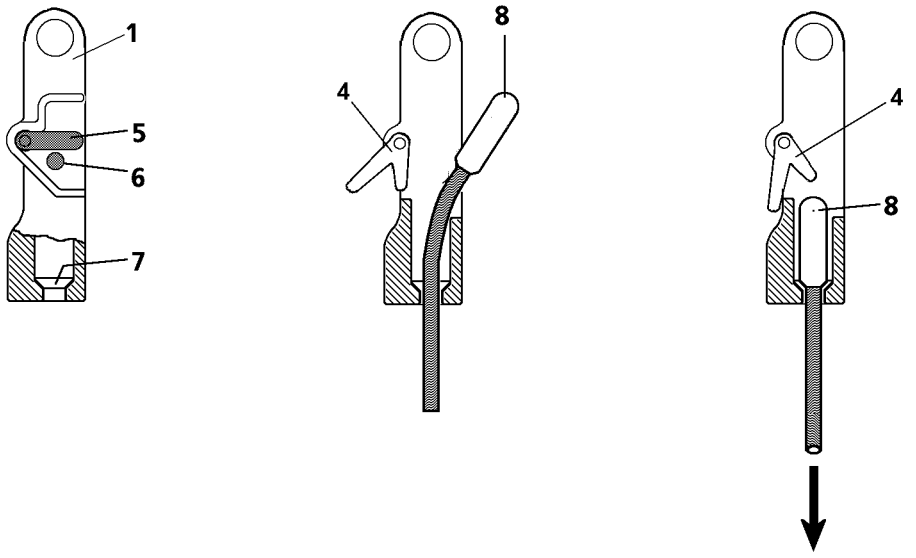

1

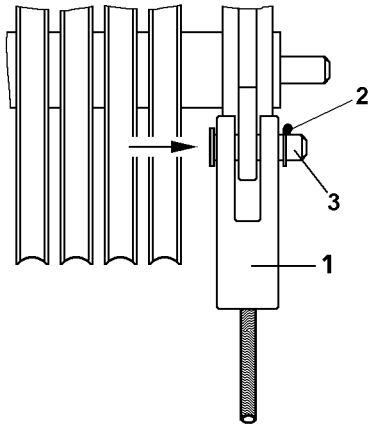

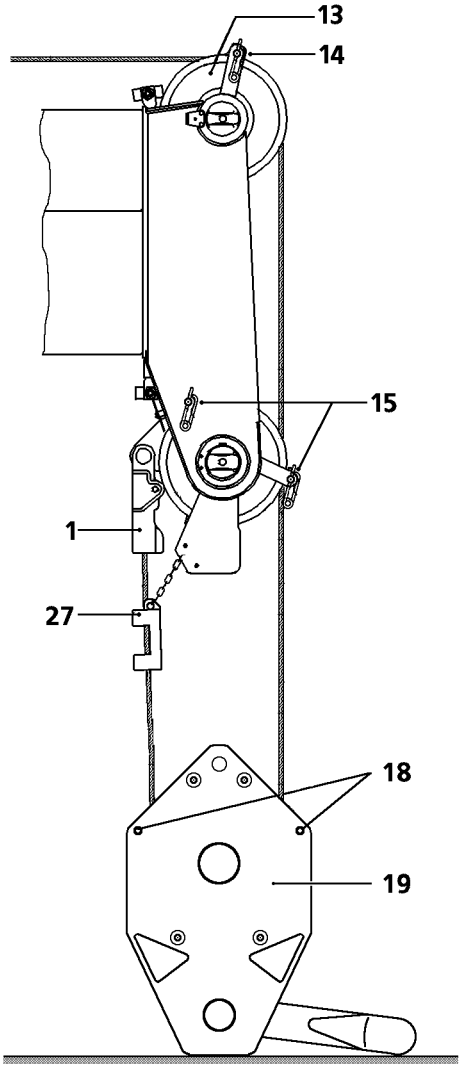

B108124

3 Reeving the hook block in and out

3.1 Reeving in the hook block

3.1.1 Preparing the hook block

NOTICE
Damage to the hoist rope!
An incorrectly reeved hoist rope or the incorrect selection of the rope fixed point can cause the hook block not to hang vertically and thus cause damage to the hoist rope!
- ▶ Always carry out the reeving of the hoist rope according to the reeving plan!
- ▶ The rope fixed point on the hook block is to be selected in such a way that the last strand runs parallel to the remaining rope strands, as much as possible!

- ▶ Place the required hook block under the pulley head of the telescopic boom.
- ▶ At the hook block **19**, remove the spring retainers **18** for both rope retaining pins and pull them both out.

WARNING
Risk of falling!
The assembly personnel, due to an erroneous operation of the crane function or slip on the telescopic boom, can fall and be killed!
- ▶ The telescopic boom may only be accessed if the assembly personnel is protected with suitable safety measures to prevent them from falling!
- ▶ If retaining ropes are present on the telescopic boom, then the assembly personnel must hang an approved fall arrest system to the retaining ropes of the telescopic boom on the left and right with both snap hooks and secure themselves in case of falls. See crane operating instructions, chapter 2.04 and chapter 2.06!
- ▶ Without appropriate safety measures, it is **strictly** prohibited to step on the telescopic boom!
- ▶ If railings are present for the crane, then they must be brought into the corresponding position and secured for assembly / disassembly.
- ▶ Carry out all assembly work from a safe place!

- ▶ Reeve in the hoist rope, see section “Reeving the hoist rope with the auxiliary reeving rope”.
- ▶ Insert the rope retaining pipes again and secure with spring retainers.

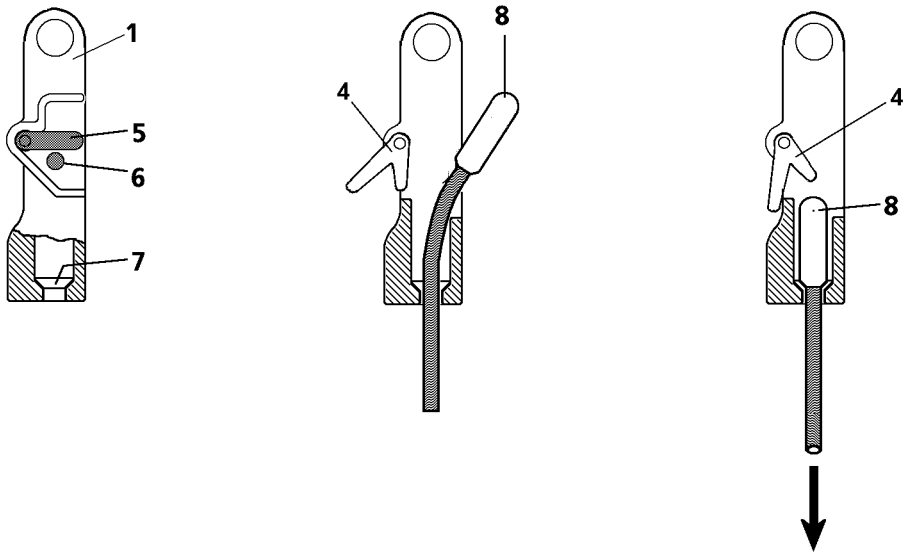

1

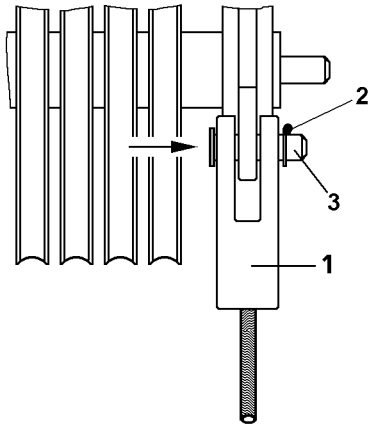

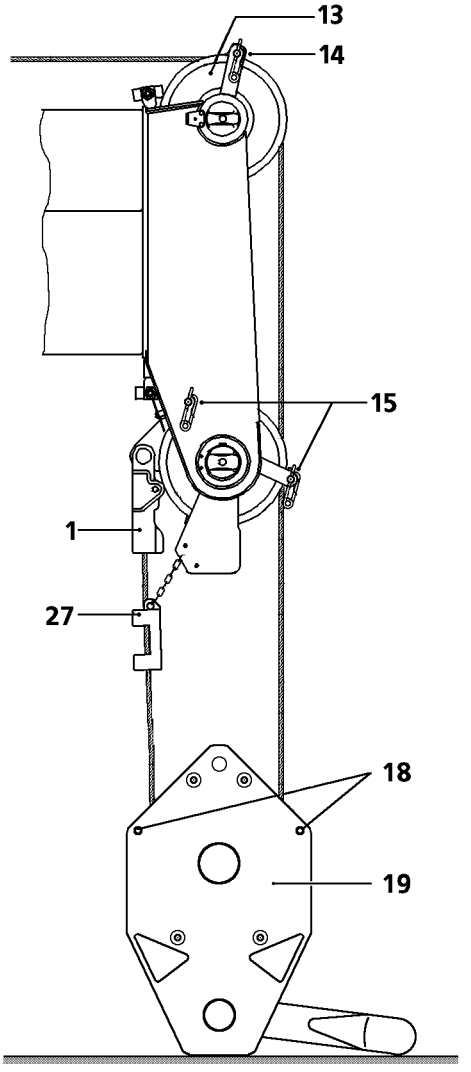

B108124

3.1.2 Fastening the hoist rope

NOTICE
Damage to the hoist rope!
If the pin **3** has been assembled incorrectly, the hoist rope may rub against the pin **3** or on the linch pin **2**.
▶ Always insert the pins **3** from “inside to outside” and secure from the outside, see fig. **1**.

▶ The rope lock **1** must be pinned in either at the pulley head or on the hook block and secured with linch pins **2**, depending on reeving.
▶ Push the retaining pin **6** on the rope lock **1** in, move the lever **5** “downward” and hold it in this position.

Result:
– The latch **4** will be swivelled downward.

▶ Attach the rope end with the locking clamp **8** in the rope lock and pull the rope firmly “downward” (in direction of arrow), until the locking clamp **8** is placed in the cone **7**.

WARNING
Danger of accident due to incorrect mounting of locking clamp!
▶ The locking clamp **8** must touch on the cone **7** after hanging it into the rope lock **1** and must be secured by the latch **4**!

▶ Release the lever **5**.

Result:
– The lever **5** returns to the initial position and is locked by the retaining pin **6**.

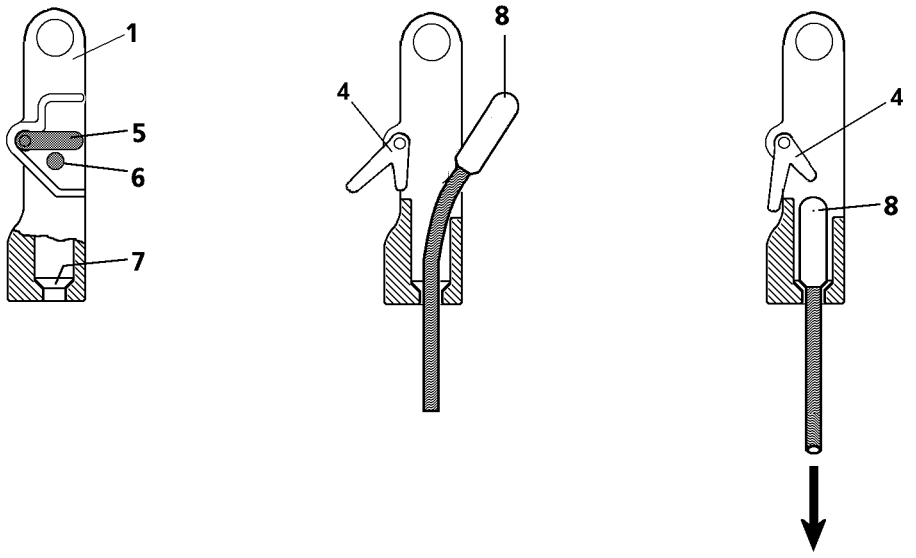

1

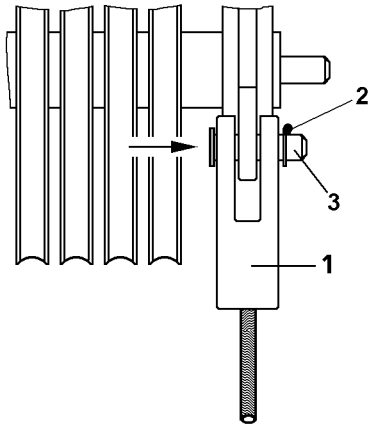

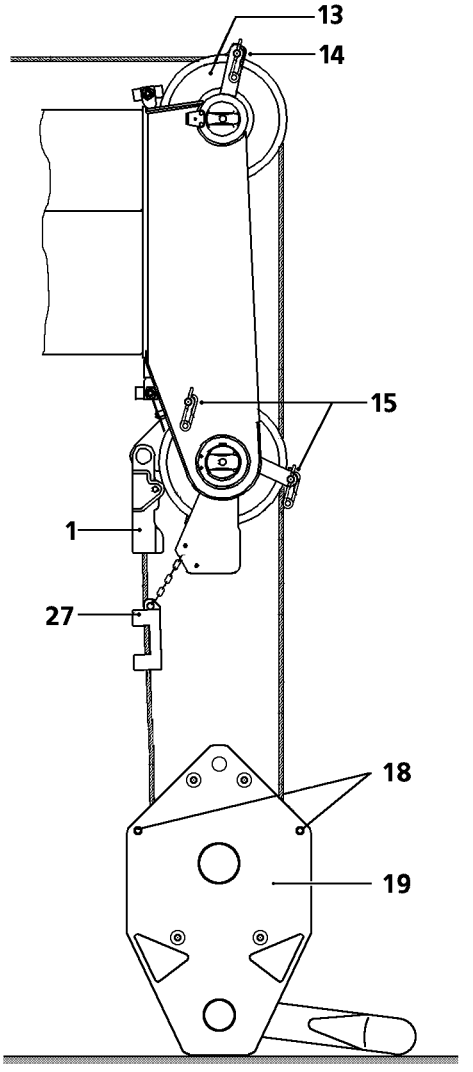

B108124

3.2 Unreeving the hook block

Make sure that the following prerequisites are met:
- The crane is properly supported and horizontally aligned.
- The crane is ballasted according to the load chart.
- The LICCON overload protection has been set according to the load chart.
- The telescopic boom is fully telescoped in.
- The telescopic boom has been luffed to the rear or the side.
- The telescopic boom is luffed down in 0° position.
- The ground is level and of sufficient load carrying capacity.

3.2.1 Lowering the hook block

WARNING
Crushing of hands!
When guiding the hook block by hand, hands or fingers can be crushed!
When unreeving the hook block, it can topple over!
- ▶ Use the handles in the safe area of the hook block!
- ▶ Make sure the hook block is safely positioned!

- ▶ Lower the hook block and set it on the ground.
- ▶ Remove the hoist limit switch weight, see section “Removing the hoist limit switch weight”.

3.2.2 Detaching the hoist rope

- ▶ Push in retaining pin **6** on the rope lock **1** move the lever **5** downward and hold it in this position.

Result:
- The latch **4** is moved to the side and the locking clamp **8** is released.

- ▶ Push the hoist rope up and detach the locking clamp **8**.
- ▶ At the hook block **19**, remove the spring retainers **18** for both rope retaining pins and pull both rope retaining pins out, see section “Reeving the hoist rope with the assembly winch”
- ▶ On the pulley head remove the spring retainers on the rope retaining pipe **14** and on the rope retaining pipe **15** and pull the rope retaining pipes out, see section “Reeving the hoist rope with the auxiliary reeving rope”
- ▶ Unreeve the hoist rope from the hook block and the pulley head.
- ▶ Insert the rope retaining pipes again and secure with spring retainers.

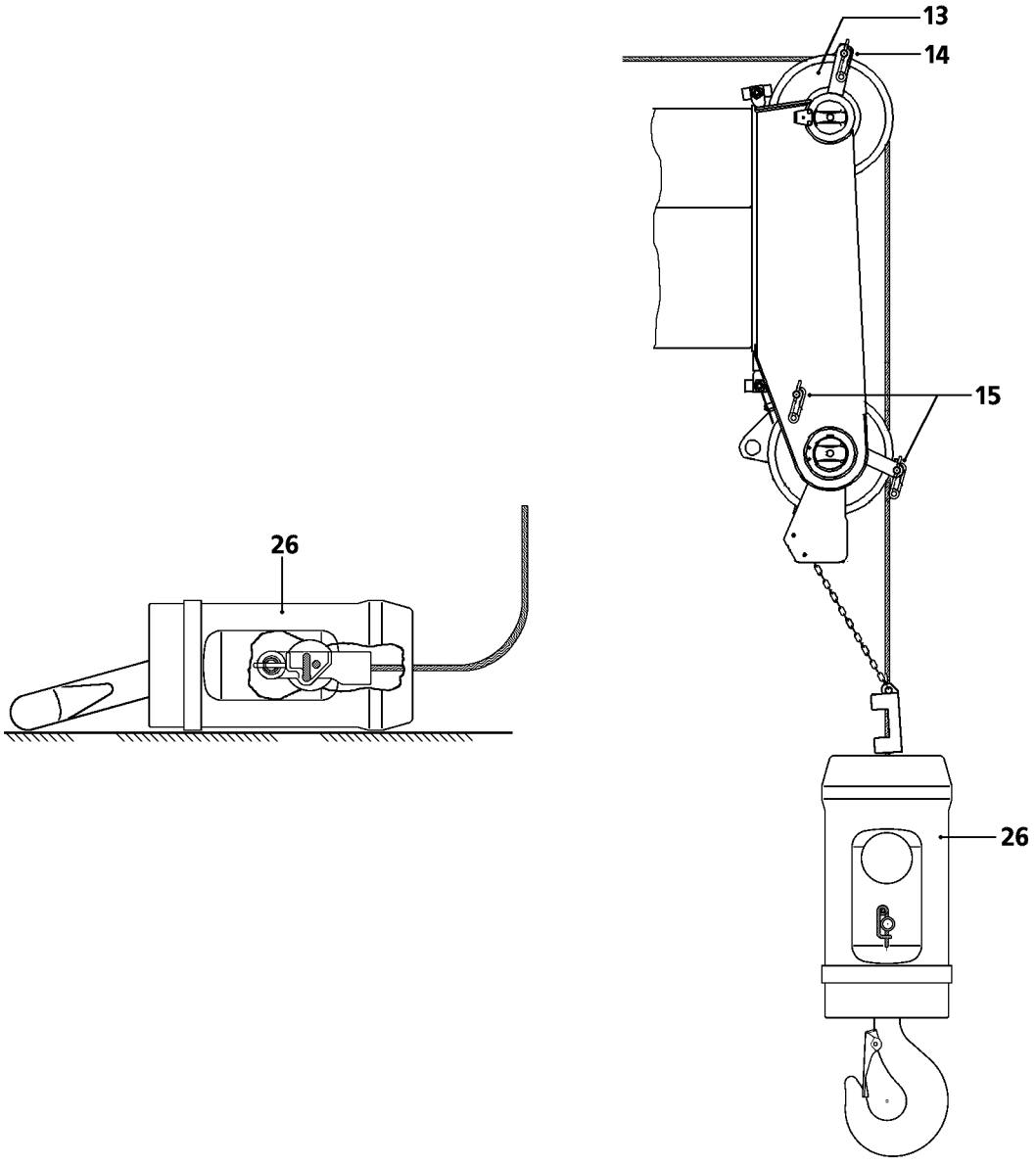

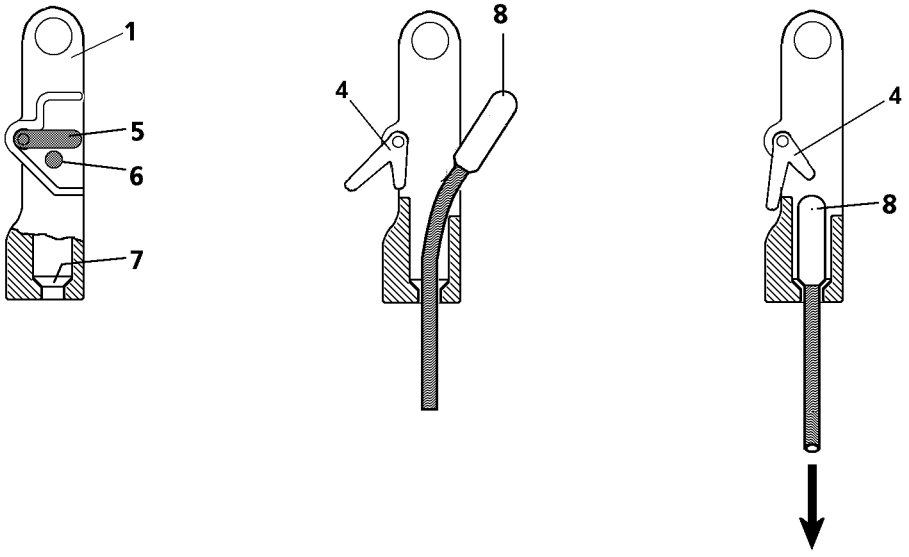

B108125

4 Securing and removing the load hook*

4.1 Securing the load hook*

4.1.1 Assembling the load hook*

- ▶ Place the load hook under the pulley head of the telescopic boom.
- ▶ At the pulley head remove the spring retainers on the rope retaining pipe **14** and on the rope retaining pipe **15** and pull the rope retaining pipe out.

WARNING
Risk of falling!
The assembly personnel, due to an erroneous operation of the crane function or slip on the telescopic boom, can fall and be killed!
- ▶ The telescopic boom may only be accessed if the assembly personnel is protected with suitable safety measures to prevent them from falling!
- ▶ If retaining ropes are present on the telescopic boom, then the assembly personnel must hang an approved fall arrest system to the retaining ropes of the telescopic boom on the left and right with both snap hooks and secure themselves in case of falls. See crane operating instructions, chapter 2.04 and chapter 2.06!
- ▶ Without appropriate safety measures, it is **strictly** prohibited to step on the telescopic boom!
- ▶ If railings are present for the crane, then they must be brought into the corresponding position and secured for assembly / disassembly.
- ▶ Carry out all assembly work from a safe place!

- ▶ Place the hoist rope over the upper rope pulley **13**, see section “Reeving the hoist rope with the auxiliary reeving rope”.
- ▶ Insert the rope retaining pipe **14** and the rope retaining pipe **15** and secure with spring retainers.
- ▶ Pin the rope lock **1** in the load hook **26** and secure with spring retainers.

4.1.2 Fastening the hoist rope

- ▶ Push the retaining pin **6** into the rope lock **1**, move the lever **5** sideways and hold it in this position.

Result:
- – The latch **4** is moved to the side.

- ▶ Hang in the rope end with the locking clamp **8** in the rope lock and pull the rope firmly in the direction of the arrow, until the locking clamp **8** contacts the cone **7**.

WARNING
Danger of accident due to incorrect mounting of locking clamp!
- ▶ The locking clamp **8** must touch on the cone **7** after hanging it into the rope lock **1** and must be secured by the latch **4**!

- ▶ Release the lever **5**.

Result:
- – The lever **5** returns to the initial position and is locked by the retaining pin **6**.

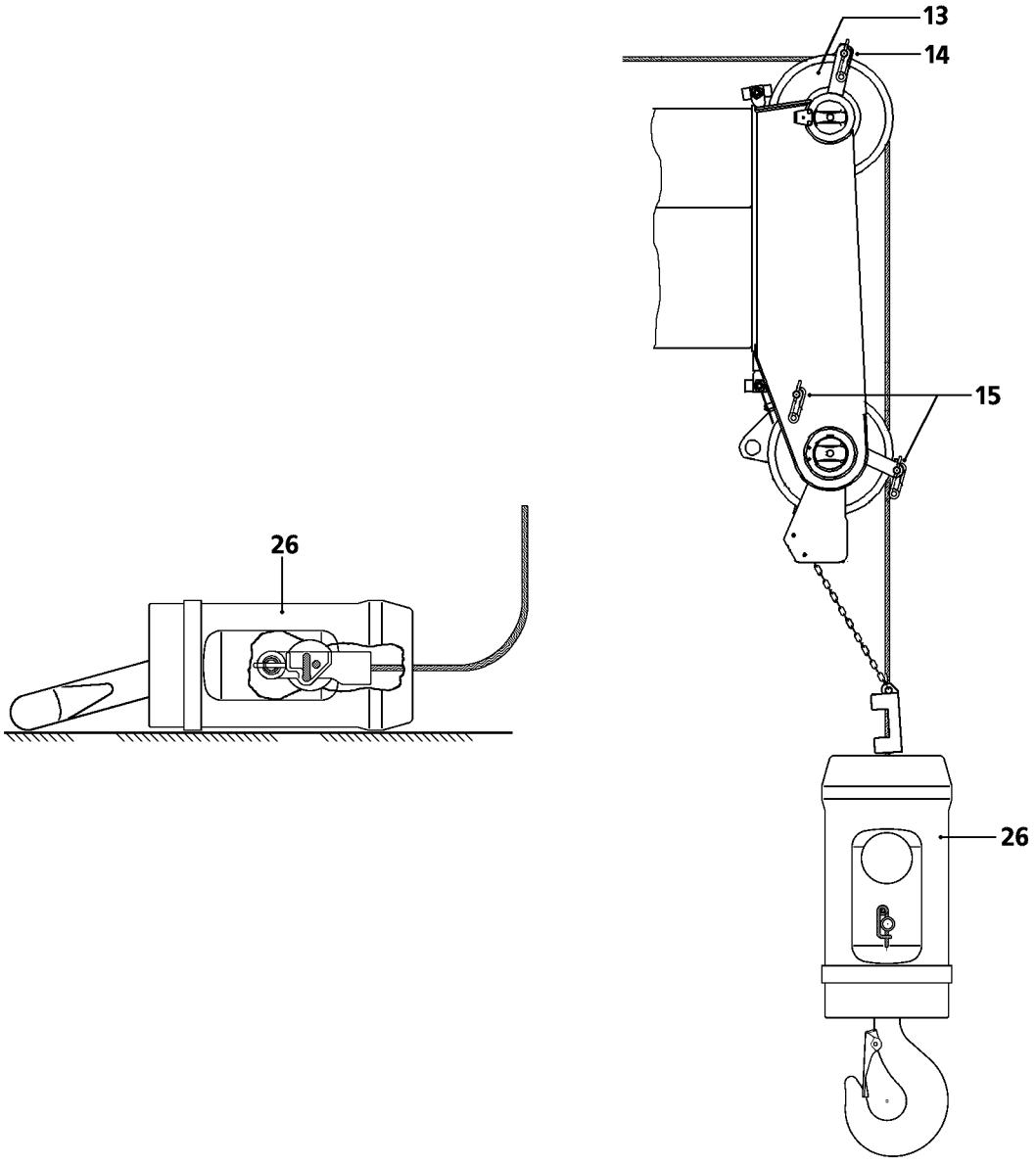

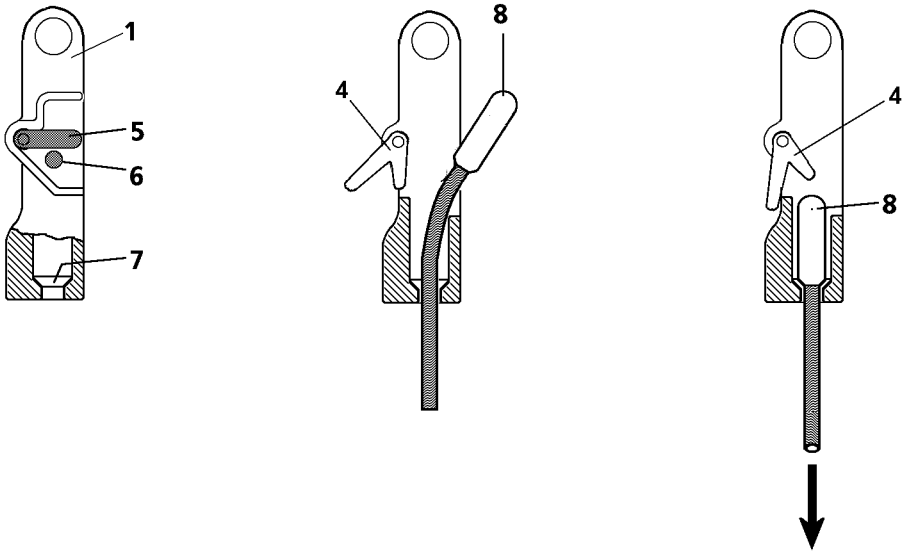

B108125

4.2 Removing the load hook*

Make sure that the following prerequisites are met:
- The crane is properly supported and horizontally aligned.
- The crane is ballasted according to the load chart.
- The LICCON overload protection has been set according to the load chart.
- The telescopic boom is fully telescoped in.
- The telescopic boom has been luffed to the rear or the side.
- The telescopic boom is luffed down in 0° position.
- The ground is level and of sufficient load carrying capacity.

4.2.1 Lowering the load hook

WARNING
Crushing of hands!
When guiding the load hook by hand, hands or fingers can be crushed!
The load hook could roll away!
▶ Make sure the load hook is safely positioned!

▶ Place the load hook **26** on the ground.
▶ Remove the hoist limit switch weight, see section “Removing the hoist limit switch weight”.

4.2.2 Detaching the hoist rope

▶ Push the retaining pin **6** into the rope lock **1**, move the lever **5** sideways and hold it in this position.

Result:
- The latch **4** is moved to the side and the locking clamp **8** is released.

▶ Push the hoist rope in the direction of the load hook and detach the locking clamp **8**.
▶ At the pulley head remove the spring retainers on the rope retaining pipe **14** and on the rope retaining pipe **15** and pull the rope retaining pipe out, see section “Reeving the hoist rope with the assembly winch”.
▶ Unreeve the hoist rope from the pulley head.
▶ Insert the rope retaining pipes again and secure with spring retainers.

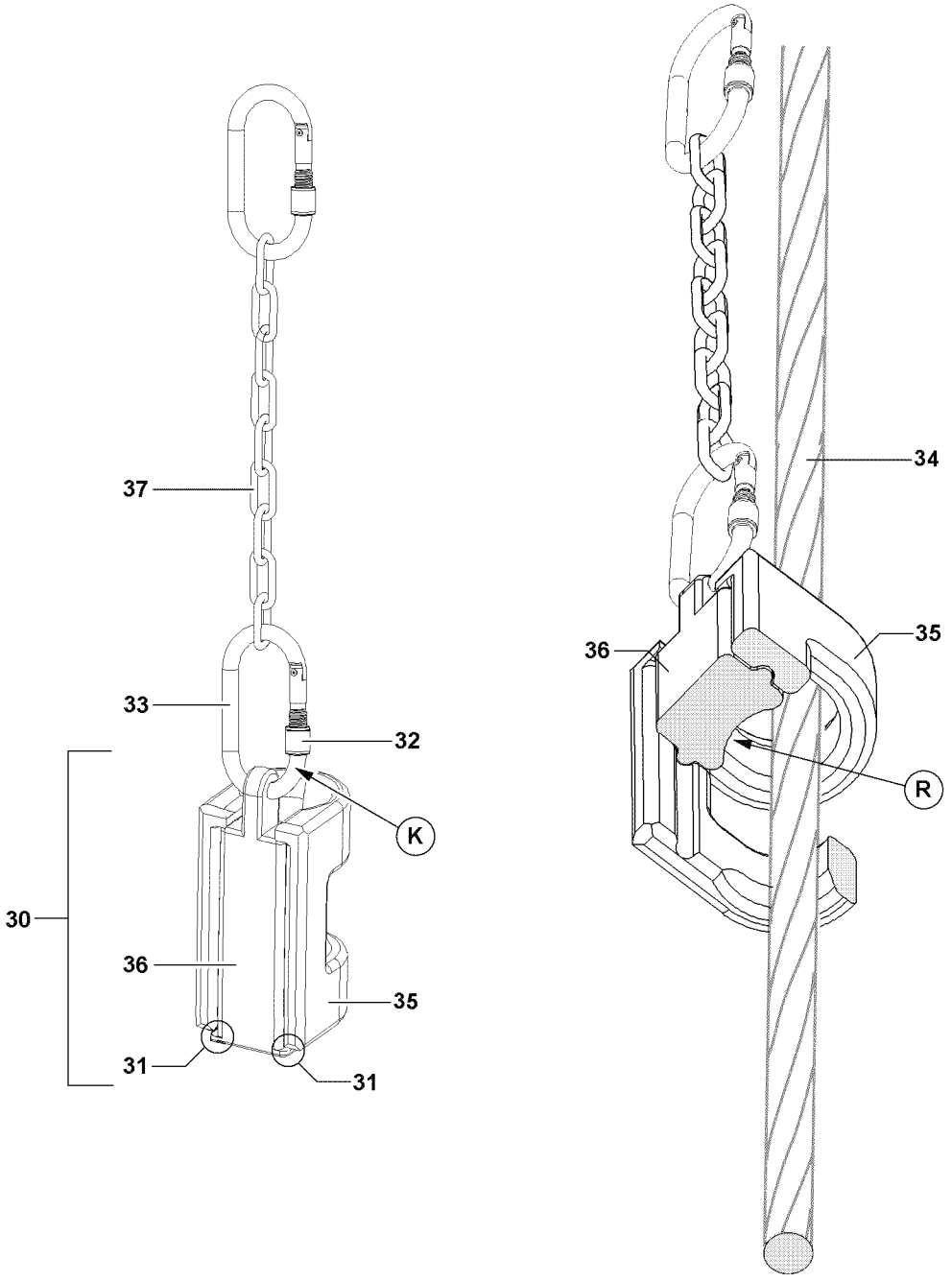

B106127

5 Attaching / removing the hoist limit switch weight

5.1 Attaching the hoist limit switch weight

The hoist limit switch weight **30** consists of 2 parts, which are pushed into each other:
– The weight **35**.
– The carrier section **36**.

▶ Loosen and open the screw retainer **32**.

WARNING
The hoist limit switch can fall down!
If the hoist limit switch weight is incorrectly assembled, components can fall down!
Personnel can be severely injured or killed!
▶ Do not replace the snap hook **33** with other parts, such as a shackle or similar!
▶ When detaching or attaching the hoist limit switch weight **30** make sure that the weight **35** and the carrier section **36** do not fall down!
▶ Make sure that the curvature **R** of the carrier section **36** points to the hoist rope **34**!
▶ Make sure that the stubs **31** of the carrier section **36** touch on the weight **35**!
▶ Make sure that the screw retainer **32** can be turned to be closed from top to bottom, point **K**!

The attachment of the hoist limit switch weight **30** depends on the position of the rope fixed point.

Rope fixed point on the pulley head:
– In the event of multiple hoist rope reeving, the hoist limit switch weight **30** must always be laid around the “stationary rope strand”, in other words around the rope strand that leads directly to the cable lock.

Rope fixed point on hook block:
– The hoist limit switch weight **30** is laid around the outer strand which shows the least diagonal pull, i.e. the one with the smallest angle between the hanging hoist limit switch weight and the hoist rope.

Note
▶ The chain **37** must be attached in full length during crane operation and may not be shortened.

▶ Push the weight **35** with one hand on the hoist rope **34** and hold.
▶ With the other hand, guide the carrier section **36** behind the hoist rope **34** and under the weight **35**. The curvature **R** of the carrier section **36** must point to the hoist rope **34**.
▶ Push the weight **35** on the carrier section **36**.
▶ Hang in the hoist limit switch weight **30** with the carrier section **36** in the snap hook **33**.

The snap hook **33** must be secured with the screw retainer **32**.
▶ Close the screw retainer **32** on the snap hook **33**.

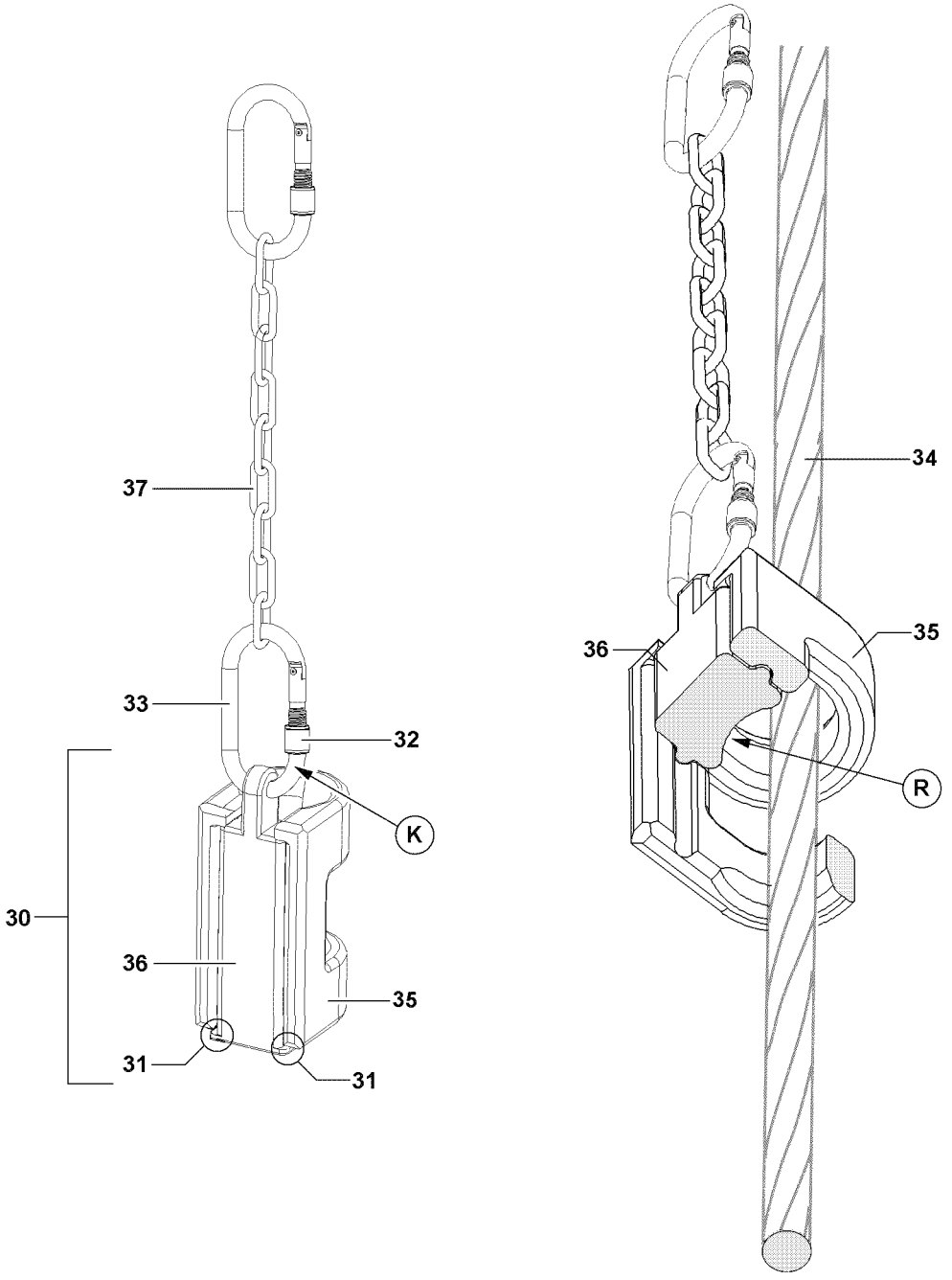

B106127

5.2 Removing the hoist limit switch weight

WARNING
The hoist limit switch can fall down!
If the hoist limit switch weight is incorrectly removed, components can fall down!
Personnel can be severely injured!

- When detaching or attaching the hoist limit switch weight **30** make sure that the weight **35** and the carrier section **36** do not fall down!
- It is prohibited for anyone to remain in the danger zone!

- Release and open the screw retainer **32** on the snap hook **33**.
- Detach the hoist limit switch weight **30** from the snap hook **33**.
- Hold the weight **35** with one hand and with the other hand, push the carrier section **36** from the weight **35**.
- Store the weight **35** and carrier section **36** safely.

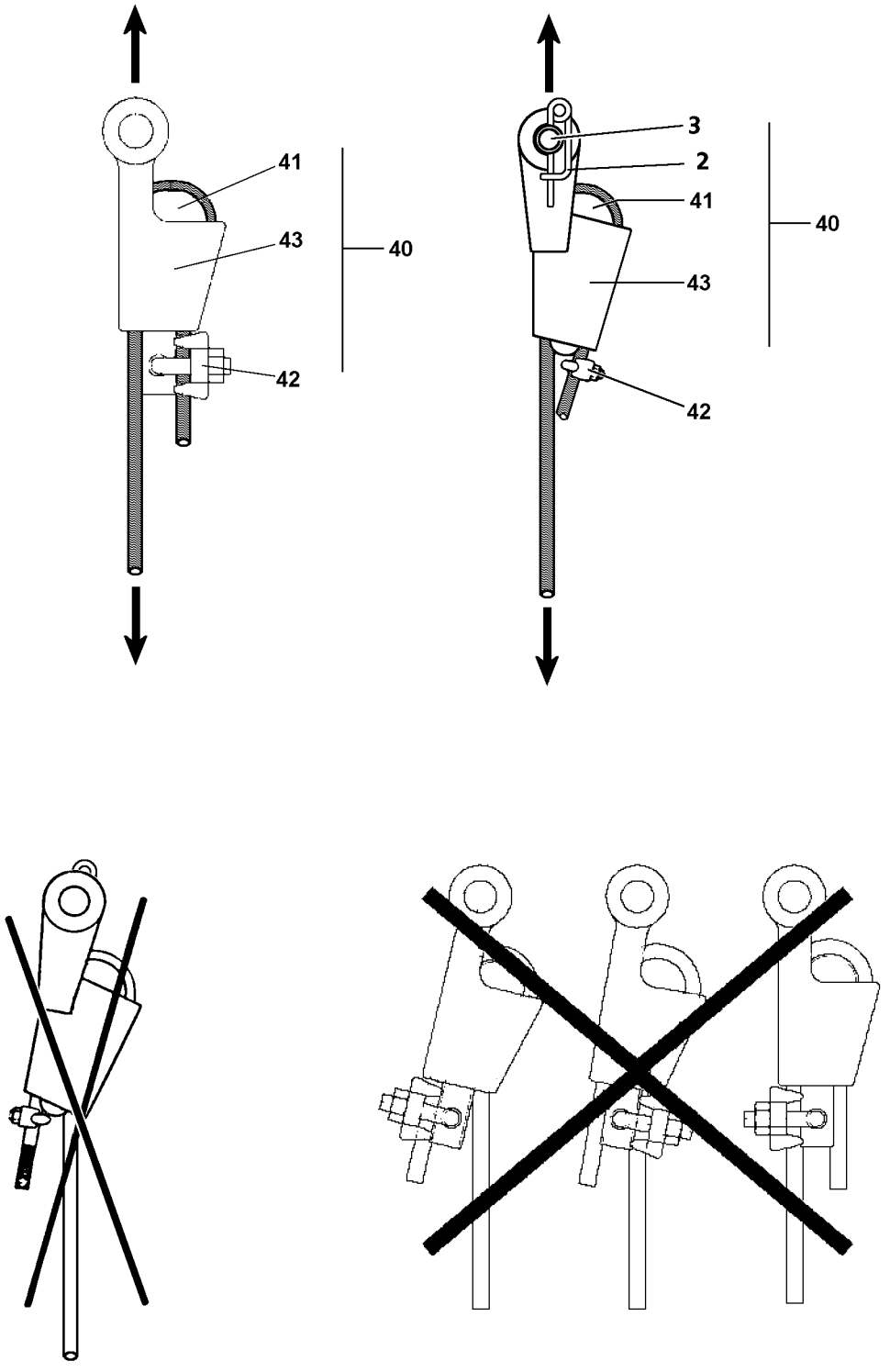

B108119

6 Assembling / disassembling the wedge lock

Make sure that the following prerequisites are met:
– The rope clamp is cut off on the hoist rope.
– The hook block or the load hook are ready for assembly.

6.1 Installing the wedge lock

WARNING
Danger of fatal accidents due to falling load!
If an incorrect wedge lock **40** is used or if the wedge lock **40** is incorrectly assembled, the hoist rope can rip off or the hoist rope can be pulled through the wedge lock **40**!
The hook block and the load can fall down and kill personnel!
▶ Use only a wedge lock **40** approved by Liebherrwerk Ehingen!
▶ Assembling the wedge lock **40** correctly!
▶ Place the hoist rope with the wedge **41** into the housing **43** in such a way that the rope strand runs in the pull axle of the wedge lock **40**!
▶ The dead end of the rope must be secured by the clamp **42** to prevent it from being pulled through!
▶ It is prohibited for personnel to remain in the danger zone!

▶ Take a matching wedge lock **40** from the tool box.
▶ Place the hoist rope with the wedge **41** into the housing **43**.
▶ If possible, assemble the clamp **42** through the wedge **41** on the dead end of the rope.

NOTICE
Damage to the hoist rope!
If the pin **3** has been assembled incorrectly, the hoist rope may rub against the pin **3** or on the linch pin **2**.
▶ Always insert the pins **3** from “inside to outside” and secure from the outside.

▶ Pin and secure the wedge lock **40** on the fixed point of the pulley head or that of the hook block or on the load hook, depending on the reeving plan.

6.2 Disassembling the wedge lock

▶ Unpin the wedge lock **40** on the fixed point.
▶ Remove the clamp **42** and pull the hoist rope with the wedge from the housing.
▶ Store the wedge lock **40**.

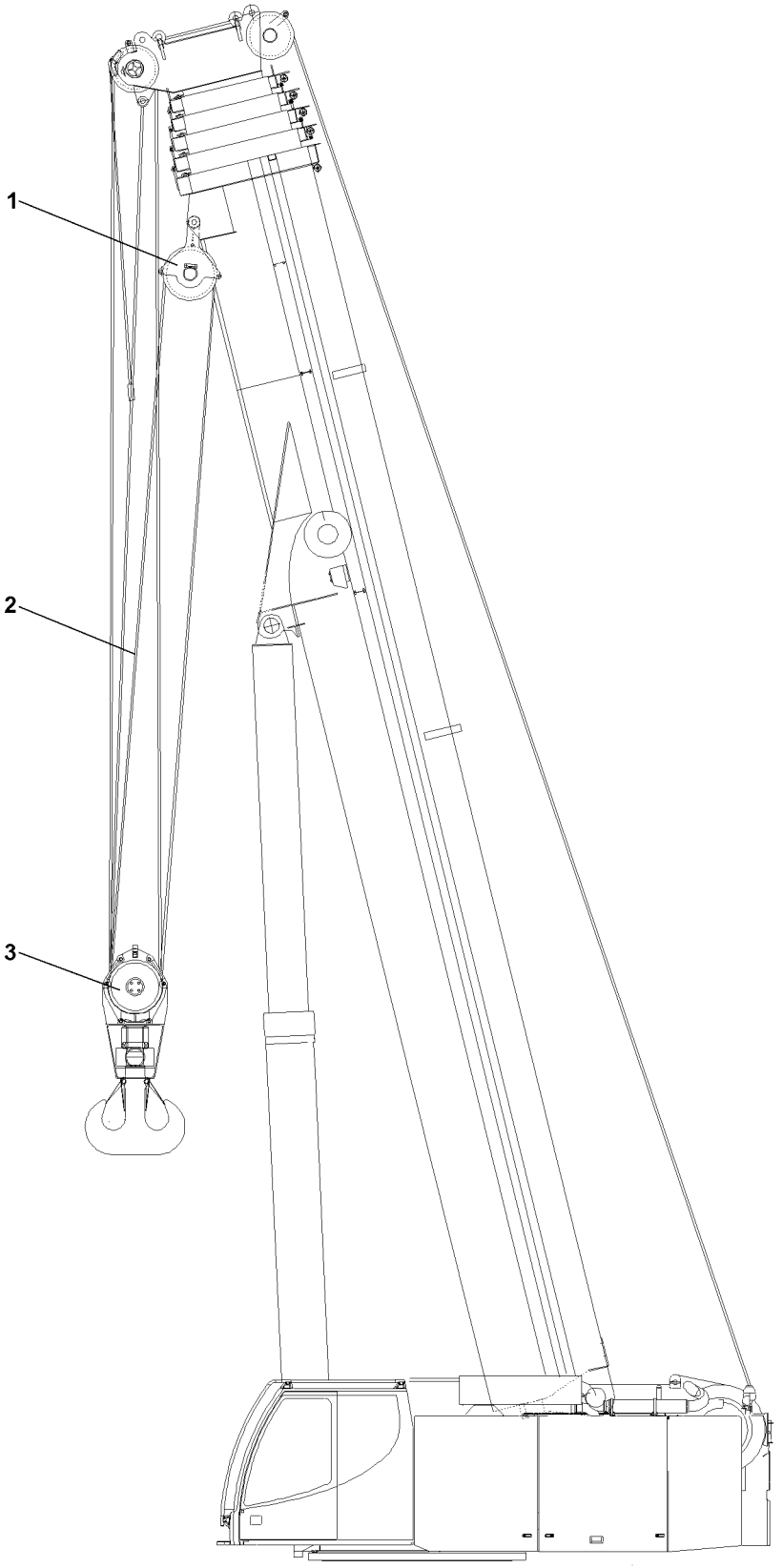

B108222

7 Crane operation with auxiliary block* on the telescopic boom

7.1 Crane operation with auxiliary block*

For crane operation with auxiliary block **1**, the following prerequisites are required:

– The TY guying has been disassembled (if present).
– The working floodlights on the telescopic boom have been disassembled.

Note

▶ For crane operation with auxiliary block **1** on the telescopic boom, move only to the radius ranges, which are present in the load chart!

NOTICE

Damage of hook block, auxiliary block or hoist rope!

If the following notes are not observed, the hook block **3**, the hoist rope **2** or the auxiliary block **1** can be damaged!

If the hoist limit switch chain on the hoist limit switch weight is too short, the hook block **3** can run on the auxiliary block **1** when spooling up the hoist rope **2** and damage it severely.

▶ Before crane operation with auxiliary block **1**, assemble the longer hoist limit switch chain!
▶ Before crane operation with auxiliary block **1**, remove the rope protection pipes on the hook block **3**!
▶ When the hook block **3** is on the ground, ensure that the hoist rope **2** remains in the pulleys!
▶ For operation with auxiliary block **1**, do **not** telescope the telescopic boom out and run only the radii ranges, which are specified in the load chart!

▶ Carry out crane operation with auxiliary block **1** carefully.

8 Rope reeving

Note

▶ For reeving plans, see Crane operating instructions, chapter 4.15!

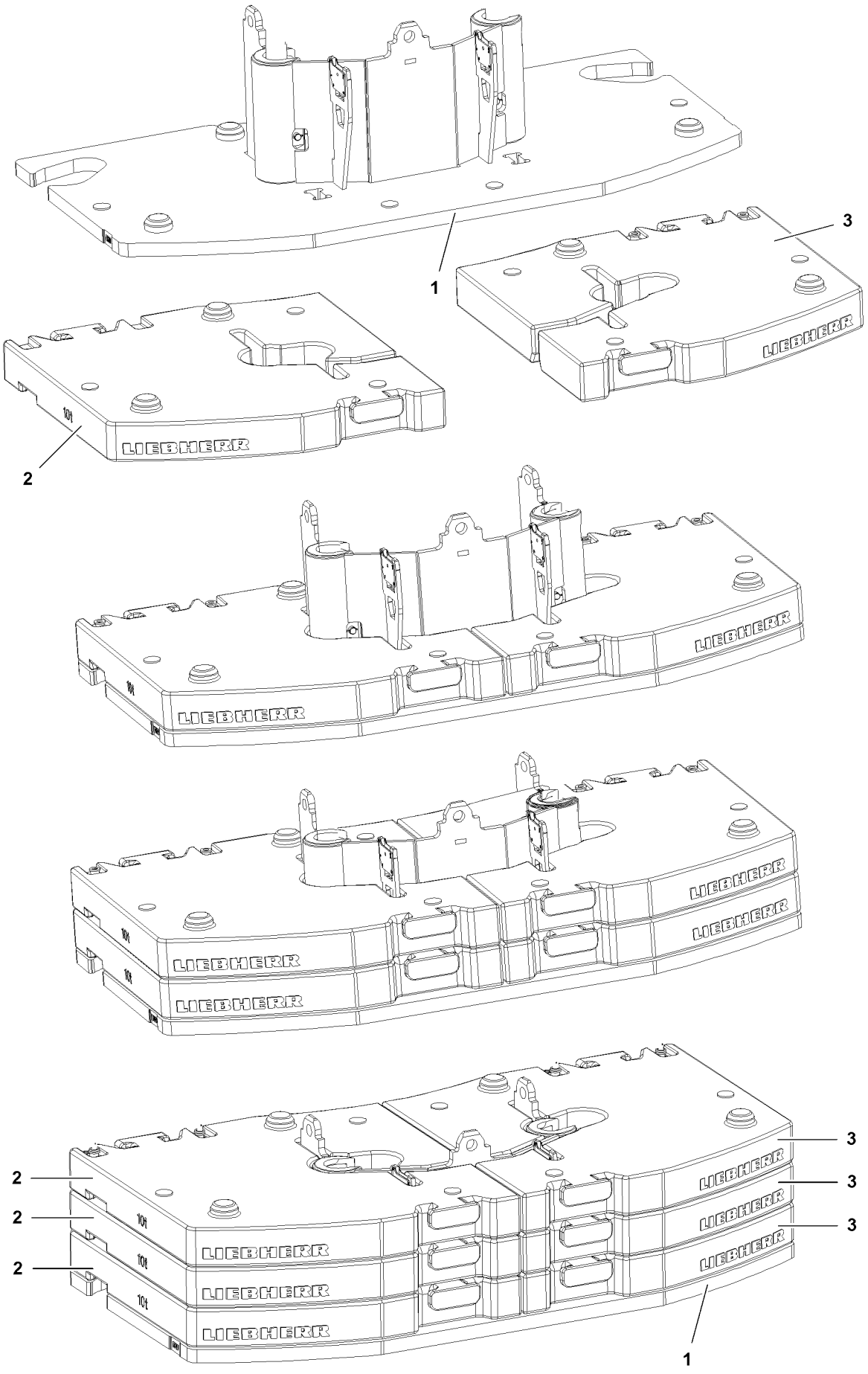

B117323

1 Overview of counterweight

The counterweight consists of:
– Receptacle plate **1**
– Counterweight plate **2**
– Counterweight plate **3**

Note
▶ The counterweight plates are marked with their respective own weights.
▶ The counterweight plate **2** is present three times identically.
▶ The counterweight plate **3** is present three times identically.

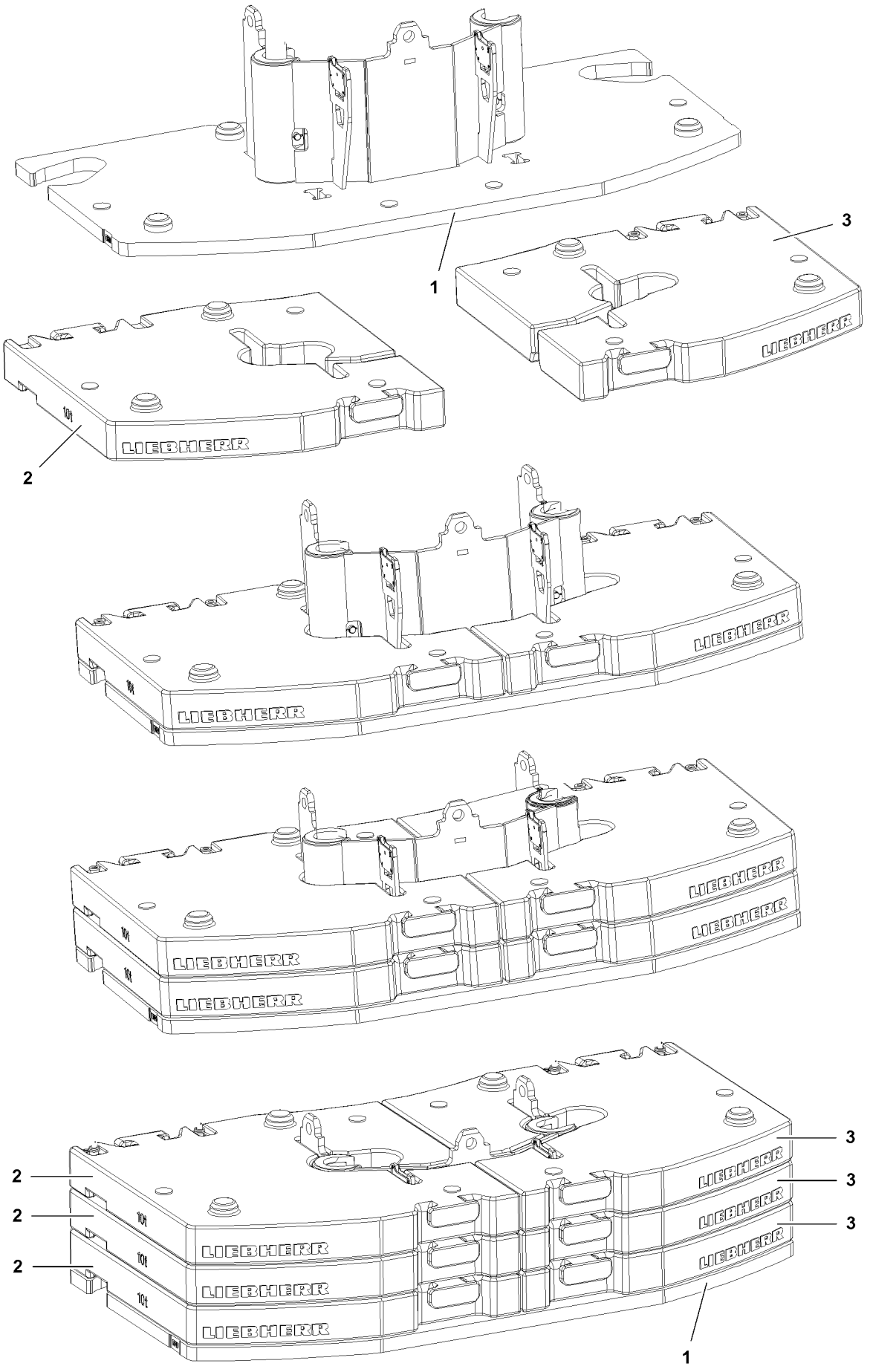

B117323

2 Counterweight combinations

WARNING
The crane can topple over!
If any other counterweight combination than the one noted in the charts is used, the crane can topple over!
▶ Counterweight combinations specified in the following charts must be used!

Counterweight	Combination	Individual weight
0.0 t	No receptacle plate, no counterweight	0.0 t

Counterweight	Combination	Individual weight
10.0 t	Receptacle plate **1**	10.0 t

Counterweight	Combination	Individual weight
30.0 t	Receptacle plate **1**	10.0 t
	1 x counterweight plate **2**	10.0 t
	1 x counterweight plate **3**	10.0 t

Counterweight	Combination	Individual weight
50.0 t	Receptacle plate **1**	10.0 t
	2 x counterweight plate **2**	10.0 t
	2 x counterweight plate **3**	10.0 t

Counterweight	Combination	Individual weight
70.0 t	Receptacle plate **1**	10.0 t
	3 x counterweight plate **2**	10.0 t
	3 x counterweight plate **3**	10.0 t

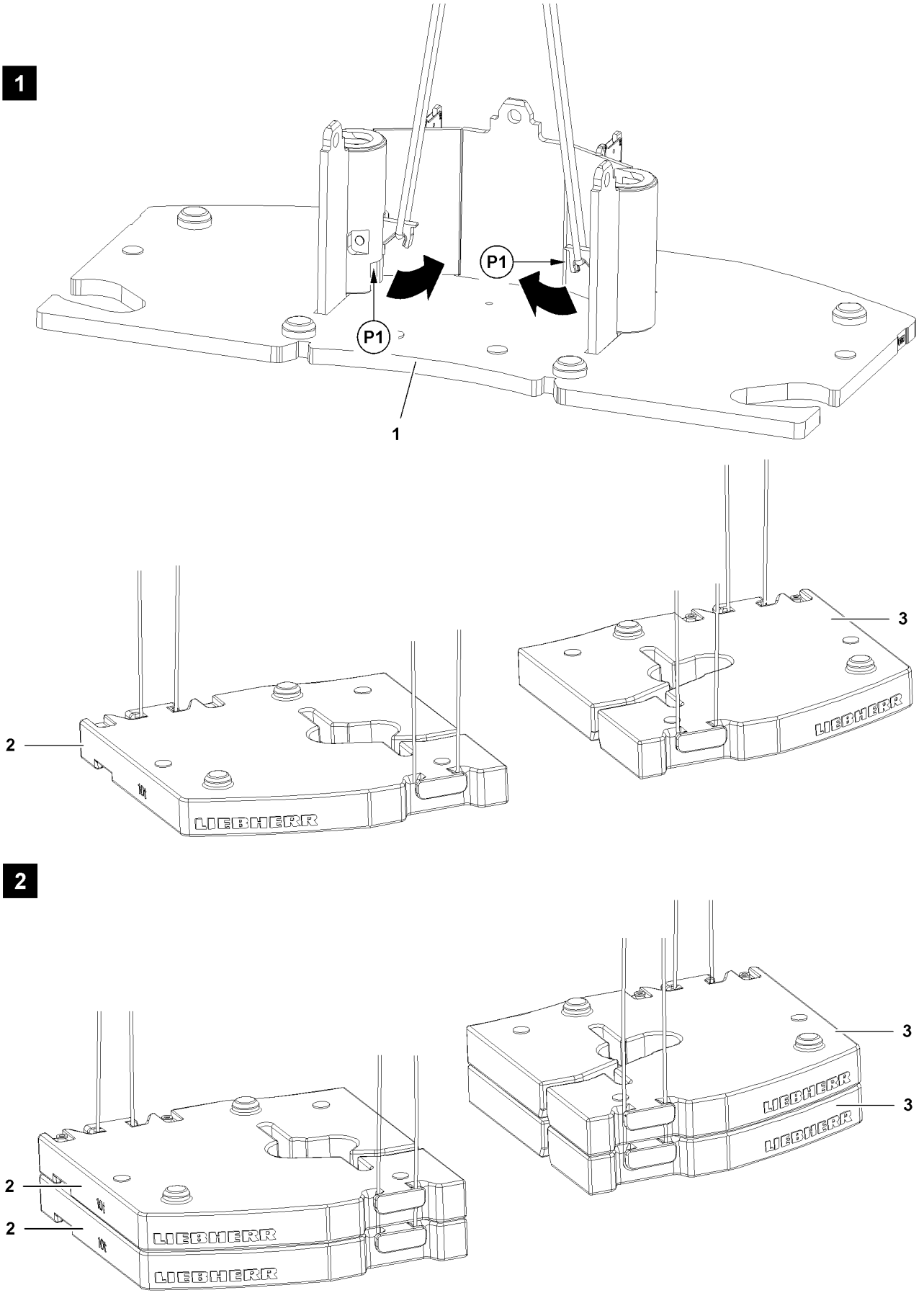

B117324

3 Fastening the counterweight plates and receptacle plate

WARNING
Improperly fastened crane components!
Improperly fastened crane components can slip and fall down when lifting or swinging them.
Personnel can be severely injured or killed.
- ▶ Before lifting, make sure that the crane components are properly fastened.
- ▶ Use only approved and suitable fastening equipment.
- ▶ Always keep sufficient distance to suspended crane components.
- ▶ Standing under raised crane components is **prohibited**.
- ▶ Carefully initiate all crane movements with attached crane components extremely sensitively and initiate slow down with utmost caution.

3.1 Fastening the counterweight plate

Fold the fastening points out on point **P1**.
Fasten the receptacle plate on the fastening points, see illustration **1**.

3.2 Fastening counterweight plates

WARNING
Property damage due to overload!
- ▶ Lift a maximum of two form-fit stacked counterweight plates as an assembly.

Fasten the counterweight plates on the fastening points, see illustration **2**.

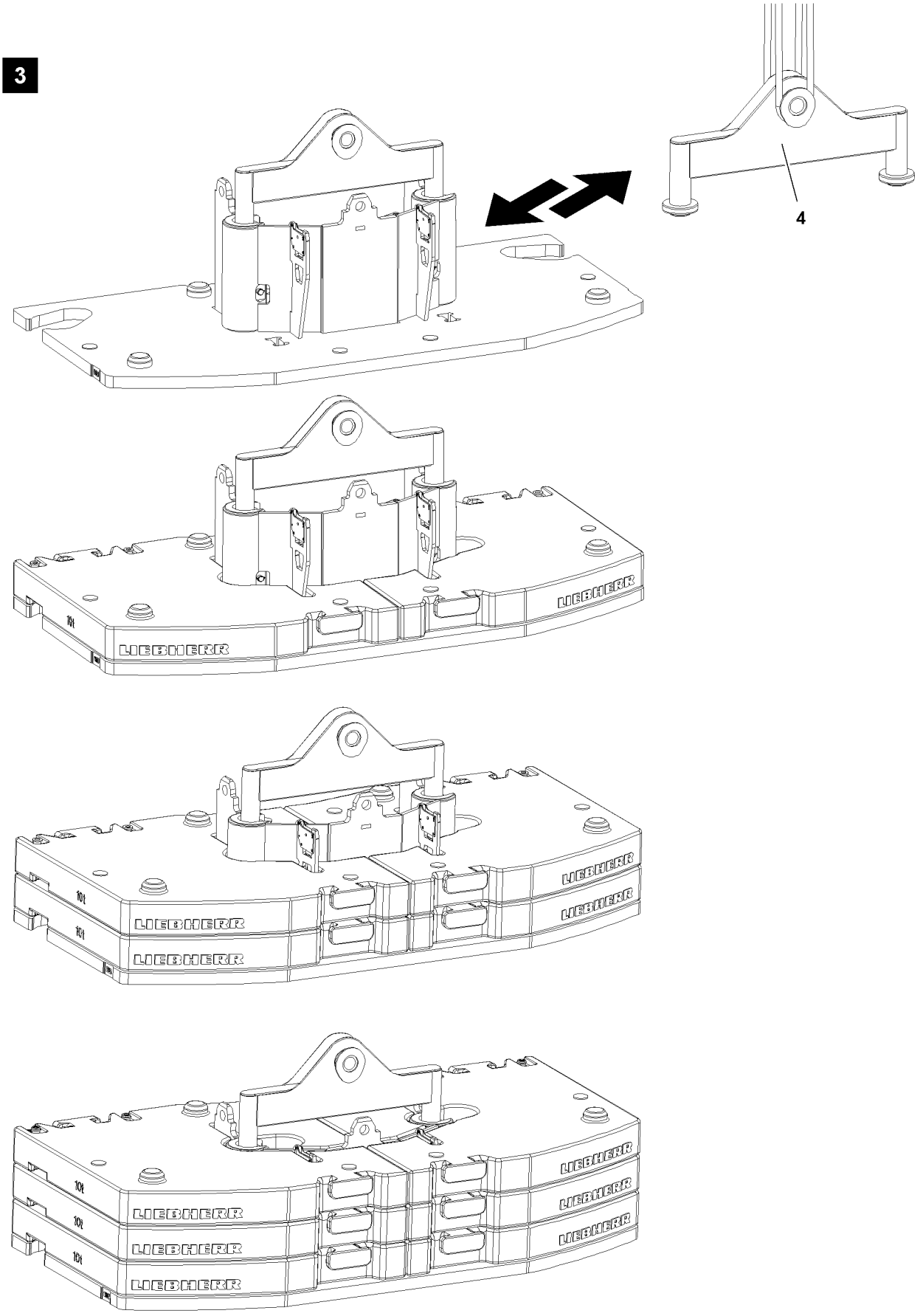

B117325

3.3 Fastening the counterweight with cross beam

Note

▶ The counterweight stack can be fastened as an assembly with the cross beam **4**, see illustration **3**.

WARNING

Improperly fastened crane components!

Improperly fastened crane components can slip and fall down when lifting or swinging them!

Personnel can be severely injured or killed!

- ▶ Before lifting, make sure that the crane components are properly fastened!
- ▶ Use only approved and suitable fastening equipment!
- ▶ Always keep sufficient distance to suspended crane components!
- ▶ Standing under raised crane components is **prohibited**!
- ▶ Carefully initiate all crane movements with attached crane components extremely sensitively and initiate slow down with utmost caution!
- ▶ Lift only form-fit and symmetrically stacked counterweight plates as an assembly!

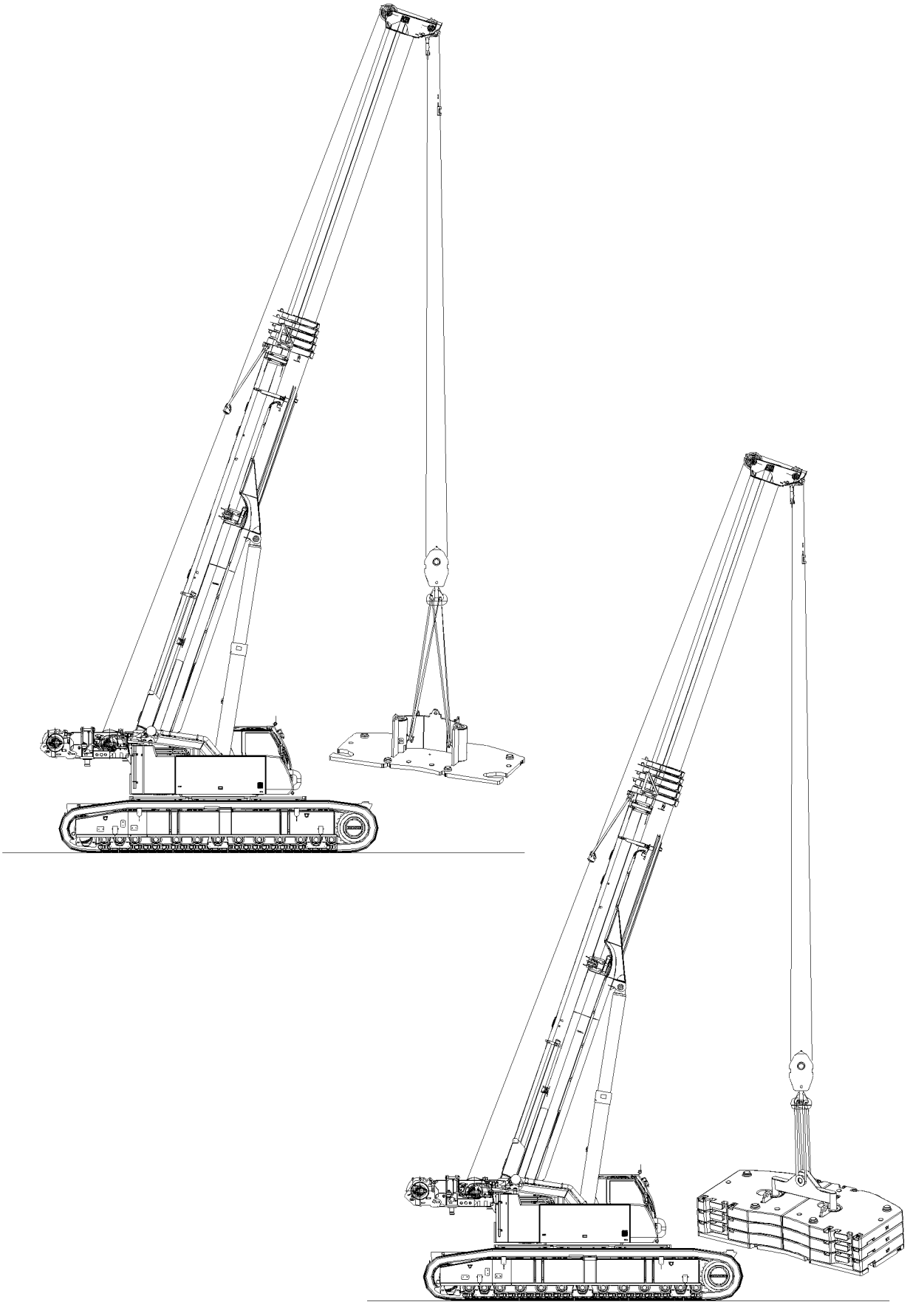

B117329

4 Assembly of counterweight

WARNING
Danger of falling!
During assembly and disassembly, personnel must be secured with appropriate aids to prevent them from falling! If this is not observed, assembly personnel can fall and suffer life-threatening or fatal injuries!
- ▶ Any work, where there is a danger of falling, must be carried out with suitable aids (for example: lifting platforms, scaffoldings, ladders, auxiliary crane)!
- ▶ If the work can neither be carried out with such aids nor from the ground, then the assembly personnel must secure themselves with approved catch systems to avoid falling, see chapter 2.04 of the operating instruction!
- ▶ If railings are present on the crane components, then they must be brought into the corresponding position and secured for assembly / disassembly work!
- ▶ Step on aids and fall protection equipment only with clean shoes!
- ▶ Keep aids and fall protection equipment clean and free from snow and ice!
- ▶ During all assembly and disassembly work, maintenance work and inspections, travel or crane operation is prohibited!

WARNING
Danger of accident!
During assembly or disassembly of the counterweight, personnel can be injured or killed!
Objects can be damaged!
- ▶ During the assembly or disassembly of the counterweight, no personnel may remain within the danger zone!
- ▶ During the assembly or disassembly of the counterweight, no objects may remain within the danger zone!

WARNING
Damaged counterweight!
If a damaged / dirty counterweight is used, then the tight seating and the operational safety are no longer ensured.
- ▶ Do not use a damaged counterweight.
- ▶ Replace / repair a damaged counterweight.
- ▶ Clean a dirty counterweight.
- ▶ Keep the placement / installation surfaces of the counterweight clean.

WARNING
Falling counterweight!
If the counterweight is not properly ballasted / installed, then it can fall down and cause severe accidents.
Personnel can be severely injured or killed.
- ▶ Before operation, make sure that the counterweight is properly ballasted / installed.

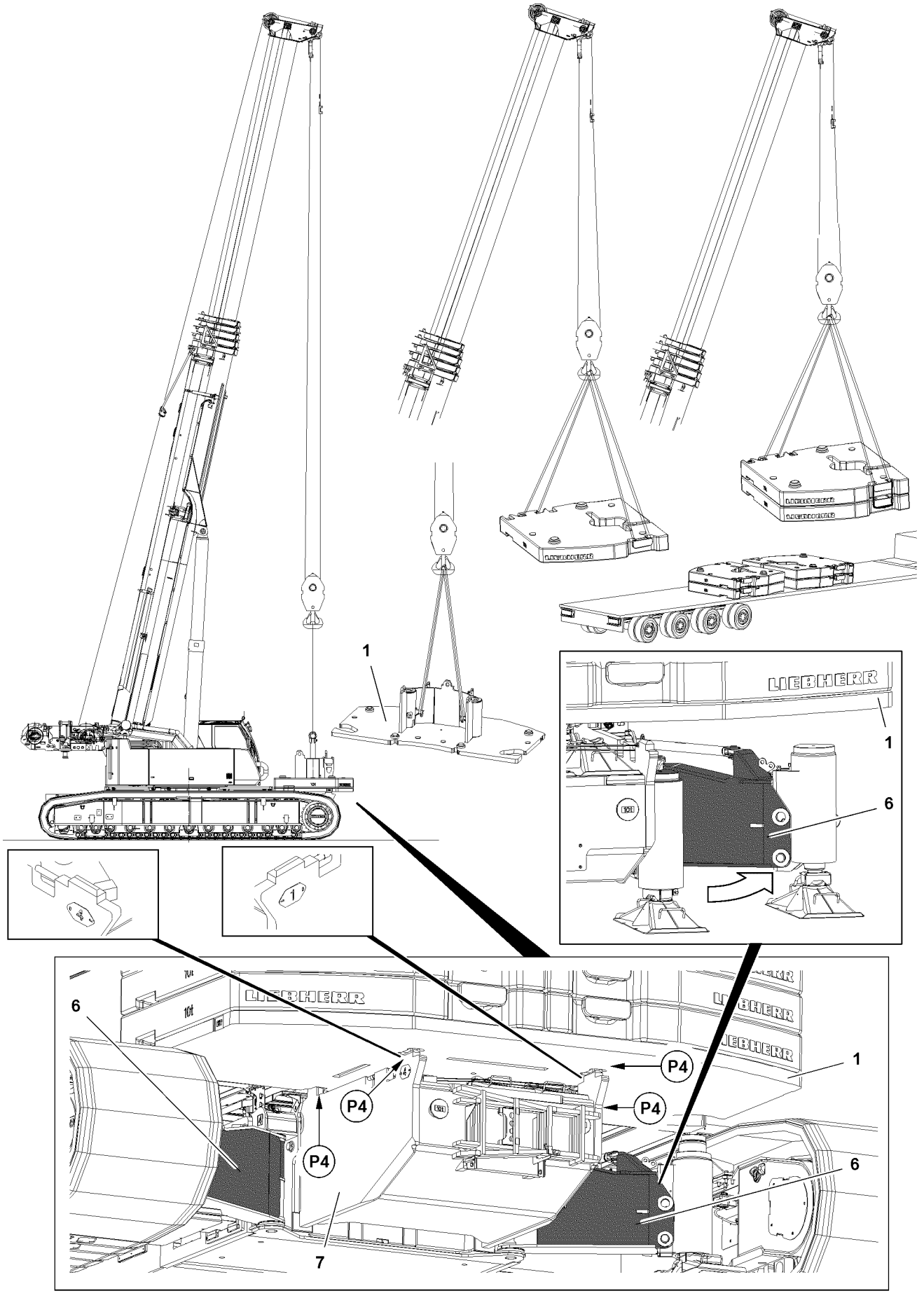

B117326

4.1 Placing the counterweight down with the crane

Make sure that the following prerequisites are met:

- The crane is positioned on a level and load-bearing surface.
- The crane is aligned in horizontal direction.
- The central ballast blocks **7** are installed on the front and rear, see Crane operating instructions, chapter 3.03.
- The crane with installed crawler carriers is operational as assembly crane.
- The support cylinders are completely retracted.
- The transport vehicle with the counterweight plates is in the immediate vicinity of the crane.
- No support plates and the assembly device are placed on the central ballast.
- The fall protection equipment is installed.
- The LICCON overload protection is set:
  - Crawler operation with track width
  - Central ballast 20 t
  - Counterweight 0 t
  - Without auxiliary boom / accessory
  - Slewing range

The receptacle plate acts as a carrier plate for the counterweight plates and must always be placed onto the central ballast first.

4.1.1 Placing the receptacle plate on the central ballast

DANGER
Danger of fatal accident due to toppling the crane!
If the counterweight is not placed on the central ballast block 1/4 **7**, the crane will topple over.
▶ Make sure that the receptacle plate and the counterweight plates are placed on the central ballast block 1/4 **7**.

NOTICE
Damage of receptacle plate due to collision!
If the support cylinders are pinned in the uppermost position, then the support cylinders can collide with the base plate.
▶ Swing both folding beam brackets **6** out and secure.

▶ Fasten the receptacle plate **1** with fastening ropes on the crane.
▶ Place the receptacle plate in the centerings **P4** of the central ballast block 1/4 **7**.

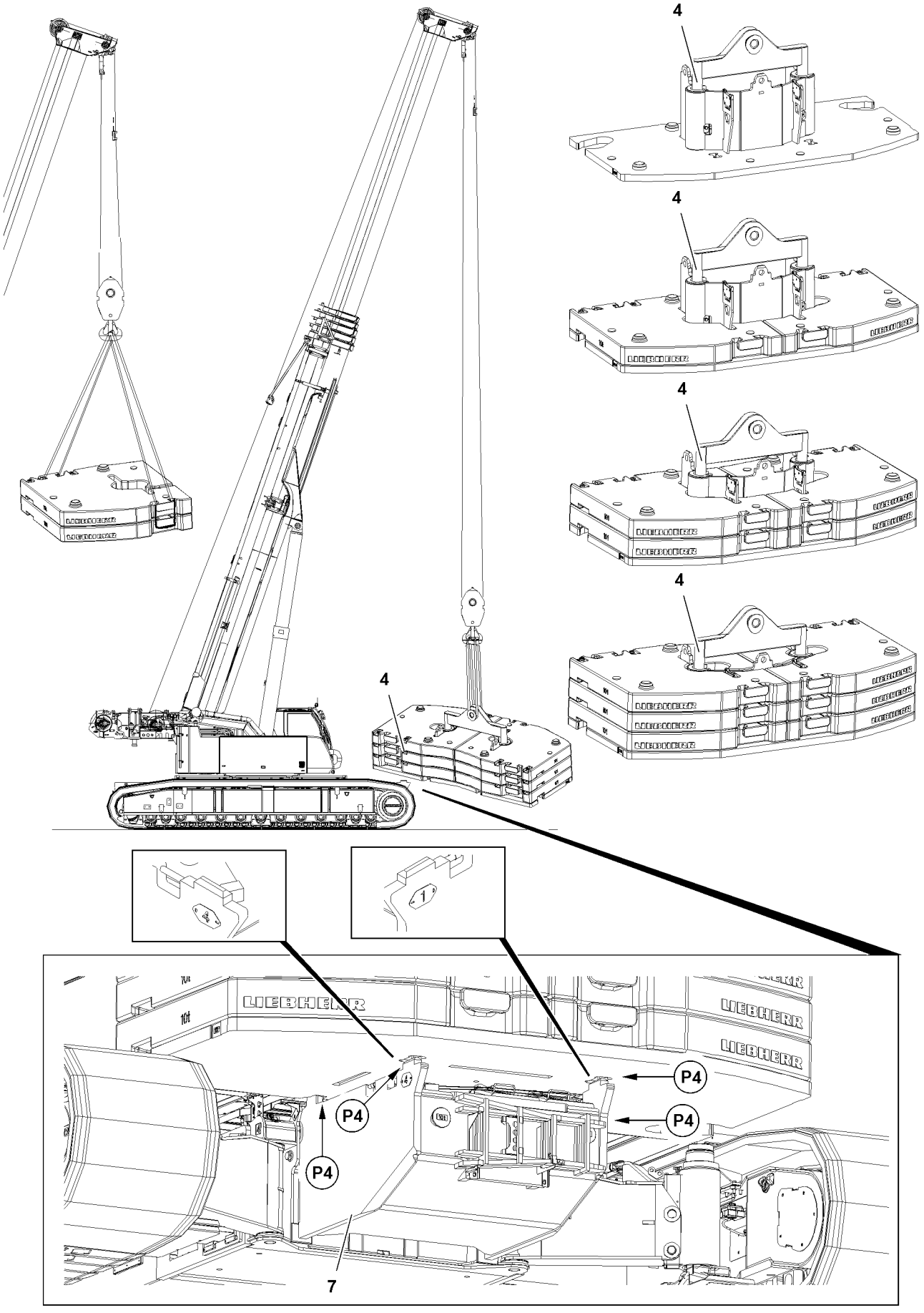

B117331

4.1.2 Placing the counterweight plates on the central ballast

WARNING
Property damage due to overload!
▶ Lift a maximum of two form-fit stacked counterweight plates as an assembly.

WARNING
The crane can topple over!
If the counterweights are asymmetrically placed on the receptacle plate **1** or if the counterweight is asymmetrically installed, then the crane can topple over and kill personnel!
▶ Place counterweights alternately on the left and right on the receptacle plate only up to a difference of 10 t.
▶ Attach the counterweight symmetrically.

▶ Attach the counterweight plates on the crane.
▶ Place the counterweight plates to match on the centering cone of the counterweight receptacle.

4.2 Placing the counterweight as an assembly with the cross beam on the central ballast

WARNING
Toppling crane if asymmetrically placed!
▶ Install the counterweight symmetrically.

NOTICE
Damage of receptacle plate due to collision!
If the support cylinders are pinned in the uppermost position, then the support cylinders can collide with the base plate.
▶ Swing both folding beam brackets **6** out and secure.

▶ Attach the counterweight with the cross beam **4** on the crane.
▶ Place the counterweight with the cross beam **4** in the centering **P4** of the central ballast.

4.3 Installing the hoist gear 2*

When hoist gear 2 is to be installed, see Crane operating instructions, chapter 5.09.

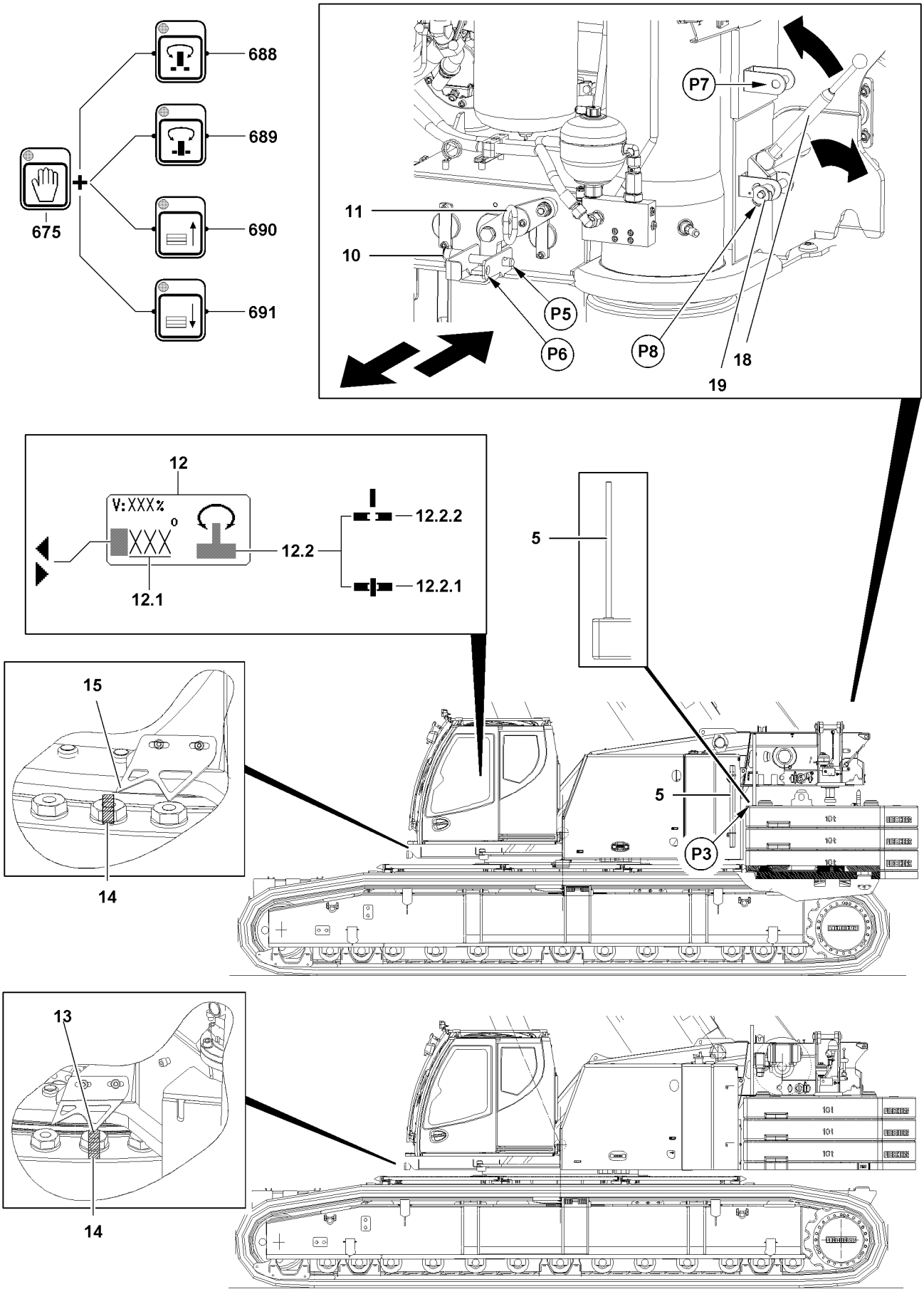
688
689
690
691
675
P7
11
10
P5
P6
P8
18
19
12
V:XXX%
XXX
12.2
12.2.2
12.2.1
12.1
5
15
14
5
P3
13
14

B117327

4.4 Taking up the counterweight with the ballasting device

4.4.1 Unpinning the ballasting device

NOTICE
Damage to the ballasting system!
If the ballasting device is not unpinned before moving the ballasting cylinders out, then the ballasting device can be damaged!
▶ Unpin the ballasting device before moving the ballasting cylinders out!

▶ Release the grip pins: Unpin the ball locking pins **10**.
▶ Unpin the grip pins **11** to the stop.
▶ Secure the grip pins **11**: Insert the ball locking pin **10** on position **P6**.
▶ Release the hand lever **18**: Unpin the ball locking pin **19** on point **P7**.
▶ Pull hand lever **18** downwards.
▶ Insert the ball locking pin **19** in park position **P8**.

4.4.2 Ballasting the counterweight plates

WARNING
Danger of accident!
▶ As long as the crane superstructure is **not** locked, no movement (lift / lower counterweight) may be carried out!

WARNING
Ballasting cylinders not moved in!
If the ballasting cylinders are not fully moved in, they can collide with the counterweight when the crane superstructure is turned and cause significant property damage on the crane. The counterweight can fall down and hit personnel!
Personnel can be severely injured or killed!
▶ Make sure that the ballasting cylinders are fully moved in before turning the crane superstructure!

▶ The crane operating screen is called up on the LICCON monitor:
Turn the crane superstructure to the right until the small pointer **15** on the slewing ring aligns with the marked screw **14**, see illustration **1**.

Result:
– The ballasting cylinders are now located over the entry ports of the counterweight.
– Shown on the LICCON monitor, in the Slewing range icon **12** is a value **12.1** from 176° to 177°.

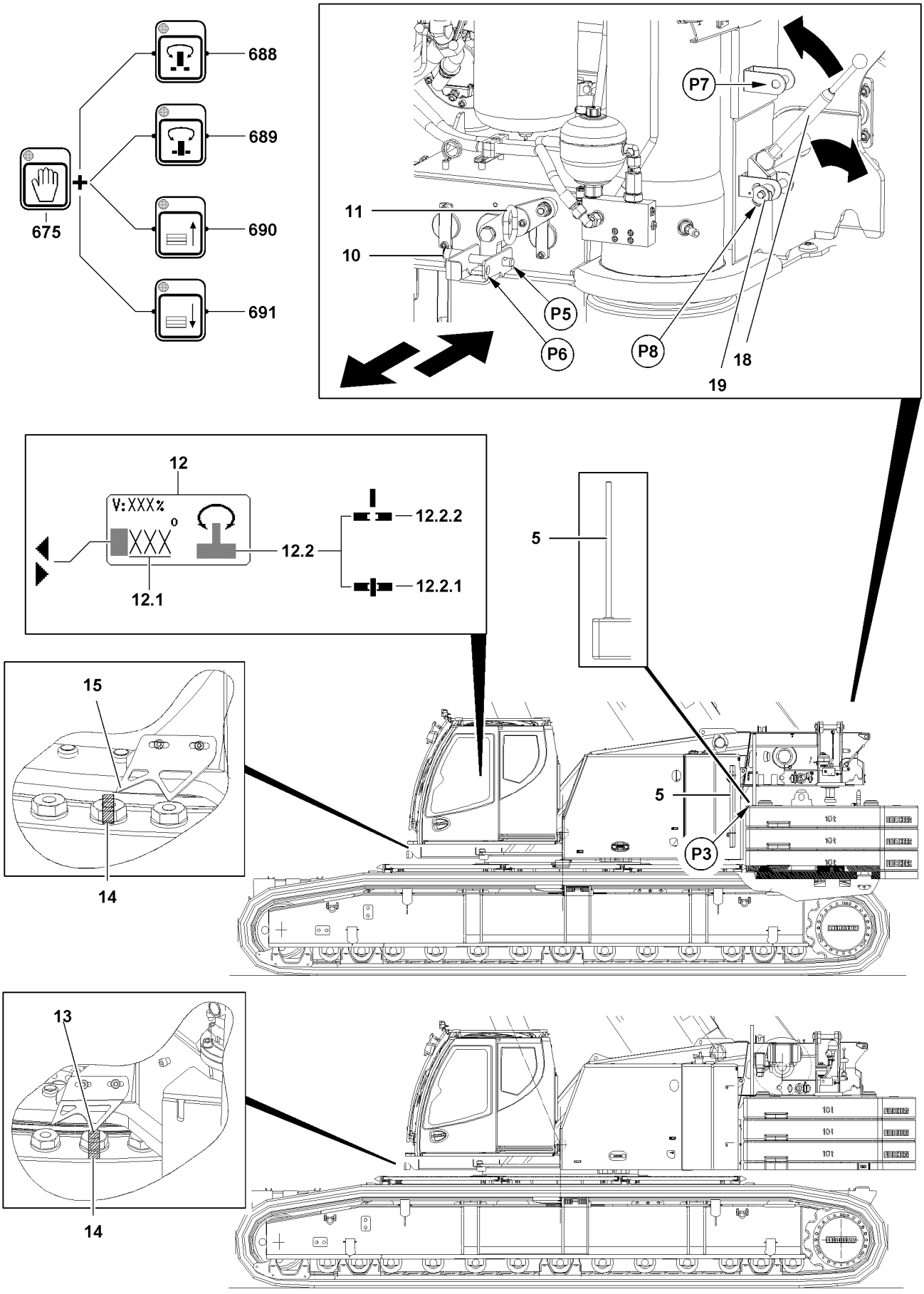
688
689
690
691
675
P7
11
10
P5
P6
P8
18
19
12
V:XXX%
XXX
12.2
12.2.2
12.2.1
12.1
5
15
14
5
P3
13
14

B117327

Note

▶ Use the release button **675** to control the necessary release functions. The release key **675** is deactivated 30 s after a button is last pressed on the BKE.

▶ Activate the release button **675** and then press the button **689**.

Result:

– The LED on button **689** blinks as the turntable is pinned.
– During the pinning procedure, the pin in the “Turntable locked” icon **12.2.1** blinks.
– As soon as the crane superstructure is locked with the crane chassis, the “turntable locked” icon **12.2.1** appears static and the LED on button **689** lights up (static).

▶ When the pinning procedure of the turntable lock has been completed:
Release the button **689**.

▶ Press the button **691**.

Result:

– When the ballasting cylinders are extended completely, the LED on button **691** lights up static.

▶ When the ballasting cylinders are fully extended:
Release the button **691**.

▶ Press the button **688**.

Result:

– The LED on button **688** blinks as the turntable is unpinned.
– During the unpinning procedure, the pin in the “Turntable released” icon **12.2.2** blinks.
– As soon as the crane superstructure is released, the “turntable released” icon **12.2.2** appears static and the LED on button **689** lights up (static).

▶ When the unpinning procedure of the turntable lock has been completed:
Release the button **688**.

▶ Turn the crane superstructure carefully to the right until the large pointer **13** on the slewing ring aligns with the marked screw **14** (180° angle position), illustration **2**.

Result:

– The ballasting cylinders are now entered into the receptacle studs of the counterweight.
– Shown on the LICCON monitor, in the Turning range icon **12** is the value **12.1** 180°.

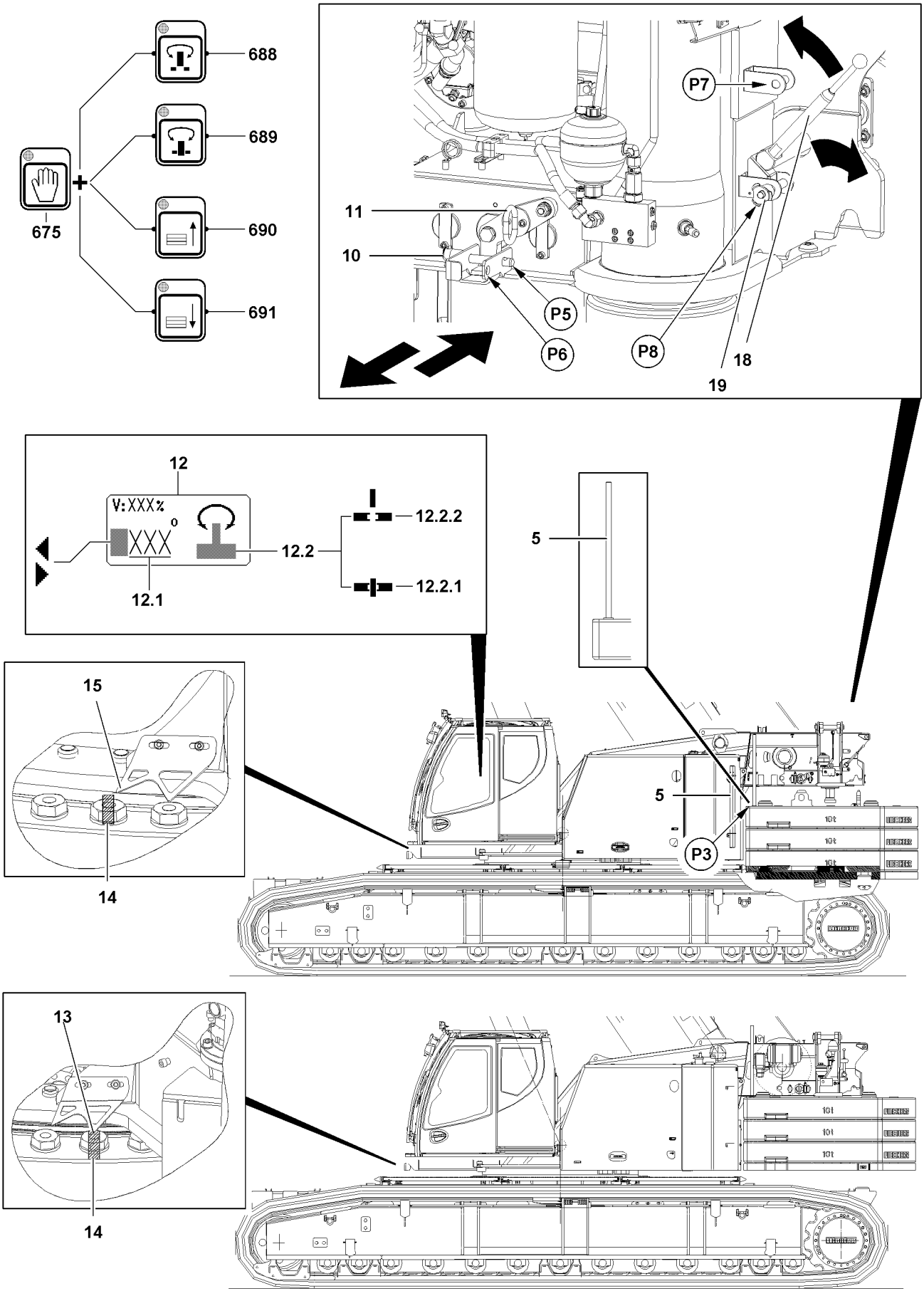
688
689
690
691
675
P7
11
10
P5
P6
P8
18
19
12
V:XXX%
XXX
12.2
12.2.2
12.2.1
12.1
5
15
14
5
P3
13
14

B117327

▶ Press the button **689**.

Result:

– The LED on button **689** blinks as the turntable is pinned.
– During the pinning procedure, the pin in the “Turntable locked” icon **12.2.1** blinks.
– As soon as the crane superstructure is locked with the crane chassis, the “turntable locked” icon **12.2.1** appears static and the LED on button **689** lights up (static).

▶ When the pinning procedure of the turntable lock has been completed:
Release the button **689**.

▶ Press the button **690**.

Result:

– The ballasting cylinders are retracted and the counterweight is raised.

▶ When the ballasting cylinders are completely retracted and the counterweight is fully raised:
Release the button **690**.

4.4.3 Pinning the ballasting device

WARNING

Falling counterweight!

If the ballasting device is not pinned when the counterweight is installed, then the counterweight can loosen up! The counterweight can fall down and cause severe accidents!

Personnel can be severely injured or killed!

▶ Pin the ballasting device with the counterweight!

▶ Take the retaining pipe **5** from park position and pin on both sides in the counterweight plate on position **P3**.
▶ Release the grip pins: Unpin the ball locking pins **10**.
▶ Pin the grip pins **11**.
▶ Secure the grip pins **11**: Insert the ball locking pin **10** on position **P5**.
▶ Unpin the ball locking pin **19** in park position **P8**.
▶ Swing the hand lever **18** upward.
▶ Secure the hand lever **18**: Insert the ball locking pin **19** on point **P7**.
▶ Unpin the retaining pipe **5** and pin it in park position.

4.4.4 Releasing the turntable lock

▶ Press the button **688**.

Result:

– The LED on button **688** blinks as the turntable is unpinned.
– During the unpinning procedure, the pin in the “Turntable released” icon **12.2.2** blinks.
– As soon as the crane superstructure is released, the “turntable released” icon **12.2.2** appears static and the LED on button **688** lights up (static).

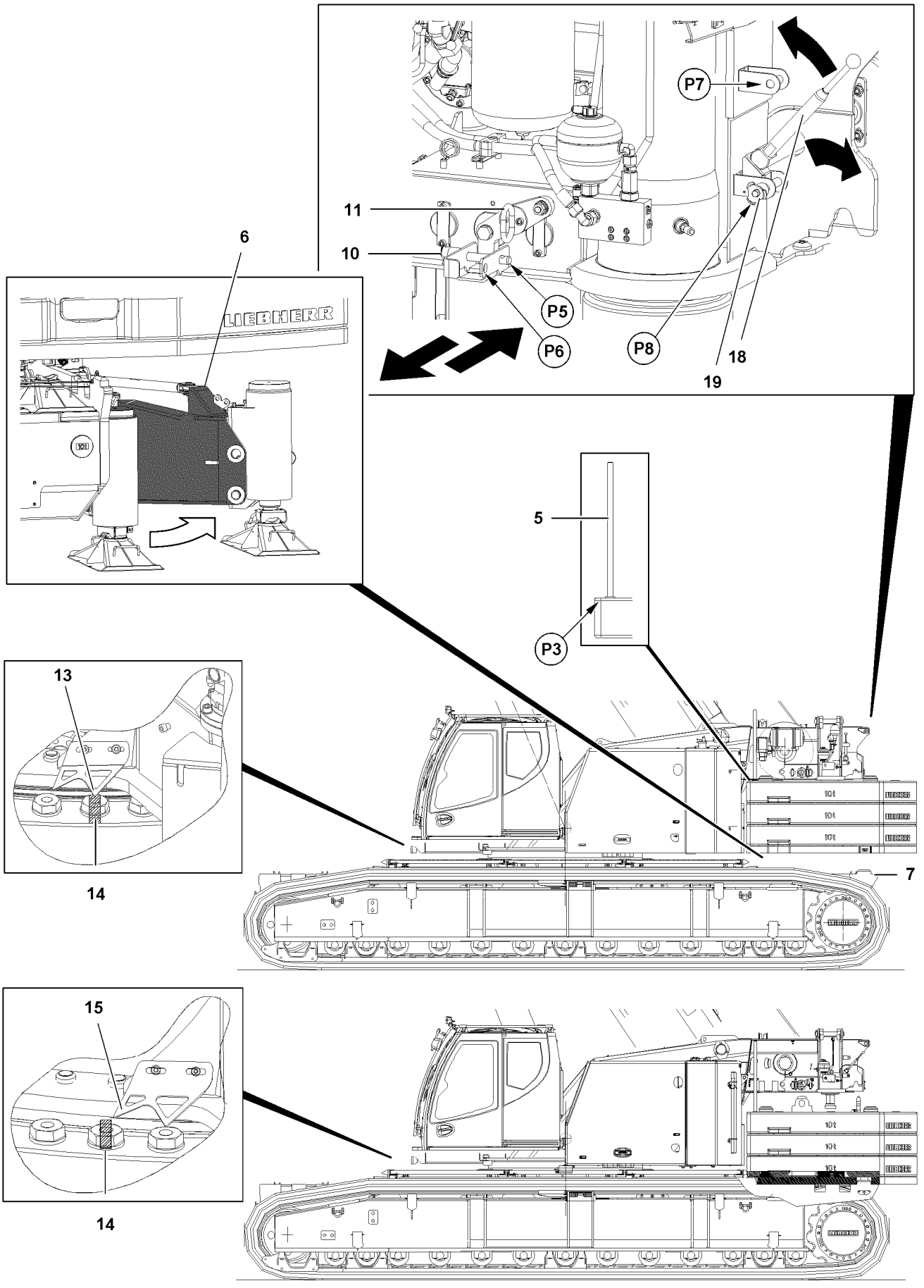

B117355

5 Disassembly of counterweight

WARNING
Danger of falling!
During assembly and disassembly, personnel must be secured with appropriate aids to prevent them from falling! If this is not observed, assembly personnel can fall and suffer life-threatening or fatal injuries!

- ▶ Any work, where there is a danger of falling, must be carried out with suitable aids (for example: lifting platforms, scaffoldings, ladders, auxiliary crane)!
- ▶ If the work can neither be carried out with such aids nor from the ground, then the assembly personnel must secure themselves with approved catch systems to avoid falling, see chapter 2.04 of the operating instruction!
- ▶ If railings are present on the crane components, then they must be brought into the corresponding position and secured for assembly / disassembly work!
- ▶ Step on aids and fall protection equipment only with clean shoes!
- ▶ Keep aids and fall protection equipment clean and free from snow and ice!
- ▶ During all assembly and disassembly work, maintenance work and inspections, travel or crane operation is prohibited!

WARNING
Danger of accident!
During assembly or disassembly of the counterweight, personnel can be injured or killed!
Objects can be damaged!

- ▶ During the assembly or disassembly of the counterweight, no personnel may remain within the danger zone!
- ▶ During the assembly or disassembly of the counterweight, no objects may remain within the danger zone!

5.1 Removing hoist gear 2*

When hoist gear 2 is to be removed, see Crane operating instructions, chapter 5.09.

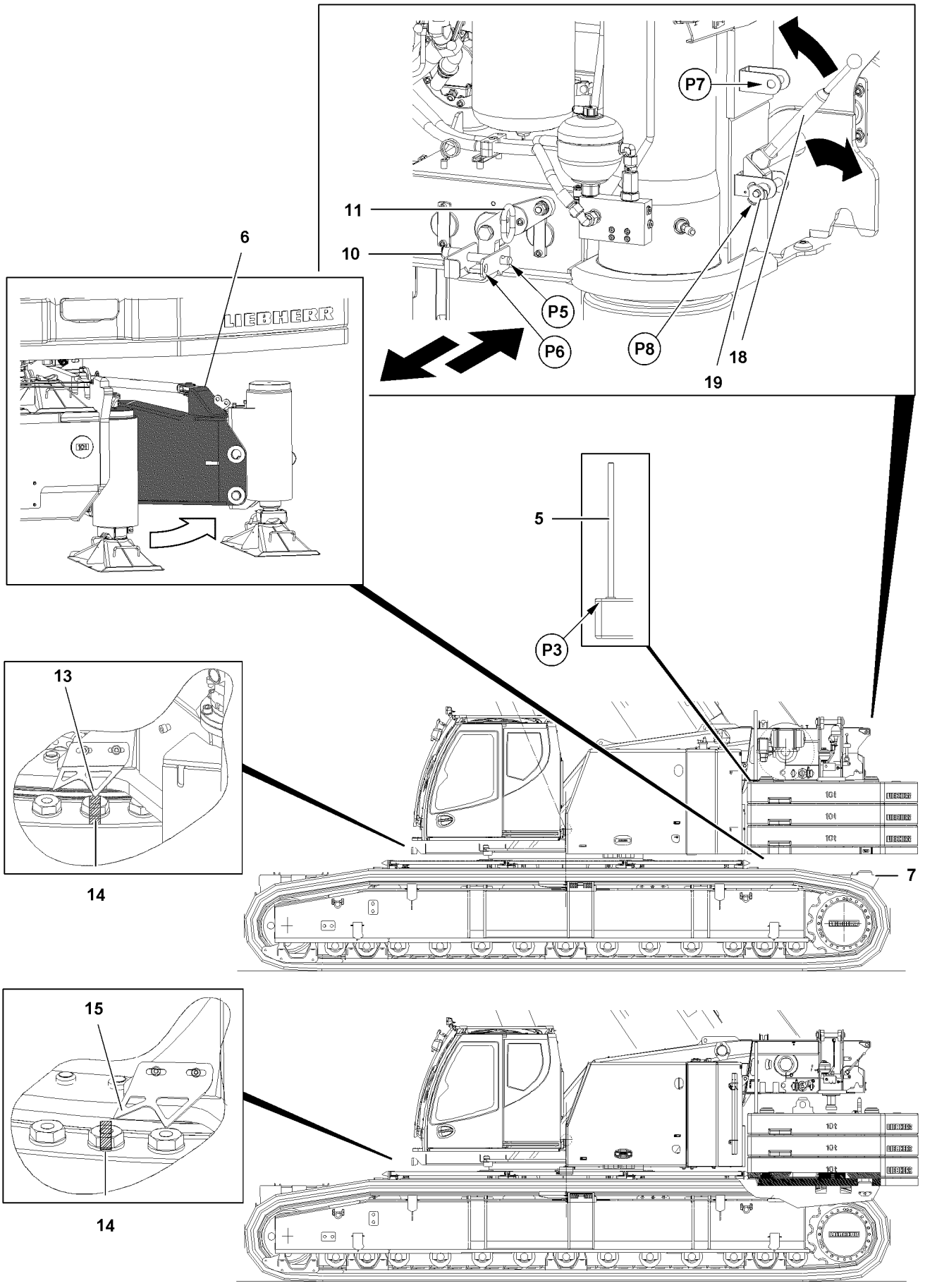

B117355

5.2 Setting the counterweight with the ballasting device down

Make sure that the following prerequisites are met:

– The crane is positioned on a level and load-bearing surface.
– The crane is aligned in horizontal direction.
– The central ballast blocks **7** are installed on the front and rear, see Crane operating instructions, chapter 3.03.
– The crane with installed crawler carriers is operational as assembly crane.
– The support cylinders are completely retracted.
– The transport vehicle for the counterweight plates is in the immediate vicinity of the crane.
– No support plates and the assembly device are placed on the central ballast.
– The fall protection equipment is installed.
– The LICCON overload protection has been set according to the load chart and the set up configuration.
  - Crawler operation with track width
  - Central ballast 20 t
  - Counterweight 0 t
  - Without auxiliary boom / accessory
  - Slewing range

NOTICE
Damage of receptacle plate due to collision!
If the support cylinders are pinned in the uppermost position, then the support cylinders can collide with the base plate.
▶ Swing both folding beam brackets **6** out and secure.

5.2.1 Unpinning the ballasting device

Make sure that the following prerequisites are met:

– The large pointer **13** on the slewing ring aligns with the marked screw **14** (180° angle position).

NOTICE
Damage to the ballasting system!
If the ballasting device is not unpinned before moving the ballasting cylinders out, then the ballasting device can be damaged!
▶ Unpin the ballasting device before moving the ballasting cylinders out.

▶ Take the retaining pipe **5** from park position and pin on both sides in the counterweight plate on position **P3**.
▶ Release the grip pins: Unpin the ball locking pins **10**.
▶ Unpin the grip pins **11** to the stop.
▶ Secure the grip pins **11**: Insert the ball locking pin **10** on position **P6**.
▶ Release the hand lever **18**: Unpin the ball locking pin **19** on point **P7**.
▶ Pull hand lever **18** downwards.
▶ Insert the ball locking pin **19** in park position **P8**.
▶ Unpin the retaining pipe **5** and pin it in park position.

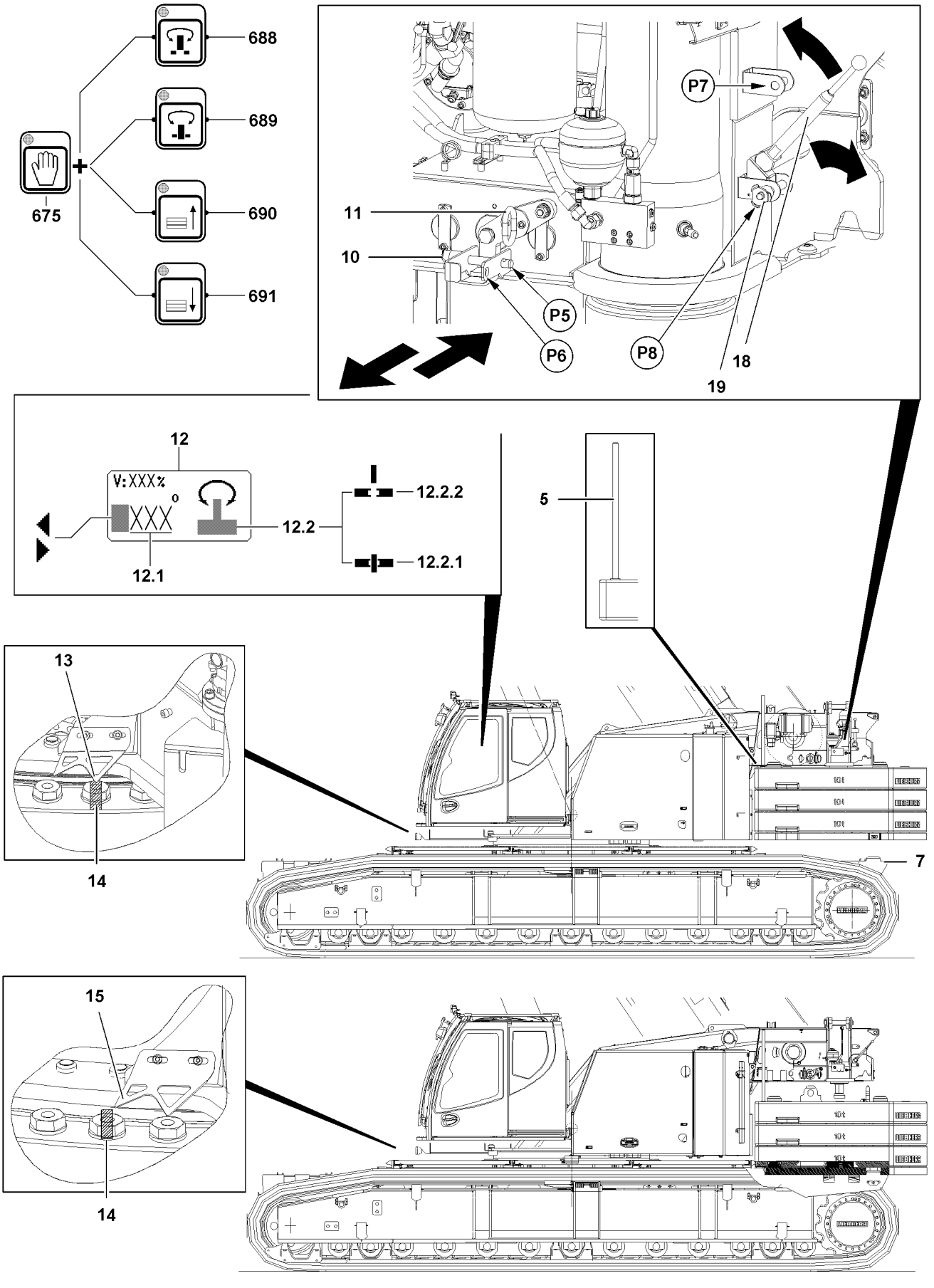
688
689
690
691
675
P7
11
10
P5
P6
P8
18
19
12
V:XXX%
XXX
12.2
12.2.2
12.2.1
12.1
5
13
14
7
15
14

B117328

5.2.2 Placing the counterweight plates on the central ballast

Note

▶ Use the release button **675** to control the necessary release functions. The release key **675** is deactivated 30 s after a button is last pressed on the BKE.

▶ Activate the release button **675** and then press the button **689**.

Result:

– The LED on button **689** blinks as the turntable is pinned.
– During the pinning procedure, the pin in the “Turntable locked” icon **12.2.1** blinks.
– As soon as the crane superstructure is locked with the crane chassis, the “turntable locked” icon **12.2.1** appears static and the LED on button **689** lights up (static).

▶ When the pinning procedure of the turntable lock has been completed:
Release the button **689**.

▶ Press the button **691**.

Result:

– The counterweight is lowered on the counterweight receptacle.
– When the ballasting cylinders are extended completely, the LED on button **691** lights up static.

▶ When the ballasting cylinders are completely extended and the counterweight is completely placed down on the counterweight receptacle:
Release the button **691**.

▶ Press the button **688**.

Result:

– The LED on button **688** blinks as the turntable is unpinned.
– During the unpinning procedure, the pin in the “Turntable released” icon **12.2.2** blinks.
– As soon as the crane superstructure is released, the “turntable released” icon **12.2.2** appears static and the LED on button **688** lights up (static).

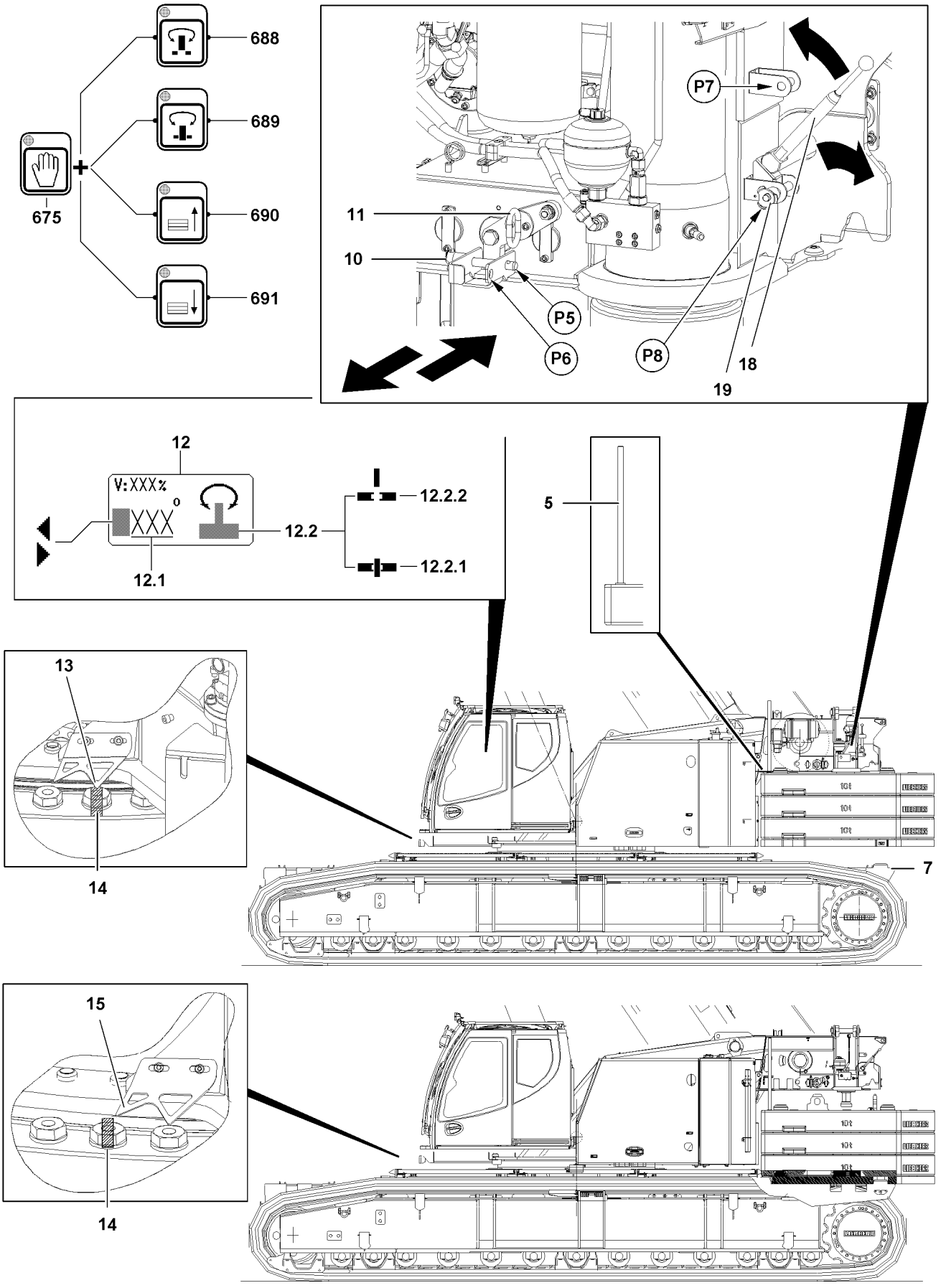
688
689
690
691
675
P7
11
10
P5
P6
P8
18
19
12
V:XXX%
XXX
12.2
12.2.2
12.2.1
12.1
5
13
14
7
15
14

B117328

▶ When the unpinning procedure of the turntable lock has been completed:
Release the button **688**.

▶ Rotate the crane superstructure until the small pointer **15** on the slewing ring aligns with the marked screw **14**, illustration **1**.

Result:

– The ballasting cylinders are now moved out from the receptacle studs of the counterweight.
– On the LICCON monitor, in the turning rage icon **12** 176° to 177° is shown as a value **12.1**.

▶ Press the button **689**.

Result:

– The LED on button **689** blinks as the turntable is pinned.
– During the pinning procedure, the pin in the “Turntable locked” icon **12.2.1** blinks.
– As soon as the crane superstructure is locked with the crane chassis, the “turntable locked” icon **12.2.1** appears static and the LED on button **689** lights up (static).

▶ When the pinning procedure of the turntable lock has been completed:
Release the button **689**.

▶ Press the button **690**.

Result:

– The ballasting cylinders are moved in.

5.2.3 Releasing the turntable lock

▶ Press the button **688**.

Result:

– The LED on button **688** blinks as the turntable is unpinned.
– During the unpinning procedure, the pin in the “Turntable released” icon **12.2.2** blinks.
– As soon as the crane superstructure is released, the “turntable released” icon **12.2.2** appears static and the LED on button **688** lights up (static).

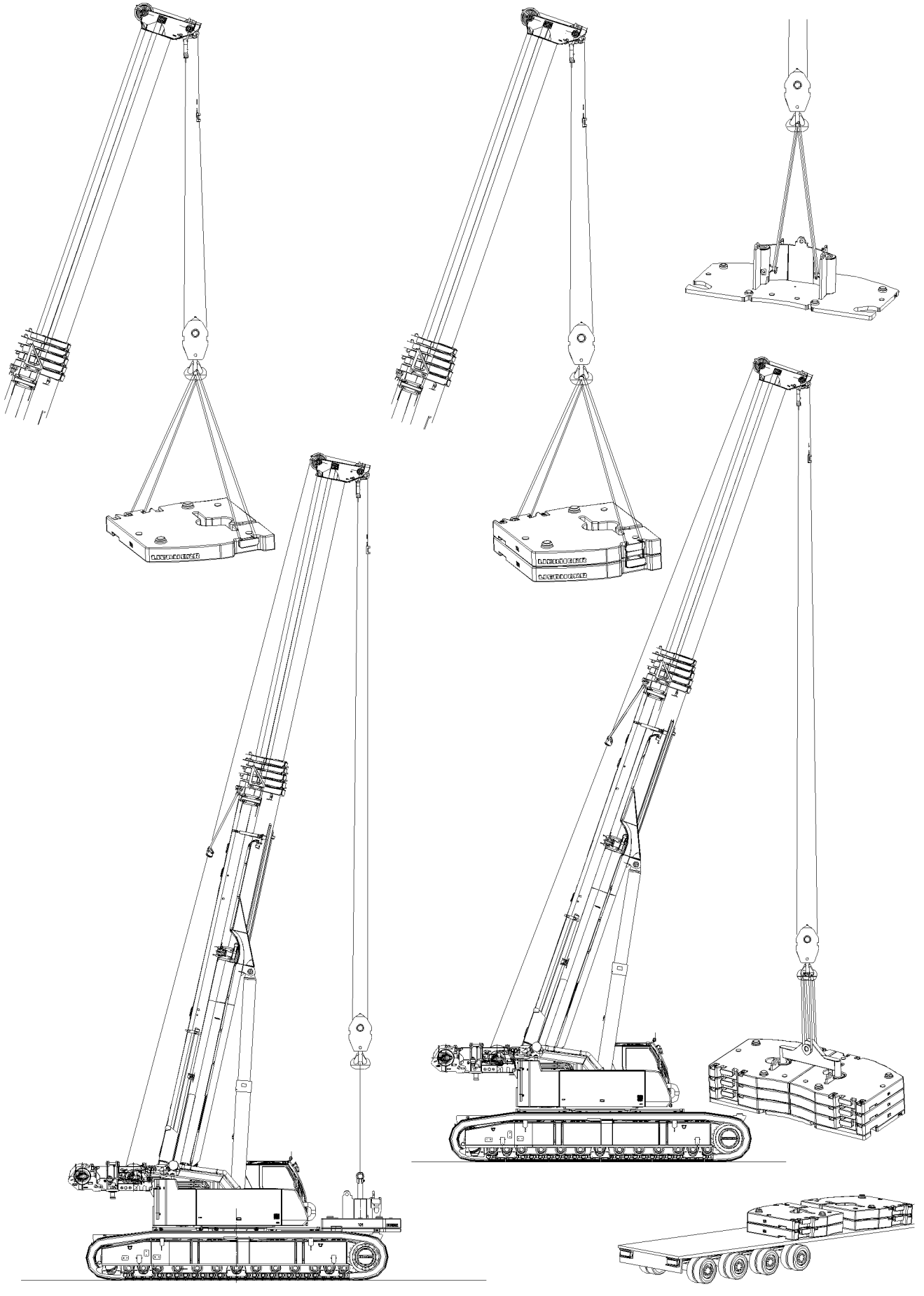

B117332

5.3 Lifting the counterweight from the central ballast

WARNING
Danger of accident due to toppling the crane!
The boom lengths and boom radii specified in the load chart may not be exceeded. If this is not observed, there is a danger of accidents as the crane can topple over!
Personnel can be severely injured or killed!
▶ The boom lengths and boom radii noted in the load chart must be strictly observed!

▶ Attach the counterweight on the crane.
▶ Place the counterweight individually or as an assembly with the cross beam on the transport vehicle.

1

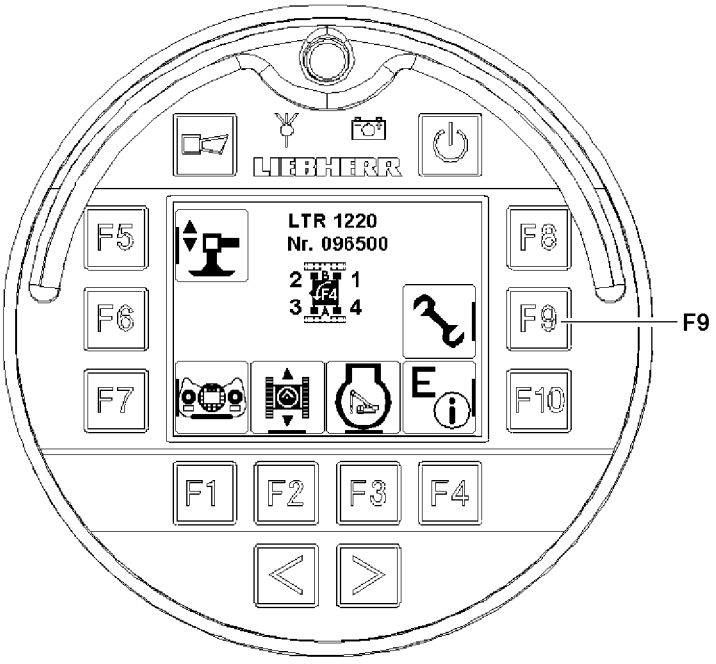
LIEBHERR
LTR 1220
Nr. 096500
F5
F6
F7
F8
F9
F10
F1
F2
F3
F4

2

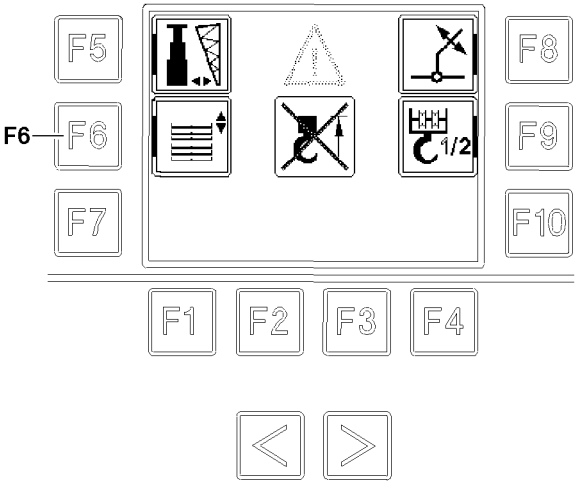
F5
F6
F7
F8
F9
F10
F1
F2
F3
F4
1/2

3

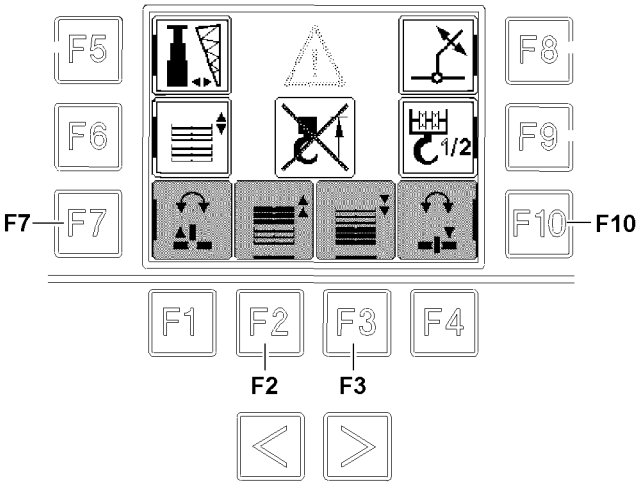
F5
F6
F7
F8
F9
F10
F1
F2
F3
F4
1/2

B117334

6 Operating element Bluetooth™ Terminal

The turntable lock and the ballasting cylinders can be controlled with the Bluetooth™ Terminal.
Make sure that the following prerequisite is met:
– The Bluetooth™ Terminal is turned on.
– The start menu is set, see illustration **1**

6.1 Pinning the turntable with the Bluetooth™ Terminal

▶ Press the function key **F9**.
Result:
– The BTT displays the “Main menu”, see illustration **2**.

▶ Press the function key **F6**.
Result:
– The BTT displays the “Main menu”, see illustration **3**.

▶ Press the function key **F10**, see illustration **3**.
Result:
– The turntable lock is pinned.

▶ Press the function key **F7**, see illustration **3**.
Result:
– The turntable lock is unpinned.

6.2 Retract / extend the ballasting cylinders with the Bluetooth™ Terminal

▶ Press the function key **F9**.
Result:
– The BTT displays the “Main menu”, see illustration **2**.

▶ Press the function key **F6**.
Result:
– The BTT displays the “Main menu”, see illustration **3**.

▶ Press the function key **F2**, see illustration **3**.
Result:
– The ballasting cylinders are moved in.

▶ Press the function key **F3**, see illustration **3**.
Result:
– The ballasting cylinders are moved out.

B195219

1 Safety technical instructions for working with a load

For more information, see chapter 2.04.

WARNING
The crane can topple over!
For steep boom positions, for which no loads are specified in the load charts there is a risk of the crane superstructure toppling when turning “backward”, i.e. towards the counterweight side! There is a particular danger if the support base has been reduced and supported with the sliding beams retracted!
Personnel can be severely injured or killed!
▶ The radii specified in the load chart must be observed!

WARNING
Danger of accident due to erroneous operation!
If the reeving number on the pulley head is less than the reeving number set on the LICCON computer system and if the load is lifted with the luffing gear, it can result in an overload of the hoist rope, as a result, the hoist rope can rip, causing the load to drop!
Personnel can be severely injured or killed!
▶ Always comply with the reeving numbers specified in the load chart for maximum loads!
▶ The reeving on the pulley head and the reeving set on the LICCON computer system must match, otherwise crane operation is prohibited!

DANGER
Danger of fatal accidents due falling load!
If the number of three coils is fallen below (for example due to a technical defect), the hoist rope is ripped from the winch drum and the load falls down.
Personnel can be severely injured or killed!
▶ The crane operator must ensure that there are always at least three windings on the winch drum!

Always comply with the maximum loads specified in the load chart.
The weight of the hook block according the load chart must be taken into account.
For the lift, use the hook block which is suited best for the existing set up configuration in connection with the load chart.
Initiate all crane movements carefully. Also slow down the crane movements carefully. That way you can avoid a swinging or pendulum motion in the suspended load.

2 Checks before starting to work with the crane

Before starting work with the crane, the crane operator must carry out a further inspection to satisfy himself about the crane's operational safety:

– Check that the crane is properly supported and level.
– Check that all values in the load chart that apply to the current equipment configuration have been entered and met.
– Ensure that there are no people or objects in the crane danger zone.

WARNING
Danger of accidents when turning the crane superstructure!
By turning the crane superstructure in restricted space conditions on the job site, especially in the rear area of the counterweight and towards the chassis, personnel can be crushed and severely injured or killed!

▶ Give a short warning signal (horn) before starting a slewing movement!
▶ Ensure before starting any slewing movement that there are no people or objects in the danger zone!

2.1 Visual check for damage

WARNING
Danger of accident!
If the crane is operated despite existing defects, personnel can be severely injured or killed!

▶ In the event of deficiencies that threaten operational safety, stop crane operation immediately!

The following deficiencies threaten the crane's operational safety:

– Damage to load-bearing parts of the crane design, such as booms, supports etc.
– Failure of the hoist gear brake and consequent slipping of the load
– Functional failures in the crane control system
– Functional failures in the indicator and warning lights
– Damage to the hoist ropes
– Functional failures in the safety devices
– Leakages on safety relevant components of the crane hydraulic

Inform the appropriate supervisor about the deficiencies on the crane and also inform your relief when crane operators are changed.

2.2 Telescopic boom distortion because of sunshine on one side

A temperature difference occurs between the side facing the sun and the side facing away from the sun for cranes with telescopic boom. This causes telescopic boom side distortion, which can reduce the load-bearing capacity of the telescopic boom. For example, a temperature difference between the two boom sides of 30 °C and a boom length of 60 m results in a length difference caused by the temperature difference between the two sides of the telescopic boom of approximately 22 mm. With narrow boom parts, this causes the profiles to bend sideways!
If the maximum load carrying capacity is being utilized when a telescopic boom extension such as a fixed lattice jib, luffing lattice jib or folding jib is being used, then in must be ensured through a visual inspection before picking up the load that the boom is not showing signs of side deformation due to one-sided sun exposure.

WARNING
Danger of accident because of component overloading!
If the telescopic boom has become distorted because of one-sided sun exposure this can cause component overload and therefore accidents!

▶ Turn crane so that both sides of the boom are brought to about the same temperature, therefore preventing side deformation due to temperature differences!

3 Crane movement - Telescoping

If the telescopic boom is telescoped with the auxiliary boom or telescopic boom extension, before the telescoping procedure, ensure that:

– The crane is properly supported and horizontally aligned.
– The telescopic boom is evenly warmed up by solar radiation.
– There is no strong side wind.

WARNING

Damage of the telescopic boom or the hoist rope!

If these 3 factors are not adhered to, damage of the telescopic boom or the hoist rope can occur and lead to accidents!

▶ Support the crane properly and align it horizontally!
▶ Keep both sides of the boom at about the same temperature!
▶ Telescope only to the permissible wind speed according to the load chart!
▶ If the actual wind speed is higher than the permissible wind speed noted on the load chart, telescoping is prohibited!

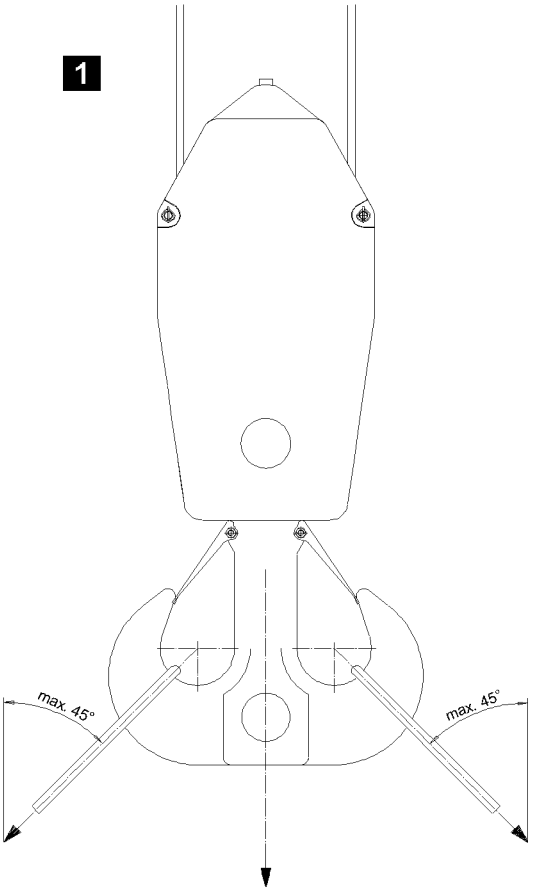
1
max. 45°
max. 45°

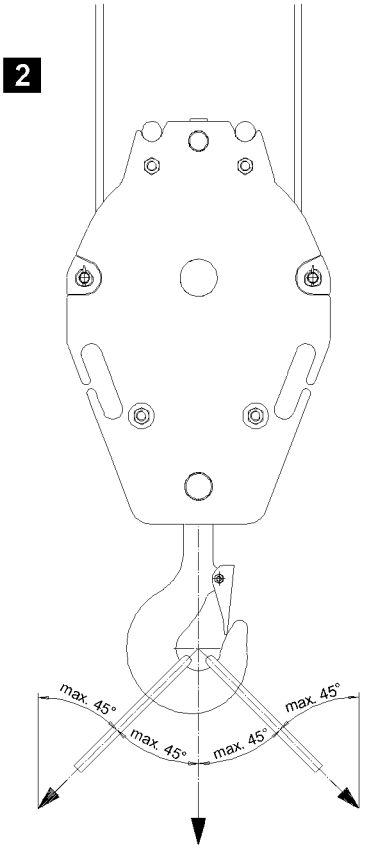
2
max. 45°
max. 45°
max. 45°
max. 45°

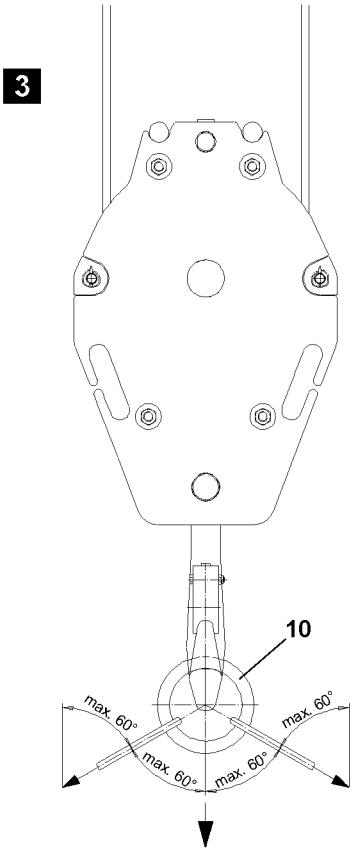
3
10
max. 60°
max. 60°
max. 60°
max. 60°

B112108

4 Taking on a load

The crane must always be operated in such a way that its load-bearing parts are not destroyed or damaged and its stability is ensured.
Make sure that the following prerequisites are met:
– The crane is supported and horizontally aligned.
– The LICCON overload protection has been set according to the load chart.
– The counterweight is installed according to the load chart.
– The hook block or the load hook is correctly reeved.

4.1 Attaching the load

WARNING
The crane can topple over!
If the following conditions are not met, the crane can topple over and cause fatal injuries!
This could result in high property damage!
▶ Observe own weight of the load tackle!
▶ Observe own weight of the load tackle!
▶ The maximum permissible incline of the strands fastened on single or double hooks in the hook jaws is 45°! See illustration **1** and illustration **2**.
If necessary for the single hook:
▶ Use fastening equipment with a suspension link **10**! The maximum permissible incline in this case is 60°! See illustration **3**.
▶ Load a single and double hook symmetrically! A maximum deviation of ±3° from the direction of the center of gravity is permissible!
If necessary:
▶ Use crossbars or two cranes for taking up the load!

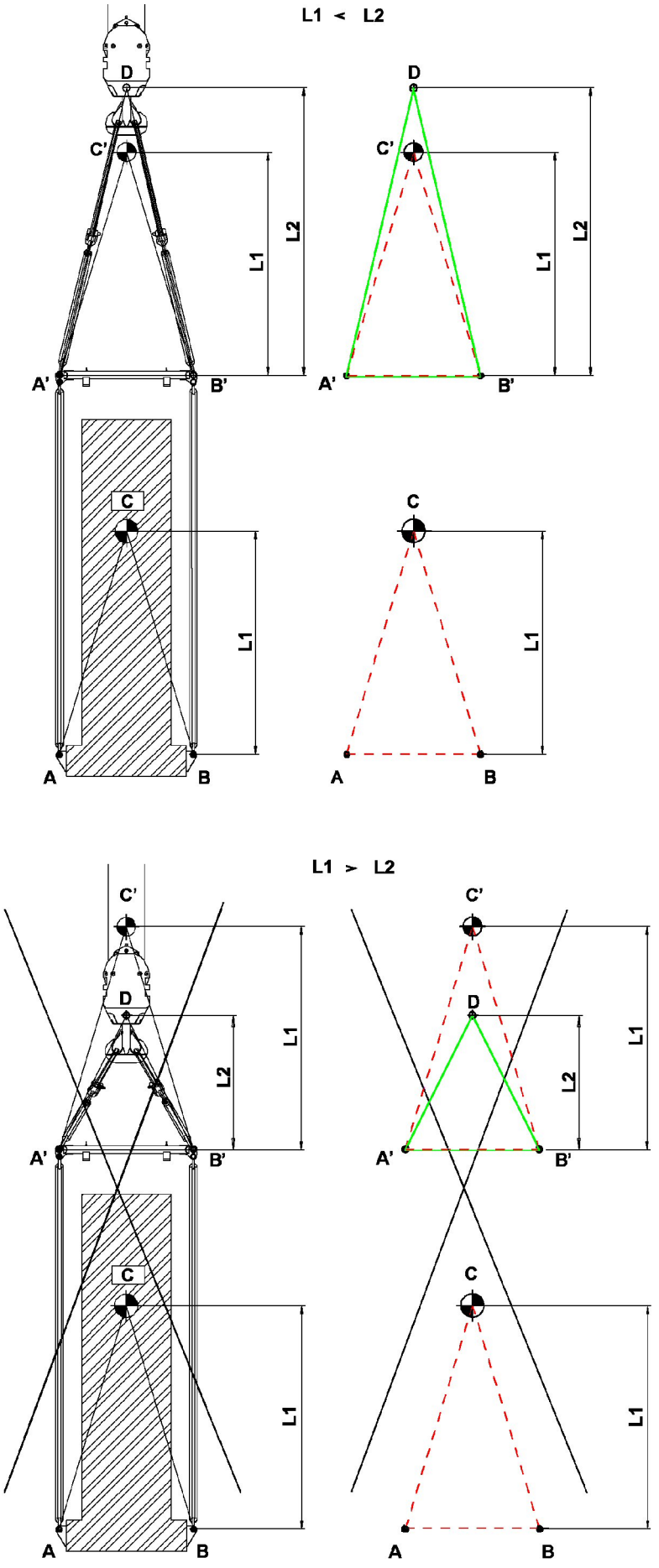

B116274

4.2 Load take up with cross bar

Cross bars are load lifting equipment between crane hook and load.
The distance of the center of gravity **L1** is the vertical dimension from the fastening point of the load to the center of gravity of the load.
The cross bar height **L2** is the vertical dimension from the point of rotation of the crane hook to the next lower linkage point of the cross bar.

WARNING
Tipping of load to the side!
If fastening ropes are used which are too short, so that the load center of gravity is above the fastening point, then there is a danger of the load tipping to the side!
Personnel can be severely injured or killed!

- ▶ The load center of gravity must be below the crane hook.
- ▶ The distance of the center of gravity **L1** must be smaller than the cross bar height **L2** (L1 < L2).
- ▶ The triangle **A'B'C'** must be within the triangle **A'B'D**.

4.3 Transporting the hook block

WARNING
Danger of accident!
If a hook block is fastened incorrectly for transport, personnel can be injured!

- ▶ Fasten the hook block for transport on the fixed point in the center!
- ▶ Fastening the complete hook block on the auxiliary weights is prohibited!

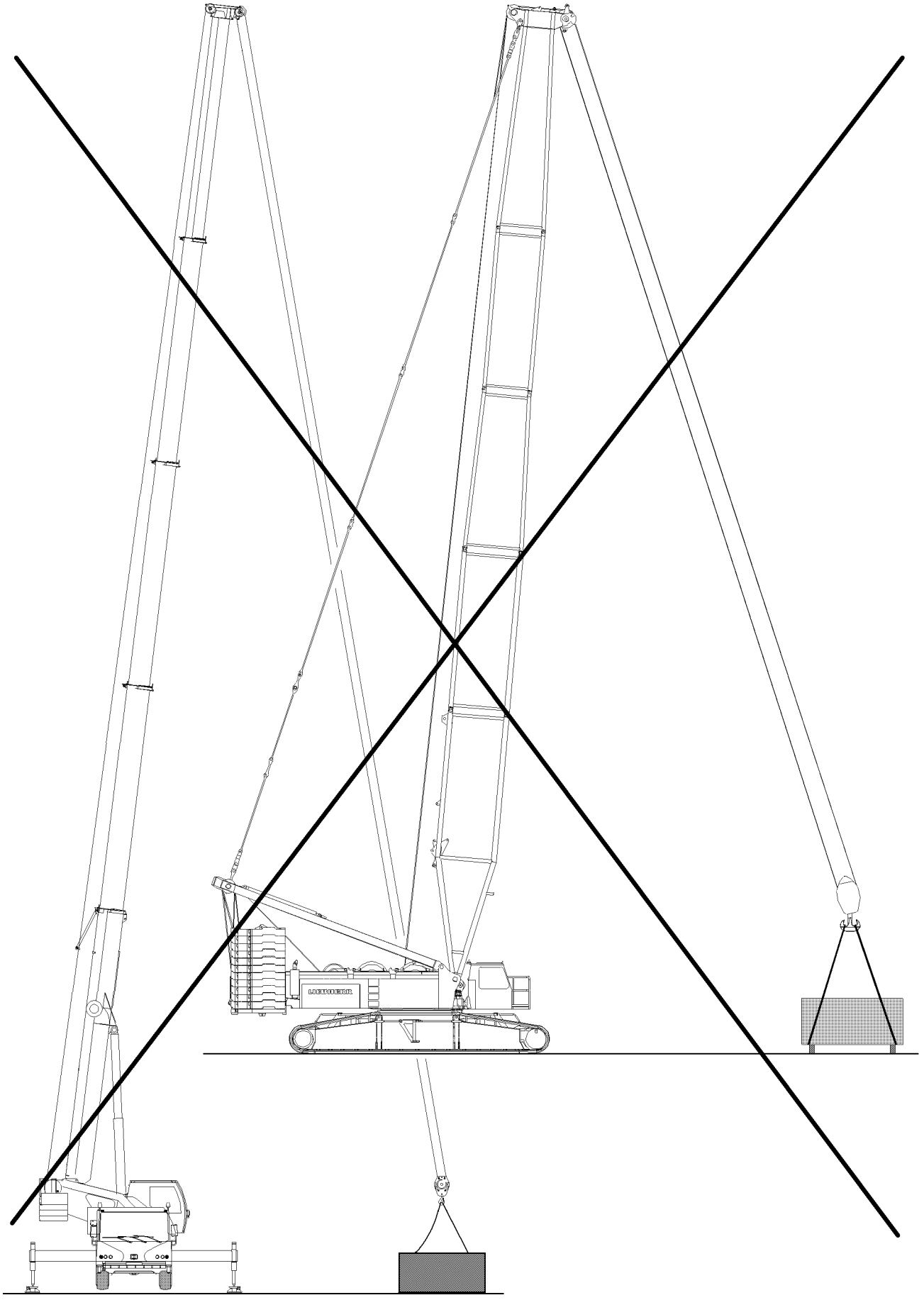

B102716

4.4 Lifting the load

WARNING
Danger of crushing for people in the load zone!
If personnel are located between the load to be lifted and a possible interfering edge (such as a wall of a building or similar) when the load is lifted, personnel can be severely injured or killed!
- ▶ Before lifting the load it must be ensured that there are no persons within the danger zone!
- ▶ It is prohibited for anyone to remain in the danger zone!
- ▶ It is prohibited for anyone to be under the load! Keep a safety distance!
- ▶ Swinging of the load is prohibited!
- ▶ Exercise extreme caution when lifting a load!

WARNING
The crane can topple over!
If an attempt to lift a load above the hoist gear causes the LICCON overload protection to turn off, then the load may not be lifted by luffing up the boom. This leads to overloading and toppling of the crane!
Personnel can be severely injured or killed!
- ▶ Do not lift the load by luffing up the boom from the ground!

Note
When using the assembly winch* observe the following:
- ▶ Use the assembly winch* only for assembly and not for lifting loads!
- ▶ Lifting of loads with the auxiliary winch is prohibited!

If the fastening rope is manually attached by an assistant to the load to be lifted:
- Make sure that the assistant's hands are not crushed by the tightened ropes between the load and the fastening rope.
- Make sure that the assistant's body parts (hands, legs etc.) are not crushed by a swaying movement of the load during lifting.

4.5 Angular pulling

WARNING
The crane can topple over!
Angular pulling can destroy the crane or cause it to topple over!
Personnel can be severely injured or killed!
- ▶ Attach (hang) the hook block always vertically over the center of gravity of the load to be lifted!
- ▶ Do not use the slewing gear to pull and set up loads!
- ▶ Angular pull is prohibited!

The crane is designed only to lift loads vertically. During angular pulling, regardless of whether this is done in the same direction as the boom or laterally, horizontal forces are generated in addition to the vertical forces, for which the boom is not designed.

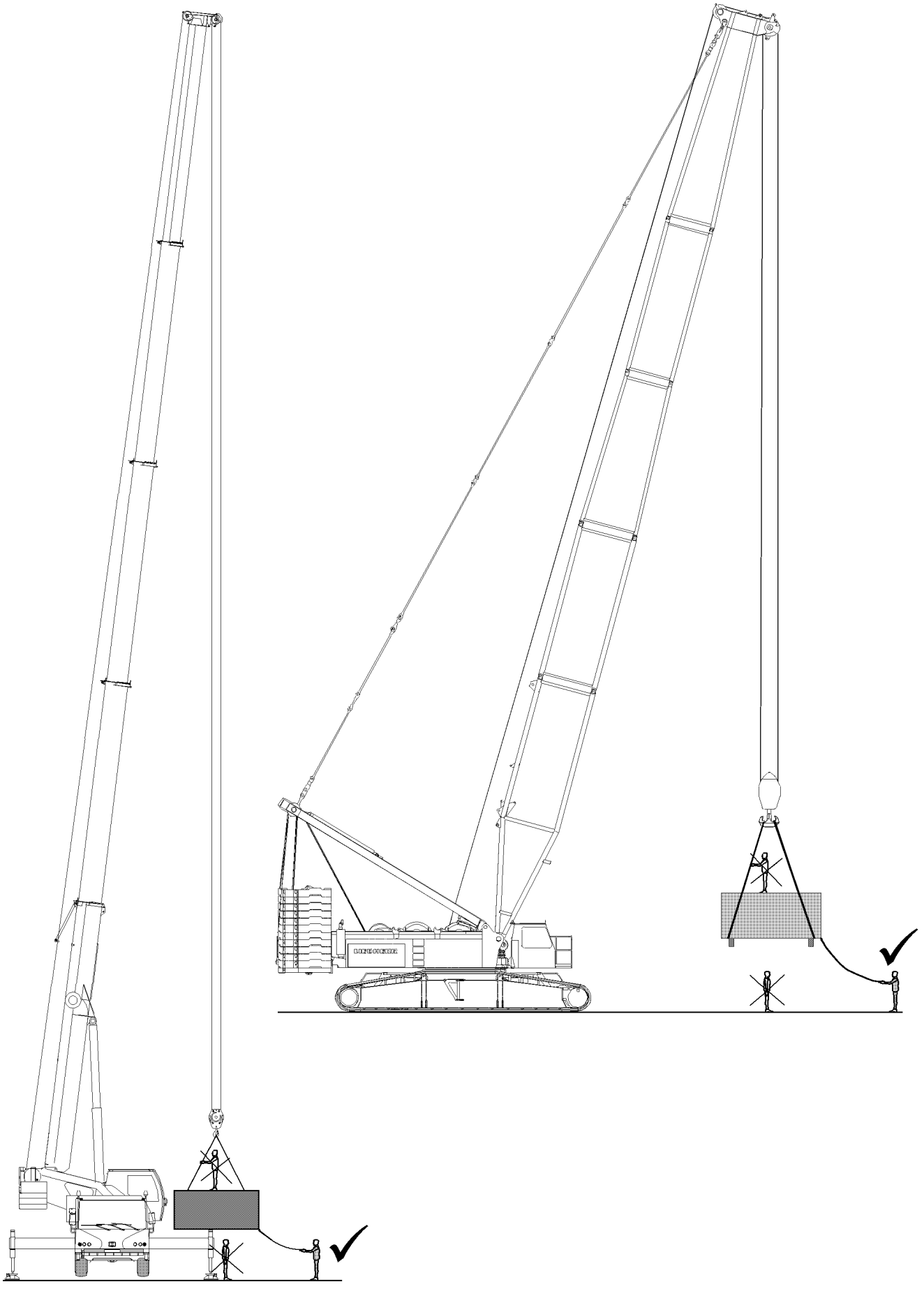

B102717

4.6 Breaking away fixed loads

WARNING
The crane can topple over!
Ripping stuck loads free can destroy the crane or cause it to topple over!
Personnel can be severely injured or killed!
▶ Ripping stuck loads free is prohibited!

5 Crane operation

The maximum load capacity of the crane is not just limited by the stability, but in many cases a load-bearing component breaks when the crane is overloaded **before** the crane topples over. Components that are susceptible to buckling such as the telescopic boom may fail suddenly **without showing signs of distortion beforehand** if the crane is overloaded.

WARNING
Danger of accidents for cranes with luffing cylinders!
When the luffing cylinder is on block position, the overload protection is not functioning!
▶ Crane operation at block position of luffing cylinders is prohibited!

5.1 General

A suspended load must always be kept under control. A fundamental requirement for this is the safe and delicate control of the crane's functions.

WARNING
Risk of accident due to swaying loads!
A swaying load can damage the crane and cause it to topple!
▶ All crane movements must be executed slowly and delicately!
▶ Initiate all crane movements slowly!
▶ Apply the brakes slowly in all crane movements!
▶ Crane operation with swaying loads is prohibited!

NOTICE
Damage of rope pulleys!
▶ Place down hook blocks, booms, folding jibs, auxiliary booms and boom noses in such a way that the rope pulleys do not lie on the ground and are damaged!

5.2 Guiding the load

The use of guide ropes is recommended to help the crane operator to manage the load more precisely and to prevent the load from swaying. This will prevent undesirable movements of the load and consequent damage.

5.3 Danger of being crushed!

WARNING
Danger of fatal injury!
Extreme care is needed when lowering a load! Mortal danger exists for personnel in the immediate area of the load being lowered!
Personnel can be severely injured or killed!
▶ Standing under a suspended loads is strictly prohibited!

5.4 Danger of falling!

WARNING
Danger of fatal injury!
If persons are on the suspended load, then they can fall down and be severely injured or killed!
- ▶ Remaining on a suspended load is strictly prohibited.
- ▶ Remaining on or within crane components (for example: At assembly of boom sections, lattice sections) which are moved during lifting, lowering, turning or closing procedures is strictly prohibited.

5.5 Working in the vicinity of electricity transmission lines

If there are electricity transmission lines in the immediate vicinity of the building site, then the electrical transmission lines must be turned off by qualified electricians. If this is not possible, the danger area must be covered over or cordoned off.

WARNING
Danger of current transfer!
If electricity transmission lines are not shut off nor covered nor blocked off, then there is an increased danger due to current transfer!
- ▶ Adhere to a safety distance of at least 6 m!

If the crane becomes electrified despite having taken all necessary precautions, proceed as follows:
- ▶ Remain calm!
- ▶ Do not leave the crane cab!
- ▶ Warn people outside: Stay in place and do not touch the crane!
- ▶ Move the crane out from the danger zone!

5.6 Ram work or pulling sheet piles

Vibration can be transmitted to the supporting steel structure of the crane during ram work or when pulling sheet piles with the crane. This vibration can cause premature fatigue of the material and therefore cracks in the supporting steel structure.

DANGER
Important instructions for “ram work” or “pulling sheet piles”!
If the crane is used for ram work or pulling sheet piles, then the following instructions must be followed. Failure to follow the instructions can result in damage to the crane.
- ▶ The ramming equipment may not pass on vibrations into the boom!
- ▶ When pulling sheet piles, the maximum pull force of the crane is limited according to the load chart! Restricting the maximum pull force via the crane overload protection **only** is prohibited! The pull force must be additionally checked by measuring.

blank page!

B199898

1 Prerequisites for driving the crane (crawler operation)

For driving the crane (crawler operation) the situations of the travel route are the deciding factor.
- For **ground inclines within the area of a valid load chart Driving with load** is possible at slow speed. The ground must be sufficiently level and capable of supporting the load. The addendums to the load charts for driving the crane must be observed.
- For **ground inclines outside the area of a valid load chart Driving without load** is possible at slow speed up to certain incline ranges. The ground must be sufficiently level and capable of supporting the load.

Driving the crane: Load chart available:
- valid and regular load chart available
- with load on the hook
- without load on the hook

Driving the crane: No load chart is available:
- only without load on the hook
- with specifications and limitations for the set up configuration of the crane

WARNING
The crane can topple over!
If the permissible inclines of the crane are exceeded, the crane can topple over!
If the permissible surface pressures of the travel route are exceeded, the crane can topple over!
Personnel can be severely injured or killed!
- ▶ Do not exceed the permissible inclines of the crane.
- ▶ Do not exceed the permissible surface pressures for the travel route.

WARNING
The crane can topple over!
If the following specifications, instructions and prerequisites are not observed, then the crane can topple over or be overloaded!
Personnel can be severely injured or killed!
- ▶ The crane operator is responsible for adhering to all specifications, instructions and prerequisites in the crane documentation.
- ▶ The crane operator may not drive the crane if not all specifications, instructions and prerequisites in the crane documentation can be adhered to.
- ▶ The crane operator is responsible for the correct and complete entry of data in the LICCON computer system.
- ▶ All drive movements (starting out, steering, acceleration, deceleration, stopping etc.) must be initiated sensitively, with utmost caution and at the lowest speed.
- ▶ Depending on the situation, additional observers, who are acoustically or visually connected with the crane operator (for example by radio or sight), may have to support the crane operator with shared responsibility.

Make sure that the following prerequisites are met:
- No personnel or obstacles are within the danger zone.
- The crane is in operational condition.
- The crane is in a set up configuration permitted for travel operation.
- Installed ballast (central ballast and counterweight) is properly installed and secured.
- There are no loose objects on the crane.

1.1 Travel route

WARNING
The crane can topple over!
If the following specifications, instructions and prerequisites are not observed, then the crane can topple over or be overloaded!
Personnel can be severely injured or killed!

- ▶ The transfer from the horizontal into an uphill slope and from the uphill slope into the horizontal must be made evenly, i.e.: There may be no edges which can cause the crane to topple over. Any incline changes must be made continuously.
- ▶ If measures were taken to initiate the forces into the ground, then they must be checked by an expert before starting to drive for proper execution and sufficient supportability.
- ▶ An insufficient ground condition can cause accidents, for example the crane can slide away to the side and as a result get into an impermissible incline position.

Make sure that the following prerequisites are met:

- Before starting to drive, the travel route was determined.
- Before starting to drive, the condition of the ground has been checked.
- The entire travel route can safely absorb the surface pressure.
- All inclines occurring on the travel route can be driven safely by the crane.
- The entire travel route is free of obstacles.
- The friction coefficient between crawler track and ground is sufficiently large to absorb the occurring drive forces or to eliminate the crane from slipping away in an incline position.
- Possible environmental influences while driving the crane (among others precipitation and wind) were taken into account for the travel route.
- The travel route has been selected in such a way that a sufficient distance to local facilities (among others power lines) can be retained.

For falling terrain gradients outside the range of a valid load chart, the following applies:

- Before starting to drive, the travel route was checked in connection with the actual set up configuration of the crane on the LICCON job planner.
- Before starting to drive, the optimum positions for the boom system were determined to obtain as even a surface pressure as possible - the LICCON job planner can be used for this purpose.

Note

- ▶ For a detailed description of the LICCON job planner on the crane , see the operating instructions LICCON job planner.
- ▶ For a detailed description of the computer program LICCON job planner, see separate description.

1.1.1 Optimizing measures for travel route

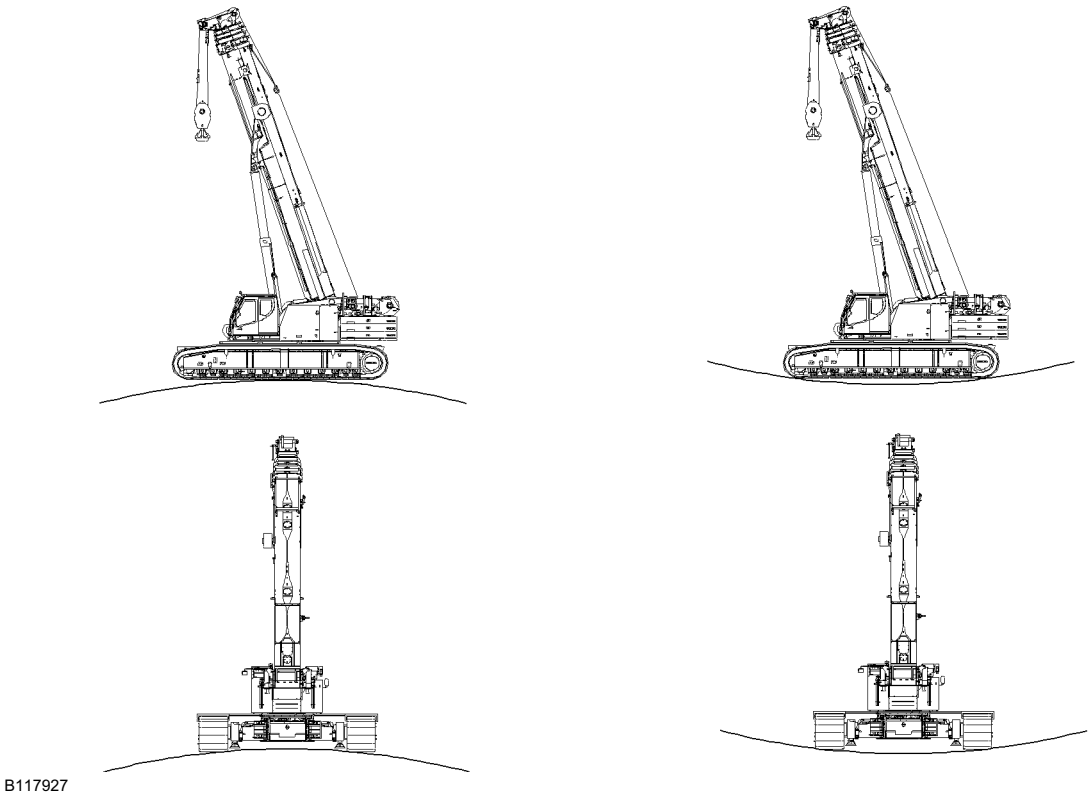

Depressions, crests, track grooves and other uneven areas of the travel route cause punctiform strain to the track.

NOTICE
Damage to the track!
Continuous punctiform strain to the track causes increased wear. Continuous increased wear can cause damage to the track.
- ▶ Set up the travel routes in such a way that the track is not subjected to continuous punctiform strain.
- ▶ For extended travel operation shorten the maintenance intervals.

Through the following configuration features of the travel route, wear on the track can be minimized:
- Shapings of the travel route (such as depressions, crests, track grooves) have been eliminated via suitable measures.
- Select the travel route in such a way that few steering movements are required.

1.2 Calculation of required length of transfers in rising / falling gradients

The required length **L** for transfers results from the existing uphill angle **α** and the length of the crawler carriers **LC**.

Abbreviation	Description
L	Required length of transfers
α	Angle of uphill slope in degrees
LC	Length of crawler carriers between drive wheels and steering wheels

1.2.1 Calculation example

Given:
α = 4°
LC = 8.0 m
Wanted:
L = ?

Calculation formula						
L	=	0.5	*	**α**	*	**LC**
L	=	0.5	*	4	*	8.0 m
L	=	16.0 m				

1.3 Travel drives / hydraulic motors / track rollers

NOTICE
Damage to the travel gear, hydraulic motors and track rollers!
On longer travel routes and / or when driving uphill / downhill, the travel gears, hydraulic motors and / or track rollers can be overheated and damaged.

- ▶ Make sure that the travel gears - before driving the crane - are on maximum fill level.
- ▶ With suitable measuring devices make sure that the maximum permissible temperature of the travel gears, hydraulic motors and / or track rollers in travel operation over longer distances is below 90 °C. For a short time (**maximum** 10 minutes), the temperature may increase to a value between 90 °C and 100 °C.
- ▶ As soon as the maximum permissible temperature on one position is exceeded, take a break for cooling off.
- ▶ The crane operator is responsible for any damage on travel gears, hydraulic motors and / or track rollers.

- ▶ When the maximum permissible temperature range on a travel gear and / or hydraulic motor is reached:
  Take a break until the temperature on travel gear(s), hydraulic motor(s) and / or track rollers had dropped considerably.

	Maximum permissible temperature range on travel gear(s) / hydraulic motor(s)	
	To 90 °C	**between 90 °C and 100 °C**
Duration of exposure	continuous	not longer than 10 minutes

- ▶ When the temperature has dropped on all travel gears / hydraulic motors under 90 °C:
  Travel operation is permissible again.

1.4 Use of insertion plates into the track chains

If insertion plates are used in the track chains:
- The ground can be saved from damage.
- It is possible that the friction coefficient between the track and the ground changes.

WARNING
If the friction coefficient is too low between the track and the ground then there is a danger of accident!
In unfavorable ground characteristics, such as snow or ice, the friction coefficient between the track and the ground is reduced.
The drive forces can no longer be absorbed. The crane can slide off.
▶ Use insertion plates only when a sufficient friction coefficient between the track with insertion plates and the ground is ensured.

1.5 Supplementary national guidelines / limitations for driving crawler cranes

For driving crawler cranes, some areas have limitations due to national regulations.

WARNING
Disregard of national regulations!
▶ Before crane operation, all information for national regulations / limitations must be obtained.
▶ The crane operator bears the sole and full responsibility for the observation of national regulations.

Make sure that the following prerequisites are met:
– The observance of national regulations is monitored by the crane operator as the sole responsible person.
– The specifications from the crane documentation **and** the national regulations are observed.

1.5.1 Example: Load reduction for Australia when driving with a load

Driving crawler cranes in Australia is only permissible when observing a load reduction.
The load reduction applies for the following load charts:
– Standard load charts according to ISO DIN / EN13000 (75 %)

The load reduction does not apply for the following load charts:
– Load charts with 66 % programming

Example: Calculation formula for Standard load charts according to ISO DIN / EN13000 (75 %)

Calculation formula calculation factor V						
V [1]	=	1.0	/	**V** $_{\text{ISO DIN}}$ [2]	*	**V** $_{\text{red}}$ [3]
V	=	1.0	/	0.75	*	0.66
V	=	0.88				

1) **V** = Calculation factor
2) **V** $_{\text{ISO DIN}}$ = Calculation factor for standard load charts according to ISO DIN / EN13000 (75 %)
3) **V** $_{\text{red}}$ = Calculation factor for nominal load (66 %)

Driving crawler cranes with reduced load+

Calculation formula

$$T_{V}^{1)} = T_{ISO\ DIN}^{2)} * 0.88^{3)}$$

1) T_V = maximum permissible, drivable load (= 66 percent of the nominal load)
2) $T_{ISO\ DIN}$ = Standard load charts according to ISO DIN / EN13000
3) **0.88** = Calculation factor **V**

- ▶ The load capacities of the respective load chart must be multiplied with the calculation factor **V** (here V = 0.88).
- ▶ If the legal specifications change, then the currently valid specifications must be used.

2 Displays for center of gravity, surface pressure and incline in the LICCON monitor

WARNING

Danger of accident due to deviating set up configuration!

If the actual set up configuration of the crane deviates from the entries and settings in the Set up program, then the overload protection is not correctly set!

An incorrectly set overload protection calculates the actual load incorrectly and transmits faulty display values!

The crane can be overloaded without noticing it and topple over or collapse as a result!

Personnel can be severely injured or killed!

- ▶ The entries and settings in the set up program must match the actual set up configuration of the crane.

WARNING

Incorrect display values!

If the display values do not increase correspondingly when lifting known weights, an erroneous display value may be present.

If the crane is operated with erroneous display values, then the crane can be overloaded.

This could result in serious accidents.

- ▶ When lifting the hook block off the ground check if the display value for the actual load increases correspondingly.
- ▶ When lifting the load off the ground check if the display value for the actual load increases correspondingly.

Make sure that the following prerequisites are met:

- The actual set up configuration of the crane matches the entries and settings in the set up program.
- The assignment of the crane to the displays in the LICCON monitor is clear.
- All displays function flawlessly.

Note

- ▶ For a detailed description of the displays in the LICCON monitor, see Crane operating instructions, chapter 4.02.
- ▶ For a detailed description of the safety devices, see Crane operating instructions, chapter 4.04.

2.1 Display for the center of gravity in the LICCON monitor

WARNING
Shifting of center of gravity!
The calculation of the values for the display of the center of gravity in the LICCON monitor are based on ideal assumptions!
▶ Side deformations of the boom system due to wind, inclined position and elastic resilience of the steel structure are not taken into account but they can lead to a shifting of the center of gravity.

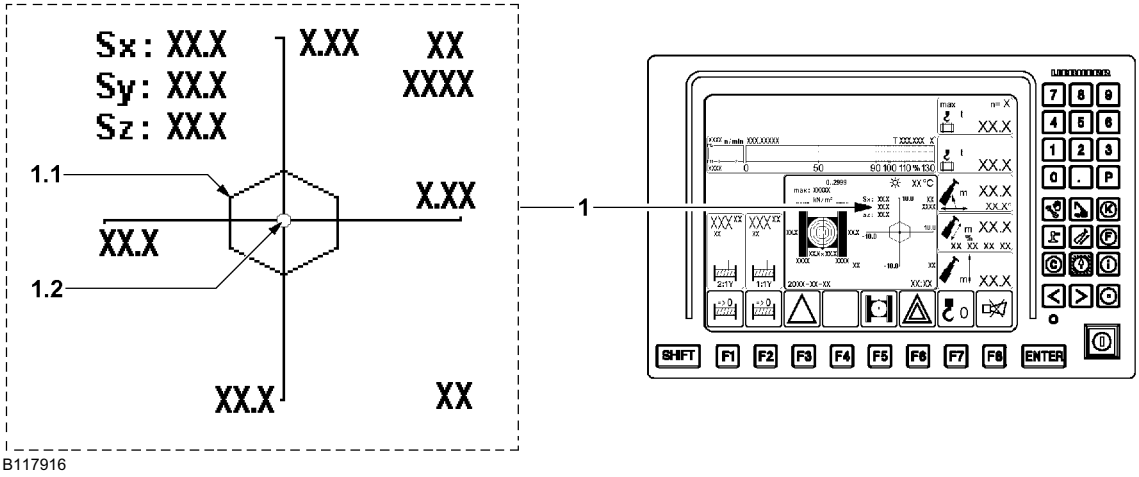

Display Center of gravity 1	
Position	**Description**
1.1	Core surface
1.2	Center of gravity

WARNING
Center of gravity of the crane is outside the core area!
If the center of gravity **1.2** of the crane is outside the core area **1.1**, then the crane can topple over!
Personnel can be severely injured or killed!
▶ To drive the crane, the center of gravity **1.2** must always be within the core area **1.1**.
▶ If the center of gravity **1.2** is outside of the core area **1.1**, then it is prohibited to drive the crane.

The following specifications and instructions must be observed:
– By luffing the boom system up and down, the position of the center of gravity **1.2** must be corrected in such a way that the overall center of gravity remains within the core area **1.1**.

2.2 Display for surface pressure and incline in the LICCON monitor

WARNING
Increased surface pressure!
The calculation of the values for the display of the surface pressure in the LICCON monitor are based on ideal assumptions!
▶ Side deformations of the boom system due to wind, inclined position and elastic resilience of the steel structure are not taken into account but they can lead to an increase of the surface pressure.

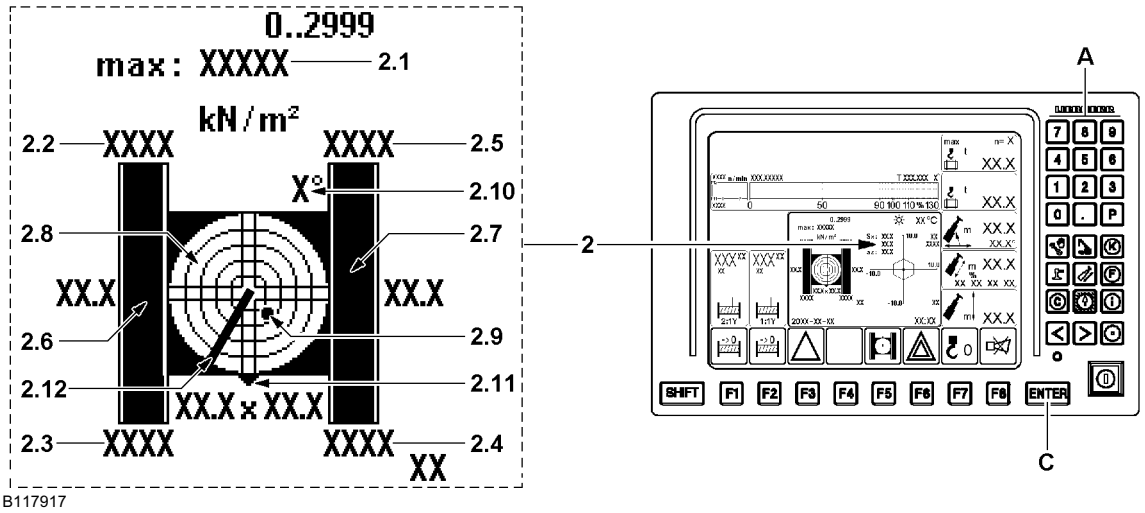

Display Surface pressure 2	
Position	**Description**
2.1	Maximum surface pressure
2.2	Surface pressure right rear
2.3	Surface pressure right front
2.4	Surface pressure left front
2.5	Surface pressure left rear
2.6	Placement surface Track right
2.7	Placement surface Track left
2.8	Incline display[1)]
2.9	Point
2.10	Display resolution[2)]
2.11	Marker “Front side of crawler carrier” [3)]
2.12	Boom direction[4)]

1) The graphic display is in the form of a spirit level with a moving dot **2.9** representing the air bubble.
2) This value describes the resolution of the graphic view. The resolution is matched automatically to the incline.
3) The front on the crawler travel gear is always on the side where the chain tension devices for the crawler carriers are located.
4) Current boom direction in reference to the displayed icon.

WARNING
Surface pressure too high!
If the maximum surface pressure is exceeded, the crane can topple over!
Personnel can be severely injured or killed!
- ▶ Do not exceed the maximum surface pressure.
- ▶ The value entered in the LICCON computer system for the maximum surface pressure **2.1** must match the actual conditions of the travel route.

WARNING
The crane can topple over!
If the permissible incline of the crane is exceeded, the crane can topple over!
- ▶ Do not exceed the permissible incline from the load chart!
- ▶ Do not exceed the permissible incline for driving the crane, see the following sections.

Note

- ▶ The placement surface of the track is graphically shown in the display of the surface pressure.
- ▶ If the resulting surface pressure can be distributed so that the maximum surface pressure of the travel route is not exceeded **and** the resulting forces can be transferred safely into the ground, then the stability of the crane is ensured.
- ▶ Incline display **2.8** with number values, see section “Display of incline in LICCON monitor”.

The following specifications and instructions must be observed:

- The maximum surface pressure, which may be reached, must be entered as the maximum surface pressure **2.1**.
- By luffing the boom system up and down, the resulting surface pressure must be distributed in such a way that the maximum surface pressure of the travel route is not exceeded.
- Inclines, which are reached on the travel route are known and are taken into account.
- As soon as the crane shows the tendency that die permissible incline could be exceeded, the load must be set down. If necessary, driving the crane must be interrupted.

2.2.1 Entering the maximum permissible surface pressure

Make sure that the following prerequisite is met:

- The Crane operation program is called up.
- The maximum permissible surface pressure of the travel route is known.

▶ Press the enter key **C**.

Result:

- The value for the maximum surface pressure **2.1** can be changed.

▶ Enter the value for the maximum permissible surface pressure via the keyboard **A**.

▶ Press the enter key **C**.

Result:

- The new value for the maximum surface pressure **2.1** appears.

▶ Check the value for the maximum permissible surface pressure.

2.3 Display for the incline in the LICCON monitor

The display of the incline is additional shown at the monitored auxiliary functions.
There is the display of the incline of the crane to the horizontal in longitudinal and lateral direction. The display is graphic as well as numeric.

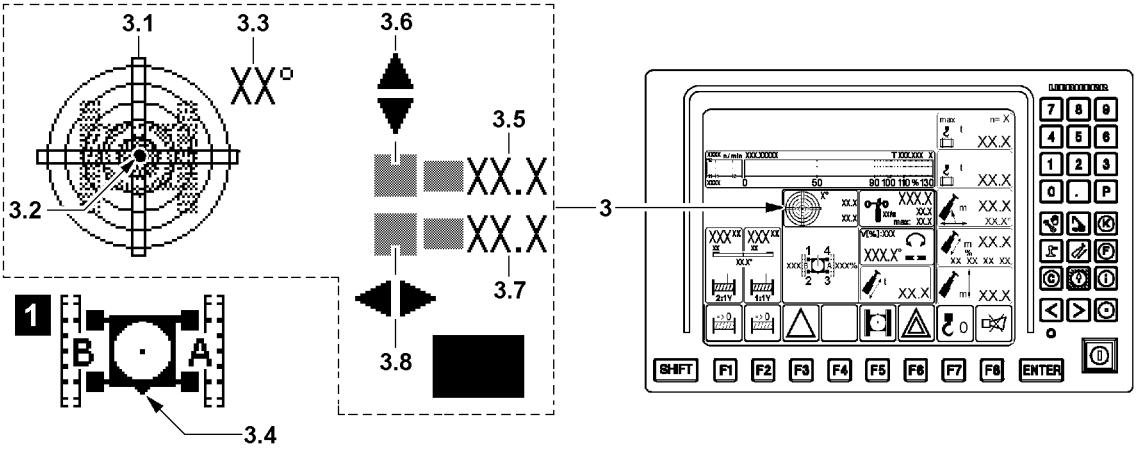

B117918

Display Incline 3	
Position	**Description**
3.1	Sight gauge
3.2	Bubble
3.3	Resolution of view
3.4	Marker Front side of crawler travel gear[1)]
3.5	Incline in longitudinal direction
3.6	Incline direction
3.7	Incline in lateral direction
3.8	Incline direction

1) The crawler travel gear is highlighted in the sight gauge **3.1** as orientation aid. The front side of the crawler travel gear **3.4** is in the display below, see detail **1**. The front on the crawler travel gear is always on the side where the chain tension devices for the crawler carriers are located.

WARNING
The crane can topple over!
If the permissible incline of the crane is exceeded, the crane can topple over!
▶ Do not exceed the permissible incline from the load chart!
▶ Do not exceed the permissible incline for driving the crane, see the following sections.

The following specifications and instructions must be observed:
– Inclines, which are reached on the travel route are known and are taken into account.
– As soon as the crane shows the tendency that die permissible incline could be exceeded, the load must be set down.

blank page!

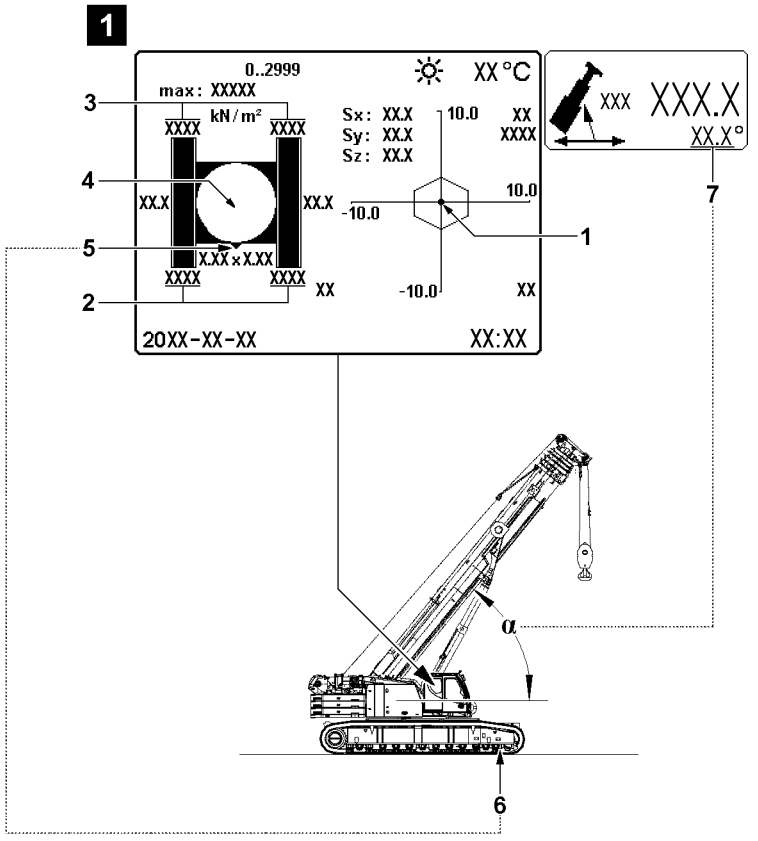
1
0..2999
XX°C
max: XXXXX
kN/m²
XXXX
XXXX
Sx: XX.X
Sy: XX.X
Sz: XX.X
10.0
XX
XXXX
XXX
XXX.X
XX.X°
XX.X
XX.X
-10.0
10.0
X.XX x X.XX
XXXX
XXXX
XX
-10.0
XX
20XX-XX-XX
XX:XX
1
2
3
4
5
6
7
α

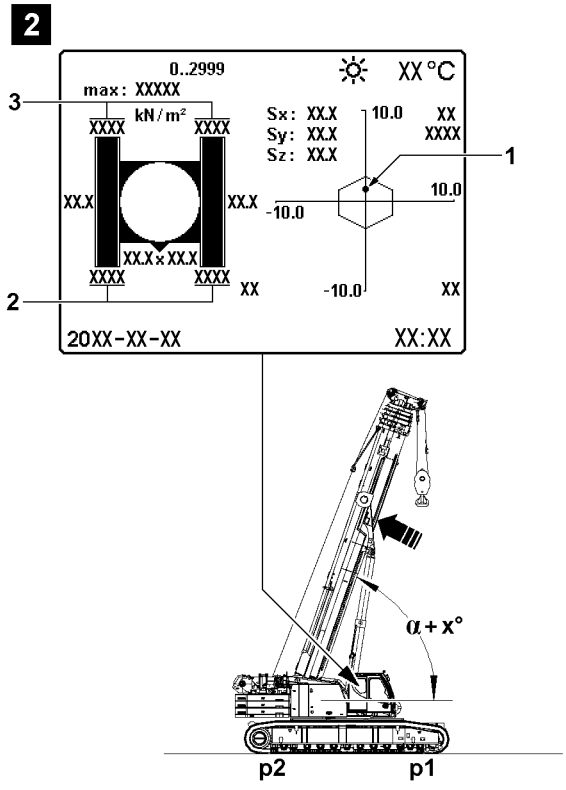
2
0..2999
XX°C
max: XXXXX
kN/m²
XXXX
XXXX
Sx: XX.X
Sy: XX.X
Sz: XX.X
10.0
XX
XXXX
XX.X
XX.X
-10.0
10.0
XX.X x XX.X
XXXX
XXXX
XX
-10.0
XX
20XX-XX-XX
XX:XX
1
2
3
α + x°
p2
p1

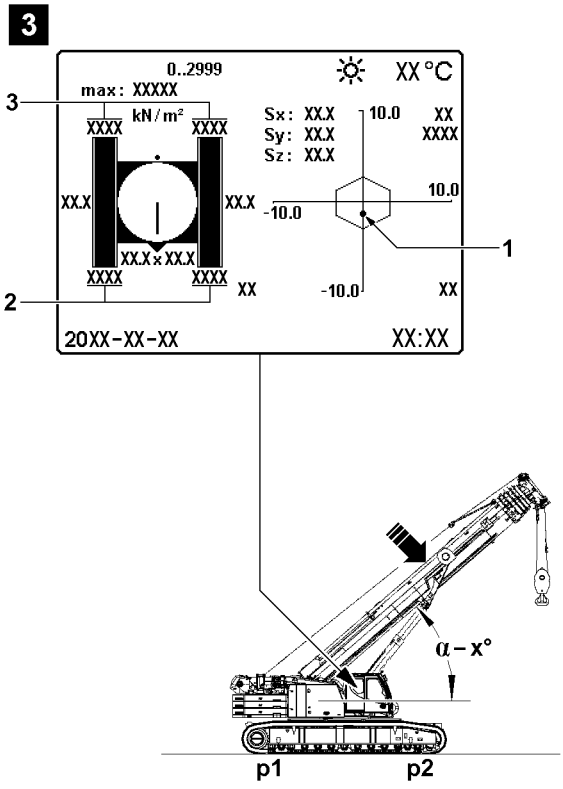
3
0..2999
XX°C
max: XXXXX
kN/m²
XXXX
XXXX
Sx: XX.X
Sy: XX.X
Sz: XX.X
10.0
XX
XXXX
XX.X
XX.X
-10.0
10.0
XX.X x XX.X
XXXX
XXXX
XX
-10.0
XX
20XX-XX-XX
XX:XX
1
2
3
α − x°
p1
p2

B117919

3 Preparing for driving the crane

3.1 Distribution of surface pressure

While driving, pay attention in all driving conditions to the ratio of the surface pressure between the front and the rear sides of the crawler travel gear.
In the following examples it is assumed that the turntable is aligned to the front to the crawler travel gear.

Distribution of surface pressure	
Position	**Description**
1	Center of gravity
2	Surface pressure front
3	Surface pressure rear
4	Incline display[1)]
5	Marker “Front side of crawler carrier” [2)]
6	Chain tension device Crawler carrier
7	Display angle main boom
α	Angle main boom

1) The angle display always refers to the crawler travel gear. As orientation aid, the front side of the crawler travel gear **5** is optically highlighted.
2) The front on the crawler travel gear is always on the side where the chain tension device **6** for the crawler carriers is located.

Before driving the crane is it required to position the boom in such a way that a suitable distribution of surface pressure for driving is obtained.

3.1.1 Examples for the distribution of surface pressure

The center of gravity **1** is in the center, illustration **1**
– The surface pressure on the front **2** is the same as the surface pressure on the rear **3**.

The center of gravity **1** is in the rear, illustration **2**
– The boom was luffed up.
– The surface pressure on the rear **3** is higher.

The center of gravity **1** is in the front, illustration **3**
– The boom was luffed down.
– The surface pressure on the front **2** is higher.

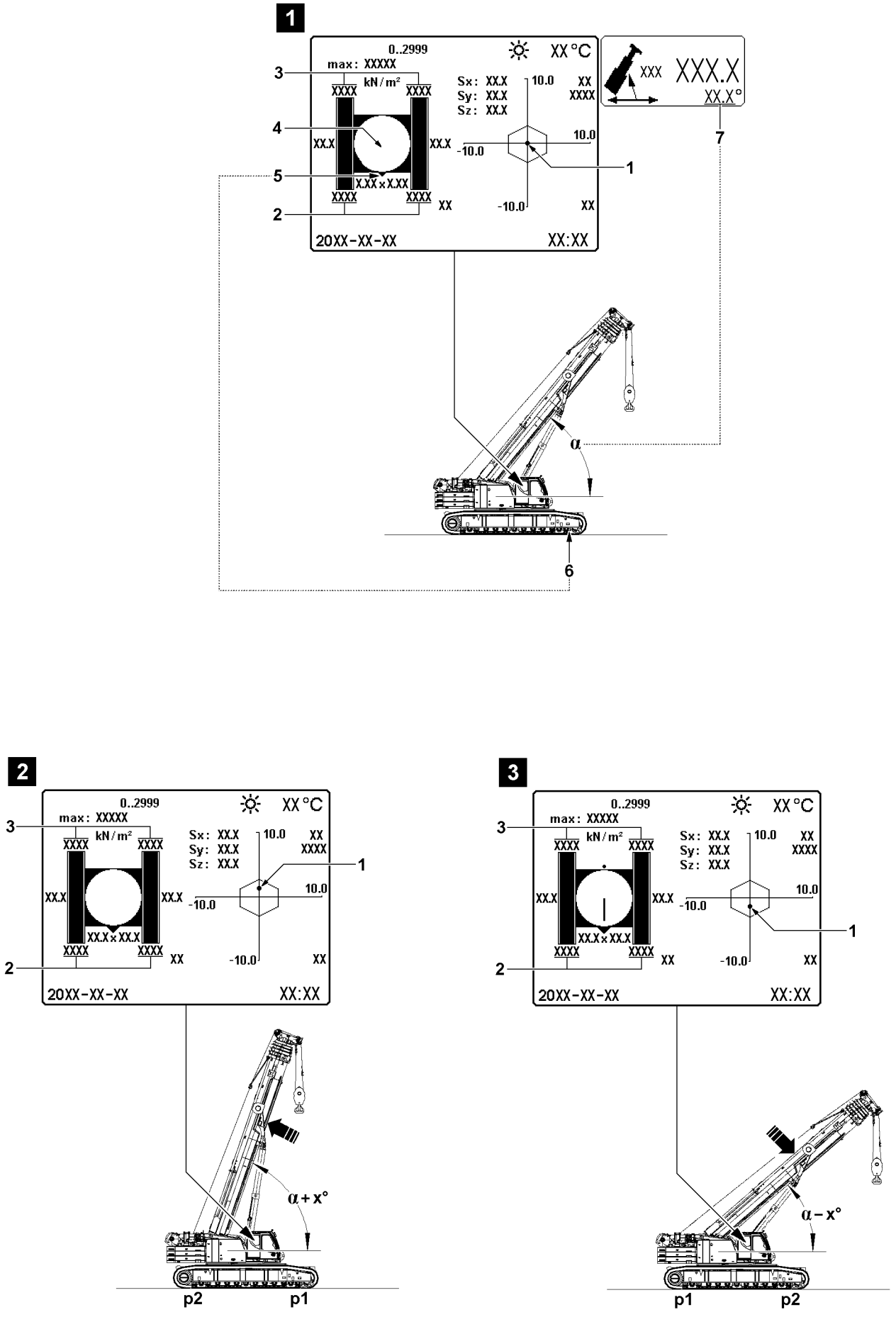
1
0..2999
XX °C
max: XXXXX
kN/m²
XXXX
XXXX
Sx: XX.X
Sy: XX.X
Sz: XX.X
10.0
XX
XXXX
XX.X
XX.X
-10.0
10.0
X.XX x X.XX
XXXX
XXXX
XX
-10.0
XX
20XX-XX-XX
XX:XX
XXX
XXX.X
XX.X°
1
2
3
4
5
6
7
α
2
0..2999
XX °C
max: XXXXX
kN/m²
XXXX
XXXX
Sx: XX.X
Sy: XX.X
Sz: XX.X
10.0
XX
XXXX
XX.X
XX.X
-10.0
10.0
XX.X x XX.X
XXXX
XXXX
XX
-10.0
XX
20XX-XX-XX
XX:XX
1
2
3
α + x°
p2
p1
3
0..2999
XX °C
max: XXXXX
kN/m²
XXXX
XXXX
Sx: XX.X
Sy: XX.X
Sz: XX.X
10.0
XX
XXXX
XX.X
XX.X
-10.0
10.0
XX.X x XX.X
XXXX
XXXX
XX
-10.0
XX
20XX-XX-XX
XX:XX
1
2
3
α − x°
p1
p2

B117919

3.2 Suitable distribution of surface pressure

For the suitable distribution of surface pressure, the following applies:
– p1 = Surface pressure on the side of the crawler travel gear which has the lower load
– p2 = Surface pressure on the side of the crawler travel gear which has the higher load

Distribution of surface pressure p1 to p2				
p1	/	**p2**	=	should be greater than 0.3

In case of unfavorable distribution of surface pressure it is required to position the boom system in such a way that a suitable distribution of the surface pressure is reached for driving.
▶ The turntable should be turned while at a standstill: The boom system should be luffed in such a way that the crawlers are subjected to a load as evenly as possible.
▶ Driving uphill: The boom system should be luffed in such a way that the side of the crawler travel gear which has less of a load is on the rear.
▶ Driving downhill: The boom system should be luffed in such a way that the side of the crawler travel gear which has less of a load is on the front.

3.3 Steering ability

Note
High load on the crane
When driving the crane, steering movements cause a high load on the crane travel gear.
▶ If possible, do not make any steering movements with a load on the hook.
▶ Select the travel route in such a way that no steering movements are required.
▶ If not otherwise possible, before initiating a steering movement, set down the load.

The steering ability depends on the following factors:
– Friction conditions under the chains
– Evenness of the ground:
  • Steering is not possible if the crawler travel gear is only making contact with the ground at the front and rear.
– Load bearing capacity of the ground:
  • If the crawler travel gear sinks into the ground, then the steering ability is significantly restricted.
– Position of the total center of gravity:
  • If the total center of gravity - under consideration of the suspended load - is at the center of the crane, then steering is hard or not possible at all.

The steering ability can be improved by:
– Placing metal sheeting, sand, gravel, water underneath.
– By taking the load bearing capacity of the ground and the position of the center of gravity into account: Changing center of gravity.

4 Driving the crane: Load chart available

WARNING
The crane can topple over!
If the following conditions are not observed, the crane can topple over!
Personnel can be severely injured or killed!
▶ The ground must be sufficiently level and within the range of permissible incline.
▶ The ground must be able to safely take on the maximum occurring surface pressure.

WARNING
The crane can topple over!
If the permissible inclines of the load charts are exceeded when driving the crane, then the crane can topple over or be overloaded!
If the permissible wind speeds of the load charts are exceeded when driving, then the crane can topple over or be overloaded!
Personnel can be severely injured or killed!
▶ If the inclines are too large then driving the crane is prohibited.
▶ If the wind speeds are too large then driving the crane is prohibited.

Permissible inclines	
Overall incline	See load charts

Permissible wind speeds	
Wind speed	See load charts

Driving with a load is possible under specifications of the load chart:
– The permissible inclines from the load charts apply for driving.
– Take the maximum permissible wind speeds from the load charts.
– Take the maximum permissible driving speed from the following sections!

4.1 Driving with load on the hook

WARNING
The crane can topple over!
If the load on the hook collides with the crane, the ground or obstacles when driving, then the crane can be damaged and topple over!
Personnel can be severely injured or killed!
▶ Make sure that the load does not collide with anything when driving.

WARNING
Danger of accident!
If the suspended load starts to swing, then the crane operator can loose control over the crane.
If the following prerequisites are not observed, the crane can topple over!
This could result in serious accidents.
▶ Do not exceed the maximum permissible driving speed.
▶ Avoid jerky driving movements.
▶ The attached load must be secured to prevent it from swinging. If oscillating movements should occur, set the load as fast as possible down on the ground. Observe the limit values of the load moment display while doing so.

Make sure that the following prerequisites are met:
– The permissible inclines from the load charts are adhered to.
– The maximum permissible wind speeds from the load charts are adhered to.
– The travel speed may **not** exceed 0.1 m/s or 0.36 km/h.
– The attached load hangs freely.
– The attached load must be secured to prevent it from swinging back and forth, if necessary.
– Hold the attached load close to the ground.
– Hold the attached load at a small radius.
– The boom length is reduced as much as the load case permits.

4.2 Driving without load on the hook

Make sure that the following prerequisites are met:
- The crane is driving according to the inclines from the load charts.
- Take the maximum permissible wind speeds from the load charts.
- The maximum travel speed is matched to the local conditions.
- The hook block is secured to prevent it from swinging back and forth.
- The boom is telescoped in as far as possible.

5 Driving the crane: No load chart is available

WARNING
The crane can topple over!
If the following note is not observed, the crane can topple over!
Personnel can be severely injured or killed!
- ▶ Driving uphill must always be anticipatory, with upmost caution and at the slowest speed.
- ▶ Drive on starting rising and falling inclines (for example ramps) at a right angle.
- ▶ It is prohibited to let the crane tip over an edge.

WARNING
The crane can topple over!
If the permissible incline of the crane is exceeded, the crane can topple over!
- ▶ Do not exceed the permissible incline for driving the crane.

WARNING
The crane can topple over!
If the crane is driven outside the load chart with a load, accidents can occur!
The crane can topple over or be overloaded!
Personnel can be severely injured or killed!
- ▶ Driving the crane with a load outside the load chart is prohibited.

Make sure that the following prerequisites are met:
- There is no load on the hook.
- The oil level of the crane engine is at maximum fill level.
- The travel speed may **not** exceed 0.1 m/s or 0.36 km/h.
- The turntable is aligned parallel to the crawler track, 0° or 180° position.
- The permissible lateral incline when driving without a load is adhered to.
- The permissible longitudinal incline when driving without a load is adhered to.

Permissible inclines	
Longitudinal incline	25°
Lateral incline	4°

5.1 Driving uphill / downhill

WARNING
The crane can topple over!
If the following notes are not observed, the crane can topple over!
Personnel can be severely injured or killed!
- ▶ Deciding for driving uphill are the exact knowledge of operational conditions on the jobsite.
- ▶ Specifications, instructions and prerequisites in this chapter must be adhered to.
- ▶ Driving uphill / downhill must always be anticipatory, with utmost caution and at the slowest speed.

WARNING
The crane can topple over!
If the crane is driven with a load in uphill / downhill slopes, the crane can topple over!
If the angle of the boom system is not matched to the incline when driving the crane in uphill slopes, then the crane can topple over!
- ▶ Match the angle of the boom system to the uphill slope.
- ▶ Driving uphill with a load is prohibited.

WARNING
The crane can topple over!
If the turntable is not parallel to the crawler travel gear when driving the crane in uphill or downhill slops, then the crawler crane can topple over of be overloaded!
- ▶ Make sure that the turntable is aligned parallel to the crawler travel gear (in 0° or 180° position) before driving the crane uphill or downhill.

There are two different possibilities for driving crawler cranes on uphill / downhill slopes:
- By adjusting the angle of the boom system.
- Without adjusting the angle of the boom system.

5.1.1 Maximum climbing ability

The maximum climbing ability of the crawler crane is limited by the following criteria:
- The location of the center of gravity for the complete crawler crane
- The friction coefficient between roadway and track pads
- The transit between the horizontal and the uphill slope

5.1.2 Driving uphill / downhill by changing the angle of the boom system

The following specifications and instructions must be observed:
- On level ground, set the optimum angle of the boom system regarding the center of gravity and the surface pressure.
- Uphill / downhill slopes: As soon as the value of the displays for the center of gravity and the surface pressure become more unfavorable, match the boom angle in the permissible range.

WARNING
The crane can topple over!
If the limit values for the center of gravity and the surface pressure are exceeded, then the crane can topple over or be overloaded!
- ▶ Driving without display values for the center of gravity and the surface pressure is only permissible when the center of gravity and the surface pressure are otherwise monitored and ensured.

Note
Driving without display values for center of gravity and surface pressure!
- ▶ On level ground, set the optimum angle of the boom system regarding the center of gravity and the surface pressure.
- ▶ When driving into an uphill slope, during the transition between the horizontal into the incline, the original angle of the boom system must be changed continuously in such a way that the same angle ratio always remains between the boom system and the horizontal. This angle must be retained in the uphill incline.
- ▶ When driving out from an uphill incline, at the transition from incline into the horizontal, change the angle of the boom system continuously so that always the same angle ratio is retained.
- ▶ As a rule, the center of gravity and the surface pressure of the crane must be taken into account.

Positive longitudinal incline

Note
- ▶ When driving in positive longitudinal inclines (uphill), the main boom must usually be luffed down.

Status	Transition	Boom angle
Driving on level ground (horizontal)	after uphill incline	match
Driving in uphill incline		
Driving in uphill incline	after horizontal	match
Driving on level ground (horizontal)		

Negative longitudinal incline

Note
- ▶ When driving in negative longitudinal inclines (downhill), the main boom must usually be luffed up.

Status	Transition	Boom angle
Driving on level ground (horizontal)	after downhill slope	match
Driving downhill		
Driving downhill	after horizontal	match
Driving on level ground (horizontal)		

5.1.3 Prerequisites for driving uphill / downhill without changing the angle of the boom system

The following specifications and instructions must be observed:

– Make sure that with the selected position of the boom system, the center of gravity and the surface pressure is within the permissible range.

WARNING

The crane can topple over!

If the limit values for the center of gravity and the surface pressure are exceeded, then the crane can topple over or be overloaded!

Personnel can be severely injured or killed!

▶ Before driving into uphill and downhill slops, check the change of the center of gravity and the surface pressure and ensure that it is permissible.

▶ Before driving the crane, determine if the crane may drive on the intended route without changing the boom system.

▶ If the intended uphill / downhill slope cannot be driven without changing the angle of the boom system, then the boom angle must be changed to be able to drive on the uphill / downhill slope.

6 Crawler crane in crawler operation

WARNING

The crane can topple over!

The retracted track reduces the stability of the crawler crane. Due to operational errors during crane operation or driving, the crawler crane can topple over and fatally injure personnel!

▶ Crane operation and “driving with a load on the hook” is permitted for retracted track or asymmetric track if **extra load charts** are programmed for this case!

▶ Crane operation and “driving with a load on the hook” is permitted for retracted track or asymmetric track if **no extra load charts** are programmed for this case is strictly prohibited!

WARNING

The crane can topple over!

If the permissible incline of the crane is exceeded, the crane can topple over!

In impermissible inclines, the LICCON computer system does **not** turn the travel operation off!

The crane operator carries the sole responsibility for possible risks or dangers when working with impermissible inclines!

▶ Do not exceed the permissible incline from the load chart!

▶ Do not exceed the permissible incline for driving the crane.

▶ While driving the crane, monitor the displays for center of gravity, surface pressure and incline in the LICCON monitor constantly!

Make sure that the following prerequisite is met:

– The set up configuration of the crane has been entered correctly into the LICCON computer system.

– The displays for incline, surface pressure and center of gravity are shown.

– There are no persons or objects in the danger zone.

– The crawler travel gear is extended to a track with according to the load chart.

blank page!

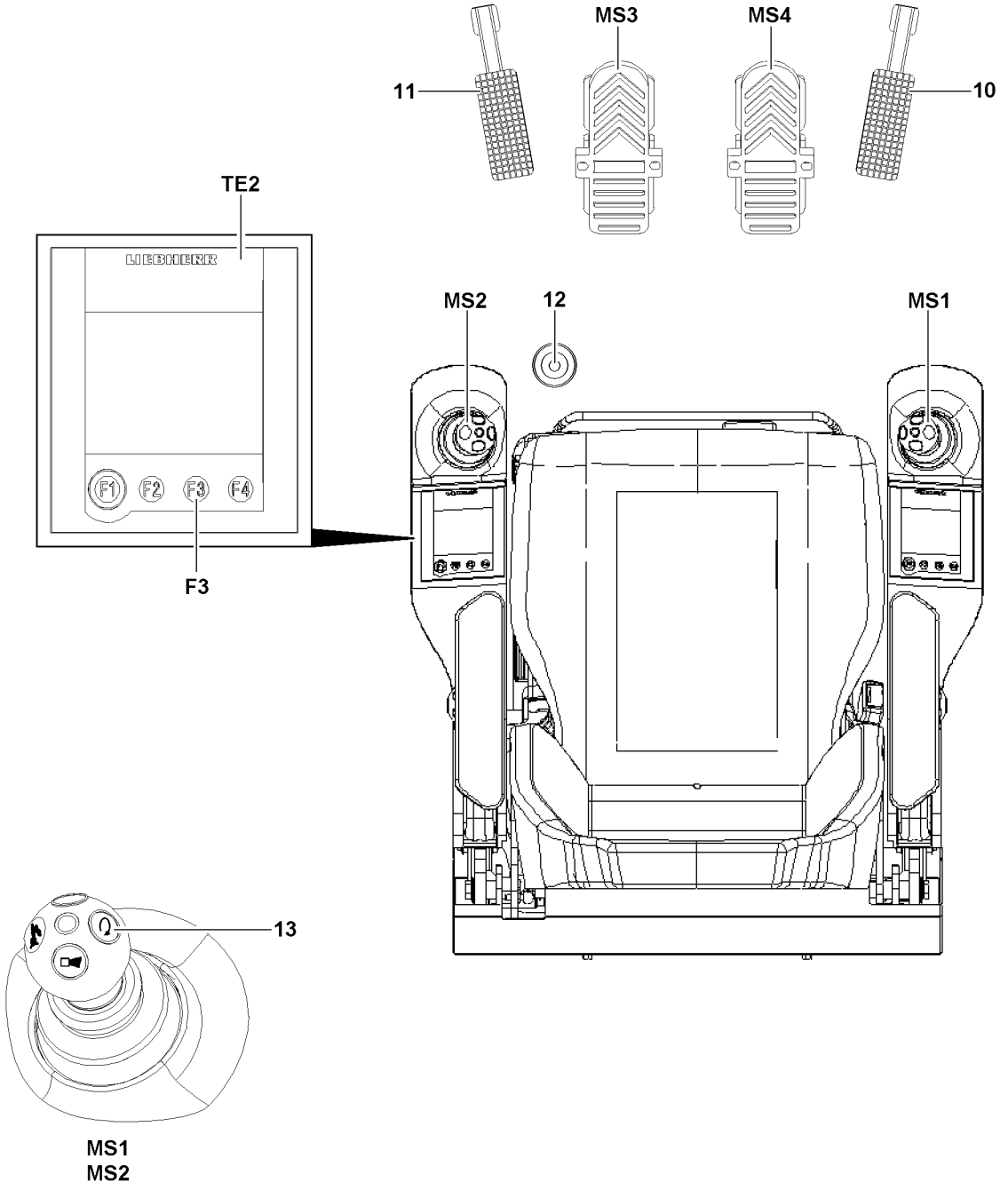

B117921

6.1 Operating elements for the crawler operation

Note

▶ The crane features a variable low idling speed: If no hydraulic power is required, the engine rpm is automatically reduced to approx. 600 rpm. If hydraulic power is required, the engine rpm is automatically raised to at least 850 rpm.

6.1.1 Pedal carrier

– Pedal for engine regulation **10**
– Pedal for slewing gear brake **11**
– Foot button for coasting slewing gear **12**
– Foot rocker **MS3**
– Foot rocker **MS4**

Crawler operating mode	Pedal carrier	
	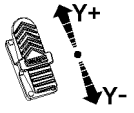 *Foot rocker **MS3***	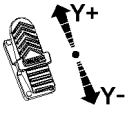 *Foot rocker **MS4***
Normal travel	Left track forward / backward: **MS3** direction **Y+ / Y-**	Right track forward / backward: **MS4** direction **Y+ / Y-**
Parallel travel	Steer both tracks: **MS3** direction **Y+ / Y-**	Forward / backward both tracks: **MS4** direction **Y+ / Y-**

6.1.2 Engine regulation

The rpm of the crane engine is controlled with the Pedal for the engine regulation **10**. For crawler operation, a certain rpm can be locked in, see Crane operating instructions, chapter 4.05.

▶ Locking the current rpm of the crane engine: Press the button **13** on master switch **MS1** or master switch **MS2**.

Result:

– Behind the rpm display in the LICCON monitor appears a “+”.
– The current rpm of the crane engine is locked.
– The rpm can be increased further via the pedal for the engine regulation **10**.

▶ Releasing the rpm lock: Press the button **13** on master switch **MS1** or master switch **MS2** again.

Result:

– The “+” behind the rpm display turns off.

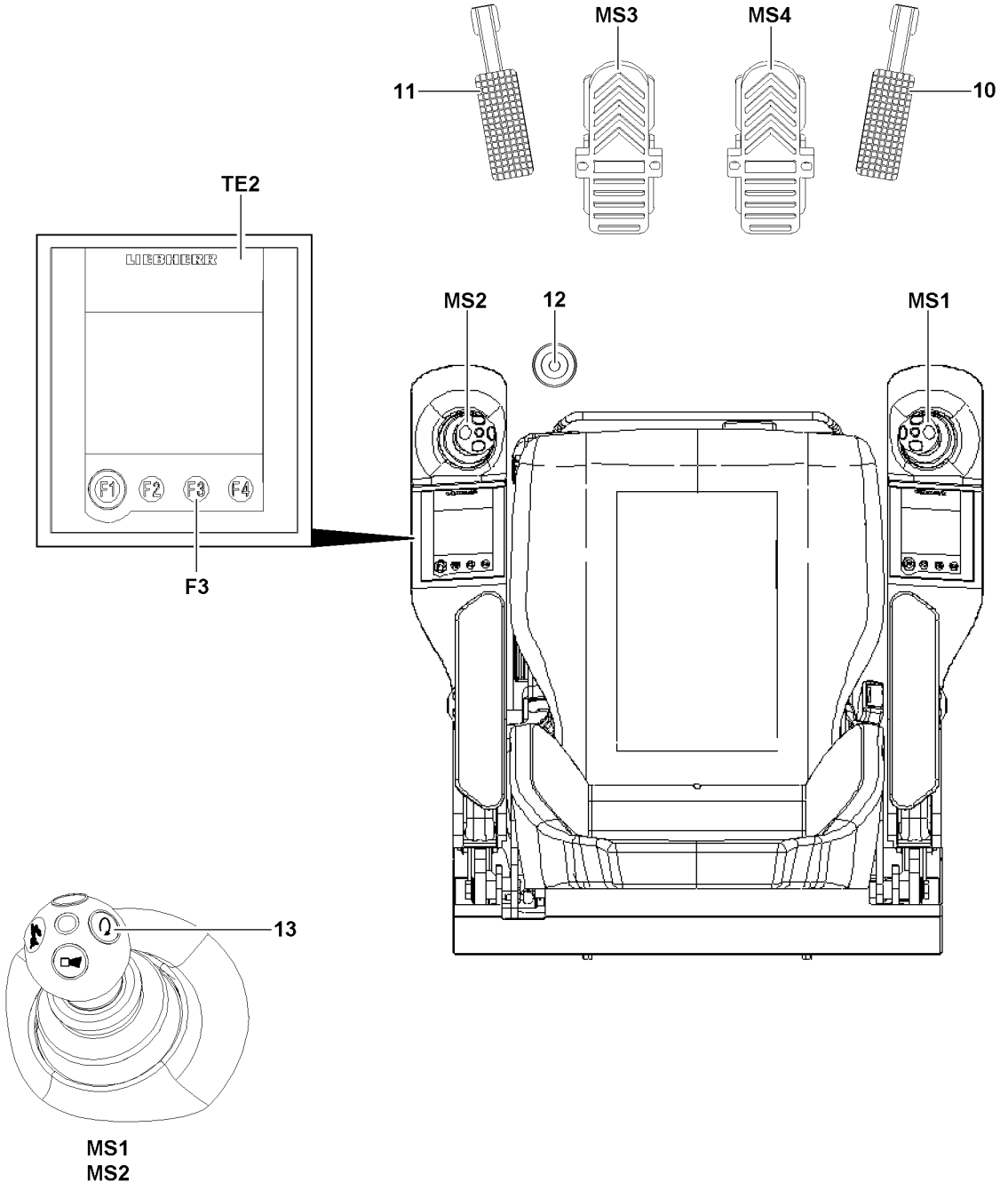

B117921

6.1.3 Slewing gear brake

Operating elements for slewing gear brake:

– Pedal for slewing gear brake **11**
– Foot button for coasting slewing gear **12**
– Button **F3**: Slewing gear brake in TE2 (parking brake)

▶ Regulate the slewing gear brake steplessly: Actuate the pedal for the slewing gear brake **11**.

Result:

– The slewing gear brake is regulated according to the pedal position: The further the pedal is pressed down, the stronger the slewing gear brake brakes.

▶ Adding the coasting function of the slewing gear: Actuate the foot button for coasting the slewing gear **12**.

Result:

– Coasting the slewing gear is engaged as long as the foot button for coasting the slewing gear **12** is pressed down.

Icon	Assignment TE2 main menu: Slewing gear
	Nominal status slewing gear open, icon remains even when the slewing gear brake is applied with the pedal for the slewing gear brake 11.
	Nominal status slewing gear closed, icon remains even when the slewing gear brake is automatically released by the control.

▶ Close the slewing gear brake (parking brake): Press the button **F3** on the touch display 2 **TE2**.

Result:

– Icon “Slewing gear brake closed” appears.

▶ Open the slewing gear brake (parking brake): Press the button **F3** on the touch display 2 **TE2** again.

Result:

– Icon “Slewing gear brake opened” appears.

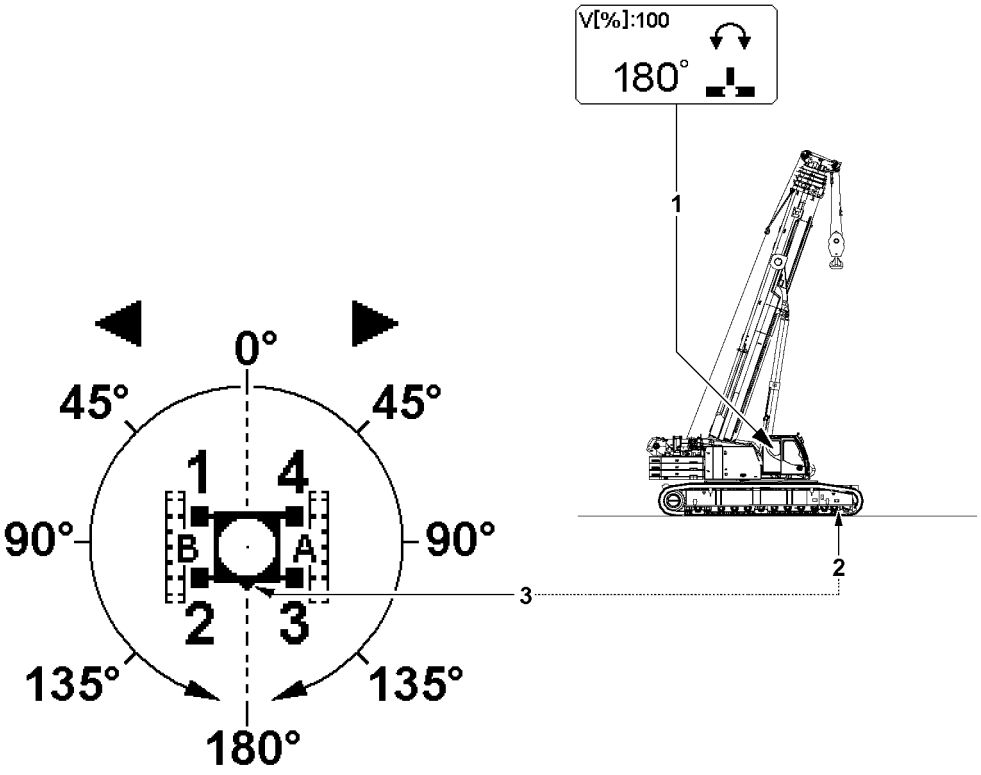

B117923

6.2 Assignment of the crane superstructure to the travel direction

The travel direction of the crane is continuously assigned to the position of the crane superstructure. The position of the crane superstructure to the crawler travel gear can be read with one glance on the slewing range icon **1**:

– At display value 180° in slewing range icon **1** the crane superstructure is exactly in position “forward”, see illustration.

  Note: The front on the crawler travel gear is always on the side where the chain tension device **2** for the crawler carriers is located. In the LICCON view of the crawler travel gear, the front side is marked by a directional triangle **3**.

– At display value 0° in the slewing range icon **1** the crane superstructure is exactly in position “to the rear”.

– The apex for the assignment of the crane superstructure is at display value 90° in the slewing range icon **1**. At display values from 0° to 90° the crane superstructure is positioned “to the rear”. At display values from 90° to 180° the crane superstructure is positioned “to the front”.

– If the crane superstructure is turned over / under the display value 90° in the slewing range icon **1**, then the running direction of the crawler carriers changes to actuation direction of the foot rockers. The change happens only when the foot rockers are in position 0 (not actuated).

– If the crane superstructure is turned while driving over / under the display value 90° in the slewing range icon **1**, then the running direction of the crawler carriers and therefore the travel direction remains until the respective foot rocker is “returned” to zero position.

  The new assignment of the travel direction becomes only active after the foot rockers are the next time in position 0 (not actuated).

WARNING

Change of travel direction after turning the crane superstructure!

If the crane superstructure is turned while driving over / under the display value 90° in the slewing range icon **1**, then the running direction of the crawler carriers only remains until the respective foot rocker is “returned” to zero position. If the foot rocker is actuated again in the same direction, the crane is driven into the opposite direction.

▶ Pay attention to the assignment of the crane superstructure to the travel direction when turning the crane superstructure while driving the crane.

▶ After turning the crane superstructure, check the travel route in both directions for persons and obstacles. Initiate travel movements with upmost caution.

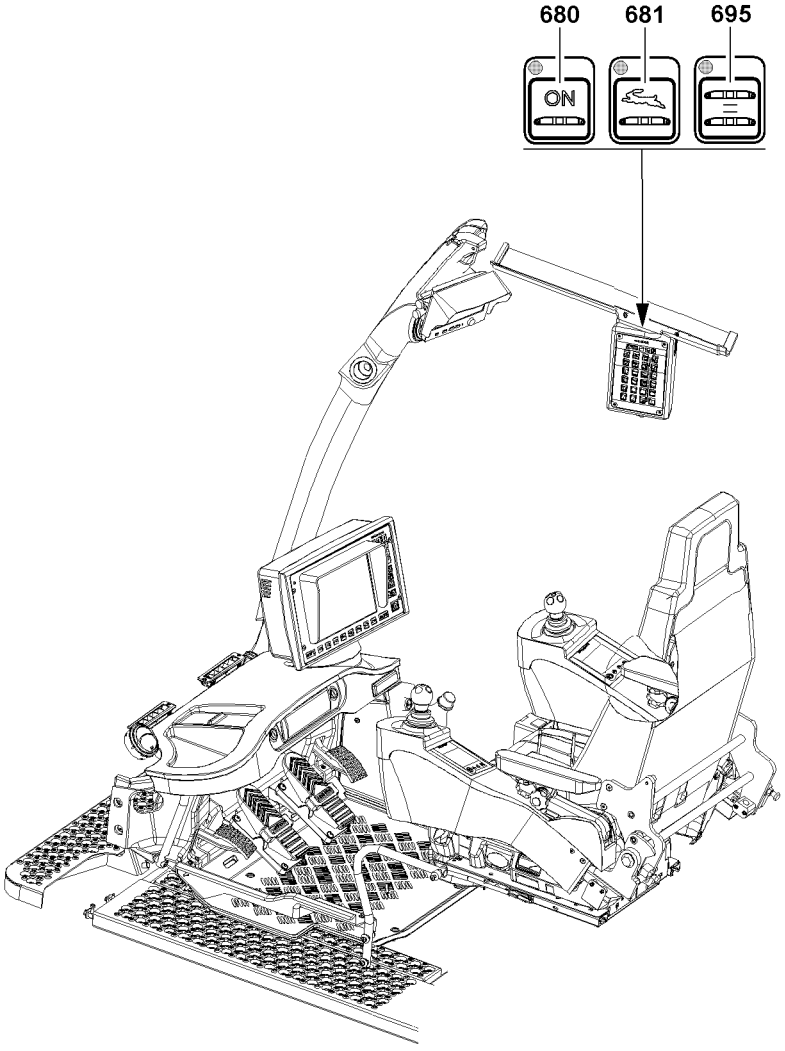

B117920

6.3 Turning crawler operating modes on / off

The crawler crane can be driven with various crawler operating modes:

- Normal travel crawler operation
  - Classic crawler operation, every track is controlled via a separate foot pedal
- Parallel travel crawler operation
  - The steering movement is controlled by a separate foot pedal
  - The travel direction is controlled by a separate foot pedal

To obtain a higher travel speed, the rapid gear can be activated.

6.3.1 Turning normal travel crawler operation on / off

The normal travel crawler operation is the prerequisite to drive the crane and must generally be activated.

▶ Press the control button **680**.

Result:

- The LED on the control button **680 lights up**.
  Normal travel crawler operation is activated.

▶ If the normal travel crawler operation is to be turned off:
Press the control button **680** again.

Result:

- The LED on the control button **680 is turned off**.
  The crawler operation is turned off, the crane can no longer be driven.

6.3.2 Turning parallel travel crawler operation on / off

Make sure that the following prerequisites are met:

- Normal travel crawler operation is activated.
- The tracks are at a standstill.

▶ Press the control button **695**.

Result:

- The LED on the control button **695 lights up**.
  The parallel travel crawler operation is turned on.

▶ If the parallel travel crawler operation is to be turned off:
Press the control button **695** again.

Result:

- The LED on the control button **695 is turned off**.
  The parallel travel is turned off, the normal travel crawler operation remains on.

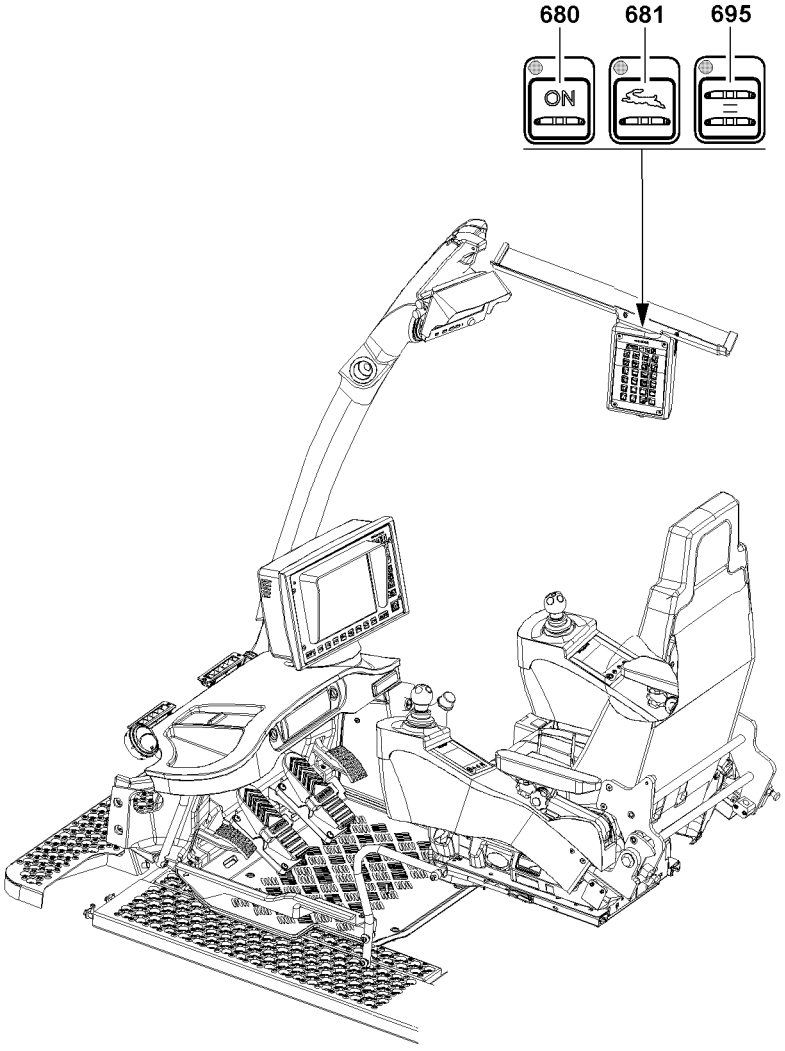

B117920

6.3.3 Turning the rapid gear on / off

WARNING
The crane can topple over!
If the crane is driven in rapid gear with a load, then the crane can topple over. Personnel can be severely injured or killed.
▶ Observe the permissible highest speeds for driving the crawler crane!

Make sure that the following prerequisite is met:
– Normal travel crawler operation is activated.
  or
– the parallel travel crawler operation is turned on.

▶ Press the control button **681**.

Result:
– The LED on the control button **681 lights up**.
  The rapid gear is added, no higher travel speeds can be obtained.

▶ If the rapid gear is to be turned off:
  Press the control button **681** again.

Result:
– The LED on the control button **681 is turned off**.
  The rapid gear is turned off, the normal travel crawler operation or parallel travel crawler operation remains engaged.

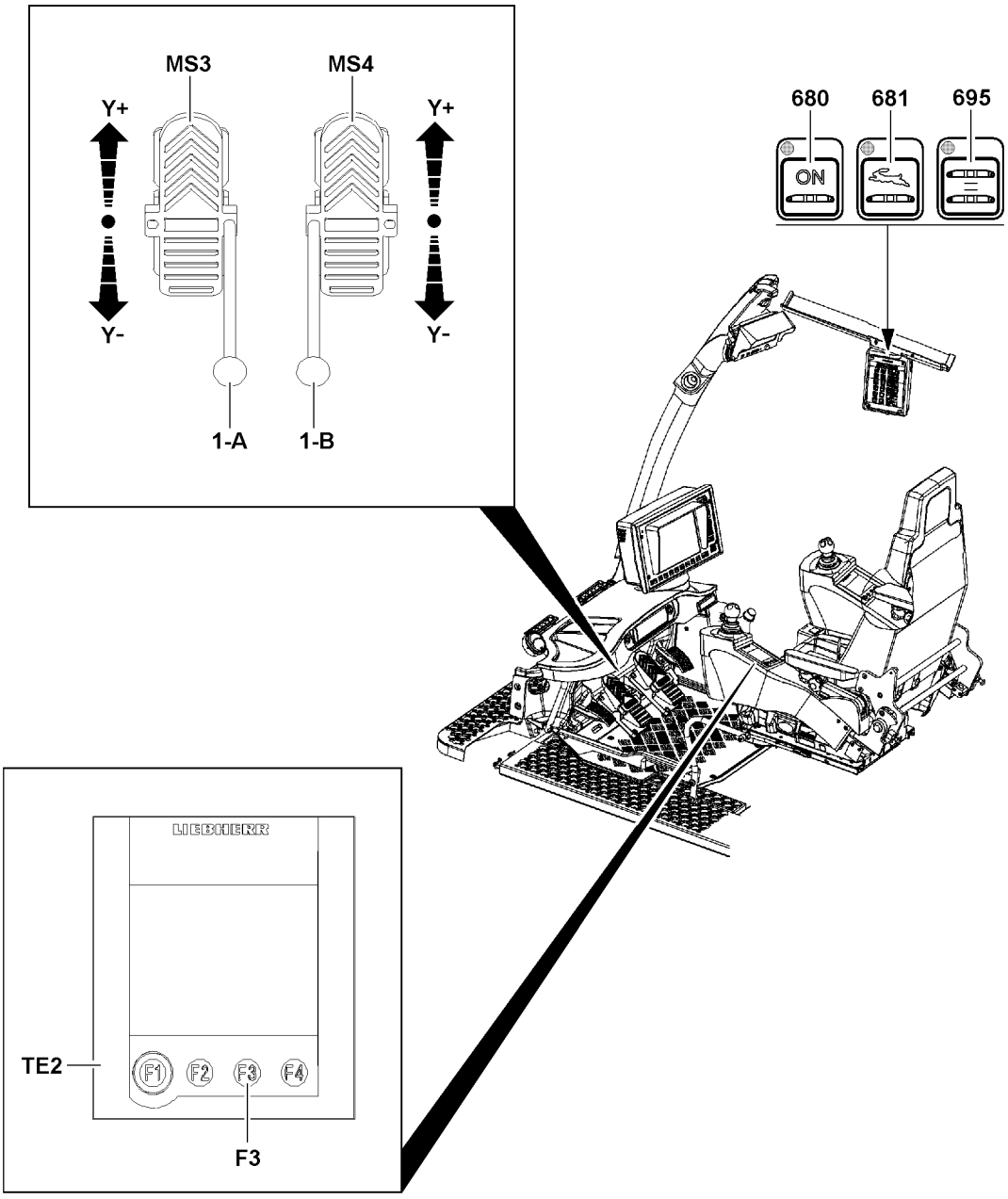
MS3
MS4
Y+
Y-
Y+
Y-
1-A
1-B
680
681
695
ON
LIEBHERR
TE2
F1
F2
F3
F4
F3

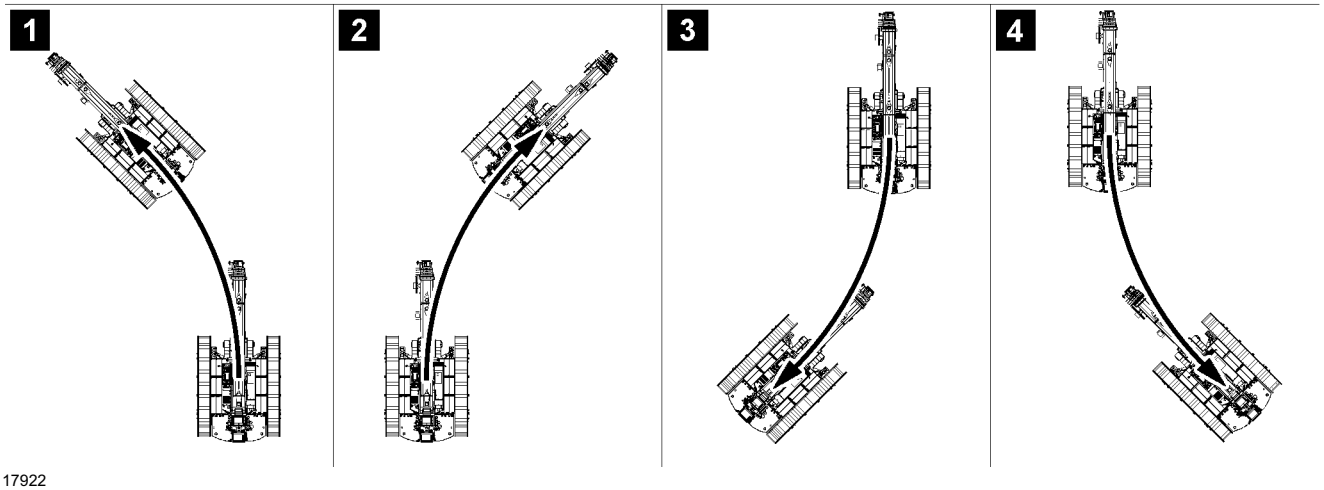
1
2
3
4

B117922

6.4 Driving the crawler crane in normal travel

NOTICE
Increased wear on the crawler travel gear!
When steering in small radii, high friction forces are created which lead to increased wear.
- ▶ If possible, always drive in curves with large radii.
- ▶ Avoid turning over a stationary track, if possible.
- ▶ Avoid counterrotation, if possible.

Make sure that the following prerequisites are met:
- – A travel direction change may only be done from the standstill.
- – The desired rpm of the crane engine is set.
- – Normal travel crawler operation is selected.

Note
- ▶ Special hand levers **1-A** and hand levers **1-B** can be inserted into the foot rockers. These hand levers **1-A** and hand levers **1-B** are used for delicate driving maneuvers.
- ▶ Hand levers **1-A** and hand levers **1-B** are placed in the transport retainer on the left of the crane operator's seat!
- ▶ The technical design of the hand lever **1-A** and the hand lever **1-B** is completely identical. The differentiation of the two hand levers is only in their assignment to the corresponding foot rockers in assembled (pushed on) condition!

6.4.1 Driving forward

▶ Deflect the left foot rocker **MS3** and the right foot rocker **MS4** synchronously forward (direction **Y+**).

Result:
- – The crane drives forward.

6.4.2 Driving in reverse

▶ Deflect the left foot rocker **MS3** and the right foot rocker **MS4** synchronously backward (direction **Y-**).

Result:
- – The crane drives backward.

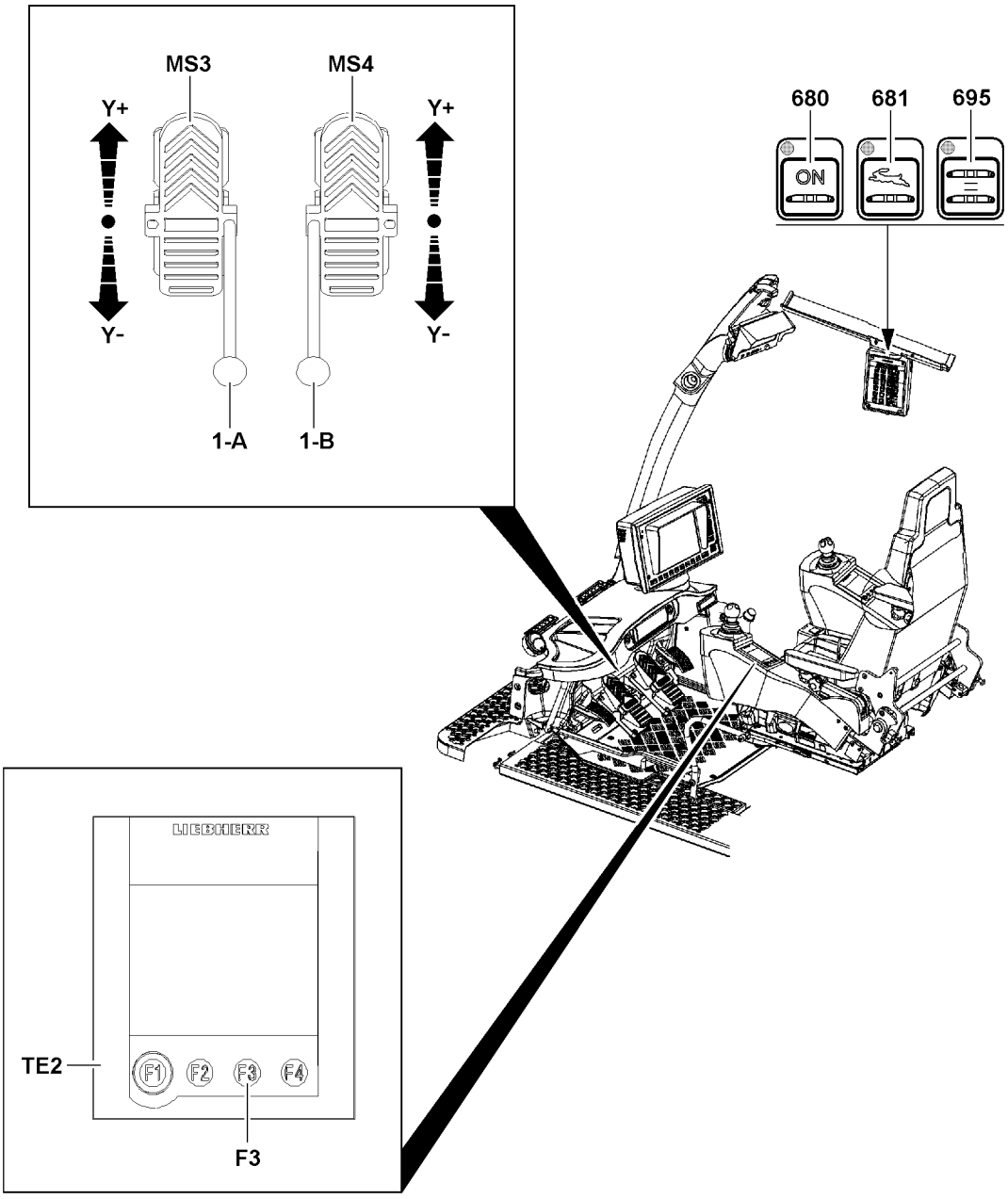
MS3
MS4
Y+
Y-
Y+
Y-
1-A
1-B
680
681
695
ON
LIEBHERR
TE2
F1
F2
F3
F4
F3

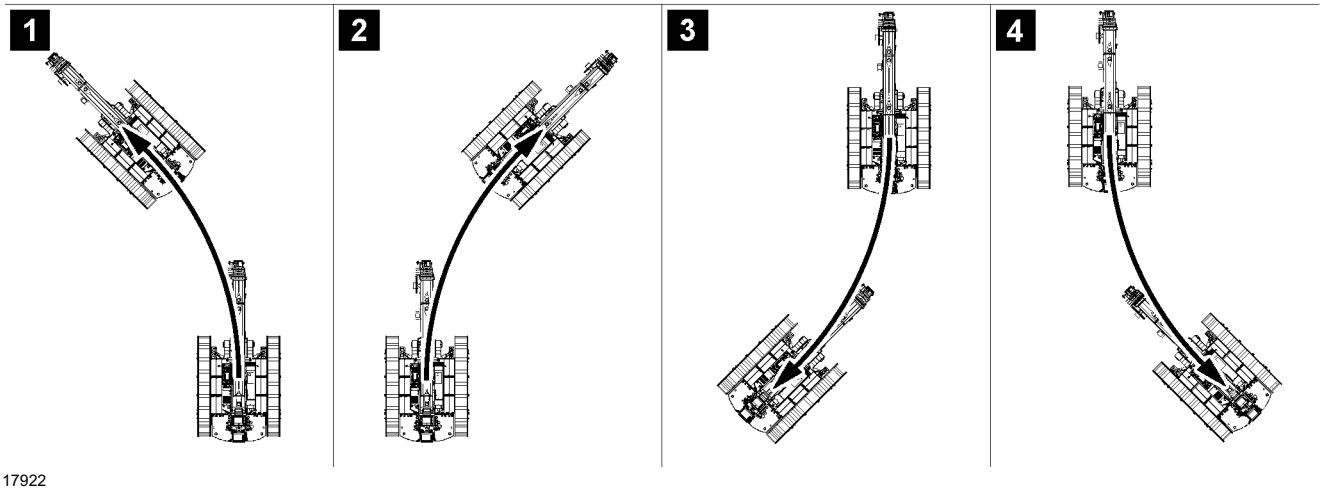
1
2
3
4

B117922

6.4.3 Driving in curves forward to the left

See illustration **1**.

▶ Actuate the left foot rocker **MS3** reduced to the front (direction **Y+**) and the right foot rocker **MS4** stronger to the front (direction **Y+**).

Result:

– The crane drives a forward curve to the left.

6.4.4 Driving in curves forward to the right

See illustration **2**.

▶ Actuate the left foot rocker **MS3** stronger to the front (direction **Y+**) and the right foot rocker **MS4** reduced to the front (direction **Y+**).

Result:

– The crane drives a forward curve to the right.

6.4.5 Driving in curves reverse to the left

See illustration **3**.

▶ Actuate the left foot rocker **MS3** reduced to the rear (direction **Y-**) and the right foot rocker **MS4** stronger to the rear (direction **Y-**).

Result:

– The crane drives a reverse curve to the left.

6.4.6 Driving in curves reverse to the right

See illustration **4**.

▶ Actuate the left foot rocker **MS3** stronger to the rear (direction **Y-**) and the right foot rocker **MS4** reduced to the rear (direction **Y-**).

Result:

– The crane drives a reverse curve to the right.

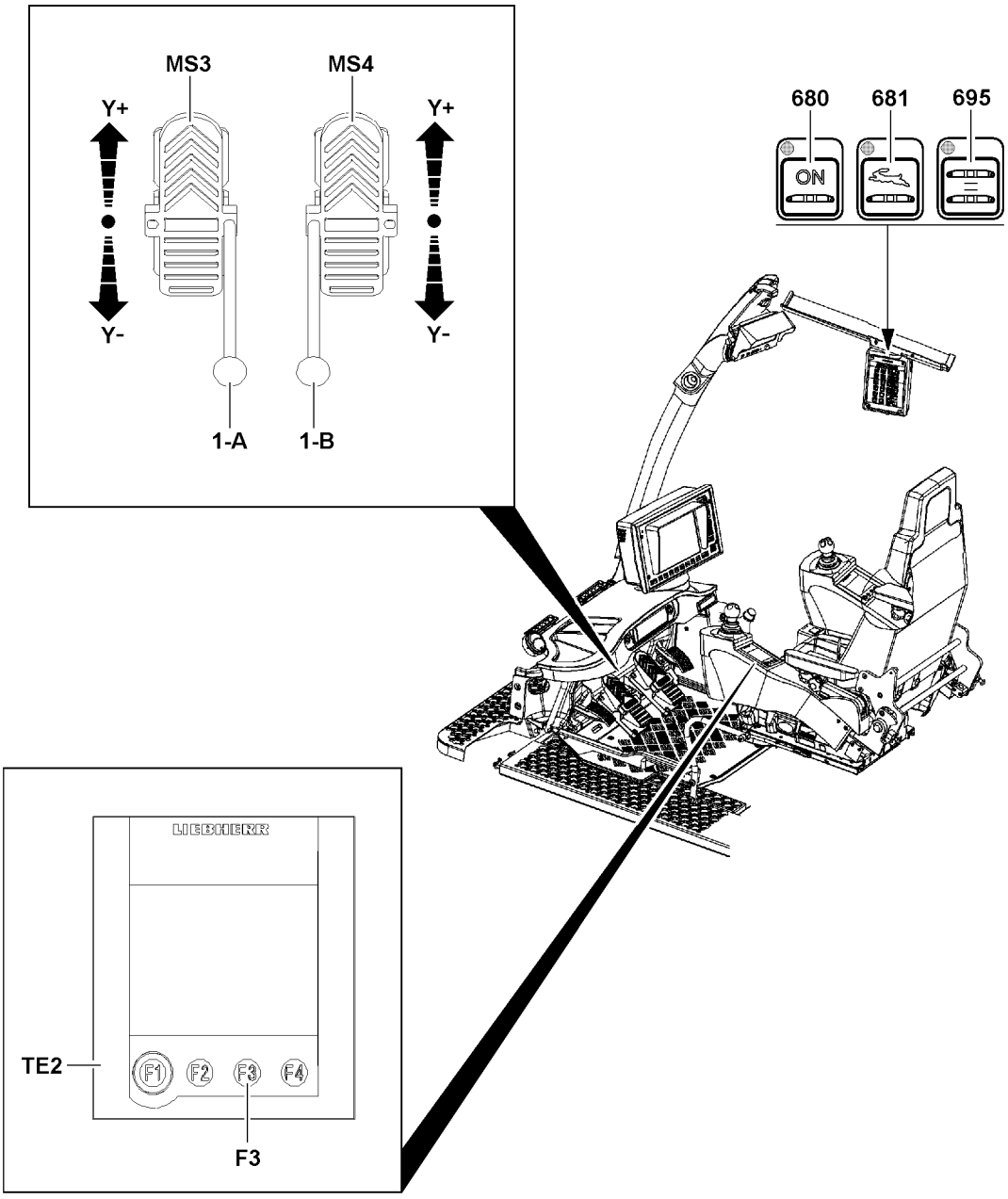
MS3
MS4
Y+
Y-
Y+
Y-
1-A
1-B
680
681
695
ON
LIEBHERR
TE2
F1
F2
F3
F4
F3

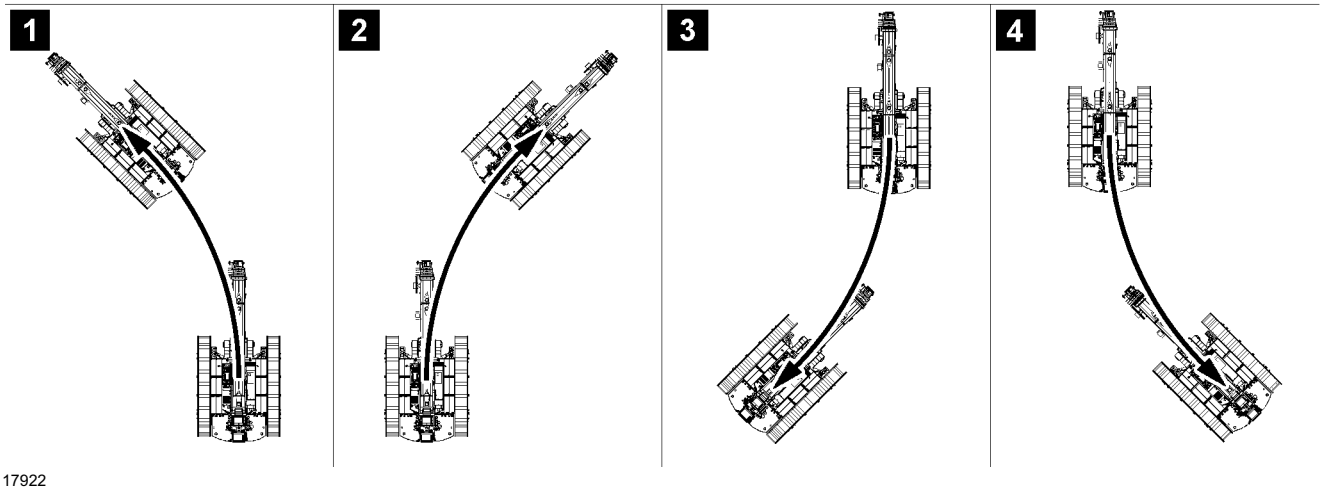
1
2
3
4

B117922

6.4.7 Turning forward to the left

▶ Actuate the right foot rocker **MS4** forward (direction **Y+**).

Result:

– The crane is turned forward to the left.

6.4.8 Turning forward to the right

▶ Actuate the left foot rocker **MS3** forward (direction **Y+**).

Result:

– The crane is turned forward to the right.

6.4.9 Turning backward to the left

▶ Actuate the right foot rocker **MS4** backward (direction **Y-**).

Result:

– The crane is turned backward to the left.

6.4.10 Turning backward to the right

▶ Actuate the right foot rocker **MS3** backward (direction **Y-**).

Result:

– The crane is turned backward to the right.

6.4.11 Counterrotation to the left (counterclockwise direction)

▶ Actuate the left foot rocker **MS3** to the rear (direction **Y-**) and the right foot rocker **MS4** to the front (direction **Y+**).

Result:

– The crane is turned to the left.

6.4.12 Counterrotation to the right (clockwise direction)

▶ Actuate the left foot rocker **MS3** to the front (direction **Y+**) and the right foot rocker **MS4** to the rear (direction **Y-**).

Result:

– The crane is turned to the right.

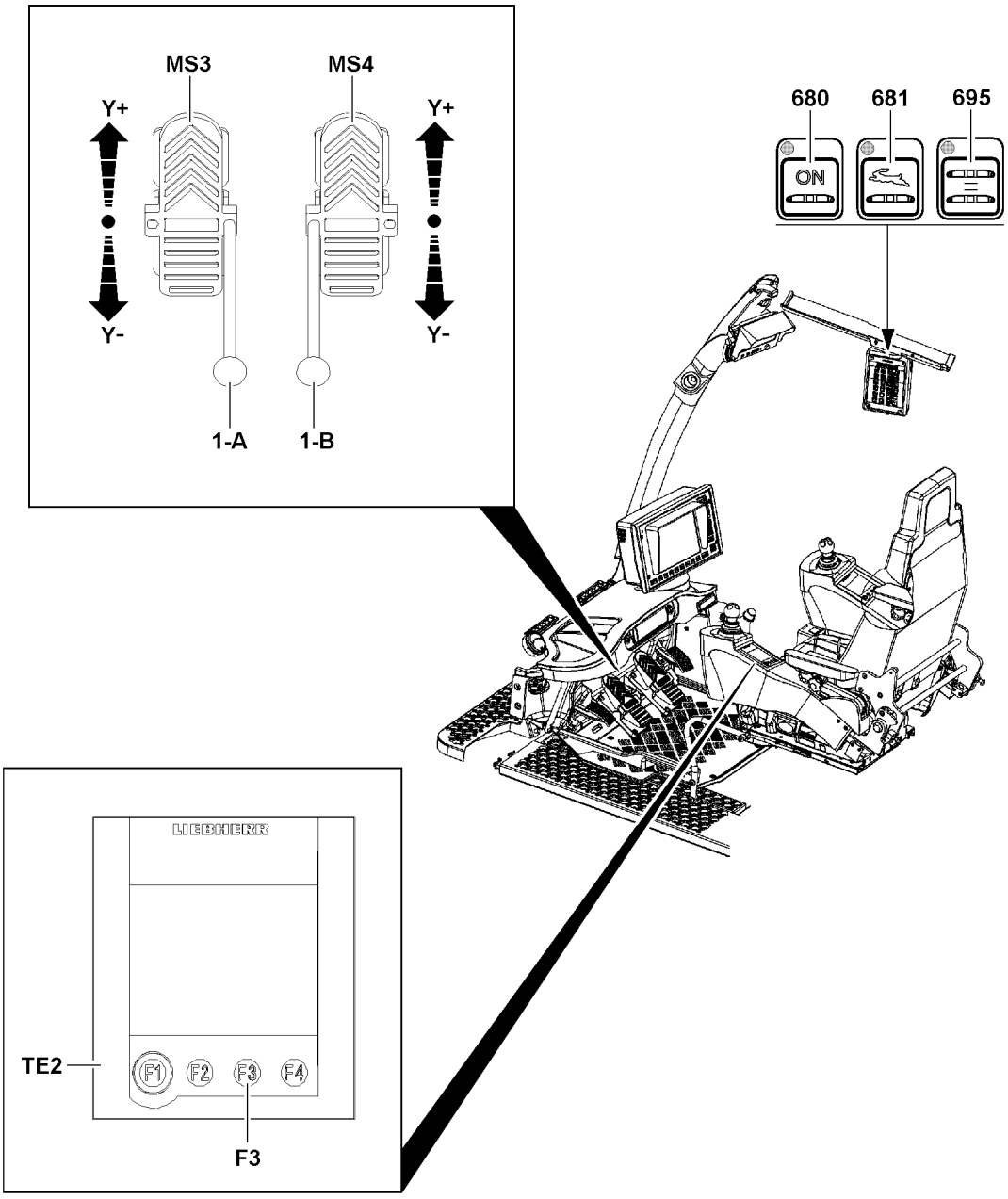
MS3
MS4
Y+
Y-
Y+
Y-
1-A
1-B
680
681
695
ON
LIEBHERR
TE2
F1
F2
F3
F4
F3

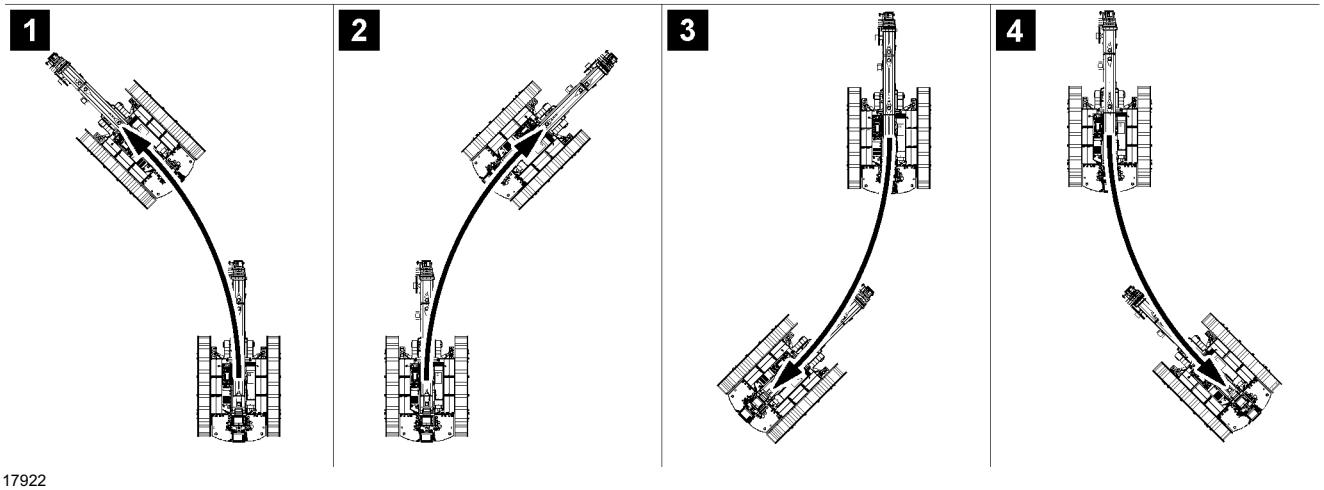
1
2
3
4

B117922

6.5 Driving the crawler crane in parallel travel

NOTICE
Increased wear on the crawler travel gear!
When steering in small radii, high friction forces are created which lead to increased wear.
▶ If possible, always drive in curves with large radii.
▶ Avoid turning over a stationary track, if possible.

Make sure that the following prerequisites are met:
– The desired rpm of the crane engine is set.
– The parallel travel crawler operation is selected.

Note
▶ Special hand levers **1-A** and hand levers **1-B** can be inserted into the foot rockers. These hand levers **1-A** and hand levers **1-B** are used for delicate driving maneuvers. The operation is identical to that for the foot rockers.
▶ Hand levers **1-A** and hand levers **1-B** are placed in the transport retainer on the left of the crane operator's seat!
▶ The technical design of the hand lever **1-A** and the hand lever **1-B** is completely identical. The differentiation of the two hand levers is only in their assignment to the corresponding foot rockers in assembled (pushed on) condition!

Turning the crawler travel gear in counterrotation is not possible in parallel travel.

6.5.1 Driving forward

▶ Deflect the right foot rocker **MS4** forward (direction **Y+**).

Result:
– The crane drives forward.

Note
▶ The further the foot rockers are actuated forward (direction **Y+**) the higher the speed.

6.5.2 Driving in reverse

▶ Deflect the right foot rocker **MS4** backward (direction **Y-**).

Result:
– The crane drives backward.

Note
▶ The further the foot rockers are actuated forward (direction **Y+**) the higher the speed.

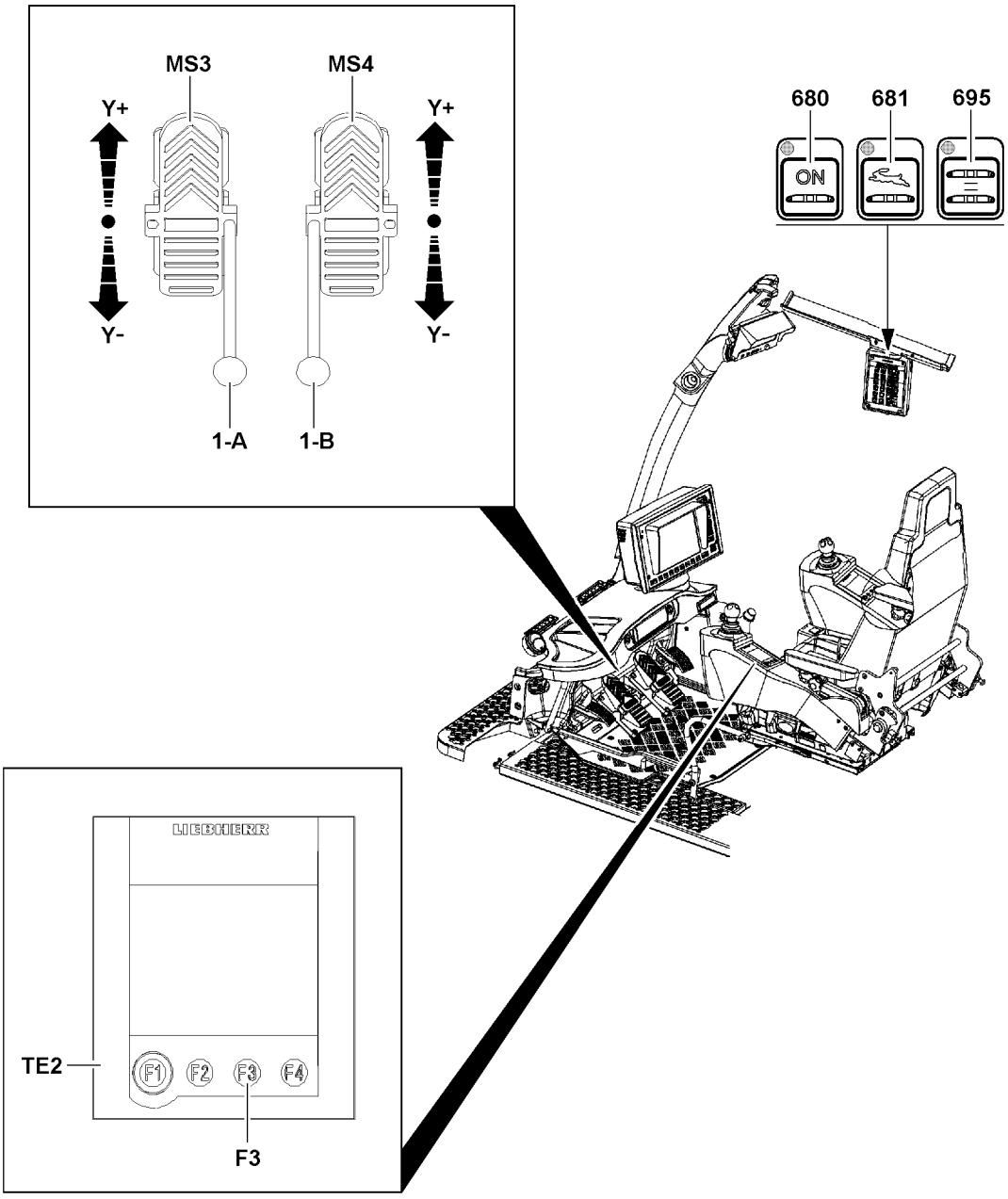
MS3
MS4
Y+
Y-
Y+
Y-
1-A
1-B
680
681
695
ON
LIEBHERR
TE2
F1
F2
F3
F4
F3

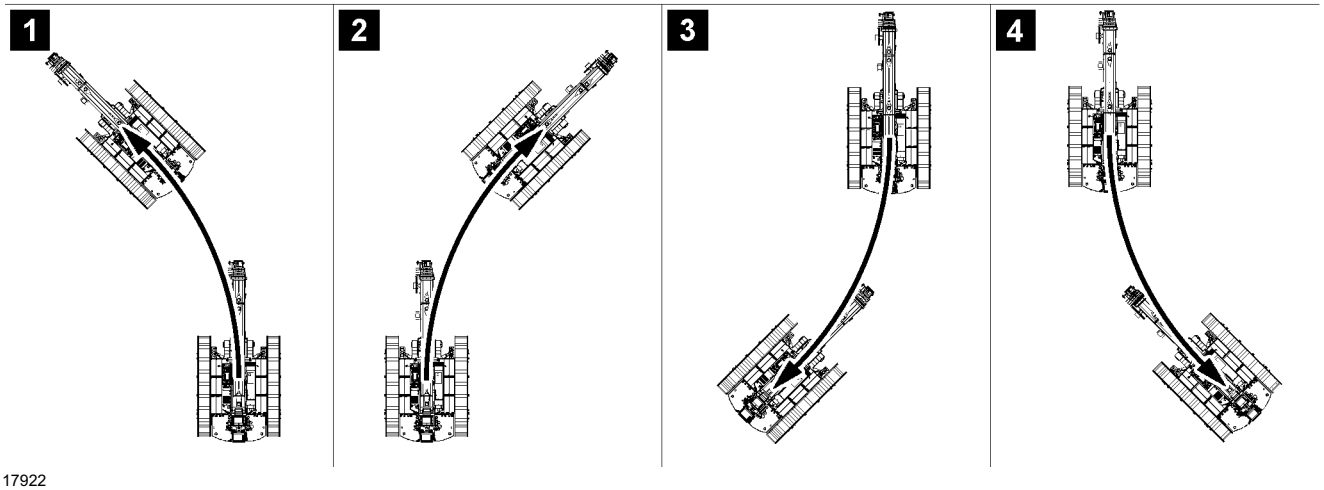
1
2
3
4

B117922

6.5.3 Driving in curves forward to the left

See illustration **1**.

▶ Actuate the left foot rocker **MS3** reduced to the rear (direction **Y-**) and the right foot rocker **MS4** to the front (direction **Y+**).

Result:

– The crane drives a forward curve to the left.

Note

▶ The further the right foot rocker **MS4** is actuated forward (direction **Y+**) the higher the speed of driving a curve.

▶ If the left foot rocker **MS3** is pushed fully to the rear (direction **Y-**), the left track stops.

6.5.4 Driving in curves forward to the right

See illustration **2**.

▶ Actuate the left foot rocker **MS3** reduced to the front (direction **Y+**) and the right foot rocker **MS4** to the front (direction **Y+**).

Result:

– The crane drives a forward curve to the right.

Note

▶ The further the right foot rocker **MS4** is actuated forward (direction **Y+**) the higher the speed of driving a curve.

▶ If the left foot rocker **MS3** is pushed fully to the front (direction **Y+**), the right track stops.

6.5.5 Driving in curves reverse to the left

See illustration **3**.

▶ Actuate the left foot rocker **MS3** reduced to the rear (direction **Y-**) and the right foot rocker **MS4** to the rear (direction **Y-**).

Result:

– The crane drives a reverse curve to the left.

Note

▶ The further the right foot rocker **MS4** is actuated backward (direction **Y-**) the higher the speed of driving a curve.

▶ If the left foot rocker **MS3** is pushed fully to the rear (direction **Y-**), the left track stops.

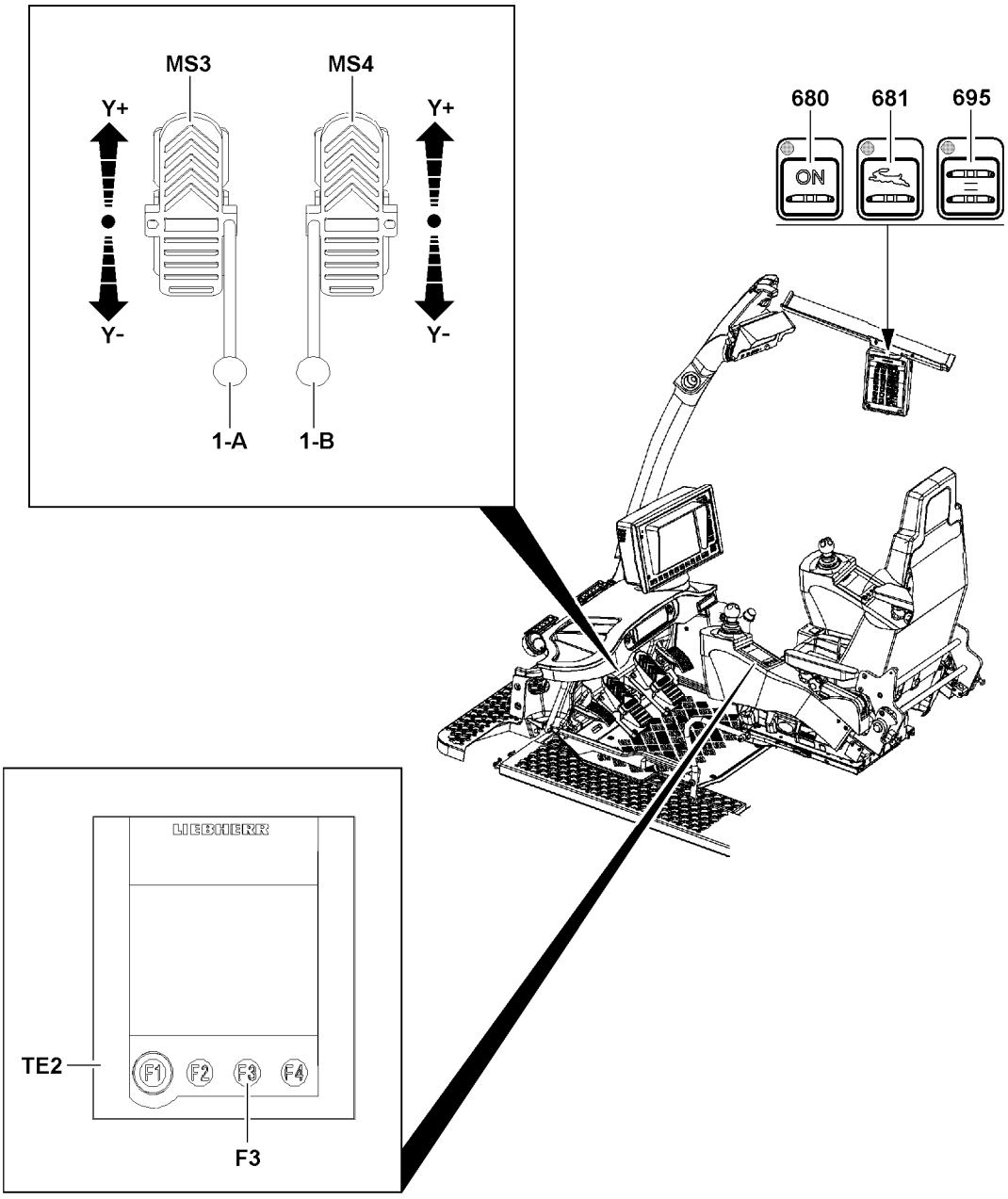
MS3
MS4
Y+
Y-
Y+
Y-
1-A
1-B
680
681
695
ON
LIEBHERR
TE2
F1
F2
F3
F4
F3

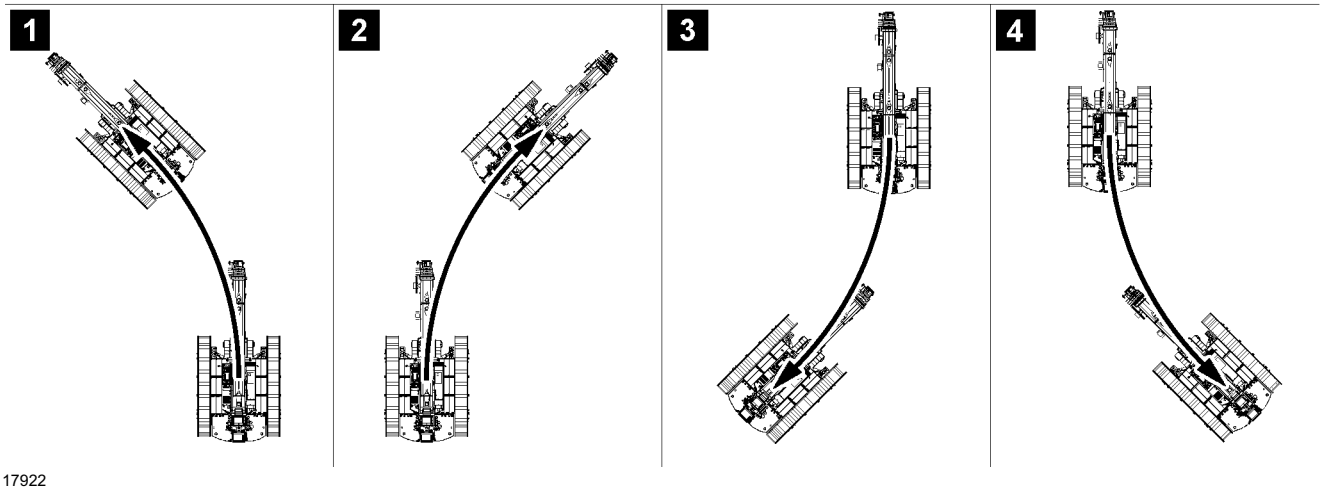
1
2
3
4

B117922

6.5.6 Driving in curves reverse to the right

See illustration **4**.

▶ Actuate the left foot rocker **MS3** reduced to the front (direction **Y+**) and the right foot rocker **MS4** to the rear (direction **Y-**).

Result:

– The crane drives a reverse curve to the right.

Note

▶ The further the right foot rocker **MS4** is actuated backward (direction **Y-**) the higher the speed of driving a curve.

▶ If the left foot rocker **MS3** is pushed fully to the front (direction **Y+**), the right track stops.

6.5.7 Turning forward to the left

▶ Push through and hold the left foot rocker **MS3** fully to the rear (direction **Y-**).

▶ Actuate the right foot rocker **MS4** forward (direction **Y+**).

Result:

– The crane is turned forward to the left.

Note

▶ The further the right foot rocker **MS4** is actuated forward (direction **Y+**) the higher the speed of the turning movement.

6.5.8 Turning forward to the right

▶ Push through and hold the left foot rocker **MS3** fully to the front (direction **Y+**).

▶ Actuate the right foot rocker **MS4** forward (direction **Y+**).

Result:

– The crane is turned forward to the right.

Note

▶ The further the right foot rocker **MS4** is actuated forward (direction **Y+**) the higher the speed of the turning movement.

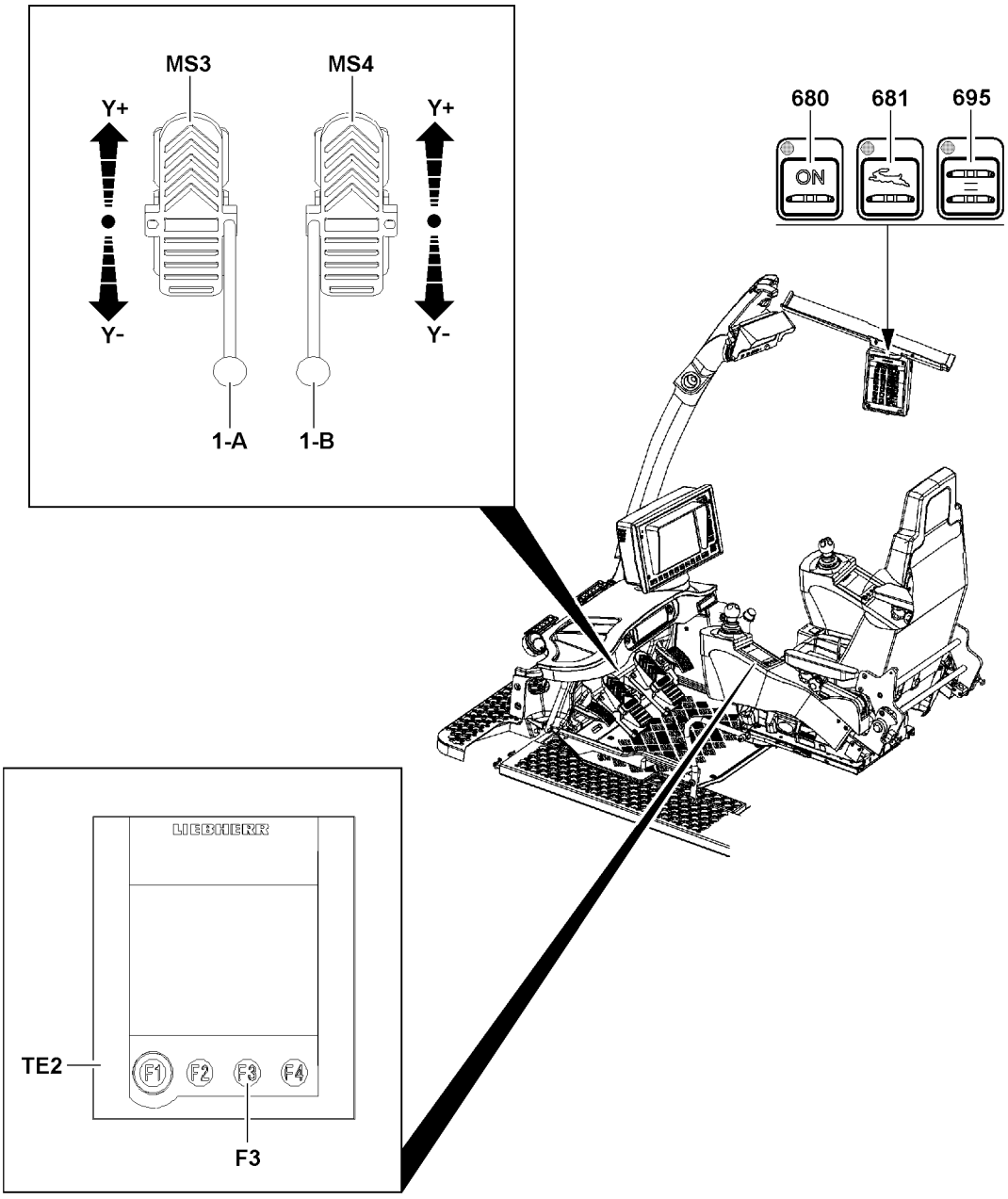
MS3
MS4
Y+
Y-
Y+
Y-
1-A
1-B
680
681
695
ON
LIEBHERR
TE2
F1
F2
F3
F4
F3

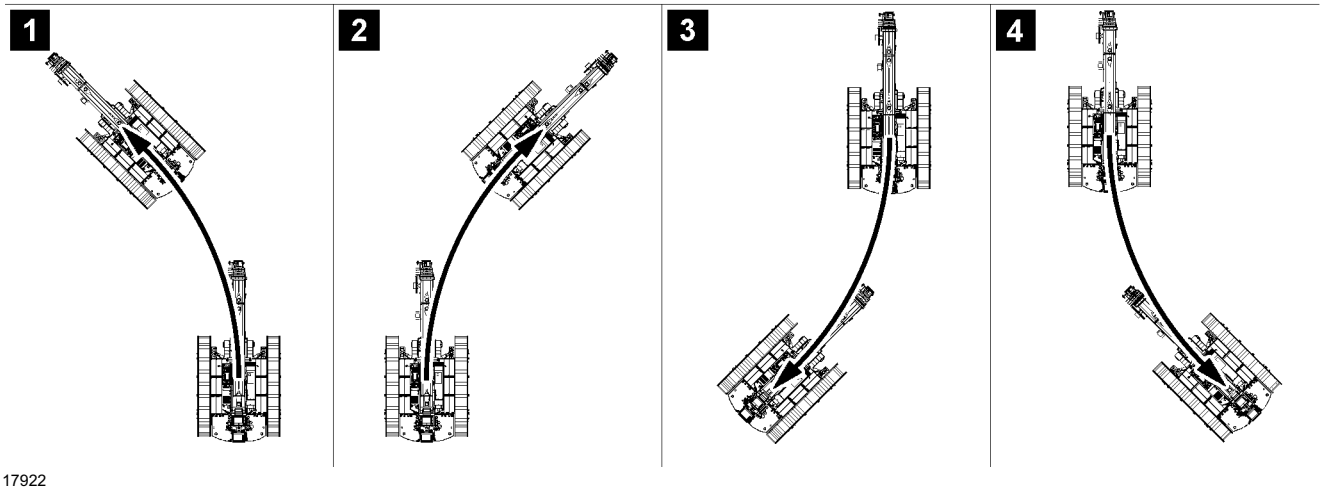
1
2
3
4

B117922

6.5.9 Turning backward to the left

▶ Push through and hold the left foot rocker **MS3** fully to the rear (direction **Y-**).

▶ Actuate the right foot rocker **MS4** backward (direction **Y-**).

Result:

– The crane is turned backward to the left.

Note

▶ The further the right foot rocker **MS4** is actuated backward (direction **Y-** the higher the speed of the turning movement.

6.5.10 Turning backward to the right

▶ Push through and hold the left foot rocker **MS3** fully to the front (direction **Y+**).

▶ Actuate the right foot rocker **MS4** backward (direction **Y-**).

Result:

– The crane is turned backward to the right.

Note

▶ The further the right foot rocker **MS4** is actuated backward (direction **Y-**) the higher the speed of the turning movement.

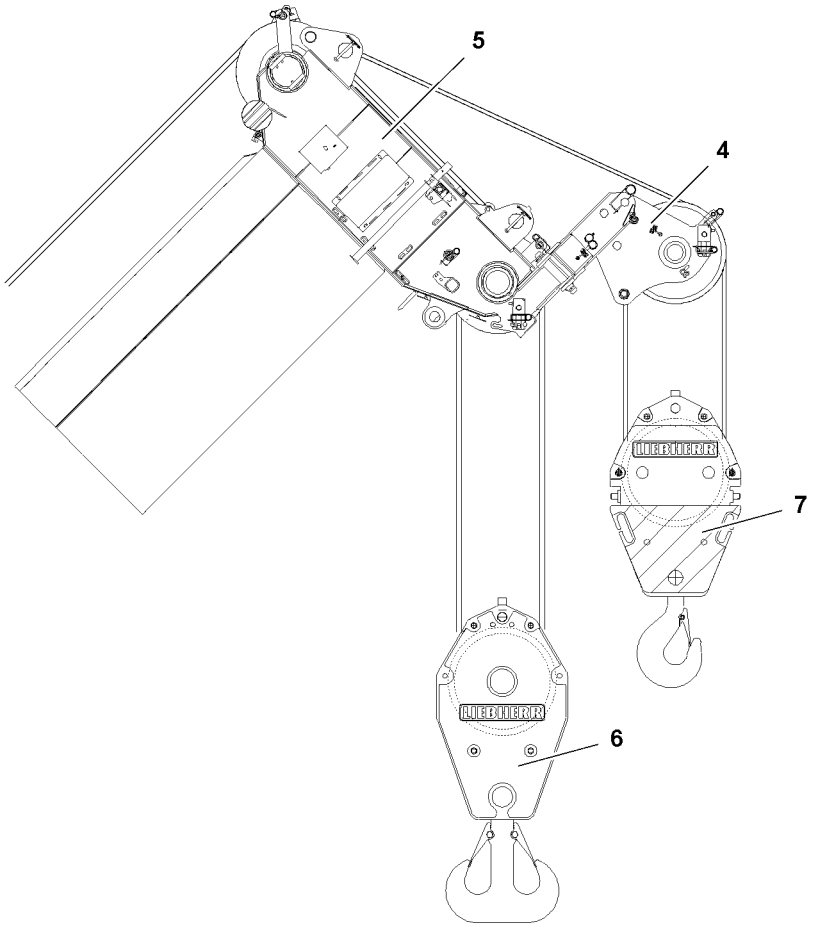

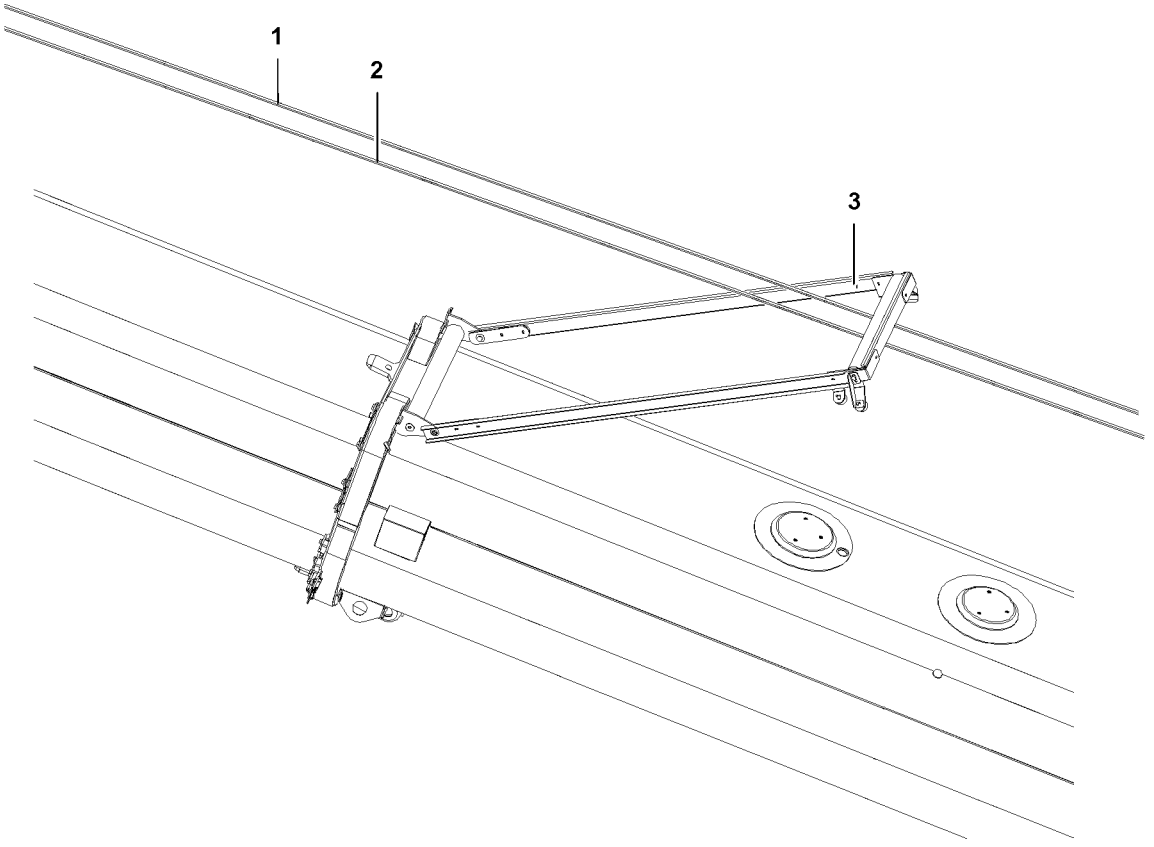

B117830

1 Operating modes

A distinction is made between the following operating modes:
- Operation with boom nose* on the telescopic boom
- Operation with boom nose* on lattice jib
- “Two hook operation” with auxiliary boom* (folding jib, auxiliary jib, lattice jib)

2 Operation with boom nose* on the telescopic boom

NOTICE
Damage to the hoist ropes!
▶ Guide the hoist rope **1** and hoist rope **2** through the bracket **3** on the telescopic boom during reeving.

The operation “boom nose on telescopic boom” is set up for quick lifts via the boom nose **4**. The hook block **6** can remain reeved on the boom head **5**.

2.1 Setting the LICCON overload protection

Add the following weights to the load:
- Hook block **6** on boom head **5**
- Hook block (load hook) **7** on the boom nose **4**
- Boom nose **4**
- Fastening equipment

WARNING
Danger of accidents because of imprecise radius and load display!
In operation with “boom nose on telescopic boom” the radius and load display of the LICCON overload protection is not precise. The boom geometry is not taken into account!
▶ Do not overload the crane.

For operation “boom nose on telescopic boom” no special load charts are available. For operation “boom nose on telescopic boom” set operating mode “telescopic boom” on the LICCON overload protection.
▶ Set operating mode “telescopic boom” on the LICCON overload protection.

WARNING
Overload of crane!
Protection through the LICCON overload protection is only possible when the reeving on the boom head **5**, is equal to / larger than the reeving on the boom nose **4**.
▶ Reeve in a boom head **5** equal to / larger than the boom nose **4**.

Setting it to the smaller reeving of the two hooks ensures that the crane cannot be overloaded.
▶ Set the LICCON overload protection to the smaller reeving (reeving on the boom nose **4**).

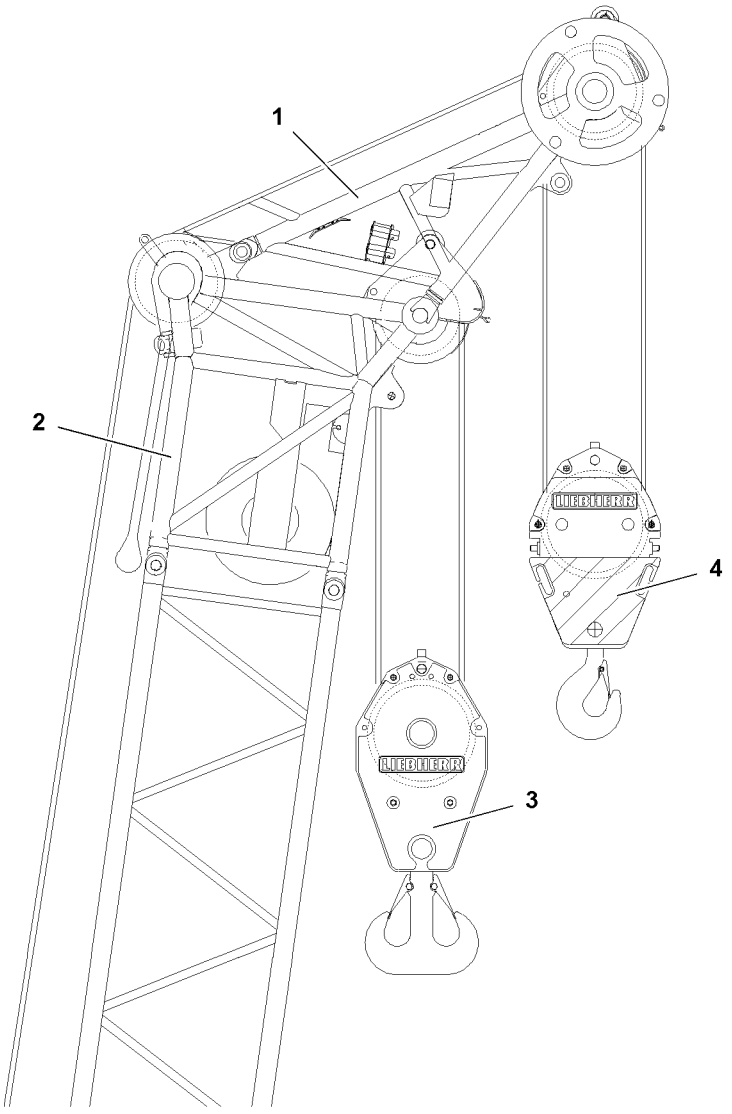

B117753

3 Operation with boom nose* on lattice jib

The operation “boom nose on lattice jib” is set up for quick lifts via the boom nose **1**. The hook block **3** can remain reeved on the boom head **2**.

3.1 Setting the LICCON overload protection

Add the following weights to the load:
- Hook block **3** on boom head **2**
- Hook block (load hook) **4** on the boom nose **1**
- Boom nose **1**
- Fastening equipment

WARNING
Danger of accidents because of imprecise radius and load display!
In operation with “boom nose on lattice jib” the radius and load display of the LICCON overload protection is not precise. The boom geometry is not taken into account!
▶ Do not overload the crane.

For operation “boom nose on lattice jib” no special load charts are available. For operation “boom nose on lattice jib” set operating mode “lattice jib” on the LICCON overload protection.
▶ Set operating mode “lattice jib” on the LICCON overload protection.

WARNING
Overload of crane!
Protection through the LICCON overload protection is only possible when the reeving on the boom head **2**, is equal to / larger than the reeving on the boom nose **1**.
▶ Reeve in a boom head **2** equal to / larger than the boom nose **1**.

Setting it to the smaller reeving of the two hooks ensures that the crane cannot be overloaded.
▶ Set the LICCON overload protection to the smaller reeving (reeving on the boom nose **1**).

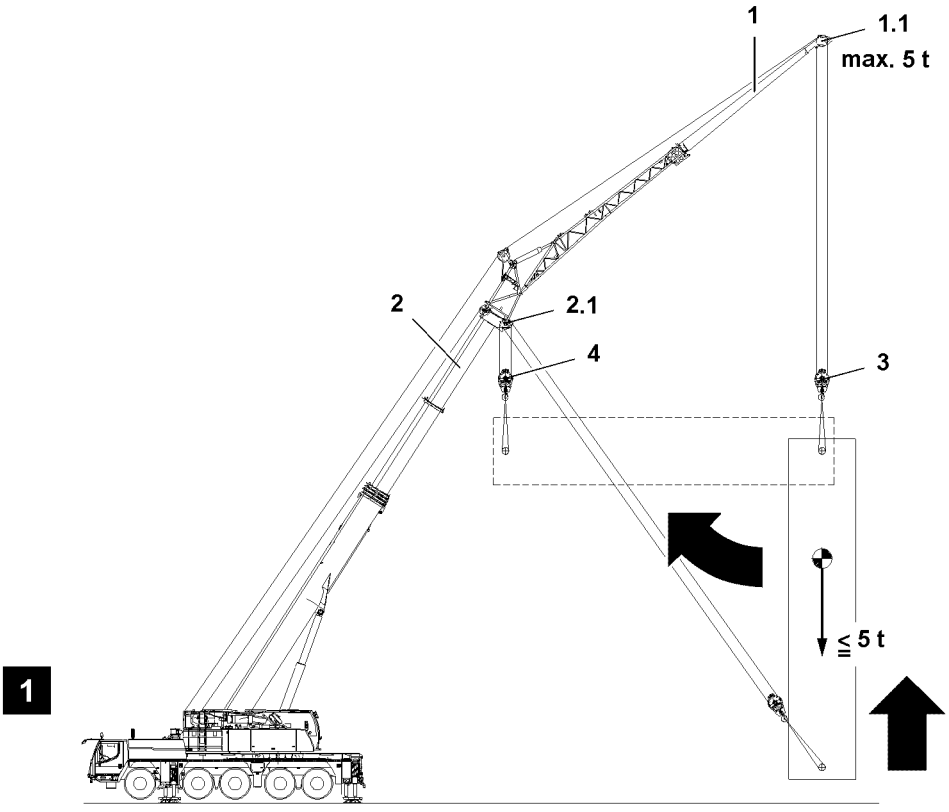

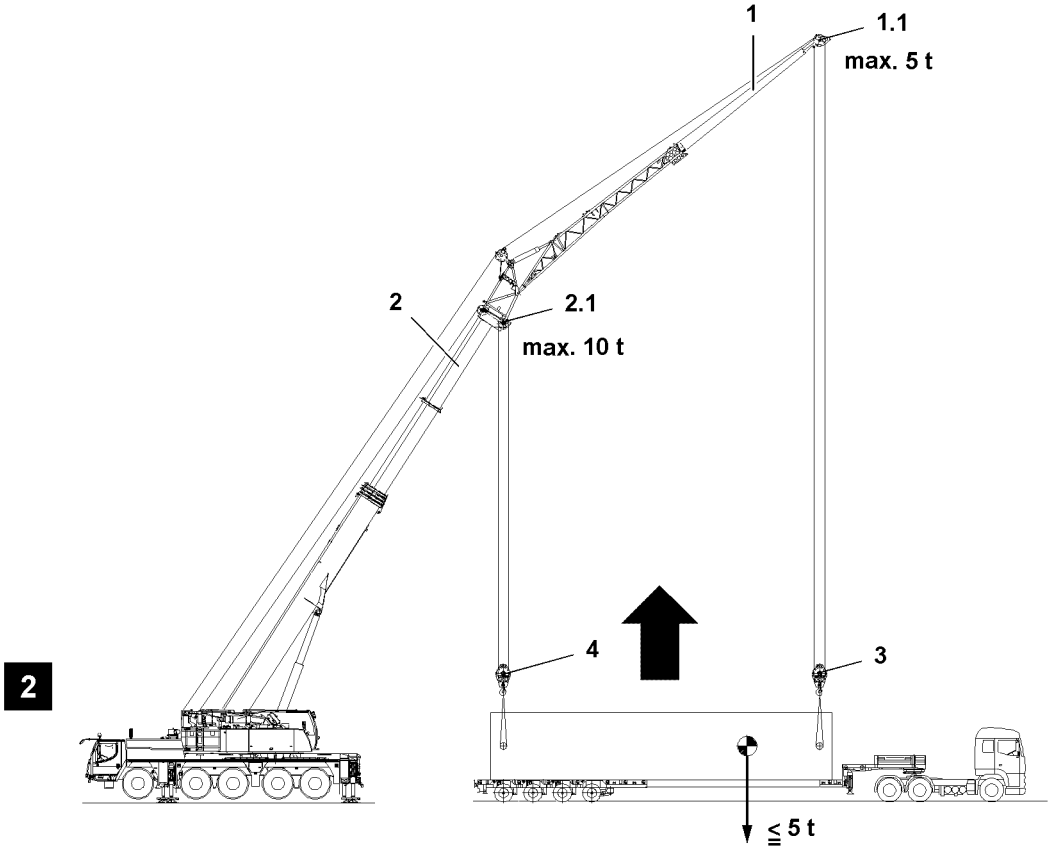

B117833

4 “Two hook operation” with auxiliary boom*

The “two hook operation” with main boom and auxiliary boom **1** (folding jib, auxiliary jib, lattice jib) is set up for turning loads with simultaneous operation of both hoist gears.
For “two hook operation” with auxiliary boom **1** there are two possibilities:

1.) Lift / lower load exclusively with the auxiliary boom, illustration **1**
2.) Lift / lower load with the main boom and auxiliary boom, illustration **2**

WARNING
Danger of fatal accident due to overloading the crane!
The “two hook operation” is not monitored!
To avoid an overload of the crane, the information given in the operating instructions must be strictly adhered to.

- ▶ The total weight of the load must be smaller / equal to the maximum permissible load of the auxiliary boom **1**.
- ▶ “Two hook operation” with a load larger than the maximum permissible load of the auxiliary boom **1** is prohibited!
- ▶ Lift the load no higher than to the height of the main boom head **2.1**.
- ▶ If there is a load on both hooks, then it is prohibited to luff down the boom! There is no protection provided by the LICCON overload protection.
- ▶ Lift and lower the load vertically.
- ▶ “Two hook operation” with TY-guying and eccentric or spacer is prohibited!

Add the following weights to the load:

- Hook block **4** on main boom head **2.1**
- Hook block (load hook) **3** on auxiliary boom head **1.1**
- Fastening equipment

The minimum reeving can be obtained from the erection and take down charts.
For “two hook operation” with folding jib, auxiliary jib, fixed lattice jib, the minimum reeving in the erection and take down charts is sufficient.

WARNING
Danger of accident in case of incorrect minimum reeving!
For “two hook operation” with luffing lattice jib, the minimum reeving in the erection and take down charts is **not** sufficient!

- ▶ Increase the specified minimum reeving according to the erection and take down charts by 1 rope strand.

NOTICE
Rubbing hoist ropes!
In “two hook operation” angular pull is only permissible in boom direction with raised load.

- ▶ Make sure that the hoist ropes do not rub on the rope retaining pipes of the rope pulleys during angular pull.

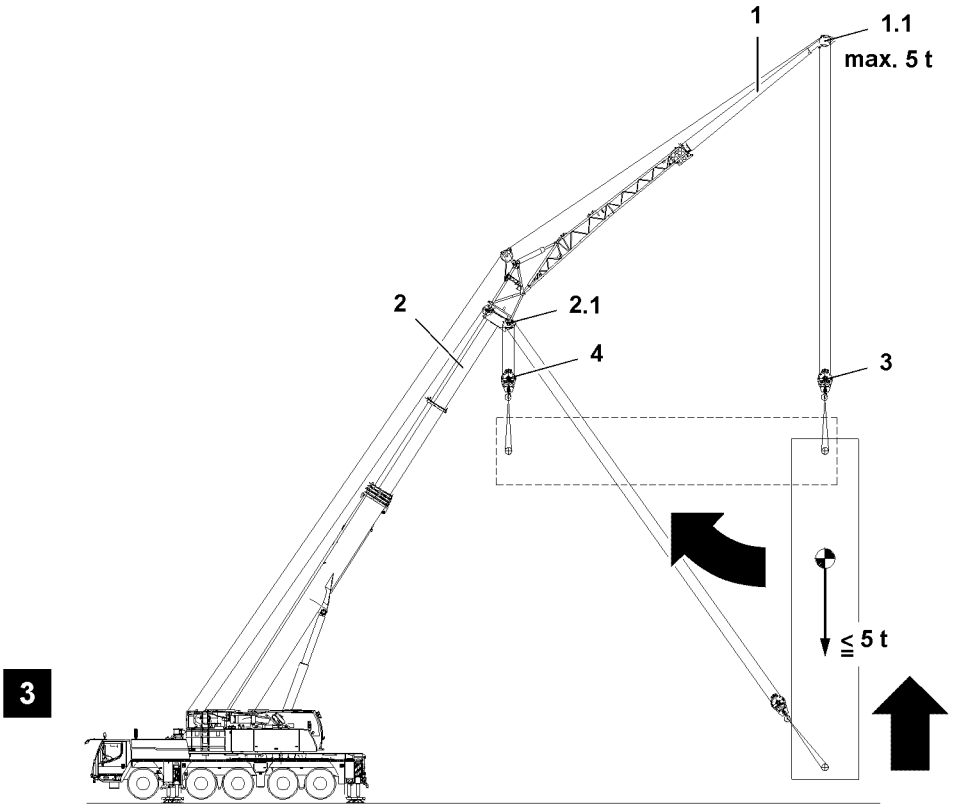

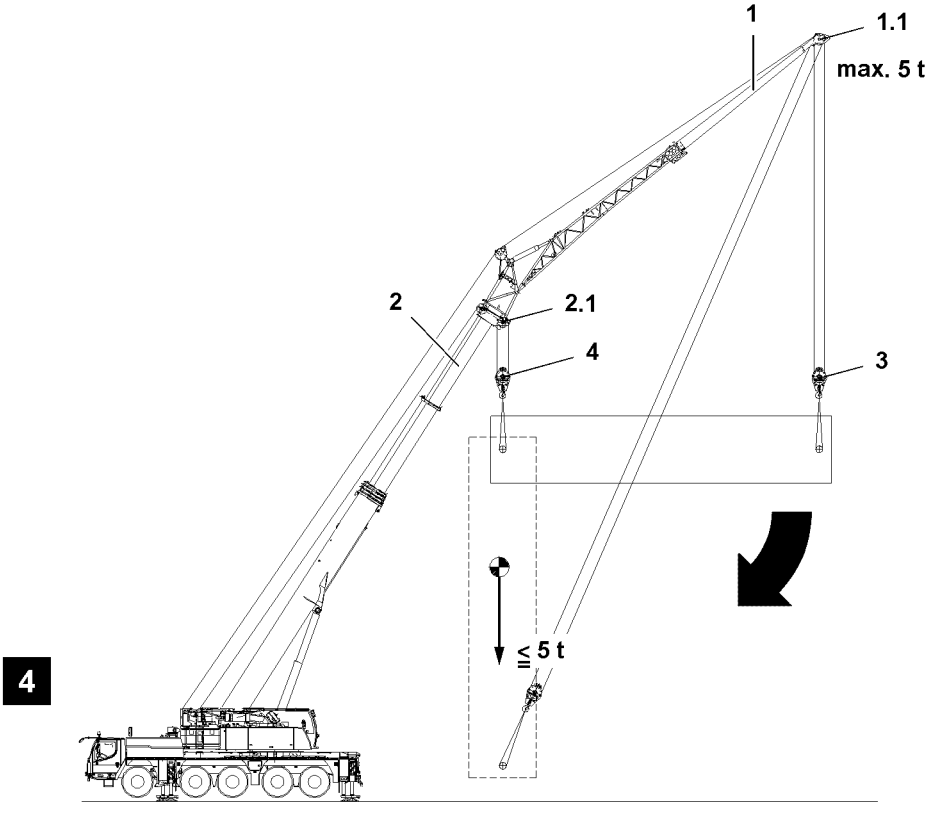

B117834

4.1 Setting the LICCON overload protection

For “two hook operation” with main boom and auxiliary boom **1** the LICCON overload protection must be set to operating mode auxiliary boom (folding jib, auxiliary jib, lattice jib).

▶ Set operating mode “auxiliary jib” (folding jib, auxiliary jib, lattice jib) on the LICCON overload protection.

Result:

– The displayed boom radius is according to the installed auxiliary boom **1**.

WARNING

Overload of crane!

Protection through the LICCON overload protection is only possible when the reeving on the main boom head **2.1**, is equal to / larger than the reeving on the auxiliary boom head **1.1**.

▶ Reeve in the main boom head **2.1** equal / larger than the auxiliary boom head **1.1**.

Setting it to the smaller reeving of the two hooks ensures that the crane cannot be overloaded.

▶ Set the LICCON overload protection to the smaller reeving (reeving on the auxiliary boom head **1.1**).

4.2 Lifting / lowering the load exclusively with the auxiliary boom

Make sure that the following prerequisite is met:

– The total weight of the load is smaller / equal to the maximum permissible load of the auxiliary boom **1**.

WARNING

Danger of fatal accident due to overloading the crane!

If the total weight or the center of gravity of the load is not exactly known, then the load must first be lifted or lowered with the auxiliary boom **1**.

▶ Lift the load with auxiliary boom **1** (folding jib, auxiliary jib, lattice jib) to 100 %.

▶ Lower the load with auxiliary boom **1** (folding jib, auxiliary jib, lattice jib) to 100 %.

▶ Lift the load with auxiliary boom **1** to 100 %, illustration **3**.

▶ Take over the load with the main boom **2**, illustration **4**.

Result:

– As soon as the load hangs on the main boom **2.1** is the load display of the LICCON overload protection incorrect.

▶ When the load is to be lowered:
Take over the load with the auxiliary boom **1** to 100 % and then place it down.

Result:

– As soon as the load hangs by 100 % on the auxiliary boom head **1.1** is the load display of the LICCON overload protection correct.

5

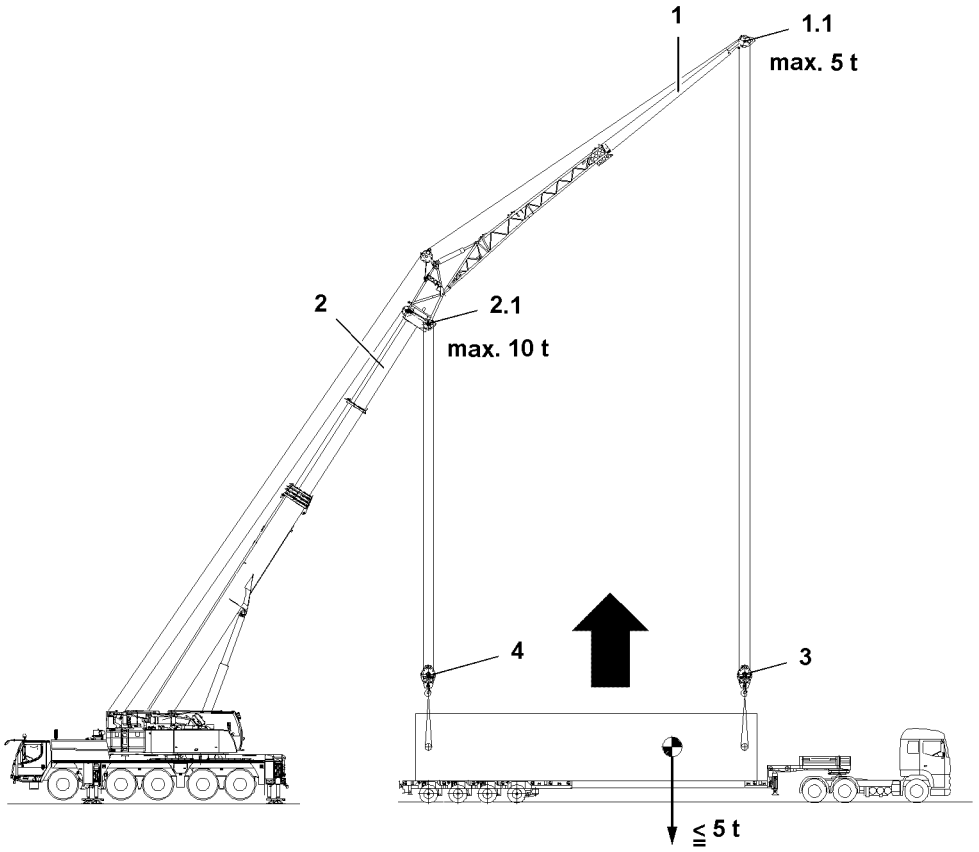

6

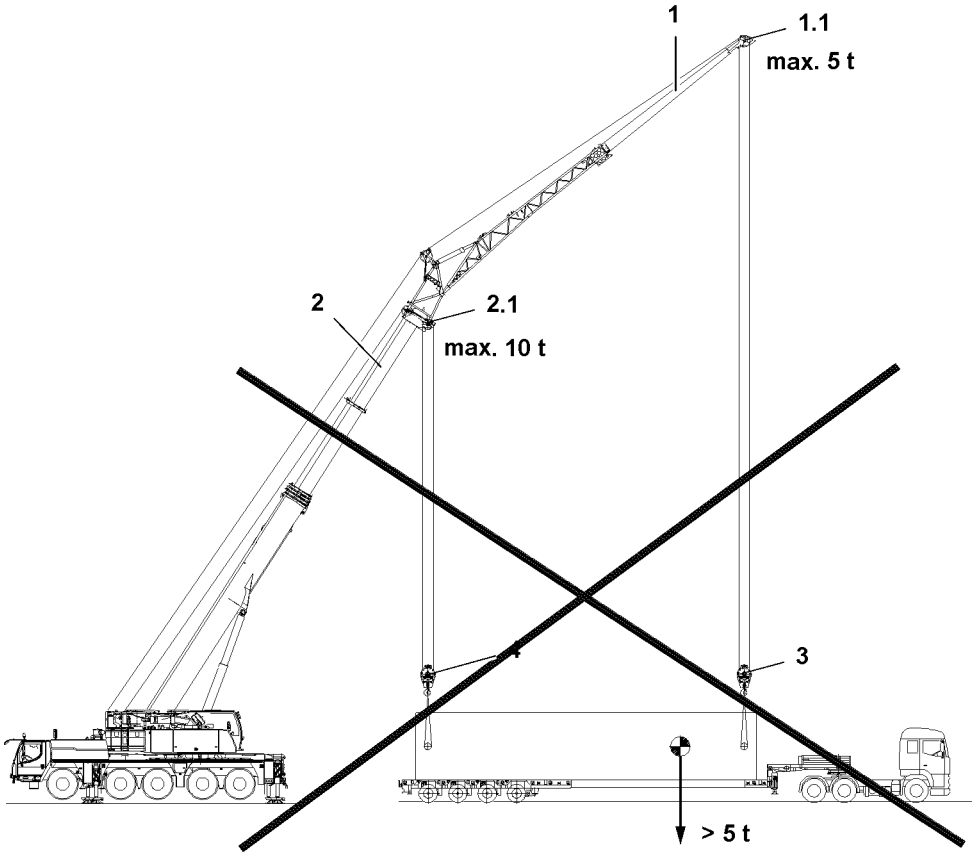

B117835

4.3 Lifting / lowering the load with the main boom and auxiliary boom

Make sure that the following prerequisite is met:

– The total weight of the load is smaller / equal to the maximum permissible load of the auxiliary boom **1**.

WARNING

Danger of fatal accident due to overloading the crane!

▶ The total weight and the center of gravity of the load must be known exactly.

▶ “Two hook operation” with a load larger than the maximum permissible load of the auxiliary boom **1** is strictly prohibited, illustration **6**!

▶ Lift the load with the main boom **2** and auxiliary boom **1**, illustration **5**.

Result:

– As soon as the load hangs on the main boom **2.1** is the load display of the LICCON overload protection incorrect.

▶ When the load is to be lowered:
Place the load down with the main boom **2** and auxiliary boom **1**.

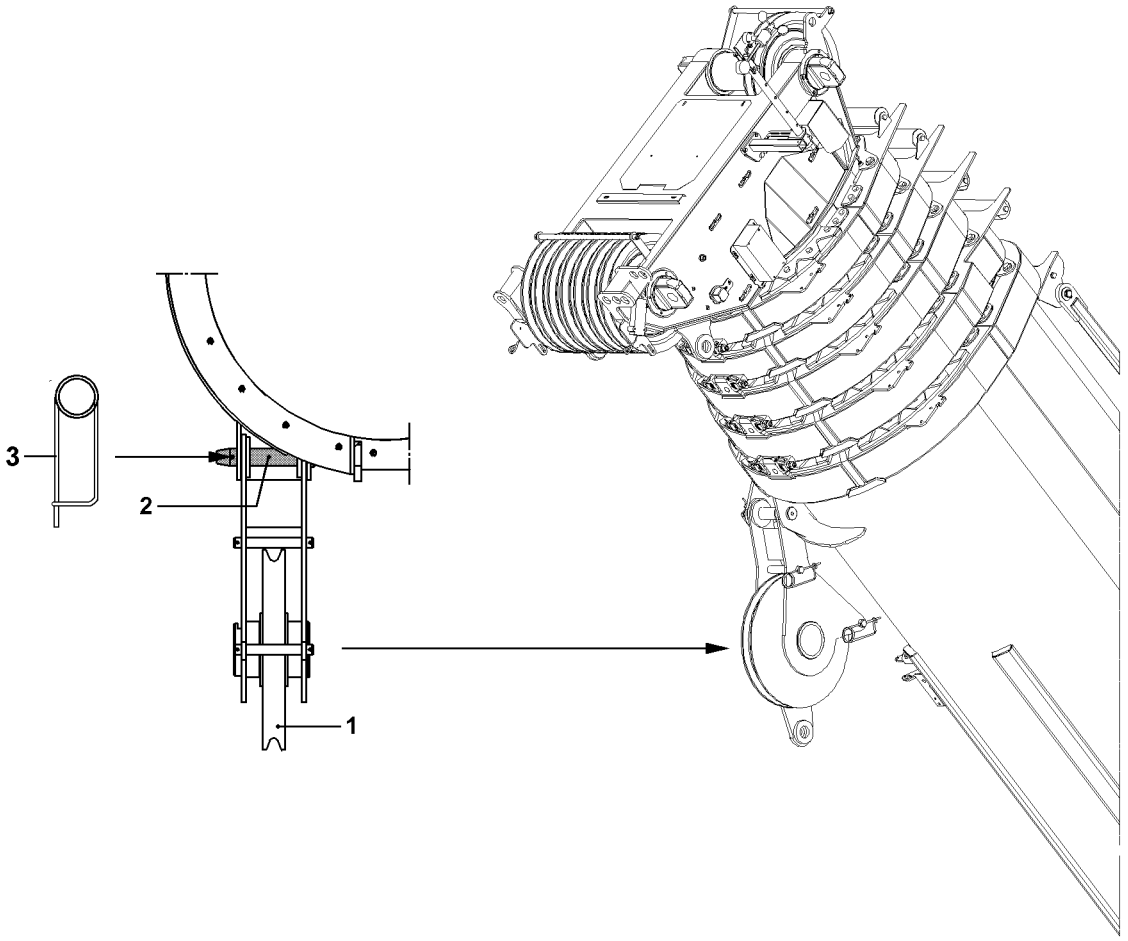

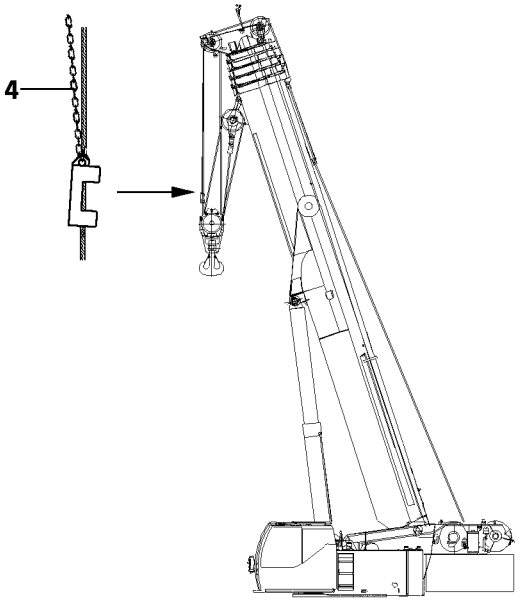

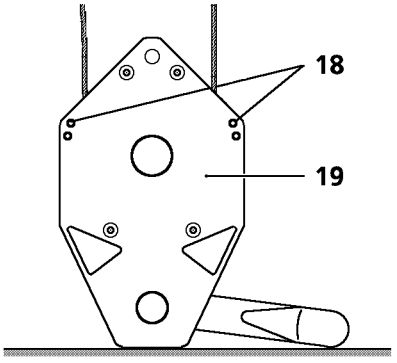

B107275

1 Reeving plans

1.1 Assembling the auxiliary equipment*

- ▶ Affix the auxiliary pulleys **1** on the intended bores.
- ▶ Insert the pins **2**.
- ▶ Secure pins **2** with spring retainers **3**.

1.2 Operation with auxiliary pulley block on pivot section*

NOTICE

Damage to auxiliary device!

If the following notes are not observed, the hook block, the hoist rope or the auxiliary block can be damaged!

For operation with auxiliary pulley block on the pivot section, do **not** telescope out and run only the radii ranges, which are specified in the load chart.

Before operation with the auxiliary pulley block, the rope guard pins on the hook block must be removed!

When the hook block is on the ground, it must be ensured that the ropes remain in the pulleys!

If the limit switch chain **4** on the hoist limit switch weight is set too short, then the hook block can run onto the auxiliary device when the hoist rope is spooled up and damage it severely.

- ▶ Do not telescope out!
- ▶ On the hook block **19**, remove the spring retainers **18** and pull out the rope guard pin!
- ▶ Check if all ropes are in the pulleys.
- ▶ Before operation with the auxiliary device, set the limit switch chain **4** on the hoist limit switch weight to maximum length.

- ▶ Check if all prerequisites have been met.

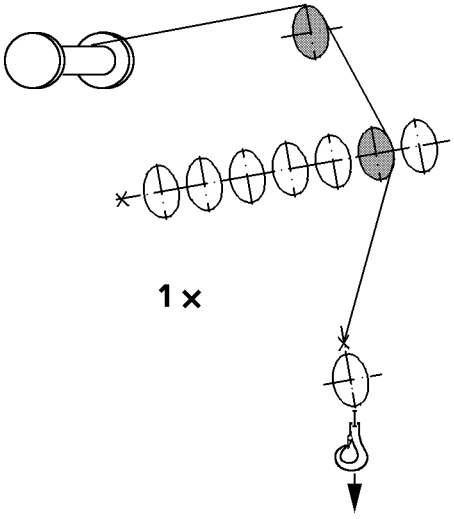

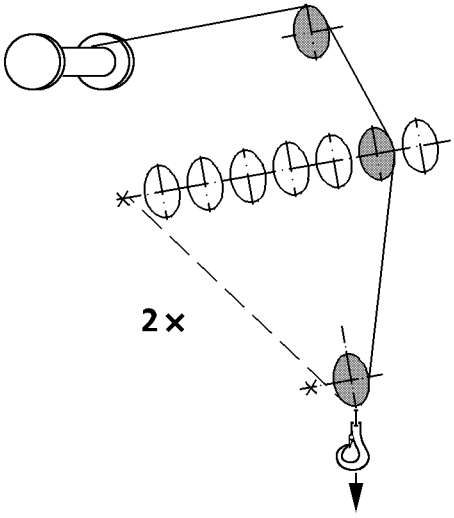

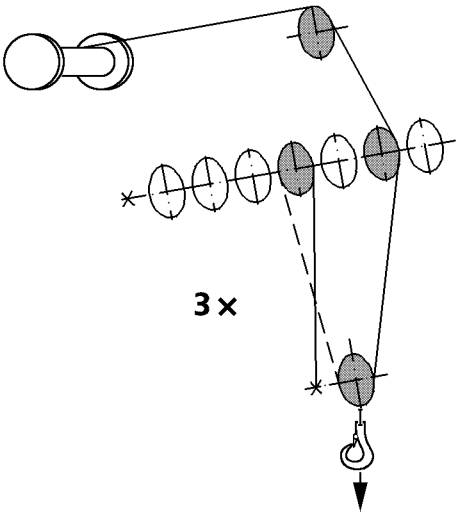

B191927

1.3 Reeving in, T-operation

1.3.1 1-pulley hook block / load hook

Reeving	Rope fixed point
1x	On the hook block or on the load hook fixed point
2x	On the pulley head
3x	On the hook block

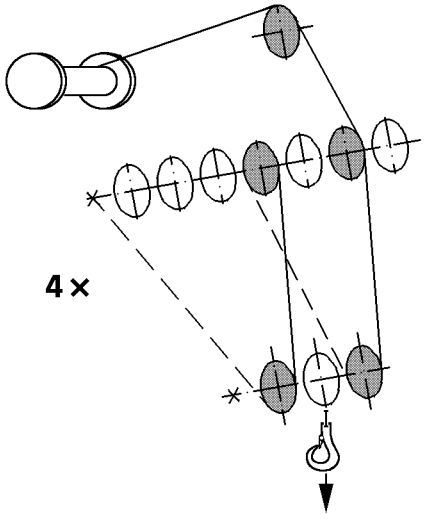

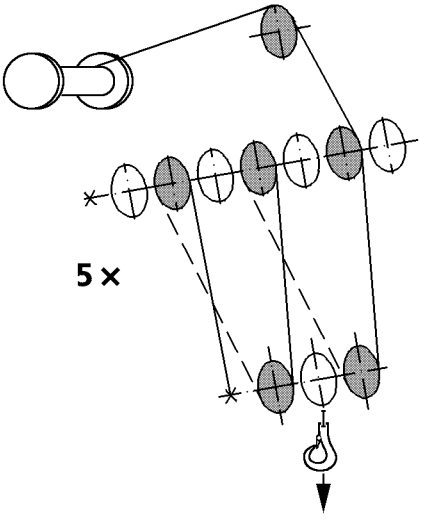

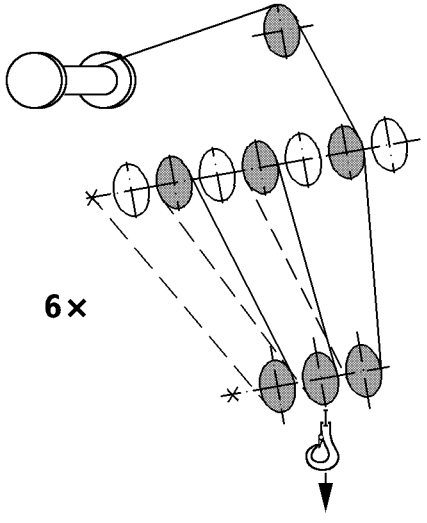

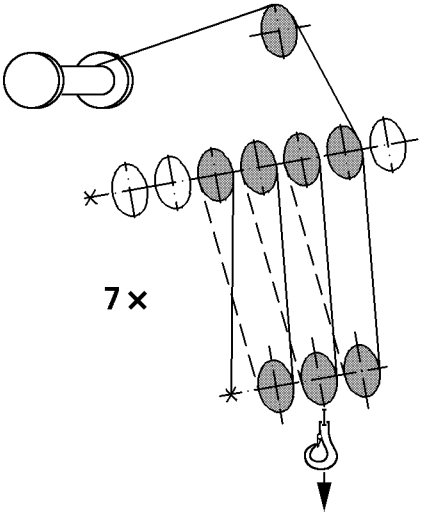

B191928

1.3.2 3-pulley hook block

Reeving	Rope fixed point
4x	On the pulley head
5x	On the hook block
6x	On the pulley head
7x	On the hook block

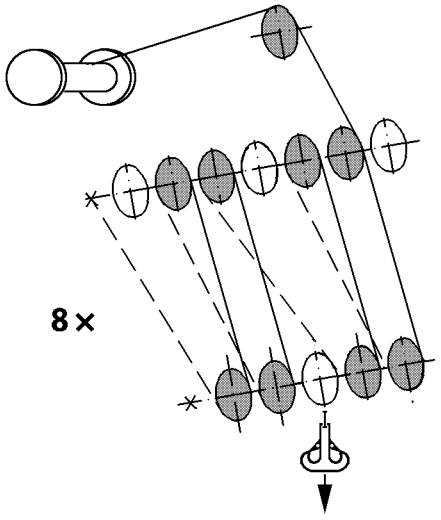

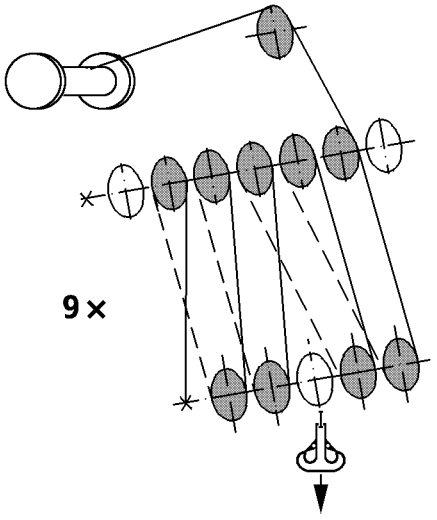

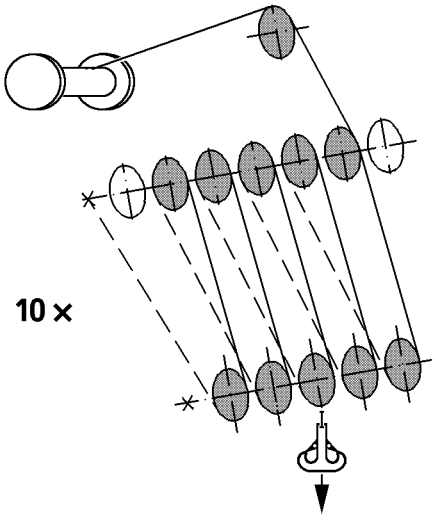

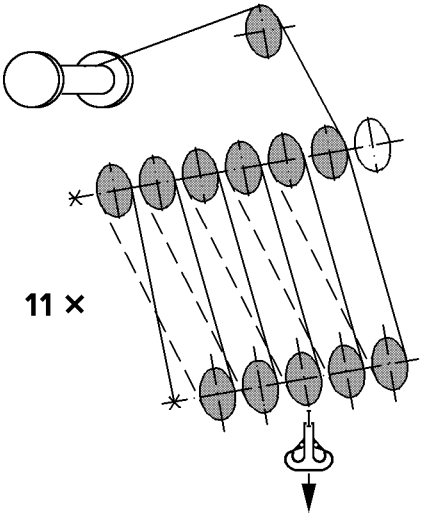

B191929

1.3.3 5-pulley hook block

Reeving	Rope fixed point
8x	On the pulley head
9x	On the hook block
10x	On the side on the pulley head
11x	On the hook block

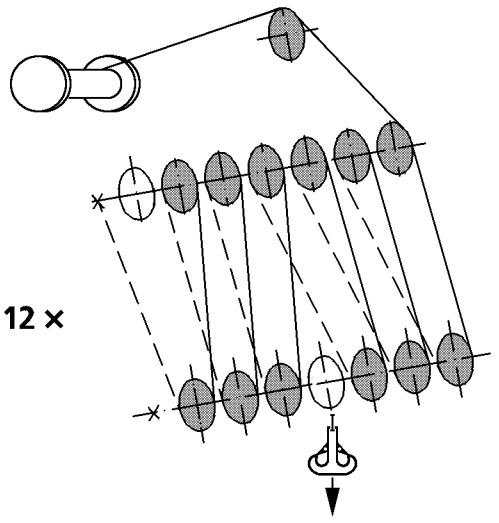

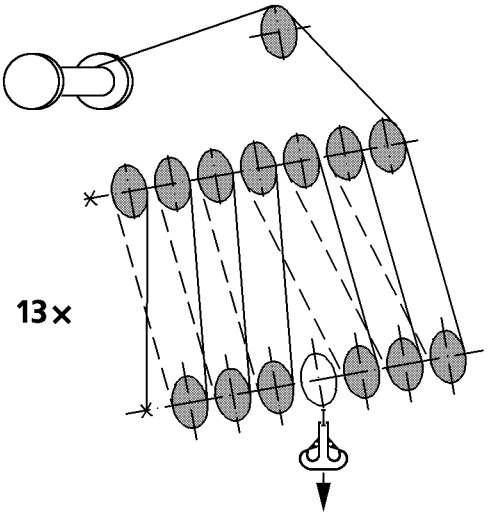

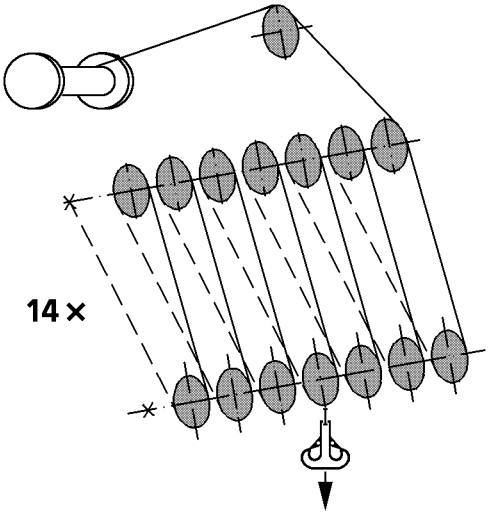

B191930

1.3.4 7-pulley hook block

Reeving	Rope fixed point
12x	On the pulley head
13x	On the hook block
14x	On the pulley head

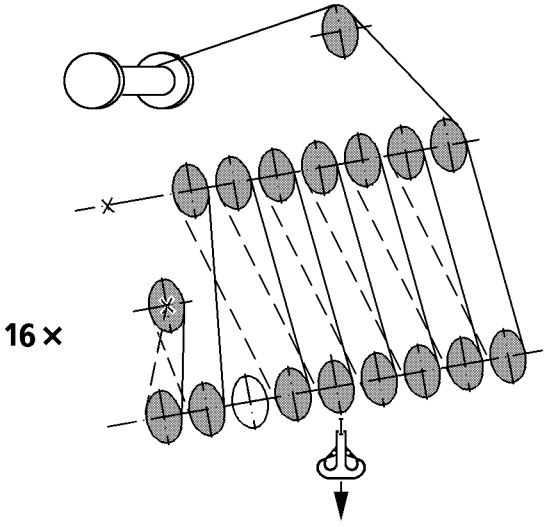

B116618

1.3.5 9-pulley hook block

Reeving	Rope fixed point
16x	On the auxiliary device

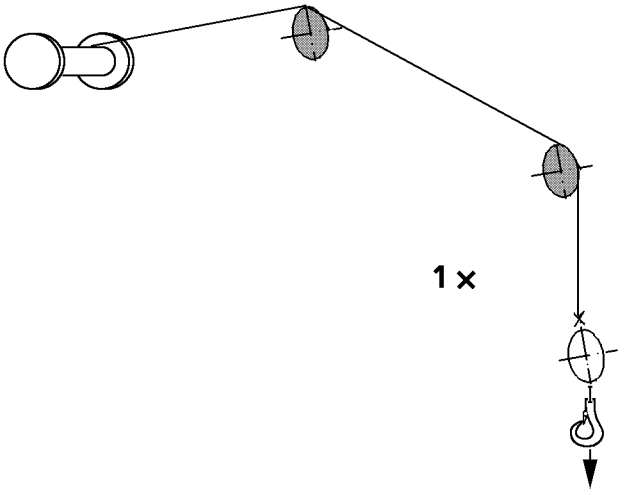

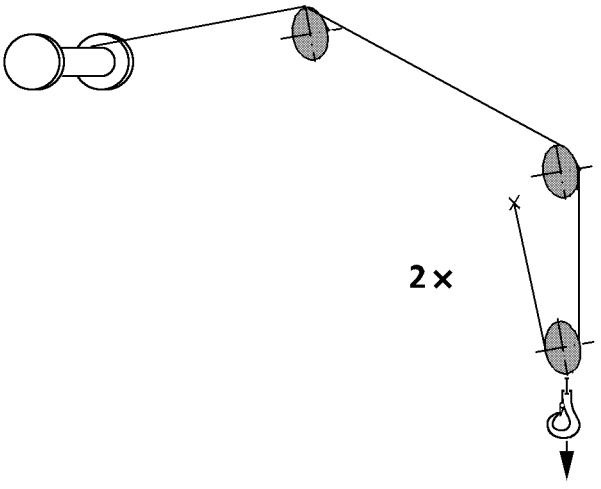

B191932

1.4 Reeving TK / TVK / TNZK / TVNZK operation

Reeving	Rope fixed point
1x	On the hook block or on the load hook fixed point
2x	On the pulley head

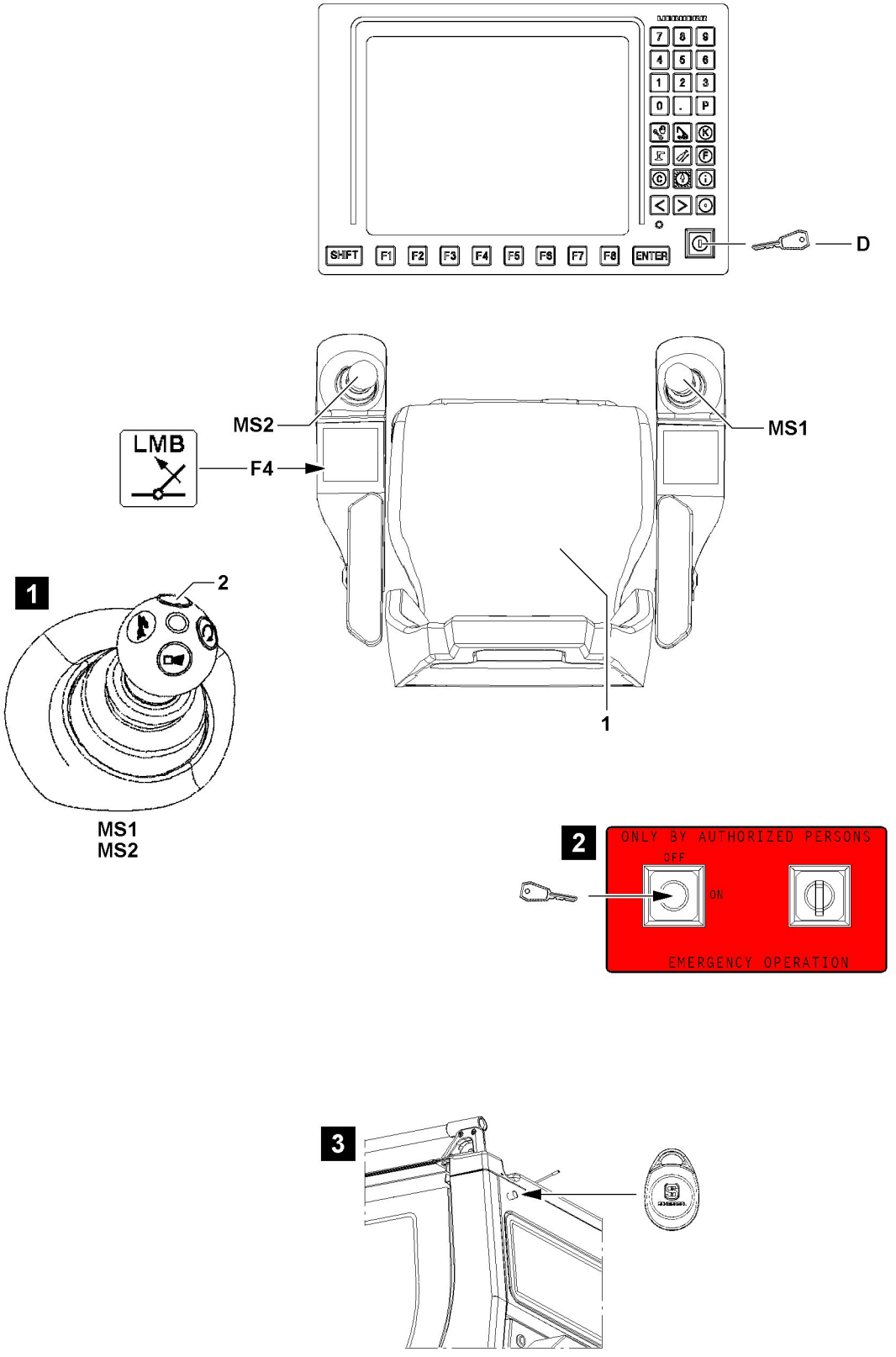
SHIFT
F1
F2
F3
F4
F5
F6
F7
F8
ENTER
D
MS2
MS1
LMB
F4
1
2
1
MS1
MS2
2
ONLY BY AUTHORIZED PERSONS
OFF
ON
EMERGENCY OPERATION
3

B117245

1 General

WARNING
Limits of LICCON computer system!
The LICCON computer system cannot reduce the danger of accidents in case of unsuitable or careless operation nor abrogate physical limits.
The LICCON computer system cannot take into account errors or judgment / erroneous operation.
- ▶ The responsibility for safe crane operation / assembly operation and crane application is resting solely with the crane operator and operating personnel.
- ▶ Always match crane operation / assembly operation and crane application with the operating conditions.

Note
- ▶ The monitor illustrations in this chapter are only examples.
- ▶ The numerical values in the individual icons and charts do not have to necessarily match the crane exactly.
- ▶ Numbers and letters can be replaced by place holders.
- ▶ The display and assignment of the icons can deviate, depending on the set up configuration, operating status and configuration of the crane.
- ▶ In addition, many of the illustrations show the maximum configuration of the LICCON monitor with icons.
- ▶ In crane operation, an identical display will **not** appear on the LICCON monitor.

Note
- ▶ Load hook and hook block are generally also described as hooks.

1.1 Operating elements for special cases at operation of the LICCON overload protection

Within the crane operator's cab, two buttons are installed as operating elements for “Special cases at operation of the LICCON overload protection”
- Button **F4** in the left control console.
- Set up key **D** on LICCON monitor 0

Depending on the crane configuration, an additional operating element can be installed outside the crane operator's cab as operating element for “Special cases at operation of the LICCON overload protection”:
- Key switch LMB-emergency operation in switch cabinet, see illustration **2**.
- Transponder/Sensor LMB-emergency operation on rear of crane cab, see illustration **3**

If a crane movement is to be carried out with master switch **MS1** or master switch **MS2**, then at least one of the following buttons must be actuated:
- Seat contact button **1**
  - Is actuated by sitting properly on the seat.
- Button **2**
  - To bypass the seat contact button **1**, to be able to work while standing up, if necessary.

1.2 Special cases at operation of the LICCON overload protection

When special cases at operation of the LICCON overload protection occur, then the functionality of the LICCON overload protection is accessed.

WARNING
Access into the functionality of the LICCON overload protection!
If the functionality of the LICCON overload protection is accessed by pressing the key **F4**, set up key **D** or possibly the activation of the LMB-emergency operation, then the LICCON overload protection is entirely deactivated, bypassed or limited.
It is possible to exceed several shut off limits of the LICCON overload protection simultaneously or one after the other.
It is possible to carry out crane movements, which are not monitored by the LICCON overload protection.
Without the LICCON overload protection, no additional protection against overload of the crane via the crane control is present.
▶ When accessing the functionality of the LICCON overload protection, take into account that the LICCON overload protection is deactivated totally or limited.
▶ Carry out any access into the functionality of the LICCON overload protection exclusively according to the specifications in the Operating instructions.

Possible limitation in the crane control:
– During certain “Special cases at operation of the LICCON overload protection”, the working speed of the crane is significantly reduced.
– During certain “Special cases at operation of the LICCON overload protection”, the possibility to control the crane is limited in time.
– During certain “Special cases at operation of the LICCON overload protection”, the individual display instruments show no values.

1.2.1 Special operating conditions

If a special operating status occurs, such as self-blocking of overload protection (“Deadlock”), pressing key **F4** or set up key **D** can provide a remedy.
By pressing the key **F4** you can:
– Luffing in with suspended load

By pressing the set up key **D**, the function “Exceeding the shut off limits of the LICCON overload protection” is activated. This makes it possible:
– To exceed the maximum permissible load moment.
– To exceed the maximum value of the F-load display in crane operation
– To make it possible to carry out some limited crane movements after LMB-STOP due to sensor errors, when the erroneous sensor is not required for monitoring by the LICCON overload protection.

Note
▶ If there is no defect at a sensor and a load chart is available, then the display values remain for the crane utilization (load capability display).
▶ Depending on the crane configuration, exceeding the maximum permissible load moment is limited to 110 %.

1.2.2 Assembly / disassembly procedures

By pressing the set up key **D** you can:
– Bypass the LICCON overload protection to carry out erection / take down procedures and assembly procedures
– Bypass hoist top shut off (erection / take down procedures and assembly procedures)

Note
▶ For assembly / disassembly procedures, there may not no or significantly fewer reduced display values available.
▶ The display of required display values or determination of required values is ensured when correctly proceeded.

1.2.3 Failure of components

WARNING
Erroneous operation of the crane!
If the LICCON overload protection turns the crane movement off due to failure of components, then the exact cause for the shut off must be determined.
After a failure of components, no normal operating status can be reached. No normal crane operation is possible.
▶ Procedure, see special chapter for Diagnostics and Maintenance.
▶ Assume normal crane operation only when the cause for the shut off has been remedied and the crane control is fully functioning.

Depending on the crane configuration, a shut off due to “failure of components” can be bypassed by:
– Activating the LMB-emergency operation:
  • Key switch LMB-emergency operation in switch cabinet
    or
  • Transponder/Sensor LMB-emergency operation on rear of crane cab
– **or**
– Set up key **D**

The activated function contains the following:
– Allows crane movements in case of failure of components, for example sensors which are required for monitoring by the LICCON overload protection.

1.2.4 Emergency situations

WARNING
Overload of crane!
If the LICCON overload protection is bypassed, then the LICCON overload protection is entirely deactivated.
If the LICCON overload protection is bypassed, there is no further protection against crane overload.
There is no longer a load moment limitation.
If the LICCON overload protection is bypassed, the crane can be overloaded readily.
Overload of the crane can lead to accidents.
During accidents, personnel could be killed or seriously injured.
▶ If the LICCON overload protection is bypassed, take into account that the LICCON overload protection is entirely deactivated.
▶ If the LICCON overload protection is bypassed, the crane operator assumes the full responsibility for his actions.

Depending on the crane configuration, the LICCON overload protection can be bypassed by:
– Activating the LMB-emergency operation:
  • Key switch LMB-emergency operation in switch cabinet
    or
  • Transponder/Sensor LMB-emergency operation on rear of crane cab
– **or**
– Set up key **D**

The activated function contains the following:
– Allowing crane movements in emergency situations without monitoring by the LICCON overload protection

Note
▶ Installation location of operating elements, see Chapter 4.01

1.3 Operating status of crane

A **“normal operating status”** can only be reached if all of the following statements apply:

- The crane is in proper condition.
- The crane is set up according to the specifications in the Operating instructions.
- The set up configuration of the crane has been entered correctly into the LICCON computer system.
- The crane is in the range of a valid load chart.
- The crane utilization is in the range of 0 % to 100 %.
- The F-load display is in the permissible range.
- All required displays in the LICCON monitors provide the correct display values.
- All required display instruments are functioning.
- The local conditions meet the specifications for crane application.

“**No normal operating status** ” is, among others, if one or more of the following statements apply:

- The crane has defects, which compromise the operational safety.
- The crane is not set up according to the specifications in the Operating instructions.
- The set up status of the crane deviates from the entries in the LICCON computer system.
- The limit values from the load charts are exceeded.
- The maximum permissible load moment is exceeded.
- The hoist top shut off is bypassed.
- The limit values from the F-load display are exceeded.
- Required displays in the LICCON monitors provide no correct display values.
- Required display instruments are not functioning.
- The functionality of the LICCON overload protection has been accessed by pressing the key **F4**, set up key **D**.
- When the LMB emergency operation is activated.
- Crane movements are carried out without functioning overload protection.
- Crane movements are carried out outside of the load charts.
- A special case at operation of the LICCON overload protection has occurred.

blank page!

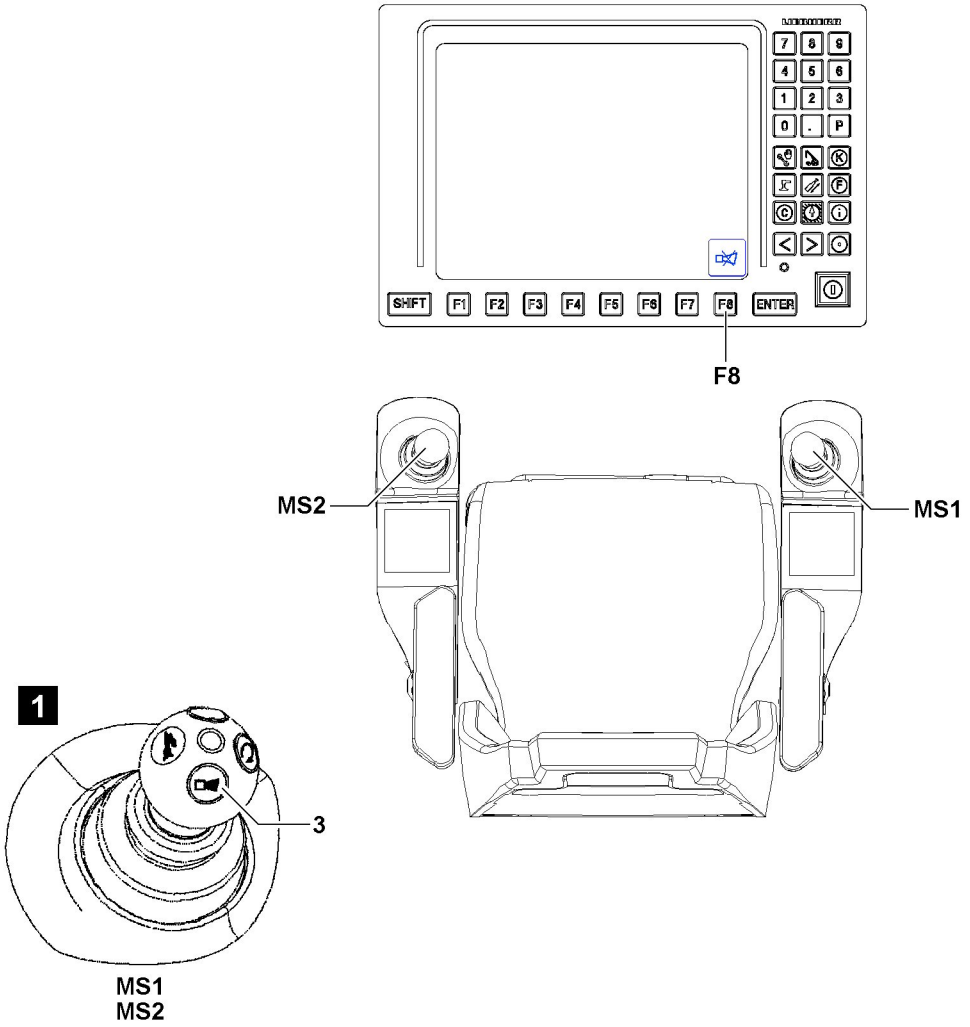

B117246

1.4 Overview of acoustic / optical warnings

- Via the signal sounds of the LICCON monitor, the acoustic warnings are issued to the crane operator.
- Via a horn on the turntable, the acoustic warnings are issued to the crane surrounding area.
- Via warning icons in display instruments, the optical warnings are issued to the crane operator.
- Via the LMB-warning lights, optical warnings are issued to the area surrounding the crane.
- The acoustic warnings within the crane operator's cab are turned off by pressing the key **F8** on the corresponding LICCON monitor.
- The shut off of the acoustical warnings outside the crane operator's cab is made by pressing the button **3** (signal horn / horn, illustration **1**) on master switch **MS1** or master switch **MS2**.

1.4.1 General notes regarding the acoustic / optical warnings to the crane surrounding area

WARNING
Disregard of acoustic or optical warnings!
If persons in the crane surrounding area are not informed about the meaning of acoustic / optical warnings of the crane, then there is a danger of accidents.
▶ Only persons who have been informed how to proceed correctly according to the acoustic / optical warnings may be in the area surrounding the crane.

In reference to the horn on the turntable, the following applies:
- An intermittent sound is heard: A special case in the operation of the LICCON overload protection has occurred or the overload protection has turned the crane movement off.

In reference to the three color light **9**, (illustration **2**) the following applies:
- The three color light **9** lights up green: The crane is in normal operating status.
- The three color light **9** lights up yellow: The crane is still in normal operating status, an advance warning for upcoming shut off exists.
- The three color light **9** lights up red: The crane movement was turned off by the overload protection.
- The three color light **9** blinks yellow: A special case at operation of the LICCON overload protection has occurred.
- The three color light **9** blinks red: A special case at operation of the LICCON overload protection has occurred.

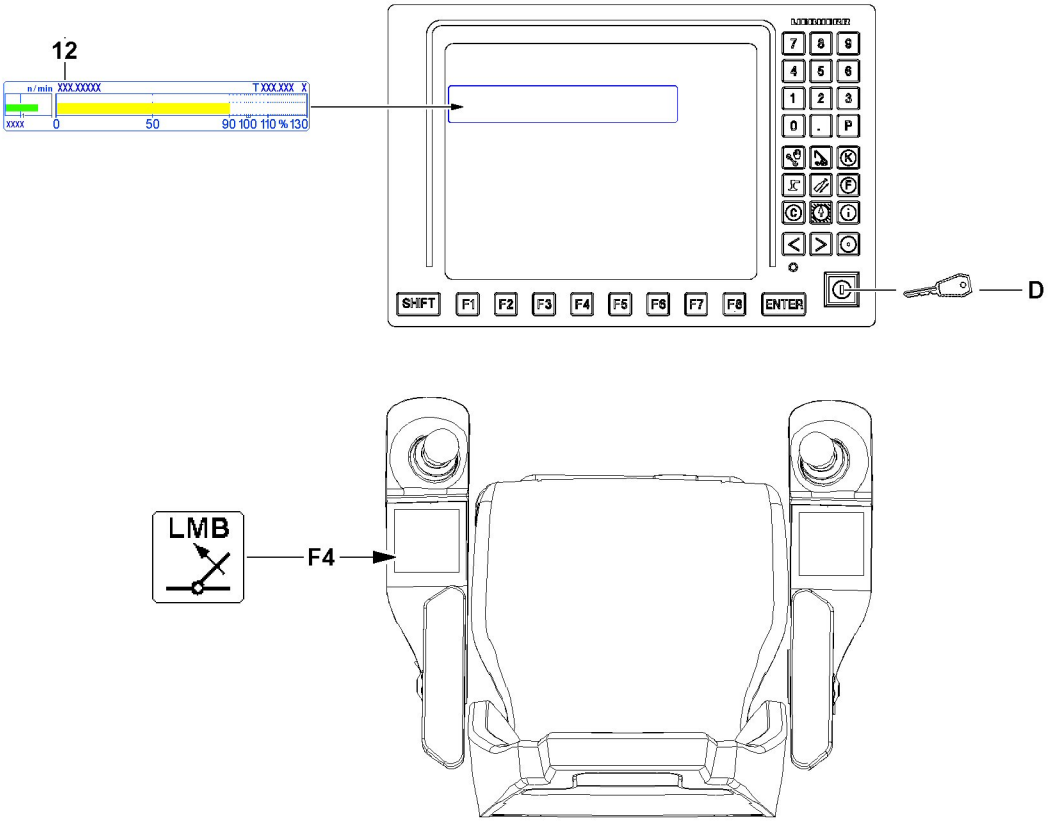
12
n/min XXX.XXXXX
T XXX.XXX X
XXXX 0 50 90 100 110 % 130
SHIFT
F1
F2
F3
F4
F5
F6
F7
F8
ENTER
D
LMB
F4

B117247

1.4.2 Description of acoustic / visual warnings

The occurrence of acoustic / optical warnings in crane operation is explained via sample situations. The situation numbers from the chart “Overview of possible situations” is valid for the following charts in this chapter:

– Acoustic / visual warnings on the LICCON monitor
– LMB warning lights
– Horn on the turntable

Note

▶ The percentage values in the “Overview of possible situations” refers to the crane utilization according to the display in the bar diagram for utilization **12**.

Overview of possible situations	
Situation number	**Sample description of the situation**
Situation 001	Normal operating status with crane utilization of 0 % to 100 %.
Situation 003	The crane movement was turned off due to a crane utilization above 100 % - LMB-STOP was triggered.
Situation 004	The crane movement was turned off even though the crane utilization is below 100 % - LMB-STOP was triggered.
Situation 005	The crane movement “luffing in with suspended load” is carried out at a crane utilization above 100 % via the **F4** key.
Situation 006	Failure of components
Situation 010	The shut off limits of the LICCON overload protection are deactivated / exceeded with the set up key **D** .
Situation 011	An actuated hoist limit switch (hoist top shut off) is bypassed with the set up key **D** .
Situation 020	The assembly operation was activated with the set up key **D** to erect / take down the boom system. No load chart is available.

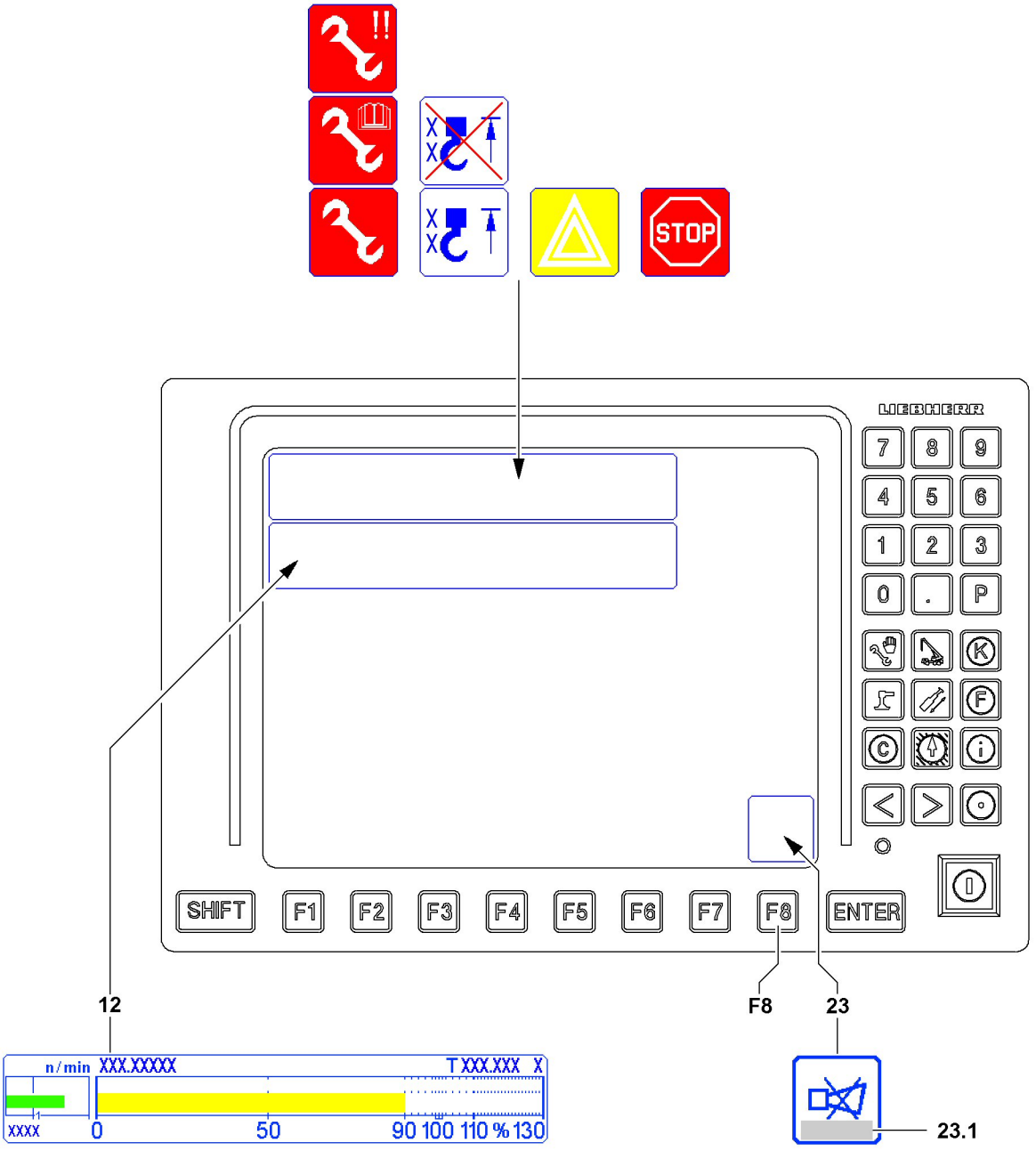
STOP
LIEBHERR
7 8 9
4 5 6
1 2 3
0 . P
SHIFT F1 F2 F3 F4 F5 F6 F7 F8 ENTER
12
F8
23
23.1
n/min XXX.XXXXX
T XXX.XXX X
XXXX 0 50 90 100 110 % 130

B117248

1.4.3 Acoustic / visual warnings within the crane operator's cab

Note

- ▶ For description of the situations assigned to the situation numbers, see chart “Overview of possible situations”
- ▶ The percentage values refer to the crane utilization according to the display in the bar diagram for utilization **12**.

WARNING

Erroneous operation of the crane!

- ▶ In relation with acoustic / optical warnings in the horn **23** icon, pay attention to the notes regarding error messages **23.1**.

Acoustic / visual warnings on the LICCON monitor							
Situation number	**Acoustic warning**		**Visual warning LICCON monitor**				
	Horn short[2)]	**Horn long[2)]**	**Warning signs**		**Special signs**		
Situation 001	From 90 %	-	From 90 %	-	-	-	-
Situation 003	From 90 %	From 101 %	From 90 %	From 101 %	-	-	-
Situation 004	-	Always	-	Always	-	-	-
Situation 005	-	From 101 %	From 101 %	From 101 %			
Situation 006				Always		Always[3)]	
Situation 010	From 90 %	From 101 %	From 90 %	From 101 %	Always	-	-
Situation 011[1)]	-	Always	-	-	-	-	Always
Situation 020	-	Always	-	-	-	Always	-

1) Is in part superseded by other warnings

2) Can be turned off immediately on the LICCON monitor key **F8**

3) Depending on the crane configuration, a similar icon appears, in which two exclamation marks (upper right) appear, see also chapter 4.02

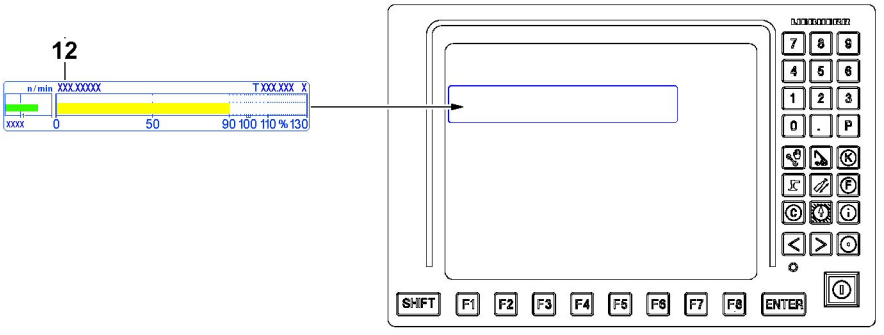
12
n/min XXX.XXXXX
T XXX.XXX X
XXXX 0 50 90 100 110 % 130
SHIFT
F1
F2
F3
F4
F5
F6
F7
F8
ENTER

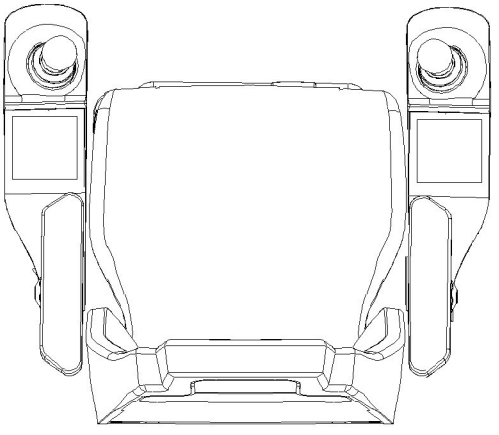

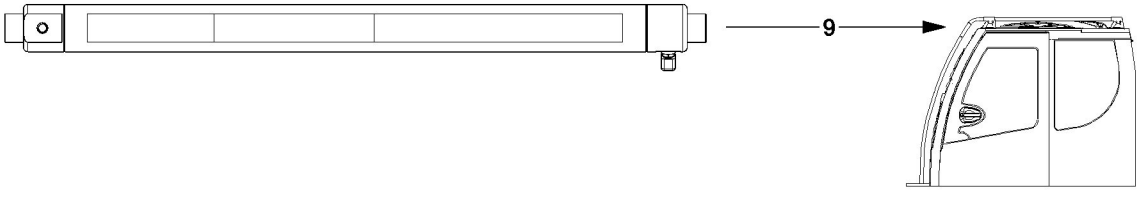
9

B117249

1.4.4 Acoustic / visual warnings outside the crane operator's cab

Note

- ▶ For description of the situations assigned to the situation numbers, see chart “Overview of possible situations”
- ▶ The percentage values refer to the crane utilization according to the display in the bar diagram for utilization **12**.

LMB warning lights				
Situation number	**At utilization of crane**	**Three color light 9**		
		Green	**Yellow**	**Red**
Situation 001	0 % to 89 %	Lights up		
	90 % to 100 %		Lights up	
Situation 003	From 101 %			Lights up
Situation 004	Always			Lights up
Situation 005	From 101 %			Blinks
Situation 006	Always			Blinks
Situation 010 4)	0 % to 89 %	Lights up		
	90 % to 100 %		Lights up	
	101 % to 110 %		Blinks	
	From 111 %			Lights up
Situation 010	0 % to 89 %	Lights up		
	90 % to 100 %		Lights up	
	From 101 %			Blinks
Situation 011 1)	Always		Blinks	
Situation 020	No display value		Blinks	

1) Is in part superseded by other warnings

4) Cranes according to EN13000:2010

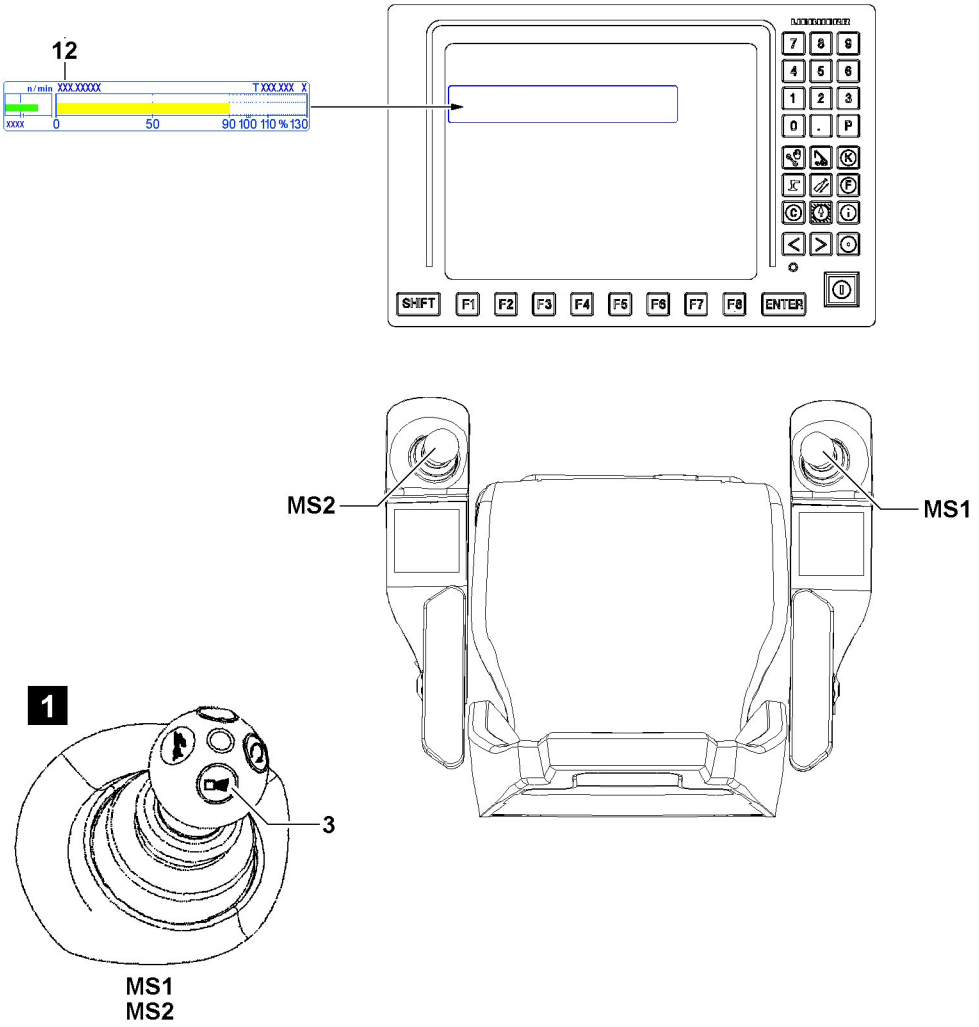
12
n/min XXX.XXXXX
T XXX.XXX X
XXXX 0 50 90 100 110 % 130
SHIFT
F1
F2
F3
F4
F5
F6
F7
F8
ENTER
MS2
MS1
1
3
MS1
MS2

B117250

Note

- For description of the situations assigned to the situation numbers, see chart “Overview of possible situations”
- The percentage values refer to the crane utilization according to the display in the bar diagram for utilization **12**.

The shut off of the acoustical warnings outside the crane operator's cab is made by pressing the button **3** (signal horn / horn, illustration **1**) on master switch **MS1** or master switch **MS2**. The signal shut off is effective no earlier than after five seconds.

Signal turntable		
Situation number	**At utilization of crane**	**Signal type**
Situation 001	0 % to 89 %	-
Situation 002	90 % to 100 %	-
Situation 003	From 101 %	Intermittent sound, can be shut off after five seconds
Situation 004	Always	-
Situation 005	From 101 %	Intermittent sound, can be shut off after five seconds
Situation 006	Always	Intermittent sound
Situation 010	From 111 %	Intermittent sound, can be shut off after five seconds
Situation 011[1)]	Always	Intermittent sound, can be shut off after five seconds
Situation 020	No display value	-

1) Is in part superseded by other warnings

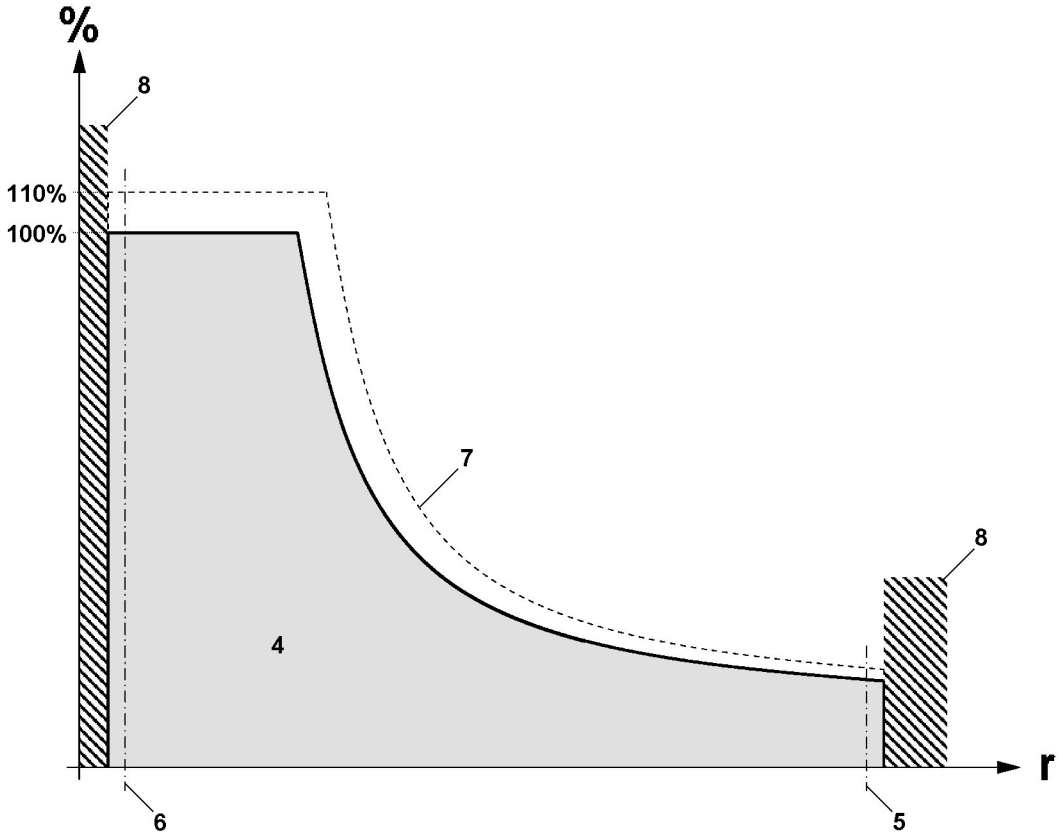

B115265

2 Instructions to resume the crane movement

WARNING
Danger of accident!
If the following points are not observed, personnel can be severely injured or killed.
▶ The crane operator bears the sole and full responsibility for the adherence to measures to be taken in case of shut off of crane movement.

2.1 Overview Load chart

Sample overview of a load chart.

Axle	Description
r	Radius boom (working radius)
%	Utilization of the crane in percentages

Position	Description
4	Range “Load chart available”
5	Lower limit angle load chart
6	Upper limit angle load chart
7	Curve utilization 110 %
8	Range “No load chart available”

2.2 Shut off of crane movement

The LICCON overload protection carries out the following shut offs if a limit value is exceeded in crane operation:
– Shut off of overload
– Shut off Luffing the telescopic boom up / down
– Shut off Luffing the auxiliary boom / accessory up / down
– Shut off Telescoping the telescopic boom out (limit length)
– Shut off Telescoping the telescopic boom in
– Shut off Spooling the winch up / out
– Shut off Hoist top
– Shut off Crane movement with danger of tipping to the rear
– Shut off Maximum value F-load display
– Shut off Telescoping cylinder (pressure too high)
– Shut off due to error message

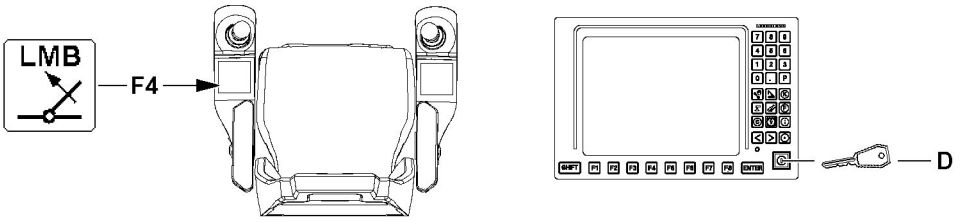

B117251

WARNING
Erroneous operation of the crane!
If the LICCON overload protection turns the crane movement off, then the exact cause for the shut off must be determined first.

- ▶ Determine the cause for the shut off and remedy it if possible without pressing the key **F4** “Luffing in with suspended load” or the set up key **D**.
- ▶ If it is not possible to reset the crane movement causing the shut off, see section “Procedure for special cases at operation of the LICCON overload protection”.

2.2.1 Shut off of overload

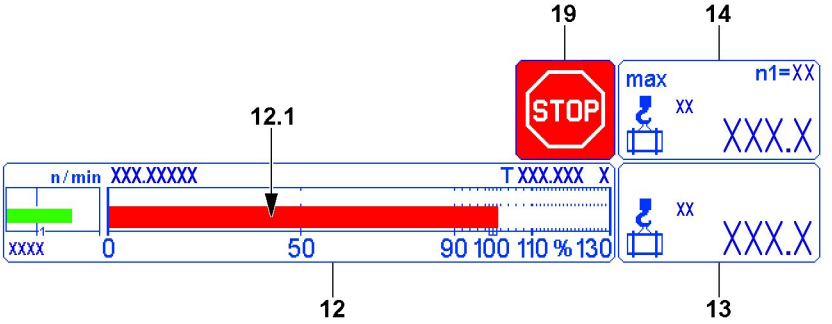

B117252

In the bar diagram utilization **12** the utilization bar **12.1** exceeds the 100 % mark. The LICCON overload protection has turned off the crane movement, icon LMB-STOP **19** appears. The actual load **13** has exceeded the maximum load **14**.

Note
The crane and load may be swaying.
If possible:

- ▶ Wait until the crane and load came to a complete standstill.

- ▶ When the bar diagram utilization **12** levels off at less or equal 100 %:
  Carry out crane movements in such a way that no repeated shut off by the LICCON overload protection occurs.
- ▶ When the bar diagram utilization **12** levels off at more than 100 %:
  Check if there are permissible tasks, which positively influence the utilization of the crane.
- ▶ When necessary and possible:
  Set down the load.

Note
It is possible that the following tasks can positively influence the utilization of the crane:
- ▶ Set down the load and reduce.
- ▶ Reduce the radius.
- ▶ Set down the load and reconfigure the crane to obtain higher load chart values.
- ▶ Set down the load and reduce the radius by changing the crane.

▶ Carry out permissible tasks which reduce the utilization of the crane.

Troubleshooting
The crane operation is limited because the maximum load **14** is seemingly too low or reached too soon?
- ▶ Make sure that the load capacity of the crane is sufficient for the upcoming crane application.
- ▶ Make sure that a valid set up status has been entered on the LICCON computer system.
- ▶ Make sure that the crane is assembled according to the specifications in the Operating instructions.
- ▶ Make sure that the actual set up status and the entered set up status of the crane match.
- ▶ Make sure that all attachment parts and guy rods on the boom system, which are not needed, have been removed (weight).
- ▶ Make sure that the boom system is free of snow and ice (weight).
- ▶ Make sure that the environmental influences (for example wind influence) onto the crane are not too great.
- ▶ Contact Liebherr Service.

▶ When the shut off cannot be remedied despite noting all points listed here:
Change to section “Procedure for special cases at operation of the LICCON overload protection”.

2.2.2 Shut off Luffing the telescopic boom up / down

Note
▶ The illustration of icon **15** depends on the set up status of the crane.

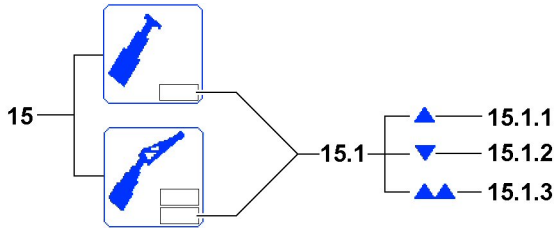

B117253

In the icon **15** the arrow **15.1.1** or arrow **15.1.2** blink and the LICCON overload protection has shut off the crane movement.
“Luffing the telescopic boom up” (arrow **15.1.1**) or “Luffing the telescopic boom down” (arrow **15.1.2**) was shut off because the upper / lower limit angle of the selected load chart was exceeded or fallen below.

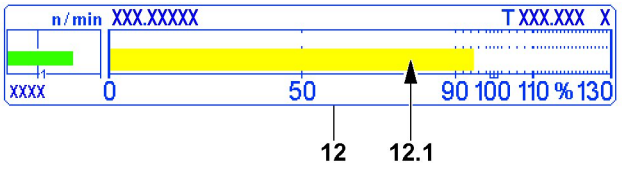

B117254

Note

▶ If the utilization of the crane approaches 100 % (in the bar diagram utilization **12** the utilization bar **12.1** is just before 100 %) and the maximum load according to the load chart (falling load capacity) drops by continuing to luff up the boom, then the arrow **15.1.1** also appears and the crane movement “Luffing the telescopic boom up” is turned off.

If the double arrow **15.1.3** appears, then:

– **either** it was luffed up to a limit switch or the limit switch has turned off the crane movement “Luffing the telescopic boom up”
– **or** there is an error on one of the limit switches “Telescopic boom top”

The arrow **15.1.1** appears and the crane movement “luffing the telescopic boom up” was turned off:

▶ Luff the telescopic boom down.

Result:

– Crane operation is possible again.

The arrow **15.1.2** appears and the crane movement “luffing the telescopic boom down” was turned off:

▶ Luff the telescopic boom up.

Result:

– Crane operation is possible again.

The double arrow **15.1.3** appears and the crane movement “Luffing the telescopic boom up” was turned off:

▶ Luff the telescopic boom down.

Result:

– Crane operation is possible again.

Troubleshooting

The double arrow **15.1.3** appears continuously?

If a double arrow **15.1.3** appears without having luffed the telescopic boom up to a limit switch, then there may be an error in the limit switches / sensors.

▶ Check if there is an error message from the LICCON computer system, see section “Shut off due to error message”.
▶ If yes: Remedy the error immediately.

WARNING

Limited warning functions!

If one of the double version limit switches / sensors is not ok and the crane is continued to be operated, then the warning functions of the LICCON overload protection are limited.

▶ The crane can only be operated in an emergency after failure of a double version limit switch.

▶ Carry out crane movements in such a way that no repeated shut off by the LICCON overload protection occurs.

2.2.3 Shut off luffing the auxiliary boom / accessory up / down

Note

▶ Only in operating modes with auxiliary boom / accessory
▶ The illustration of icon **15** depends on the set up status of the crane.
▶ The description “auxiliary boom / accessory” comprises all boom types which are installed on the telescopic boom luffable / adjustable.

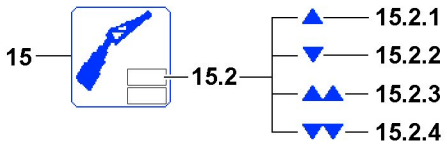

B117255

In the icon **15** (upper field) the arrow **15.2.1** or arrow **15.2.2** blink and the LICCON overload protection has shut off the crane movement.
“Luffing the auxiliary boom / accessory up” (arrow **15.2.1**) or “Luffing the auxiliary boom / accessory down” (arrow **15.2.2**) was shut off because the upper / lower limit angle of the selected load chart was exceeded / fallen below.

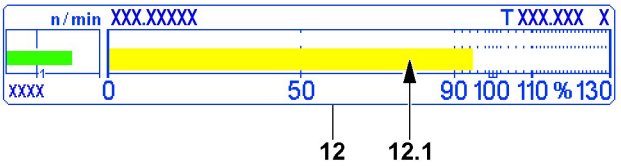

B117254

Note

▶ If the utilization of the crane approaches 100 % (in the bar diagram utilization **12** the utilization bar **12.1** is just before 100 %) and the maximum load according to the load chart (falling load capacity) drops by continuing to luff up the boom, then the arrow **15.2.1** also appears and the crane movement “Luffing the auxiliary boom / accessories up” is turned off.

If the double arrow **15.2.3** appears, then:
– **either** it was luffed up to a limit switch or the limit switch has turned off the crane movement “Luffing the auxiliary boom / accessory up”
– **or** the mechanical relapse support has turned off the crane movement “Luffing the auxiliary boom / accessory up”
– **or** there is an error on one of the limit switches “Auxiliary boom / accessory top”.

If the double arrow **15.2.4** appears, then:
– **either** it was luffed down to a limit switch “Auxiliary boom / accessory bottom” and the limit switch has turned off the crane movement “Luffing the auxiliary boom / accessory up”
– **or** there is an error on one of the limit switches “Auxiliary boom / accessory bottom”

The arrow **15.2.1** appears and the crane movement “Luffing the auxiliary boom / accessory up” was turned off:
▶ Luff the auxiliary boom / accessory down.

Result:
– Crane operation is possible again.

The arrow **15.2.2** appears and the crane movement “Luffing the auxiliary boom / accessory down” was turned off:
▶ Luff the auxiliary boom / accessory up.

Result:
– Crane operation is possible again.

The double arrow **15.2.3** appears and the crane movement “Luffing the auxiliary boom / accessory up” was turned off:
▶ Luff the auxiliary boom / accessory down.

Result:
– Crane operation is possible again.

Troubleshooting
The double arrow **15.2.3** appears continuously?
If a double arrow **15.2.3** appears without having luffed up to a limit switch, then there may be an error in the limit switches “Auxiliary boom / accessory top”.
▶ Check if there is an error message from the LICCON computer system, see section “Shut off due to error message”.
▶ If yes: Remedy the error immediately.

The double arrow **15.2.4** appears and the crane movement “Luffing the auxiliary boom / accessory down” was turned off:
▶ Luff the auxiliary boom / accessory up.
Result:
– Crane operation is possible again.

Troubleshooting
The double arrow **15.2.4** appears continuously?
If a double arrow **15.2.4** appears without having luffed down to a limit switch, then there may be an error in the limit switches / sensors.
▶ Check if there is an error message from the LICCON computer system, see Diagnostics manual.
▶ If yes: Remedy the error immediately.

WARNING
Limited warning functions!
If one of the double version limit switches / sensors is not ok and the crane is continued to be operated, then the warning functions of the LICCON overload protection are limited.
▶ The crane can only be operated in an emergency after failure of a double version limit switch / sensor.

▶ Carry out crane movements in such a way that no repeated shut off by the LICCON overload protection occurs.

2.2.4 Shut off Telescoping the telescopic boom out (limit length)

B117258

In the “Horn” icon, illustration **1** appears an error message. An acoustical signal sounds, the LICCON overload protection has interrupted the crane movement “Telescoping the telescopic boom out”. Depending on the crane type, the double arrow in the icon **16** will also blink.
The crane movement “Telescoping the telescopic boom out” was shut off because the **limit length** of the selected load chart has been exceeded.
▶ Telescope the telescopic boom in.
Result:
– Crane operation is possible again.

2.2.5 Shut off Telescoping the telescopic boom in

B117258

In the “Horn” icon, illustration **1** appears an error message. An acoustical signal sounds, the LICCON overload protection has interrupted the crane movement “Telescoping the telescopic boom in”. Depending on the crane type, the double arrow in the icon **16** will also blink.
The crane movement “Telescoping the telescopic boom in” was shut off because the **limit length** of the selected load chart has been fallen below.

▶ Telescope the telescopic boom out.

Result:

– Crane operation is possible again.

2.2.6 Shut off spooling the winch up / out

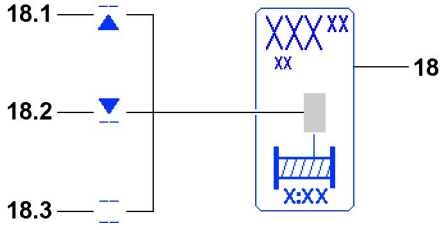

B117256

In the icon **18**, the line / arrow **18.1**, arrow / line **18.2** or line / line **18.3** appears and the LICCON overload protection has shut off the crane movement.
“Spooling the winch out” (line / arrow **18.1**) or “Spooling the winch up” (arrow / line **18.2**) was shut off because the upper / lower limit angle of the rope for the selected winch was exceeded or fallen below.
If line / line **18.3** appears blinking in the icon **18**, then the affected winch is deactivated.

The line / arrow **18.1** appears and the crane movement “Spooling the winch out” was turned off:

▶ Spool the winch up.

Result:

– Crane operation is possible again.

The arrow / line **18.2** appears and the crane movement “Spooling the winch up” was turned off:

▶ Spool the winch out.

Result:

– Crane operation is possible again.

The line / line **18.3** appear and the winch is deactivated:

▶ Activate the winch, see chapter 4.02.

Result:

– Crane operation is possible again.

2.2.7 Shut off hoist top

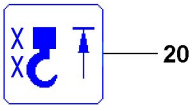

B115281

The icon “hoist top” **20** appears in the LICCON monitor and the LICCON overload protection has turned off crane movement.
Spooling the hoist winch up was turned off because the hook (hook block / load hook) has touched a hoist limit weight during the upward movement and the affected hoist limit switch was triggered.

WARNING
Property damage / falling load!
▶ After shut off spool hoist winch up (hoist top), for every further crane movement, the distance between the hook (hook block / load hook) and the boom head must be checked.

Note
▶ After a hoist top shut off occurred, further crane movements, which affect the length of the hoist rope are also shut off.

▶ Spool the hoist winch out.

Result:
– Crane operation is possible again.

2.2.8 Shut off Crane movement with danger of tipping to the rear

Note
▶ Applies only for cranes with support force monitoring*.

WARNING
Danger of tipping backward!
When reaching the programmed minimum / maximum support force limits there is **no** automatic shut off of crane movements.
Exception: When the two supports with the lowest forces are in boom direction, then some crane movements which increase the “danger of tipping to the rear” significantly are turned off.
▶ If there is a “danger of tipping to the rear”, luff the boom down carefully or telescope out until the support limit forces are again within the minimum / maximum values.

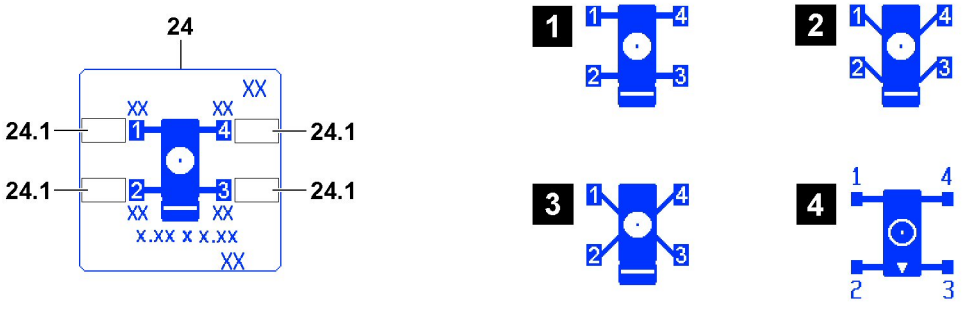

B117257

The icon **24** (depending on the crane similarly to illustration **1** to illustration **4**) is shown in the LICCON monitor with blinking values in the fields **24.1** of the supports with the lowest forces. An acoustical signal sounds and the LICCON overload protection has shut off the crane movement.
Crane movements which increase the “danger of tipping to the rear” significantly were turned off.
▶ Luff the boom down carefully until the support limit forces are again within the minimum / maximum values and no value in the fields **24.1** blinks any longer.

Result:
– Crane operation is possible again.

Note
Possibilities to counteract the tipping danger to the rear:
- ▶ Luff down the boom.
- ▶ Telescope the boom out.
- ▶ Reduce the counterweight.

2.2.9 Shut off Maximum value F-load display

Note
- ▶ Applies only for certain crane types with respective display in the second LICCON monitor.

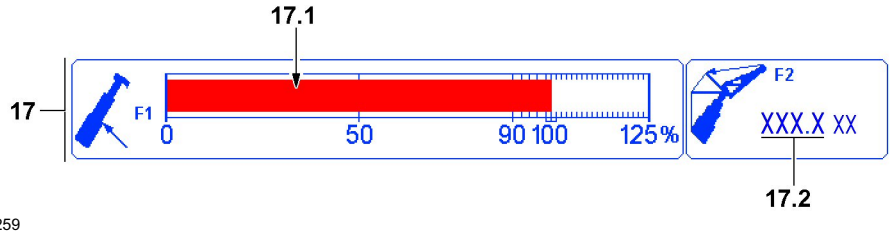

– F1-utilization bar **17.1** = Test point F1 (Pressure display luffing cylinder)
– F2-actual value **17.2** = Test point F2 (force of guying auxiliary boom / accessories)
Note: Appears only for a corresponding boom system

In the F-load display **17** the F1-utilization bar **17.1** exceeds the 100 % mark and the LICCON overload protection has shut off the crane movement. $F1_{actual}$ has exceeded $F1_{max}$.
All subsequent movements, which lead to a deterioration of the force ratios on the test point F1 are shut off.
▶ Reverse any crane movement which has caused the shut off.

or

■ Initiate an alternative crane movement, which improves the force ration on test point F1.
Result:
– Crane operation is possible again.

▶ Carry out crane movements in such a way that no repeated shut off by the LICCON overload protection occurs.

Troubleshooting
The crane operation is limited because the $F1_{max}$ apparently is being reached too early?
- ▶ Make sure that a valid set up status has been entered on the LICCON computer system.
- ▶ Make sure that the crane is assembled according to the specifications in the Operating instructions.
- ▶ Make sure that the actual set up status and the entered set up status of the crane match.
- ▶ Make sure that all attachment parts and guy rods on the boom system, which are not needed, have been removed (weight).
- ▶ Make sure that the boom system is free of snow and ice (weight).
- ▶ Make sure that the wind influence onto the boom is not too great.
- ▶ If no irregularities can be found:
  Contact Liebherr Service.

▶ When the shut off cannot be remedied despite noting all points listed here:
Change to section “Procedure for special cases at operation of the LICCON overload protection”.

2.2.10 Shut off Telescoping cylinder (pressure too high)

Note

▶ Applies only for certain crane types with respective display in the second LICCON monitor.

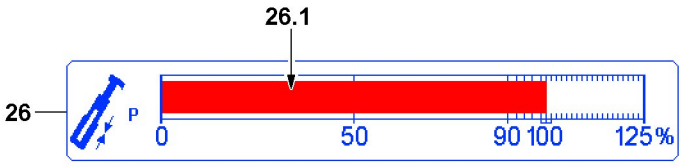

B117260

In the icon **26** (telescoping cylinder pressure) the utilization bar **26.1** reaches the 100 % mark and the LICCON overload protection has shut off the crane movement.
All further movements, which directly lead to an increase of the telescoping cylinder pressure are shut off.

▶ Lower the telescoping cylinder pressure by lowering the load.

or

■ Initiate an alternative crane movement, which lowers the telescoping cylinder pressure.

Result:

– Crane operation is possible again.

In assembly operation:
Make sure that the specifications in the erection / take down charts are observed.

▶ Check that the specifications are observed.

2.2.11 Shut off due to error message

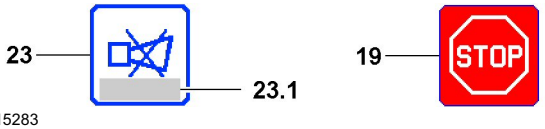

B115283

In the icon **23** appears an error message, the icon **19** appears in the LICCON monitor and the LICCON overload protection has turned off crane movement.

▶ Determine the existing error with the help of the error message from the error field **23.1** in icon **23**, see Diagnostics manual.

▶ Remedy the error.

▶ If the error cannot be remedied:
Contact Liebherr Service.

Troubleshooting

The erection of the crane, for example after assembly on a new job site or with another equipment configuration, is not possible due to an error message?

▶ Evaluate the error message.

▶ Make sure that all electrical connections are established correctly.

▶ Check if all sensors are connected properly.

▶ Check if all end plugs (dust caps with integrated electric) have been connected properly.

Note
If there is a defect on a participating sensor (LMB), then the crane can no longer be operated in normal operating status.
▶ Fix / replace the sensor, contact Liebherr Service if necessary.

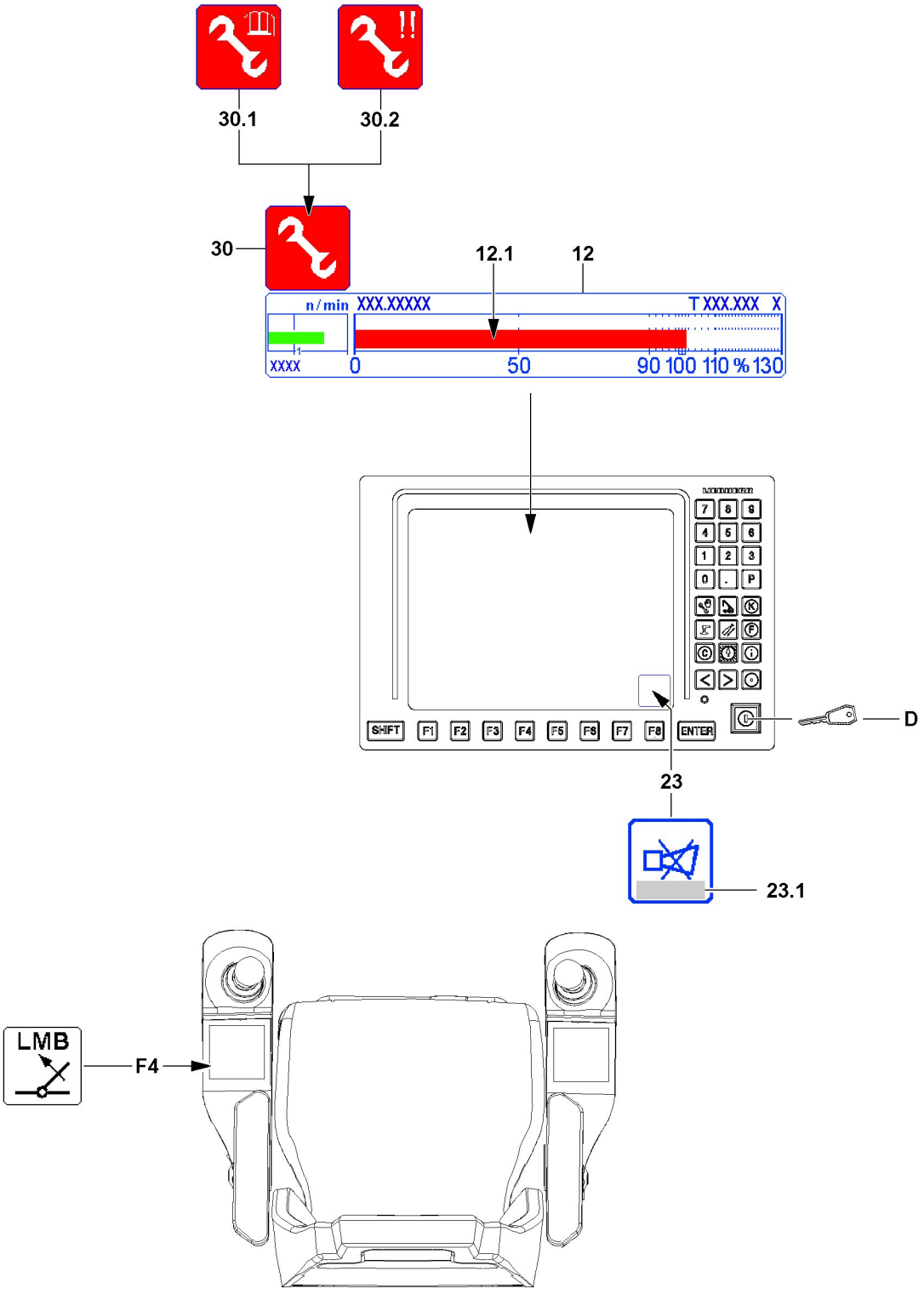
30.1
30.2
30
12.1
12
n / min
XXX.XXXXX
T XXX.XXX X
XXXX
0
50
90 100 110 % 130
SHIFT
F1
F2
F3
F4
F5
F6
F7
F8
ENTER
D
23
23.1
LMB
F4

B117261

2.3 Procedure for special cases at operation of the LICCON overload protection

Within the crane operator's cab, the following operating elements available for Special cases at operation of the LICCON overload protection:

– Button **F4** in the left control console.
– Set up key **D** on the right LICCON monitor

By pressing key **F4** and set up key **D** the functionality of the LICCON overload protection is accessed.
If the set up key **D** is actuated, the assembly icon **30** appears in the LICCON monitor 0.
The assembly icon **30** appears, depending on the situation, also as:

– assembly icon **30.1** - no load chart / assembly status / sensor defect
– assembly icon **30.2** - emergency operation (also with only one exclamation mark)

In the horn icon **23** also appear error messages **23.1**:

– Observe and evaluate error messages **23.1**, see also Diagnostics manual.

WARNING
Risk of overloading and toppling of the crane!
If the functionality of the LICCON overload protection is accessed without knowing the exact cause for the shut off, then the crane can be overloaded and topple over.
Personnel can be severely injured or killed.

▶ Before accessing the functionality of the LICCON overload protection, determine the exact cause for the shut off.
▶ Observe and evaluate error messages **23.1**.

WARNING
Access into the functionality of the LICCON overload protection!
When accessing the functionality of the LICCON overload protection, the LICCON overload protection is deactivated totally or limited.
It is possible to exceed several shut off limits of the LICCON overload protection simultaneously or one after the other.
It is possible to carry out crane movements, which are not monitored by the LICCON overload protection.
Without the LICCON overload protection, no additional protection against overload of the crane via the crane control is present.

▶ When accessing the functionality of the LICCON overload protection, take into account that the LICCON overload protection is deactivated totally or limited.
▶ Carry out any access into the functionality of the LICCON overload protection exclusively according to the specifications in the Operating instructions.
▶ Outside of the load charts, the data in the erection / take down charts is binding.

WARNING
Leaving the load chart!
If the set up key **D** is actuated, it is possible that the crane leaves the range of the load charts.
Without a load chart, various display values are no longer displayed in the crane operating screen.
A load on the hook can no longer be monitored by the LICCON overload protection.
Severe accidents due to crane overload can result.
Personnel can be severely injured or killed.

▶ Do not leave the range of the load charts.

WARNING
Danger of accident due to incorrect procedure!
Due to erroneous operation or deliberate misuse, the crane could collapse, the boom can break off or the crane can topple over.
Key **F4** “Luffing in at suspended load” and set up key **D** may only be actuated when it is ensured that without their actuation no normal operating status (see section “operating status of the crane”) can be reached.
- ▶ Actuate the set up key **D** only when no normal operating status can be reached with the key **F4** “Luffing in with suspended load”.
- ▶ The set up key **D** may only be actuated by persons who are aware of the effects of their acts regarding the access into the functionality of the LICCON overload protection.
- ▶ Access into the functionality of the LICCON overload protection requires the presence of an authorized person and must be performed with utmost caution.
- ▶ Access into the functionality of the LICCON overload protection is prohibited in normal crane operation.

WARNING
Expanded working / danger zone of the crane!
Due to an access into the functionality of the LICCON overload protection it is possible that the working / danger zone of the crane is significantly expanded.
If these circumstances are not observed, collisions and accidents can occur.
Personnel can be severely injured or killed.
- ▶ During a special case at operation of the LICCON overload protection take an expanded working / danger zone of the crane into account and monitor it.

WARNING
Overload of crane!
Luffing in / pulling in of a load standing on the ground is not permissible.
When taking on a load by luffing the boom up, the crane can be overloaded.
This could result in serious accidents.
- ▶ Taking on load by luffing up the boom is prohibited.
- ▶ Take on a load only with the hoist gear.

WARNING
Self-blockade of overload protection (Deadlock)
After activation of the function “exceeding the shut off limits of the LICCON overload protection”, if no crane movements are initiated, which lead immediately to a normal operating status (see section “operating status of the crane”), then the overload protection can be self-blocking (Deadlock).
At a self-blocked overload protection it is no longer possible to control the crane.
- ▶ After activation of the function “exceeding the shut off limits of the LICCON overload protection” initiate crane movements which lead immediately to a normal operating status (see section “operating status of the crane”).

Possible limitation in the crane control during certain “Special cases at operation of the LICCON overload protection”:
- – During certain “Special cases at operation of the LICCON overload protection” the shut off limits of the overload protection can be exceeded by pressing the set up key **D** maximum to 110 %.
- – During certain “Special cases at operation of the LICCON overload protection”, the working speed of the crane is significantly reduced.
- – During certain “Special cases at operation of the LICCON overload protection”, the possibility to control the crane is limited in time.
- – During certain “Special cases at operation of the LICCON overload protection”, the individual display instruments show no values.

Note
Depending on the number of load positions, the display in the bar diagram utilization **12** changes for certain crane types.

- ▶ If an additional utilization bar appears next to the utilization bar **12.1**, then the description applies accordingly.
- ▶ For a detailed description of the Bar diagram utilization **12**, see chapter 4.02.

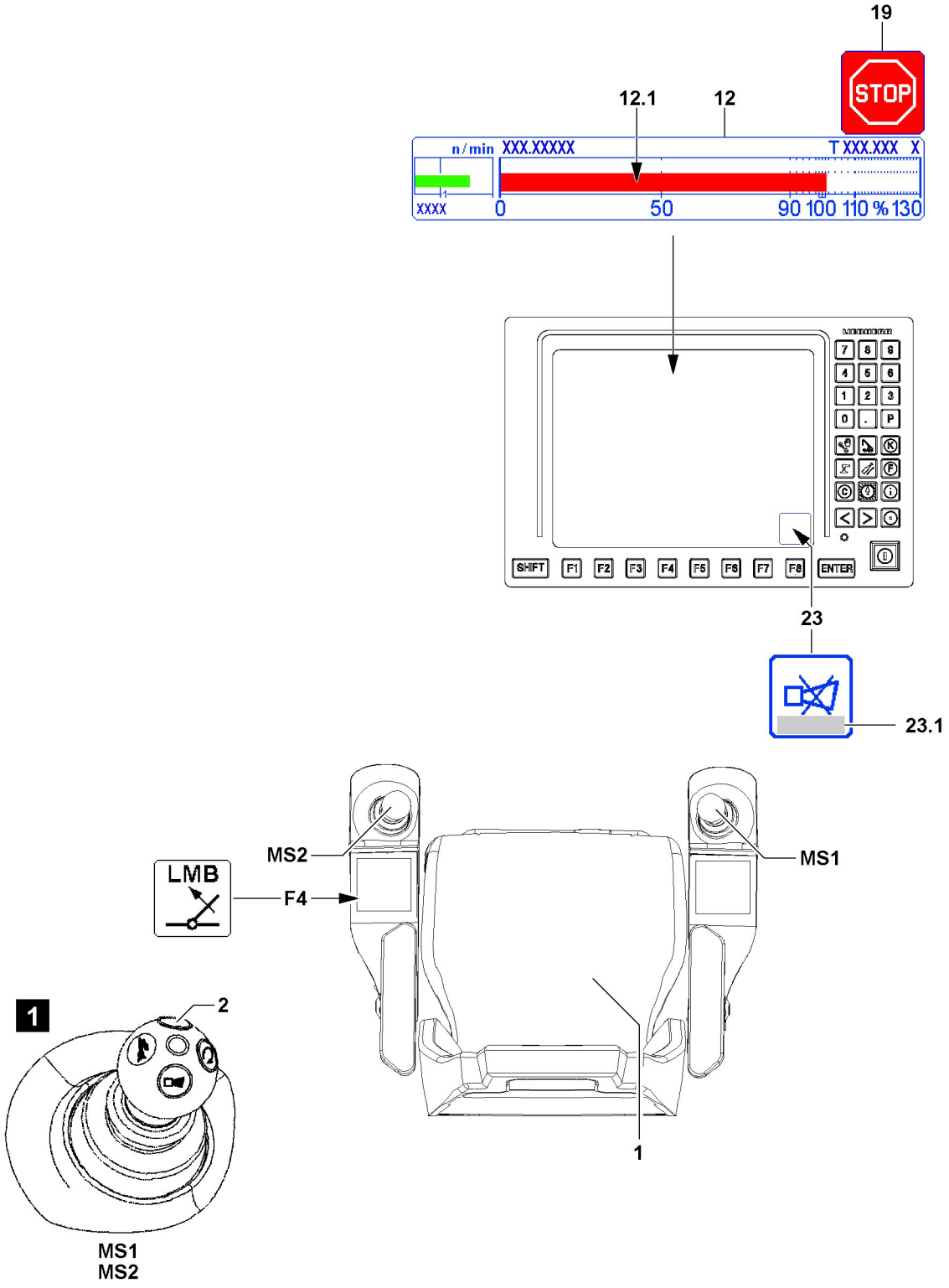
19
STOP
12.1
12
n / min
XXX.XXXXX
T XXX.XXX X
XXXX
0
50
90 100 110 % 130
SHIFT
F1
F2
F3
F4
F5
F6
F7
F8
ENTER
23
23.1
MS2
MS1
LMB
F4
1
2
1
MS1
MS2

B117262

2.3.1 Luffing in with suspended load

If the maximum permissible load torque is exceeded, the LICCON overload protection turns off all crane movements that increase the load torque.
In the bar diagram utilization **12** (load moment display) the utilization bar **12.1** has exceeded the 100 % mark and in the LICCON monitor appears the icon **19**.
This shut off limit can be exceeded by actuating the button **F4** “Luffing in with suspended load”.
Make sure that the following prerequisites are met:
– The load hangs freely.
– The load hook / hook block and boom system have no ground contact.
– Either the seat contact button **1** or one of the buttons **2** (illustration **1**) of the master switches (MS1, MS2) is actuated.

Note
If the load is reduced by luffing up or the values in the bar diagram utilization **12** are exceeded too far, then the key **F4** “Luffing in with suspended load” is possibly not functioning.
▶ Pay attention to notes regarding error messages **23.1** occurring in the horn **23** icon.
▶ For the procedure when the button **F4** “Luffing in with suspended load” is not functioning, see section “Exceedance of maximum permissible load moment”.

▶ Press the key **F4** “Luffing in with suspended load” and hold it.

Result:
– The LICCON overload protection is inactive.

▶ Luff the load in.

The function “Luffing in with suspended load” is deactivated:
– When the key **F4** “Luffing in with suspended load” is not longer actuated.
– When neither the seat contact button **1** nor one of the buttons **2** of the master switches (MS1, MS2) is actuated.

The function “Luffing in with suspended load” is deactivated:
– The LICCON overload protection is active.

▶ Carry out crane movements in such a way that no repeated shut off by the LICCON overload protection occurs.

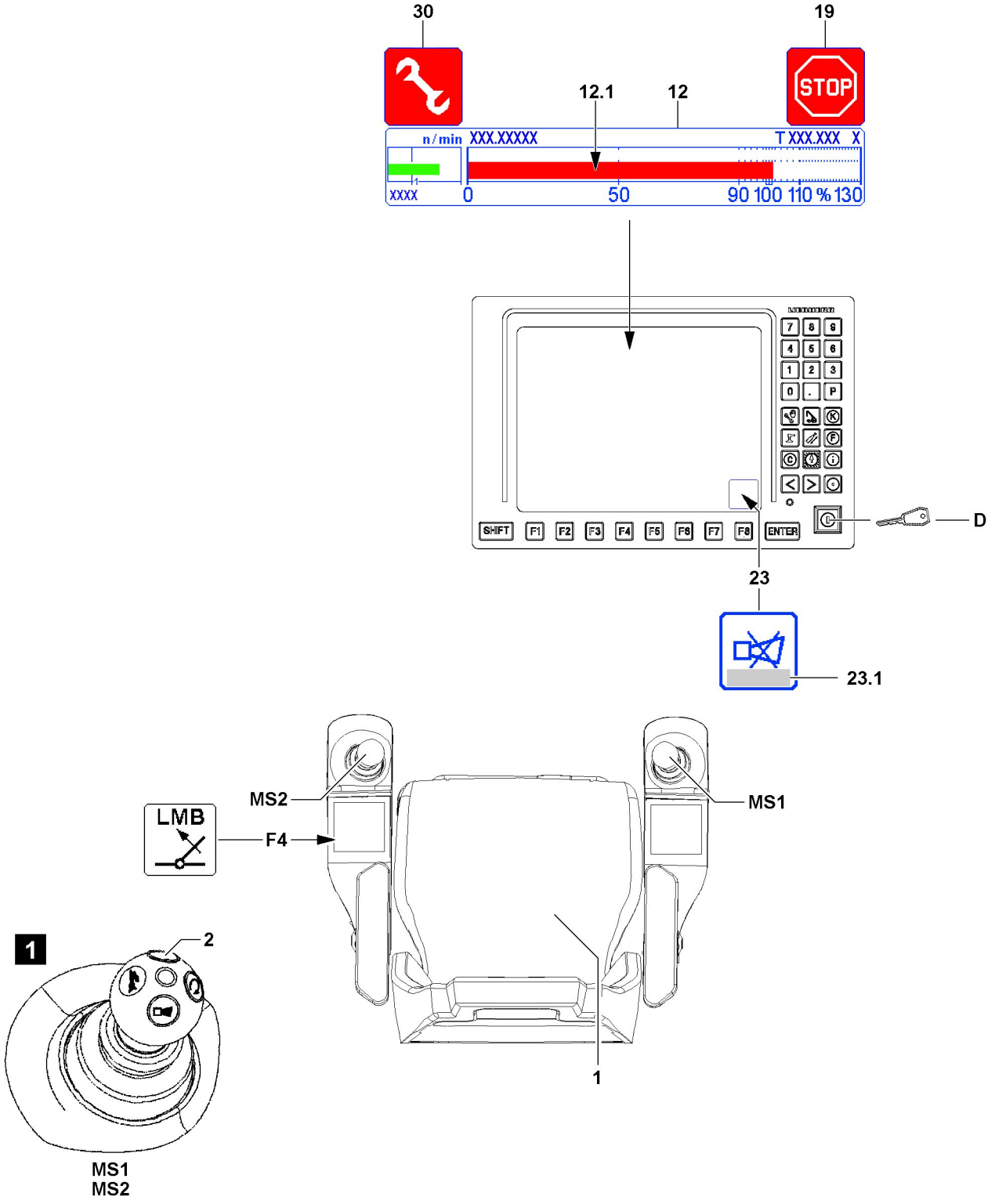
30
19
STOP
12.1
12
n / min
XXX.XXXXX
T XXX.XXX X
XXXX
0
50
90 100 110 % 130
SHIFT
F1
F2
F3
F4
F5
F6
F7
F8
ENTER
D
23
23.1
MS2
MS1
LMB
F4
1
2
1
MS1
MS2

B117263

2.3.2 To exceed the maximum permissible load moment.

If the maximum permissible load torque is exceeded, the LICCON overload protection turns off all crane movements that increase the load torque.
In the bar diagram utilization **12** (load moment display) the utilization bar **12.1** has exceeded the 100 % mark and in the LICCON monitor appears the icon **19**.
This limit value can be exceeded by the set up key **D** in the “right touching” position.

WARNING
Shut off safety device!
If the function “Exceedance of shut off limits of LICCON overload protection” is activated by actuating the set up key **D** then it is possible to exceed the maximum permissible load moment.
▶ All notes regarding the “Special cases at operation of LICCON overload protection” must be observed.

The set up key **D** on the LICCON monitor has two positions:
– Operating position (not actuated): Crane is in normal operation.
– Position to right (touching): The function “Exceedance of shut off limits of the LICCON overload protection” is activated, the assembly icon **30** appears in the LICCON monitor.

Make sure that the following prerequisites are met:
– With the button **F4** “Luffing in with suspended load” no normal operating status (utilization below 100 % and no active shut off) can be reached.
– All master switches are in zero position (not deflected).
– Either the seat contact button **1** or one of the buttons **2** (illustration **1**) of the master switches (MS1, MS2) is actuated.
– The crane is in the range of a load chart.

Note
If the values in the bar diagram utilization **12** are exceeded too far, then the functionality of the set up key **D** may be disabled.
▶ Pay attention to notes regarding error messages **23.1** occurring in the horn **23** icon.

▶ Turn the set up key **D** to the right (touching).

Result:
– The LICCON overload protection is inactive.
– The assembly icon **30** appears in the LICCON monitor.

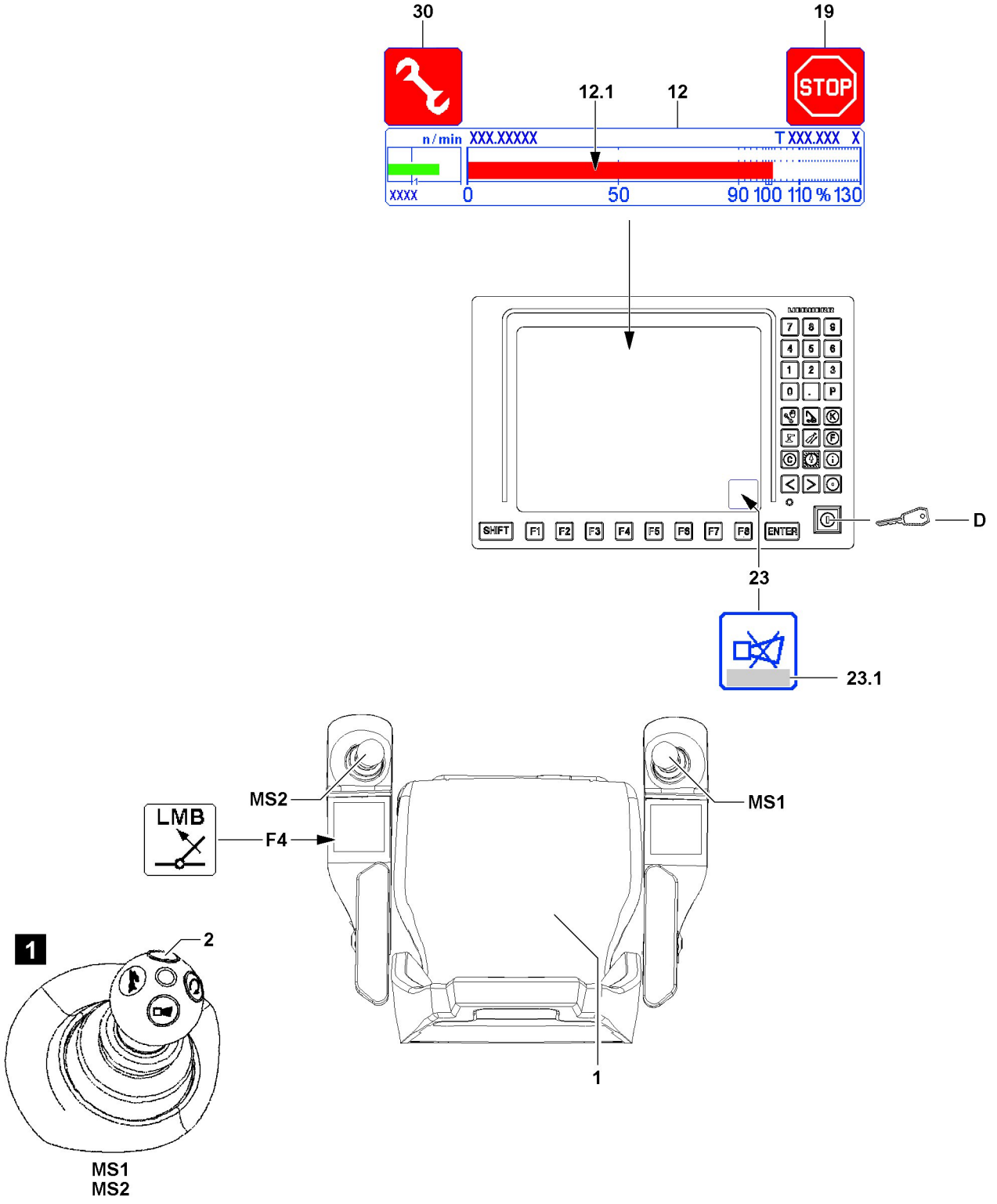
30
19
STOP
12.1
12
n / min
XXX.XXXXX
T XXX.XXX X
XXXX
0
50
90 100 110 % 130
SHIFT
F1
F2
F3
F4
F5
F6
F7
F8
ENTER
D
23
23.1
MS2
MS1
LMB
F4
1
2
1
MS1
MS2

B117263

▶ Initiate crane movements which lead immediately to a normal operating status (see section “operating status of the crane”).

The function “Exceedance of shut off limits of LICCON overload protection” turns off immediately also:
– If the set up key **D** is actuated again.
– If all master switches are in neutral position for 10 seconds.
– When neither the seat contact button **1** nor one of the buttons **2** of the master switches (MS1, MS2) is actuated.
– When a hoist top shut off occurs.

Note
▶ The function “Exceedance of shut off limits of the LICCON overload protection” is only turned off when the assembly icon **30** in the LICCON monitor turns off.
▶ If the function “Exceedance of shut off limits of the LICCON overload protection” does not turn off after pressing the set up key **D** once, then press the set up key **D** again until the assembly icon **30** in the LICCON monitor turns off.

The function “Exceedance of shut off limits of the LICCON overload protection” has / was shut off:
– The assembly icon **30** in the LICCON monitor turns off.
– The working speed is possibly reduced until all master switches are in zero position at the same time.

▶ Make sure that the assembly icon **30** does no longer appear in the LICCON monitor.
▶ Carry out crane movements in such a way that no repeated shut off by the LICCON overload protection occurs.

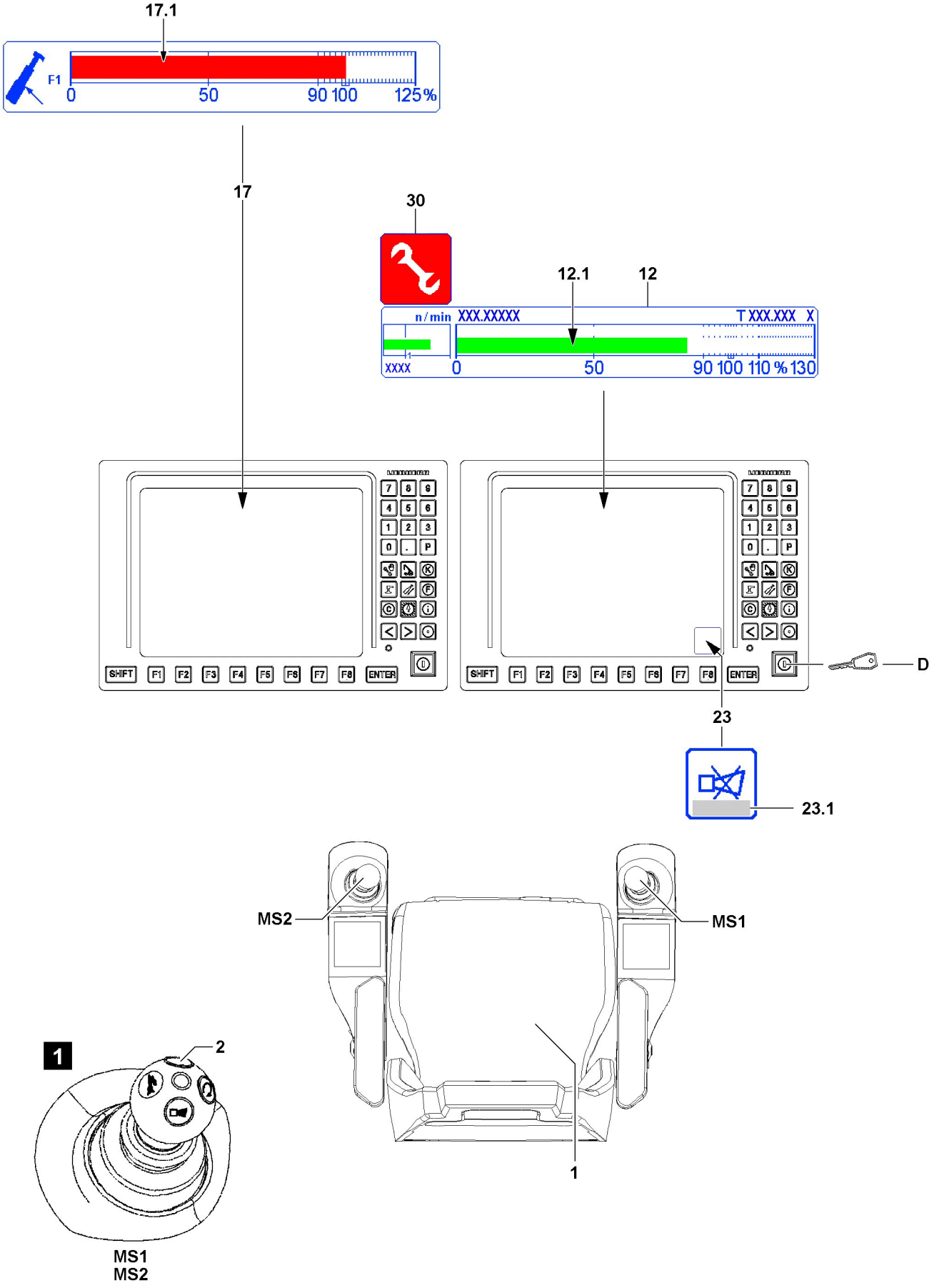
17.1
F1
0
50
90 100
125 %
17
30
12.1
12
n / min
XXX.XXXXX
T XXX.XXX X
XXXX
0
50
90 100 110 % 130
SHIFT
F1
F2
F3
F4
F5
F6
F7
F8
ENTER
D
23
23.1
MS2
MS1
1
2
MS1
MS2

B117264

2.3.3 To exceed the maximum value of the F-load display in crane operation

Note

▶ Applies only for certain crane types with respective display in the second LICCON monitor.

WARNING

Shut off safety device!

By pressing the set up key **D** if the maximum value of the F-load display is exceeded, then the function “Exceedance of shut off limits of the LICCON overload protection” is automatically activated Thus there is no shut off if the maximum permissible load moment is exceeded.

▶ All notes regarding the “Special cases at operation of LICCON overload protection” must be observed.

▶ The utilization bar **12.1** of the bar diagram utilization **12** must be observed.

▶ The F1-utilization bar **17.1** of the F-load display **17** must be observed.

Note

▶ See also section “Maximum values of F-load display reached”.

In the F1-load display **17** the utilization bar_{actual} **17.1** exceeds the 100 % mark and the LICCON overload protection has shut off the crane movement. $F1_{actual}$ has exceeded $F1_{max}$ value.
All other movements, which lead to a decline of the force ratio in the F-load display **17** are turned off.

Note

If the values in the F-load display **17** or in the bar diagram utilization **12** are outside the permissible range, then the functionality of the set up key **D** my be disabled.

▶ Pay attention to notes regarding error messages **23.1** occurring in the horn **23** icon.

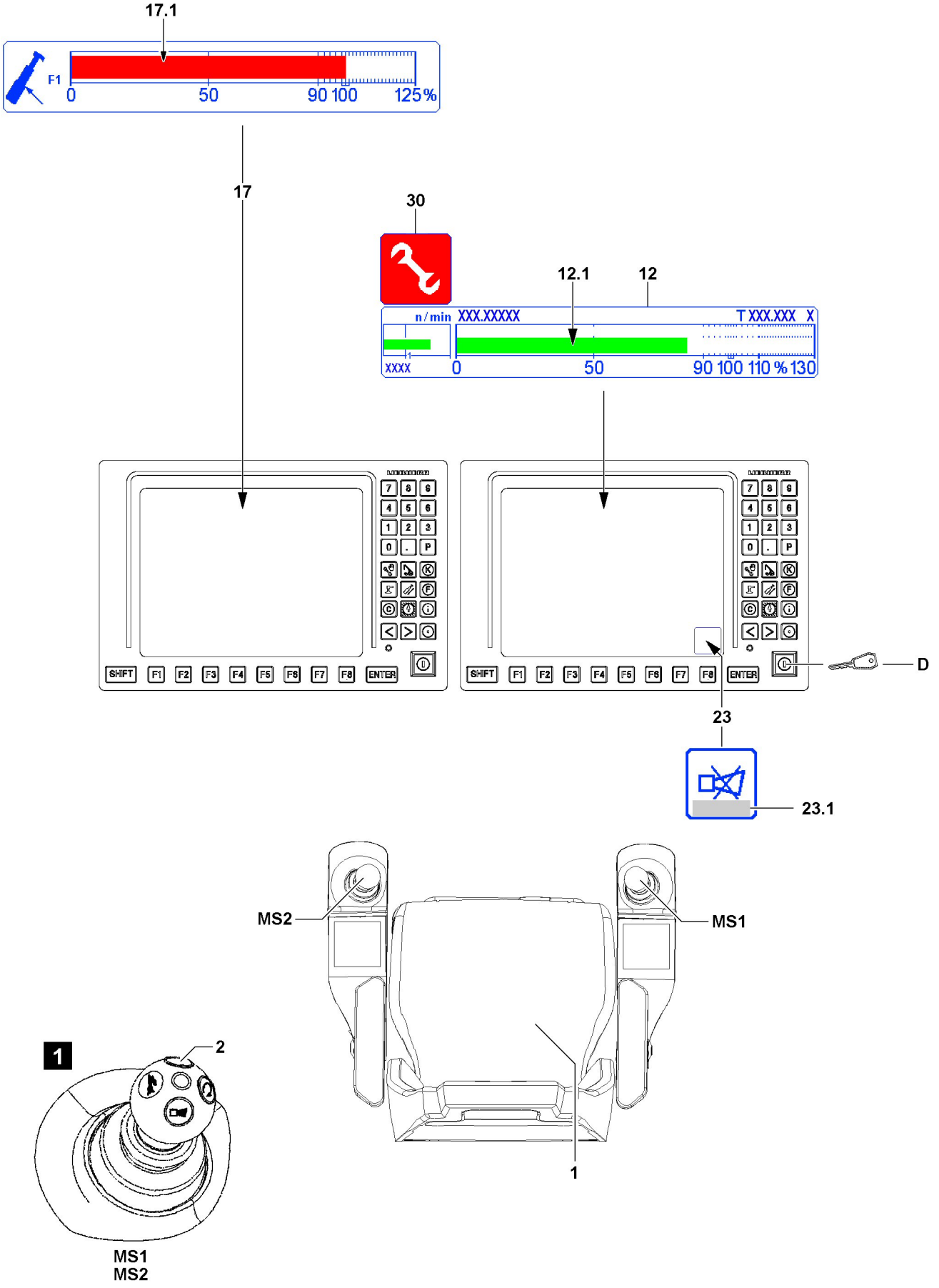
17.1
F1
0
50
90 100
125 %
17
30
12.1
12
n / min
XXX.XXXXX
T XXX.XXX X
XXXX
0
50
90 100 110 % 130
SHIFT
F1
F2
F3
F4
F5
F6
F7
F8
ENTER
D
23
23.1
MS2
MS1
1
2
MS1
MS2

B117264

Make sure that the following prerequisites are met:
- All master switches are in zero position (not deflected).
- Either the seat contact button **1** or one of the buttons **2** (illustration **1**) of the master switches (MS1, MS2) is actuated.
- The crane is in the range of a load chart.

▶ Turn the set up key **D** to the right (touching).

Result:
- The function “Exceedance of shut off limits of the LICCON overload protection” is activated. As a result the maximum value of the F-load display can be exceeded.
- The assembly icon **30** appears.
- $F1_{max}$ can be exceeded.

▶ Initiate crane movements which lead immediately to a normal operating status (see section “operating status of the crane”).

The function “Exceedance of shut off limits of LICCON overload protection” turns off immediately also:
- If the set up key **D** is actuated again.
- If all master switches are in neutral position for 10 seconds (with load chart available).
- When neither the seat contact button **1** nor one of the buttons **2** of the master switches (MS1, MS2) is actuated.
- When a hoist top shut off occurs.

Note
▶ The function “Exceedance of shut off limits of the LICCON overload protection” is only turned off when the assembly icon **30** in the LICCON monitor turns off.
▶ If the function “Exceedance of shut off limits of the LICCON overload protection” does not turn off after pressing the set up key **D** once, then press the set up key **D** again until the assembly icon **30** in the LICCON monitor turns off.

The function “Exceedance of shut off limits of the LICCON overload protection” has / was shut off:
- The assembly icon **30** in the LICCON monitor turns off.
- The working speed is possibly reduced until all master switches are in zero position at the same time.

▶ Make sure that the assembly icon **30** does no longer appear in the LICCON monitor.
▶ Carry out crane movements in such a way that no repeated shut off by the LICCON overload protection occurs.

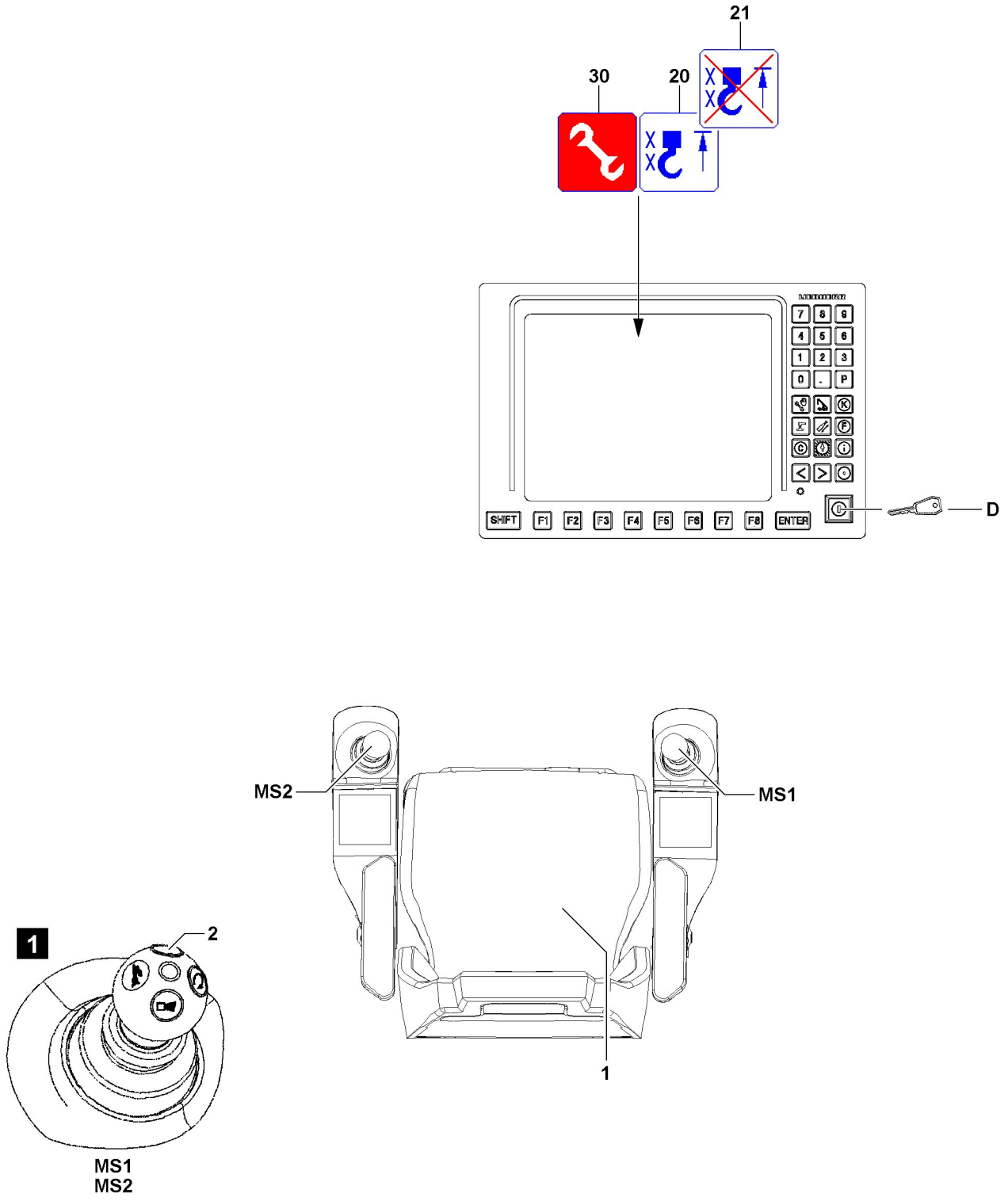

B117265

2.4 Bypassing the hoist top shut off

WARNING
Improper use of the function “Bypass of hoist top shut off”!
▶ The function “Bypass of hoist top shut off” may never be used to increase the lifting height during crane operation.

WARNING
Property damage and falling load!
If the function “Bypass of hoist top shut off” is activated, there is the danger that the hook (hook block / load hook) is pulled against the pulley head.
This danger exists especially when the hoist winch is continued to be spooled up and for crane movements which have an influence on the hoist rope, for example luffing the telescopic boom or the auxiliary boom / accessory.
Property damage and falling load can result.
Personnel can be severely injured or killed.
▶ The function “Bypass of hoist top shut off” may only be made if the crane operator is able to determine otherwise that there is a sufficient distance between hook block / load hook and boom head.
▶ Carry out all crane movements with utmost caution.

Note
▶ A bypass of the hoist top shut off is only possible in some circumstances when the shut off has already occurred due to a triggered hoist limit switch.
▶ For assembly purposes or in emergency cases, if the activation of the function “Bypass of hoist top shut off” **and** activation of the function “Exceedance of shut off limits of the LICCON overload protection” is necessary, then the set up key **D** must be actuated until the icon **21** and assembly icon **30** appear.

Spooling the hoist winch up was turned off because the hook (hook block / load hook) has touched a hoist limit weight during the upward movement and the affected hoist limit switch was triggered.
Make sure that the following prerequisites are met:
– A hoist top shut off has occurred, the hoist top icon **20** appears in the LICCON monitor.
– Either the seat contact button **1** or one of the buttons **2** (illustration **1**) of the master switches (MS1, MS2) is actuated.
– All master switches are in zero position (not deflected).

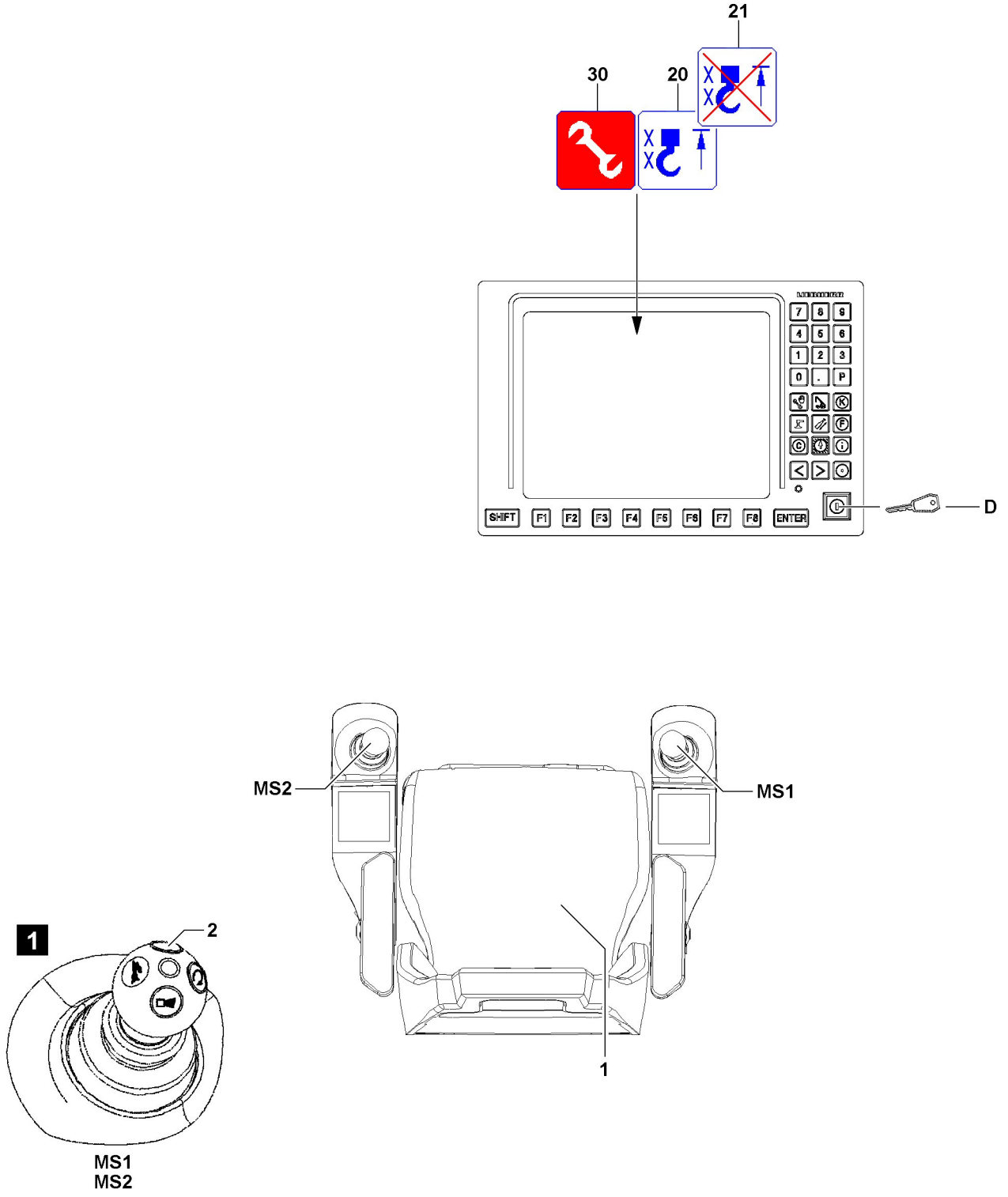

B117265

– To bypass the hoist top shut off, a combined actuation of the set up key **D** and at least one master switch (MS1, MS2) is required.

▶ Turn the set up key **D** to the right (touching).

Result:
– The assembly icon **30** (assembly operation) appears in the LICCON monitor.
– The hoist top icon **20** in the LICCON monitor changes to the icon **21**.

Note
▶ Depending on the situation, it may be possible that the bypass of the hoist top shut off remains only active as long as the master switch (MS1, MS2) is deflected.

▶ Within 10 seconds, if the master switch (MS1, MS2) to lift the hoist gear is deflected, the hoist limit switches are bypassed.
Carry out a crane movement with utmost caution and by taking the safety guidelines into account.

The function “Bypass of the hoist top shut off” turns off:
– If the set up key **D** is actuated again.
– When no master switch (MS1, MS2) was deflected for 10 seconds.
– When neither the seat contact button **1** nor one of the buttons **2** of the master switches (MS1, MS2) is actuated.
– If there is no longer a shut off of a hoist limit switch.

The function “Bypass of the hoist top shut off” has / was turned off:
– The assembly icon **30** (assembly operation) in the LICCON monitor turns off.
– The icon **21** on the LICCON monitor turns off.

▶ Make sure that the assembly icon or the assembly icon **30** (assembly operation) as well as the icon **21** no longer appear in the LICCON monitor.

▶ Carry out the crane movements in such a way that no repeated hoist top shut off occurs.

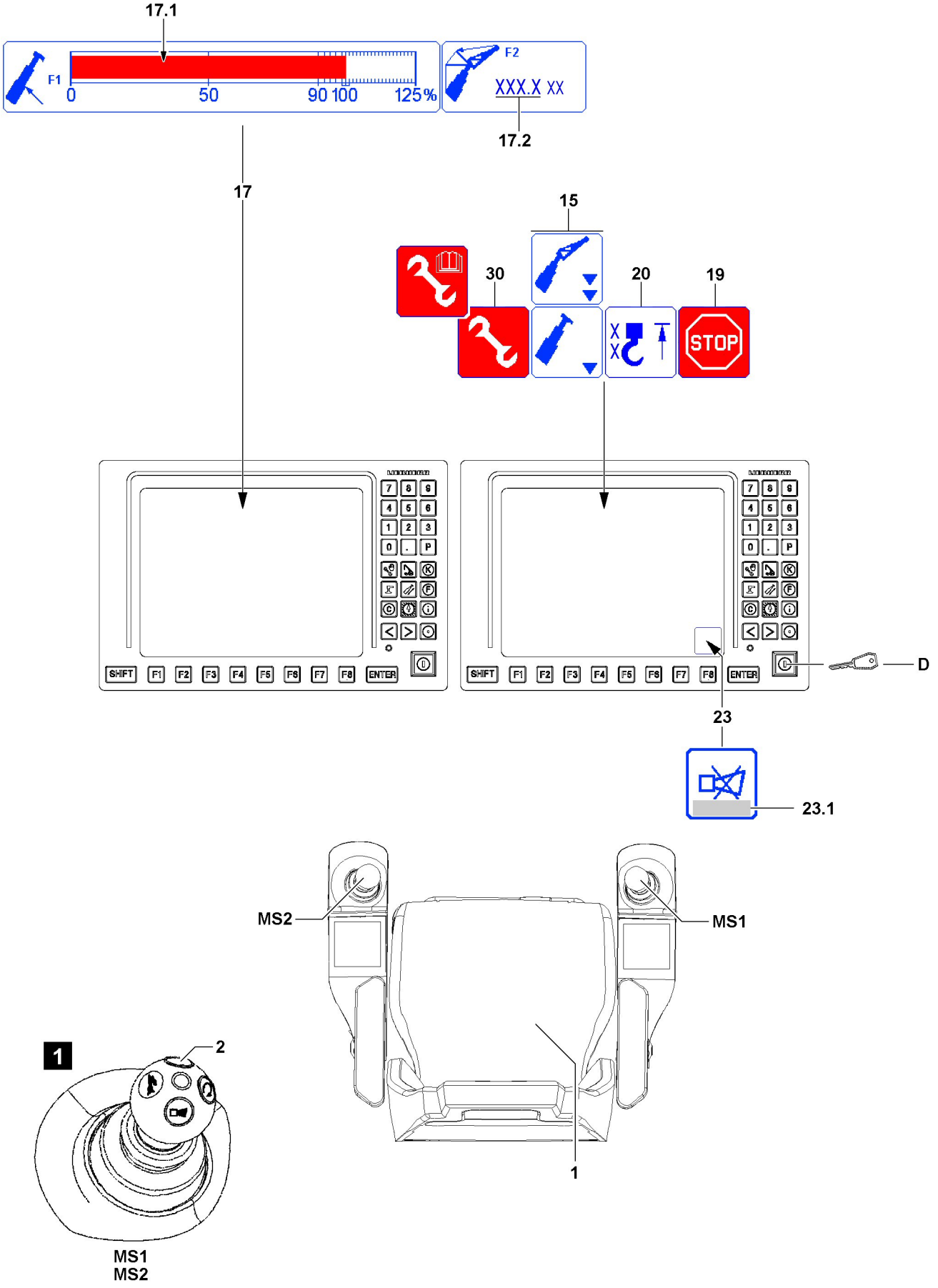
17.1
F1
0
50
90 100
125 %
F2
XXX.X XX
17.2
17
15
30
20
19
STOP
SHIFT
F1
F2
F3
F4
F5
F6
F7
F8
ENTER
D
23
23.1
MS2
MS1
1
2
MS1
MS2

B117266

2.5 Carrying out the erection / take down procedures

To carry out the erection / take down procedures and assembly procedures, the LICCON overload protection can be bypassed with the set up key **D**.

Note

- ▶ If the crane is in the range “No load chart available” then there is a shut off of the crane control by the LICCON overload protection. The icon **19** appears in the LICCON monitor.
- ▶ By pressing the set up key **D** all erection / take down procedures and assembly procedures can be carried out according to the specifications in the Operating instructions.

WARNING

Danger of accident during erection / take down procedures!

If the specifications of the Operating instructions are not observed, the crane can collapse, the boom can break off or the crane can topple over.

Personnel can be severely injured or killed.

- ▶ Make sure to adhere to all specifications in the Operating instructions.
- ▶ Press the set up key **D** only when the configuration status has been entered correctly in the LICCON computer system and matches the actual situation.

Additional information for cranes with F-load display:

– F1-load display
  Pressure display luffing cylinder
– F2-load display
  Force of guying Auxiliary boom / accessory
  Note:
  Appears only for corresponding boom system

Note

The permissible maximum value corresponds to 100 % in the bar display.

- ▶ The F1-utilization bar **17.1** shows the relationship $F1_{actual}$ to $F1_{max}$.
- ▶ F2-load display, the F2 $value_{actual}$ **17.2** is only shown. When $F2_{max}$ is reached, an error message **23.1** is issued.
- ▶ When leaving the range “load chart available” the display of the assembly icon **30** changes.

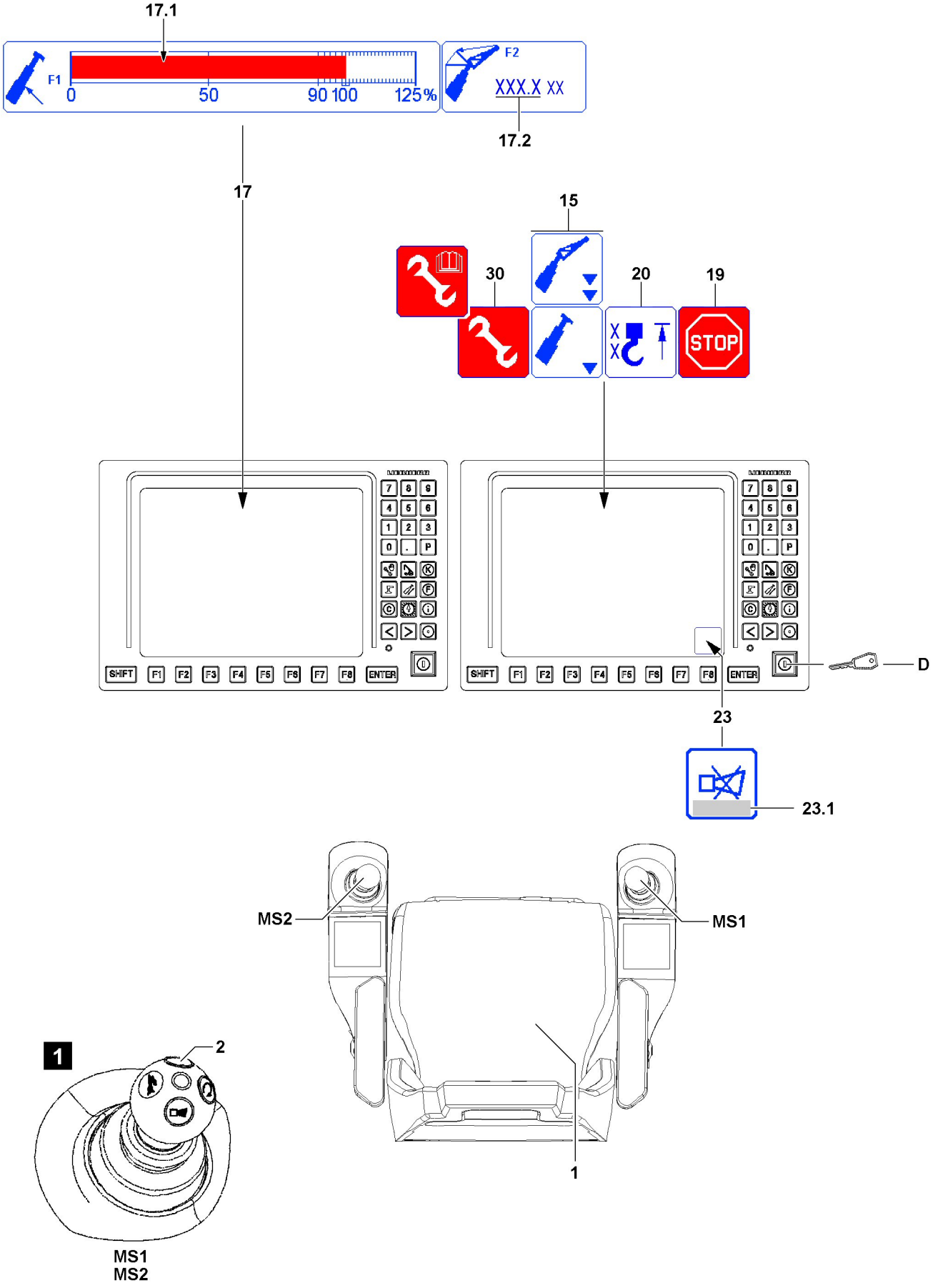
17.1
F1
0
50
90 100
125 %
F2
XXX.X XX
17.2
17
15
30
20
19
STOP
SHIFT
F1
F2
F3
F4
F5
F6
F7
F8
ENTER
D
23
23.1
MS2
MS1
1
2
MS1
MS2

B117266

2.5.1 Carrying out erection procedures

Make sure that the following prerequisites are met:

– The set up status corresponds to the specifications in the Operating instructions.
– The set up status has been entered correctly into the LICCON computer system.
– All master switches are in zero position (not deflected).
– Either the seat contact button **1** or one of the buttons **2** (illustration **1**) of the master switches (MS1, MS2) is actuated.

Note

▶ Depending on the situation, the hoist top shut off (icon **20** appears) must be bypassed at the same time.
▶ Depending on the situation, one of the icons **15** appears, because a limit angle load chart is reached.

▶ Turn the set up key **D** to the right (touching).

Result:

– The assembly icon **30** appears.
– The erection procedure can be carried out.

Troubleshooting

The functionality of the set up key **D** is disabled by the crane control?

▶ Pay attention to notes regarding error messages **23.1** occurring in the horn **23** icon.
▶ Check the electrical connections.
▶ Check if all sensors or dummy plugs with integrated electric have been connected properly.

▶ Luff the boom system according to the specifications of the Operating instructions.
▶ Observe the F-load display **17**, all values must be within the permissible range.

Troubleshooting

The erection / take down procedure cannot be carried out due to exceeding of the maximum values?

▶ See section “Maximum values of F-load display reached”.

The “Bypass of the LICCON overload protection” via the set up key **D** turns off:

– If the set up key **D** is actuated again.
– When an range with existing load chart is reached (erection procedure).
– If all master switches are in neutral position for 10 seconds (with “load chart available”).
– When neither the seat contact button **1** nor one of the buttons **2** of the master switches (MS1, MS2) is actuated.

The function “Exceedance of shut off limits of the LICCON overload protection” has / was shut off:

– The assembly icon **30** in the LICCON monitor turns off.

▶ After completion of the erection / take down procedures, make sure that the assembly icon **30** no longer appears in the LICCON monitor.

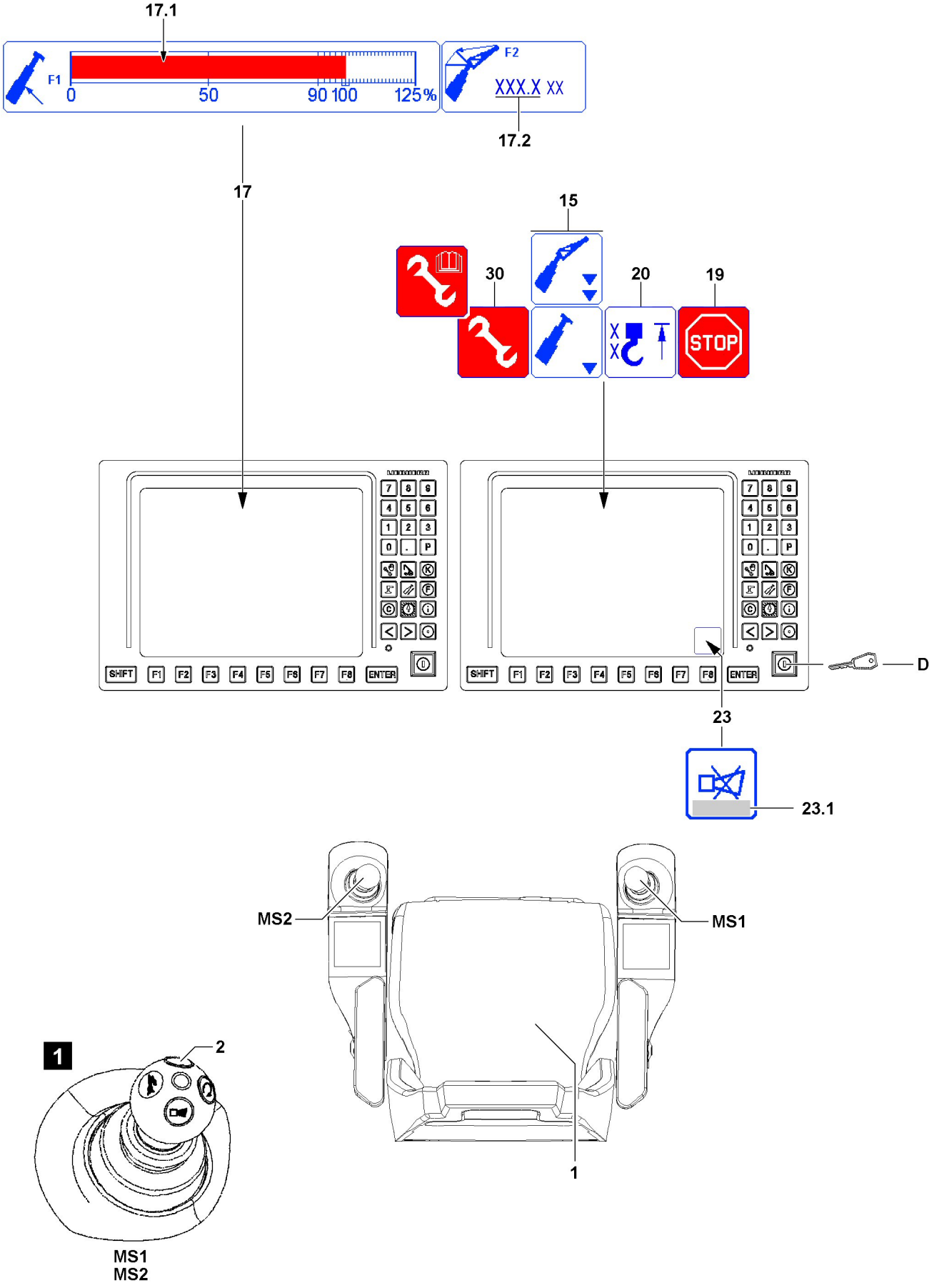
17.1
F1
0
50
90 100
125 %
F2
XXX.X XX
17.2
17
15
30
20
19
STOP
SHIFT
F1
F2
F3
F4
F5
F6
F7
F8
ENTER
D
23
23.1
MS2
MS1
1
2
MS1
MS2

B117266

2.5.2 Carrying out take down procedures

WARNING
Danger of accidents when placing the boom system down!
When the shut off luffing the telescopic boom / auxiliary boom / accessory down is bypassed, then the LICCON overload protection as a whole is deactivated, bypassed or limited.
The telescopic boom and / or auxiliary boom / accessory can be luffed from the range of the load chart.
In case of deviations from the specifications of the Operating instructions, severe accidents can be the result.
Personnel can be severely injured or killed.
▶ Always proceed according to the specifications of the Operating instructions.
▶ Carry out all crane movements with utmost caution.

Make sure that the following prerequisites are met:
– One of the icons **15** appears (limit angle load chart reached) and the LICCON overload protection has shut off the crane movement.
– Either the seat contact button **1** or one of the buttons **2** (illustration **1**) of the master switches are actuated.
– All master switches are in zero position (not deflected).
– There is no load on the hook (hook block / load hook).
– If necessary, the hook (hook block / load hook) is placed on the ground.
– The set up status corresponds to the specifications in the Operating instructions.
– The set up status has been entered correctly into the LICCON computer system.

Note
▶ When leaving the range “load chart available” the display of the assembly icon **30** changes.

▶ Turn the set up key **D** to the right (touching).

Result:
– The assembly icon **30** appears in the LICCON monitor.
– The take down procedure can be carried out.

▶ Place the boom system down according to the specifications of the Operating instructions.
▶ Observe the F-load display **17**, all values must be within the permissible range.

Troubleshooting
The erection / take down procedure cannot be carried out due to exceeding of the maximum values?
▶ See section “Maximum values of F-load display reached”.

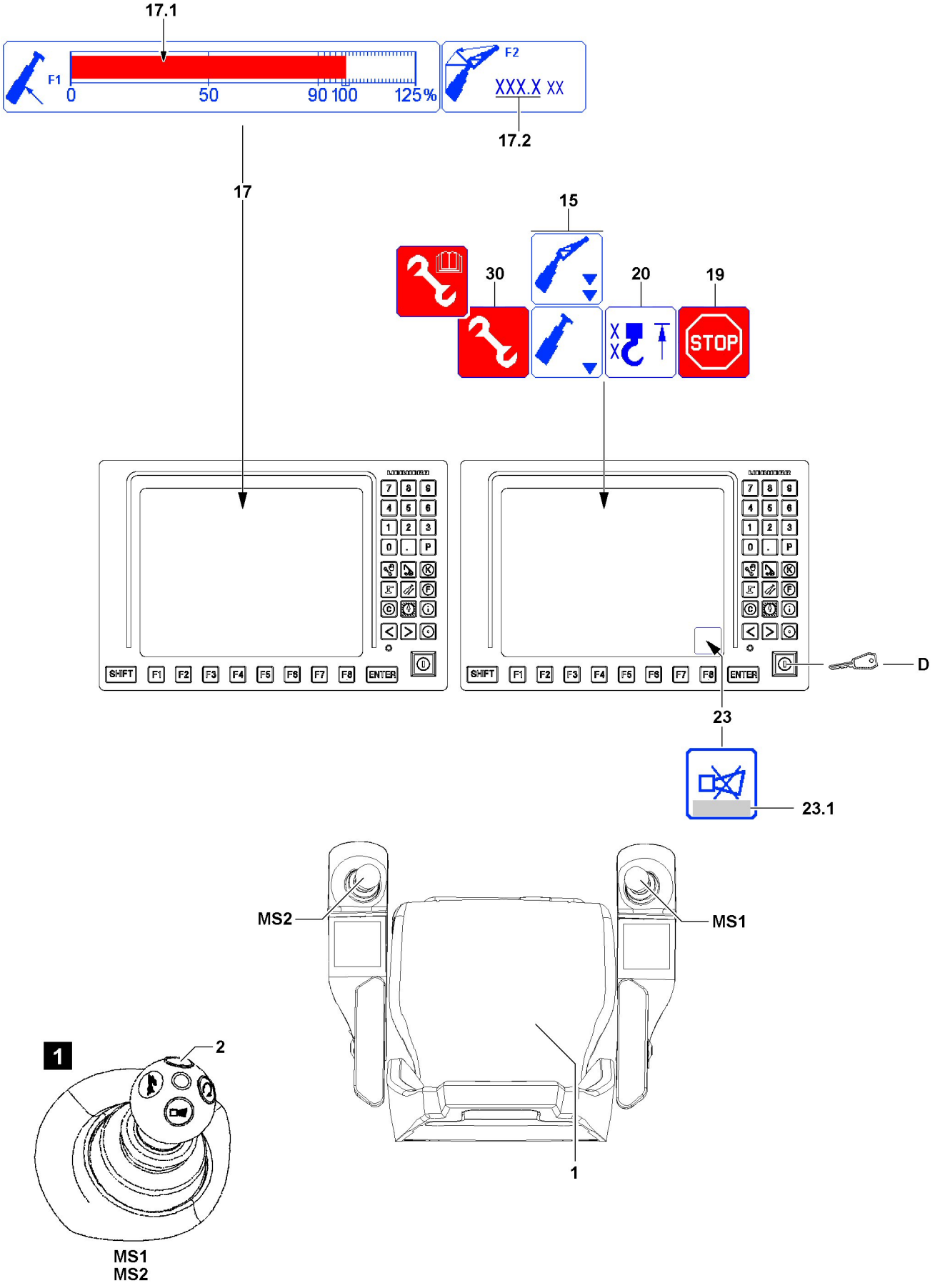
17.1
F1
0
50
90 100
125 %
F2
XXX.X XX
17.2
17
15
30
20
19
STOP
SHIFT
F1
F2
F3
F4
F5
F6
F7
F8
ENTER
D
23
23.1
MS2
MS1
1
2
MS1
MS2

B117266

Note

▶ Depending on the situation, the hoist top shut off (icon **20** appears) must be bypassed at the same time.

The “Bypass of the LICCON overload protection” via the set up key **D** turns off:

– If the set up key **D** is actuated again.
– When neither the seat contact button **1** nor one of the buttons **2** of the master switches (MS1, MS2) is actuated.
– When an area with existing load chart is reached.

The bypass of the LICCON overload protection is / was turned off:

– The assembly icon **30** in the LICCON monitor turns off.

▶ Make sure that the assembly icon **30** does no longer appear in the LICCON monitor.

2.5.3 Carrying out the assembly procedures

WARNING

Danger of accident during assembly procedures!

In case of deviations from the specifications of the Operating instructions for the assembly procedures, severe accidents can be the result.

Personnel can be severely injured or killed.

▶ Always proceed according to the specifications of the Operating instructions.

▶ **If you cannot proceed according to the Operating instructions, contact Liebherr Service before carrying out any subsequent steps and agree on the procedure.**

Make sure that the following prerequisites are met:

– The set up status corresponds to the specifications in the Operating instructions.
– The set up status has been entered correctly into the LICCON computer system.

▶ Operate the set up key **D** according to the specifications of the Operating instructions.

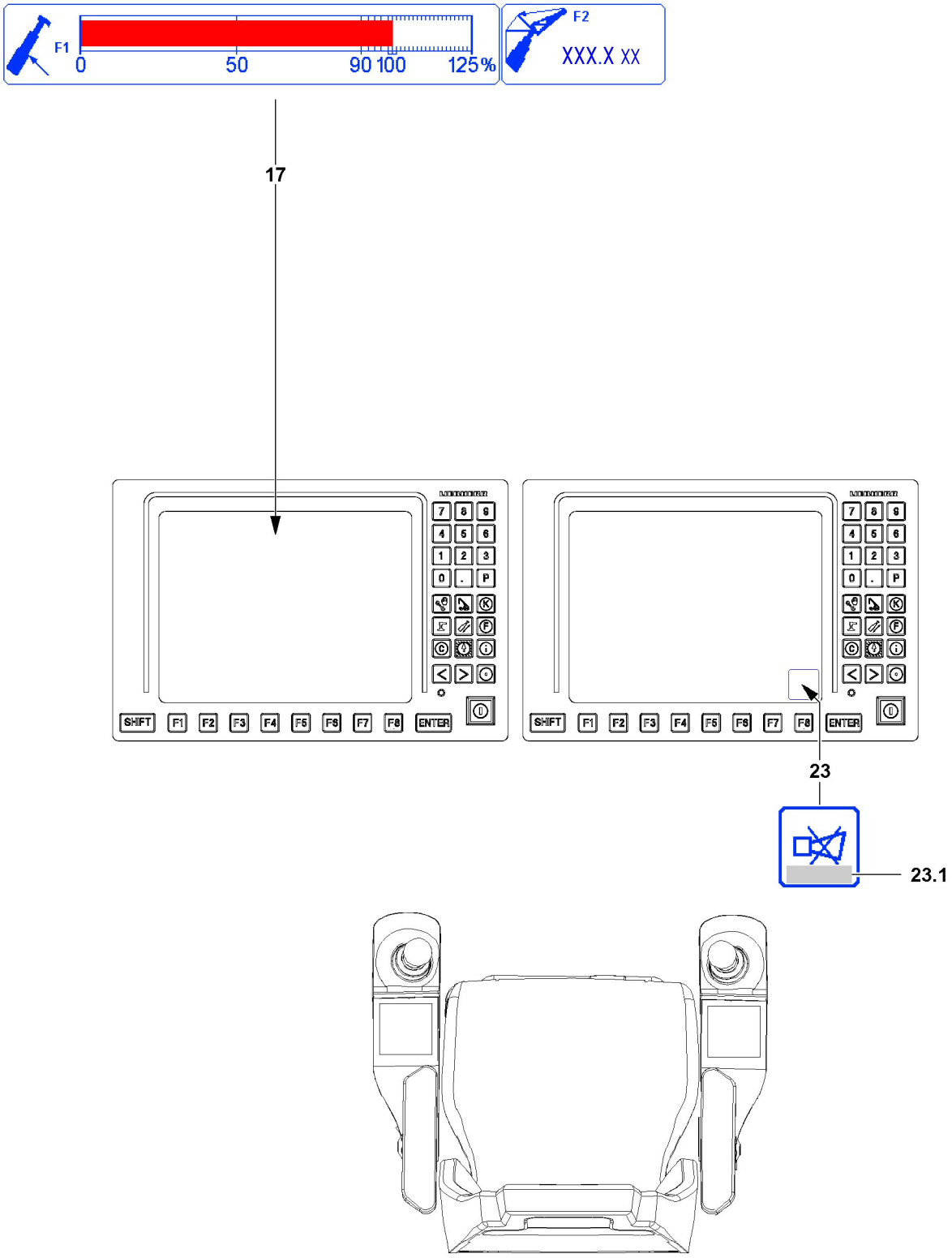
F1
0
50
90 100
125 %
F2
XXX.X XX
17
SHIFT
F1
F2
F3
F4
F5
F6
F7
F8
ENTER
23
23.1

B117267

2.6 Maximum values of F-load display reached

Note

▶ The display and assignment of the F-load display **17** can deviate depending on the set up status, operating status and configuration of the crane, see chapter 4.02.

In the F-load display **17** the maximum values were reached.
Make sure that the following prerequisites are met:

- The crane is assembled according to the specifications in the Operating instructions.
- A valid set up configuration has been entered on the LICCON computer system (Set up program).
- The actual set up configuration has been entered on the LICCON computer system (Set up program).
- The hook block / load hook is correctly installed and reeved.
- All attachment parts and guy rods on the boom system, which are not needed, have been removed (weight).
- The boom system is free of snow and ice (weight).
- The wind influence onto the crane is not too great.
- The local conditions (terrain incline) are in the permissible range.
- Possible notes regarding error messages **23.1** occurring in the horn **23** icon were observed.

▶ Check if a crane movement was initiated, which leads to an improvement of the force ratio in the F-load display **17**.

Note

In the permissible framework of specifications of the Operating instructions, a positive influence of the force ratio in the F-load display **17** can be reached by:

▶ Erection of the telescopic boom: Carry the hook (hook block / load hook) along.
▶ In difficult local conditions (terrain incline): Support the placed down boom system to obtain more favorable angle conditions.
▶ In difficult local conditions (terrain incline): Support the placed down boom system to reduce flexation.

5 Equipment

B195219

1 Checking the retaining elements

Retaining elements are used to secure the pins. Due to mechanical damage / distortion, the function of the retaining elements can be compromised. In addition, the spring force of the retaining elements can be reduced significantly. Do not re-use retaining elements if there is insufficient spring force. The pin retainer must be secured with a correctly **functioning** retaining element.

WARNING
Failure of retaining element!
If the spring force of the retaining element is not sufficient or in case of mechanical damage / distortion, the retaining element can fail!
If the correct retention of the pin is no longer ensured, then the pin can unpin by itself! Accidents with bodily injuries / property damage can result!
▶ Use exclusively **functioning** retaining elements in proper condition.

2 Rope pulleys

WARNING
Danger of crushing due to rotating rope pulleys!
Arms and legs can be caught and crushed or severed between the rope pulley and the rope due to rotating rope pulleys!
▶ It is prohibited to touch the ropes or rope pulleys during operation!
▶ Adhere to the safety distance to ropes and rotating rope pulleys!

3 Checking the ropes

WARNING
Danger of accident!
▶ The ropes must be checked by an expert before assembly and checks must be performed at regular intervals in order to detect possible damage or wear and tear at an early stage. See Crane operating instructions, chapter 8.04.

The ropes must be removed immediately if any of the following damage is detected:
– Breakage of a strand
– Wire breaks
– Broken wire nests
– Reduction in the rope diameter by 10 % or more of the nominal size
– Rope deformations

3.1 Placing the hoist / control ropes

In order to guarantee safety and operating characteristics, only original Liebherr replacement parts or parts approved by Liebherr may be used.

NOTICE
Damage of hoist / control rope!
If a hoist / control rope is placed with worn rope pulleys, damage can occur!
▶ Before placing a rope, check the rope pulleys. See Crane operating instructions, chapter 8.01!
▶ Replace worn or damaged rope pulleys!

NOTICE
If the following notes are not observed, the cam limit switch / winch turn sensor must be readjusted!
- ▶ When the hoist rope is spooled up, the end of the hoist rope must remain in front of the winch and may not be pulled over the winch.
- ▶ Never pull the hoist rope ends under the winch by spooling the winch up!
- ▶ Never pull the hoist rope off from the “stationary” winch.
- ▶ The winch turn sensor must also be readjusted, if it is determined during operation or when changing the hoist rope that the winch does not turn off when the minimum rope coils are reached.

3.1.1 Cranes with cam limit switch

The cam limit switch is adjusted at the factory that it turns off before the minimum rope coils are reached (three hoist rope coils on the winch).

WARNING
Danger of accident due to falling load!
If the following instructions are not observed, the hoist rope end attachment may be torn out, causing the load to topple.
- ▶ If a new hoist rope is used, the cam limit switch must be reset!
- ▶ The cam limit switch must be adjusted so that it turns off when only 3 hoist rope coils remain on the winch!

3.1.2 Cranes with winch turn sensor

The winch turn sensor is adjusted at the factory that it turns off before the minimum rope coils are reached (four hoist rope coils on the winch). If used properly, the winch turn sensor will not need readjustment.

WARNING
Danger of accident due to falling load!
If the following instructions are not observed, the hoist rope end attachment may be torn out, causing the load to topple.
- ▶ If a new hoist rope is placed, the winch turn sensor must be checked!
- ▶ The winch turn sensor must be set to turn off when only 4 hoist rope coils remain on the winch!

4 Control measures

WARNING
The crane can topple over!
If the control measures are not carried out before crane operation, then accidents can occur. The crane can be overloaded, topple over or be damaged!
Personnel can be killed or injured!
- ▶ Crane operation with safety devices which are **not** functioning correctly is strictly prohibited!
- ▶ Start crane operation only after all safety devices have been checked and are functioning correctly!
- ▶ Start crane operation only if the overload protection has been set according to the data in the load chart!
- ▶ Start crane operation only if the crane is properly supported and horizontally aligned!

WARNING
Interruption of crane operation!
If the following specifications for interruption of crane operation are not observed, accidents can occur.

- ▶ If the crane operator leaves the crane cab even if for just a short time, the crane must be secured to prevent unauthorized access.
- ▶ Before starting to work again with the crane, the crane operator is obligated to check the operating mode settings and to reset them, if necessary.

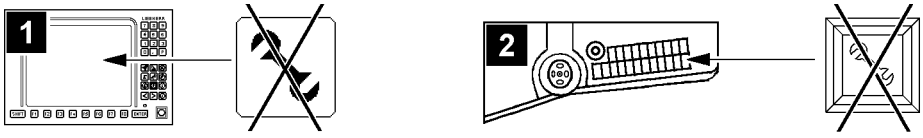

B113437

Make sure that the following prerequisites are met:
- The overload protection is not bypassed.
- No assembly operation is activated.
- Crane operation can be carried out with minimum boom radius.

4.1 General control measures before crane operation

- Make sure that no visible damage is visible on the crane.
- Make sure that there are no loose parts on the boom, crane chassis and crane superstructure.
- Make sure that exposed rope pulleys are free of snow, frost and ice.
- Make sure that the cable / rope drum and the limit switches are free of snow and ice.
- Make sure that the gear ring of the rotary connection is clean and greased.
- Make sure that the air supply to the oil and water cooler is clear.
- Make sure that the step, ladders and pedestals are in the correct position for crane operation.
- Make sure that all tool boxes, compartments, coverings, covers and cabinet doors are closed.
- Make sure that no persons or objects are within the danger zone of the crane.
- Make sure that the crane is standing on level, load bearing ground.
- Make sure that the crane is sufficiently supported depending on the load case and the ground conditions.
- Make sure that there is sufficient distance to excavations and slopes.
- Make sure that no obstacles are within the working range of the crane, which obstruct the required crane movements.
- Make sure that the crane has sufficient distance to live power lines.
- Make sure that the LICCON overload protection is set according to the data in the load chart.
- Make sure that the overload protection is set according to the actual set up configuration of the crane.
- Make sure that the electrical connections, the connector plug, the pull release, the cables and the protective insulation function. Replace missing or defective parts.
- Make sure that the cable routings on the electrical connections are seated tightly. If necessary, tighten loose screw connections.
- Make sure that the existing safety devices are functioning.
- Make sure that the overload protection is functioning.
- Make sure that the hoist limit switches are functioning.
- Make sure that the limit switch boom “steepest position” is functioning.
- Make sure that the wind speed sensor easily moves and is functioning.

4.2 Additional controls for cranes with crane support

- Make sure that the folding / sliding beams are secured with pins to prevent them from sliding.
- Make sure that the support plates are secured in the operating position.
- Make sure that the crane is properly supported.
- Make sure that the crane is horizontally aligned.
- Make sure that the axle suspension is blocked (mobile crane).
- Make sure that the tires have no contact to the ground (mobile crane).
- Make sure that the track chains are secured to prevent them from sagging (crawler crane).

4.3 Additional controls for freestanding crane operation (on tires)

- Make sure that all prerequisites for freestanding crane operation are met.
- Make sure that sufficient tire pressure is in all tires for crane operation on tires.
- Make sure that the ground is sufficiently level for crane operation on tires.

4.4 Additional controls for cranes with derrick boom

- Make sure that the shut off via the limit switch - derrick is functioning.
- Make sure that the entire swing range of the suspended ballast / ballast trailer is free of personnel and obstacles.

4.5 Additional controls for cranes with luffing auxiliary boom / accessories

- Make sure that the shut off via the limit switch luffing auxiliary boom / accessories “steepest position” is functioning.
- Make sure that the shut off via the limit switch luffing auxiliary boom / accessories “lowest position” is functioning.
- Make sure that the shut off via the limit switch flap in “steepest position” position is functioning.
- Make sure that the pendulum of the mechanical relapse retainer moves easily over the entire swing range and is functioning.

4.6 Additional controls for certain crawler cranes

For existing crawler assembly key button:

- Make sure that the crawler assembly key button is turned off.

5 Dangerous conditions without shut off

5.1 Block position of relapse cylinders when setting down the load

NOTICE

Damage to boom or relapse cylinder!

If the block position of the relapse cylinders is triggered by the boom or the derrick with attached, freely suspended load, then there is a danger of damaging the boom or the relapse cylinders when setting down the load onto the ground! By setting down the load, the crane is relieved, which causes the boom system to move to the rear.

There is no shut off of the hoist gear down function!

▶ Actuate the opposite direction of movement which caused the block position and eliminate the block position!

6 Transporting components

WARNING
Danger of accident!
- ▶ If any components are transported on an auxiliary vehicle, then they must be properly secured. If necessary, transport these components on supports or using a special transport device.

6.1 Transporting lattice sections

WARNING
Danger of accident!
- ▶ If the lattice sections are pushed into each other for transport, the lattice sections must be safely rigged on the transport vehicle and secured on at least two independent points.

7 Pneumatic springs for assembly support of components

Pneumatic springs are installed on various crane components to simplify the installation of these components.

WARNING
Danger of crushing!
Defective pneumatic springs no longer provide the supporting properties on the movable components!
Due to falling components, personnel can be killed or severely injured!
High risk of accident!
- ▶ Always check pneumatic springs for damage before actuating the corresponding components!
- ▶ Do not use components with defective pneumatic springs! Replace defective pneumatic springs immediately!
- ▶ Make sure that no persons or objects are in the movement range of the moving components which is supported by the pneumatic spring!
- ▶ It is strictly prohibited to remain or place any objects in the movement or other danger zone of the moving crane components which are supported by the pneumatic spring!

8 Manual rope winches for assembly support of components

Manual rope winches are installed on various components to simplify the installation or removal of these components.

WARNING
Danger of crushing!
Defective manual rope winches no longer provide the supporting action on the movable components!
Due to falling components, personnel can be killed or severely injured!
High risk of accident!
- ▶ Always check manual rope winches for external and functional damage before actuating the respective components!

- ▶ Check the rope of the manual rope winch for damage!
- ▶ At least two rope coils must always remain on the rope drum!
- ▶ Do not use components with defective manual rope winches! Replace defective manual rope winches!
- ▶ It is strictly prohibited for personnel or objects to remain within the movement range of the components, which are supported by the manual rope winch!
- ▶ It is prohibited for personnel or objects to remain within the danger zone of the moveable components!

9 Weights

Note

- ▶ The weight of each component is specified in the chapter 1.03 or the respective chapter in the Crane operating instructions or is stated on the tag attached to the corresponding component!
- ▶ If components are pushed into one another (for example intermediate sections) or folded together (for example the folding jib), then the total weight is given by the sum of the individual components!

NOTICE

False estimation of weights

- ▶ Contact the Service department at **Liebherr-Werk Ehingen GmbH** if the weight of the respective component is not stated on the tag or in the Crane operating instructions!
- ▶ Use an auxiliary crane with sufficient load carrying capacity including judicious reserve!

10 Guy rods

WARNING

Boom can break off!

The arrangement of the guy rods for the boom or boom systems is stipulated in the rod plan! If the arrangement of the guy rods according to the rod plan is not observed, the crane can collapse, the boom can break off or the crane can topple over!

Personnel can be severely injured or killed!

- ▶ Always carry out the arrangement of the guy rods according to the rod plan!
- ▶ If an auxiliary guying is required for a certain boom length, then it must always be installed according to the rod plan on the position defined in the rod plan!

WARNING

Unutilized guy rods on boom!

If guy rods are on the lattice sections which are not used for operation, then there is a risk of accidents!

Unused guy rods can loosen up and fall down!

Personnel can be severely injured or killed!

The load chart is invalid!

The load display of the LICCON computer system shows an incorrect value!

The weight of the boom is too large for erection!

- ▶ Disassemble and remove the guy rods which are not needed on the transport retainers before erecting the boom!

Note

- ▶ Inspection and maintenance of guy rods, see Crane operating instructions, chapter 8.15!

11 Auxiliary guying

The auxiliary guying is of significant importance for safe crane operation.
The auxiliary guying is a deciding factor in relieving the boom, or the boom system during erection and take down as well as during crane operation.

WARNING
The crane can topple over!
If the auxiliary guying is not installed or not installed on the position specified in the rod plan, then the crane can collapse, the boom can break off or the crane can topple over!
- ▶ If an auxiliary guying is specified in the rod plan for the required boom length, then it must be installed on the respective position!
- ▶ Make sure that the auxiliary guying is always completely installed and that all pins are properly pinned and secured!

12 Bypassing the overload protection

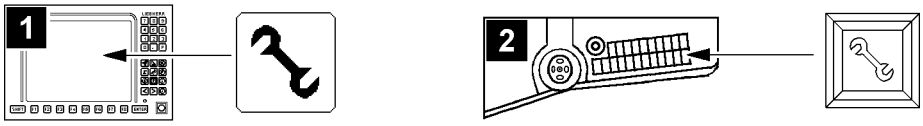

B113438

- Illustration **1**: LICCON monitor (only certain crane types).
- Illustration **2**: Indicator light “Assembly” in instrument panel crane cab (only certain crane types).

The overload protection is considered bypassed for:
- all types of assembly operations.
- all types of exceeded shut off limits of the overload protection.
- all types of emergency operation.
- all types of crane operation with deactivated or defective sensors and limit switches.
- all types of deviation from specified set up configuration of the crane.

DANGER
Increased accident risk when bypassing the overload protection!
As section 4.2.6.3.2 of EN 13000 does not put the requirements of appendix 1 of the EC machinery directive 89/37/EC into concrete terms, the overload protection has not been designed according to this definition.
Proper and destined use of the crane is ensured due to the construction of the overload protection system and observance of the information in the Crane operating instructions. All **sensibly foreseeable erroneous operations** of the crane have been taken into consideration.
Prohibited crane operation with bypassed overload protection – with the aim of increasing the maximum load capacity of the crane above the rated value in the load chart, or to extend the designated working range of the crane – does not constitute a **sensibly foreseeable erroneous operation**, rather **a deliberate improper use with high risk of accident**!
The possible risks and consequences of such deliberate improper use are detailed in the Crane operating instructions.
Such deliberate improper use can neither be prevented by means of the constructive design, nor by means of information in the Crane operating instructions!
- ▶ Bypass the overload protection only according to the Crane operating instructions!
- ▶ Exceed the shut off limits of the overload protection only according to the Crane operating instructions!
- ▶ Any other use of the crane with bypassed overload protection than that described in the Crane operating instructions is prohibited!

12.1 Bypassing the overload protection

If the maximum permissible load moment is exceeded, the overload protection turns all load moment increasing crane movements off.
This shut off can be bypassed or exceeded various ways by:
– exceeding the shut off limits (utilization more than 100 % or leaving the load chart).
– activating an assembly operation.
– activating an emergency operation.

The displays of the LICCON overload protection remain functioning when all associated sensors and limit switches are active and a load chart is available.

WARNING
Increased accident risk when bypassing the overload protection!
If the overload protection is bypassed, there is no additional protection against crane overload!
In the event of deliberate improper use, the crane could collapse, the boom can break off or the crane can topple over!
Personnel can be killed!
This could result in high property damage!
▶ It is only permitted to bypass the overload protection for assembly or in emergencies!
▶ The bypass of the overload protection may only be carried out by persons who are aware of the effects of their acts!
▶ Bypassing the overload protection requires the presence of a person authorized by the crane operator and must be performed with utmost caution!
▶ Crane operation with bypassed overload protection is strictly prohibited!

12.1.1 Bypassing the LICCON overload protection

Note
▶ Applies only for cranes with LICCON overload protection!

Depending on the crane version, one or more operating elements are available to bypass the overload protection:
– Button in the control console.
– Key button on the LICCON monitor.
– Key button in the instrument panel.
– Key button in the switch cabinet.
– Sensor for transponder on the crane cab.

▶ Actuate the respective operating element.

Result:
– The LICCON overload protection is bypassed / inactive.
– The “Assembly” icon appears on the LICCON monitor.
– Depending on the circumstances, acoustical and / or optical warning signals (blinkers, flashing lights, bells and horns).

▶ If the LICCON overload protection is to be reactivated:
No longer actuate the respective operating element or reset.

Result:
– The LICCON overload protection is active.
– The “Assembly” icon no longer appears on the LICCON monitor.
– The acoustical and / or optical warning signals which were triggered by the bypass are turned off again.

12.1.2 Bypassing the PAT overload protection

Note
▶ Applies only for cranes with PAT overload protection!

▶ Actuate the bypass key button and turn the PAT overload protection off.
Result:
– The PAT overload protection is bypassed / inactive.

▶ Actuate the bypass key button and turn the PAT overload protection on.
Result:
– The PAT overload protection is active.

13 Bypassing the hoist top shut off

Note
▶ Applies only for cranes with hoist limit switch!

If the hook block contacts the hoist limit switch weight during its upward movement, the hoist limit switch is triggered. The crane movements “Spool up winches”, “Luff boom down” and “Telescope telescopic boom out” are turned off. The shut off can be bypassed.

WARNING
Danger of accidents due to bypass of Hoist top shut off!
When bypassing the hoist top shut off, there is a risk that the hook block may be pulled against the pulley head when continuing to lift or luffing down the boom. This may damage the pulleys and cause the loads to fall!
▶ The bypass of the hoist top shut off in crane operation with a load may only be carried out by a person authorized by the crane operator with the aid of a “Guide”. The guide must be in direct contact with the crane operator and must continually monitor the distance between the hook block and the boom head.
▶ Carry out all crane movements with maximum care and minimum speed.

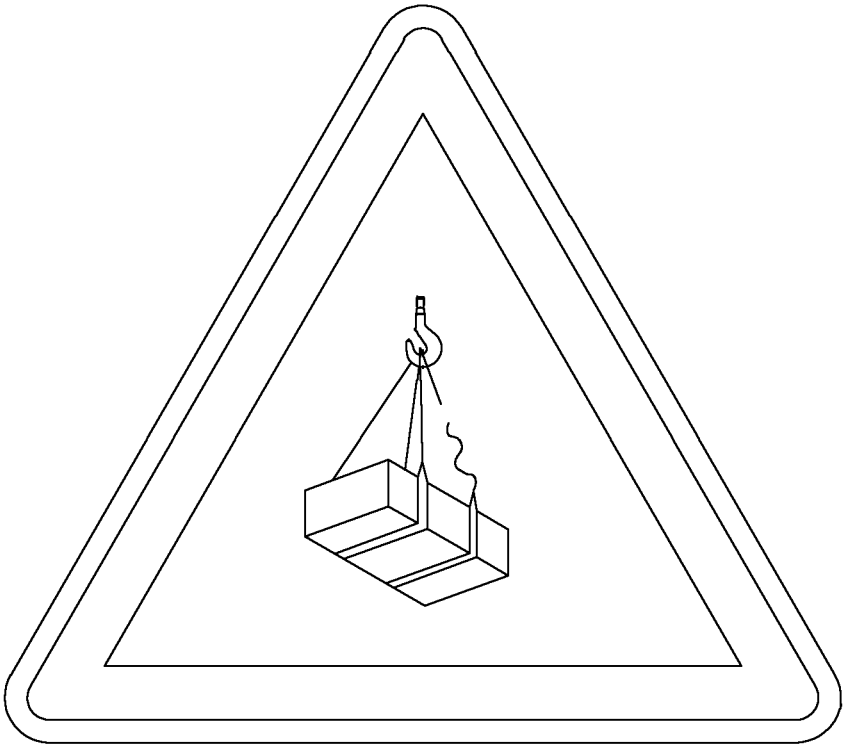

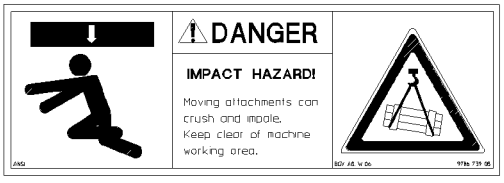
DANGER
IMPACT HAZARD!
Moving attachments can crush and impale.
Keep clear of machine working area.

B108048

14 Assembly / disassembly

WARNING
Risk of fatal injury due to incorrect assembly or disassembly!
The assembly / disassembly of components may never be performed by untrained personnel.
Incorrect assembly / disassembly can result in death or severe injuries!
- ▶ Assembly and disassembly may only be carried out by authorized and trained expert personnel!
- ▶ For assembly / disassembly of individual components, also observe the chapters relating to those components!
- ▶ The boom combinations must be assembled according to the separately supplied rod plans!
- ▶ The winch use is regulated in the master switch assignment in the Electric wiring diagram. The winches may only be operated according to this master switch assignment specified in the Electric wiring diagram.
- ▶ All components which must be transported separately must be transported with suitable auxiliary cranes and fastening equipment near ground level.

WARNING
Failure of auxiliary winch
- ▶ Only use the auxiliary winch (assembly or reeving winch) for assembly and not to lift loads!
- ▶ Lifting of loads with the auxiliary winch is prohibited!

WARNING
Danger of impact and crushing!
There is a risk of impact and crushing when standing in the vicinity of suspended loads moving sideways.
- ▶ During assembly / disassembly no one may be in the dangerous area around or underneath the suspended load before the load has been secured!

Part of the category “Aids for working aloft” are, for example:
- Lifting platforms
- Scaffolding
- Auxiliary cranes

WARNING
Danger of falling!
During assembly / disassembly, inspection and maintenance work, personnel must be secured with appropriate aids to prevent them from falling! If this is not observed, assembly personnel could fall and suffer life-threatening or fatal injuries!
- ▶ All work aloft, where there is a danger of falling must be carried out with suitable aids!
- ▶ If fall protection equipment is available, then it must be used, see Crane operating instructions, chapter 2.06!
- ▶ If aids are not available and work cannot be carried out from the ground, then the assembly personnel must secure themselves with the specified fall arrest system to prevent falling, see Crane operating instructions, chapter 2.04!
- ▶ The fall arrest system must be fastened on the fastening and hook points as well as on the safety ropes. For safety points, see Crane operating instructions, chapter 2.06!
- ▶ Only step on the aids, ladders and catwalks with clean shoes!
- ▶ Keep aids, ladders and catwalks free of heavy dirt, snow and ice!

- ▶ Remaining on a suspended load is prohibited!
- ▶ Remaining on or within crane components (for example: At assembly of boom sections, lattice sections) which are moved during lifting, lowering, turning or closing procedures is strictly prohibited!
- ▶ During all assembly and disassembly work, maintenance work and inspections, travel or crane operation is prohibited!
- ▶ It is prohibited to walk on the telescopic or an auxiliary boom without suitable protective devices!
- ▶ Stepping or walking on crane components and lattice sections, which have an incline of more than 20° is prohibited!

WARNING
Components not pinned and secured!
If a component is released from the auxiliary crane before having been pinned and secured, the component will fall down! Personnel can be severely injured or killed!
- ▶ Do not disengage the auxiliary crane until the respective component is pinned and secured!

WARNING
The components can fall down!
If the corresponding component is unpinned without being secured by an auxiliary crane, the corresponding component can fall down and fatally injure personnel!
- ▶ Do not unpin the components until they are secured by an auxiliary crane!

WARNING
Falling components and tools!
Whenever working aloft, for example on the crane or on an aerial platform, components or tools can fall down. Personnel can be severely injured or killed.
- ▶ Make sure that the danger zone under the work area is blocked off and marked.

14.1 Assembly drawings

WARNING
Use of assembly drawings!
Due to sole use of assembly drawings, dangerous situations can arise up to toppling of the crane!
Personnel can be severely injured or killed!
- ▶ Assembly drawings should only be considered to be **additional** and **supplementary** information.
- ▶ The respective chapters in the crane operating instructions are decisive for the assembly and disassembly of booms or equipment.
- ▶ The detailed information and danger notes in the respective chapters must be observed and adhered to.

14.2 Pin connections

WARNING
Danger due to pin connections!
If the pins / pin connections are not properly greased or lubricated before assembly, then they can corrode, seize in the pin bores and / or be damaged!
This could result in high property damage!
Personnel can be severely injured or killed due to suddenly releasing pins at disassembly!

- ▶ Make sure that all pins, which are not supplied with grease via the central lubrication system are sufficiently greased before assembly.
- ▶ Make sure that all lube points, which are equipped with a grease fitting, are properly greased at assembly and according to the respective interval specification.
- ▶ Make sure that all pins are secured with the intended retaining elements to prevent them from loosening up by themselves.
- ▶ Never pin or unpin pins by force.

14.3 Guiding crane sections, lattice sections or crane components

WARNING
Danger due to oscillating load!
During the assembly of crane sections, lattice sections or crane components with the auxiliary crane, they can start to swing back and forth!
Personnel can be severely injured or killed!

- ▶ To guide and position crane sections, lattice sections or crane components always use a guide rope.
- ▶ Make sure that the guide rope is sufficiently long and that the assembly personnel does not enter the danger zone.

14.4 Assembly / disassembly of booms

WARNING
The crane can topple over!
Angular pull can overload the crane. Overload can cause destruction of the crane or cause it to topple over.

- ▶ The hook block must always be attached vertically over the center of gravity of the load to be lifted!
- ▶ Angular pull is prohibited!

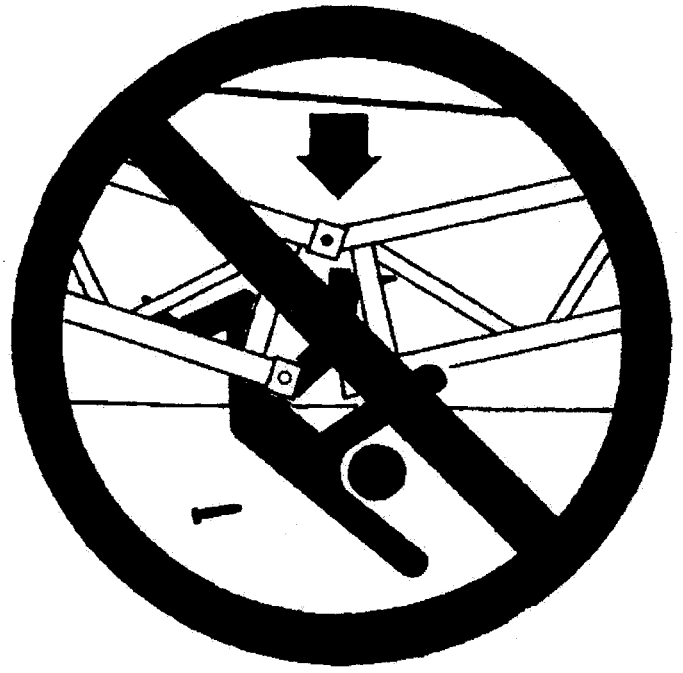

B113444

WARNING
Danger of accident at assembly / disassembly of booms!
The disassembling of unsecured or unsupported booms may result in fatal injury or mutilation.
- ▶ Never unpin the pins under unsecured or unsupported booms!
- ▶ Never unpin the connecting pins on unsecured or unsupported booms!
- ▶ Do not stand under the booms or within the complete danger zone during the pinning and unpinning procedure of the booms!
- ▶ Secure the pins in the bearing points and in the receptacles!
- ▶ The railing at assembly and disassembly of booms must be horizontal!
- ▶ Do not lean the ladder against the component being disassembled!

WARNING
Risk of accident due to distorted pins!
Angular pulling or excessive / low hoisting force of the auxiliary crane may result in distortion of the pins.
Distorted parts can suddenly detach themselves when the pins are unpinned. This represents a fatal injury risk to assembly personnel.
- ▶ When the pins are unpinned, the “lifting force” of the crane must be adapted to the “weight” of the parts being lifted!
- ▶ Do **not** remove difficult to remove pins by force!
- ▶ Remedy the cause of the distortion!

WARNING
If the following specifications are not observed, accidents can result:
- ▶ Pin or unpin both pins at the same horizontal level, i.e. **left and right**!
- ▶ Pin the lower collar pins **from the inside to the outside** and unpin from the **outside to inside**!
- ▶ Insert and unpin horizontally installable double cone pins from the **outside to inside**!
- ▶ Insert and unpin vertically installable double cone pins from **top to bottom**!

Make sure that the following prerequisites are met:
- If parts of the equipment (for example lattice sections) are not in contact with the ground during assembly / disassembly, then they must be supported with suitable, stable materials.
- Select the height of the support so that the parts of the equipment are not in contact with the ground.
- Place the parts of the equipment with rope pulleys down in such a way that the rope pulleys are not damaged.
- During disassembly make sure that the auxiliary crane can lift the load vertically.
- Have an auxiliary crane with sufficient load carrying capacity available to be able to hold the load at a respective radius.

14.5 Fastening positions for assembly / disassembly of the lattice jib

WARNING
Danger of fatal accidents due falling components!
The maximum permissible tensile load on the fastening eye is engraved on the fastening eye.
The maximum permissible fastening load of the respective components can differ to the maximum permissible tensile load of the fastening eye.
Components can be damaged at overload and fall down during lifting!
- ▶ Observe the maximum permissible fastening load according to the operating instructions and the tags on the components.
- ▶ Fasten the lattice jib only according to the following descriptions.
- ▶ Do not overload the components!

14.5.1 Closing the end section

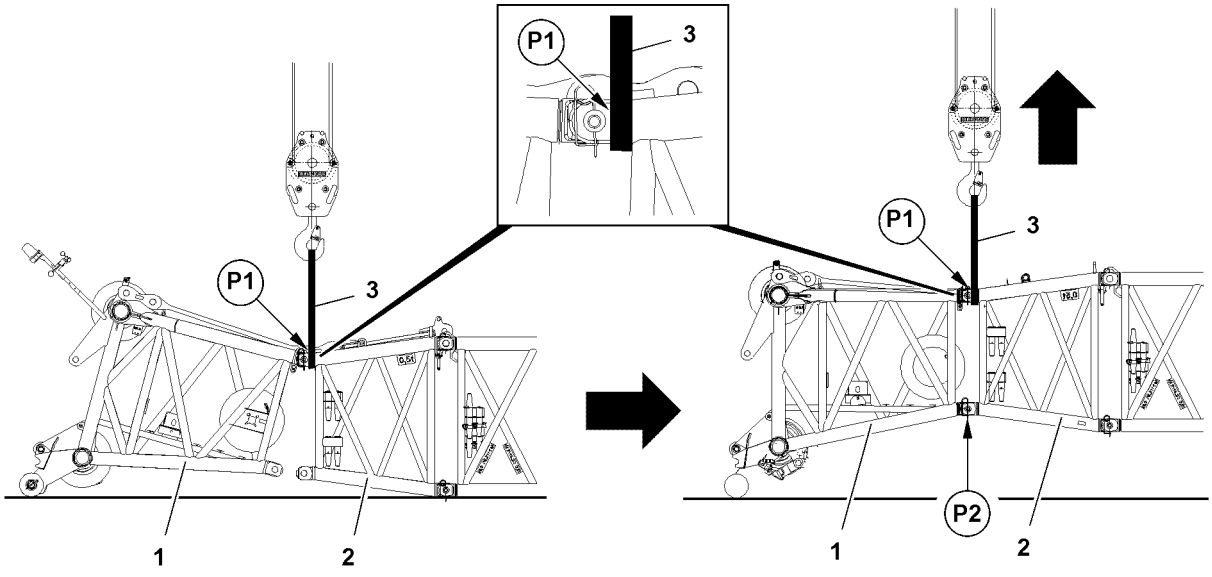

B117840

Closing the end section

For closing the end section, observe the following:
- Use textile type fastening equipment **3**.
- Loop the textile type fastening equipment **3** on the left and right around on the pin points.

- ▶ Before fastening:
  Check the position of the spring retainers and correct, if necessary.
- ▶ Fasten the textile type fastening equipment **3** on the upper pin points **P1** between the end section **1** and the pinned components **2**.

- ▶ Lift the lattice jib until the lower pin points **P2** align between the end section **1** and components **2**.
- ▶ Pin the end section **1** and components **2** on the lower pin points **P2** on the left and right.
- ▶ After pinning:
  Remove the textile type fastening equipment **3**.

14.5.2 Placing the lattice jib into the pulley cart

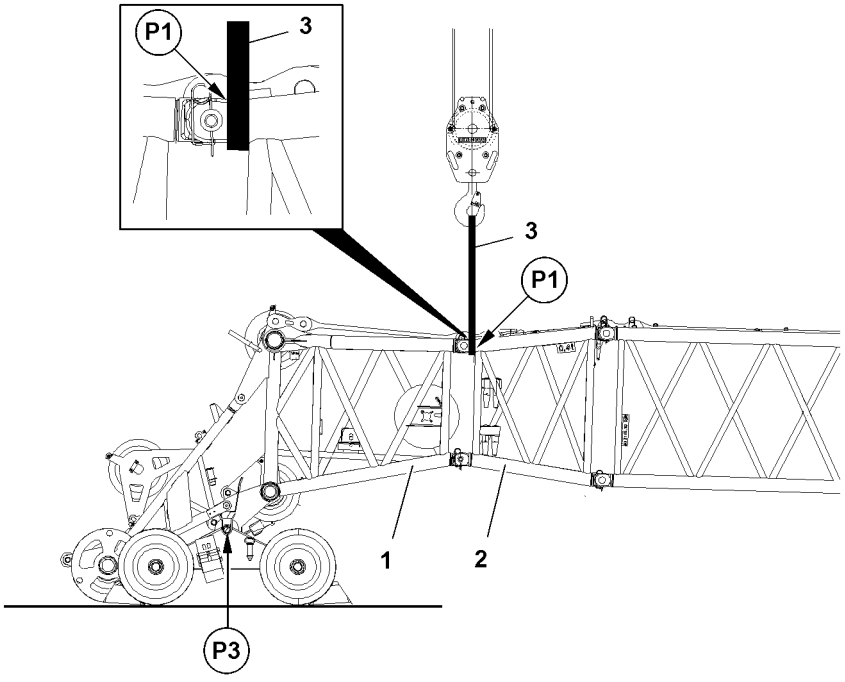

B117842

Placing the lattice jib into the pulley cart

When placing it into the pulley cart, observe the following:
- The end section **1** is completely installed.
- Use textile type fastening equipment **3**.
- Loop the textile type fastening equipment **3** on the left and right around on the pin points.

- ▶ Before fastening:
  Check the position of the spring retainers and correct, if necessary.
- ▶ Fasten the textile type fastening equipment **3** on the upper pin points **P1** between the end section **1** and the pinned components **2**.
- ▶ Lift the lattice jib and place it in the pulley cart **4**.
- ▶ Pin the end section **1** with the pulley cart **4** on the pin points **P3** on the left and right.
- ▶ Remove the textile type fastening equipment **3**.

Note
- ▶ The disassembly and removal of the pulley cart **4** is handled accordingly.

14.5.3 Opening the end section

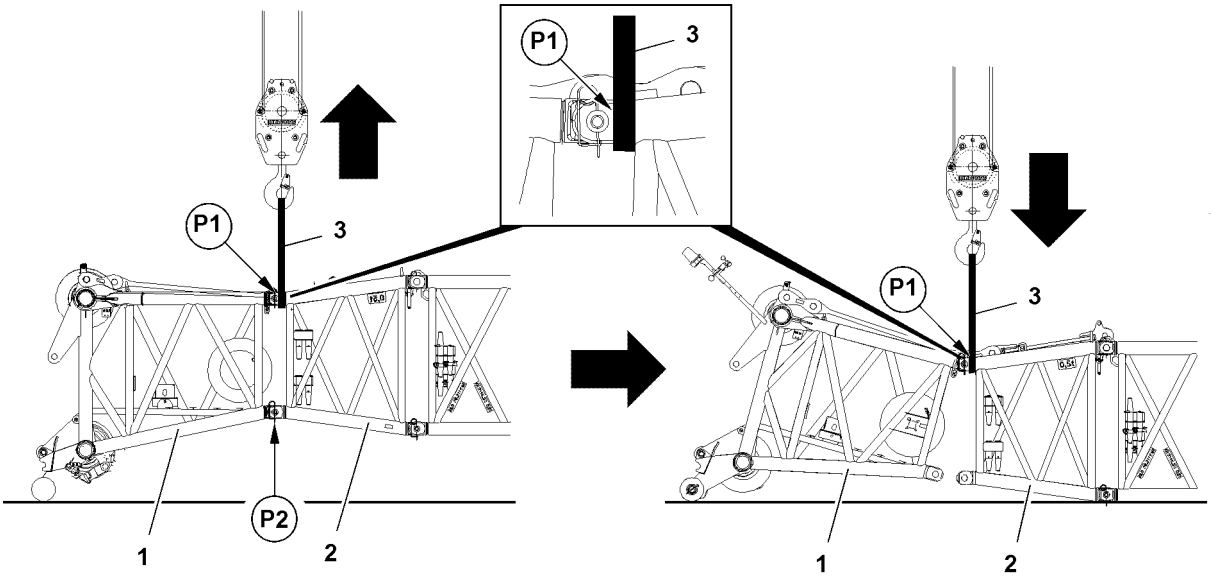

B117841

Opening the end section

For opening the end section, observe the following:

– The pulley cart is disassembled and removed.
– Use textile type fastening equipment **3**.
– Loop the textile type fastening equipment **3** on the left and right around on the pin points.

▶ Before fastening:
Check the position of the spring retainers and correct, if necessary.

▶ Fasten the textile type fastening equipment **3** on the upper pin points **P1** between the end section **1** and the pinned components **2**.

▶ Lift the lattice jib and relieve the pins on the lower pin points **P2**.

▶ Unpin the end section **1** and components **2** on the lower pin points **P2** on the left and right.

▶ Place the lattice jib on the ground.

▶ Remove the textile type fastening equipment **3**.

14.5.4 Holding the luffing lattice jib

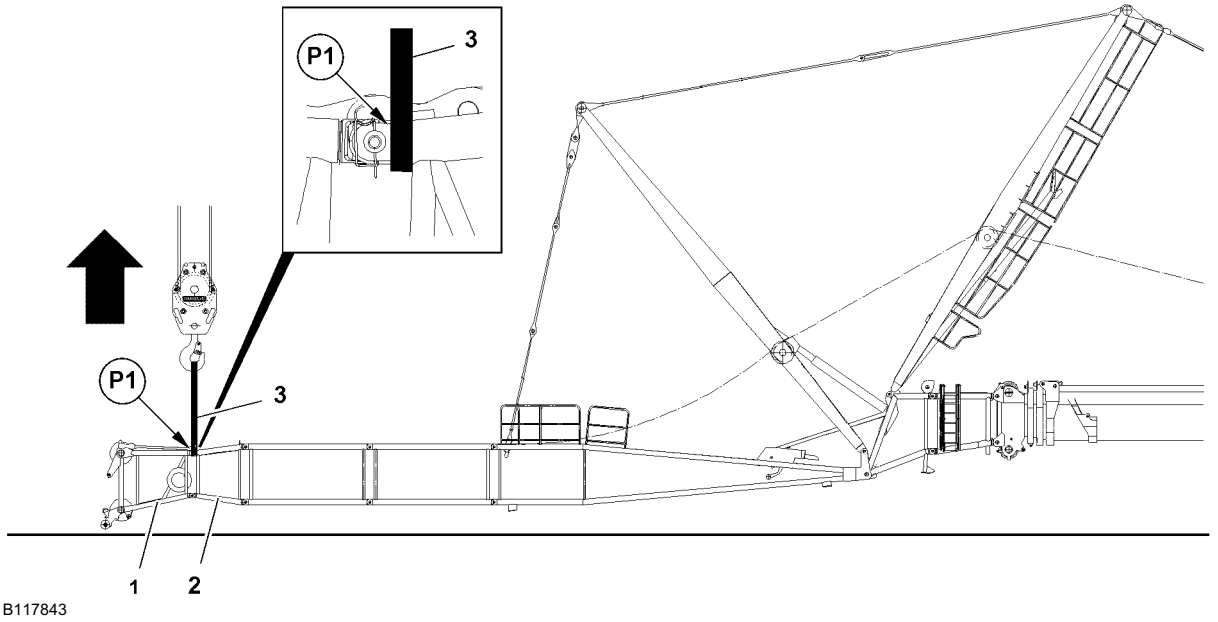

Holding the luffing lattice jib

To be able to install or remove the guy rods and "flying assembly", the luffing lattice jib must be held on the upper pin points **P1**.
When holding the luffing lattice jib, observe the following:
– The lattice jib has been completely assembled.
– Use textile type fastening equipment **3**.
– Loop the textile type fastening equipment **3** on the left and right around on the pin points.

▶ Before fastening:
Check the position of the spring retainers and correct, if necessary.
▶ Fasten the textile type fastening equipment **3** on the upper pin points **P1** between the end section **1** and the pinned components **2**.
▶ Lift the lattice jib and install the guy rods.
▶ When the guy rods are installed:
Remove the textile type fastening equipment **3**.

Note
▶ The removal of the guy rods is handled accordingly.

14.5.5 Assembling the fixed lattice jib on the TF-adapter

WARNING
Mortal danger if the lattice jib tilts over!
Due to unfavorable center of gravity, only certain lattice jib lengths can be installed / removed as an assembled lattice jib.
If a lattice jib length cannot be installed / removed as an assembled lattice jib, then they must be installed / removed individually in flying mode.
▶ Check if the respective lattice jib length can be installed / removed as an assembled lattice jib.
See charts in the Crane operating instructions, chapter 5.01.10.

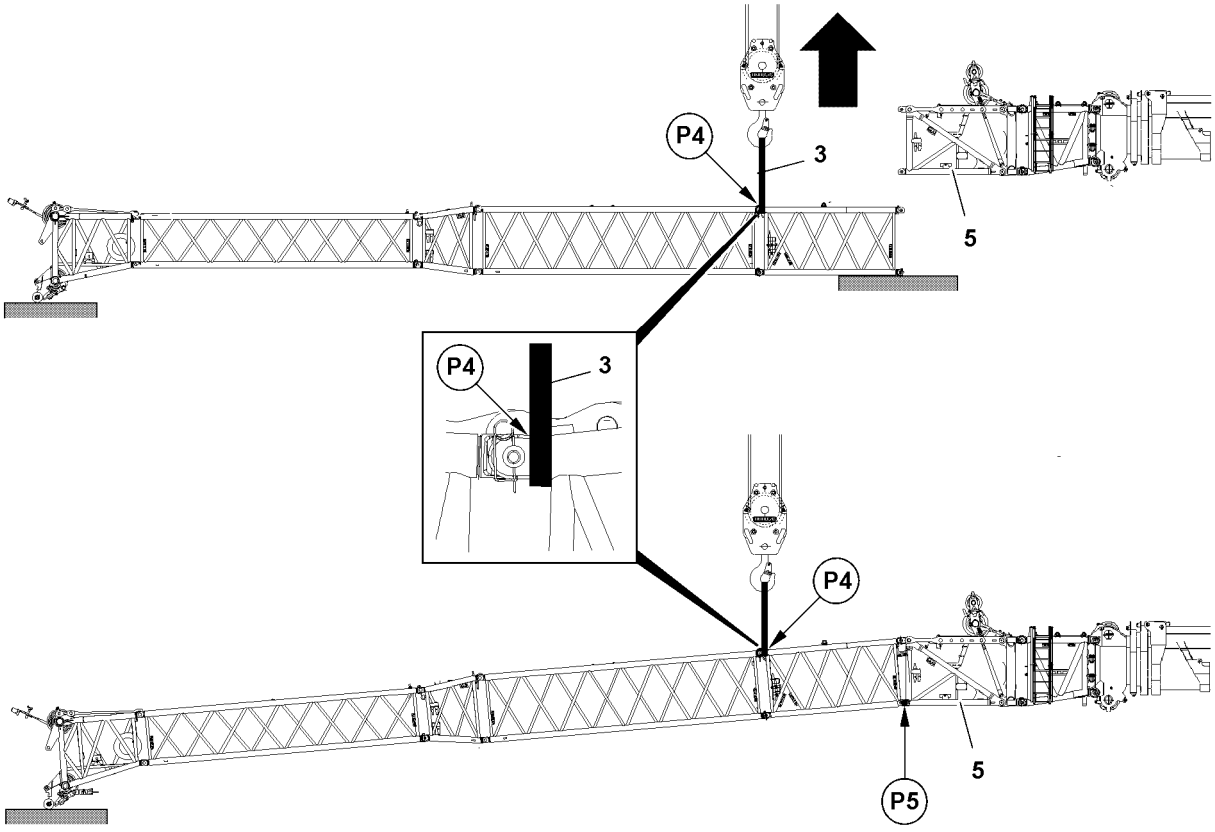

B117844

Assembling the lattice jib on the TF-adapter

For installation on the TF-adapter, observe the following:

– The lattice jib has been assembled.
– The TF-adapter **5** is installed.
– Use textile type fastening equipment **3**.
– Loop the textile type fastening equipment **3** on the left and right around on the pin points.

▶ Before fastening:
Check the position of the spring retainers and correct, if necessary.

Fasten between the lattice sections, which are installed directly on the TF-adapter.

▶ Fasten the textile type fastening equipment **3** on the upper pin points **P4**.
▶ Lift the lattice jib and affix on the lower pin point **P5** on the TF-adapter **5**.
▶ Pin the lattice jib on the lower pin point **P5** with the TF-adapter **5**.
▶ After pinning:
Remove the textile type fastening equipment **3**.

WARNING
Mortal danger if the lattice jib tilts over!
▶ Make sure to observe the permissible lattice jib length at disassembly.

▶ Disassemble accordingly.

14.5.6 Closing the fixed lattice jib

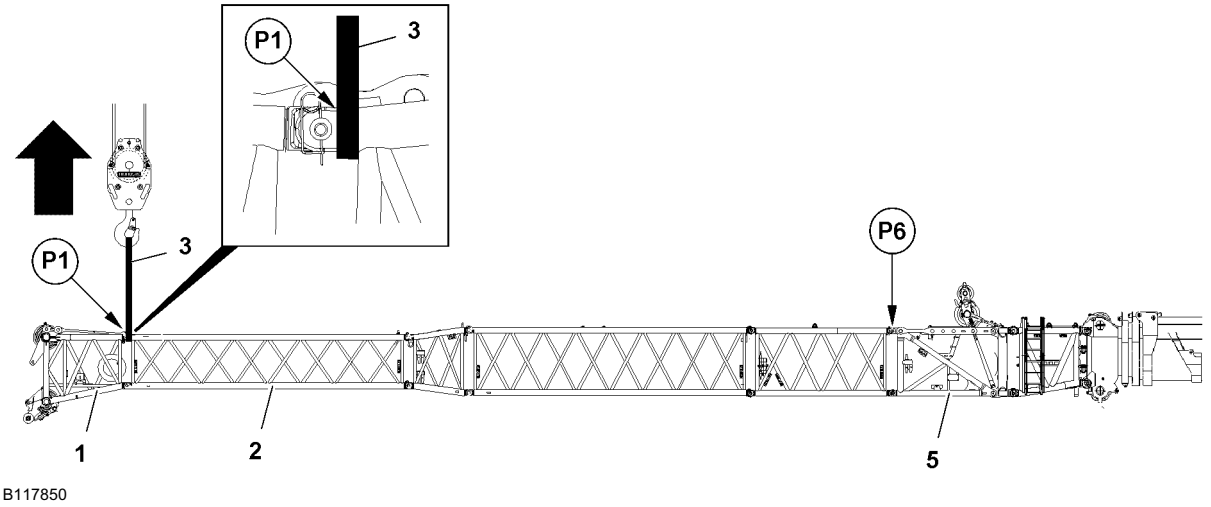

Closing the lattice jib

For installation on the TF-adapter, observe the following:

– The lattice jib is pinned on the lower pin points of the TF-adapter **5**.
– Use textile type fastening equipment **3**.
– Loop the textile type fastening equipment **3** on the left and right around on the pin points.

▶ Before fastening:
Check the position of the spring retainers and correct, if necessary.

▶ Fasten the textile type fastening equipment **3** on the upper pin points **P1** between the end section **1** and the pinned components **2**.

▶ Lift the lattice jib and affix on the upper pin point **P6** on the TF-adapter **5**.

▶ Pin the lattice jib on the upper pin point **P6** with the TF-adapter **5**.

▶ After pinning:
Remove the textile type fastening equipment **3**.

Note

▶ Disassemble accordingly.

14.5.7 Angle adjustment on the fixed lattice jib

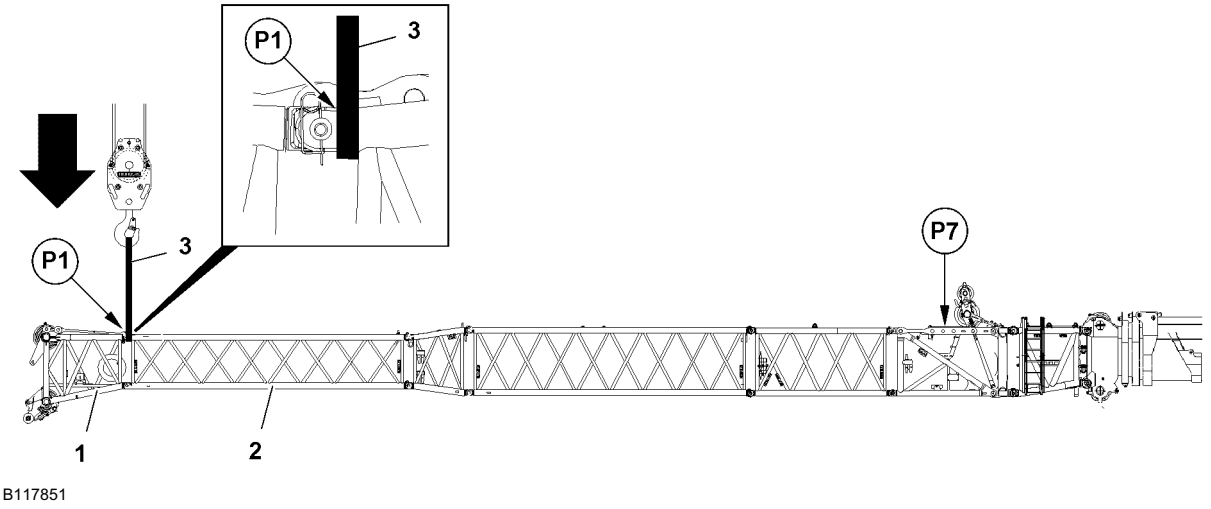

Angle adjustment on the fixed lattice jib

For the angle adjustment on the fixed lattice jib, observe the following:
– The lattice jib has been completely assembled.
– Use textile type fastening equipment **3**.
– Loop the textile type fastening equipment **3** on the left and right around on the pin points.

▶ Before fastening:
Check the position of the spring retainers and correct, if necessary.
▶ Fasten the textile type fastening equipment **3** on the upper pin points **P1** between the end section **1** and the pinned components **2**.
▶ Lift the lattice jib and relieve the pins on the angle adjustment **P7**.
▶ Unpin the angle adjustment **P7**, see Crane operating instructions, chapter 5.03.
▶ Lower the lattice jib and adjust the respective angle on the lattice jib.
▶ Pin the angle adjustment **P7**, see Crane operating instructions, chapter 5.03.
▶ After pinning:
Remove the textile type fastening equipment **3**.

14.5.8 Loading the preassembled lattice jib

For loading the lattice jib, observe the following:
– The lattice jib has been preassembled.
– Use textile type fastening equipment.
– Loop the textile type fastening equipment on the left and right around on the pin points.

▶ Before fastening:
Check the position of the spring retainers and correct, if necessary.
▶ Fasten the preassembled lattice jib according to the fastening points in the Crane operating instructions, chapter 5.03.

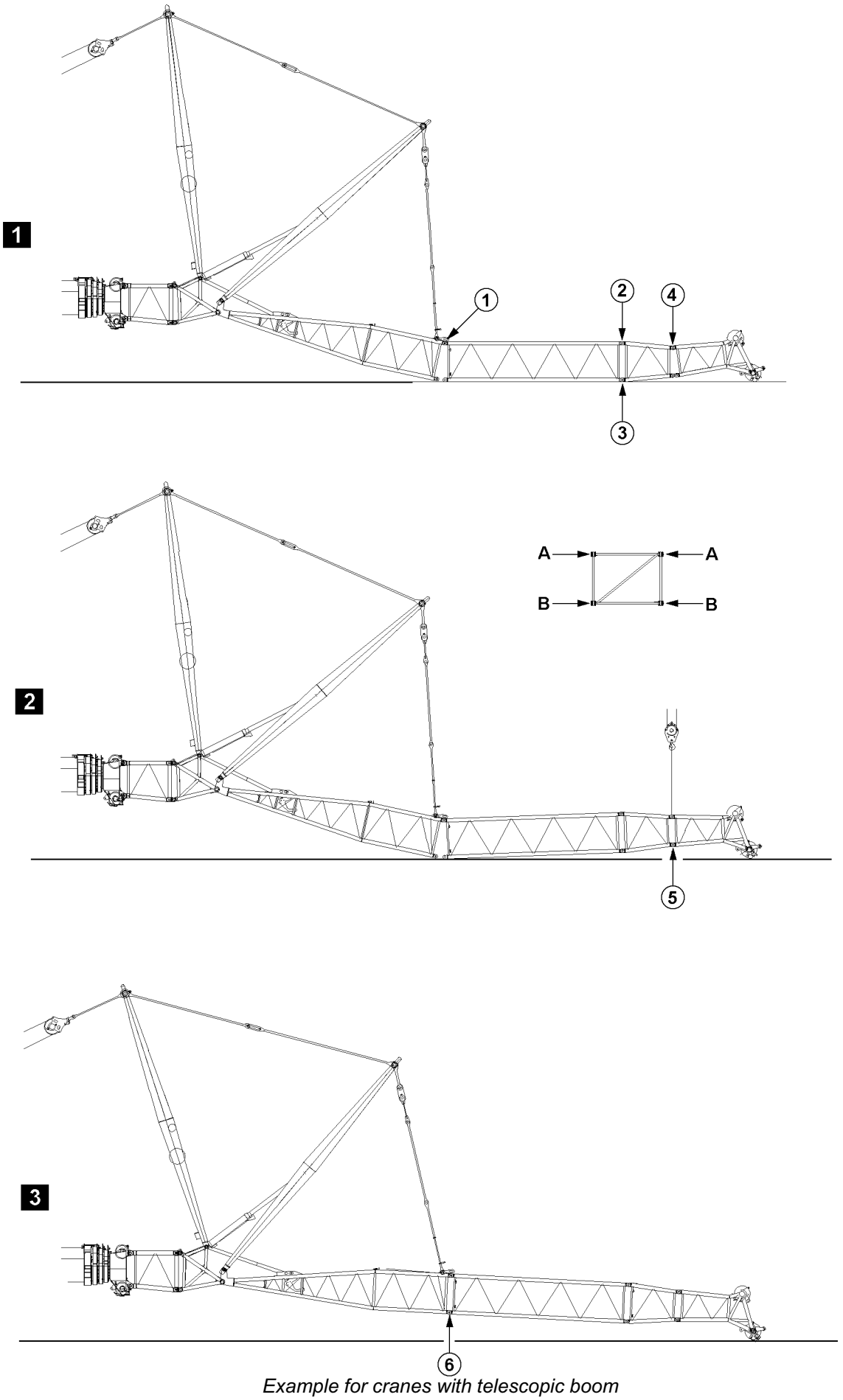

B197718

Example for cranes with telescopic boom

14.6 Assembly of lattice sections for telescopic cranes

14.6.1 Assembly of lattice sections for guyed auxiliary boom with an auxiliary crane

The illustrations serve as examples. The illustrations may differ depending on the crane.

WARNING
Danger of fatal injury when assembling auxiliary booms!
If the pins are not pinned in the given sequence, then lattice sections may suddenly fold down or fall down.
Personnel can be killed or seriously injured!
▶ Pins must be pinned in the order specified!

▶ Pin and secure pins at both sides (level **A**) at point **1**, illustration **1**.
▶ Pin and secure pins at both sides (level **A**) at point **2**, illustration **1**.
▶ Pin and secure pins at both sides (level **B**) at point **3**, illustration **1**.
▶ Pin and secure pins at both sides (level **A**) at point **4**, illustration **1**.
▶ Close the end section with the auxiliary crane, illustration **2**.
▶ Pin and secure pins at both sides (level **B**) at point **5**, illustration **2**.
▶ Lift the lattice sections, illustration **3**.
▶ Pin and secure pins at both sides (level **B**) at point **6**, illustration **3**.

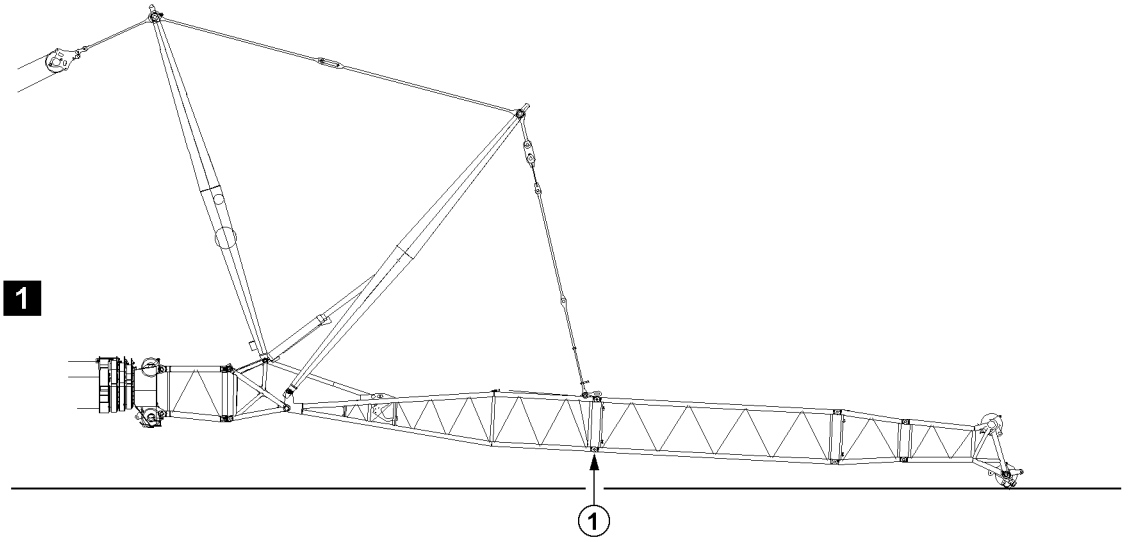

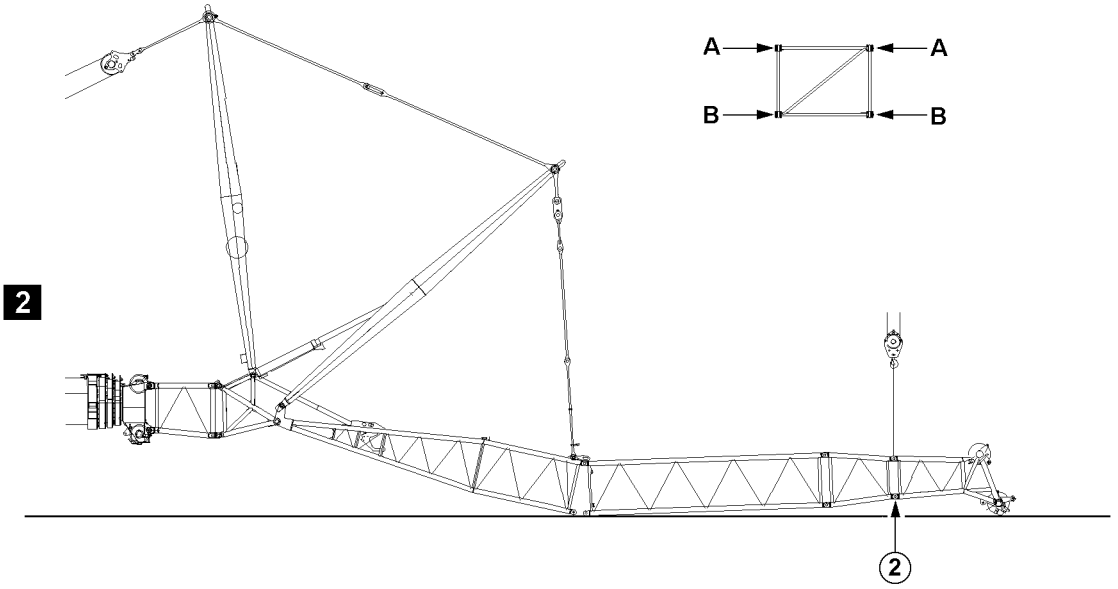

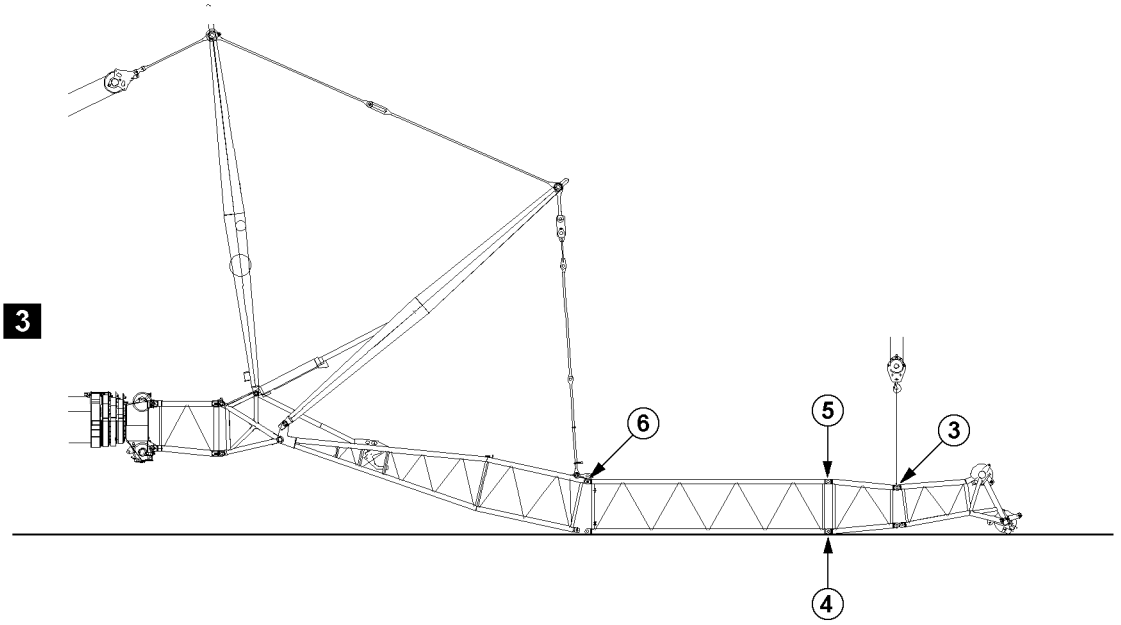

B197719

Example for cranes with telescopic boom

14.6.2 Disassembly of lattice sections for guyed auxiliary boom with an auxiliary crane

The illustrations serve as examples. The illustrations may differ depending on the crane.

WARNING
Risk of fatal injury when disassembling auxiliary booms!
If the pins are not unpinned in the given sequence, then lattice sections may suddenly fold down or fall down.
Personnel can be killed or seriously injured!
▶ Pins must be unpinned in the order specified!

- ▶ Luff the auxiliary boom down until the end section touches the ground slightly, illustration **1**.
- ▶ Release and unpin the pins at both sides (level **B**) at point **1**, illustration **1**.
- ▶ Completely remove the lattice sections, illustration **2**.
- ▶ Lift the end section with the auxiliary crane, illustration **2**.
- ▶ Release and unpin the pins at both sides (level **B**) at point **2**, illustration **2**.
- ▶ Release and unpin the pins at both sides (level **A**) at point **3**, illustration **3**.
- ▶ Release and unpin the pins at both sides (level **B**) at point **4**, illustration **3**.
- ▶ Release and unpin the pins at both sides (level **A**) at point **5**, illustration **3**.
- ▶ Release and unpin the pins at both sides (level **A**) at point **6**, illustration **3**.

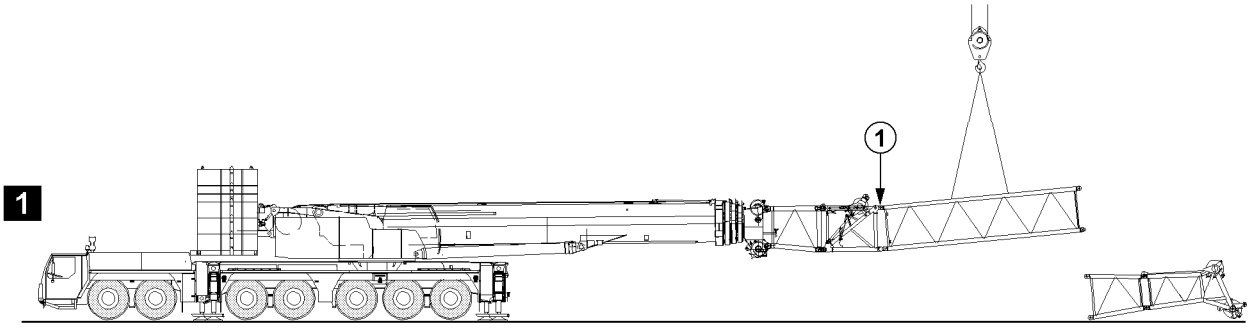

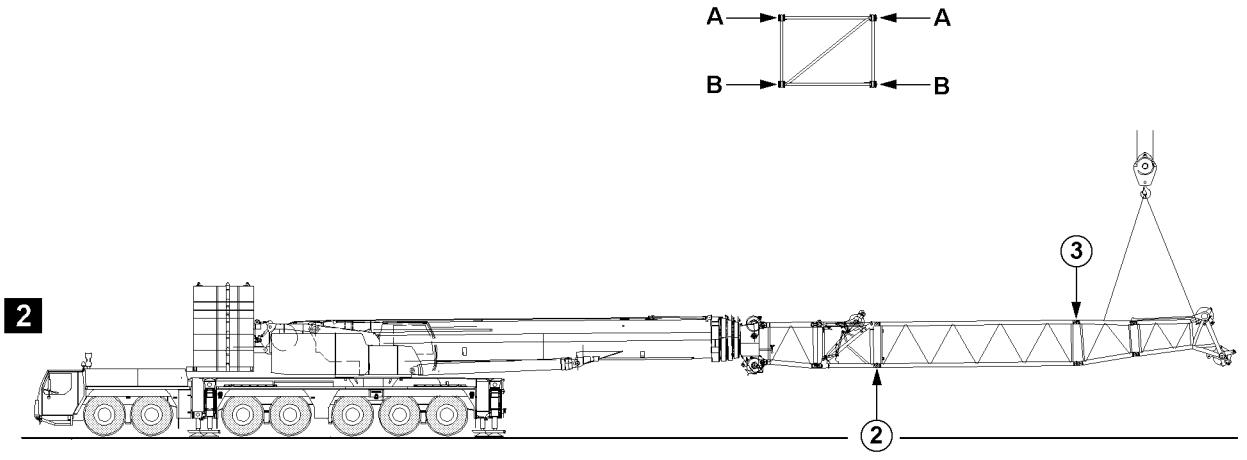

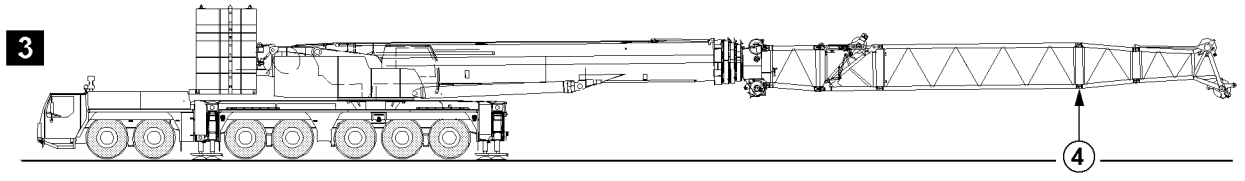

B197705 *Example for cranes with telescopic boom*

14.6.3 Assembly of lattice sections on self-supporting auxiliary booms using an auxiliary crane

The illustrations serve as examples. The illustrations may differ depending on the crane.

WARNING
Danger of fatal injury when assembling auxiliary booms!
If the pins are not pinned in the given sequence, then lattice sections may suddenly fold down or fall down.
Personnel can be killed or seriously injured!
▶ Pins must be pinned in the order specified!

▶ Pin and secure pins at both sides (level **A**) at point **1**, illustration **1**.
▶ Pin and secure pins at both sides (level **B**) at point **2**, illustration **2**.
▶ Pin and secure pins at both sides (level **A**) at point **3**, illustration **2**.
▶ Pin and secure pins at both sides (level **B**) at point **4**, illustration **3**.

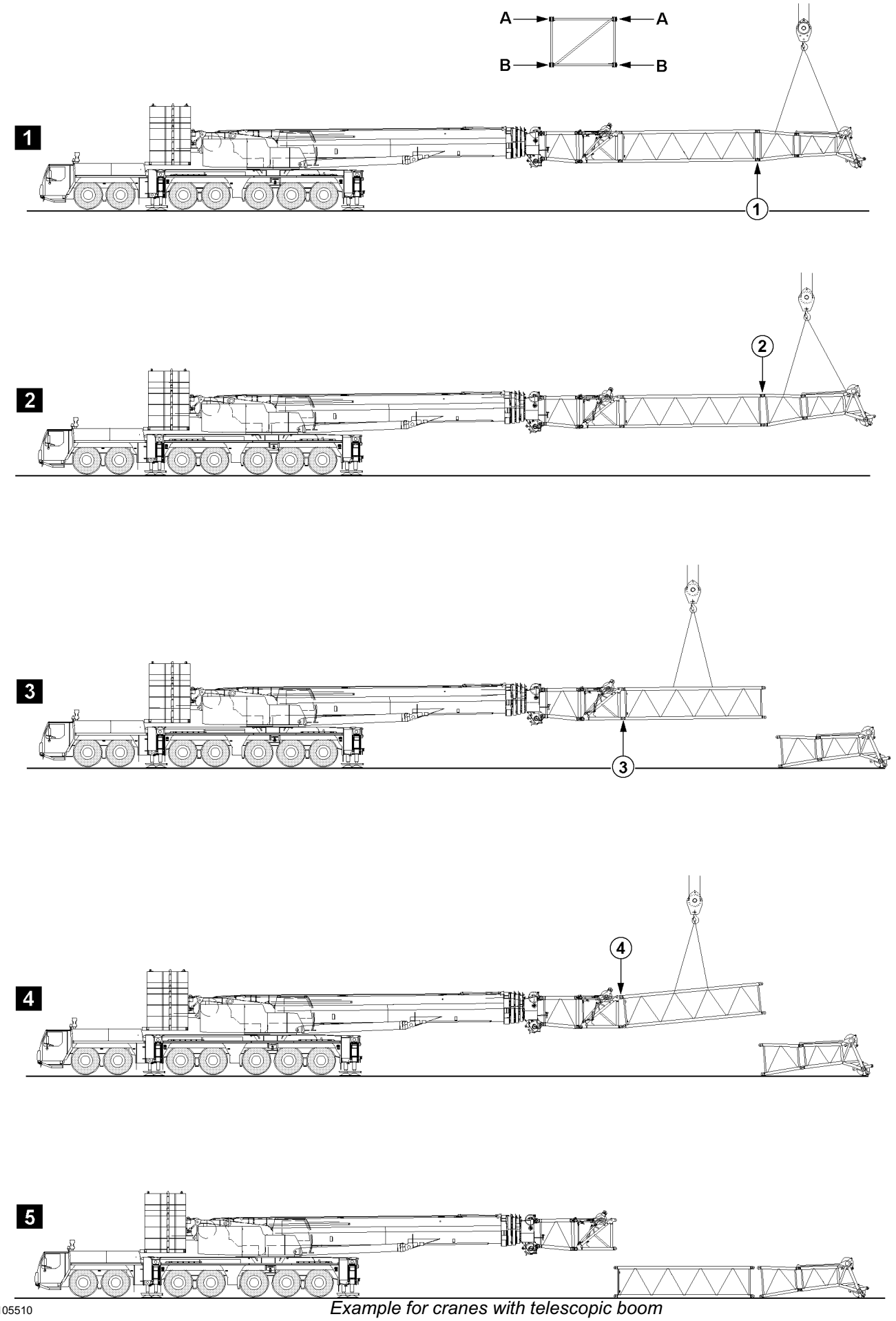

B105510 *Example for cranes with telescopic boom*

14.6.4 Disassembly of lattice sections on self-supporting auxiliary booms using an auxiliary crane

The illustrations serve as examples. The illustrations may differ depending on the crane.

WARNING
Risk of fatal injury when disassembling auxiliary booms!
If the pins are not unpinned in the given sequence, then lattice sections may suddenly fold down or fall down.
Personnel can be killed or seriously injured!
▶ Pins must be unpinned in the order specified!

▶ Release and unpin the pins at both sides (level **B**) at point **1**, illustration **1**.
▶ Release and unpin the pins at both sides (level **A**) at point **2**, illustration **2**.
▶ Release and unpin the pins at both sides (level **B**) at point **3**, illustration **3**.
▶ Release and unpin the pins at both sides (level **A**) at point **4**, illustration **4**.

1

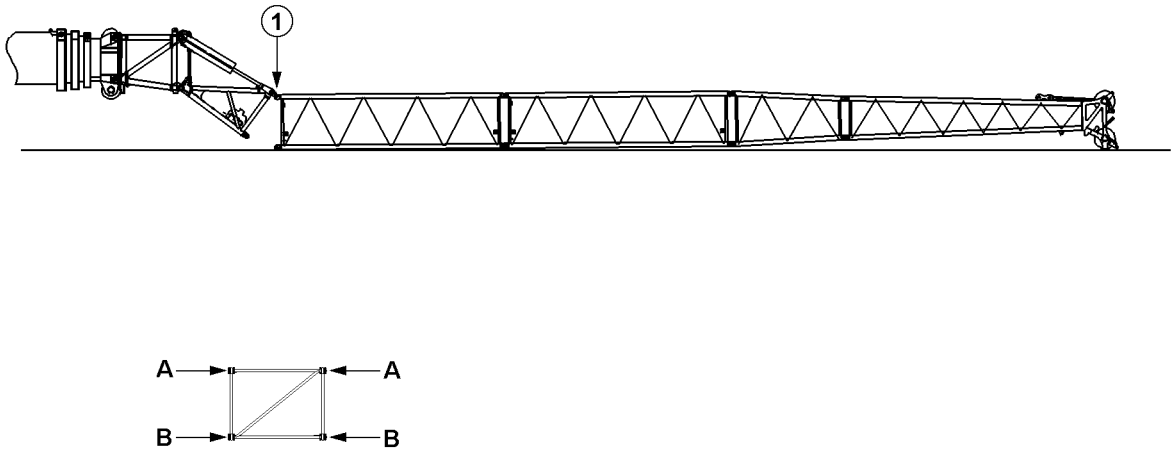

2

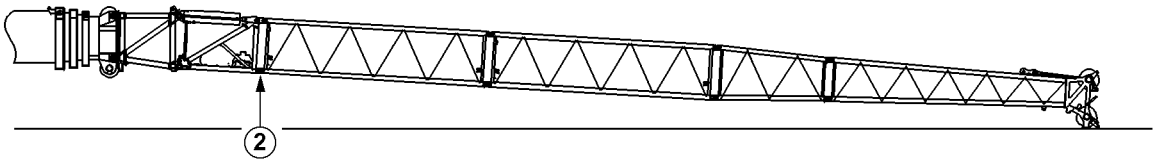

3

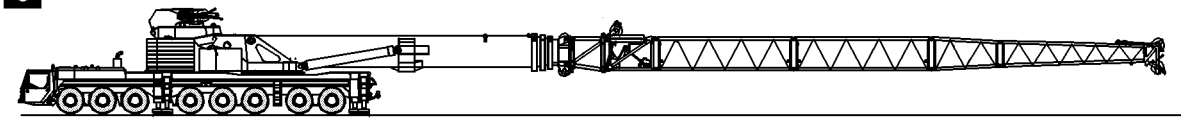

B197712 *Example for cranes with telescopic boom*

14.6.5 Assembly of lattice sections on self-supporting auxiliary booms, without auxiliary crane

The illustrations serve as examples. The illustrations may differ depending on the crane.

WARNING
Danger of fatal injury when assembling auxiliary booms!
If the pins are not pinned in the given sequence, then lattice sections may suddenly fold down or fall down.
Personnel can be killed or seriously injured!
▶ Pins must be pinned in the order specified!

For cranes with hydraulic angle adjustment and self-supporting auxiliary boom, the assembly / disassembly of additional lattice sections may be performed using the crane itself.
In order to do so, proceed as follows.

▶ Assemble the lattice sections to the required length.
▶ Pin and secure pins at both sides (level **A**) at point **1**, illustration **1**.
▶ Luff the auxiliary boom up until the pins can be pinned at point **2**, illustration **2**.
▶ Pin and secure pins at both sides (level **B**) at point **2**, illustration **2**.

1

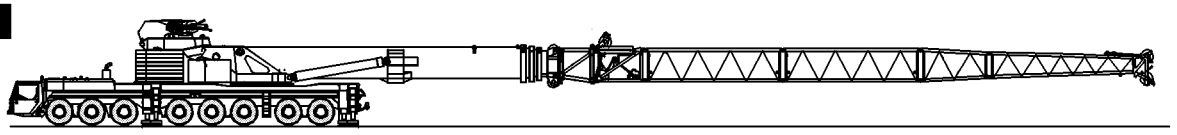

2

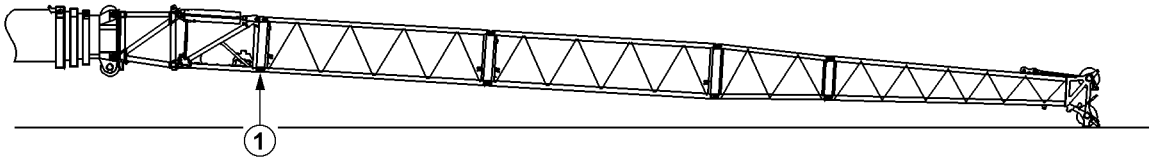

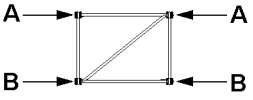

3

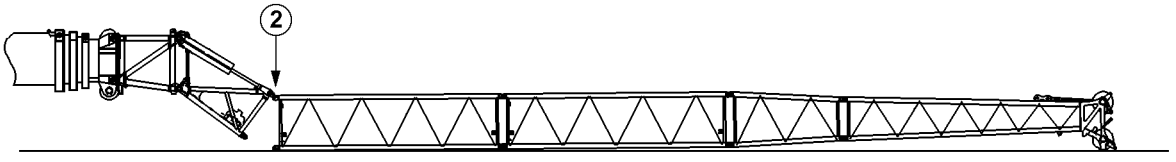

B197713 *Example for cranes with telescopic boom*

14.6.6 Disassembly of lattice sections on self-supporting auxiliary booms, without auxiliary crane

The illustrations serve as examples. The illustrations may differ depending on the crane.

WARNING
Risk of fatal injury when disassembling auxiliary booms!
If the pins are not unpinned in the given sequence, then lattice sections may suddenly fold down or fall down.
Personnel can be killed or seriously injured!
▶ Pins must be unpinned in the order specified!

For cranes with hydraulic angle adjustment and self-supporting auxiliary boom, the assembly / disassembly of additional lattice sections may be performed using the crane itself.
In order to do so, proceed as follows.

▶ Luff the auxiliary boom down until the end section touches the ground slightly, illustration **2**.
▶ Release and unpin the pins at both sides (level **B**) at point **1**, illustration **2**.
▶ Luff the auxiliary boom down until the lattice sections to be removed are laying completely on the ground, illustration **3**.
▶ Release and unpin the pins at both sides (level **A**) at point **2**, illustration **3**.
▶ Completely remove the auxiliary boom.

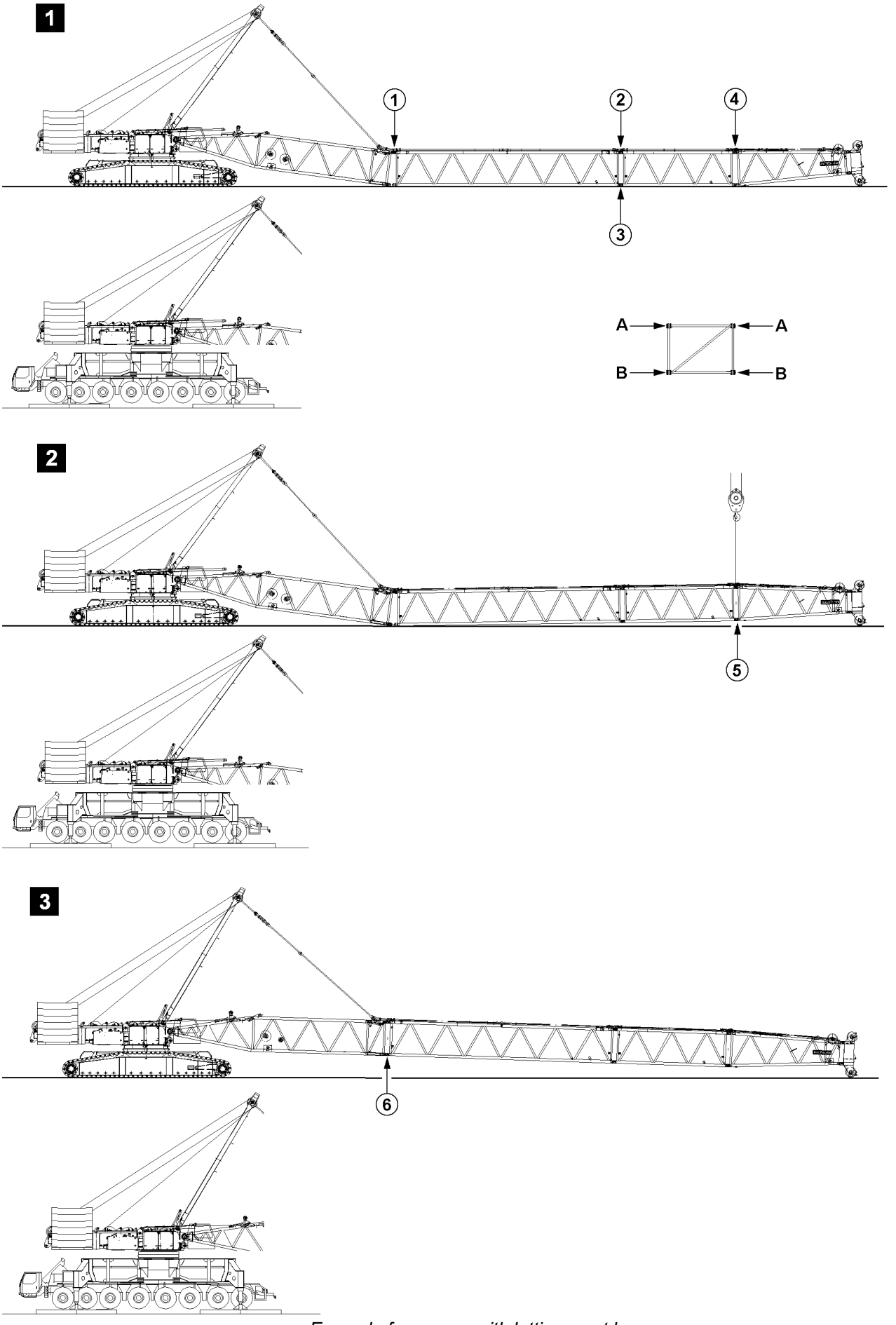

B197710 *Example for cranes with lattice mast booms*

14.7 Assembly of lattice sections for lattice mast cranes

14.7.1 Assembly of lattice sections

The illustrations serve as examples. The illustrations may differ depending on the crane.

WARNING
Risk of fatal injury when assembling booms!
If the pins are not pinned in the given sequence, then lattice sections may suddenly fold down or fall down.
Personnel can be killed or seriously injured!
▶ Pins must be pinned in the order specified!

▶ Pin and secure pins at both sides (level **A**) at point **1**, illustration **1**.
▶ Pin and secure pins at both sides (level **A**) at point **2**, illustration **1**.
▶ Pin and secure pins at both sides (level **B**) at point **3**, illustration **1**.
▶ Pin and secure pins at both sides (level **A**) at point **4**, illustration **1**.
▶ Lift the end section with the auxiliary crane, illustration **2**.
▶ Pin and secure pins at both sides (level **B**) at point **5**, illustration **2**.
▶ Lift the lattice sections, illustration **3**.
▶ Pin and secure pins at both sides (level **B**) at point **6**, illustration **3**.

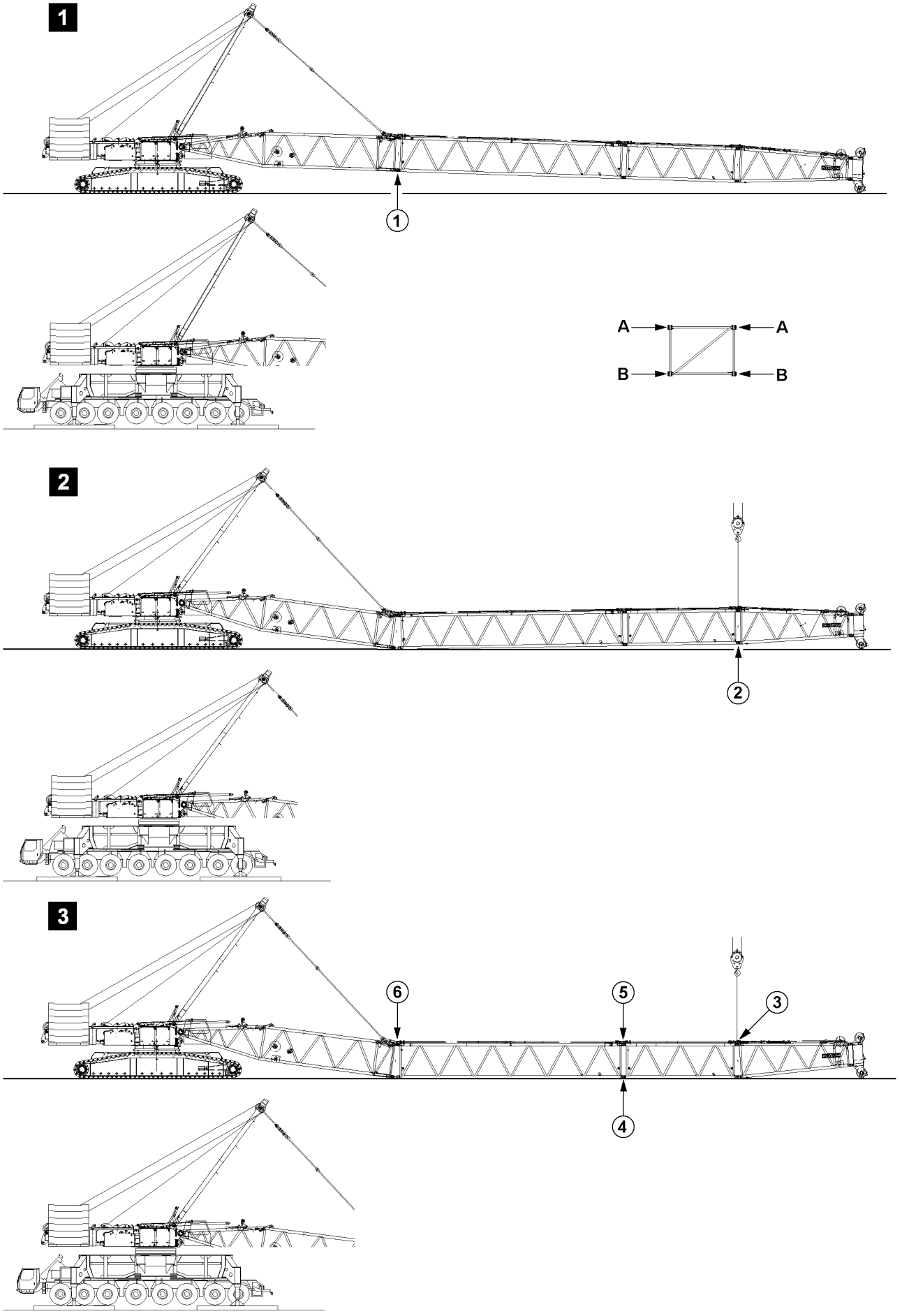

B197711 *Example for cranes with lattice mast booms*

14.7.2 Disassembly of lattice sections

The illustrations serve as examples. The illustrations may differ depending on the crane.

WARNING
Risk of fatal injury when disassembling booms!
If the pins are not unpinned in the given sequence, then lattice sections may suddenly fold down or fall down.
Personnel can be killed or seriously injured!
▶ Pins must be unpinned in the order specified!

- ▶ Luff the boom down until the end section touches the ground slightly, illustration **1**.
- ▶ Release and unpin the pins at both sides (level **B**) at point **1**, illustration **1**.
- ▶ Completely remove the lattice sections, illustration **2**.
- ▶ Lift the end section with the auxiliary crane, illustration **2**.
- ▶ Release and unpin the pins at both sides (level **B**) at point **2**, illustration **2**.
- ▶ Release and unpin the pins at both sides (level **A**) at point **3**, illustration **3**.
- ▶ Release and unpin the pins at both sides (level **B**) at point **4**, illustration **3**.
- ▶ Release and unpin the pins at both sides (level **A**) at point **5**, illustration **3**.
- ▶ Release and unpin the pins at both sides (level **A**) at point **6**, illustration **3**.

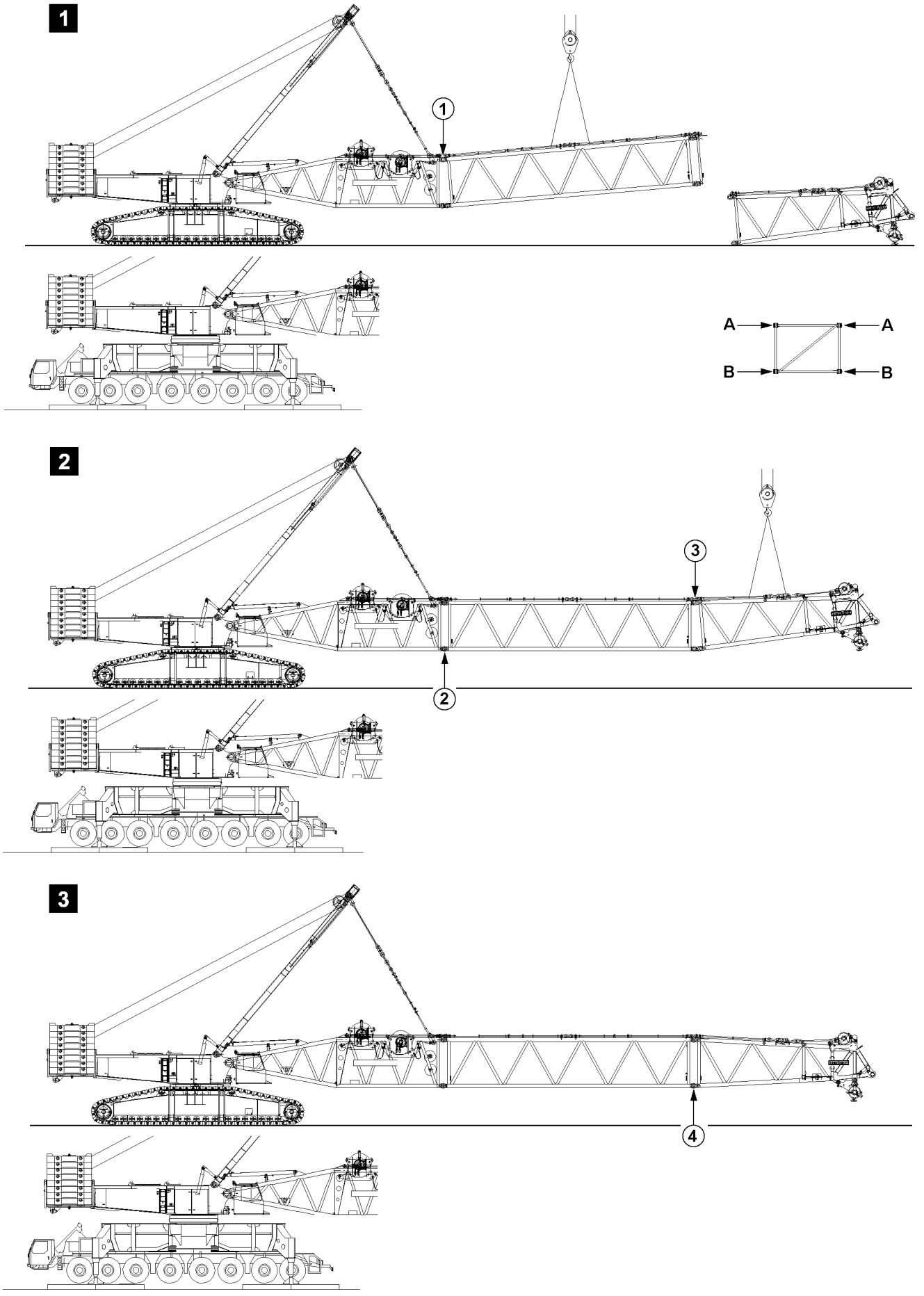

B198182 *Example for cranes with lattice mast booms*

14.7.3 Flying assembly of lattice sections

The illustrations serve as examples. The illustrations may differ depending on the crane.

WARNING
Risk of fatal injury when assembling booms!
If the pins are not pinned in the given sequence, then lattice sections may suddenly fold down or fall down.
Personnel can be killed or seriously injured!
▶ Pins must be pinned in the order specified!

▶ Pin and secure pins at both sides (level **A**) at point **1**, illustration **1**.
▶ Pin and secure pins at both sides (level **B**) at point **2**, illustration **2**.
▶ Pin and secure pins at both sides (level **A**) at point **3**, illustration **2**.
▶ Pin and secure pins at both sides (level **B**) at point **4**, illustration **3**.

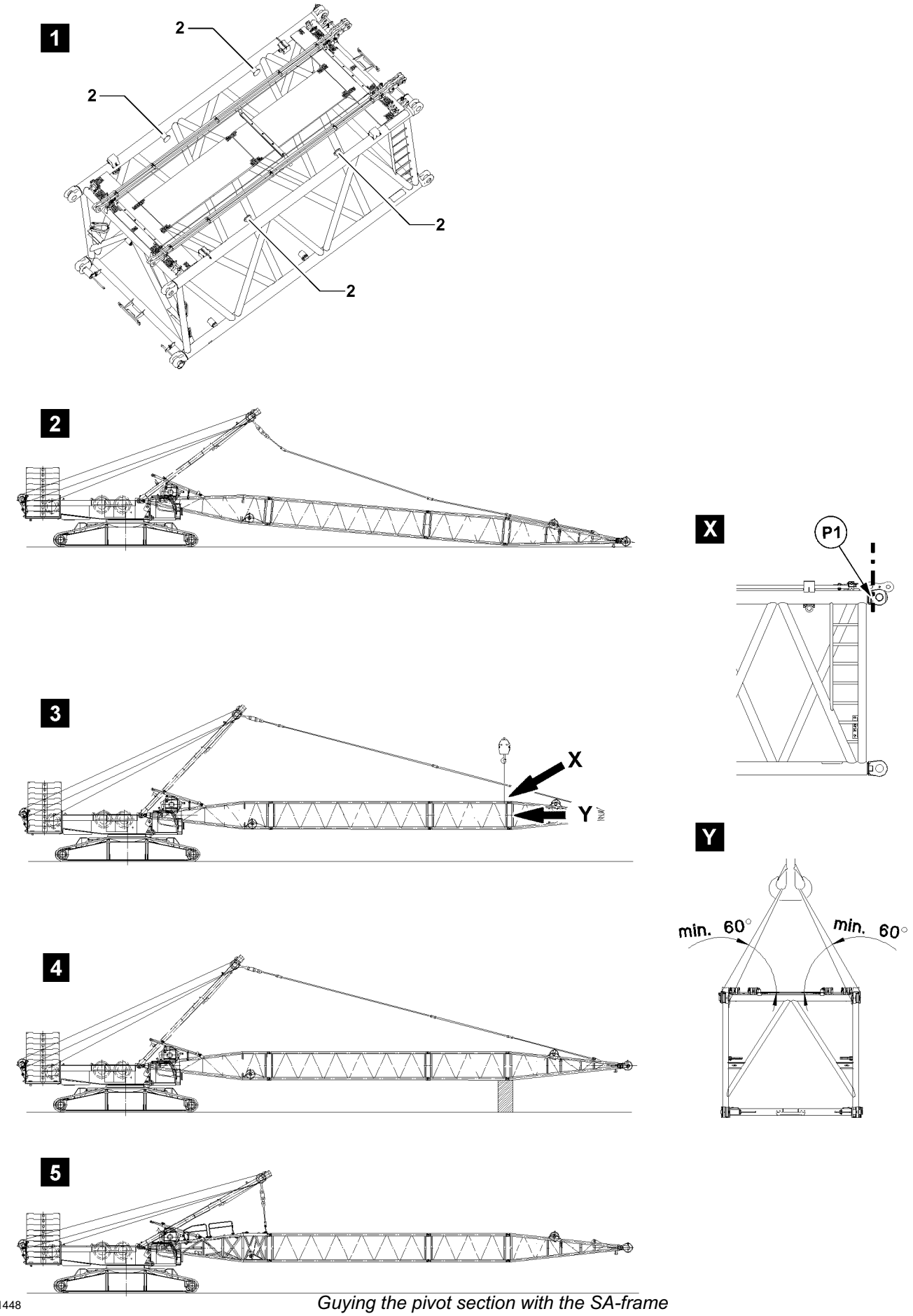

B111448 *Guying the pivot section with the SA-frame*

14.7.4 Flying disassembly of lattice sections

The illustrations serve as examples. The illustrations may differ depending on the crane.
The flying disassembly of lattice sections can be used on:
– Derrick boom
– Main boom

Ensure that the following prerequisite is met:
– Before guying the pivot section, secure the boom properly to prevent it from falling down!

Guying the pivot section in flying mode with the SA-frame

▶ Place the boom on the ground, see illustration **2**.

or

WARNING
Lattice section incorrectly attached!
If the fastening equipment is attached on the bitts **2** when securing the boom, then the bitts will be overloaded! The lattice section will be damaged. The boom can fall down! Personnel can be severely injured or killed!
If the auxiliary crane is used to secure the boom for flying disassembly:
▶ Do **not** fasten the lattice section on the bitts **2**, see illustration **1**!
▶ Attach the fastening equipment in the area of point **P1** on both sides on the lattice section, see detail **X**!
▶ Make sure that the long fastening equipment is used, so that the angle between the cross section of lattice section and guyed fastening equipment is at least 60°, see detail **Y**!

■ Secure the boom with the auxiliary crane, see illustration **3**.

or

WARNING
Falling boom!
If the boom is not properly and securely supported from below, then the boom can fall down!
▶ Support the boom properly and safely with suitable material!

■ Support the boom, see illustration **4**.
Result:
– The guy rods can be disassembled.

▶ Place down, secure and disassemble the guy rods.
▶ Pin and secure the guy rods SA-frame on the pivot section.
▶ Tighten the guy rods SA-frame until the boom is in horizontal position.
Result:
– Pivot section is guyed in flying mode with the SA-frame, see illustration **5**.
– The lattice sections can be disassembled in flying mode.

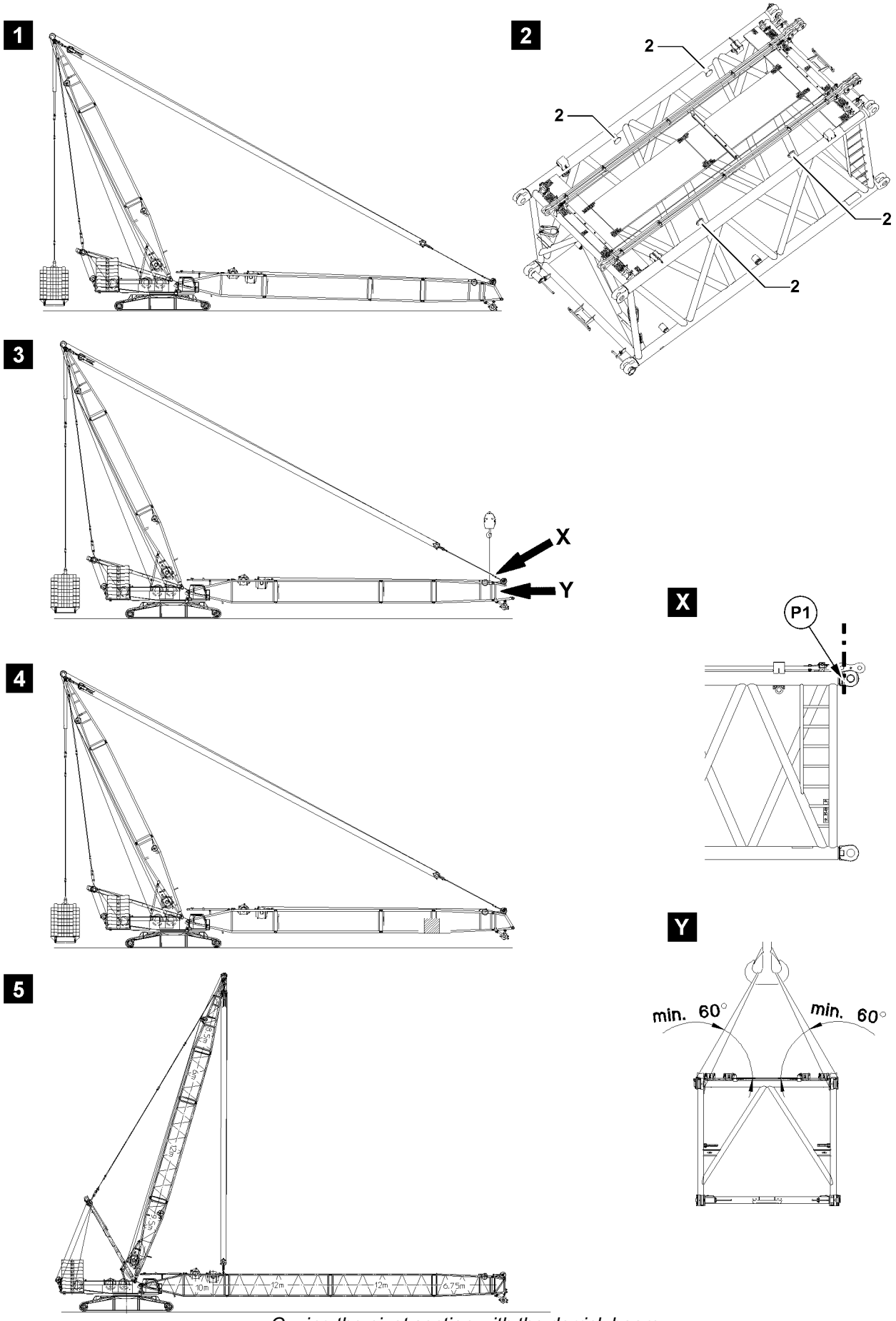

B111449 *Guying the pivot section with the derrick boom*

Guying the pivot section in flying mode with the derrick boom

▶ Place the boom on the ground, see illustration **1**.

or

WARNING
Lattice section incorrectly attached!
If the fastening equipment is attached on the bitts **2** when securing the boom, then the bitts will be overloaded! The lattice section will be damaged. The boom can fall down! Personnel can be severely injured or killed!
If the auxiliary crane is used to secure the boom for flying disassembly:
▶ Do **not** fasten the lattice section on the bitts **2**, see illustration **2**!
▶ Attach the fastening equipment in the area of point **P1** on both sides on the lattice section, see detail **X**!
▶ Make sure that the long fastening equipment is used, so that the angle between the cross section of lattice section and guyed fastening equipment is at least 60°, see detail **Y**!

■ Secure the boom with the auxiliary crane, see illustration **3**.

or

WARNING
Falling boom!
If the boom is not properly supported from below, then the boom can fall down!
▶ Support the boom properly and safely with suitable material!

■ Support the boom, see illustration **4**.
Result:
– The guy rods can be disassembled.

▶ Place down, secure and disassemble the guy rods.
▶ Pin and secure the pulley block on the pivot section.
▶ Tighten the control rope until the boom is in horizontal position.
Result:
– Pivot section is guyed in flying mode with the SA-frame, see illustration **5**.
– The lattice sections can be disassembled in flying mode.

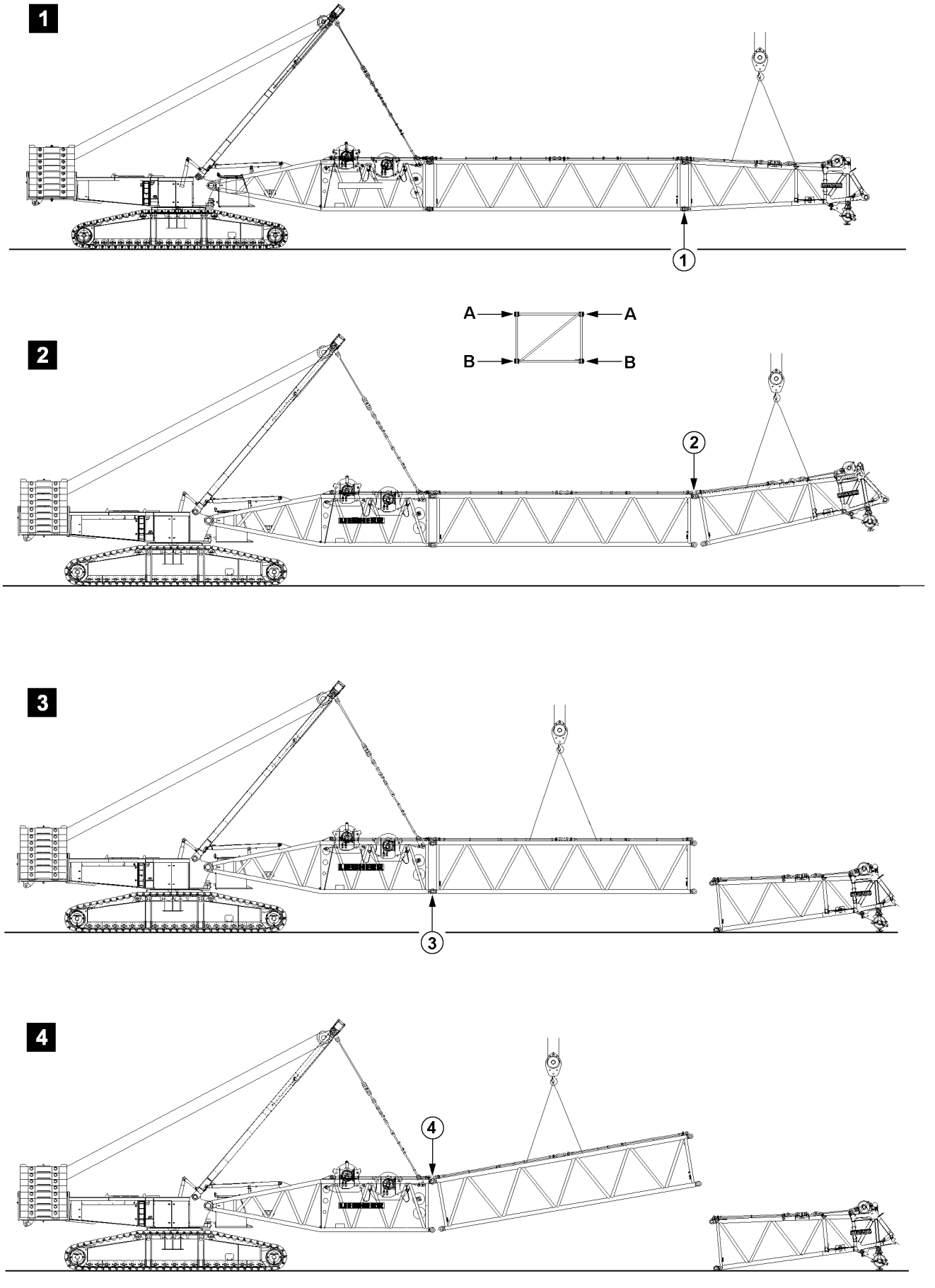

B105511

Example for cranes with lattice mast booms

Unpinning the lattice components

WARNING
Risk of fatal injury when disassembling booms!
If the pins are not unpinned in the given sequence, then lattice sections may suddenly fold down or fall down.
Personnel can be killed or seriously injured!
▶ Pins must be unpinned in the order specified!

▶ Release and unpin the pins at both sides (level **B**) at point **1**, illustration **1**.
▶ Release and unpin the pins at both sides (level **A**) at point **2**, illustration **2**.
▶ Release and unpin the pins at both sides (level **B**) at point **3**, illustration **3**.
▶ Release and unpin the pins at both sides (level **A**) at point **4**, illustration **4**.

14.8 Bypass for assembly and disassembly

Depending on the crane version, the “Bypass at assembly and disassembly” is activated by:
– The set up button (key button) on the LICCON monitor.
– The assembly key button in the instrument panel.

WARNING
High risk of accident in crane operation with activated “Bypass at assembly and disassembly”!
At activated “Bypass at assembly and disassembly” the overload protection and possible the hoist limit switches are bypassed!
In the event of deliberate improper use, the crane could collapse, the boom can break off or the crane can topple over!
Personnel can be killed!
This could result in high property damage!
▶ The activation of the “Bypass at assembly and disassembly” is only permissible for assembly and disassembly purposes!
▶ All other usage of the “Bypass at assembly and disassembly” other than as described in the operating instructions is prohibited!
▶ The “Bypass at assembly and disassembly” may only be activated by persons who are aware of the consequences of a bypass!
▶ Crane operation with activated “Bypass at assembly and disassembly” is strictly prohibited!
▶ The “Bypass at assembly and disassembly” must be deactivated immediately after assembly and disassembly work!
▶ The crane operator or a person authorized by him must make sure that no misuse of the bypass device is possible (remove the key and store it safely, if necessary)!

14.8.1 Activating the Bypass at assembly and disassembly

Note
▶ Applies only for cranes with LICCON overload protection.
▶ Indicator light “Assembly” is only present in the instrument panel for certain crane types.

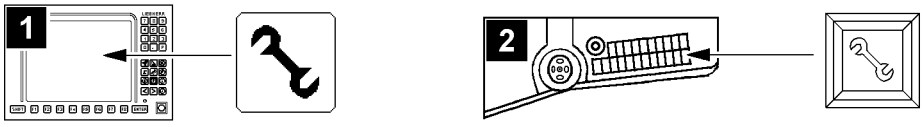

B113438

– Illustration **1**: LICCON monitor (only certain crane types).
– Illustration **2**: Indicator light “Assembly” in instrument panel crane cab (only certain crane types).

▶ Actuate the respective operating element.

Result:
- The LICCON overload protection is bypassed / inactive and the “Bypass at assembly and disassembly” is activated.
- The “Assembly” icon appears in the LICCON monitor and / or the indicator light “Assembly” in the instrument panel lights up.
- Depending on the circumstances, acoustical and / or optical warning signals (blinkers, flashing lights, bells and horns).

14.8.2 Bypass at assembly and disassembly

Note
▶ Applies only for cranes with LICCON overload protection.
▶ Indicator light “Assembly” is only present in the instrument panel for certain crane types.

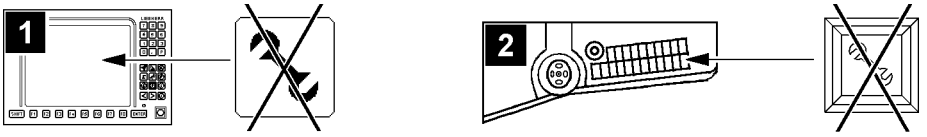

B113437

▶ No longer actuate the respective operating element or reset.

Result:
- The LICCON overload protection is active and the “Bypass at assembly and disassembly” is deactivated.
- The “Assembly” icon turns off in the LICCON monitor and / or the indicator light “Assembly” in the instrument panel no longer lights up.
- The acoustical and / or optical warning signals which were triggered by the bypass are turned off again.

14.9 Bypassing during crawler assembly

Note
▶ Applies only for cranes with crawler assembly key button.

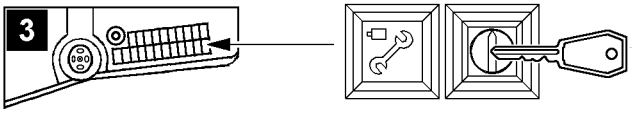

B113441

- Illustration **3**: Crawler assembly key button and indicator light

Ensure that the following prerequisite is met:
- The LICCON overload protection is bypassed / inactive and the “Bypass at assembly and disassembly” is activated.

WARNING
High risk of injury in case of actuated crawler assembly key button!
Operating the crawler assembly key button bypasses the overload protection! No shut off at overload will occur in assembly mode or in crane operations!
In the event of deliberate misuse, the crane can topple over!
Personnel can be killed!

This could result in high property damage!
- ▶ The crawler assembly key button may only be actuated for assembly tasks!
- ▶ All other usage of the crawler assembly key button other than as described in the operating instructions is prohibited!
- ▶ Operating the crane with the crawler assembly key button enabled is strictly prohibited!

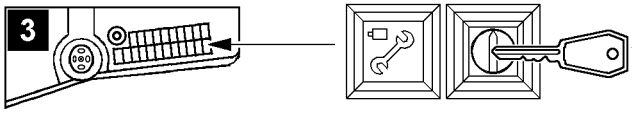

B113441

▶ Actuate the crawler assembly key button.

Result:
- The LICCON overload protection is inactive.
- The indicator light “Crawler assembly” lights up.

▶ If the bypass at crawler assembly is to be turned off:
Turn the crawler assembly off by pressing the off button.

Result:
- The indicator light in the button turns off.

14.10 Assembling / disassembly of hydraulic lines

When connecting and releasing hydraulic lines with quick couplings, make sure that the coupling procedure is carried out correctly.

WARNING
Danger of accident due to loss of pressure or leakage!
Incorrectly coupled or self-loosening quick-release couplings (particularly return lines) can result in serious accidents due to component failure!
Personnel can be severely injured or killed!
- ▶ Check the quick-release couplings after installation for correct connection.

WARNING
Pressure in the hydraulic lines!
If the pressure supply is not interrupted before releasing the hydraulic lines, the hydraulic oil can escape with high pressure!
Personnel can be severely injured or killed!
- ▶ Release the pressure in the hydraulic system before releasing. Interrupt the pressure supply and wait for a short time.

- ▶ Release the pressure in the hydraulic system before connecting and disconnecting: Turn the engine off and wait for short time.
- ▶ Connect the coupling components (sleeve and connector) and screw together with the hand-tightened nut.
- ▶ Tighten the hydraulic coupling by hand. Rotate the hand-tightened nut until it reaches a tangible, fixed stop position.

14.11 Assembly / disassembly of electrical lines

NOTICE
Danger of damage of electrical connections!
If the following measures are not adhered to, the electrical connections can be damaged!
- ▶ Do not plug in the plug connection or unplug them under tension!
- ▶ Do not pinch or crush electrical connections!

When pulling the cable out:
- ▶ Hold the plug and not the cable. Do not pull on the cable to release the plug connection!
- ▶ Relieve the electrical connections in operating condition!
- ▶ In case of defective or faulty electrical lines, contact Service at Liebherr-Werk Ehingen!

NOTICE
Corroding of plug connections!
The plug connections are only protected when plugged in. If the plug connections are not plugged in, then the contact surfaces can corrode!
- ▶ Always plug or screw the plug connections together properly!
- ▶ Keep plug connections clean and dry! Clean contact surfaces provide the best signal transfer.

- ▶ If a pull release for the cable drum is present:
  Hang the pull release in on the fixed point and relieve the plug connections from the pull strain.
- ▶ After installing the plug connections:
  Check all plug connections for proper connection.
- ▶ If a plug connection is not properly connected:
  Plug or screw the plug connection together properly.
- ▶ After removing the plug connections:
  Protect the electrical connections with dust caps or place them in intended parking retainers.
- ▶ If locking brackets are present:
  Close the locking bracket.

15 Erection / take down

WARNING
The crane can topple over!
Due to an unforeseen occurrence, for example: Sudden strong wind or storm can lead to dangerous operating situations, up to toppling the crane!
Personnel can be severely injured or killed!
- ▶ The boom must be able to be placed down at any time with its current equipment!
- ▶ The required counterweight must always be in direct vicinity of the crane!
- ▶ The crane operator must ensure that the required counterweight is carried along when driving the crane with the equipment in place and that the boom can be placed down at any time!

WARNING
Danger of fatal injury!
- ▶ Incorrectly installed or non-functioning limit switches as well as falling parts (pins, spring retainers, ice etc.) can cause accidents!

15.1 Erection / take down for mobile cranes

Make sure that the following prerequisites are met:

- The crane is properly supported.
- The crane is horizontally aligned.
- The counterweight has been installed on the turntable according to the load chart or the erection / take down charts.
- The derrick ballast (suspended ballast or ballast trailer ballast) is installed according to the load chart or the erection / take down charts.
- The telescopic boom is fully telescoped in.
- The boom has been installed according to the load chart and the Crane operating instructions.
- The hoist rope has been correctly placed in the rope pulleys and prevented from jumping out with the rope retaining pins.
- All limit switches have been correctly installed and are fully functional.
- All pin connections have been secured.
- No personnel is within the danger zone.
- There are no loose parts on the boom or the auxiliary boom.
- In winter, the exposed rope pulleys must be kept free of snow, frost and ice.
- In winter, the telescopic boom, the auxiliary boom and their associated components (limit switches, cable drum, flashing beacon, wind speed sensor etc.) must be kept free of ice and snow.

▶ Check if all prerequisites have been met.

15.2 Erection / take down for crawler cranes

Make sure that the following prerequisites are met:

- The crane is horizontally aligned.
- The crane is properly supported (cranes with support).
- The counterweight has been installed on the turntable according to the load chart.
- The central ballast has been installed according to the load chart.
- The counterweight is installed according to the load chart or the erection / take down charts.
- The derrick ballast (suspended ballast or ballast trailer ballast) is installed according to the load chart or the erection / take down charts.
- The boom has been installed according to the load chart and the Crane operating instructions.
- The hoist rope has been correctly placed in the rope pulleys and prevented from jumping out with the rope retaining pins.
- All limit switches have been correctly installed and are fully functional.
- All pin connections have been secured.
- No personnel is within the danger zone.
- There are no loose parts on the boom or the auxiliary boom.
- In winter, the exposed rope pulleys must be kept free of snow, frost and ice.
- In winter, the boom, the auxiliary boom and their associated components (limit switches, cable drum, flashing beacon, wind speed sensor etc.) must be kept free of ice and snow.

▶ Check if all prerequisites have been met.

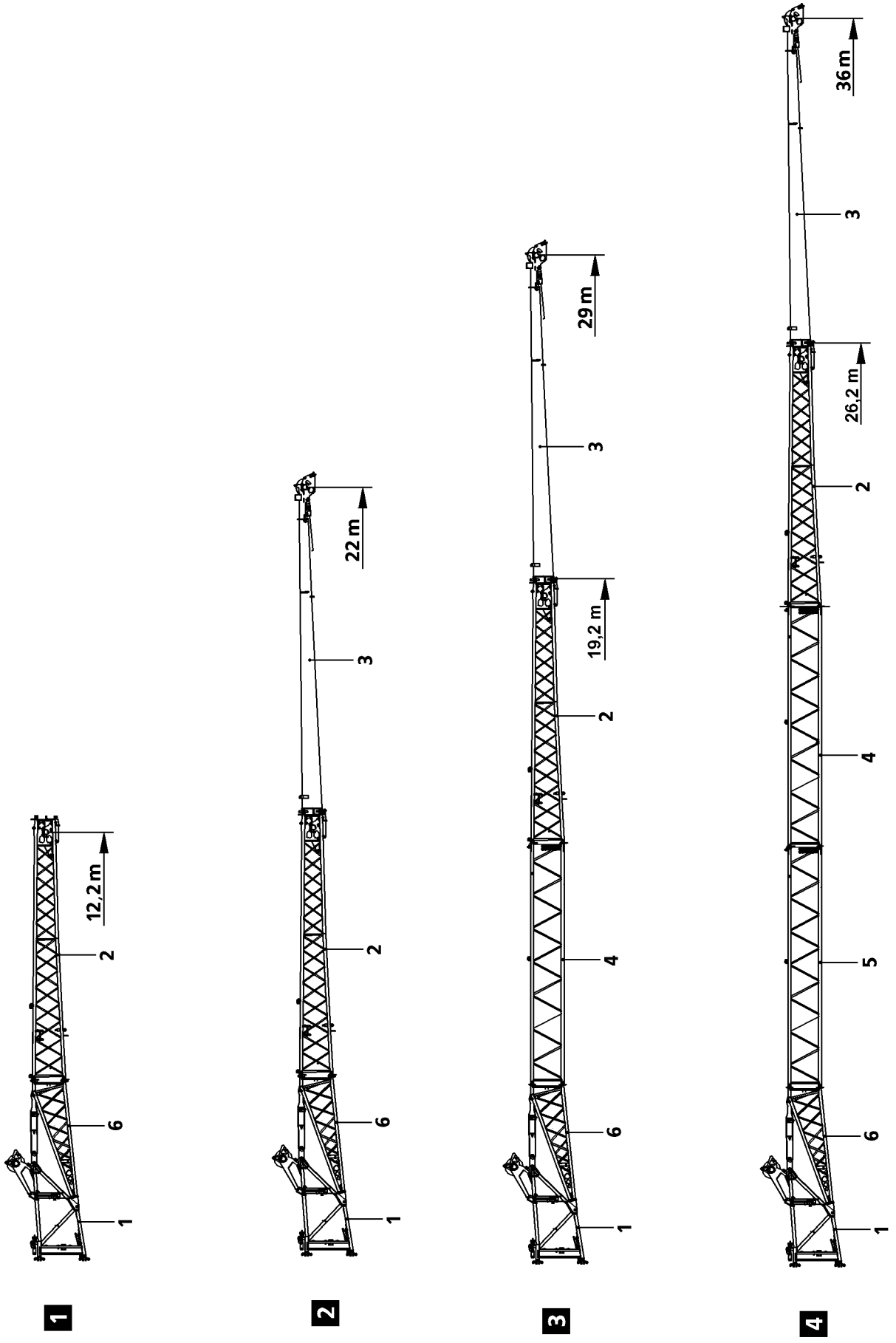

B192122

1 General

This crane may be equipped with a hydraulic or mechanical folding jib. The folding jib with “mechanical angle adjustment” may be assembled as a straight (0 °) extension or below an angle of 22.5 ° or 45 ° to the telescopic boom. The folding jib with “hydraulic angle adjustment” may be luffed under load from 0 ° to 45 °. The folding jib is folded onto the telescopic boom and mechanically secured for on road travel.

DANGER
Danger of accident when driving with folding jib!
- ▶ Before on road travel, the folding jib must always be brought into the transport position and mechanically secured.
- ▶ Make sure that the folding jib is properly secured before moving the crane on public roads.

1.1 Folding jib variations

The following folding jib variations are possible:
- Single folding jib with “mechanical angle adjustment”
- Single folding jib with “hydraulic angle adjustment”
- Double folding jib with “mechanical angle adjustment”
- Double folding jib with “hydraulic angle adjustment”
- 3-piece folding jib with “mechanical angle adjustment”
- 3-piece folding jib with “hydraulic angle adjustment”
- 4-piece folding jib with “mechanical angle adjustment”
- 4-piece folding jib with “hydraulic angle adjustment”

1.1.1 Single folding jib, see illustration 1

Position	Description	Length
1	Adapter	1.5 m
2	Reducer section	7.55 m
6	Pivot section	3.65 m
Length of single folding jib		12.7 m

1.1.2 Double folding jib, see illustration 2

Position	Description	Length
1	Adapter	1.5 m
2	Reducer section	7.55 m
3	End section	9.3 m
6	Pivot section	3.65 m
Length of double folding jib		22.0 m

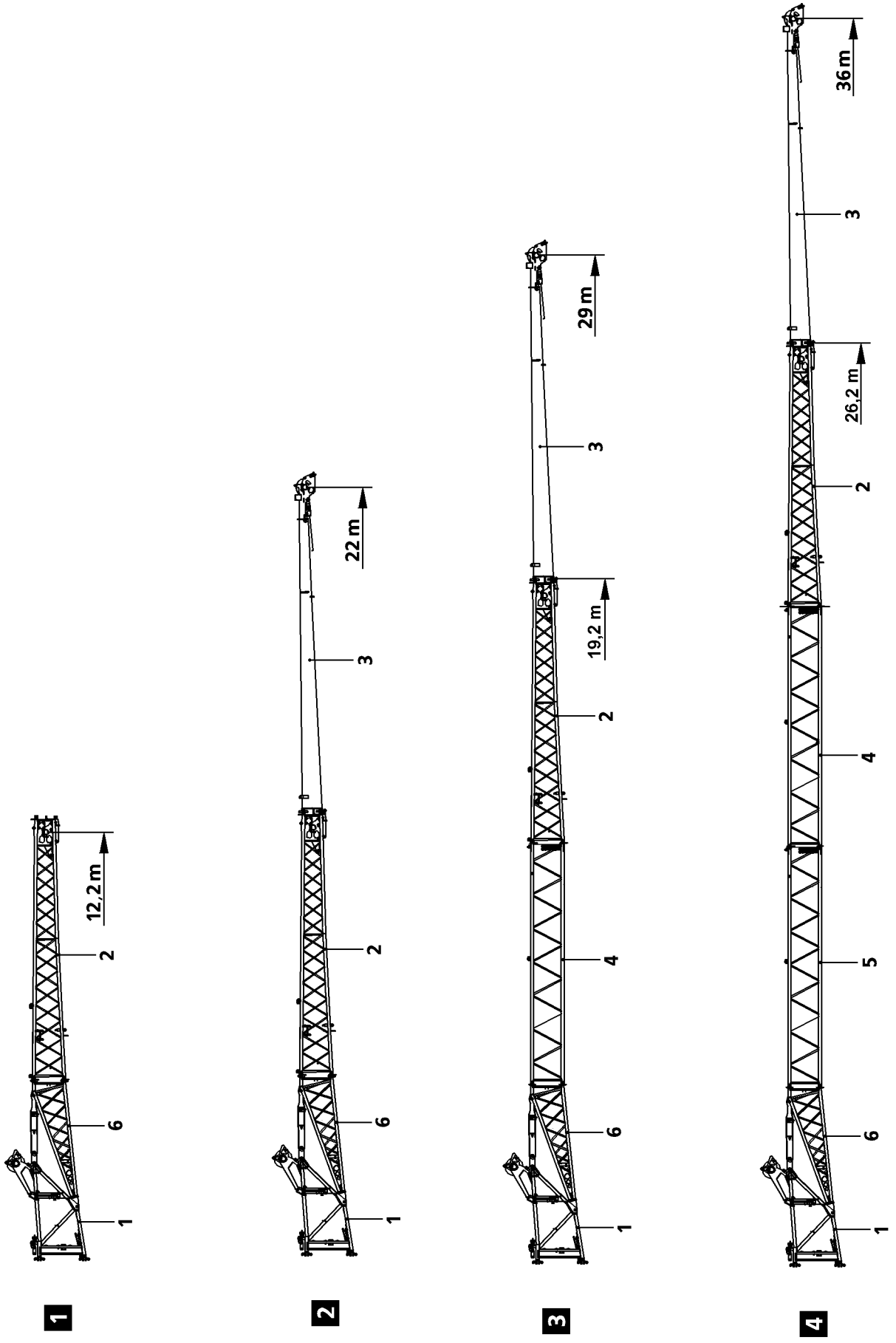

B192122

1.1.3 3-piece folding jib, see illustration 3

Position	Description	Length
1	Adapter	1.5 m
2	Reducer section	7.55 m
3	End section	9.3 m
4	Folding jib extension	7 m
6	Pivot section	3.65 m
Length of 3-piece folding jib		29 m

1.1.4 4-piece folding jib, see illustration 4

Position	Description	Length
1	Adapter	1.5 m
2	Reducer section	7.55 m
3	End section	9.3 m
4	Folding jib extension	7 m
5	Folding jib extension	7 m
6	Pivot section	3.65 m
Length of 4-piece folding jib		36 m

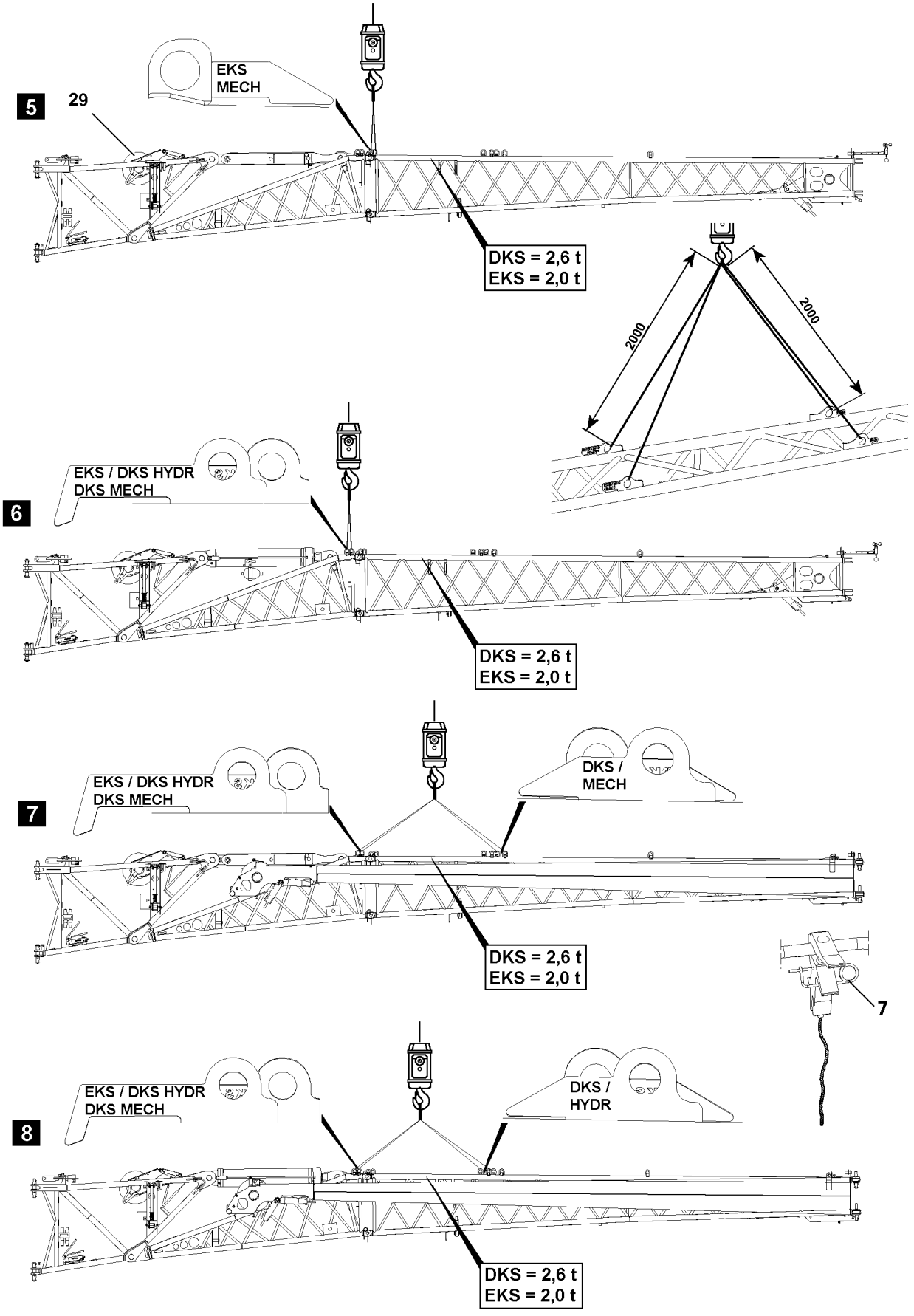
5
29
EKS
MECH
DKS = 2,6 t
EKS = 2,0 t
2000
2000
6
EKS / DKS HYDR
DKS MECH
DKS = 2,6 t
EKS = 2,0 t
7
EKS / DKS HYDR
DKS MECH
DKS /
MECH
DKS = 2,6 t
EKS = 2,0 t
7
8
EKS / DKS HYDR
DKS MECH
DKS /
HYDR
DKS = 2,6 t
EKS = 2,0 t

B117343

1.2 Fastening points “folding jib complete”

If the folding jib is carried along separately with a transport vehicle, then fastening points are installed for the assembly and disassembly of the folding jib. The transportation methods vary in terms of single or double folding jib and / or “mechanical angle adjustment” or “hydraulic angle adjustment”.
The appropriate fastening eyes are marked with tags.
Make sure that the following prerequisites are met:

– The single folding jib or the double folding jib is pinned and secured in 0° position.
– The rope guide pulley **29** is pinned and secured in transport position.
– The end section is pinned with the pivot section in folded in position and secured with spring retainer **7**.

DANGER
Danger of accident due to incorrect attachment!
Life-threatening situations can arise if the folding jib is improperly or incorrectly attached!

▶ Attach the folding jib according to the fastening points shown on the signs!
▶ The appropriate fastening eyes and points are marked with tags.
▶ Attaching the single folding jib or the double folding jib on non-intended points or on any arbitrary location is **prohibited**!
▶ When attaching the double folding jib, the end section **3** must be folded in, locked and the spring retainer **7** must be secured!

CAUTION
Damage of fastening points!
If the fastening equipment is too short, then the fastening points on the folding jibs can be damaged!

▶ To attach the folding jibs, fastening equipment with a strand length of at least 2000 mm each must be used!

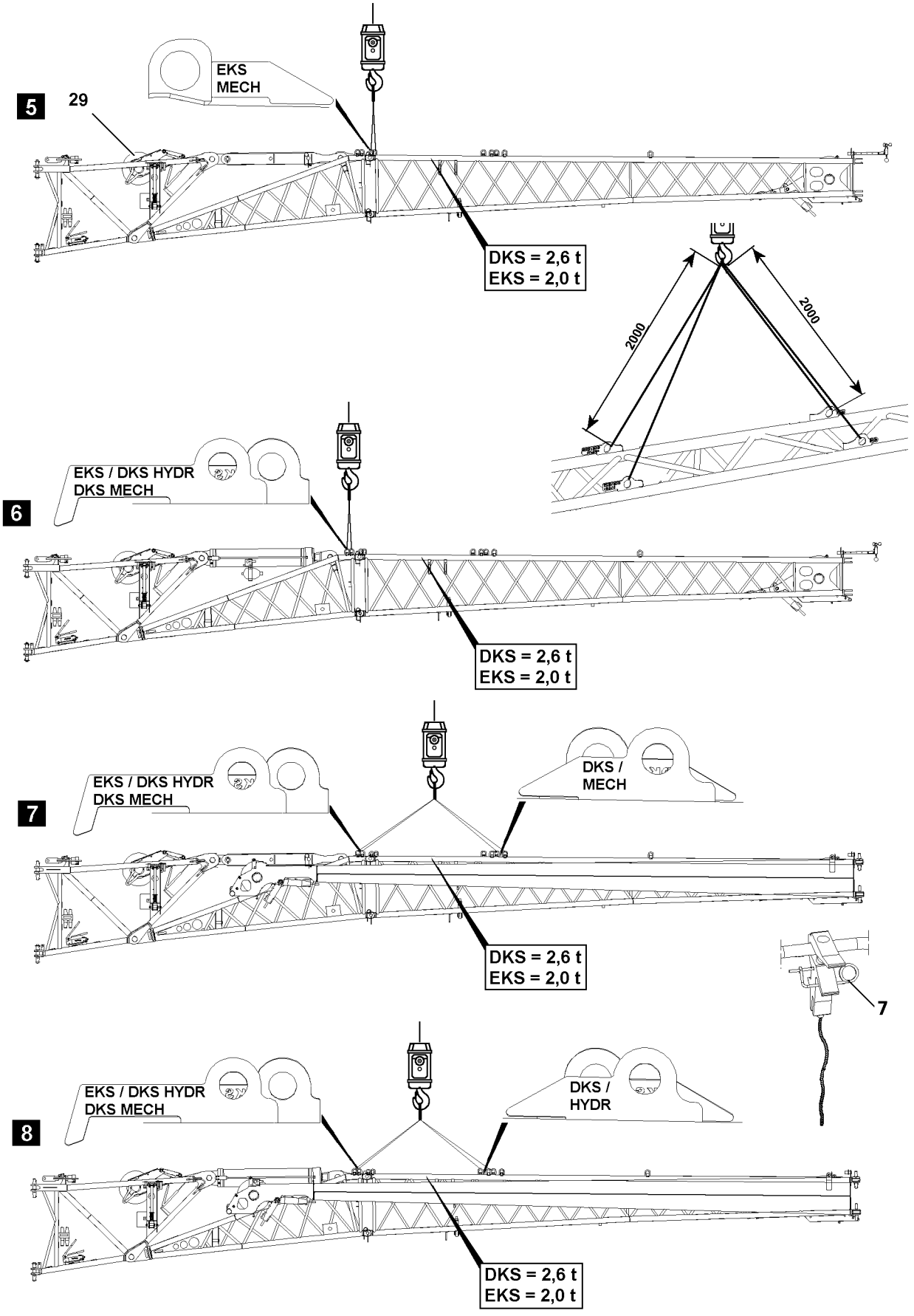
5
29
EKS
MECH
DKS = 2,6 t
EKS = 2,0 t
2000
2000
6
EKS / DKS HYDR
DKS MECH
DKS = 2,6 t
EKS = 2,0 t
7
EKS / DKS HYDR
DKS MECH
DKS /
MECH
DKS = 2,6 t
EKS = 2,0 t
7
8
EKS / DKS HYDR
DKS MECH
DKS /
HYDR
DKS = 2,6 t
EKS = 2,0 t

B117343

1.2.1 Single folding jib, see illustration 5

Single folding jib with “mechanical angle adjustment”.

Description	Abbreviation	Weight
Mechanical	MECH	
Single folding jib	EKS	2.0 t

1.2.2 Single folding jib, see illustration 6

Single folding jib with “hydraulic angle adjustment”.

Description	Abbreviation	Weight
Hydraulic	HYDR	
Single folding jib	EKS	2.0 t

1.2.3 Double folding jib, see illustration 7

Double folding jib with “mechanical angle adjustment”.

Description	Abbreviation	Weight
Mechanical	MECH	
Double folding jib	DKS	2.6 t

1.2.4 Double folding jib, see illustration 8

Double folding jib with “hydraulic angle adjustment”.

Description	Abbreviation	Weight
Hydraulic	HYDR	
Double folding jib	DKS	2.6 t

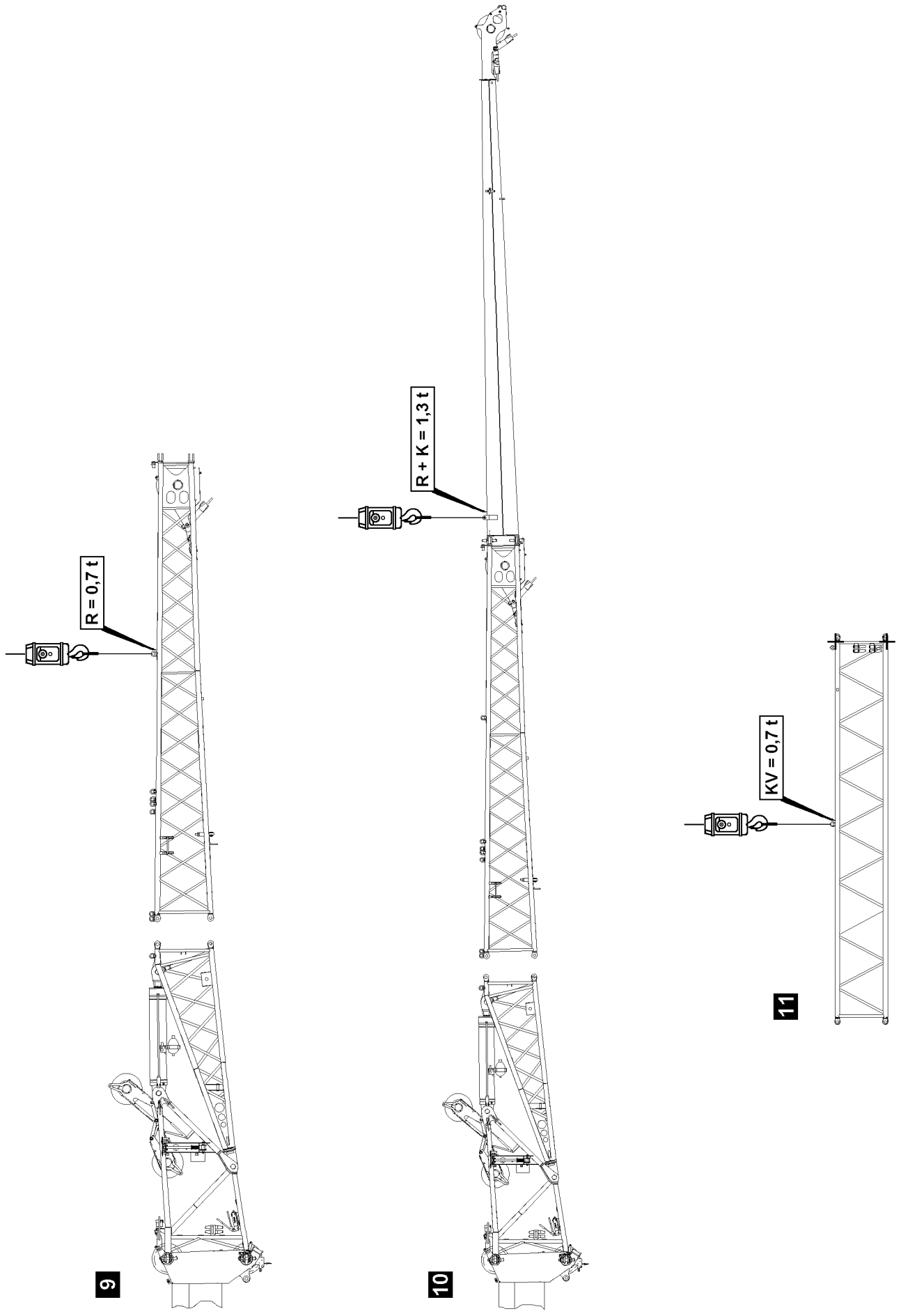

B196429

1.3 Fastening points “separated folding jib”

To install or remove the 3 or 4 piece folding jib, various fastening eyes are installed on the folding jib. The appropriate fastening eyes are marked with tags.

1.3.1 Single folding jib, see illustration 9

Description	Abbreviation	Weight
Reducer section	R	0.7 t

1.3.2 Double folding jib, see illustration 10

Description	Abbreviation	Weight
Reducer section with end section	R + K	1.3 t

1.3.3 Folding jib extension, see illustration 11

Description	Abbreviation	Weight
Folding jib extension	KV	0.7 t

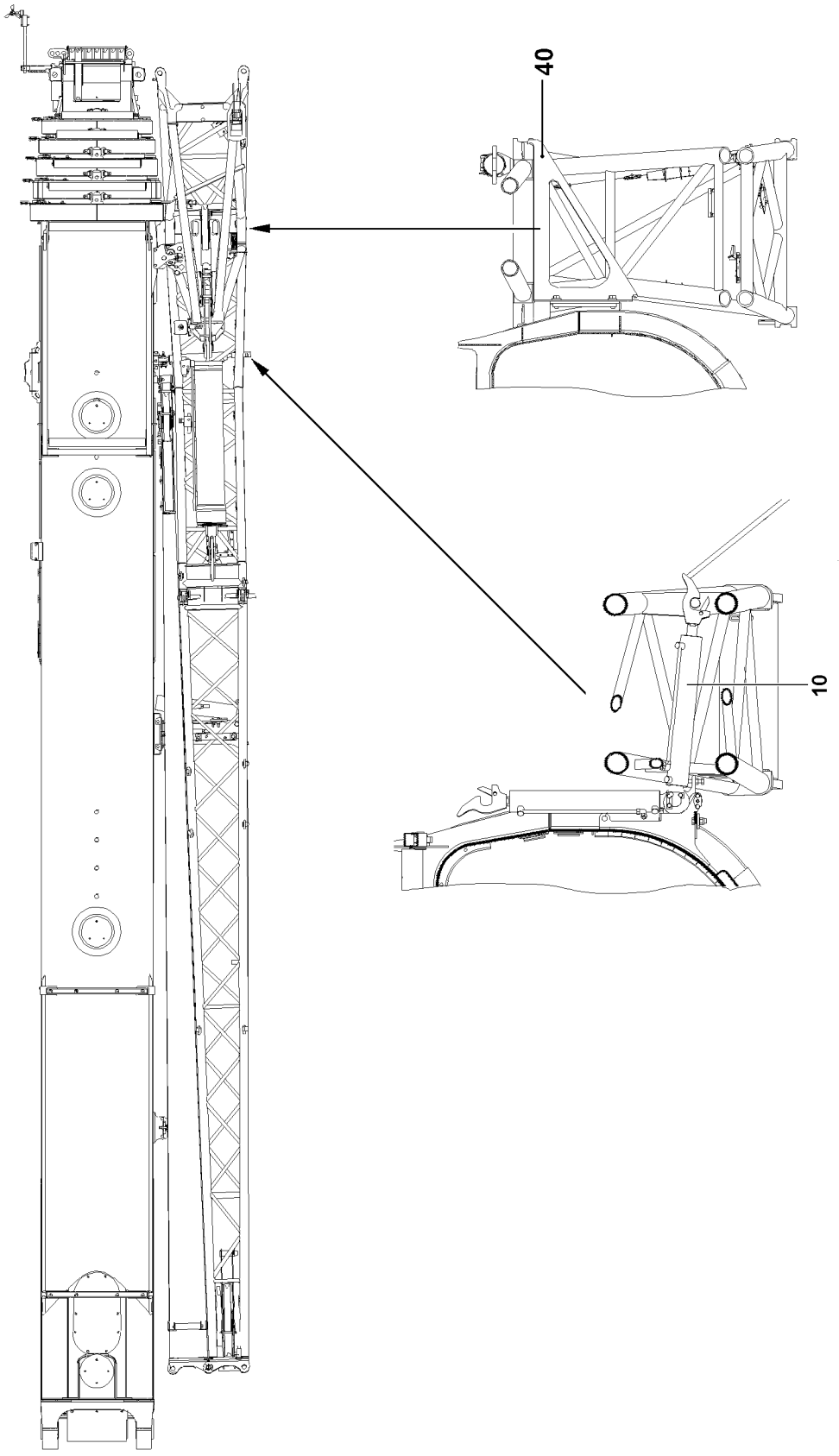

B103445

2 Assembling the folding jib

For Tele operation, the swing cylinder **10** can be folded up, if necessary.

2.1 General

DANGER
Danger of fatal injuries due to falling folding jib!
As a result of improperly mounted, damaged or non-existing catch bar **40** on the telescopic boom pivot section, the folding jib – due to an assembly error – can fall down and cause fatal injuries.

- ▶ Before folding jib assembly, make sure that the catch bar **40** is properly mounted on the telescopic boom pivot section and that it is not damaged.
- ▶ The catch bar **40** is a mechanical safety device. For that reason, it is prohibited to change the catch bar **40** in any way.
- ▶ Standing under the folding jib during the swing procedure is prohibited!
- ▶ Standing in the swing range as well as in the folding area of the folding jib is prohibited!
- ▶ The folding jib must be secured by an auxiliary rope during the swinging process!

WARNING
Danger of falling!
During assembly and disassembly, personnel must be secured with appropriate aids to prevent them from falling! If this is not observed, assembly personnel could fall and suffer fatal injuries!

- ▶ All work aloft, where there is a danger of falling must be carried out with suitable aids!
- ▶ If fall arrest equipment is available, then it must be used, see Crane operating instructions, chapter 2.06!
- ▶ If aids are not available and work cannot be carried out from the ground, then the assembly personnel must secure themselves with the supplied fall arrest system to prevent falling, see Crane operating instructions, chapter 2.04!
- ▶ The supplied fall arrest system must be fastened on the fastening and hook points as well as on the safety ropes. For safety points, see Crane operating instructions, chapter 2.06!
- ▶ Only step on the aids, ladders and catwalks with clean shoes!
- ▶ Keep aids, ladders and catwalks free of heavy dirt, snow and ice!
- ▶ It is prohibited to walk on the telescopic boom!

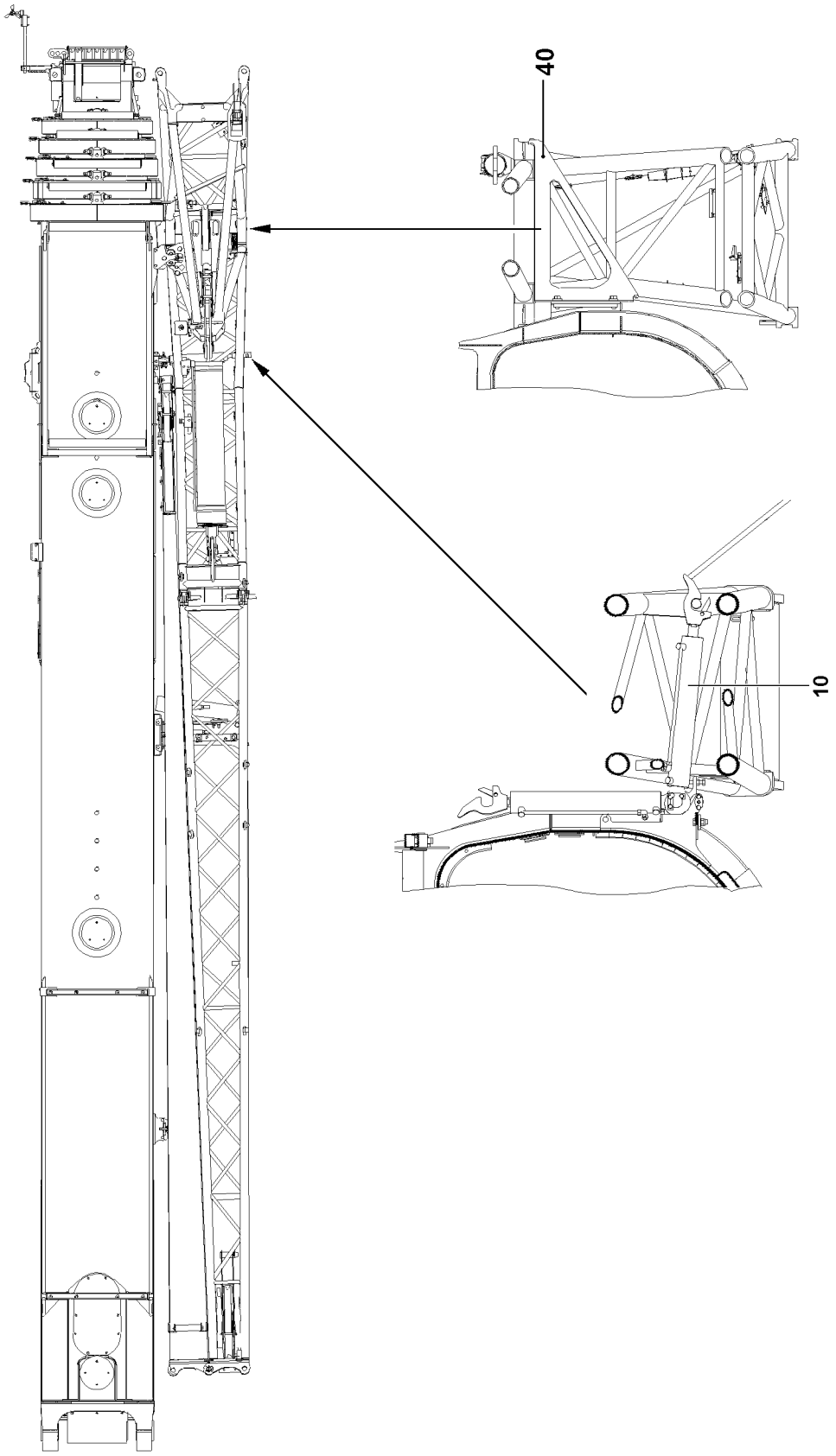

B103445

2.1.1 Prerequisite for assembly

Make sure that the following prerequisites are met:

– The crane is properly supported and horizontally aligned.
– The counterweight has been installed on the turntable according to the load chart.
– The telescopic boom is fully telescoped in.
– The folding jib has been attached for transport on the telescopic boom pivot section.
– The telescopic boom has been luffed down to the rear or the side in the 0° position.

2.1.2 Prerequisites for operation with crane LTM 1220

Make sure that the following prerequisite is met:

– The telescopic boom has been luffed down to the rear or the side in the 0° position.

DANGER

Danger of accident if the folding jib swings out by itself when it is unpinned!
If the telescopic boom is not in the 0° position, there is a danger of accidents if the folding jib swings out by itself when it is unpinned.

▶ Move the telescopic boom to 0° position.

2.1.3 Prerequisites for operation with crane LTR 1220

Make sure that the following prerequisite is met:

– The telescopic boom is luffed up to the rear or to the side by 1°.

Note

▶ If the telescopic boom is not luffed up by 1°, then the folding jib cannot be installed.

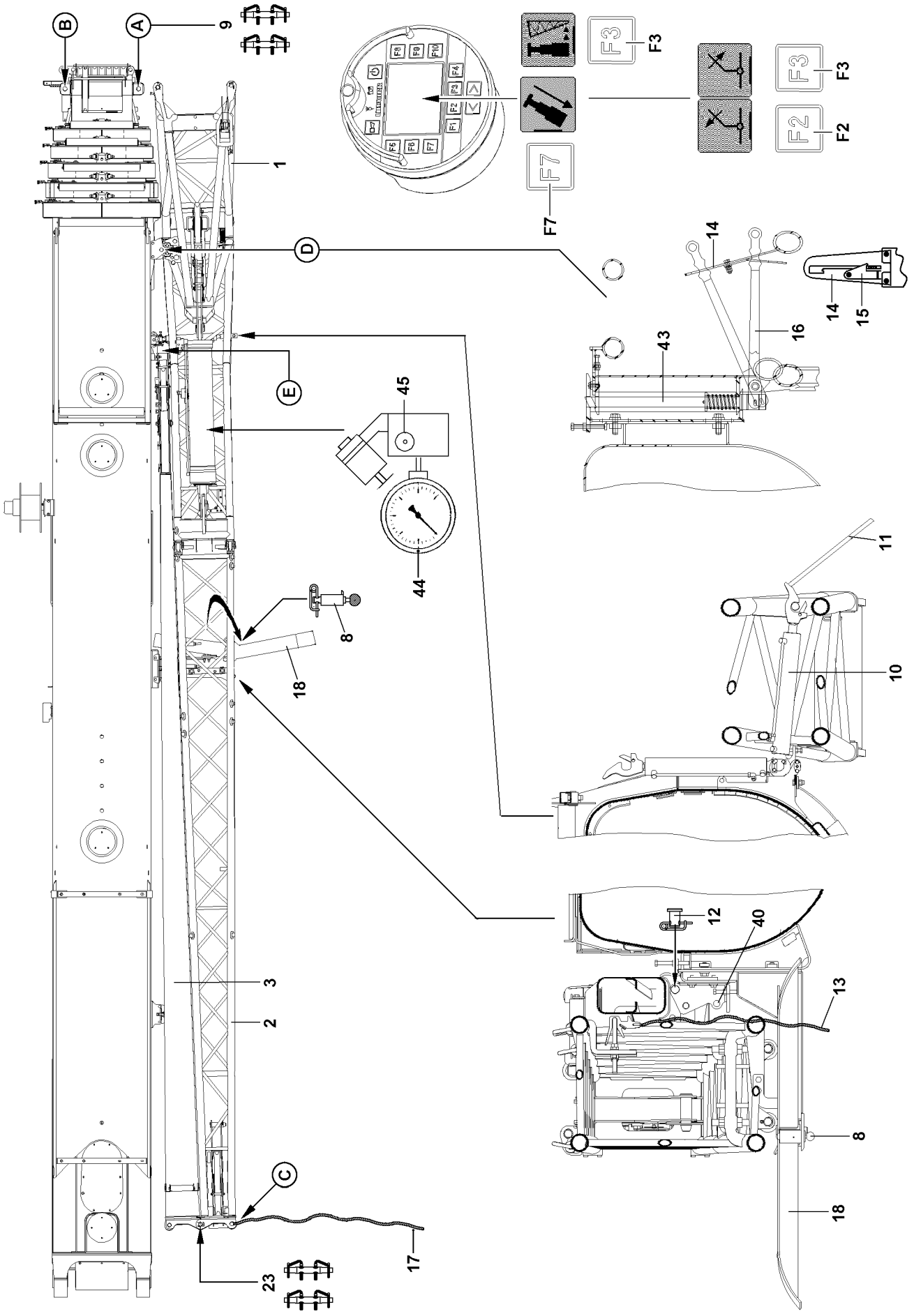
B
A
9
1
D
E
45
44
8
18
3
2
C
23
17
F7
F3
F3
F2
14
15
14
16
43
11
10
12
40
13
8
18

B118027

2.2 Reeving out the hoist rope on the telescopic boom head

In order to speed up subsequent reeving in of the hoist rope after assembling the folding jib, the hook block can be set down at a distance from the crane approximating to the subsequent distance of the telescoped in telescopic boom **with** assembled folding jib.

- ▶ Telescope the telescopic boom out to the respective length.
- ▶ Place the hook block on the ground.
- ▶ Disengage the hoist rope on the rope fixed point.
- ▶ For safety reasons, remove the hoist limit switch weight and the chain.

Note

- ▶ The hoist limit switch must be pulled mechanically and the operating rope must be attached to the telescopic boom head using the snap-hook when operating the folding jib.
- ▶ The telescopic boom may remain reeved if the hoist rope of winch 2 is used for folding jib operation.

- ▶ Remove the rope retaining pipes on the pulley head and on the back pulley.
- ▶ Telescope the telescopic boom in again completely.

2.3 Important check before swinging out the hydraulic folding jibs (TNZK operation)

DANGER

Danger of fatal injury if the folding jib involuntarily folds down!

When using hydraulic folding jibs (TNZK operation), before swinging the folding jib out, check if a pressure of 60 bar is shown on the pressure gauge **44**. If the pressure on the pressure gauge **44** is too low, fatal accidents can occur if the folding jib folds down by itself!

- ▶ It is **expressly prohibited** to swing out the folding jib with less than 60 bar on the pressure gauge **44**.

The restrictor **45** may only be operated during maintenance operations.

- ▶ If the pressure gauge **44** shows low pressure:
  Connect hydraulic line.
- ▶ Luff the folding jib up with the master switch until a pressure of at least 60 bar is shown on the pressure gauge **44**.

or

- ■ On the Bluetooth™ Terminal (BTT) call up the “Lift / lower the folding jib” menu.
- ▶ Press the key **F2** until a pressure of at least 60 bar is shown on the pressure gauge **44**, see Crane operating instructions, chapter 5.31.

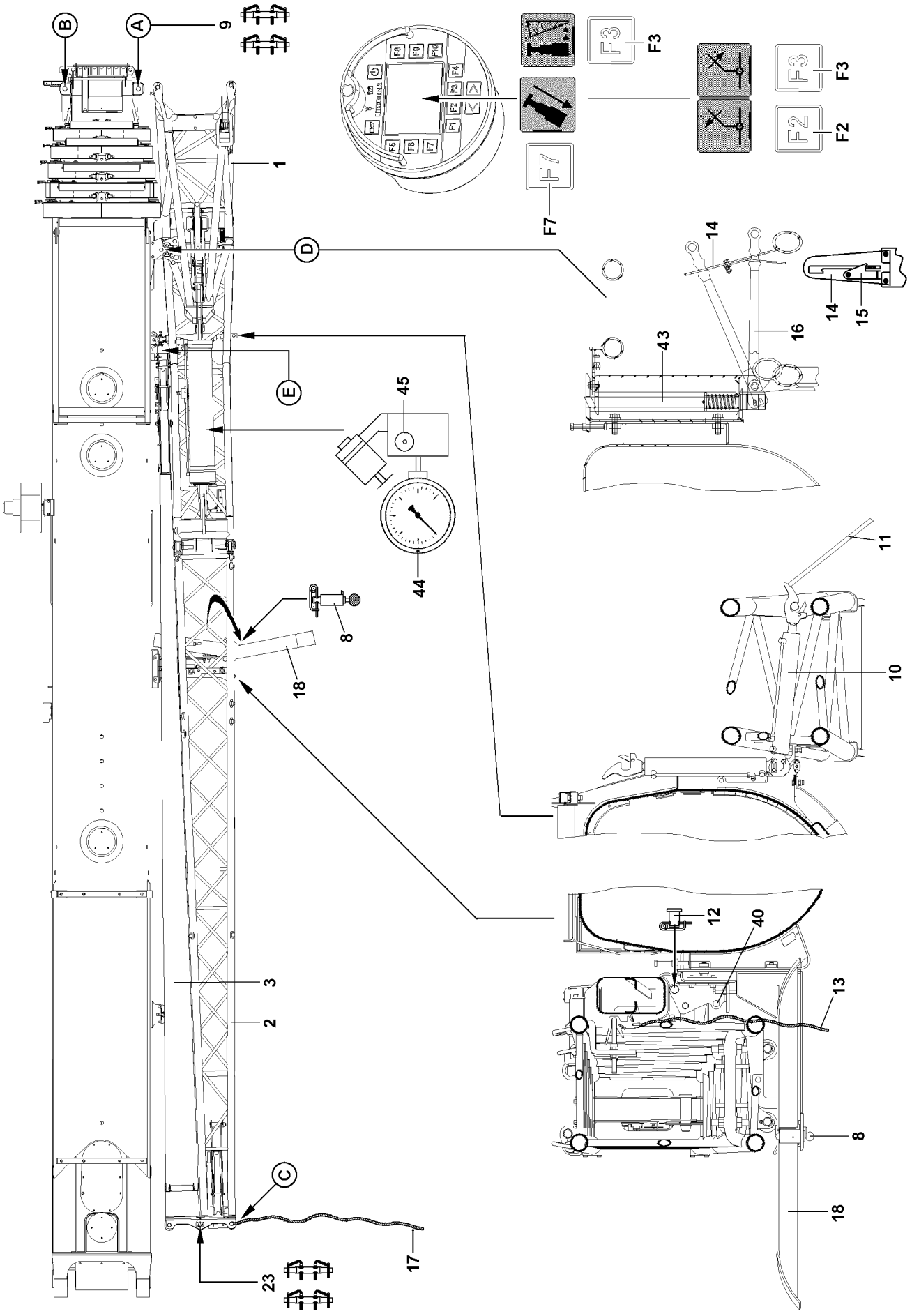
B
A
9
1
D
E
45
44
8
18
3
2
C
23
17
F7
F3
F3
F2
14
15
14
16
43
11
10
12
40
13
8
18

B118027

2.4 Assembly of the single folding jib carried on the crane

The end section **3**, which is not required, remains pinned to the telescopic boom during single folding jib operation.

DANGER
Danger of fatal injuries due to toppling end section!
During operation with the single folding jib, the end section **3** may not be unpinned from the telescopic boom. Otherwise, there is a danger of accidents if the end section **3** falls down.
▶ Do not unpin the end section **3** on the telescopic boom!

2.4.1 Assembly procedure, part 1

When swinging the folding jib support **18** in and out, ensure that the spring pin **8** is unlocked with one hand and that the folding jib support **18** is moved overhead with the other hand.
▶ Release and unpin the spring pin **8**.
▶ Swing the folding jib support **18** out until the spring pin **8** reengages.

For a “hydraulic folding jib” (TNZK operation), the hydraulic line must be uncoupled before swinging the folding jib out.
▶ If a hydraulic folding jib is carried along:
Uncouple the hydraulic line on point **E**.
▶ Attach the auxiliary rope **17** on point **C**.
▶ If a double folding jib is carried along:
Release and unpin the pin **23**.
▶ If a double folding jib is carried along:
Pull the nylon rope **13** and loosen the lock between the end section **3** and the reducer section **2**.
▶ Start the crane engine.
▶ Press the function key **F3** on the BTT and swing out the folding jib with swing cylinder until it can be pinned at point **A**.

Troubleshooting
If the pin bores on point **A** do not align, the telescopic boom can be tensioned with the function key **F7**:
▶ Place the telescopic boom down and telescope all telescopes in completely.
▶ Pin telescope 5.

WARNING
Danger of severe crushing!
For the “Tension the telescope boom” function, all telescoping sections are pulled together, which can lead to severe crushing injuries of fingers.
▶ As long as the function “Tension telescopic boom” is carried out, it is prohibited for any personnel to remain in the push out range of the telescoping sections!

▶ Press the function key **F7** on the BTT.
Result:
– All telescopic sections are pulled together.

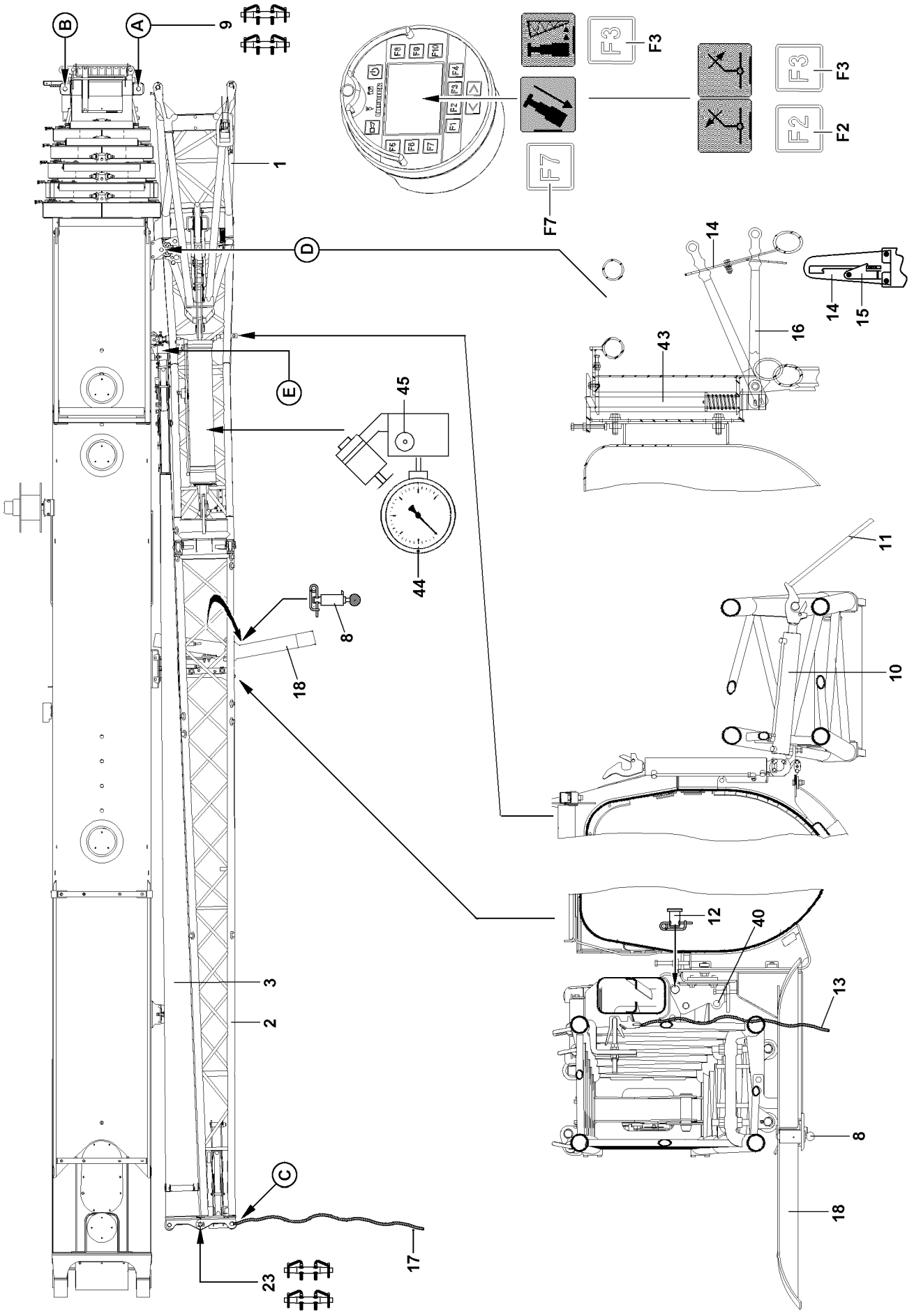
B
A
9
1
D
E
45
44
8
18
3
2
C
23
17
F7
F3
F3
F2
14
15
14
16
43
11
10
12
40
13
8
18

B118027

Note

▶ Bluetooth™ Terminal (BTT), see Crane operating instructions, chapter 5.31, section “The assembly function menu on the BTT”.

▶ Insert the pins **9** on top and bottom on point **A** and secure.

DANGER

Danger of fatal injuries due to falling folding jib!

Special retaining clips must be used to secure the pins **9**. The use of spring pins or spring retainers on the pins **9** is not permitted. The folding jib may only be unlocked at point **D**, when the pins **9** are pinned and secured at the top and bottom at point **A**.

▶ Pin and secure pins **9** at point **A** on top and bottom.

▶ Swing the safety bracket **15** with assembly rod **11** to the side.

▶ Press the lever **16** with the assembly rod **11** upward and latch it into the link **14**.

▶ Press the function key **F3** on the BTT and swing the folding jib with the swing cylinder all the way out.

▶ Unlock the swing cylinder **10** with assembly rod **11**.

DANGER

Danger of fatal injuries due to falling folding jib!

The folding jib could fall down due to an assembly error.

▶ Standing under the folding jib during the swing procedure is prohibited!

▶ Standing in the swing range as well as in the folding area of the folding jib is prohibited!

▶ Swing the reducer section **2** with the auxiliary rope **17** by 180° until it can be pinned on the top and at the bottom at the point **B**.

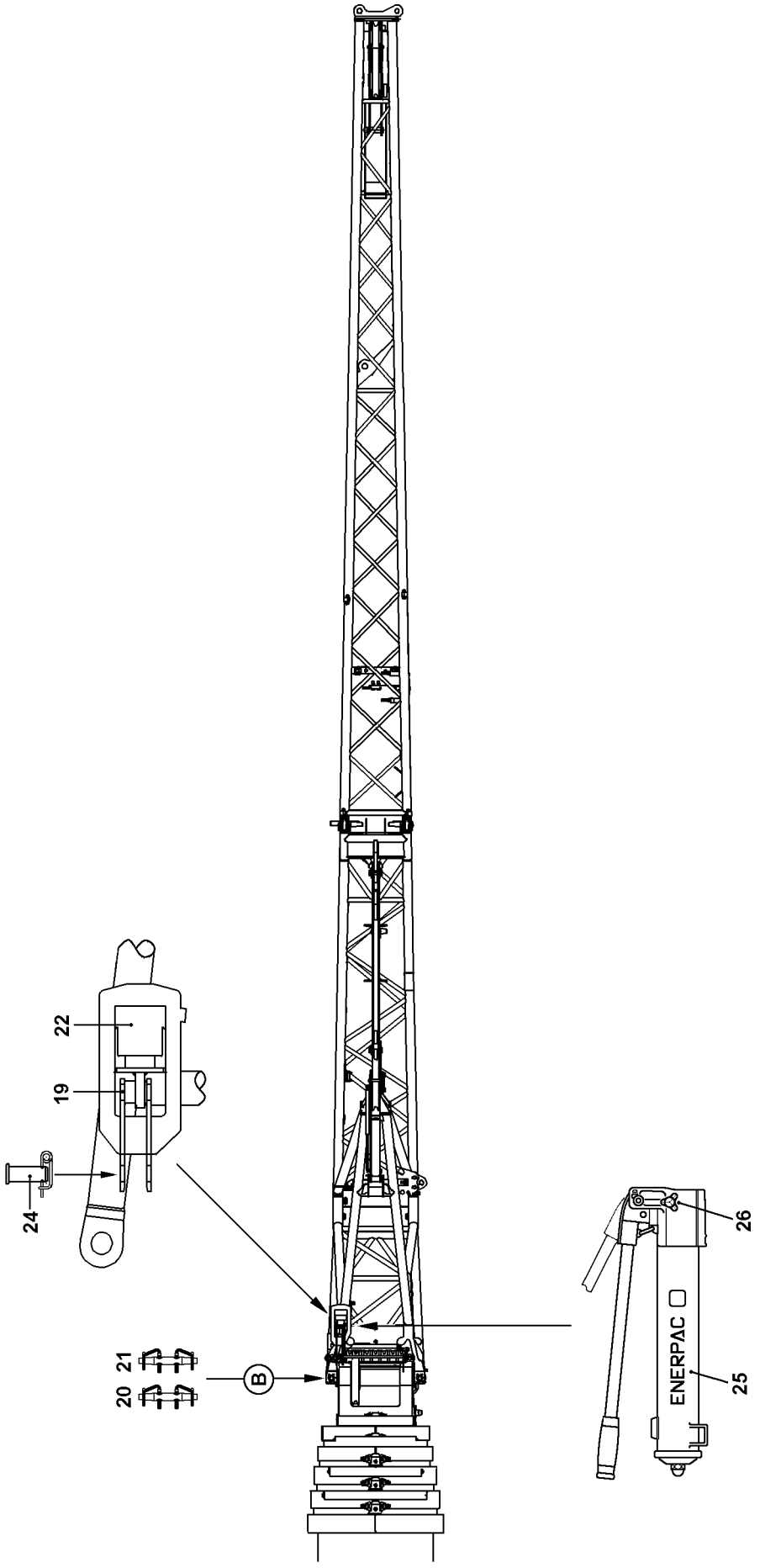

B196431

2.4.2 Assembly procedure, part 2

DANGER
Danger of accident!
- ▶ The use of spring pins or retaining springs is prohibited on pins **20** and pins **21**!
- ▶ To secure the pin **20** and the pin **21**, use the special retaining clips.

▶ Pin and secure the pin **20** on the bottom at point **B**.

In order to pin on top of point **B**, the hydraulic / mechanical assembly aid **22** must be used.
- ▶ Release the pin **24** and unpin from bore **19**.
- ▶ Pin and secure the assembly aid **22** to the towing bracket with pin **24**.
- ▶ Close the knob **26**.
- ▶ Extend the hydraulic cylinder of the assembly aid **22** by operating the hand pump **25** until the bore is aligned at the opening of the folding jib and the telescopic boom.
- ▶ Pin and secure the pin **21** on top on point **B**.
- ▶ Open the knob **26**.

Result:
- – The hydraulic cylinder of the assembly aid **22** returns to the starting position and the pin **24** is released.

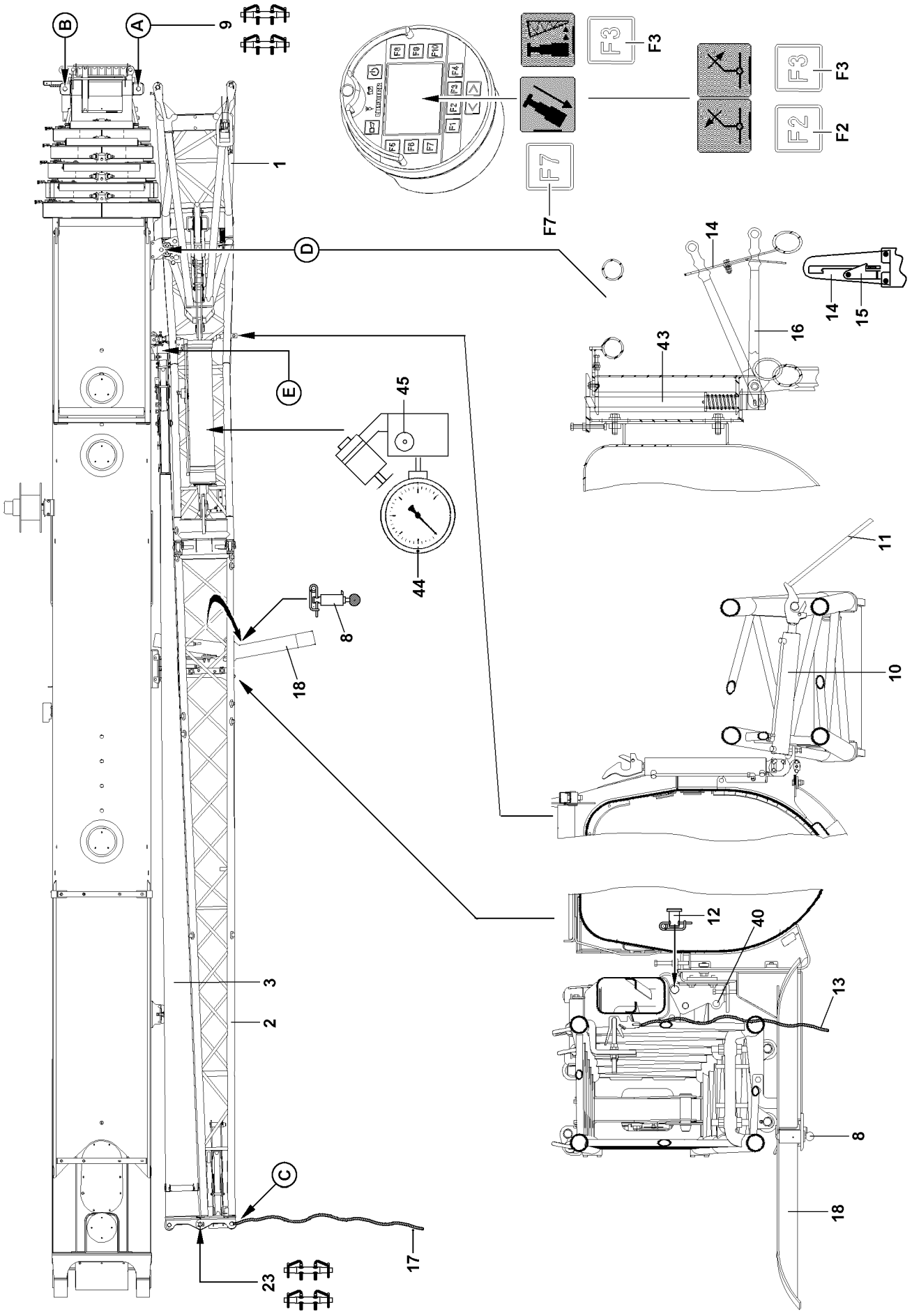
B
A
9
1
D
E
45
44
8
18
3
2
C
23
17
F7
F3
F3
F2
14
15
14
16
43
11
10
12
40
13
8
18

B118027

2.5 Assembly of the double folding jib carried on the crane

2.5.1 Assembly of reducer section, part 1

When swinging the folding jib support **18** in and out, ensure that the spring pin **8** is unlocked with one hand and that the folding jib support **18** is moved overhead with the other hand.

- ▶ Release and unpin the spring pin **8**.
- ▶ Swing the folding jib support **18** out until the spring pin **8** reengages.

For a “hydraulic folding jib” (TNZK operation), the hydraulic line must be uncoupled before swinging the folding jib out.

- ▶ If a hydraulic folding jib is carried along:
  Uncouple the hydraulic line on point **E**.
- ▶ Attach the auxiliary rope **17** on point **C**.
- ▶ Release and unpin pin **12** and insert into bore **40**.
- ▶ Press the function key **F3** on the BTT and swing out the folding jib with swing cylinder until it can be pinned at point **A**.

Troubleshooting

If the pin bores on point **A** do not align, the telescopic boom can be tensioned with the function key **F7**:

- ▶ Place the telescopic boom down and telescope all telescopes in completely.
- ▶ Pin telescope 5.

WARNING

Danger of severe crushing!

For the “Tension the telescope boom” function, all telescoping sections are pulled together, which can lead to severe crushing injuries of fingers.

- ▶ As long as the function “Tension telescopic boom” is carried out, it is prohibited for any personnel to remain in the push out range of the telescoping sections!

- ▶ Press the function key **F7** on the BTT.

Result:

– All telescopic sections are pulled together.

Note

- ▶ Bluetooth™ Terminal (BTT), see Crane operating instructions, chapter 5.31, section “The assembly function menu on the BTT”.

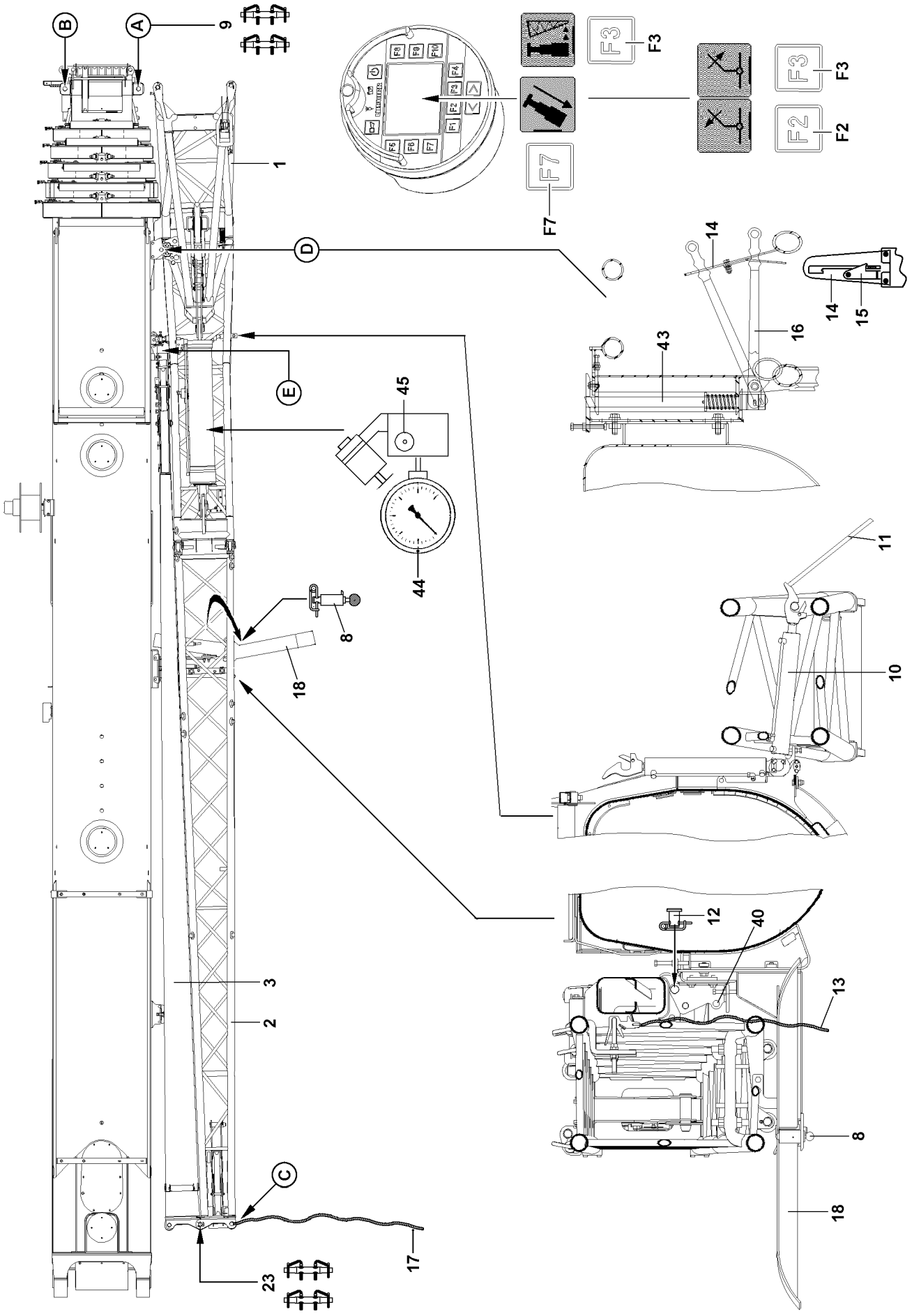
B
A
9
1
D
E
45
44
8
18
3
2
C
23
17
F7
F3
F3
F2
14
15
14
16
43
11
10
12
40
13
8
18

B118027

▶ Insert the pins **9** on top and bottom on point **A** and secure.

DANGER
Danger of fatal injuries due to falling folding jib!
Special retaining clips must be used to secure the pins **9**. The use of spring pins or spring retainers on the pins **9** is not permitted. The folding jib may only be unlocked at point **D**, when the pins **9** are pinned and secured at the top and bottom at point **A**.
▶ Pin and secure pins **9** at point **A** on top and bottom.

▶ Swing the safety bracket **15** with assembly rod **11** to the side.
▶ Press the lever **16** with the assembly rod **11** upward and latch it into the link **14**.
▶ Press the function key **F3** on the BTT and swing the folding jib with the swing cylinder all the way out.
▶ Unlock the swing cylinder **10** with assembly rod **11**.

DANGER
Danger of fatal injuries due to falling folding jib!
The folding jib could fall down due to an assembly error.
▶ Standing under the folding jib during the swing procedure is prohibited!
▶ Standing in the swing range as well as in the folding area of the folding jib is prohibited!

▶ Swing the reducer section **2** with the auxiliary rope **17** by 180° until it can be pinned on the top and at the bottom at the point **B**.

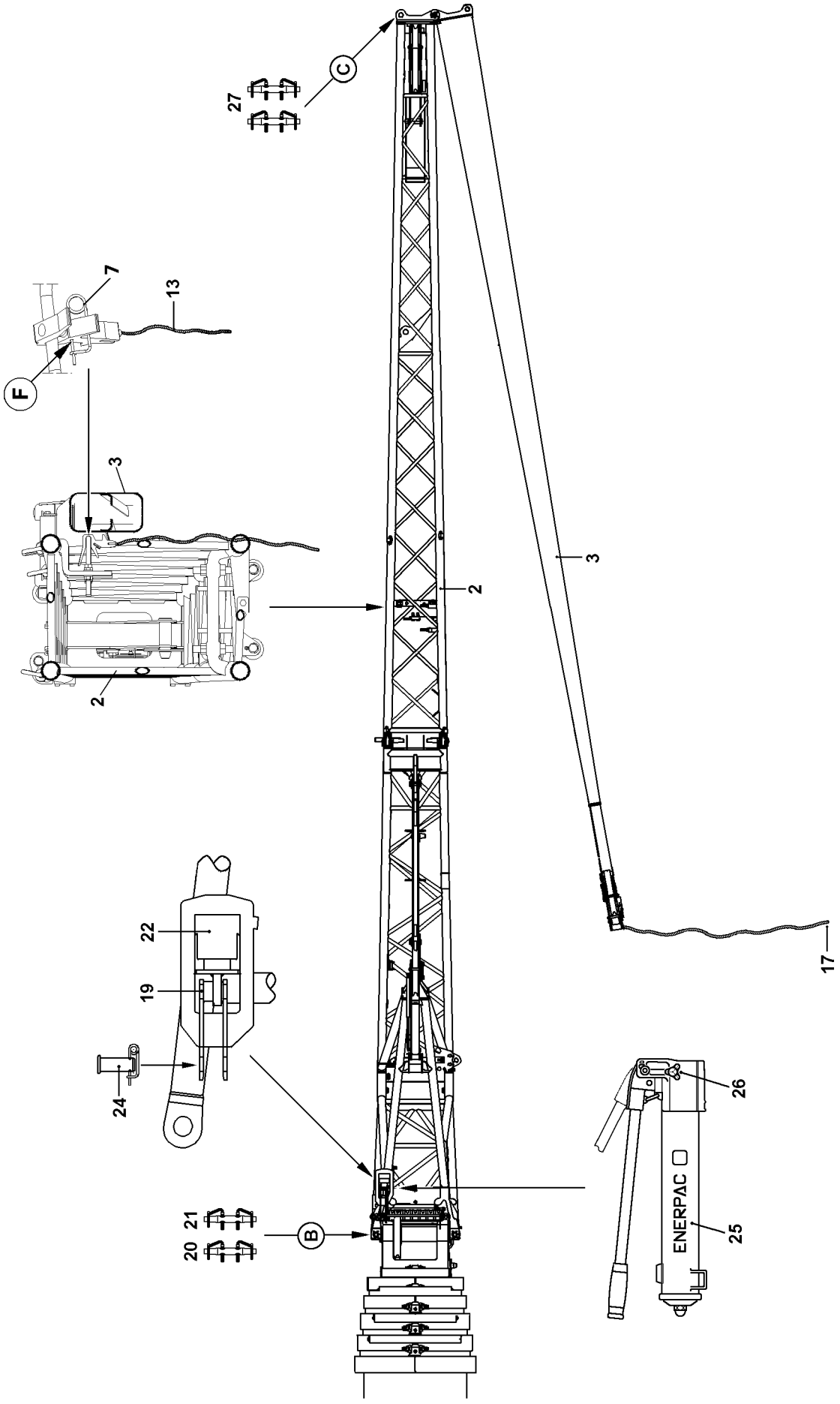

B103448

2.5.2 Assembly of reducer section, part 2

DANGER
Danger of accident!
- ▶ The use of spring pins or retaining springs is prohibited on pins **20** and pins **21**!
- ▶ To secure the pin **20** and the pin **21**, use the special retaining clips.

- ▶ Pin and secure the pin **20** on the bottom at point **B**.

In order to pin on top of point **B**, the hydraulic / mechanical assembly aid **22** must be used.
- ▶ Release the pin **24** and unpin from bore **19**.
- ▶ Pin and secure the assembly aid **22** to the towing bracket with pin **24**.
- ▶ Close the knob **26**.
- ▶ Extend the hydraulic cylinder of the assembly aid **22** by operating the hand pump **25** until the bore is aligned at the opening of the folding jib and the telescopic boom.
- ▶ Pin and secure the pin **21** on top on point **B**.
- ▶ Open the knob **26**.

Result:
- – The hydraulic cylinder of the assembly aid **22** returns to the starting position and the pin **24** is released.

2.5.3 Assembly of end section

- ▶ Remove the auxiliary rope **17** on point **C** and attach on the end section **3**.

CAUTION
The folding jib may swing out inadvertently!
The folding jib may swing out inadvertently while releasing the lock.
In order to prevent the folding jib from swinging out by itself:
- ▶ Hold the folding jib with the auxiliary rope!

- ▶ Remove the spring retainer **7** on point **F**.
- ▶ Pull the nylon rope **13** and loosen the lock between the end section **3** and the reducer section **2**.
- ▶ Swing the end section **3** forward by 180° until it can be pinned at point **C**.

DANGER
Danger of fatal injuries due to falling folding jib!
The folding jib could fall down due to an assembly error.
- ▶ Standing under the folding jib during the swing procedure is prohibited!
- ▶ Standing in the swing range as well as in the folding area of the folding jib is prohibited!
- ▶ The use of spring pins or retaining springs is prohibited on pins **27**!
- ▶ Special retaining clips must be used to secure the pins **27**.

- ▶ Pin and secure pins **27** at top and bottom using safety clips.
- ▶ Remove the auxiliary rope.

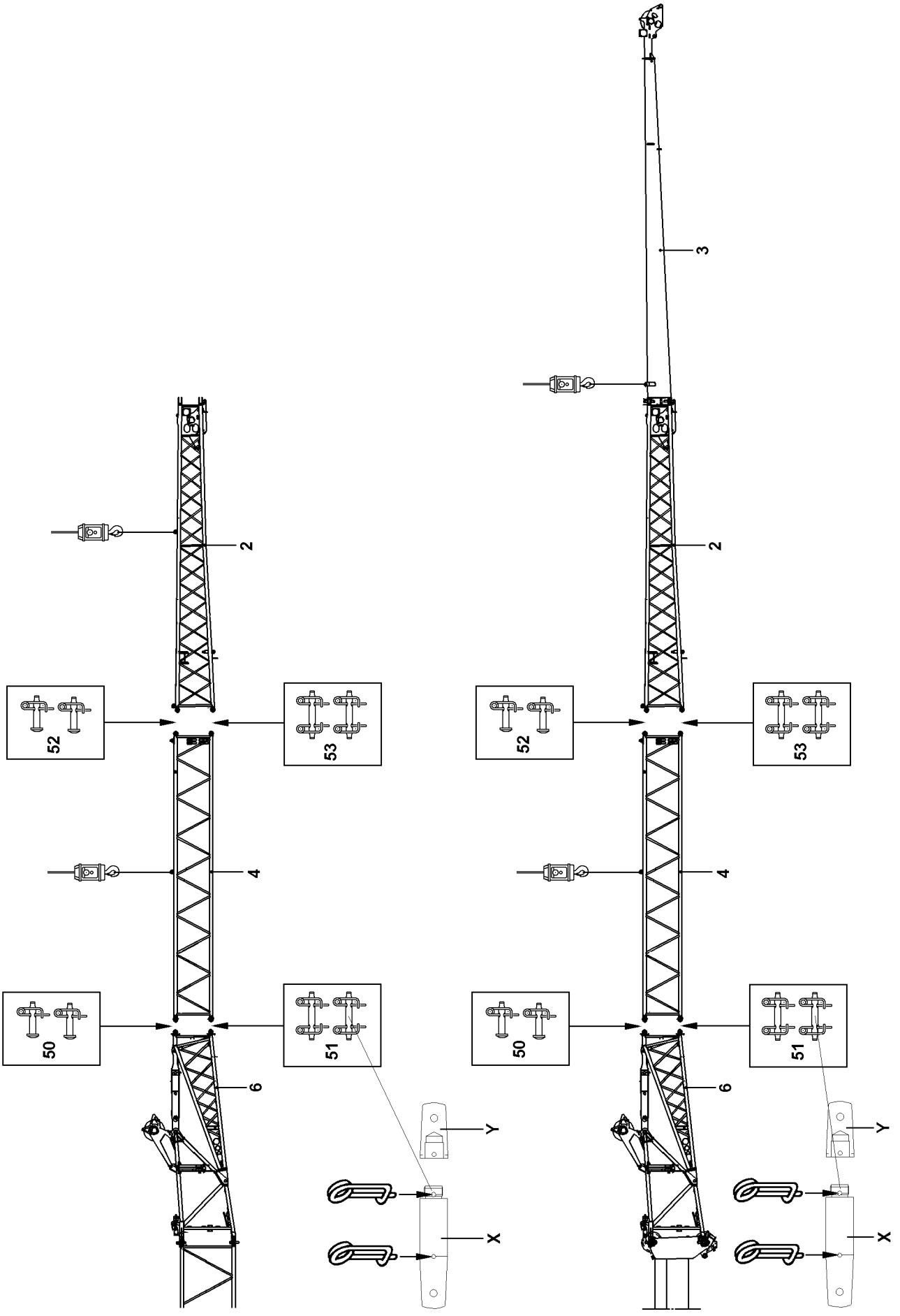

B197289

2.6 Assembly of the 3-piece folding jib

The 3-piece folding jib is a folding jib that has been extended with a folding jib extension **4**.
Make sure that the following prerequisites are met:

– The folding jib is attached on the telescopic boom or on the telescopic boom extension.
– An auxiliary crane with an adequate load-bearing capacity is available.

DANGER
Danger of accident during assembly / disassembly of the 3-piece folding jib!
If the following conditions are not met, people can be fatally injured during assembly / disassembly.

▶ When knocking out the pins, no one may remain under the folding jib!
▶ Pin and unpin the pins in the specified sequence!
▶ Attach the auxiliary crane in such a way that no angular pull occurs!

▶ Attach the reducer section **2** to auxiliary crane and tighten the fastening rope slightly.

or

■ Attach the reducer section **2** with the end section **3** on the auxiliary crane and tighten the fastening rope slightly.

DANGER
Danger of accident due to distorted pins!
Angular pulling or excessive / low hoisting force of the auxiliary crane may result in distortion of the pins.
Distorted parts can suddenly fly off when the pins are unpinned.

▶ When the pins are unpinned, the “lifting force” of the crane must be adapted to the “weight” of the parts being lifted!
▶ Do **not** remove difficult to remove pins by force!
▶ Remedy the cause of the distortion!

▶ Release and unpin the pins **50** on both sides.

Note

▶ Before unpinning and pinning the pins **X**, unbolt the extension **Y** or on accordingly. Then secure the pins **X** on both sides with spring retainers. Before driving on public roads, the extension **Y** must be removed again, and the pins **X** must be secured on both sides with the spring retainers.

▶ Release the pins **51** on both sides and unpin from the outside to the inside.
▶ Place the reducer section **2** down.

or

■ Place the reducer section **2** with the end section **3** down.

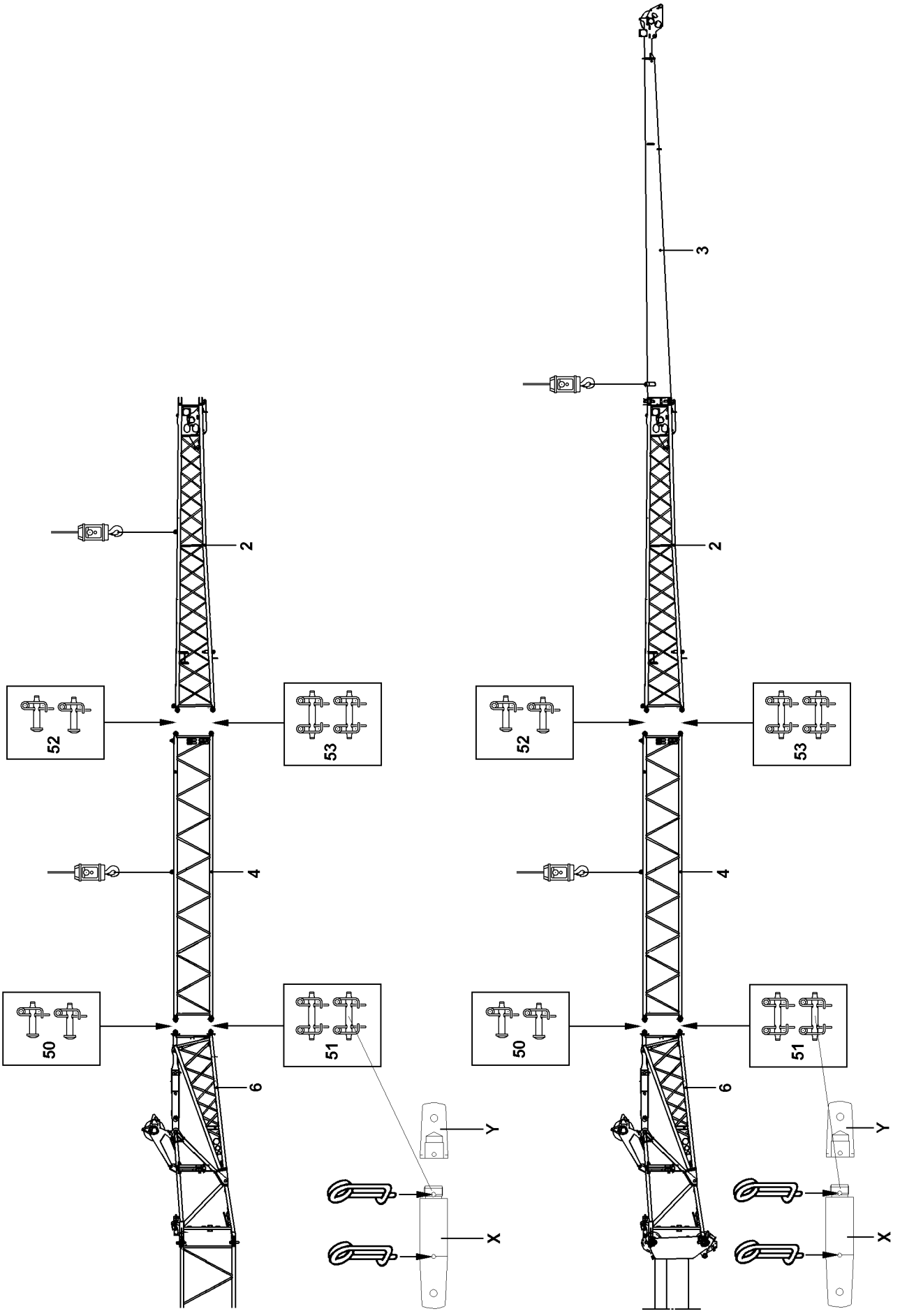

B197289

- ▶ Fasten the folding jib extension **4** to the auxiliary crane and insert into the fork heads on the pivot section **6**.
- ▶ Pin the folding jib extension **4** with the pivot section **6**: Pin the pins **50** on both sides from the outside to the inside and secure.
- ▶ Pin the pins **51** on both sides from the outside to the inside and secure.
- ▶ Attach the reducer section **2** to the auxiliary crane and insert into the fork heads on the folding jib extension **4**.

or

- ■ Attach the reducer section **2** with the end section **3** on the auxiliary crane and insert into the fork heads on the folding jib extension **4**.
- ▶ Pin the reducer section **2** with the folding jib extension **4**: Pin the pins **52** on both sides from the outside to the inside and secure.
- ▶ Pin the pins **53** on both sides from the outside to the inside and secure.

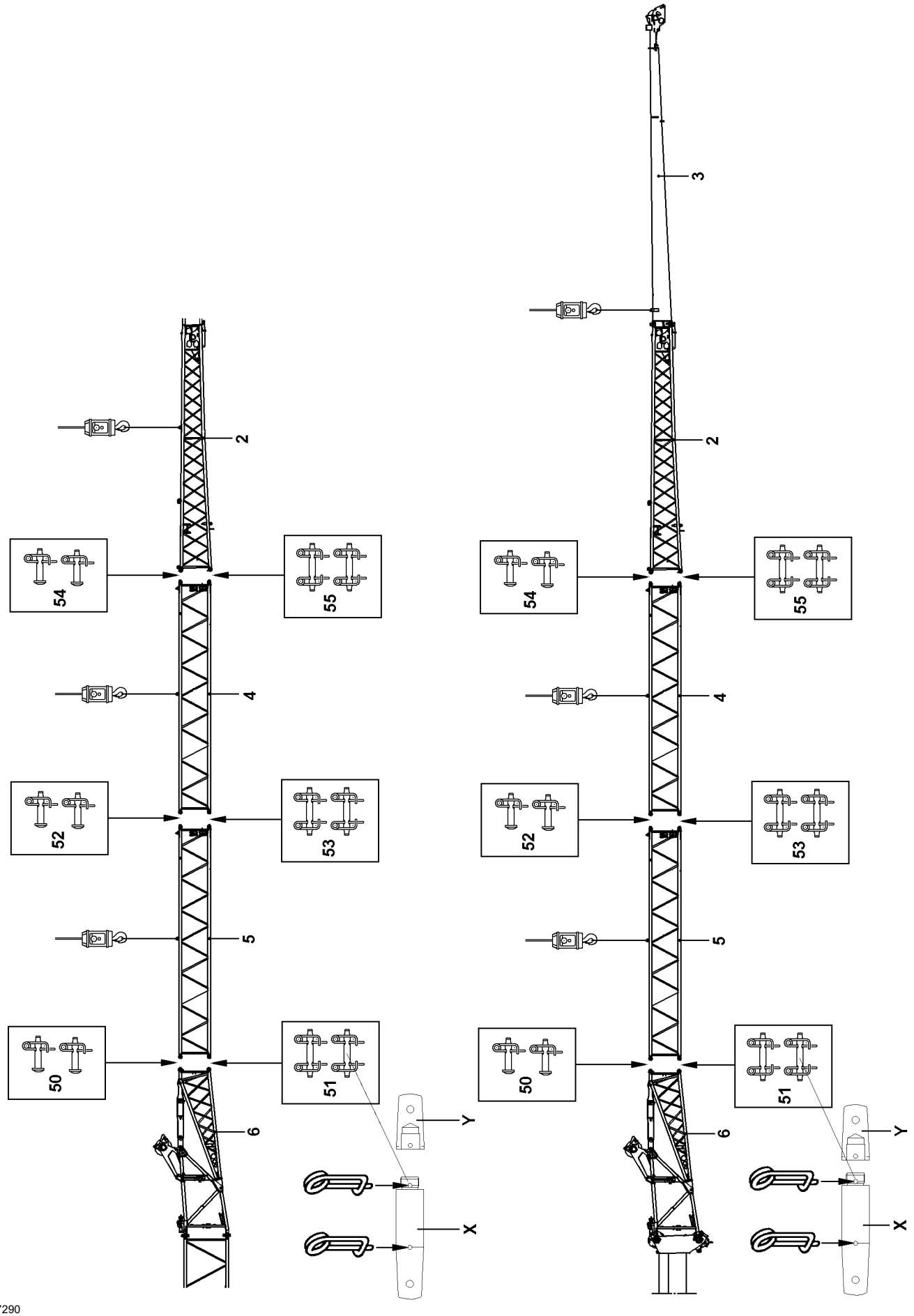

B197290

2.7 Assembly of the 4-piece folding jib

The 4-piece folding jib is a folding jib that has been extended with a folding jib extension **4** and a folding jib extension **5**.
Make sure that the following prerequisites are met:
– The folding jib is attached on the telescopic boom or on the telescopic boom extension.
– An auxiliary crane with an adequate load-bearing capacity is available.

DANGER
Danger of accident during assembly / disassembly of the 4-piece folding jib!
If the following conditions are not met, people can be fatally injured during assembly / disassembly.
▶ When knocking out the pins, no one may remain under the folding jib!
▶ Pin and unpin the pins in the specified sequence!
▶ Attach fastening ropes in such a way that no angular pull occurs!

▶ Attach the reducer section **2** to auxiliary crane and tighten the fastening rope slightly.

or

■ Attach the reducer section **2** with the end section **3** on the auxiliary crane and tighten the fastening rope slightly.

DANGER
Danger of accident due to distorted pins!
Angular pulling or excessive / low hoisting force of the auxiliary crane may result in distortion of the pins.
Distorted parts can suddenly fly off when the pins are unpinned.
▶ When the pins are unpinned, the “lifting force” of the crane must be adapted to the “weight” of the parts being lifted!
▶ Do **not** remove difficult to remove pins by force!
▶ Remedy the cause of the distortion!

▶ Release and unpin the pins **50** on both sides.
▶ Release the pins **51** on both sides and unpin from the outside to the inside.
▶ Place the reducer section **2** down.

or

■ Place the reducer section **2** with the end section **3** down.
▶ Fasten the folding jib extension **5** to the auxiliary crane and insert into the fork heads on the pivot section **6**.
▶ Pin the folding jib extension **5** with the pivot section **6**: Pin the pins **50** on both sides from the outside to the inside and secure.

Note
▶ Before unpinning and pinning the pins **X**, unbolt the extension **Y** or on accordingly. Then secure the pins **X** on both sides with spring retainers. Before driving on public roads, the extension **Y** must be removed again, and the pins **X** must be secured on both sides with the spring retainers.

▶ Pin the pins **51** on both sides from the outside to the inside and secure.

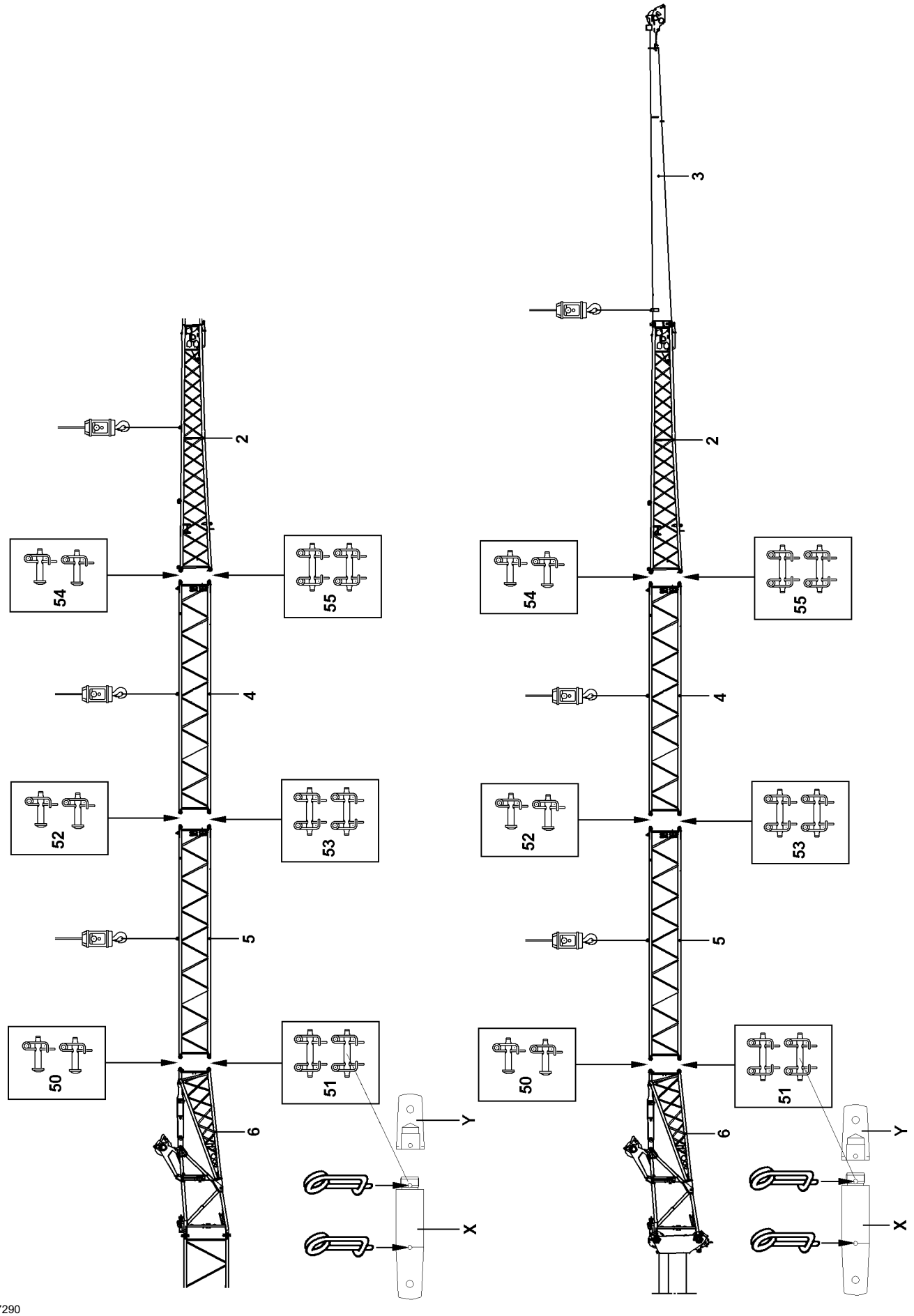

B197290

- ▶ Attach folding jib extension **4** to the auxiliary crane and insert into the fork heads on the folding jib extension **5**.
- ▶ Pin the folding jib extension **4** with folding jib extension **5**: Pin the pins **52** on both sides from the outside to the inside and secure.
- ▶ Pin the pins **53** on both sides from the outside to the inside and secure.
- ▶ Attach the reducer section **2** to the auxiliary crane and insert into the fork heads on the folding jib extension **4**.

or

- ■ Attach the reducer section **2** with the end section **3** on the auxiliary crane and insert into the fork heads on the folding jib extension **4**.
- ▶ Pin the reducer section **2** with the folding jib extension **4**: Pin the pins **54** on both sides from the outside to the inside and secure.
- ▶ Pin the pins **55** on both sides from the outside to the inside and secure.

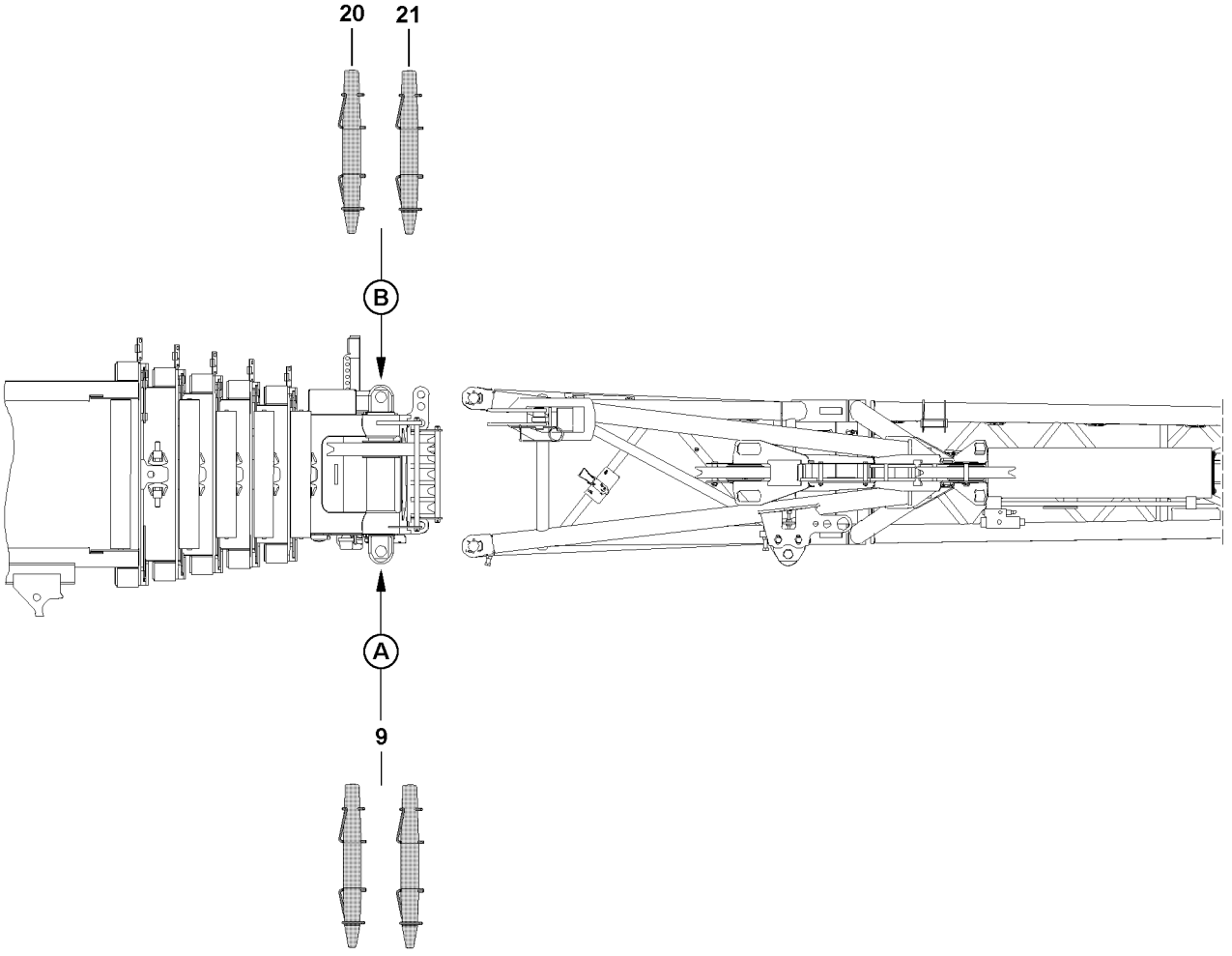

B103446

2.8 Assembling the separately transported folding jib on the crane

2.8.1 Assembling the separately transported folding jib for crane operating position

For description of fastening points, see section “Fastening points”.

DANGER
Danger of accident due to incorrect attachment!
Life-threatening situations can arise if the folding jib is improperly or incorrectly attached!
- ▶ Attach the folding jib according to the fastening points shown on the signs!
- ▶ The appropriate fastening eyes and points are marked with tags.
- ▶ Attaching the single folding jib or the double folding jib on non-intended points or on any arbitrary location is **prohibited**!
- ▶ When attaching the double folding jib, the end section must be folded in, locked and the spring retainer must be secured!

CAUTION
Damage of fastening points!
If the fastening equipment is too short, then the fastening points on the folding jibs can be damaged!
- ▶ To attach the folding jibs, fastening equipment with a strand length of at least 2000 mm each must be used!

- ▶ Attach the auxiliary crane to the respective fastening points of the folding jib.
- ▶ Lift the folding jib with the auxiliary crane and insert it into the pin points on the telescopic boom.

DANGER
Danger of accident!
- ▶ The use of spring pins or spring retainers is prohibited on pins **9**, pins **20** and pins **21**!
- ▶ Use the special retaining clips to secure pins **9**, pins **20** and pins **21**.

- ▶ Pin the folding jib to telescopic boom:
- ▶ Pin and secure the pin **9** on top on point **A**.
- ▶ Pin and secure the pin **20** on top on point **B**.
- ▶ Pin and secure the pin **9** on the bottom at point **A**.
- ▶ Pin and secure the pin **21** on the bottom at point **B**.
- ▶ For more information concerning the double folding jib assembly, see section “Assembly of the end section”.

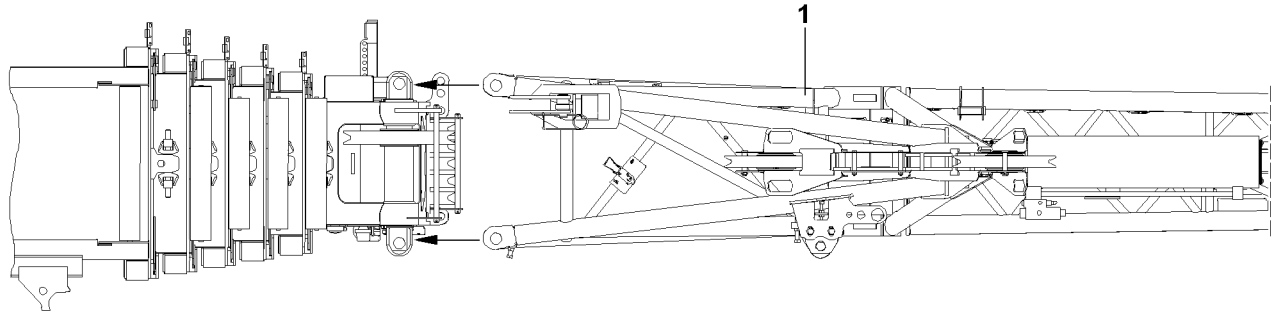

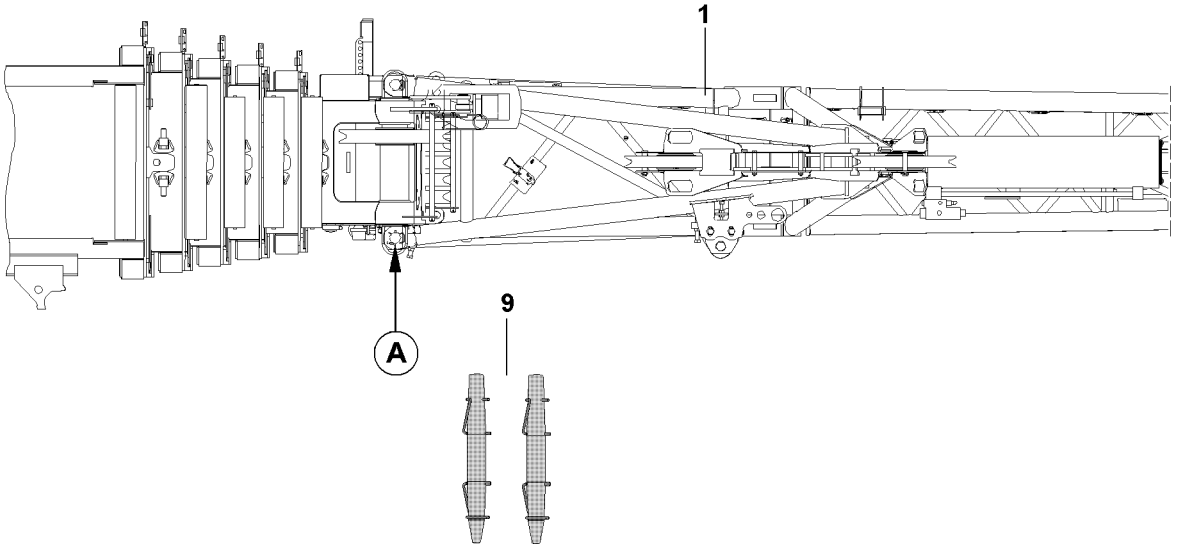

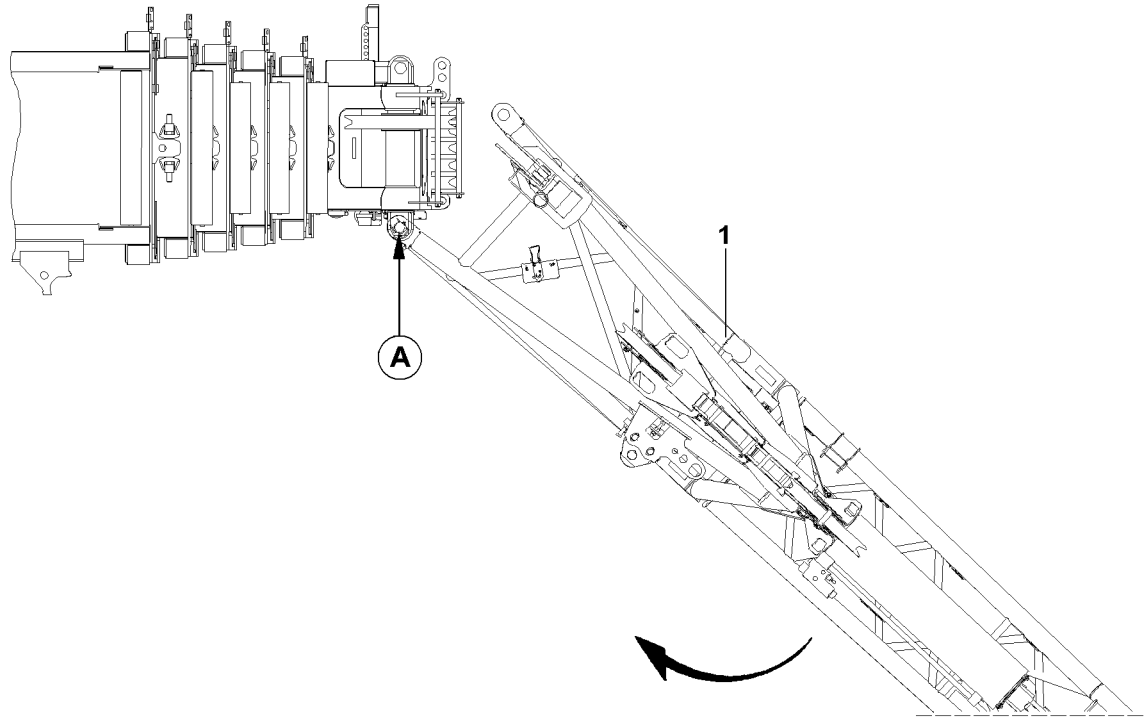

B103447

2.8.2 Installing separately transported folding jib for transport position

An auxiliary crane must be available for the assembly of the separate folding jib **1**.
Make sure that the following prerequisites are met:

– The crane is properly supported and horizontally aligned.
– The telescopic boom is fully telescoped in.
– The telescopic boom is in travel direction in 0° position.

DANGER
Danger of accident from involuntary swinging out of the folding jib when removing the fastening equipment!
If the telescopic boom is not in 0° position, a danger of accident exists due to involuntary swinging out of the folding jib when the fastening equipment is removed.
▶ Move the telescopic boom to 0° position.

▶ Attach the auxiliary crane to corresponding fastening points on folding jib, see section “Fastening points”.

CAUTION
Danger of property damage!
If the following notes are not observed, the folding jib can move uncontrolled and as a result, damage can occur in the area of the telescopic boom and the driver’s cab.
▶ Carry out auxiliary crane movements only with utmost care and the least possible acceleration.
▶ The folding jib must be secured with an auxiliary rope during the assembly procedure!

▶ Lift the folding jib with the auxiliary crane and guide it into pin points on the telescopic boom head.

DANGER
Danger of accident!
▶ The use of spring pins or spring retainers is prohibited on the pins **9**!
▶ Special retaining clips must be used to secure the pins **9**.

▶ Pin the folding jib to telescopic boom:
▶ Pin and secure pins **9** on top and on the bottom at point **A**.

DANGER
Danger of fatal injuries due to falling folding jib!
Due to improperly pinned folding jib on the telescopic boom, life threatening or even fatal injuries can occur.
▶ Before removing the auxiliary crane, make sure that the folding jib is pinned and secured on point **A** on top and bottom.

▶ Remove the auxiliary crane.

Note
▶ For further procedure to fold the folding jib onto the telescopic boom or in transport position, refer to section “Removing the folding jib”.

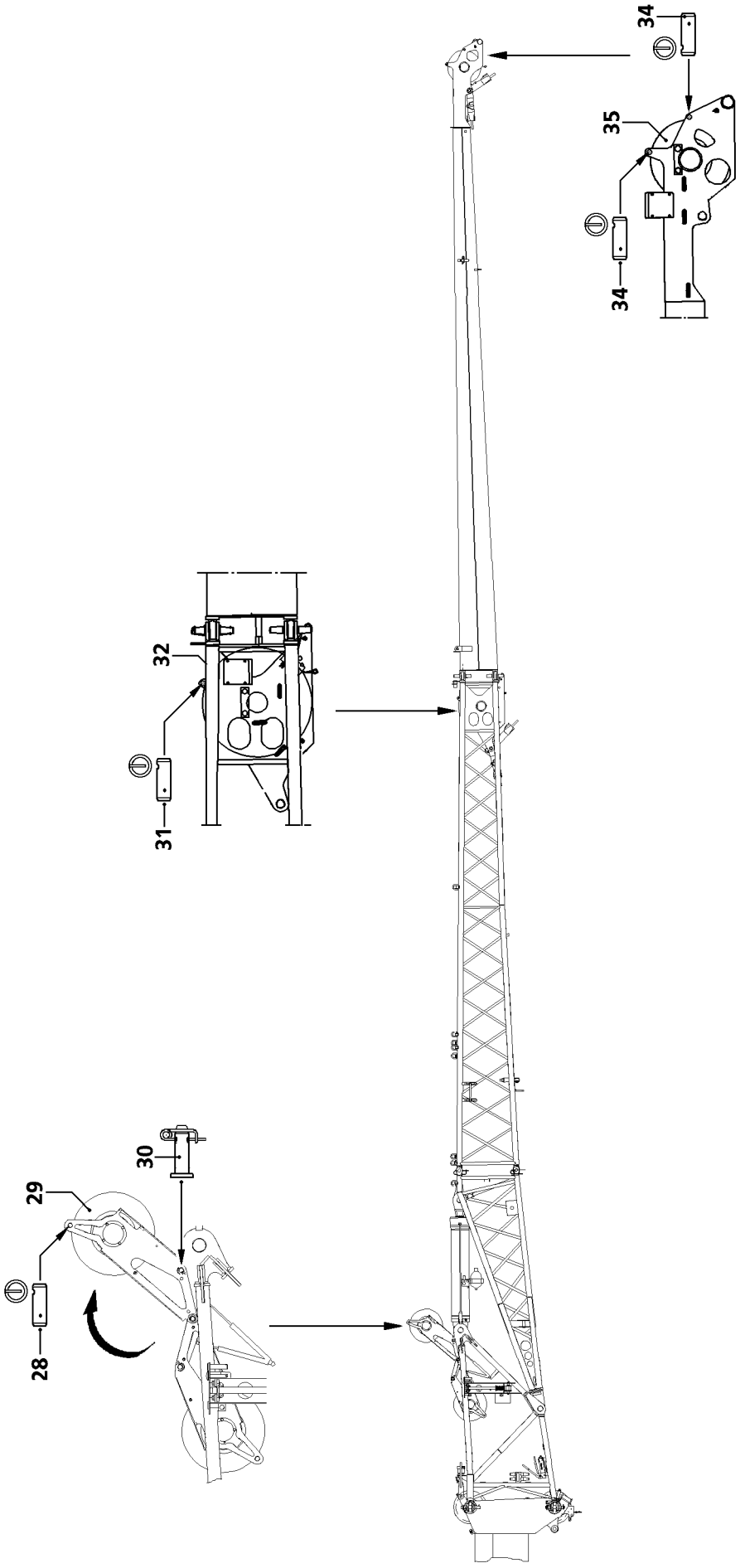

B196435

3 Reeving in the hoist rope

DANGER
Danger of sliding off the folding jib!
When stepping on the folding jib, for example to reeve the hoist rope in or out, there is a danger of slipping and falling from the folding jib.
▶ Do not step on the folding jib!

3.1 Swinging the rope guide pulley into operating position

▶ Release and unpin the pin **30**.
▶ Swing the rope guide pulley **29** into operating position.
▶ Pin the rope guide pulley **29** in operating position: Insert and secure pin **30**.

3.2 Reeving in the hoist rope

▶ Release and unpin the rope retaining pin **28** and rope retaining pin **31**.
▶ For operation with double folding jib, 3-piece folding jib or 4-piece folding jib:
Release and unpin the rope retaining pins **34**.
▶ Place the hoist rope over the rope guide pulley **29** and over the end pulley **32** at 12.2 m or over the end pulley **35** at 22 m.
▶ Insert the rope retaining pin again and secure with locking pins.

NOTICE
Damage to the hoist rope!
If the rope retaining pin **31** is inserted during operation with the double folding jib, the 3-piece folding jib or the 4-piece folding jib, then the slack hoist rope can scrape against the rope retaining pin **31** and be damaged.
▶ Do **not** insert the rope retaining pins **31** for double folding jib, 3-piece folding jib or 4-piece folding jib operation!

▶ Reeve in the load hook or hoist rope.
▶ Attach the hoist limit switch weight.

Note
▶ In folding jib operation with the hook block reeved in on the telescopic boom, the weight of the reeved in hook block on the telescopic boom must be deducted from the load.

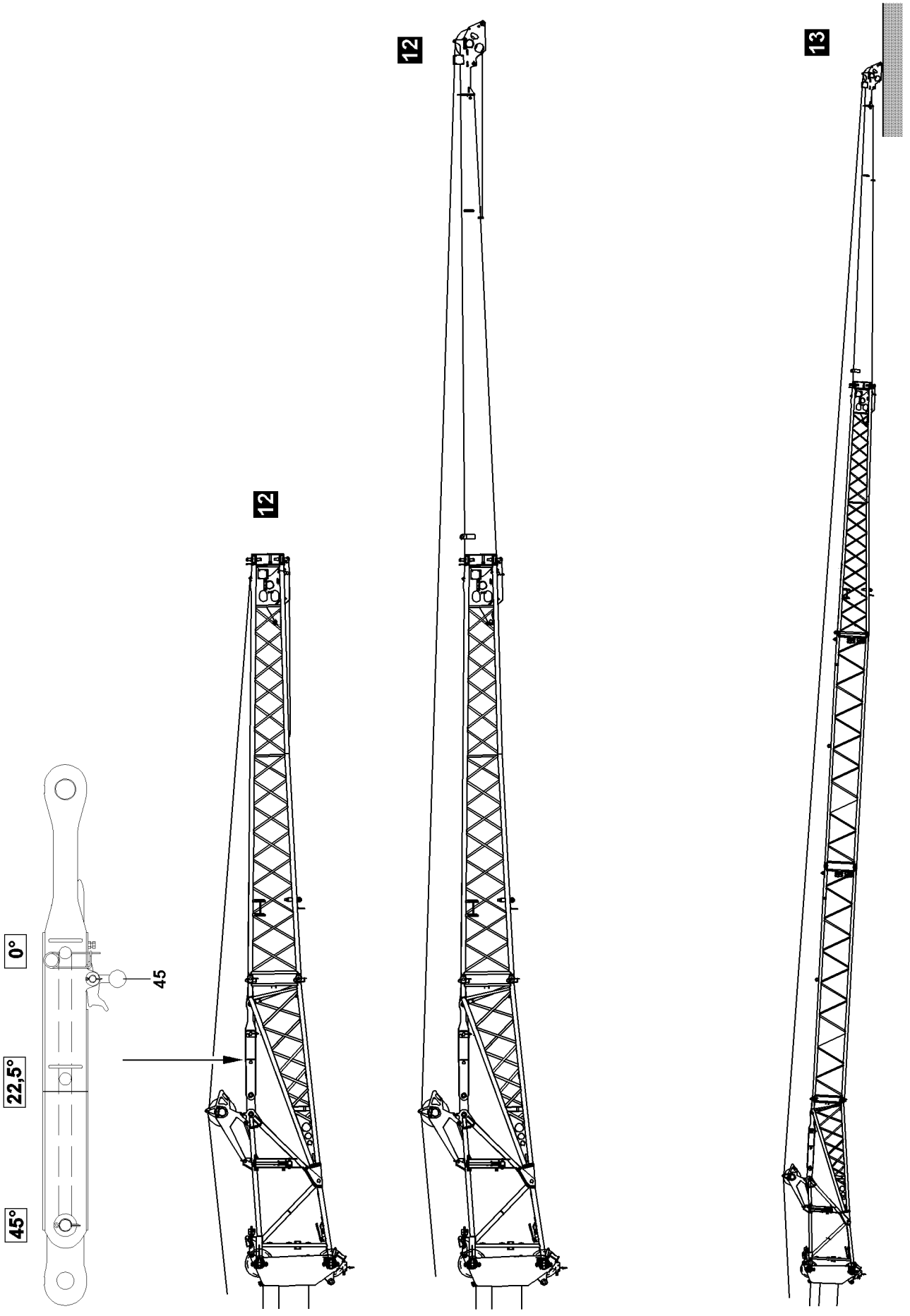

B114341

4 Changing over mechanical folding jib from 0° to 22.5° or 45°

DANGER
Danger of fatal injury!
If the following danger notes are not observed, fatal injuries can occur during assembly and change over work on the folding jib.
▶ Make sure that there are no persons within the danger zone of the crane!

There are two ways of changing the mechanical folding jib to 22.5° or 45°:
1.) Changing the double folding jib with the hoist rope, see illustration **12**.
Only permitted for operation with single folding jib and double folding jib.
2.) Changing the folding jib by supporting, see illustration **13**.

DANGER
Danger of accident due to hard to move oscillation guard!
If the oscillation guard **45** is stiff, safe crane operation with the folding jib is **not** ensured.
▶ Before crane operation with folding jib, check the oscillation guard **45** for easy movement!
▶ Crane operation with folding jib with a stiff oscillation guard **45** is prohibited!

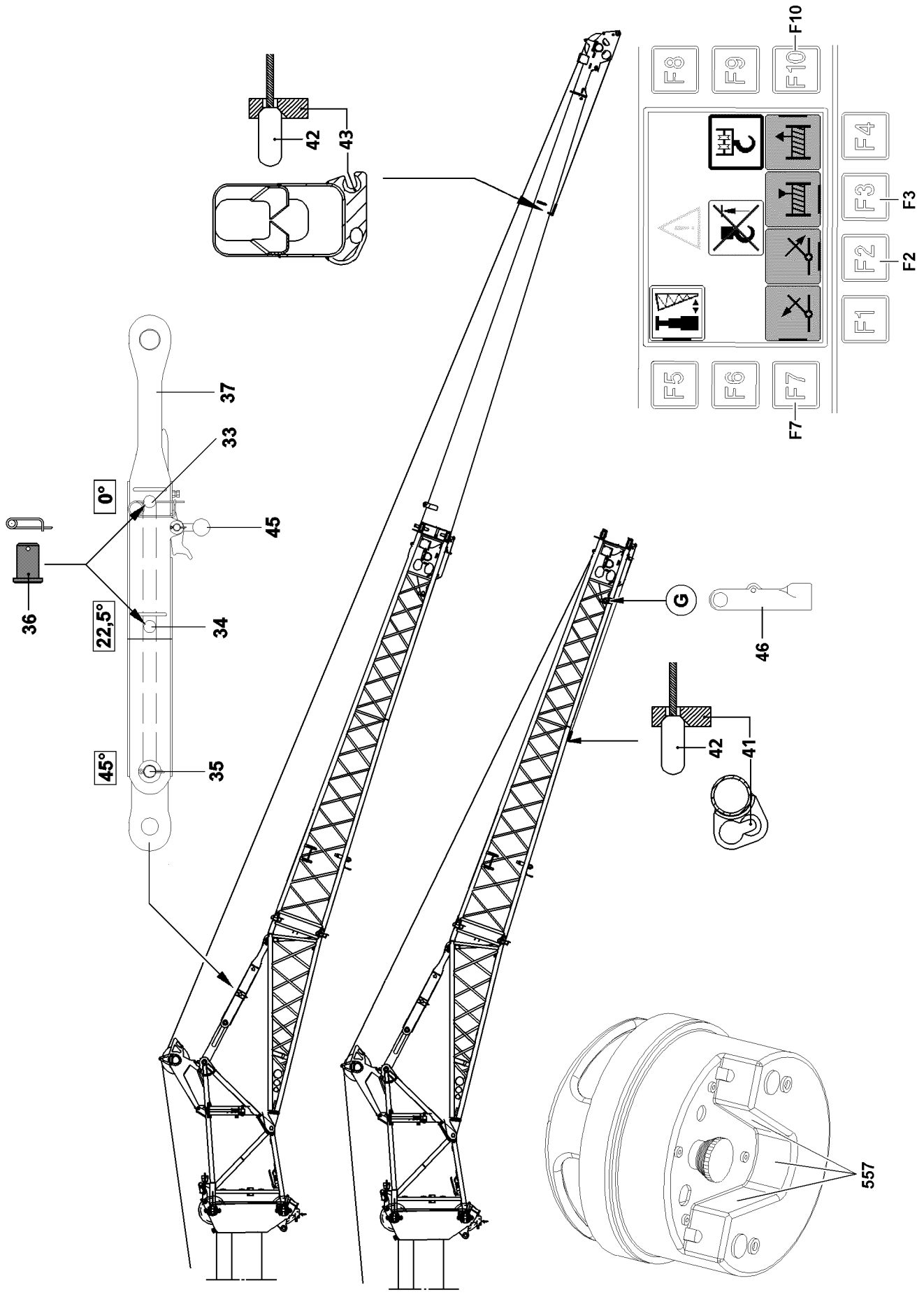
F10
F8
F9
F10
F4
F3
F3
F2
F2
F1
F5
F6
F7
F7
42
43
37
33
0°
45
36
22,5°
34
45°
35
G
46
42
41
557

B114342

4.1 Changing the folding jib with the hoist rope

WARNING
Life-threatening danger at angle installation with the BTT!
Due to jerky movements at angle installation of the folding jib with the hoist rope, the boom along with the folding jib can swing up. This can cause the folding jib to fold down uncontrolled!
Personnel can be severely injured or killed!
▶ Make sure that there are no persons within the danger zone of the folding jib!
▶ Actuate all movements carefully with the BTT!

4.1.1 Preparatory work

Make sure that the following prerequisites are met:
– The telescopic boom is luffed down and completely telescoped in.
– The counterweight has been installed on the turntable according to the load chart.
– The folding jib is attached as a straight extension in the 0° position.
– The telescopic boom has been luffed to the rear or the side.
– The hoist rope is detached from the rope lock.
– The rope lock has been removed.
– The hoist limit switch weight has been removed.
– The master switches have **not** been operated.
– The hook block or the load hook is unreeved.

WARNING
Danger of accident!
▶ When adjusting the folding jib angle with the hoist rope, it is **explicitly prohibited** to telescope the telescopic boom out / in or to luff the telescopic boom up / down!
▶ If this is not observed, crane components of the folding jib will be overloaded and damaged!

CAUTION
Damage to the hoist rope!
The hoist rope can be damaged by the rope lock **46**.
▶ Remove the rope lock **46** on point **G**!

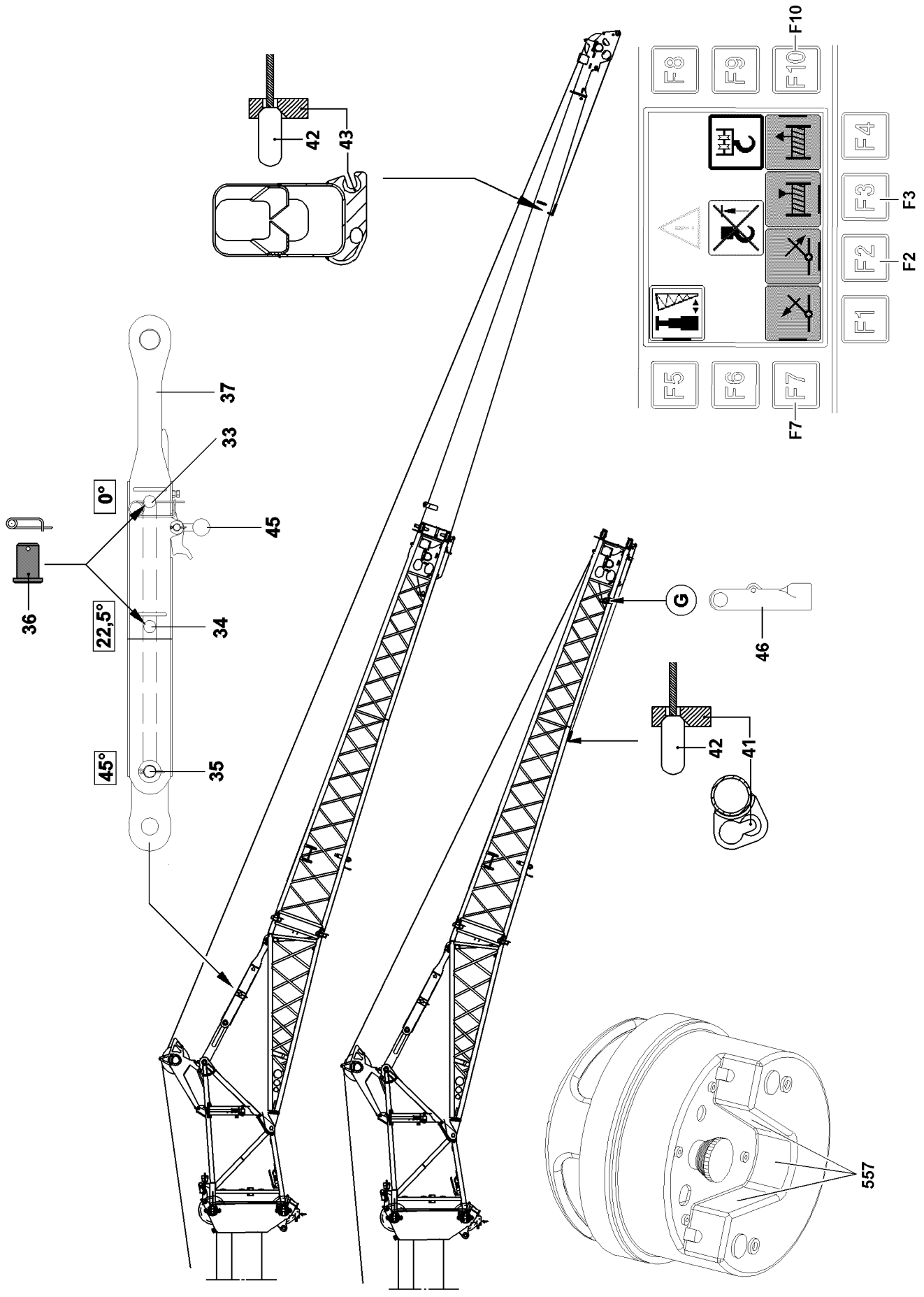
F10
F8
F9
F10
F4
F3
F3
F2
F2
F1
F5
F6
F7
F7
42
43
37
33
0°
45
36
22,5°
34
45°
35
G
46
42
41
557

B114342

▶ For operation with double folding jib
Guide the press fitting **42** into the assembly fixed point **43**.

or

For operation with the single folding jib
- Guide the press fitting **42** into the assembly fixed point **41**.
- ▶ Press the set up key on the LICCON monitor.

Note
- ▶ When changing the folding jib with the BTT, the hoist limit switch is bypassed.
- ▶ BTT, see Crane operating instructions, chapter 5.31!

▶ Tighten the hoist rope by **carefully deflecting** the appropriate manual control lever.

or

- Tighten the hoist rope by actuating the 2-hand keypad **557** and the function key **F3**.

Note
- ▶ Hold the pulley head of the folding jib approx. 1 m above the ground.

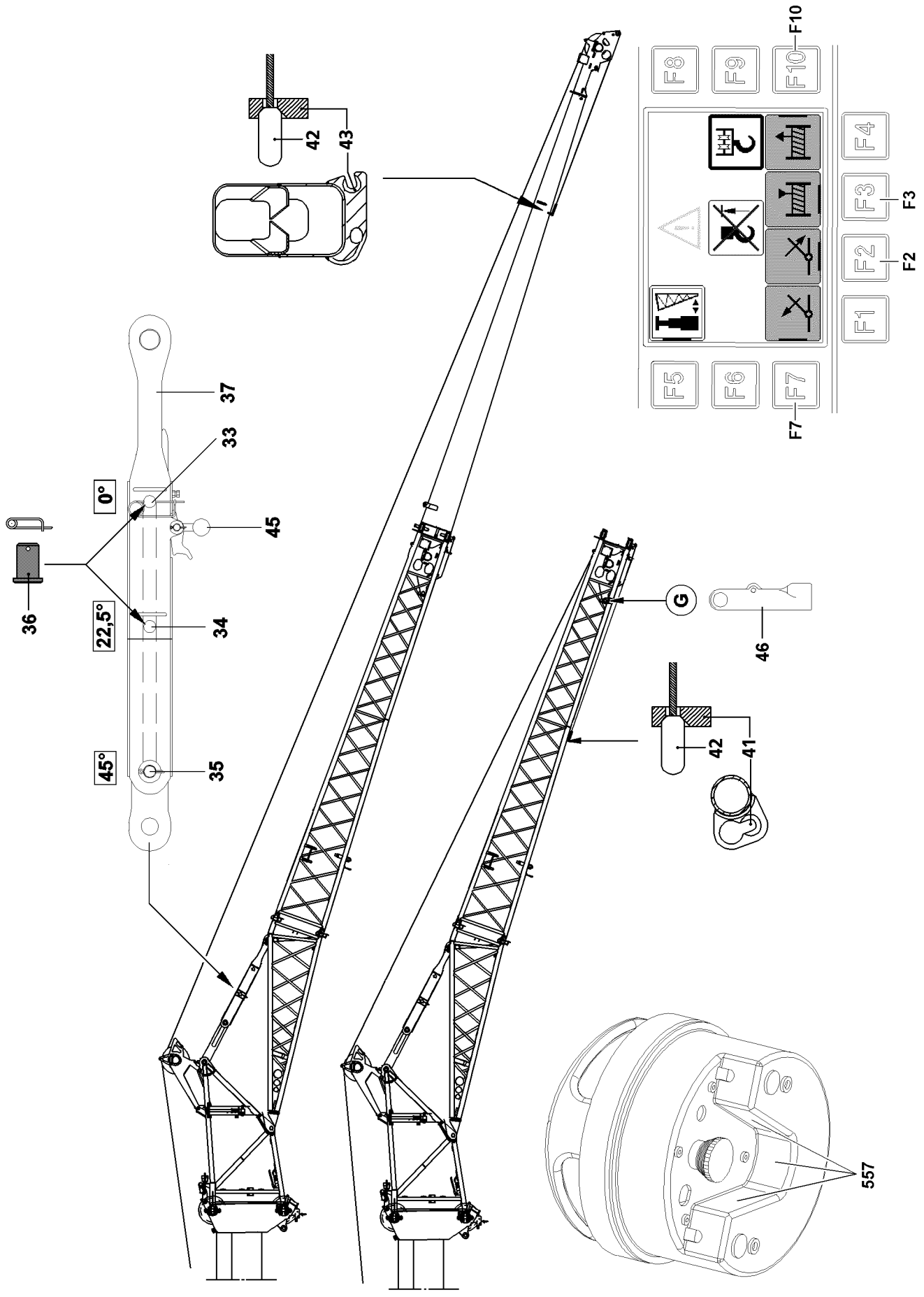
F10
F8
F9
F10
F4
F3
F3
F2
F2
F1
F5
F6
F7
F7
42
43
37
33
0°
45
36
22,5°
34
45°
35
G
46
42
41
557

B114342

4.1.2 Changing the angle with the hoist rope

You can operate the folding jib at three different angles. The required angle is set with the pin **36**. In the “Basic setting”, immediately after assembling the folding jib, the folding jib is in the 0° position.

DANGER
Danger of fatal injury!
Danger of accident if the folding jib suddenly “folds downward”!
- ▶ Make sure that there are no persons within the danger zone of the folding jib.
- ▶ **Before unpinning** the pins **36**, ensure that the hoist rope is taut and that the folding jib is held by the hoist rope.
- ▶ Unpinning the retaining pins **35** at the 45° pin bores is **prohibited**!

Angle setting 22.5°

- ▶ Release the pin **36** and unpin from the 0° bore **33**.
- ▶ Insert the pin **36** into the 22.5° bore **34** and secure.

Angle setting 45°

- ▶ Release the pin **36** and unpin from the 0° bore **33**.
- ▶ Insert the pin **36** into the pin receptacle and secure.

Positioning the folding jib

Make sure that the pin **36** is properly pinned in and secured for the required angle setting.

NOTICE
Danger of property damage!
- ▶ When using the hoist rope to adjust the angle from 0° to 22.5° or 45°, it must be ensured that no slack rope forms when simultaneously luffing the telescopic boom up and spooling the hoist rope out when the corresponding end position is reached!

- ▶ Spool the hoist rope out by carefully moving with the corresponding master switch and simultaneously luffing the telescopic boom up.

or

- ■ Spool out the hoist rope by actuating the 2-hand keypad **557** and the function key **F10** on the BTT. At the same time, luff the telescopic boom up slowly and carefully by pressing the function key **F7**.

Result:
- – The pull bracket **37** places itself against the respective pin in the selected angle setting.
- – The folding jib is held by the pin **36**.

Note
- ▶ BTT, see Crane operating instructions, chapter 5.31.

- ▶ Release the press fitting from the fixed assembly point.
- ▶ Install the rope lock **46** on point **G**!

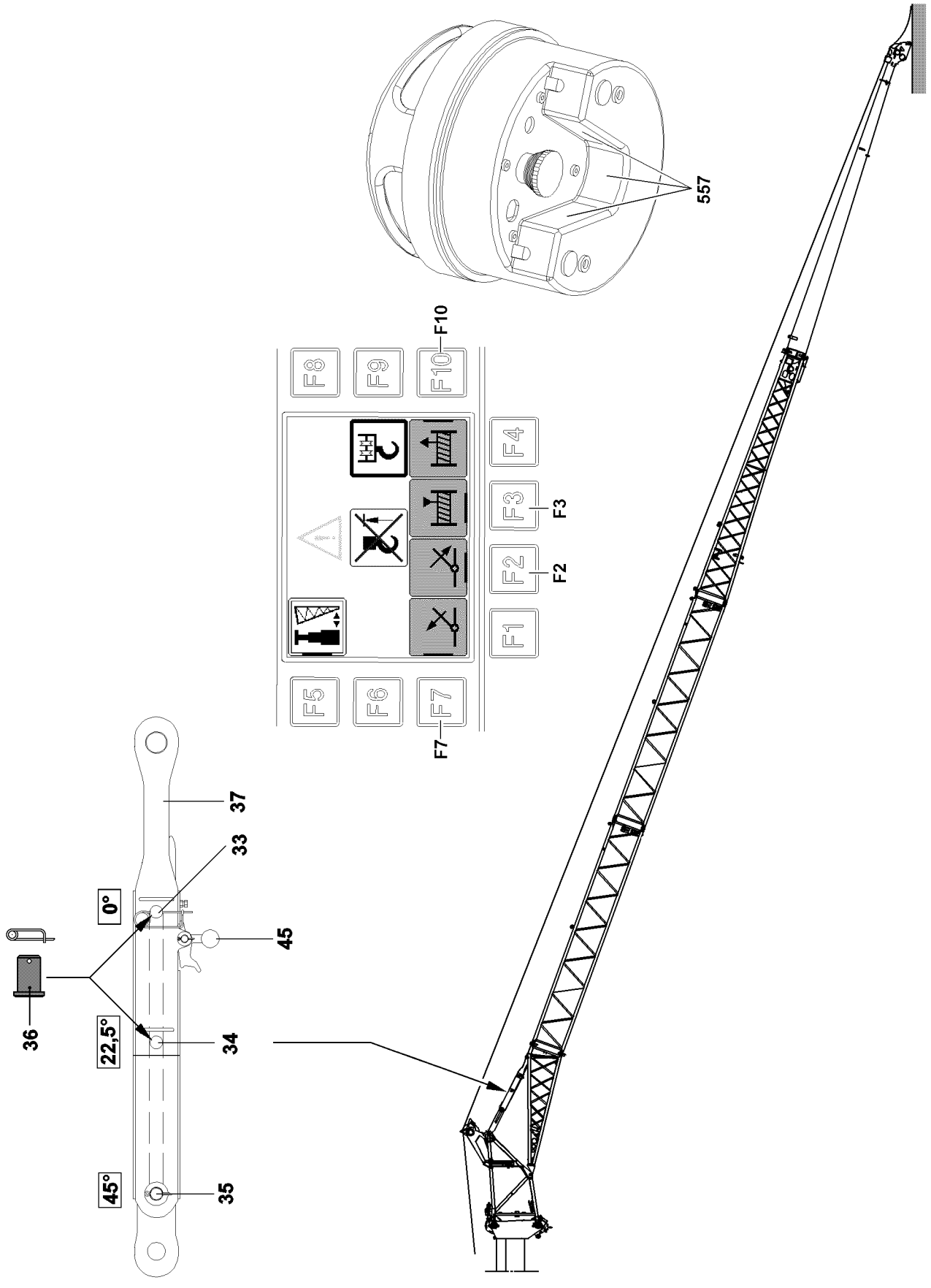
557
F10
F8
F9
F10
F4
F3
F3
F2
F2
F1
F5
F6
F7
F7
37
33
0°
45
36
22,5°
34
45°
35

B114343

4.2 Changing the folding jib by supporting it

4.2.1 Preparatory work

Note

▶ The folding jib can lie on the ground or must be properly supported, if necessary.

CAUTION

Danger of property damage!

▶ When laying down the folding jib, make sure that the folding jib is **not** laid down on the rope pulley. The folding jib can be damaged.

▶ Make sure that the hoist rope is **not** damaged.

▶ Completely luff down the telescopic boom until the folding jib lies the ground.

4.2.2 Changing angle with folding jib supported

The folding jib can be operated in three different angles. The required angle is set with the pin **36**. In the “Basic setting” - immediately after assembling the folding jib - the folding jib is in the 0° position.

DANGER

Danger of fatal injury!

Danger of accident if the folding jib suddenly “folds downward”!

▶ Make sure that there are no persons within the danger zone of the folding jib.

▶ **Before unpinning** the pins **36**, make sure that the folding jib is lying on the ground or on a proper and secure support.

▶ Unpinning the retaining pins **35** at the 40° pin bores is **prohibited**!

Angle setting 22.5°

▶ Release the pin **36** and unpin from the 0° bore **33**.

▶ Insert the pin **36** into the 22.5° bore **34** and secure.

Angle setting 45°

▶ Release the pin **36** and unpin from the 0° bore **33**.

▶ Insert the pin **36** into the pin receptacle and secure.

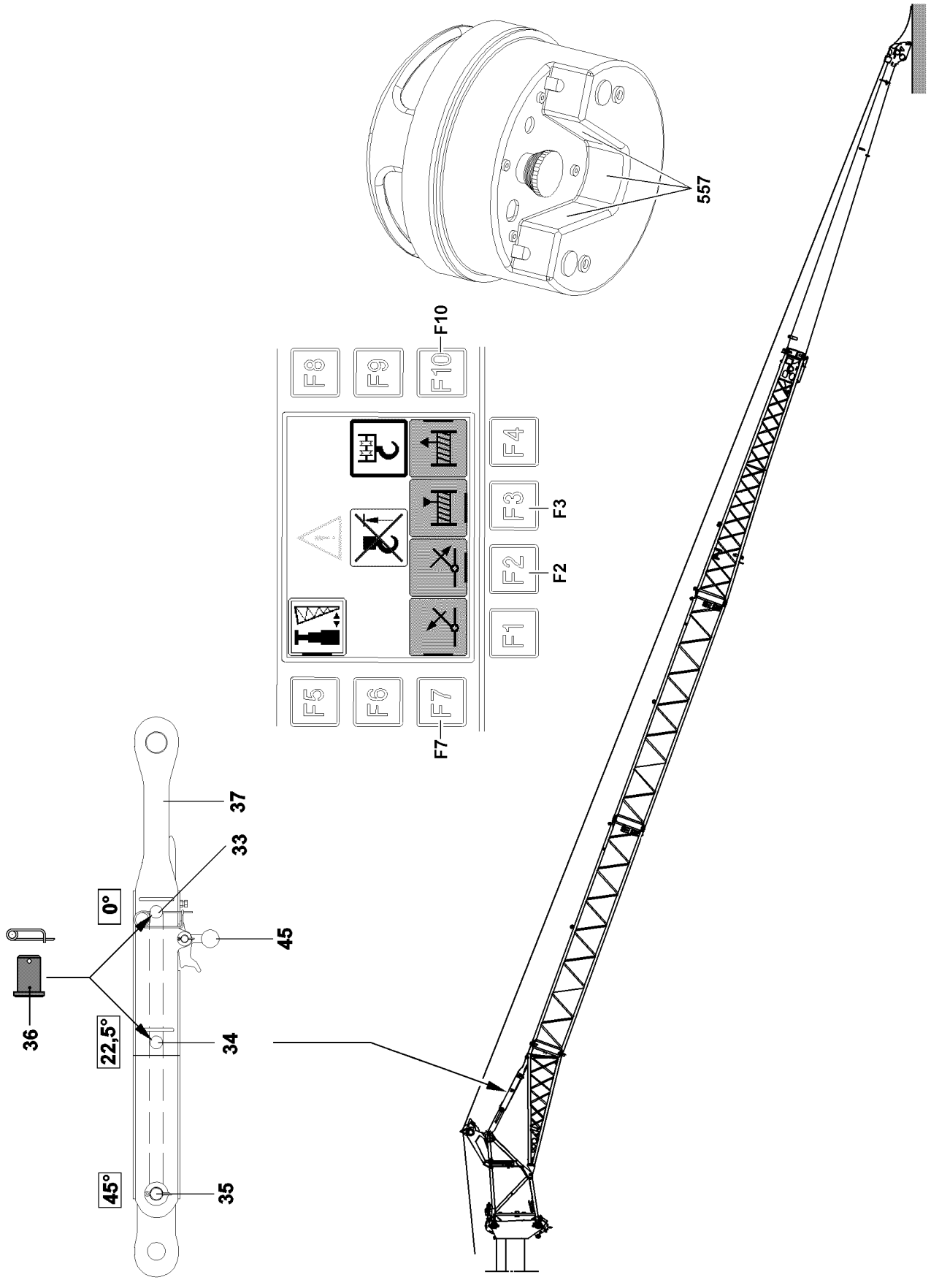
557
F10
F8
F9
F10
F4
F3
F2
F1
F5
F6
F7
F3
F2
F7
37
33
0°
45
36
22,5°
34
45°
35

B114343

Positioning the folding jib

WARNING
Life-threatening danger at angle installation with the BTT!
▶ Actuate all movements carefully with the BTT!
▶ Make sure that there are no persons within the danger zone of the folding jib!

Note
▶ When changing the folding jib with the BTT, the hoist limit switch is bypassed.
▶ BTT, see Crane operating instructions, chapter 5.31.

Make sure that the pin **36** is properly pinned in and secured for the required angle setting.
▶ Spool the hoist rope out by deflecting the corresponding manual control lever and at the same time luff up the telescopic boom slowly and carefully.

or

■ Luff the telescopic boom up slowly and carefully by actuating the 2-hand keypad **557** and the function key **F7** on the BTT.

Result:
– The pull bracket **37** places itself against the respective pin in the selected angle setting.
– The folding jib is held by the respective pin.

▶ Install the hoist limit switch weight and chain.
▶ Attach the hoist limit switch weight on the hoist rope.

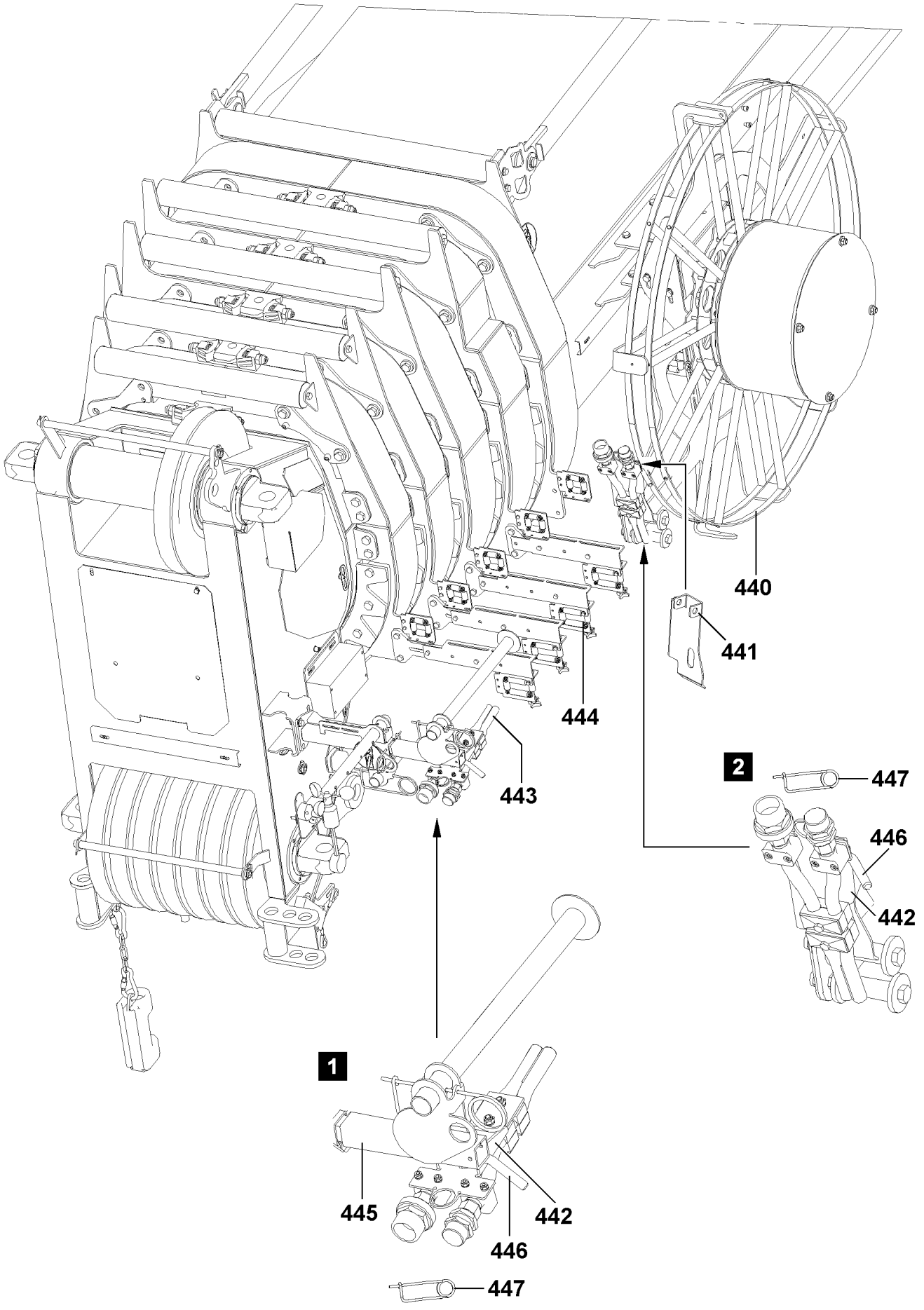

B114339

5 Hydraulic connections

5.1 Establishing the hydraulic connections

A hydraulic connection to the folding jib must only be established for a hydraulic angle adjustment (TNZK operation). Hydraulic lines cannot be incorrectly connected due to the different diameters of the hydraulic connections.

- ▶ For operation with a hydraulic folding jib:
  Establish the hydraulic connections.
- ▶ After operation with a hydraulic folding jib:
  Protect the connections from contamination.

5.2 Installing the hose couplings in operating or neutral position

The hydraulic supply to the folding jib is made via the hydraulic hose drum **440** on the telescopic boom. For extended telescopic boom operation, the bracket **442** should be installed in the retainer **441** in the “neutral position”.
This avoids having to spool the hydraulic hoses up and out unnecessarily.

CAUTION
Danger of accident due to rebounding hydraulic hoses!
The hydraulic hoses are under spring tension. If the removed bracket **442** is released, it snaps back against the hydraulic hose drum **440** due to the spring force. This can cause injury to assembly personnel or damage the hydraulic hose drum **440**.

- ▶ Do not allow removed bracket **442** to snap back!
- ▶ Hold the removed bracket **442** and then reinstall it!

5.2.1 Assembling the hose couplings in operating position (illustration 1)

- ▶ Unpin the bracket **442** with the hydraulic couplings from the retainer **441**.
- ▶ Place the two-fold hydraulic hose **443** into the guides **444**.
- ▶ Install the bracket **442** with hydraulic couplings in the retainer **445** on the telescopic boom head, to do so, insert the pin **446** and secure with spring retainer **447**, see illustration **1**.
- ▶ Secure the hydraulic hose **443** in the guides **444**.

5.2.2 Assembling the hose couplings in resting position (illustration 2)

- ▶ Release the hydraulic hose **443** in the guides **444**.
- ▶ Remove the bracket **442** with the hydraulic couplings from the retainer **445** on the boom head, to do so, release and remove the pin **446**, see illustration **1**.
- ▶ Remove the two-fold hydraulic hose **443** from the guides **444**.
- ▶ Install the bracket **442** with hydraulic couplings in the retainer **441** on the hydraulic hose drum **440**, to do so, insert the pin **446** and secure with spring retainer **447**, see illustration **2**.

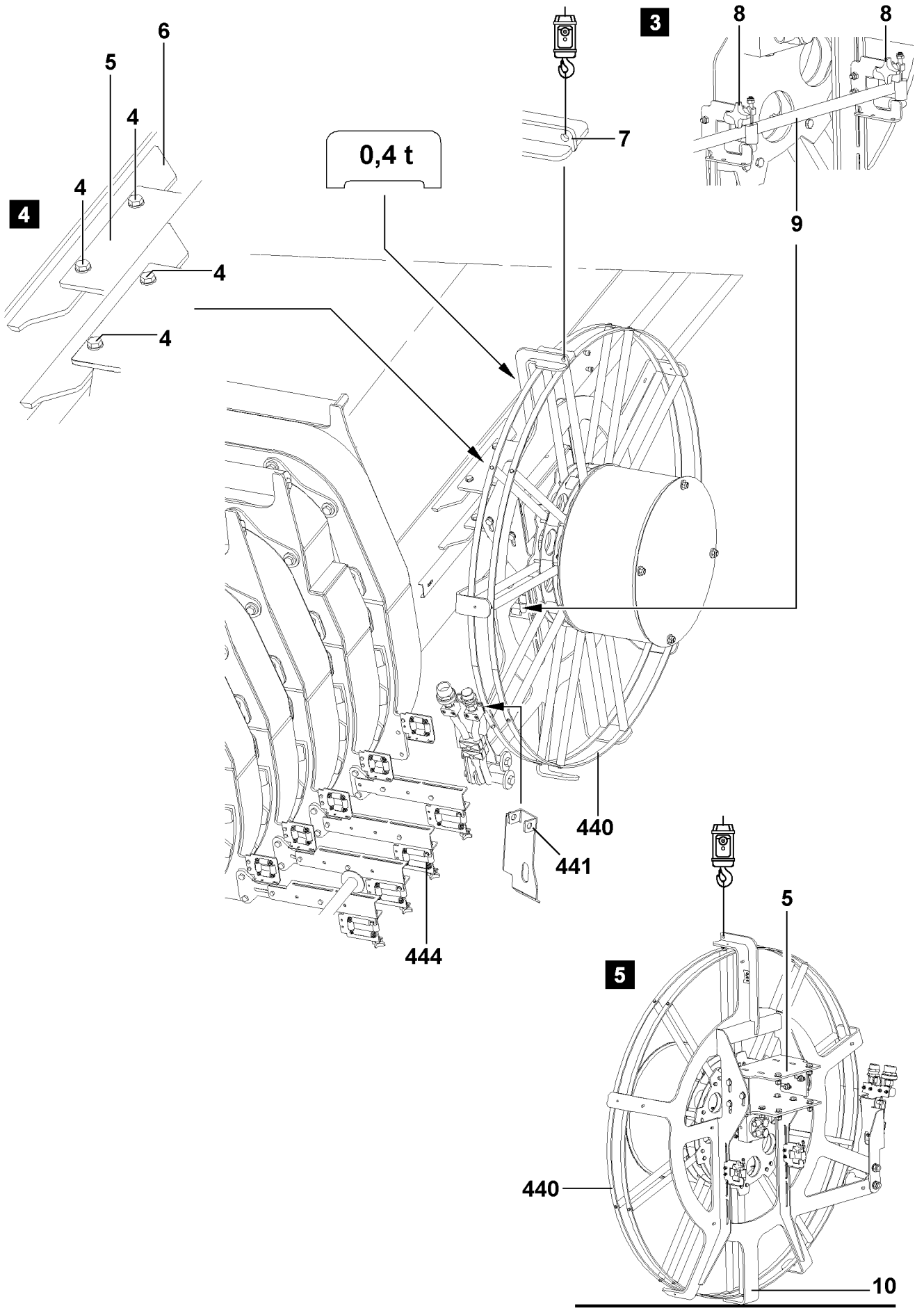

B107186

5.3 Removing the hydraulic hose drum

WARNING
Danger of falling!
During installation and removal of the hydraulic hose drum **440**, personnel must be secured with appropriate fall arrest aids to prevent them from falling. If this is not observed, assembly personnel could fall and suffer life-threatening or fatal injuries!
- ▶ All work aloft, where there is a danger of falling must be carried out with suitable aids!
- ▶ If fall arrest equipment is available, then it must be used, see Crane operating instructions, chapter 2.06!
- ▶ If aids are not available and work cannot be carried out from the ground, then the assembly personnel must secure themselves with the supplied fall arrest system to prevent falling, see Crane operating instructions, chapter 2.04!
- ▶ The supplied fall arrest system must be fastened on the fastening and hook points as well as on the safety ropes. For safety points, see Crane operating instructions, chapter 2.06!
- ▶ Only step on the aids, ladders and catwalks with clean shoes!
- ▶ Keep aids, ladders and catwalks free of heavy dirt, snow and ice!
- ▶ It is prohibited to walk on the telescopic boom!

WARNING
Danger of fatal injuries due to toppling hose drum!
- ▶ In case of an assembly / disassembly error, the hydraulic hose drum **440** can fall down!
- ▶ It is prohibited for anyone to remain under the hydraulic hose drum **440** during assembly or disassembly!

Make sure that the following prerequisites are met:
- – The telescopic boom is luffed down, telescoped in and swung by 90° to the side **or** to the rear.
- – The hydraulic connections of the hose couplings to the folding jib are released and the hose couplings are installed in resting position, see section “Assembling the hose couplings in resting position”.
- – An auxiliary crane with suitable fastening equipment is available for removing the hydraulic hose drum **440**.

- ▶ Attach the auxiliary crane with fastening equipment on the suspension lug **7** of the hydraulic hose drum **440** and secure, see illustration **3**.
- ▶ Release the cross handles **8** from the pulley sections and remove the cable **9**, see illustration **3**.

WARNING
Danger of burning due to hot oil!
When releasing hydraulic connections, hot oil can emerge!
- ▶ When releasing hydraulic connections, it is imperative to use suitable work gloves!

- ▶ Release all hydraulic connections from the telescopic boom to the hydraulic hose drum **440**.
- ▶ Remove all **four** hex head screws **4** from the retainer **5** and bracket **6**, see illustration **4**.
- ▶ Lift the hydraulic hose drum **440** with the auxiliary crane and remove.

WARNING
Danger of crushed limbs!
When placing the hydraulic hose drum **440** down, limbs can be crushed!
- ▶ Place the hydraulic hose drum **440** down especially carefully!

- ▶ Place the hydraulic hose drum **440** on the center spoke **10** on level ground, see illustration **5**.
- ▶ Place the hydraulic hose drum **440** slowly on the retainer **5**, see illustration **5**.

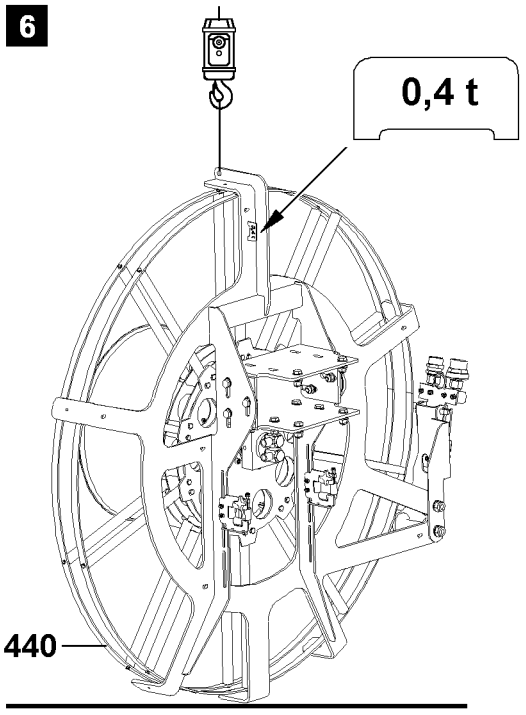

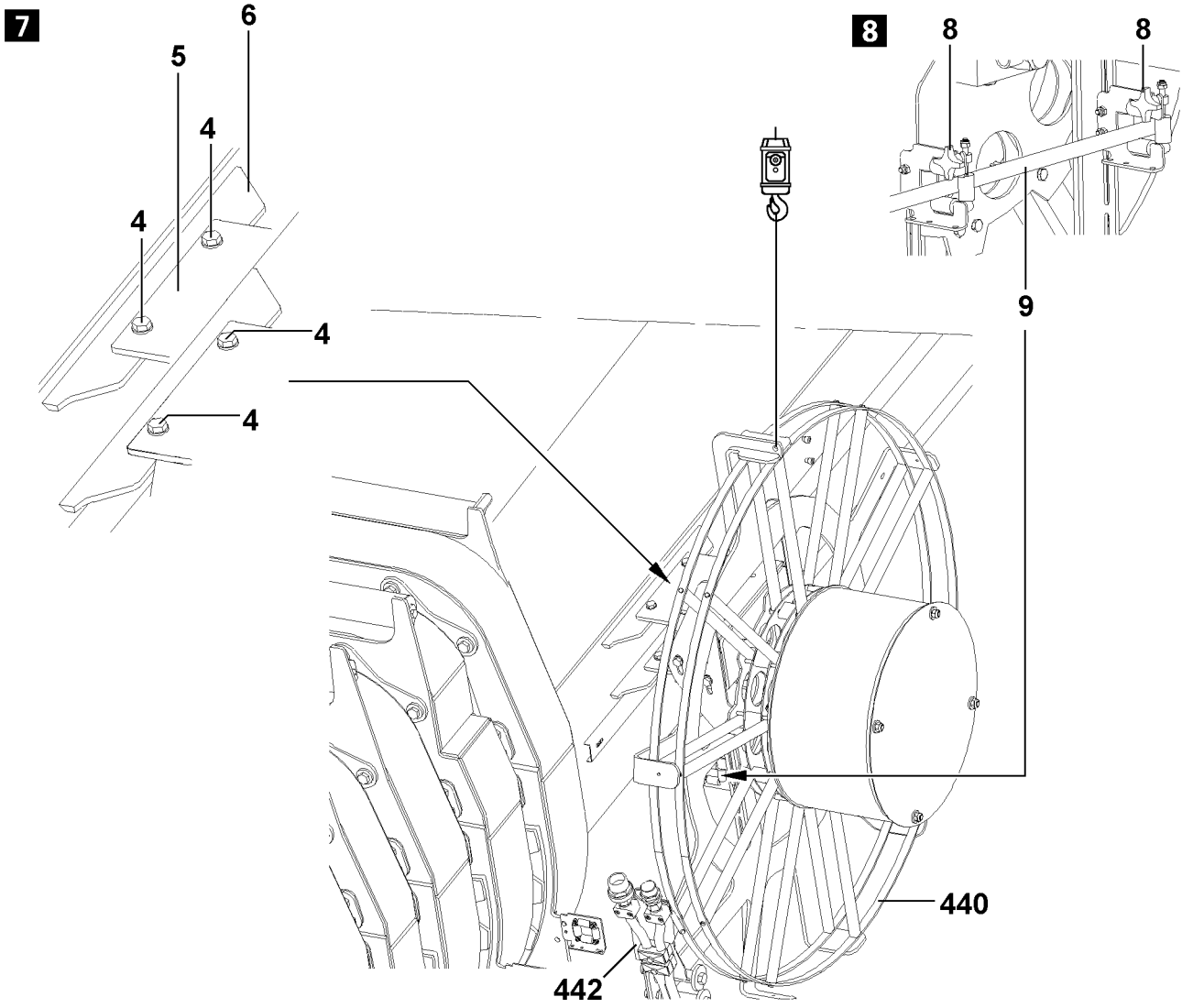

B107270

5.4 Installing the hydraulic hose drum

WARNING
Danger of falling!
During installation and removal of the hydraulic hose drum **440**, personnel must be secured with appropriate fall arrest aids to prevent them from falling. If this is not observed, assembly personnel could fall and suffer life-threatening or fatal injuries!
- ▶ All work aloft, where there is a danger of falling must be carried out with suitable aids!
- ▶ If fall arrest equipment is available, then it must be used, see Crane operating instructions, chapter 2.06!
- ▶ If aids are not available and work cannot be carried out from the ground, then the assembly personnel must secure themselves with the supplied fall arrest system to prevent falling, see Crane operating instructions, chapter 2.04!
- ▶ The supplied fall arrest system must be fastened on the fastening and hook points as well as on the safety ropes. For safety points, see Crane operating instructions, chapter 2.06!
- ▶ Only step on the aids, ladders and catwalks with clean shoes!
- ▶ Keep aids, ladders and catwalks free of heavy dirt, snow and ice!
- ▶ It is prohibited to walk on the telescopic boom!

WARNING
Danger of fatal injuries due to toppling hose drum!
- ▶ Due to an assembly / disassembly error, the hydraulic hose drum **440** can fall down!
- ▶ It is prohibited for anyone to remain under the hydraulic hose drum **440** during assembly or disassembly!

Make sure that the following prerequisites are met:
- – The telescopic boom is luffed down, telescoped in and swung by 90° to the side **or** to the rear.
- – An auxiliary crane with suitable fastening equipment is available for removing the hydraulic hose drum **440**.

- ▶ Attach the auxiliary crane on the suspension lug **7** of the hydraulic hose drum **440** with suitable fastening equipment and secure, see illustration **6**.
- ▶ Lift the hydraulic hose drum **440** with the auxiliary crane and affix on the telescopic boom, see illustration **7**.

WARNING
Danger of crushed limbs!
When installing the hydraulic hose drum **440** on the telescopic boom, limbs can be crushed!
- ▶ Be especially careful at installation of the hydraulic hose drum **440**!

- ▶ Screw the retainer **5** on the bracket **6** with all **four** hex head screws **4** and **new self-locking nuts**, see illustration **7**.
- ▶ Guide the cable **9** into the pulley sections and attach the cross handles **8** tightly, see illustration **8**.
- ▶ Establish all hydraulic connections from the telescopic boom to the hydraulic hose drum **440**.
- ▶ Remove the auxiliary crane.
- ▶ Install the bracket **442** with hose couplings in operating position, if needed, see section “Installing the hose couplings in operating position”.

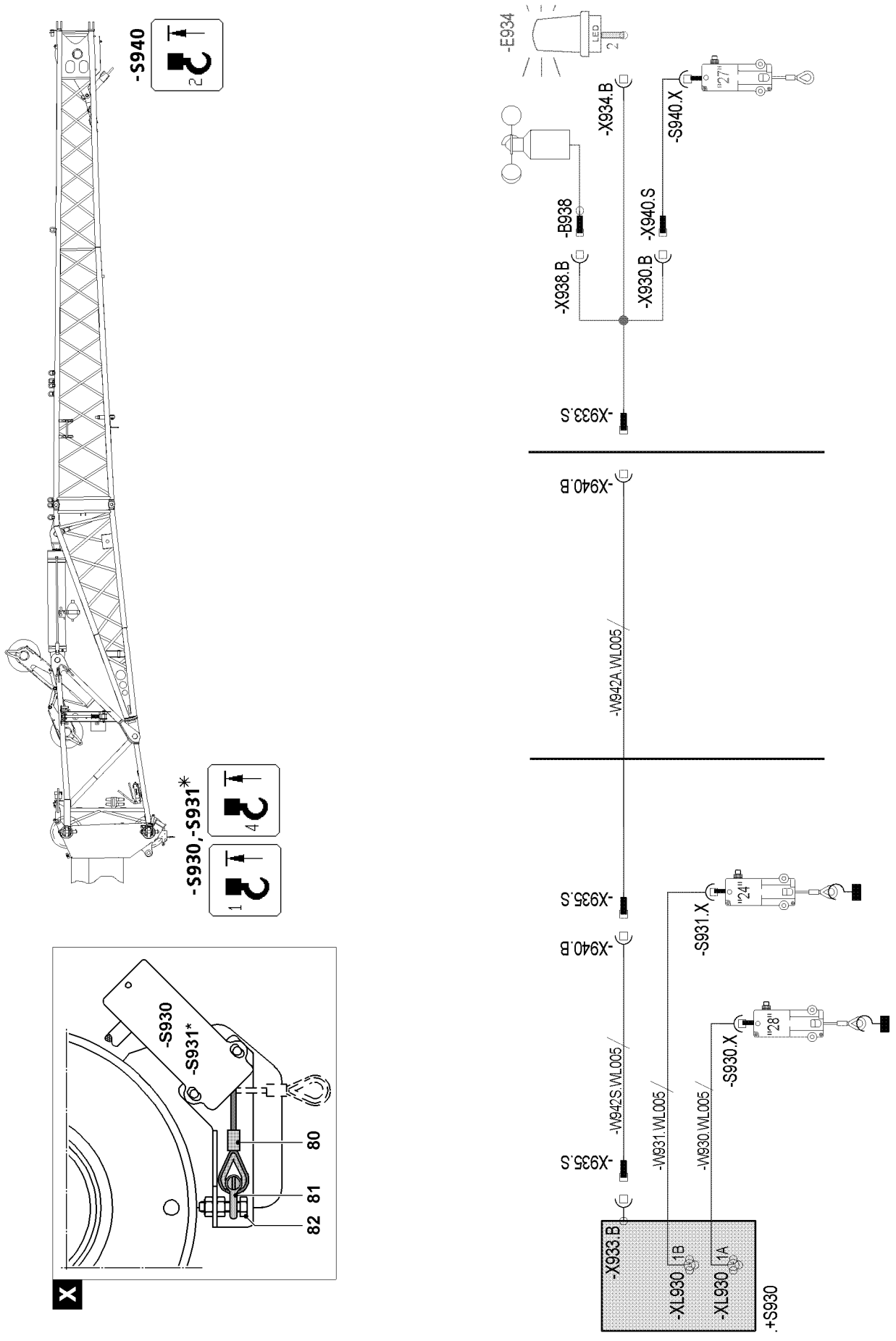
-S940
-S930,-S931*
-S930
-S931*
80
81
82
X
-E934
LED
-X934.B
-S940.X
"27"
-B938
-X940.S
-X938.B
-X930.B
-X933.S
-X940.B
-W942A.WL005
-X935.S
-X940.B
-S931.X
"24"
-S930.X
"28"
-W942S.WL005
-W931.WL005
-W930.WL005
-X935.S
-X933.B
-XL930
1B
-XL930
1A
+S930

B115025

6 Electrical connections

6.1 Mechanically actuating the hoist limit switch, illustration X

If you are working in “Single hook mode” with the installed folding jib, the hoist limit switch **-S930** and hoist limit switch* **-S931** which is not required must be actuated manually.

- ▶ Remove the hoist limit switch weight and chain.
- ▶ Pull the hoist limit switch rope **80** and attach to the fixed point **82** with the shackle **81**.

6.2 Establishing the electrical connections on the single folding jib

6.2.1 Establishing the electrical connection to the hoist limit switch

Note

- ▶ In single hook operation, only the hoist limit switch **-S940** on the single folding jib is active. The hoist limit switch **-S930** and the hoist limit switch* **-S931** must be mechanically actuated, see illustration **X**.
- ▶ In two hook operation, the hoist limit switch **-S940** on the single folding jib and the hoist limit switch **-S930** on the telescopic boom are active. The hoist limit switch* **-S931** must be actuated mechanically, see illustration **X**.

- ▶ Plug in the cable **W942** with the plug **-X935.S** on the terminal box **-S930**.
- ▶ Plug the cable **W942** with the plug **-X935.S** into the socket **-X940.B**.

Note

- ▶ To be able to establish the electrical connection to the hoist limit switch **-S940**, the Y-adapter must be plugged in the socket **-X940.B** with the plug **-X933.S**.

- ▶ Plug the Y-adapter with the plug **-X933.S** in the socket **-X940.B**
- ▶ Plug the Y-adapter with the plug **-X940.S** in the socket **-X930.B**
- ▶ Plug in the hoist limit switch **-S940**.

6.2.2 Establishing the electrical connection to the LED continuous light* or flashing beacon*

Note

- ▶ To be able to establish the electrical connection to the LED continuous light and the rotating beacon, the Y-adapter on the cable must be plugged in the socket **-X940.B** with the plug **X933.S**.

- ▶ Plug the LED continuous light or flashing beacon in the socket **-X934.B**.

6.2.3 Establishing the electrical connection to the wind speed sensor*

Note

- ▶ To be able to establish the electrical connection to the wind speed sensor, the plug **X933.S** must be plugged in the socket **-X940.B**.

- ▶ Plug the wind speed sensor in the socket **-X938.B**.

Note

- ▶ After folding jib operation, protect the electrical connections from contamination with caps.

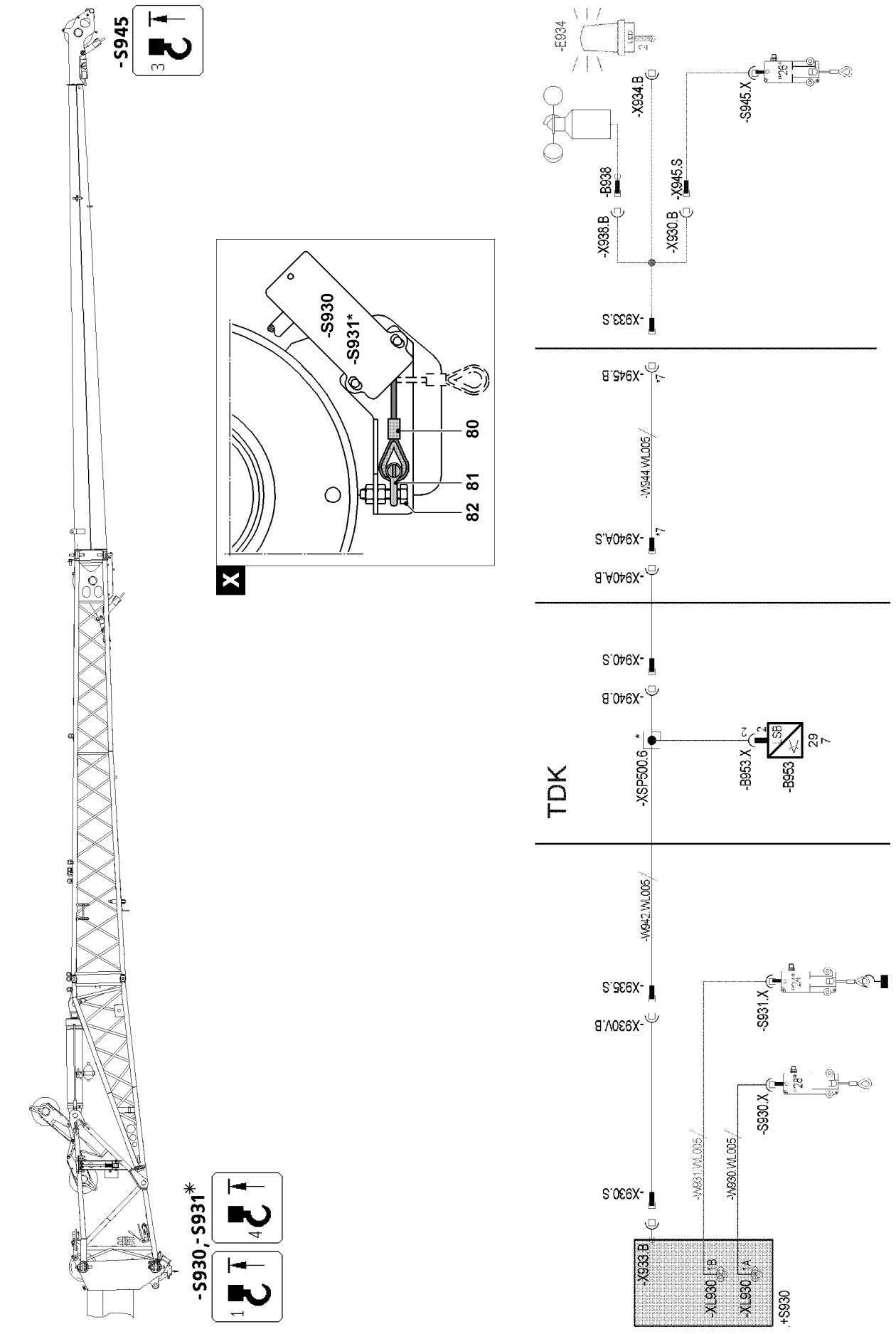
-S945
-S930, -S931*
-S930
-S931*
80
81
82
X
-E934
-X934.B
-B938
-X938.B
-X930.B
-X945.S
-S945.X
-X933.S
-X945.B
-W944.WL005
-X940A.S
-X940A.B
-X940.S
-X940.B
TDK
-XSP500.6
-B953.X
-B953
-X942.WL005
-X935.S
-X930V.B
-S931.X
-S930.X
-W931.WL005
-W930.WL005
-X930.S
-X933.B
-XL930
-XL930
+S930

B115026

6.3 Establishing the electrical connections on the double folding jib

6.3.1 Establishing the electrical connection to the hoist limit switch

Note

- Only the hoist limit switch **-S945** on the double folding jib is active during single hook operation. The hoist limit switch **-S940** on the single folding jib must be unplugged. The hoist limit switch **-S930** and the hoist limit switch* **-S931** must be mechanically actuated, see illustration **X**.
- In two hook operation, the hoist limit switch **-S945** on the double folding jib and the hoist limit switch **-S930** on the telescopic boom are active. The hoist limit switch **-S940** must be unplugged and the hoist limit switch* **-S931** must be mechanically actuated, see illustration **X**.

- Plug the cable with the plug **-X930.S** in on the terminal box **-S930**.
- Plug the cable **W942** with the plug **-X935.S** into the socket **-X930V.B**.
- Plug the cable with the plug **-X940.S** into the socket **-X940.B**.
- Plug the cable with the plug **-X940.AS** into the socket **-X945.A.B**.
- Plug the Y-adapter with the plug **X933.S** in the socket **-X945.B**
- Plug in the hoist limit switch **-S945**.

6.3.2 Establishing the electrical connection to the LED continuous light* or flashing beacon*

Note

- To be able to establish the electrical connection to the LED continuous light and the rotating beacon, the Y-adapter must be plugged in the socket **-X945.B** with the plug **X933.S**.

- Plug the LED continuous light or flashing beacon in the socket **-X934.B**.

6.3.3 Establishing the electrical connection to the wind speed sensor*

Note

- To be able to establish the electrical connection to the wind speed sensor, the plug **X933.S** must be plugged in the socket **-X945.B**.

- Plug the wind speed sensor in the socket **-X938.B**.

1

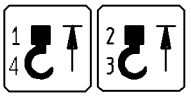

2

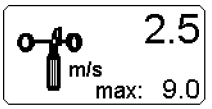

B105574

6.4 Function check

Make sure that the following prerequisites are met:
- All electrical connections have been established.
- The crane engine is running
- The appropriate folding jib operating mode is set on the LICCON monitor.

6.4.1 Hoist limit switch

▶ Actuate all active hoist limit switches manually.

Result:
- The corresponding symbol element “Hoist top” appears on the LICCON monitor.
- The hoist winch turns off in the lift direction, see illustration **1**.

Note
The respective symbol element “Hoist top” does not appear on the monitor when manually actuating the hoist limit switch?
Is spool winch up and luff telescopic boom down blocked?
The auxiliary boom is not compatible with the LICCON overload protection!
▶ Contact the next **Liebherr Service location** or **Liebherr-Werk Ehingen**!

Note
▶ When replacing or changing the hoist limit switch (HES), the corresponding hoist limit switch must have the correct bus address and the correct software version in order to be detected again by the bus system (LSB).

1

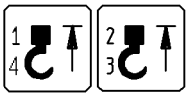

2

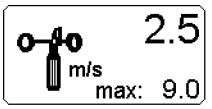

B105574

6.4.2 Function check

Make sure that the following prerequisites are met:
- All electrical connections have been established.
- The crane engine is running
- The appropriate folding jib operating mode is set on the LICCON monitor.

Hoist limit switch

▶ Actuate all active hoist limit switches manually.

Result:
- The corresponding symbol element “Hoist top” appears on the LICCON monitor.
- The hoist winch turns off in the lift direction, see illustration **1**.

Note
The respective symbol element “Hoist top” does not appear on the monitor when manually actuating the hoist limit switch?
Is spool winch up and luff telescopic boom down blocked?
The auxiliary boom is not compatible with the LICCON overload protection!
▶ Contact the next **Liebherr Service location** or **Liebherr-Werk Ehingen**!

Note
▶ When replacing or changing the hoist limit switch (HES), the corresponding hoist limit switch must have the correct bus address and the correct software version in order to be detected again by the bus system (LSB).

Wind sensor

WARNING
Danger of accident due to toppling crane!
The wind speed can no longer be determined when attaching a defective wind sensor.
▶ Check the function of the wind sensor after every assembly.

▶ Manually actuate the wind sensor.

Result:
- The icon “Wind speed”, see illustration **2**, appears on the LICCON monitor.

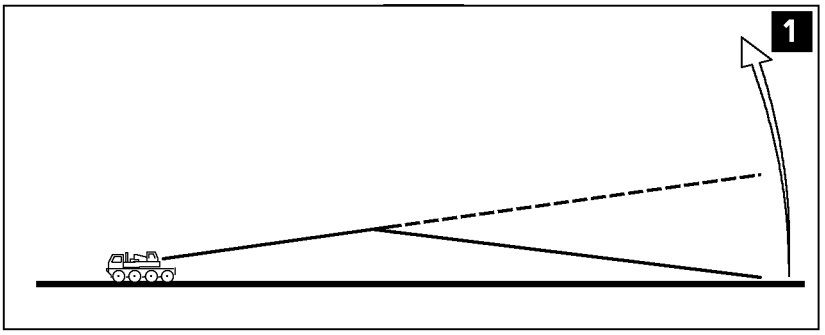

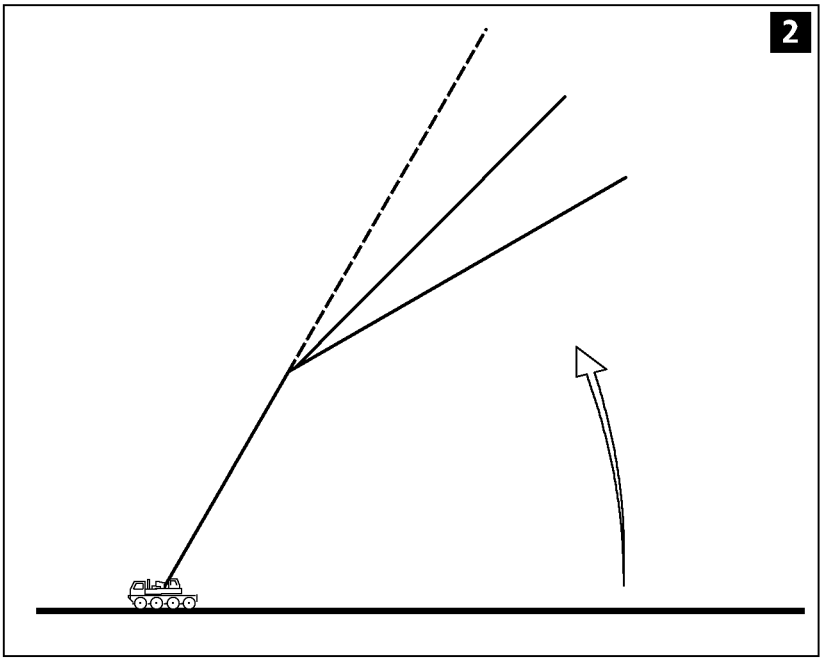

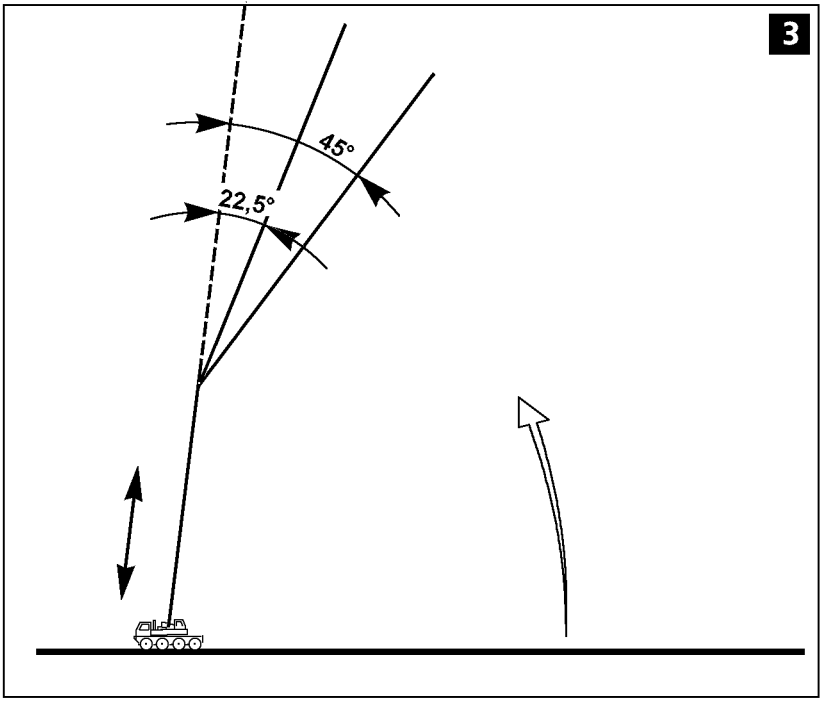

B196442

7 Erection

7.1 Preparatory work

Make sure that the following prerequisites are met:

- The crane is properly supported and horizontally aligned.
- The counterweight has been installed on the turntable according to the load chart.
- The telescopic boom is fully telescoped in.
- The folding jib has been assembled according to the load chart and the operating instructions.
- All limit switches have been correctly installed and are fully functional.
- All pin connections have been secured.
- The hoist rope has been correctly placed in the rope pulleys and is secured with the rope retaining pins to prevent it from jumping out.
- There are no “foreign objects” on the telescopic boom and the folding jib.
- The telescopic boom, the folding jib and its components (such as: Limit switch, airplane warning light, wind speed sensor) must be free of snow and ice in winter.

DANGER
Danger of accident!
Incorrectly installed or non-functioning limits switches as well as falling parts (such as: pins, cotter / spring pins, ice) can cause accidents!
▶ Install all limit switches, pins and spring pins properly.

▶ Check if all prerequisites have been met.

7.2 Erection procedure

DANGER
Danger of accidents due to toppling of the crane!
The radii specified in the load chart may not be exceeded or fallen below, even if there is no load on the hook! If this regulation is not observed, the crane can topple over.
▶ Compare and check the settings on the LICCON computer system with the actual configuration status!

Adjustment of the LICCON overload safety device, refer to Crane operating instructions, chapter 4.02.

▶ Set and confirm the LICCON overload protection according to the required set up configuration.
▶ Luff the telescopic boom up with the folding jib attached until the LICCON signals the release.
▶ Telescope the telescopic boom out to the values specified in the load chart.

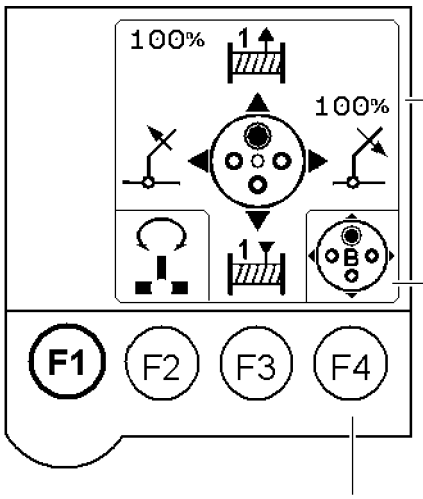
100%
100%
460
472
F1
F2
F3
F4
464

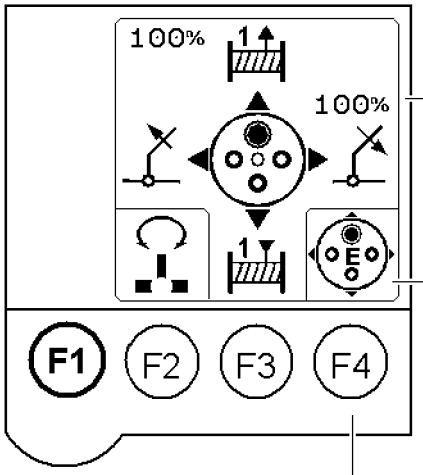
100%
100%
460
477
F1
F2
F3
F4
464

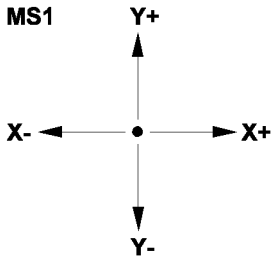
MS1
Y+
X-
X+
Y-

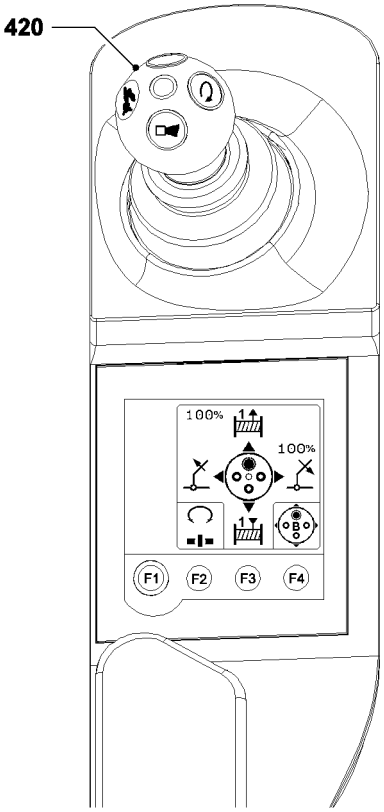
420

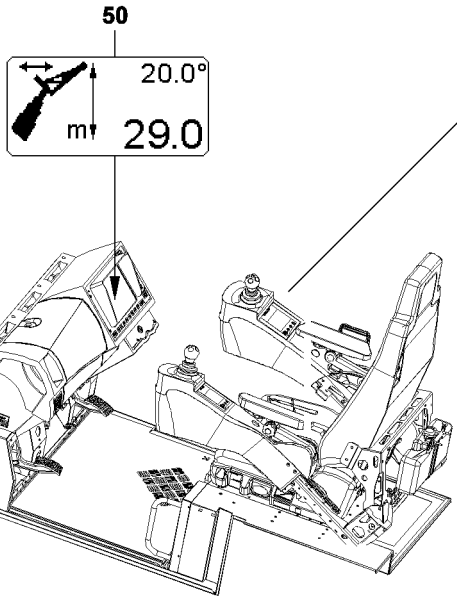
50
20.0°
m
29.0

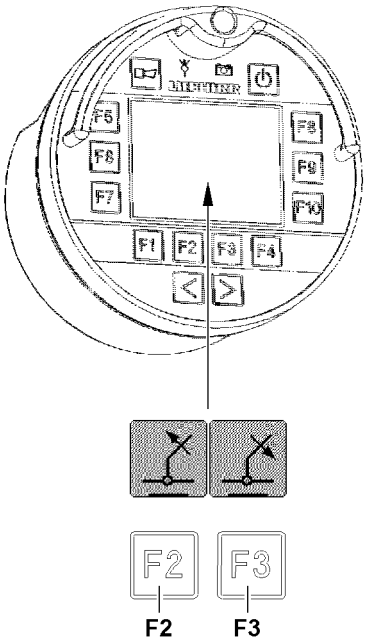
F2
F3
F2
F3

B106568

8 Adjusting the folding jib angle hydraulically*

8.1 Folding jib with hydraulic* angle adjustment

The adjustment range of the folding jib lies between 0° and 40° to the telescopic boom. It is possible to luff the hydraulically adjustable folding jib under load.

DANGER
Danger of accident due to toppling crane!
The crane may topple if the maximum load is exceeded.
- ▶ The specifications in the load charts must be adhered to!
- ▶ The load charts for the hydraulically adjustable folding jib are only valid for angles of 0°, 20° and 40°!
- ▶ For the adjustment angles between the nominal angles of 0°, 20° and 40°, the maximum load carrying capacity will be determined by the LICCON computer system shown on the LICCON monitor.

Make sure that the following prerequisites are met:
- All hydraulic connections have been made.
- All electrical connections have been made.
- The crane engine is running.
- The operating mode **TNZK** has been set and confirmed on the LICCON computer system.

8.1.1 Angle display for folding jib

The folding jib angle **50** is shown on the LICCON monitor as the relative angle between the telescopic boom pulley head and the folding jib.

8.1.2 Luffing with “hydraulic angle adjustment”

Make sure that the following prerequisites are met:
- The right touch display **460** appears on the “Driving mode + Master switch configuration” menu.
- The master switch configuration “B” **472** is active (for devices with one winch).
- The master switch assignment “E” **477** is active (for devices with two winches).

The folding jib angle adjustment can be made under load.

▶ If the folding jib is to be luffed down:
Deflect the master switch **420** to the right in direction X+.

Result:
- The hydraulic folding jib is luffed down.

▶ If the folding jib is to be luffed up:
Deflect the master switch **420** to the left in direction X-.

Result:
- The hydraulic folding jib is luffed up.

Note
- ▶ Alternatively, the hydraulic angle adjustment can also be made with the BTT.
- ▶ The hydraulic folding jib can be luffed up with the function key **F2** or luffed down with the function key **F3**, see chapter 5.31, section “The menu Assembly functions on the BTT”.

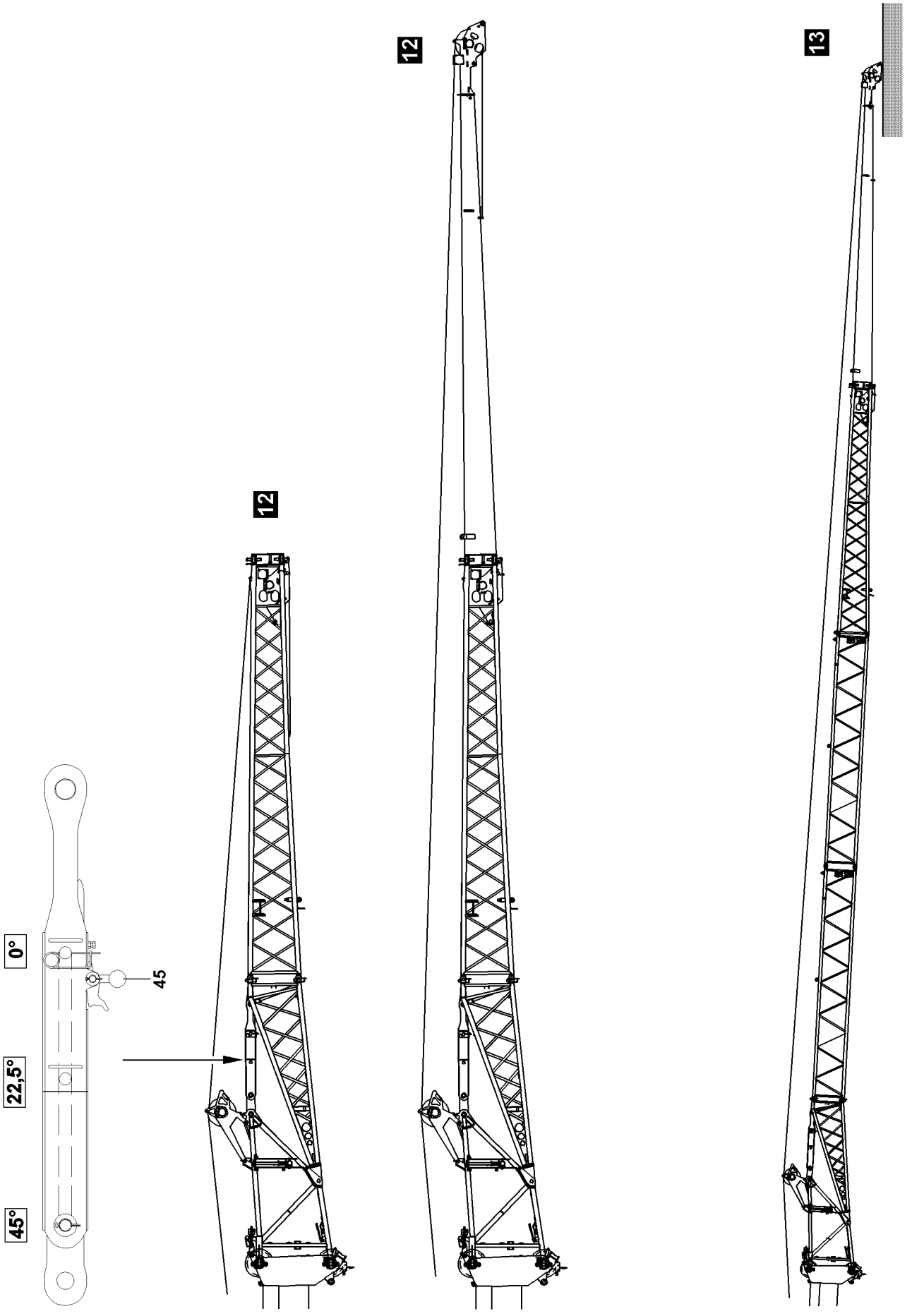

B114341

9 Changing over mechanical folding jib from 22.5° or 45° to 0°

DANGER
Danger of fatal injury!
If the following danger notes are not observed, fatal injuries can occur during assembly and change over work on the folding jib.
▶ No persons may remain within the danger zone of the crane.

There are two ways of changing the mechanical folding jib to 0°:
1.) Changing the folding jib with the hoist rope, see illustration **12**.
Only permitted for operation with single folding jib and double folding jib.
2.) Changing the folding jib by supporting it from below, see illustration **13**.

9.1 Changing the folding jib with the hoist rope

WARNING
Life-threatening danger at angle installation with the BTT!
Due to jerky movements at angle installation of the folding jib with the hoist rope, the boom along with the folding jib can swing up. This can cause the folding jib to fold down uncontrolled!
Personnel can be severely injured or killed!
▶ Actuate all movements carefully with the BTT!
▶ Make sure that there are no persons within the danger zone of the folding jib!

Note
▶ When changing the folding jib with the BTT, the hoist limit switch is bypassed.
▶ BTT, see Crane operating instructions, chapter 5.31.

Make sure that the following prerequisites are met:
– The crane is properly supported and horizontally aligned.
– The counterweight has been installed on the turntable according to the load chart.
– The telescopic boom is fully telescoped in.
– The folding jib is installed at an angle of 22.5° or 45°.
– The telescopic boom has been luffed to the rear or the side.

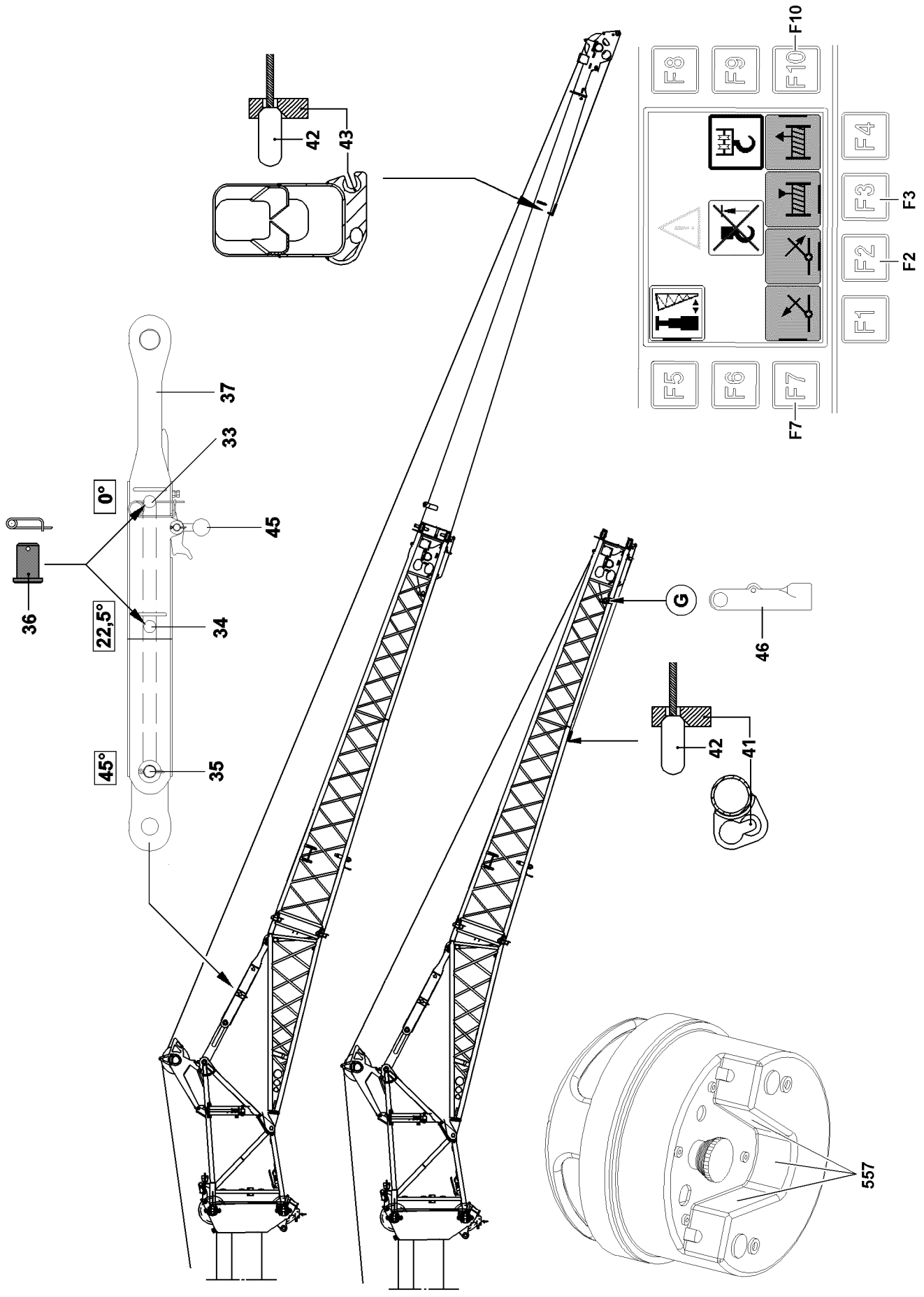
F10
F8
F9
F10
F4
F3
F3
F2
F2
F1
F5
F6
F7
F7
42
43
37
33
0°
45
36
22,5°
34
45°
35
G
46
42
41
557

B114342

9.1.1 Preparatory work

- ▶ Lower the telescopic boom until the hook block can be reeved out on the end section of the folding jib.
- ▶ Reeve out the hoist rope onto the hook block.
- ▶ Remove the hoist limit switch weight.

CAUTION
Danger of damage to the folding jib and the hoist rope!
If the telescopic boom is telescoped out or luffed down as long as the hoist rope is tightened on the assembly fixed point, the hoist rope can rip and the folding jib can be damaged.
- ▶ Do not telescope out or luff down the telescopic boom with the hoist rope attached on the fixed assembly point!

- ▶ For operation with double folding jib:
  Guide the press fitting **42** into the assembly fixed point **43**.

or

For operation with single folding jib:
- ■ Guide the press fitting **42** into the assembly fixed point **41**.
- ▶ Tighten the hoist rope by **carefully deflecting** the appropriate manual control lever.

or

- ■ Tighten the hoist rope by actuating the 2-hand keypad **557** and the function key **F3**.

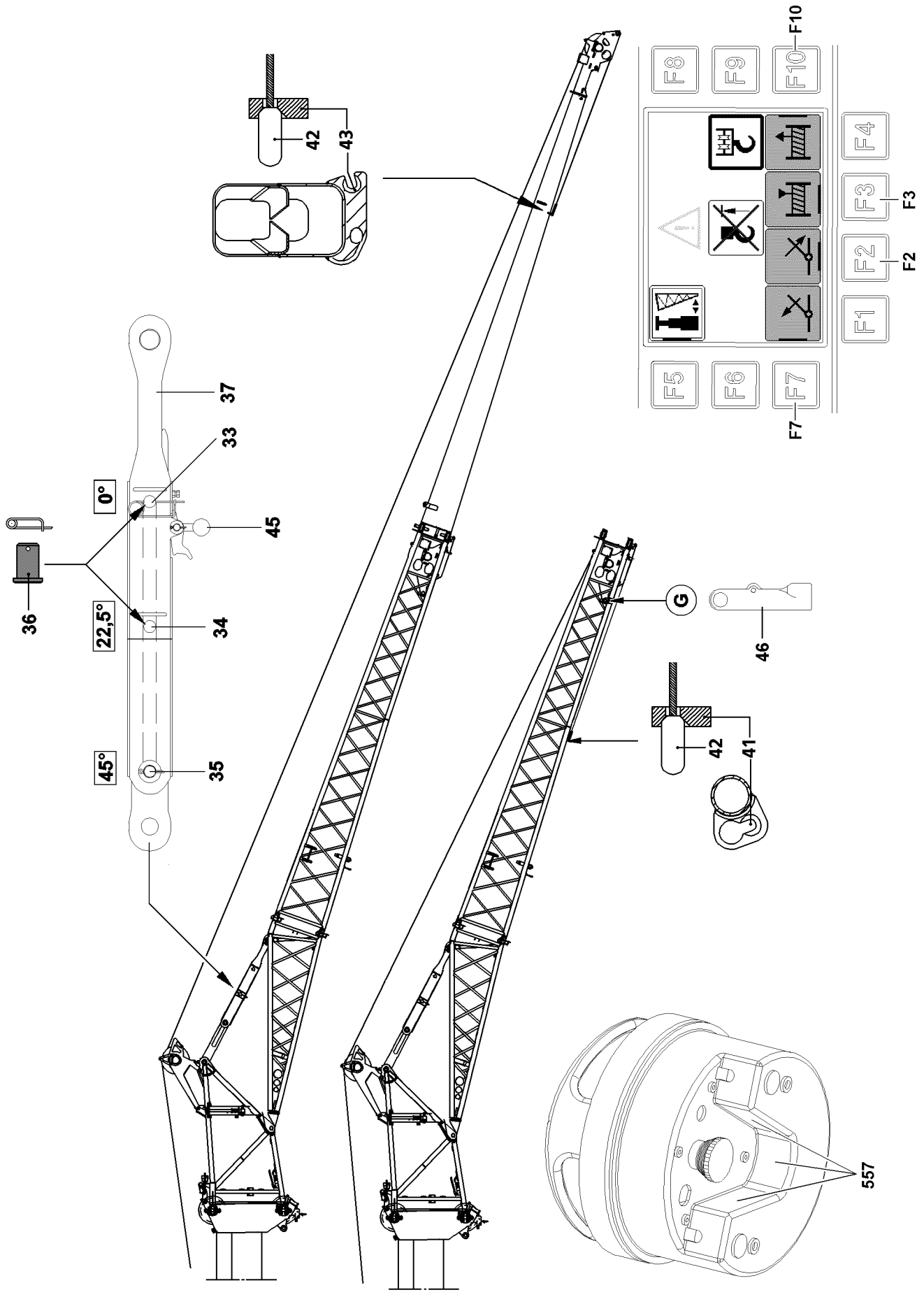
F10
F8
F9
F10
F4
F3
F3
F2
F2
F1
F5
F6
F7
F7
42
43
37
33
0°
45
36
22,5°
34
45°
35
G
46
42
41
557

B114342

9.1.2 Changing the angle with the hoist rope

CAUTION
Danger of damage to the folding jib and the hoist rope!
▶ As soon as the folding jib has reached the 0° position (stop at pull bracket), the “Lifting” and “Luffing” movement must be stopped immediately.

▶ Luff down telescopic boom and simultaneously spool up the hoist rope so that the pivot section of the folding jib is always kept at the same height, approx. 1.0 m - 1.5 m, above the ground until the 0° position (stop on pull bracket) has been reached.

or

■ Luff the telescopic boom down via the BTT by actuating the 2-hand keypad **557** and the function key **F2**. Spool up the hoist rope simultaneously with the function key **F3** so that the pivot section of the folding jib is always held at the same height, approx. 1.0 m to 1.5 m above the ground until the 0 ° position “Stop on pull bracket” is reached.

DANGER
Danger of fatal injury!
Danger of accident if the folding jib suddenly “folds downward”!
▶ Make sure that there are no persons within the danger zone of the folding jib.
▶ **Before unpinning** the pins **36**, ensure that the hoist rope is taut and that the folding jib is actually held by the hoist rope.
▶ Unpinning the retaining pins **35** at the 45° pin bores is **prohibited**!

▶ Release the pins **36** and unpin from the 22.5° bore **34 or** remove from the transport retainer.
▶ Insert the pin **36** into the 0° bore **33** and secure.
▶ Disengage the hoist rope on the assembly fixed point.
▶ Install the rope lock **46** on point **G**!

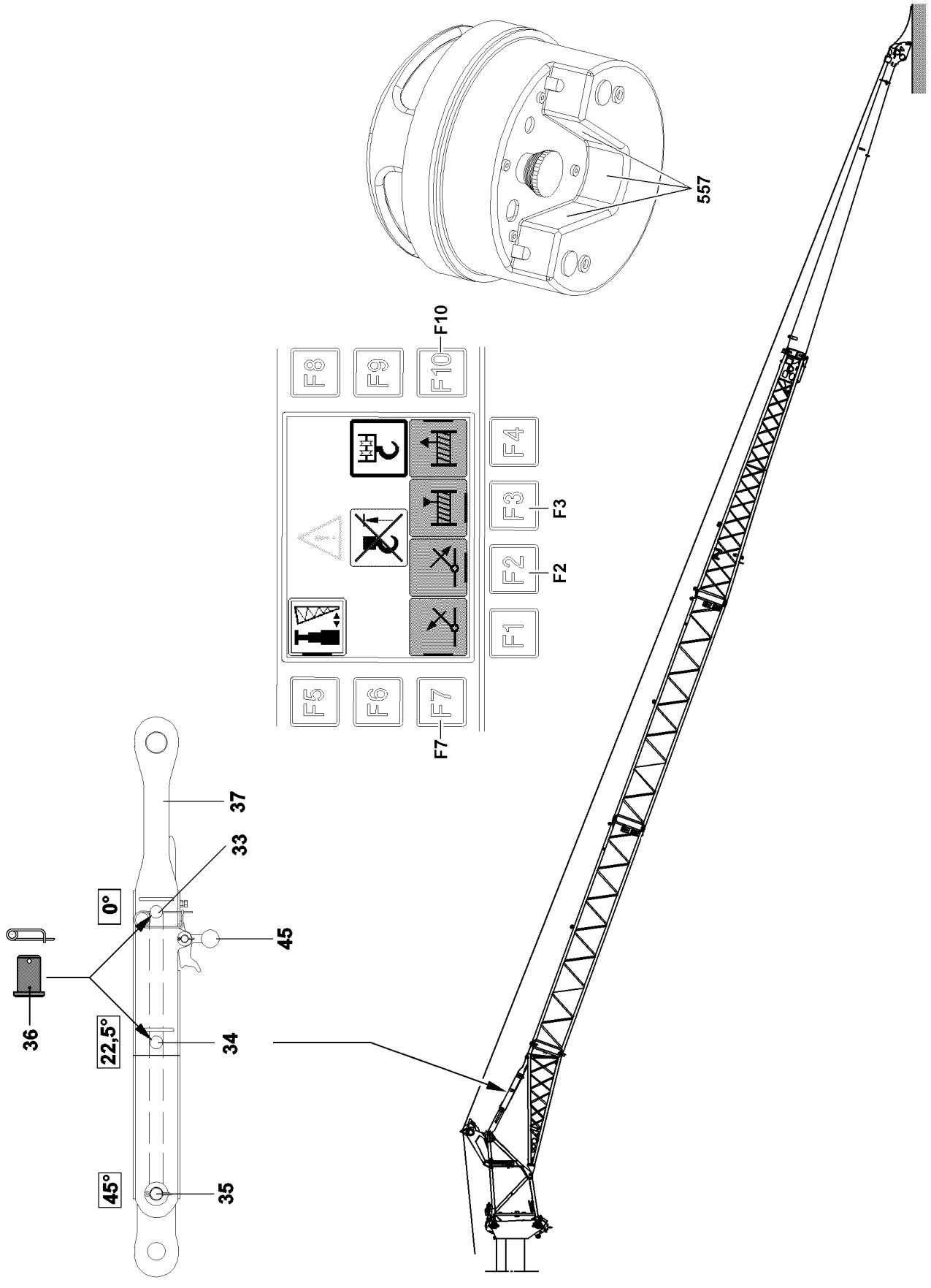
557
F10
F8
F9
F10
F4
F3
F2
F1
F5
F6
F7
F3
F2
F7
37
33
0°
45
36
22,5°
34
45°
35

B114343

9.2 Changing the folding jib by supporting it

WARNING
Life-threatening danger at angle installation with the BTT!
- ▶ Actuate all movements carefully with the BTT!
- ▶ Make sure that there are no persons within the danger zone of the folding jib!

Note
- ▶ When changing the folding jib with the BTT, the hoist limit switch is bypassed.

- ▶ Luff the telescopic boom completely down via the master switch until the hook block can be reeved out.
- ▶ Remove the lock and the hoist limit switch weight.

CAUTION
Danger of property damage!
- ▶ When laying down the folding jib, make sure that the folding jib is **not** laid down on the rope pulley. The folding jib can be damaged.
- ▶ Make sure that the hoist rope is **not** damaged.
- ▶ Make sure that the ground is level and solid, so that the folding jib does not sink into the ground when luffing it down.

- ▶ Completely luff down the telescopic boom until the folding jib lies the ground.

or

- ■ Luff the telescopic boom down all the way by actuating the 2-Hand key field **557** and the function key **F2** on the BTT until the folding jib is laying on the ground.
- ▶ Continue to luff down the telescopic boom carefully until the 0° position (stop at pull bracket) is reached.

DANGER
Danger of fatal injury!
Danger of accident if the folding jib suddenly “folds downward”!
- ▶ No persons may remain within the danger zone of the crane.
- ▶ Make sure **before unpinning** the pin **36**, that the folding jib is lying on the ground or on a proper and secure support.
- ▶ Unpinning the retaining pins **35** at the 45° pin bores is **prohibited**!

- ▶ Release the pins **36** and unpin from the 22.5° bore **34 or** remove from the transportation retainer.
- ▶ Insert the pin **36** into the 0° bore **33** and secure.

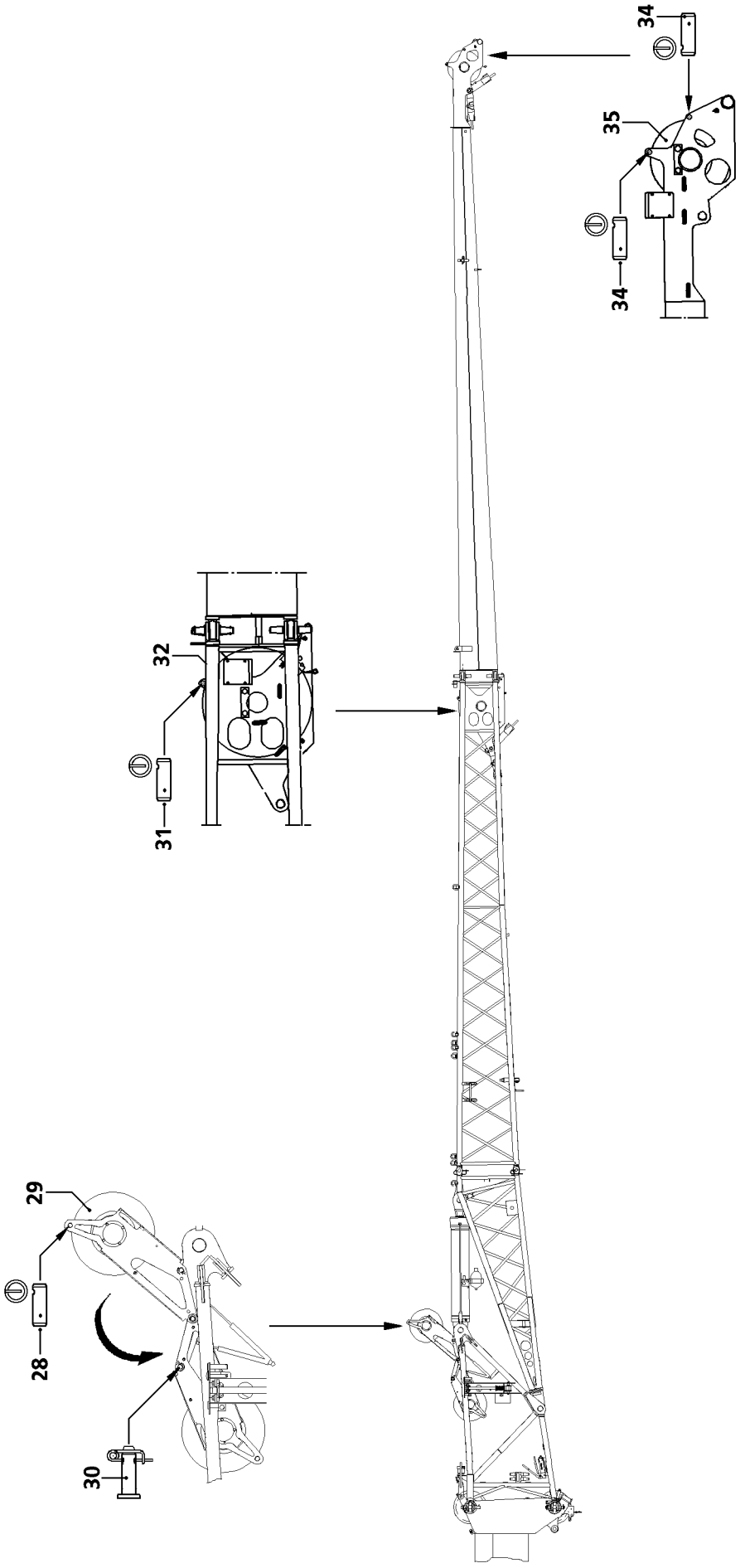

B196444

10 Unreeving the hoist rope

DANGER
Danger of falling from folding jib!
When stepping on the folding jib, for example to reeve the hoist rope in or out, there is a risk of slipping and falling from the folding jib.
▶ Do not step on the folding jib!

Make sure that the following prerequisites are met:
– The telescopic boom is telescoped in.
– The hook block / load hook has been placed on the ground.
– The hoist rope is detached from the rope fixed point.
– The hoist limit switch weight and the chain have been removed.

10.1 Unpinning / pinning the rope retaining pin

▶ Release and unpin the rope retaining pin **28** and rope retaining pin **31**.
▶ For operation with double folding jib, 3-piece folding jib or 4-piece folding jib:
Release and unpin the rope retaining pin **34**.
▶ Spool the hoist rope up.
▶ Repin the rope retaining pin **28**, rope retaining pin **31** and rope retaining pin **34** and secure with locking pins.

10.2 Swinging the rope guide pulley into transport position

▶ Release and unpin the pin **30**.
▶ Swing the rope guide pulley **29** into transport position.
▶ Pin the rope guide pulley **29** in transport position: Insert and secure pin **30**.

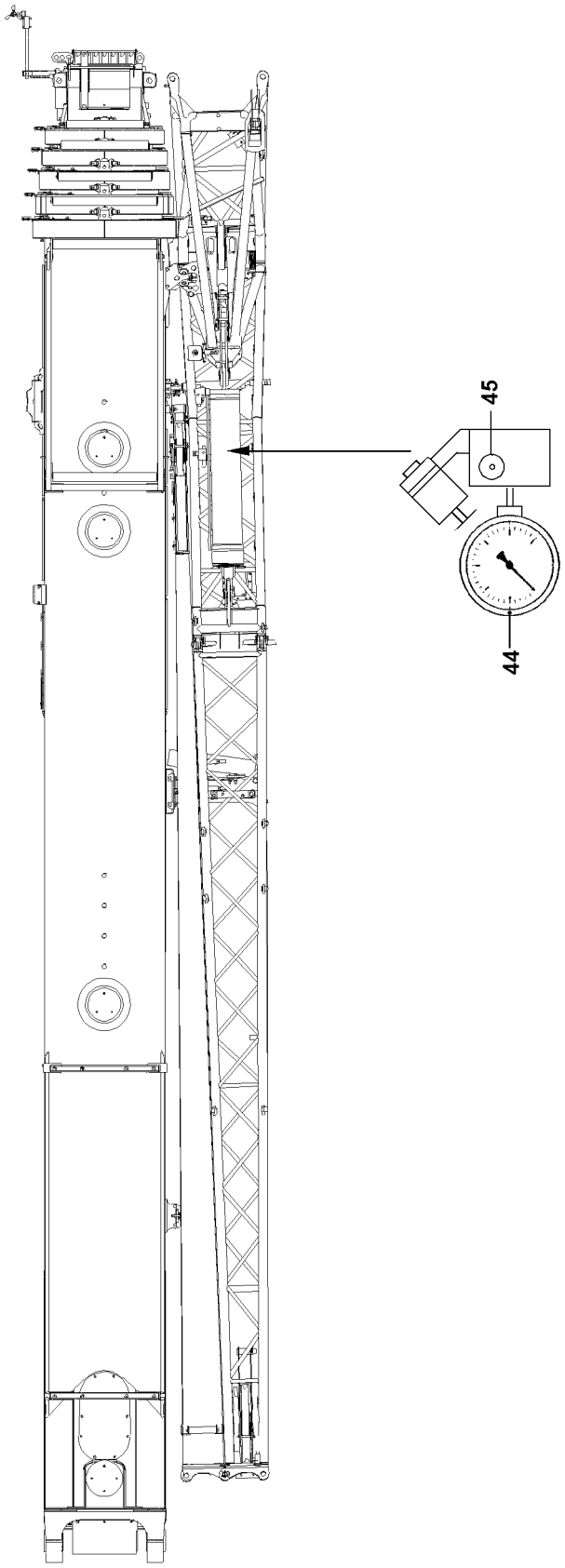

B103452

11 Removing the folding jib

11.1 General

DANGER
Danger of fatal injuries due to falling folding jib!
The folding jib could fall down due to a disassembly error.
- ▶ Standing under the folding jib during the swing procedure is prohibited!
- ▶ Standing in the swing range as well as in the folding area of the folding jib is prohibited!
- ▶ The folding jib must be secured by an auxiliary rope during the swinging process!

WARNING
Danger of falling!
During assembly and disassembly, personnel must be secured with appropriate aids to prevent them from falling! If this is not observed, assembly personnel could fall and suffer fatal injuries!
- ▶ All work aloft, where there is a danger of falling must be carried out with suitable aids!
- ▶ If fall arrest equipment is available, then it must be used, see Crane operating instructions, chapter 2.06!
- ▶ If aids are not available and work cannot be carried out from the ground, then the assembly personnel must secure themselves with the supplied fall arrest system to prevent falling, see Crane operating instructions, chapter 2.04!
- ▶ The supplied fall arrest system must be fastened on the fastening and hook points as well as on the safety ropes. For safety points, see Crane operating instructions, chapter 2.06!
- ▶ Only step on the aids, ladders and catwalks with clean shoes!
- ▶ Keep aids, ladders and catwalks free of heavy dirt, snow and ice!
- ▶ It is prohibited to walk on the telescopic boom!

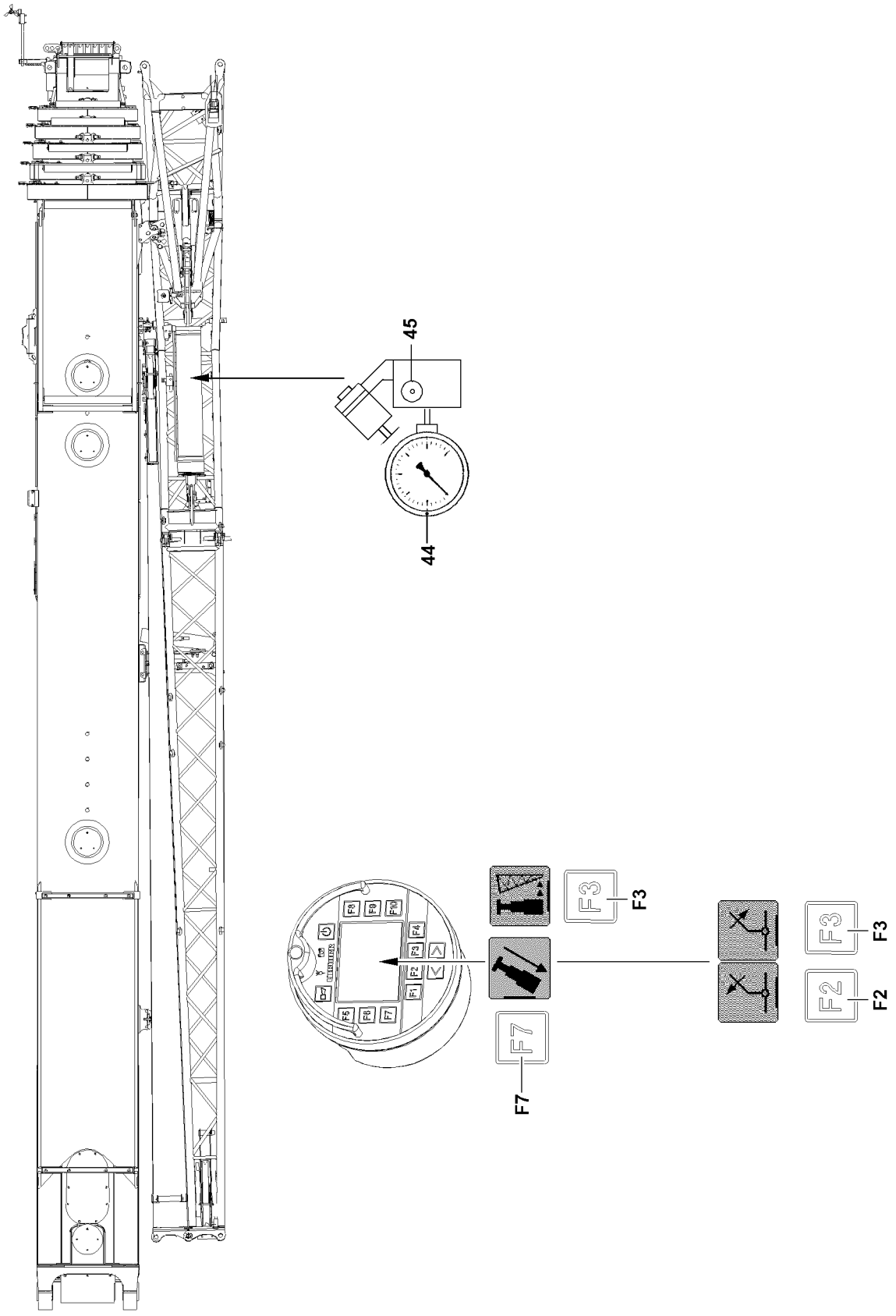

B118028

11.2 Preparatory work before swinging in hydraulic folding jibs

DANGER
Danger of fatal injury if the folding jib involuntarily folds down!
When using hydraulic folding jibs (TNZK operation), prior to swinging in the folding jib, check if a pressure of at least 200 bar is shown on the pressure gauge **44**. If the pressure on the pressure gauge **44** is too low, fatal accidents can occur if the folding jib folds down by itself!
▶ It is **expressly prohibited** to swing in the folding jib with less than 200 bar on the pressure gauge **44**.

Prior to swinging in the hydraulic folding jib*, the folding jib must be completely luffed up and held in the end position for approximately 15 seconds. This causes the hydraulic reservoir to fill.
▶ If the oil pressure on the pressure gauge **44** is below 200 bar
Luff the folding jib completely up with the master switch and move it to end position.

or

■ On the Bluetooth™ Terminal (BTT) call up the “Lift / lower the folding jib” menu.
▶ Press the key **F2** until a pressure of at least 200 bar is shown on the pressure gauge **44**, see Crane operating instructions, chapter 5.31.

Result:
– The pressure gauge **44** then must show 200 bar to 250 bar.

11.3 Prerequisite for disassembly

Make sure that the following prerequisites are met:
– The crane is properly supported and horizontally aligned.
– The counterweight has been installed on the turntable according to the load chart.
– The telescopic boom is fully telescoped in.
– The folding jib is in the 0° position.
– The electrical / hydraulic connections on the folding jib have been released.
– The rope guide pulley has been folded from the operating position into transport position.

DANGER
Danger of accident if the folding jib swings out by itself when it is unpinned!
If the telescopic boom is not in the 0° position, there is a danger of accidents if the folding jib swings out by itself when it is unpinned.
▶ Move the telescopic boom to 0° position.

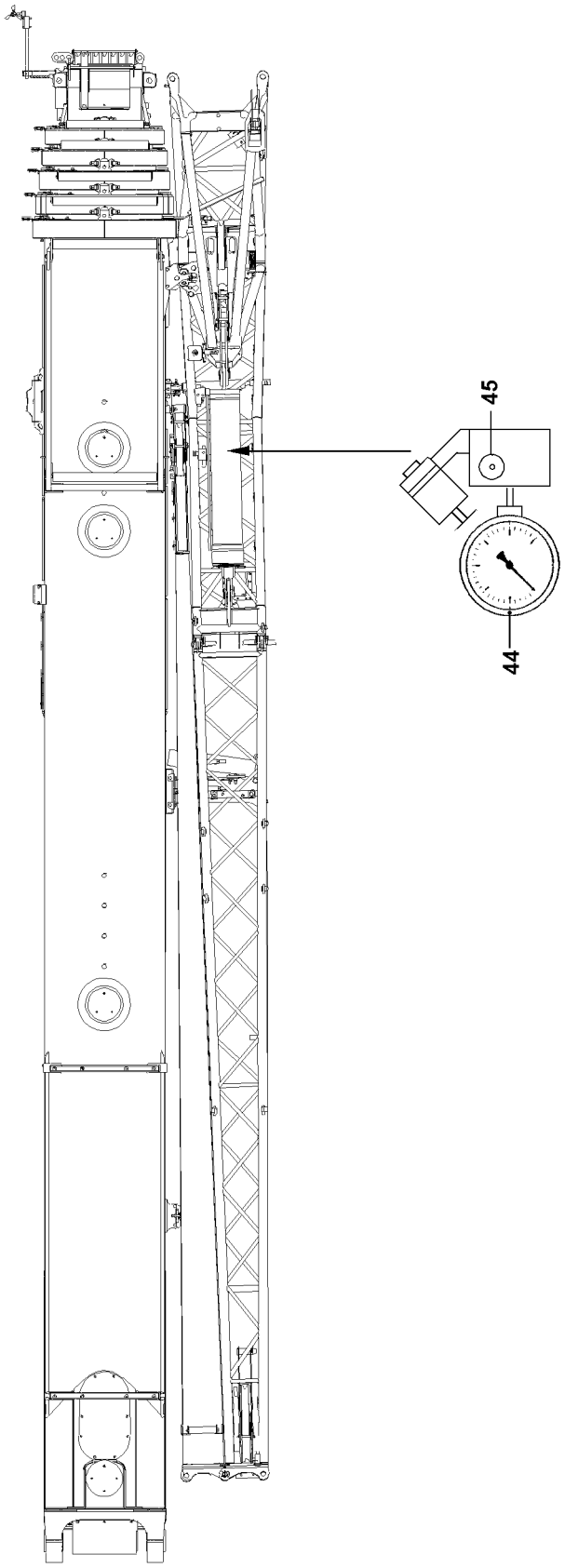

B103452

11.4 Prerequisites for operation with crane LTM 1220

Ensure that the following prerequisites are met:

– The telescopic boom has been luffed down to the rear or the side in the 0° position.

DANGER

Danger of accident if the folding jib swings out by itself when it is unpinned!

If the telescopic boom is not in the 0° position, there is a danger of accidents if the folding jib swings out by itself when it is unpinned.

▶ Move the telescopic boom to 0° position.

11.5 Prerequisites for operation with crane LTR 1220

Ensure that the following prerequisites are met:

– The telescopic boom is luffed up to the rear or to the side by 1°.

Note

▶ If the telescopic boom is not luffed up by 1°, then the folding jib cannot be installed.

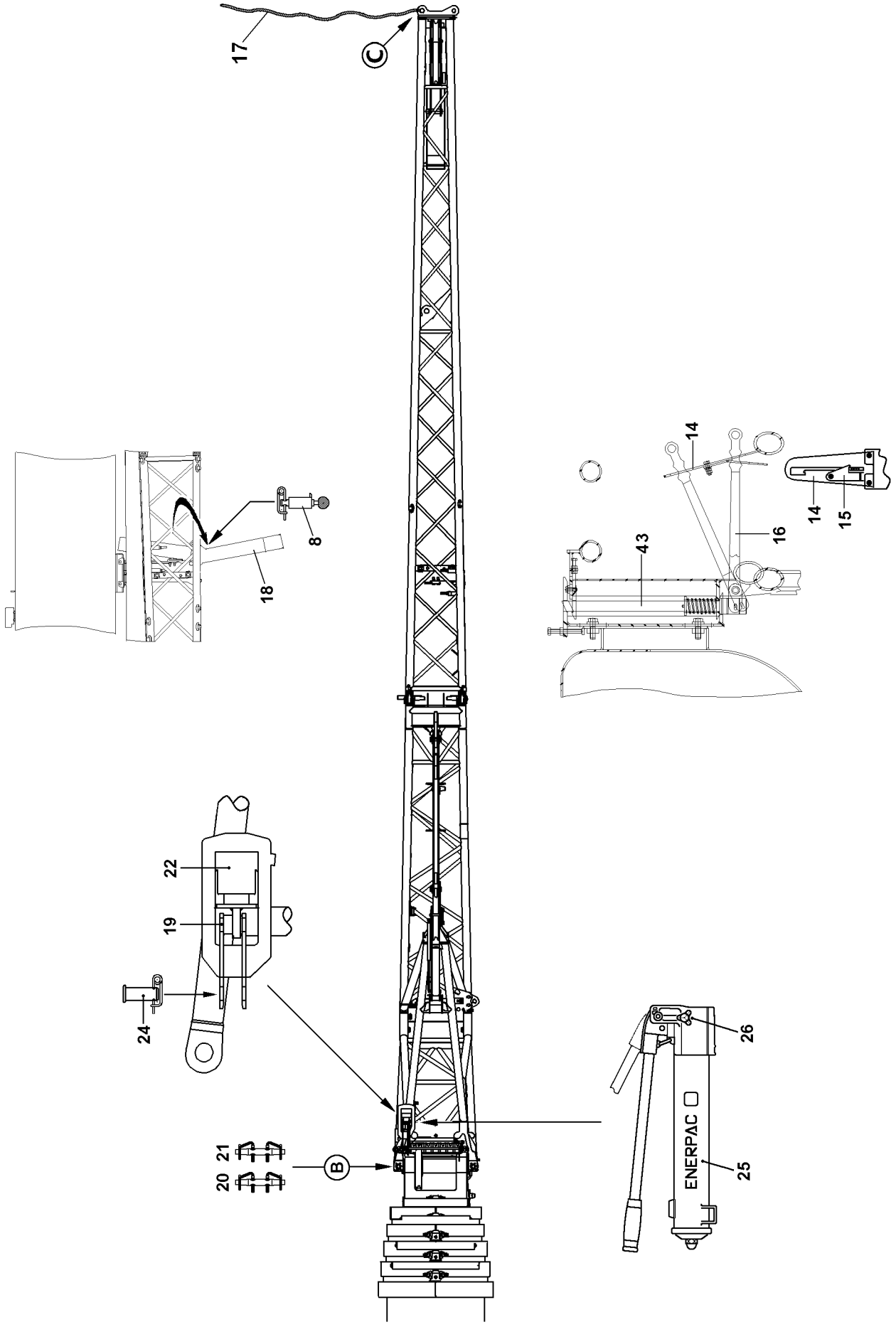

B196445

11.6 Removing the single folding jib carried on the crane, part 1

- ▶ Disengage the lever **16** with the assembly rod from the link **14** and pull downward.
- ▶ Attach the auxiliary rope **17** on point **C**.

When swinging the folding jib support **18** in and out, ensure that the spring pin **8** is unlocked with one hand and that the folding jib support **18** is moved overhead with the other hand.

- ▶ Release and unpin the spring pin **8**.
- ▶ Swing out the folding jib support **18** until the spring pin **8** engages again.

In order to unpin on top on point **B**, the hydraulic / mechanical assembly aid **22** must be used.

- ▶ Close the knob **26** on the hand pump **25**.
- ▶ Extend the hydraulic cylinder of the assembly aid **22** by operating the hand pump **25** until the pin **21** can be unpinned.
- ▶ Release and unpin the pin **21** on top.
- ▶ Open the knob **26** on the hand pump **25**.

Result:

– The hydraulic cylinder of the assembly aid **22** returns to the starting position.

- ▶ Unpin the pins **24** and insert into bore **19** and secure.

DANGER
The folding jib may swing out inadvertently!
When removing the pin **20**, the folding jib can swing out unintentionally.
In order to prevent the folding jib from swinging out by itself:

- ▶ Hold the folding jib with the auxiliary rope!
- ▶ Do not lean the ladder against the folding jib!

- ▶ Release the pin **20** on the bottom and unpin.

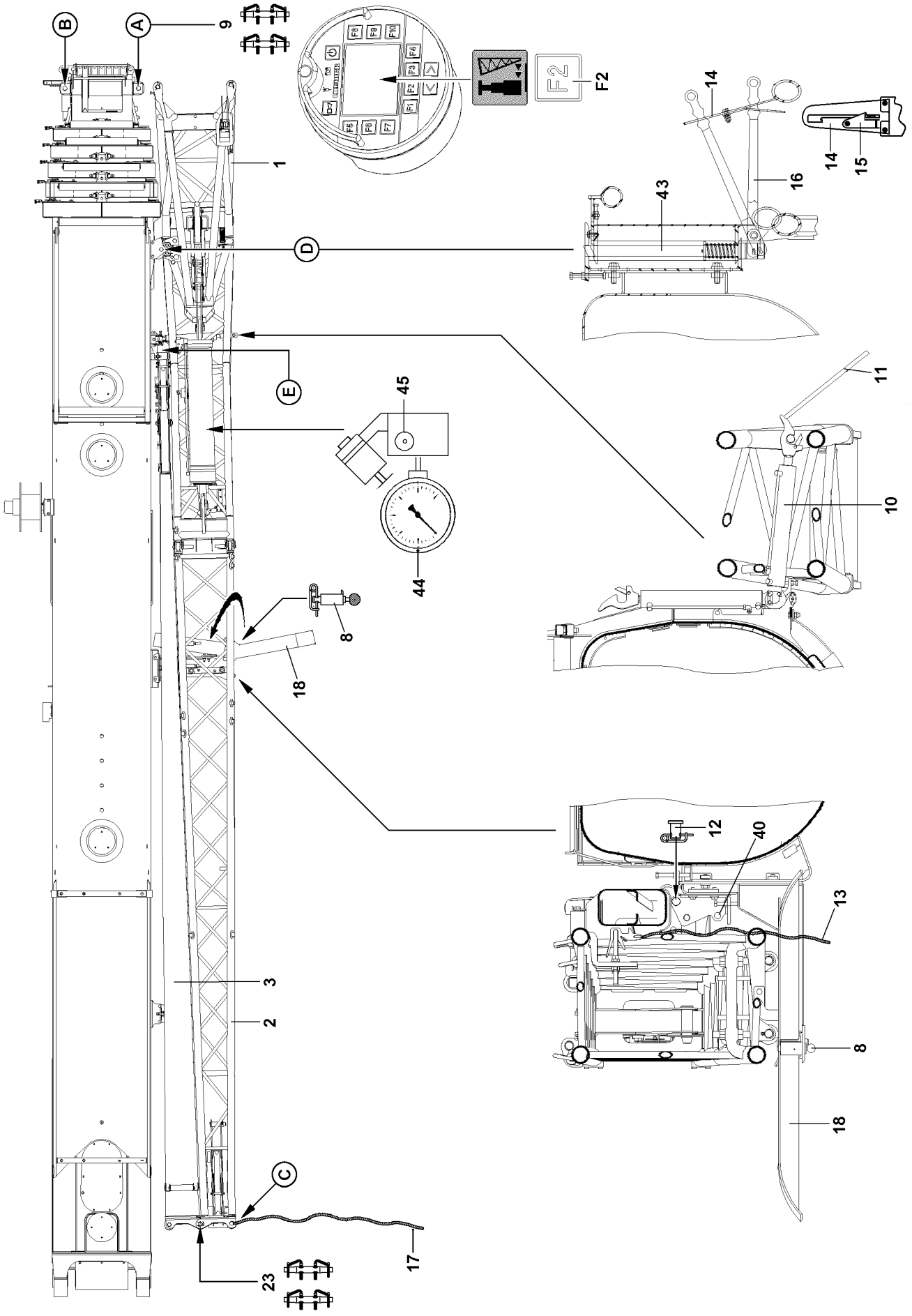

B114340

11.7 Removing the single folding jib carried on the crane, part 2

DANGER
Danger of fatal injuries due to falling folding jib!
The folding jib could fall down due to a disassembly error.
- ▶ Standing under the folding jib during the swing procedure is prohibited!
- ▶ Standing in the swing range as well as in the folding area of the folding jib is prohibited!

- ▶ Swing the folding jib backward until the swing cylinder **10** is locked to the folding jib.
- ▶ Start the crane engine.
- ▶ Press the function key **F2** on the BTT and swing in the folding jib with the swing cylinder until the lock **43** engages audibly.
- ▶ Check if the lock **43** is engaged properly.

DANGER
Danger of fatal injury when unpinning the pins **9**!
If the pins **9** are unpinned before the lock **43** has engaged, then the folding jib will fall down and possibly cause fatal injury to the assembly personnel.
- ▶ The pins **9** may not be unpinned until the lock **43** has engaged and the manual lever **16** has been secured with the safety bracket **15**.

- ▶ Secure the manual lever **16** with the safety bracket **15**.
- ▶ Release the pin **9** at point **A**, unpin and insert into transport retainer.
- ▶ Press the function key **F2** on the BTT and swing the folding jib with swing cylinder in all the way.

Result:
- – When carrying the double folding jib along, the reducer section **2** is locked with the end section **3**.

- ▶ If a double folding jib is carried along:
  Insert and secure pin **23**.

When swinging the folding jib support **18** in and out, ensure that the spring pin **8** is unlocked with one hand and that the folding jib support **18** is moved overhead with the other hand.
- ▶ Unpin the spring pin **8** and swing in the folding jib support **18** until the spring pin **8** engages.
- ▶ Secure the spring pin **8**.
- ▶ If a hydraulic folding jib is carried along:
  Connect the hydraulic line to the hydraulic cylinder at the point **E**.
- ▶ Remove the auxiliary rope **17**.

“Hydraulic folding jibs” have an overflow tank attached to the hydraulic cylinder. The overflow tank must be emptied when it is full. Even when the folding jib is not carried along on the crane.
- ▶ For operation with a hydraulic folding jib:
  Empty the overflow tank on the hydraulic cylinder.

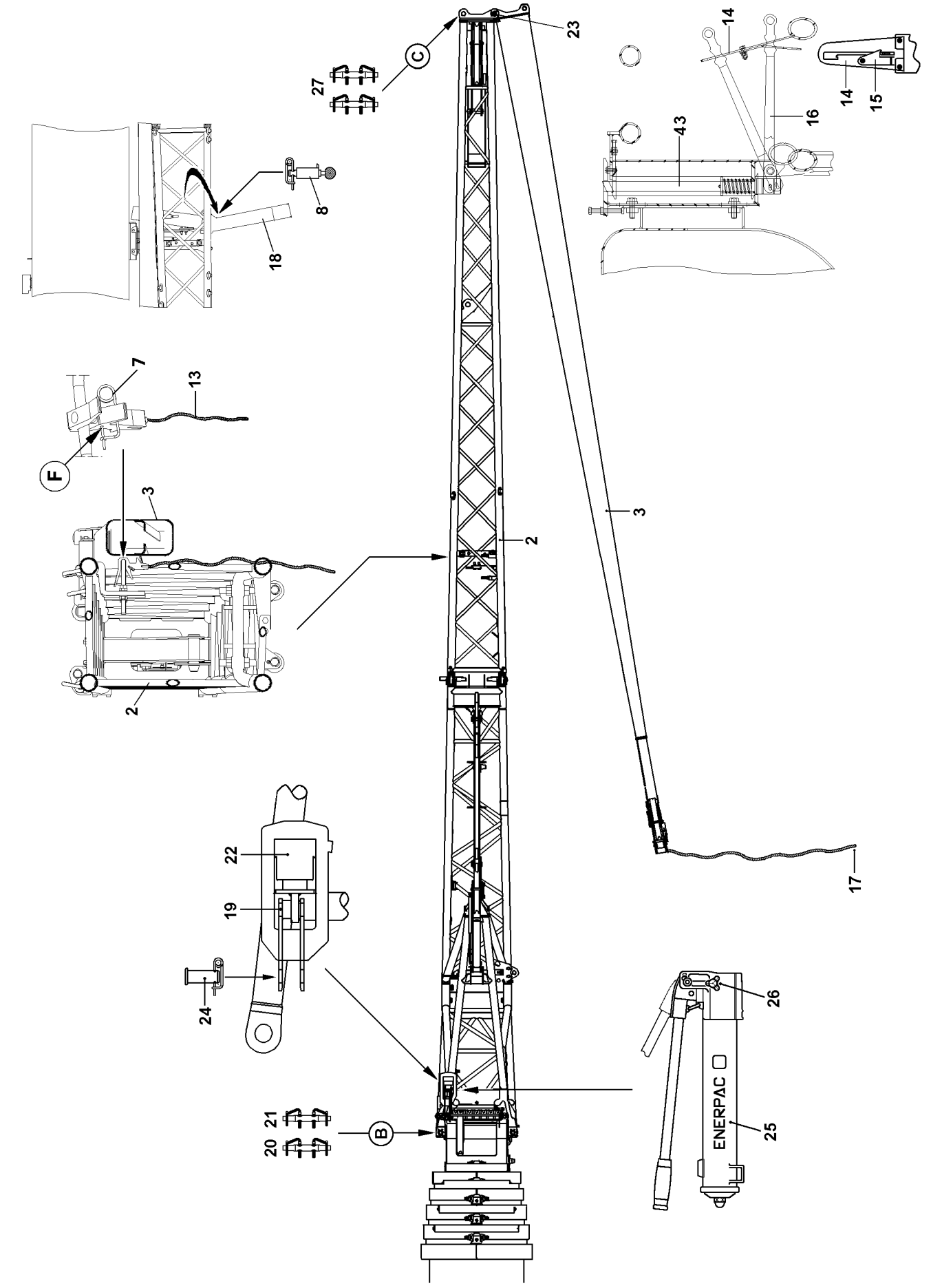
23
C
27
14
14
15
16
43
8
18
7
13
F
3
2
3
2
22
19
24
17
26
ENERPAC
25
21
20
B

B103449

11.8 Removing the double folding jib carried on the crane

11.8.1 Removing the end section

▶ Attach the auxiliary rope **17** on the end section.

DANGER
The folding jib may swing out inadvertently!
When removing the pin **27**, the folding jib can swing out unintentionally.
In order to prevent the folding jib from swinging out by itself:
▶ Hold the folding jib with the auxiliary rope!
▶ Do not lean the ladder against the folding jib!

▶ Release and unpin the pin **27**.

DANGER
Danger of fatal injuries due to falling folding jib!
The folding jib could fall down due to a disassembly error.
▶ Standing under the folding jib during the swing procedure is prohibited!
▶ Standing in the swing range as well as in the folding area of the folding jib is prohibited!
▶ The pins **23** must remain pinned.

▶ Swing in the end section **3** and then lock with the reducer section **2**.

DANGER
The end section can swing out involuntarily!
To prevent the lock between the end section **3** and the pivot section **2** from opening inadvertently, the spring retainer **7** must also be inserted on point **F**.
▶ Insert the spring retainer **7** on point **F**.

▶ Check if the end section **3** and the reducer section **2** are properly locked.
▶ Remove the auxiliary rope **17** from the end section **3** and attach on point **C**.
▶ Disengage the lever **16** with the assembly rod from the link **14** and pull downward.

When swinging the folding jib support **18** in and out, ensure that the spring pin **8** is unlocked with one hand and that the folding jib support **18** is moved overhead with the other hand.
▶ Release and unpin the spring pin **8**.
▶ Swing out the folding jib support **18** until the spring pin **9** engages again.

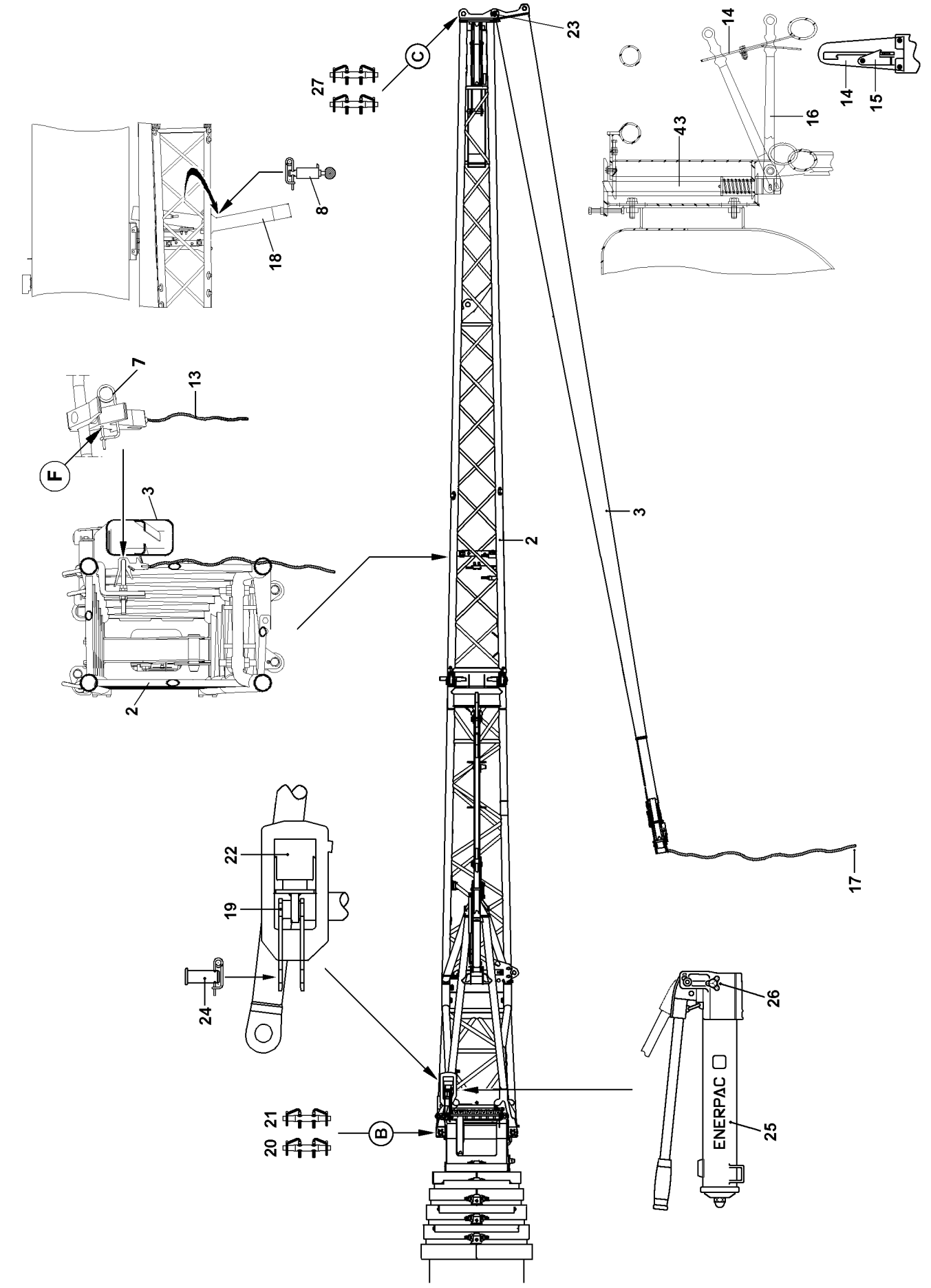
23
C
27
14
14
15
16
43
8
18
7
13
F
3
2
3
2
22
19
24
17
26
ENERPAC
25
21
20
B

B103449

11.8.2 Disassembly of reducer section, part 1

In order to unpin on top on point **B**, the hydraulic / mechanical assembly aid **22** must be used.

- ▶ Close the knob **26** on the hand pump **25**.
- ▶ Extend the hydraulic cylinder of the assembly aid **22** by operating the hand pump **25** until the pin **21** can be unpinned.
- ▶ Release and unpin the pin **21** on top.
- ▶ Open the knob **26** on the hand pump **25**.

Result:

– The hydraulic cylinder of the assembly aid **22** returns to the starting position.

- ▶ Unpin the pins **24** and insert into bore **19** and secure.

CAUTION

The folding jib may swing out inadvertently!

When removing the pin **20**, the folding jib can swing out unintentionally.

In order to prevent the folding jib from swinging out by itself:

- ▶ Hold the folding jib with the auxiliary rope!
- ▶ Do not lean the ladder against the folding jib!

- ▶ Release the pin **20** on the bottom and unpin.

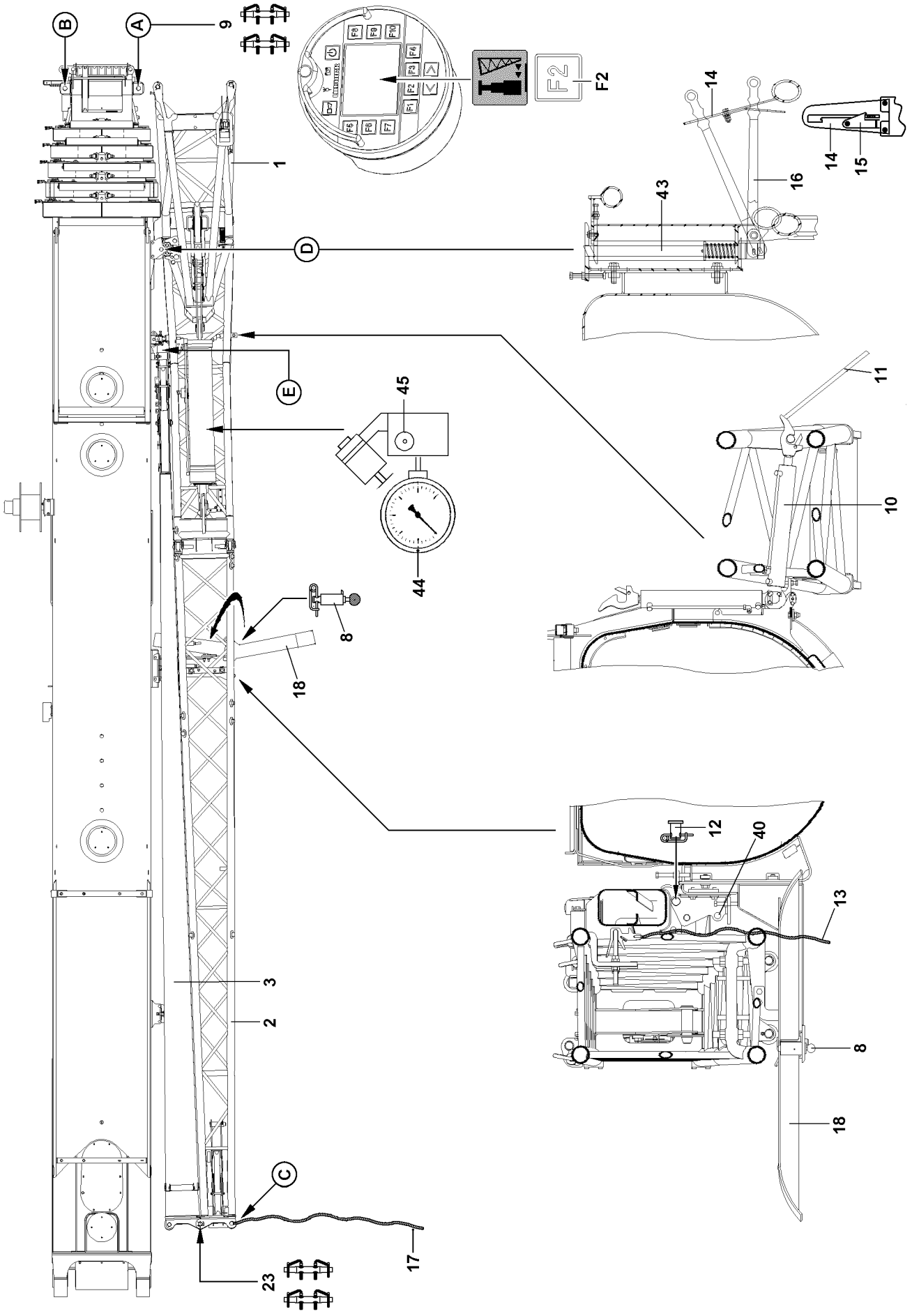

B114340

11.8.3 Disassembly of reducer section, part 2

DANGER
Danger of fatal injuries due to falling folding jib!
The folding jib could fall down due to a disassembly error.
- ▶ Standing under the folding jib during the swing procedure is prohibited!
- ▶ Standing in the swing range as well as in the folding area of the folding jib is prohibited!

- ▶ Swing the folding jib backward until the swing cylinder **10** is locked to the folding jib.
- ▶ Start the crane engine.
- ▶ Press the function key **F2** on the BTT and swing in the folding jib with the swing cylinder until the lock **43** engages audibly.
- ▶ Check if the lock **43** is engaged properly.

DANGER
Danger of fatal injury when unpinning the pins **9**!
If the pins **9** are unpinned before the lock **43** has engaged, then the folding jib will fall down and possibly cause fatal injury to the assembly personnel.
- ▶ The pins **9** may not be unpinned until the lock **43** has engaged and the manual lever **16** has been secured with the safety bracket **15**.

- ▶ Secure the manual lever **16** with the safety bracket **15**.
- ▶ Release the pin **9** at point **A**, unpin and insert into transport retainer.
- ▶ Press the function key **F2** on the BTT and swing the folding jib with swing cylinder in all the way.
- ▶ Pin the folding jib with the folding jib retainer: Insert and secure pin **12**.

Unpin the spring pin **8** and swing in the folding jib support **18** until the spring pin **8** engages.
- ▶ Unpin the spring pin **8** and swing in the folding jib support **18** until the spring pin **8** engages.
- ▶ Secure the spring pin **8**.
- ▶ If a hydraulic folding jib is carried along:
  Connect the hydraulic line to the hydraulic cylinder at the point **E**.
- ▶ Remove the auxiliary rope **17**.

“Hydraulic folding jibs” have an overflow tank attached to the hydraulic cylinder. The overflow tank must be emptied when it is full. Even when the folding jib is not carried along on the crane.
- ▶ For operation with a hydraulic folding jib:
  Empty the overflow tank on the hydraulic cylinder.

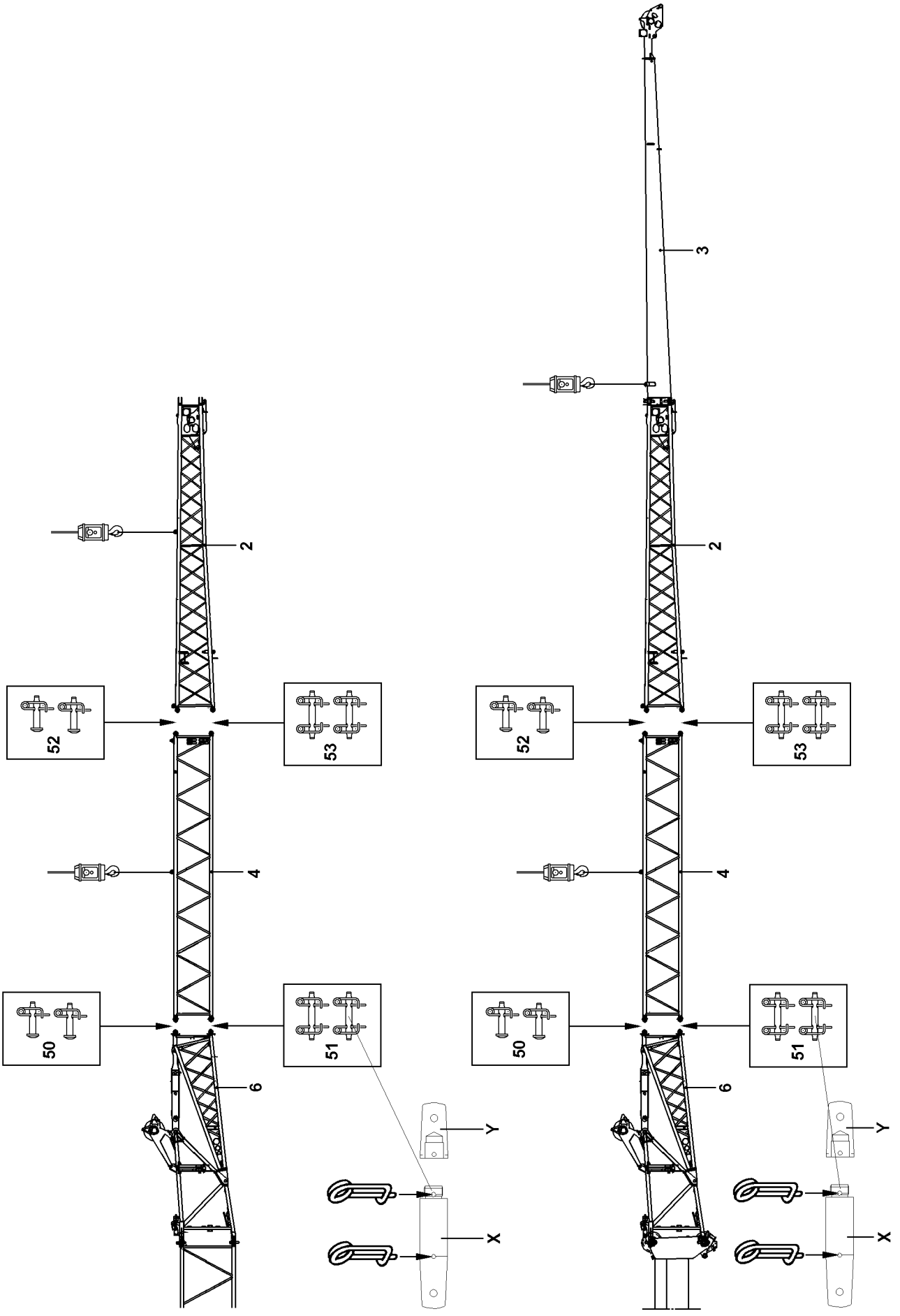

B197289

11.9 Disassembly of the 3-piece folding jib

DANGER
Danger of accident during assembly / disassembly of the 3-piece folding jib!
If the following conditions are not met, people can be fatally injured during assembly / disassembly.
- ▶ When knocking out the pins, no one may remain under the folding jib!
- ▶ Pin and unpin the pins in the specified sequence!
- ▶ Attach the auxiliary crane in such a way that no angular pull occurs!
- ▶ Do not remove the folding jib until it has been secured with the auxiliary crane to prevent it from falling!
- ▶ Do not lean the ladder against the folding jib!

▶ Attach the reducer section **2** to auxiliary crane and tighten the fastening rope slightly.

or

- ■ Attach the reducer section **2** with the end section **3** on the auxiliary crane and tighten the fastening rope slightly.

DANGER
Danger of accident due to distorted pins!
Angular pulling or excessive / low hoisting force of the auxiliary crane may result in distortion of the pins.
Distorted parts can suddenly fly off when the pins are unpinned.
- ▶ When the pins are unpinned, the “lifting force” of the crane must be adapted to the “weight” of the parts being lifted!
- ▶ Do **not** remove difficult to remove pins by force!
- ▶ Remedy the cause of the distortion!

▶ Release and unpin the pins **52** on both sides.
▶ Place the pins **52** into the transport retainer.
▶ Release the pins **53** on both sides and unpin from the outside to the inside.
▶ Place the pins **53** into the transport retainer.
▶ Place the reducer section **2** down.

or

- ■ Place the reducer section **2** with the end section **3** down.
- ▶ Attach folding jib extension **4** to the auxiliary crane and tighten the cables lightly.
- ▶ Release and unpin the pins **50** on both sides.
- ▶ Place the pins **50** into the transport retainer.

Note
▶ Before unpinning and pinning the pins **X**, unbolt the extension **Y** or on accordingly. Then secure the pins **X** on both sides with spring retainers. Before driving on public roads, the extension **Y** must be removed again, and the pins **X** must be secured on both sides with the spring retainers.

▶ Release the pins **51** on both sides and unpin from the outside to the inside.

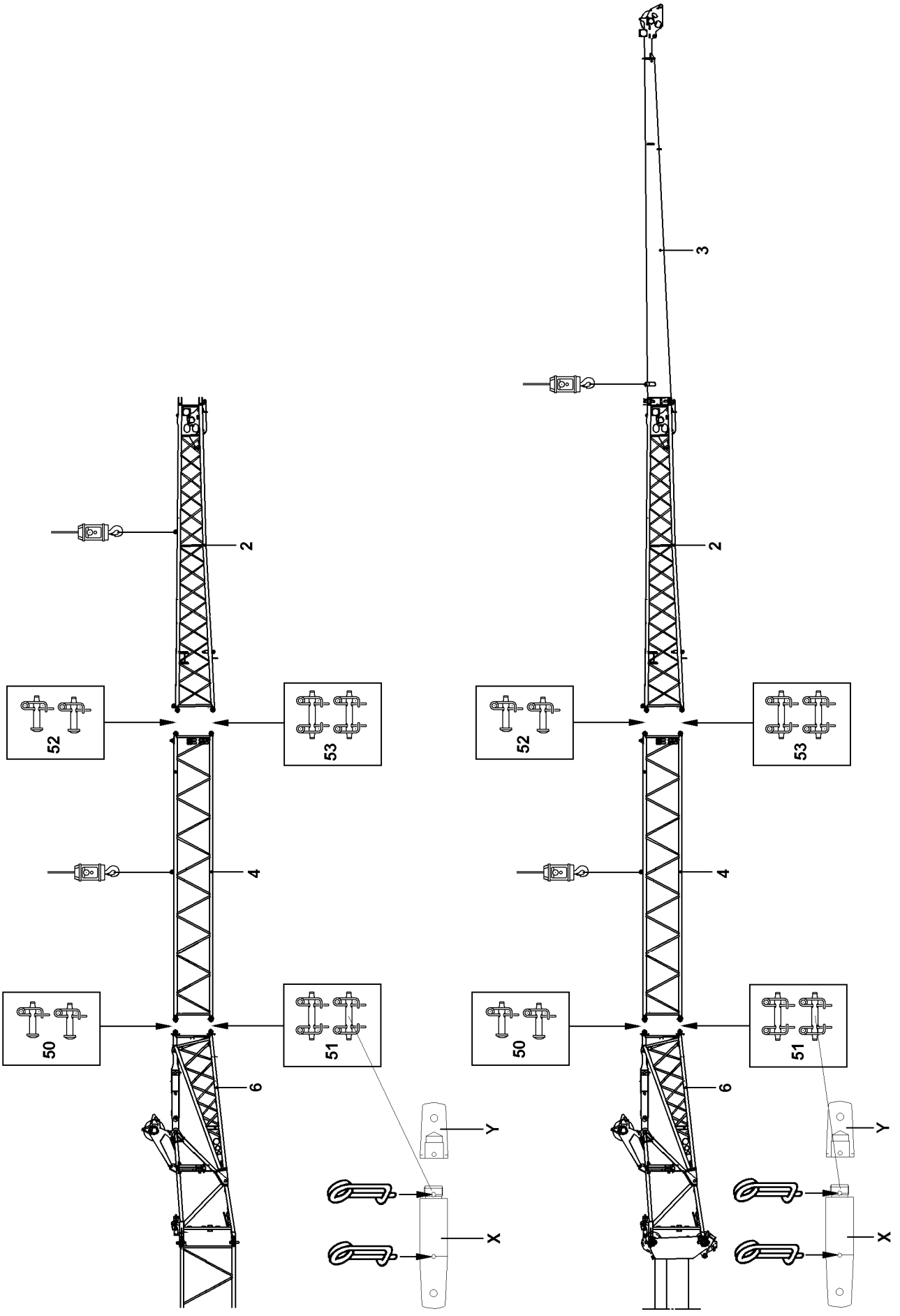

B197289

- ▶ Place the pins **51** into the transport retainer.
- ▶ Place the folding jib extension **4** down.
- ▶ Hang the reducer section **2** on the auxiliary crane and guide into the fork heads on the pivot section **6**.

or

- ■ Hang the reducer section **2** with the end section **3** on the auxiliary crane and guide into the fork heads on the pivot section **6**.
- ▶ Pin the reducer section **2** to the pivot section **6**: Pin the pins **50** on both sides from the outside to the inside and secure.
- ▶ Pin the pins **51** on both sides from the outside to the inside and secure.

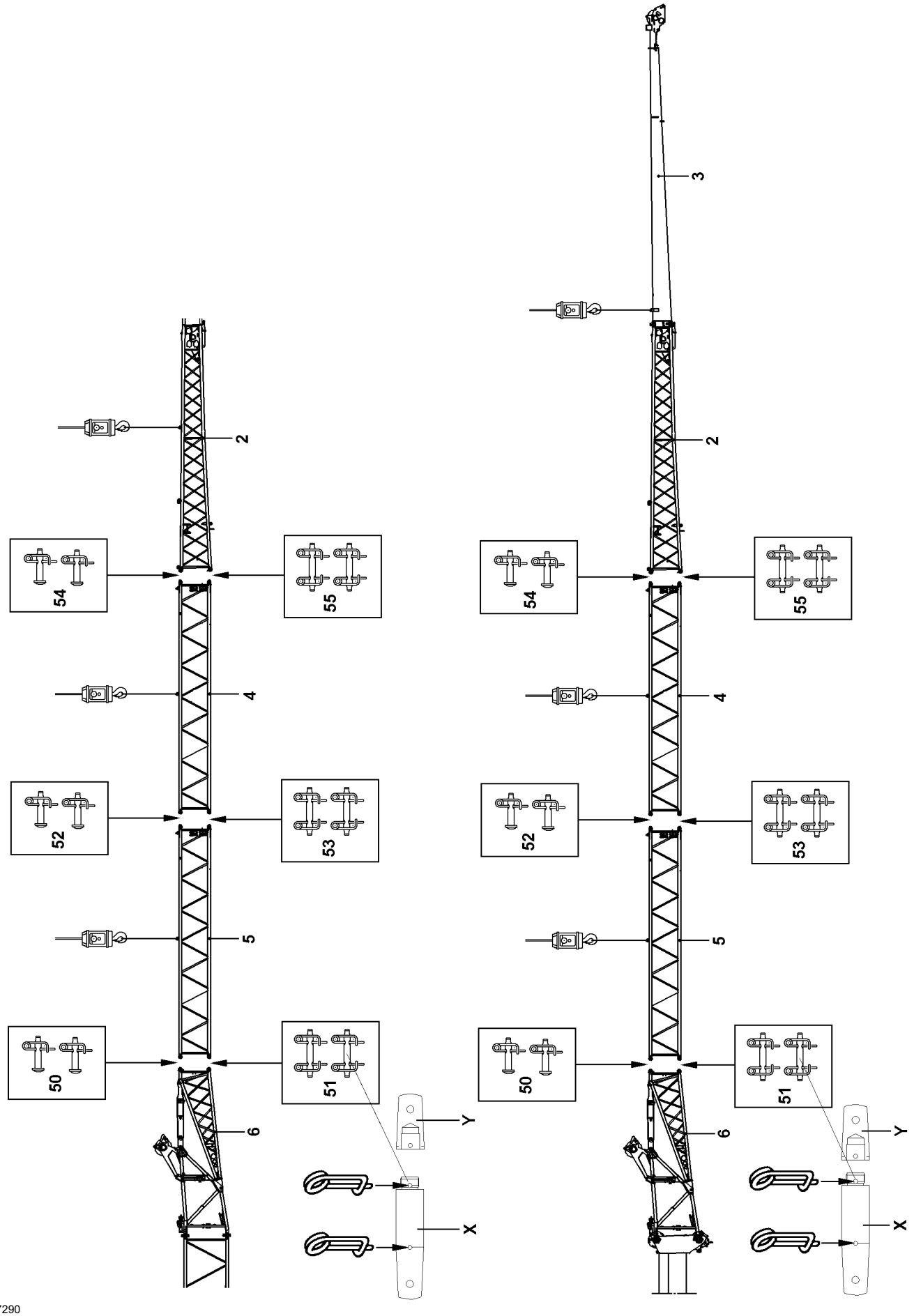

B197290

11.10 Disassembly of the 4-piece folding jib

DANGER
Danger of accident during assembly / disassembly of the 4-piece folding jib!
If the following conditions are not met, people can be fatally injured during assembly / disassembly.
- ▶ When knocking out the pins, no one may remain under the folding jib!
- ▶ Pin and unpin the pins in the specified sequence!
- ▶ Attach fastening ropes in such a way that no angular pull occurs!
- ▶ Do not remove the folding jib until it has been secured with the auxiliary crane to prevent it from falling!
- ▶ Do not lean the ladder against the folding jib!

▶ Attach the reducer section **2** to auxiliary crane and tighten the fastening rope slightly.

or

- ■ Attach the reducer section **2** with the end section **3** on the auxiliary crane and tighten the fastening rope slightly.

DANGER
Danger of accident due to distorted pins!
Angular pulling or excessive / low hoisting force of the auxiliary crane may result in distortion of the pins.
Distorted parts can suddenly fly off when the pins are unpinned.
- ▶ When the pins are unpinned, the “lifting force” of the crane must be adapted to the “weight” of the parts being lifted!
- ▶ Do **not** remove difficult to remove pins by force!
- ▶ Remedy the cause of the distortion!

▶ Release and unpin the pins **54** on both sides.
▶ Release the pins **55** on both sides and unpin from the outside to the inside.
▶ Place the pins **54** and the pins **55** in the transport retainer.
▶ Place the reducer section **2** down.

or

- ■ Place the reducer section **2** with the end section **3** down.
- ▶ Attach folding jib extension **4** to the auxiliary crane and tighten the cable lightly.
- ▶ Release and unpin the pins **52** on both sides.
- ▶ Release the pins **53** on both sides and unpin from the outside to the inside.
- ▶ Place the folding jib extension **4** down.
- ▶ Place the pins **52** and the pins **53** in the transport retainer.
- ▶ Attach folding jib extension **5** to the auxiliary crane and tighten the cable lightly.

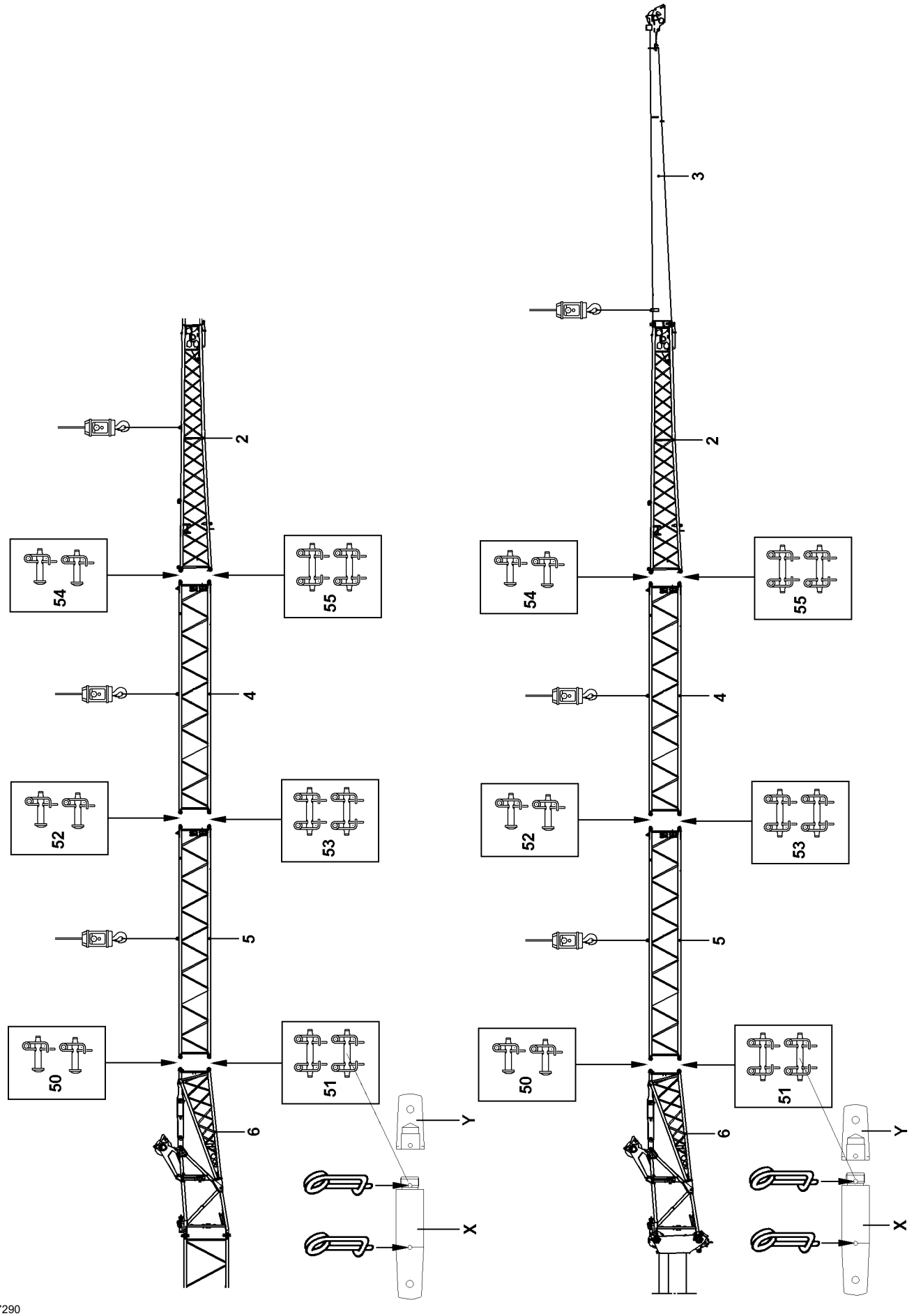

B197290

▶ Release and unpin the pins **50** on both sides.

Note

▶ Before unpinning and pinning the pins **X**, unbolt the extension **Y** or on accordingly. Then secure the pins **X** on both sides with spring retainers. Before driving on public roads, the extension **Y** must be removed again, and the pins **X** must be secured on both sides with the spring retainers.

▶ Release the pins **51** on both sides and unpin from the outside to the inside.

▶ Place the folding jib extension **5** down.

▶ Hang the reducer section **2** on the auxiliary crane and guide into the fork heads on the pivot section **6**.

or

■ Hang the reducer section **2** with the end section **3** on the auxiliary crane and guide into the fork heads on the pivot section **6**.

▶ Pin the reducer section **2** to the pivot section **6**: Pin the pins **50** on both sides from the outside to the inside and secure.

▶ Pin the pins **51** on both sides from the outside to the inside and secure.

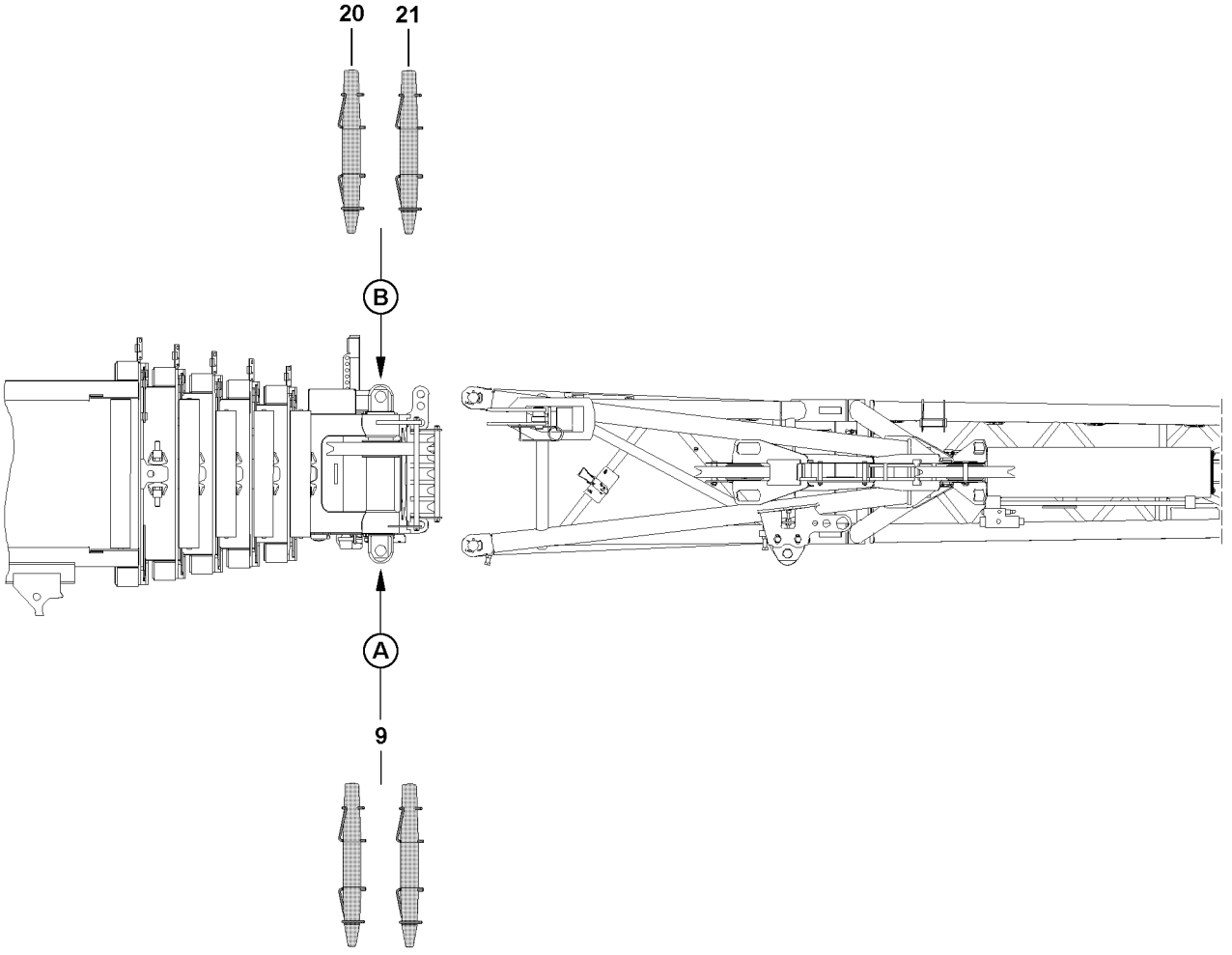

B103446

11.11 Disassembly of the separately transported folding jib

Make sure that the following prerequisite is met:

– The end section is locked with the reducer section.
  See section “Disassembly of the end section”.

For description of fastening points, see section “Folding jib fastening points, complete”.

DANGER
Danger of accident due to incorrect attachment!
Life-threatening situations can arise if the folding jib is improperly or incorrectly attached!

- ▶ Attach the folding jib according to the fastening points shown on the signs!
- ▶ The appropriate fastening eyes and points are marked with tags.
- ▶ Attaching the single folding jib or the double folding jib on non-intended points or on any arbitrary location is **prohibited**!
- ▶ When attaching the double folding jib, the end section must be folded in, locked and secured!

CAUTION
Damage of fastening points!
If the fastening equipment is too short, then the fastening points on the folding jibs can be damaged!

- ▶ To attach the folding jibs, fastening equipment with a strand length of at least 2000 mm each must be used!

- ▶ Attach the auxiliary crane to the respective fastening points of the folding jib.

DANGER
Danger of accident when disassembling the folding jib!
Failing to comply with the following conditions can result in fatal injury to the assembly personnel during disassembly.

- ▶ When knocking out the pins, no one may remain under the folding jib!
- ▶ Attach the auxiliary crane so that no angular pull occurs!
- ▶ Only lift a weight with the auxiliary crane that corresponds to the weight of the folding jib that is being removed!
- ▶ The folding jib can suddenly release due to distortion!
- ▶ Do not remove the folding jib until it has been secured with the auxiliary crane to prevent it from falling!
- ▶ Do not lean the ladder against the folding jib!

- ▶ Tighten the fastening ropes until the folding jib is secured to prevent it from falling.
- ▶ Unpin the folding jib from the telescopic boom:
- ▶ Release the pin **9** on top on point **A** and unpin.
- ▶ Release the pin **20** on top on point **B** and unpin.
- ▶ Release the pin **9** on the bottom on point **A** and unpin.
- ▶ Release the pin **21** on the bottom on point **B** and unpin.
- ▶ Place the folding jib onto the transport vehicle.

On hydraulic folding jibs, an overflow tank is installed on the hydraulic cylinder. The overflow tank must be emptied when it is full. Even if the folding jib is not transported on the crane.

- ▶ For operation with a hydraulic folding jib:
  Empty the overflow tank on the hydraulic cylinder.

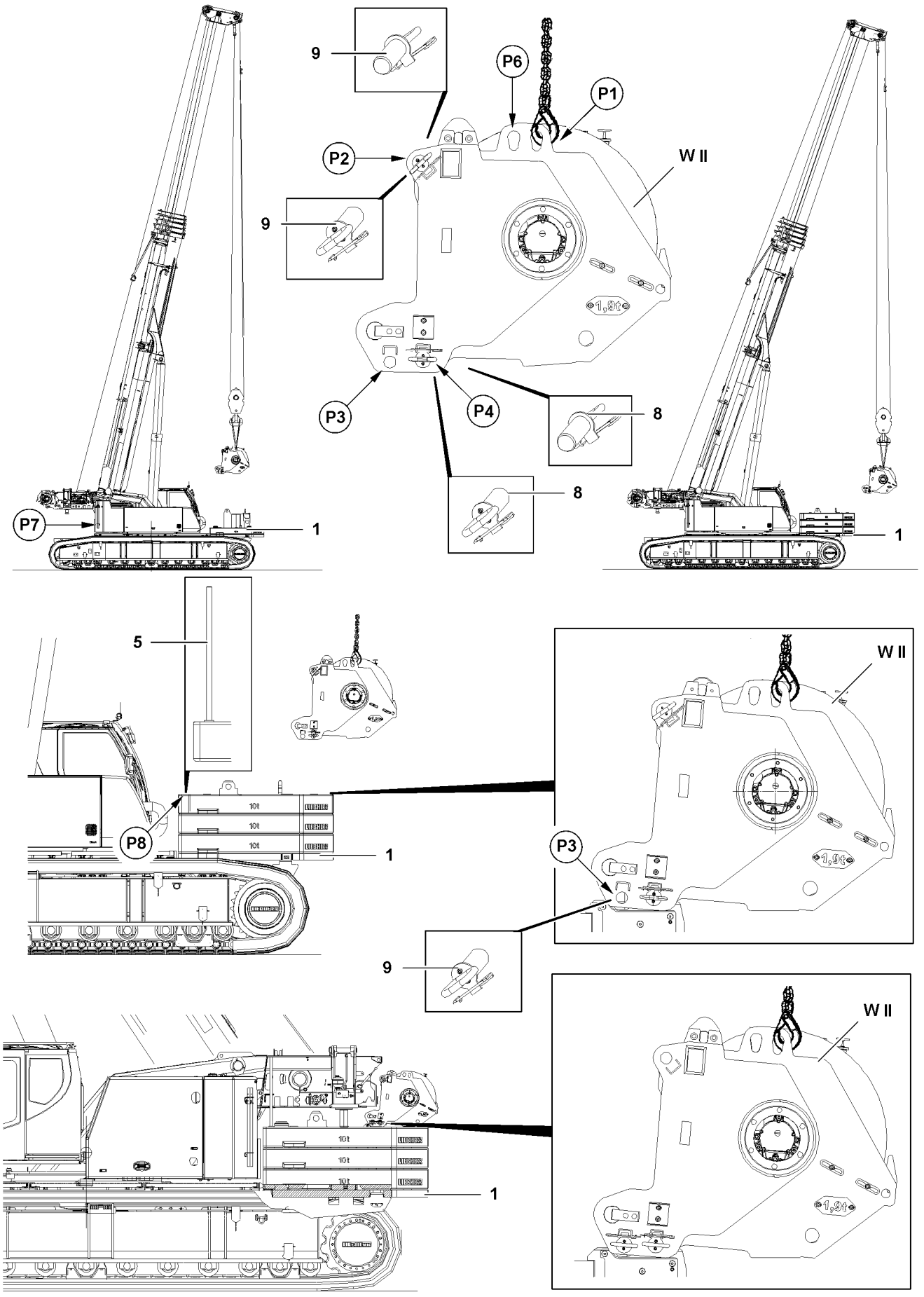

B117356

1 General

The winch 2 **WII** is installed or removed through self-installation, without auxiliary crane.

Note

- ▶ For the assembly of the winch 2 **WII** at least the receptacle plate must be placed on the central ballast block on the “rear”.
- ▶ The winch assembly is permissible with counterweight combinations of 30 t to 70 t.
- ▶ Place the receptacle plate or the counterweight on the central ballast block, see Crane operating instructions, chapter 4.07.

Description	Weight
Winch 2 WII	1.9 t

1.1 Fastening points winch 2

For the assembly and disassembly without auxiliary crane, the winch 2 **WII** must be fastened on the fastening points **P1**.
For the assembly and disassembly with auxiliary crane, the winch 2 **WII** must be fastened on the fastening points **P6**.

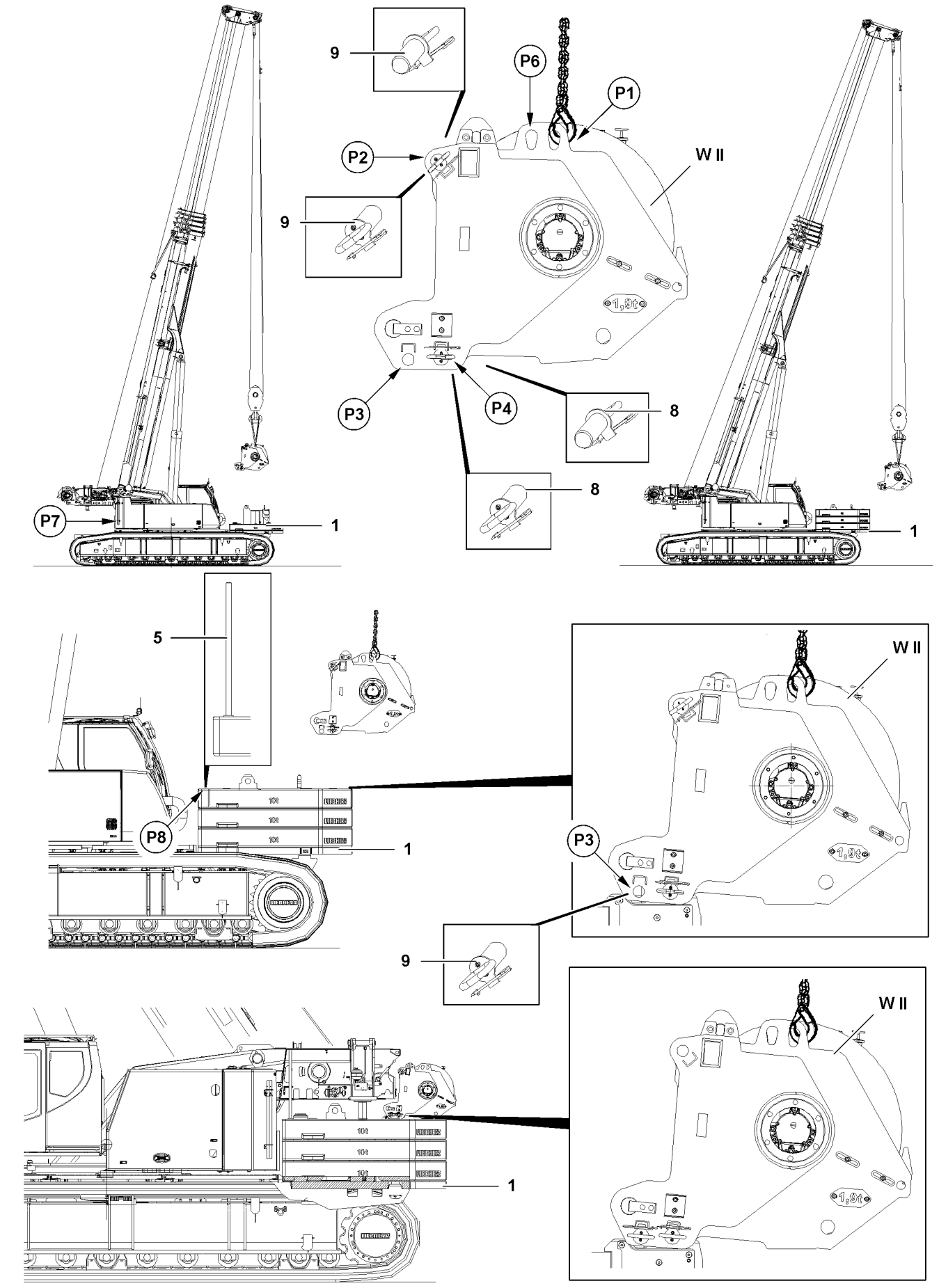

B117356

2 Assembly winch 2

Make sure that the following prerequisites are met:
- The pin **8** is pinned and secured on both sides on position **P4**.
- The crane is aligned in horizontal direction.
- The receptacle plate or the counterweight is placed on the central ballast.
- The counterweight is not ballasted.
- The LICCON overload protection is set:
  - Crawler operation with track width
  - Central ballast 20 t
  - Counterweight 0 t
  - Without auxiliary boom / accessory
  - Slewing range

2.1 Assembling Winch 2*

▶ Fasten winch 2 **WII** on both sides on the fastening eyes **P1** on the crane.

▶ Release the pins **9** on both sides on position **P2** and unpin.

▶ Set winch 2 **WII** on the receptacle plate **1**.

DANGER
Winch 2 can fall down!
When winch 2 **WII** is released from the crane before winch 2 **WII** is pinned with the receptacle plate **1**, then winch 2 **WII** can fall down.
Personnel can be severely injured or killed.

▶ Do not disengage the crane until winch 2 **WII** has been pinned with receptacle plates **1** and secured.

▶ Insert the pins **9** on both sides into the receptacle plate **1** on position **P3** and secure.

▶ Release winch 2 **WII** from the crane.

▶ Swing the crane superstructure, extend the ballasting cylinder and swing into the receptacle of the counterweight, see Crane operating instructions, chapter 4.07.

▶ Take the retaining pipe **5** from park position **P7** and pin on both sides in the counterweight plate on position **P8**.

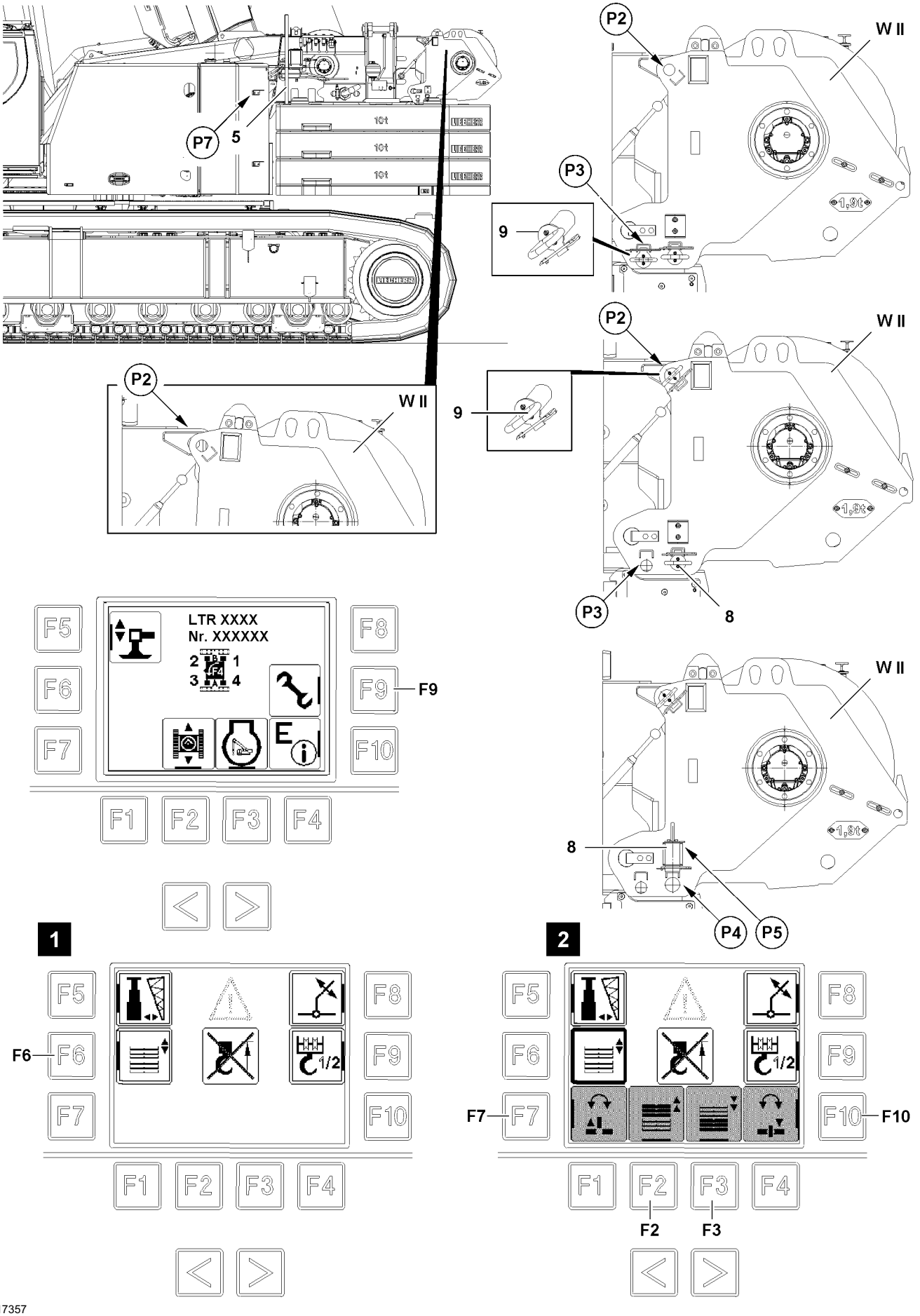
P7
5
P2
W II
P3
9
P2
W II
9
P2
W II
P3
8
W II
8
P4
P5
LTR XXXX
Nr. XXXXXX
F5
F6
F7
F8
F9
F10
F1
F2
F3
F4
F9
1
F6
1/2
2
F7
F10
F2
F3

B117357

▶ Press the function key **F9** on the BTT.

Result:

– The menu “Ballasting cylinder” appears, see illustration **1**.

▶ Press the function key **F6** on the BTT.

Result:

– The menu “Ballasting cylinder” is active, see illustration **2**.

▶ Retract the ballasting cylinder completely with function key **F2**.

WARNING

Winch 2 can fall down!

If the pins **9** are unpinned before the ballasting cylinders are fully retracted, then the winch can fall down.

▶ Make sure that the ballast cylinders are fully retracted.

▶ When the ballast cylinders are fully retracted:
Unpin pins **9** on both sides on position **P3**.

▶ Insert the pins **9** on both sides in the bores on position **P2** and secure with spring retainers.

▶ Press the function key **F3**, relieve the ballasting cylinder.

DANGER

Damage to winch 2!

If the pins **8** are not removed after assembly, then the winch or the ballasting cylinders can be damaged.

▶ Release and unpin the pins **8**.

▶ Release the pins **8** on both sides on position **P4** and unpin.

▶ Insert the pins **8** on both sides in park position **P5** and secure.

▶ Unpin the retaining pipe **5** and insert it in park position **P7**.

▶ Retract the ballasting cylinder completely with function key **F2**.

2.2 Connecting the supply lines

▶ Establish the electrical connection for winch 2 **WII**.

▶ Establish the supply line for the central lubrication system.

The engine must be turned off before connecting and disconnecting hydraulic lines.

The different diameters of the hydraulic lines prevent incorrect coupling.

▶ Establish the hydraulic connection for winch 2 **WII**.

▶ Unpin the retaining pipe **5** and insert it in park position.

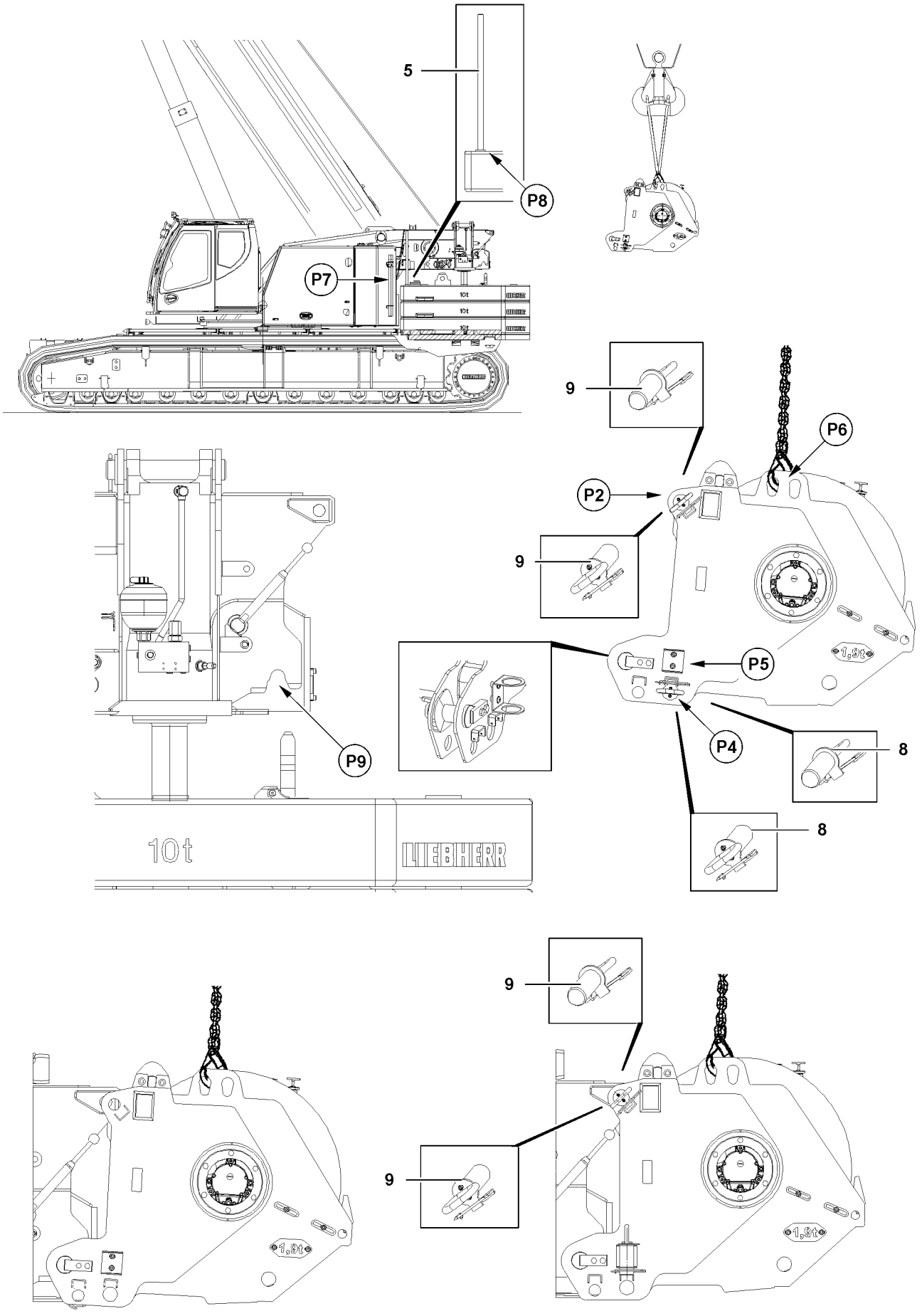

B117360

3 Assembly of winch 2 with auxiliary crane

Make sure that the following prerequisites are met:
- The crane is aligned in horizontal direction.
- An auxiliary crane is on hand.
- The pins **8** are unpinned on both sides and pinned in park position **P5** and secured.
- The counterweight has been placed on the central ballast.

3.1 Assembling Winch 2*

▶ Fasten winch 2 **WII** on both sides on the fastening eyes **P6** on the auxiliary crane.
▶ Take the retaining pipe **5** from park position and pin on both sides in the counterweight plate on position **P8**.
▶ Winch 2 **WII** with auxiliary crane in assembly position.
▶ Move winch 2 **WII** into the receptacle **P9**.
▶ Lift winch 2 **WII** until the pin bores of winch 2 **WII** align with the pin bores on the turntable.
▶ Pin the turntable with winch 2 **WII**: Insert the pins **9** on both sides on position **P2**.
▶ Secure the pins **9** with spring retainers.

DANGER
Danger of accident if winch 2 falls down!
▶ Do not remove the fastening equipment until winch 2 **WII** has been properly pinned and secured on position **P2**!

▶ Unhook winch 2 **WII** from the auxiliary crane.

3.2 Connecting the supply lines

▶ Establish the electrical connection for winch 2 **WII**.
▶ Establish the supply line for the central lubrication system.

The engine must be turned off before connecting and disconnecting hydraulic lines.
The different diameters of the hydraulic lines prevent incorrect coupling.
▶ Establish the hydraulic connection for winch 2 **WII**.
▶ Unpin the retaining pipe **5** and pin it in park position **P7**.

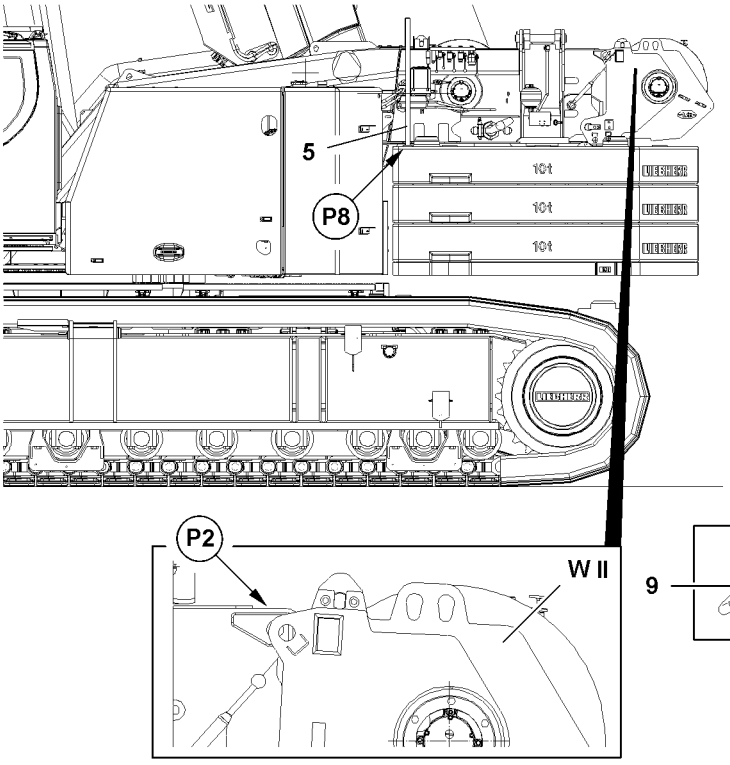
5
P8
P2
W II

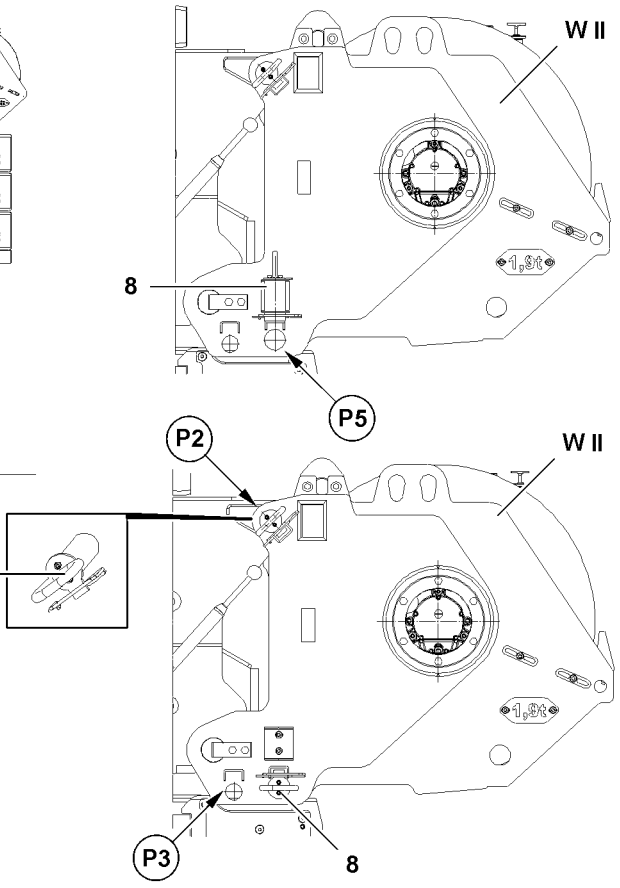
W II
8
P5
P2
W II
9
P3
8

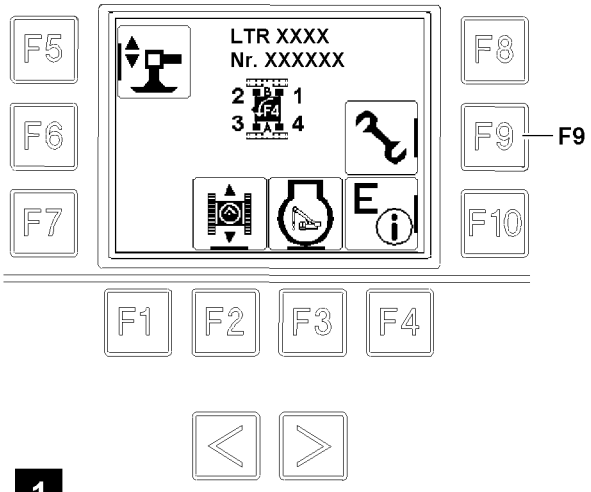
F5
F6
F7
F8
F9
F10
F1
F2
F3
F4
LTR XXXX
Nr. XXXXXX
F9

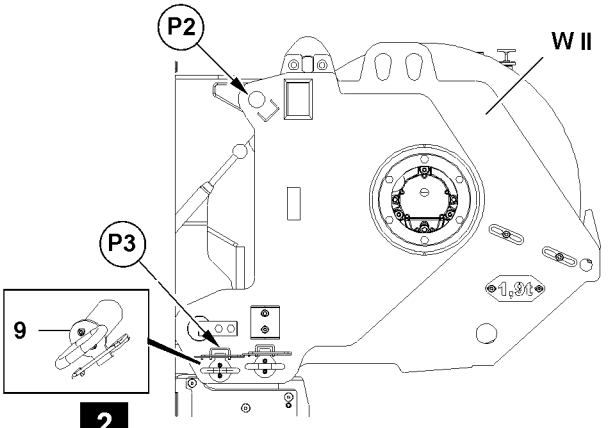
P2
W II
P3
9

1

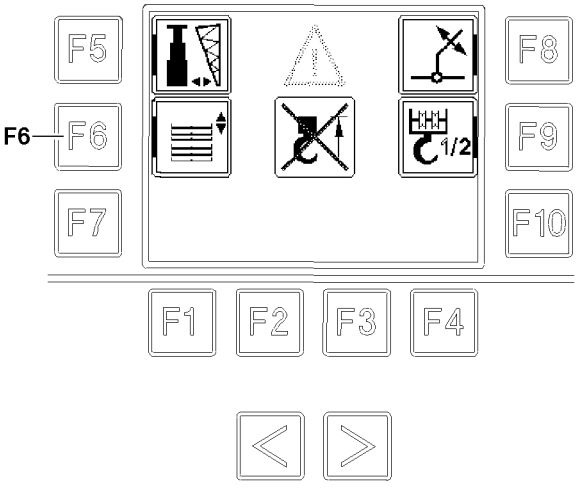
F5
F6
F7
F8
F9
F10
F1
F2
F3
F4
F6

2

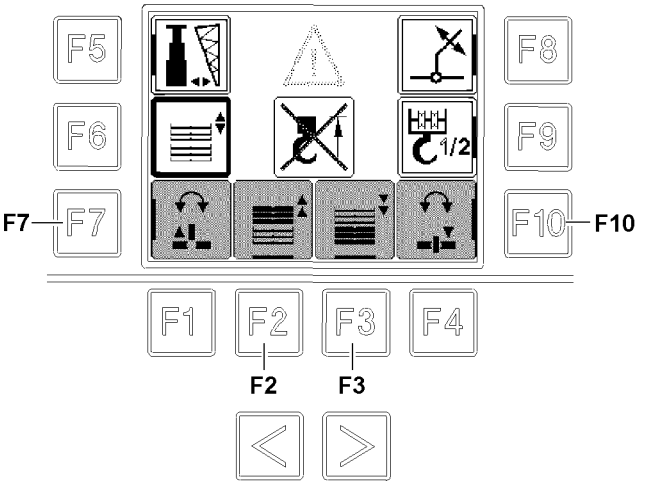
F5
F6
F7
F8
F9
F10
F1
F2
F3
F4
F7
F10
F2
F3

B117358

4 Disassembly winch 2

Make sure that the following prerequisites are met:
- The pin **8** is pinned and secured on position **P5**.
- The crane is aligned in horizontal direction.
- The receptacle plate or the counterweight are placed on the central ballast.
- The hoist rope is spooled up and secured.
- The LICCON overload protection is set:
  - Crawler operation with track width
  - Central ballast 20 t
  - Counterweight 0 t
  - Without auxiliary boom / accessory
  - Slewing range

4.1 Releasing the supply lines

The engine must be turned off before connecting and disconnecting hydraulic lines.
- ▶ Release the hydraulic connection for winch 2.
- ▶ Release the electrical connection for winch 2.
- ▶ Remove the supply line for central lubrication system.
- ▶ Secure the supply lines in the transport retainers.

4.2 Removing winch 2

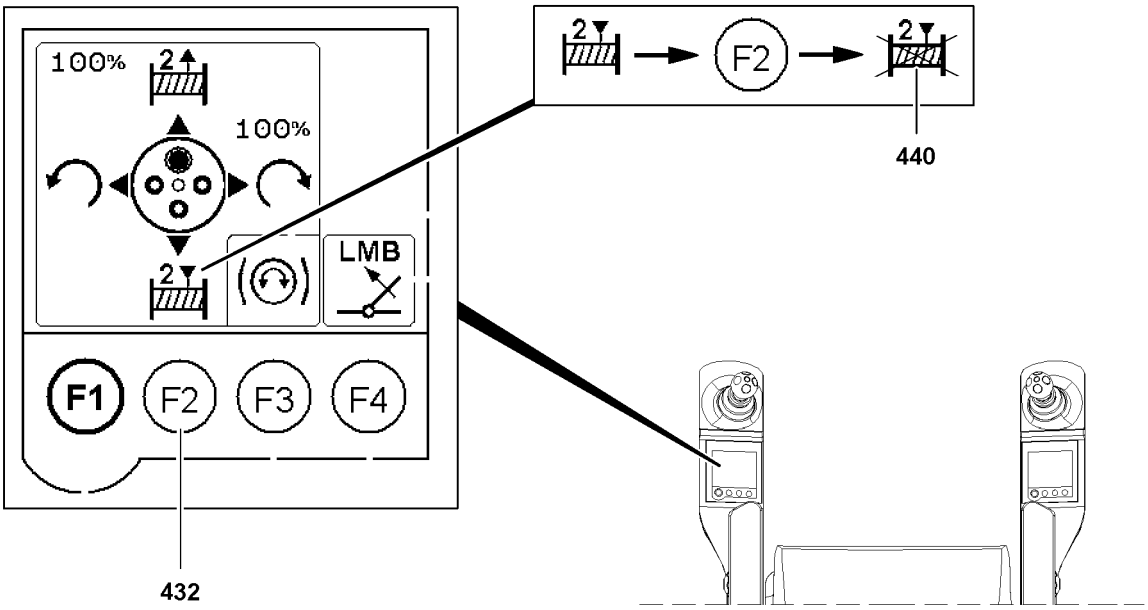

B118093

- ▶ Block winch 2 **WII** on left touch display by pressing function key F2 **432**.

Result:
- Icon **440** is visible.

- ▶ Swing the crane superstructure, extend the ballasting cylinder and swing into the receptacle of the counterweight, see Crane operating instructions, chapter 4.07.
- ▶ Press the function key **F9** on the BTT.

Result:
– The menu “Ballasting cylinder” appears, see illustration **1**.

▶ Press the function key **F6** on the BTT.

Result:
– The menu “Ballasting cylinder” is active, see illustration **2**.

▶ Retract the ballasting cylinder completely with function key **F2**.
▶ Take the retaining pipe **5** from park position and pin on both sides in the counterweight plate on position **P8**.

WARNING
Winch 2 can fall down!
If the pins **9** are unpinned before the ballasting cylinders are fully retracted, then the winch can fall down.
▶ Make sure that the ballast cylinders are fully retracted.

▶ When the ballast cylinders are fully retracted:
Unpin pins **9** on both sides on position **P2**.
▶ Insert the pins **9** on both sides in the bores on position **P3** and secure with spring retainers.
▶ Press the function key **F3** on the BTT.

Result:
– The ballasting cylinders are extended, the counterweight plates are placed with winch 2 **WII** on the crane chassis.

blank page!

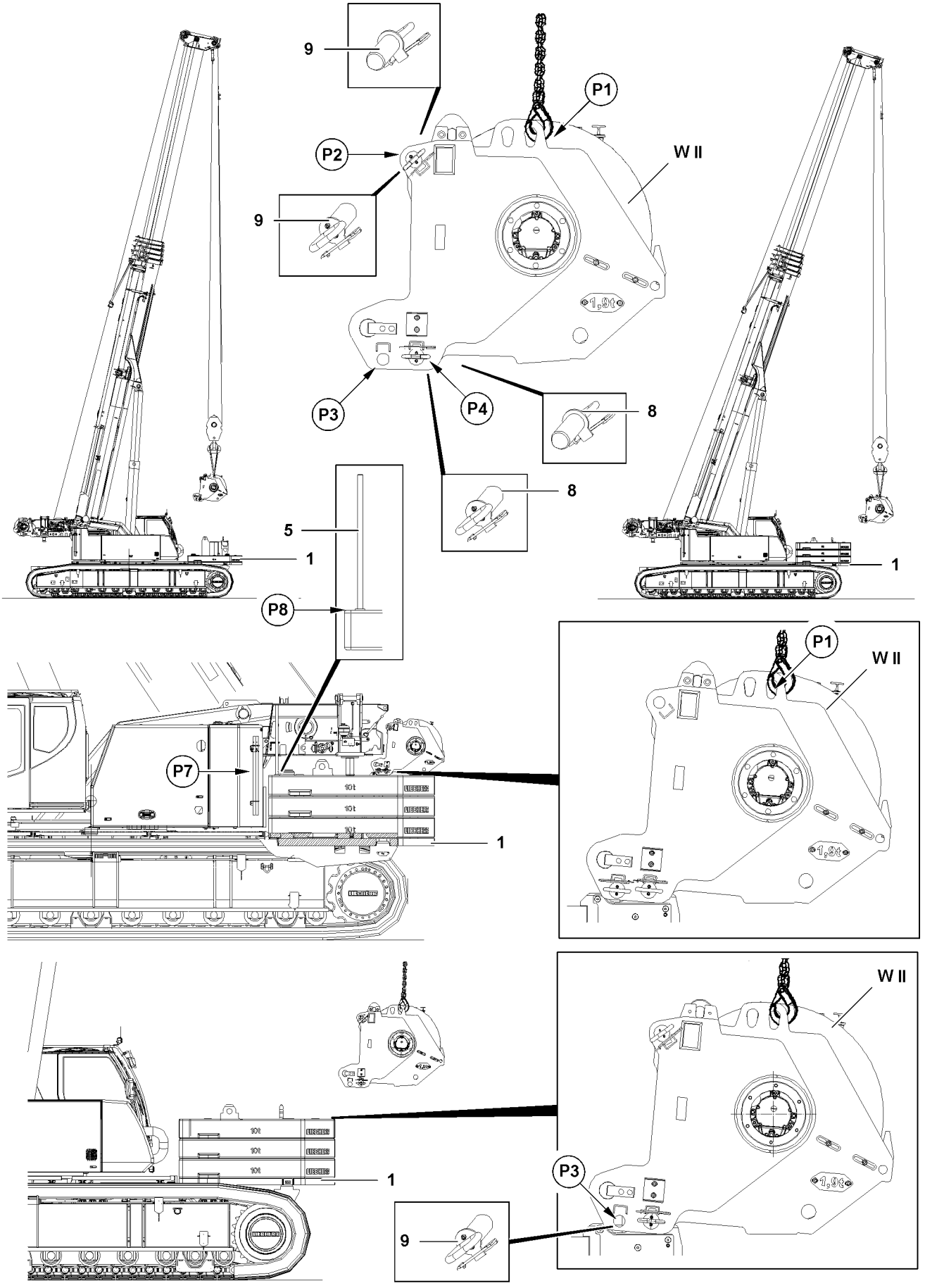

B117359

DANGER
Winch 2 can fall down!
If the pin **9** on position **P3** is unpinned before the winch is fastened and secured on the crane, then winch 2 **WII** can fall down.
Personnel can be severely injured or killed.
▶ Fasten winch 2 **WII** on the crane.

▶ Fasten winch 2 **WII** on the fastening eyes **P1** on the crane.
▶ Release the pins **9** on both sides on position **P3** and unpin.
▶ Insert the pins **9** on both sides in winch 2 **WII** on position **P2** and secure.
▶ Unpin the retaining pipe **5** and insert it in park position **P7**.
▶ Lift winch 2 **WII** from the counterweight and set it on the transport vehicle.

Note
▶ If winch 2 **WII** has been removed, the master switch assignment must be switched from a “two-winch system” to a “one-winch system”, see Crane operating instructions, chapter 4.01.

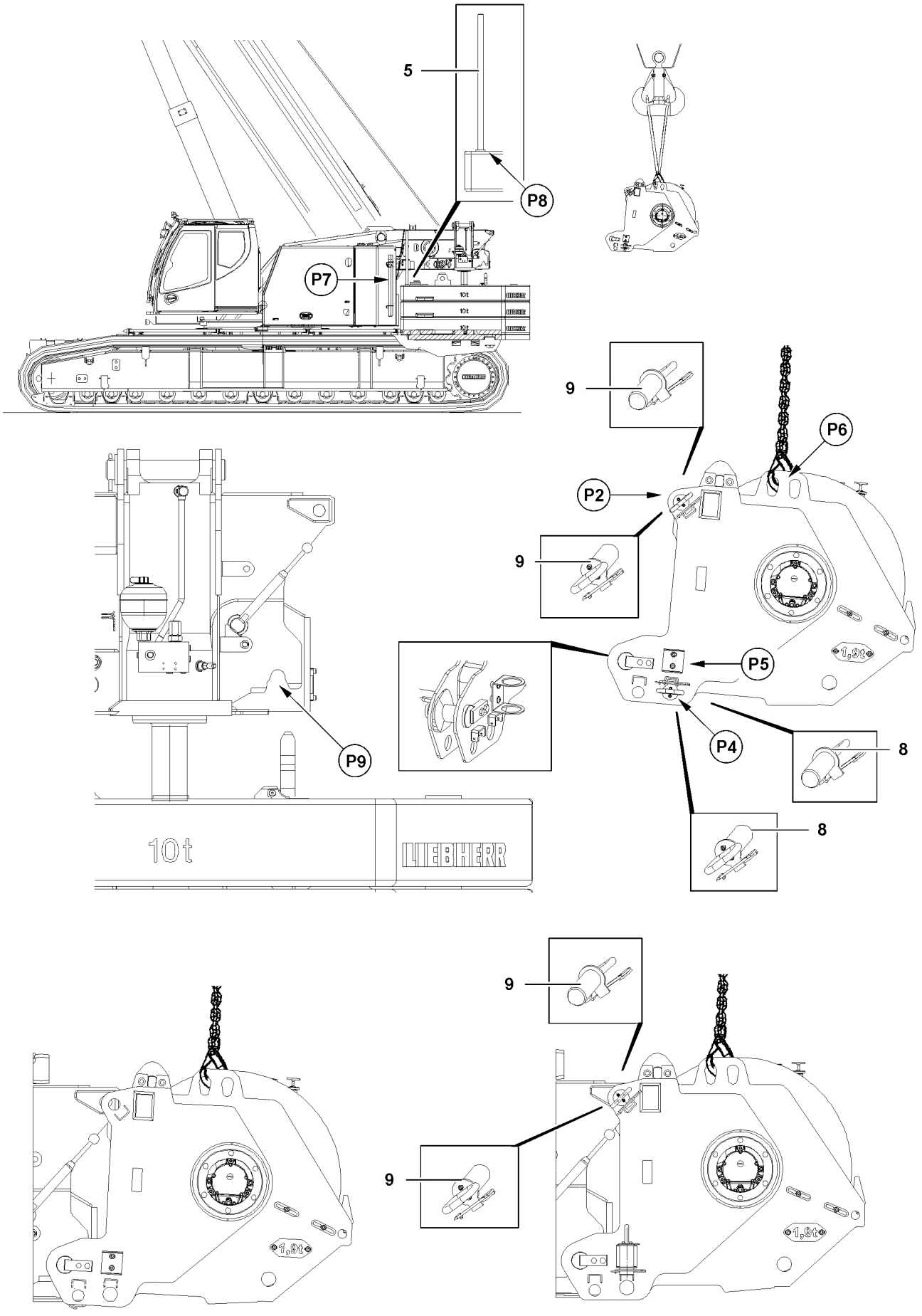

B117360

5 Disassembly of winch 2 with auxiliary crane

Make sure that the following prerequisites are met:
- The crane is aligned in horizontal direction.
- An auxiliary crane is on hand.
- The hoist rope is spooled up and secured.
- The counterweight has been placed on the central ballast.

5.1 Releasing the supply lines

5.1.1 Releasing the supply lines

The engine must be turned off before connecting and disconnecting hydraulic lines.
- ▶ Release the hydraulic connection for winch 2.
- ▶ Release the electrical connection for winch 2.
- ▶ Remove the supply line for central lubrication system.
- ▶ Secure the supply lines in the transport retainers.

5.2 Removing winch 2*

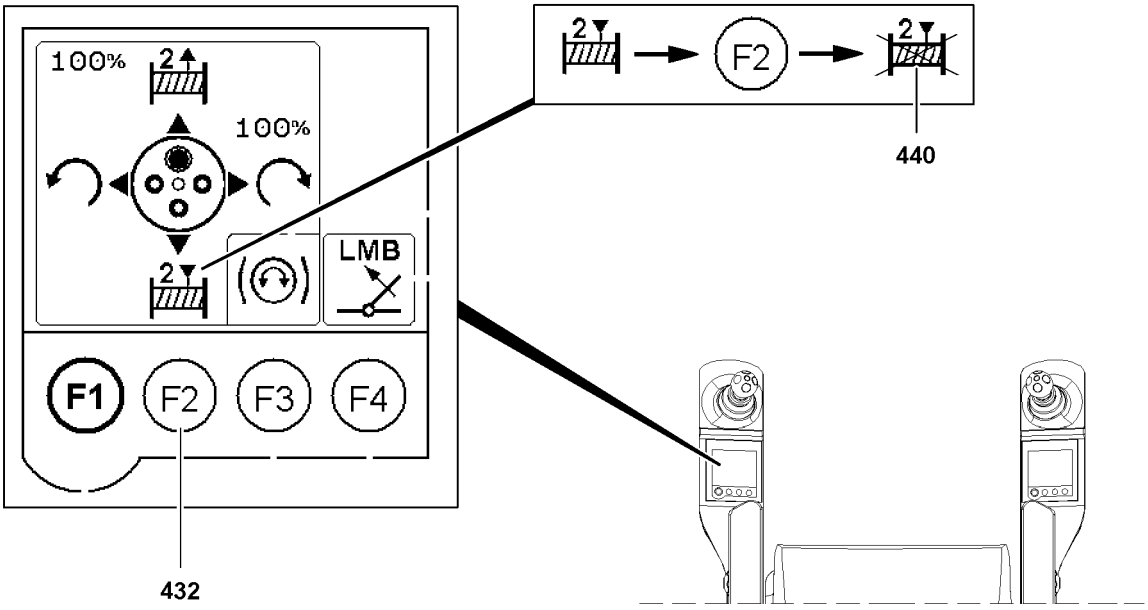

B118093

- ▶ Block winch 2 **WII** on left touch display by pressing function key F2 **432**.

Result:
- Icon **440** is visible.

- ▶ Take the retaining pipe **5** from park position **P7** and pin on both sides in the counterweight plate on position **P8**.
- ▶ Attach the auxiliary crane on the eyehooks **P6** on both sides.
- ▶ Tension the hoist rope of the auxiliary crane lightly.

DANGER
Danger of accident if winch 2 falls down!
▶ Do not unpin the pin **9** until winch 2 **WII** has been secured with the auxiliary crane.

▶ Release and unpin the pin **9**.
▶ Place winch 2 **WII** on the transport vehicle.
▶ Unpin the retaining pipe **5** and pin it in park position **P7**.

Note
▶ If winch 2 **WII** has been removed, the master switch assignment must be switched from a “two-winch system” to a “one-winch system”, see Crane operating instructions, chapter 4.01.

blank page!

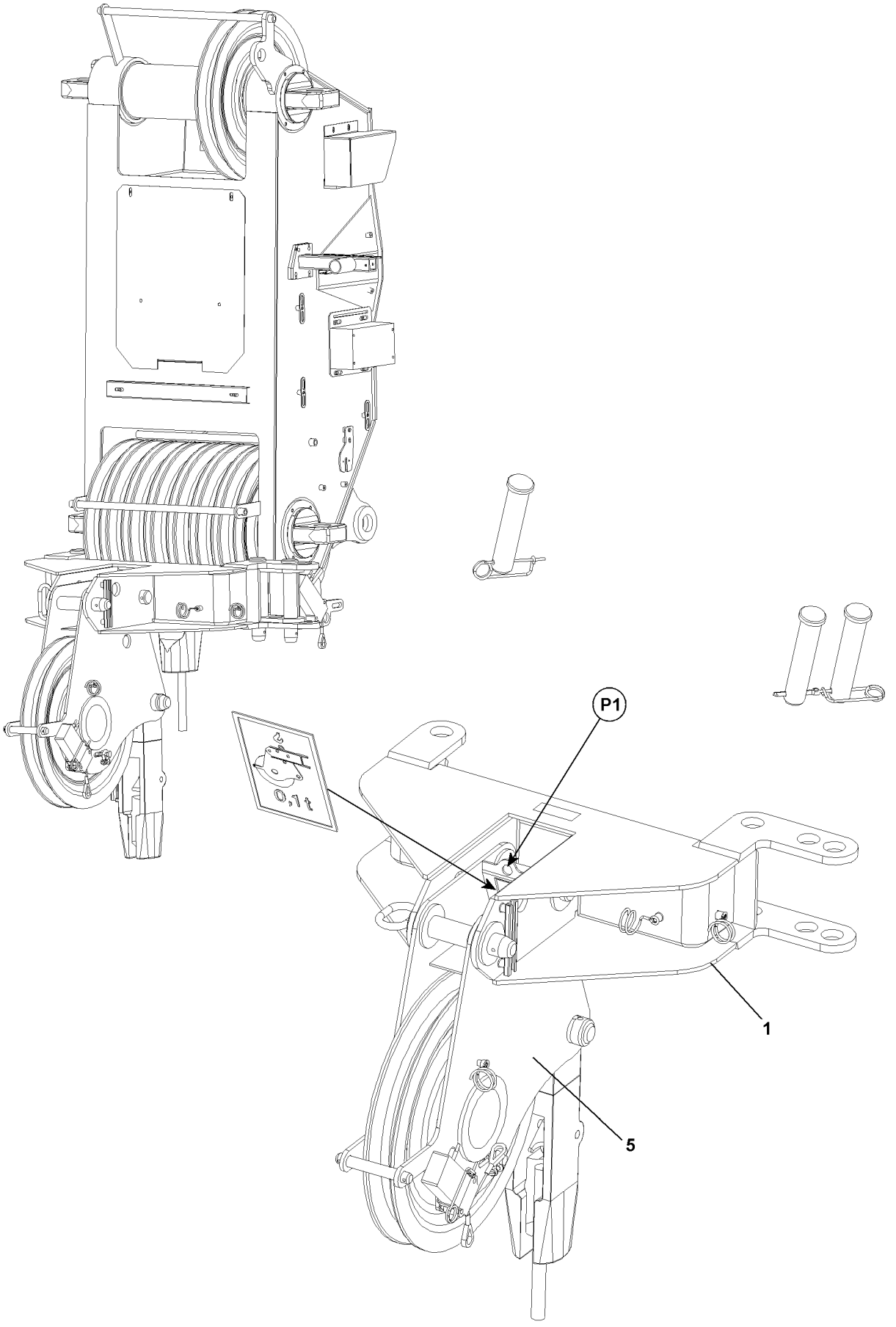

B114100

1 General

Operation with the boom nose **1** is set up for rapid lifting via the boom nose **1**, whereby the hook block can remain reeved on the telescopic boom.

Position	Description	Weight
1	Boom nose	0.1 t

Note
Load charts
▶ No special load charts are available for operation with boom nose **1**. The boom nose is generally run in the telescopic boom operating mode. However, the load is reduced by the weight of the boom nose and the lifting and fastening equipment that is used.

1.1 Fastening point

A fastening point **P1** is installed on the boom nose **1**.
The fastening point **P1** is marked with a tag.

WARNING
Danger of accident!
Life-threatening situations can arise if the boom nose **1** is improperly or incorrectly attached!
▶ At assembly / disassembly, fasten the boom nose **1** properly on the fastening point **P1**!

1

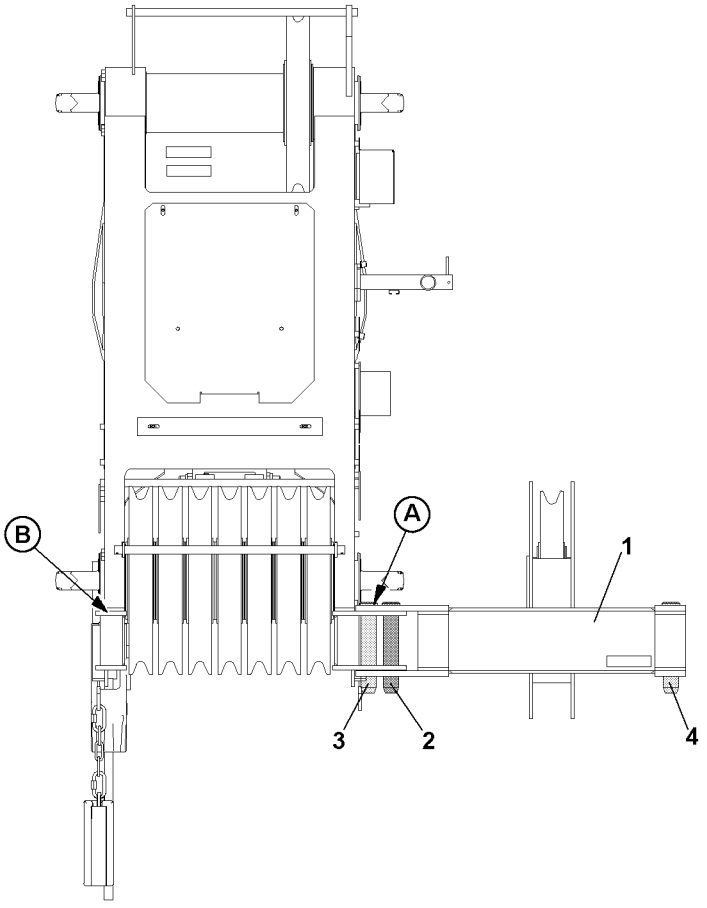

2

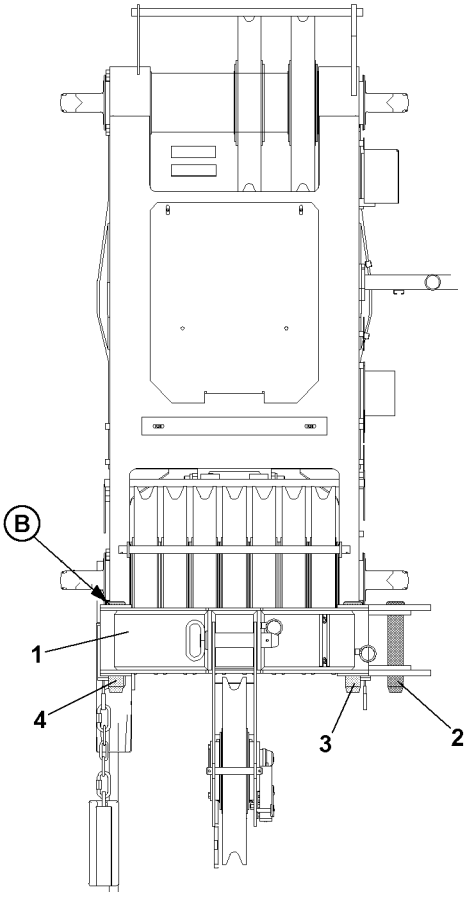

B196449

2 Assembly

2.1 Installing the boom nose on the telescopic boom

WARNING
Danger of crushing!
During assembly, hands can be crushed due to swing movements of the boom nose **1**!
▶ Make sure that the boom nose **1** is not swinging back and forth during installation!

▶ Attach the boom nose **1** on the auxiliary crane.

DANGER
The boom nose can fall down!
If the boom nose **1** is unhooked from the auxiliary crane before the boom nose **1** is pinned, then the boom nose **1** can fall down and kill or severely injure personnel!
▶ Do not detach the auxiliary crane until the boom nose **1** is properly installed and secured!

▶ Install the boom nose on the telescopic boom: Insert the swing pin **2** and secure with spring retainer.
▶ Detach the auxiliary crane.

2.2 Swinging the boom nose into operating position, illustrations 1 and 2

DANGER
Danger of accident if the boom nose falls down!
If the swing pin **2** is unpinned, the boom nose will fall down.
▶ Never unpin the swing pin **2**!

▶ Release the pin **3** and the pin **4** and unpin.

CAUTION
Danger of crushing fingers!
Fingers could be crushed between the telescopic boom and the boom nose when the boom nose is swivelled.
▶ Do not put fingers between the boom nose and the telescopic boom!

▶ Swing the boom nose **1** by 180 ° until the pin **4** can be inserted on point **B**.
▶ Pin and secure the pin **4**.
▶ Pin and secure the pin **3**.

3

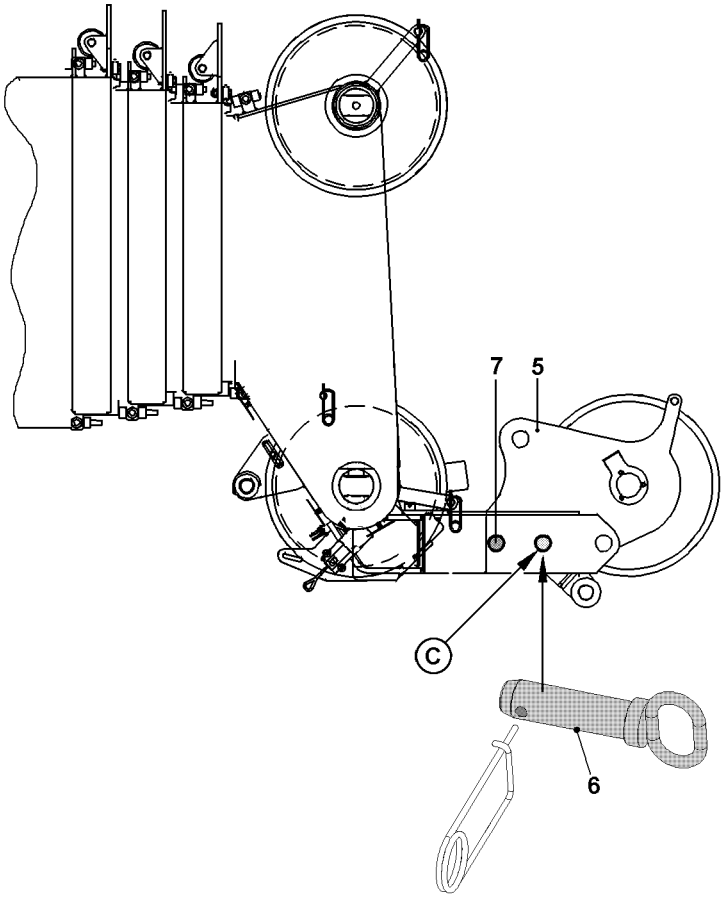

4

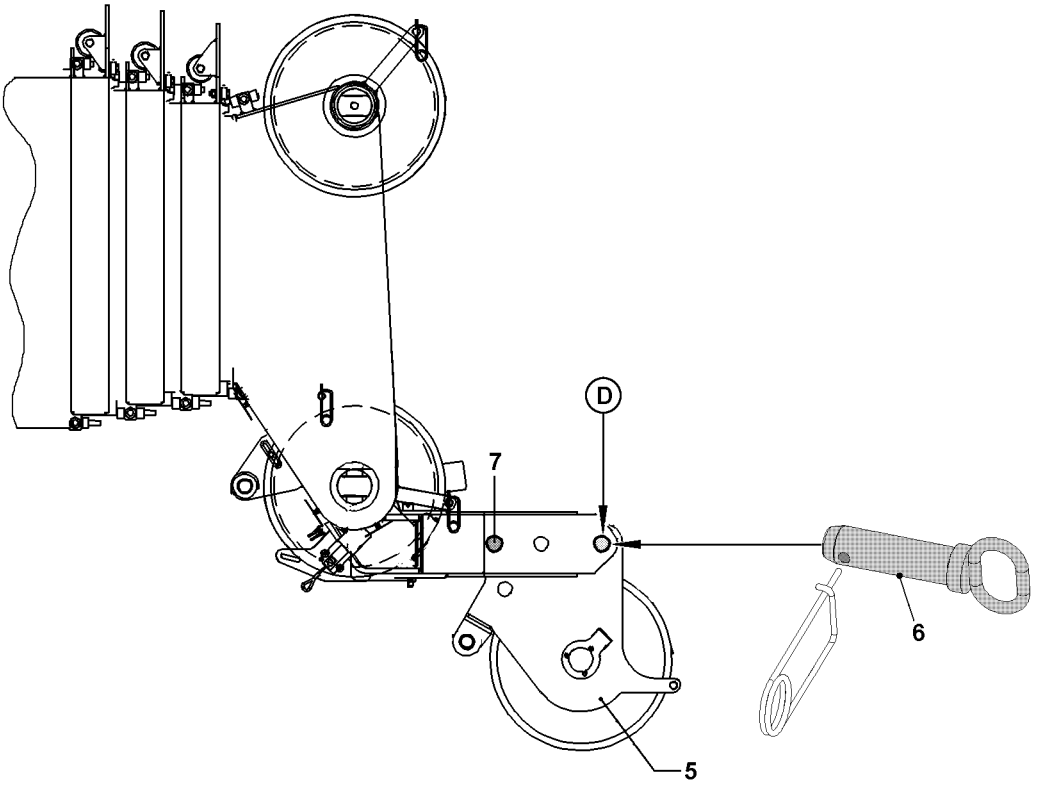

B196450

2.3 Folding the boom nose into operating position, illustrations 3 and 4

WARNING
Damage of boom nose!
If the boom nose is not folded into operating position, the boom nose can be overloaded!
▶ Fold the boom nose into operating position!

DANGER
Danger of accident if the boom nose falls down!
If the swing pin **7** is unpinned, the boom nose will fall down.
▶ Never unpin the swing pin **7**!

▶ Release the pin **6** on point **C** and unpin.

CAUTION
Danger of crushing fingers!
Fingers can be crushed when the boom nose is folded.
▶ Do not crush your fingers when the rope pulley **5** folds down!

▶ Fold the rope pulley **5** down until it can be pinned at point **D**.
▶ Pin and secure the pin **6**.

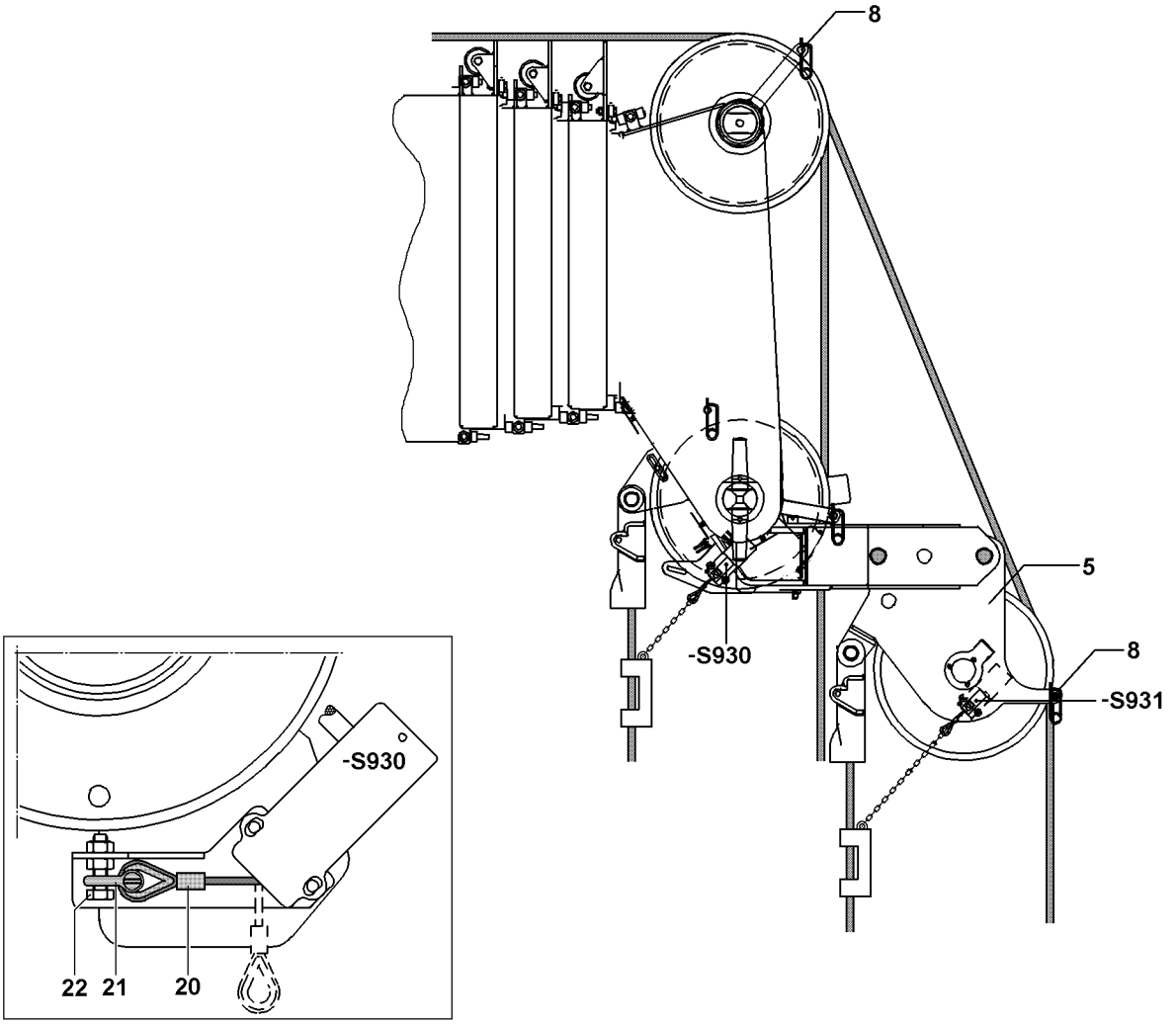
8
5
8
-S930
-S931
-S930
22
21
20

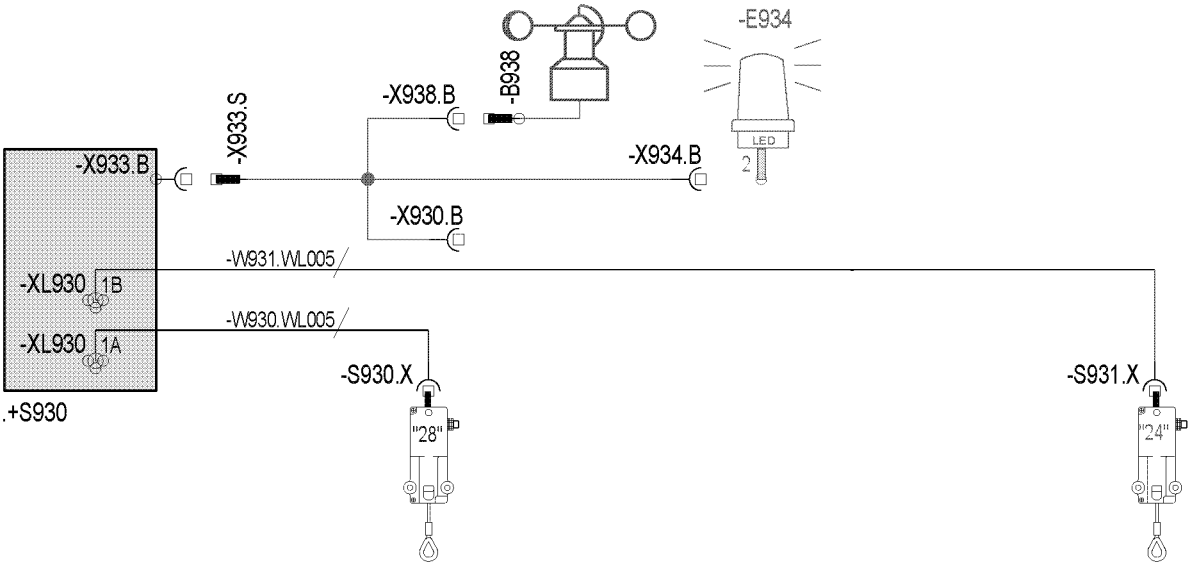
-E934
-B938
-X938.B
-X933.S
-X933.B
-X934.B
LED
2
-X930.B
-W931.WL005
-XL930
1B
-W930.WL005
-XL930
1A
-S930.X
-S931.X
.+S930
"28"
"24"

B114102

2.4 Reeving in the hoist rope

Can be reeved in a maximum of 2 times on the boom nose.

- ▶ Release and unpin the rope retaining pipes **8**.
- ▶ Place the hoist rope over the end pulley on the telescopic boom and over the rope pulley **5**.
- ▶ Pin the rope retaining pipes **8** and secure.
- ▶ Reeve in the load hook or hook block.
- ▶ Attach the hoist limit switch weight.

2.5 Hoist limit switch

The hoist limit switch **-S930**, the airplane warning light* and the wind sensor* remain attached on the telescopic boom head.

- ▶ If the hoist limit switch **-S931** is attached to the telescopic boom:
  Remove the hoist limit switch **-S931** from the telescopic boom and assemble to the boom nose.

2.6 Single hook operation

If you are working in “single hook mode”, the hoist limit switch **-S930** that is not required must be operated manually.

- ▶ Remove the hoist limit switch weight and chain.
- ▶ Pull the hoist limit switch rope **20** and attach to the fixed point **22** with the shackle **21**.
- ▶ Actuate the hoist limit switch **-S930** mechanically.

2.7 Two hook operation

During two hook operation the hoist limit switch **-S930** on the telescopic boom and the hoist limit switch **-S931** on the boom nose are active!

2.8 Function check

The function check **must** be performed by the operator before lifting a load.
The following checks must be performed.

- ▶ Check that the hoist limit switch, wind sensor* and airplane warning light* connections are properly connected.
- ▶ Check wind sensor* operation on LICCON monitor.
- ▶ Check the function of the airplane warning light*.

Check the movement of hoist limit switches. The following steps are required to perform these checks.

- ▶ Actuate the hoist limit switch manually.
- ▶ Check that “Hoist top” icon is displayed on LICCON monitor for main boom or boom nose.
- ▶ Check that hoist winch switches off correctly.

5

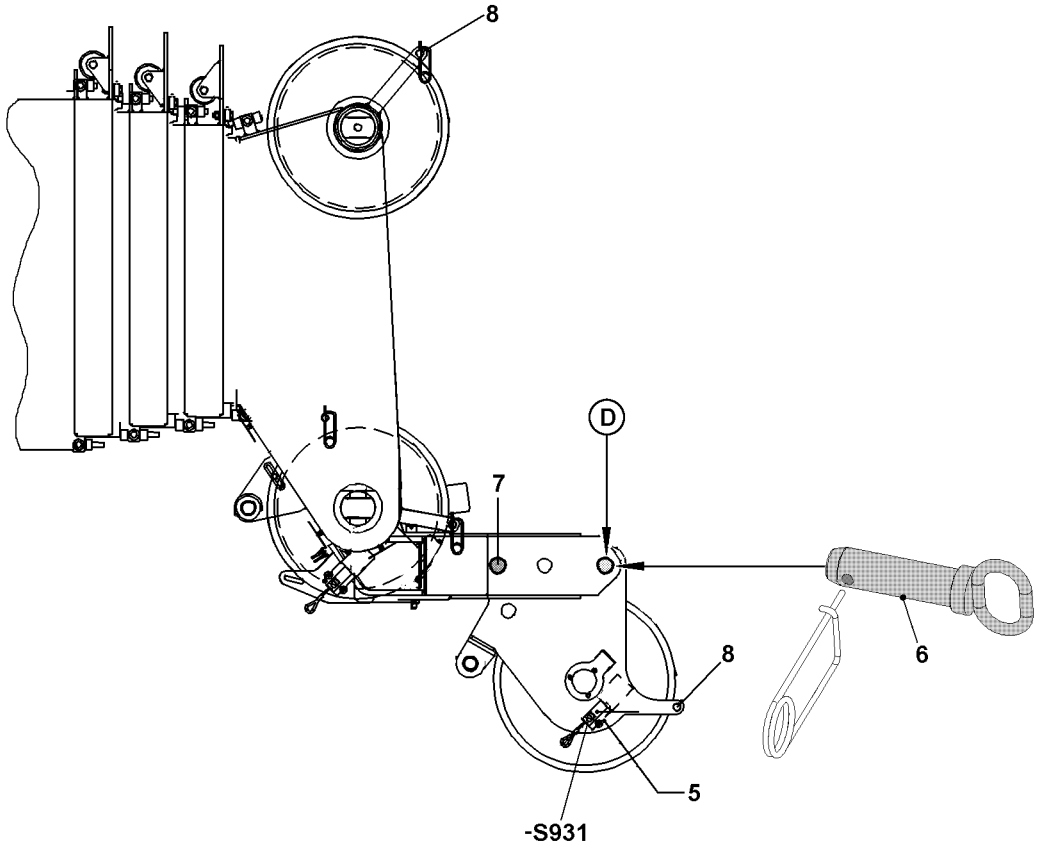

6

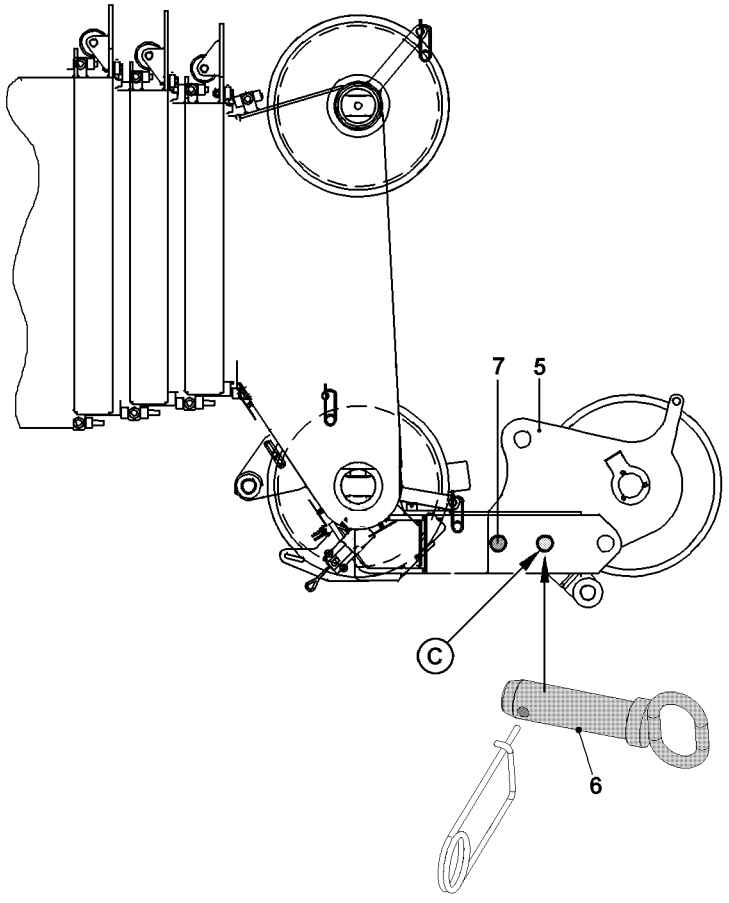

B196452

3 Disassembly

3.1 Folding the boom nose into transport position, illustrations 5 and 6

- ▶ Remove the hoist limit switch weight.
- ▶ Reeve out the load hook / hook block to boom nose.
- ▶ Release and unpin the rope retaining pipes **8**.

Do not pull hoist rope beneath the winch when reeling in.

- ▶ Spool the hoist rope up.

Note

- ▶ During operation **without** the boom nose, you must use the hoist limit switch **-S931** as an additional hoist limit switch for the telescopic boom **or** mechanically pull the hoist limit switch **-S931** and attach it to the rope fixed position with a shackle.

DANGER

Danger of accident if the boom nose falls down!

If the swing pin **7** is unpinned, the boom nose will fall down.

- ▶ Never unpin the swing pin **7**!

- ▶ Release the pin **6** on point **D** and unpin.

CAUTION

Danger of crushing fingers!

Fingers can be crushed when the boom nose is folded.

- ▶ Do not crush your fingers when the rope pulley **5** folds up!

- ▶ Move the rope pulley **5** up until it can be pinned at the point **C**.
- ▶ Pin and secure the pin **6**.

7

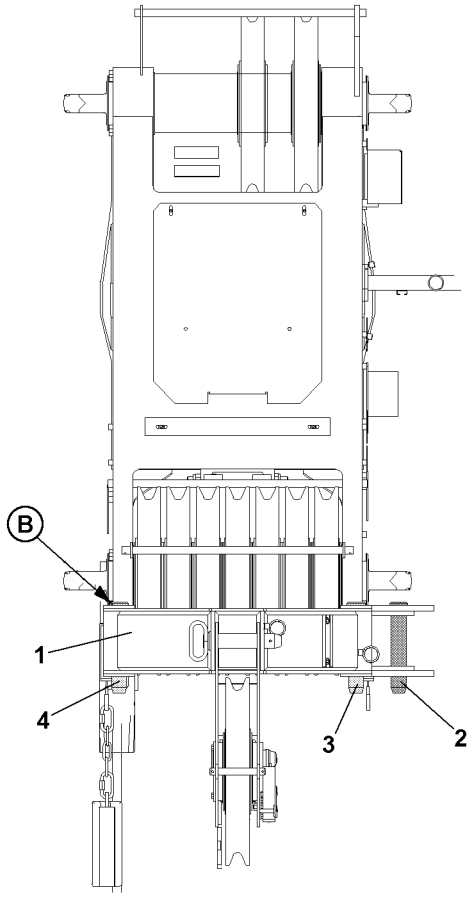

8

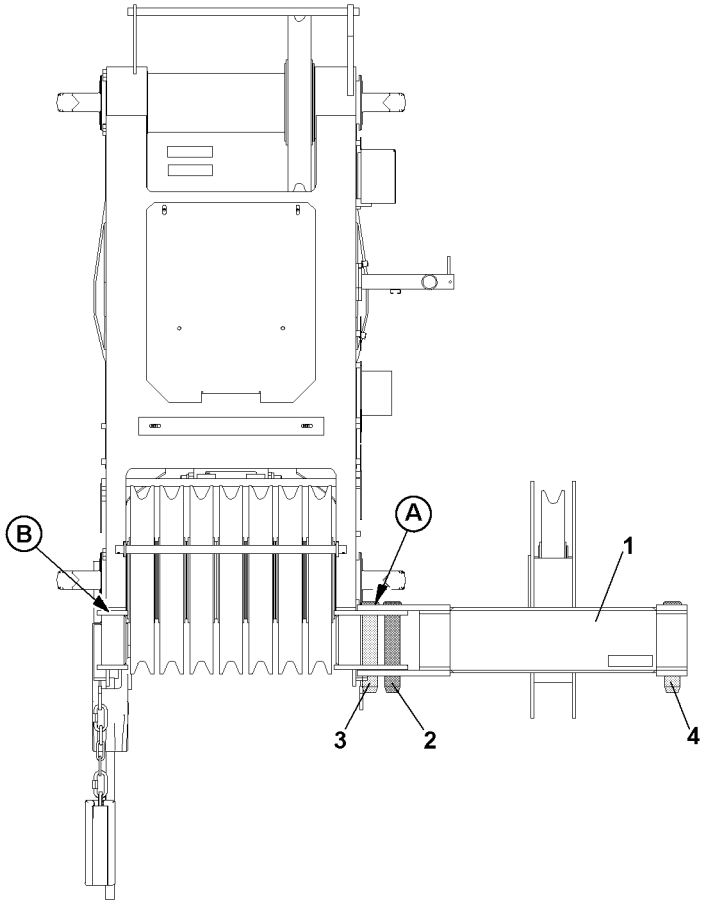

B196453

3.2 Swinging the boom nose into transport position, illustrations 7 and 8

DANGER
Danger of accident if the boom nose falls down!
If the swing pin **2** is unpinned, the boom nose will fall down.
▶ Never unpin the swing pin **2**!

▶ Release and unpin the pin **4**.

CAUTION
Danger of crushing fingers!
Fingers could be crushed between the telescopic boom and the boom nose when the boom nose is swivelled.
▶ Do not put fingers between the boom nose and the telescopic boom!

▶ Swing the boom nose **1** by 180 ° until the pin **3** can be inserted on point **A**.
▶ Insert and secure pin **3**.
▶ Pin the pin **4** on the boom nose and secure.

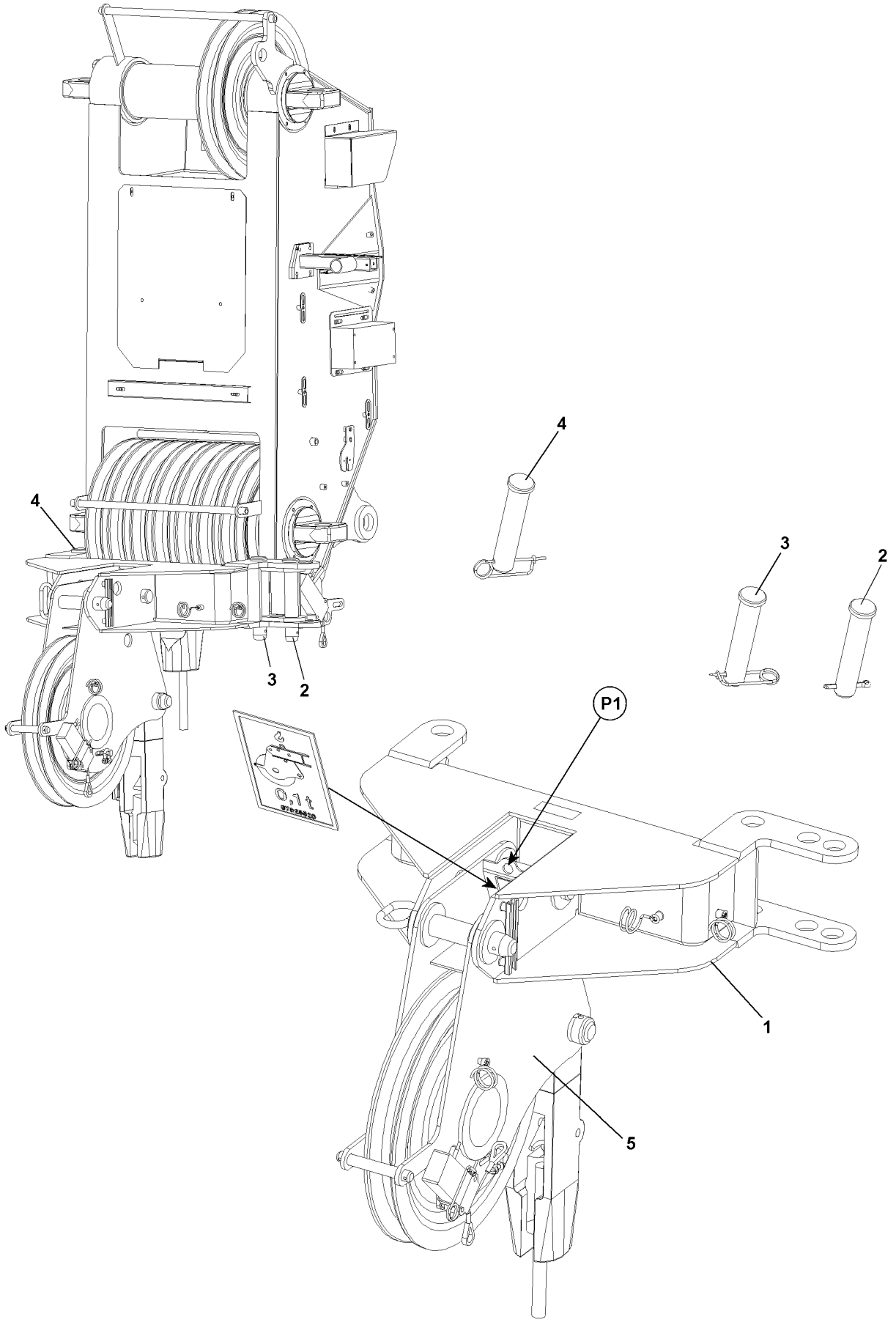

B114101

3.3 Removing the boom nose on the telescopic boom

Make sure that the following prerequisite is met:

– The boom nose is folded into operating position.

DANGER

Danger of accident if the boom nose falls down!

If the swing pin **2** is unpinned before the boom nose **1** is secured with the auxiliary crane, then the boom nose **1** can fall down and kill or severely injure personnel!

▶ Unpin the swing pin **2** only when the boom nose is secured with the auxiliary crane!

▶ Attach the auxiliary crane on the boom nose **1**.

WARNING

Danger of crushing!

During disassembly, hands can be crushed due to swing movements of the boom nose **1**!

▶ Make sure that the boom nose **1** is not swinging back and forth during removal!

Remove the boom nose **1**:

▶ Release and unpin the pin **3**.

▶ Release and unpin the pin **4**.

▶ Release and unpin the swing pin **2**.

▶ Place the boom nose onto the transport vehicle.

▶ Detach the auxiliary crane.

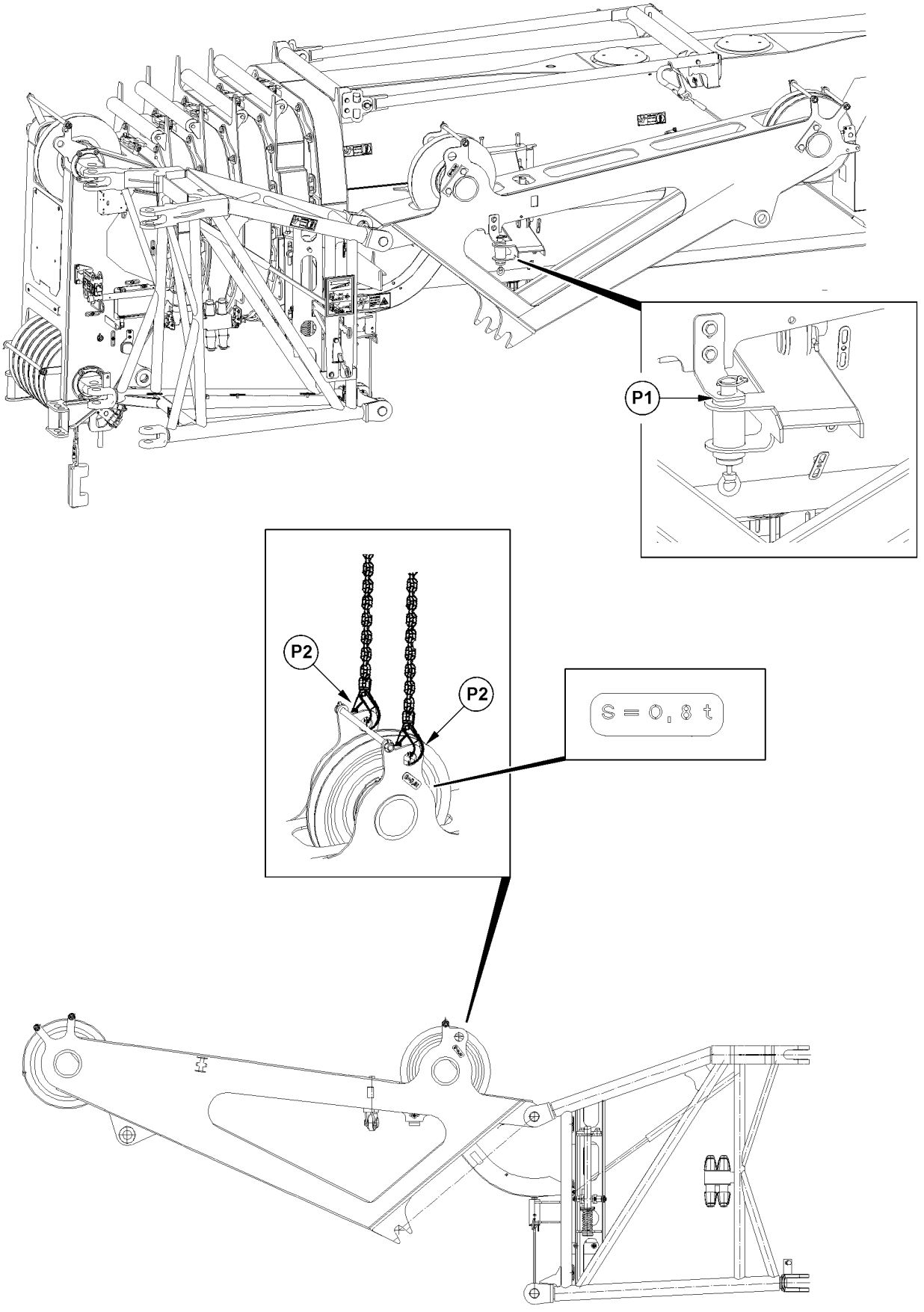

B117354

1 General

DANGER
Danger of accident when transporting the crane with auxiliary boom!
- ▶ Before transporting the crane, the auxiliary boom must always be brought into transport position and mechanically secured on point **P1**.
- ▶ Make sure that the auxiliary boom is properly secured on point **P1** before transporting the crane on public roads.

Note
- ▶ **Load reduction!** With the hook block reeved on the telescopic boom, loads in auxiliary boom operating modes must be reduced by the weight of the hook block.

1.1 Component overview

Position	Description	Length	Weight
1	Pivot section		
2	End section	3.4 m	0.8 t

1.2 Fastening point

DANGER
Danger of accident due to incorrect attachment!
Life-threatening situations can arise due to improper or incorrect fastening of the auxiliary boom!
- ▶ Fasten the auxiliary boom according to the fastening point **P2** shown on the tag.
- ▶ The appropriate fastening eyes and points are marked with tags.
- ▶ Attaching the auxiliary boom on non-intended points or on any arbitrary location is **prohibited**.

Description	Abbreviation
Auxiliary boom	**S**

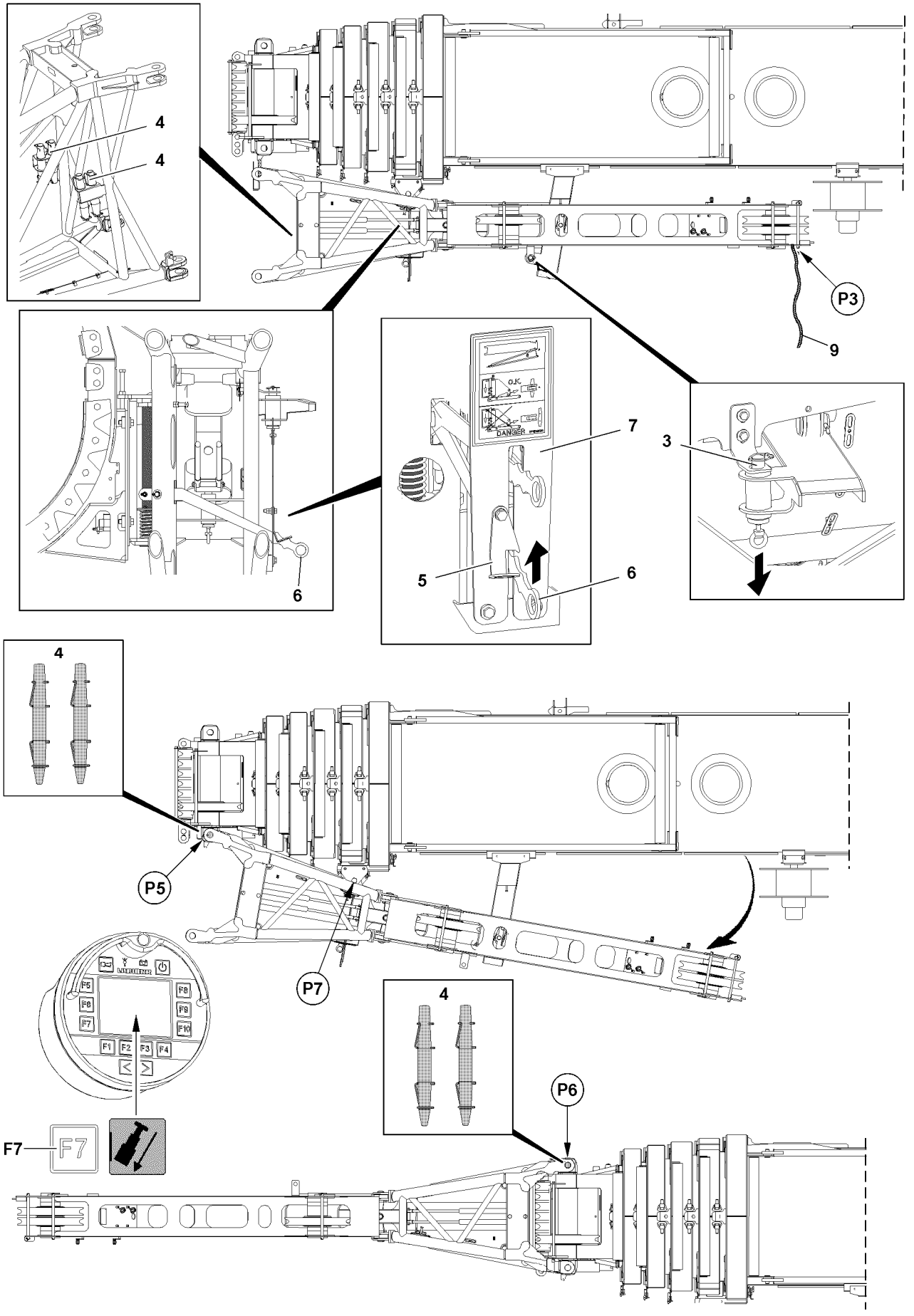
4
4
P3
9
6
7
3
5
6
4
P5
P7
4
P6
F7
F7
B117349

2 Installing the auxiliary boom

2.1 General

DANGER
Danger of fatal injury due to toppling auxiliary boom!
The auxiliary boom may topple if it is incorrectly fitted.
- ▶ Standing under the auxiliary boom during the swing operation is prohibited.
- ▶ It is prohibited for anyone to remain within the swing range as well as the folding area of the auxiliary boom.
- ▶ The auxiliary boom must be secured by an auxiliary rope during the swing process.

WARNING
Danger of falling!
During assembly and disassembly, personnel must be secured with appropriate aids to prevent them from falling! If this is not observed, assembly personnel could fall and suffer fatal injuries.
- ▶ All work aloft, where there is a danger of falling must be carried out with suitable aids.
- ▶ If fall arrest equipment is available, then it must be used, see Crane operating instructions, chapter 2.06.
- ▶ If aids are not available and work cannot be carried out from the ground, then the assembly personnel must secure themselves with the supplied fall arrest system to prevent falling, see Crane operating instructions, chapter 2.04.
- ▶ The supplied fall arrest system must be fastened on the fastening and hook points. For safety points, see Crane operating instructions, chapter 2.06.
- ▶ Only step on the aids, ladders and catwalks with clean shoes.
- ▶ Keep aids, ladders and catwalks free of heavy dirt, snow and ice.
- ▶ Do not walk on the auxiliary boom.

Make sure that the following prerequisites are met:
- The crane is aligned in horizontal direction.
- The counterweight has been installed on the turntable according to the load chart.
- The telescopic boom is fully telescoped in.
- The auxiliary boom is attached on the telescopic boom pivot section for transport.
- The telescopic boom has been luffed down to the rear or the side in the 0° position.

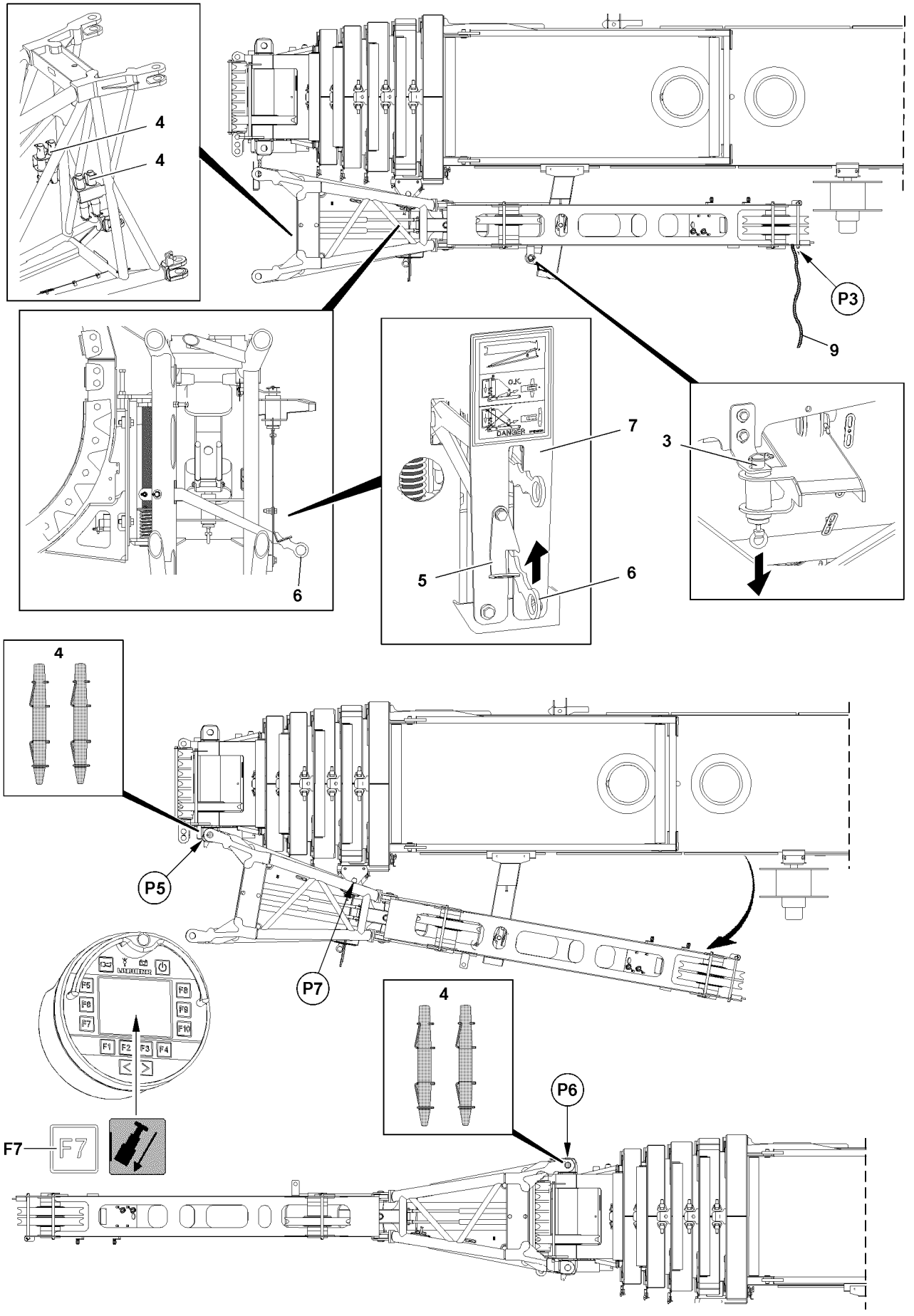
4
4
P3
9
6
7
3
5
6
4
P5
P7
4
P6
F7
F7
B117349

2.2 Reeving out the hoist rope on the telescopic boom head

- ▶ Extend the telescopic boom to a length of approximately 4 m.
- ▶ Place the hook block on the ground.
- ▶ Disengage the hoist rope on the rope fixed point.
- ▶ For safety reasons, remove the hoist limit switch weight and the chain.

Note

- ▶ The hoist limit switch must be pulled mechanically and the operating cable must be attached to the telescopic boom head with the snap hook when operating the auxiliary boom.
- ▶ The telescopic boom may remain reeved, if the hoist rope of winch 2 is used for auxiliary boom operation.

- ▶ Remove the rope retaining pipes on the pulley head and on the back pulley.
- ▶ Telescope the telescopic boom in all the way.

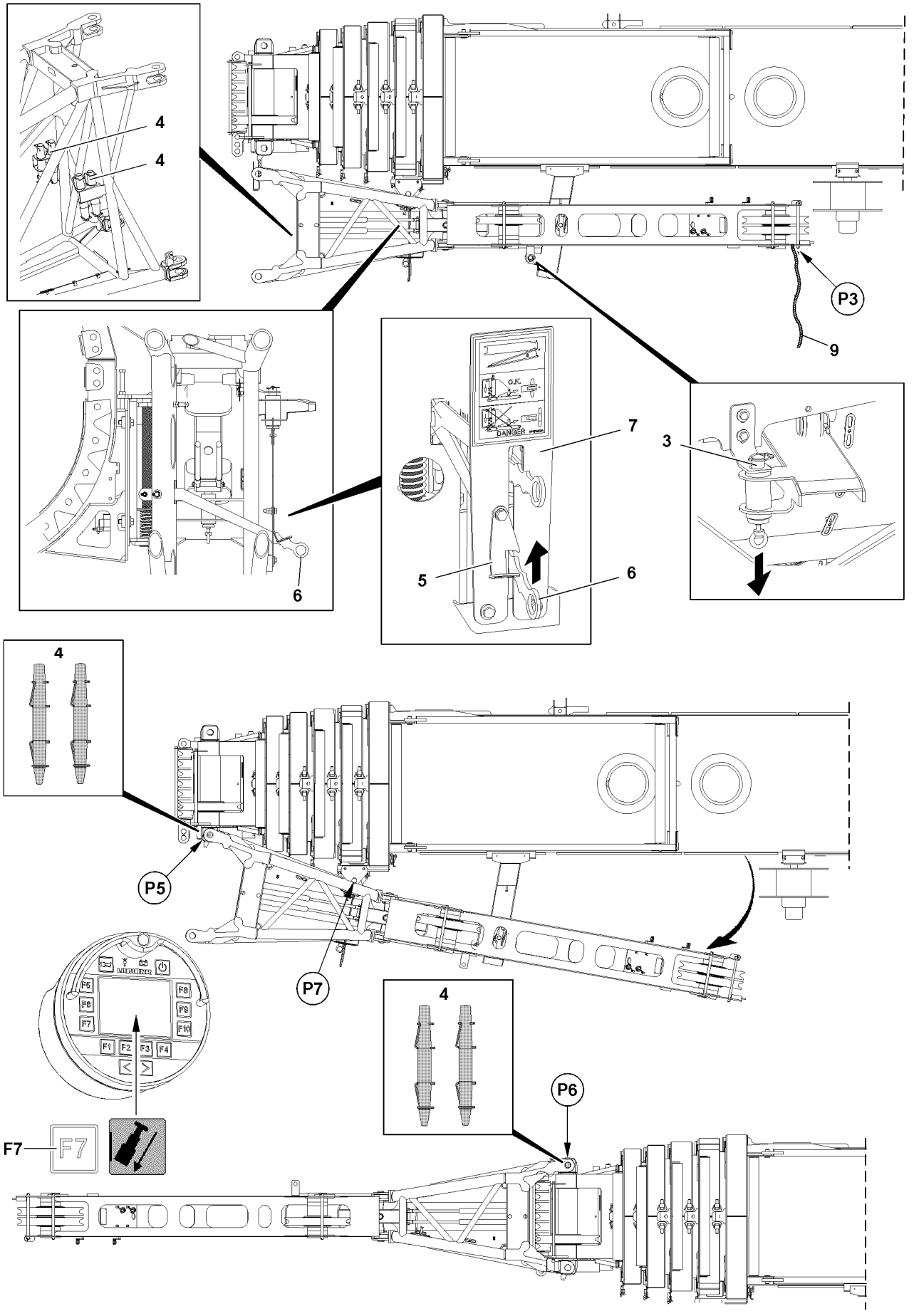
4
4
P3
9
6
7
3
5
6
4
P5
P7
4
P6
F7
F7
B117349

2.3 Assembly of the auxiliary boom carried on the crane

2.3.1 Swinging the auxiliary boom into operating position

Make sure that the following prerequisite is met:

– The telescopic boom is luffed up to the rear or to the side by 1°.

Note

▶ If the telescopic boom is not luffed up to 1°, then the auxiliary boom cannot be installed.

▶ Attach the auxiliary rope **9** on point **P3**.

▶ Release the spring-loaded pin **3**.

▶ Pull the spring pin **3**.

▶ Swing auxiliary boom out until it can be pinned at point **P5**.

Troubleshooting

If the pin bores on point **P5** do not align, the telescopic boom can be tensioned with the function key **F7** on the BTT in the “Assembly functions on the BTT” menu:

▶ Start the crane engine.

▶ Pin telescope 5.

Note

▶ Bluetooth™ Terminal (BTT), see Crane operating instructions, chapter 5.31.

WARNING

Danger of severe crushing!

For the “Tension the telescope boom” function, all telescoping sections are pulled together, which can lead to severe crushing injuries of fingers.

▶ As long as the function “Tension telescopic boom” is carried out, it is prohibited for any personnel to remain in the push out range of the telescoping sections!

▶ Press the function key **F7** on the BTT.

Result:

– All telescopic sections are pulled together.

▶ Insert the pins **4** on top and bottom on point **P5** and secure.

DANGER

Danger of fatal injury due to toppling auxiliary boom!

Special retaining clips must be used to secure the pins **4**. The use of spring pins or spring retainers on the pins **4** is not permitted.

The auxiliary boom may only be released at point **P7** if the pins **4** are pinned and secured on top and bottom at point **P5**.

▶ Pin and secure pins **4** at point **P5** on top and bottom.

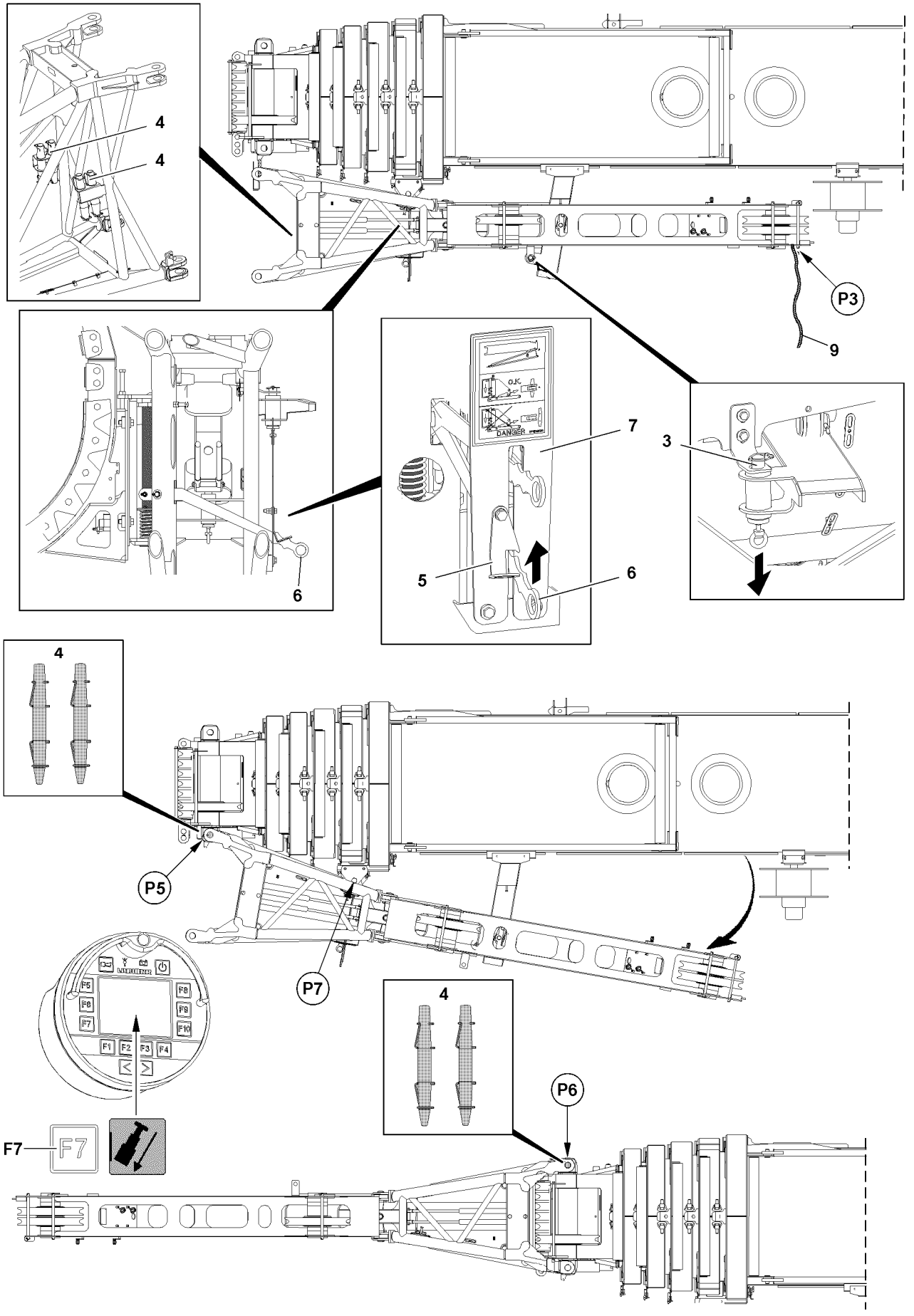
4
4
P3
9
6
7
3
5
6
4
P5
P7
4
P6
F7
F7
B117349

- ▶ Swing the safety bracket **5** with the assembly rod to the side.
- ▶ Push the lever **6** with the assembly rod up and latch into the bracket **7**.

DANGER
Danger of fatal injury due to toppling auxiliary boom!
The auxiliary boom may topple if it is incorrectly fitted.
- ▶ Standing under the auxiliary boom during the swing operation is prohibited.
- ▶ Standing in the swing range as well as the folding range of the auxiliary boom is prohibited.

- ▶ Swing the auxiliary boom with the auxiliary rope **9** by 180 ° until it can be pinned at point **P6** on the top and bottom.

DANGER
Danger of fatal injury due to toppling auxiliary boom!
- ▶ Special retaining clips must be used to secure the pins **4**.
- ▶ The use of spring cotters or spring retainers on the pins **4** is prohibited!

- ▶ Insert the pins **4** on top and bottom on point **B** and secure.
- ▶ Remove the auxiliary rope **9**.

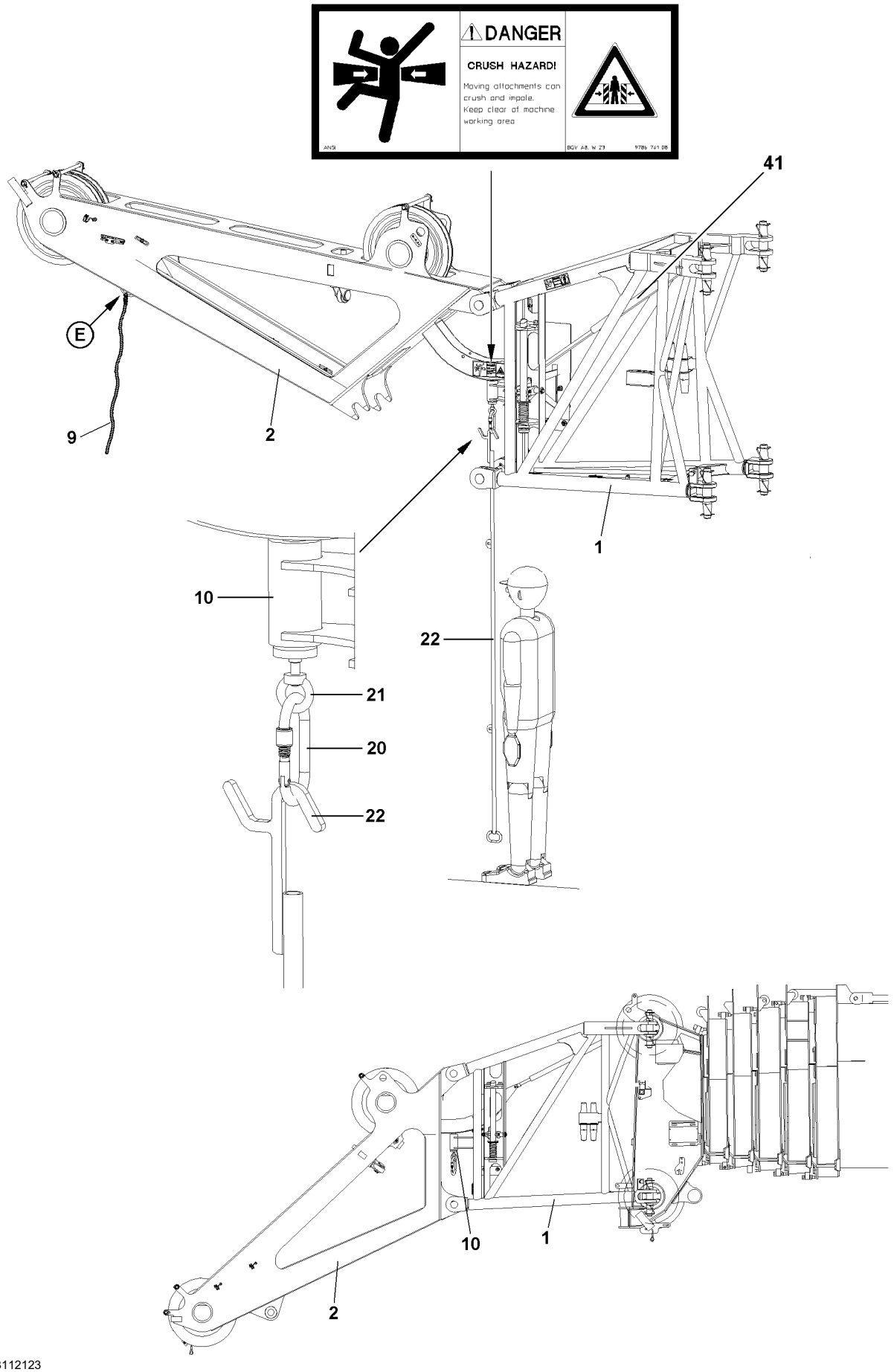
DANGER
CRUSH HAZARD!
Moving attachments can crush and impale.
Keep clear of machine working area
ANSI
BGV A8, W 23
9786 741 08
41
E
9
2
1
10
22
21
20
22
10
1
2

B112123

2.3.2 Folding the end section into operating position

DANGER
Danger of fatal injury in case of defective pneumatic spring!
Defective pneumatic springs **41** no longer provide the supporting action for the movable components on the auxiliary boom.
If the pneumatic spring **41** is defective, the end section **2** can fall down and fatally or seriously injure personnel.
There is an increased danger of accidents.

- ▶ Before unpinning the spring pin **10** and before actuation, check the pneumatic spring **41** for external damage.
- ▶ Do not use auxiliary boom with defective pneumatic spring **41**! Replace defective pneumatic springs **41**.
- ▶ If the pneumatic spring **41** is defective, support the end section **2** from below or hang it on an auxiliary crane.
- ▶ It is strictly prohibited for personnel or objects to remain within the movement range between the end section **2** and the pivot section **1**.
- ▶ It is prohibited for personnel or objects to remain within the danger zone of the moveable components.

- ▶ Attach the auxiliary rope **9** on point **E**.

DANGER
Danger of accident!
Before unpinning the spring pins **10** it must be ensured that no persons or objects are in the danger zone, particularly between the end section **2** and the pivot section **1**.

- ▶ Unpin the spring pin **10** only if there are no persons or objects in the danger zone.

- ▶ Hang the snap hook **20** on the eye **21** of the spring pin **10**.
- ▶ Hang the assembly rod **22** on the snap hook **20** and pull the spring pin **10**.
- ▶ Fold the end section **2** down with the auxiliary rope **9** until the spring pin **10** engages.
- ▶ Secure the spring pin **10**.

DANGER
Danger of accident!

- ▶ Before operation with the auxiliary boom can be started, the end section **2** must lie against the pivot section **1** and be pinned with the spring pin **10**.

- ▶ Check whether the auxiliary boom has been pinned as described in the operating instructions.
- ▶ Remove the auxiliary rope **9**.

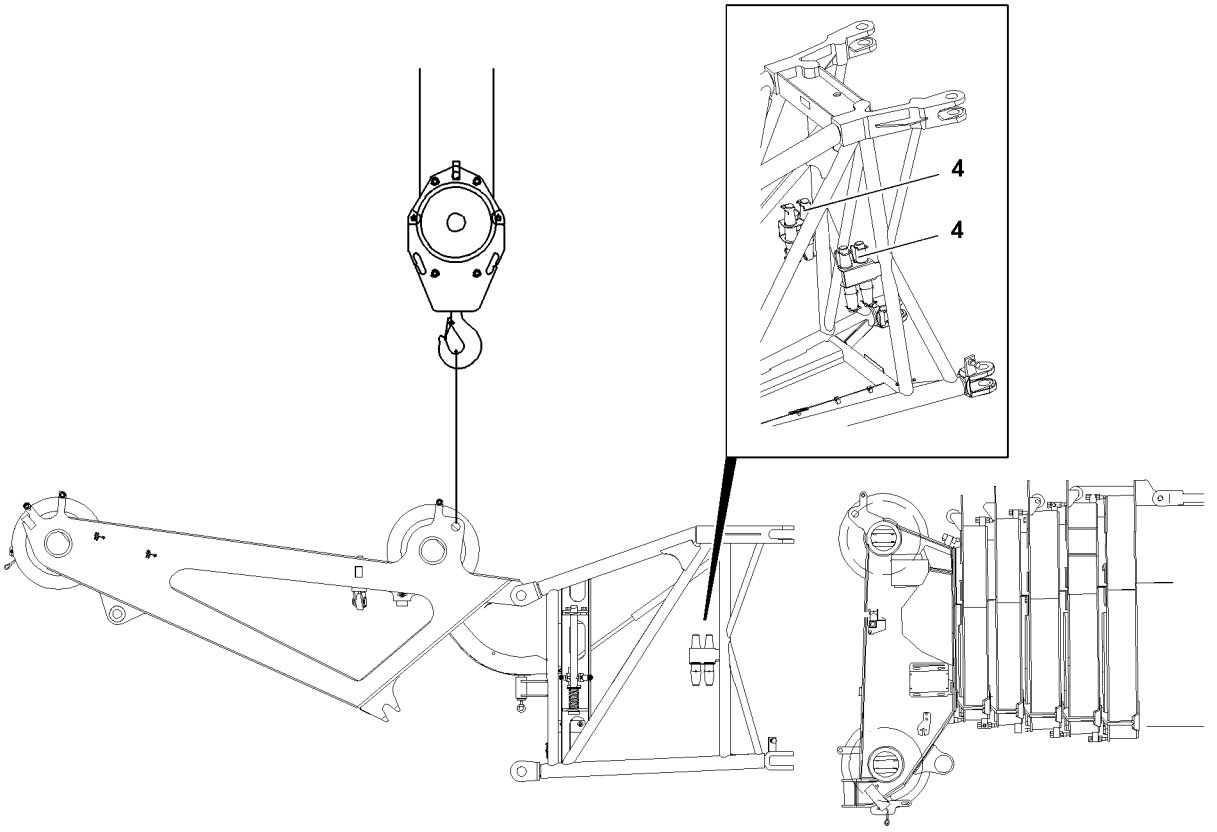

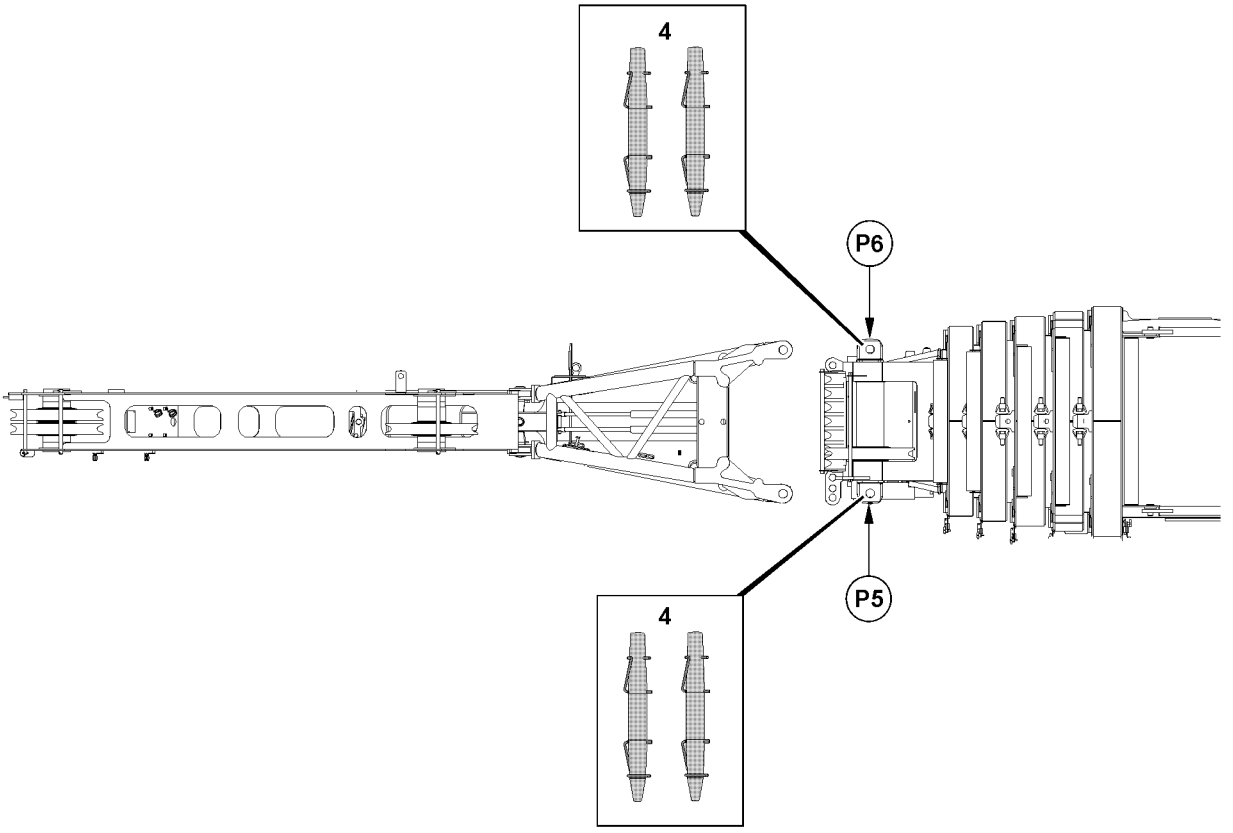

B117350

2.4 Assembling the separately transported auxiliary boom

DANGER
Danger of fatal injury due to toppling auxiliary boom!
The auxiliary boom may topple if it is incorrectly fitted.
▶ Do not allow anyone to stand beneath the auxiliary boom during installation!

▶ Attach auxiliary boom at attachment point and insert into pinning points of telescopic boom.

DANGER
Danger of fatal injury due to toppling auxiliary boom!
▶ The use of spring cotters or spring retainers on the pins **4** is prohibited!
▶ To secure the pin **4** and the pin **8**, use the special safety clips.

▶ Pin the auxiliary boom with the telescopic boom:
▶ Insert and secure pin **4**.
▶ Pin and secure the pin **4** on top on point **P6**.
▶ Pin and secure the pin **4** on the bottom at point **P5**.
▶ Pin and secure the pin **4** on the bottom at point **P6**.
▶ For the rest of the assembly see section “Folding the end section into operating position”.

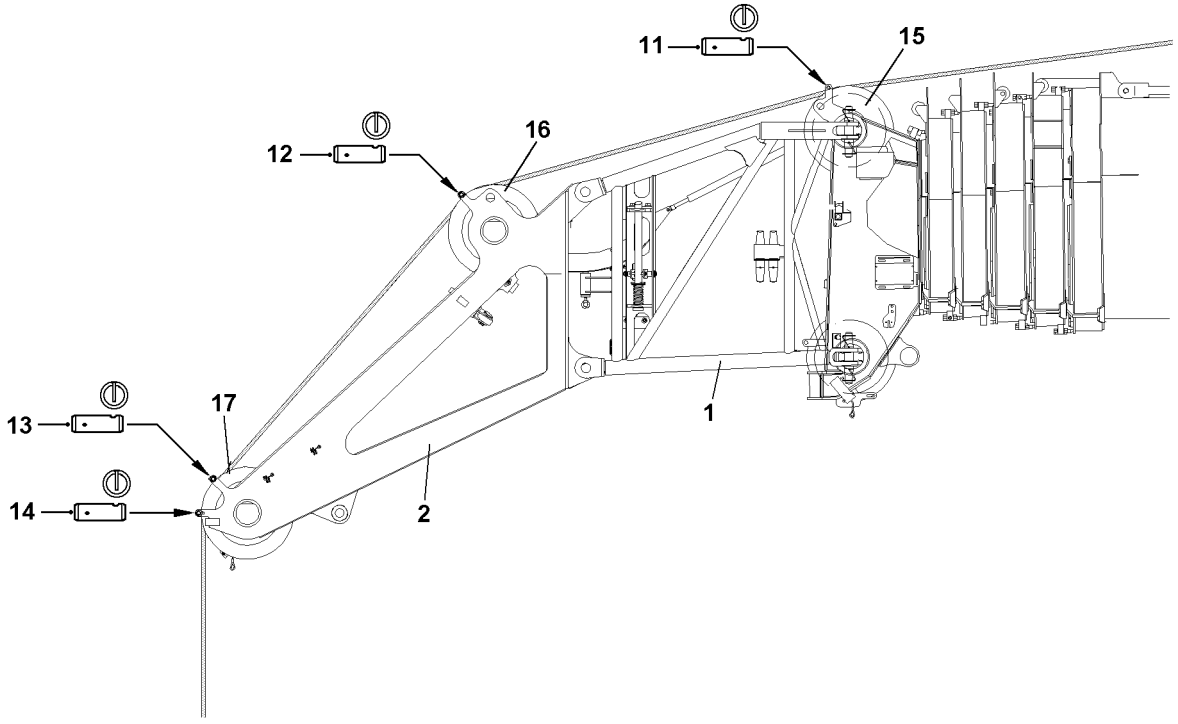

B197316

2.5 Reeving in the hoist rope

DANGER
Danger of falling from auxiliary boom!
When walking on the auxiliary boom to reeve the hoist rope in or out, there is a risk of slipping and falling from the auxiliary boom.
- ▶ Do not walk on the auxiliary boom!

- ▶ Release and unpin rope retaining pin **11**, rope retaining pin **12** , rope retaining pin **13** and rope retaining pin **14**.
- ▶ Run hoist rope over rope guide pulley **15**, rope guide pulley **16** and rope guide pulley **17**.
- ▶ Insert all rope retaining pins and secure with locking pins.
- ▶ Reeve in the hoist rope. See chapter “4.06 Rope reeving”.
- ▶ Attach the hoist limit switch weight.

Note
- ▶ For auxiliary boom operation with hook block reeved in on the telescopic boom, the weight of the hook block reeved in on the telescopic boom must be deducted from the load.

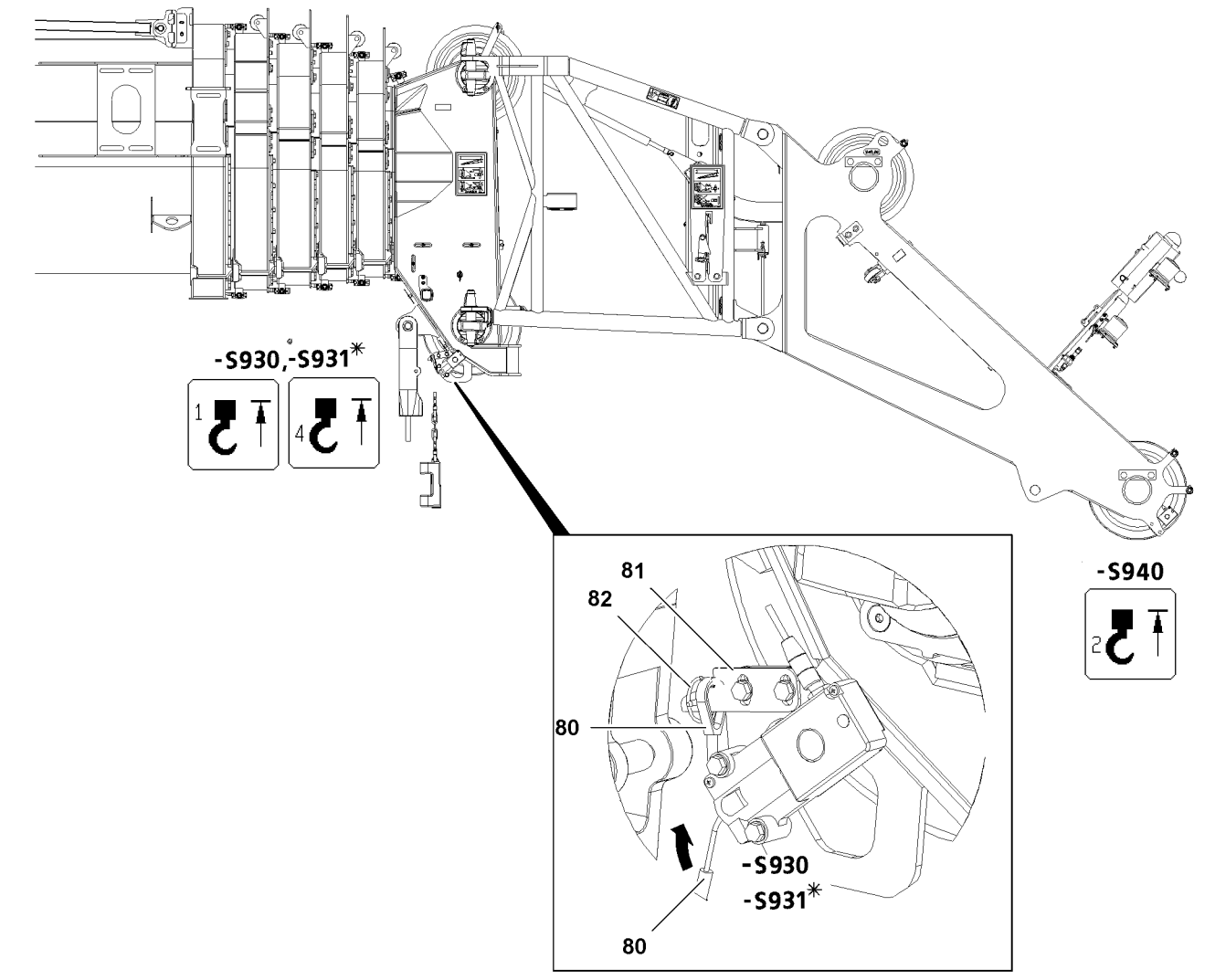
-S930,-S931*
1
4
-S940
2
81
82
80
-S930
-S931*
80

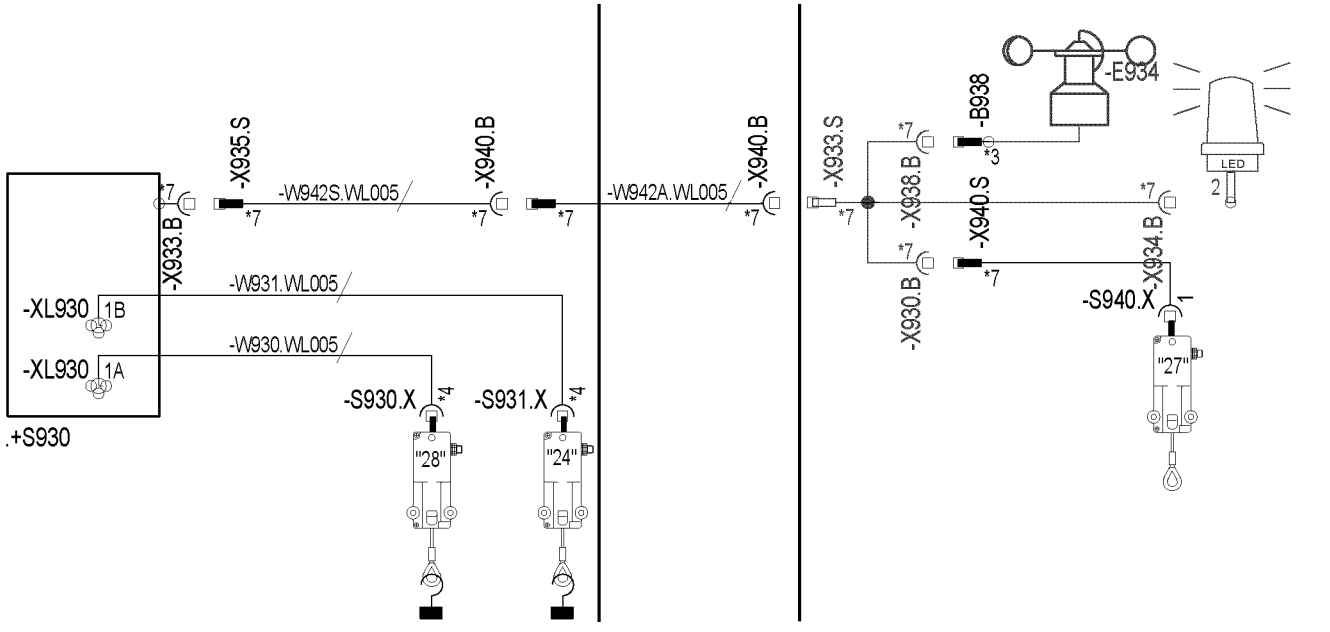
-X935.S
-X940.B
-W942S.WL005
-W942A.WL005
-X940.B
-X933.S
-E934
-B938
LED
2
-X933.B
-XL930 1B
-XL930 1A
-W931.WL005
-W930.WL005
-X938.B
-X940.S
-X934.B
-X930.B
-S940.X
1
"27"
-S930.X
-S931.X
"28"
"24"
.+S930

B117351

2.6 Electrical connections on auxiliary boom

2.6.1 Actuating the hoist limit switch mechanically, illustration 1

If you are working in “single hook mode” when using the auxiliary boom, the hoist limit switch **-S930/-S931** that is not required must be operated manually.

- ▶ Remove the hoist limit switch weight of the hoist limit switch **-S930.X** and hoist limit switch* **-S931.X**.
- ▶ Pull the hoist limit switch rope **80**, hang in on the fixed point **81** and secure with locking pin **82**.
- ▶ After auxiliary boom operation, protect the electrical connections from contamination with caps.

2.6.2 Electrical connections

Single hook operation

Note

- ▶ Only the hoist limit switch **S940** on the auxiliary boom is active during single hook operation.

- ▶ Actuate the hoist limit switch **-S930** mechanically.
- ▶ If installed on the telescopic boom:
  Actuate the hoist limit switch* **-S931** mechanically.
- ▶ Insert the cable **-W942.S** with cable plug **-X935.S** into the socket **-X933.B**.
- ▶ Plug the cable **-W942A** into the socket **-X940.B**.
- ▶ Plug the Y-adapter with the plug **-X933.S** in the socket **-X940.B**
- ▶ Plug the Y-adapter with the plug **-X940.S** in the socket **-X930.B**
- ▶ Plug in the hoist limit switch **-S940**.

Establishing the electrical connection to the LED continuous light* or flashing beacon*

Note

- ▶ To be able to establish the electrical connection to the LED continuous light and the rotating beacon, the Y-adapter on the cable must be plugged in the socket **-X940.B** with the plug **X933.S**.

- ▶ Plug the LED continuous light or flashing beacon in the socket **-X934.B**.

Establishing the electrical connection to the wind speed sensor*

Note

- ▶ To be able to establish the electrical connection to the wind speed sensor, the plug **X933.S** must be plugged in the socket **-X940.B**.

- ▶ Plug the wind speed sensor in the socket **-X938.B**.

Note

- ▶ After folding jib operation, protect the electrical connections from contamination with caps.

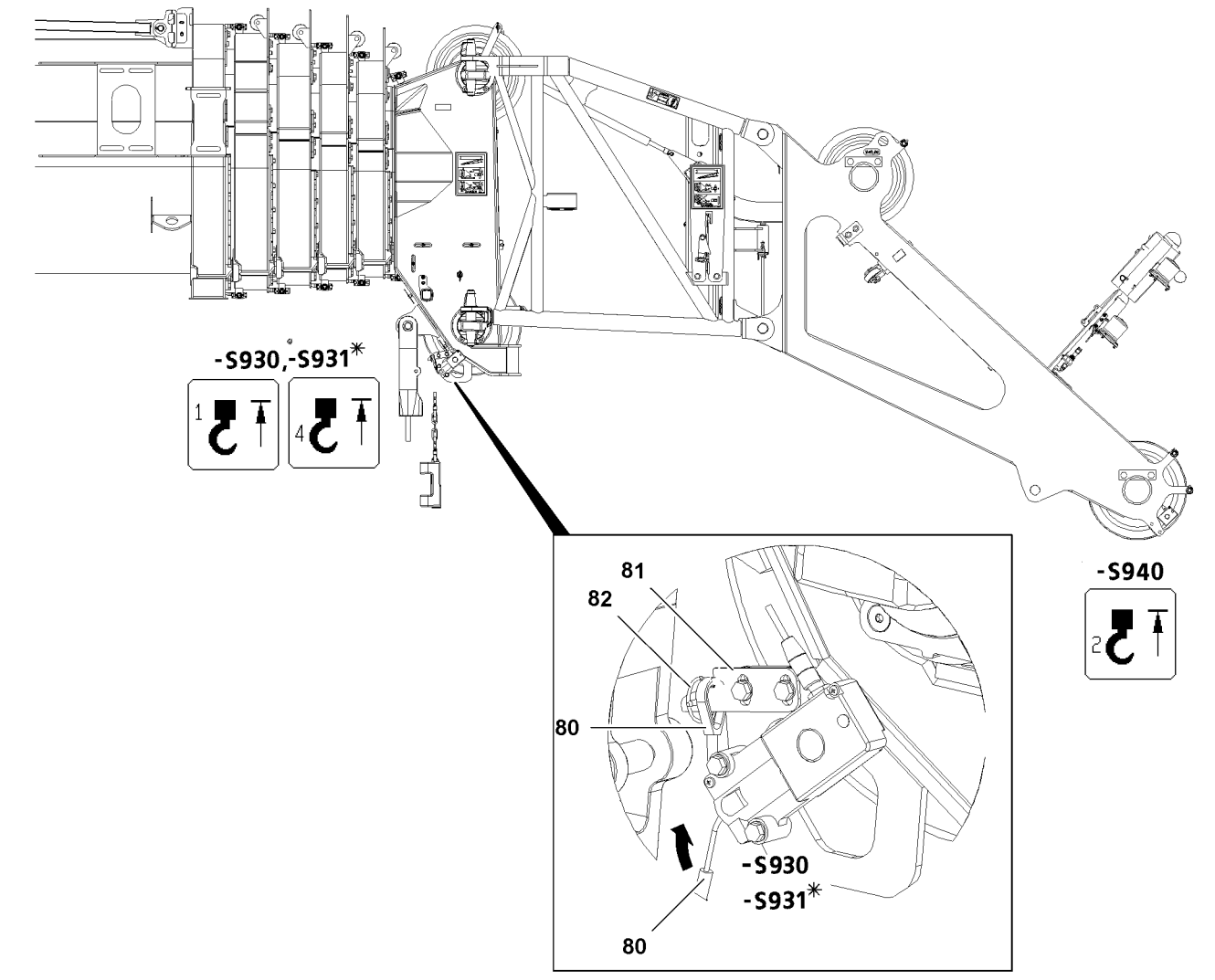
-S930,-S931*
1
4
-S940
2
81
82
80
-S930
-S931*
80

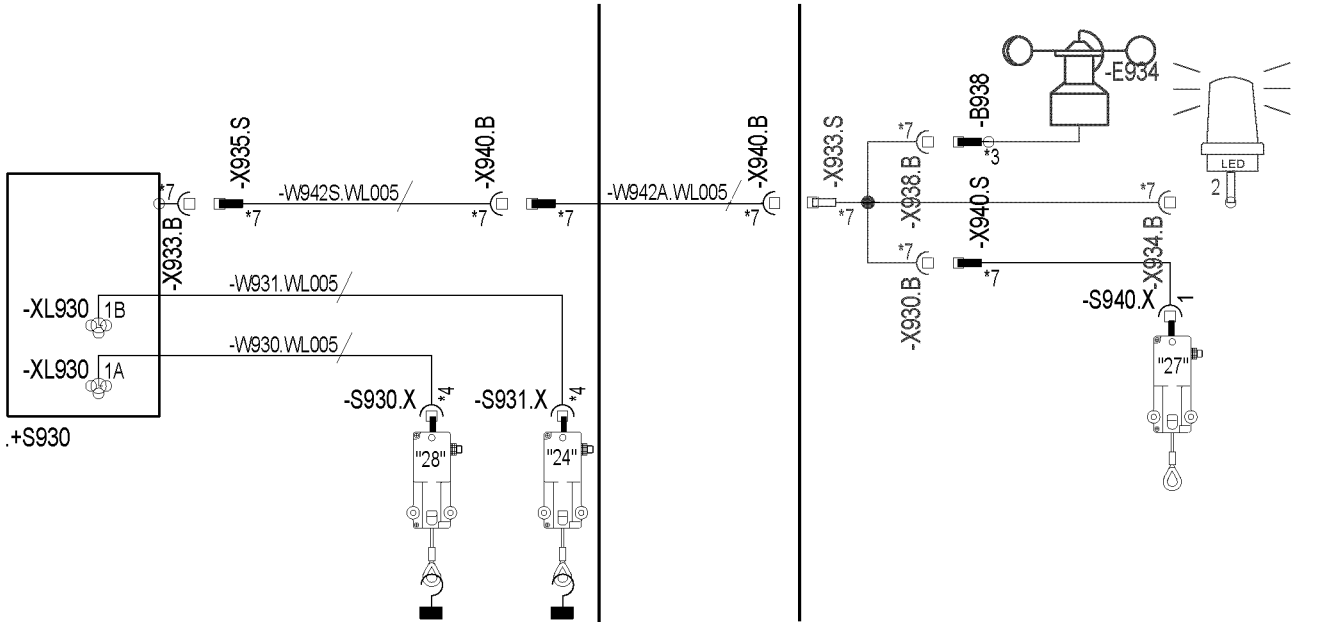
-X935.S
-X940.B
-W942S.WL005
-W942A.WL005
-X940.B
-X933.S
-E934
-B938
LED
2
-X933.B
-XL930 1B
-XL930 1A
-W931.WL005
-W930.WL005
-S930.X
-S931.X
"28"
"24"
.+S930
-X938.B
-X940.S
-X930.B
-X934.B
-S940.X
"27"

B117351

Two hook operation

Note

- During two hook operation the hoist limit switch **S930** on the telescopic boom and the hoist limit switch **S940** on the auxiliary boom are active!

- If installed on the telescopic boom:
  Actuate the hoist limit switch* **-S931** mechanically.
- Insert the cable **-W942.S** with cable plug **-X935.S** into the socket **-X933.B**.
- Plug the cable **-W942A** into the socket **-X940.B**.
- Plug the Y-adapter with the plug **-X933.S** in the socket **-X940.B**
- Plug the Y-adapter with the plug **-X940.S** in the socket **-X930.B**
- Plug in the hoist limit switch **-S940**.

Establishing the electrical connection to the LED continuous light* or flashing beacon*

Note

- To be able to establish the electrical connection to the LED continuous light and the rotating beacon, the Y-adapter on the cable must be plugged in the socket **-X940.B** with the plug **X933.S**.

- Plug the LED continuous light or flashing beacon in the socket **-X934.B**.

Establishing the electrical connection to the wind speed sensor*

Note

- To be able to establish the electrical connection to the wind speed sensor, the plug **X933.S** must be plugged in the socket **-X940.B**.

- Plug the wind speed sensor in the socket **-X938.B**.

Note

- After folding jib operation, protect the electrical connections from contamination with caps.

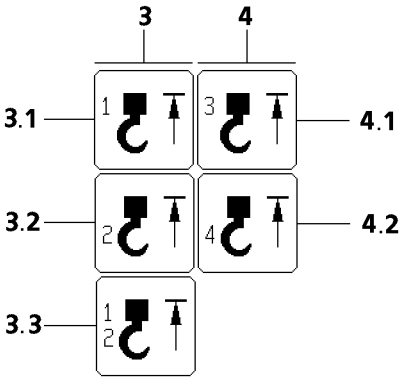

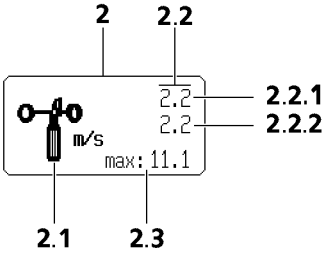

B103473

2.6.3 Function check

Make sure that the following prerequisites are met:
– All electrical connections have been made.
– The LICCON computer system is running.

Wind sensor

CAUTION
Danger of accident due to toppling crane!
The wind speed can no longer be determined when attaching a defective wind sensor.
▶ Check the function of the wind sensor after every assembly.

▶ Manually actuate the wind sensor.
Result:
– The icon element “Wind speed” **2.2** appears on the monitor.

Hoist limit switch

▶ Actuate all active hoist limit switches manually.
Result:
– The appropriate icon element “Hoist top” appears on the monitor.
– The winch turns off.

Note
▶ When replacing or changing the hoist limit switch, the respective hoist limit switch must have the correct bus address and the correct software version in order to be detected by the bus system.

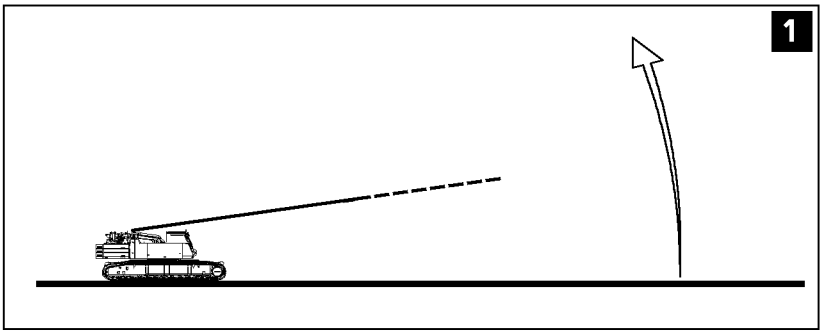

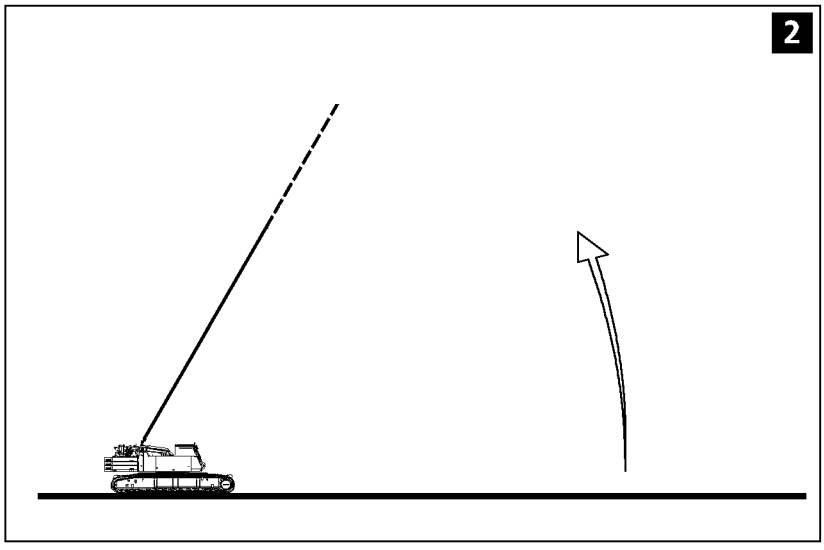

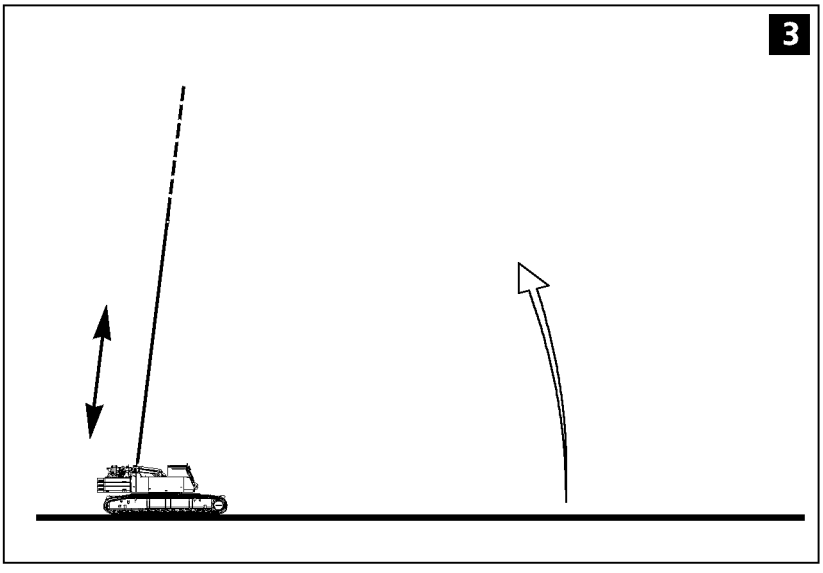

B117352

3 Erection

3.1 Preparatory work

Make sure that the following prerequisites are met:

- The track width is extended according to the load chart.
- The crane is aligned in horizontal direction.
- The counterweight has been installed on the turntable according to the load chart.
- The telescopic boom is fully telescoped in.
- The auxiliary boom has been assembled according to the load chart and the operating instructions.
- All limit switches have been correctly installed and are fully functional.
- All pin connections have been secured.
- The hoist rope has been correctly placed in the rope pulleys and is secured with the rope retaining pins to prevent it from jumping out.
- There is no “debris” on the telescopic boom and the auxiliary boom.
- The telescopic boom, the auxiliary boom and its components (such as: limit switch, airplane warning light, wind speed sensor) must be free of snow and ice in winter.

DANGER
Danger of accident!
Incorrectly installed or non-functioning limits switches as well as falling parts (such as: pins, cotter / spring pins, ice) can cause accidents.
▶ Install all limit switches, pins and spring pins properly.

▶ Check if all prerequisites have been met.

3.2 Erection procedure

DANGER
Danger of accident due to toppling crane!
The radii specified in the load chart may not be exceeded or fallen below, even if there is no load on the hook! If this regulation is not observed, the crane can topple over.
▶ Compare and check the settings on the LICCON computer system with the actual set up configuration.

Adjustment of the LICCON overload protection, refer to Crane operating instructions, chapter 4.02.

▶ Set and confirm the LICCON overload protection according to the required set up configuration.
▶ Luff the telescopic boom up with installed auxiliary boom until the LICCON issues the release.
▶ Telescope the telescopic boom out to the values specified in the load chart.

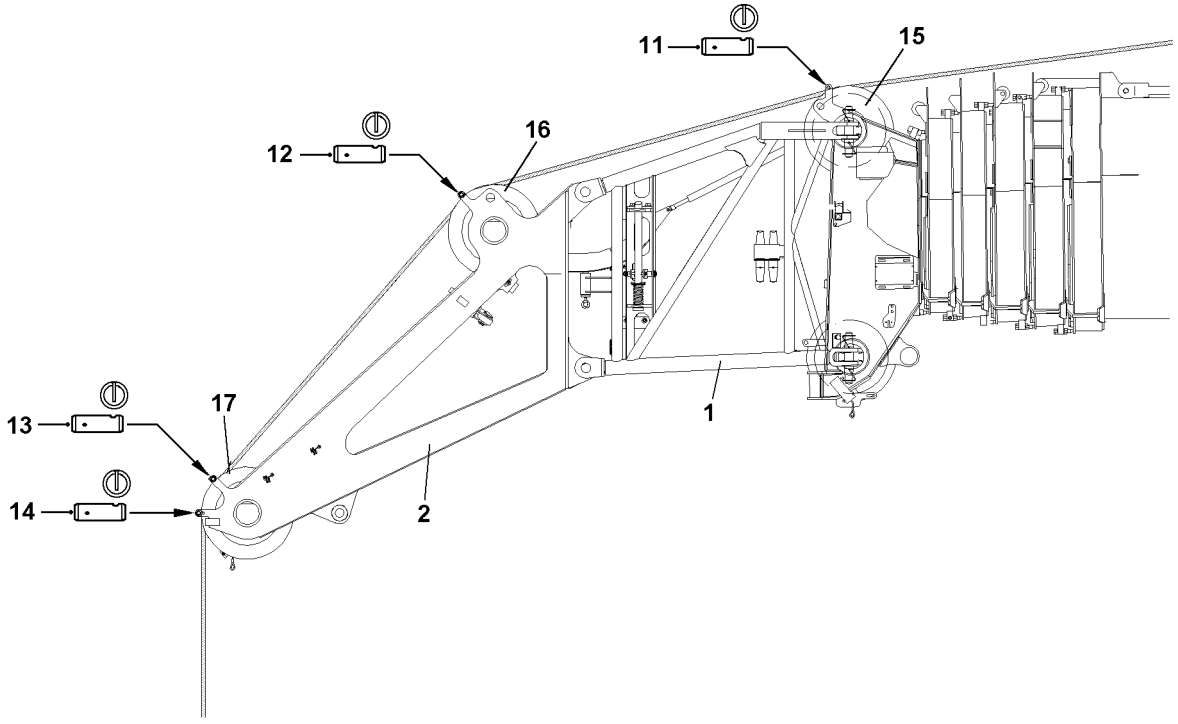

B197316

4 Unreeving the hoist rope

DANGER
Danger of falling from auxiliary boom!
When walking on the auxiliary boom to reeve the hoist rope in or out, there is a risk of slipping and falling from the auxiliary boom.
▶ Do not walk on the auxiliary boom.

4.1 Unreeving the hoist rope

Make sure that the following prerequisites are met:
– The telescopic boom is telescoped in.
– The hook block / load hook has been placed on the ground.
– The hoist rope is detached from the rope fixed point.
– The hoist limit switch weight and the chain have been removed.

▶ Release and unpin rope retaining pin **11**, rope retaining pin **12** , rope retaining pin **13** and rope retaining pin **14**.
▶ Spool the hoist rope up.
▶ Insert the rope retaining pin **11**, rope retaining pin **12**, rope retaining pin **13** and rope retaining pin **14** and secure with locking pins.

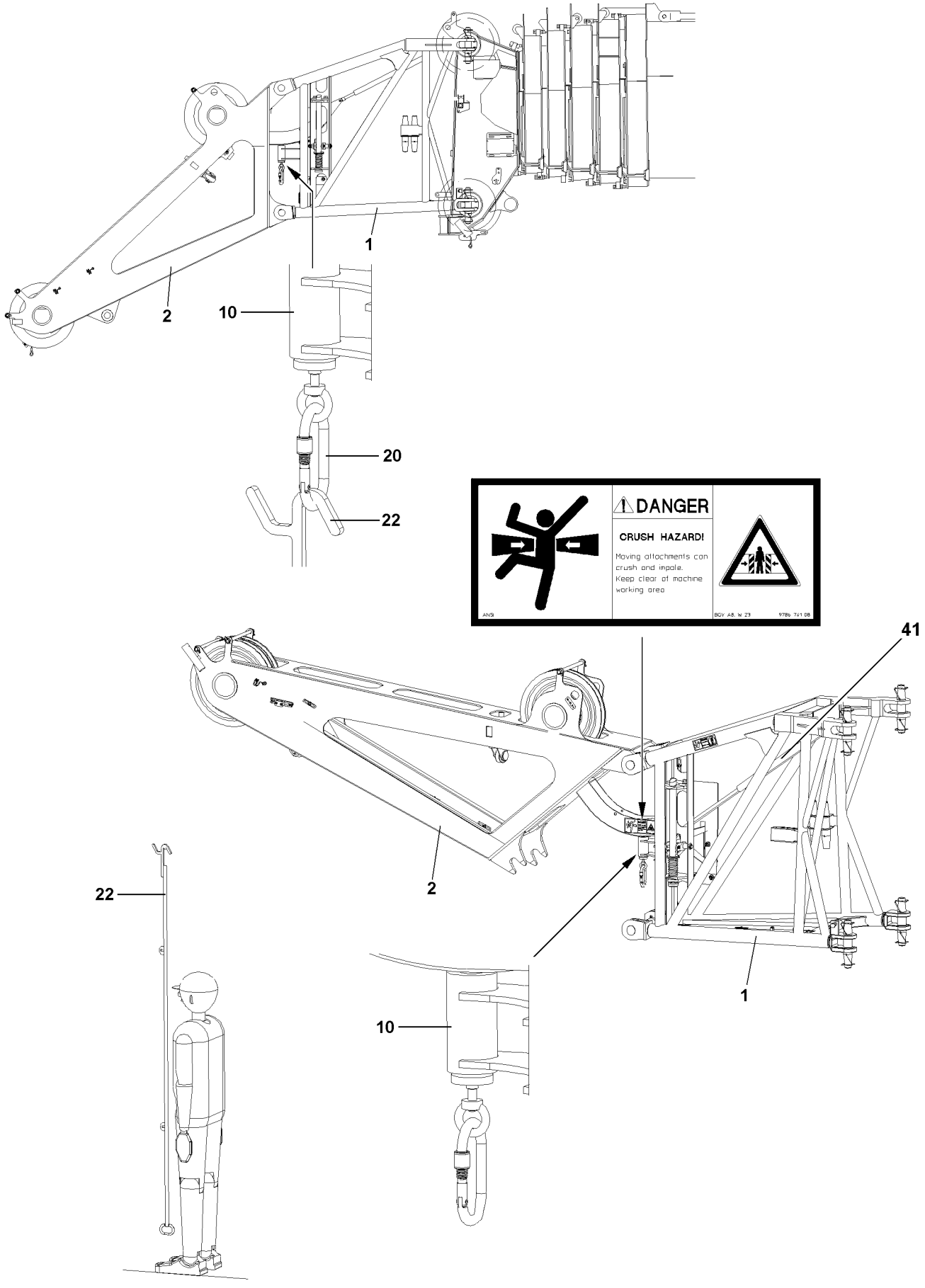
1
2
10
20
22
DANGER
CRUSH HAZARD!
Moving attachments can crush and impale.
Keep clear of machine working area
ANSI
BGV A8, W 29
9786 741 08
41
2
22
1
10

B112124

5 Disassembly of the auxiliary boom

5.1 General

DANGER
Danger of fatal injury due to toppling auxiliary boom!
The auxiliary boom may topple if it is incorrectly dismantled.
- ▶ Standing under the auxiliary boom during the swing operation is prohibited.
- ▶ It is prohibited for anyone to remain within the swing range as well as the folding area of the auxiliary boom.
- ▶ The auxiliary boom must be secured by an auxiliary rope during the swing process.

WARNING
Danger of falling!
During assembly and disassembly, personnel must be secured with appropriate aids to prevent them from falling! If this is not observed, assembly personnel could fall and suffer fatal injuries!
- ▶ All work aloft, where there is a danger of falling must be carried out with suitable aids.
- ▶ If fall arrest equipment is available, then it must be used, see Crane operating instructions, chapter 2.06.
- ▶ If aids are not available and work cannot be carried out from the ground, then the assembly personnel must secure themselves with the supplied fall arrest system to prevent falling, see Crane operating instructions, chapter 2.04.
- ▶ The supplied fall arrest system must be fastened on the fastening and hook points. For safety points, see Crane operating instructions, chapter 2.06.
- ▶ Only step on the aids, ladders and catwalks with clean shoes.
- ▶ Keep aids, ladders and catwalks free of heavy dirt, snow and ice.
- ▶ Do not walk on the auxiliary boom.

Make sure that the following prerequisites are met:
- The crane is aligned in horizontal direction.
- The counterweight has been installed on the turntable according to the load chart.
- The telescopic boom is fully telescoped in.
- The electrical connection of the auxiliary boom has been disconnected.
- The telescopic boom has been luffed down to the rear or the side in the 0° position.

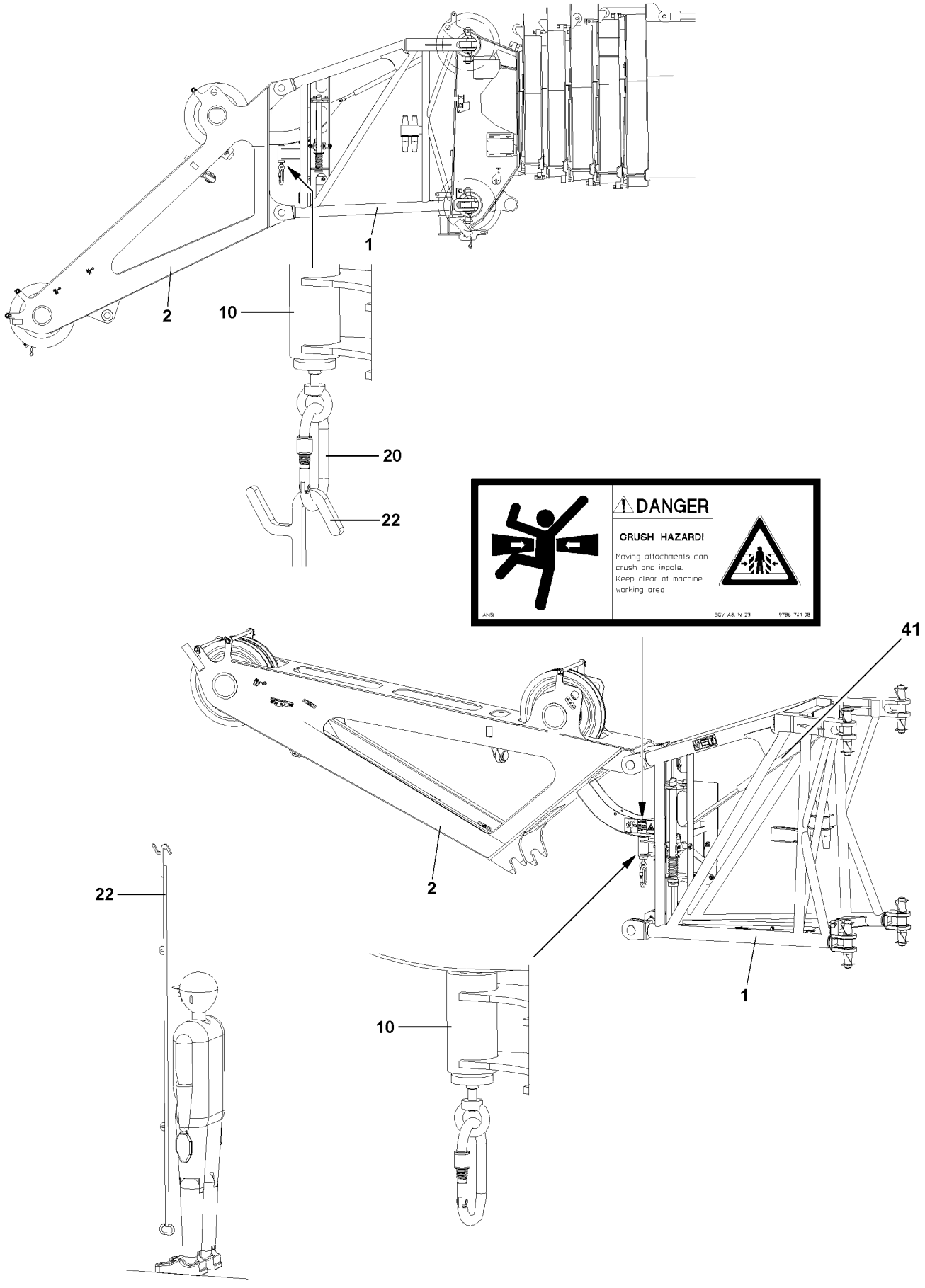
1
2
10
20
22
DANGER
CRUSH HAZARD!
Moving attachments can crush and impale.
Keep clear of machine working area
ANSI
BGV A8, W 29
9786 741 08
41
2
22
1
10

B112124

5.2 Dismantling the auxiliary boom carried on the crane

5.2.1 Folding the end section into transport position

DANGER
Danger of fatal injury in case of defective pneumatic spring!
Defective pneumatic springs **41** no longer provide the supporting action for the movable components on the auxiliary boom.
If the pneumatic spring **41** is defective, the end section **2** can fall down and fatally or seriously injure personnel.
There is an increased danger of accidents.

- ▶ Before unpinning the spring pin **10** and before actuation, check the pneumatic spring **41** for external damage.
- ▶ Do not use auxiliary boom with defective pneumatic spring **41**. Replace defective pneumatic springs **41**.
- ▶ If the pneumatic spring **41** is defective, support the end section **2** from below or hang it on an auxiliary crane.
- ▶ It is strictly prohibited for personnel or objects to remain within the movement range between the end section **2** and the pivot section **1**.
- ▶ It is prohibited for personnel or objects to remain within the danger zone of the moveable components.

- ▶ Check the pneumatic spring **41** for external damage.
- ▶ Hang the assembly rod **22** on the snap hook **20** and pull the spring pin **10**.
- ▶ Fold the end section **2** up with the assembly rod **22** until the spring pin **10** engages.

DANGER
Danger of accident!

- ▶ The spring pin **10** must be engaged and secured **before** the auxiliary boom is swung into transport position.

- ▶ Engage and secure the spring pin **10**.

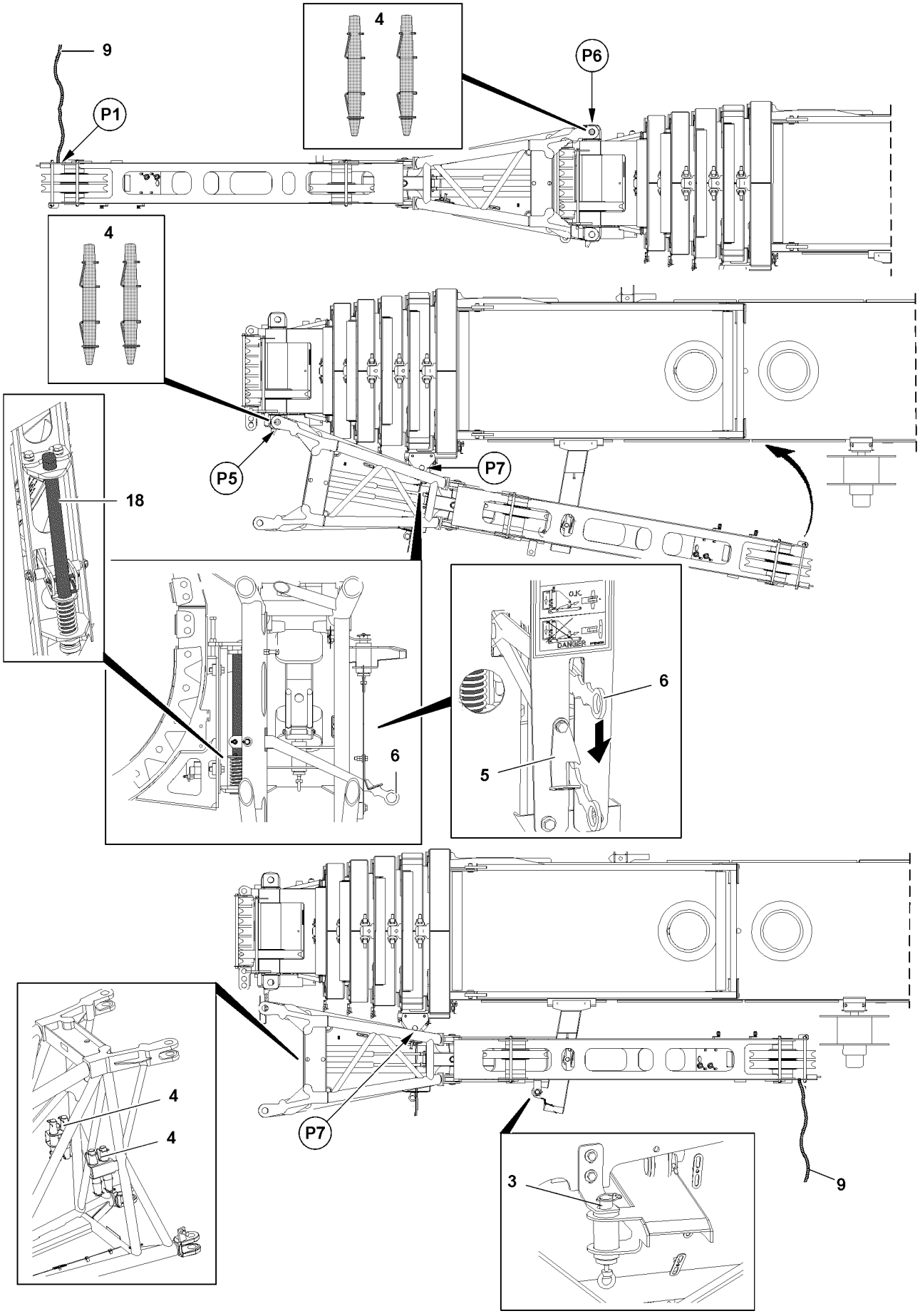

B117353

5.2.2 Swinging the auxiliary boom into the transport position

Make sure that the following prerequisite is met:

– The telescopic boom is luffed up to the rear or to the side by 1°.

Note

▶ If the telescopic boom is not luffed up to 1°, then the auxiliary boom cannot be removed.

▶ Attach the auxiliary rope **9** on point **P1**.

DANGER

The auxiliary boom may swing out involuntarily!

While unpinning the pin **4** on point **P6**, the auxiliary boom can swing out unintentionally.

In order to prevent the auxiliary boom from involuntarily swinging out:

▶ Hold the auxiliary boom with the auxiliary rope.

▶ It is prohibited to lean the auxiliary ladder against the auxiliary boom.

▶ Release the pin **4** on point **P6** and unpin.

▶ Disengage the hand lever **6** with the assembly rod from the platform **7** and pull downward.

▶ Swing the auxiliary boom in with the auxiliary rope **9** until the lock **18** audibly engages on point **P7**.

▶ Check if the lock **18** has engaged properly on point **P7**.

▶ Secure hand lever **6** with retaining bracket **5**.

DANGER

Danger of fatal injury due to toppling auxiliary boom!

If the pins **4** are unpinned on point **P5** before the lock **18** has audibly engaged, then the auxiliary boom will fall down and possibly fatally injure the assembly personnel.

▶ The pins **4** may not be unpinned until the lock **18** has audibly engaged on point **P7** and the hand lever **6** has been secured with the safety bracket **5**.

▶ Release the pin **4** on point **P5** and unpin.

▶ Release and unpin the spring pin **3**.

▶ Swing the auxiliary boom in until the spring pin **3** engages.

▶ Secure the spring pin **3**.

▶ Remove the auxiliary rope **9**.

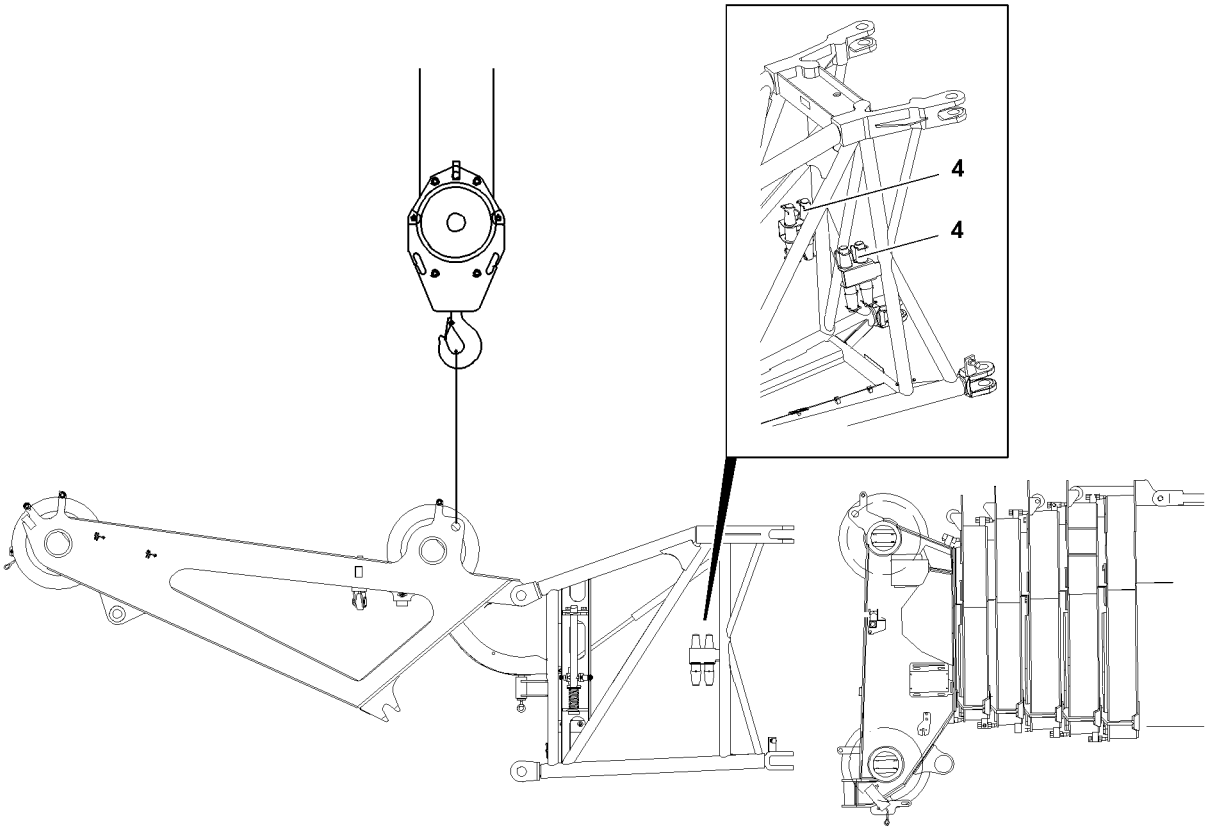

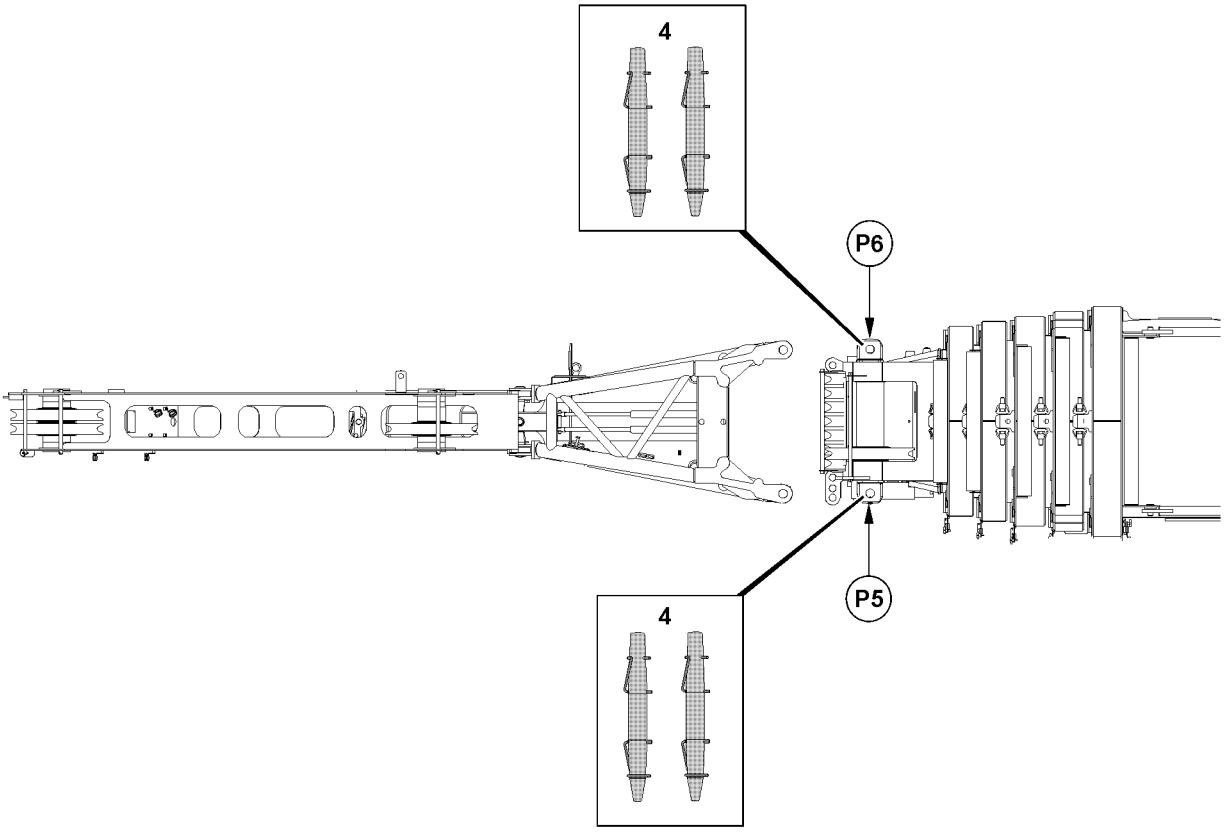

B117350

5.3 Disassembly of separately transported auxiliary boom

- Attach the auxiliary crane on the fastening point of the auxiliary boom.

DANGER
Danger of accident when removing the auxiliary boom!
Failing to comply with the following conditions can result in fatal injury to the assembly personnel during disassembly.

- When knocking out the pins, no personnel may remain under the auxiliary boom!
- Attach the auxiliary crane so that no angular pull occurs.
- Only lift a weight with the auxiliary crane that corresponds to the weight of the auxiliary boom that is being removed.
- The auxiliary boom may detach suddenly because of distortion.
- Do not remove auxiliary boom until it has been secured with the auxiliary crane to prevent it from falling.
- It is prohibited to lean the auxiliary ladder against the auxiliary boom.

- Tighten the ropes so that auxiliary boom is prevented from falling.
- Unpin the auxiliary boom on the telescopic boom:
- Release the pin **4** on top on point **P5** and unpin.
- Release the pin **4** on top on point **P6** and unpin.
- Release the pin **4** on the bottom on point **P5** and unpin.
- Release the pin **4** on the bottom on point **P6** and unpin.
- Place the auxiliary boom onto the transport vehicle.

B195219

1 Minimum required hook block weight

WARNING

Falling components and hook block!

If the chosen hook block weight is not large enough. then the hoist rope pulls the hook block between the boom head and the winch from a certain hoisting height suddenly upward. As a result, the boom head and the hook block can be damaged. Damaged components and the hoist rope between the boom head and the winch can fall down.

If slack rope forms between the winch and the boom head when spooling the winch out, then the hook block can suddenly fall down.

Personnel can be severely injured or killed!

- ▶ Calculate the minimum required hook block weight before lifting the load!
- ▶ Select the weight of the hook block depending on the calculation!

If the weight of the hook block is not sufficient:

- ▶ Select a heavier hook block or increase the weight of the hook block with fastening items, load tackle, auxiliary weights or modification kits!

NOTICE

Rope damage due to insufficient weight of the hook block!

If the hook block is operated with a higher reeving than is required by the load on the respective boom length, the minimum required hook block weight increases.

If the hook block weight is too low to tighten the hoist rope sufficiently, spooling problems may occur on the winches when lowering and lifting the hook block due to slack rope formation. Rope damage can result.

If no minimum system-related hoist reeving is required for the operating mode:

- ▶ Reeve the hook block at the minimum depending on the maximum rope pull and the weight of the load to be lifted!

If loads are taken up at great heights:

- ▶ If possible, increase the reeving!

If the reeving was increased:

- ▶ Deduct the hoist rope weight for the additional strands from the load.

If the hook is lowered under the crane placement surface:

- ▶ Deduct the hoist rope weight of the hoist rope under the crane placement surface from the load.

If the weight of the hook block is not sufficient:

- ▶ Select a heavier hook block or increase the weight of the hook block with fastening items, load tackle, auxiliary weights or modification kits!

Note

Recommendation for selection of hook block weight!

If the maximum load capacity for the respective boom configuration is not exceeded by an additional weight increase of the hook block:

- ▶ Increase the minimum required hook block weight additionally by at least 10 %!

If an additional weight increase of the hook block due to the maximum load capacity for the respective boom configuration is not possible:

- ▶ Lower the hook block only with utmost caution!

Note
Observe the permissible hook block weights for erection and take down of the boom system!
If the permissible hook block weight for erection and take down of the boom system is exceeded due to the own weight increase of the hook block, then the boom system cannot be erected or taken down with this hook block weight.
▶ Observe the permissible hook block weights for erection and take down in the erection and take down charts!
If the permissible hook block weight for erection and take down is exceeded:
▶ Remove auxiliary weights for the erection and take down of the boom system!

1.1 Calculating the minimum required hook block weight

$$G = L \times M \times N \times F$$

B109881

Formula to determine the minimum required hook block weight

Abbreviation	Description	Unit
G	Minimum required hook block weight	kg
L	Overall boom length	m
M	Rope weight	kg/m
N	Reeving	-
F	Factor	-

Explanation of variables to calculate the minimum required hook block weight

1.2 Determining the rope weight for the rope diameter

Rope diameter	Rope weight M
13 mm	0.85 kg/m
15 mm	1.12 kg/m
17 mm	1.45 kg/m
19 mm	1.81 kg/m
21 mm	2.24 kg/m
23 mm	2.67 kg/m
25 mm	3.09 kg/m
28 mm	3.94 kg/m
30 mm	4.46 kg/m
32 mm	5.09 kg/m
38 mm	7.21 kg/m
40 mm	7.99 kg/m
52 mm	13.50 kg/m

Rope diameter and rope weight

1.3 Determining the factor for reeving

Reeving N	Factor F
1	1.31
2	1.34
3	1.36
4	1.39
5	1.41
6	1.44
7	1.46
8	1.49
9	1.52
10	1.54
11	1.57
12	1.60
13	1.63
14	1.65
15	1.68
16	1.71
17	1.74
18	1.77
19	1.80
20	1.83
21	1.87
22	1.90
23	1.93
24	1.96
25	2.00
26	2.03
27	2.06
28	2.10
29	2.13
30	2.17

Reeving and factor

1.4 Calculation examples

1.4.1 Calculating the required hook block weight for crane operation with 1 hoist rope winch in single operation with single hook block

Crane configuration:

– Length of main boom: 70 m
– Length of auxiliary boom: 28 m
– Rope diameter: 28 mm
– Reeving: 12 rope strands

Variables for calculation:

L = overall boom length = 98 m
M = rope weight for rope diameter 28 mm = 3.94 kg/m
N = reeving = 12
F = Factor for 12 rope strands = 1.60

Calculation:

G = **L** x **M** x **N** x **F**
G = 98 m x 3.94 kg/m x 12 x 1.60
G = 7414 kg
The minimum required hook block weight must be 7414 kg and must be increased additionally by at least 10 % (741 kg) to 8155 kg. The maximum load capacity for the respective boom configuration may not be exceeded by the additional weight increase of the hook block.

1.4.2 Calculating the required hook block weight for crane operation with 2 hoist rope winches in parallel operation with double hook block

Crane configuration:

– Length of main boom: 70 m
– Length of auxiliary boom: 28 m
– Rope diameter: 28 mm
– Reeving: 2 x 8 rope strands

Variables for calculation:

L = overall boom length = 98 m
M = rope weight for rope diameter 28 mm = 3.94 kg/m
N = reeving = (2 x 8)
F = Factor for 8 rope strands = 1.49

Calculation:

G = **L** x **M** x (**2** x **N**) x **F**
G = 98 m x 3.94 kg/m x (2 x 8) x 1.49
G = 9205 kg
The minimum required hook block weight must be 9205 kg and must be increased additionally by at least 10 % (921 kg) to 10126 kg. The maximum load capacity for the respective boom configuration may not be exceeded by the additional weight increase of the hook block.

2 Procedure in case of slack rope

2.1 Lowering the hook block if slack rope forms

If the hook block can no longer be lowered due to slack rope formation, then the following steps must be carried out.

2.1.1 Spooling op loose hoist rope

▶ Spool up loose hoist rope between the boom head and the wind carefully onto the winch.

Note

▶ A slight rope slack must remain between the boom head and the winch!

2.1.2 Luffing the boom down

NOTICE

Danger of collision!

When luffing the boom down, the hoist rope length can shorten and pull the hook block against the boom head.

▶ Monitor the distance of the hook block to the boom head!

▶ Luff the boom down carefully.

Result:

– The hoist rope between the boom head and the winch is tensioned.

2.1.3 Lowering the hook block

▶ Lower the hook block carefully with the hoist gear.

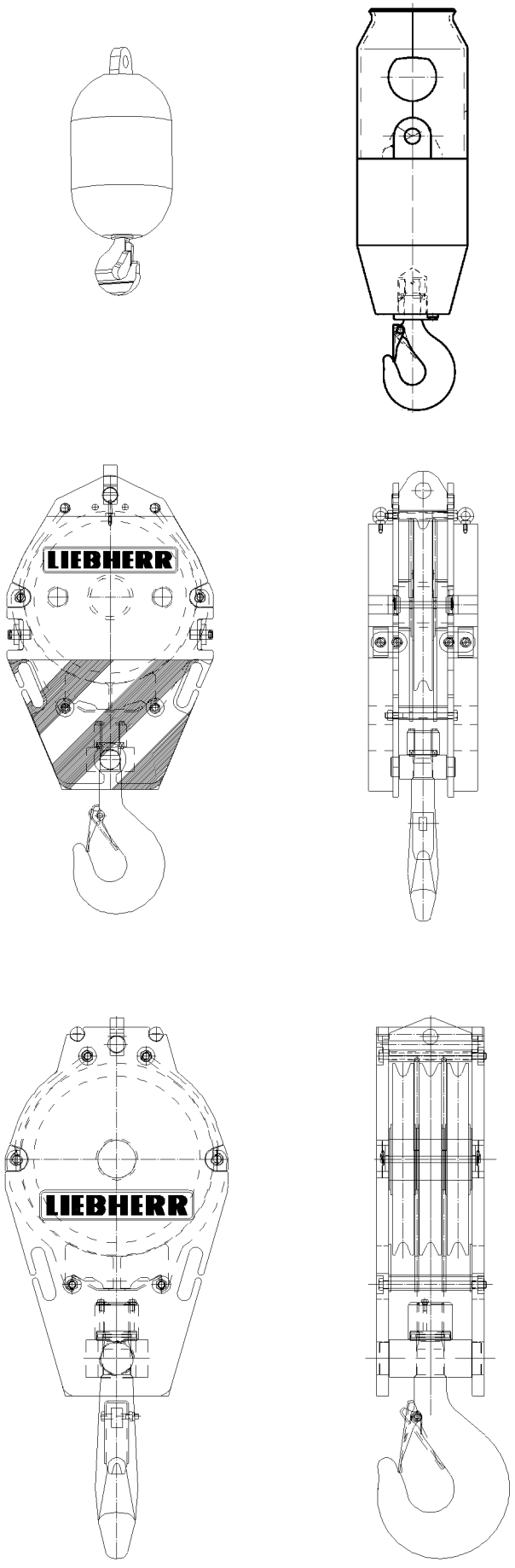

B108963

3 Hook block overview

3.1 Handling of hook blocks

Note

- ▶ For the load hooks and hook blocks approved for this crane type refer to the separate load chart manual!
- ▶ The hook blocks shown in this chapter are only examples and can differ from your hook block in type and number of rope pulleys. The different assembly and disassembly procedures are therefore only an example of the description for a number of different hook blocks!

DANGER

Hook block weights!

If the data in the erection and take down charts as well as the load charts are not observed, dangerous situations up to toppling of the crane can occur!

Personnel can be severely injured or killed, in addition, high property damage can result!

- ▶ Observe the data in the erection and take down charts!
- ▶ The specifications in the load charts must be adhered to!
- ▶ The crane operator bears the sole and full responsibility for the adherence to the data in the erection and take down charts as well as the load charts!

Differently sized hook blocks can be used for various loads.

NOTICE

Rope damage due to insufficient hook block weight!

If the hook block weight is too low to tighten the hoist rope sufficiently, spooling problems may occur on the winches when lowering and lifting the hook block due to slack rope formation!

The hoist rope can be damaged!

- ▶ In order to prevent spooling problems on the winches, the hook block weight may be increased with auxiliary weights, if necessary!
- ▶ If problems develop in the assembly and set up conditions due to the weight increase of the hook block, auxiliary weights must be removed again!

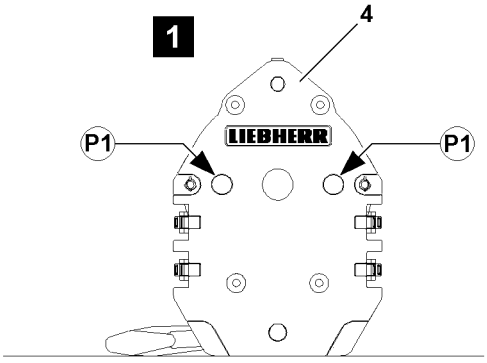

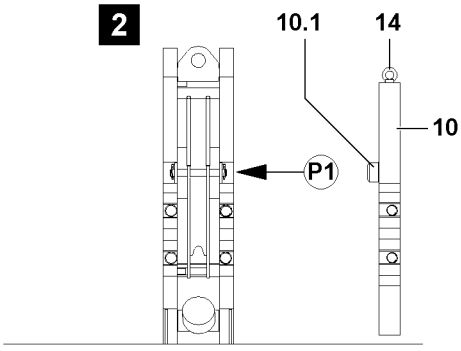

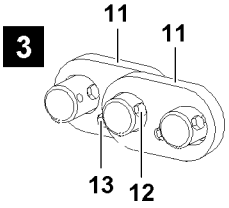

B108965

4 Installing the single blocks

4.1 Installing the auxiliary weights

Note

▶ The own weight for each auxiliary weight is marked on the auxiliary weight!

WARNING

Toppling of hook block!

If the auxiliary weights are installed one-sided, the hook block can topple over!

Personnel can be severely injured or killed!

▶ The auxiliary weights may only be installed **individually** and alternately on the left and right on the hook block!

▶ When the required auxiliary weight is installed on the hook block, the difference between the left and right side may never be more than one auxiliary weight!

▶ Asymmetrical installation of auxiliary weights is prohibited!

▶ Do not exceed the maximum permissible own weight of the hook block! The maximum permissible own weight is engraved on ballastable hook blocks. See “Engraving WT max.”.

Make sure that the following prerequisite is met:

– The hook block is placed on the ground.

WARNING

Falling auxiliary weights!

If the auxiliary weights are not properly installed on the hook block, then they can fall down during installation or in crane operation!

Personnel can be severely injured or killed!

▶ Standing under a suspended auxiliary weight is prohibited!

▶ Make sure that the auxiliary weights are properly installed and secured!

▶ Crane operation with insufficiently secured auxiliary weights is prohibited!

▶ Attach the auxiliary weight **10** on the ring screw **14** on the auxiliary crane.

WARNING

Danger of crushing!

When swinging the auxiliary weights to the hook block, personnel can be severely injured or killed!

Fingers, hands and arms can be crushed or severed!

▶ It is prohibited for anyone to remain between the hook block and the auxiliary weight!

▶ Swing auxiliary weights in to the hook block with utmost caution and at the least possible speed!

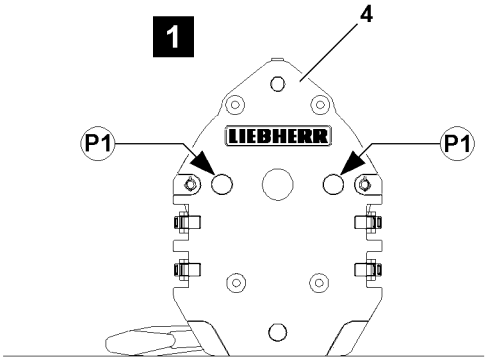

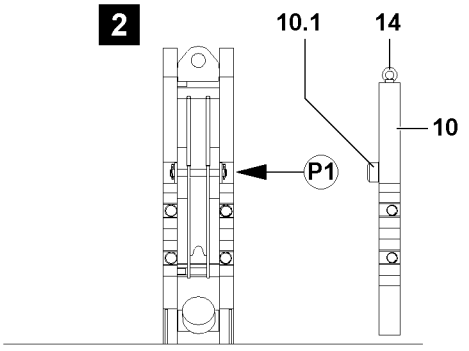

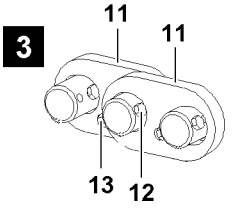

B108965

- ▶ Align the auxiliary weight **10** on the hook block.
- ▶ Move the centering pin **10.1** of the auxiliary weight into the centering bores **P1** on the hook block.

WARNING
Falling auxiliary weights!
If all mounting brackets **11** are removed simultaneously on an unsecured auxiliary weight, then the auxiliary weight can fall down!
Personnel can be severely injured or killed!
- ▶ Never remove all mounting brackets **11** of an unsecured auxiliary weight at the same time!
- ▶ Always install or remove the mounting brackets **11** alternately!

- ▶ Install the mounting brackets **11** on the side and connect the hook block with the auxiliary weight **10**, illustration **3**.
- ▶ Secure the mounting brackets **11** with screws **12** and lock nuts **13**, illustration **3**.

Note
- ▶ Additional auxiliary weights must be connected with the mounting brackets **11**!

WARNING
Falling auxiliary weights!
The auxiliary weights can fall down by removing the auxiliary crane!
Personnel can be severely injured or killed!
- ▶ Remove the auxiliary crane only when it is ensured that the auxiliary weight **10** is properly secured with the mounting brackets **11**!

- ▶ When the respective auxiliary weight is properly installed and secured:
  Remove the auxiliary crane.

4.2 Preparing the hook block for crane operation

Note
- ▶ The reeving of the hook blocks is described in chapter 4.06 of the Crane operating instructions!
- ▶ Observe the “permissible hook block weights” in the erection and take down charts!

- ▶ Reeve the hoist rope according to the instructions in chapter 4.06 of the Crane operating instructions and the reeving plans!

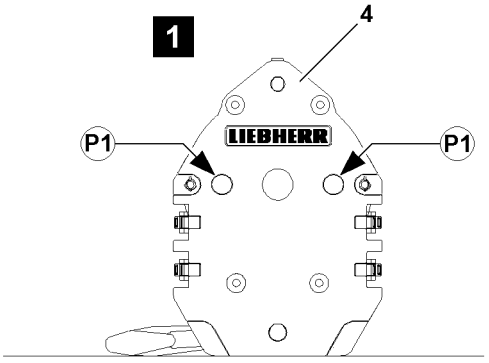

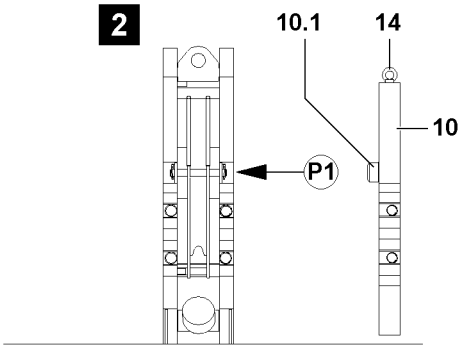

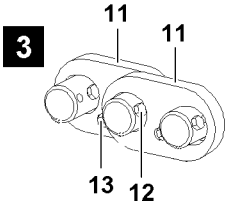

B108965

5 Removing the single blocks

5.1 Preparing the hook block for removal

Note
- ▶ The unreeving of the hook blocks is described in chapter 4.06 of the Crane operating instructions!
- ▶ Observe the “permissible hook block weights” in the erection and take down charts!

Make sure that the following prerequisites are met:
- – The ground is sufficiently load bearing to take on the weight of the hook block and the auxiliary weights safely.
- – The ground is level and horizontal.

▶ Lower the hook block completely to the ground.

▶ When the hook block was placed down on the ground properly:
Unreeve the hoist rope according to chapter 4.06 of the Crane operating instructions!

5.2 Removing the auxiliary weights

Note
- ▶ The own weight for each auxiliary weight is marked on the auxiliary weight!

WARNING
Toppling of hook block!
If the auxiliary weights are removed one-sided, the hook block can topple over!
Personnel can be severely injured or killed!
- ▶ The auxiliary weights may only be removed **individually** and alternately on the left and right on the hook block!
- ▶ The difference between the left and the right side at removal of the auxiliary weights may never be more than one auxiliary weight!
- ▶ Asymmetrical removal of auxiliary weights is prohibited!

WARNING
Falling auxiliary weights!
If the auxiliary weights on the pulley block are not properly removed, then they can fall down at removal!
Personnel can be severely injured or killed!
- ▶ Standing under a suspended auxiliary weight is prohibited!

▶ Attach the auxiliary weight **10** on the ring screw **14** on the auxiliary crane.

▶ Tension the fastening equipment carefully.

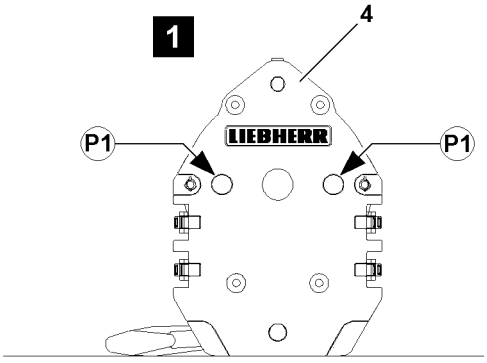

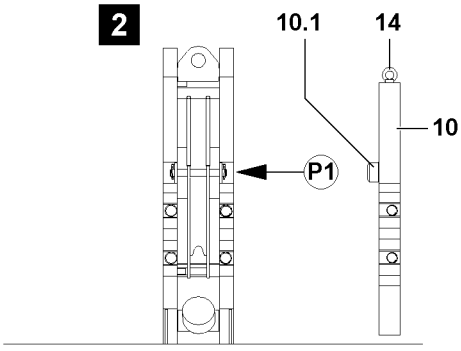

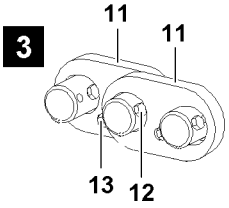

B108965

WARNING
Oscillating auxiliary weights!
During the removal of the auxiliary weights, the auxiliary weights can start to swing back and forth!
Personnel can be severely injured or killed!
- ▶ It is prohibited for anyone to remain in the danger zone!
- ▶ Make sure that the auxiliary weight which is being removed is properly attached on the auxiliary crane before releasing the mounting brackets!
- ▶ Angular pull is prohibited!

▶ When the fastening equipment is tensioned on the auxiliary weight:
Release the screw connection on the mounting brackets of the outermost auxiliary weight and remove the screws.

WARNING
Falling auxiliary weights!
If all mounting brackets **11** are removed simultaneously on an unsecured auxiliary weight, then the auxiliary weight can fall down!
Personnel can be severely injured or killed!
- ▶ Never remove all mounting brackets **11** of an unsecured auxiliary weight at the same time!
- ▶ Always install or remove the mounting brackets **11** alternately!

▶ Pull the mounting brackets **11** off to the side.

WARNING
Falling auxiliary weights!
If additional auxiliary weights which are being removed are released, then these auxiliary weights can fall down!
Personnel can be severely injured or killed!
- ▶ Make sure, before removing the outermost auxiliary weight, that the other auxiliary weights are secured with the mounting brackets **11**!

▶ If additional mounting brackets **11** must be removed to release the outermost auxiliary weight:
Reinstall the mounting brackets **11** again immediately, so that only the auxiliary weight which is being removed is released.

▶ Lift the auxiliary weight with the auxiliary crane from the hook block.

▶ Place the auxiliary weight onto the ground.

▶ Remove the auxiliary crane.

▶ Remove additional auxiliary weights as described above.

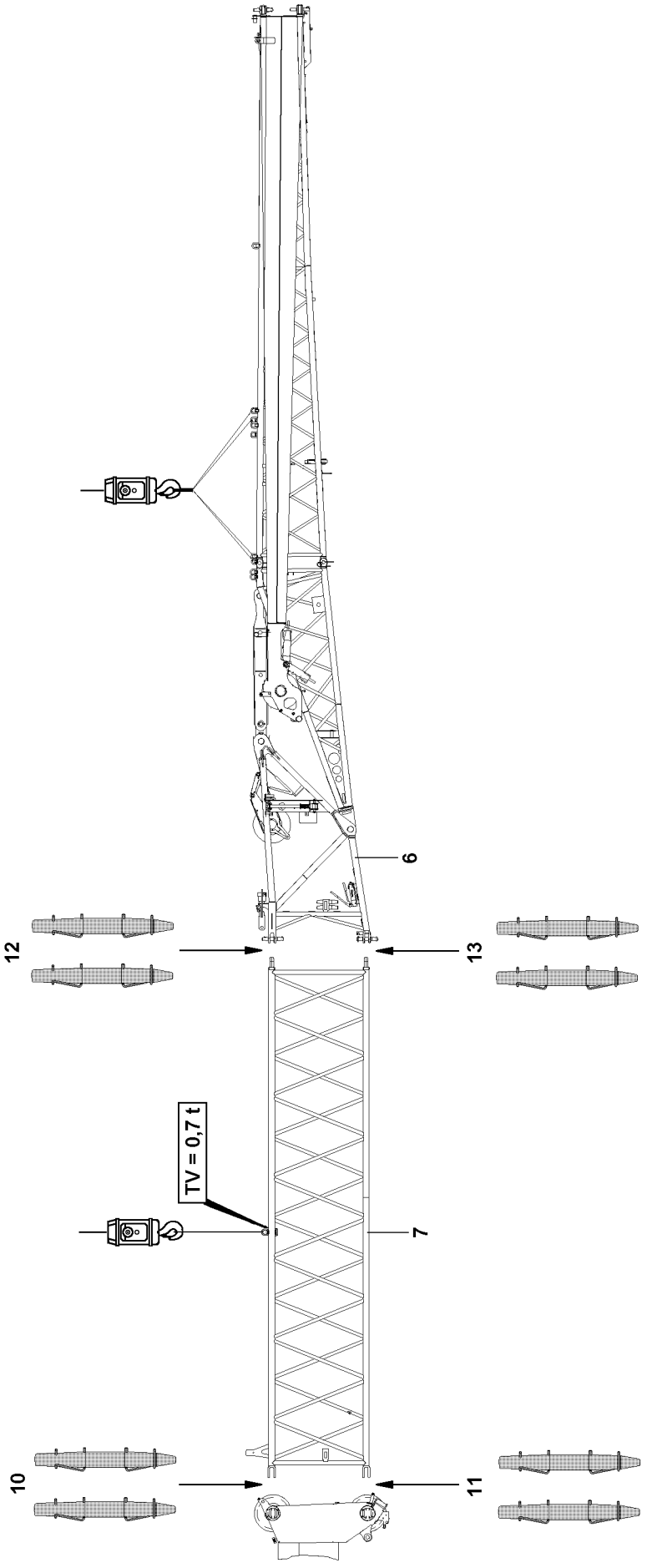

B114346

1 General

In order to increase the lifting height on this crane, a 7 m long telescopic boom extension can be installed.

DANGER
Danger of falling!
During assembly and disassembly, assembly personnel must be secured with appropriate aids to prevent them from falling. If this is not observed, assembly personnel could fall and suffer life-threatening injuries.
- ▶ Also refer to hazard warnings in the Crane operating instructions, chapter 5.01, section “Assembly / disassembly”.

1.1 Telescopic boom extension fastening points

DANGER
Danger of accident due to incorrect attachment!
Life-threatening situations can arise if the telescopic boom extension is improperly or incorrectly attached!
- ▶ Attach the telescopic boom extension according to the fastening points shown on the signs!
- ▶ The appropriate fastening eye hooks / fastening points are marked with signs.
- ▶ Attaching the telescopic boom extension on non-intended points or on any arbitrary location is **prohibited**!

CAUTION
Damage of fastening points!
If the fastening equipment is too short, then the fastening points on the telescopic boom extension can be damaged!
- ▶ To attach the telescopic boom extension, fastening equipment with a strand length of at least 2000 mm each must be used!

Description	Abbreviation	Weight
Telescopic boom extension	TV	0.7 t

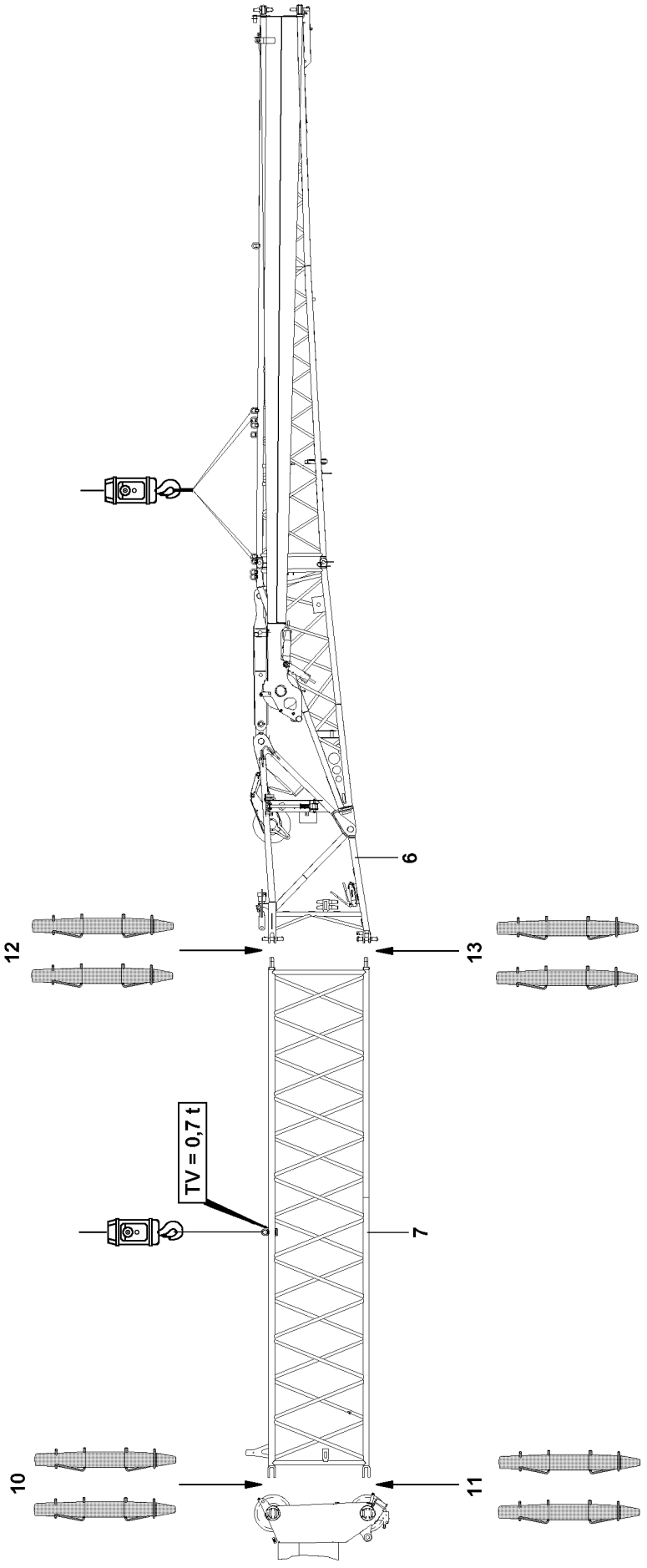

B114346

2 Assembly

DANGER
Danger of accident during the assembly / disassembly of the telescopic boom extension!
If the following conditions are not fulfilled, people may be fatally injured during assembly / disassembly.
- ▶ When knocking the pins out, no personnel may be underneath the telescopic boom extension!
- ▶ Unpin or insert the pins in the sequence specified in the operating instructions!
- ▶ Unpin or insert the pins from the top to the bottom!
- ▶ The use of cotter pins or spring retainers is prohibited on pins **10**, pins **11**, pins **12** and pins **13**!
- ▶ To secure the pins **10**, pins **11**, pins **12** and pins **13**, use the special retaining clips.
- ▶ Attach the auxiliary crane so that no diagonal pull occurs!

Make sure that the following prerequisites are met:
- The crane is properly supported and horizontally aligned.
- The counterweight has been installed on the turntable according to the load chart.
- The telescopic boom is fully telescoped in.
- The telescopic boom has been luffed down to the rear or the side in the 0° position.
- An auxiliary crane is on hand.

2.1 Assembly procedure

- ▶ Attach telescopic boom extension **7** to the auxiliary crane and insert into the fork heads at the telescopic boom.
- ▶ Pin the telescopic boom extension **7** with the telescopic boom: Insert the pins **10** on both sides from top to bottom and secure.
- ▶ Insert the pins **11** on both sides from top to bottom and secure.

For the fastening points of the folding jib, see chapter 5.02.
- ▶ Attach folding jib to the auxiliary crane and insert into the fork heads at the telescopic boom extension **7**.
- ▶ Pin the folding jib with the telescopic boom extension **7**: Insert the pins **12** on both sides from top to bottom and secure.
- ▶ Insert the pins **13** on both sides from top to bottom and secure.

For more information concerning folding jib assembly see chapter 5.02.
- ▶ Completely assemble the folding jib.

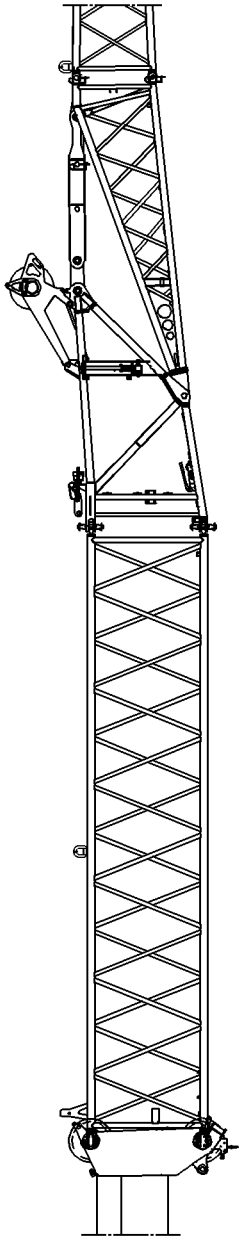

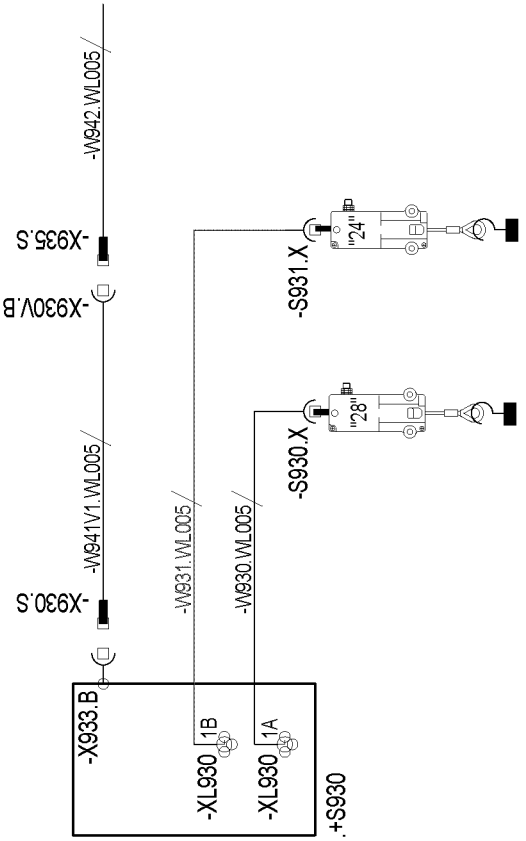
-W942.WL005
-X935.S
-X930V.B
-W941V1.WL005
-X930.S
-W931.WL005
-W930.WL005
-S931.X
"24"
-S930.X
"28"
-X933.B
-XL930
1B
-XL930
1A
.+S930

B114347

3 Establishing the electrical / hydraulic connections

3.1 Establishing the hydraulic connection

A hydraulic connection to the folding jib must only be established for a hydraulic angle adjustment (TNZK operation). Hydraulic lines cannot be incorrectly connected due to the different diameters of the hydraulic connections.

- ▶ For operation with a hydraulic folding jib:
  Establish the hydraulic connections.
- ▶ After operation with a hydraulic folding jib:
  Protect the connections from contamination.

3.2 Establishing the electrical connection

- ▶ Insert the cable plug **-X930.S** into the socket **-X933B**.
- ▶ Insert the cable plug **-X935S** into the socket **-X930VB**.

For remaining electrical connections to the folding jib, see Crane operating instructions, Chapter 5.02.

- ▶ Establish the electrical connection for the folding jib.

4 Erection

Carry out the erection according to the Crane operating instructions, chapter 5.02.

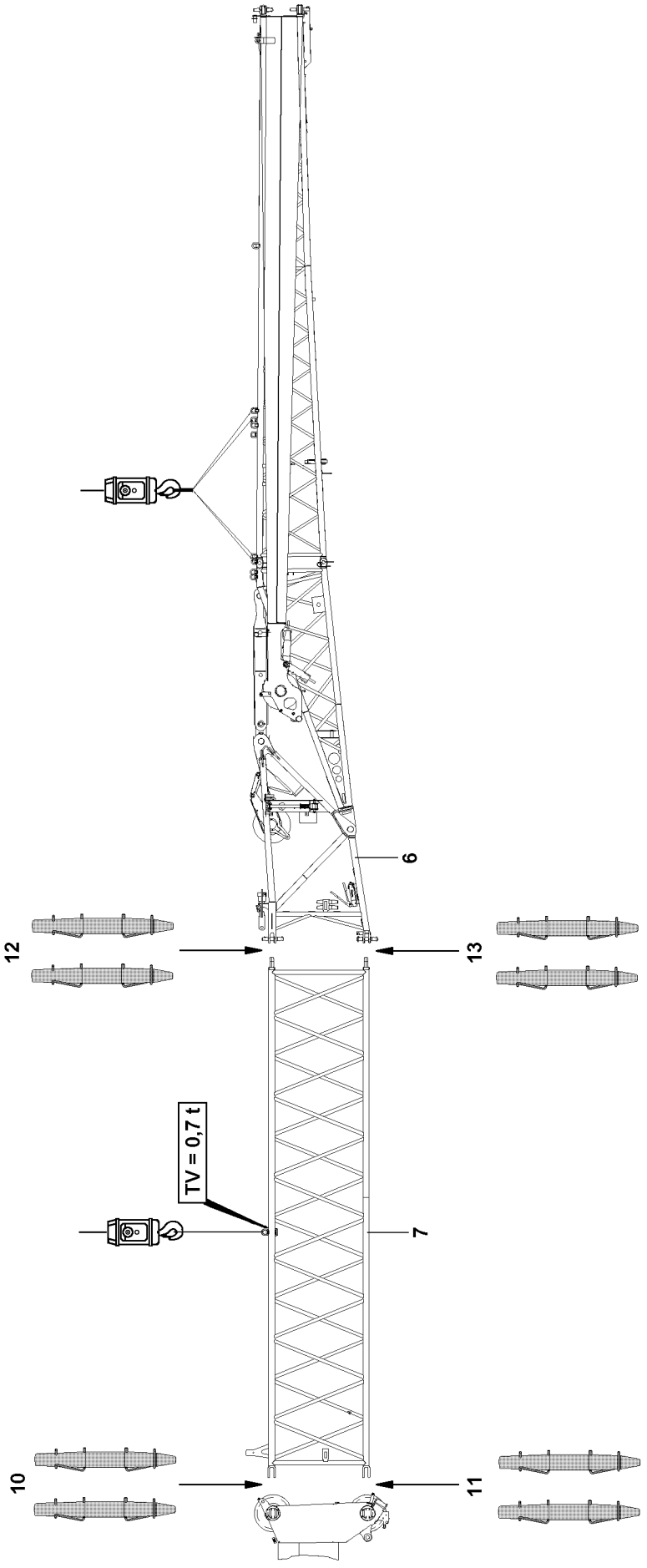

B114346

5 Disassembly

DANGER
Danger of accident during the assembly / disassembly of the telescopic boom extension!
If the following conditions are not fulfilled, people may be fatally injured during assembly / disassembly.

- ▶ When knocking the pins out, no personnel may be underneath the telescopic boom extension or the folding jib!
- ▶ Remove or insert the pins in the sequence specified in the operating instructions!
- ▶ Unpin or insert the pins from the top to the bottom!
- ▶ Attach the auxiliary crane so that no diagonal pull occurs!
- ▶ Only lift a weight with the auxiliary crane that corresponds to the weight of the folding jib or telescopic boom extension that is being removed!
- ▶ The folding jib or telescopic boom extension may detach suddenly because of distortion!
- ▶ Do not remove folding jib or telescopic boom extension until it has been secured with the auxiliary crane to prevent it from falling!
- ▶ Leaning the auxiliary ladder on the folding jib or the telescopic boom extension is prohibited if it is just being removed!

DANGER
Danger of accident due to incorrect attachment!
Life-threatening situations can arise if the telescopic boom extension is improperly or incorrectly attached!

- ▶ Attach the telescopic boom extension according to the fastening points shown on the signs!
- ▶ The appropriate fastening eye hooks / fastening points are marked with signs.
- ▶ Attaching the telescopic boom extension on non-intended points or on any arbitrary location is **prohibited**!

CAUTION
Damage of fastening points!
If the fastening equipment is too short, then the fastening points on the telescopic boom extension can be damaged!

- ▶ To attach the telescopic boom extension, fastening equipment with a strand length of at least 2000 mm each must be used!

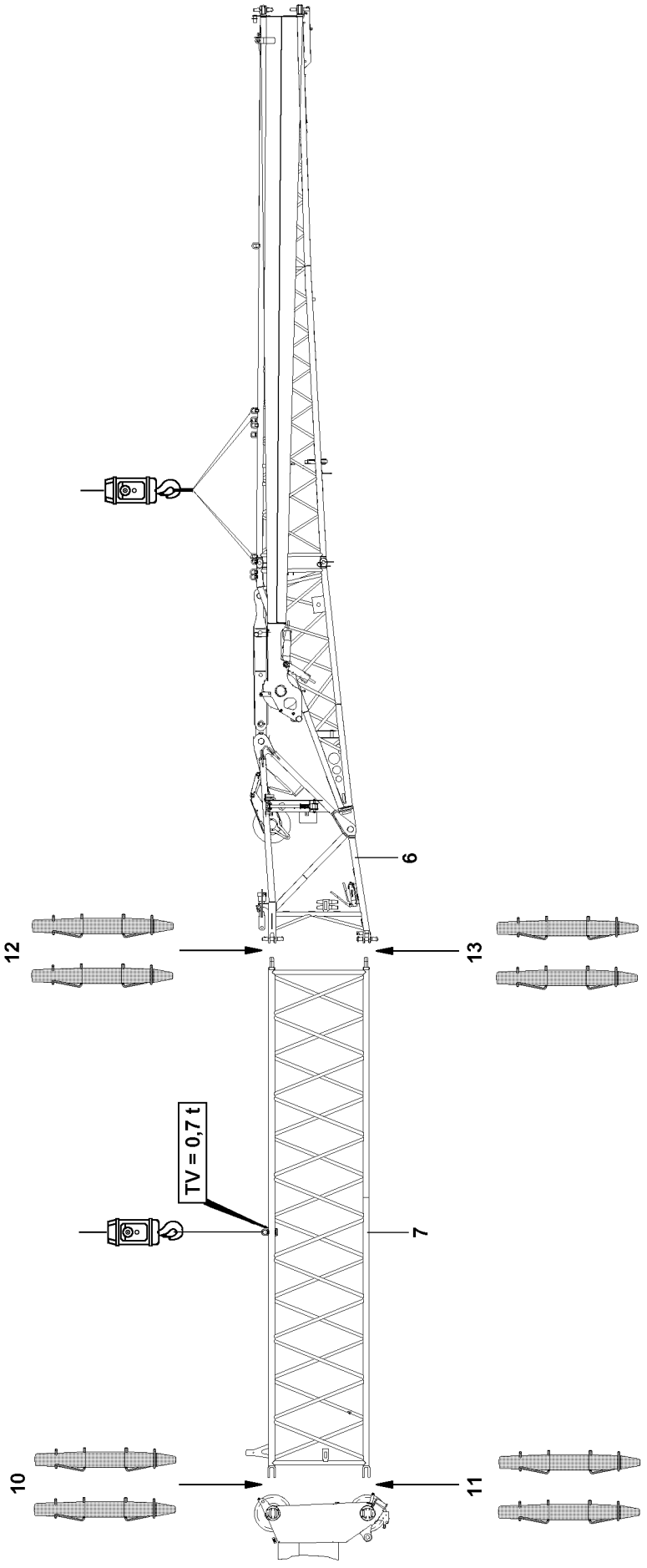

B114346

5.1 Disassembly procedure

Make sure that the following prerequisites are met:
- The crane is properly supported and horizontally aligned.
- The telescopic boom is fully telescoped in.
- The telescopic boom has been luffed down to the rear or the side in the 0° position.
- The folding jib is in the 0° position.
- The end section, if it is carried along, is folded in and locked.
- The electrical and hydraulic lines have been disconnected.
- An auxiliary crane is on hand.

Note

▶ Fastening points folding jib, see Crane operating instructions, chapter 5.02.

▶ Attach the fastening ropes on the folding jib and tighten until the folding jib is secured to prevent it from falling.

▶ Release pins **13** at both sides and unpin from top to bottom.

▶ Release pins **12** at both sides and unpin from top to bottom.

▶ Put down folding jib.

▶ Attach the fastening ropes on the telescopic boom extension **7** and tension until the telescopic boom extension **7** is secured to prevent it from falling down.

▶ Release pins **10** at both sides and unpin from top to bottom.

▶ Release pins **11** at both sides and unpin from top to bottom.

▶ Place the telescopic boom extension **7** down.

The following tasks are only necessary if the folding jib is to be driven along with the crane.

▶ Attach folding jib to the auxiliary crane and insert into the fork heads at the telescopic boom.

▶ Pin the folding jib to telescopic boom: Insert the pins **10** on both sides from top to bottom and secure.

▶ Insert the pins **11** on both sides from top to bottom and secure.

For the remaining disassembly of the folding jib, see Crane operating instructions, chapter 5.02.

▶ Completely disassemble the folding jib.

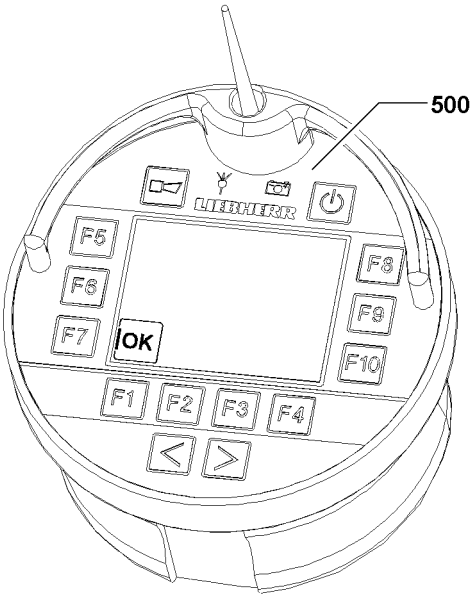

B114221

1 Display / operating element Bluetooth™ Terminal

The Bluetooth™ Terminal **500** (abbreviated BTT) is a combined display / operating element for the crane. Selected crane movements can be carried out. The data exchange is made via the Bluetooth™ Basis (abbreviated BTB) installed on the crane. The data exchange can also be made wireless as well as via a connector cable.
The BTT is operated using function keys F1 - F10 and two changeover buttons.

Note
- ▶ The illustrations and / or icons on the BTT display only serve as examples.
- ▶ They may differ from the crane!
- ▶ The Bluetooth™ Terminal **500** is abbreviated in the description as “BTT”.
- ▶ The Bluetooth™ Basis is abbreviated in the description as “BTB”.

Via the BTT **500**, you can call up various menus. Various crane functions can be selected or preselected, turned on or off, or directly activated in these menus.
If the turned on BTT is pulled from the charging cradle, the following menu points can be selected:
- Menu Track width adjustment
- Menu Engine operation crane superstructure
- Menu Assembly functions
- Menu Test system

The operation of the BTT **500** via the function keys and changeover buttons:

Function keys	• The function of the function keys is menu dependent. For exact description, see the respective menu section.
Changeover buttons	• The function of the changeover buttons is menu dependent. For exact description, see the respective menu section.

NOTICE
The BTT will be destroyed!
- ▶ Under no circumstances clean the BTT **500** with a jet of water or a steam cleaner.

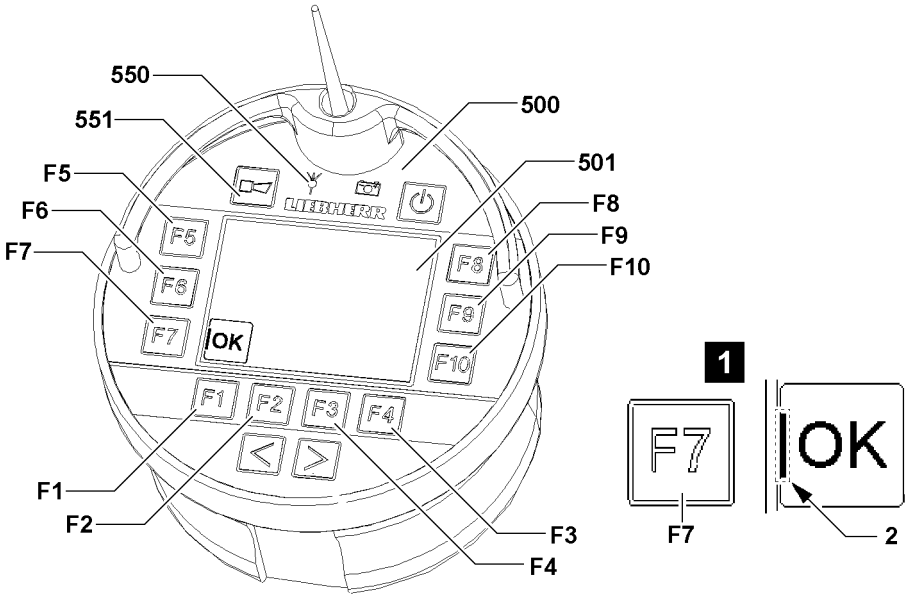
550
551
500
501
F5
F6
F7
F8
F9
F10
F1
F2
F3
F4
OK
LIEBHERR
1
F7
OK
2

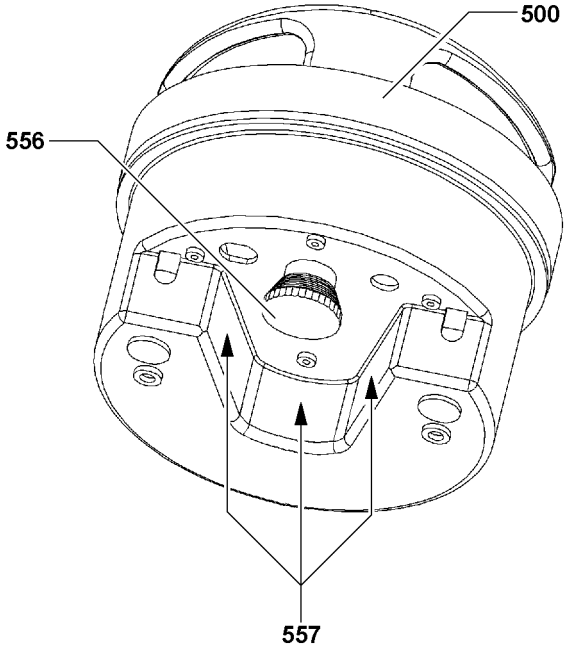
500
556
557

B114222

1.1 Important information for BTT

The following important information must be observed for operation with the BTT **500**:

- The machine number on the data tag of the crane cab must match the machine number on the BTT display **501**.
- It can only be turned on when the EMERGENCY STOP switch **556** on the rear of the BTT is **not** actuated.
- The rechargeable battery of the BTT is only charged if the EMERGENCY STOP switch **556** on the rear of the BTT is **not** actuated when plugging it into the charging module.
- When a function is selected via a function key, the corresponding icon is surrounded with a black border. In some case, additional icons are shown on the display.
- The operation of the BTT must be made with two hands, for safety reasons, see section “Release of button block on the BTT”.
- During crane operation via the BTT **500**, the complete crane must be in the field of visibility of the operator.
- Before any movement, which is controlled via the BTT **500**, the horn **551** must be actuated.
- As soon as the reception of the radio signal deteriorates, the indicator light **550** lights up orange.
- The reach of the radio signal can fluctuate due to local conditions.
- If the radio contact between the BTT **500** and the BTB is interrupted or the EMERGENCY STOP switch **556** on the rear of the BTT **500** is actuated, the crane movement stops.
- Keep the BTT **500** and the charging module clean.
- Protect the BTT **500** from direct sun exposure.
- Protect the BTT **500** from dirt and moisture.

Note

Function keys **F1** to **F10**

▶ Icons are assigned to the individual function keys. A small bar **2** marks the assigned button, see illustration **1**. Example for function key **F7**.

1.2 Release of the button block on the BTT

To prevent inadvertent crane operation, movements to be carried out on the BTT are secured by a button block. The 2-Hand keypad **557** can be activated by finger touch. The button block is removed.
After selecting a function, the actual movement (operation) is only released after activation of the 2-hand keypad **557**. Released icons are highlighted with the color **purple**.
If the icon is released and the respective function key is pressed, the movement is carried out.

Note

▶ Any actuation of the 2-hand keypad **557** is stored for 30 seconds. If no movement is actuated within these 30 s or if the 2-hand keypad **557** is actuated again, then the button block is activated and a signal tone sounds.

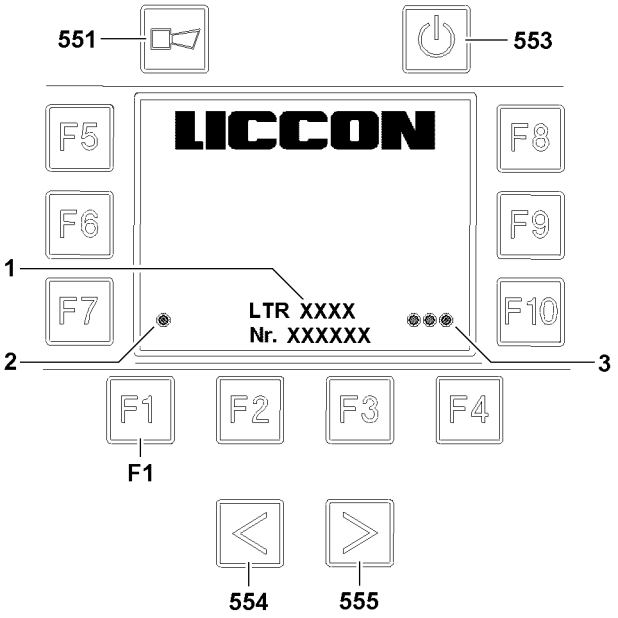
551
553
LICCON
F5
F6
F7
F8
F9
F10
1
2
3
LTR XXXX
Nr. XXXXXX
F1
F2
F3
F4
F1
554
555

B114223

1.3 Connecting the BTB and the BTT

Note

▶ If crane type and crane number **2** do not match, a connection from BTB and BTT is not possible.

To be able to control the crane via the Bluetooth™ Terminal (BTT), a connection to the Bluetooth™ Basis (BTB) must be established.
The connection is based on a pairing process and a code calibration.

1.3.1 Pairing process

If the BTT is plugged into the charging module when the ignition is turned on, then a pairing process is carried out automatically with the Bluetooth™ Basis (BTB).
Carry out the pairing process by hand:
To do so, the turned on BTT must be plugged into the charging module. Various connecting parameters are compared and checked for a match via an infrared interface.
When the pairing process is completed successfully, the indicator light **1** lights up green.

Note

▶ If the pairing process does not run successfully, contact your **Liebherr Service location** or **Liebherr-Werk Ehingen**!

1.3.2 Code calibration

If the BTT is plugged into the charging module when the ignition is turned on, then the code calibration is made automatically.
Carry out the code calibration by hand:
One after the other, press the button **554**, then the button **555** and then the function key **F1**.
When the code calibration is completed successfully, all indicator lights **3** light up green.

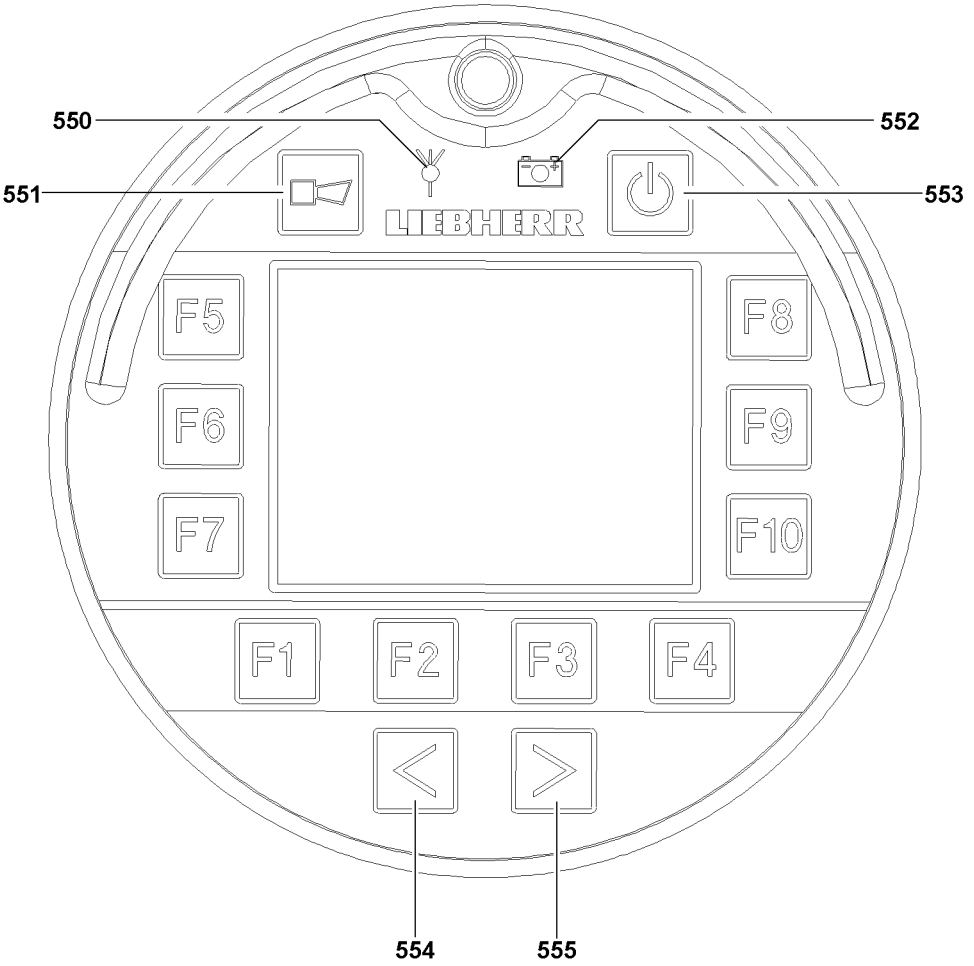
550
552
551
553
LIEBHERR
F5
F6
F7
F8
F9
F10
F1
F2
F3
F4
554
555

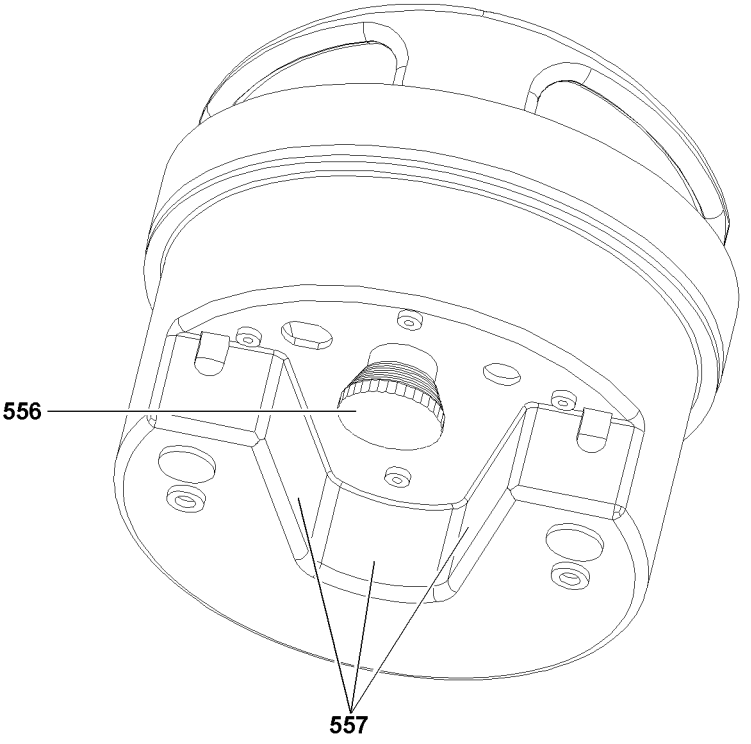
556
557

B110315

1.4 General for BTT

550	Indicator light	Transmission signal for Bluetooth™ Terminal (BTT): • Green: Transmission signal ok. • Yellow: Transmission signal about to be lost. • Red: Transmission signal not available.
551	Button	• Operate the acoustic signal of the crane (horn)
552	Indicator light	Battery charge condition for Bluetooth™ Terminal (BTT): • Green: Rechargeable battery fully charged. • Yellow: Rechargeable battery almost discharged. • Red: Rechargeable battery discharged.

Note

▶ To recharge the rechargeable battery, the BTT **500** must be plugged into the charging cradle.

553	Button	• ON / OFF button: Turn the Bluetooth™ Terminal (BTT) on / off • ON / OFF button: End Standby of Bluetooth™ Terminal (BTT)
554	Button	• Changeover button (menu dependent)
555	Button	• Changeover button (menu dependent)
556	EMERGENCY STOP switch	• **Note:** The EMERGENCY STOP switch **556** is on the underside of the Bluetooth™ Terminal (BTT).
557	2-hand keypad	• **Note:** The 2-hand keypad **557** must be actuated in order to be able to actuate a movement with the BTT.

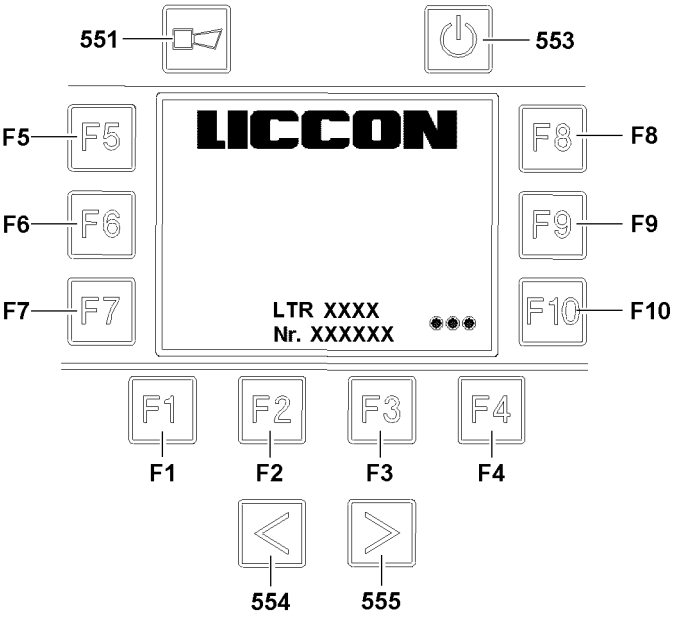
551
553
LICCON
F5
F6
F7
F8
F9
F10
LTR XXXX
Nr. XXXXXX
F1
F2
F3
F4
554
555

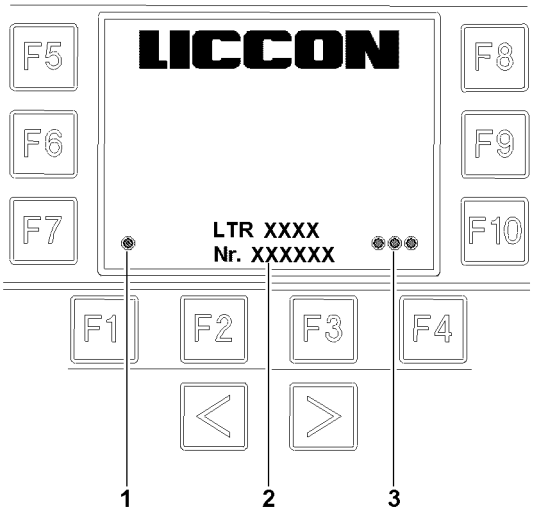
LICCON
F5
F6
F7
F8
F9
F10
LTR XXXX
Nr. XXXXXX
F1
F2
F3
F4
1
2
3

B110317

1.5 Start screen BTT

1.5.1 Icon explanation Start screen BTT

1	Indicator light	Status display connection to BTT receiver • Yellow / red: Not connected. • Yellow: Transmission signal being build up or severed. • Green / magenta: Connection prepared. • Green: Connection established. • Red: No connection between BTB and BTT. **Note:** If necessary, the pairing process must be repeated, see section “Connecting the BTB and BTT”
2	Crane type and crane number	
3	Indicator lights	Status indicator code entry: • Green: Code entry OK. • Red: No code entered, code entry incorrect.
F1-F10	Function key	• **Note**: Once the code has been successfully entered, press any function key **F1-F10** to switch back to the selection overview.

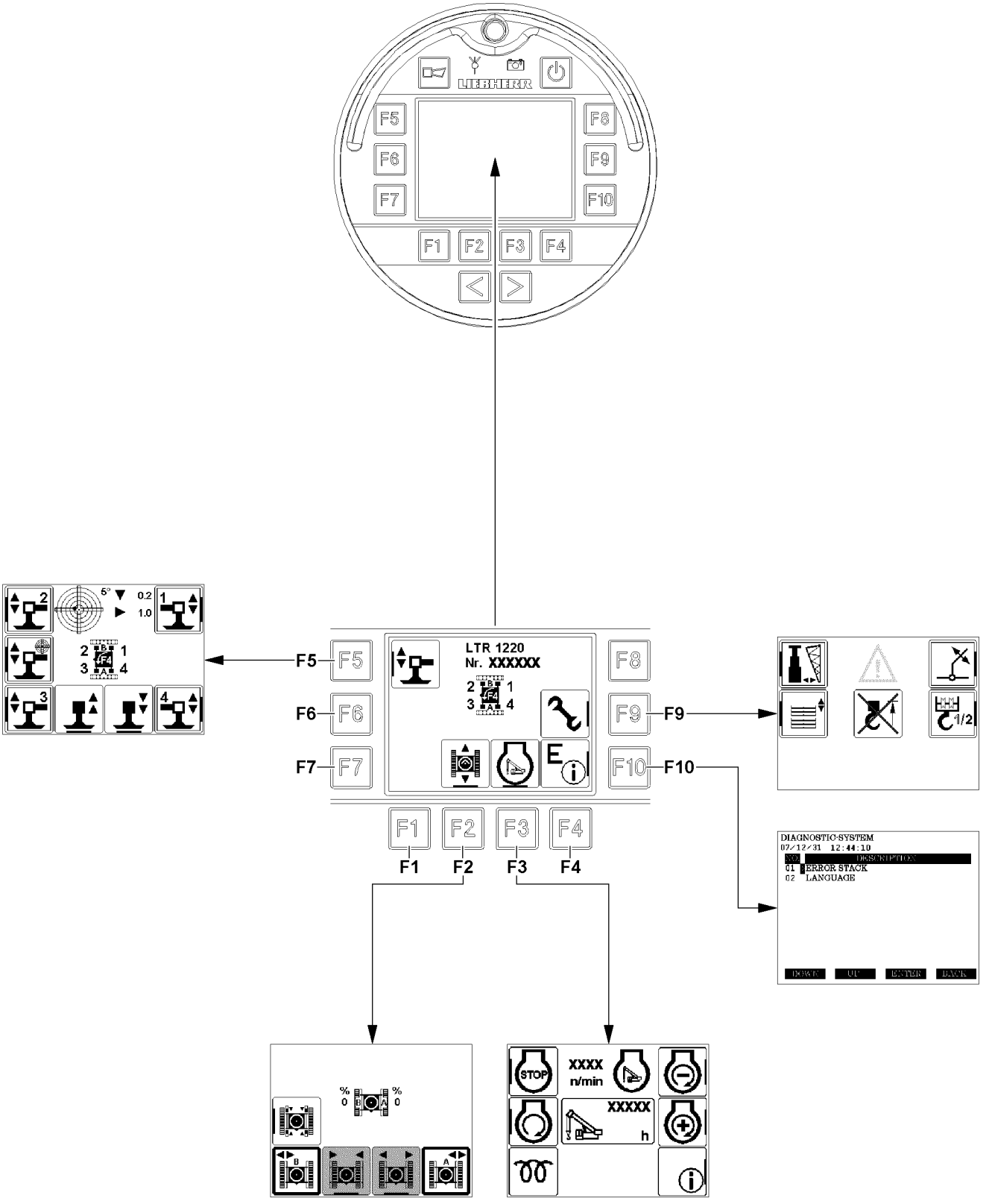
LIEBHERR
F5
F6
F7
F8
F9
F10
F1
F2
F3
F4
LTR 1220
Nr. XXXXXX
DIAGNOSTIC-SYSTEM
07/12/31 12:44:10
NO. DESCRIPTION
01 ERROR STACK
02 LANGUAGE
DOWN
UP
ENTER
BACK
STOP
XXXX
n/min
XXXXX
h

B117968

2 Start menu of the BTT

Function key / menu description		
F1	-No function in the start menu-	
F2	**Crawler travel gear menu**	
>>	**F1**	-Back to the start menu-
>>	**F2**	Retract the selected crawler carrier
>>	**F3**	Extend the selected crawler carrier
>>	**F6**	Unpin / pin the track width adjustment
>>	**F7**	Selection / deselection of crawler carrier B
>>	**F10**	Selection / deselection of crawler carrier A
F3	**Menu Engine operation**	
>>	**F1**	-Back to the start menu-
>>	**F5**	Turn the engine off
>>	**F6**	Turn the engine on
>>	**F8**	Decrease engine rpm
>>	**F9**	Increase engine rpm
>>	**F10**	Change to test system
F4	-No function in the start menu-	

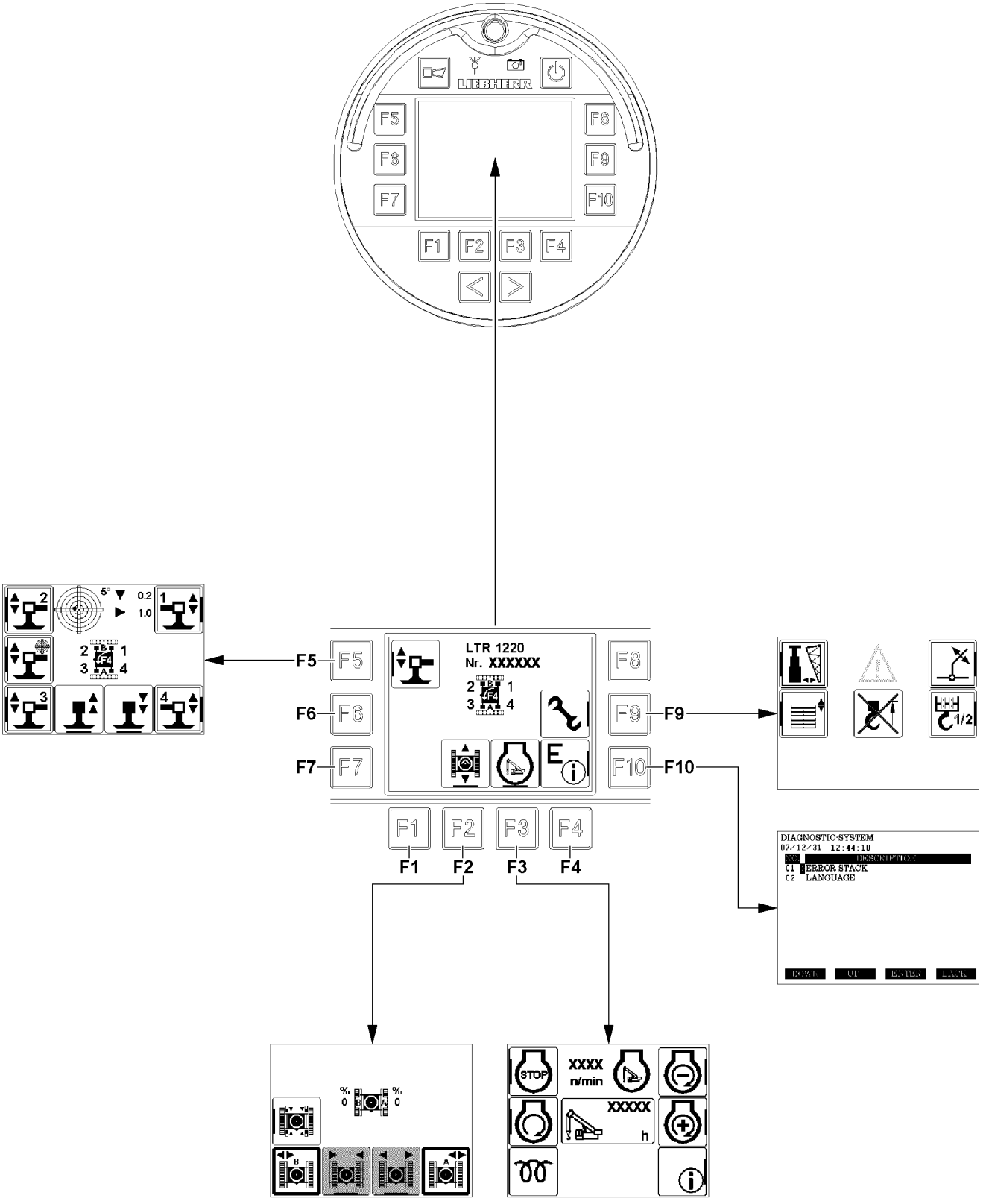
LIEBHERR
F5
F6
F7
F8
F9
F10
F1
F2
F3
F4
LTR 1220
Nr. XXXXXX
DIAGNOSTIC-SYSTEM
07/12/31 12:44:10
NO. DESCRIPTION
01 ERROR STACK
02 LANGUAGE
DOWN
UP
ENTER
BACK
STOP
XXXX
n/min
XXXXX
h
1/2

B117968

Function key / menu description		
F5	**Menu Support**	
>>	**F1**	-Back to the start menu-
>>	**F2**	Retract selected support(s)
>>	**F3**	Extend selected support(s)
>>	**F5**	Select / deselect the support for a given crane position
>>	**F6**	Select / deselect the automatic support.
>>	**F7**	Select / deselect the support for a given crane position
>>	**F8**	Select / deselect the support for a given crane position
>>	**F10**	Select / deselect the support for a given crane position
F6	-No function in the start menu-	
F7	-No function in the start menu-	
F8	-No function in the start menu-	
F9	**Menu Assembly functions**	
>>	**F1**	-Back to the start menu-
>>	**F5**	Selection / deselection of hydraulic folding jib assembly*
>>	**F6**	Selection / deselection of ballasting / turntable lock
>>	**F8**	Selection / deselection of lifting / lowering the hydraulic folding jib*
>>	**F9**	Selection / deselection of fastening the hook block
F10	**Test system**	

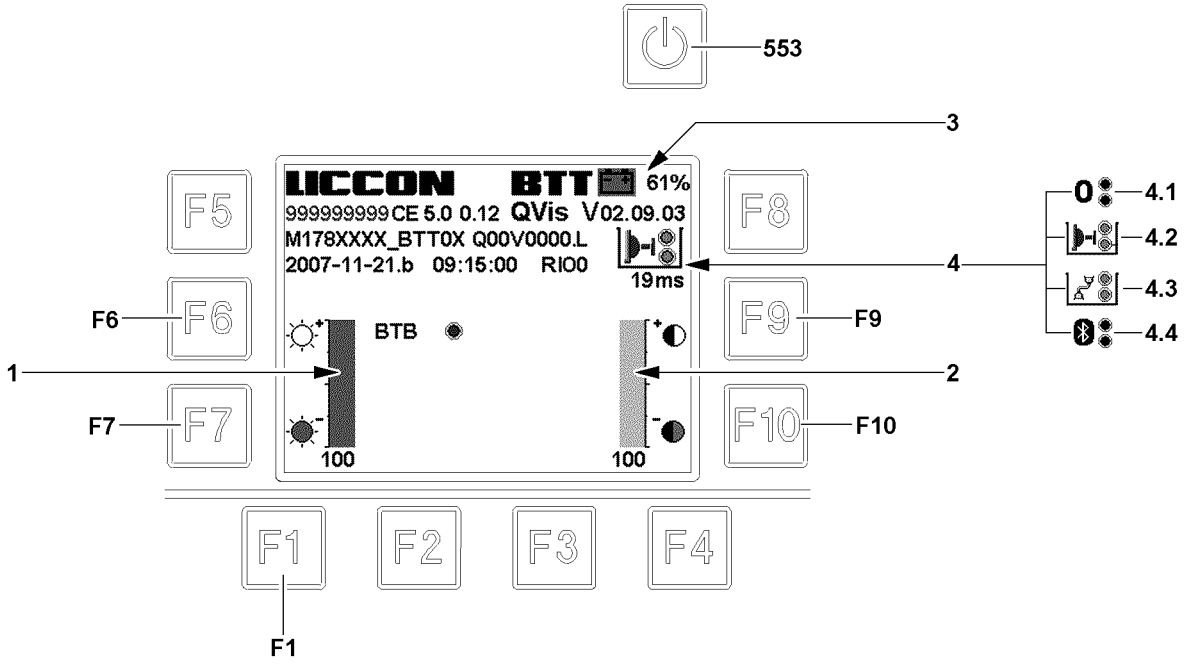
553
3
LICCON BTT 61%
999999999 CE 5.0 0.12 QVis V02.09.03
M178XXXX_BTT0X Q00V0000.L
2007-11-21.b 09:15:00 RIO0
19ms
BTB
100
100
F5
F6
F7
F8
F9
F10
F1
F2
F3
F4
1
2
4
4.1
4.2
4.3
4.4

B117976

3 Settings and status displays on the BTT

In the system screen of the BTT, settings can be made and status displays can be read.

3.1 Calling up / closing the system screen

Make sure that the following prerequisite is met:
– The start menu is displayed.

▶ Select the System screen: Press the button **553** momentarily until the system screen appears (max. 1 second).

Note
▶ When the button **553** is pressed too long, the BTT turns off.

▶ To change back to the System menu: Press the function key **F1**.

3.2 Adjusting the brightness level of the BTT display

The current setting stage for brightness can be read on the bar diagram **1**.
▶ BTT display brighter: Press the function key **F6**.
▶ BTT display darker: Press the function key **F7**.

3.3 Adjusting the contrast of the BTT display

Note
▶ Only available for certain crane types:

The current setting stage for the contrast can be read on the bar diagram **2**.
▶ BTT display more contrast: Press the function key **F9**.
▶ BTT display less contrast: Press the function key **F10**.

3.4 Determining the exact charge condition of the rechargeable battery

The exact charge condition of the rechargeable battery can be read on the charge condition display **3**.
▶ Read the charge condition, if necessary recharge the BTT by inserting it in the charging bay.

3.5 Checking the connection type

The connection type can be read on the connection type display **4**.
▶ Read the connection type.

Result:
– No connection **4.1**
– Infrared **4.2** (only in the charging bay)
– Cable **4.3**
– Bluetooth™ **4.4**

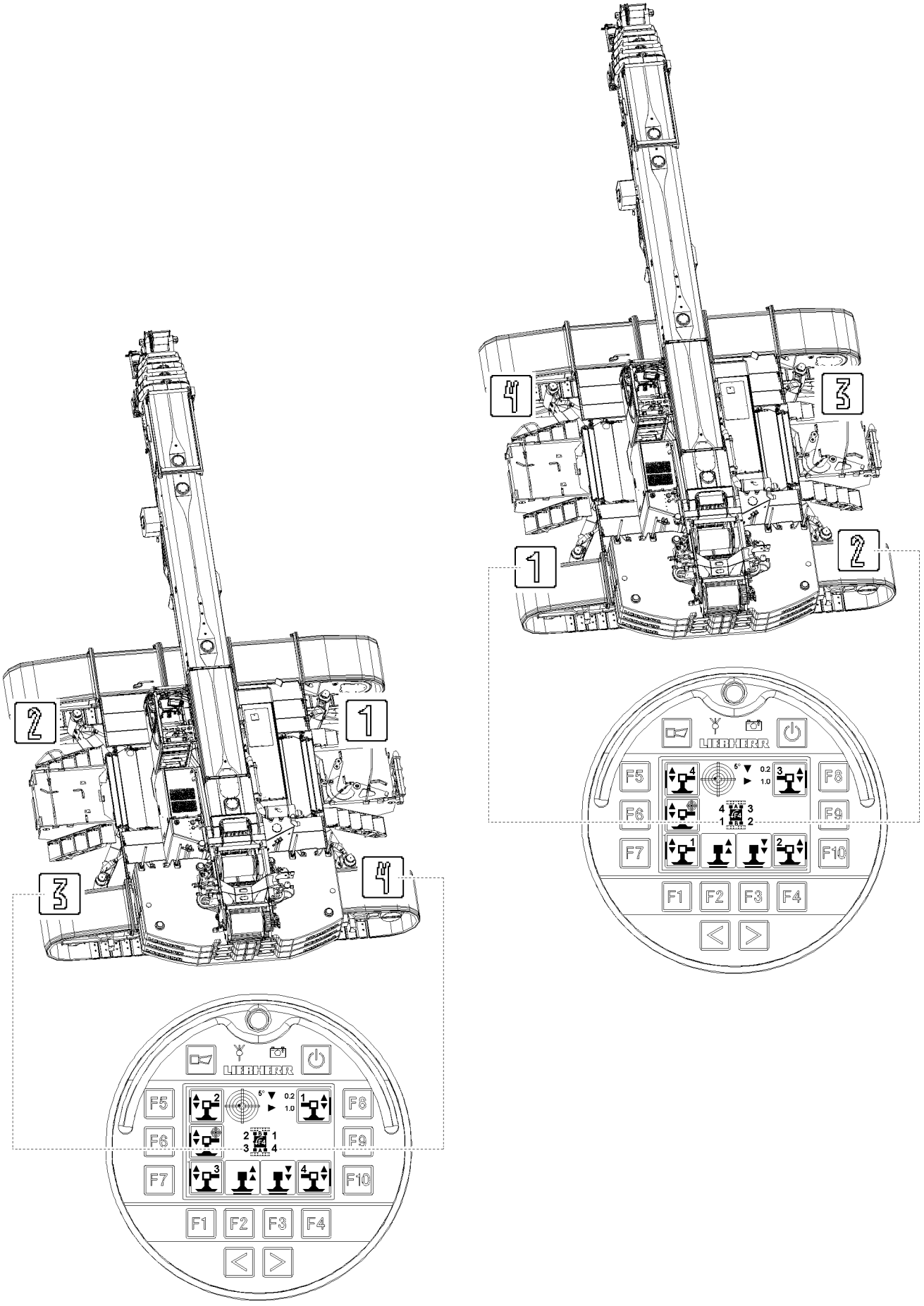

B117814

4 Aligning the BTT to the crane

If “F4” and to rotation arrows appear within the crane icon on the BTT display, then the location of the operator must be aligned with the BTT to the crane.

– The determining factor for the orientation of the BTT is the crane chassis.
– A selection can be made between two orientations:
  - **Illustration 1** :
    - Operator is standing on the side of support 3 and support 4 (crawler carrier A).
    - In the crane icon on the BTT display, the supports with number 3 and number 4 are on the bottom.
  - **Illustration 2** :
    - Operator is standing on the side of support 1 and support 2 (crawler carrier B).
    - In the crane icon on the BTT display, the supports with number 1 and number 2 are on the bottom.

WARNING
Danger of accident if operator is incorrectly positioned to the crane!
If the operator is not correctly oriented to the crane, then the working range / danger zone cannot be viewed completely!
Personnel can be severely injured or killed!
▶ The crane icon on the BTT display must correspond to the actual direction of the operator to the crane!

F4 Function key	• When “F4” and two rotation arrows appear within the crane icon: Press function key **F4** to turn the crane icon in 180° increments.

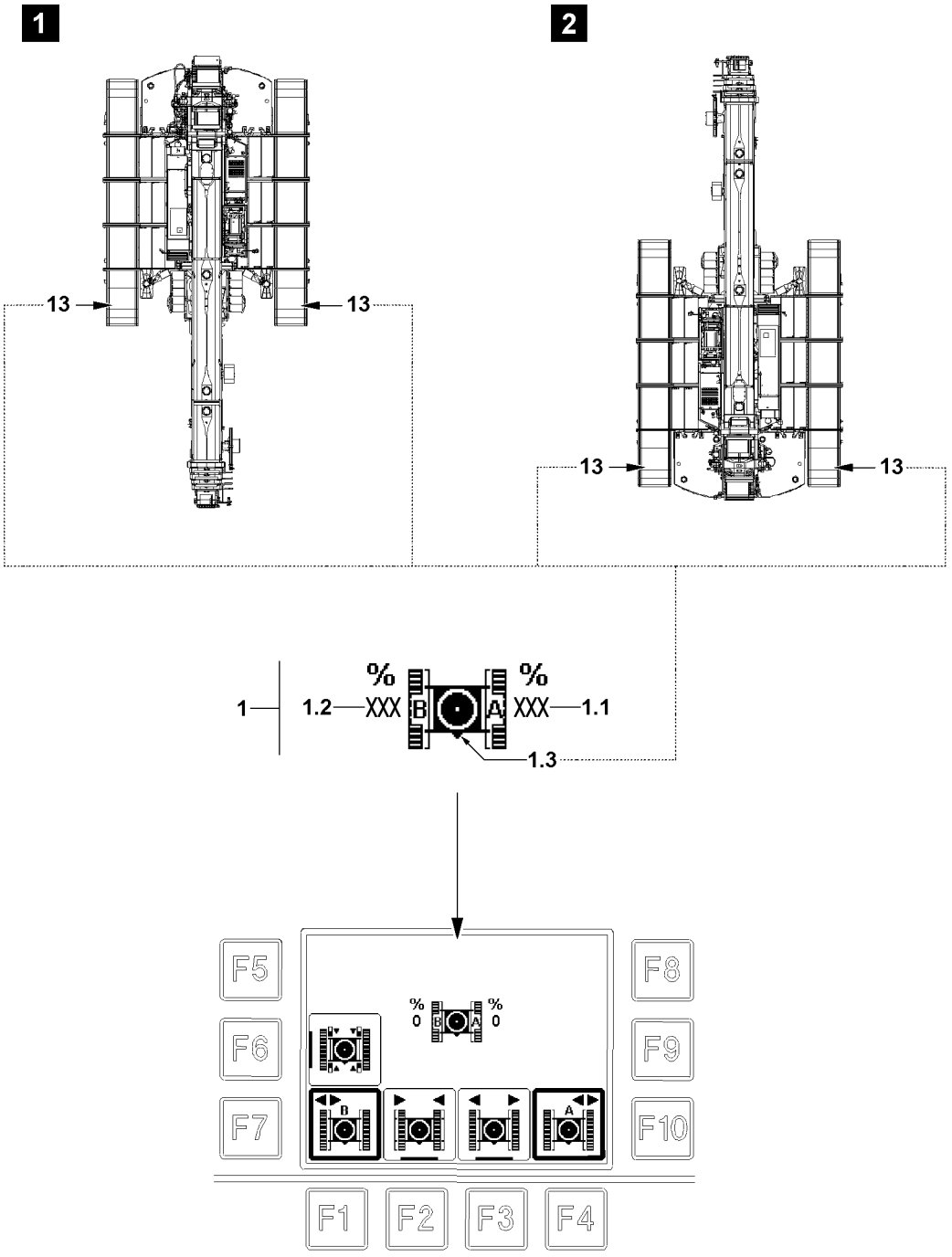

B117969

5 Crawler travel gear menu

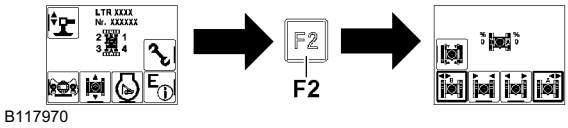

Note
Change from start menu to crawler travel gear menu:
▶ Press the function key **F2**.

Functions in the “crawler travel gear” menu:
– Extending / retracting the crawler carriers

In the crawler travel gear menu, the display of the crane icon **1** cannot be adjusted:
– The marker “front side of crawler travel gear” **1.3** shows where in the display the front side of the crawler travel gear is.
– The position of the crane superstructure is not relevant in the crawler travel gear menu, see example of illustration **1** and illustration **2**.
– Front and rear on the crawler track can be determined by the chain tension devices **13** (chain tension side):
  • The chain tension devices **13** are always on the front of the crawler track.
  • The chain tension devices **13** are on the side of support 2 and support 3.

5.1 Icon explanation in crawler travel gear menu

1 Track width display	• The crawler carriers are marked with letters. • The extension conditions of the cross carriers are given in percentages.
1.1 Crawler carrier A	• Extension condition of crawler carrier A in percentages (%) 0 % = Crawler carrier A is completely retracted to 100 % = Crawler carrier A is completely extended
1.2 Crawler carrier B	• Extension condition of crawler carrier B in percentages (%) 0 % = Crawler carrier B is completely retracted to 100 % = Crawler carrier B is completely extended
1.3 Front on travel gear	• Shows where the front side of the crawler travel gear is in the icon.

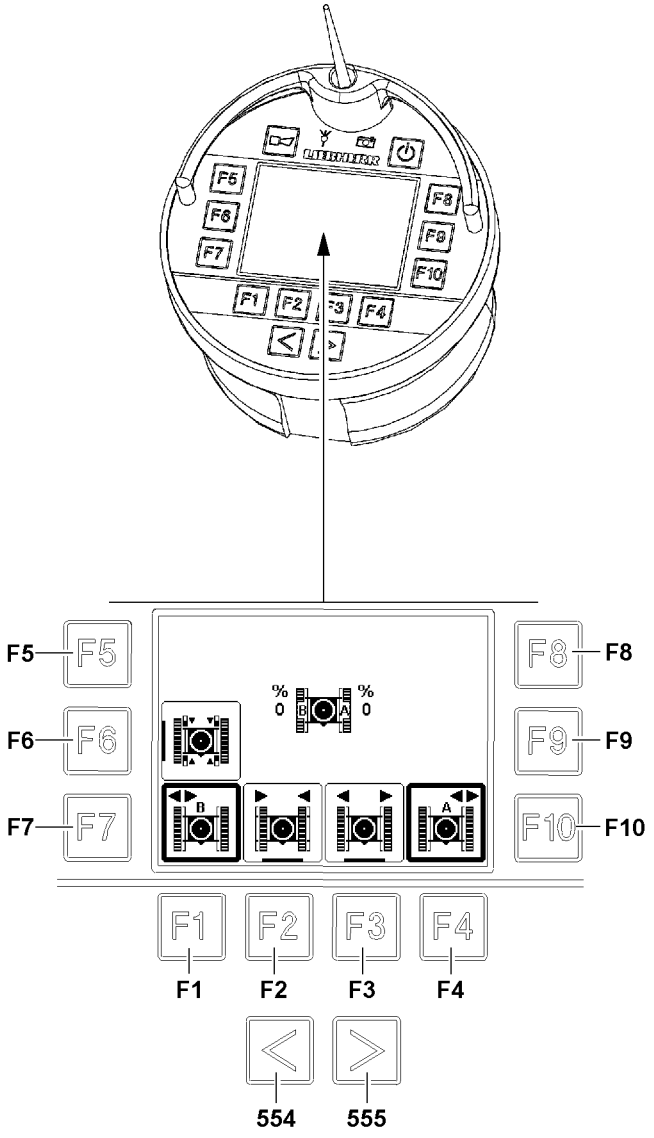

B117971

5.2 Function keys in the crawler travel gear menu

554	Button	• Change to the Menu Engine operation
555	Button	• Call of the operating screen for the radio remote control
F1	Function key	• Return to the start menu
F2	Function key	• Retract the selected crawler carrier
F3	Function key	• Extend the selected crawler carrier
F4	Function key	• -No function-
F5	Function key	• -No function-
F6	Function key	• Unpin / pin the track width adjustment
F7	Function key	• Selection / deselection of crawler carrier B
F8	Function key	• -No function-
F9	Function key	• -No function-
F10	Function key	• Selection / deselection of crawler carrier A

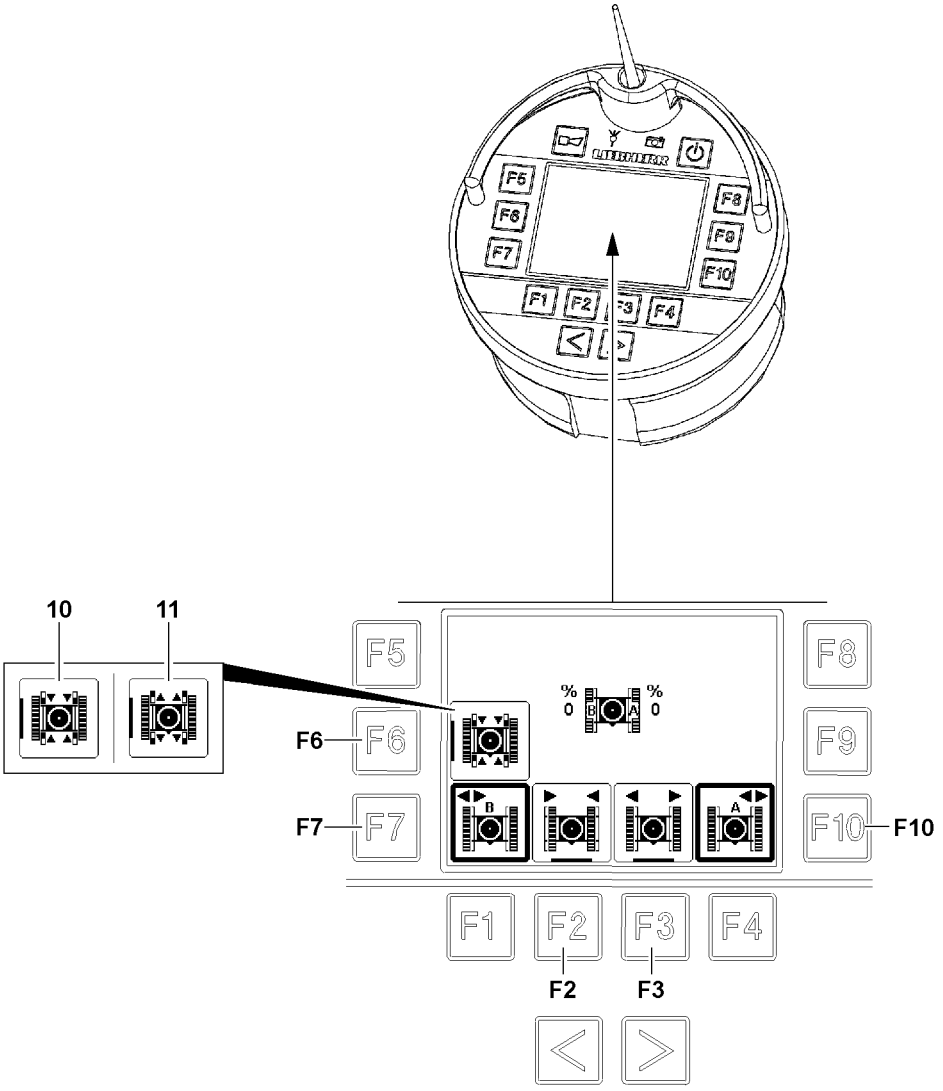

B117972

5.3 Extending / retracting the crawler carriers

The crawler carriers can be selected and controlled individually or together.
To be able to extend / retract the crawler carriers, the cross carriers must be unpinned.

– **Selection / deselection of crawler carrier:**
  - Press function key **F7** for crawler carrier B
  - Press function key **F10** for crawler carrier A
    - **Result**: Selected crawler carriers are bordered in bold. The other crawler carrier can be selected / deselected as desired.

– **Unpin / pin the cross carriers:**
  - Press the function key **F6**.
    - Pin the cross carrier active: Icon **10** appears.
      As soon as the pin aligns with a pin point, the cross carriers are pinned. Pin points are at 0 %, 50 % or 100 % extension condition of crawler carriers.
    - Unpin the cross carriers active: Icon **11** appears.
      Unpin the pin from the pin point is actuated.

– **Control release:**
  - The control release is made by touching the 2-Hand keyboard in the rear of the BTT, see section “Release of button block on BTT”
  - After completed control release, the icons over the function key **F2** / function key **F3** are highlighted in purple.

Note

▶ To control the crawler carriers, a control release must be issued: The corresponding icons must be highlighted in purple.

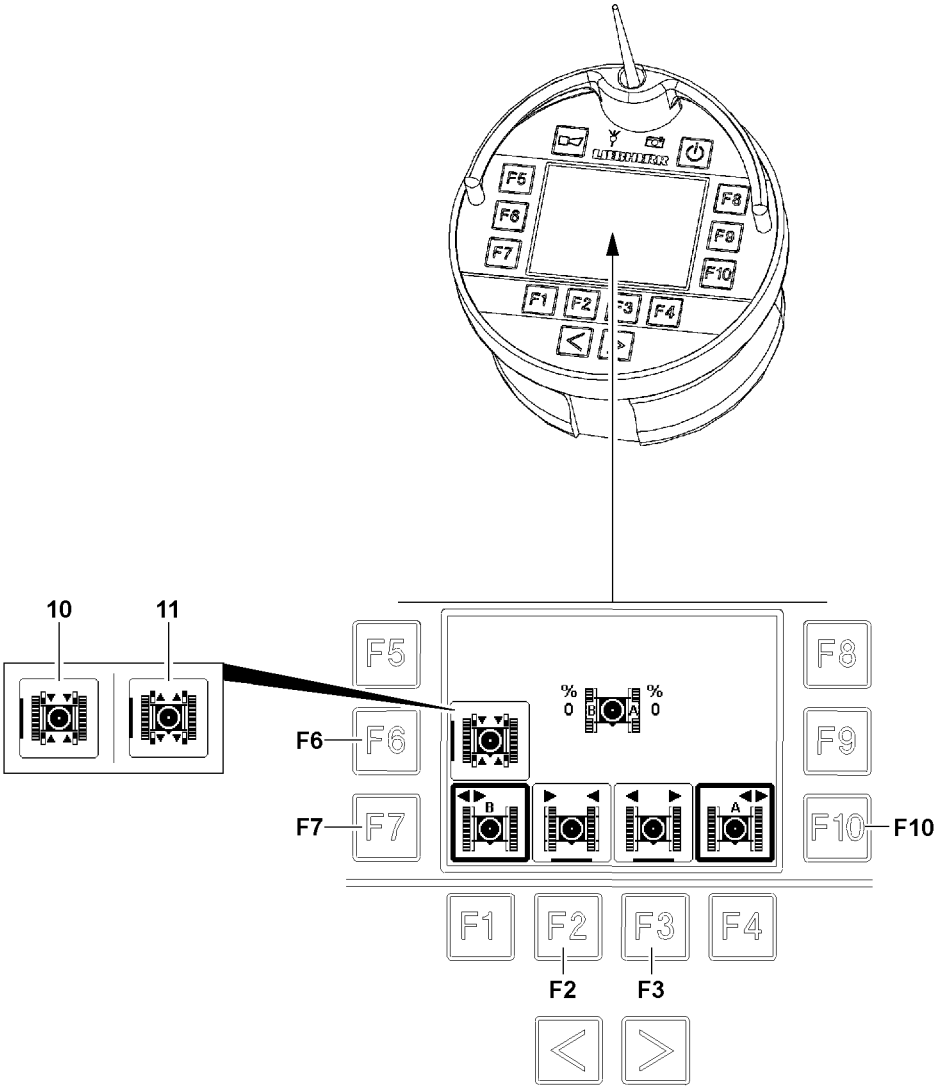

B117972

– **Retract the crawler carrier A:**
  Prerequisites: Icon **11** must appear, crawler carrier A is selected.
  • Press the function key **F2**.

– **Extend crawler carrier A:**
  Prerequisites: Icon **11** must appear, crawler carrier A is selected.
  • Press the function key **F3**.

– **Retract the crawler carrier B:**
  Prerequisites: Icon **11** must appear, crawler carrier B is selected.
  • Press the function key **F2**.

– **Extend the crawler carrier B:**
  Prerequisites: Icon **11** must appear, crawler carrier B is selected.
  • Press the function key **F3**.

– **Retract both crawler carriers parallel:**
  Prerequisites: Icon **11** must appear, crawler carrier A and crawler carrier B are selected.
  • Press the function key **F2**.

– **Extend both crawler carriers parallel:**
  Prerequisites: Icon **11** must appear, crawler carrier A and crawler carrier B are selected.
  • Press the function key **F3**.

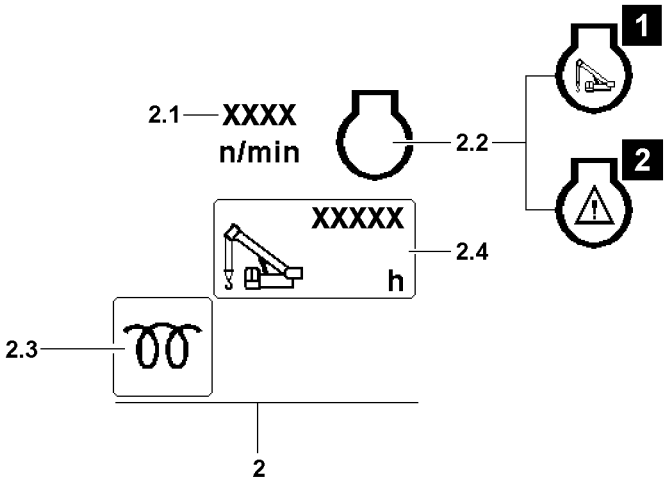
1
2.1
XXXX
n/min
2.2
2
XXXXX
h
2.4
2.3
2

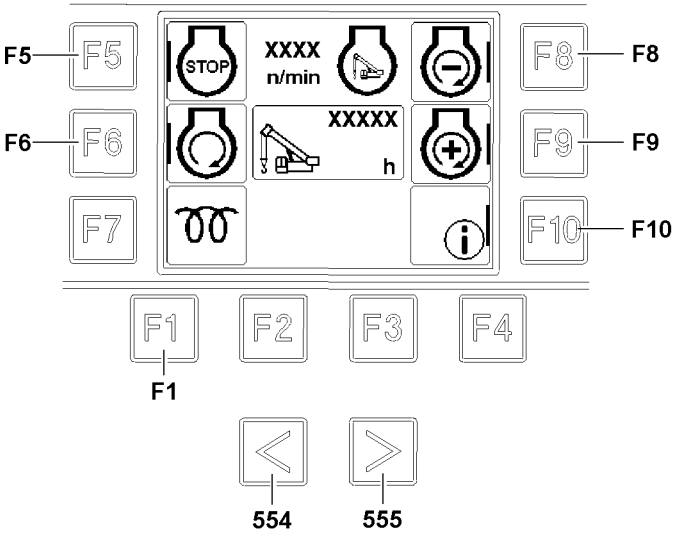
F5
F5
STOP
XXXX
n/min
F8
F8
F6
F6
XXXXX
h
F9
F9
F7
F10
F10
F1
F2
F3
F4
F1
554
555

B117638

6 Menu Engine operation

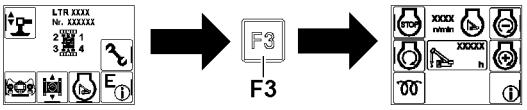

B117948

Note
Change from start menu to engine operation menu:
▶ Press the function key **F3**.

6.1 Icon explanation in engine operation menu

2	Icons Engine operation	
2.1	Engine speed	• Actual engine speed in rpm
2.2	Engine monitoring	• If warning icon illustration **2** appears, then an engine warning is present. • **NOTICE:** Call up engine monitoring functions and evaluate.
2.3	Monitoring display	• The indicator light lights up green. The crane superstructure engine is ready to start. • The indicator light lights up yellow: Crane superstructure engine preheating is active. • The indicator light lights up red: The crane superstructure engine is not ready to start.
2.4	Operating hour meter	• Operating hours of crane engine

6.2 The function keys

554	Button	• Call up monitoring functions for engine
555	Button	• Call up monitoring functions for engine
F1	Function key	• Back to the start menu
F5	Function key	• Press momentarily (less than 0.5 seconds): Reset settings in the engine operation menu • Press long: Turn the engine off • **Note**: The control release must have been made by touching the 2-Hand keyboard in the rear of the BTT, see section “Release of button block on BTT”
F6	Function key	• Turn the engine on
F8	Function key	• Decrease engine rpm • **Note**: The control release must have been made by touching the 2-Hand keyboard in the rear of the BTT, see section “Release of button block on BTT”
F9	Function key	• Increase engine rpm • **Note**: The control release must have been made by touching the 2-Hand keyboard in the rear of the BTT, see section “Release of button block on BTT”
F10	Function key	• Change to test system

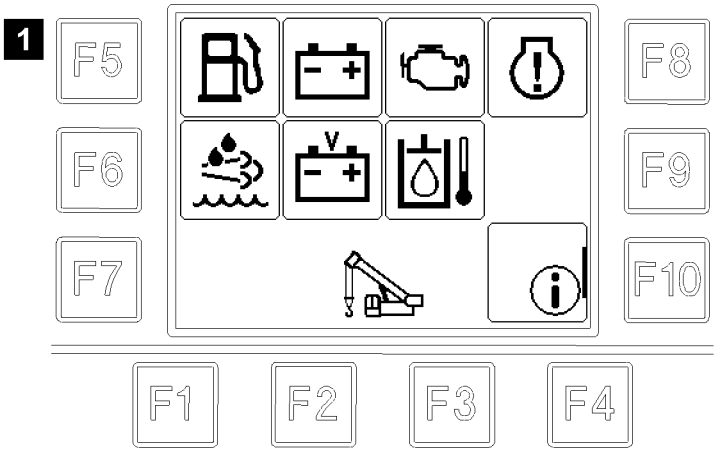

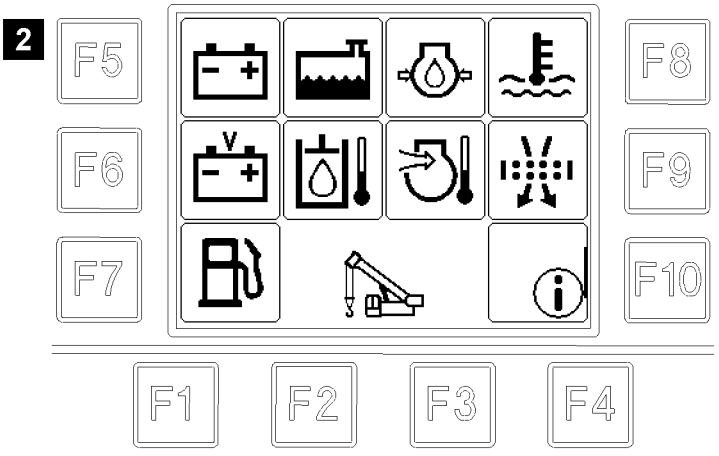

B116711

6.3 Monitoring functions for engine

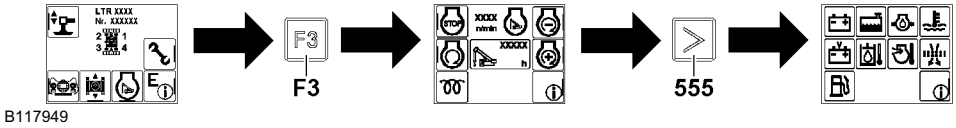

Note
Change from the start menu to the engine monitoring functions:
- ▶ Press the function key **F3**.
- ▶ Press the function key **555**.

Note
- ▶ Engines **with SCR system** for exhaust aftertreatment - Display in BTT display, see illustration **1**.
- ▶ Engines **without SCR system** - Display in BTT display, see illustration **2**.
- ▶ If a function is highlighted **green**, this function is operating correctly.
- ▶ If a function is highlighted **red** or **orange**, then this function has an error.

NOTICE
Property damage!
Property damage can result if a malfunction is not immediately rectified!
- ▶ Immediately rectify the faulty function!

Monitoring display	Icon display	Status
Information field	***B / E:***	*If a B (operating error) or E (system error) appears in the information field, then at least one error message is present. Call up and evaluate the error message by pressing function key F10 on the BTT, see also Diagnostics Manual.*

Monitoring display	Icon display	Status
Fuel reserve	*Green:*	*Fuel reserve **more** or equal to 5 %*
	Yellow:	Fuel reserve approx. 3 % - 4 %
	Red:	Fuel reserve **less** than 3 % **CAUTION** : Turn the engine off immediately and remedy the problem, pay attention to the error message!

Monitoring display	Icon display	Status
Hydraulic oil temperature	*Green:*	*Hydraulic oil temperature crane drive OK*
	Red:	Hydraulic oil temperature crane drive too high **CAUTION** : Turn the engine off immediately and remedy the problem, pay attention to the error message!

Monitoring display	Icon display	Status
Charge monitoring display	*Green:*	*Alternator OK (engine on)*
	Red:	Alternator does not charge (engine on) **CAUTION** : Turn the engine off immediately and remedy the problem, pay attention to the error message!

Monitoring display	Icon display	Status
Battery voltage	*Green:*	*Battery voltage OK*
	Red:	On-board power supply over / undervoltage **CAUTION** : Turn the engine off immediately and remedy the problem, pay attention to the error message!

Monitoring display	Icon display	Status
Note: Monitoring display only present on certain crane types!		
Engine oil level	*Green:*	*Engine oil level OK*
	Red:	Engine oil level too low or too high **CAUTION** : Call up individual monitoring displays and adjust the engine oil level according to the display, see section “Overview of individual monitoring displays” .

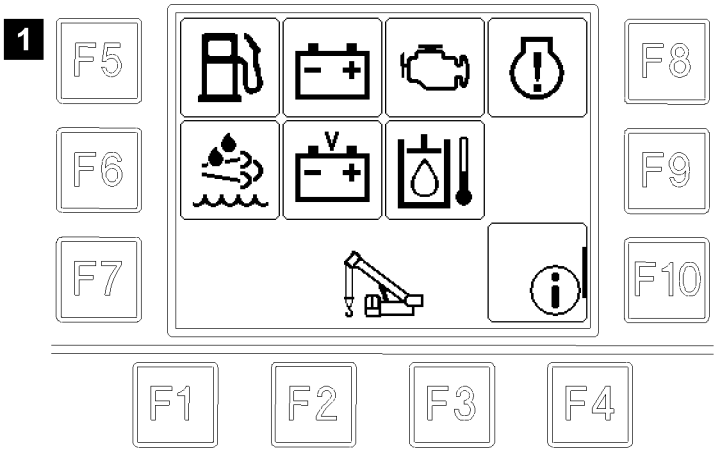

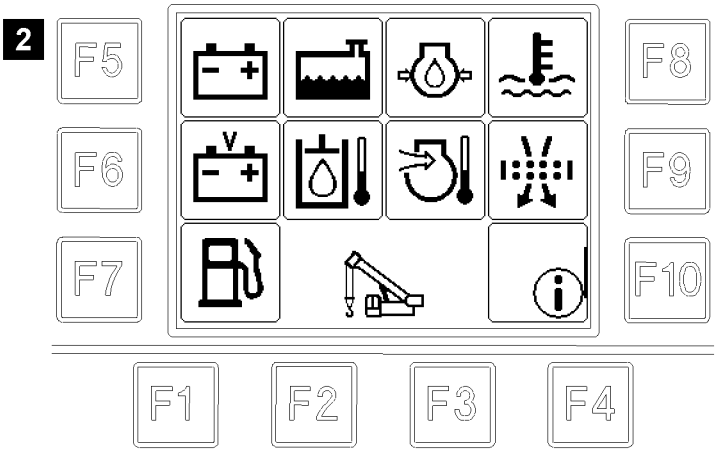

B116711

6.4 Additional monitoring functions for engines with SCR-system

Note

- ▶ Valid only for engines which are equipped with an SCR-system for exhaust aftertreatment.
- ▶ Display in BTT display, see illustration **1**.

WARNING

Triggers power reduction or start block of engine!

If Urea level is too low or if there is a faulty function in the exhaust aftertreatment, then a power reduction or start block of the engine can be triggered.

The mobile crane can significantly obstruct traffic!

The crane operation and travel operation can be limited or disabled!

- ▶ Add Urea in time!
- ▶ Remedy the faulty function of the exhaust aftertreatment immediately!
- ▶ Observe any valid national / regional regulations and the vehicle configuration!

Monitoring display	Icon display	Status
Urea tank	*Green:*	*Urea available*
	Yellow / red:	Urea level too low or erroneous function of exhaust aftertreatment system **CAUTION** : Add urea or remedy the faulty function of the exhaust aftertreatment. Under some circumstances a power reduction or start block of the engine [1] is triggered, pay attention to the error message!

Monitoring display	Icon display	Status
Exhaust aftertreatment	*Green:*	*Exhaust aftertreatment OK*
	Yellow / red:	Urea level too low or erroneous function of exhaust aftertreatment system **CAUTION** : Add urea or remedy the faulty function of the exhaust aftertreatment. Under some circumstances a power reduction or start block of the engine [1] is triggered, pay attention to the error message!

Monitoring display	Icon display	Status
Collective warning	*Green:*	*No warning messages present*
	Generally at yellow or red:	A warning is present **CAUTION** : Determine the cause with the error message and in the LICCON monitor and observe the following description.
	Yellow:	Air intake opening / air filter dirty **CAUTION** : Turn the engine off immediately and remedy the problem, pay attention to the error message!
	Red:	Engine oil pressure too low or too high **CAUTION** : Turn the engine off and remedy the problem, pay attention to the error message!
	Red:	Engine oil level too low or too high **CAUTION** : Call up the display for the engine oil level in the LICCON monitor and match the engine oil level according to the display. See Crane operating instructions, chapter 4.02. Pay attention to error message!
	Red:	Coolant level too low **CAUTION** : Turn the engine off and add coolant, see Crane operating instructions, chapter 7.04 or chapter 7.05. Pay attention to error message!
	Red:	Coolant temperature too high **CAUTION** : Bring the coolant temperature into a permissible range, turn the engine off if necessary. Pay attention to error message!
	Red:	Charge air temperature too high **CAUTION** : Bring the charge air temperature into a permissible range, turn the engine off if necessary. Pay attention to error message!

blank page!

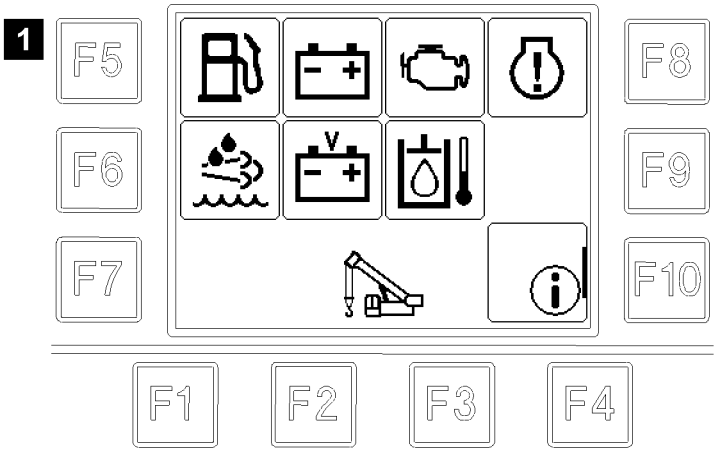

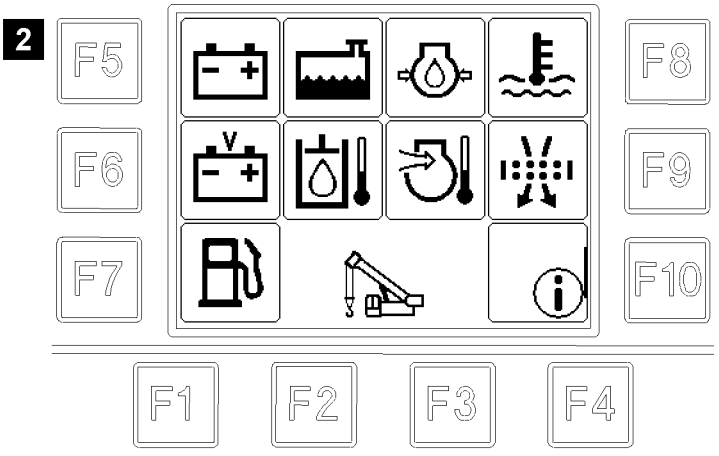

B116711

6.5 Additional monitoring functions for engines without SCR-system

Note
- ▶ Valid only for engines without SCR-system
- ▶ Display in BTT display, see illustration **2**.

Monitoring display	Icon display	Status
Coolant temperature	*Green:*	*Coolant temperature OK*
	Red:	Coolant temperature **too high** **CAUTION** : Turn the engine off and remedy the problem, pay attention to the error message!

Monitoring display	Icon display	Status
Engine oil pressure	*Green:*	*Engine oil pressure OK (engine on)*
	Red:	Engine oil pressure too low (engine on) **CAUTION** : Turn the engine off and remedy the problem, pay attention to the error message!

Monitoring display	Icon display	Status
Air filter	*Green:*	*Air filter OK*
	Yellow:	Air filter is dirty **CAUTION** : Turn the engine off and remedy the problem, pay attention to the error message!

Monitoring display	Icon display	Status
Coolant level	*Green:*	*Coolant level OK*
	Red:	Insufficient coolant **CAUTION** : Turn the engine off and remedy the problem, pay attention to the error message!

Monitoring display	Icon display	Status
Charge air temperature	*Green:*	*Charge air temperature OK*
	Red:	Charge air temperature too high **CAUTION** : Turn the engine off and remedy the problem, pay attention to the error message!

blank page!

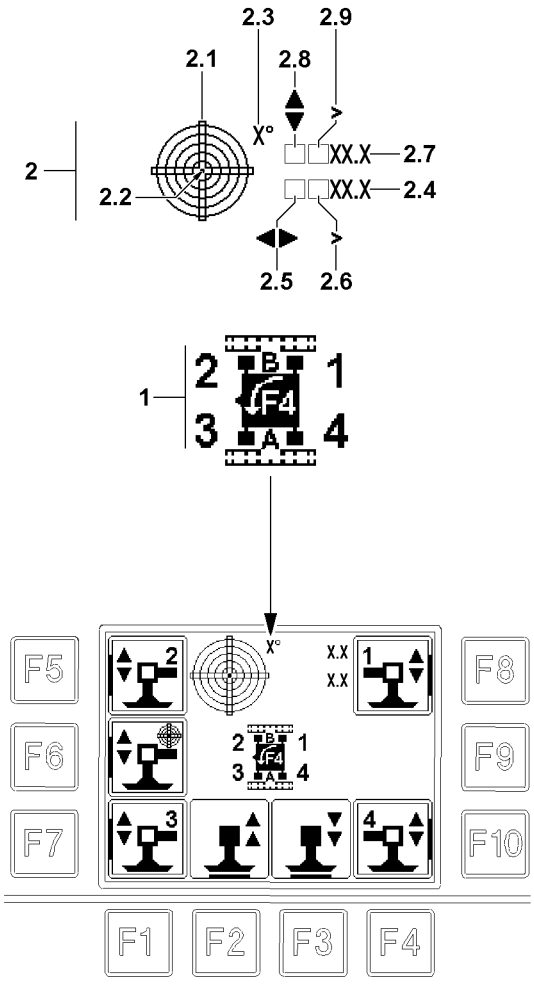
2.3
2.9
2.1
2.8
X°
XX.X
2.7
2
2.2
XX.X
2.4
2.5
2.6
1
2
1
3
4
F4
B
A
F5
F6
F7
F8
F9
F10
F1
F2
F3
F4
X.X
X.X

B117930

7 Menu Support

WARNING
Danger of accident if operator is incorrectly positioned to the crane!
If the operator is not correctly oriented to the crane, then the working range / danger zone cannot be viewed completely!
Personnel can be severely injured or killed!
▶ The crane icon on the BTT display must correspond to the actual position of the operator with respect to the crane, see section “Aligning the radio remote control to the crane”!

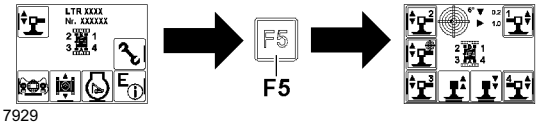

B117929

Note
Change from start menu to support menu:
▶ Press the function key **F5**.

In the Support menu, the operator can select between manual support and automatic support* (only for certain crane types).

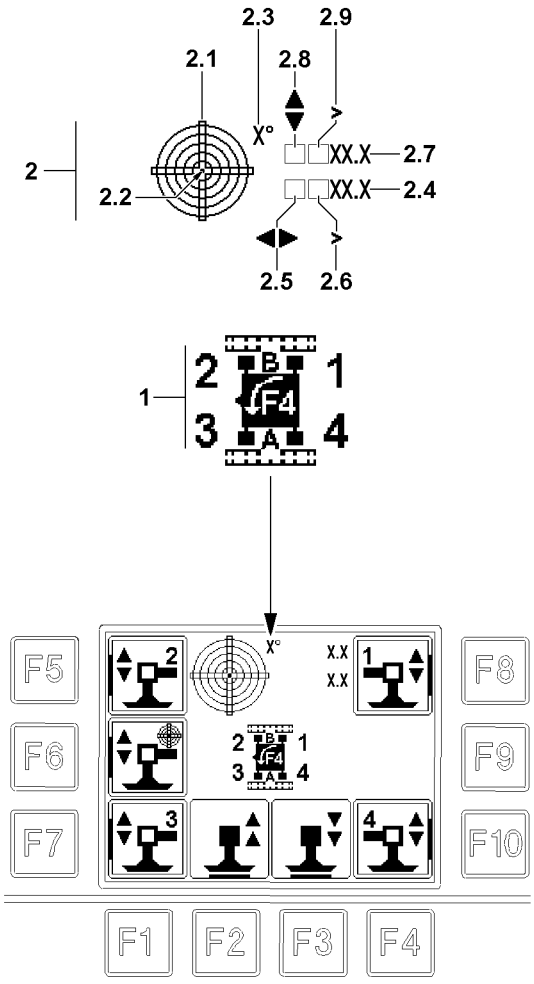
2.3
2.9
2.1
2.8
X°
XX.X
2.7
2
2.2
XX.X
2.4
2.5
2.6
1
2
1
3
4
F4
B
A
F5
F6
F7
F8
F9
F10
F1
F2
F3
F4
X.X
X.X

B117930

7.1 Icon explanation in support menu

1 Crane icon	• On the crane icon: • The crawler carriers are displayed with their identification letter. • The support cylinders are displayed with numbers.

WARNING
The crane can topple over!
The “larger than symbol” shows that the crane is inclined further than can be shown!
The exact incline can then not be read!
▶ Do not exceed the permissible incline of the crane!

2 “Incline” icon	• Display of the incline of the crane to the horizontal in longitudinal and lateral direction. The display is graphic as well as numeric. • The direction data refer to the orientation of the displayed crane icon.
2.1 Graphic display	• The graphic display has the form of a sight gauge. In it is a moving dot **2.2**, which represents the air bubble.
2.2 Point	• The center of the dot **2.2** shows the incline value.
2.3 Resolution of view	• This value describes the resolution of the graphic view. The resolution is matched automatically to the incline.
2.4 Longitudinal direction	• Incline of crane in longitudinal direction in [°].
2.5 Direction arrow	• The direction arrow shows the direction of the incline.
2.6 Display range exceeded	• If the “larger than icon” appears, then the display range is exceeded. • **Note:** The crane is inclined further than can be shown!
2.7 Lateral direction	• Incline of crane in lateral direction in [°]
2.8 Direction arrow	• The direction arrow shows the direction of the incline
2.9 Display range exceeded	• If the “larger than icon” appears, then the display range is exceeded. • **Note:** The crane is inclined further than can be shown!

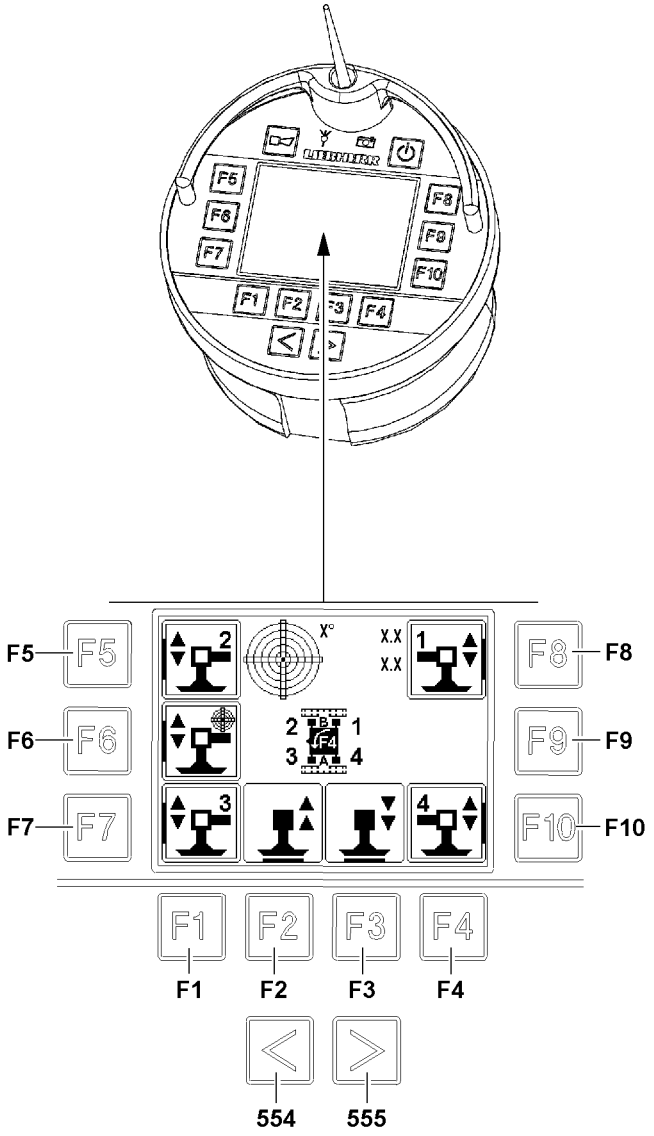

B117973

7.2 Function keys in the support menu

554	Button	• Change to the Menu Engine operation
555	Button	• Change to the Menu Engine operation
F1	Function key	• Return to the start menu
F2	Function key	• Moving the selected support cylinders in • **Note**: The control release must have been made by touching the 2-Hand keyboard in the rear of the BTT, see section “Release of button block on BTT”
F3	Function key	• Moving the selected support cylinders out • **Note**: The control release must have been made by touching the 2-Hand keyboard in the rear of the BTT, see section “Release of button block on BTT”
F4	Function key	• Turn the crane icon in 180° increments
F5	Function key	• Select / deselect the support cylinders according to the crane position
F6	Function key	• Select / deselect the support automatic* • **Note**: The function support automatic* is only available on certain crane types.
F7	Function key	• Select / deselect the support cylinders according to the crane position
F8	Function key	• Select / deselect the support cylinders according to the crane position
F9	Function key	• -No function-
F10	Function key	• Select / deselect the support cylinders according to the crane position

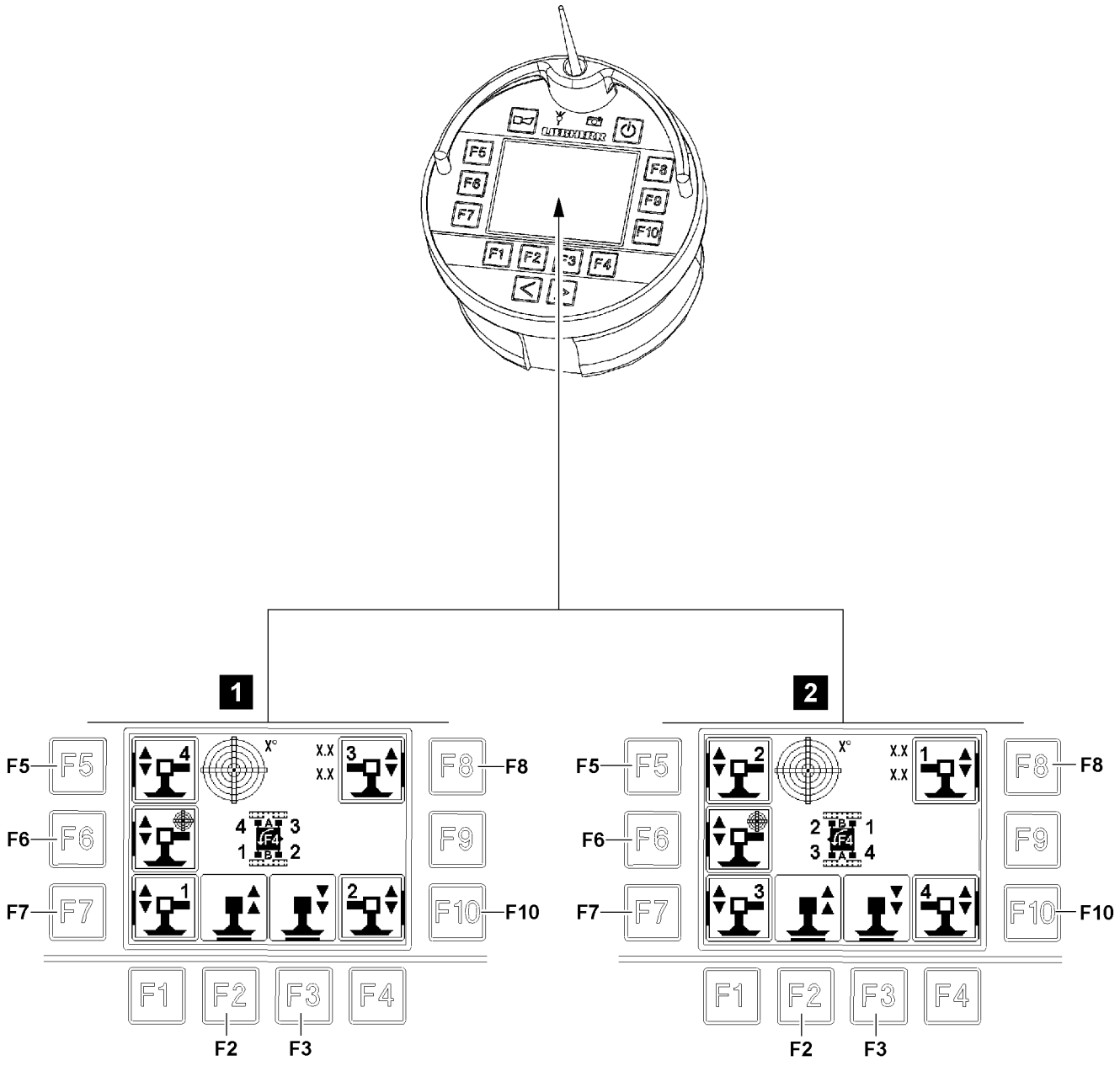

B117974

7.3 Manual support

The supports can be selected and controlled individually or in groups. When a support cylinder is directly selected, then the automatic support selection is cancelled.
Make sure that the following prerequisite is met:

– The orientation of the operator to the crane has been set correctly, see section “Aligning the radio remote control to the crane”

Selection / deselection of support cylinder:

– Illustration **1**: Operator is standing on the side of crawler carrier B:
  - Actuate the function key **F5** for support cylinders 4.
  - Actuate the function key **F7** for support cylinders 1.
  - Actuate the function key **F8** for support cylinders 3.
  - Actuate the function key **F10** for support cylinders 2.
    - **Result**: Selected support cylinders are bordered in bold. Additional support cylinders can be selected / deselected as desired.

– Illustration **2**: Operator is standing on the side of crawler carrier A:
  - Actuate the function key **F5** for support cylinders 2.
  - Actuate the function key **F7** for support cylinders 3.
  - Actuate the function key **F8** for support cylinders 1.
  - Actuate the function key **F10** for support cylinders 4.
    - **Result**: Selected support cylinders are bordered in bold. Additional support cylinders can be selected / deselected as desired.

– **Control release:**
  - The control release is made by touching the 2-Hand keyboard in the rear of the BTT, see section “Release of button block on BTT”
  - After completed control release, the icons over the function key **F2** / function key **F3** are highlighted in purple.

Note

▶ To control the support cylinders, a control release must be issued: The corresponding icons must be highlighted in purple.

– **Retract the support cylinder:**
  - Press the function key **F2**.

– **Extend the support cylinder:**
  - Press the function key **F3**.

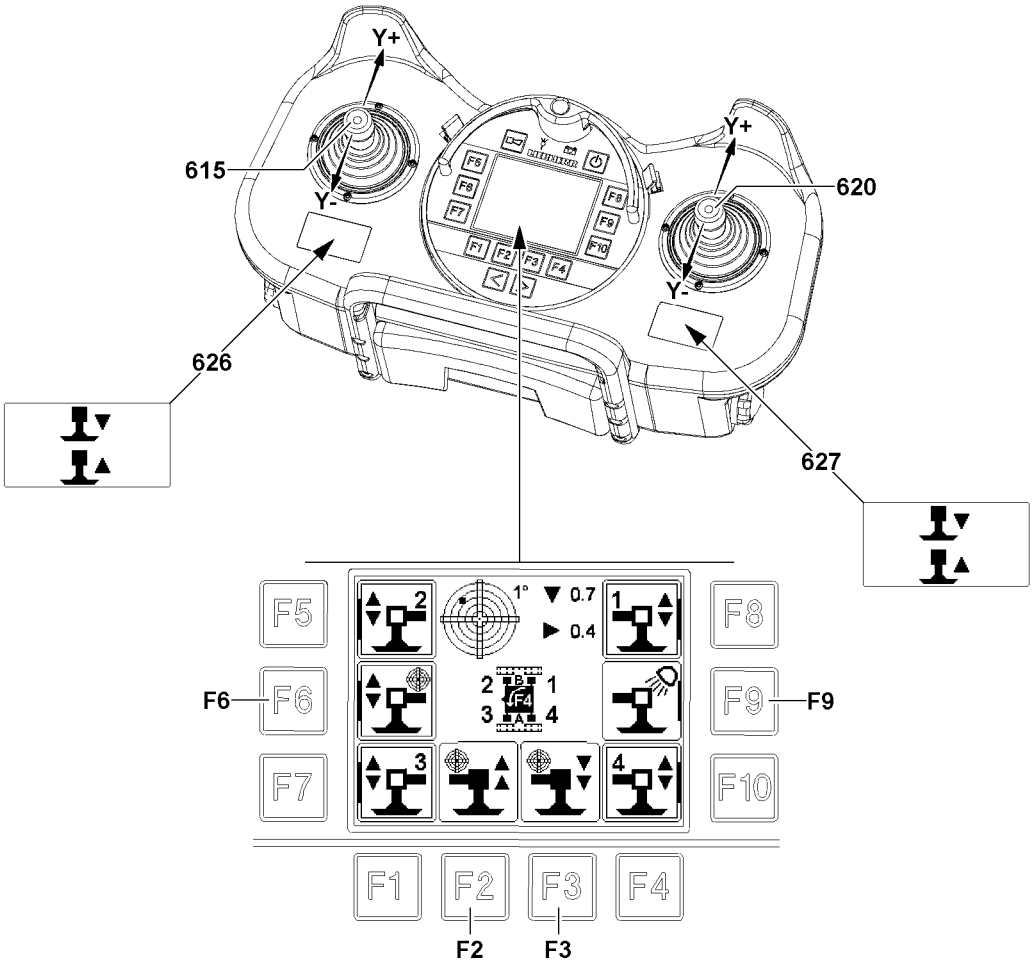

B117937

7.4 Automatic support*

Note

▶ The function support automatic* is only available on certain crane types.

The automatic support function automatically levels the crane during the support procedure.
At selection of the support automatic, an existing individual selection of the support cylinders will be deleted.
Make sure that the following prerequisite is met:

– The orientation of the operator to the crane has been set correctly, see section “Aligning the radio remote control to the crane”

– **Selection support automatic:**
  - Press the function key **F6**.
    - **Result**: When the support automatic is selected, the icon is surrounded with a bold border. When then individual support cylinders are selected / deselected, the support automatic is deselected.

– **Control release:**
  - The control release is made by touching the 2-Hand keyboard in the rear of the BTT, see section “Release of button block on BTT”
  - After completed control release, the icons over the function key **F2** / function key **F3** are highlighted in purple.

Note

▶ To control the support cylinders, a control release must be issued: The corresponding icons must be highlighted in purple.

– **Levelling the crane by retracting the support cylinder:**
  - Press the function key **F2**.

– **Levelling the crane by extending the support cylinder:**
  - Press the function key **F3**.

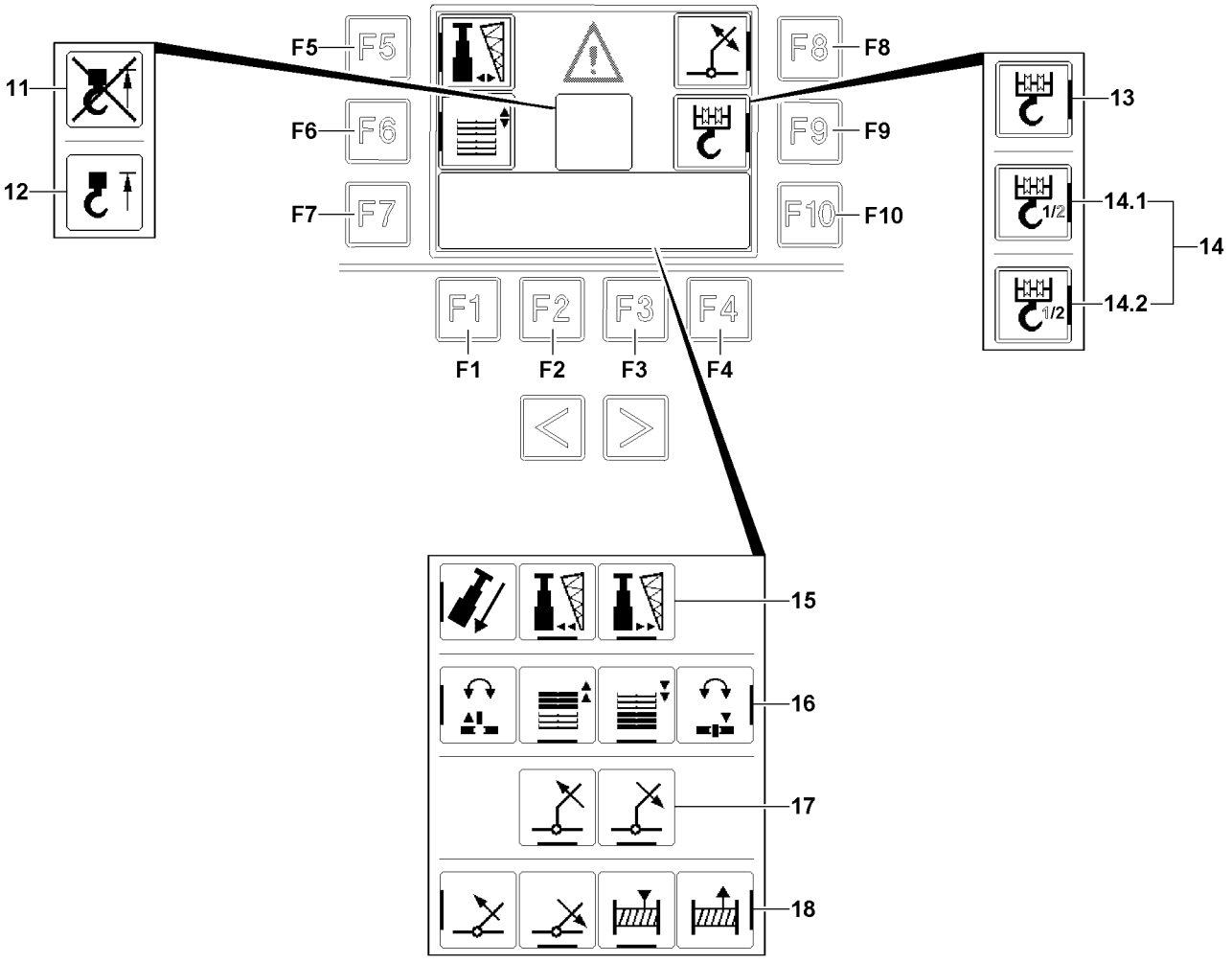

B117950

8 Menu Assembly functions

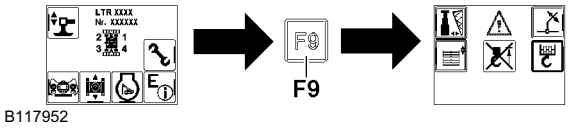

Note
Change from start menu to Assembly function menu:
▶ Press the function key **F9**.

Note
▶ The function key **F5** and the function key **F9** in the Assembly functions menu remain active only as long as the telescopic boom is completely telescoped in.

8.1 Icon explanation in assembly function menu

11 Hoist top bypassed	• Appears when the hoist top limit switch is automatically bypassed by the control.
12 Hoist top triggered	• Appears when the hoist top limit switch is triggered.
13 Single hoist gear	• Icon appears when only one hoist winch is activated.
14 Two hoist gears	• Icon appears if two hoist winches are activated. • Icon **14.1** appears: Hoist gear 1 selected. • Icon **14.2** appears: Hoist gear 2* selected.

8.2 The function keys in the assembly functions menu

554 Button	• Call up engine operation
555 Button	• Call up engine operation
F1 Function key	• Back to the start menu
F5 Function key	• Selection / deselection of hydraulic folding jib assembly* • After selection, the operating icons **15** appear additionally. • Function is only active when the telescopic boom is completely telescoped in.
F6 Function key	• Selection / deselection of ballasting / turntable lock • After selection, the operating icons **16** appear additionally.
F8 Function key	• Selection / deselection of lifting / lowering the hydraulic folding jib* • After selection, the operating icons **17** appear additionally.
F9 Function key	• Selection / deselection of fastening the hook block. • After selection, the operating icons **18** appear additionally. • Function is only active when the telescopic boom is completely telescoped in.

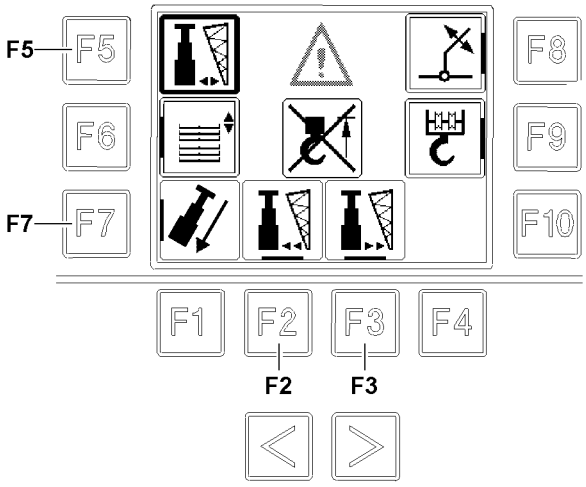

B117953

8.3 Assembling the hydraulic folding jib*

In order to be able to assemble the hydraulic folding jib* on the boom head, it must be swung out over a cylinder.
To be able to pin the hydraulic folding jib* on the boom head, it can be possible that the pin bores do not align. Then the telescopic boom must be tensioned, then the telescopic sections are pulled together.
Make sure that the following prerequisites are met:
– The telescopic boom is fully telescoped in.
– The boom angle is less than 5°.

WARNING
Danger of crushing!
For the function tension the telescopic boom, all telescopic sections are pulled together. Limbs or other body parts can be caught and crushed.
▶ As long as the function “tension the telescopic boom” is carried out, keep sufficient distance to the push area of the telescopic sections!

– **Selection / deselection of hydraulic folding jib assembly:***
  • Press the function key **F5**.
    • **Result**: When the selection has been made, the border on the icon on the right of function key **F5** is bolded. The icons over the function key **F2** / function key **F3** and next to the function key **F7** appear.

– **Control release:**
  • The control release is made by touching the 2-Hand keyboard in the rear of the BTT, see section “Release of button block on BTT”
  • After provided control release, the icons over the function key **F2** / function key **F3** and next to function key **F7** are highlighted in purple.

Note
▶ To control the functions, a control release must be issued: The corresponding icons must be highlighted in purple.

– Swing the **hydraulic folding jib* out:**
  • Press the function key **F3**.

– Swing the **hydraulic folding jib* in:**
  • Press the function key **F2**.

– **Tension telescopic boom:**
  • Press the function key **F7**.

Note
▶ To be able to tension the telescopic boom completely, the telescopic cylinder must be pinned with the innermost telescope, see Crane operating instructions, chapter 4.05.

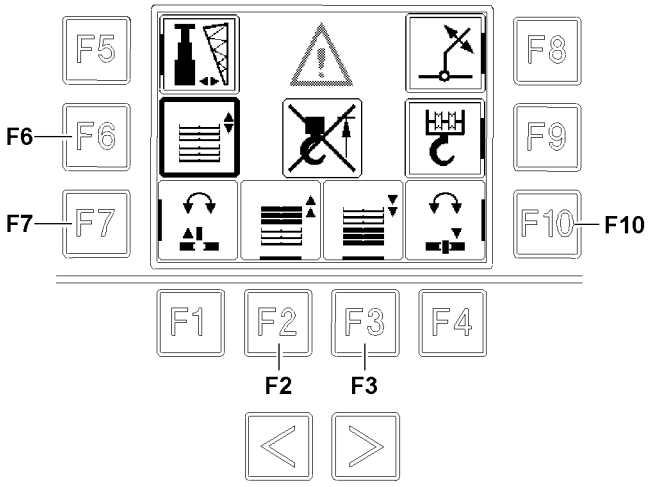

B117954

8.4 Ballasting / turntable lock

Ballasting is made via the ballasting cylinders. By pinning the turntable lock, the crane superstructure is prevented from turning. By pinning the turntable lock on the respective location, a collision of the ballasting cylinder with the counterweight can be eliminated. The turntable can be pinned on the intake point of the counterweight plates and on the receptacle point of the receptacle plate, see Crane operating instructions, chapter 4.07.

– **Selection / deselection of ballasting / turntable lock:**
  - Press the function key **F6**.
    - **Result**: When the selection has been made, the border on the icon on the right of function key **F6** is bolded. The icons over the function key **F2** / function key **F3** and next to the function key **F7** / function key **F10** appear.

– **Control release:**
  - The control release is made by touching the 2-Hand keyboard in the rear of the BTT, see section “Release of button block on BTT”
  - After provided control release, the icons over the function key **F2** / function key **F3** and next to function key **F7** / function key **F10** are highlighted in purple.

Note

▶ To control the functions, a control release must be issued: The corresponding icons must be highlighted in purple.

– **Lift the counterweight / retract the ballasting cylinders:**
  - Press the function key **F2**.

– **Lower the counterweight / extend the ballasting cylinders:**
  - Press the function key **F3**.

– **Unpin the turntable lock:**
  - Press the function key **F7**.

– **Pin the turntable lock:**
  - Press the function key **F10**.

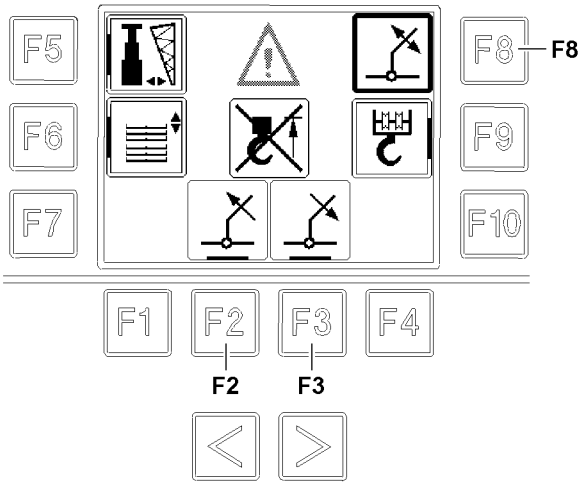

B117955

8.5 Lifting / lowering the hydraulic folding jib*

The hydraulic folding jib* can be raised / lowered for assembly, see Crane operating instructions, chapter 5.02.

– **Selection / deselection of lifting / lowering the hydraulic folding jib:***
  - Press the function key **F8**.
    - **Result**: When the selection has been made, the border on the icon on the left of function key **F8** is bolded. The icons above the function key **F2** / function key **F3** appear.

– **Control release:**
  - The control release is made by touching the 2-Hand keyboard in the rear of the BTT, see section “Release of button block on BTT”
  - After completed control release, the icons over the function key **F2** / function key **F3** are highlighted in purple.

Note

▶ To control the functions, a control release must be issued: The corresponding icons must be highlighted in purple.

– Lift the **hydraulic folding jib:***
  - Press the function key **F2**.

– Lower the **hydraulic folding jib:***
  - Press the function key **F3**.

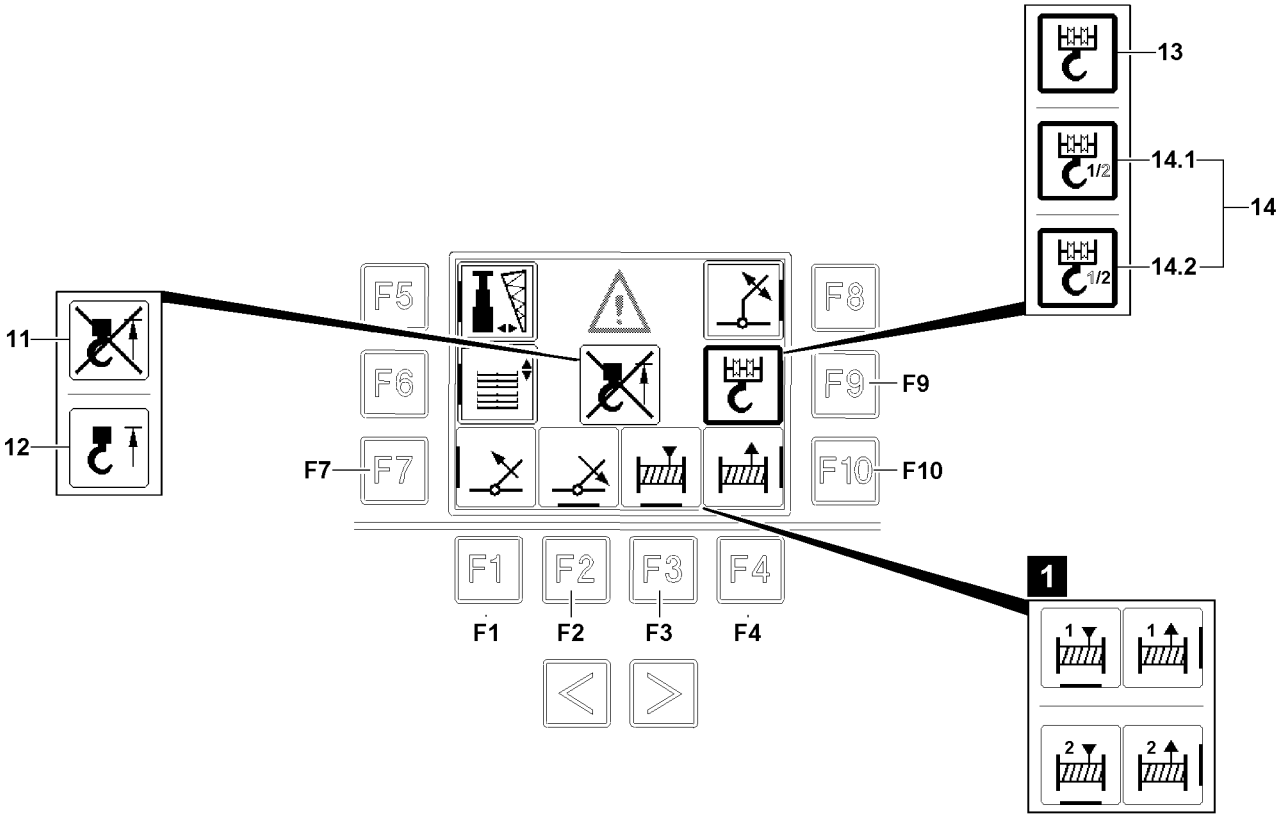
13
14.1
14
14.2
11
12
F5
F8
F6
F9
F9
F7
F7
F10
F10
F1
F2
F3
F4
F1
F2
F3
F4
1
1
1
2
2

B117951

8.6 Fasten the hook block

NOTICE
Incorrect hoist winch selected!
If the incorrect hoist winch is selected, the crane can be damaged.
▶ When two hoist winches are active, select the correct hoist winch for the hook block.

8.6.1 Selecting the hoist winch

When the hoist winches **14** icon appears, a hoist winch must be selected first. The selection is only possible via the operating elements in the crane operator's cab! To do so, the winch which is not be driven must be blocked.

– Icon hoist winch **14.1** is displayed: Hoist winch 1 (winch 1) is active.
– Icon hoist winch **14.2** is displayed: Hoist winch 2 (winch 2) is active.

Make sure that the following prerequisite is met:

– Icon hoist winches **14** appears in the BTT display.

– **Selection of hoist winch:**
  - Release the respective winch, see Crane operating instructions, chapter 4.05.
    - **Result:** The number for the active hoist winch is displayed in bold.
      In the icons for the control appears the number of the active hoist winch, see illustration **1**.

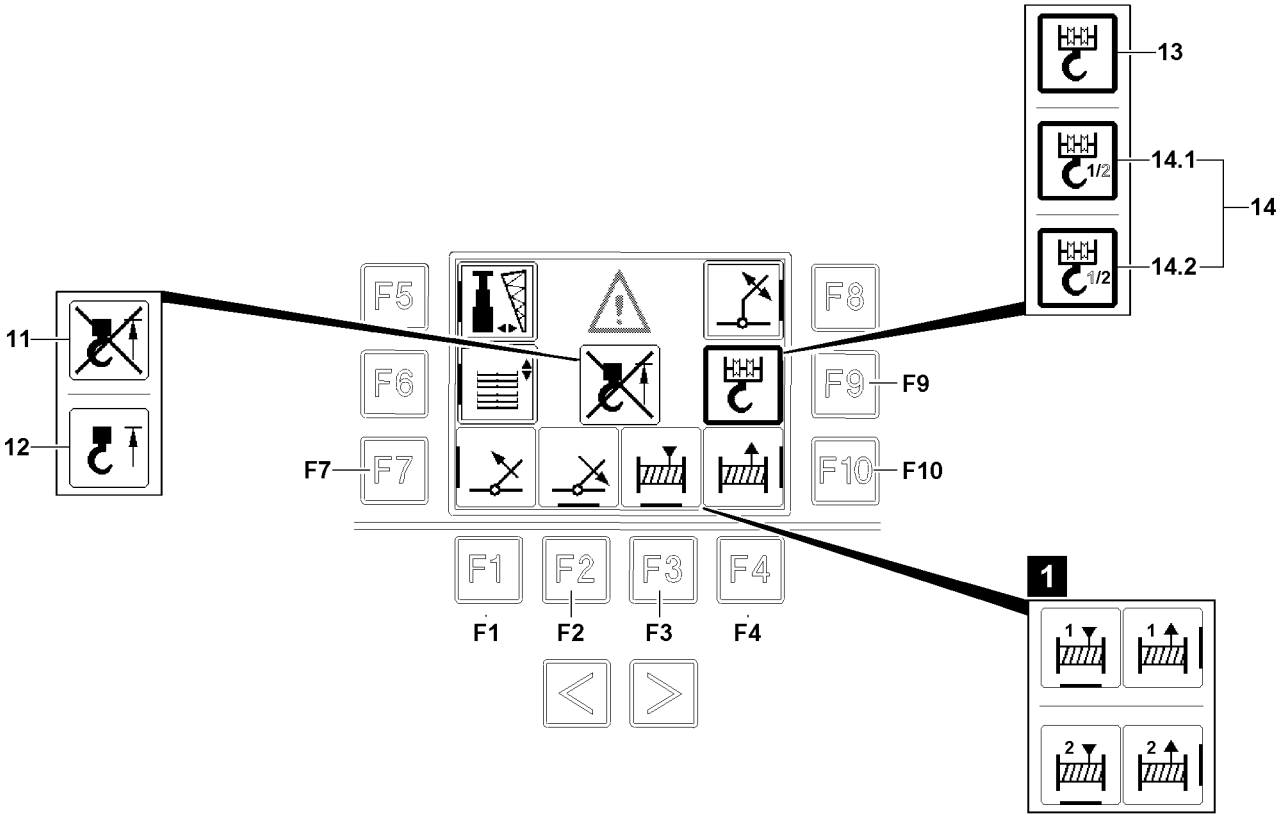

B117951

8.6.2 Detaching / attaching the hook block on the fastening point

– Hoist top limit switch bypassed **11**
  is displayed when the hoist top limit switch is automatically bypassed by the control.
– Hoist top limit switch triggered **12**
  is displayed when the hoist top limit switch is triggered, crane movements are limited.

Make sure that the following prerequisite is met:
– The crane superstructure is in 0°-position or in 180°-position pinned with the crane chassis.

– **Selection of hoist winch / hook block:**
  • Press the function key **F9**.
    • **Result**: When the selection has been made, the border on the icon on the left of function key **F9** is bolded. The icons over the function key **F2** / function key **F3** and next to the function key **F7** / function key **F10** appear.

– **Control release:**
  • The control release is made by touching the 2-Hand keyboard in the rear of the BTT, see section “Release of button block on BTT”
  • After provided control release, the icons over the function key **F2** / function key **F3** and next to function key **F7** / function key **F10** are highlighted in purple.

Note
▶ To control the functions, a control release must be issued: The corresponding icons must be highlighted in purple.

Note
▶ The function key **F2**, function key **F3**, function key **F7** and function key **F10** have 2 speed stages. For example, if the function key **F10** is actuated lightly, the hoist rope is spooled out slowly. If the function key **F10** is actuated harder, the hoist rope is spooled out quickly.

Spool the hoist winch up:
– Press the function key **F3**.

Spool the hoist winch out:
– Press the function key **F10**.

Luff the telescopic boom down:
– Press the function key **F2**.

Luff the telescopic boom up:
– Press the function key **F7**.

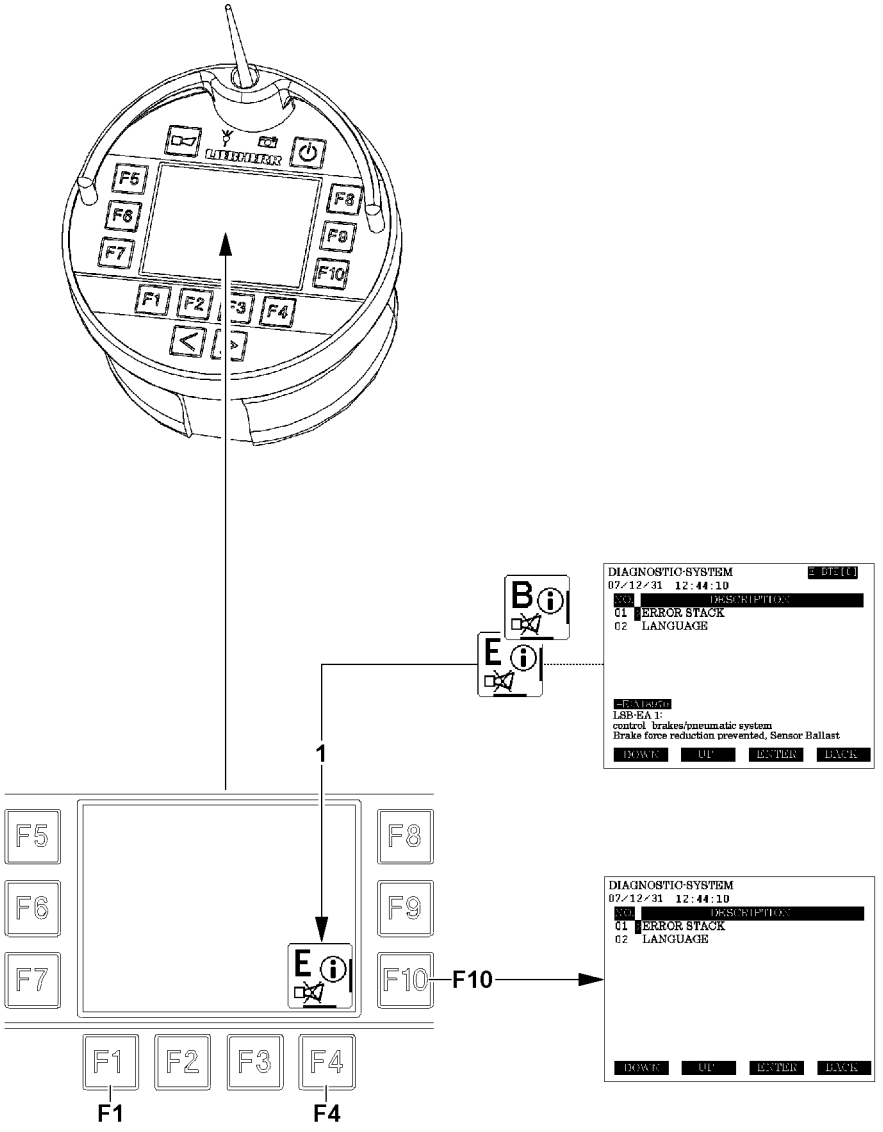
F5
F6
F7
F8
F9
F10
F1
F2
F3
F4
1
F10
F1
F4
B
E
DIAGNOSTIC-SYSTEM
07/12/31 12:44:10
NO. DESCRIPTION
01 ERROR STACK
02 LANGUAGE
LSB-EA 1:
control brakes/pneumatic system
Brake force reduction prevented, Sensor Ballast
DOWN
UP
ENTER
BACK

B117975

9 Menu Test system

If an error message is issued for the LICCON control:
– a „B“ or „E“ is shown in the information field **1**, see illustration
– an acoustic warning signal of the radio remote control is issued.

9.1 Function keys in the “Test system” menu

F1 Function key	• Return to selection overview.
F4 Function key	• When a note for an error message appears and a horn is shown in the information field **1**: Press 1x: Acoustical warning signal of the radio remote control, which can be shut off in case of operating / system errors is shut off. Press 2x: Call up test system
F10 Function key	• Call up test system

9.2 Operating the test system

– **Turn acoustic warning signal off:**
  • Press the function key **F4**.
    • **Result**: Acoustic warning signal of the radio remote control, which can be shut off in case of operating / system errors is shut off.
– **Call up test system:**
  • Press function key **F4** again.
  or
  • Press the function key **F10**.
    • **Result**: Start page of test system is called up.
– **Close the test system:**
  • Press the function key **F1**.

Note
▶ For detailed description of the test system, see Diagnostics Manual.

1

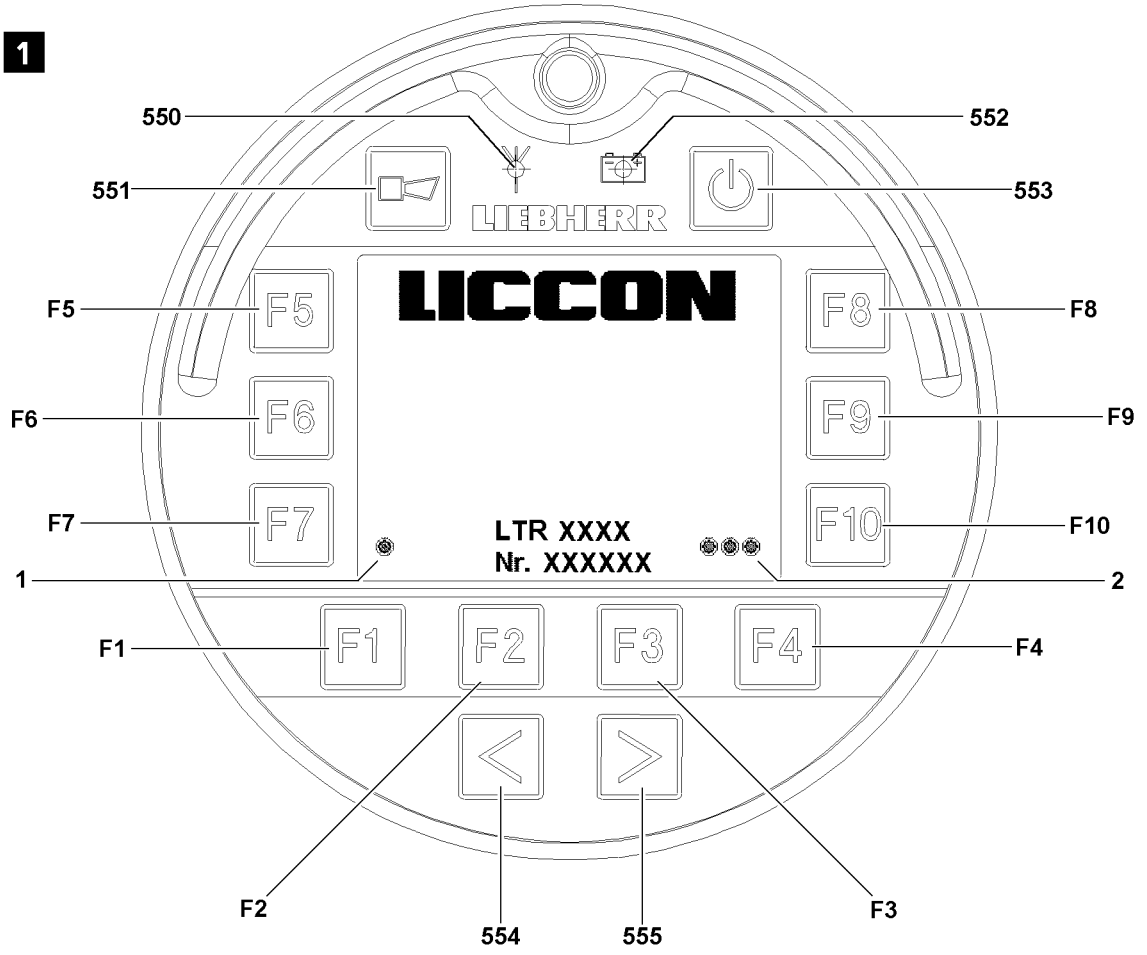
550
552
551
553
LIEBHERR
LICCON
F5
F8
F6
F9
F7
F10
LTR XXXX
Nr. XXXXXX
1
2
F1
F2
F3
F4
554
555

2

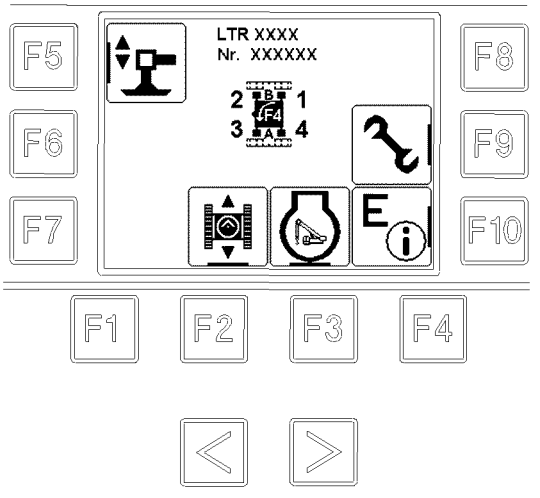
F5
F6
F7
LTR XXXX
Nr. XXXXXX
2 B 1
F4
3 A 4
E
F8
F9
F10
F1
F2
F3
F4

B117808

10 Operation Bluetooth™ Terminal

There are two ways to turn theBluetooth™ Terminal (BTT)on:
– Turning the BTT on via the ignition switch
– Turn the BTT on via the ON / OFF button

10.1 Turning the BTT on via the ignition switch

Make sure that the following prerequisite is met:
– The BTT is in the charging cradle.

▶ Turn the ignition for the crane engine on: Actuate the ignition switch, see Crane operating instructions, chapter 4.01.

Result:
– The Bluetooth™ Terminal (BTT) turns itself on.
– After completion of the starting procedure, the indicator light **550** and indicator light **552** light up green, see illustration **1**.
– The start screen is shown before the display for “Menu overview” changes, see illustration **2**.

10.2 Turning the Bluetooth™ Terminal on via the ON / OFF button

Make sure that the following prerequisite is met:
– The Bluetooth™ Terminal (BTT) has been removed from its charging cradle.

▶ Turn the ignition for the crane engine on: Actuate the ignition switch, see Crane operating instructions, chapter 4.01.

▶ Turn the Bluetooth™ Terminal (BTT) on: Press the button **553** (ON / OFF button).

Result:
– The Bluetooth™ Terminal (BTT) turns itself on.
– The indicator light **550** and indicator light **552** light up in orange.
– The start screen is displayed, see illustration **1**.

▶ Enter the code: Press button **554**, then button **555** and then function key **F1**.

Result:
– The indicator light **550** and indicator light **552** light up in green.
– The indicator light **1** and indicator light **2** light up green.
– The connection between the BTT and the receiver is established.

▶ Press any function key.

Result:
– The BTT displays the “Main menu”, see illustration **2**.

▶ Select the menu with the appropriate function key, see relevant technical chapter.

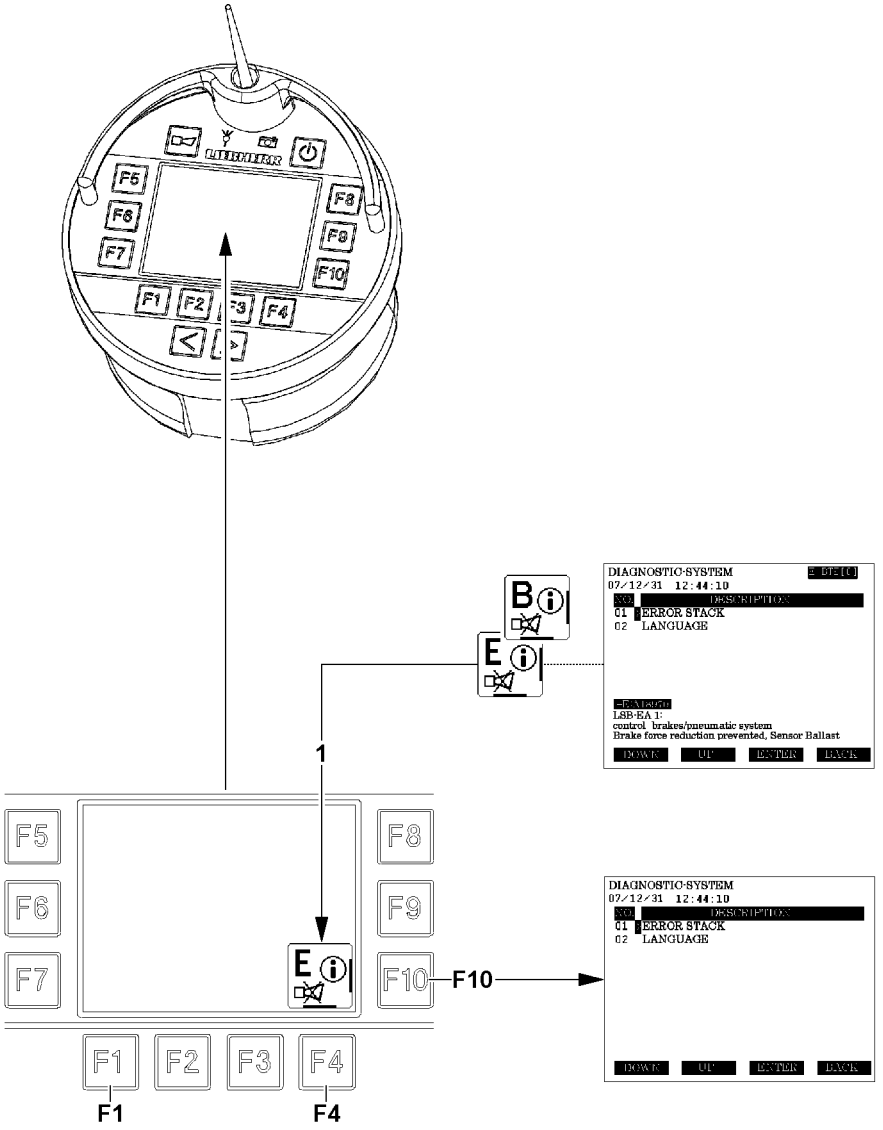
F5
F6
F7
F8
F9
F10
F1
F2
F3
F4
1
F10
F1
F4
B
E
DIAGNOSTIC-SYSTEM
07/12/31 12:44:10
NO. DESCRIPTION
01 ERROR STACK
02 LANGUAGE
LSB-EA 1:
control brakes/pneumatic system
Brake force reduction prevented, Sensor Ballast
DOWN
UP
ENTER
BACK

B117975

11 Measures in case of problems

11.1 Did an error message occur?

If an event occurs which leads to the display of an error message, a “B” or “E” are shown on icon **1**, see illustration.

WARNING
Danger of accident!
If the displayed errors in the icon **1** are ignored, there is a risk of accidents!
▶ Take the crane out of service and remedy the cause of the error!
▶ Do not put the crane back into operation before the cause of the error has been remedied!

▶ Press the function key **F4**.

Result:
– Acoustical warning signal of the radio remote control, which can be shut off in case of operating / system errors is shut off.

▶ Press the function key **F10**.

Result:
– The “Test system” program (error determination screen) is called up.

Note
▶ To be able to find the cause of the problem, the error or errors must be read in the error determination screen / error stack of the BTT **500**, see Diagnostics manual.

Close the “Test system” program (error determination screen):
▶ Press the function key **F1**.

Result:
– The “Test system” program (error determination screen) is closed.

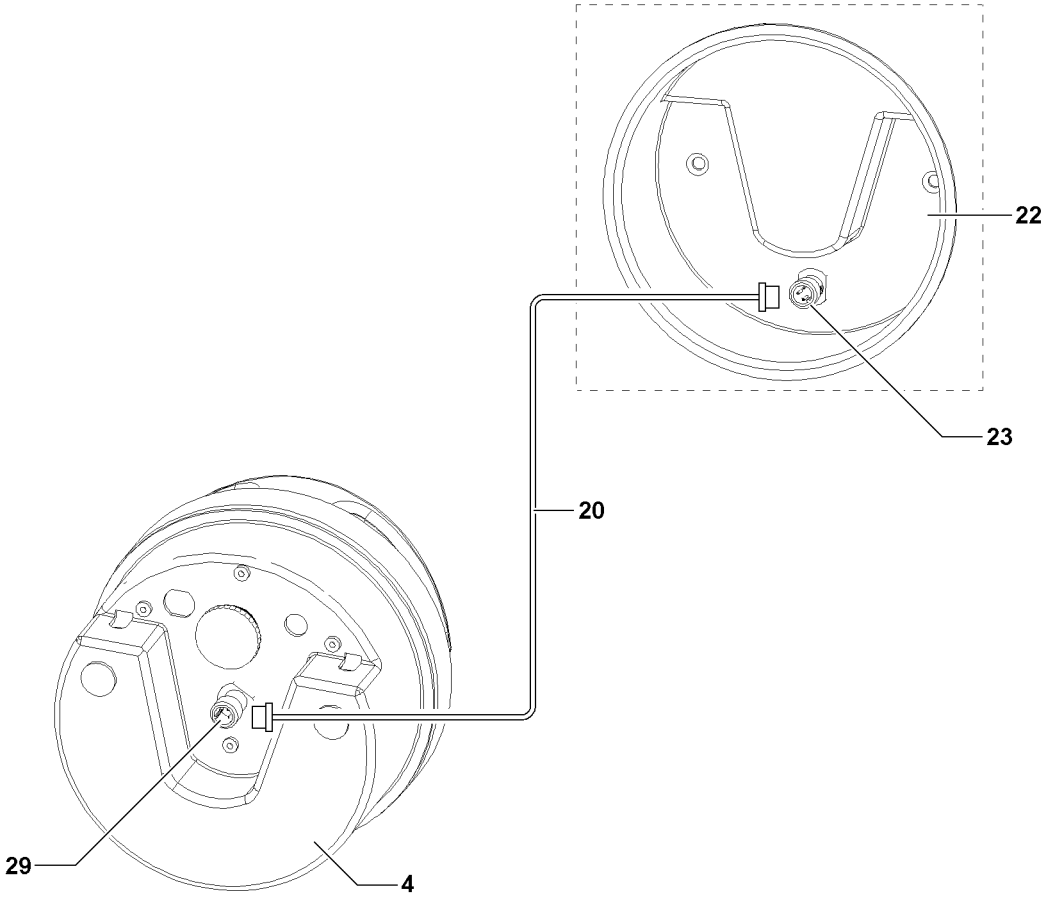

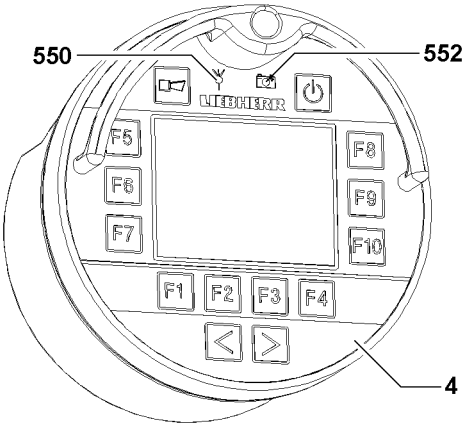

B112952

11.2 The displays remain dark?

Note
- ▶ Indicator light Charge condition **552** shows the charge condition.
- ▶ Indicator light Transmission signal **550** shows the quality of the radio contact connection.

- ▶ When the indicator light charge condition **552** does not light up or lights up red:
  Plug the BTT **4** into the charging module **22**.
- ▶ When the LED **552** does not light up with the BTT **4** plugged in or the BTT **4** cannot be turned on:
  Contact Liebherr Service to determine the cause of the problem and further procedure.

11.3 Is the radio connection faulty?

If the radio contact connection to the BTT **4** is faulty or interrupted (Indicator light Transmission signal **550** lights up red), then it can be bypassed with line **20**.
The radio connection to the BTT **4** can become faulty or interrupted through the following occurrences:
- By interference signals from a nearby radio tower.
- The radio module on the BTT **4** or on the BTB is defective.
- The rechargeable battery in the BTT **4** is discharged.
- Due to bad selection of location by the operator.

11.3.1 Radio connection interrupted

Make sure that the following prerequisites are met:
- The line **20** to bypass the radio contact connection has been removed from the switch cabinet of the crane cab.
- The BTT **4** has been removed from the charging module **22** and is turned on.
- The caps on the plug connection **23** and the plug connection **29** have been removed.

- ▶ Screw the line **20** on the charging module **22** onto the plug connection **23**.
- ▶ Screw the line **20** on the BTT **4** onto the plug connection **29**.

Result:
- The radio contact connection is bypassed.

Note
If the BTT **4** does not turn on, even though the line **20** is connected with the charging module **22**, then the rechargeable battery may be defective!
- ▶ Contact Liebherr Service to determine the cause of the problem and further procedure.

6 Additional equipment

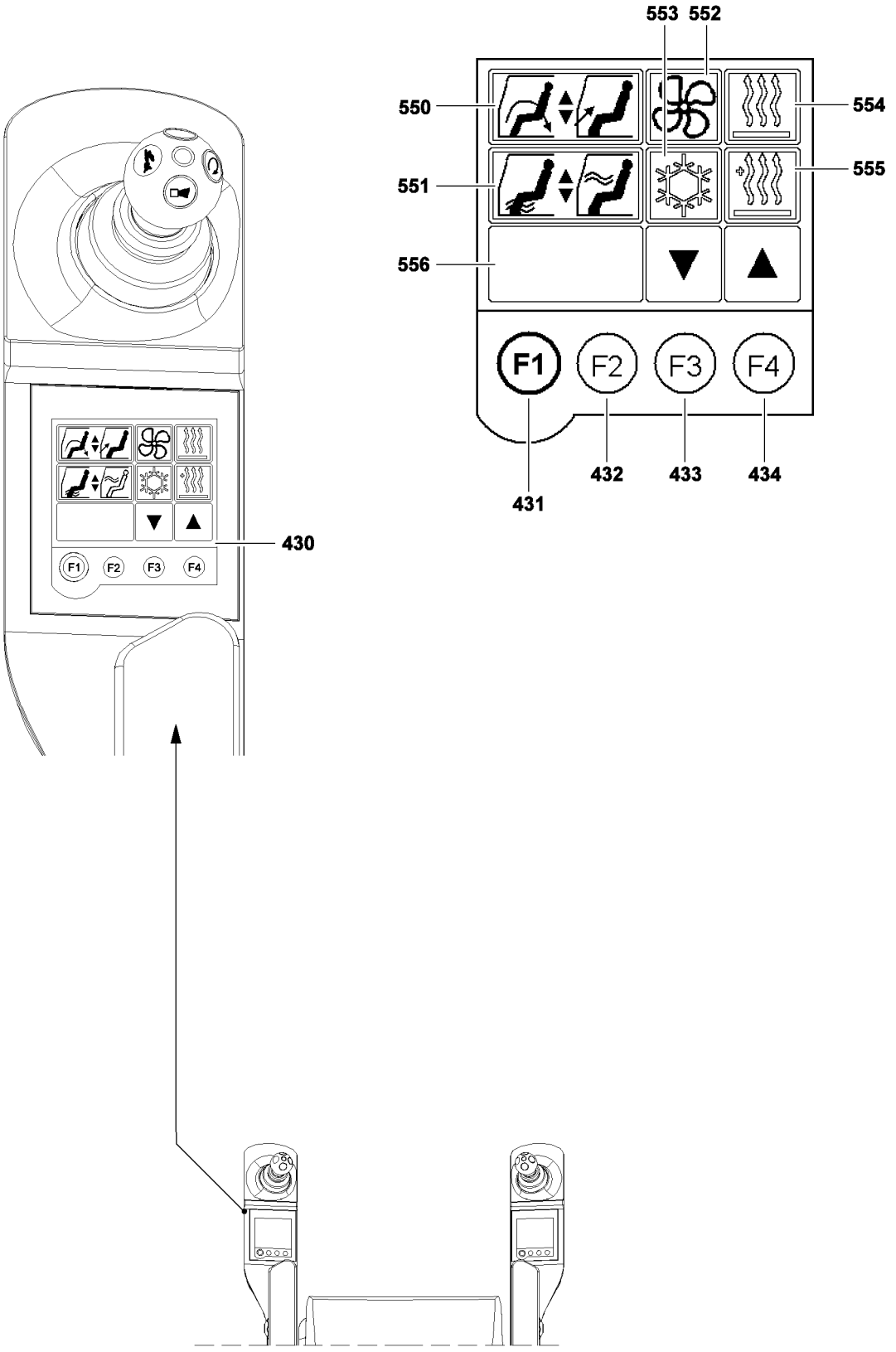

B103973

1 Heating the crane cab

The crane cab can be heated with two heaters, which are independent of each other:
– Engine-dependent heater
– Engine independent auxiliary heater* with engine preheating

Individual heater settings (both engine-dependent as well as engine-independent auxiliary heater*) are made only via the "air conditioning settings" menu on the left touch display **430**.

NOTICE
Risk of damage in the electrical / electronic component area when carrying out electrical welding work on the crane!
▶ Disconnect the negative and positive cables from the batteries and connect the positive cables to the vehicle ground.

Note
In very low temperatures it is possible that the touch displays change delayed into the menu points at the start. The touch functions remain deactivated until an automatic warms up the touch displays sufficiently.
▶ Wait a few minutes after ignition "ON" until the menu items are shown on the touch display.

2 Menu "Climate control settings"

2.1 General

The "Climate control settings" menu is accessed, with the ignition turned, on by pressing function key F1 **431** on the left touch display **430**.

Note
▶ The "Climate control settings" menu is removed automatically after 30 s if no settings are changed during this time.
▶ The display on the left touch display changes to the "Master switch configuration" menu.

If the crane ignition is turned off, the LICCON computer system and the touch display also turn themselves off. The settings in the "Climate control settings" menu remain except for the function selection auxiliary heater **555**.

Note
▶ If the auxiliary heater has been programmed, the settings are saved when the ignition is turned "OFF". The crane display appears on the left and right touch displays.

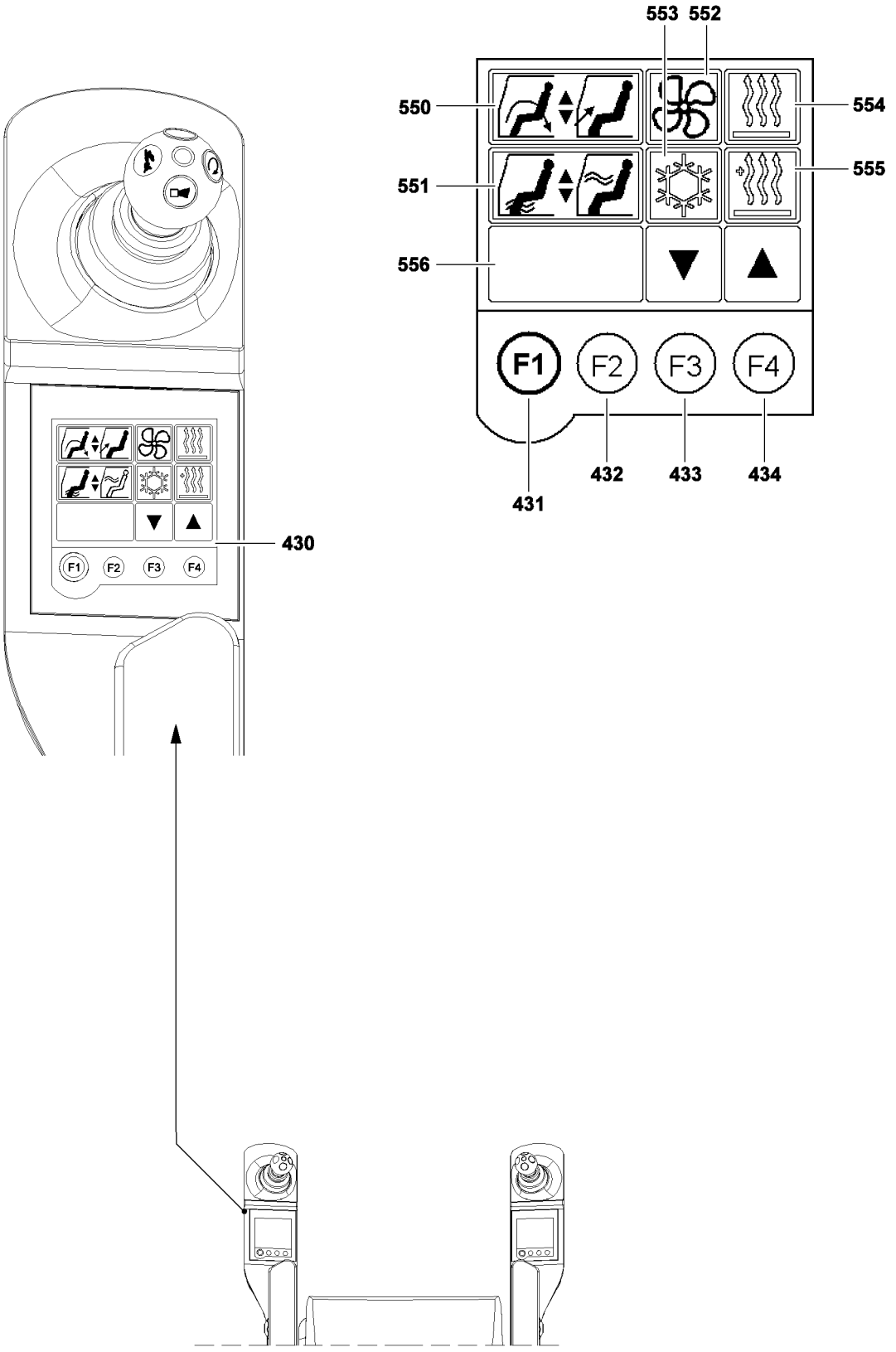

B103973

2.2 Operating the left touch display

The left touch display **430** contains all the functions for making and operating all heater, ventilation and climate control settings and for programming the auxiliary heater on the crane:

- Recirculated air / fresh air **550**
  - Function selection
- Air distribution "up" / "down" **551**
  - Function selection
- Fan / blower **552**
  - Function selection
- Climate control system* **553**
  - Function selection
- Heater **554**
  - Function selection
- Auxiliary heater **555**
  - Function selection
- Status display **556**
  - Display function
  - The status display **556** shows the following, depending on the selected function:
  - The adjustment ratios between the overhead area and the floorboard area for recirculated air / fresh air.
  - The adjustment ratios for air distribution.
  - The constant heater stage setting in manual heating mode.
  - The temperature setting in AUTO heating mode.
  - Climate control system "ON".
  - Climate control system "OFF".
  - The programming display for auxiliary heater.

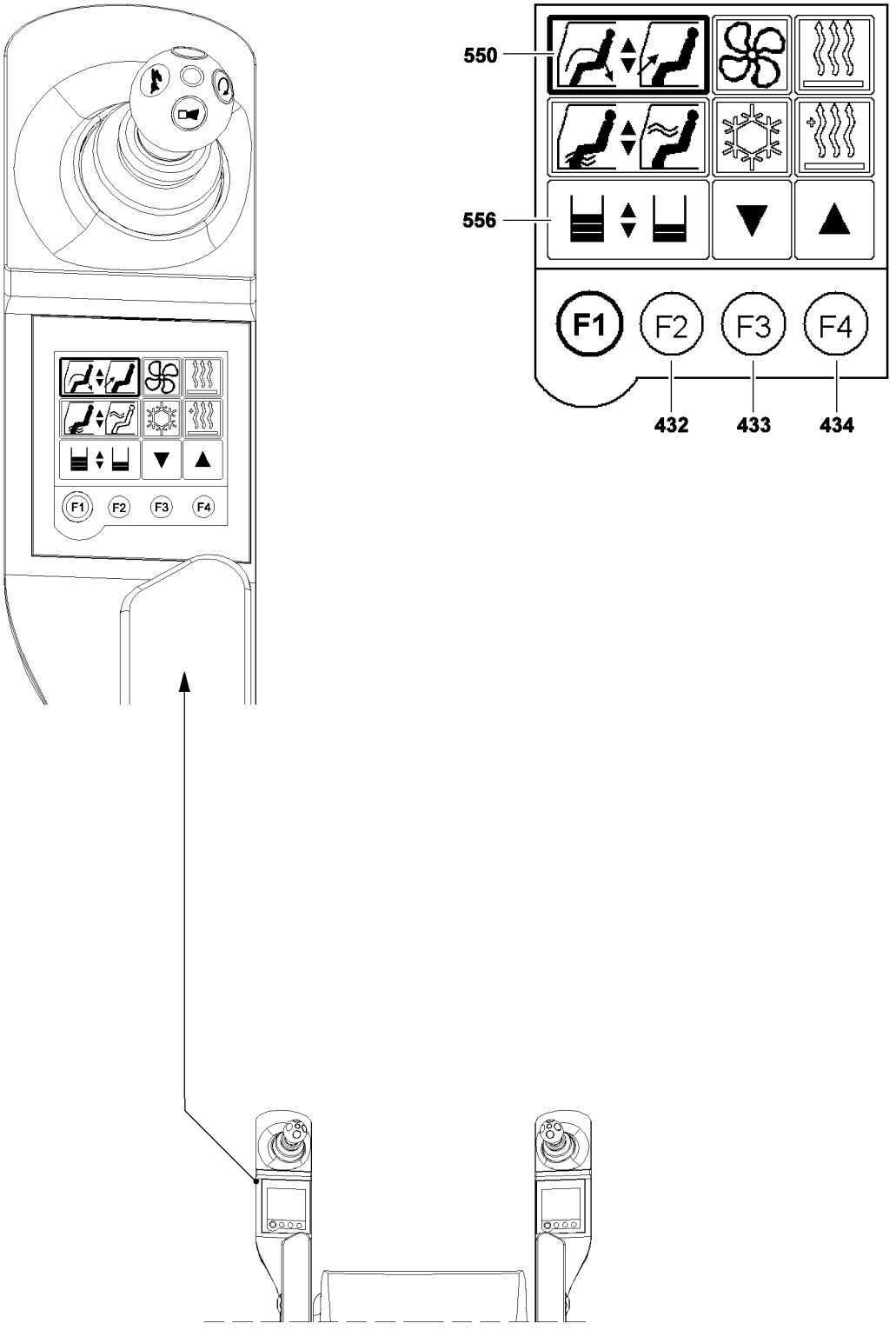

B103974

2.3 Adjusting the recirculating air / fresh air

The "recirculating air / fresh air" function is selected by "touching" the icon **550** on the left touch display.
The adjustment rate is displayed in the status display **556** as a double bar display for "recirculating air" and "fresh air".
The adjustment rate between "recirculating air / fresh air" is changed with the function key F3 **433** and the function key F4 **434**.

Adjustment rates for recirculating air / fresh air			
Status display	Recirculating air	Fresh air	Icon display
	5	**0**	*Fresh air "OFF"*
	4	**1**	
	3	**2**	
	2	**3**	
	1	**4**	
	0	**5**	*Recirculating air "OFF"*

▶ Select "Recirculating air / fresh air" **550** function by "touching".

Result:

– The "Recirculating air / fresh air" icon is surrounded with a black border.
– The current adjustment rate is displayed in the status display **556** as a double bar display for "recirculating air" and "fresh air".

▶ Press function key F3 **433**.

Result:

– The "proportion of circulating air" is reduced and the "proportion of fresh air" increases at the same time.

▶ Press function key F4 **434**.

Result:

– The “proportion of fresh air” is reduced and the “proportion of recirculating air” increases at the same time.

blank page!

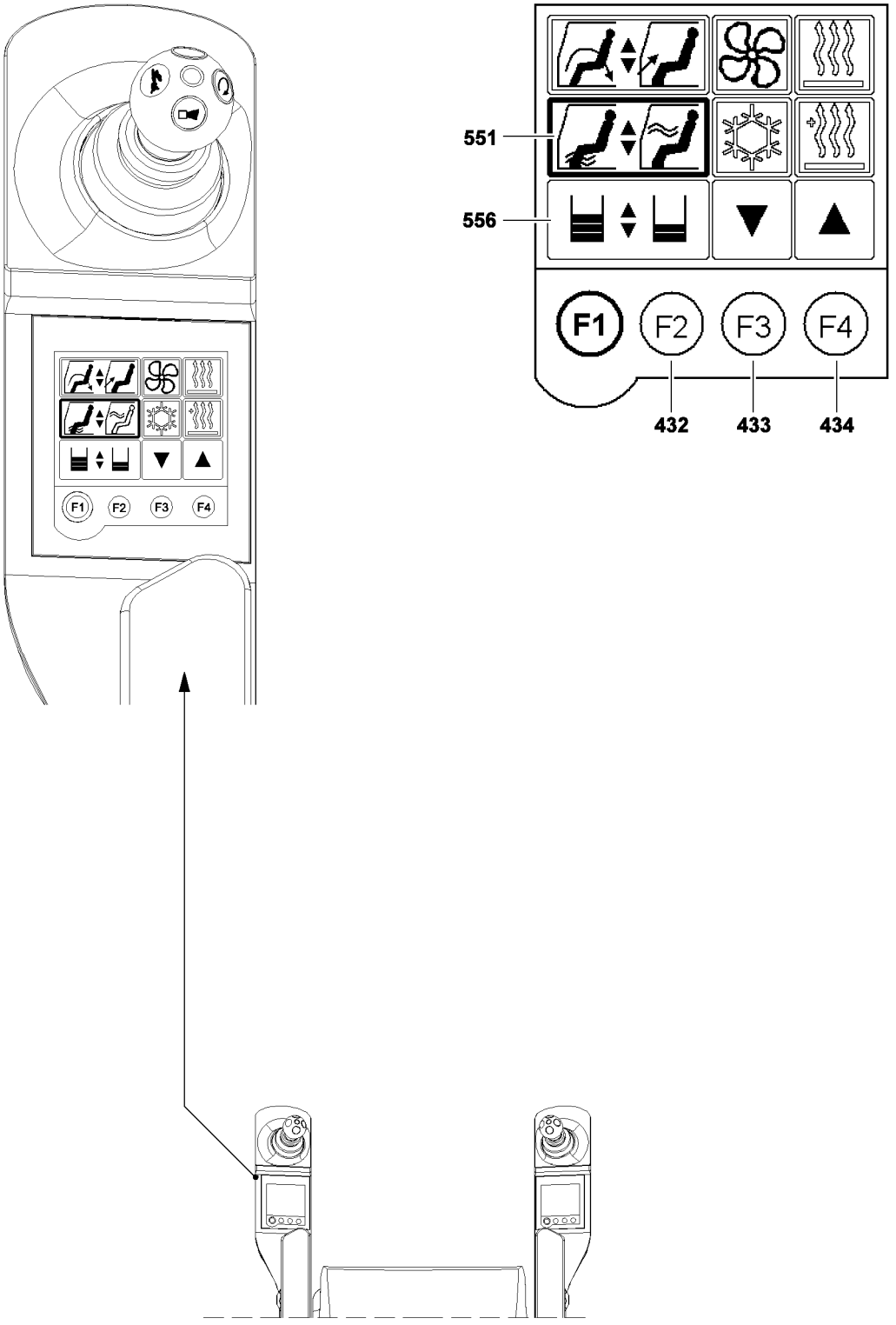

B103975

2.4 Adjusting the "lower" / "upper" air distribution

The "lower" / "upper" air distribution function is selected by "touching" the icon **551** on the left touch display.
The adjustment ratio is displayed in the Status display **556** - as a double bar display - for the "lower" and "upper" air distribution.
The adjustment ratio between "lower" and "upper" distribution is modified with function key F3 **433** and function key F4 **434**.

Air distribution adjustment rates			
Status display	"Down"	"Up"	Icon display
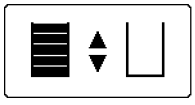	**5**	**0**	*Up "OFF"*
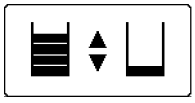	**4**	**1**	
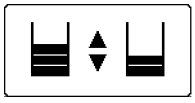	**3**	**2**	
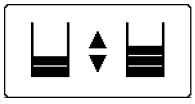	**2**	**3**	
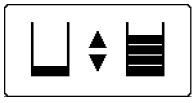	**1**	**4**	
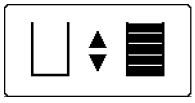	**0**	**5**	*Down "OFF"*

▶ Select Air distribution "upper / lower" **551** function by "touching".

Result:

– The "lower / upper" air distribution icon is surrounded with a black border.
– The current adjustment rate is displayed in the status display **556** - as a double bar display - for "lower" and "upper".

▶ Press function key F3 **433**.

Result:

– The proportion of air on the "bottom" is reduced, the proportion of air on the "top" increases at the same time.

▶ Press function key F4 **434**.

Result:

– The “proportion of air on top” is reduced, the “proportion of air on the bottom” increases at the same time.

blank page!

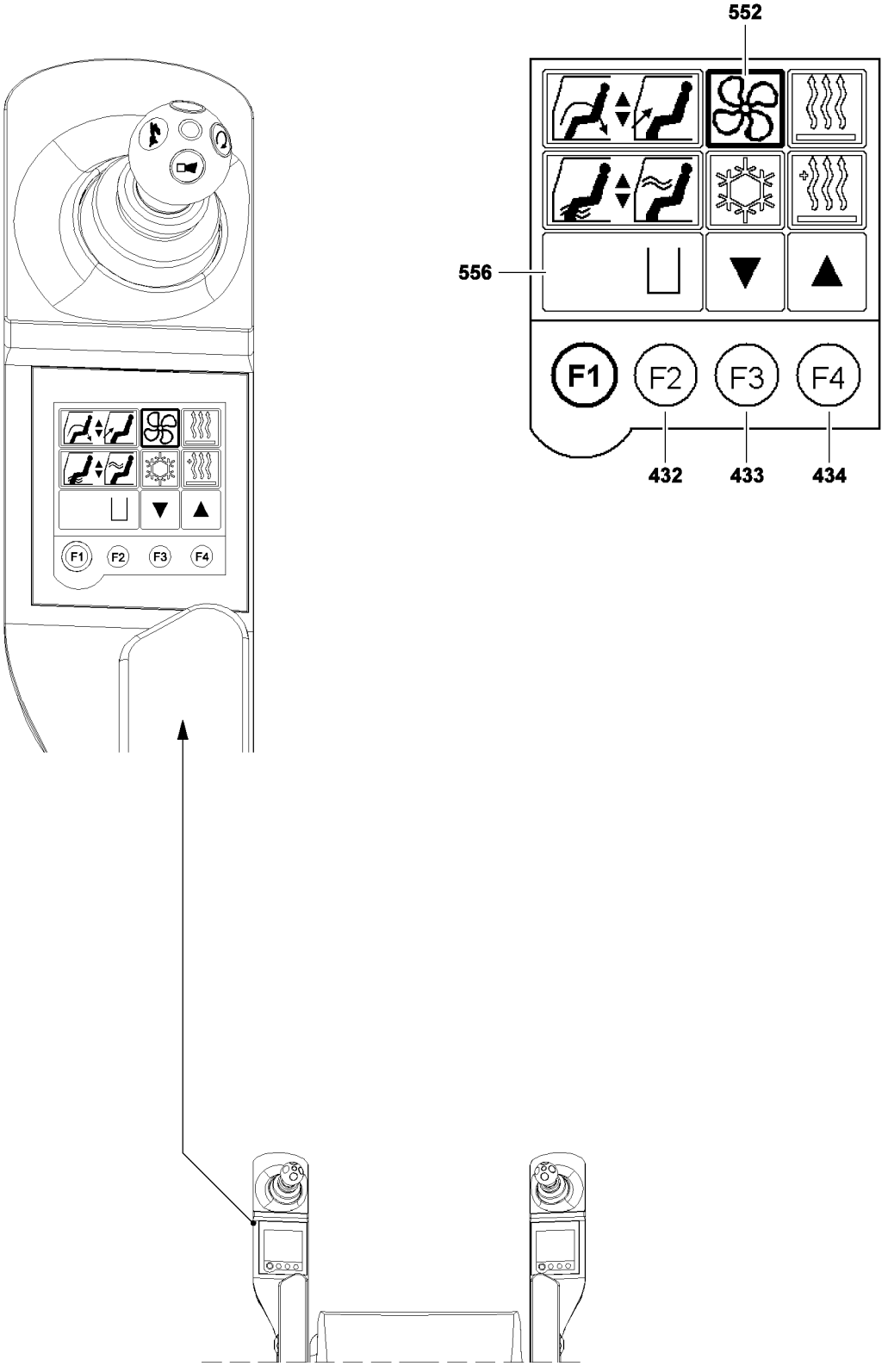

B103976

2.5 Fan / blower adjustment

The “Fan / blower” function is selected by “touching” the icon **552** on the left touch display.
The current “Fan” / “blower setting” is shown as a bar display in the status display **556**.
The “Fan” / “blower setting” is reduced with the function key F3 **433** and increased with the function key F4 **434**.

“Fan” / “blower stage”		
Status display	Stage	Icon display
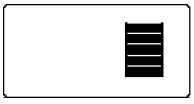	**5**	
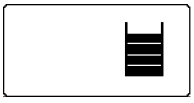	**4**	
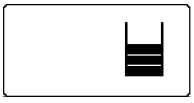	**3**	
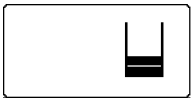	**2**	
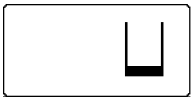	**1**	
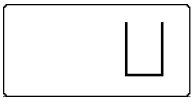	**0**	*Fan “OFF”*

▶ Select “Fan / blower **552** ” by “touch”.

Result:

– The “Fan / blower” icon is then surrounded with a black border.
– In the current status display **556**, the “Fan” / “blower stage” is shown as a bar display.

▶ Press function key F3 **433**.

Result:

– The “Fan” / “blower stage” is reduced.

▶ Press function key F4 **434**.

Result:

– The “Fan” / “blower stage” is increased.

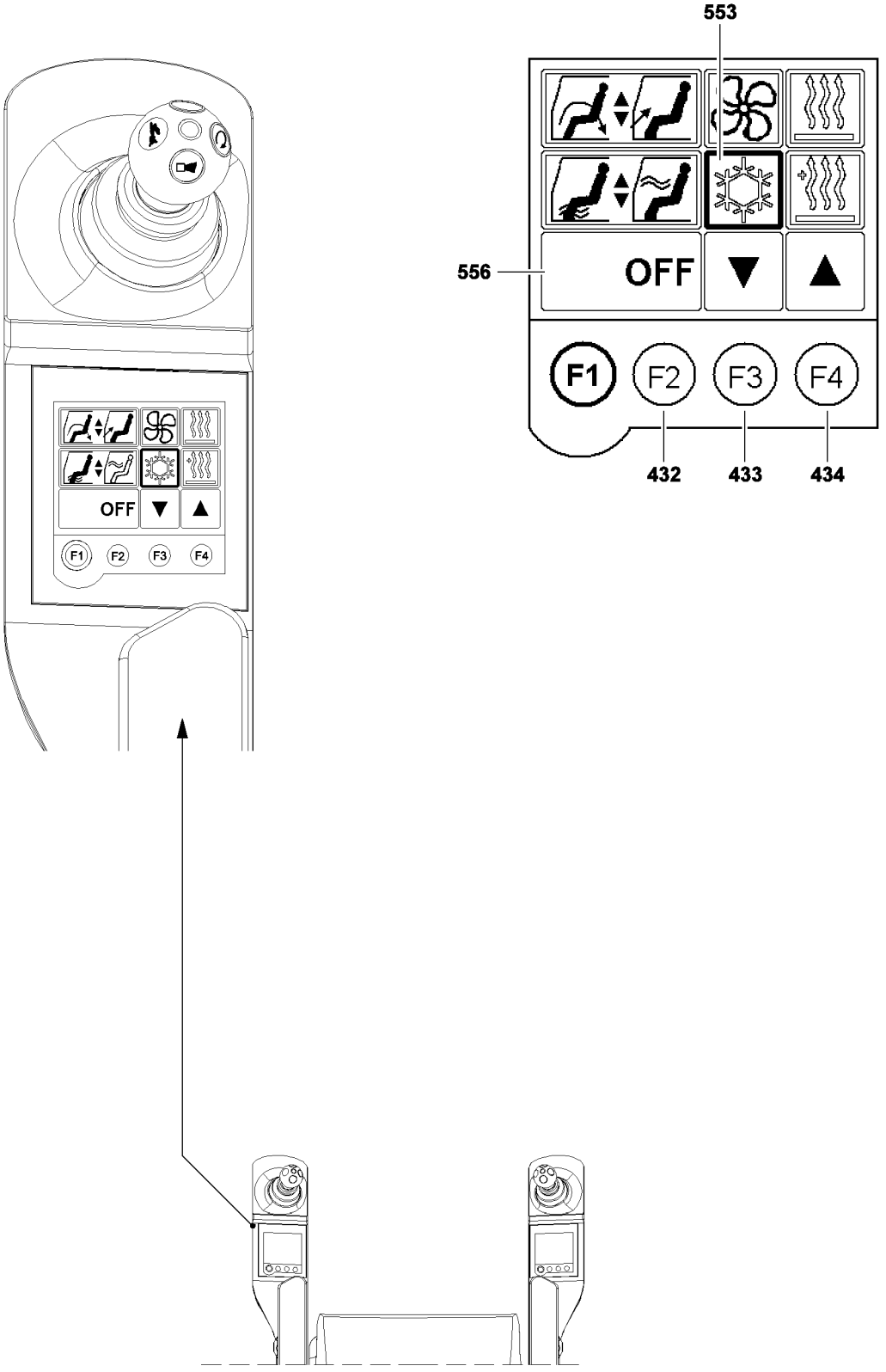

B103977

2.6 Climate control system* Crane cab

The climate control system is a combination of an automatic heater and ventilation system as well as an air conditioning system, which is used to dehumidify and cool the air in the crane cab.
Please note:

- In air conditioning operation, the humidity in the crane cab is decreased. This prevents the windows from fogging up.
- In case of high outside humidity and high outside temperatures, the condensation can drip from the evaporator of the air conditioning system and form a puddle under the crane. This is normal and no sign of leaks.
- In automatic mode:
  In low ambient temperatures, the blower does not switch to a higher speed until the coolant has reached a sufficient temperature.

WARNING
Injuries to persons and property damage!
If the climate control system is turned off and in air circulation operation, the windows can fog up!

▶ If the windows are fogged up, proceed according to section "Procedure in case of fogged up windows"!
▶ Do not expose personnel to low interior temperatures!
▶ Repair work on the climate control system and maintenance work on the cooling circuit must be carried out solely by a Service technician from Liebherr-Werk Ehingen!

Note

▶ In order not to compromise the heater or cooling output and to prevent the windows from fogging up, the air intake must be clear of ice, snow and contaminants.
▶ The climate control system works best if the windows and door are closed. However, if the crane cab is heated up too much when the mobile crane is at a standstill, due to sun rays, then the cool off procedure can be accelerated by opening the windows or door for a short time.
▶ Do not cover up the air circulation intake with clothing or other objects!

The maximum cooling output is reached when:

- All air vents are open.
- The air supply is exclusively switched to air circulation.
- The air distribution is exclusively set on the window.
- The Fan / the blower is set to maximum power.

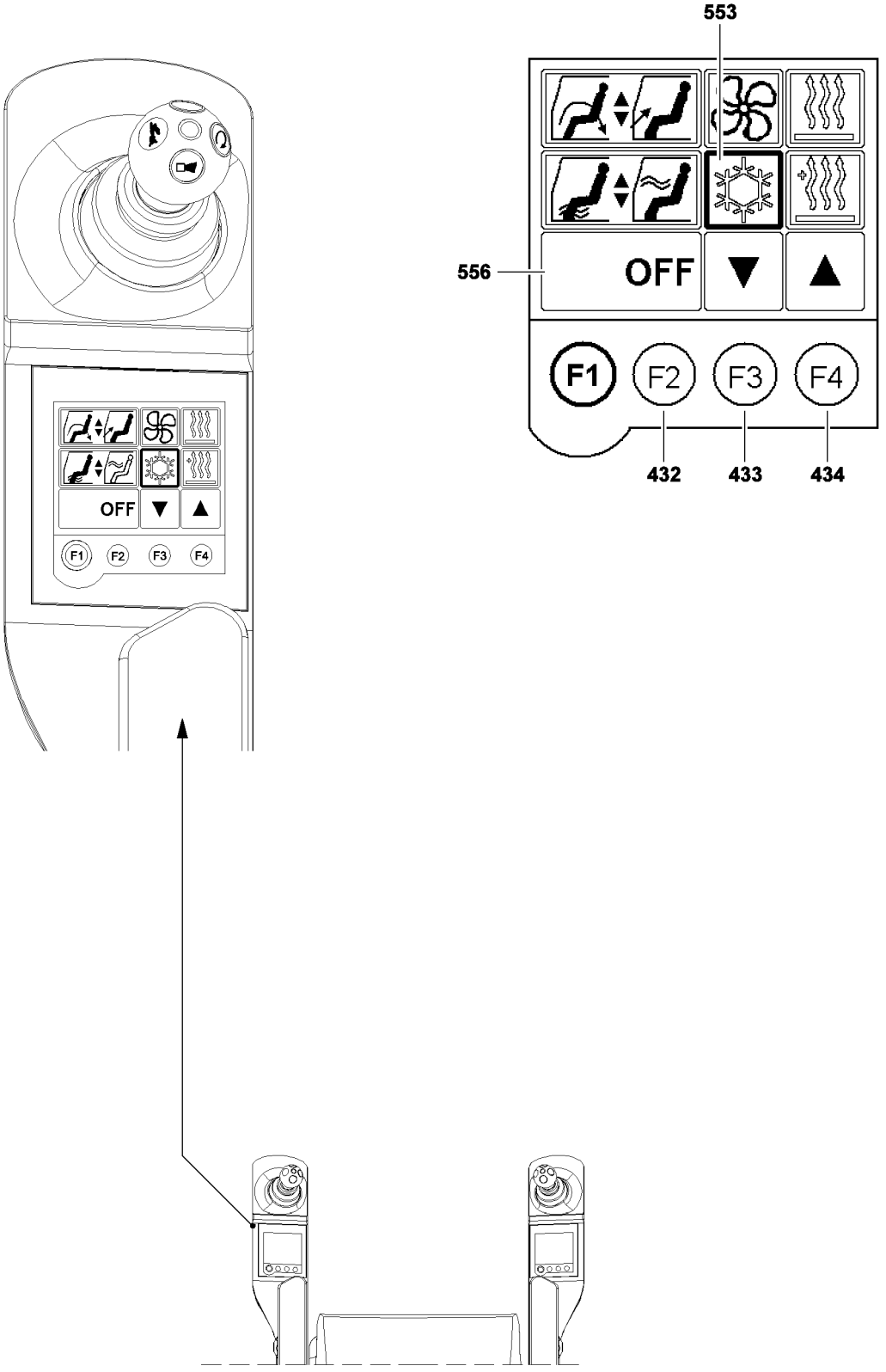

B103977

2.6.1 Climate control system* operation

The "Climate control system" function is selected by "touching" the icon **553** in the left touch display. The status of the climate control system is displayed in the status display **556**.

Note

▶ The climate control system turns itself on automatically if the "AUTO" heating mode is activated.

Climate control system		
Status display	Condition	Icon display
OFF	**"OFF"**	
ON	**"ON"**	

Make sure that the following preconditions are met before starting up the climate control system:
– The windows and the cab door are closed.
– The engine is running.

▶ Select "Climate control system **553** " function by "touching".

Result:
– The "Climate control system" icon is then surrounded with a black border.
– The switching status of the climate control system appears in the status display **556**.

▶ Press the function key F4 **434** and turn the climate control system on.

In heating mode - "AUTO" the Fan / blower preselection occurs automatically.
In heating mode - "MANUAL" the Fan / blower preselection must be manually selected.

▶ Select the heater and change into "AUTO" heating mode.

or

■ Select the heater and change into "MANUAL" heating mode.

▶ Set the Fan / blower.

▶ If necessary:
Set the air distribution window or floorboard area.

▶ If necessary:
Adjust the recirculating air / fresh air.

Troubleshooting

The temperature from the air vents is not noticeably below the ambient temperature?
The air circulation or the fresh air filter or evaporator are dirty.

▶ Check the air circulation and fresh air filter for contaminants and clean or replace, as necessary.

▶ Check the evaporator for contaminants and clean, if necessary.

▶ If none of these measures are helpful, contact the Service Dept. of Liebherr-Werk Ehingen!

▶ If the climate control system is to be turned off:
Press function key F3 **433**.

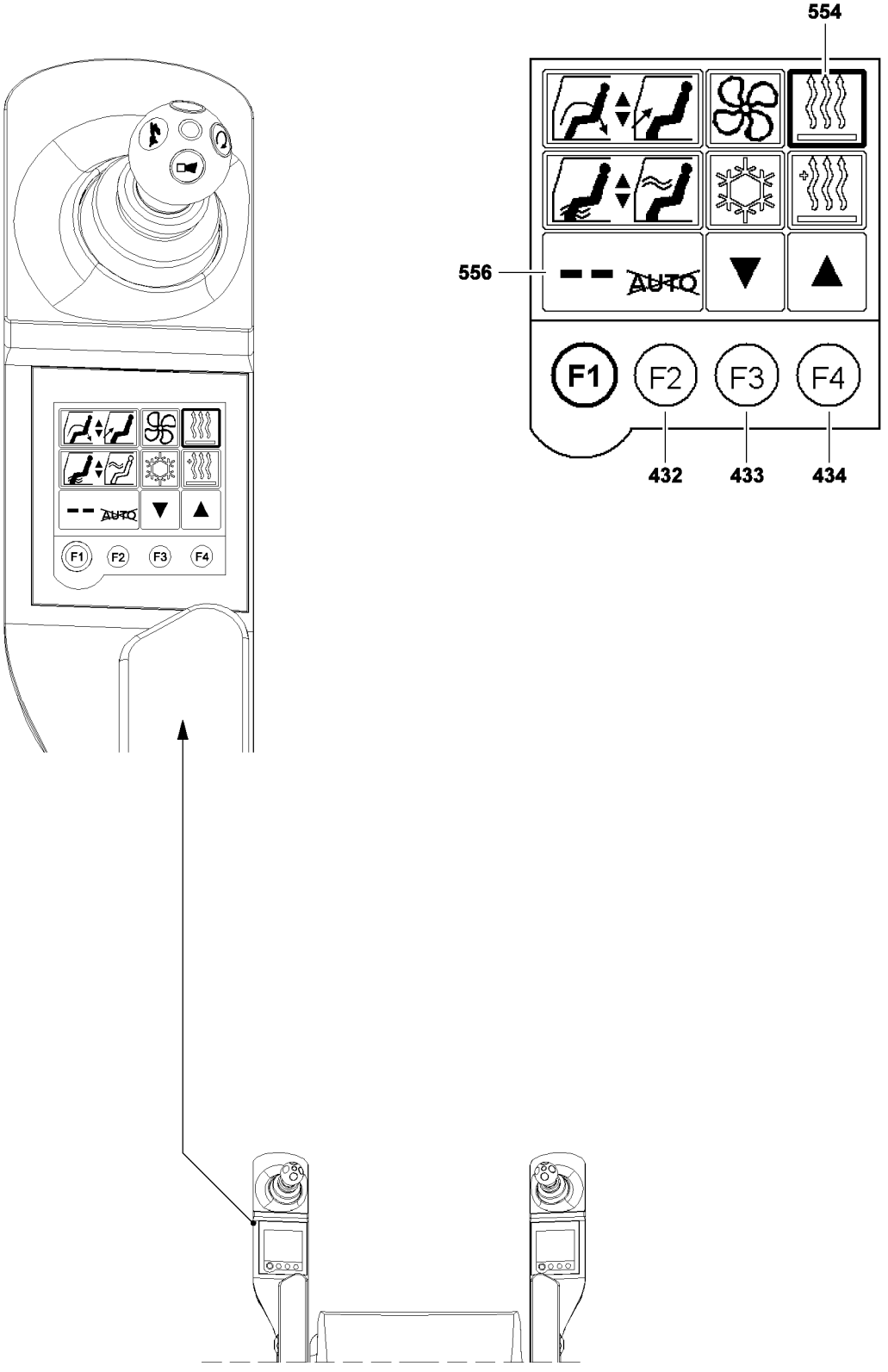

B103978

2.7 Turning the heater on

2.7.1 General

The "Heating" function is selected by "touching" the icon **554** on the left touch display.
The status of the heater is displayed in the status display **556**.
The temperature for the "AUTO" heating mode or the preselect of the constant heat stages in "MANUAL" heating mode is preset via the function keys function key F3 **433** ("reduce" temperature) and function key F4 **434** ("increase" temperature).
Use the function key F2 **432** to switch from "MANUAL" heating mode to "AUTO" heating mode and vice-versa.

2.7.2 Manual heating mode

In "MANUAL" heating mode, the temperature stages - from stage 1 to stage 16 - are available to the crane operator for temperature adjustment.
With the function key F3 **433**, the temperature stages can be reduced from stage 16 in increments until "heater OFF".

Note
- ▶ If the status "Heater OFF" is reached, the heater does not operate.
- ▶ The crane cab is **not** heated.

Press the function key F4 **434** to leave the "OFF" status and to increase the temperature stages incrementally from stage 1 to maximum stage 16.

Heating mode "MANUAL"			
Status display	Condition	Stage	Icon display
-- AUTO	**"OFF"**	— —	*Heater "OFF"*
1 AUTO	**"ON"**	**1**	
16 AUTO	**"ON"**	**16**	

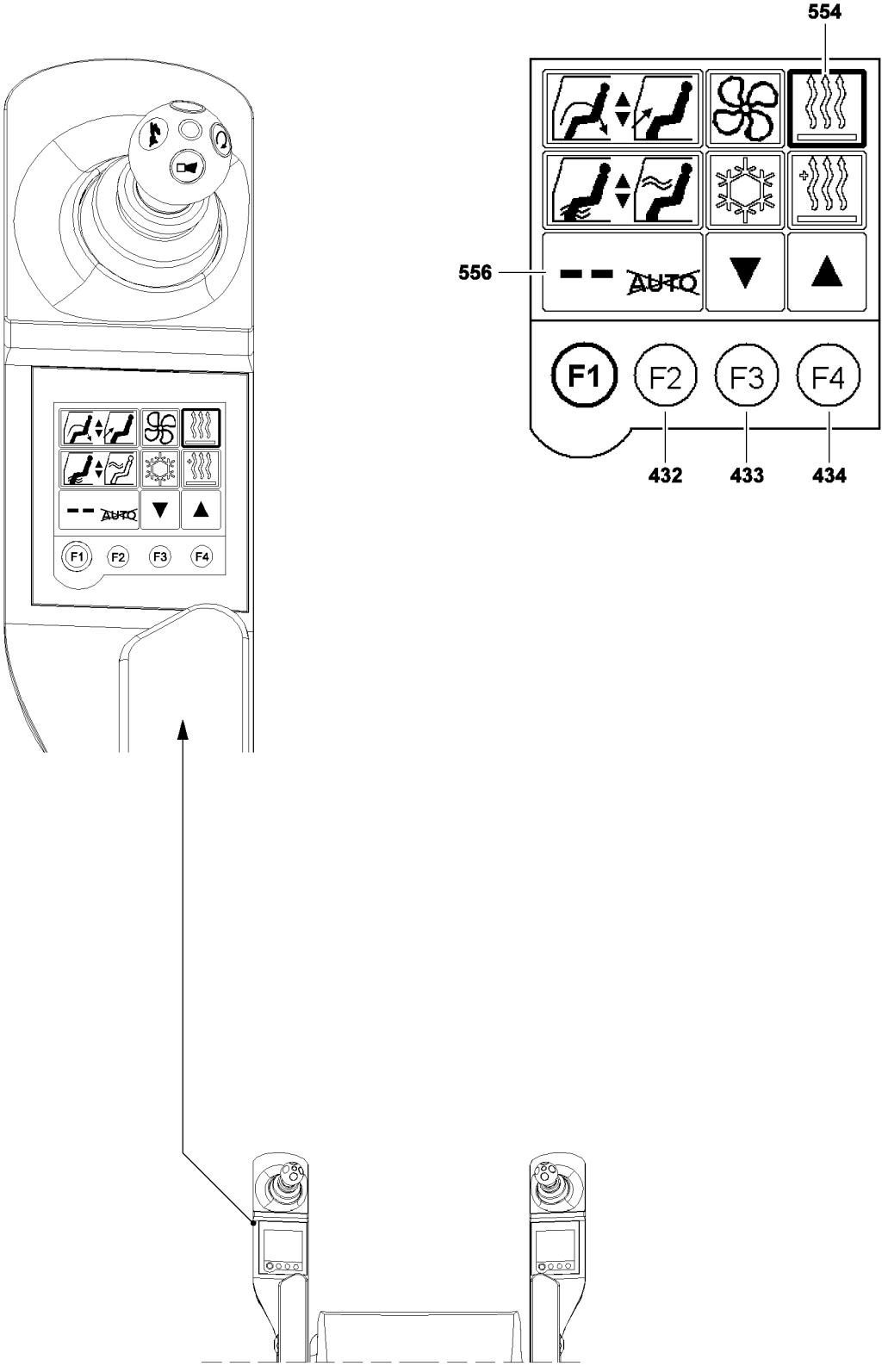

B103978

▶ Select the "Heater **554** " function by "touching".

Result:

– The "Heater" icon is then surrounded with a black border.
– The status display **556** contains the current status of the "Heater".

▶ Press function key F2 **432**.

Result:

– Switch from heating mode "AUTO" to heating mode "MANUAL".

▶ Press function key F3 **433**.

Result:

– The "constant heat stages" are reduced one level at a time.
– The amount of warm air supply into the cab is reduced accordingly.

▶ Press function key F4 **434**.

Result:

– The "constant heat stages" are increased one level at a time.
– The amount of warm air supply into the cab is increased.

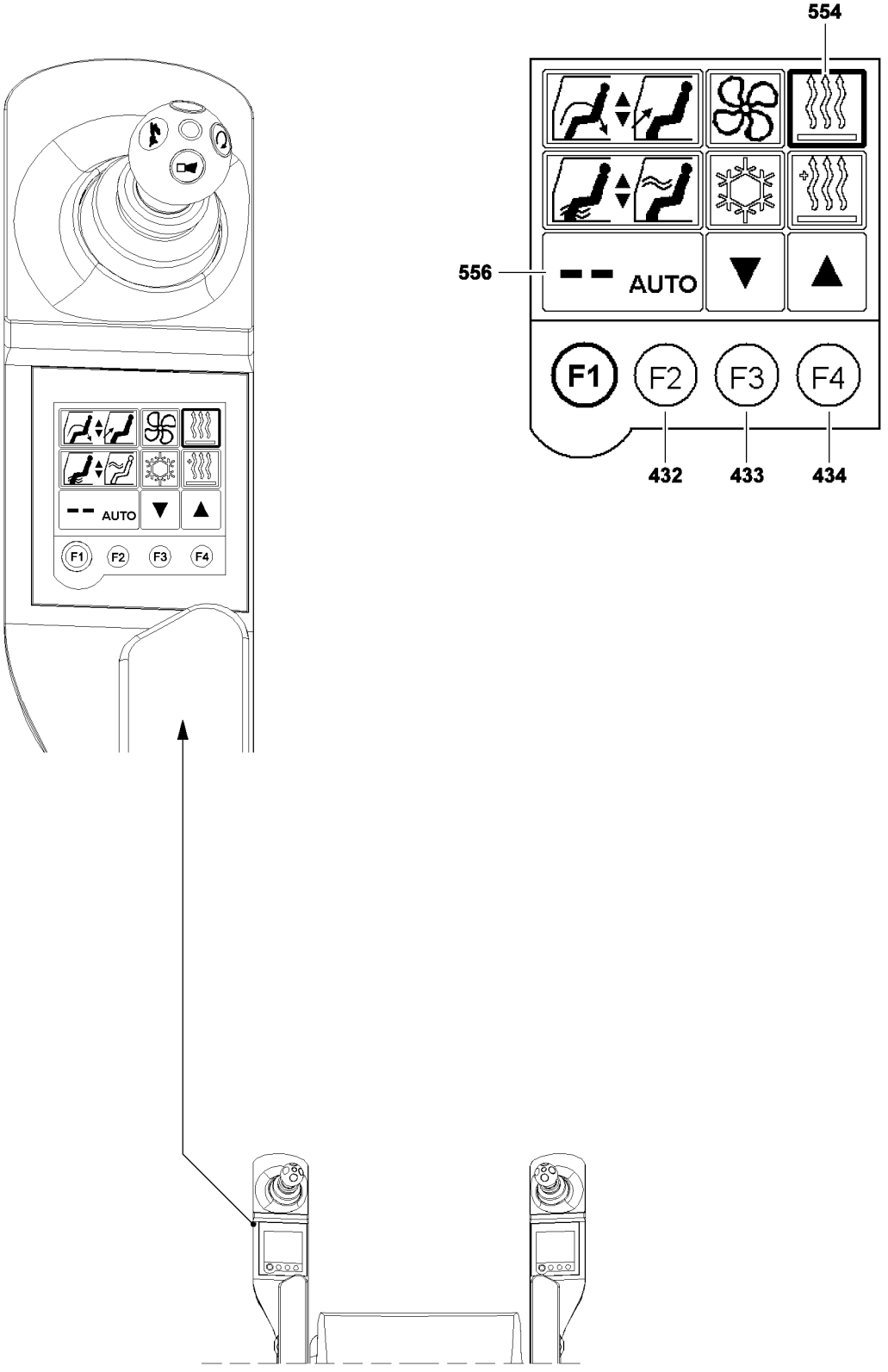

B103979

2.7.3 AUTO heating mode

If the "AUTO" heating mode is selected, the air conditioning system is automatically added, if needed.

Note

▶ The blower / fan stage is automatically regulated in the "AUTO" heating mode, whereby the maximum blower / fan stage is available, which was set before manually.

In "AUTO" heating mode, the crane driver can adjust the temperature infinitely variable.
By pressing the function key F3 **433**, the temperature is reduced steplessly from maximum value to minimum value and if the function key F3 **433** is pressed again, the heater is turned off.

Note

▶ If a status "Heater OFF" has been reached, the heater does **not** operate but the crane cab can continue to be cooled.
▶ The crane cab is **not** heated.

Leave the "OFF" state by pressing the function key F4 **434** and the temperature can be increased infinitely variable from minimum value to maximum value.

Heating mode "AUTO"			
Status display	Condition	Temperature in [**°C**] or [°F]	Icon display
-- AUTO	**"OFF"**	—	*Heater "OFF"*
15 °X AUTO *Minimum value*	***"ON"***	***15***	
30 °X AUTO *Maximum value*	***"ON"***	***30***	

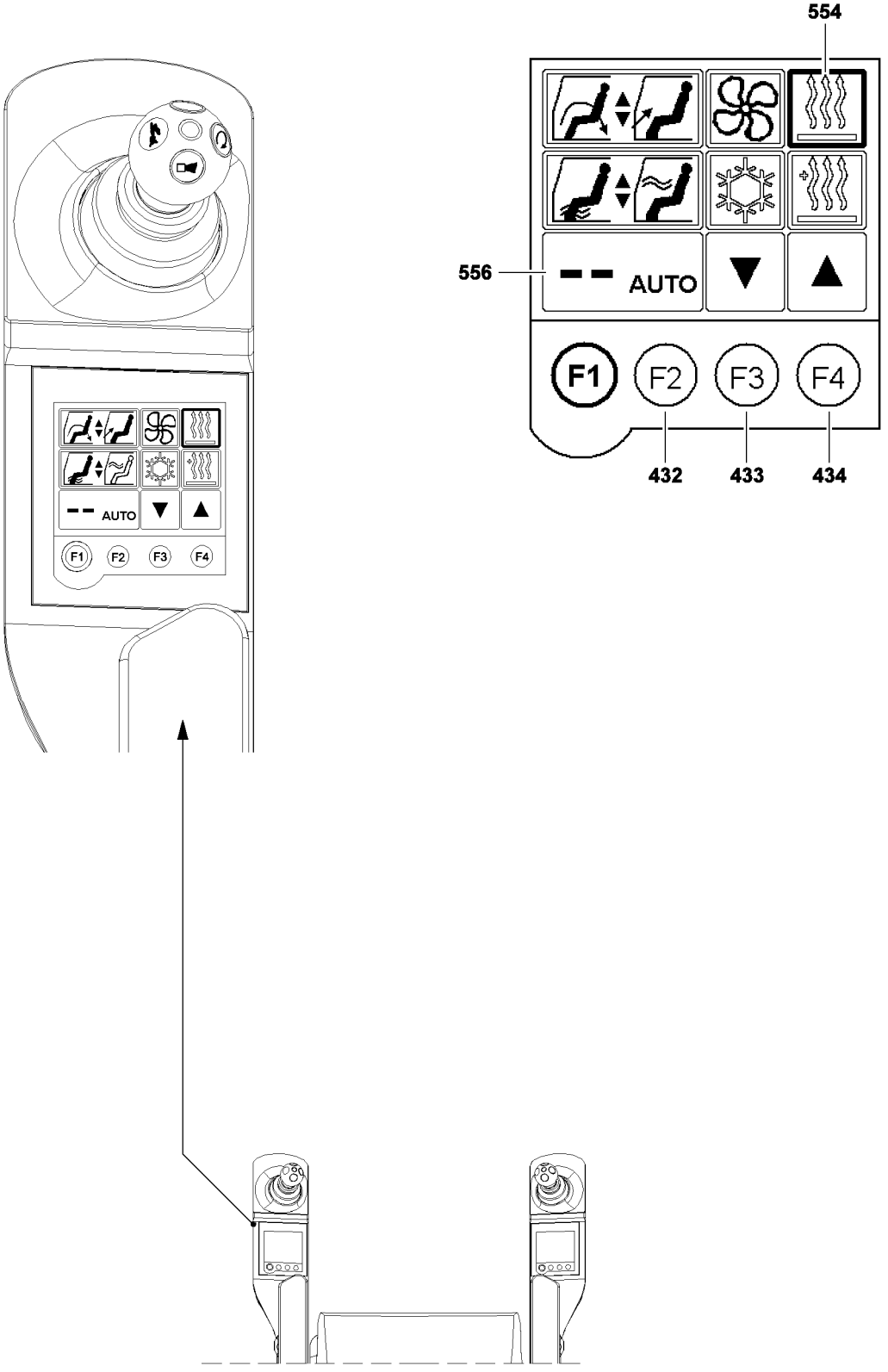

B103979

▶ Select the "Heater **554** " function by "touching".

Result:

– The "Heater" icon is then surrounded with a black border.
– The status display **556** contains the current status of the "Heater".

▶ Press function key F2 **432**.

Result:

– Change from "MANUAL" heating mode to "AUTO" heating mode.

▶ Press function key F3 **433**.

Result:

– The "temperature setting" is reduced in stages in 1 °C increments.
– The amount of warm air supply into the cab is regulated according to the current temperature setting.

▶ Press function key F4 **434**.

Result:

– The "temperature setting" is increased in stages in steps of 1 °C.
– The amount of warm air supply into the cab is regulated according to the current temperature setting.

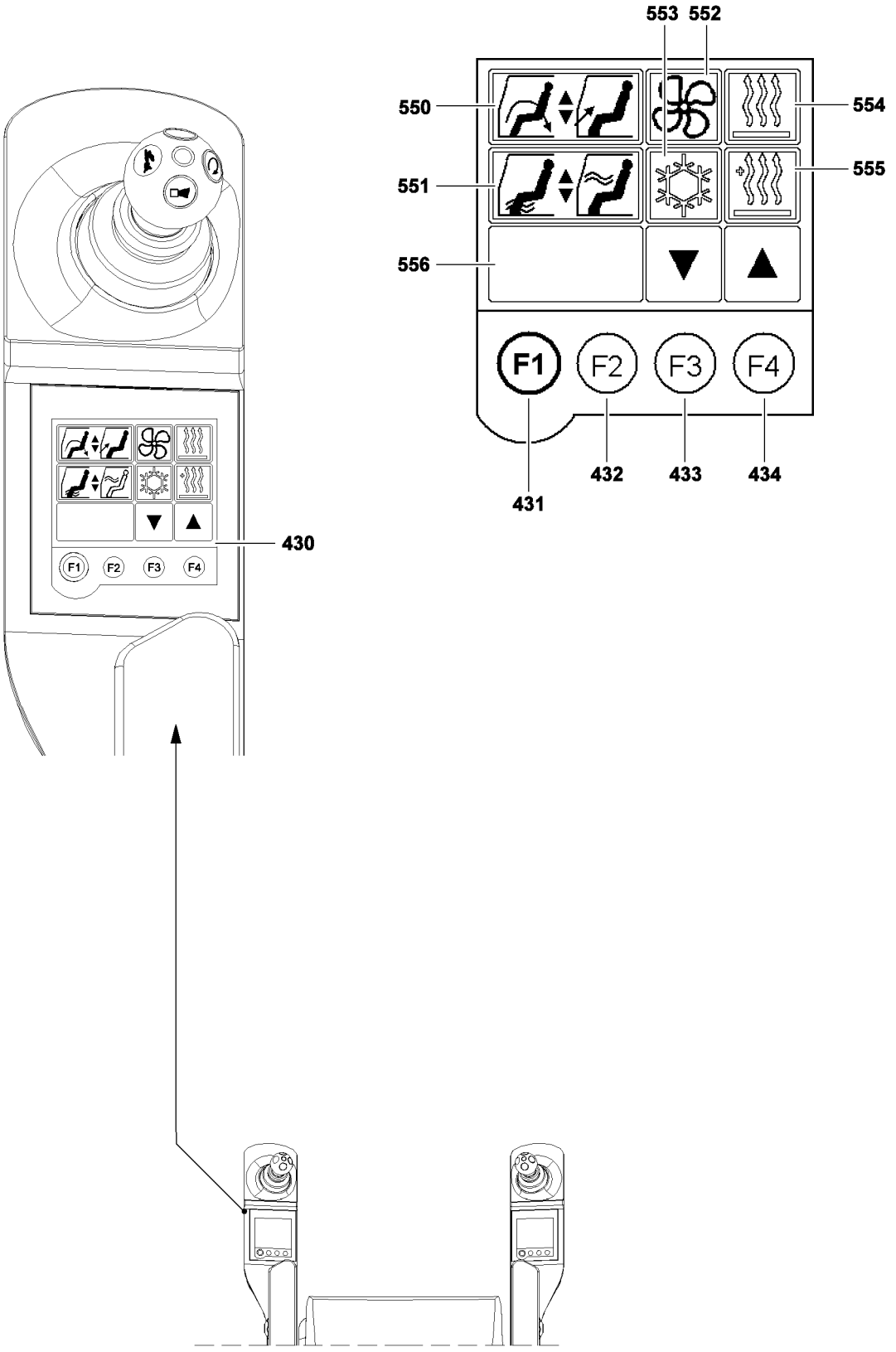

B103973

2.8 Procedure in case of fogged up windows

To be able to clear the windows quickly, observe a certain sequence of the settings.
The settings can be made manually or in "**AUTO** " heating mode.

2.8.1 Making the settings manually

- ▶ Set the air distribution **551** to maximum level "up" - stage 5.
- ▶ Open the air vents.
- ▶ Set recirculating air **550** to maximum level - stage 5.
- ▶ Set the Fan / blower **552** to maximum level - stage 5.
- ▶ Set the climate control system* **553** to "ON".

Note
- ▶ The higher the temperature in the crane cab, the better the air will be dehumidified.

- ▶ Set the heater **554** to maximum possible level in "**MANUAL** " heating mode.
- ▶ Add the auxiliary heater* **555**.

2.8.2 Making the settings in "AUTO" heating mode

- ▶ Set the Heater **554** to "AUTO" heating mode.
- ▶ Set the air distribution **551** to maximum level "up" - stage 5.
- ▶ Open the air vents.
- ▶ Add the auxiliary heater* **555**.

Note
- ▶ The other functions are automatically added by the system.

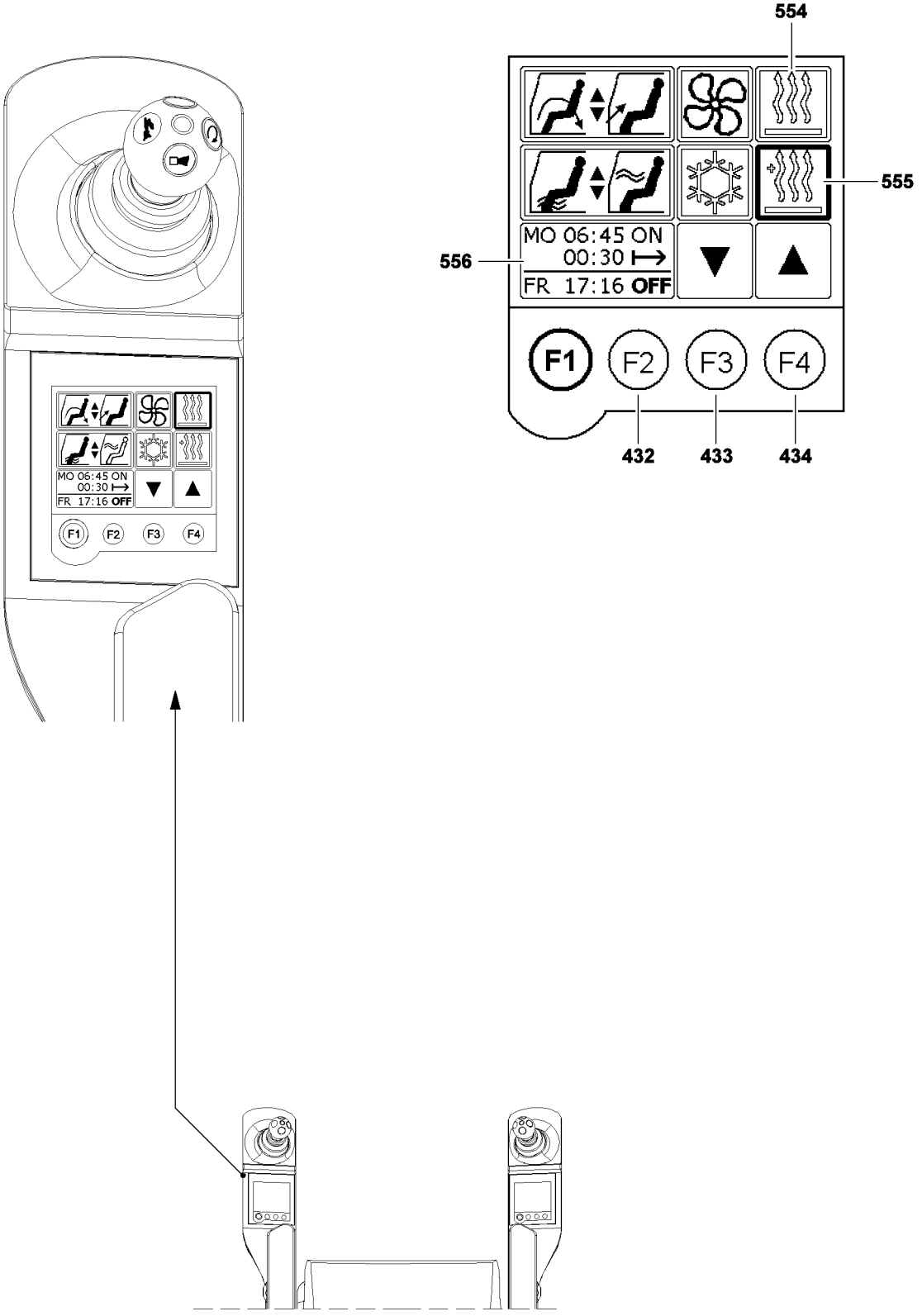

B103980

3 Operating the engine-independent auxiliary heater

The engine-independent auxiliary heater is used to heat the crane cab when the engine is turned off and to provide additional heat at low ambient temperatures if the engine-dependent heater is insufficient.

Note

▶ Let the auxiliary heater run once a month for approx. 15 to 20 minutes if it is not used for an extended period of time!

Carry out maintenance work on the auxiliary heater according to the supplied manufacturer's operating instructions.

3.1 General

NOTICE

Risk of damage to auxiliary heater!

▶ Fill all units with sufficient service fluids for winter operation according to the lubrication chart.

WARNING

Risk of poisoning and suffocation in enclosed areas!

▶ Only operate the engine-independent auxiliary heater in enclosed areas such as garages or workshops only if an exhaust system is connected to the exhaust of the auxiliary heater, even in “programming mode”.

WARNING

Risk of explosion!

In areas where combustible fumes or dust could form, such as in the vicinity of storage areas for fuel, coal, wood dust or grain storage or similar and in the vicinity of filling stations or tank depots, there is a risk of explosion when operating the auxiliary heater!

▶ Turn the auxiliary heater off!

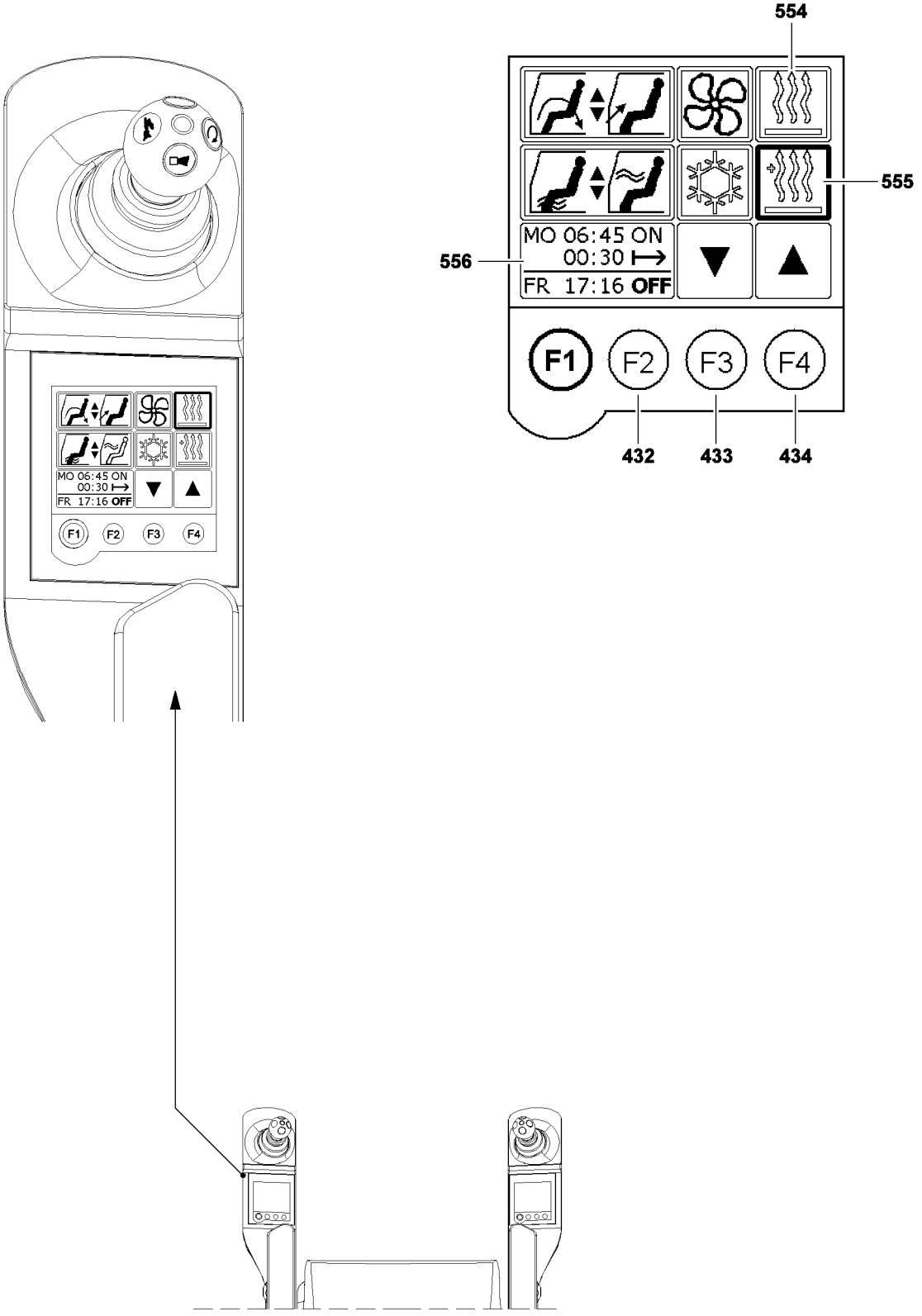

B103980

3.2 Adding the engine-independent auxiliary heater manually

The engine-independent auxiliary heater can be added manually in driving or crane operation mode. The auxiliary heater, icon **555**, must be selected and turned on.

If the auxiliary heater is in the "OFF" state, press the function key F4 **434** once to add the crane cab auxiliary heater.

Pressing function key F4 **434** again adds the auxiliary heater for engine preheating.

Note

▶ If the auxiliary heater it added for engine pre-heating, then the crane cab is **not** heated.

Manual auxiliary heater			
Status display	Function key **F4**	Function key **F3**	Icon display
MO 06:45 ON 00:30 ⟼ FR 17:16 **OFF**	▲ F4	— —	*Auxiliary heater "OFF"*
MO 06:45 ON 00:30 ⟼ FR 17:16 **ON**	▲ F4	▼ F3	*Auxiliary heater - crane cab "ON"*
MO 06:45 ON 00:30 ⟼ FR 17:16 **ON**	▲ F4	▼ F3	*Auxiliary heater - engine pre-heating "ON"*

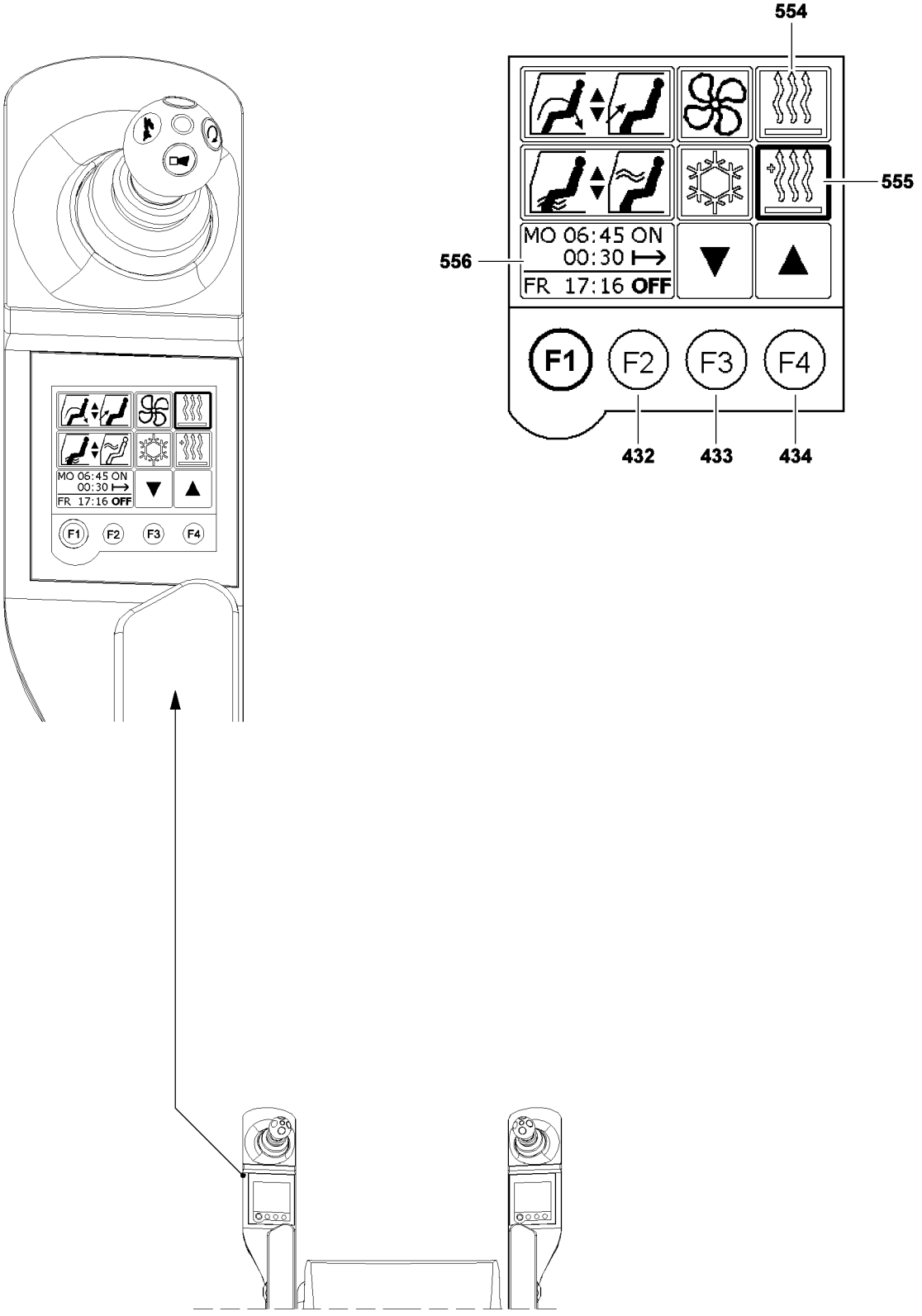

B103980

3.2.1 Adding the auxiliary heater

▶ Select Heater **554** and set the required temperature via the function key F3 **433** or function key F4 **434** (see section "Turning the heater on").

Note

▶ The temperature adjustment via the function key F3 **433** or function key F4 **434** is only needed to heat the crane cab!

▶ Select auxiliary heater **555** and press function key F4 **434** or function key F3 **433** until the required setting is displayed in the status display **556** (see chart).

Result:

– The auxiliary heater is added.
– Depending on the setting, the crane cab or the engine is heated.

Note

▶ When the crane cab is "warm" and the engine is at the operating temperature, turn the auxiliary heater off.
▶ This increases the service life of the auxiliary heater!

3.2.2 Turning the auxiliary heater off

▶ Select auxiliary heater **555** and press the function key F3 **433** until the status display **556** shows the setting auxiliary heater "OFF" (**OFF**).

Result:

– The auxiliary heating is turned off.
– Whenever the auxiliary heater is turned off, a shut off delay occurs.

NOTICE

Danger of property damage!

▶ Turn the battery master switch off only when the heater shut off delay is over.

▶ Turn the battery master switch off if the crane is temporarily not being used.

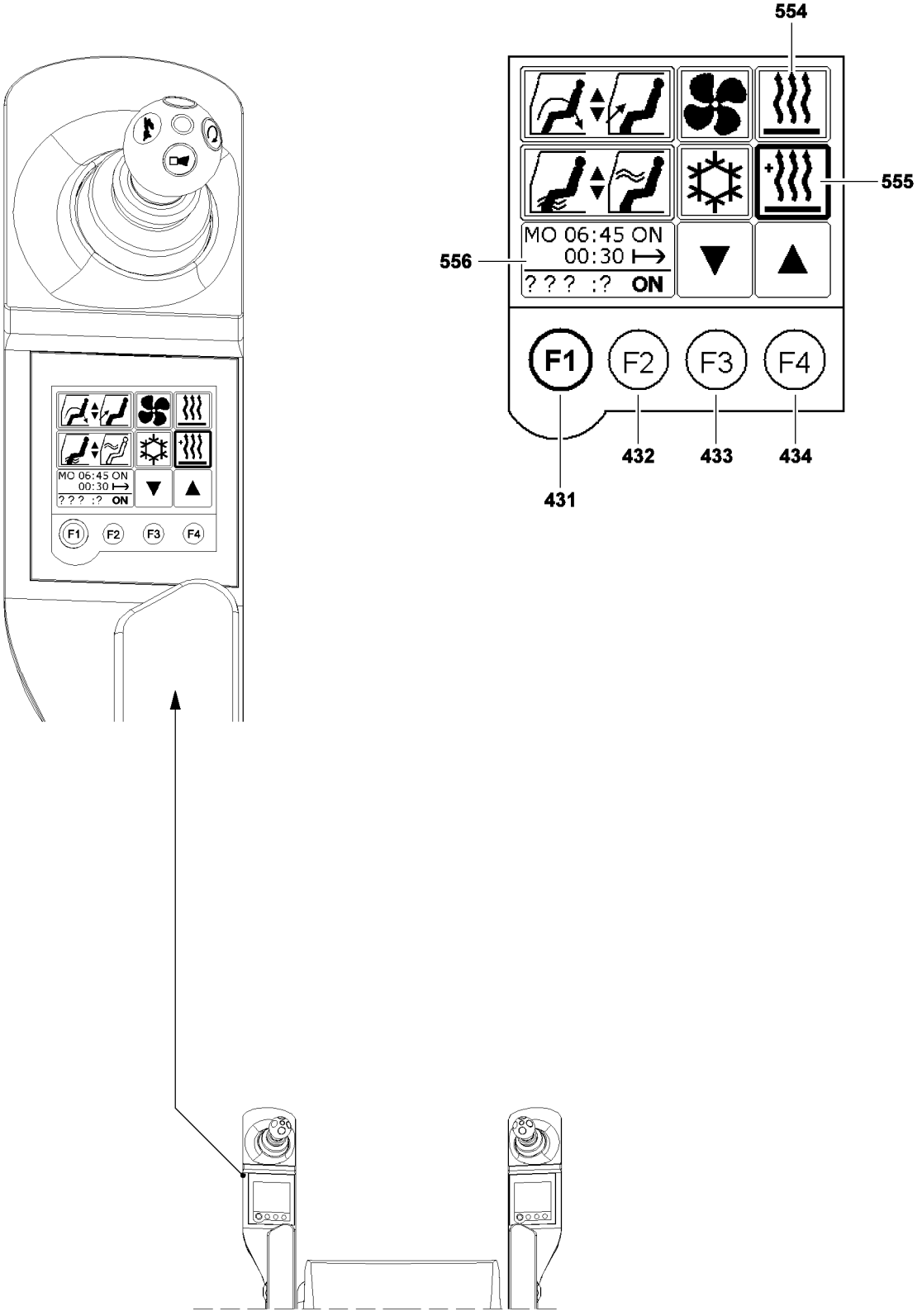

B107713

3.3 Adding the engine independent auxiliary heater at ignition “OFF”

The engine independent auxiliary heater can be turned on to heat the crane cab when the ignition is “OFF”.

Note

- ▶ Operating the engine independent auxiliary heater for a longer period of time can discharge the battery. With discharged batteries, the crane engine can no longer by started by itself!
- ▶ Operation of the engine independent auxiliary heater without turned on battery master switch is not possible!
- ▶ If the engine independent heater is turned on when the ignition is OFF, then the timer cannot be programmed. Question marks appear in the status display **556**, see illustration.

Make sure that the following prerequisite is met:

– The battery master switch is turned on.

▶ Press the function key F1 **431** on the left touch display until the “Climate control settings” menu appears.

Result:

– The “Climate control settings” menu is displayed.

Note

- ▶ In very low temperatures it is possible that the touch displays initially change to the menu items delayed and that the touch functions remain deactivated for that time.
- ▶ In this case, wait a few minutes with the ignition “ON” until the menu items are shown on the touch display.

Note

- ▶ If the auxiliary heater is not turned on with the function key F4 **434** after releasing the function key F1 **431** within 4 seconds, the display in the touch display turns off.

▶ Turn the auxiliary heater on with function key F4 **434**.

Result:

– The auxiliary heater is turned on.

– The display in the touch display turns off only after the auxiliary heater has been turned off with the function key F3 **433**.

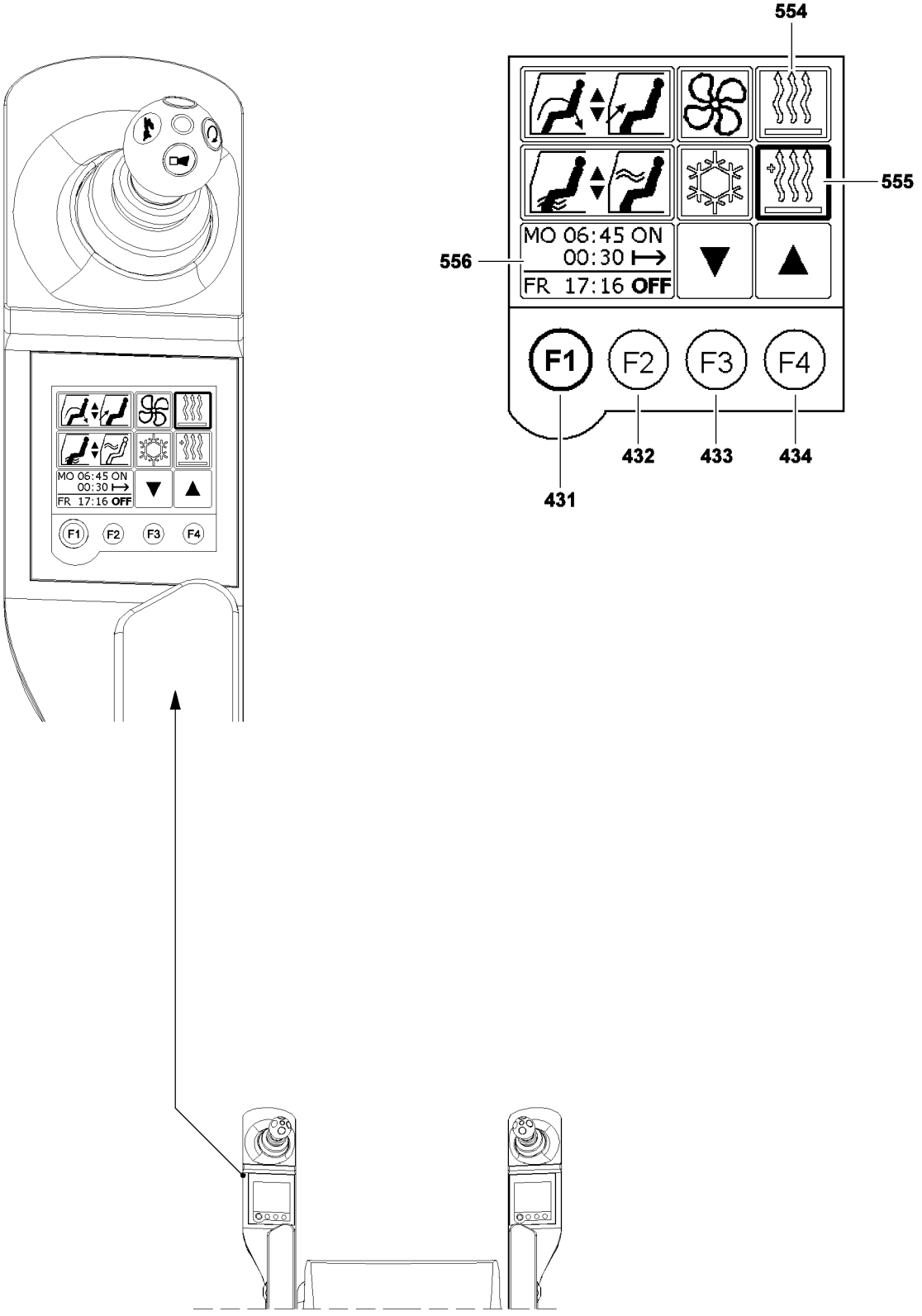
554
555
556
MO 06:45 ON
00:30
FR 17:16 OFF
F1
F2
F3
F4
431
432
433
434

B107714

3.4 Continuing operation with the engine independent auxiliary heater after crane operation

The engine independent auxiliary heater can continue to be operated to heat the crane cab after crane operation when the ignition is "OFF".

Note

- ▶ It is advisable to restrict the auxiliary heater programming to two days, otherwise there is a risk of discharging the batteries in very low temperatures. It might no longer be possible to start the crane engine!
- ▶ Operation of the engine independent auxiliary heater without turned on battery master switch is not possible!
- ▶ If the engine independent auxiliary heater is continued to be operated after crane operation, the preprogrammed timer can be selected once.

Make sure that the following prerequisites are met:

– The auxiliary heater is turned on.
– The ignition on the crane superstructure is turned on.

▶ Press the function key F1 **431** on the left touch display.

Result:

– Change the menus on the touch display.

▶ Turn the ignition on the crane superstructure off and press the function key F1 **431** on the left touch display until the "Climate control settings" menu appears and the LICCON monitor is down.

Result:

– The display on the right touch display turns off.
– The climate control settings menu is shown on the left touch display.
– The auxiliary heater is turned on.
– The display in the touch display turns off only after the auxiliary heater has been turned off with the function key F3 **433**.

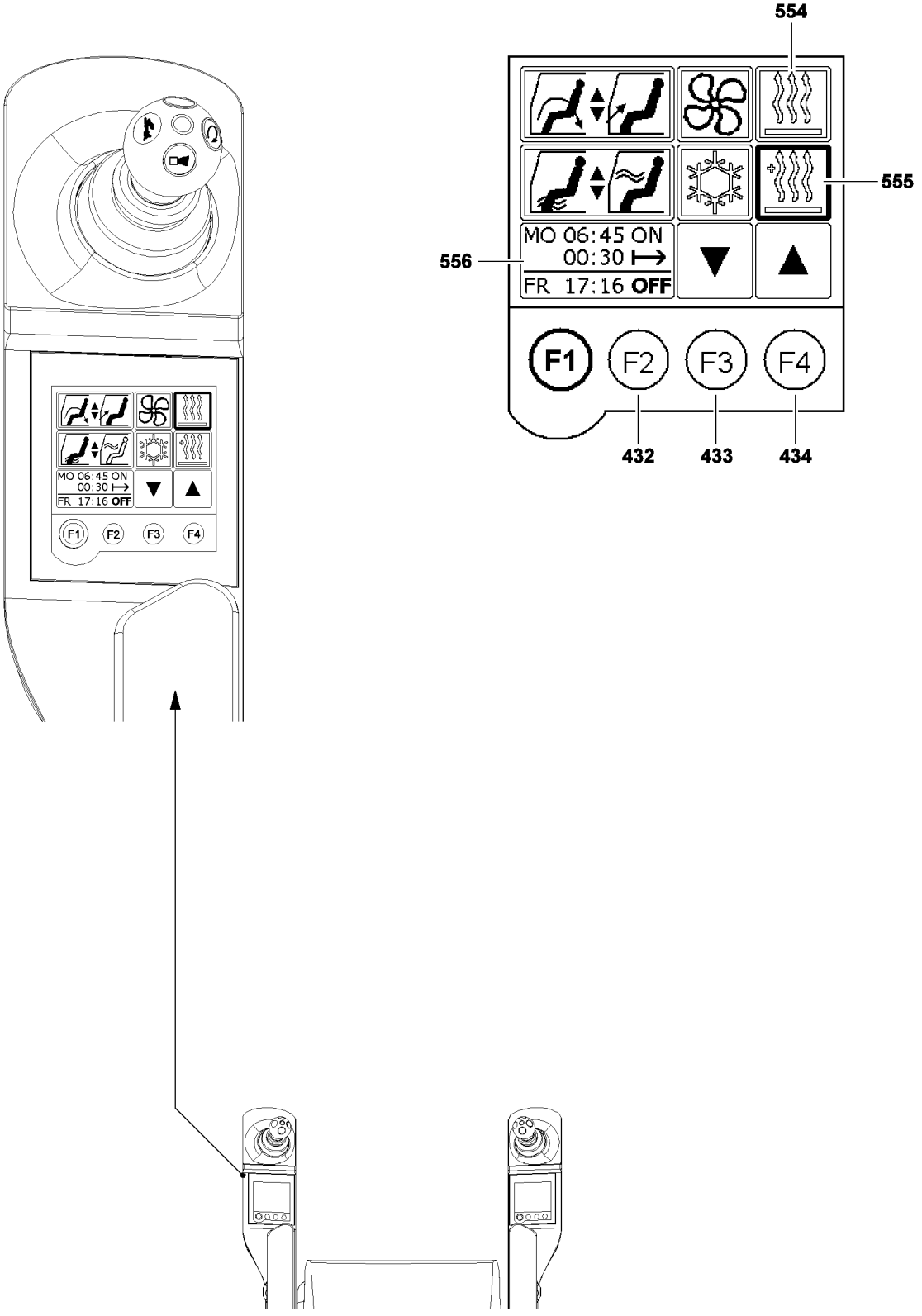

B103980

3.5 Adding the engine-independent auxiliary heater in programming mode

The engine independent auxiliary heater to heat the crane cab or to preheat the engine can be programmed a **maximum** of one week in advance.

Note

▶ It is advisable to restrict the auxiliary heater programming to two days, otherwise there is a risk of discharging the batteries quickly in very low temperatures.

Auxiliary heater programmed			
Status display	Function key **F4**	Function key **F3**	Icon display
MO 06:45 ON 00:30 ↦ FR 17:16 **OFF**	▲ F4	— —	*Auxiliary heater “OFF”*
MO 06:45 ON 00:30 ↦ FR 17:16	▲ F4	▼ F3	*Auxiliary heater crane cab*
MO 06:45 ON 00:30 ↦ FR 17:16	— —	▼ F3	*Auxiliary heater - engine preheating*

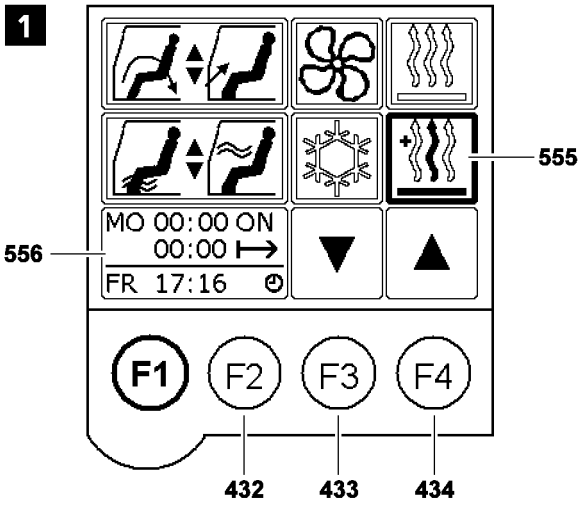
1
555
556
MO 00:00 ON
00:00
FR 17:16
F1
F2
F3
F4
432
433
434

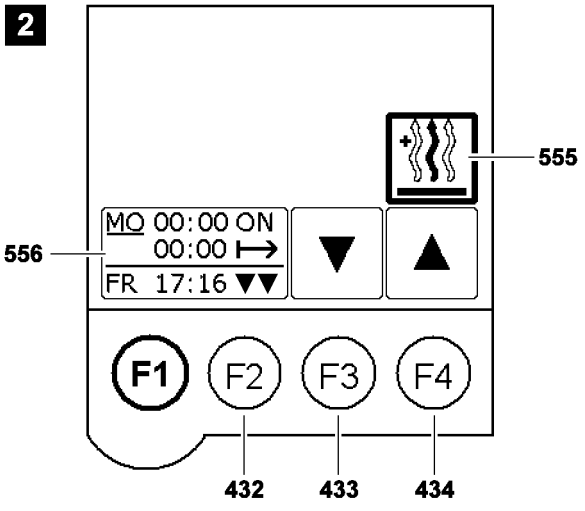
2
555
556
MO 00:00 ON
00:00
FR 17:16
F1
F2
F3
F4
432
433
434

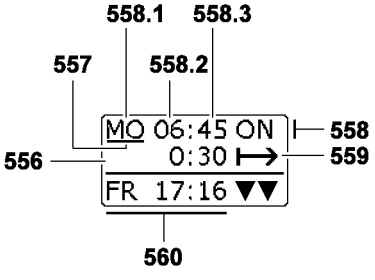
558.1
558.3
557
558.2
MO 06:45 ON
0:30
FR 17:16
558
559
556
560

B103981

3.5.1 Programming the auxiliary heater

To get to the programming mode of the auxiliary heater, press the function key F4 **434** until the status display shows the "clock" (Programming mode: Heating the crane cab) or the "clock with wave" (Programming mode: engine preheating), illustration **1**.
The status display **556** contains the current day of the week with the time **560**. The time in the status display **556** is coupled to the "real-time clock" in the test system.

Note
▶ The procedure for programming the auxiliary heater, to heat the crane cab or to preheat the engine is identical in both cases.

Make sure that the following preconditions are met **before** the auxiliary heater is programmed:
– The desired temperature for the heater has been set.
– The Fan / blower is set to stage 0 ("OFF").
– The desired programming mode, heating the crane cab ("clock") or engine preheating ("clock with wave") has been set.

▶ Press the function key F2 **432**.

Result:
– The auxiliary heater programming interface is displayed, illustration **2**.
– In the status display **556** appears the cursor **557** under the editable input value.

Note
▶ The cursor **557** is positioned on day programming **558** by default.

▶ Press the function key F4 **434** and select the required day of the week **558.1** (**ascending** order).

or

■ Press the function key F3 **433** and select the required day of the week **558.1** (**descending** order).

Result:
– The selected day of the week is "set".

▶ Press the function key F2 **432**.

Result:
– The cursor **557** changes from day programming **558.1** to hour programming **558.2**.

▶ Press the function key F4 **434** and select the desired hour **558.2** (**ascending** order).

or

■ Press the function key F3 **433** and select the desired hour **558.2** (**descending** order).

Result:
– The selected hour is "set".

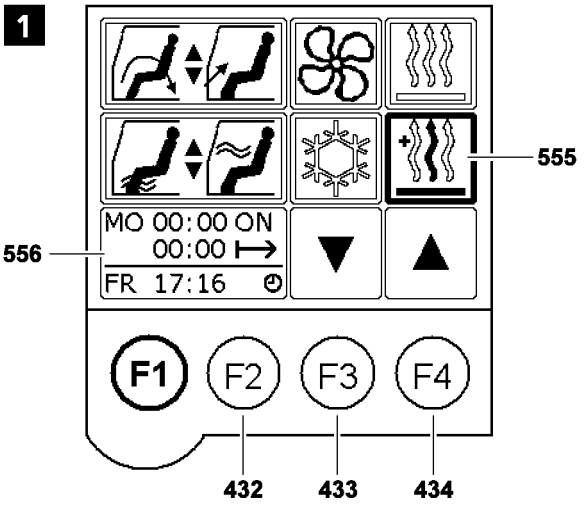
1
555
556
MO 00:00 ON
00:00
FR 17:16
F1
F2
F3
F4
432
433
434

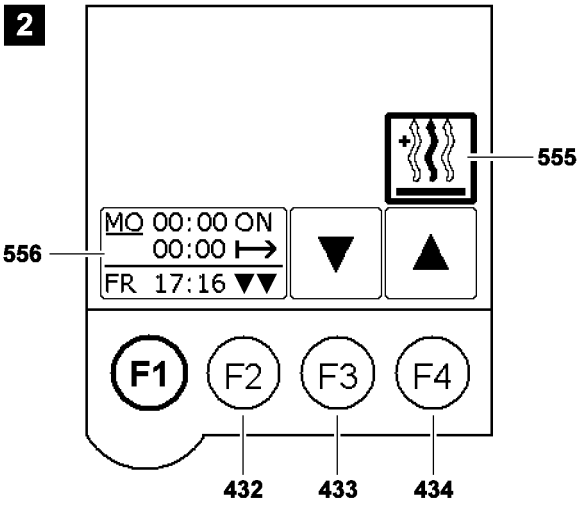
2
555
556
MO 00:00 ON
00:00
FR 17:16
F1
F2
F3
F4
432
433
434

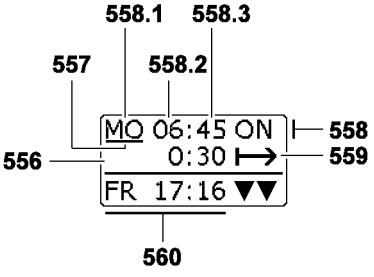
558.1
558.3
557
558.2
MO 06:45 ON
0:30
FR 17:16
558
559
556
560

B103981

▶ Press the function key F2 **432**.

Result:

– The cursor **557** changes from hour programming **558.2** to minute programming **558.3**.

▶ Press the function key F4 **434** and select the desired minute **558.3** (**ascending** order).

or

■ Press the function key F3 **433** and select the desired minute **558.3** (**descending** order).

Result:

– The selected minute is "set".

▶ Press the function key F2 **432**.

Result:

– The cursor **557** changes from minute programming **558.3** to turn on programming **559**.

▶ Press the function key F4 **434** and select the desired turn on duration **559** (ascending).

or

■ Press the function key F3 **433** and select the desired turn on duration **559** (descending).

Result:

– The selected turn on duration **559** is "set".

Note

▶ The turn on duration **559** for the auxiliary heater is restricted to a maximum of **0:55 minutes**!

▶ The cursor **557** automatically changes to the minutes setting for the turn on duration **559**.

▶ The turn on duration **559** can only be changed in 5 minute increments.

▶ Press the function key F2 **432**.

Result:

– The cursor **557** changes from turn on duration **559** to day programming **558**.

– The programming for the auxiliary heater is complete.

▶ Select the auxiliary heater **555** by "touching".

Result:

– The programmed settings are taken over.

– The "Climate control settings" menu is displayed.

– The auxiliary heater starts to operate when the programmed turn on time for the heater operation is reached and turns the heater operation off again when the selected turn on duration has expired.

– The auxiliary heater runs in automatic regulating operation, depending on the heater setting in "manual" or "AUTO".

Note

▶ The auxiliary heater programming must be manually reset to "zero" after the programmed heating period. Otherwise, the auxiliary heater is turned on automatically according to the programming.

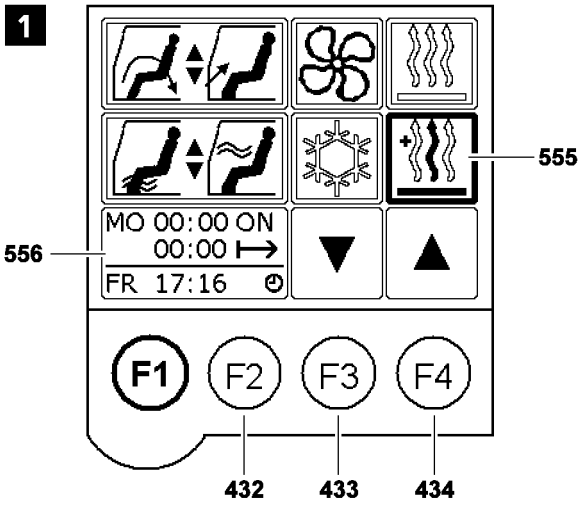
1
555
556
MO 00:00 ON
00:00
FR 17:16
F1
F2
F3
F4
432
433
434

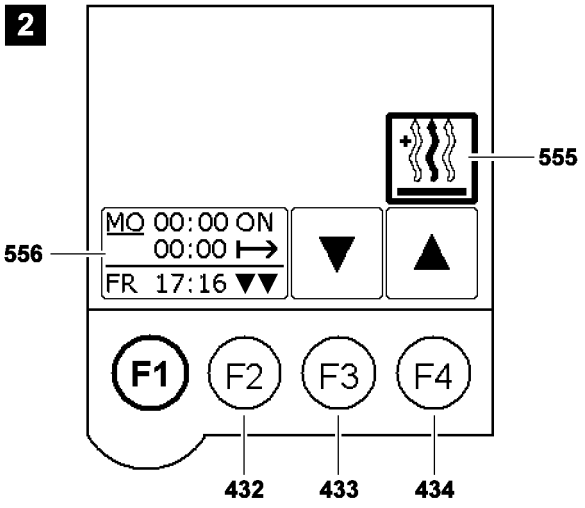
2
555
556
MO 00:00 ON
00:00
FR 17:16
F1
F2
F3
F4
432
433
434

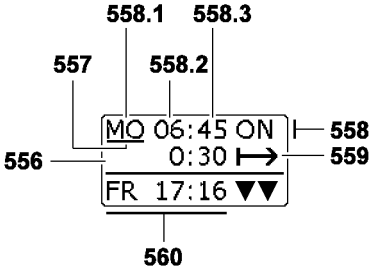
558.1
558.3
557
558.2
MO 06:45 ON
0:30
FR 17:16
558
559
556
560

B103981

3.5.2 Resetting the auxiliary heater programming

To reset the auxiliary heater programming, proceed as described in "Auxiliary heater programming".

▶ Reset the values in the status display **556** to "zero".

Result:

– The programming is turned off.

Note

▶ The programming can be manually changed at any time or it can be turned off altogether.

4 Bleeding the heating system

When draining off the engine coolant, the contents of the heating system will also be drained because the engine and heater operate as one circuit. When refilling the system, it must be carefully bled.

4.1 Bleeding the heating system without engine independent auxiliary heater

▶ Fill the coolant via the expansion tank of the engine cooling system for the superstructure as specified in the lubrication chart.

▶ Start the crane engine.

▶ Set the heater for the crane cab to "warm".

▶ Check the expansion tank for air bubbles.

Result:

– The engine is bled as soon as no more air bubbles rise up.

▶ Once no more air bubbles appear in the expansion tank:
Set the crane cab heater to "cold".

Result:

– The heating circuit will be bled.

▶ Check the expansion tank for air bubbles.

Result:

– The heating circuit is bled as soon as no more air bubbles rise up.

4.2 Bleeding the heating system with engine independent auxiliary heater

The procedure is as in section "Bleeding the heating system without engine independent auxiliary heater".

5 Maintaining the engine independent heater

Note

▶ The maintenance guidelines of the heater manufacturer remain valid and binding!

If an engine independent heater (auxiliary heater) is installed on the crane, maintenance must be carried out in regular intervals.

WARNING
Danger of accident!
On locations, where flammable vapors or dust can form (for example on gas stations), there is a danger of explosion when operating the engine independent heater!
▶ Do not operated the engine independent heater in case of a danger of explosion!
▶ Do not breathe in the exhaust of the engine independent heater!

The maintenance of the engine independent heater includes:
– Monthly: Function test.
– Before every heating period: Checks.
– according to the specification of the heater manufacturer: Replace components of the heater.
– After fuel tank was empty: Bleed the fuel line.

5.1 Perform function tests

Operate the engine independent heater once a month for at least 10 minutes.
Make sure that the following prerequisites are met:
– The crane is outside or a sufficient exhaust suction is ensured.
– The location has been selected in such a way that there is no danger of explosion when operating the engine independent heater.
– Combustion air infiltration and exhaust emission of the heater are free of foreign particles.
– Pollen filter / dust filter of the heater are continuous (if present).
– Heating circuit is bled.
– Fuel line is bled.
– Heating circuit is completely cold.
– The crane engine is turned off.

▶ Turn the engine independent heater and heater blower on.

Result:
– The circulation pump starts.
– The combustion air blower starts.
– After maximum four minutes an exhaust emission on the exhaust pipe is noticeable.
– The engine independent heater runs: The heating circuit starts to warm up.

▶ Check the heat effect on the air vents of the vehicle.
▶ Engine preheating* (Engine must be off!): Check if the engine temperature increases.

5.2 Checks to be performed

Before every heating period, carry out the following checks.
Make sure that the following prerequisites are met:
– The heater and the heating circuit are completely cold.
– A function check was completed successfully.
– In the error stack of the heater **and** in the error stack of the LICCON computer system are no error messages listed for the heater.

Note
The error stack of the heater can only be read by expert personnel.
▶ Contact Customer Service at Liebherr-Werk Ehingen.

▶ Clean the heater externally (avoid water infiltration).
▶ Check the electrical connections for contact corrosion and tight seating.
▶ Check the exhaust and combustion air line for damage and free passage.
▶ Check the fuel line and fuel filter (if installed separately) for leaks and cracks.
▶ Replace the fuel filter (if installed separately).

- ▶ Check the circulation pump for leaks.
- ▶ Check the heating circuit for leaks and cracks.
- ▶ Check the anti-corrosion / antifreeze in the heating circuit (specification: 50 % anti-corrosion fluid / antifreeze).

5.3 Replacing components of the heater

The heater manufacturer specifies time frames, after which the components of the heater must be replaced.

- No later than after 3000 operating hours, the burner of the heater must be replaced.
- No later than after 10 years, the heat exchanger of the heater must be replaced.

5.4 Bleed the fuel line.

If the fuel tank of the engine independent heater was run dry, then it is possible that the fuel line must be bled.

In addition, it may be possible that a new start must be carried out on the control unit of the engine independent heater.

Note

New start of the control unit of the engine independent heater.

▶ Contact Customer Service at Liebherr-Werk Ehingen and coordinate the procedure.

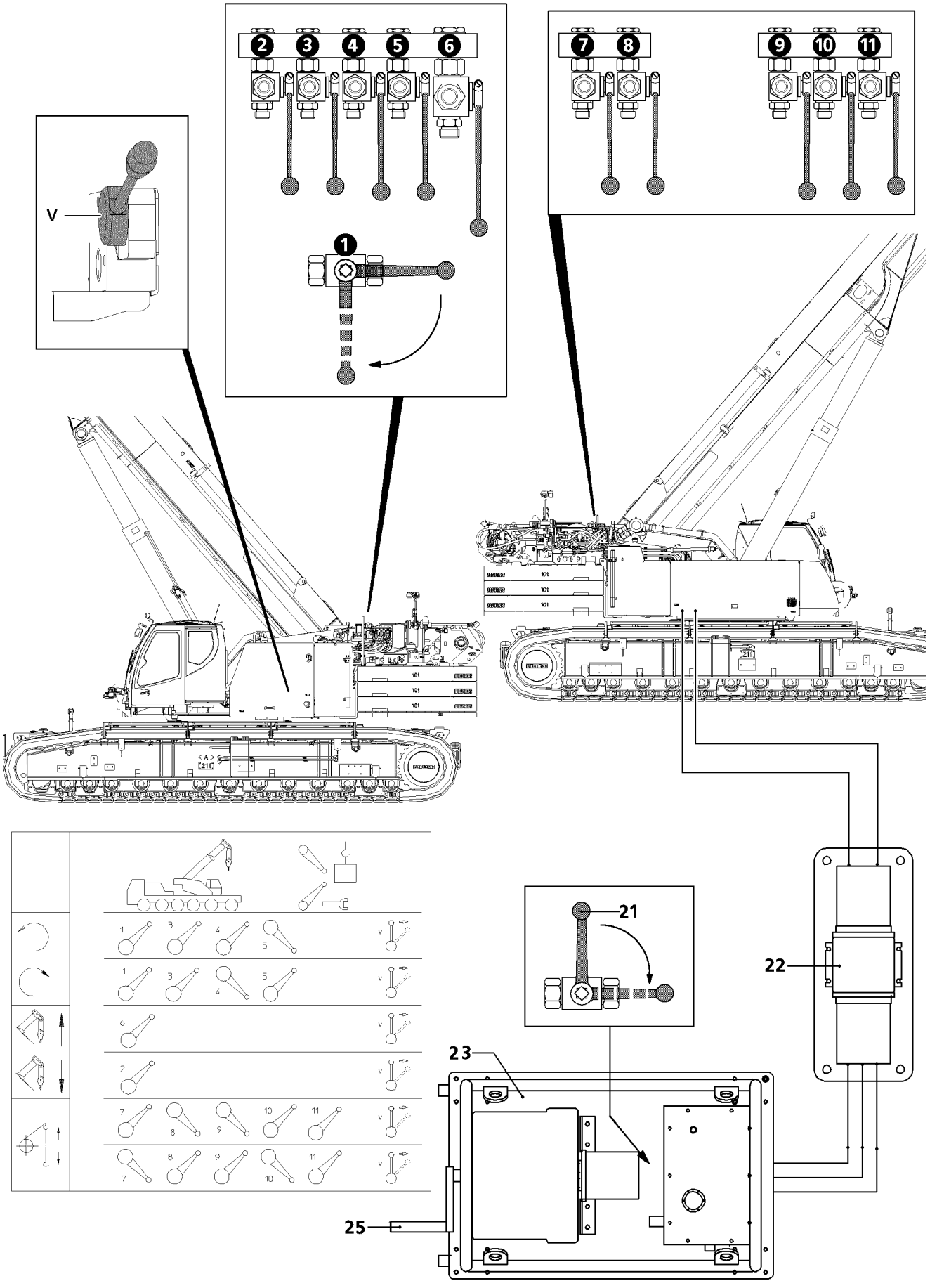

B118014

1 Emergency control

To be able to take down the crane in case of failure of the crane hydraulic, the crane electrical system or the crane engine, ball valves and a hand lever **V** are installed on the superstructure. Via the ball valves, the corresponding crane movement can be preselected and carried out by deflecting the hand lever **V**.

1.1 General

DANGER
Increased danger of accident during emergency operation!
The crane movements are no longer monitored by LICCON in emergency operation.
- ▶ Emergency operation and particularly luffing down of the telescopic boom may only be carried out in accordance with the information in the load chart.
- ▶ If possible, set down the load first.

- – For normal “crane operation”, turn the ball valves downward.
- – For “emergency operations”, turn the respective ball valves (see following section and emergency operation sign on the crane superstructure) upward.
- – Several movements cannot be carried out at the same time.
- – All crane movements must be carried out with extreme caution and slowly.
- – The ball valves must always be switched over completely into the corresponding switch position.

1.2 Ball valve positions during emergency operation

1.2.1 Turning the turntable to the left

- ▶ Switch ball valve **1**, ball valve **3** and ball valve **4** upwards.
- ▶ Move the ball valve **5** downward.

1.2.2 Turning the turntable to the right

- ▶ Move the ball valve **1**, ball valve **3** and ball valve **5** upwards.
- ▶ Move the ball valve **4** downward.

1.2.3 Luff the telescopic boom up

- ▶ Move the ball valve **6** upward.

1.2.4 Luff the telescopic boom down

- ▶ Move the ball valve **2** upward.

1.2.5 Raising the hoist gear

- ▶ Move the ball valve **7**, ball valve **10** and ball valve **11** upwards.
- ▶ Switch ball valve **8** and ball valve **9** downwards.

1.2.6 Lowering the hoist gear

- ▶ Move the ball valve **8**, ball valve **9** and ball valve **11** upwards.
- ▶ Switch ball valve **7** and ball valve **10** downwards.

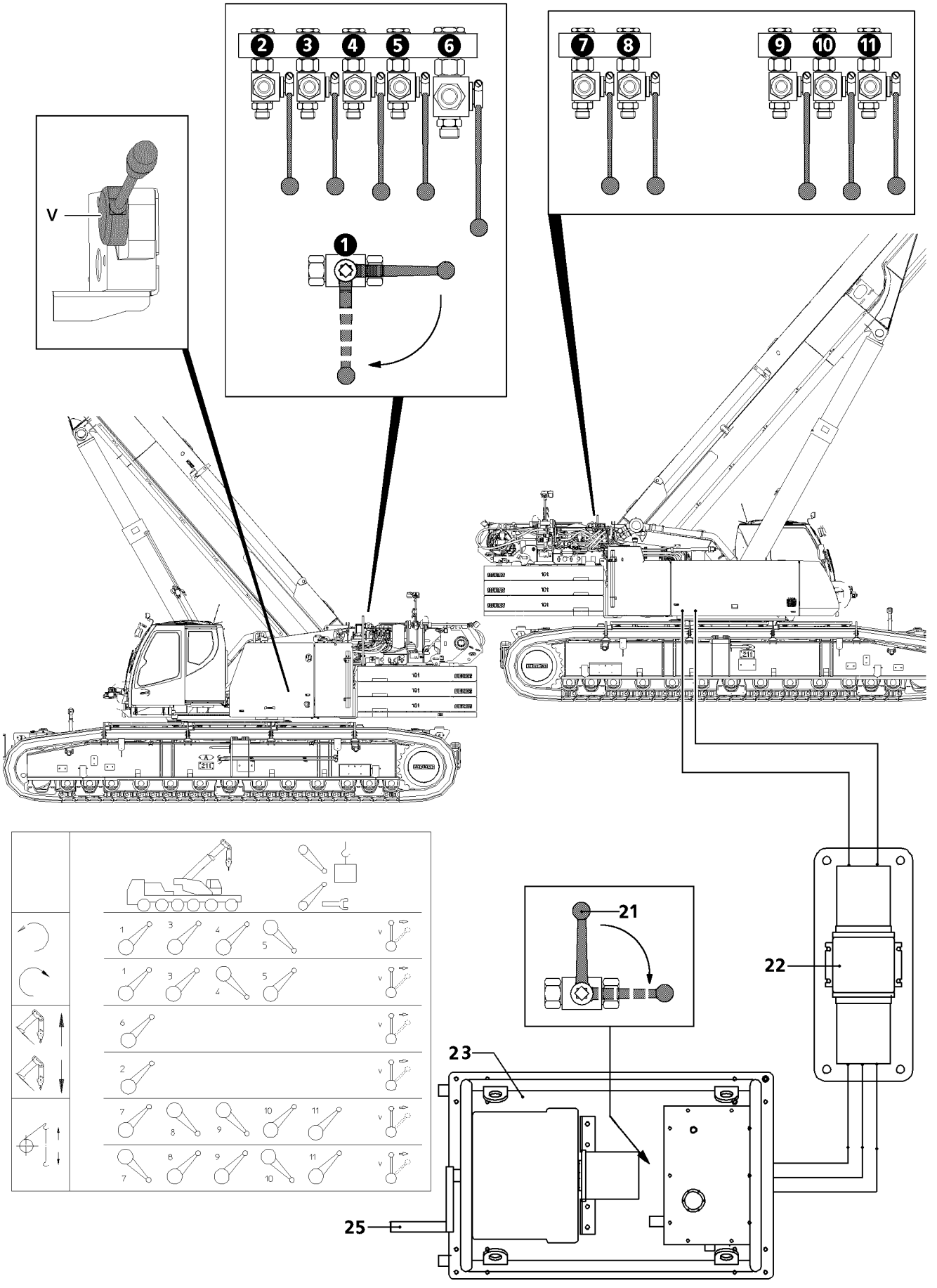

B118014

1.3 Emergency operation with emergency operation unit

In cranes with one motor the superstructure can be supplied with power with the aid of the emergency operation unit **23** and a hydraulic transformer **22**.

1.3.1 Preparing the crane for emergency operation

▶ Remove the dummy plugs on the hydraulic connections.

The different diameters of the hydraulic lines prevent incorrect piping.

▶ Establish the hydraulic connections from the emergency operation aggregate **23** to the transformer **22**.

▶ Make the hydraulic connections between the transformer **22** and the superstructure and the chassis.

1.3.2 Emergency operation unit

▶ Start the emergency operation unit **23**.

▶ Move the ball valve **21** to emergency operation.

Note

▶ The engine rpm can be adjusted using a separate rpm regulator on the emergency operation unit **23**.

1.3.3 Emergency control

▶ Preselect ball valves (1 -11) for the respective crane movement, see previous section or the emergency operation tag on the crane superstructure.

The deflection of the hand lever **V** determines the speed of the respective crane movement.

▶ Move the hand lever **V** and carry out the respective crane movement carefully.

1.3.4 Completing emergency control

DANGER

Danger of accident!

▶ After “emergency operation”, always change the ball valves over to “crane operation”.

▶ Change all ball valves to “crane operation”.

▶ Turn the emergency operation unit **13** off and close the ball valve **21**.

▶ Disconnect the hydraulic lines and screw in dummy plugs.

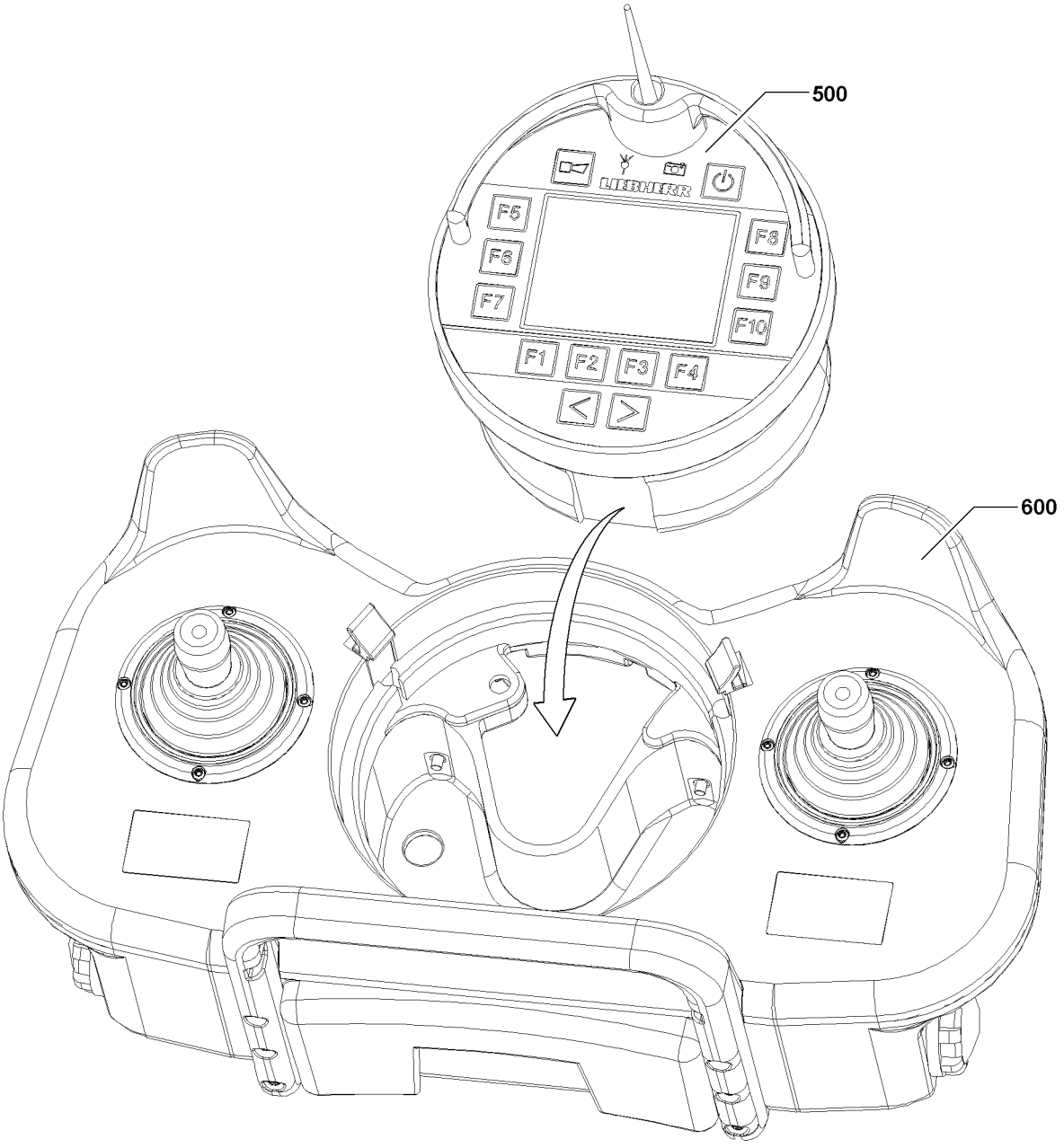

B113389

1 General

WARNING
Danger of accidents due to operating error!
Insufficient familiarity and errors in the operation of the crane with the radio remote control can cause accidents!
Personnel can be killed or seriously injured!
This could result in property damage!
- ▶ In any case, read the entire manufacturer's operating instructions!
- ▶ The crane may only be operated if the contents of the operating instructions have been understood!
- ▶ The Crane operating instructions must be observed!

Note
- ▶ The Bluetooth™ Terminal **500** is abbreviated in the description as “BTT”.

This crane is equipped with a radio remote control console **600**. The radio remote control console **600**, together with the BTT **500** forms a radio remote control.
The control commands are sent by the radio remote control console **600** via the BTT **500** to the crane.
At the same time, the most important crane data as well as any warning, monitoring and operational messages are shown on the BTT **500**.
This gives the crane operator optimum overview over the crane at all times, even in radio remote control operation.

Note
In radio remote control operation, the touch displays and master switches in the crane cab are in stand-by mode.
A stand-by screen is displayed on the touch displays.
- ▶ Control of the touch displays and master switches in the crane cab is **not** possible in radio remote control operation.

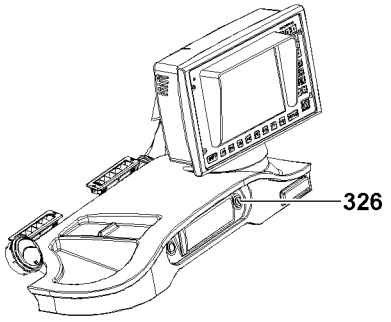
326

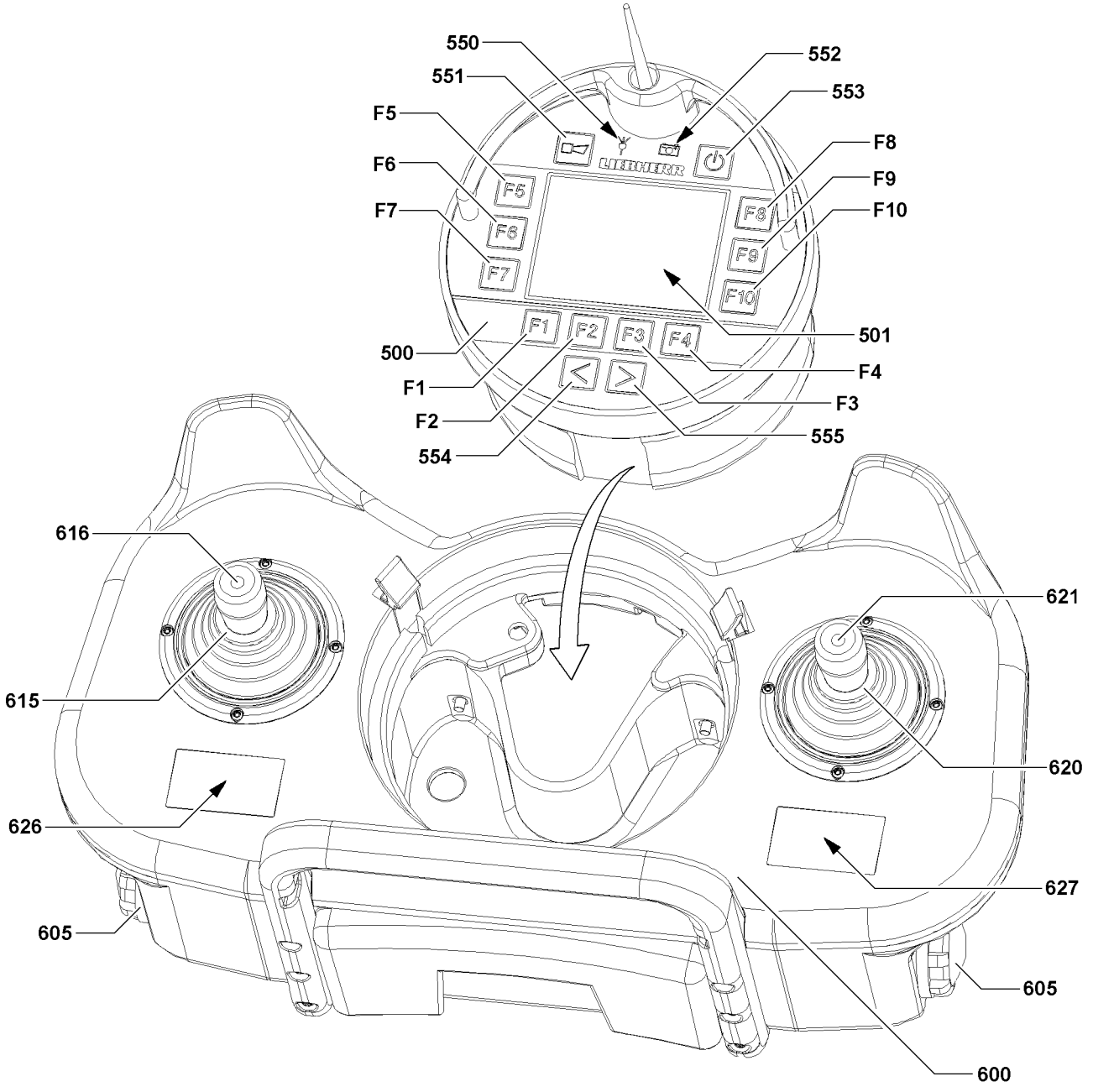
550
551
552
553
F5
F6
F7
F8
F9
F10
501
500
F1
F2
F3
F4
555
554
616
615
621
620
626
627
605
605
600

B117815

2 Operating and control instruments

326	Ignition switch	• Crane operator's cab
500	Bluetooth™ Terminal (BTT)	
501	BTT display	
550	Indicator light transmission signal	• Green: Transmission signal ok. • Yellow: Transmission signal about to be lost. • Red: Transmission signal not available.
551	Button	• Operate the acoustic signal (horn)
552	Indicator light rechargeable battery	• Green: Rechargeable battery fully charged. • Yellow: Rechargeable battery almost discharged. • Red: Rechargeable battery discharged.

Note

▶ To recharge the rechargeable battery, the BTT **500** must be plugged into the charging cradle.

553	Button	• Turn the Bluetooth Terminal (BTT) on / off
554	Button	• Change over key • Function menu / operating screen dependent
555	Button	• Change over key • Function menu / operating screen dependent

Note

Function keys on the BTT **500**

▶ The assignment of the function keys **F1** to **F10** is menu / operating screen dependent and is described in the respective section.

600	Radio remote control console	
605	Battery compartments	• The power supply for the radio remote control console is provided by the BTT **500**. If the rechargeable battery in the BTT is weak, then radio remote control operation can be continued by inserting batteries.
615	Manual control lever, left	• Assignment according to Graphic display left **626**
616	Button	• Change over of rpm between low idle rpm and maximum or saved rpm.
620	Manual control lever, right	• Assignment according to Graphic display right **627**
621	Button	• Rapid mode addition for hoist gear(s) and luffing up
626	Graphic display left	• Assignment display manual control lever **left**.
627	Graphic display right	• Assignment display manual control lever **right**.

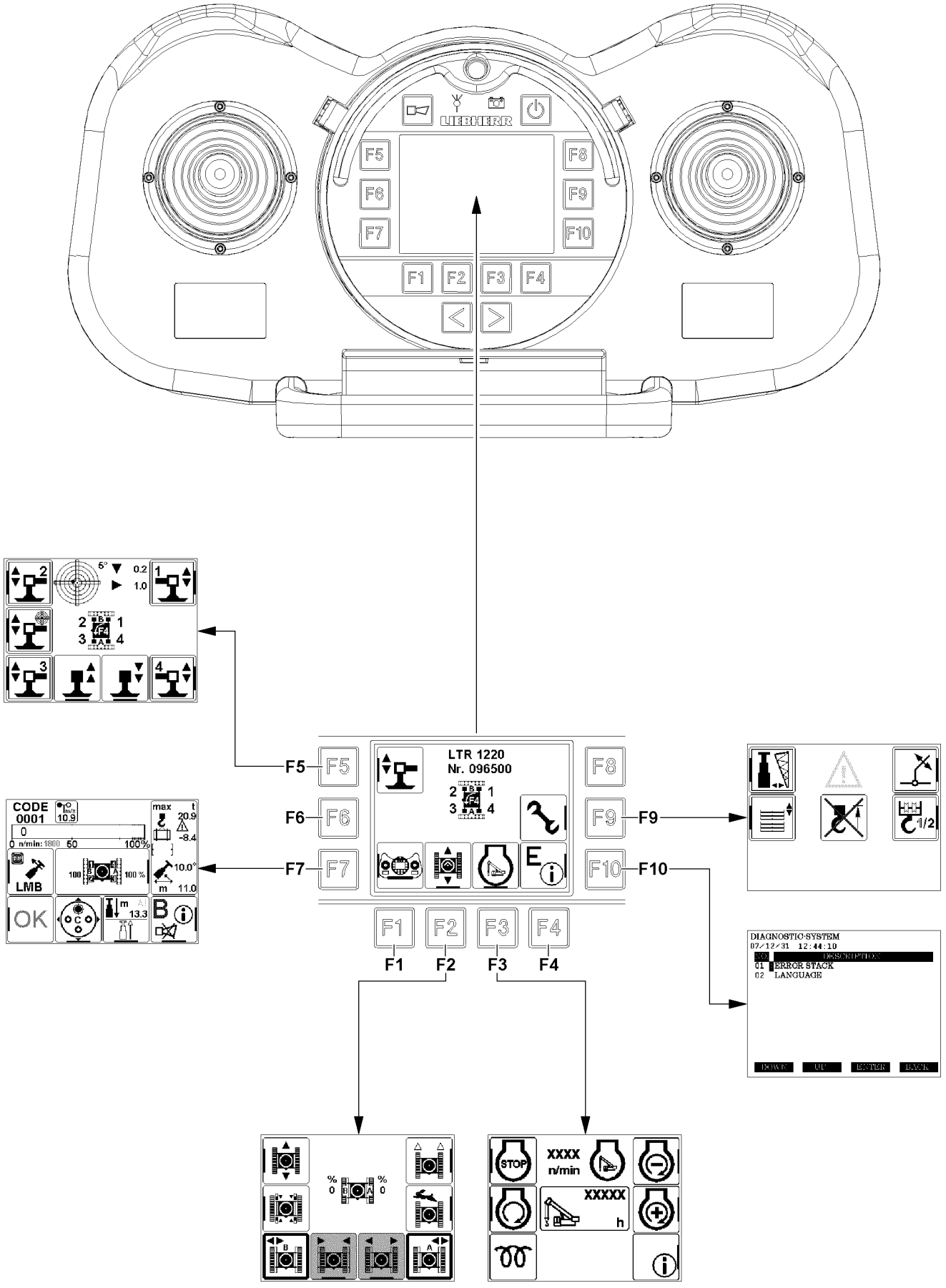
LIEBHERR
F1
F2
F3
F4
F5
F6
F7
F8
F9
F10
LTR 1220
Nr. 096500
CODE
0001
LMB
OK
DIAGNOSTIC-SYSTEM
07/12/31 12:44:10
01 ERROR STACK
02 LANGUAGE
DOWN
UP
ENTER
BACK
STOP
XXXX
n/min
XXXXX
h

B117813

3 Start menu of the radio remote control

Function key / menu description		
F1	-No function in the start menu-	
F2	**Crawler travel gear menu**	
>>	**F1**	-Back to the start menu-
>>	**F2**	Retract the selected crawler carrier
>>	**F3**	Extend the selected crawler carrier
>>	**F5**	Turning normal travel crawler operation on / off
>>	**F6**	Unpin / pin the track width adjustment
>>	**F7**	Selection / deselection of crawler carrier B
>>	**F8**	Turning parallel travel crawler operation on / off
>>	**F9**	Select the rapid gear normal travel / parallel travel
>>	**F10**	Selection / deselection of crawler carrier A
F3	**Menu Engine operation**	
>>	**F1**	-Back to the start menu-
>>	**F5**	Turn the engine off
>>	**F6**	Turn the engine on
>>	**F8**	Decrease engine rpm
>>	**F9**	Increase engine rpm
>>	**F10**	Change to test system
F4	-No function in the start menu-	

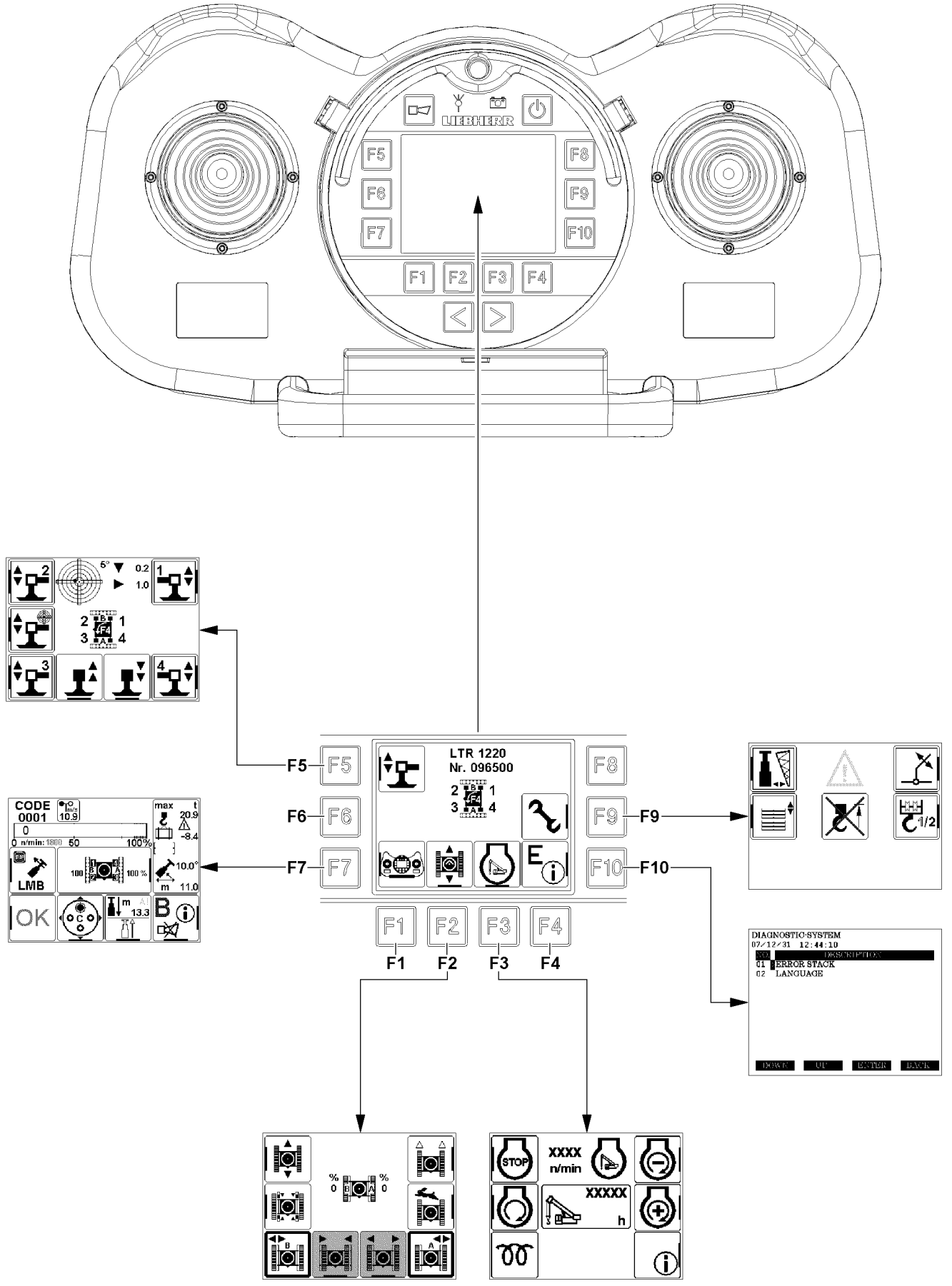
LIEBHERR
F1
F2
F3
F4
F5
F6
F7
F8
F9
F10
LTR 1220
Nr. 096500
CODE
0001
LMB
OK
DIAGNOSTIC-SYSTEM
07/12/31 12:44:10
01 ERROR STACK
02 LANGUAGE
DOWN
UP
ENTER
BACK
STOP
XXXX
n/min
XXXXX
h

B117813

Function key / menu description		
F5	**Menu Support**	
>>	**F1**	-Back to the start menu-
>>	**F2**	Retract selected support(s)
>>	**F3**	Extend selected support(s)
>>	**F5**	Select / deselect the support for a given crane position
>>	**F6**	Select / deselect the automatic support
>>	**F7**	Select / deselect the support for a given crane position
>>	**F8**	Select / deselect the support for a given crane position
>>	**F10**	Select / deselect the support for a given crane position
F6	-No function in the start menu-	
F7	**Operating screen radio remote control**	
>>	**F1**	-Back to the start menu-
>>	**F2**	Change over manual control lever assignment
>>	**F3**	Telescoping direction / boom length
>>	**F4**	Turn off the acoustic warnings
>>	**F6**	Function “Luffing in with suspended load”
>>	**F7**	Confirmation of operating mode
>>	**F9**	Change over the display
>>	**F10**	Test system
F8	-No function in the start menu-	
F9	**Menu Assembly functions**	
>>	**F1**	-Back to the start menu-
>>	**F5**	Selection / deselection of hydraulic folding jib assembly*
>>	**F6**	Selection / deselection of ballasting / turntable lock
>>	**F8**	Selection / deselection of lifting / lowering the hydraulic folding jib*
>>	**F9**	Selection / deselection of fastening the hook block
F10	**Test system**	

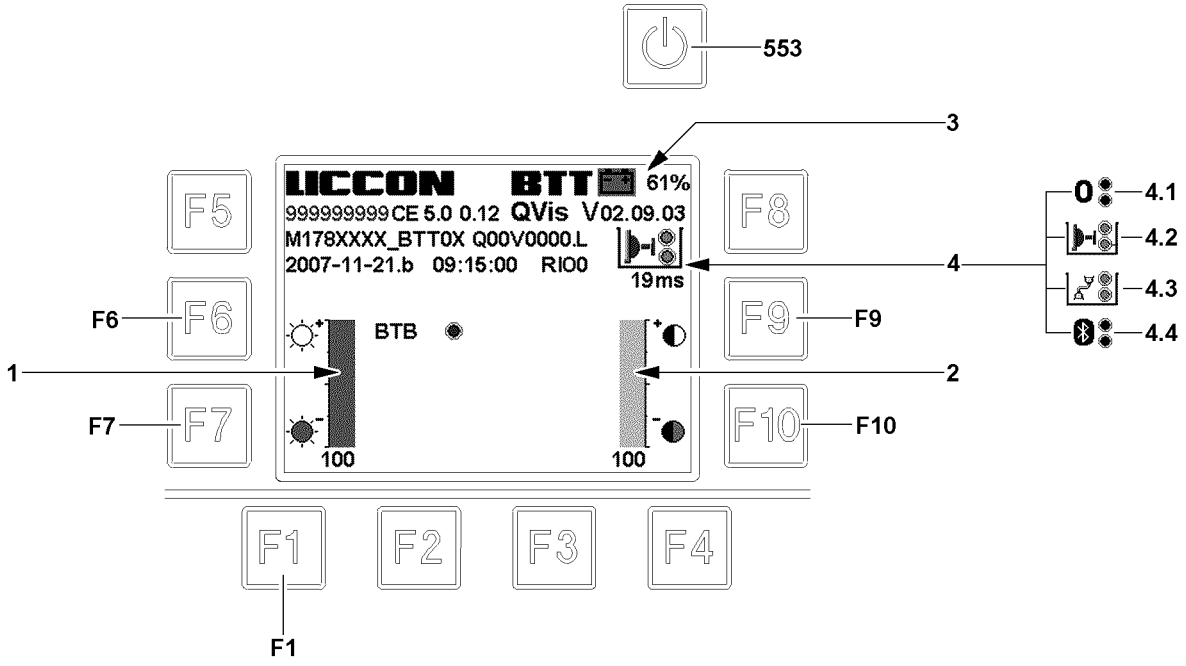
553
3
LICCON BTT 61%
999999999 CE 5.0 0.12 QVis V02.09.03
M178XXXX_BTT0X Q00V0000.L
2007-11-21.b 09:15:00 RIO0
19ms
BTB
100
100
F5
F6
F7
F8
F9
F10
F1
F2
F3
F4
1
2
4
4.1
4.2
4.3
4.4

B117976

4 Settings and status displays on the BTT

In the system screen of the BTT, settings can be made and status displays can be read.

4.1 Calling up / closing the system screen

Make sure that the following prerequisite is met:
– The start menu is displayed.

▶ Select the System screen: Press the button **553** momentarily until the system screen appears (max. 1 second).

Note
▶ When the button **553** is pressed too long, the BTT turns off.

▶ To change back to the System menu: Press the function key **F1**.

4.2 Adjusting the brightness level of the BTT display

The current setting stage for brightness can be read on the bar diagram **1**.
▶ BTT display brighter: Press the function key **F6**.
▶ BTT display darker: Press the function key **F7**.

4.3 Adjusting the contrast of the BTT display

Note
▶ Only available for certain crane types:

The current setting stage for the contrast can be read on the bar diagram **2**.
▶ BTT display more contrast: Press the function key **F9**.
▶ BTT display less contrast: Press the function key **F10**.

4.4 Determining the exact charge condition of the rechargeable battery

The exact charge condition of the rechargeable battery can be read on the charge condition display **3**.
▶ Read the charge condition, if necessary recharge the BTT by inserting it in the charging bay.

4.5 Checking the connection type

The connection type can be read on the connection type display **4**.
▶ Read the connection type.

Result:
– No connection **4.1**
– Infrared **4.2** (only in the charging bay)
– Cable **4.3**
– Bluetooth™ **4.4**

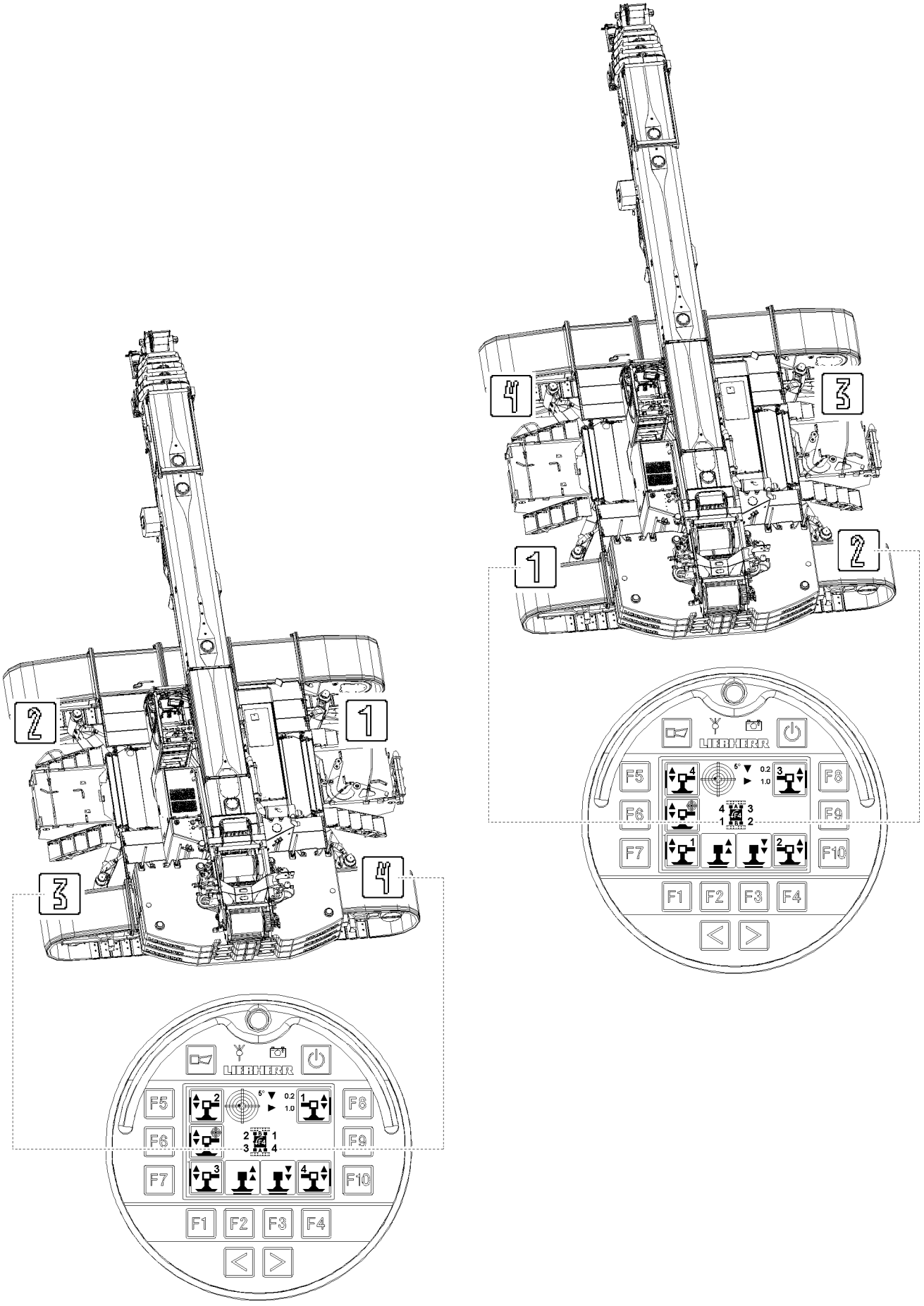

B117814

5 Aligning the radio remote control to the crane

If “F4” and two rotation arrows appear within the crane icon on the BTT display, then the location of the operator must be aligned with the radio remote control to the crane.

– The determining factor for the orientation of the radio remote control is the crane chassis.
– A selection can be made between two orientations:
  - **Illustration 1** :
    - Operator is standing on the side of support 3 and support 4 (crawler carrier A).
    - In the crane icon on the BTT display, the supports with number 3 and number 4 are on the bottom.
  - **Illustration 2** :
    - Operator is standing on the side of support 1 and support 2 (crawler carrier B).
    - In the crane icon on the BTT display, the supports with number 1 and number 2 are on the bottom.

WARNING
Danger of accident if operator is incorrectly positioned to the crane!
If the operator is not correctly oriented to the crane, then the working range / danger zone cannot be viewed completely!
Personnel can be severely injured or killed!
▶ The crane icon on the BTT display must correspond to the actual direction of the operator to the crane!

F4 Function key	• When “F4” and two rotation arrows appear within the crane icon: Press function key **F4** to turn the crane icon in 180° increments.

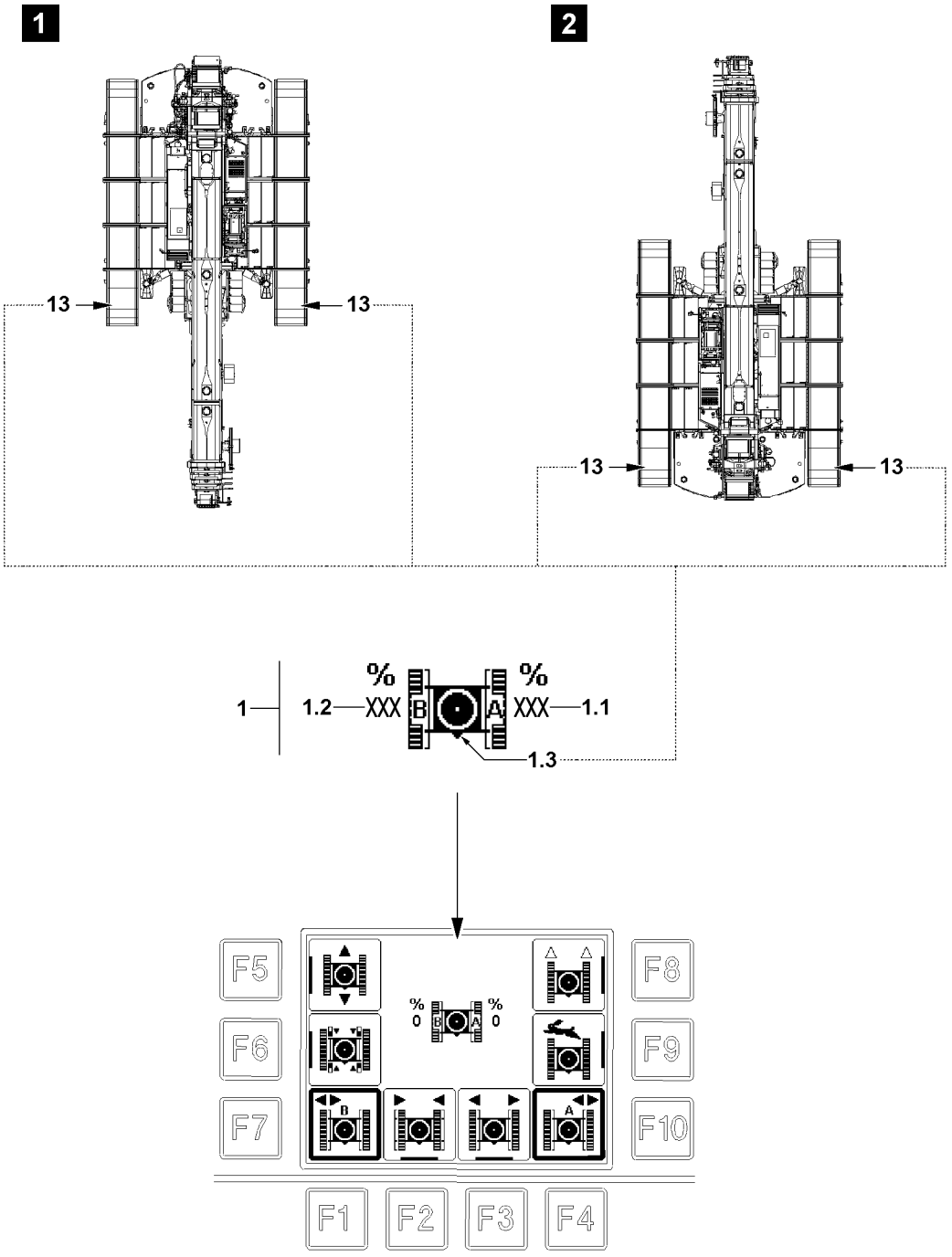

B117945

6 Crawler travel gear menu

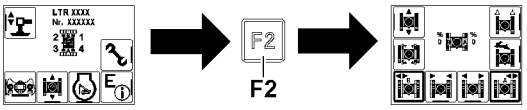

B117943

Note
Change from start menu to crawler travel gear menu:
▶ Press the function key **F2**.

Functions in the “crawler travel gear” menu:
– Extending / retracting the crawler carriers
– Turning crawler operation on / off

In the crawler travel gear menu, the display of the crane icon **1** cannot be adjusted:
– The marker“front side of crawler travel gear” **1.3** shows where in the display the front side of the crawler travel gear is.
– The position of the crane superstructure is not relevant in the crawler travel gear menu, see example of illustration **1** and illustration **2**.
– Front and rear on the crawler track can be determined by the chain tension devices **13** (chain tension side):
  • The chain tension devices **13** are always on the front of the crawler track.
  • The chain tension devices **13** are on the side of support 2 and support 3.

6.1 Icon explanation in crawler travel gear menu

1 Track width display	• The crawler carriers are marked with letters. • The extension conditions of the cross carriers are given in percentages.
1.1 Crawler carrier A	• Extension condition of crawler carrier A in percentages (%) 0 % = Crawler carrier A is completely retracted to 100 % = Crawler carrier A is completely extended
1.2 Crawler carrier B	• Extension condition of crawler carrier B in percentages (%) 0 % = Crawler carrier B is completely retracted to 100 % = Crawler carrier B is completely extended
1.3 Front on travel gear	• Shows where the front side of the crawler travel gear is in the icon.

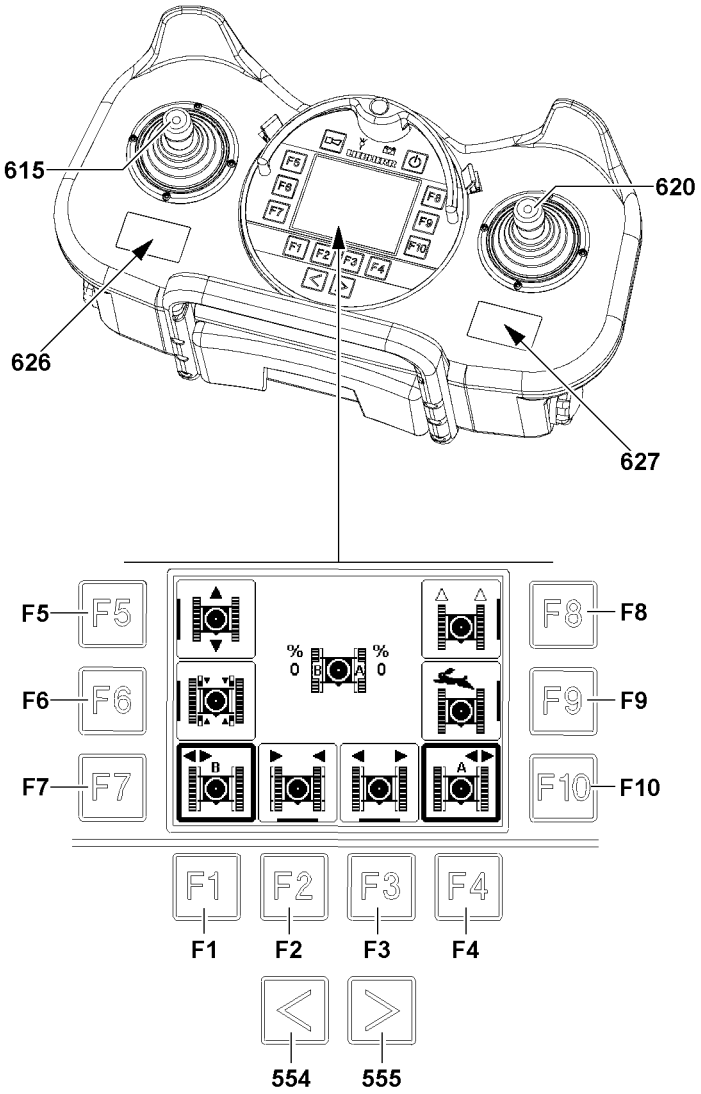

B117944

6.2 Function keys in the crawler travel gear menu

554	Button	• Change to the Menu Engine operation
555	Button	• Call of the operating screen for the radio remote control
F1	Function key	• Return to the start menu
F2	Function key	• Retract the selected crawler carrier
F3	Function key	• Extend the selected crawler carrier
F4	Function key	• -No function-
F5	Function key	• Turning normal travel crawler operation on / off
F6	Function key	• Unpin / pin the track width adjustment
F7	Function key	• Selection / deselection of crawler carrier B
F8	Function key	• Turning parallel travel crawler operation on / off
F9	Function key	• Select the rapid gear normal travel / parallel travel
F10	Function key	• Selection / deselection of crawler carrier A

6.3 Manual control lever in the crawler travel gear menu

615	Manual control lever	• Shown in the graphic display **626** is the function of the manual control lever **615** according to the direction of deflection. • **Note:** The function can only be carried out when the respective icon is highlighted in the BTT display in purple.
620	Manual control lever	• Shown in the graphic display **627** is the function of the manual control lever **615** according to the direction of deflection. • **Note:** The function can only be carried out when the respective icon is highlighted in the BTT display in purple.

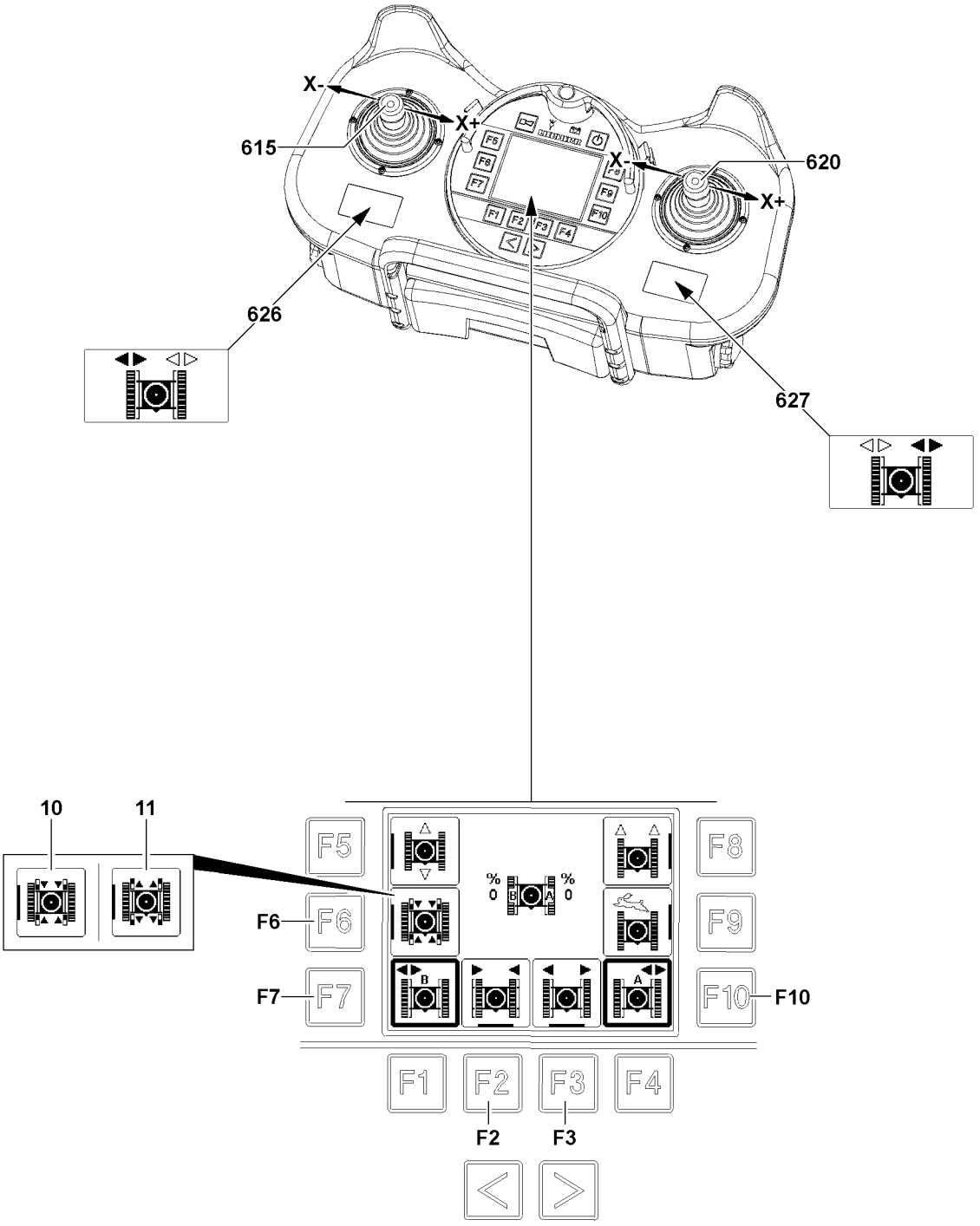

B117946

6.4 Extending / retracting the crawler carriers

The crawler carriers can be selected and controlled individually or together.
To be able to extend / retract the crawler carriers, the cross carriers must be unpinned.

– **Selection / deselection of crawler carrier:**
  - Press function key **F7** for crawler carrier B
  - Press function key **F10** for crawler carrier A
    - **Result**: Selected crawler carriers are bordered in bold. After selection of the first crawler carrier, the control release is issued. The other crawler carrier can be selected / deselected as desired.

– **Unpin / pin the cross carriers:**
  - Press the function key **F6**.
    - Pin the cross carrier active: Icon **10** appears.
      As soon as the pin aligns with a pin point, the cross carriers are pinned. Pin points are at 0 %, 50 % or 100 % extension condition of crawler carriers.
    - Unpin the cross carriers active: Icon **11** appears.
      unpin the pin from the pin point is actuated.

– **Control release:**
  - The control release is issued automatically after selection.
  - After completed control release, the icons over the function key **F2** / function key **F3** are highlighted in purple.

Note

▶ To control the crawler carriers, a control release must be issued: The corresponding icons must be highlighted in purple.

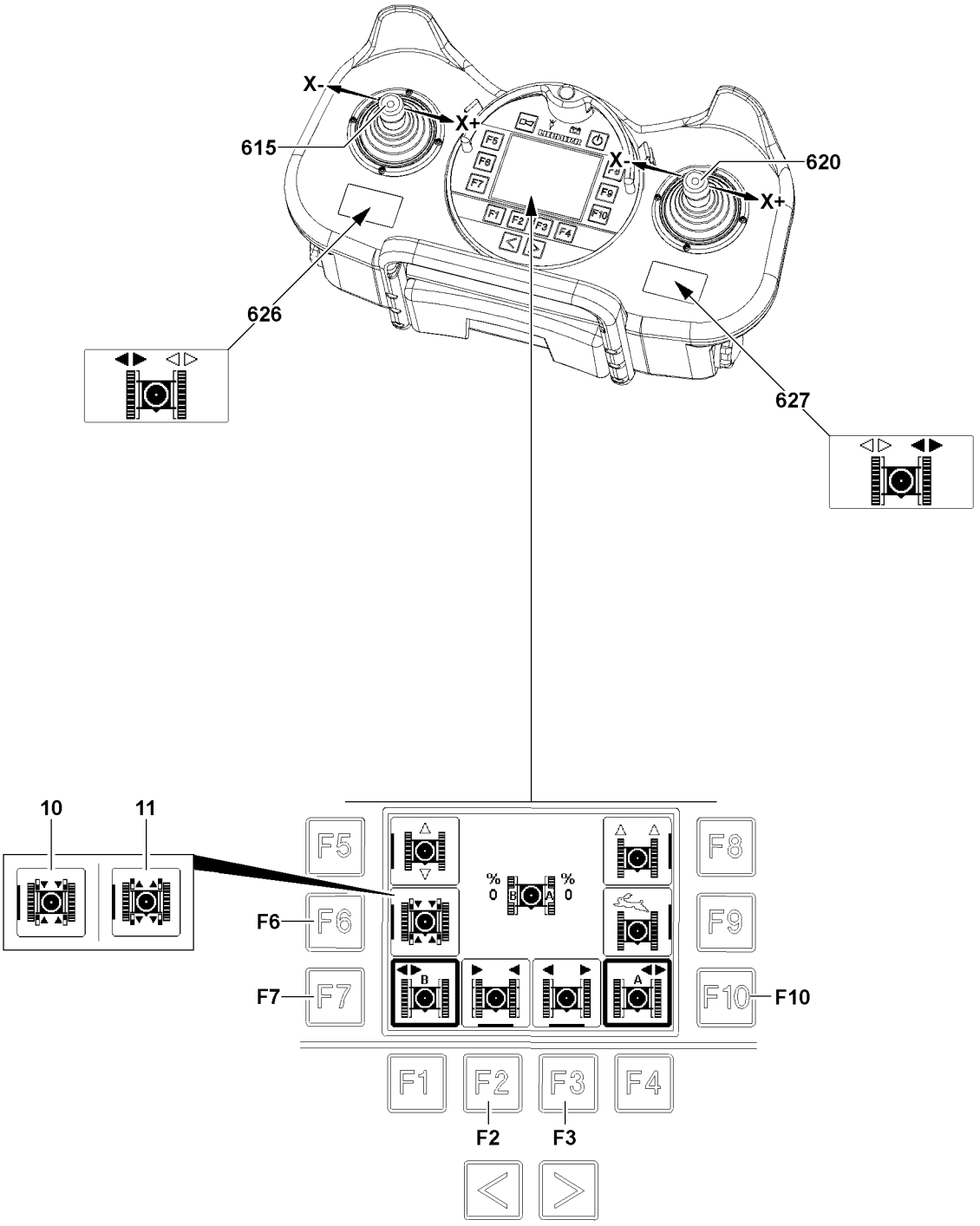

B117946

– **Retract the crawler carrier A:**
  Prerequisites: Icon **11** must appear, crawler carrier A is selected.
  - Press the function key **F2**.
    or
  - Deflect the manual control lever **620** in direction **X-**.

– **Extend crawler carrier A:**
  Prerequisites: Icon **11** must appear, crawler carrier A is selected.
  - Press the function key **F3**.
    or
  - Deflect the manual control lever **620** in direction **X+**.

– **Retract the crawler carrier B:**
  Prerequisites: Icon **11** must appear, crawler carrier B is selected.
  - Press the function key **F2**.
    or
  - Deflect the manual control lever **615** in direction **X+**.

– **Extend the crawler carrier B:**
  Prerequisites: Icon **11** must appear, crawler carrier B is selected.
  - Press the function key **F3**.
    or
  - Deflect the manual control lever **615** in direction **X-**.

– **Retract both crawler carriers parallel:**
  Prerequisites: Icon **11** must appear, crawler carrier A and crawler carrier B are selected.
  - Press the function key **F2**.
    or
  - Deflect the manual control lever **615** in direction **X+** and deflect manual control lever **620** in direction **X-**.

– **Extend both crawler carriers parallel:**
  Prerequisites: Icon **11** must appear, crawler carrier A and crawler carrier B are selected.
  - Press the function key **F3**.
    or
  - Deflect the manual control lever **615** in direction **X-** and deflect manual control lever **620** in direction **X+**.

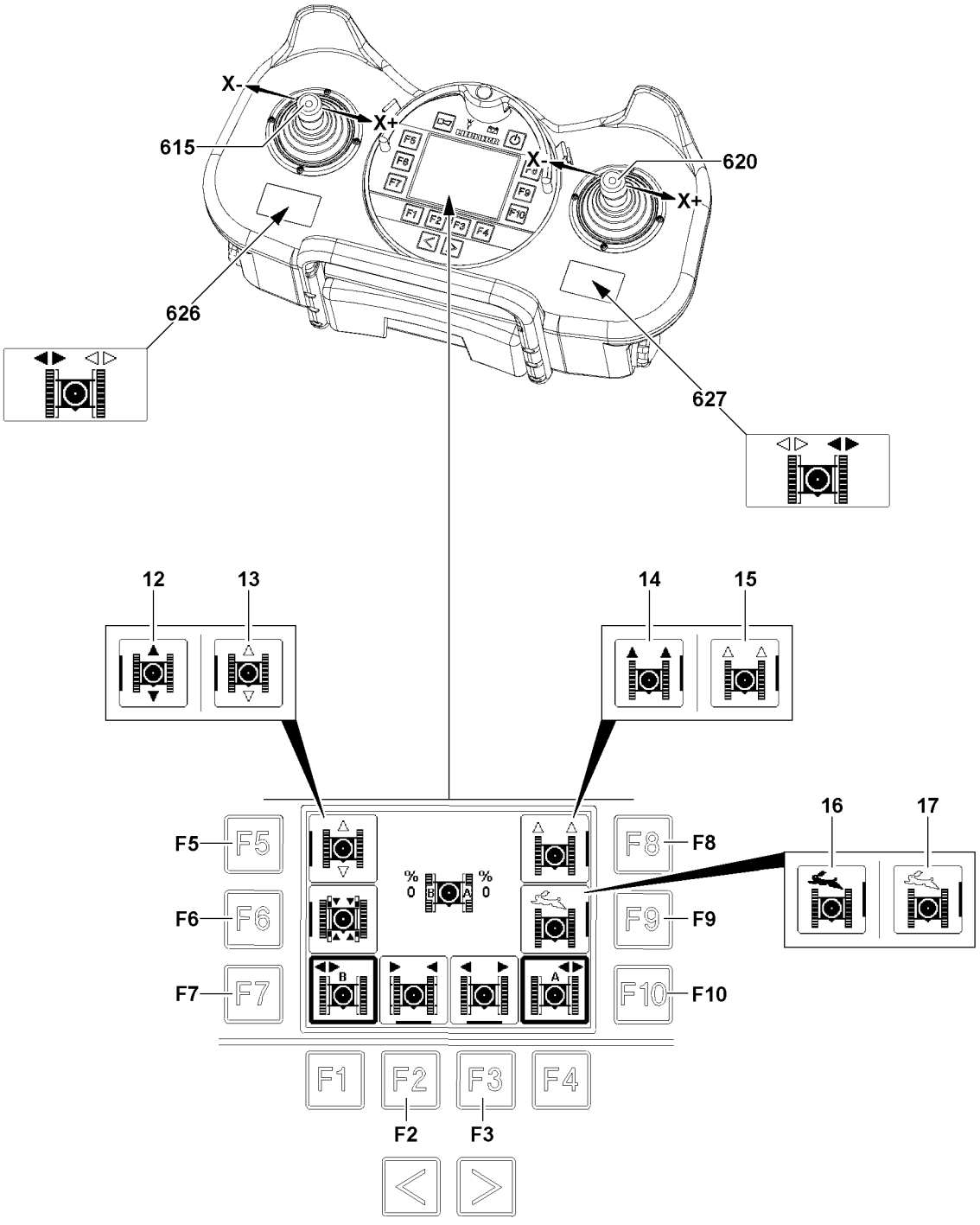
X-
X+
615
620
626
627
12
13
14
15
16
17
F5
F6
F7
F8
F9
F10
F1
F2
F3
F4
%
0
B
A

B117947

6.5 Turning crawler operation on / off

The crawler operation can only selected / deselected in the crawler travel gear menu.

To drive the crane, the operating screen radio remote control must be called up, see section “Travel operation with radio remote control”.

The rapid gear to increase the highest speed can be added in normal travel of crawler operation as well as in parallel travel of crawler operation.

– **Turning normal travel crawler operation on / off**
  - Press the function key **F5**.
    - Normal travel crawler operation added: Icon **12** appears.
    - Normal travel crawler operation turned off: Icon **13** appears.

– **Turning parallel travel crawler operation on / off**
  - Press the function key **F8**.
    - Parallel travel crawler operation added: Icon **14** appears.
    - Parallel travel crawler operation turned off: Icon **15** appears.

– **Turning rapid gear crawler operation on / off**
  - Press the function key **F5**.
    - Rapid gear crawler operation is added: Icon **16** appears.
    - Rapid gear crawler operation is turned off: Icon **17** appears.

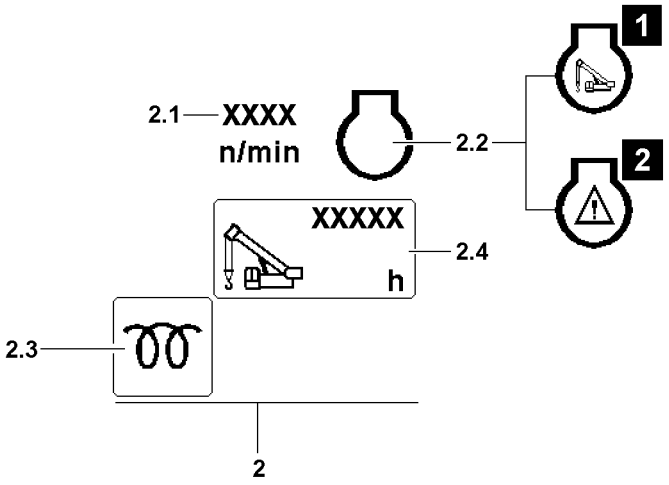
1
2.1
XXXX
n/min
2.2
2
XXXXX
h
2.4
2.3
2

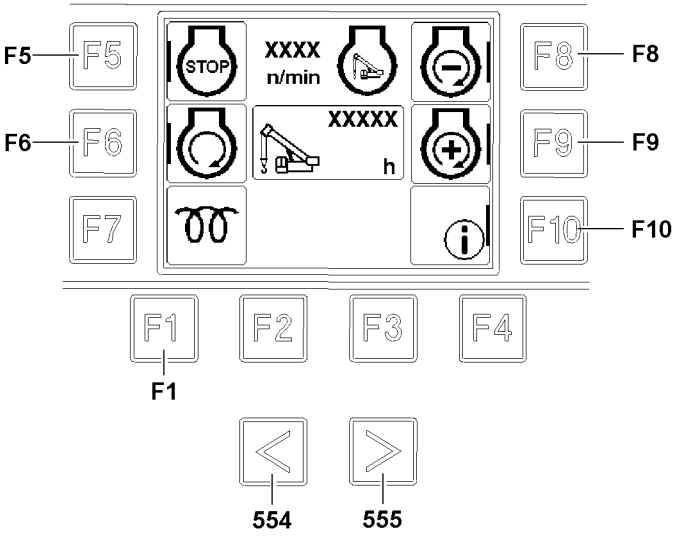
F5
F5
STOP
XXXX
n/min
F8
F8
F6
F6
XXXXX
h
F9
F9
F7
F10
F10
F1
F2
F3
F4
F1
554
555

B117638

7 Menu Engine operation

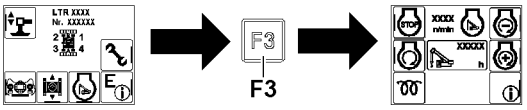

B117948

Note
Change from start menu to engine operation menu:
▶ Press the function key **F3**.

7.1 Icon explanation in engine operation menu

2	Icons Engine operation	
2.1	Engine speed	• Actual engine speed in rpm
2.2	Engine monitoring	• If warning icon illustration **2** appears, then an engine warning is present. • **NOTICE:** Call up engine monitoring functions and evaluate.
2.3	Monitoring display	• The indicator light lights up green. The crane superstructure engine is ready to start. • The indicator light lights up yellow: Crane superstructure engine preheating is active. • The indicator light lights up red: The crane superstructure engine is not ready to start.
2.4	Operating hour meter	• Operating hours of crane engine

7.2 Function keys

554	Button	• Call up monitoring functions for engine
555	Button	• Call up monitoring functions for engine
F1	Function key	• Back to the start menu
F5	Function key	• Press momentarily (less than 0.5 seconds): Reset settings in the engine operation menu • Press long: Turn the engine off
F6	Function key	• Turn the engine on
F8	Function key	• Decrease engine rpm
F9	Function key	• Increase engine rpm
F10	Function key	• Change to test system

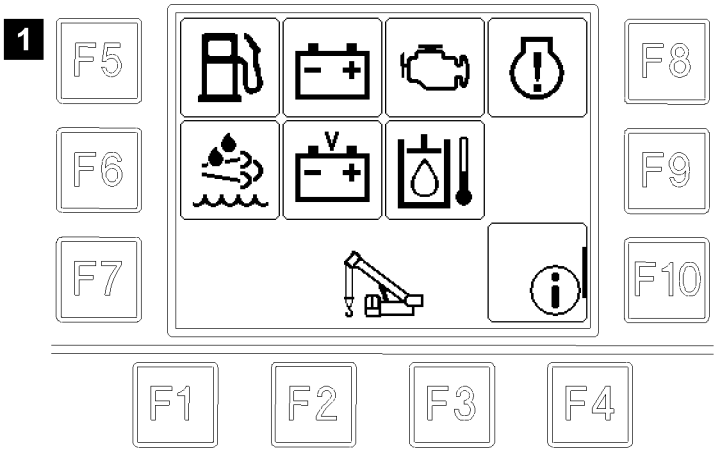

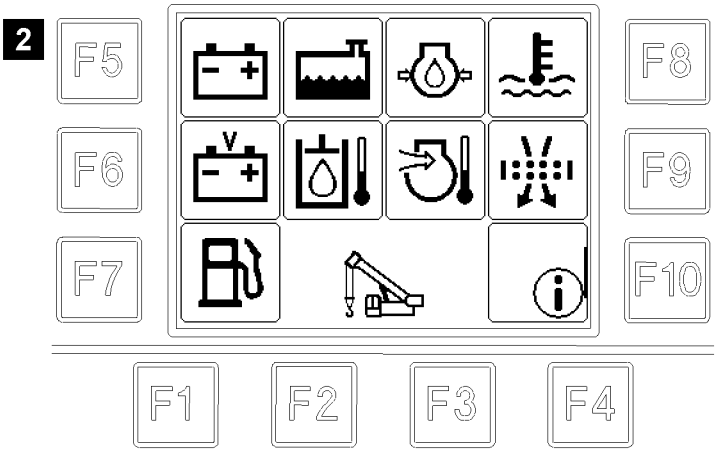

B116711

7.3 Monitoring functions for engine

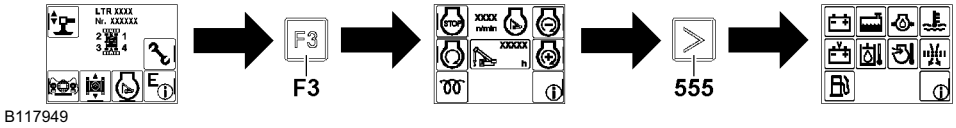

Note
Change from the start menu to the engine monitoring functions:
- ▶ Press the function key **F3**.
- ▶ Press the function key **555**.

Note
- ▶ Engines **with SCR system** for exhaust aftertreatment - Display in BTT display, see illustration **1**.
- ▶ Engines **without SCR system** - Display in BTT display, see illustration **2**.
- ▶ If a function is highlighted **green**, this function is operating correctly.
- ▶ If a function is highlighted **red** or **orange**, then this function has an error.

NOTICE
Property damage!
Property damage can result if a malfunction is not immediately rectified!
- ▶ Immediately rectify the faulty function!

Monitoring display	Icon display	Status
Information field	***B / E:***	*If a B (operating error) or E (system error) appears in the information field, then at least one error message is present. Call up and evaluate the error message by pressing function key F10 on the BTT, see also Diagnostics Manual.*

Monitoring display	Icon display	Status
Fuel reserve	*Green:*	*Fuel reserve **more** or equal to 5 %*
	Yellow:	Fuel reserve approx. 3 % - 4 %
	Red:	Fuel reserve **less** than 3 % **CAUTION** : Turn the engine off immediately and remedy the problem, pay attention to the error message!

Monitoring display	Icon display	Status
Hydraulic oil temperature	*Green:*	*Hydraulic oil temperature crane drive OK*
	Red:	Hydraulic oil temperature crane drive too high **CAUTION** : Turn the engine off immediately and remedy the problem, pay attention to the error message!

Monitoring display	Icon display	Status
Charge monitoring display	*Green:*	*Alternator OK (engine on)*
	Red:	Alternator does not charge (engine on) **CAUTION** : Turn the engine off immediately and remedy the problem, pay attention to the error message!

Monitoring display	Icon display	Status
Battery voltage	*Green:*	*Battery voltage OK*
	Red:	On-board power supply over / undervoltage **CAUTION** : Turn the engine off immediately and remedy the problem, pay attention to the error message!

Monitoring display	Icon display	Status
Note: Monitoring display only present on certain crane types!		
Engine oil level	*Green:*	*Engine oil level OK*
	Red:	Engine oil level too low or too high **CAUTION** : Call up individual monitoring displays and adjust the engine oil level according to the display, see section “Overview of individual monitoring displays” .

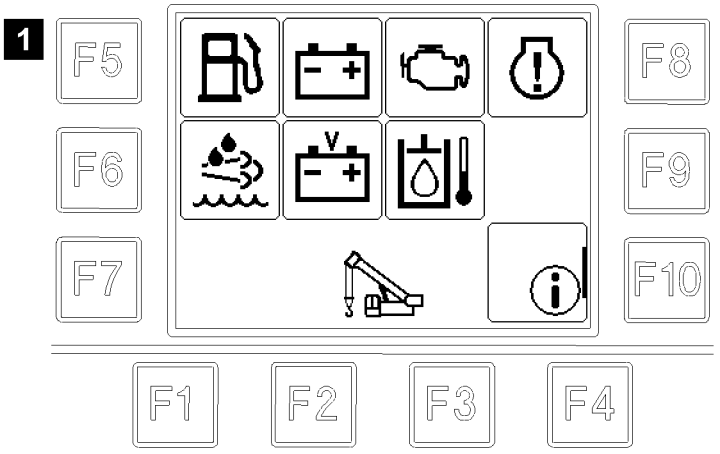

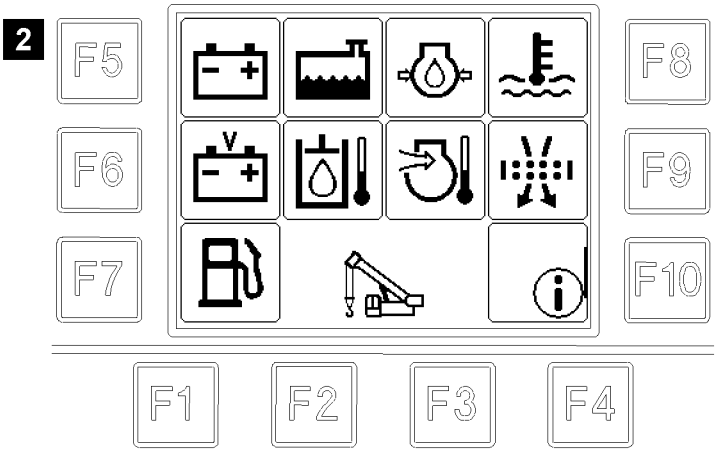

B116711

7.4 Additional monitoring functions for engines with SCR-system

Note

- ▶ Valid only for engines which are equipped with an SCR-system for exhaust aftertreatment.
- ▶ Display in BTT display, see illustration **1**.

WARNING

Triggers power reduction or start block of engine!

If Urea level is too low or if there is a faulty function in the exhaust aftertreatment, then a power reduction or start block of the engine can be triggered.

The mobile crane can significantly obstruct traffic!

The crane operation and travel operation can be limited or disabled!

- ▶ Add Urea in time!
- ▶ Remedy the faulty function of the exhaust aftertreatment immediately!
- ▶ Observe any valid national / regional regulations and the vehicle configuration!

Monitoring display	Icon display	Status
Urea tank	*Green:*	*Urea available*
	Yellow / red:	Urea level too low or erroneous function of exhaust aftertreatment system **CAUTION** : Add urea or remedy the faulty function of the exhaust aftertreatment. Under some circumstances a power reduction or start block of the engine [1] is triggered, pay attention to the error message!

Monitoring display	Icon display	Status
Exhaust aftertreatment	*Green:*	*Exhaust aftertreatment OK*
	Yellow / red:	Urea level too low or erroneous function of exhaust aftertreatment system **CAUTION** : Add urea or remedy the faulty function of the exhaust aftertreatment. Under some circumstances a power reduction or start block of the engine [1] is triggered, pay attention to the error message!

Monitoring display	Icon display	Status
 Collective warning	*Green:*	*No warning messages present*
	Generally at yellow or red:	A warning is present **CAUTION** : Determine the cause with the error message and in the LICCON monitor and observe the following description.
	Yellow:	Air intake opening / air filter dirty **CAUTION** : Turn the engine off immediately and remedy the problem, pay attention to the error message!
	Red:	Engine oil pressure too low or too high **CAUTION** : Turn the engine off and remedy the problem, pay attention to the error message!
	Red:	Engine oil level too low or too high **CAUTION** : Call up the display for the engine oil level in the LICCON monitor and match the engine oil level according to the display. See Crane operating instructions, chapter 4.02. Pay attention to error message!
	Red:	Coolant level too low **CAUTION** : Turn the engine off and add coolant, see Crane operating instructions, chapter 7.04 or chapter 7.05. Pay attention to error message!
	Red:	Coolant temperature too high **CAUTION** : Bring the coolant temperature into a permissible range, turn the engine off if necessary. Pay attention to error message!
	Red:	Charge air temperature too high **CAUTION** : Bring the charge air temperature into a permissible range, turn the engine off if necessary. Pay attention to error message!

blank page!

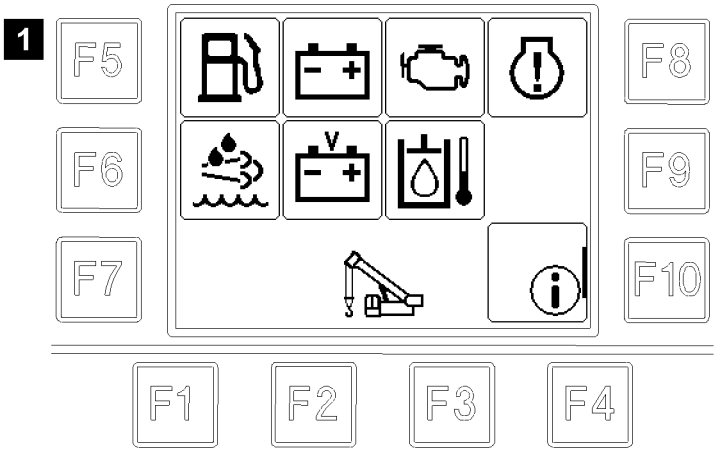

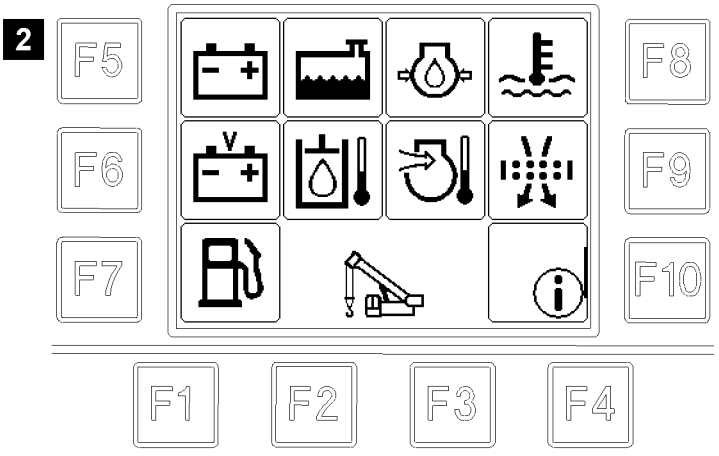

B116711

7.5 Additional monitoring functions for engines without SCR-system

Note
- ▶ Valid only for engines without SCR-system
- ▶ Display in BTT display, see illustration **2**.

Monitoring display	Icon display	Status
Coolant temperature	*Green:*	*Coolant temperature OK*
	Red:	Coolant temperature **too high** **CAUTION** : Turn the engine off and remedy the problem, pay attention to the error message!

Monitoring display	Icon display	Status
Engine oil pressure	*Green:*	*Engine oil pressure OK (engine on)*
	Red:	Engine oil pressure too low (engine on) **CAUTION** : Turn the engine off and remedy the problem, pay attention to the error message!

Monitoring display	Icon display	Status
Air filter	*Green:*	*Air filter OK*
	Yellow:	Air filter is dirty **CAUTION** : Turn the engine off and remedy the problem, pay attention to the error message!

Monitoring display	Icon display	Status
Coolant level	*Green:*	*Coolant level OK*
	Red:	Insufficient coolant **CAUTION** : Turn the engine off and remedy the problem, pay attention to the error message!

Monitoring display	Icon display	Status
Charge air temperature	*Green:*	*Charge air temperature OK*
	Red:	Charge air temperature too high **CAUTION** : Turn the engine off and remedy the problem, pay attention to the error message!

blank page!

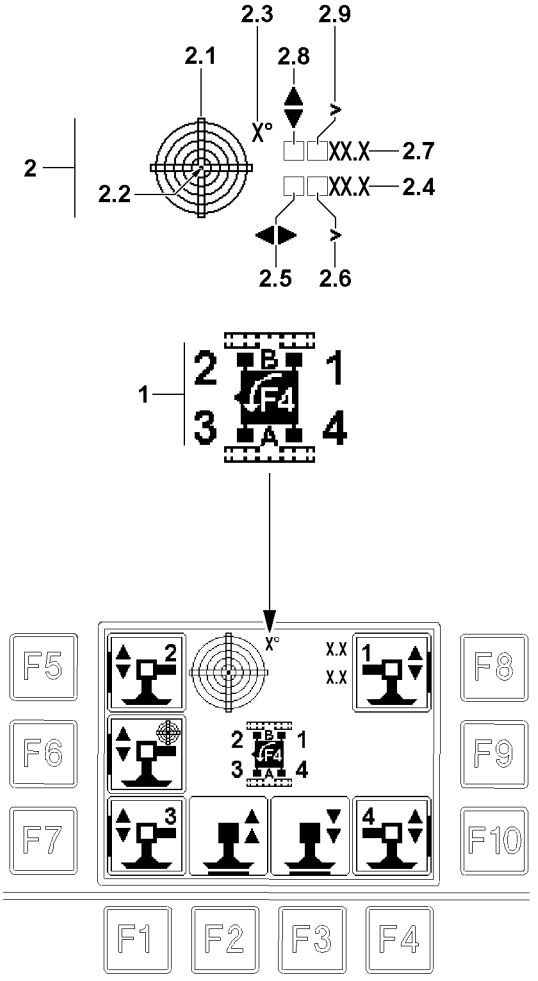
2.3
2.9
2.1
2.8
X°
XX.X
2.7
2
2.2
XX.X
2.4
2.5
2.6
1
2
1
3
4
F4
B
A
F5
F6
F7
F8
F9
F10
F1
F2
F3
F4
X.X
X.X

B117930

8 Menu Support

WARNING
Danger of accident if operator is incorrectly positioned to the crane!
If the operator is not correctly oriented to the crane, then the working range / danger zone cannot be viewed completely!
Personnel can be severely injured or killed!
▶ The crane icon on the BTT display must correspond to the actual position of the operator with respect to the crane, see section “Aligning the radio remote control to the crane”!

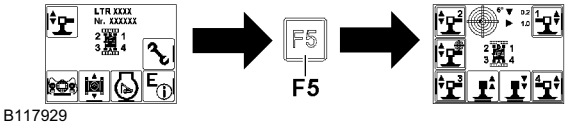

B117929

Note
Change from start menu to support menu:
▶ Press the function key **F5**.

In the Support menu, the operator can select between manual support and automatic support* (only for certain crane types).

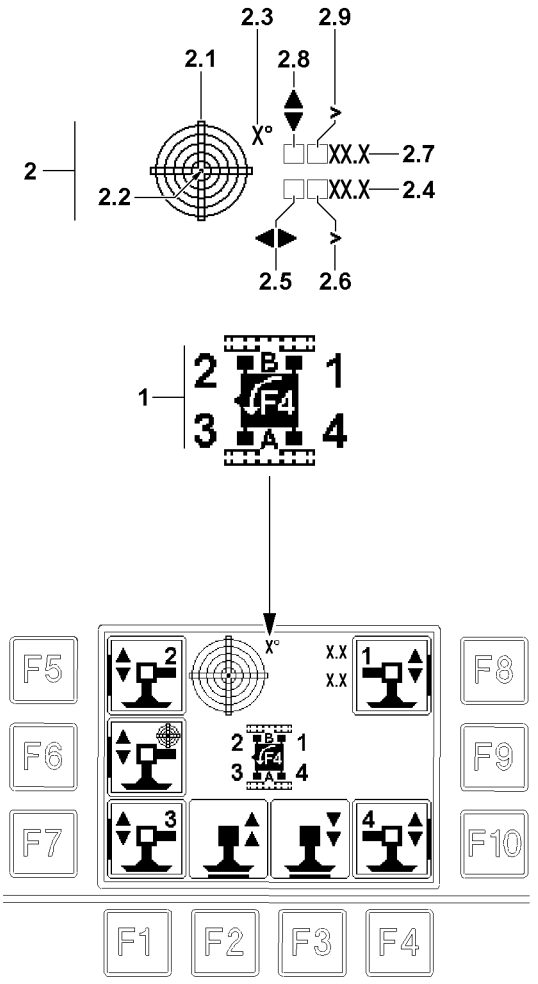
2.3
2.9
2.1
2.8
X°
XX.X
2.7
2
2.2
XX.X
2.4
2.5
2.6
1
2
1
3
4
F4
B
A
F5
F6
F7
F8
F9
F10
F1
F2
F3
F4
X.X
X.X

B117930

8.1 Icon explanation in support menu

1 Crane icon	• On the crane icon: • The crawler carriers are displayed with their identification letter. • The support cylinders are displayed with numbers.

WARNING
The crane can topple over!
The “larger than symbol” shows that the crane is inclined further than can be shown!
The exact incline can then not be read!
▶ Do not exceed the permissible incline of the crane!

2 “Incline” icon	• Display of the incline of the crane to the horizontal in longitudinal and lateral direction. The display is graphic as well as numeric. • The direction data refer to the orientation of the displayed crane icon.
2.1 Graphic display	• The graphic display has the form of a sight gauge. In it is a moving dot **2.2**, which represents the air bubble.
2.2 Point	• The center of the dot **2.2** shows the incline value.
2.3 Resolution of view	• This value describes the resolution of the graphic view. The resolution is matched automatically to the incline.
2.4 Longitudinal direction	• Incline of crane in longitudinal direction in [°].
2.5 Direction arrow	• The direction arrow shows the direction of the incline.
2.6 Display range exceeded	• If the “larger than icon” appears, then the display range is exceeded. • **Note:** The crane is inclined further than can be shown!
2.7 Lateral direction	• Incline of crane in lateral direction in [°]
2.8 Direction arrow	• The direction arrow shows the direction of the incline
2.9 Display range exceeded	• If the “larger than icon” appears, then the display range is exceeded. • **Note:** The crane is inclined further than can be shown!

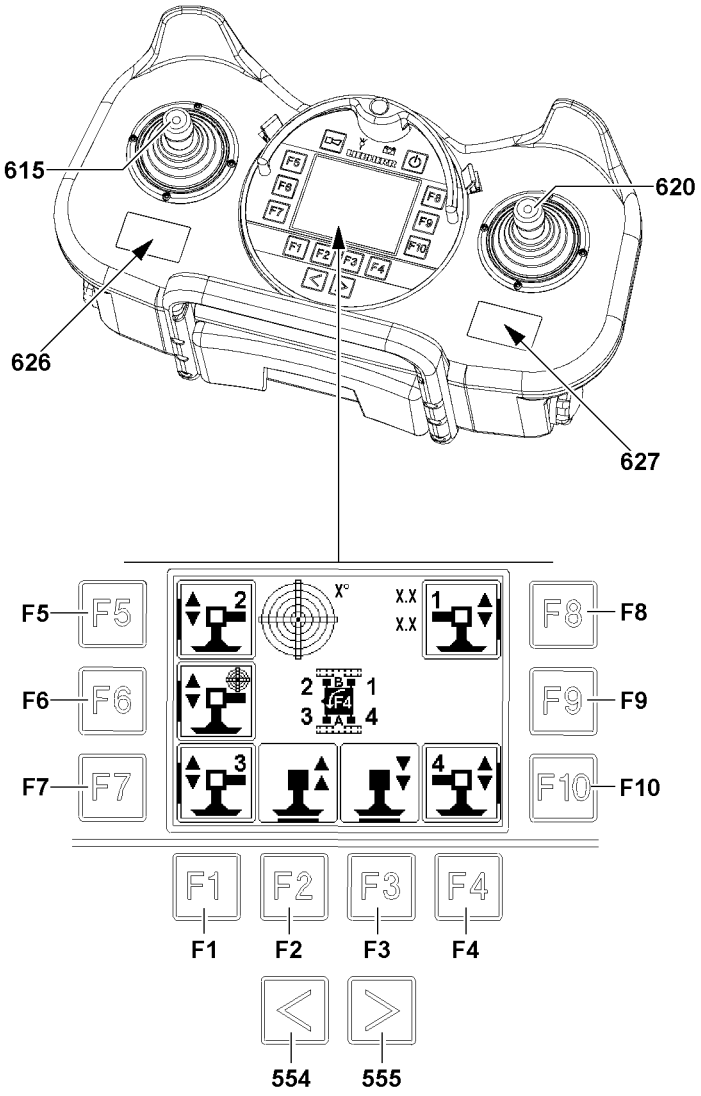

B117931

8.2 Function keys in the support menu

554	Button	• Change to the Menu Engine operation
555	Button	• Change to the Menu Engine operation
F1	Function key	• Return to the start menu
F2	Function key	• Moving the selected support cylinders in
F3	Function key	• Moving the selected support cylinders out
F4	Function key	• Turn the crane icon in 180° increments
F5	Function key	• Select / deselect the support cylinders according to the crane position
F6	Function key	• Select / deselect the support automatic* • **Note**: The function support automatic* is only available on certain crane types.
F7	Function key	• Select / deselect the support cylinders according to the crane position
F8	Function key	• Select / deselect the support cylinders according to the crane position
F9	Function key	• -No function-
F10	Function key	• Select / deselect the support cylinders according to the crane position

8.3 Manual control lever in the support menu

615	Manual control lever	• Shown in the graphic display **626** is the function of the manual control lever **615** according to the direction of deflection. • **Note:** The function can only be carried out when the respective icon is highlighted in the BTT display in purple.
620	Manual control lever	• Shown in the graphic display **627** is the function of the manual control lever **615** according to the direction of deflection. • **Note:** The function can only be carried out when the respective icon is highlighted in the BTT display in purple.

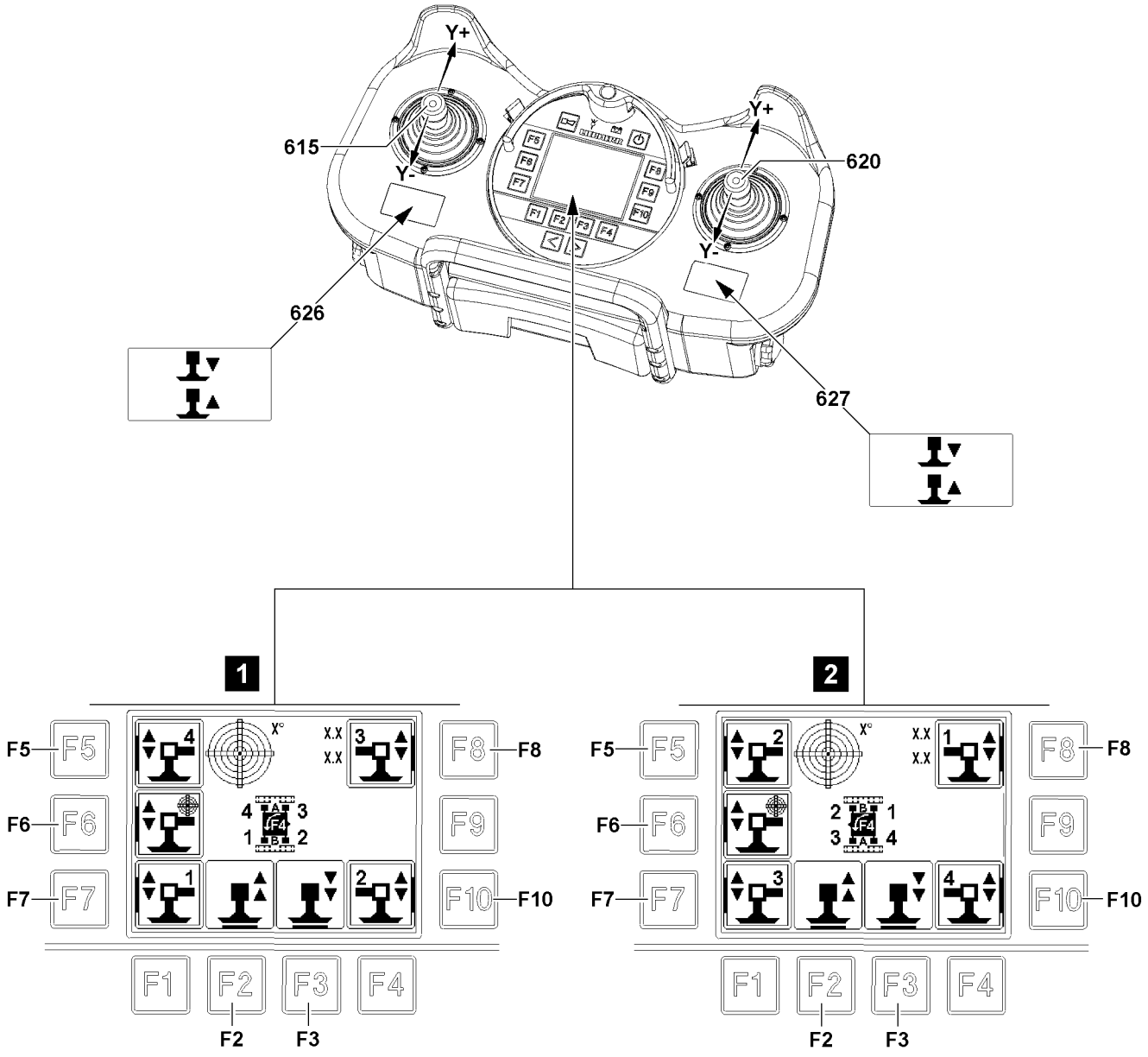

B117932

8.4 Manual support

The supports can be selected and controlled individually or in groups. When a support cylinder is directly selected, then the automatic support selection is cancelled.
Make sure that the following prerequisite is met:

– The orientation of the operator to the crane has been set correctly, see section “Aligning the radio remote control to the crane”

Selection / deselection of support cylinder:

– Illustration **1**: Operator is standing on the side of crawler carrier B:
  - Actuate the function key **F5** for support cylinders 4.
  - Actuate the function key **F7** for support cylinders 1.
  - Actuate the function key **F8** for support cylinders 3.
  - Actuate the function key **F10** for support cylinders 2.
    - **Result**: Selected support cylinders are bordered in bold. After selection of the first support cylinder, the control release is issued. Additional support cylinders can be selected / deselected as desired.

– Illustration **2**: Operator is standing on the side of crawler carrier A:
  - Actuate the function key **F5** for support cylinders 2.
  - Actuate the function key **F7** for support cylinders 3.
  - Actuate the function key **F8** for support cylinders 1.
  - Actuate the function key **F10** for support cylinders 4.
    - **Result**: Selected support cylinders are bordered in bold. After selection of the first support cylinder, the control release is issued. Additional support cylinders can be selected / deselected as desired.

– **Control release:**
  - The control release is issued automatically after selection.
  - After completed control release, the icons over the function key **F2** / function key **F3** are highlighted in purple.

Note

▶ To control the support cylinders, a control release must be issued: The corresponding icons must be highlighted in purple.

– **Retract the support cylinder:**
  - Press the function key **F2**.
    or
  - Deflect the manual control lever **615 / 620** in direction **Y-**.

– **Extend the support cylinder:**
  - Press the function key **F3**.
    or
  - Deflect the manual control lever **615 / 620** in direction **Y+**.

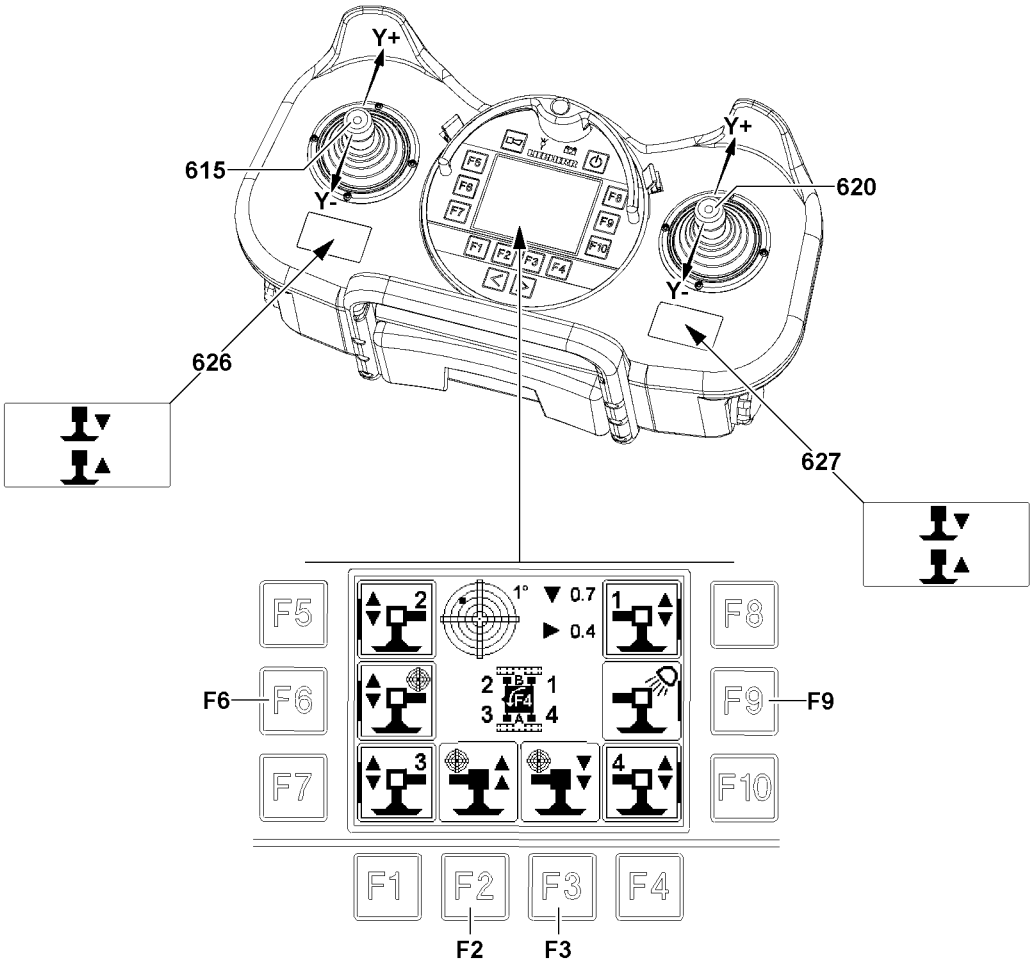

B117937

8.5 Automatic support*

Note

▶ The function support automatic* is only available on certain crane types.

The automatic support function automatically levels the crane during the support procedure.
At selection of the support automatic, an existing individual selection of the support cylinders will be deleted.
Make sure that the following prerequisite is met:

– The orientation of the operator to the crane has been set correctly, see section “Aligning the radio remote control to the crane”

– **Selection support automatic:**
  - Press the function key **F6**.
    - **Result**: When the support automatic is selected, the icon is surrounded with a bold border. After selection, the control release is issued. When then individual support cylinders are selected / deselected, the support automatic is deselected.

– **Control release:**
  - The control release is issued automatically after selection.
  - After completed control release, the icons over the function key **F2** / function key **F3** are highlighted in purple.

Note

▶ To control the support cylinders, a control release must be issued: The corresponding icons must be highlighted in purple.

– **Levelling the crane by retracting the support cylinder:**
  - Press the function key **F2**.
    or
  - Deflect the manual control lever **615 / 620** in direction **Y-**.

– **Levelling the crane by extending the support cylinder:**
  - Press the function key **F3**.
    or
  - Deflect the manual control lever **615 / 620** in direction **Y+**.

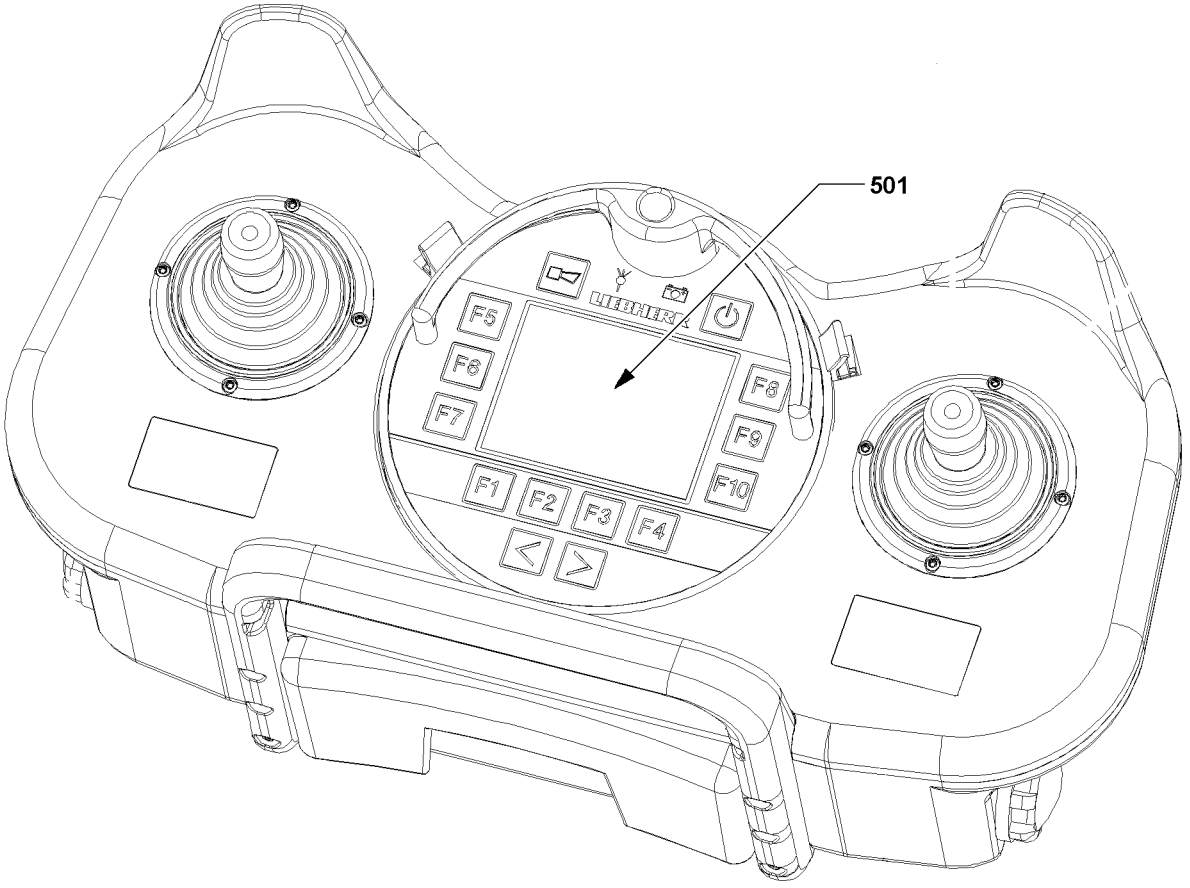

B116708

9 Operating screen radio remote control

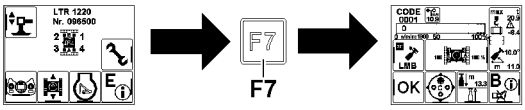

B117933

Note
Change from start menu to operating screen for the radio remote control:
▶ Press the function key **F7**.

The operating screen Radio remote control assists the crane operator by clearly displaying the data needed for radio operation on the BTT display. An acoustic signal accompanies all critical displays. It also alerts the crane operator to imminent overload conditions. In the event of overload and many error conditions, which could be hazardous, the system shuts off.
The BTT display **501** shows the radio remote control in the operating screen:
– 4-digit short code (load chart administration)
– Maximum load according to load chart and reeving
– Utilization of the crane
– Current load
– Radius
– Main boom angle
– Angle* Auxiliary boom / accessory
– Alarm functions (Hoist top limit switch, chart utilization advance warning / STOP)
– Wind speed
– Winch display, rotation angle, track width monitoring*
– Icons for operating functions of function keys
– Current manual control lever assignment

Note
▶ The display illustrations in this chapter are only examples. The display values in the individual icons and charts do not have to necessarily match the crane exactly. The configuration of the BTT display with icons is only descriptive!
▶ An identical icon display may **not** appear during crane operation!

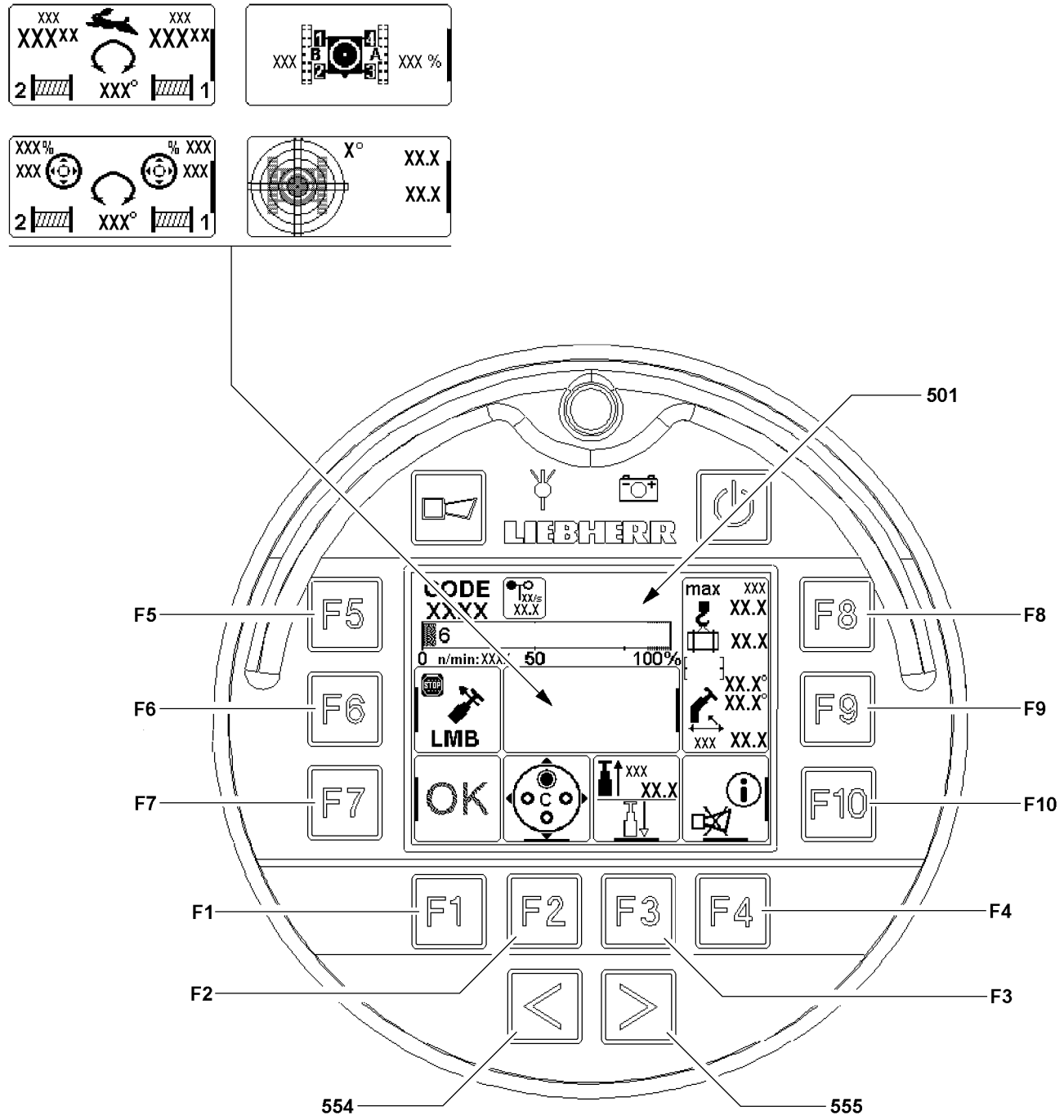
501
F5
F6
F7
F8
F9
F10
F1
F2
F3
F4
554
555
LIEBHERR
CODE
max
LMB
OK
n/min:
50
100%
XXX
XX.X
XXX°
XX.X°

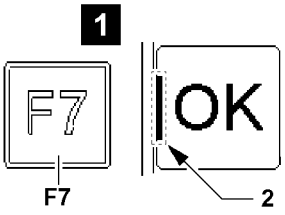
1
F7
OK
F7
2

B117934

9.1 Function keys in the operating screen Radio remote control

Note
Function keys **F1** to **F10**
▶ Icons are assigned to the individual function keys. A small bar **2** marks the assigned button, see illustration **1**. Example for function key **F7**.

F1 Function key	• Return from the sub menus to selection overview
F2 Function key	• Change over manual control lever assignment
F3 Function key	• Selection of telescoping direction • Display Main boom length
F4 Function key	• Shut off of acoustical warning in case of operating / system errors
F5 Function key	• Not assigned in this menu • See description in respective section
F6 Function key	• Activate function “Luffing in with suspended load”
F7 Function key	• “OK” icon, confirmation of operating mode
F8 Function key	• Not assigned in this menu • See description in respective section

F9 Function key	• **Short actuation (less than two seconds):** Change the display on the BTT display **501** between:
	  • Winch display
	  • Track width display
	  • Speed reduction manual control lever
	  • Incline display
	• **Actuation longer than two seconds:** Set the current hook position(s) as the zero point for the hook path display winch 1 and Winch 2*. By pressing the button, the hook path display of winch 1 and winch 2* is set to “000,00” in the winch display.

F10 Function key	• Change into the “Test system” program
554 Button	• Change to the menu Engine operation
555 Button	• Page sideways in the menus

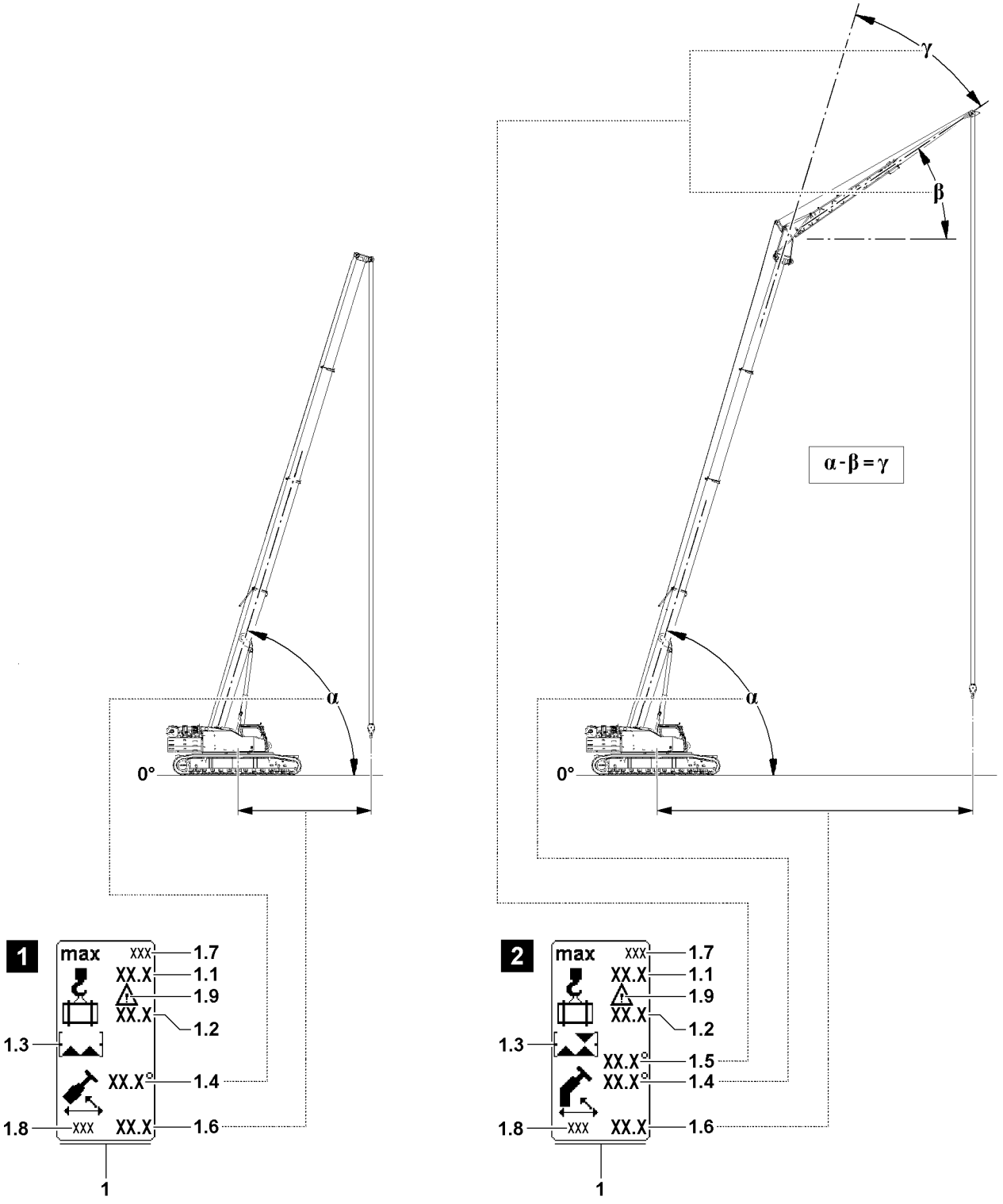
γ
β
α - β = γ
α
0°
1
max
XXX
XX.X
XX.X
XX.X
XXX
XX.X
1.7
1.1
1.9
1.2
1.3
1.4
1.8
1.6
1
2
max
XXX
XX.X
XX.X
XX.X
XX.X
XXX
XX.X
1.7
1.1
1.9
1.2
1.3
1.5
1.4
1.8
1.6
1

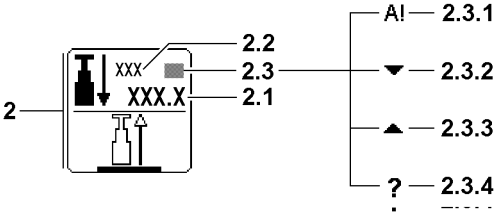
2
XXX
XXX.X
2.2
2.3
2.1
A!
2.3.1
2.3.2
2.3.3
?
2.3.4

B117935

9.2 Crane geometry and load information

Note

▶ The crane illustrations in this section are only examples and are generalized!

▶ They may differ from the crane type and equipment!

Depending on the set up configuration , the display can vary from Icon crane geometry and load **1**:

– Illustration **1** shows an example of a crane without auxiliary boom / accessories

– Illustration **2** shows an example of a crane with auxiliary boom / accessories

Note

▶ A question mark (“?”) is shown instead of values when no load chart value can be accessed!
Example: The crane is not in the range of the load chart.

▶ A question mark (“?”) is shown instead of values if the value cannot be calculated / determined!
Example: A sensor error can be present - pay attention to error messages.

WARNING

Tolerances at actual load display!

Due to tolerances, deviations can occur for the displayed values in the actual load **1.2**!

The actual load display is not a calibrated weighing device!

▶ Always observe the actual weight of the load in connection with the load charts and the set up configuration of the crane!

9.2.1 Crane geometry and load

1	Icon Crane geometry and load	• Illustration and scope of display depends on the set up configuration
1.1	Maximum load	• In [t] or [lbs]
1.2	Actual load	• Actual load on the first load position • In [t] or [lbs]
1.3	Boom limitation icon	• See section “Alarm functions”
1.4	Main boom angle	• Main boom angle **α**: The angle of the main boom to the horizontal.

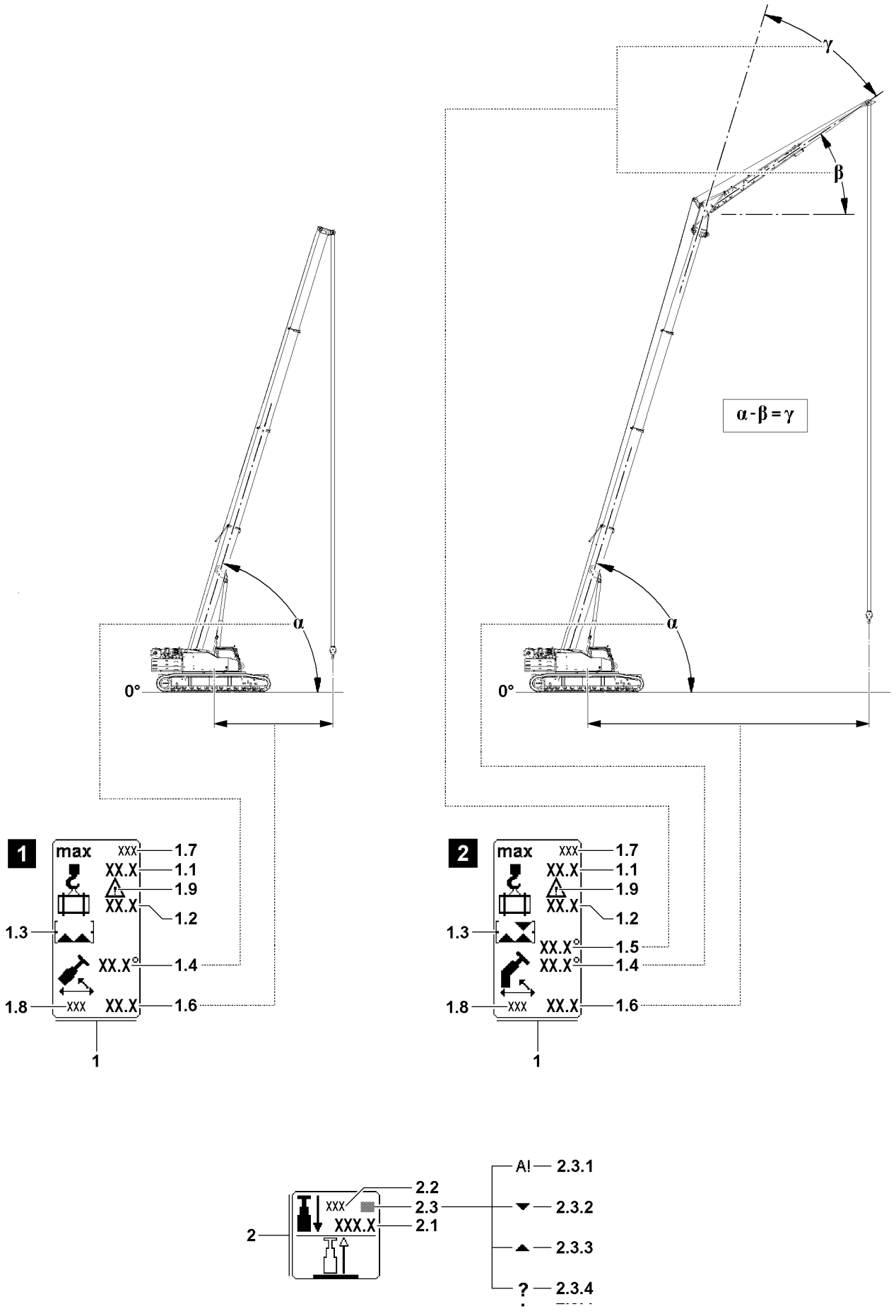
γ
β
α - β = γ
α
0°
1
max
XXX
XX.X
XX.X
XX.X
XXX
XX.X
1.7
1.1
1.9
1.2
1.3
1.4
1.8
1.6
1
2
max
XXX
XX.X
XX.X
XX.X
XX.X
XXX
XX.X
1.7
1.1
1.9
1.2
1.3
1.5
1.4
1.8
1.6
1
2
XXX
XXX.X
2.2
2.3
2.1
A!
2.3.1
2.3.2
2.3.3
?
2.3.4

B117935

1.5 Angle Auxiliary boom / accessory	• In [°]
	• Absolute angle auxiliary boom / accessory **β**
	  • The angle of the auxiliary boom / accessory to the horizontal in [°]
	  • Display absolute angle: For operating modes with load chart for specified angles of the main boom.
	• **or**
	• Relative angle auxiliary boom / accessory **γ**
	  • Angle between the main boom and the auxiliary boom / accessory in [°]
	  • Display relative angle: For operating modes with load chart for specified angles of the auxiliary boom / accessory.

Note

▶ Depending on the set up configuration and the load chart, a differentiation is made between an absolute angle display or a relative angle display.

1.6 Radius	• In [m] or [ft] • Denotes the horizontal distance of the load hook from the center of rotation of the crane superstructure.
1.7 Measuring unit load	• In [t] or [lbs]
1.8 Measuring unit radius	• In [m] or [ft]
1.9 Warning icon	• The warning icon appears if: The maximum wind speed is exceeded. The permissible crane incline is exceeded. The track width does not correspond to the set up nominal status (only for existing track width length sensors*)

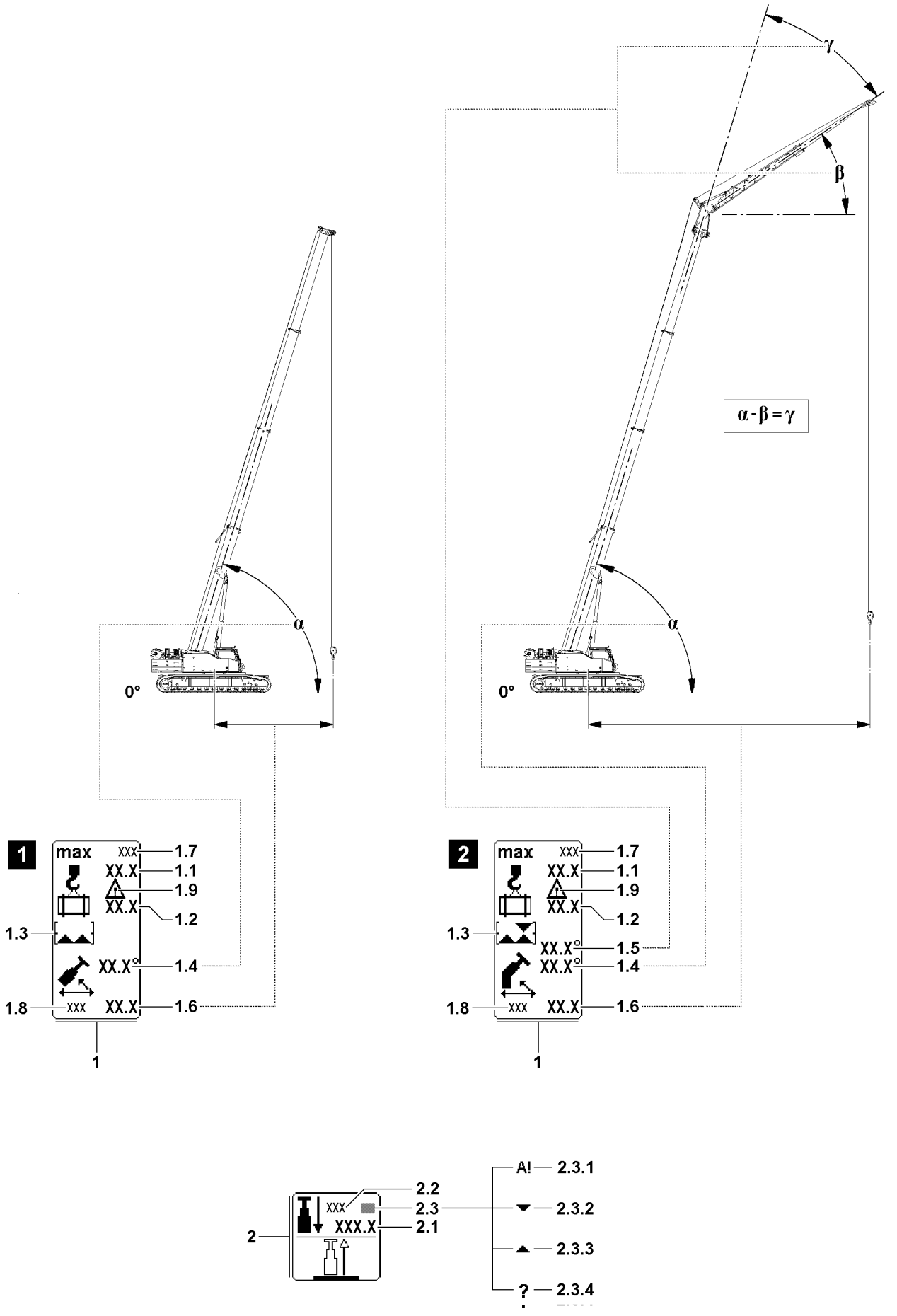
γ
β
α - β = γ
α
0°
1
max
XXX
XX.X
XX.X
XX.X
XXX
XX.X
1.7
1.1
1.9
1.2
1.3
1.4
1.8
1.6
1
2
max
XXX
XX.X
XX.X
XX.X
XX.X
XXX
XX.X
1.7
1.1
1.9
1.2
1.3
1.5
1.4
1.8
1.6
1
2.2
XXX
2.3
XXX.X
2.1
2
A!
2.3.1
2.3.2
2.3.3
?
2.3.4

B117935

9.2.2 Main boom length / telescoping

2	“Main boom length / telescoping” icon	
2.1	Length of main boom	• Actual display of length of main boom • [m] or [ft]
2.2	Measuring unit length	• In [m] or [ft]
2.3	Display field TELEMATIC	• Special function in the crane operating screen
2.3.1	Preselected telescoping target reached	
2.3.2	Nominal deflection direction of manual control lever	• Request: Telescope in = arrow down
2.3.3	Nominal deflection direction of manual control lever	• Request: Telescope out = arrow up
2.3.4	Error sign	• Telescoping: An error has occurred. • Call up error determination screen, see Diagnostics manual.

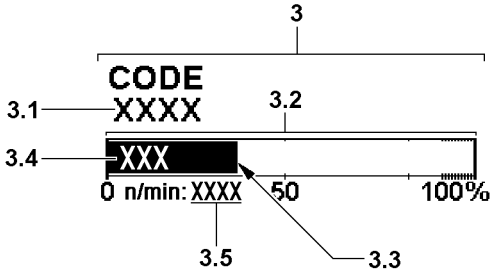

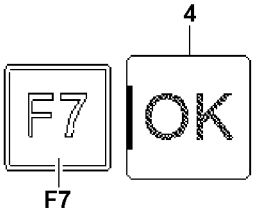

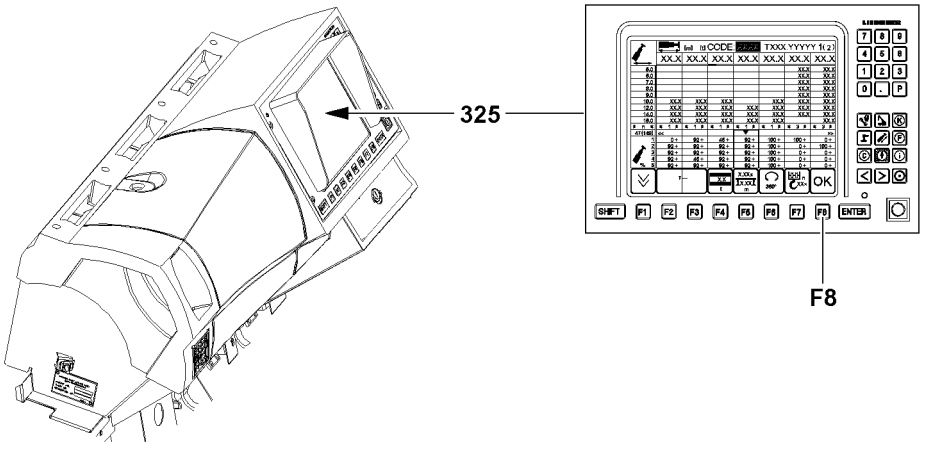

B113392

9.2.3 Dynamic load utilization bar display

3	“Dynamic utilization bar” icon	
3.1	Short code	• Identifies the selected set up configuration
3.2	Utilization scale	• The utilization of the crane is displayed as bar display and numerically.
3.3	Utilization bar	• Current utilization of crane according to load chart and reeving • Appears in blue, green, yellow and red, depending on the situation • Utilization bar **3.3** blue / green: Utilization in permissible range • Utilization bar **3.3** yellow: Advance warning! Utilization just before impermissible range • Utilization bar **3.3** red: Warning Utilization in impermissible range
3.4	Utilization of the crane	• In percentages according to load chart and reeving
3.5	Engine speed	• In [rpm]

9.2.4 Confirmation of operating mode

4	Display Confirmation of operating mode	• The display shows the current condition of the operating mode confirmation.
		• The letters “OK” changes to:
		  • **Red** when the selected load chart on the LICCON monitor **325** has not been confirmed with the function key **F8**.
		  Note:
		  No crane movement is possible via the radio remote control console!
		  • **Orange** when the load chart was confirmed on the LICCON monitor **325** but the function key **F7** on the BTT was not pressed.
		  Note:
		  No crane movement is possible via the radio remote control console!
		  • **Green** when the load chart was confirmed on the LICCON monitor **325** and the function key **F7** on the BTT was pressed.
		  Note:
		  All crane movements are possible via the radio remote control console!

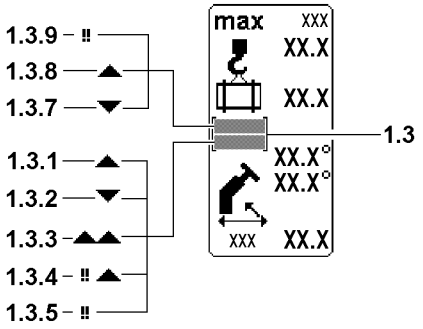
1.3.9
1.3.8
1.3.7
1.3.1
1.3.2
1.3.3
1.3.4
1.3.5
max
XXX
XX.X
XX.X
XX.X°
XX.X°
XXX
XX.X
1.3

B113393

9.3 Alarm functions

The limit ranges of the crane movements are monitored. The crane operator is alerted that the limits have been reached when the following blinking icons are shown.

1.3 “Boom limitation” icon

- The luffing range of the boom is limited upward as well as downward. Arrows appear in the display if an end-position determined by the load chart is reached when luffing the boom, or when luffing up the boom is disabled by a proximity switch.
- In addition, arrows appear in the display when the hydraulically adjustable auxiliary boom / accessories reach the adjustment range on the selected load chart, or luffing is turned off by a proximity switch (crane type dependent).
- Exclamation marks show when an associated sensor is defective.

Position	Icon	Description
1.3.1		The shut off “luffing up the main boom” has been triggered by running against the upper limit. **Note:** Luffing down the main boom is still possible.
1.3.2		The shut off “luffing down the main boom” is made by running against the lower limit. **Note:** Luffing up the main boom is still possible.
1.3.3		The shut off “luffing up the main boom” was triggered by running against the proximity switch (boom steep) on the turntable. **Note:** Luffing down the main boom is still possible.
1.3.4		An associated sensor on the main boom is defective and the shut off “luffing up the main boom” has been triggered by running against the proximity switch (boom steep) on the turntable. Pay attention to error messages! **Note:** Pay attention to error messages!
1.3.5		An associated sensor on the main boom is defective. Pay attention to error messages! **Note:** Pay attention to error messages!

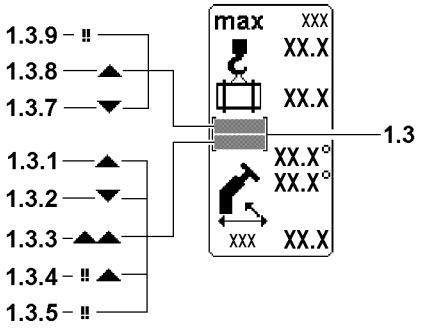
1.3.9
1.3.8
1.3.7
1.3.1
1.3.2
1.3.3
1.3.4
1.3.5
max
XXX
XX.X
XX.X
XX.X°
XX.X°
XXX
XX.X
1.3

B113393

Note

▶ Icons **1.3.7 - 1.3.9** are only required and shown for crane types with hydraulically adjustable auxiliary boom / accessories.

Position	Icon	Description
1.3.7	[▼]	The shut off “luffing down the hydraulically adjustable auxiliary boom / accessories” has been triggered by running against the lower limit. **Note:** Luffing the auxiliary boom / accessory up remains possible.
1.3.8	[▲]	The shut off “luffing up the hydraulically adjustable auxiliary boom / accessories” has been triggered by running against the upper limit. **Note:** Luffing the auxiliary boom / accessories down remains possible.
1.3.9	[!!]	An associated sensor is defective. **Note:** Pay attention to error messages!

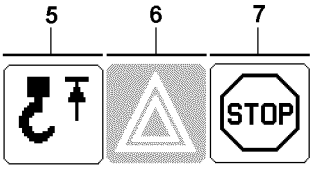

B113397

9.3.1 Hoist top limit switch

5 “Hoist top” icon

- In order to prevent the crane from being operated without hoist limit switches (HES), the minimum hoist limit switch configuration is continuously monitored. If a hoist limit switch required for a particular operating mode is not plugged in, therefore not active on the LSB bus system, an operating error message is issued.
- The icon appears if:
  - The hook block runs against the HES.
  - HES is not active, although it must be present on the bus.
  - HES has an internal error.
- **Note:**
  If a hoist limit switch is triggered, the crane movements spool up hoist winch, luff telescopic boom / accessories down and telescope telescopic boom out are turned off.

9.3.2 Load chart utilization Advance warning / STOP

6 “Advance warning” icon

- Load chart utilization
  The current load chart utilization is calculated from the “current load” and the “maximum load according to the load chart and the reeving”. The “Advance warning” icon appears, if the current load chart utilization exceeds the **90 %** limit programmed in for advance warning.

7 “STOP” icon

- The “STOP” icon is displayed if the load chart load (“current load” **greater than** “maximum load according to the load chart and the reeving”) exceeds the **100 % mark**.
- An occurrence has happened which triggered a LMB-STOP.
- **Note:**
  All crane movements that increase the load momentum are shut off.

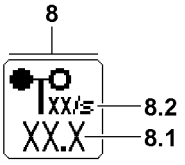

B113405

9.3.3 Wind speed

The “wind speed” icon **8** only appears when a wind sensor is installed and active is in the crane control.

8 “Wind speed” icon

WARNING
Crane operation without display value of wind speed!
If no display value appears in the “Wind speed” **8** icon, then an error has occurred in the determination of the wind speed via the wind sensor!
A risk of accidents is present in crane operation without monitoring of the wind speed!
- ▶ Remedy the error immediately!
- ▶ If an error cannot be remedied, then it must be ensured that the current wind speed is monitored otherwise!

8.1 Current wind speed	• **Note:** If several wind sensors are attached to the LSB bus, the location of the wind sensor determines the corresponding display in the icon “Wind speed”. The priority depends on the location of the wind sensor, from “outside” (accessory) to “inside” (telescopic boom). The wind speed for the “external” wind sensor is shown.
8.2 Measuring unit wind speed	• In [m/s] or [ft/s]

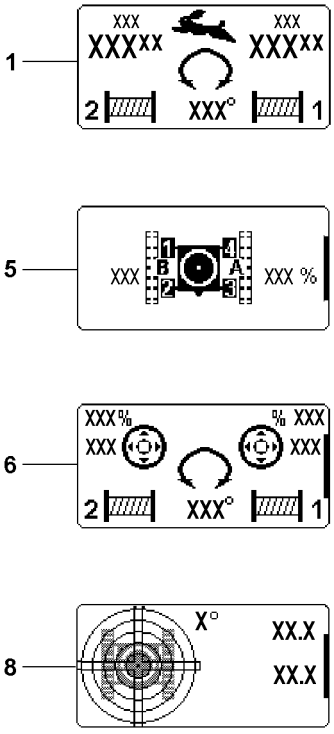
1
XXX
XXXXX
XXX
XXXXX
2
XXX°
1
5
XXX
1
B
2
4
A
3
XXX %
6
XXX%
XXX
% XXX
XXX
2
XXX°
1
8
X°
XX.X
XX.X

B117936

9.4 Monitored auxiliary and winch display

Note

▶ By pressing the function key **F9** momentarily (less and two seconds) on the BTT, the display on the BTT display can be switched over.

Change between the following displays with the function key **F9**:

1 Winch display	• Detail information for winch 1 • Detail information for winch 2* • Detail information for rapid gear • Detail information for turning range
5 Track width display	• Detail information for track width*
6 Speed reduction manual control lever	• Detail information for speed reduction manual control lever • Detail information for turning range
8 Incline display	• Detail information for crane incline

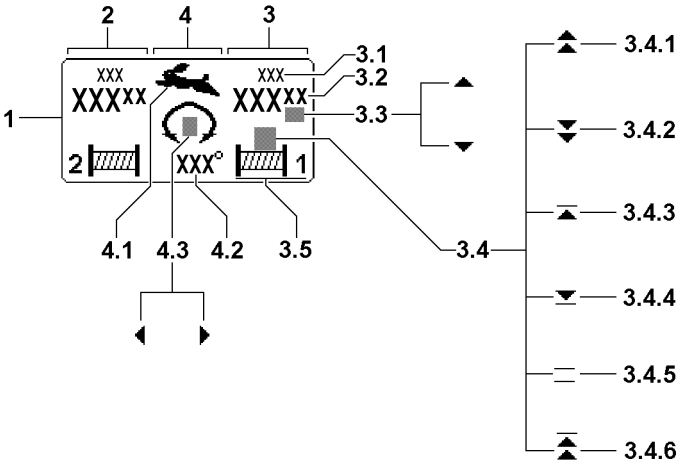
2
4
3
1
XXX
XXXXX
XXX
XXXXX
2
XXX°
1
3.1
3.2
3.3
3.4
4.1
4.3
4.2
3.5
3.4.1
3.4.2
3.4.3
3.4.4
3.4.5
3.4.6

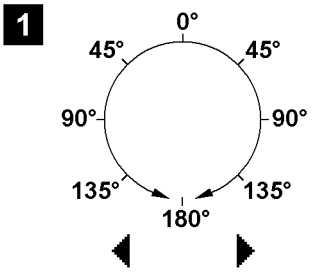
1
0°
45°
45°
90°
90°
135°
135°
180°

B113384

9.4.1 Winch display

1	“Winch display” icon	• In the winch display icon, detailed information for Winch 1 or Winch 2* and the turning range are shown.

Note

▶ The meaning of the icons for winch 1 and winch 2* is identical and is explained on display for “winch 1”.

▶ For description of activation or deactivation of winches, see Crane operating instructions, chapter 4.01!

2	Display “winch 2”	
3	Display “winch 1”	
3.1	Measuring unit hook path display	• In [m] or [ft]
3.2	Hook path display	• Spooled out / up rope length from a selectable zero point

Note

To set the current hook position(s) as the zero point for the hook path display winch 1 and Winch 2*.

▶ Press the function key **F9** on the BTT longer (more than two seconds) to set the hook path display of winch 1 and winch 2* in the winch display to “000,00”.

▶ Prerequisite for the correct display is a correct entry of the reeving in the set up screen.

▶ The positions before the decimal point are displayed with a maximum of 3 large digits. The digits after the decimal point are also displayed with small digits.

3.3	Direction of hook movement	The arrows on the length value show the direction of the hook movement in relation to the zero point: • Arrow pointing up: Hook has moved upward from the zero point. • Arrow pointing down: Hook has moved down from the zero point.
3.4	Winch status field	
3.4.1	Spool out (blinking)	
3.4.2	Spool up (blinking)	
3.4.3	Spooled out	• Spooling out is blocked
3.4.4	Spooled up	• Spooling up is blocked
3.4.5	Winch status report	• Winch is deactivated or unplugged, or the turn sensor is defective or not present on the system bus • No winch movements possible • **Note:** If no winch status icon appears, the activated winch is inactive and is neither spooled up nor spooled out.
3.4.6	Winch turned off in emergency	• Spooling out is blocked
3.5	Winch icon	• Winch icon with winch number

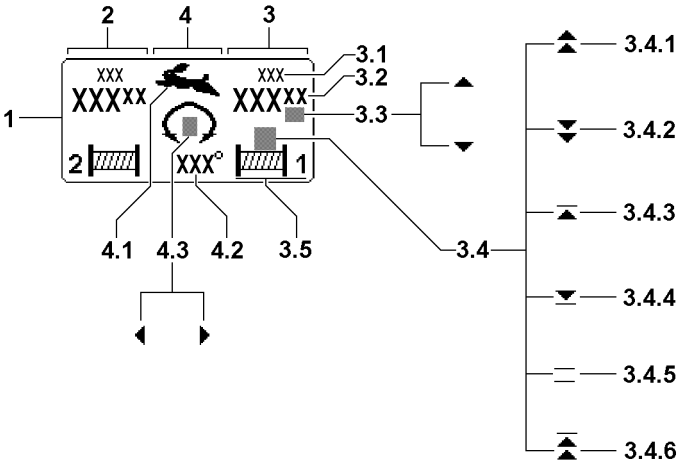
2
4
3
1
XXX
XXXXX
XXX
XXXXX
2
XXX°
1
3.1
3.2
3.3
3.4
4.1
4.3
4.2
3.5
3.4.1
3.4.2
3.4.3
3.4.4
3.4.5
3.4.6

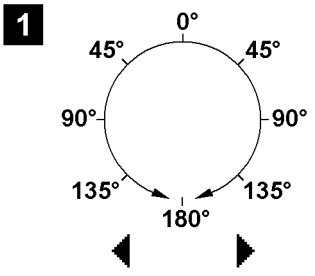
1
0°
45°
45°
90°
90°
135°
135°
180°

B113384

4	Display “Rapid gear / turning range”	

4.1	Fast mode (Rapid gear)	• The icon appears if the rapid gear is enabled during a crane movement.
		• This is possible for the following crane movements:
		  • Lift / lower hoist gear 1
		  • Lift / lower hoist gear 2
		  • Luff the boom up

4.2	Slewing angle setting	• Current position of the crane superstructure in relation to the working direction “to the rear” (0 [°]) Increases to the maximum value of 180°, see illustration **1**
4.3	Direction of rotation	The arrow in front of the value indicates the direction of rotation of the crane superstructure: • Arrow to the right: The crane superstructure is turned to the right. • Arrow to the left: The crane superstructure is turned to the left.

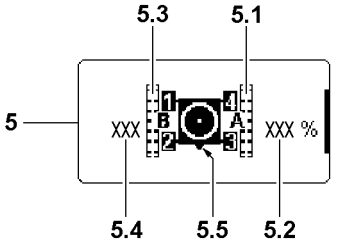

B117938

9.4.2 Track width display*

5	“Track width display” * icon	• If needed, the “track width display” * icon **5** can be shown in the operating screen with the function key **F9** on the BTT.
5.1	Crawler carrier A	• Illustration of crawler carrier A
5.2	Extension condition A	• Extension condition of crawler carrier A in percentages (%) 0 % = Crawler carrier A is completely retracted to 100 % = Crawler carrier A is completely extended **Note:** If the extension condition deviates from the nominal value of the set set up status, then the value is shown blinking.
5.3	Crawler carrier B	• Illustration of crawler carrier A
5.4	Extension condition B	• Extension condition of crawler carrier B in percentages (%) 0 % = Crawler carrier B is completely retracted to 100 % = Crawler carrier B is completely extended **Note:** If the extension condition deviates from the nominal value of the set set up status, then the value is shown blinking.
5.5	Front on travel gear	• Shows where the front side of the crawler travel gear is in the icon.

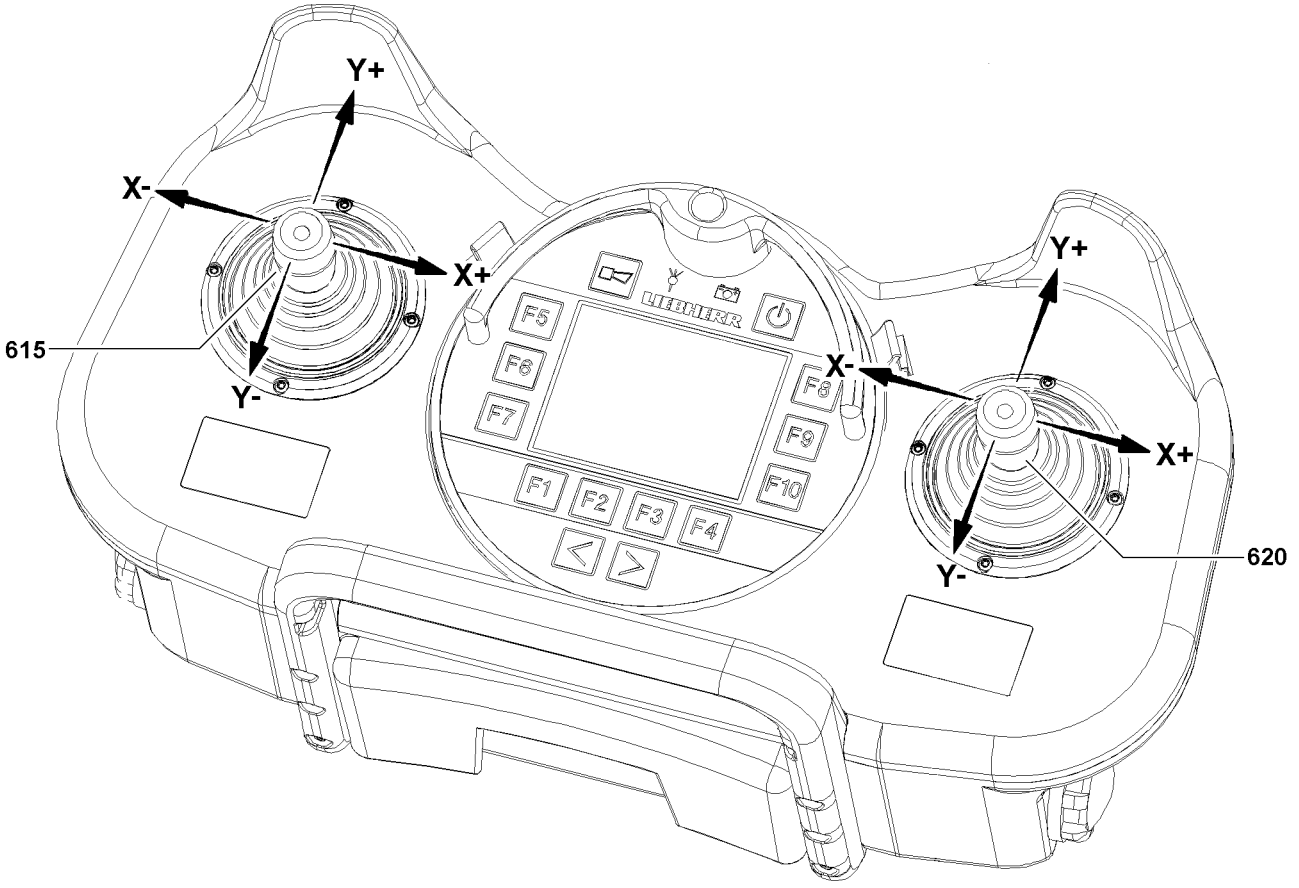
Y+
X-
X+
615
Y-
F5
F6
F7
F8
F9
F10
F1
F2
F3
F4
LIEBHERR
Y+
X-
X+
Y-
620

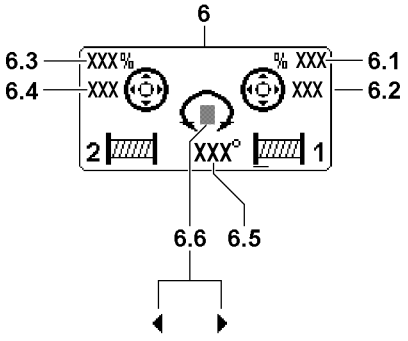
6
6.3
XXX%
6.4
XXX
% XXX
6.1
XXX
6.2
2
XXX°
1
6.6
6.5

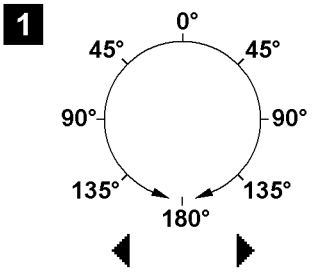
1
0°
45°
45°
90°
90°
135°
135°
180°

B113396

9.4.3 Speed reduction manual control lever

6	“Speed reduction manual control lever” icon	• In the “Speed reduction manual control lever” icon, the reduced speed of the manual control lever is shown. The speed reduction is set on the LICCON monitor, see Crane operating instructions, chapter 4.02. If a crane function is actuated by **maximum deflection** of a manual control lever, then the speed of the crane function is reduced to the speed shown in the “Speed reduction manual control lever” icon.
6.1	Reduction value	• for manual control lever **620** in direction “Y”: Speed reduction in [%]
6.2	Reduction value	• for manual control lever **620** in direction “X”: Speed reduction in [%]
6.3	Reduction value	• for manual control lever **615** in direction “Y”: Speed reduction in [%]
6.4	Reduction value	• for manual control lever **615** in direction “X”: Speed reduction in [%]
6.5	Slewing angle setting	• Current position of the crane superstructure in relation to the working direction “to the rear” (0 [°]) Increases to the maximum value of 180°, see illustration **1**
6.6	Direction of rotation	The arrow in front of the value indicates the direction of rotation of the crane superstructure: • Arrow to the right: The crane superstructure is turned to the right. • Arrow to the left: The crane superstructure is turned to the left.

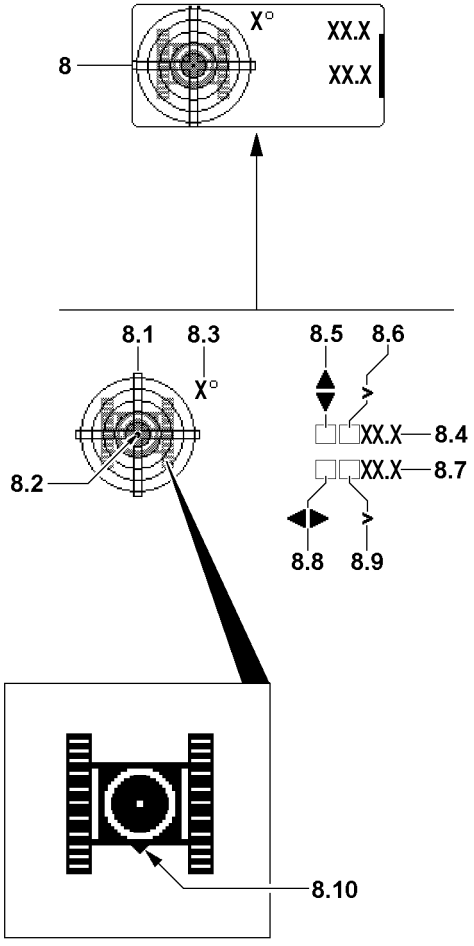

B117939

9.4.4 Incline display

WARNING
The crane can topple over!
The “larger than symbol” shows that the crane is inclined further than can be shown!
The exact incline can then not be read!
▶ Do not exceed the permissible incline of the crane!

8 “Incline display” icon	• The incline of the crane in longitudinal and lateral direction is shown graphically and numerically in the incline display icon.
8.1 Graphic incline display	• Display of incline in graphic display • The current crane incline and the incline direction is shown by the dot **8.2**.
8.3 Resolution of incline display	• Number value resolution in [°] This value describes the resolution of the graphic view. If the dot **8.2** reaches the outermost circle of the sight gauge, then the number value of the resolution of incline display **8.3** is reached. If the incline is less than 1° in lateral direction **and** in longitudinal direction, the whole display encompasses the 1° range. If at least one value exceeds the 1° limit, it switches to the next larger range. The range change is automatic.
8.4 Incline in longitudinal direction	• Numeric value of incline of crane in longitudinal direction
8.5 Arrow longitudinal direction	• Arrow shows the incline direction of the crane on longitudinal direction
8.6 Exceeded	• is displayed when the display range of the incline display is exceeded in longitudinal direction.
8.7 Incline lateral direction	• Numeric value of incline of crane in lateral direction
8.8 Arrow lateral direction	• Arrow shows the incline direction of the crane on lateral direction
8.9 Exceeded	• is displayed when the display range of the incline display is exceeded in lateral direction.

Note
Orientation aid in the incline display.
▶ The overhead view of the crawler travel gear is highlighted on the graphic incline display **8.1**. Bottom in the graphic incline display **8.1** is always the front on the crawler travel gear. The front on the crawler travel gear is always on the side where the chain tension device for the crawler carriers is located, notice the marker “front side of crawler travel gear” **8.10**.

1

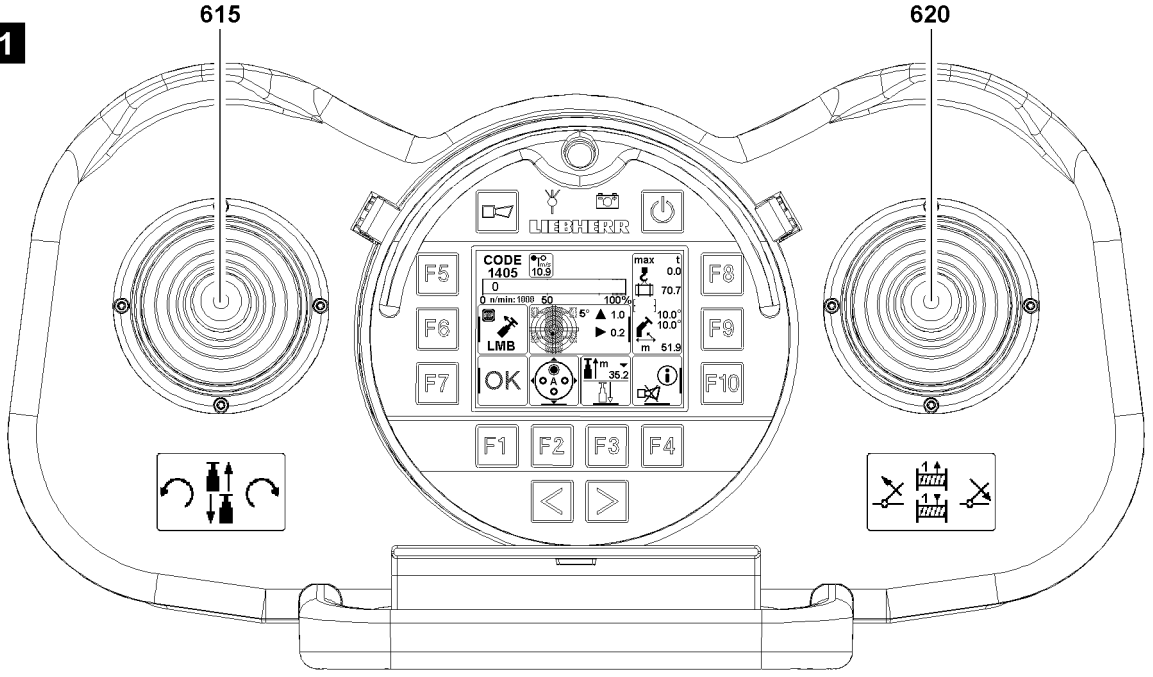
615
620
LIEBHERR
CODE
1405
F5
F6
F7
F8
F9
F10
F1
F2
F3
F4
OK
LMB

2

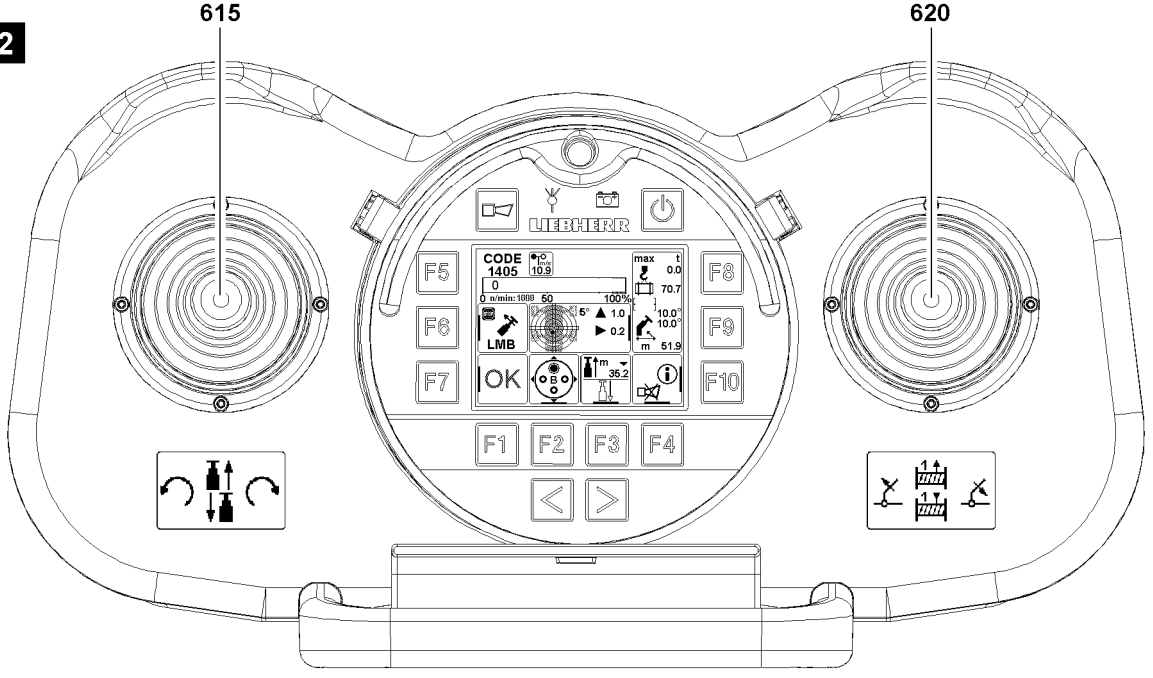
615
620
LIEBHERR
CODE
1405
F5
F6
F7
F8
F9
F10
F1
F2
F3
F4
OK
LMB

B110023

9.5 Change over manual control lever assignment

If several assignments of the manual control lever are possible due to the set up configuration of the crane, then switch between the individual assignments by pressing the function key F2 on the BTT.

9.5.1 Manual control lever assignment “A”, see illustration 1

615 Manual control lever, left	• Move the manual control lever left in direction Y+ (forward): Telescope out. • Move the manual control lever left in direction Y- (to the rear): Telescope in. • Move the manual control lever left in direction X+ (to the right): Crane superstructure turns to the right. • Move the manual control lever left in direction X- (to the left): Crane superstructure turns to the left.
620 Manual control lever, right	• Move the manual control lever right in direction Y+ (forward): Hoist gear 1 spools out and the load is lowered. • Move the manual control lever right in direction Y- (to the rear): Hoist gear 1 spools up and the load is raised. • Move the manual control lever right in direction X+ (to the right): Luff the telescopic boom down • Move the manual control lever right in direction X- (to the left): Luff the telescopic boom up

9.5.2 Manual control lever assignment “B”, see illustration 2

615 Manual control lever, left	• See manual control lever assignment “A”
620 Manual control lever, right	• Move the manual control lever right in direction Y+ (forward): Hoist gear 1 spools out and the load is lowered. • Move the manual control lever right in direction Y- (to the rear): Hoist gear 1 spools up and the load is raised. • Move the manual control lever right in direction X+ (to the right): Luff luffing lattice jib down. • Move the manual control lever right in direction X- (to the left): Luff luffing lattice jib up.

3

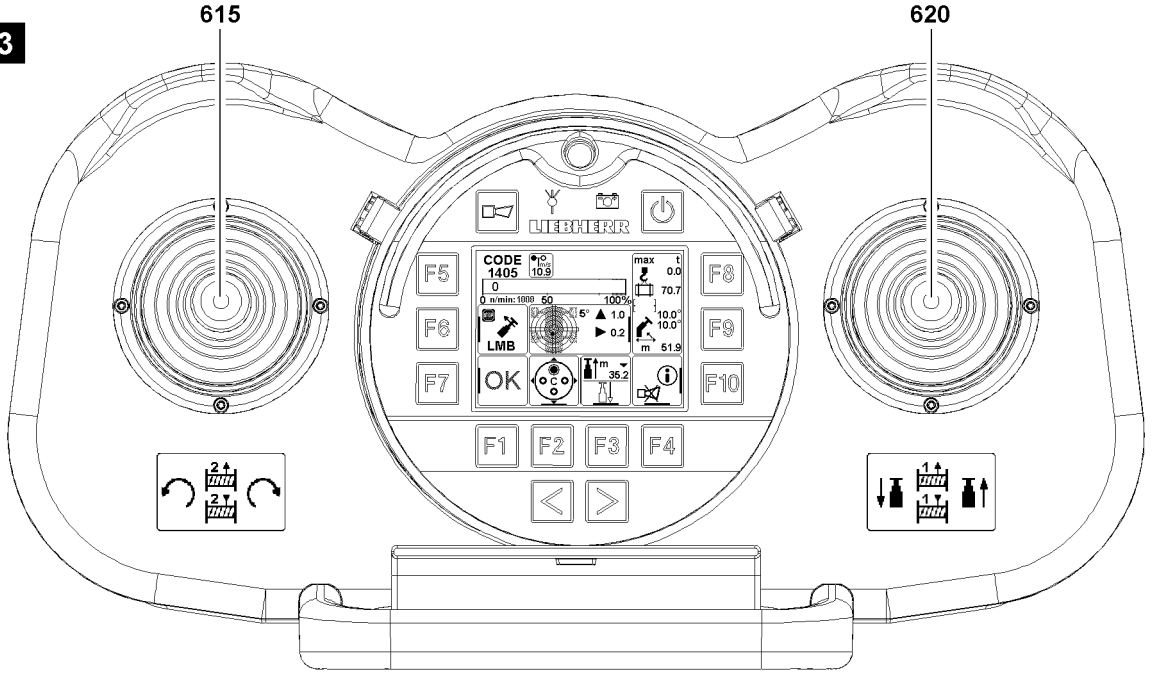
615
620
LIEBHERR
CODE
1405
F5
F6
F7
F8
F9
F10
F1
F2
F3
F4
OK
LMB

4

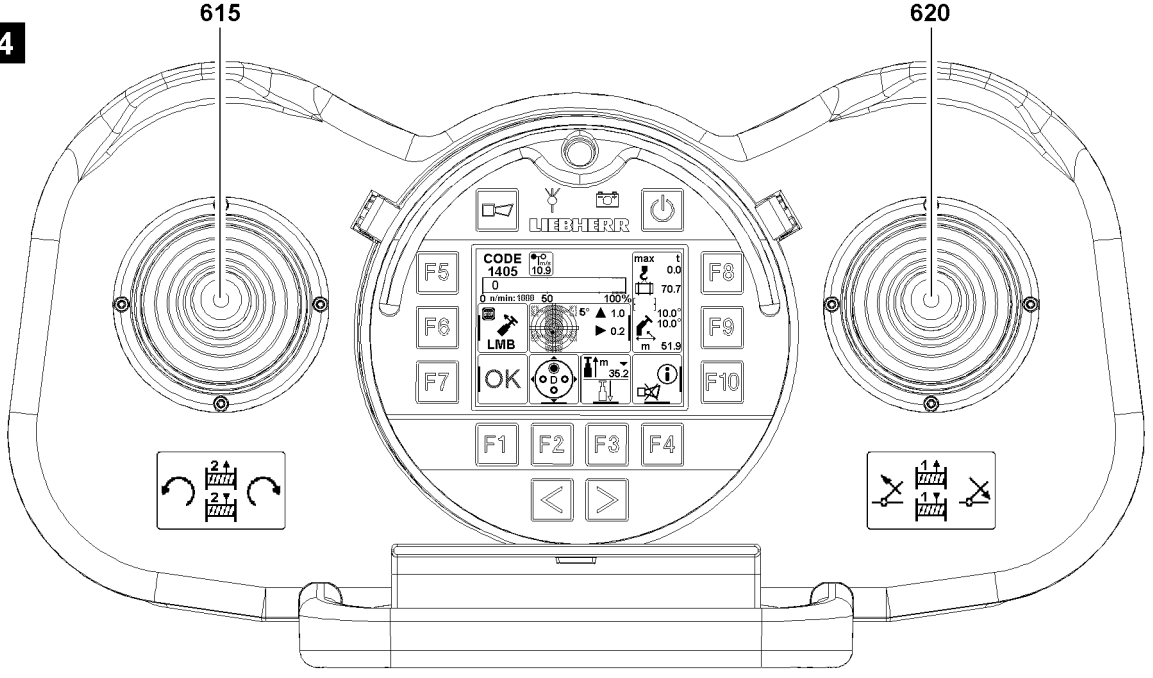
615
620
LIEBHERR
CODE
1405
F5
F6
F7
F8
F9
F10
F1
F2
F3
F4
OK
LMB

B110024

9.5.3 Manual control lever assignment “C”, see illustration 3

615 Manual control lever, left	• Move the manual control lever left in direction Y+ (forward): Hoist gear 2 spools out and the load is lowered. • Move the manual control lever left in direction Y- (to the rear): Hoist gear 2 spools up and the load is raised. • Move the manual control lever left in direction X+ (to the right): Crane superstructure turns to the right. • Move the manual control lever left in direction X- (to the left): Crane superstructure turns to the left.
620 Manual control lever, right	• Move the manual control lever right in direction Y+ (forward): Hoist gear 1 spools out and the load is lowered. • Move the manual control lever right in direction Y- (to the rear): Hoist gear 1 spools up and the load is raised. • Move the manual control lever right in direction X+ (to the right): Telescope out. • Move the manual control lever right in direction X- (to the left): Telescope in.

9.5.4 Manual control lever assignment “D”, see illustration 4

615 Manual control lever, left	• Move the manual control lever left in direction Y+ (forward): Hoist gear 2 spools out and the load is lowered. • Move the manual control lever left in direction Y- (to the rear): Hoist gear 2 spools up and the load is raised. • Move the manual control lever left in direction X+ (to the right): Crane superstructure turns to the right. • Move the manual control lever left in direction X- (to the left): Crane superstructure turns to the left.
620 Manual control lever, right	• Move the manual control lever right in direction Y+ (forward): Hoist gear 1 spools out and the load is lowered. • Move the manual control lever right in direction Y- (to the rear): Hoist gear 1 spools up and the load is raised. • Move the manual control lever right in direction X+ (to the right): Luff the telescopic boom down. • Move the manual control lever right in direction X- (to the left): Luff the telescopic boom up.

5

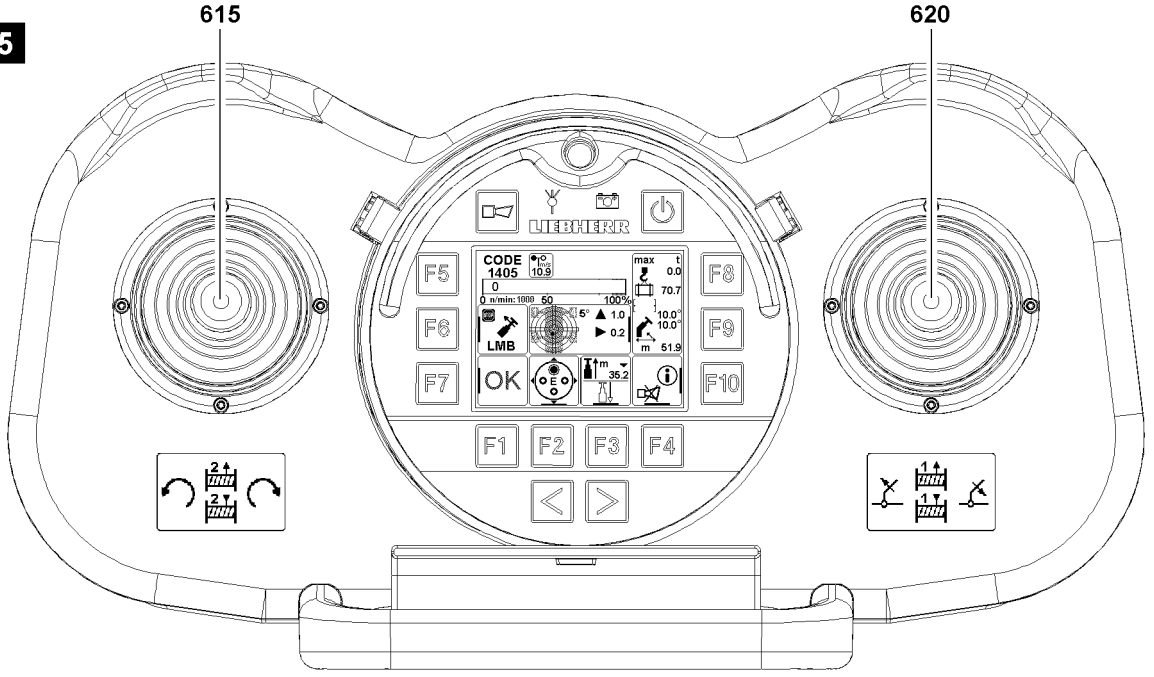
615
620
LIEBHERR
CODE
1405
F5
F6
F7
F8
F9
F10
F1
F2
F3
F4
OK
LMB

6

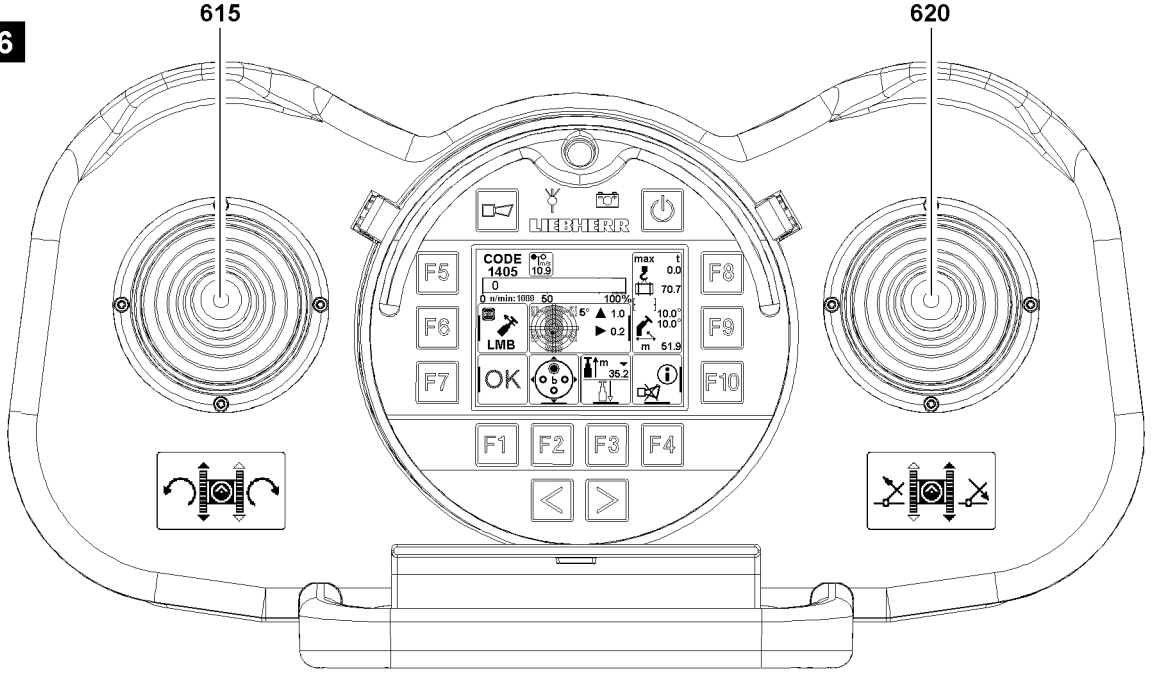
615
620
LIEBHERR
CODE
1405
F5
F6
F7
F8
F9
F10
F1
F2
F3
F4
OK
LMB

B117940

9.5.5 Manual control lever assignment “E”, see illustration 5

615	Manual control lever, left	• Move the manual control lever left in direction Y+ (forward): Hoist gear 2 spools out and the load is lowered. • Move the manual control lever left in direction Y- (to the rear): Hoist gear 2 spools up and the load is raised. • Move the manual control lever left in direction X+ (to the right): Crane superstructure turns to the right. • Move the manual control lever left in direction X- (to the left): Crane superstructure turns to the left.
620	Manual control lever, right	• Move the manual control lever right in direction Y+ (forward): Hoist gear 1 spools out and the load is lowered. • Move the manual control lever right in direction Y- (to the rear): Hoist gear 1 spools up and the load is raised. • Move the manual control lever right in direction X+ (to the right): Luff the auxiliary boom / accessory down. • Move the manual control lever right in direction X- (to the left): Luff the auxiliary boom / accessory up.

9.5.6 Manual control lever assignment “b”, see illustration 6

615	Manual control lever, left	• Move the manual control lever left in direction Y+ (forward): Left crawler drive forward. • Move the manual control lever left in direction Y- (to the rear): Left crawler drive reverse. • Move the manual control lever left in direction X+ (to the right): Crane superstructure turns to the right. • Move the manual control lever left in direction X- (to the left): Crane superstructure turns to the left.
620	Manual control lever, right	• Move the manual control lever right in direction Y+ (forward): Right crawler drive forward. • Move the manual control lever right in direction Y- (to the rear): Right crawler drive forward. • Move the manual control lever right in direction X+ (to the right): Luff the telescopic boom down. • Move the manual control lever right in direction X- (to the left): Luff the telescopic boom up.

7

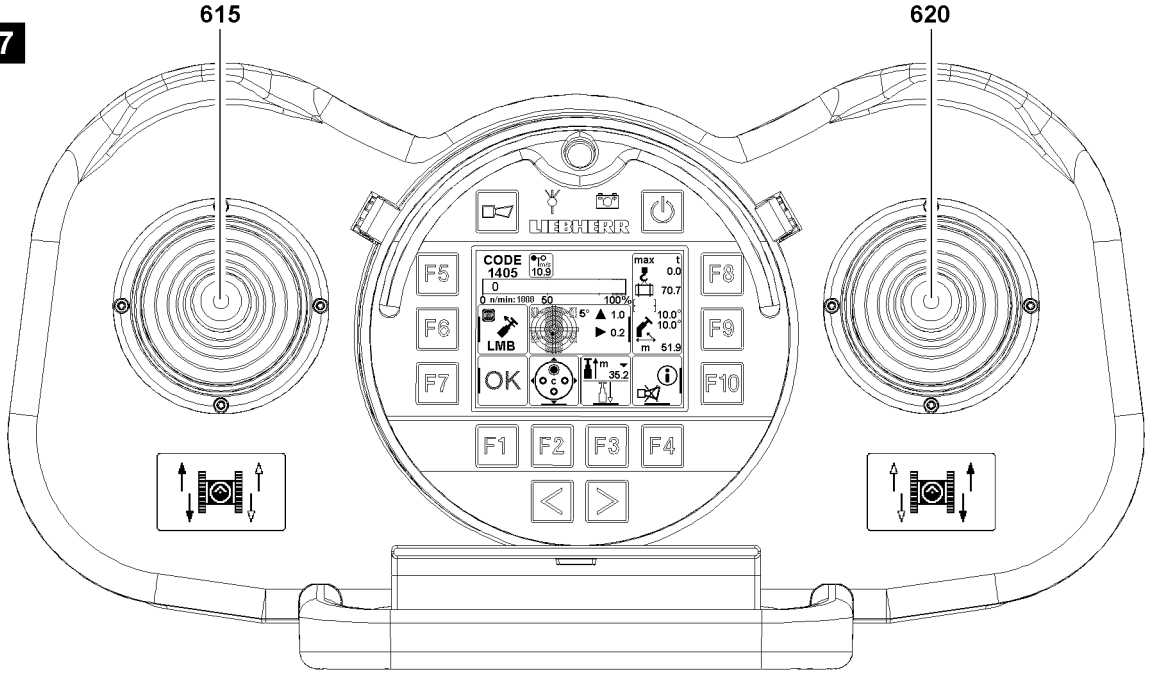
615
620
LIEBHERR
CODE
1405
F5
F6
F7
F8
F9
F10
F1
F2
F3
F4
OK
LMB

8

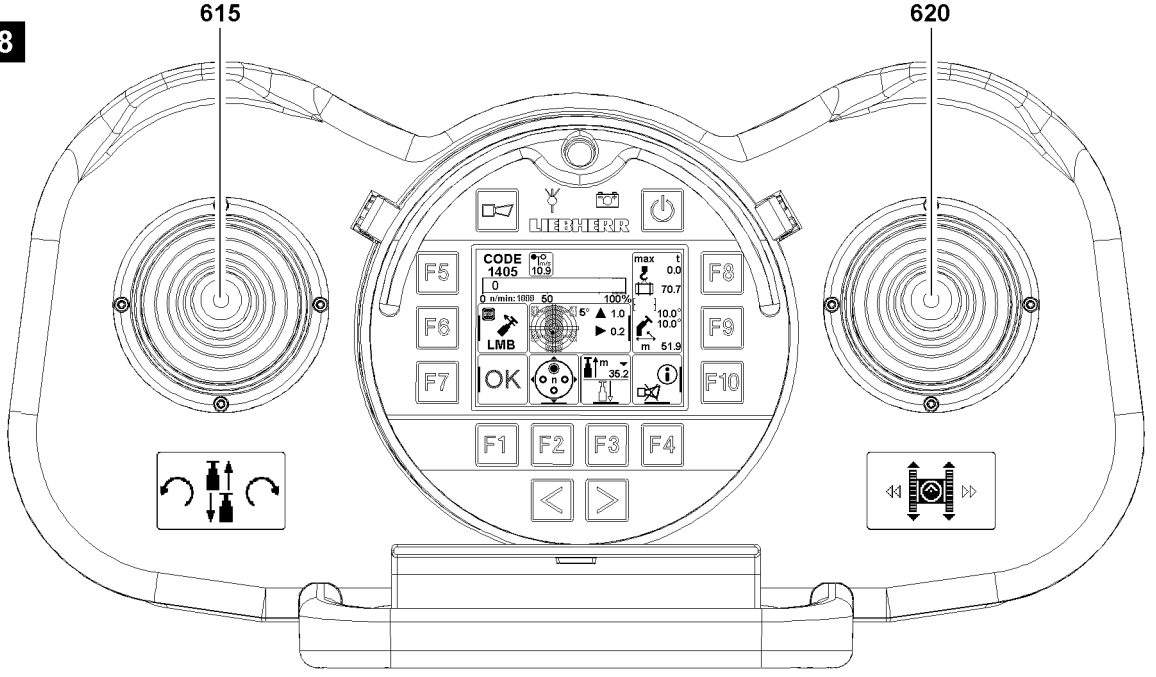
615
620
LIEBHERR
CODE
1405
F5
F6
F7
F8
F9
F10
F1
F2
F3
F4
OK
LMB

B117941

9.5.7 Manual control lever assignment “c”, see illustration 7

615	Manual control lever, left	• Move the manual control lever left in direction Y+ (forward): Hoist gear 2 spools out and the load is lowered. • Move the manual control lever left in direction Y- (to the rear): Hoist gear 2 spools up and the load is raised. • Move the manual control lever left in direction X+ (to the right): - not assigned - • Move the manual control lever left in direction X- (to the left): - not assigned -
620	Manual control lever, right	• Move the manual control lever right in direction Y+ (forward): Hoist gear 1 spools out and the load is lowered. • Move the manual control lever right in direction Y- (to the rear): Hoist gear 1 spools up and the load is raised. • Move the manual control lever right in direction X+ (to the right): Luff the auxiliary boom / accessory down. • Move the manual control lever right in direction X- (to the left): Luff the auxiliary boom / accessory up.

9.5.8 Manual control lever assignment “n”, see illustration 8

615	Manual control lever, left	• Move the manual control lever left in direction Y+ (forward): Telescope out. • Move the manual control lever left in direction Y- (to the rear): Telescope in. • Move the manual control lever left in direction X+ (to the right): Crane superstructure turns to the right. • Move the manual control lever left in direction X- (to the left): Crane superstructure turns to the left.
620	Manual control lever, right	• Move the manual control lever right in direction Y+ (forward): Crawler drive forward. • Move the manual control lever right in direction Y- (to the rear): Crawler drive reverse. • Move the manual control lever right in direction X+ (to the right): Swing the crawler drive to the right. • Move the manual control lever right in direction X- (to the left): Swing the crawler drive to the left.

9

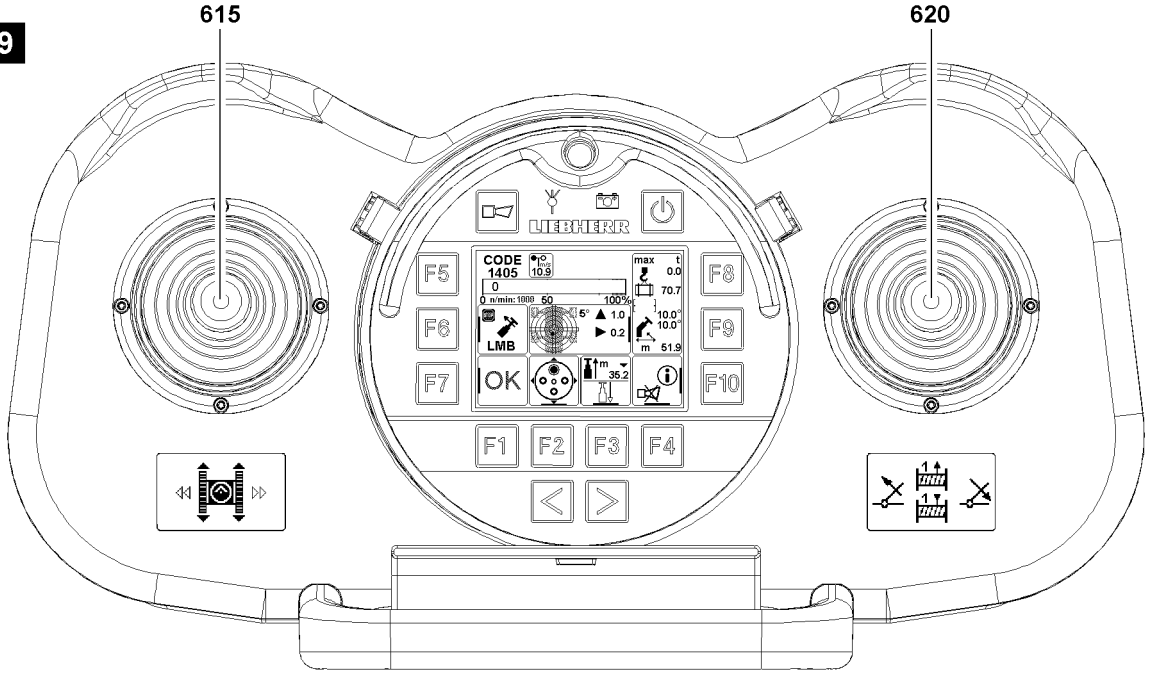

B117942

9.5.9 Manual control lever assignment “o”, see illustration 9

615 Manual control lever, left	• Move the manual control lever right in direction Y+ (forward): Crawler drive forward • Move the manual control lever right in direction Y- (to the rear): Crawler drive reverse. • Move the manual control lever right in direction X+ (to the right): Swing the crawler drive to the right. • Move the manual control lever right in direction X- (to the left): Swing the crawler drive to the left.
620 Manual control lever, right	• Move the manual control lever right in direction Y+ (forward): Hoist gear 1 spools out and the load is lowered. • Move the manual control lever right in direction Y- (to the rear): Hoist gear 1 spools up and the load is raised. • Move the manual control lever right in direction X+ (to the right): Luff the telescopic boom down. • Move the manual control lever right in direction X- (to the left): Luff the telescopic boom up.

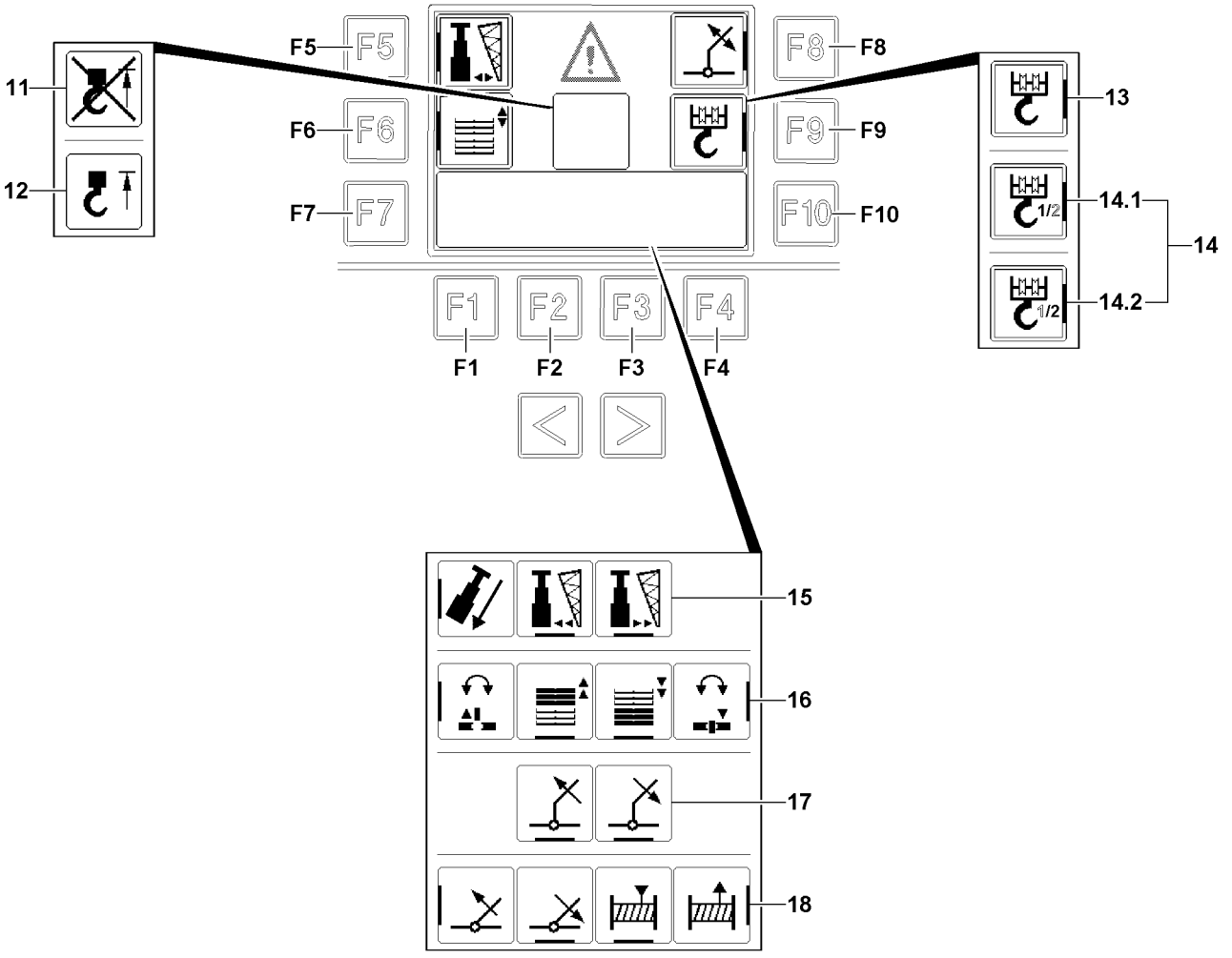

B117950

10 Menu Assembly functions

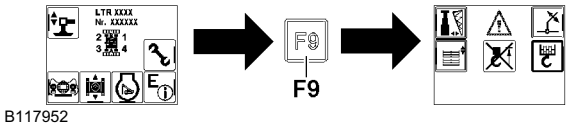

Note
Change from start menu to Assembly function menu:
▶ Press the function key **F9**.

Note
▶ The function key **F5** and the function key **F9** in the Assembly functions menu remain active only as long as the telescopic boom is completely telescoped in.

10.1 Icon explanation in assembly function menu

11	Hoist top bypassed	• appears when the hoist top limit switch is automatically bypassed by the control.
12	Hoist top triggered	• Appears when the hoist top limit switch is triggered.
13	Single hoist gear	• Icon appears when only one hoist winch is activated.
14	Two hoist gears	• Icon appears if two hoist winches are activated. • Icon **14.1** appears: Hoist gear 1 selected. • Icon **14.2** appears: Hoist gear 2* selected.

10.2 Function keys in Menu Assembly functions

554	Button	• Call up engine operation
555	Button	• Call up engine operation
F1	Function key	• Back to the start menu
F5	Function key	• Selection / deselection of hydraulic folding jib assembly* • After selection, the operating icons **15** appear additionally. • Function is only active when the telescopic boom is completely telescoped in.
F6	Function key	• Selection / deselection of ballasting / turntable lock. • After selection, the operating icons **16** appear additionally.
F8	Function key	• Selection / deselection of lifting / lowering the hydraulic folding jib* • After selection, the operating icons **17** appear additionally.
F9	Function key	• Selection / deselection of fastening the hook block. • After selection, the operating icons **18** appear additionally. • Function is only active when the telescopic boom is completely telescoped in.

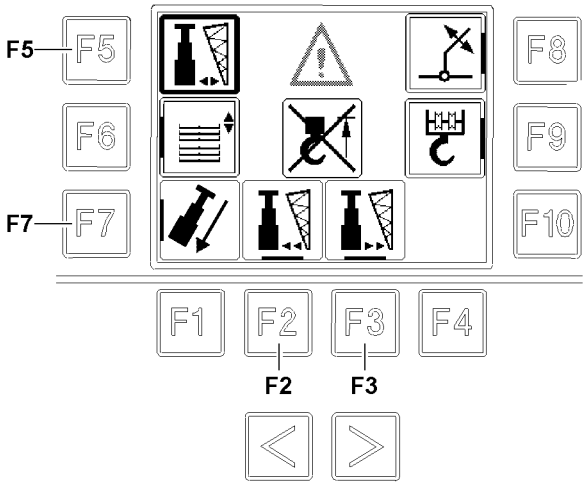

B117953

10.3 Assembling the hydraulic folding jib*

In order to be able to assemble the hydraulic folding jib* on the boom head, it must be swung out over a cylinder.
To be able to pin the hydraulic folding jib* on the boom head, it can be possible that the pin bores do not align. Then the telescopic boom must be tensioned, then the telescopic sections are pulled together.
Make sure that the following prerequisites are met:
– The telescopic boom is fully telescoped in.
– The boom angle is less than 5°.

WARNING
Danger of crushing!
For the function tension the telescopic boom, all telescopic sections are pulled together. Limbs or other body parts can be caught and crushed.
▶ As long as the function “tension the telescopic boom” is carried out, keep sufficient distance to the push area of the telescopic sections!

– **Selection / deselection of hydraulic folding jib assembly:***
  • Press the function key **F5**.
    • **Result**: When the selection has been made, the border on the icon on the right of function key **F5** is bolded. After selection the control release is made, the icons over the function key **F2** / function key **F3** and next to function key **F7** appear.

– **Control release:**
  • The control release is issued automatically after selection.
  • After provided control release, the icons over the function key **F2** / function key **F3** and next to function key **F7** are highlighted in purple.

Note
▶ To control the functions, a control release must be issued: The corresponding icons must be highlighted in purple.

– Swing the **hydraulic folding jib* out:**
  • Press the function key **F3**.

– Swing the **hydraulic folding jib* in:**
  • Press the function key **F2**.

– **Tension telescopic boom:**
  • Press the function key **F7**.

Note
▶ To be able to tension the telescopic boom completely, the telescopic cylinder must be pinned with the innermost telescope, see Crane operating instructions, chapter 4.05.

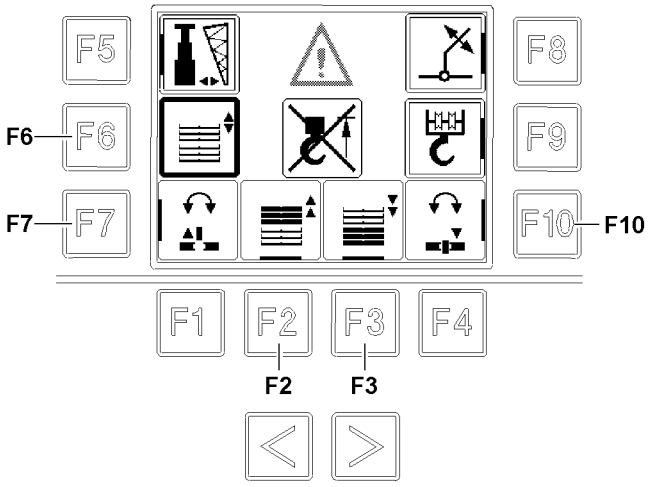

B117954

10.4 Ballasting / turntable lock

Ballasting is made via the ballasting cylinders. By pinning the turntable lock, the crane superstructure is prevented from turning. By pinning the turntable lock on the respective location, a collision of the ballasting cylinder with the counterweight can be eliminated. The turntable can be pinned on the intake point of the counterweight plates and on the receptacle point of the receptacle plate, see Crane operating instructions, chapter 4.07.

– **Selection / deselection of ballasting / turntable lock:**
  - Press the function key **F6**.
    - **Result**: When the selection has been made, the border on the icon on the right of function key **F6** is bolded. After selection the control release is made, the icons over the function key **F2** / function key **F3** and next to function key **F7** / function key **F10** appear.

– **Control release:**
  - The control release is issued automatically after selection.
  - After provided control release, the icons over the function key **F2** / function key **F3** and next to function key **F7** / function key **F10** are highlighted in purple.

Note

▶ To control the functions, a control release must be issued: The corresponding icons must be highlighted in purple.

– **Lift the counterweight / retract the ballasting cylinders:**
  - Press the function key **F2**.

– **Lower the counterweight / extend the ballasting cylinders:**
  - Press the function key **F3**.

– **Unpin the turntable lock:**
  - Press the function key **F7**.

– **Pin the turntable lock:**
  - Press the function key **F10**.

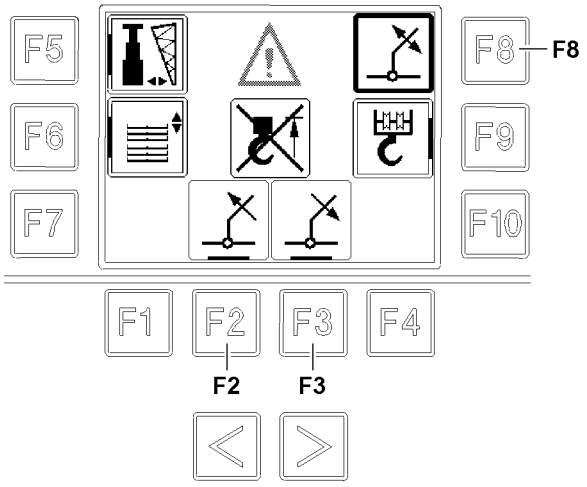

B117955

10.5 Lifting / lowering the hydraulic folding jib*

The hydraulic folding jib* can be raised / lowered for assembly, see Crane operating instructions, chapter 5.02.

– **Selection / deselection of lifting / lowering the hydraulic folding jib:***
  - Press the function key **F8**.
    - **Result**: When the selection has been made, the border on the icon on the left of function key **F8** is bolded. After selection the control release is made, the icons over the function key **F2** / function key **F3** appear.

– **Control release:**
  - The control release is issued automatically after selection.
  - After completed control release, the icons over the function key **F2** / function key **F3** are highlighted in purple.

Note

▶ To control the functions, a control release must be issued: The corresponding icons must be highlighted in purple.

– Lift the **hydraulic folding jib:***
  - Press the function key **F2**.

– Lower the **hydraulic folding jib*:**
  - Press the function key **F3**.

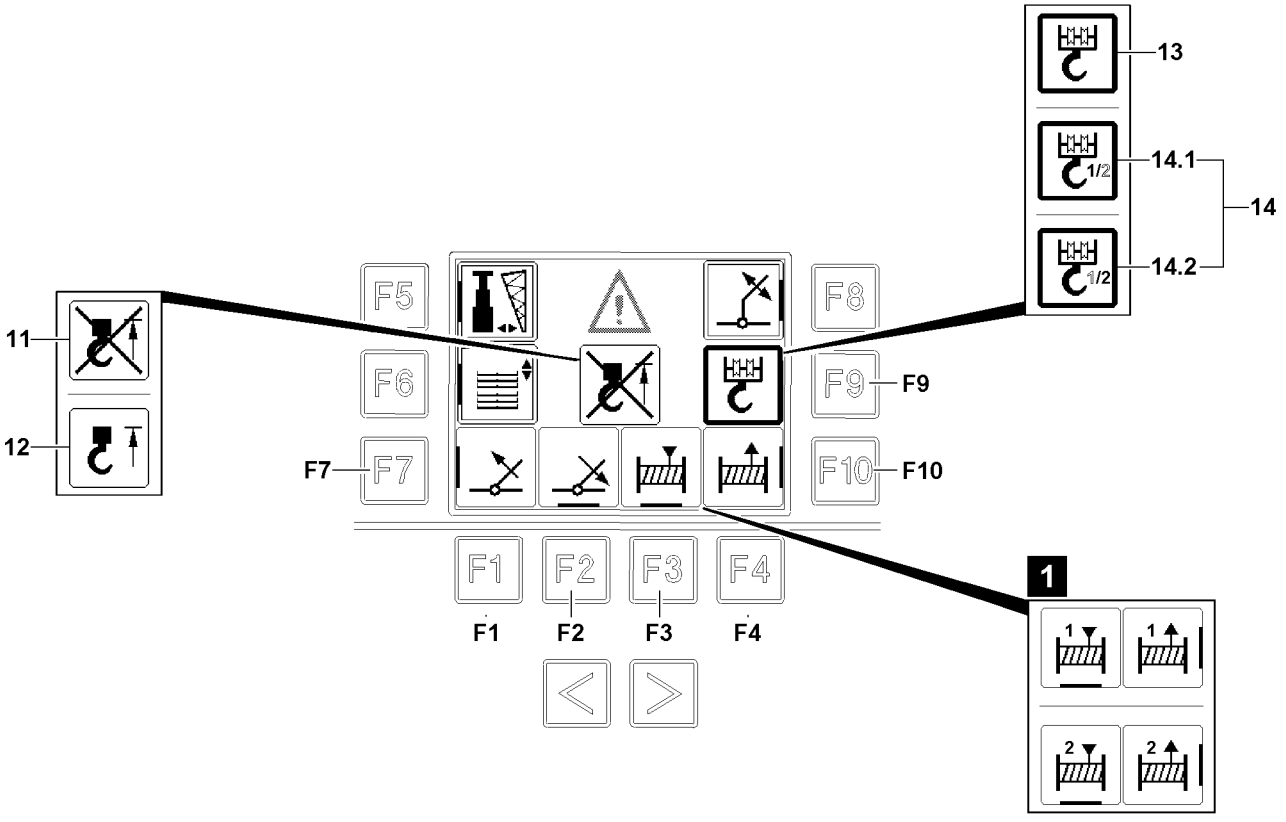

B117951

10.6 Fasten the hook block

NOTICE
Incorrect hoist winch selected!
If the incorrect hoist winch is selected, the crane can be damaged.
▶ When two hoist winches are active, select the correct hoist winch for the hook block.

10.6.1 Selecting the hoist winch

When the hoist winches **14** icon appears, a hoist winch must be selected first. The selection is only possible via the operating elements in the crane operator's cab! To do so, the winch which is not be driven must be blocked.

– Icon hoist winch **14.1** is displayed: Hoist winch 1 (winch 1) is active.
– Icon hoist winch **14.2** is displayed: Hoist winch 2 (winch 2) is active.

Make sure that the following prerequisite is met:

– Icon hoist winches **14** appears in the BTT display.

– **Selection of hoist winch:**
  - Release the respective winch, see Crane operating instructions, chapter 4.05.
    - **Result:** The number for the active hoist winch is displayed in bold.
      In the icons for the control appears the number of the active hoist winch, see illustration **1**.

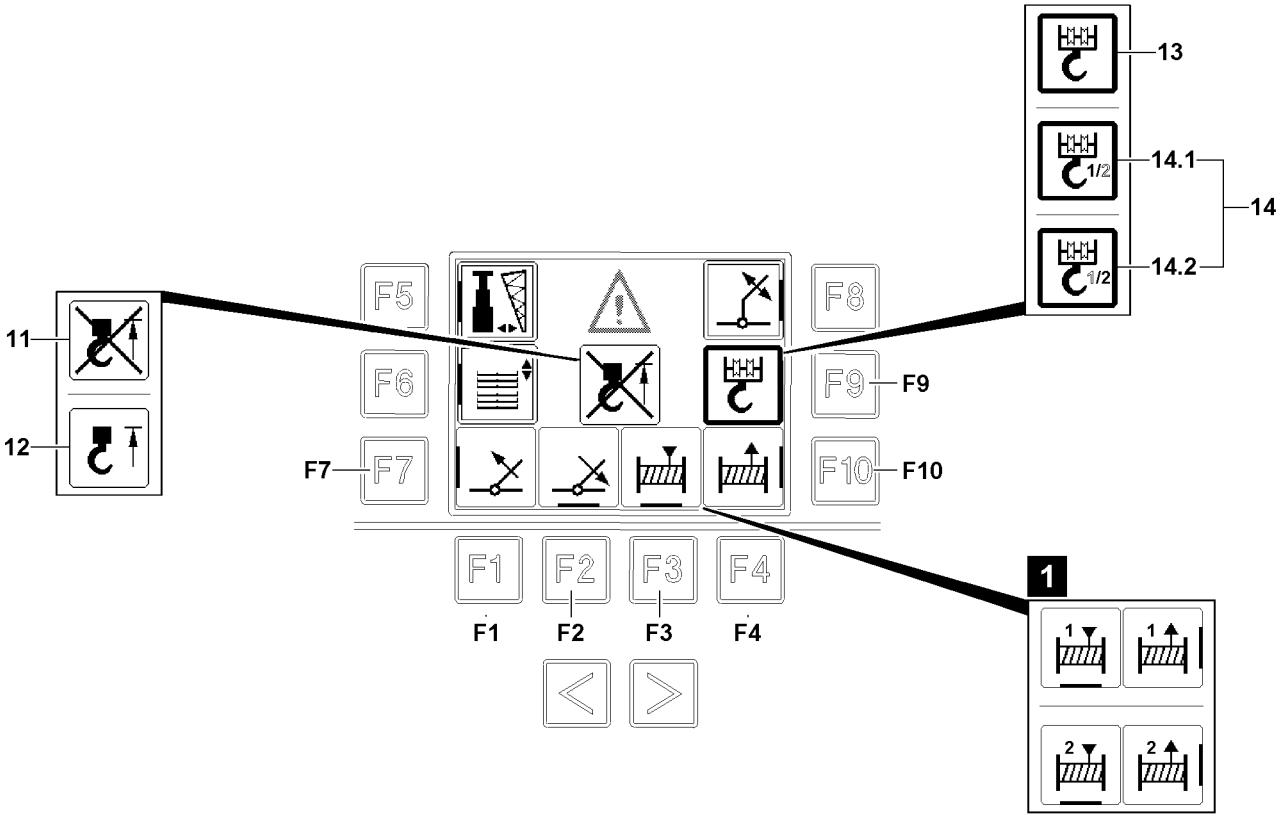

B117951

10.6.2 Detaching / attaching the hook block on the fastening point

– Hoist top limit switch bypassed **11**
  is displayed when the hoist top limit switch is automatically bypassed by the control.
– Hoist top limit switch triggered **12**
  is displayed when the hoist top limit switch is triggered, crane movements are limited.

Make sure that the following prerequisite is met:
– The crane superstructure is in 0°-position or in 180°-position pinned with the crane chassis.

– **Selection of hoist winch / hook block:**
  • Press the function key **F9**.
    • **Result**: When the selection has been made, the border on the icon on the left of function key **F9** is bolded. After selection the control release is made, the icons over the function key **F2** / function key **F3** and next to function key **F7** / function key **F10** appear.

– **Control release:**
  • The control release is issued automatically after selection.
  • After provided control release, the icons over the function key **F2** / function key **F3** and next to function key **F7** / function key **F10** are highlighted in purple.

Note
▶ To control the functions, a control release must be issued: The corresponding icons must be highlighted in purple.

Note
▶ The function key **F2**, function key **F3**, function key **F7** and function key **F10** have 2 speed stages. For example, if the function key **F10** is actuated lightly, the hoist rope is spooled out slowly. If the function key **F10** is actuated harder, the hoist rope is spooled out quickly.

Spool the hoist winch up:
– Press the function key **F3**.

Spool the hoist winch out:
– Press the function key **F10**.

Luff the telescopic boom down:
– Press the function key **F2**.

Luff the telescopic boom up:
– Press the function key **F7**.

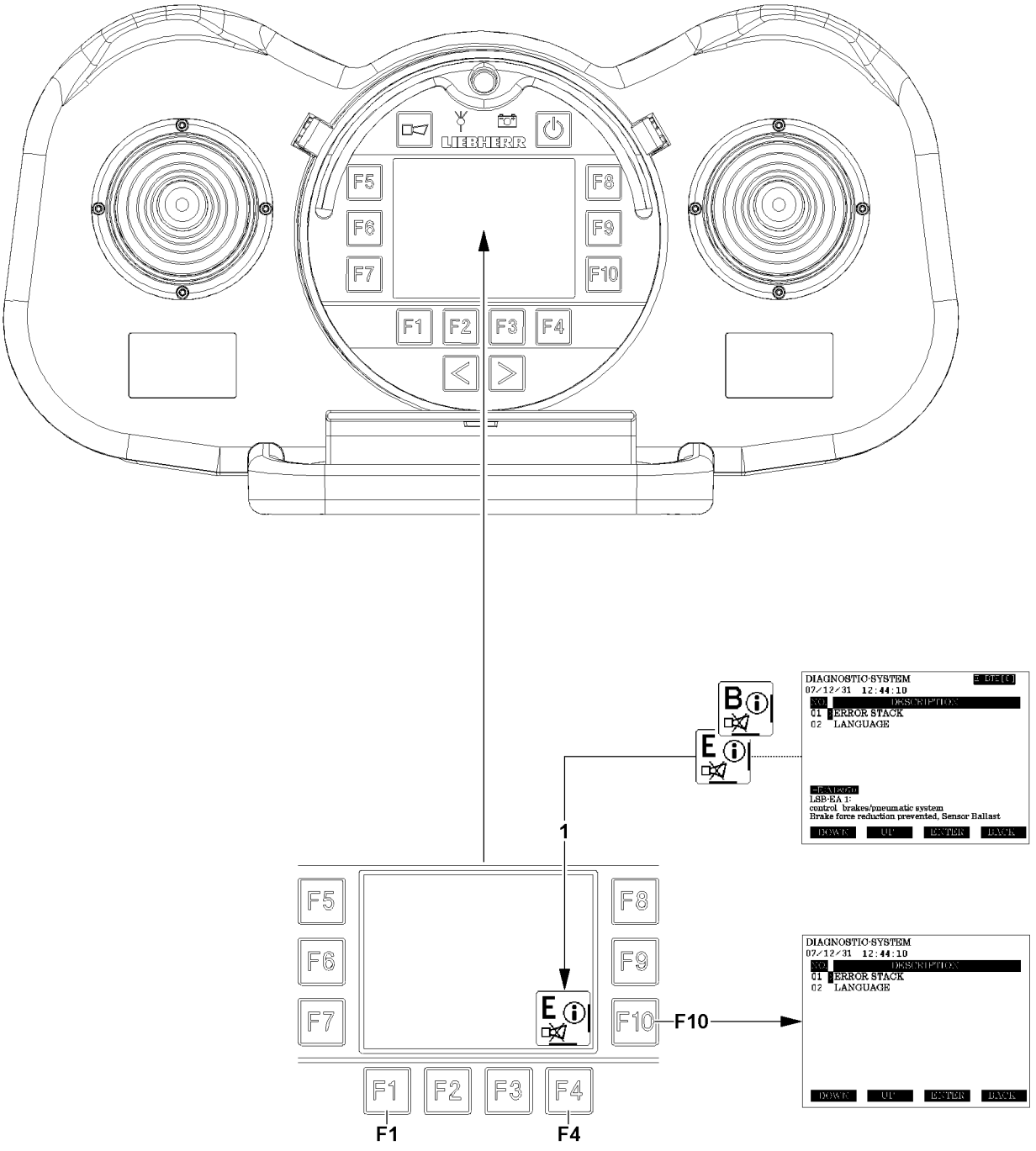
LIEBHERR
F5
F6
F7
F8
F9
F10
F1
F2
F3
F4
B
E
1
DIAGNOSTIC-SYSTEM
07/12/31 12:44:10
NO. DESCRIPTION
01 ERROR STACK
02 LANGUAGE
LSB-EA 1:
control brakes/pneumatic system
Brake force reduction prevented, Sensor Ballast
DOWN
UP
ENTER
BACK
F10
F1
F4

B116729

11 Menu Test system

If an error message is issued for the LICCON control:
– a „B“ or „E“ is shown in the information field **1**, see illustration
– an acoustic warning signal of the radio remote control is issued.

11.1 Function keys in the “Test system” menu

F1 Function key	• Return to selection overview.
F4 Function key	• When a note for an error message appears and a horn is shown in the information field **1**: Press 1x: Acoustical warning signal of the radio remote control, which can be shut off in case of operating / system errors is shut off. Press 2x: Call up test system.
F10 Function key	• Call up test system

11.2 Operating the test system

– **Turn acoustic warning signal off:**
  • Press the function key **F4**.
    • **Result**: Acoustic warning signal of the radio remote control, which can be shut off in case of operating / system errors is shut off.
– **Call up test system:**
  • Press function key **F4** again.
  or
  • Press the function key **F10**.
    • **Result**: Start page of test system is called up.

Note
▶ For detailed description of the test system, see Diagnostics Manual.

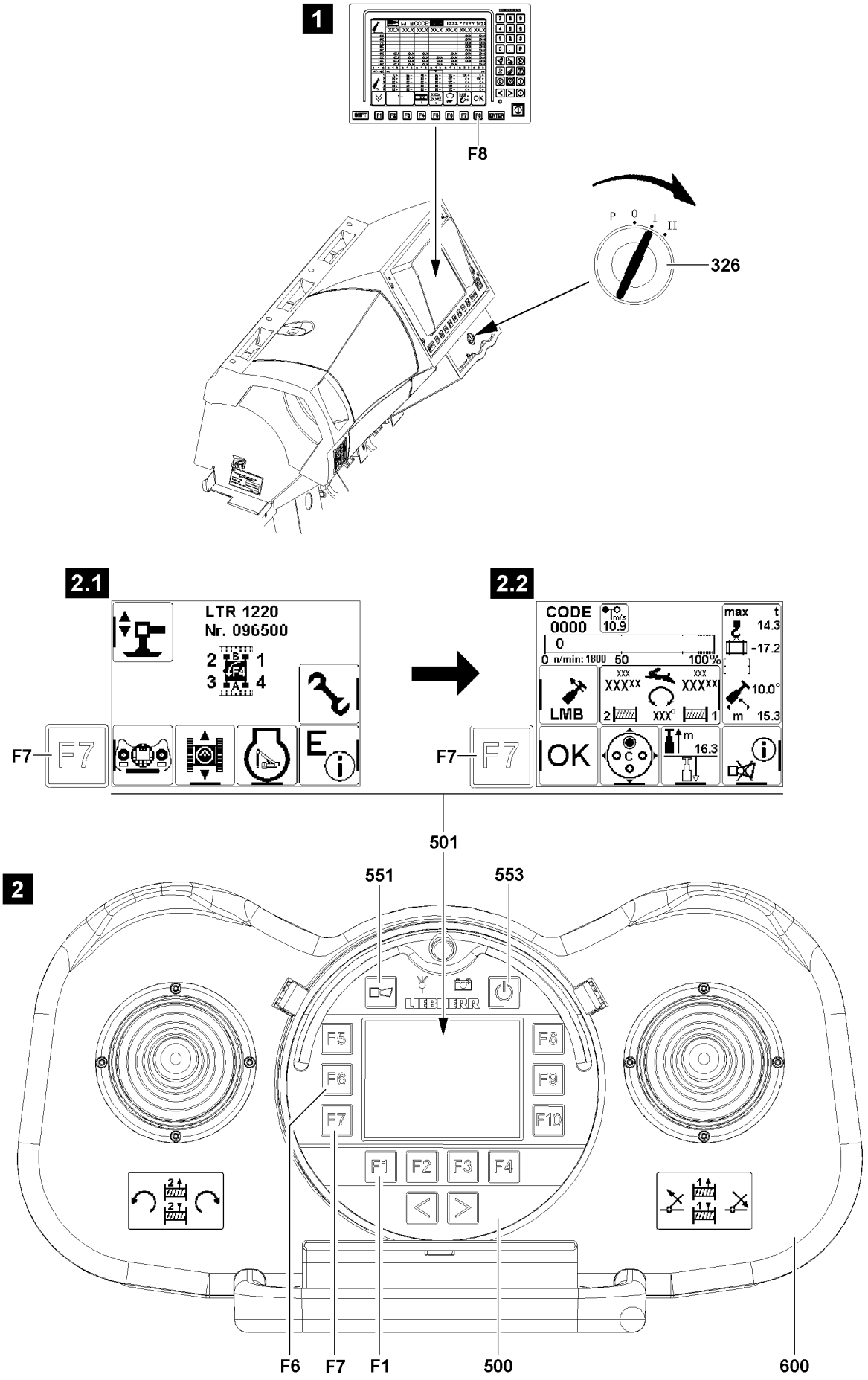
1
F8
P 0 I II
326
2.1
LTR 1220
Nr. 096500
2 B 1
F4
3 A 4
F7
F7
E
2.2
CODE
0000
10.9
max t
14.3
-17.2
0 n/min: 1800 50 100%
XXXXX
XXXXX
10.0°
LMB
2 XXX° 1
m 15.3
F7
F7
OK
m
16.3
501
2
551
553
LIEBHERR
F5
F6
F7
F8
F9
F10
F1 F2 F3 F4
F6 F7 F1 500 600

B117967

12 Start up of radio remote control

Note

- ▶ The number values which are shown in the BTT display **501** are only examples. They may differ from the crane.
- ▶ For a detailed description of the BTT **500**, see Crane operating instructions, chapter 5.31.

12.1 Activating the radio remote control

Make sure that the following prerequisite is met:

– The BTT **500** is in the charging cradle.

▶ Turn the ignition switch **326** to position “I”, see illustration **1**.

Enter the operating mode and the set up configuration:

▶ Enter the respective operating mode and the set up configuration on the LICCON monitor **325** and confirm with function key **F8**, see Crane operating instructions, chapter 4.02.

▶ When the BTT **500** is turned off:
Press the button **553**.

Result:

– The BTT **500** turns on.

▶ Pull the turned on BTT **500** from the charging cradle and insert it into the radio remote control console **600**.

Result:

– The radio remote control start menu is shown on the BTT display **501**, see illustration **2.1**.

▶ Press the function key **F7**.

Result:

– The operating screen is shown on the BTT display **501**, see illustration **2.2**.
– The icon “OK” is shown on the function key **F7** in orange lettering.
– The radio remote control unit is activated.

Troubleshooting

When inserting the BTT into the radio remote control console **600** and the start menu Radio remote control does not appear?

▶ Press the function key **F1** until the operating screen Radio remote control is shown.

Troubleshooting

The icon on function key **F7** is displayed with red lettering?

▶ Enter the respective operating mode and the set up configuration on the LICCON monitor **325** and confirm again with function key **F8** “OK”.

3

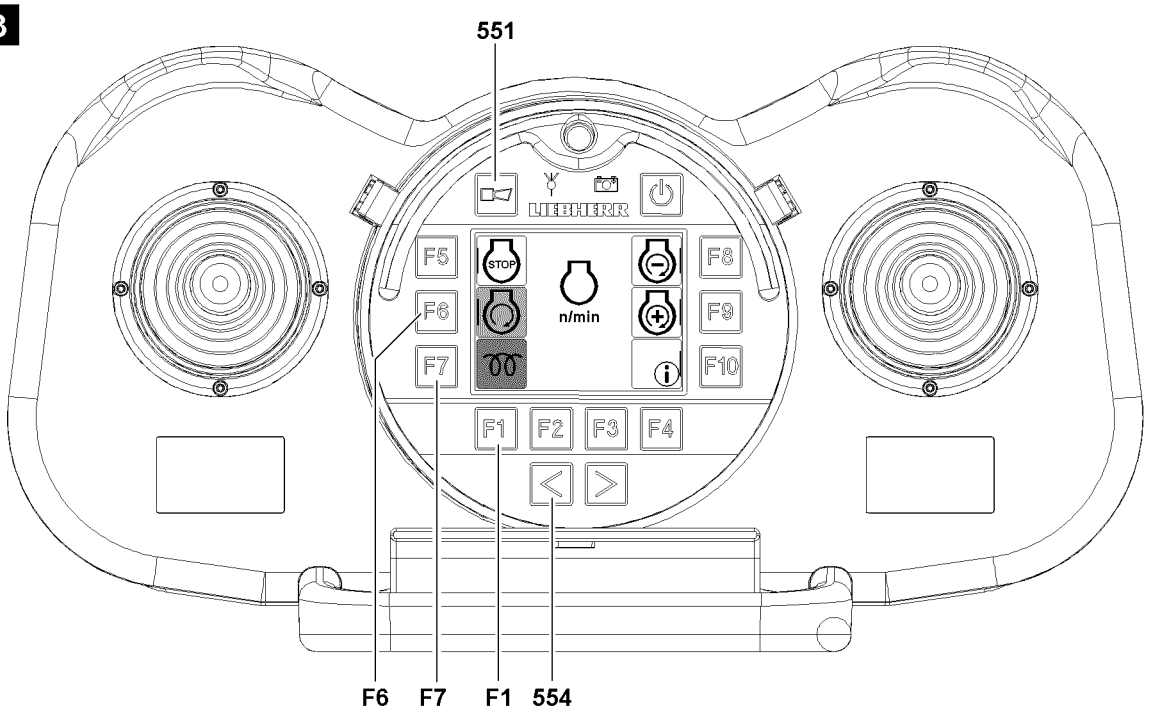
551
LIEBHERR
F5
F6
F7
STOP
n/min
F8
F9
F10
F1
F2
F3
F4
F6
F7
F1
554

4

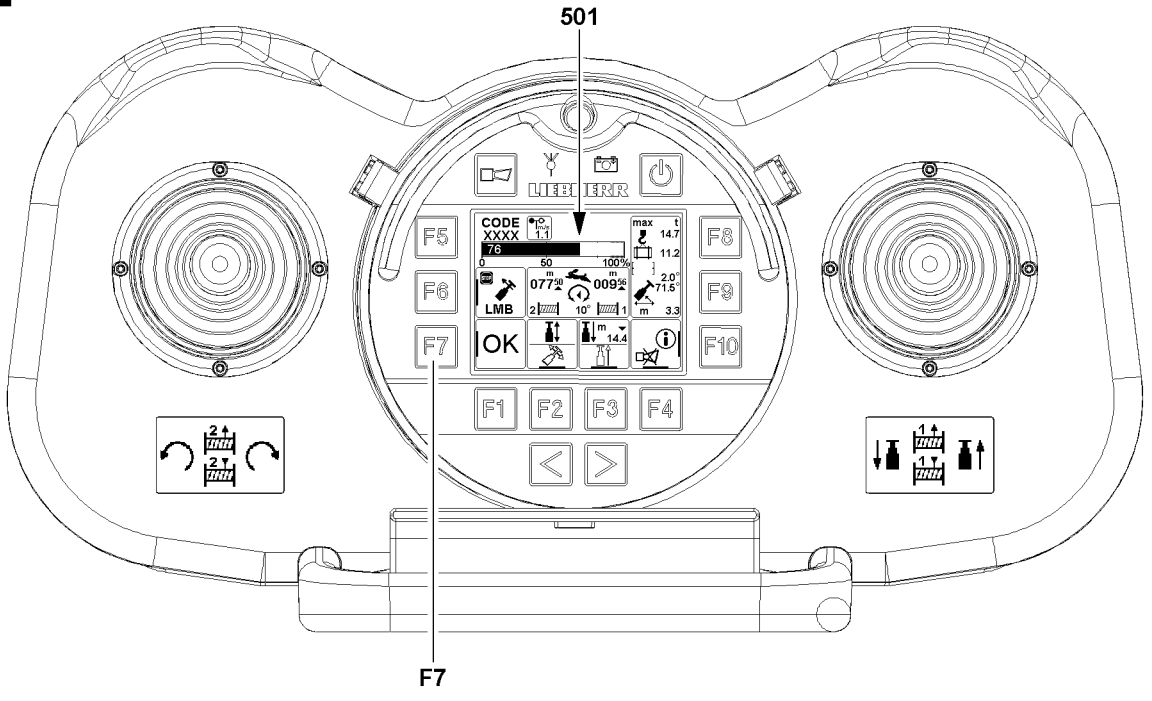
501
LIEBHERR
F5
F6
F7
CODE
XXXX
76
LMB
OK
F8
F9
F10
F1
F2
F3
F4
F7

B113414

12.2 Starting the crane with the BTT

Make sure that the following prerequisites are met:
- The steps described in section “Activating the radio remote control” have been carried out.
- The LICCON overload protection has been set according to the set up configuration.

▶ Press the button **554** until the Engine operation menu is shown on the BTT display **501**, see illustration **3**.

▶ When the icon on the function key **F6** has changed to purple and the preheat icon on the function key **F7** appears green:
Press the button **551**.

Result:
- A warning signal sounds.

▶ Press the function key **F6**.

Result:
- The crane engine starts.

▶ When the crane engine is running:
Press the function key **F1**.

Result:
- The operating screen Radio remote control is shown, see illustration **4**.

▶ When the operating screen Radio remote control is shown:
Press the function key **F7** on the BTT.

Result:
- The lettering in the “OK” icon on the function key **F7** changes from orange to green.
- The crane can now be controlled by remote control.
- The master switches in the crane operator's cab are blocked.
- The touch displays on the master switches are in stand by mode.

Note

▶ If the operating mode or the set up configuration is to be changed, see section “Activating the radio remote control”.

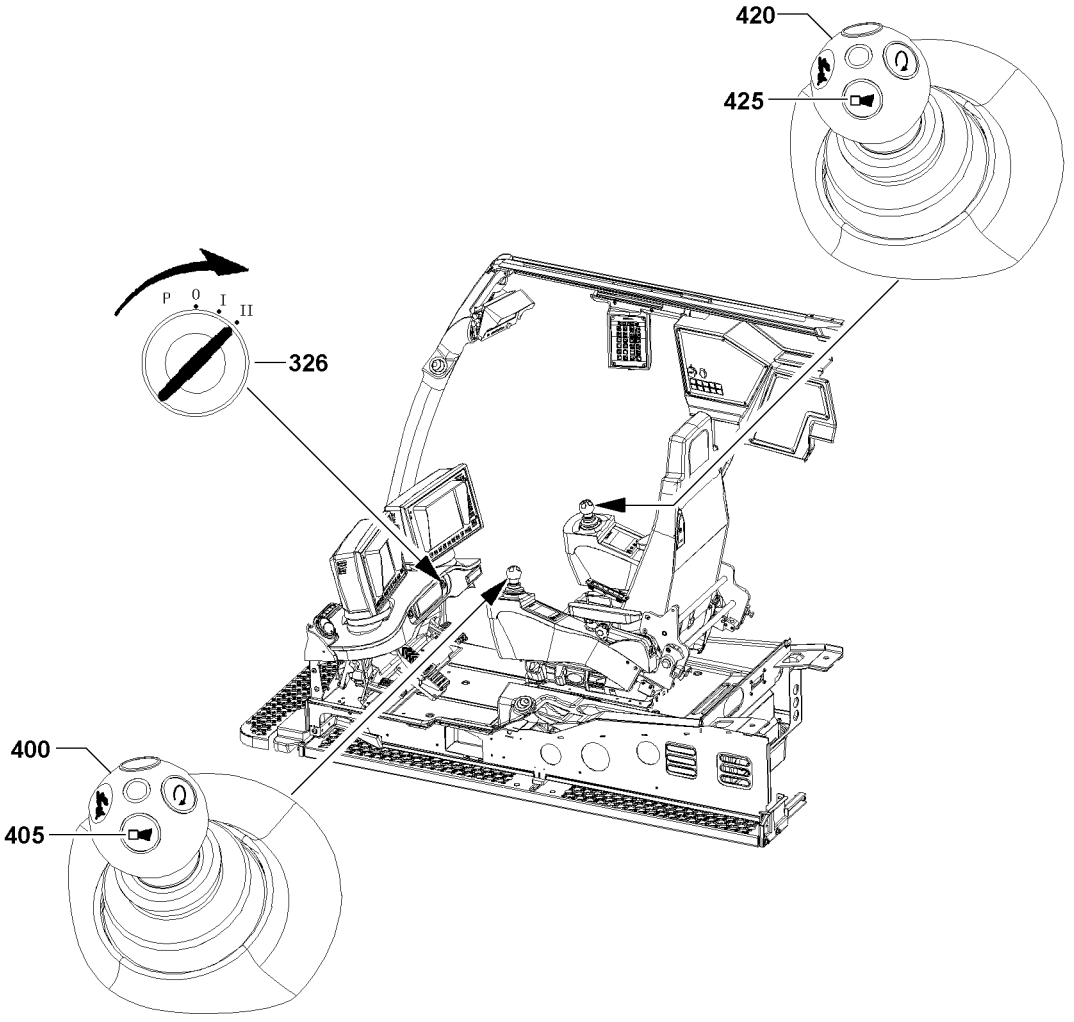
420
425
P 0 I II
326
400
405

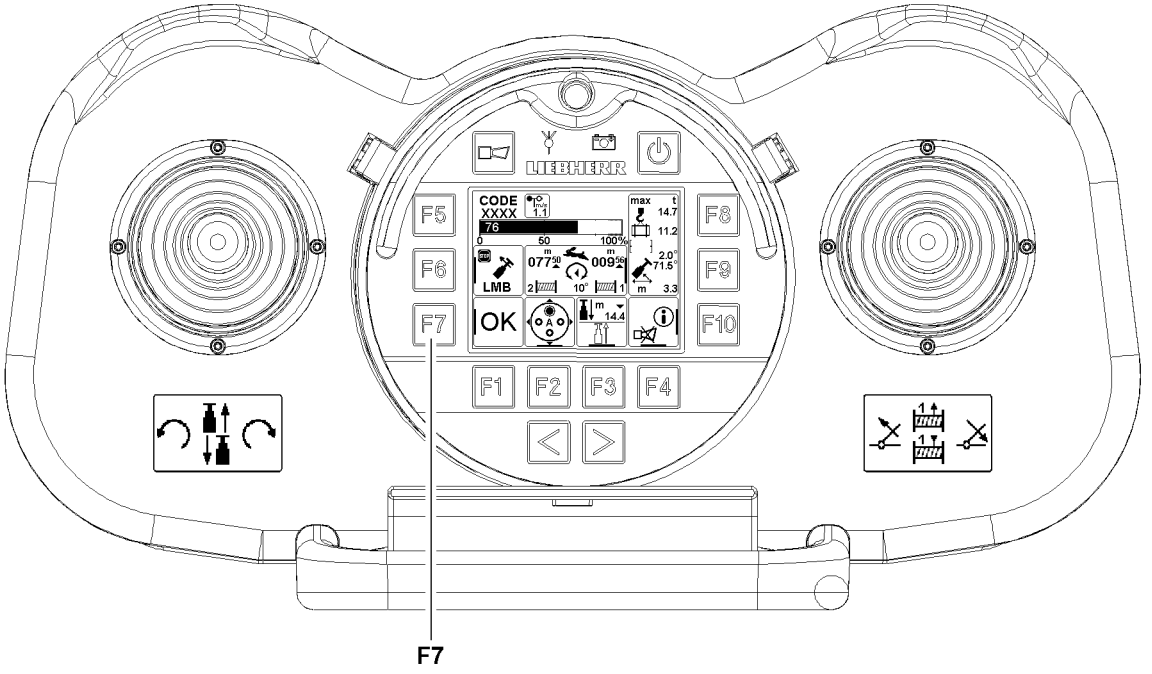
LIEBHERR
CODE
XXXX
F5
F6
F7
F8
F9
F10
F1
F2
F3
F4
OK
LMB
F7

B110027

12.3 Starting the crane with the ignition switch

Make sure that the following prerequisites are met:
- The steps described in section “Activating the radio remote control” have been carried out.
- The LICCON overload protection has been set according to the set up configuration.
- The crane engine is ready to start.

▶ Press the button **405** on the master switch **400**.

or

■ Press the button **425** on the master switch **420**.

Result:
- A warning signal sounds.

▶ Turn the ignition switch **326** touching to position “II”.

Result:
- The crane engine is started.

▶ If the crane engine was started via the ignition switch **326**:
Press the function key **F7** on the BTT.

Result:
- The lettering in the “OK” icon on the function key **F7** changes from orange to green.
- The crane can now be controlled by remote control.
- The master switches in the crane operator's cab are blocked.
- The touch displays on the master switches are in stand by mode.

Note

▶ If the operating mode or the set up configuration is to be changed, see section “Activating the radio remote control”.

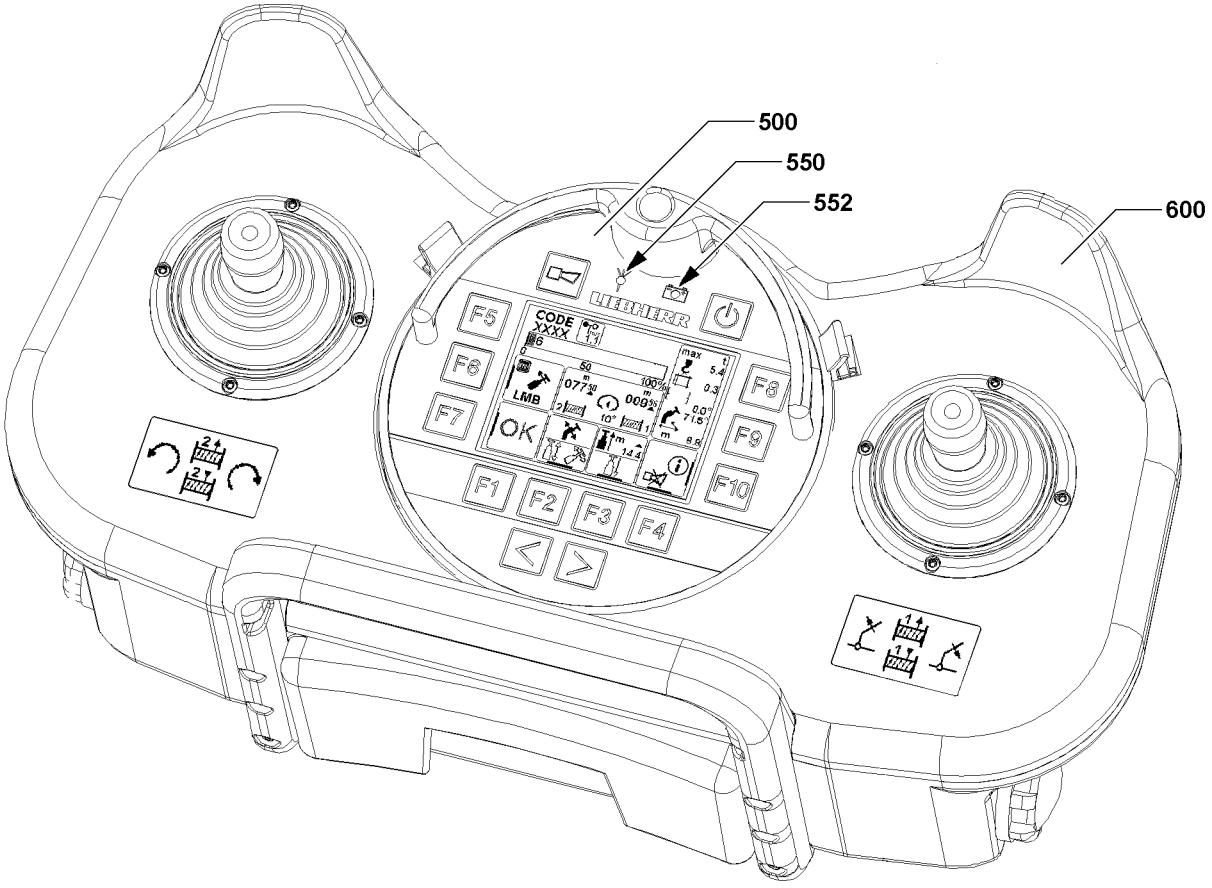
500
550
552
600
LIEBHERR
CODE
XXXX
F5
F6
F7
F8
F9
F10
F1
F2
F3
F4
OK
LMB

B113398

13 Crane operation with radio remote control

Make sure that the following prerequisites are met:
- The LICCON overload protection has been set according to the set up configuration.
- The radio remote control is ready for operation.
- The crane operator must select a safe location from where the entire working area can be seen.
- No personnel is in and on the crane.
- The driver's cab and the crane operator's are secured to prevent unauthorized access.

WARNING
Transmission signal is lost!
If the transmission signal between the radio remote control and the crane is lost, then the crane movements are turned off abruptly and uncontrolled and the actuated crane engine is turned off!
The behavior of load and crane cannot be foreseen in such a case!
Personnel can be killed or seriously injured!
This could result in property damage!
- ▶ Monitor the indicator light **550** for the transmission signal between the radio remote control and the crane!
- ▶ Select the placement location in such a way that the indicator light **550** always lights up green!
- ▶ Monitor the indicator light **552** for the charge condition of the radio remote control!

NOTICE
Change of LICCON overload protection by unauthorized personnel!
- ▶ Make sure that the LICCON overload protection cannot be changed by unauthorized personnel during crane operation with radio remote control!

Monitor the following indicator lights:
- Indicator light **550** must light up green.
- Indicator light **552** may not light up red.

Note
Bad transmission signal
- ▶ The transmission signal between the radio remote control and the crane can also be established via a cable, see section “Bypassing the radio connection”.

Note
- ▶ To charge the rechargeable battery, remove the BTT **500** from the radio remote control console **600** and insert it into the charging cradle. The rechargeable battery is charged as soon as the indicator light **552** lights up green.

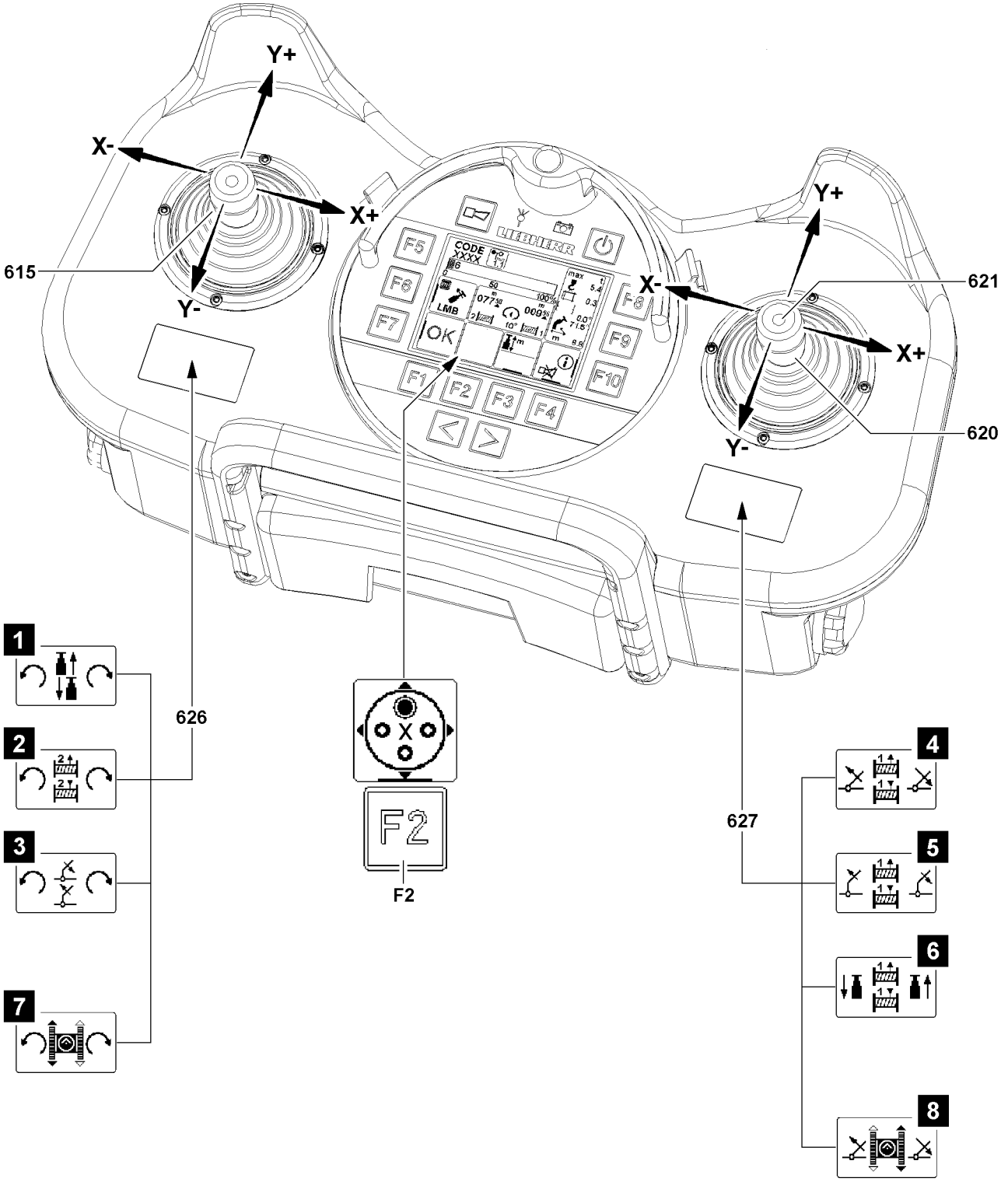

B117956

13.1 General

WARNING
Danger of accident!
Disregard of the following points could result in accidents!
Personnel can be killed or severely injured!

- ▶ Only persons who know the full scope of operation of the radio remote control may work with the radio remote control!
- ▶ Check all functions of the radio remote control for function and accuracy before starting to work!
- ▶ The radio remote control may only be used after the functionality and accuracy of the system is ensured!
- ▶ The valid national regulations to control a crane with a radio remote control must be observed!
- ▶ Before initiating a crane movement, make sure that there are no persons or obstacles within the danger zone of the crane!
- ▶ As a rule, always give a warning signal before initiating a crane movement!

The control of a crane with radio remote control simplifies work in many situations. It may need a certain training period.

- If a rapid gear is available, then it can be added by pressing the button **621** on the manual control lever **620** once.
- The speed of the crane movement is controlled via the degree of deflection of the manual control lever **615** and manual control lever **620**.
- The function assignment of the manual control lever **615** depends on the set up configuration and the active manual control lever assignment. The function assignment of the manual control lever **615** is shown in the graphic display **626**.
- The function assignment of the manual control lever **620** depends on the set up configuration and the active manual control lever assignment. the selected settings. The function assignment of the manual control lever **620** is shown in the graphic display **627**.

13.2 Changing the manual control lever assignment

The manual control lever assignment is the determining factor for the function assignment of the manual control levers on the radio remote control, see section “Changing the manual control lever assignment”
Depending on the set up configuration of the crane, one or more manual control lever assignments are possible, see illustration **1** to illustration **8**.

When several assignments of the manual control levers are possible:

- ▶ Change the manual control lever assignment in the crane operating screen by pressing the function key **F2**.

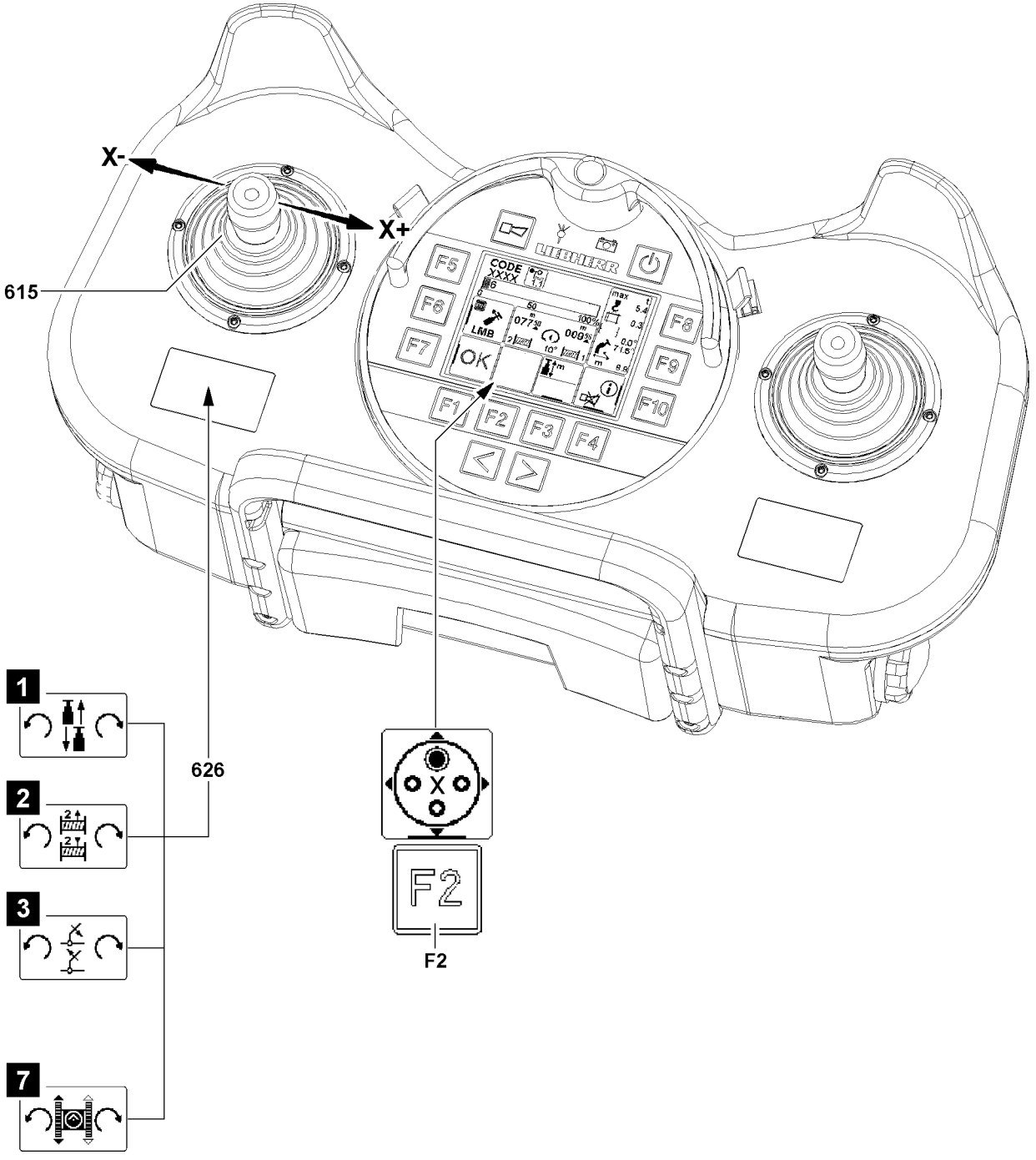

B117957

13.3 Turning the crane superstructure

Make sure that the following prerequisite is met:

– The turntable lock (crane superstructure) is unpinned.

WARNING

Overload of crane!

If the rotational speed is too high or in case of abrupt rotational movements, the load can start to oscillate!

Oscillating loads can cause overload of the crane and accidents!

Personnel can be killed or seriously injured!

▶ Always initiate and slow down rotational movements of the crane superstructure extremely sensitively!

▶ Match the rotational / slewing speed of the load chart to the operating conditions!

– To turn the crane superstructure, the graphic display **627** of the manual control lever **620** must show the function assignment illustration **1**, illustration **2**, illustration **3** or illustration **7**.

– The function assignment is set by the manual control lever assignment. The manual control lever assignment can be changed in the crane operating screen via function key **F2**.

▶ Move the manual control lever **615** in direction X+ (to the right).

Result:

– The crane superstructure turns to the right (in clockwise direction).

▶ Move the manual control lever **615** in direction X- (to the left).

Result:

– The crane superstructure turns to the left (in counterclockwise direction).

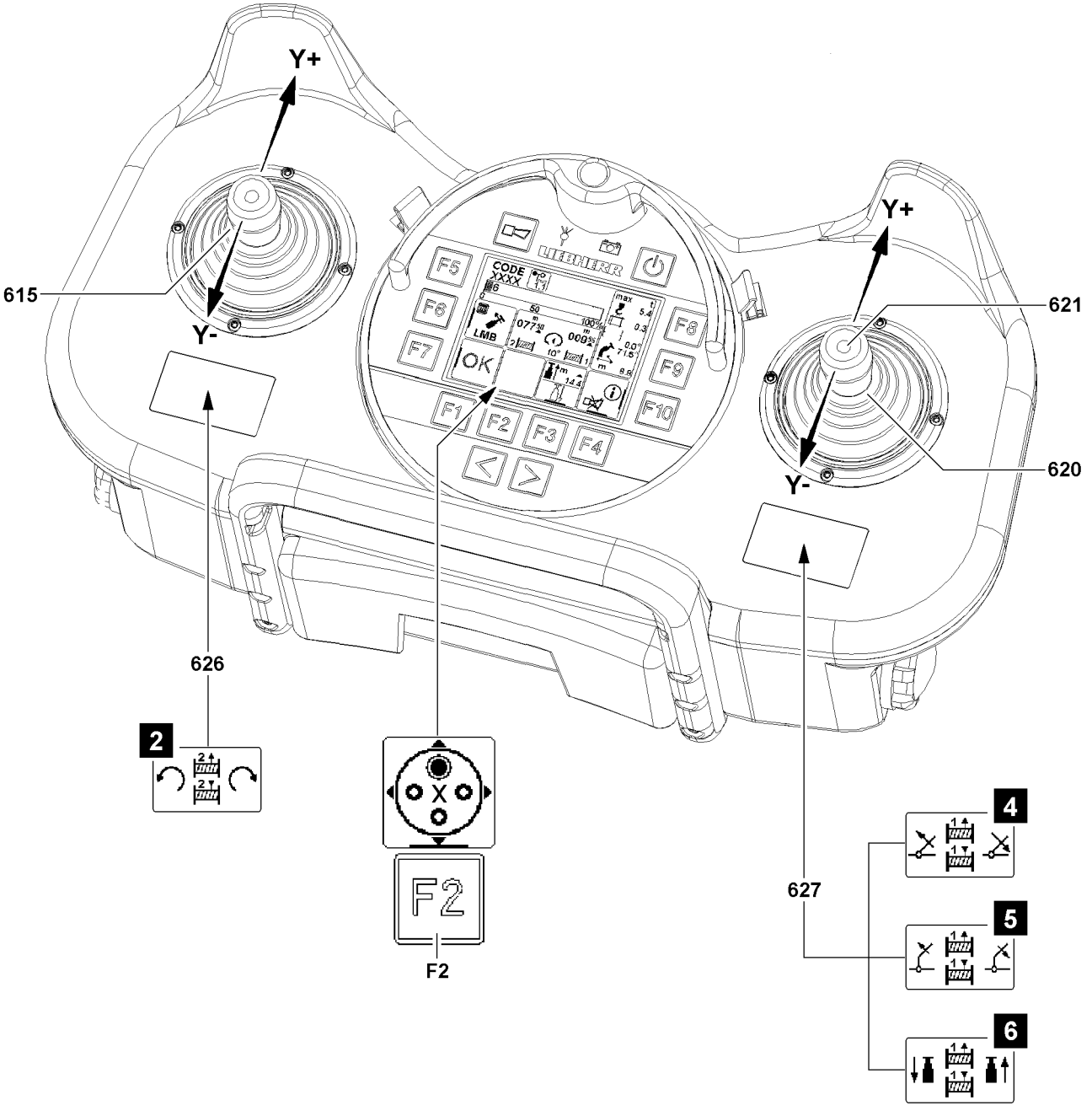

B117958

13.4 Lifting / lowering the hook

NOTICE
Risk of rope damage!
Due to slack rope formation, the hoist rope can be damaged significantly!
▶ When spooling the hoist rope up or out, always make sure that the hoist rope is tensioned!

Note
▶ By pressing the button **621** the rapid gear for the crane movement spool winch up / out and luff the telescopic boom can be turned on / off.

– To lift / lower the hook with winch 1, the graphic display **627** of manual control lever **620** must show the function assignment illustration **4**, illustration **5** or illustration **6**.
– To lift / lower the hook with winch 2, the graphic display **626** of manual control lever **615** must show the function assignment illustration **2**.
– The function assignment is set by the manual control lever assignment. The manual control lever assignment can be changed in the crane operating screen via function key **F2**.

13.4.1 Lifting the hook

Winch 1:
▶ Move the manual control lever **620** in direction Y- (to the rear).
Result:
– Winch 1 is spooled up (lift hook).

Winch 2* , graphic display **626** shows illustration **2**:
▶ Move the manual control lever **615** in direction Y- (to the rear).
Result:
– Winch 2 is spooled up (lift hook).

13.4.2 Lowering the hook

Winch 1:
▶ Move the manual control lever **620** in direction Y+ (to the front).
Result:
– Winch 1 is spooled out (lower hook).

Winch 2* , graphic display **626** shows illustration **2**:
▶ Move the manual control lever **615** in direction Y+ (to the front).
Result:
– Winch 2 is spooled out (lower hook).

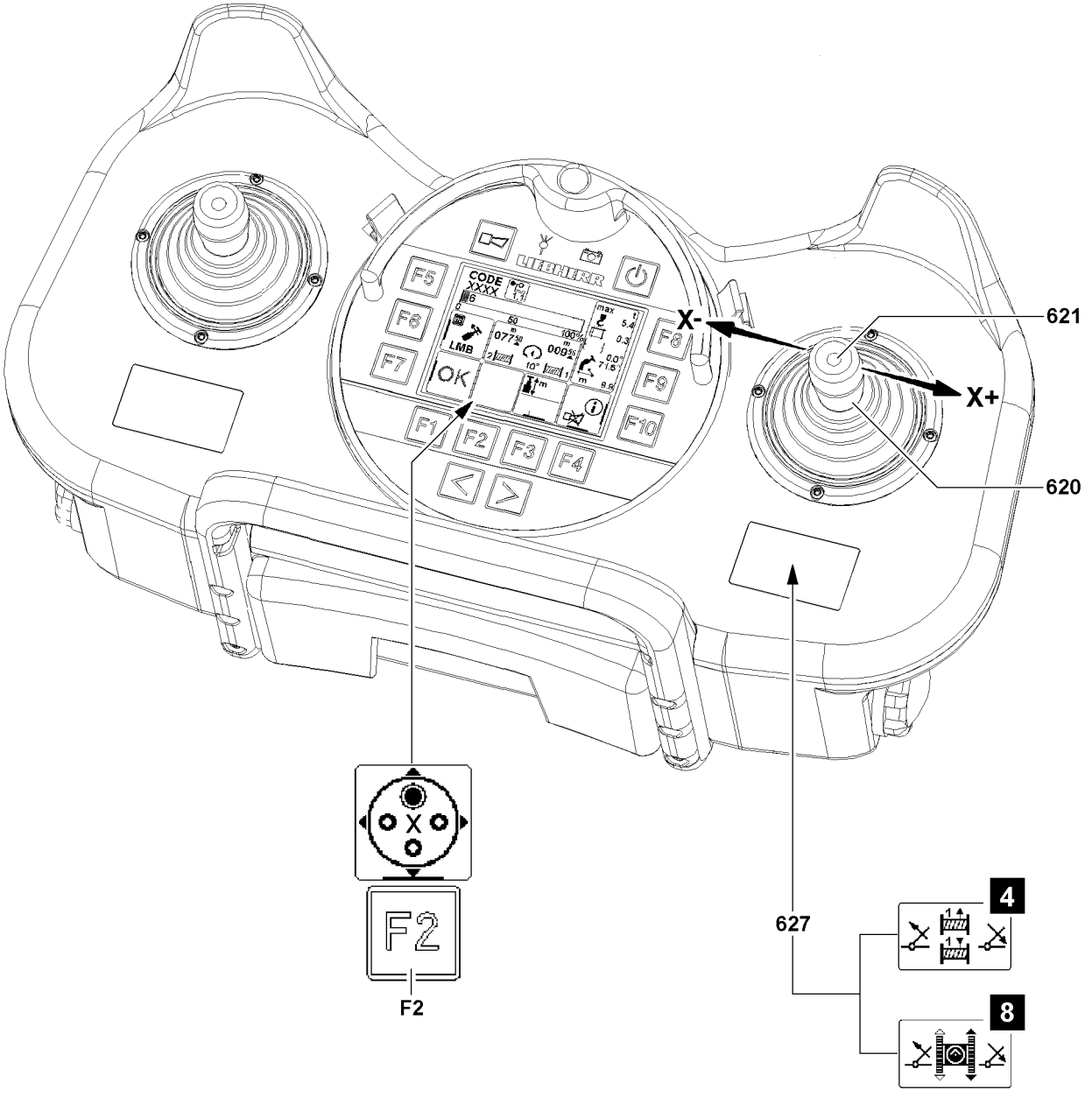

B117959

13.5 Luffing the boom

WARNING
Overload of crane!
When taking on a load by luffing the boom up, the crane can be overloaded!
This could result in serious accidents!
▶ Taking on a load by luffing up the boom is prohibited!
▶ Take on a load only with the hoist gear!

Note
▶ By pressing the button **621** the rapid gear for the crane movement spool winch up / out and luff the telescopic boom can be turned on / off.

13.5.1 Luffing the telescopic boom

– To luff the telescopic boom, the graphic display **627** of manual control lever **620** must show the function assignment illustration **4** or illustration **8**.
– The function assignment is set by the manual control lever assignment. The manual control lever assignment can be changed in the crane operating screen via function key **F2**.

▶ Move the manual control lever **620** in direction X- (to the left).

Result:
– The telescopic boom is luffed up.

▶ Move the manual control lever **620** in direction X+ (to the right).

Result:
– The telescopic boom is luffed down.

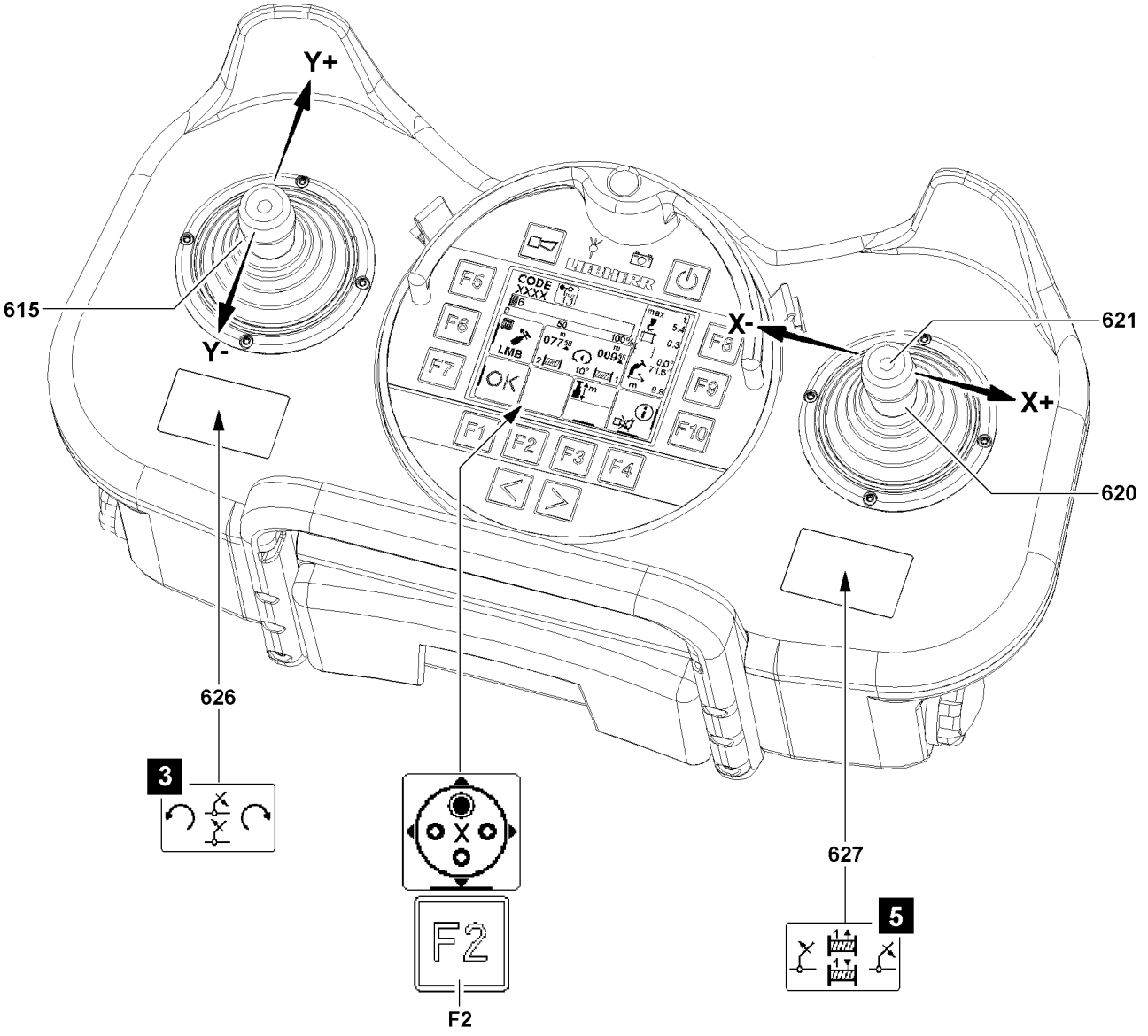

B117961

13.5.2 Luffing the auxiliary boom / accessories*

Note

▶ Luffing the auxiliary boom / accessory* is only shown if an auxiliary boom / accessory is installed and equipped.

– To luff the auxiliary boom / accessory*:
  - the graphic display **626** of manual control lever **615** must show the function assignment illustration **3**

    or
  - the graphic display **627** of manual control lever **620** must show the function assignment illustration **5**
– The function assignment is set by the manual control lever assignment. The manual control lever assignment can be changed in the crane operating screen via function key **F2**.

When the function assignment illustration **3** is shown:

▶ Move the manual control lever **615** in direction Y- (to the rear).

Result:

– The auxiliary boom / accessory* is luffed up.

▶ Move the manual control lever **615** in direction Y+ (to the front).

Result:

– The auxiliary boom / accessory* is luffed down.

When the function assignment illustration **5** is shown:

▶ Move the manual control lever **620** in direction X- (to the left).

Result:

– The auxiliary boom / accessory* is luffed up.

▶ Move the manual control lever **620** in direction X+ (to the right).

Result:

– The auxiliary boom / accessory* is luffed down.

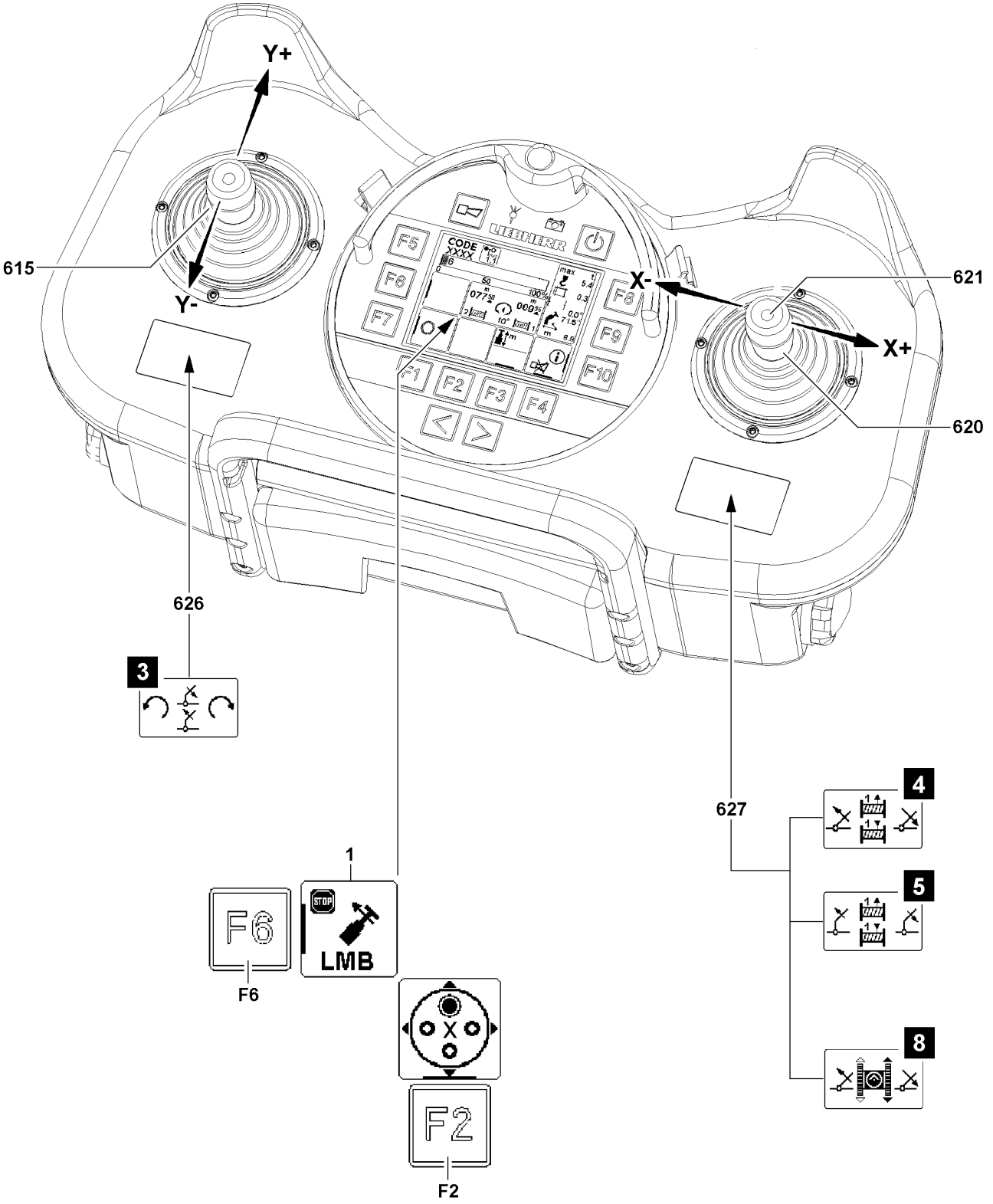
Y+
Y-
615
X-
X+
621
620
626
627
3
4
5
8
1
F6
LMB
F2
F5
F6
F7
F8
F9
F10
F1
F2
F3
F4
LIEBHERR
CODE
XXXX

B117960

13.6 Function “Luffing in with suspended load”

WARNING
Overload of crane!
By diverting the function “Luffing in with suspended load” from its intended use, the crane can be overloaded and topple over!
This could result in serious accidents!
- ▶ Use the function “Luffing in with suspended load” exclusively for load moment reducing crane movements!
- ▶ Use the function “Luffing in with suspended load” exclusively for freely suspended load!

Make sure that the following prerequisites are met:
- – The load is freely suspended and is not in contact with the ground.
- – The function assignment illustration **3**, illustration **4** or illustration **5** is shown.
- – The function assignment is set by the manual control lever assignment. The manual control lever assignment can be changed in the crane operating screen via function key **F2**.

Note
- ▶ The function key **F6** must be pressed down for the entire duration of luffing in.

If it is luffed out of the load chart:
- ▶ Icon **1** is shown: Press and hold the function key **F6**.

When the function assignment illustration 3 is shown:
- ▶ Luff the auxiliary boom / accessory* up: Move the manual control lever **626** in direction Y- (to the rear).
- ▶ Luff the auxiliary boom / accessory* down: Move the manual control lever **626** in direction Y+ (to the front).

When the function assignment illustration 4 or illustration **8** is shown:
- ▶ Luff the telescopic boom up: Move the manual control lever **627** in direction X- (to the left).
- ▶ Luff the telescopic boom down: Move the manual control lever **627** in direction X+ (to the right).

When the function assignment illustration 5 is shown:
- ▶ Luff the auxiliary boom / accessory* up: Move the manual control lever **627** in direction X- (to the left).
- ▶ Luff the auxiliary boom / accessory* down: Move the manual control lever **627** in direction X+ (to the right).

Result:
- – Function “Luffing in with suspended load” is carried out.

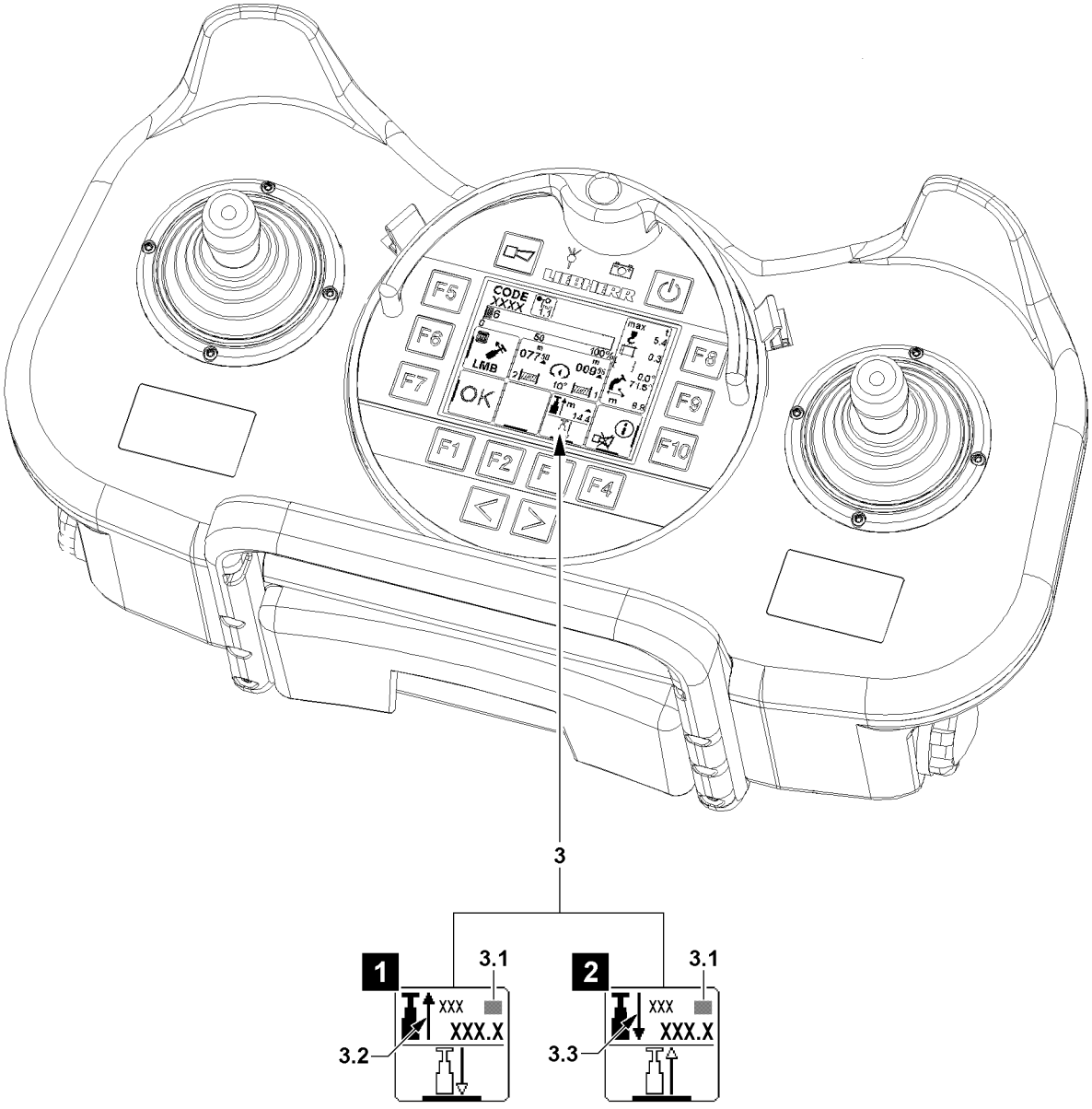
LIEBHERR
CODE
XXXX
F5
F6
F7
F8
F9
F10
F1
F2
F4
OK
LMB
3
1
2
3.1
3.1
XXX
XXX.X
XXX
XXX.X
3.2
3.3

B113401

13.7 Telescoping

NOTICE
Telescoping has an effect on the hoist rope!
The telescoping procedure has a direct influence on the hoist rope and the hook (load hook / hook block)!
▶ During the telescoping procedure, via the crane movement lifting / lowering the hoist gear, make sure that hook remains in the correct position!

Note
▶ If a blinking icon appears in the field **3.1**, then an error is present during telescoping, see error message in LICCON monitor.
▶ For detailed description of telescoping, see Crane operating instructions, chapter 4.02 and 4.05.

Note
▶ “Telescope the telescopic boom out” is shown in the icon **3** with arrow “up” **3.2**, see illustration **1**.
▶ “Telescope the telescopic boom in” is shown in the icon **3** with arrow “down” **3.3**, see illustration **2**.

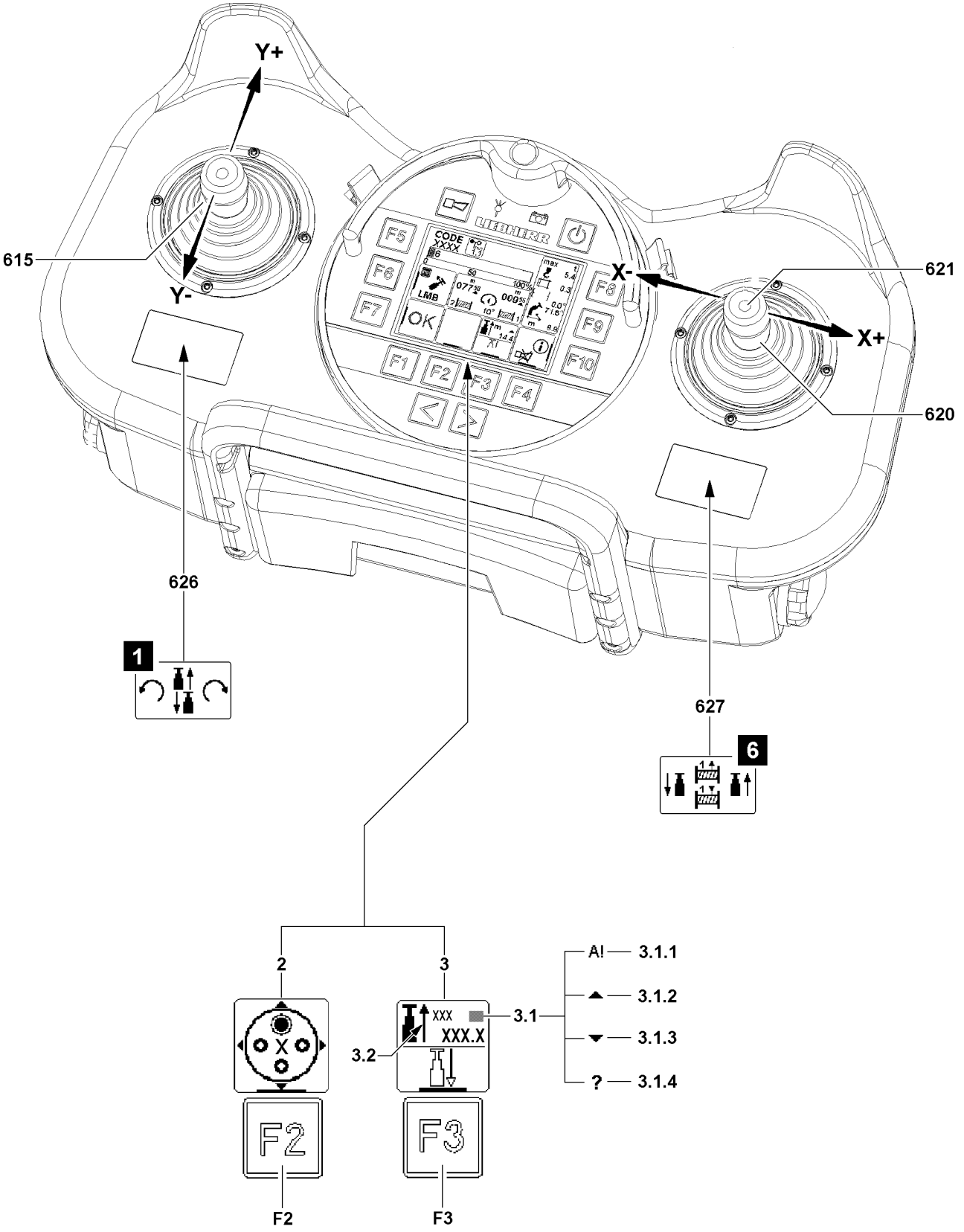
Y+
Y-
615
X-
X+
621
620
626
627
1
6
2
3
3.1
3.2
A!
3.1.1
3.1.2
3.1.3
?
3.1.4
XXX
XXX.X
F2
F3
B116772

13.7.1 Telescoping

Make sure that the following prerequisites are met:

– Telescoping is set to automatic mode, see Crane operating instructions, chapter 4.05.
– The desired telescoping target is set and has been confirmed on the LICCON computer system.
– For telescoping:
  - the graphic display **626** of manual control lever **615** must show the function assignment illustration **1**

    or
  - the graphic display **627** of manual control lever **620** must show the function assignment illustration **6**

– The function assignment is set by the manual control lever assignment. The manual control lever assignment is shown in the icon **2** and can be changed in the crane operating screen via the function key **F2**.

Telescope out

▶ Press the function key **F3** until in icon **3** “Telescoping the telescopic boom out” (arrow “up” **3.2**) is set, see illustration.

Note

Special features of the telescoping system TELEMATIC

▶ It is possible that you have to telescope in first to reach the telescoping target.
▶ Always check the direction data in field **3.1**.

When the function assignment illustration 1 is shown:

▶ If the arrow **3.1.2** (up) appears in the field **3.1**:
Move the manual control lever **615** in direction Y+ (to the front).
▶ If the arrow **3.1.3** (down) appears in the field **3.1**:
Move the manual control lever **615** in direction Y- (to the rear).

Once the telescoping target is reached, the icon **3.1.1** appears in the field **3.1**.

▶ Deflect the manual control lever **615** for another 3 seconds or so until the telescope is resting on the pin.

When the function assignment illustration 6 is shown:

▶ If the arrow **3.1.2** (up) appears in the field **3.1**:
Move the manual control lever **620** in direction X+ (to the front).
▶ If the arrow **3.1.3** (down) appears in the field **3.1**:
Move the manual control lever **620** in direction X- (to the rear).

Once the telescoping target is reached, the icon **3.1.1** appears in the field **3.1**.

▶ Deflect the manual control lever **620** for another 3 seconds or so until the telescope is resting on the pin.

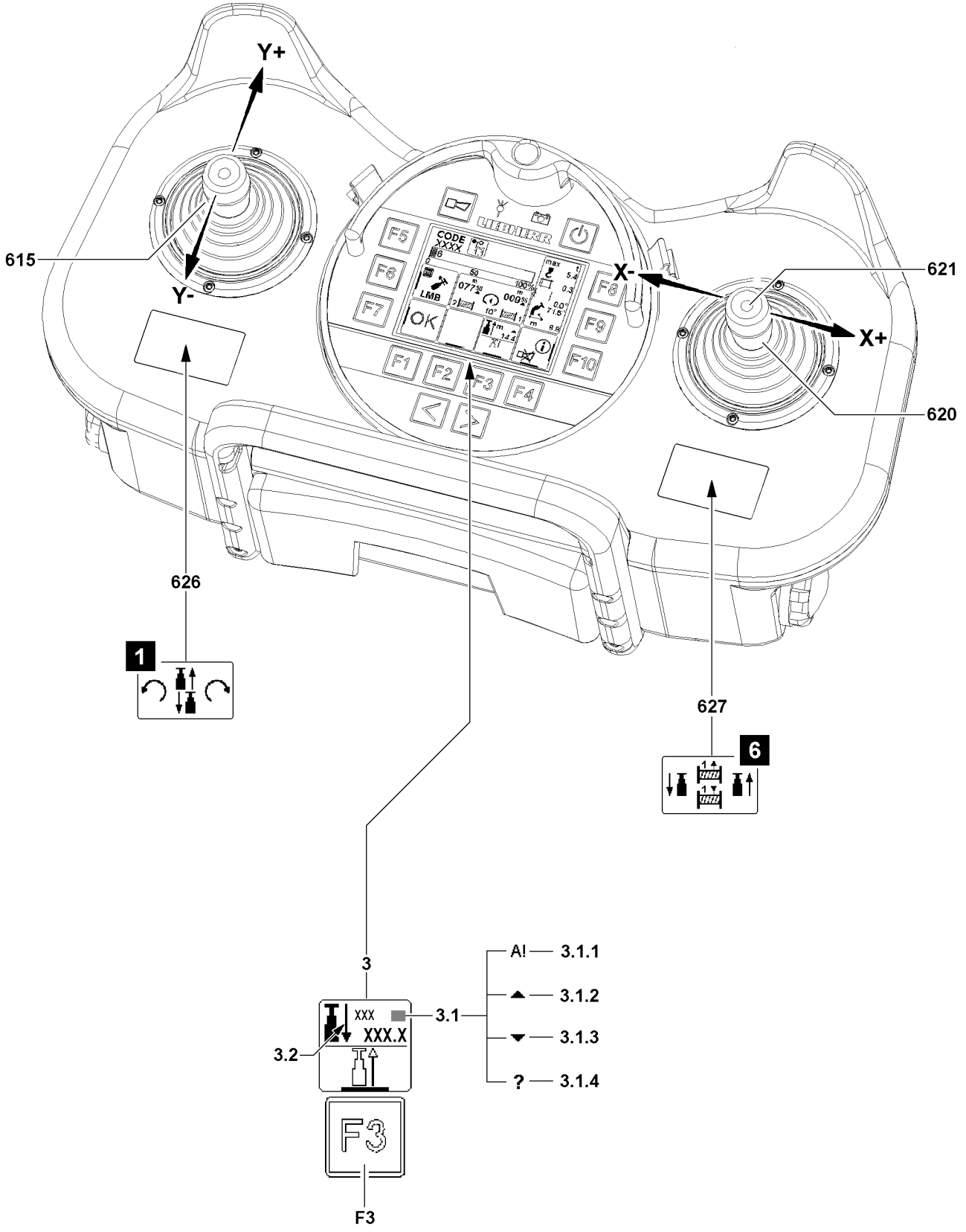
Y+
Y-
615
X-
X+
621
620
626
627
1
6
3
3.1
3.2
A!
3.1.1
3.1.2
3.1.3
?
3.1.4
XXX
XXX.X
F3
F3

B116773

Telescope in

Note

▶ When telescoping in, the telescoping target is always “Telescope the telescopic boom fully in” (all telescopes at 0 %)!

▶ Press the function key **F3** until in icon **3** “Telescoping the telescopic boom in” (arrow “down” **3.3**) is set, see illustration.

Note

Special features of the telescoping system TELEMATIC

▶ It is possible that you have to telescope in first to reach the telescoping target.

▶ Always check the direction data in field **3.1**.

When the function assignment illustration 1 is shown:

▶ If the arrow **3.1.2** (up) appears in the field **3.1**:
Move the manual control lever **615** in direction Y+ (to the front).

▶ If the arrow **3.1.3** (down) appears in the field **3.1**:
Move the manual control lever **615** in direction Y- (to the rear).

Once the telescoping target is reached, the icon **3.1.1** appears in the field **3.1**.

▶ Deflect the manual control lever **615** for another 3 seconds or so until the telescope is resting on the pin.

When the function assignment illustration 6 is shown:

▶ If the arrow **3.1.2** (up) appears in the field **3.1**:
Move the manual control lever **620** in direction X+ (to the front).

▶ If the arrow **3.1.3** (down) appears in the field **3.1**:
Move the manual control lever **620** in direction X- (to the rear).

Once the telescoping target is reached, the icon **3.1.1** appears in the field **3.1**.

▶ Deflect the manual control lever **620** for another 3 seconds or so until the telescope is resting on the pin.

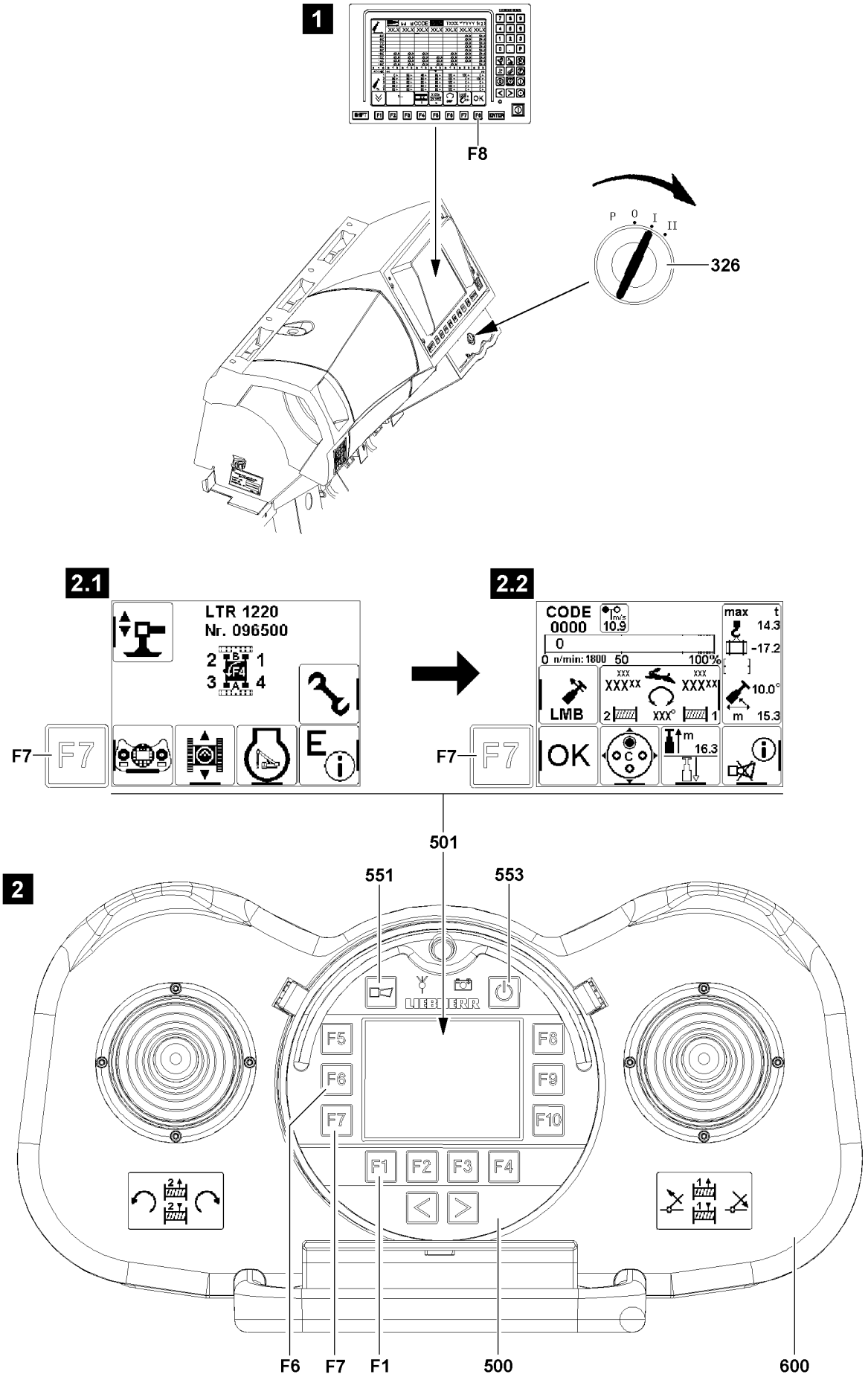
1
F8
P 0 I II
326
2.1
LTR 1220
Nr. 096500
2 B 1
F4
3 A 4
F7
F7
E
2.2
CODE
0000
10.9
max t
14.3
-17.2
0 n/min: 1800 50 100%
XXXXX
XXXXX
10.0°
LMB
2 XXX° 1
m 15.3
F7
F7
OK
m
16.3
501
2
551
553
LIEBHERR
F5
F6
F7
F8
F9
F10
F1 F2 F3 F4
F6 F7 F1 500 600

B117967

13.7.2 Aborting telescoping

Telescoping can be aborted at any time.
The pins, the telescoping cylinder and the telescopes remain where they were, in the last state they were in when the manual control lever was still being deflected.
Automatic telescoping: If desired, a new telescoping target can be set on the LICCON monitor to telescope to it, see Crane operating instructions, chapter 4.05.

13.8 Changing the set up configuration

If the set up configuration of the crane is to be changed on LICCON monitor **325**, crane operation must cease for the duration of the change.
While entering the new set up parameters, all functions of the radio remote control are blocked. After the new set up configuration was confirmed, the radio remote control can be activated again.

▶ Enter a new set up configuration on the LICCON monitor **325**, see Crane operating instructions, chapter 4.02.

▶ Confirm the new set up configuration via function key **F8** on LICCON monitor **325**.

Result:

– The short code of the new set up configuration is accepted.
– The icon “OK” on the function key **F7** on the BTT **500** is displayed with orange lettering.
– Functions on the radio remote control are blocked:

▶ Press the function key **F7** on the BTT.

Result:

– The lettering in the “OK” icon on the function key **F7** on the BTT **500** changes from orange to green.
– All crane functions on the radio remote control are active again.

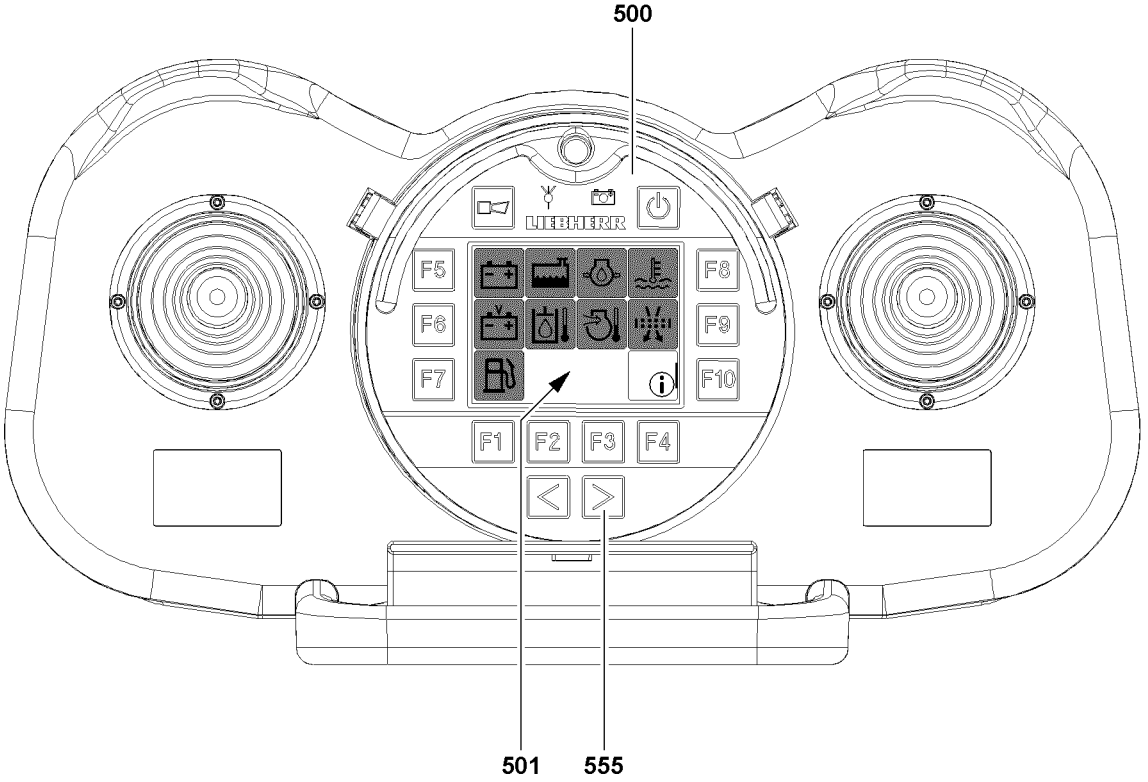

B113415

13.9 Monitoring the engine functions in radio operation

There are monitoring functions for the actuated crane engine which can be shown in the BTT display **501** or which are displayed automatically to the crane operator if a warning event occurs. The monitoring functions are always active. Using the button **555**, the monitoring field with the monitoring functions can be shown on the BTT display **501**. Any warning icons which are shown can be confirmed after fixing the cause or the error with the function key **F1** and return into the radio menu.

NOTICE
Property damage!
Property damage can result if a malfunction is not immediately rectified!
▶ Immediately rectify the faulty function!

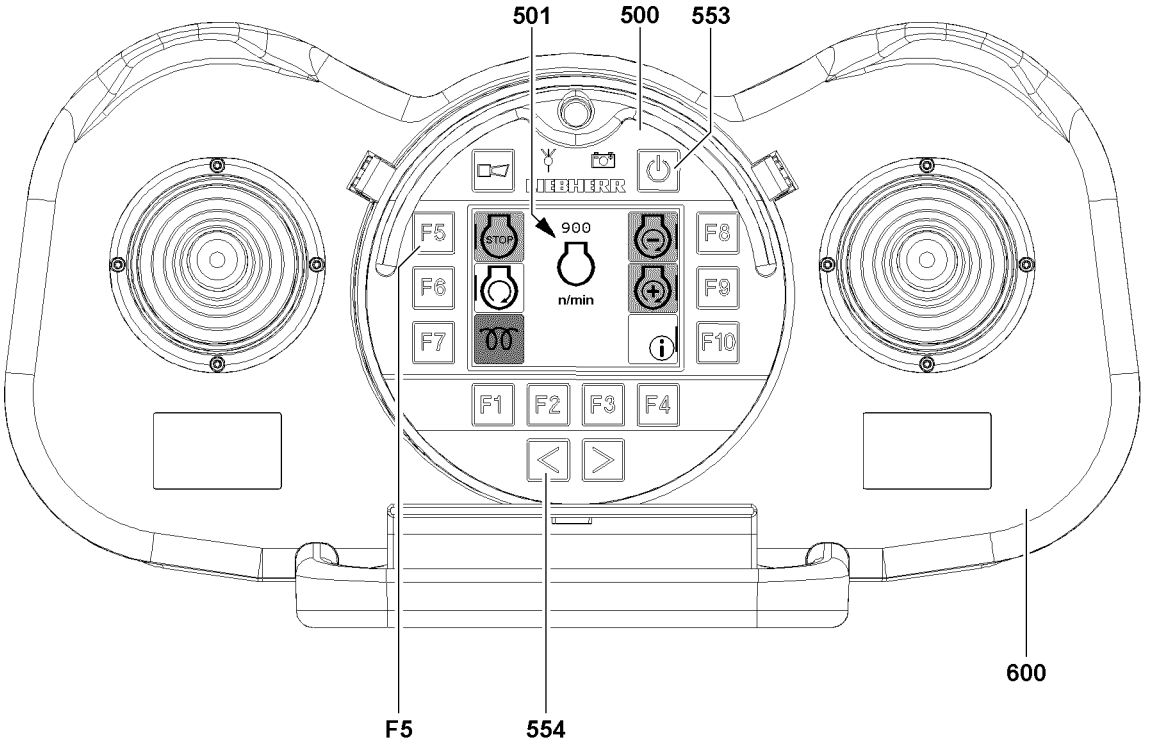
501
500
553
LIEBHERR
F5
F6
F7
STOP
900
n/min
F8
F9
F10
F1
F2
F3
F4
600
F5
554

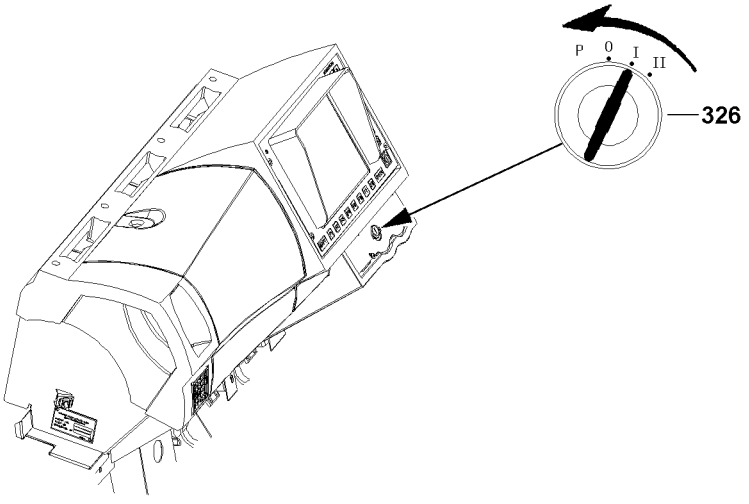
P
0
I
II
326

B113412

13.10 Turn the crane engine off

NOTICE
Operating error!
If a transmission signal between the radio remote control and the crane is interrupted, the crane engine turns off after a short time and an operating error is issued!
By turning the crane engine off, functions can be malfunctioning!
▶ Do not turn the crane engine off by interrupting the transmission signal!

13.10.1 Turning the crane engine off with the BTT

▶ Press the button **554** until the Engine operation menu is shown on the BTT display **501**, see illustration.

▶ If the icon on the function key **F5** changes to purple:
Press function key **F5** for longer than 2 second.

Result:
– The crane engine is turned off.

13.10.2 Turning the crane engine off with the ignition switch

▶ Turn the ignition switch **326** to position “0”.

Result:
– The crane engine is turned off.
– Power Save Mode is shown on the LICCON monitor, see Crane operation instructions, chapter 4.02.

▶ When the LICCON computer system is to remain active:
Turn the ignition switch **326** within 8 seconds to position “I”.

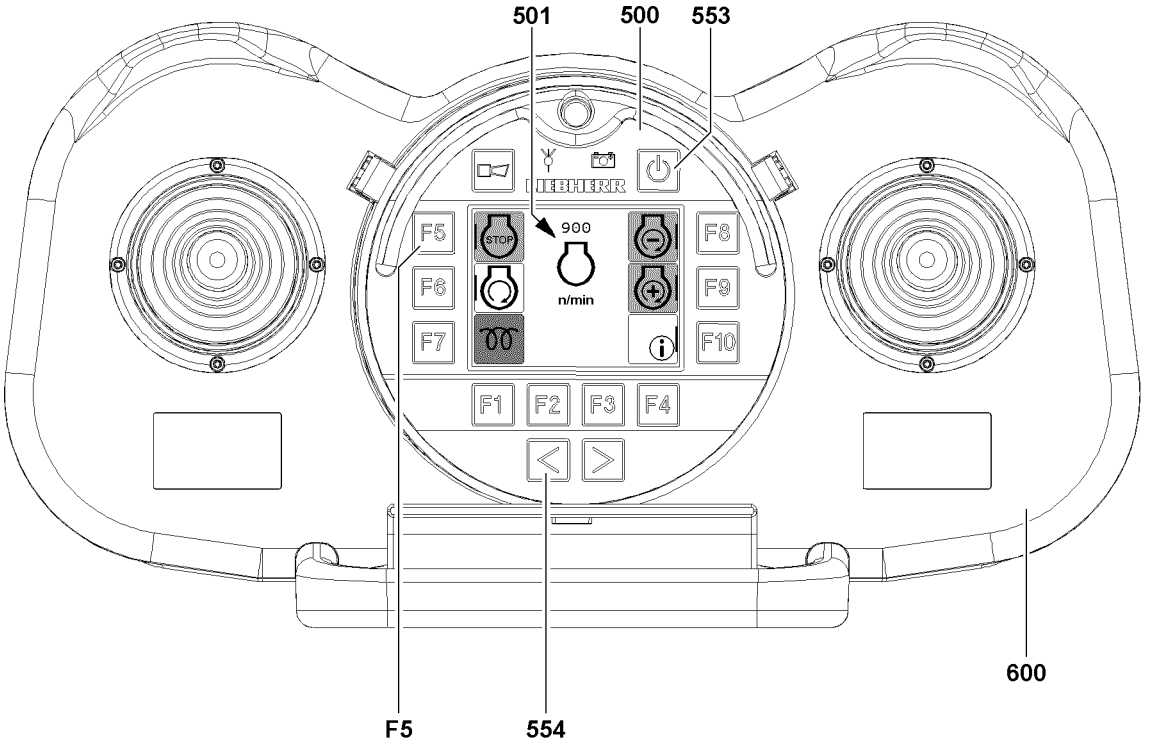
501
500
553
LIEBHERR
F5
F6
F7
STOP
900
n/min
F8
F9
F10
F1
F2
F3
F4
600
F5
554

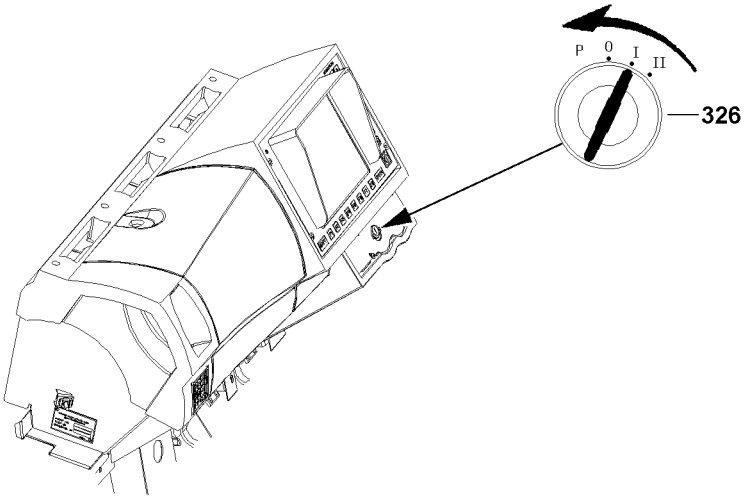
P
0
I
II
326

B113412

13.11 Ending radio operation

13.11.1 Ending with the BTT

▶ Pull the BTT **500** from the radio remote control console **600**.

Result:

– The radio operation is turned off.

▶ Insert the BTT **500** into the charging cradle.

NOTICE

Operating error!

If the button **553** is pressed to end radio operation, then the crane engine turns off after a short time. An operating error is issued!

By turning the crane engine off, functions can be malfunctioning!

▶ To end radio operation, do not use the button **553**!

▶ Store the radio remote control console **600**.

13.11.2 Ending with ignition switch in crane operator's cab

Note

▶ The crane must always be taken out of operation with the ignition switch, which was also used to put it in operation.

Make sure that the following prerequisite is met:

– The crane and the radio remote control were put into operation via the ignition switch **326**.

▶ Turn the ignition switch **326** to position “0”.

Result:

– The ignition is turned off.
– The radio operation is ended.
– Power Save Mode is shown on the LICCON monitor, see Crane operation instructions, chapter 4.02.
– The crane engine is turned off.

▶ When the LICCON computer system is to remain active:
Turn the ignition switch **326** within 8 seconds to position “I”.

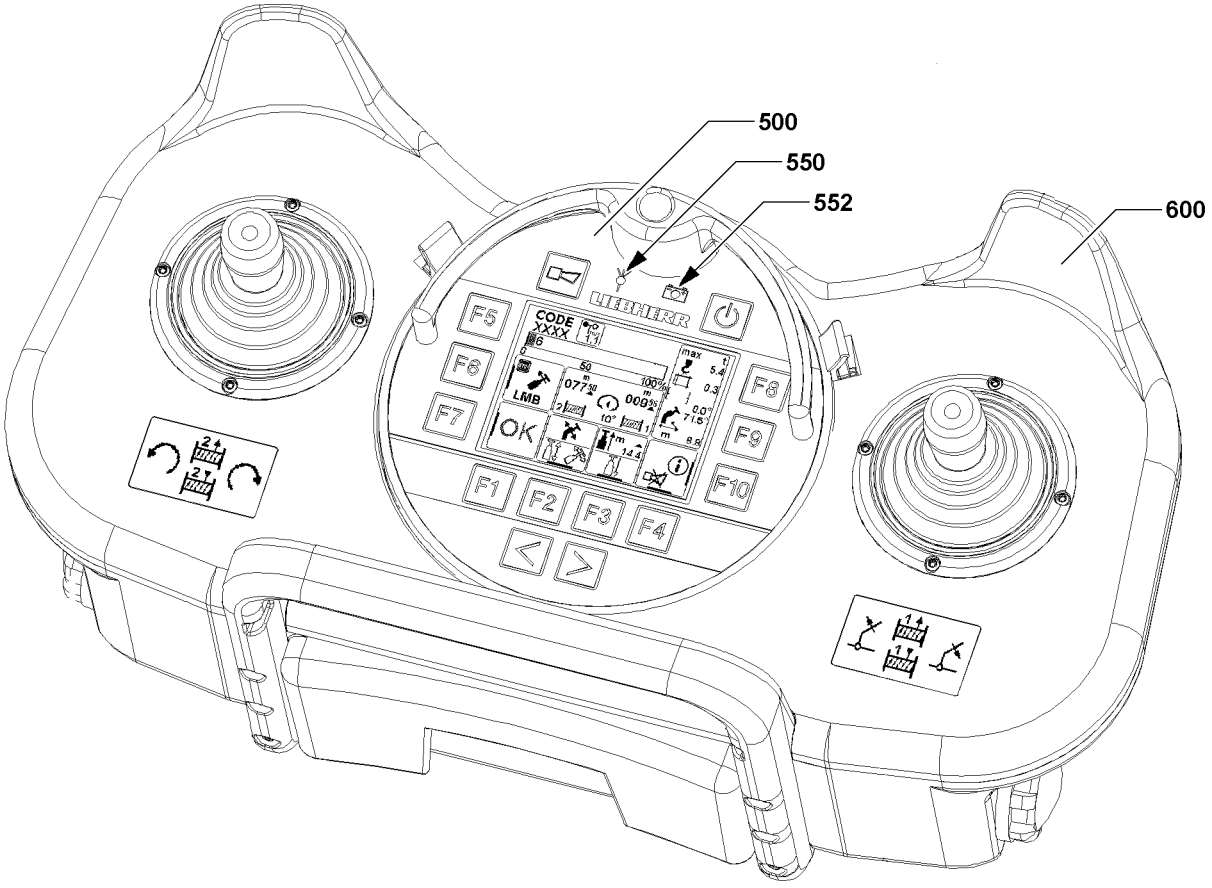
500
550
552
600
LIEBHERR
CODE
XXXX
F5
F6
F7
F8
F9
F10
F1
F2
F3
F4
OK
LMB

B113398

14 Travel operation with radio remote control

WARNING
The crane can topple over!
The retracted track reduces the stability of the crawler crane. Due to operational errors during crane operation or driving, the crawler crane can topple over and fatally injure personnel!
- ▶ Crane operation and “driving with a load on the hook” is permitted for retracted track or asymmetric track if **extra load charts** are programmed for this case!
- ▶ Crane operation and “driving with a load on the hook” is permitted for retracted track or asymmetric track if **no extra load charts** are programmed for this case is strictly prohibited!

WARNING
The crane can topple over!
If the permissible incline of the crane is exceeded, the crane can topple over!
In impermissible inclines, the LICCON computer system does **not** turn the travel operation off!
The crane operator carries the sole responsibility for possible risks or dangers when working with impermissible inclines!
- ▶ Do not exceed the permissible incline from the load chart!
- ▶ Do not exceed the permissible incline for driving the crane.
- ▶ While driving the crane, constantly monitor the incline display in the BTT display!

WARNING
Transmission signal is lost!
If the transmission signal between the radio remote control and the crane is lost, then the crane movements are turned off abruptly and uncontrolled and the actuated crane engine is turned off!
The behavior of load and crane cannot be foreseen in such a case!
Personnel can be killed or seriously injured!
This could result in property damage!
- ▶ Monitor the indicator light **550** for the transmission signal between the radio remote control and the crane!
- ▶ Select the placement location in such a way that the indicator light **550** always lights up green!
- ▶ Monitor the indicator light **552** for the charge condition of the radio remote control!

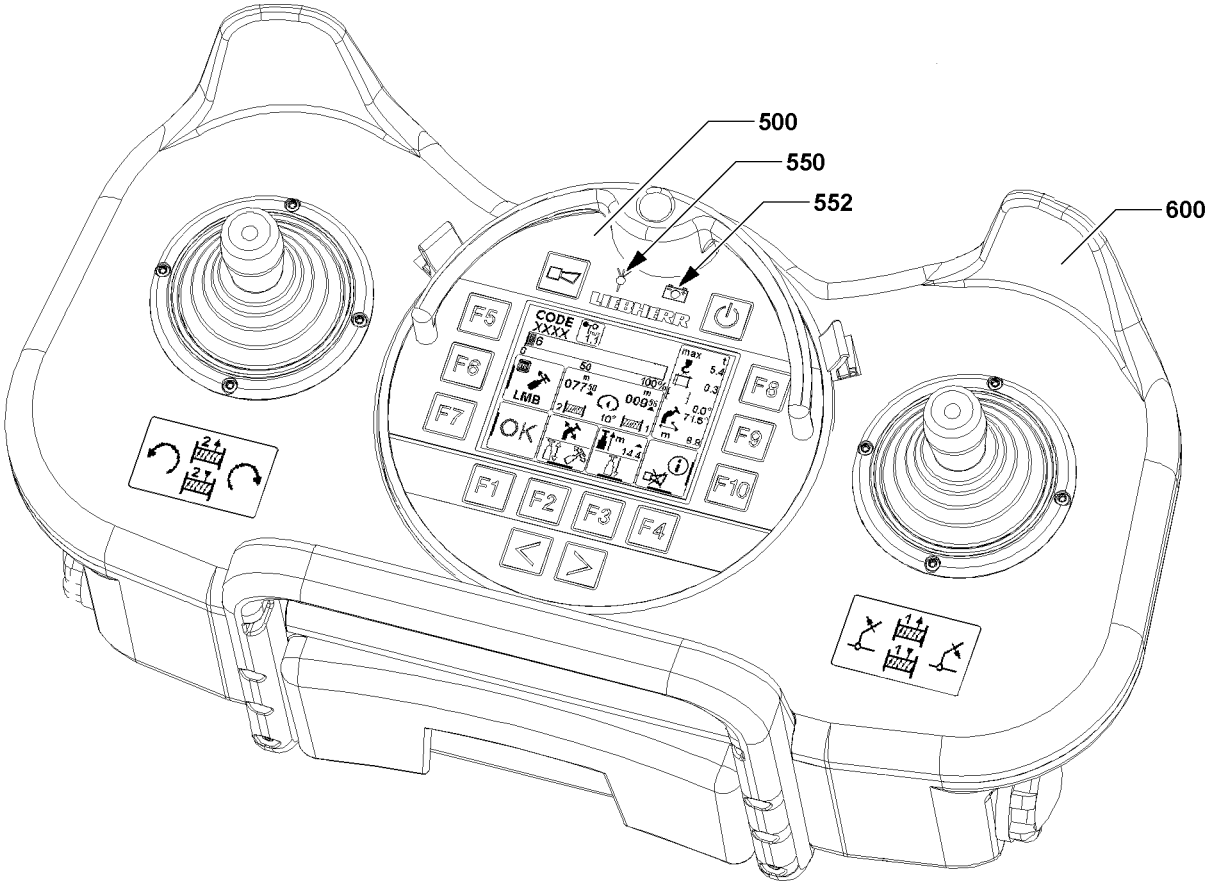
500
550
552
600
LIEBHERR
CODE
XXXX
F5
F6
F7
F8
F9
F10
F1
F2
F3
F4
OK
LMB

B113398

NOTICE
Operation of the crane by unauthorized persons!
▶ When working with the radio remote control make sure that the crane is secured to prevent operation by unauthorized personnel!

Make sure that the following prerequisites are met:
– The set up configuration of the crane has been entered correctly into the LICCON computer system.
– The radio remote control is ready for operation.
– The crawler travel gear is extended to a track with according to the load chart.
– The operating screen radio remote control is called up.
– The crane operator must select a safe location from where the travel range can be seen.
– There are no persons or objects in the danger zone.
– No personnel is in and on the crane.
– The crane cab is secured to prevent unauthorized access.

Monitor the following indicator lights:
– Indicator light **550** must light up green.
– Indicator light **552** may not light up red.

Note
Bad transmission signal
▶ The transmission signal between the radio remote control and the crane can also be established via a cable, see section “Bypassing the radio connection”.

Note
▶ To charge the rechargeable battery, remove the BTT **500** from the radio remote control console **600** and insert it into the charging cradle. The rechargeable battery is charged as soon as the indicator light **552** lights up green.

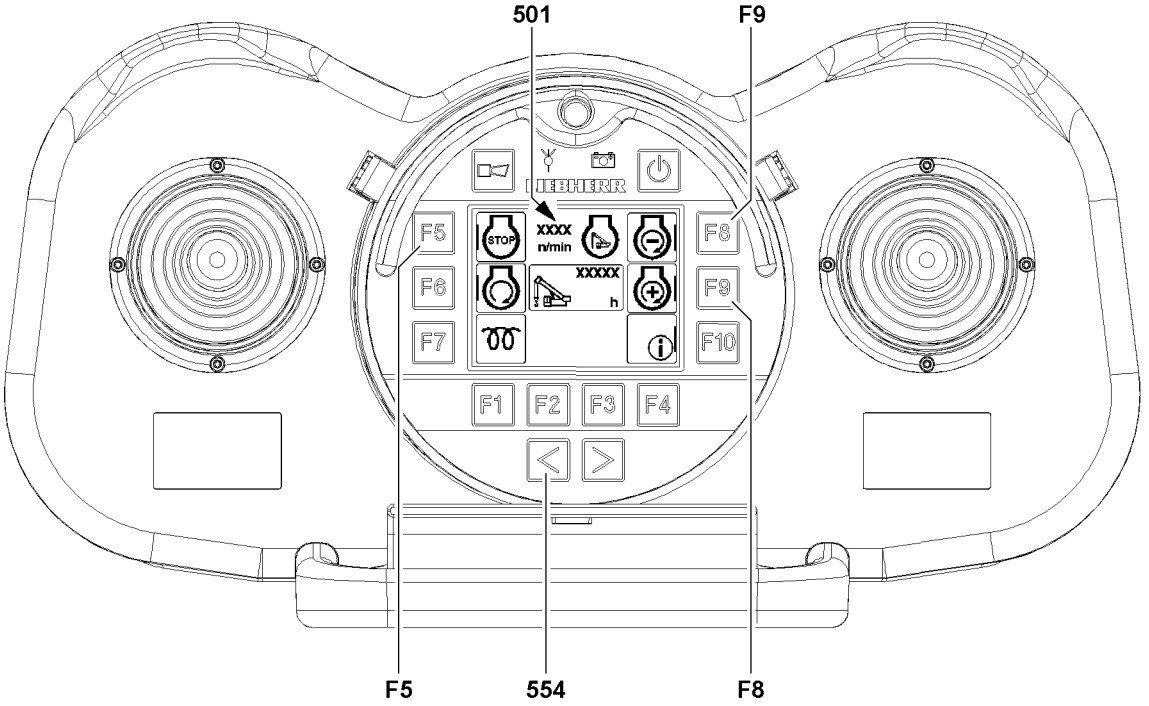
501
F9
LIEBHERR
F5
STOP
XXXX
n/min
F8
F6
XXXXX
h
F9
F7
F10
F1
F2
F3
F4
F5
554
F8

B117962

14.1 Additional settings for travel operation

14.1.1 Engine regulation

Note

▶ The crane features a variable low idling speed: If no hydraulic power is required, the engine rpm is automatically reduced to approx. 600 rpm when no further settings were made. If hydraulic power is required, the engine rpm is automatically raised to at least 850 rpm.

The rpm of the crane engine is controlled in the engine monitoring menu. For crawler operation, a certain rpm can be locked in. The current engine rpm is shown in the BTT display **501**.

▶ Press the button **554** until the Engine operation menu is shown on the BTT display **501**, see illustration.

Increase engine rpm:

▶ Press the function key **F9**.

Decrease engine rpm:

▶ Press the function key **F8**.

Reset settings in the engine operation menu:

▶ Press the function key **F5** momentarily (less than 0.5 seconds):

Turn the crane engine off:

▶ Press function key **F5** for longer than 2 second.

14.1.2 Slewing gear brake

The control of the slewing gear brake is automatic in radio operation:

– If the manual control levers are not actuated, then the slewing gear brake is applied.
– If the manual control levers are actuated, then the slewing gear brake is released.

Note

▶ The slewing gear brake can only controlled manually from the crane cab.
▶ The slewing gear can be set to coasting only from the crane cab.

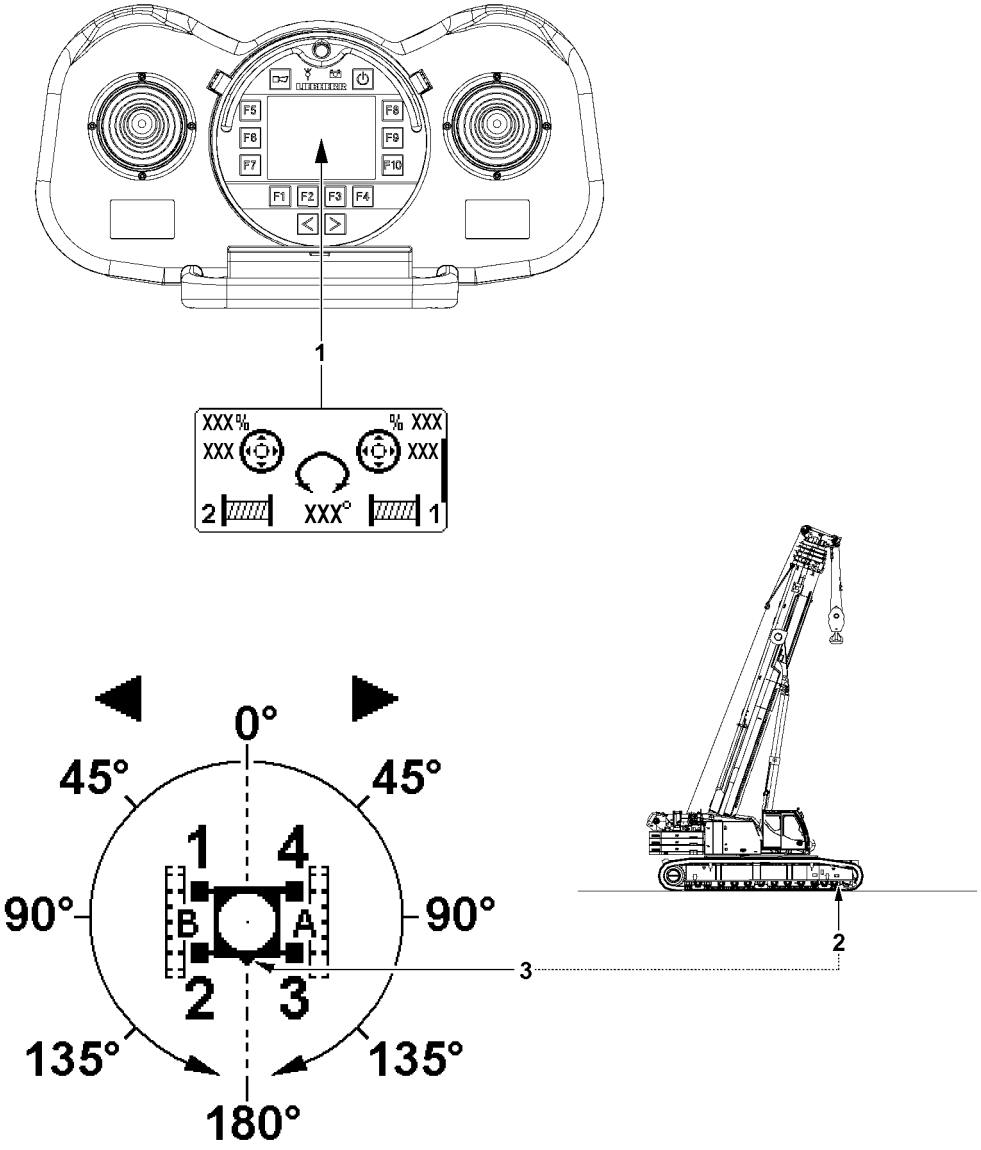
F5
F6
F7
F8
F9
F10
F1
F2
F3
F4
1
XXX %
% XXX
XXX
XXX
2
XXX°
1
0°
45°
45°
90°
90°
135°
135°
180°
1
4
B
A
2
3
3
2

B117963

14.2 Assignment of the crane superstructure to the travel direction

The travel direction of the crane is continuously assigned to the position of the crane superstructure. The position of the crane superstructure to the crawler travel gear can be read with one glance on the winch display / slewing range icon **1**:

– At display value 180° in winch display / slewing range icon **1** the crane superstructure is exactly in position “forward”, see illustration.

  Note: The front on the crawler travel gear is always on the side where the chain tension device **2** for the crawler carriers is located. In the LICCON view of the crawler travel gear, the front side is marked by a directional triangle **3**.

– At display value 0° in the winch display / slewing range icon **1** the crane superstructure is exactly in position “to the rear”.

– The apex for the assignment of the position of the crane superstructure is at display value 90° in the winch display / slewing range icon **1**. At display values from 0° to 90° the crane superstructure is positioned “to the rear”. At display values from 90° to 180° the crane superstructure is positioned “to the front”.

– If the crane superstructure is turned over / under the display value 90° in the winch display / slewing range icon **1**, then the running direction of the crawler carriers changes to actuation direction of the manual control levers. The change happens only when the manual control levers are in position 0 (not actuated).

– If the crane superstructure is turned while driving over / under the display value 90° in the winch display / slewing range icon **1**, then the running direction of the crawler carriers and therefore the travel direction remains until the respective manual control lever is “returned” to zero position.

  The new assignment of the travel direction becomes only active after the manual control levers are the next time in position 0 (not actuated).

WARNING

Change of travel direction after turning the crane superstructure!

If the crane superstructure is turned while driving over / under the display value 90° in the winch display / slewing range icon **1**, then the running direction of the crawler carriers only remains until the respective manual control lever is “returned” to zero position. If the manual control lever is actuated again in the same direction, the crane is driven into the opposite direction.

▶ Pay attention to the assignment of the crane superstructure to the travel direction when turning the crane superstructure while driving the crane.

▶ After turning the crane superstructure, check the travel route in both directions for persons and obstacles. Initiate travel movements with upmost caution.

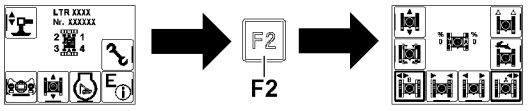

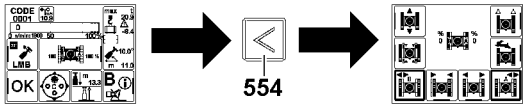

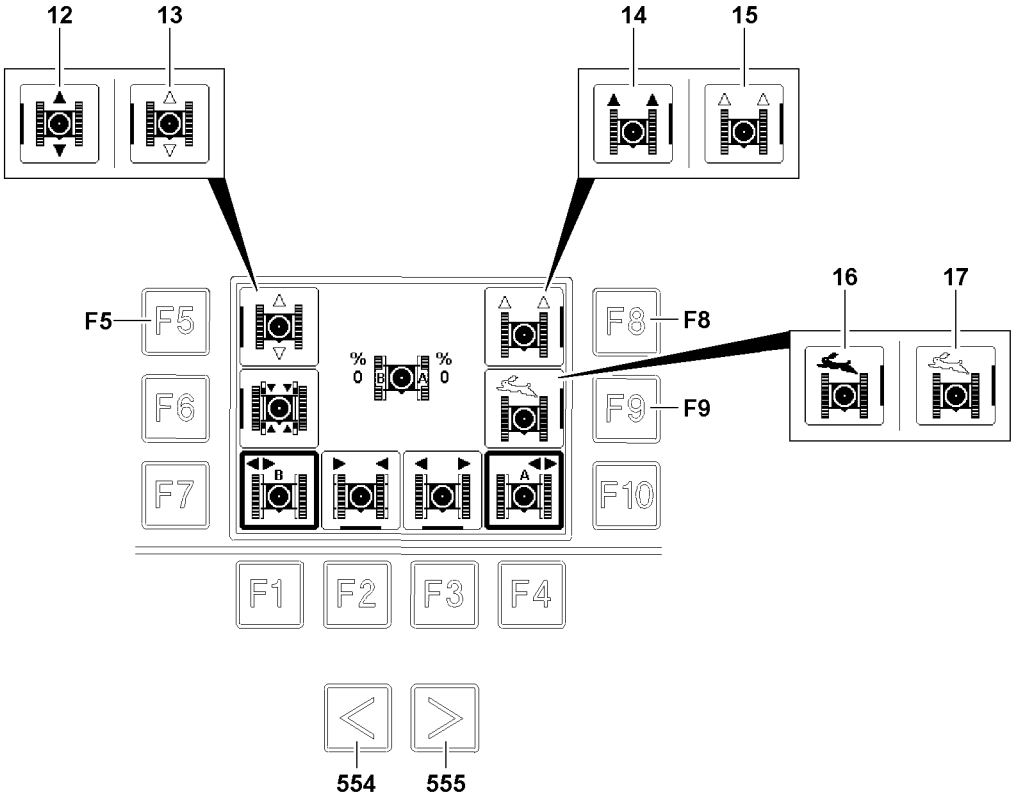

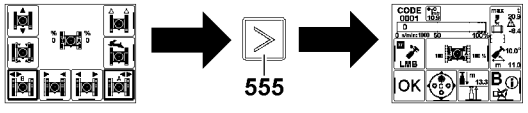

B117964

14.3 Turning crawler operating modes on / off

The crawler crane can be driven with various crawler operating modes:

– Normal travel crawler operation
  • Classic crawler operation, every track is controlled via a separate manual control lever
– Parallel travel crawler operation
  • Steering movement and travel direction are controlled by the same manual control lever

To obtain a higher travel speed, the rapid gear can be activated.

Note

▶ The crawler operating modes can only be added / turned off in the crawler travel gear menu.

14.3.1 Calling up the Crawler travel gear menu

Call up the crawler travel gear menu from the start menu:

▶ Press the function key **F2**.

Call up the crawler travel gear menu from the operating screen radio remote control:

▶ Press the button **554**.

▶ Press the button **555**.

14.3.2 Turning normal travel crawler operation on / off

The normal travel crawler operation is the prerequisite to drive the crane and must generally be added.

▶ Press the function key **F5** and add / turn off normal travel crawler operation.

Result:

– Normal travel crawler operation added: Icon **12** appears.
– Normal travel crawler operation turned off: Icon **13** appears.

14.3.3 Turning parallel travel crawler operation on / off

Make sure that the following prerequisite is met:

– Normal travel crawler operation is activated
– The tracks are at a standstill.

▶ Press the function key **F5** and add / turn off parallel travel crawler operation.

Result:

– Parallel travel crawler operation added: Icon **14** appears.
– Parallel travel crawler operation turned off: Icon **15** appears.

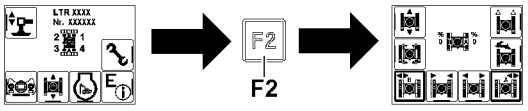

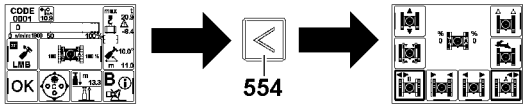

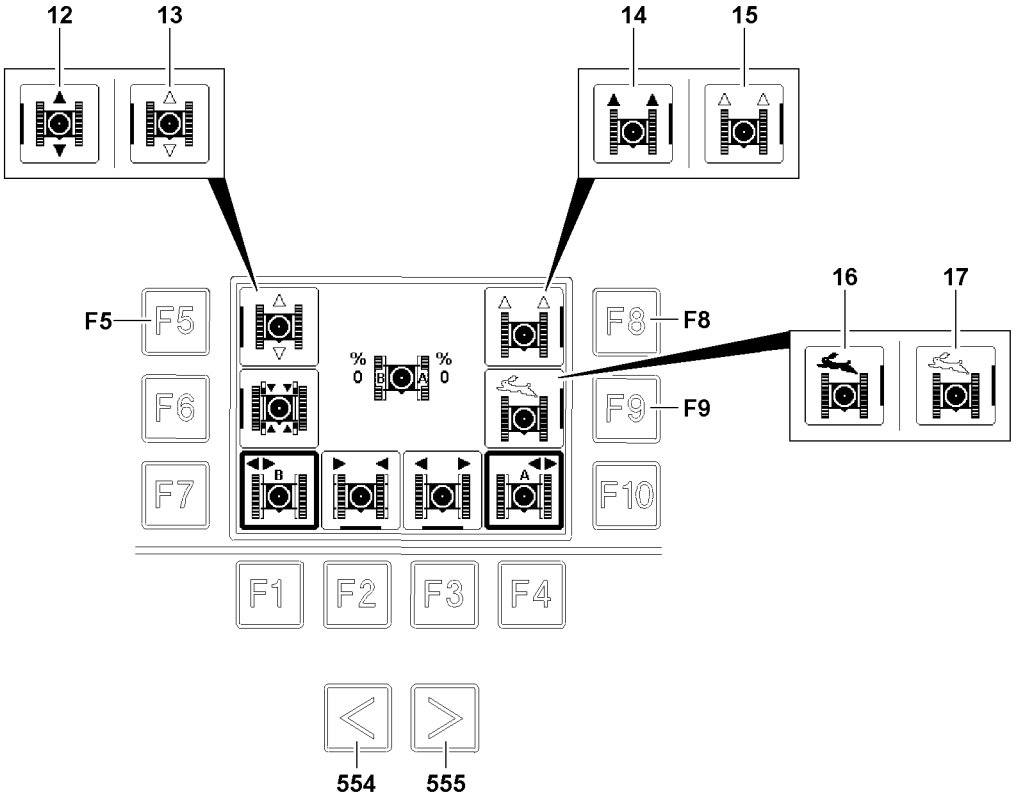

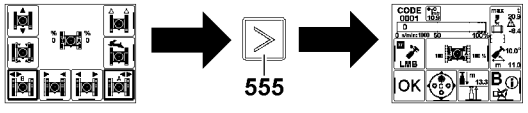

B117964

14.3.4 Turning the rapid gear on / off

WARNING
The crane can topple over!
If the crane is driven in rapid gear with a load, then the crane can topple over. Personnel can be severely injured or killed.
▶ Observe the permissible highest speeds for driving the crawler crane!

Make sure that the following prerequisite is met:
– Normal travel crawler operation is activated
or
– the parallel travel crawler operation is turned on.

▶ Press the function key **F9** and add / turn off parallel travel crawler operation.

Result:
– Rapid gear crawler operation is added: Icon **16** appears.
– Rapid gear crawler operation is turned off: Icon **17** appears.

14.3.5 Closing the Crawler travel gear menu

Close the crawler travel gear menu and call up the operating screen radio remote control:
▶ Press the button **555**.

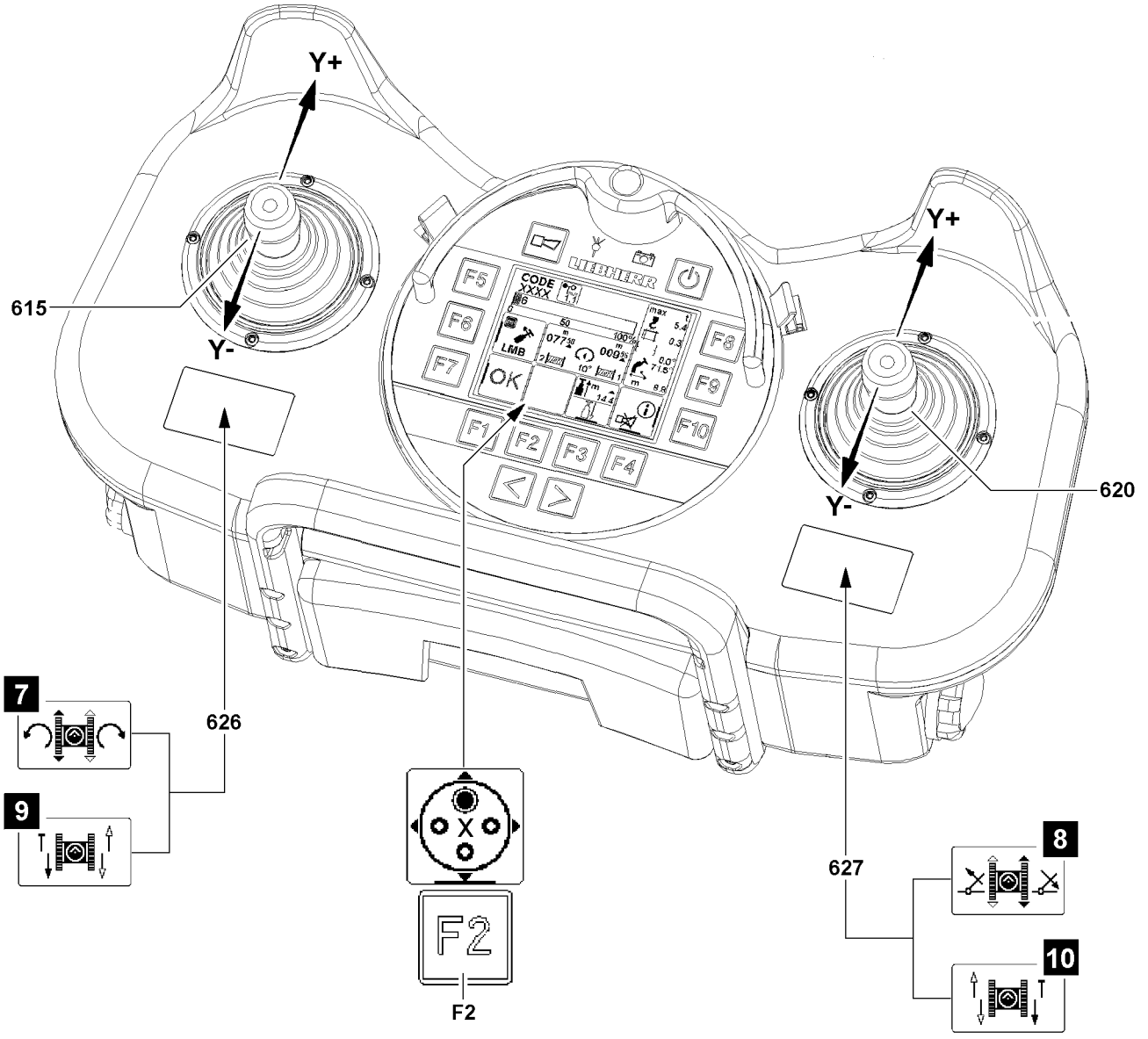

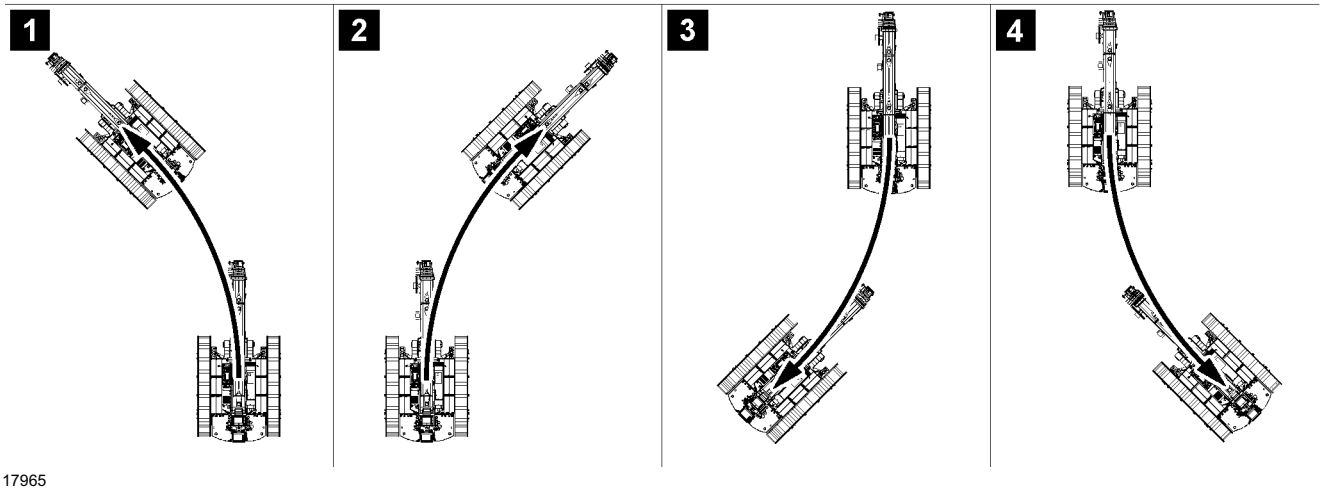

B117965

14.4 Driving the crawler crane in normal travel

NOTICE
Increased wear on the crawler travel gear!
When steering in small radii, high friction forces are created which lead to increased wear.
- ▶ If possible, always drive in curves with large radii.
- ▶ Avoid turning over a stationary track, if possible.
- ▶ Avoid counterrotation, if possible.

Make sure that the following prerequisites are met:
- A travel direction change may only be done from the standstill.
- The desired rpm of the crane engine is set.
- Normal travel crawler operation is selected.
- The function assignment illustration **7**, illustration **8** or illustration **9** and illustration **10** is shown.

Note
- ▶ The function assignment is set by the manual control lever assignment. When several manual control lever assignments are possible, changed in the crane operating screen via function key **F2**.

14.4.1 Driving forward

- ▶ Deflect the left manual control lever **615** and the right manual control lever **620** synchronously forward (direction **Y+**).

Result:
- The crane drives forward.
- The further the manual control lever is deflected, the faster the crane movement.

14.4.2 Driving in reverse

- ▶ Deflect the left manual control lever **615** and the right manual control lever **620** synchronously backward (direction **Y-**).

Result:
- The crane drives backward.
- The further the manual control lever is deflected, the faster the crane movement.

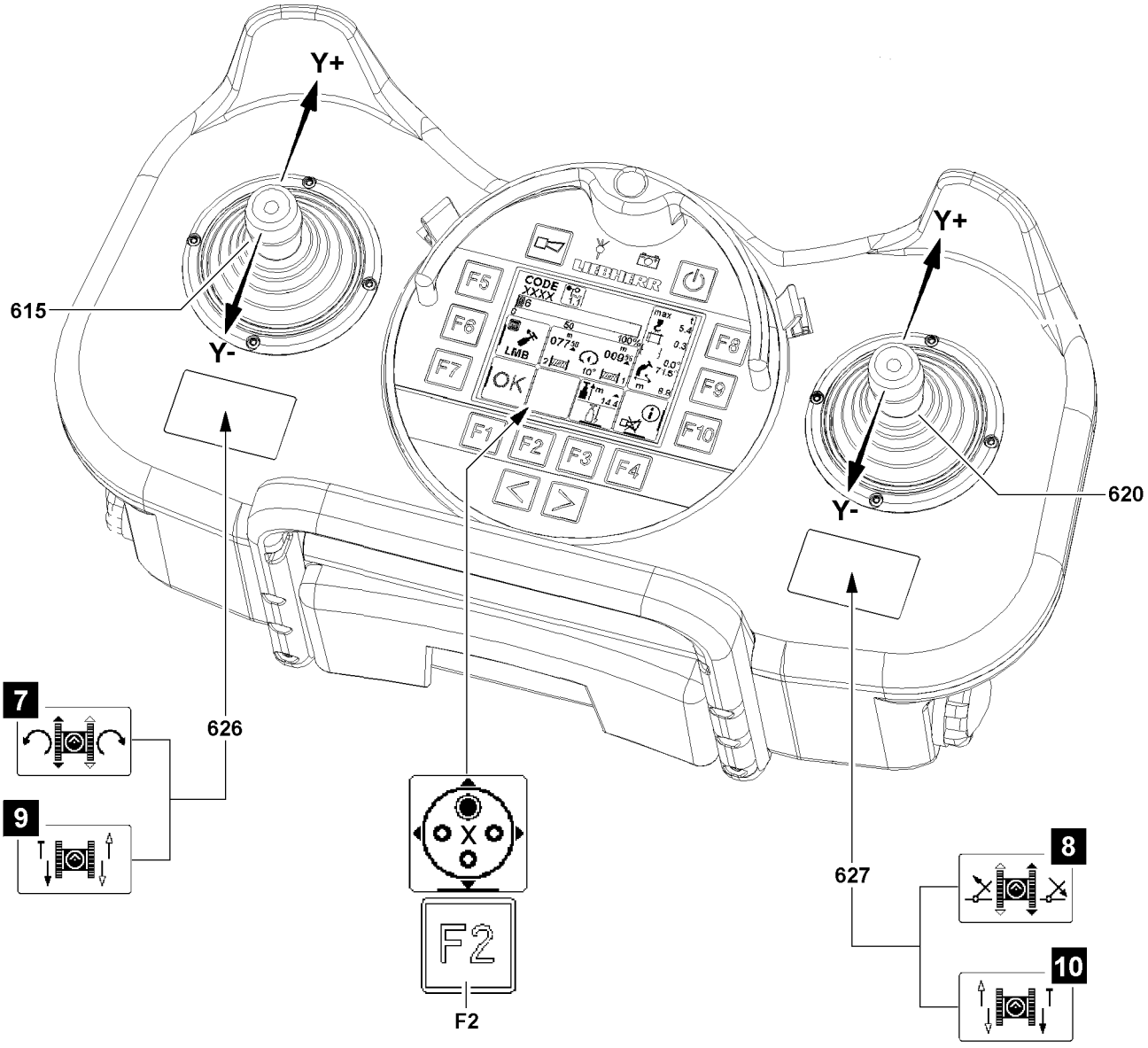

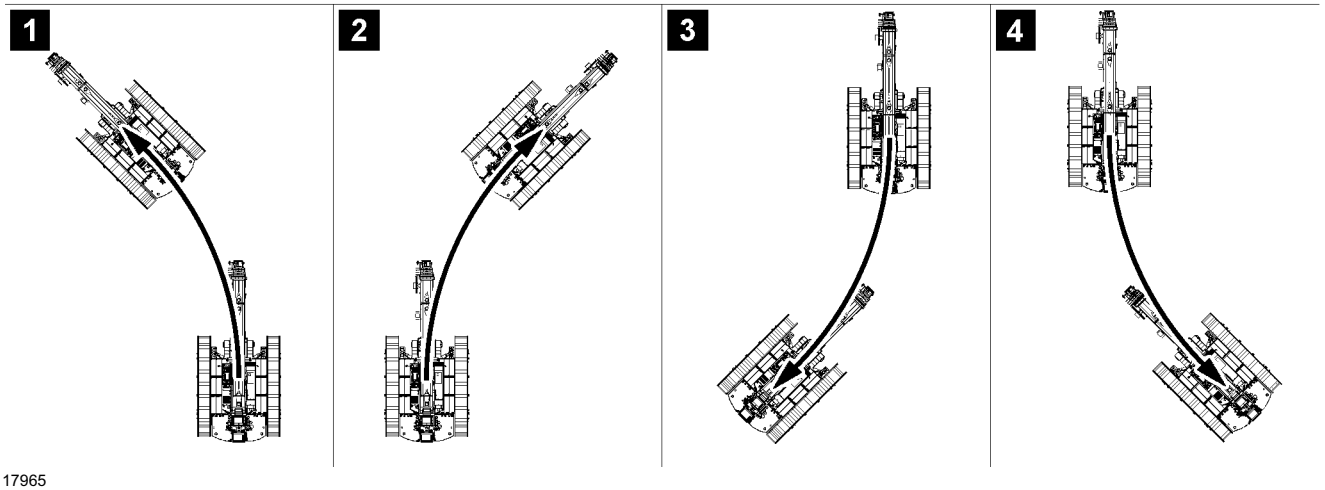

B117965

14.4.3 Driving in curves forward to the left

See illustration **1**.

▶ Actuate the left manual control lever **615** reduced to the front (direction **Y+**) and the right manual control lever **620** stronger to the front (direction **Y+**).

Result:

– The crane drives a forward curve to the left.
– The further the manual control lever is deflected, the faster the crane movement.

14.4.4 Driving in curves forward to the right

See illustration **2**.

▶ Actuate the left manual control lever **615** stronger to the front (direction **Y+**) and the right manual control lever **620** reduced to the front (direction **Y+**).

Result:

– The crane drives a forward curve to the right.
– The further the manual control lever is deflected, the faster the crane movement.

14.4.5 Driving in curves reverse to the left

See illustration **3**.

▶ Actuate the left manual control lever **615** reduced to the rear (direction **Y-**) and the right manual control lever **620** stronger to the rear (direction **Y-**).

Result:

– The crane drives a reverse curve to the left.
– The further the manual control lever is deflected, the faster the crane movement.

14.4.6 Driving in curves reverse to the right

See illustration **4**.

▶ Actuate the left manual control lever **615** stronger to the rear (direction **Y-**) and the right manual control lever **620** reduced to the rear (direction **Y-**).

Result:

– The crane drives a reverse curve to the right.
– The further the manual control lever is deflected, the faster the crane movement.

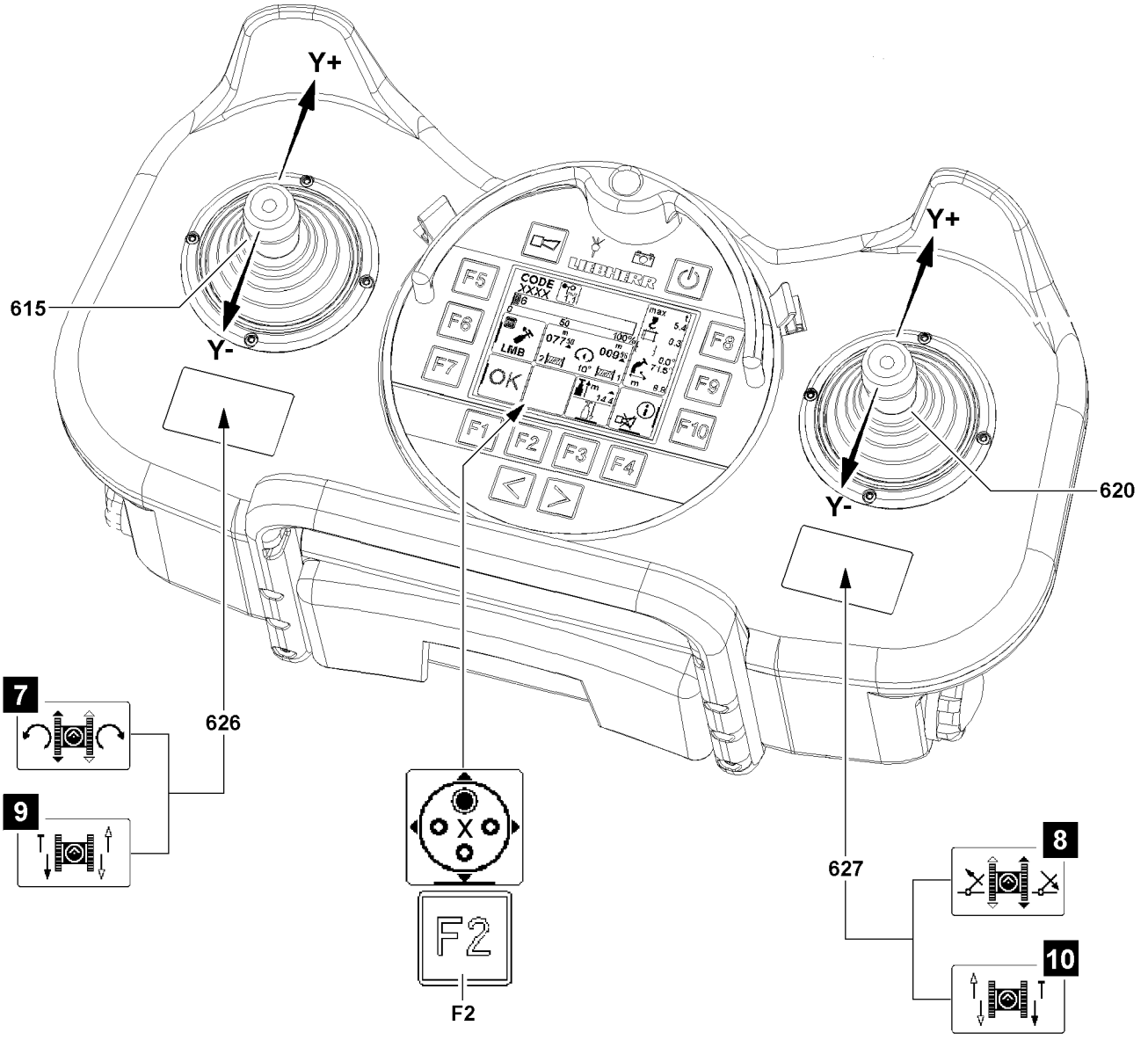

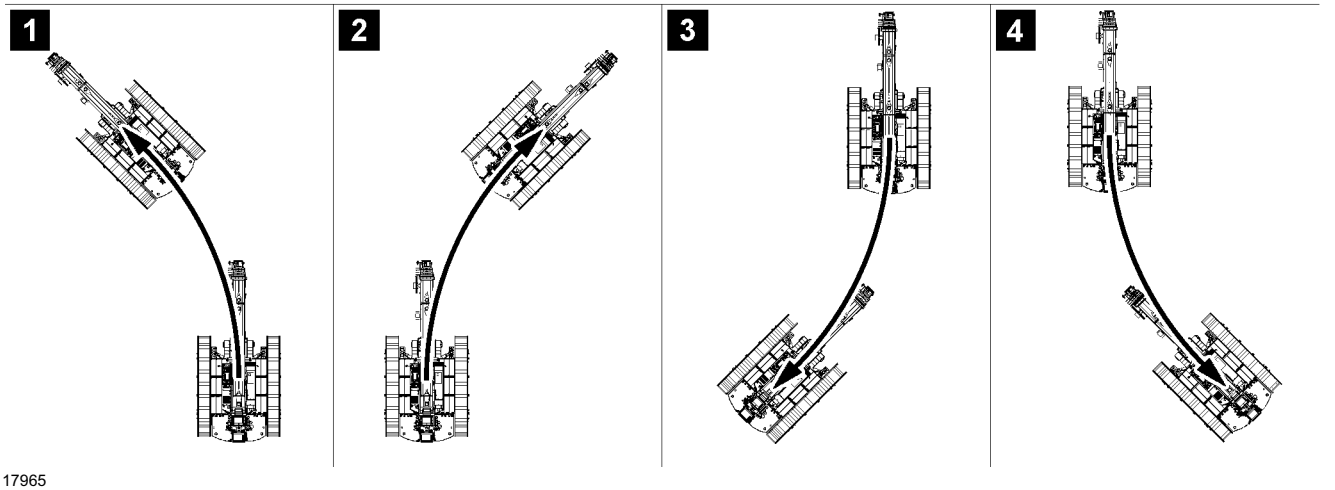

B117965

14.4.7 Turning forward to the left

▶ Move the right manual control lever **620** forward (direction **Y+**).

Result:

– The crane is turned forward to the left.
– The further the manual control lever is deflected, the faster the crane movement.

14.4.8 Turning forward to the right

▶ Move the left manual control lever **615** forward (direction **Y+**).

Result:

– The crane is turned forward to the right.
– The further the manual control lever is deflected, the faster the crane movement.

14.4.9 Turning backward to the left

▶ Move the right manual control lever **620** backward (direction **Y-**).

Result:

– The crane is turned backward to the left.
– The further the manual control lever is deflected, the faster the crane movement.

14.4.10 Turning backward to the right

▶ Move the left manual control lever **615** backward (direction **Y-**).

Result:

– The crane is turned backward to the right.
– The further the manual control lever is deflected, the faster the crane movement.

14.4.11 Counterrotation to the left (counterclockwise direction)

▶ Actuate the left manual control lever **615** to the rear (direction **Y-**) and the right manual control lever **620** to the front (direction **Y+**).

Result:

– The crane is turned to the left.
– The further the manual control lever is deflected, the faster the crane movement.

14.4.12 Counterrotation to the right (clockwise direction)

▶ Actuate the left manual control lever **615** to the front (direction **Y+**) and the right manual control lever **620** to the rear (direction **Y-**).

Result:

– The crane is turned to the right.
– The further the manual control lever is deflected, the faster the crane movement.

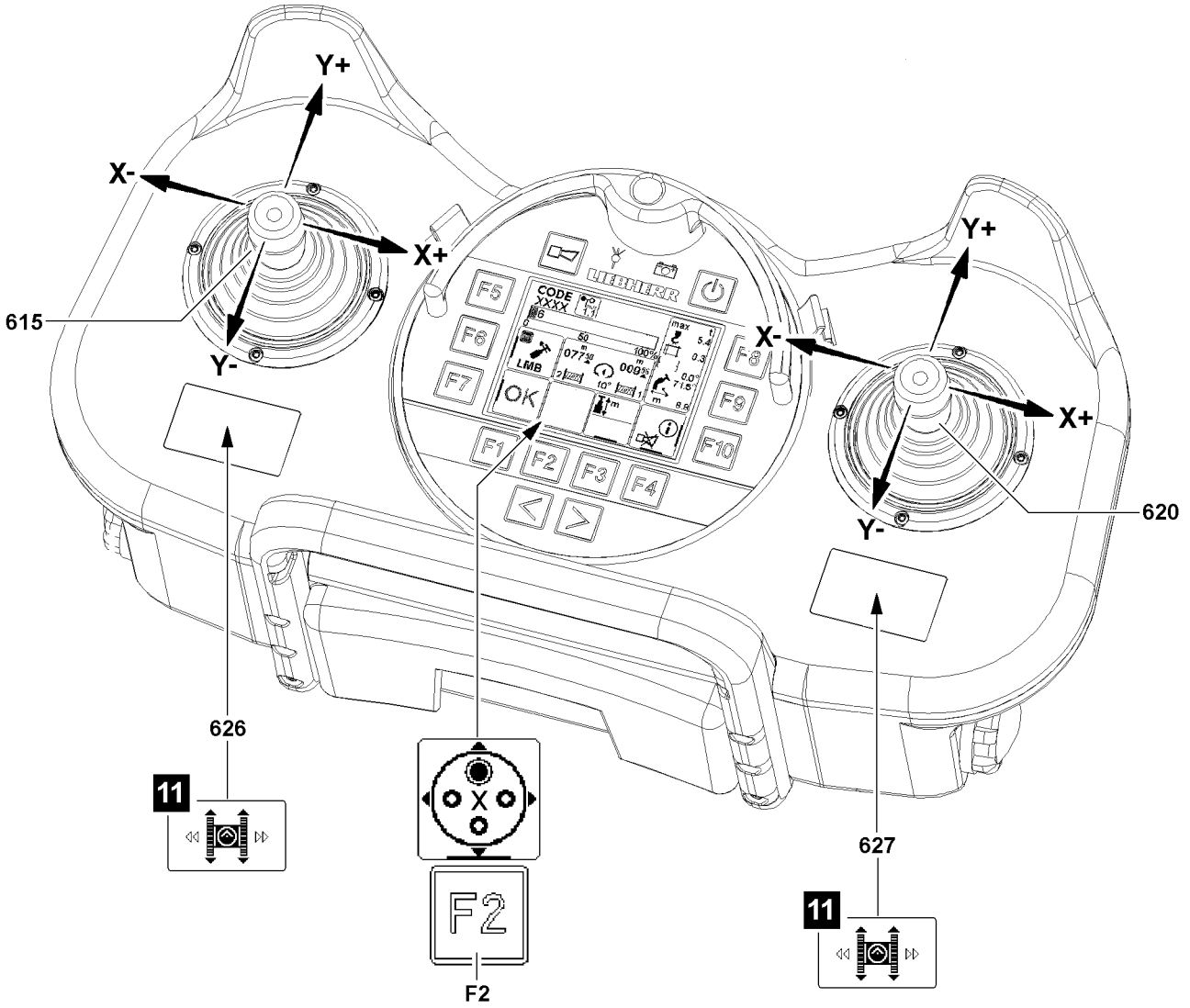
Y+
X-
X+
Y-
615
620
626
627
11
F2
LIEBHERR
CODE
OK
LMB
F1
F2
F3
F4
F5
F6
F7
F8
F9
F10

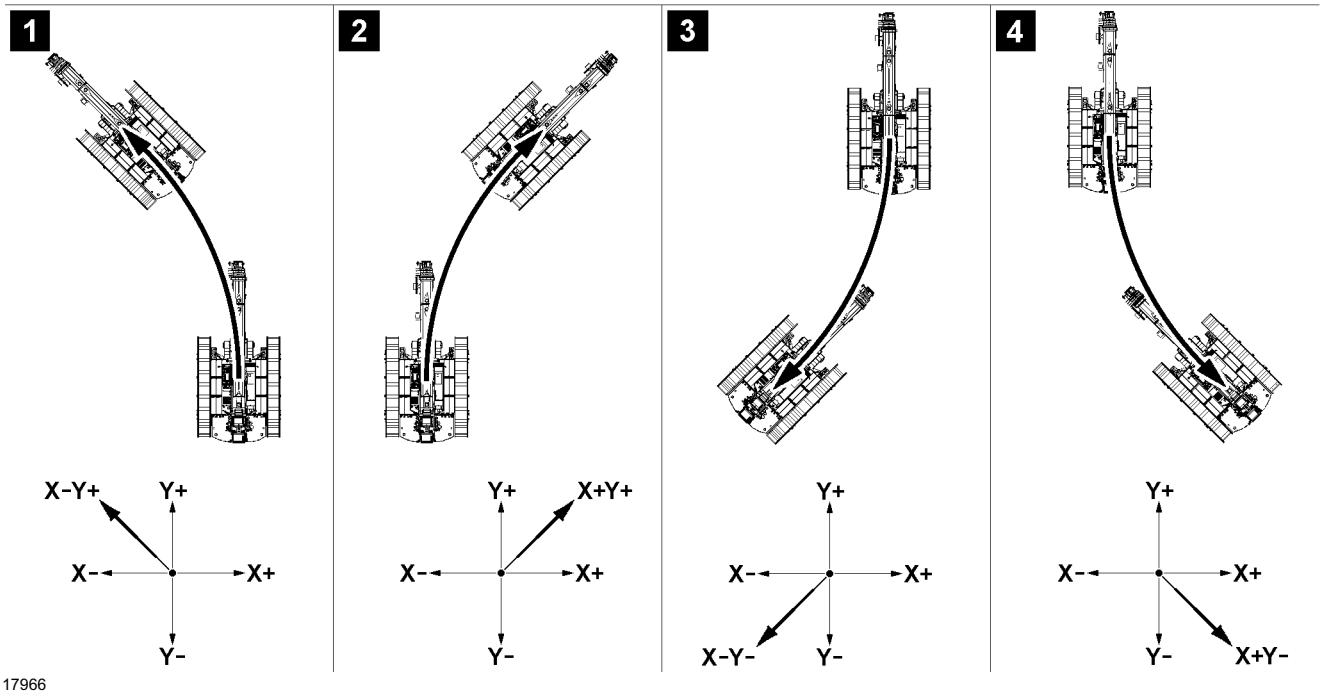
1
2
3
4
X-Y+
Y+
X-
X+
Y-
X+Y+
X-Y-
X+Y-

B117966

14.5 Driving the crawler crane in parallel travel

Make sure that the following prerequisites are met:
- The desired rpm of the crane engine is set.
- The parallel travel crawler operation is selected.
- The function assignment illustration **11** is shown in a graphic display.

NOTICE
Increased wear on the crawler travel gear!
When steering in small radii, high friction forces are created which lead to increased wear.
▶ If possible, always drive in curves with large radii.
▶ Avoid turning over a stationary track, if possible.

14.5.1 Determine the manual control lever for parallel travel

The function assignment is set by the manual control lever assignment. When several manual control lever assignments are possible, changed in the crane operating screen via function key **F2**.
Active manual control lever in parallel travel crawler operation:
- Function assignment illustration **11** is shown in the graphic display **626**: Manual control lever **615** is active.
- Function assignment illustration **11** is shown in the graphic display **627**: Manual control lever **620** is active.

To change the manual control lever assignment:
▶ Press the function key **F2**.

14.5.2 Driving forward

▶ Deflect the manual control lever with function assignment illustration **11** forward (direction **Y+**).
Result:
- Both tracks move forward.
- The further the manual control lever is deflected, the faster the crane movement.

14.5.3 Driving in reverse

▶ Deflect the manual control lever with function assignment illustration **11** backward (direction **Y-**).
Result:
- Both tracks move backward.
- The further the manual control lever is deflected, the faster the crane movement.

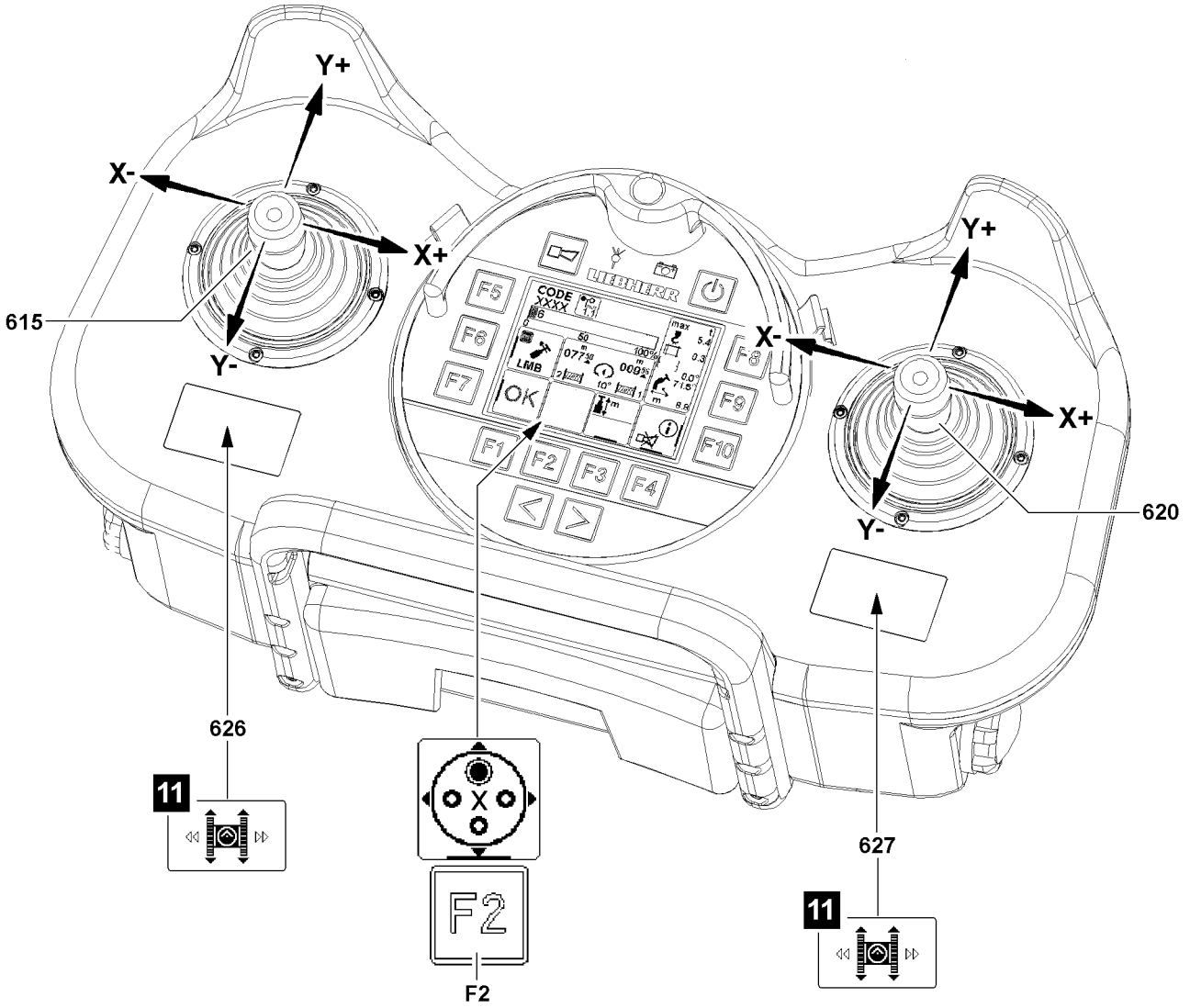
Y+
X-
X+
Y-
615
620
626
627
11
F2
LIEBHERR
CODE
XXXX
OK
LMB
F1
F2
F3
F4
F5
F6
F7
F8
F9
F10

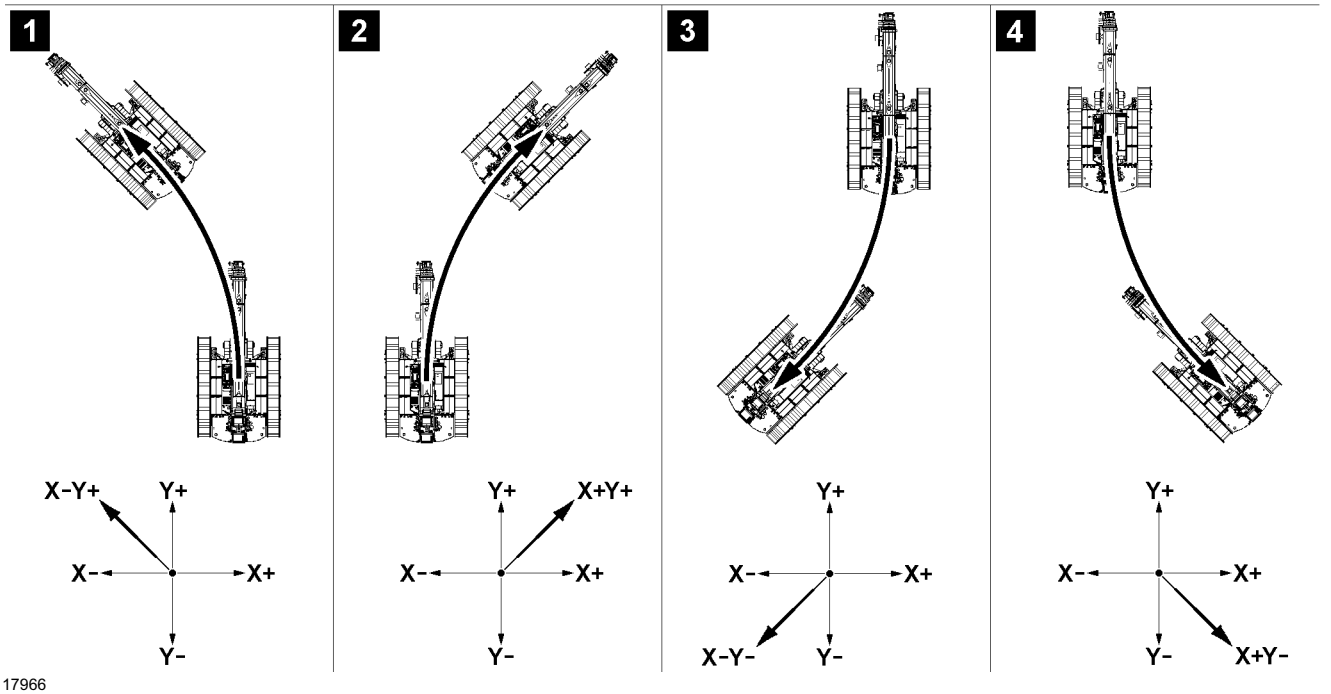
1
2
3
4
X-Y+
Y+
X-
X+
Y-
X+Y+
X-Y-
X+Y-

B117966

14.5.4 Driving in curves forward to the left

See illustration **1**.

▶ Deflect the manual control lever with function assignment illustration **11** forward to the left (direction **X-Y+**).

Result:

– The crane drives a forward curve to the left.
– The further the manual control lever is deflected, the faster the crane movement.

Note

Changing the curve radius

▶ If the manual control lever is more and more deflected forward (direction **Y+**) then the curve radius increases.
▶ If the manual control lever is more and more deflected to the left (direction **X-**) then the curve radius decreases.

14.5.5 Driving in curves forward to the right

See illustration **2**.

▶ Deflect the manual control lever with function assignment illustration **11** forward to the right (direction **X+Y+**).

Result:

– The crane drives a forward curve to the right.
– The further the manual control lever is deflected, the faster the crane movement.

Note

Changing the curve radius

▶ If the manual control lever is more and more deflected forward (direction **Y+**) then the curve radius increases.
▶ If the manual control lever is more and more deflected to the right (direction **X+**) then the curve radius decreases.

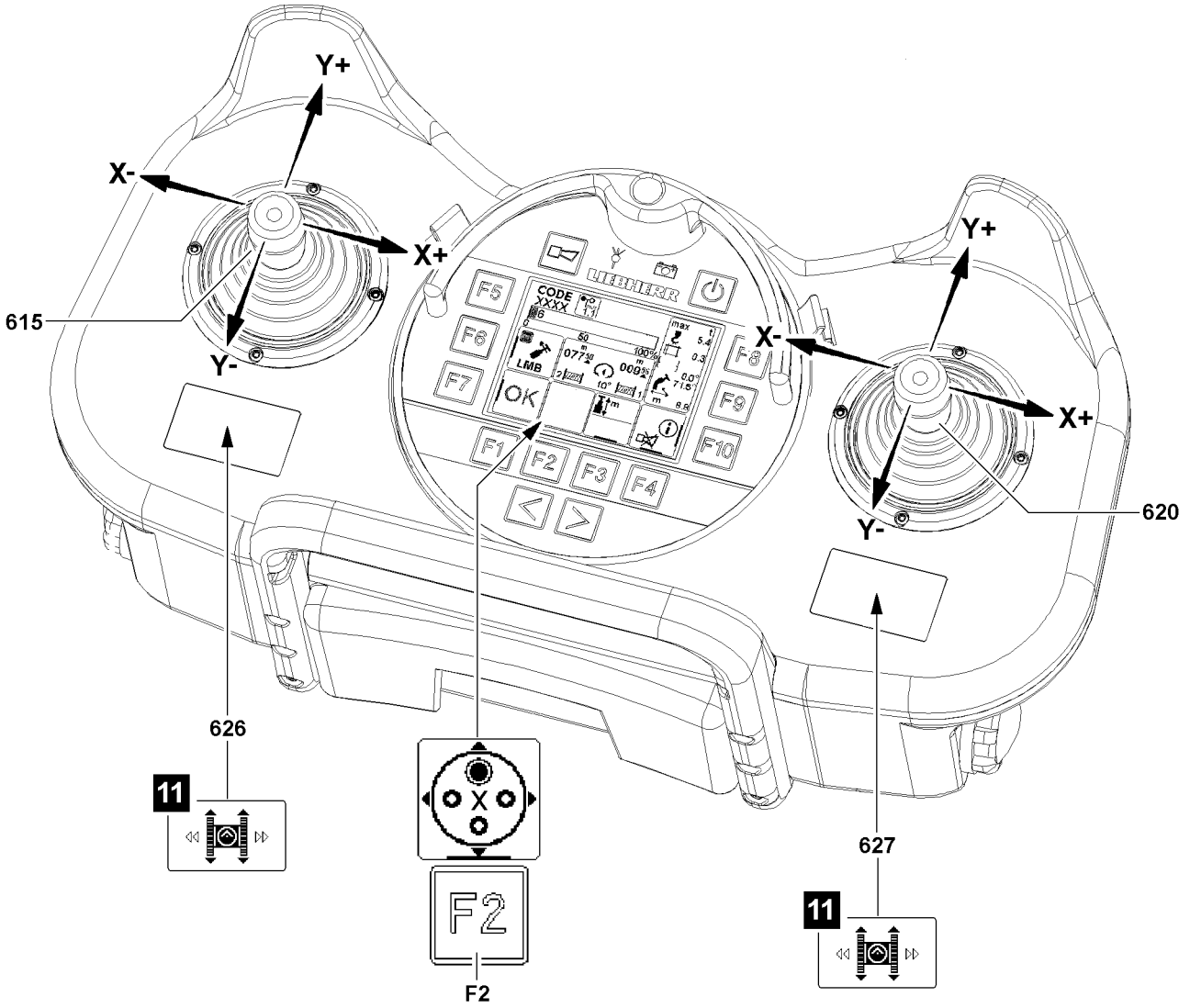
Y+
X-
X+
Y-
615
620
626
627
11
F2
LIEBHERR
CODE
XXXX
F5
F6
F7
F8
F9
F10
F1
F2
F3
F4
OK
LMB

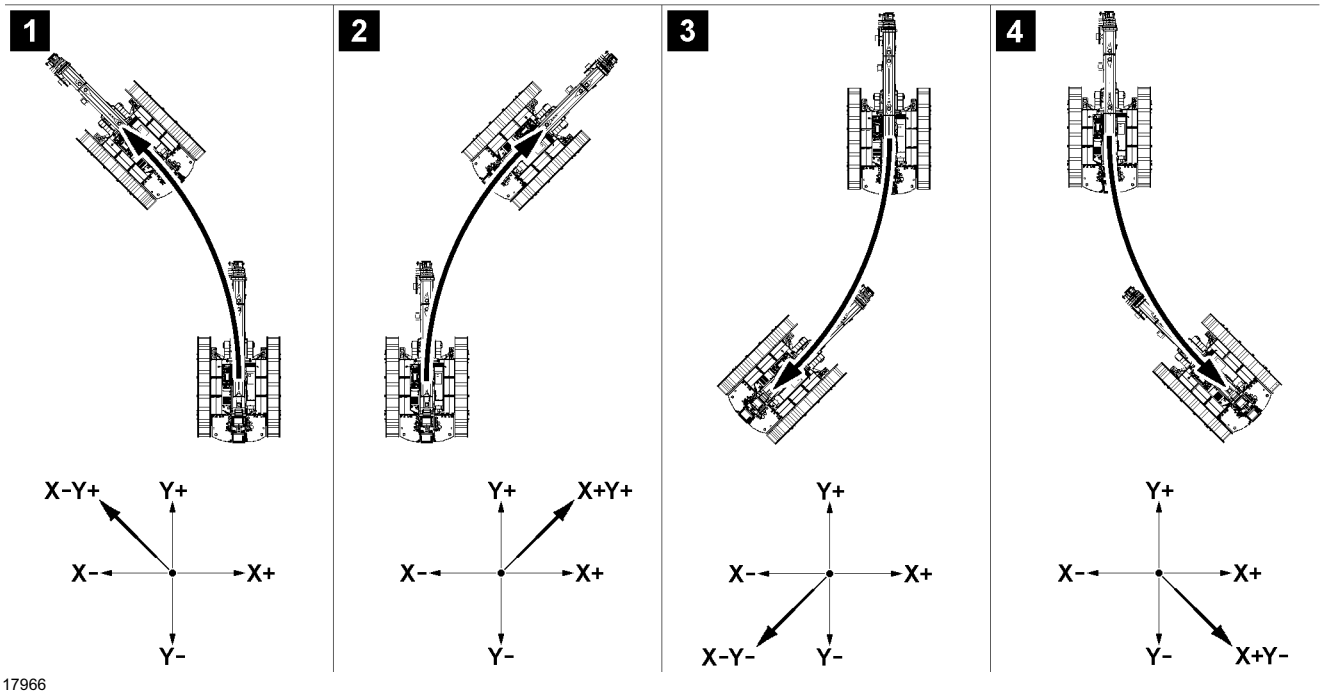
1
2
3
4
X-Y+
Y+
X-
X+
Y-
X+Y+
X-Y-
X+Y-

B117966

14.5.6 Driving in curves reverse to the left

See illustration **3**.

▶ Deflect the manual control lever with function assignment illustration **11** backward to the left (direction **X-Y-**).

Result:

– The crane drives a reverse curve to the left.
– The further the manual control lever is deflected, the faster the crane movement.

Note

Changing the curve radius

▶ If the manual control lever is more and more deflected backward (direction **Y-**) then the curve radius increases.
▶ If the manual control lever is more and more deflected to the left (direction **X-**) then the curve radius decreases.

14.5.7 Driving in curves reverse to the right

See illustration **4**.

▶ Deflect the manual control lever with function assignment illustration **11** backward to the right (direction **X+Y-**).

Result:

– The crane drives a reverse curve to the right.
– The further the manual control lever is deflected, the faster the crane movement.

Note

Changing the curve radius

▶ If the manual control lever is more and more deflected backward (direction **Y-**) then the curve radius increases.
▶ If the manual control lever is more and more deflected to the right (direction **X+**) then the curve radius decreases.

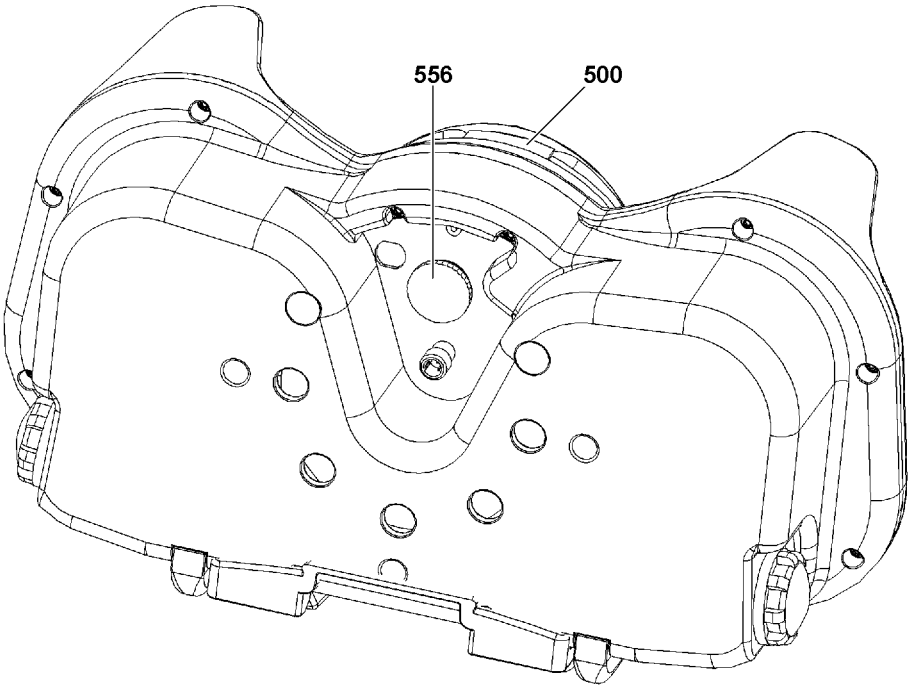
556
500

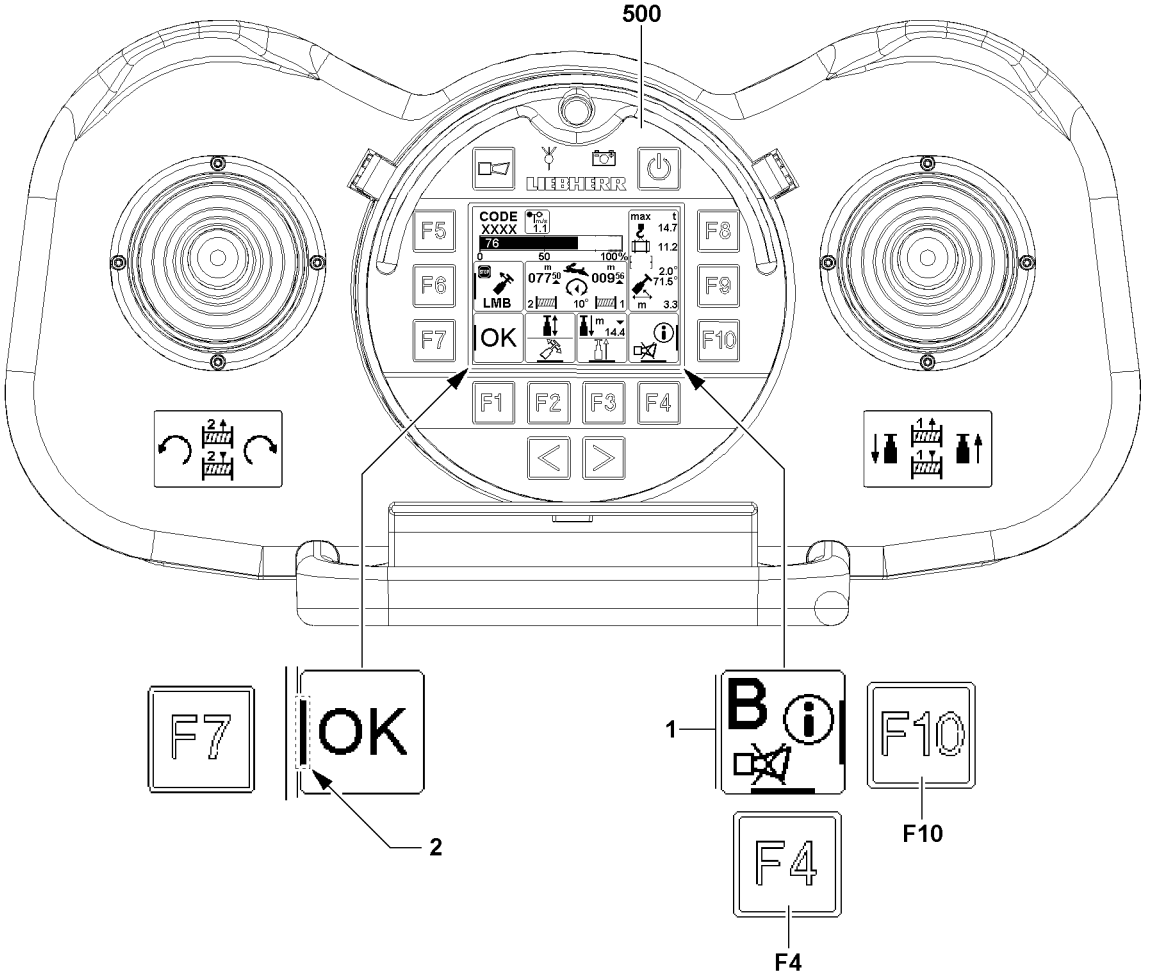
500
LIEBHERR
F5
F6
F7
F8
F9
F10
F1
F2
F3
F4
CODE
XXXX
LMB
OK
F7
OK
2
1
B
F10
F10
F4
F4

B113380

15 Measures in case of problems

WARNING
Danger of accident!
- ▶ If the crane operator changes it placement location, then crane operation via radio remote control must be interrupted (deactivate radio remote control)!
- ▶ Never put down the radio remote control unsupervised!
- ▶ In case of an emergency, in case of all problems in the working range of the crane or in case of a technical defect of the radio remote control, take the system out of operation immediately by pressing the emergency stop switch **556** on the rear of the BTT **500**!

Note
- ▶ Icons are assigned to the individual function keys. A small bar **2** marks the assigned button, see example of illustration for function key **F7**.

15.1 An error message occurs

If an event occurs which leads to the display of an error message, a “B” or “E” are shown on icon **1**, see illustration.

WARNING
Danger of accident!
If the displayed errors in the icon **1** are ignored, there is a risk of accidents!
- ▶ Take the crane out of service and remedy the cause of the error!
- ▶ Do not put the crane back into operation before the cause of the error has been remedied!

▶ Press the function key **F4**.

Result:
– Acoustical warning signal of the radio remote control, which can be shut off in case of operating / system errors is shut off.

Note
- ▶ For severe errors, the acoustical warning signal of the radio remote control can be turned off after a waiting period (up to six seconds)!

▶ Press the function key **F10**.

Result:
– The “Test system” program (error determination screen) is called up.

Note
- ▶ To be able to find the cause of the problem, the error or errors must be read in the error determination screen / error stack of the BTT **500**, see Diagnostics manual.

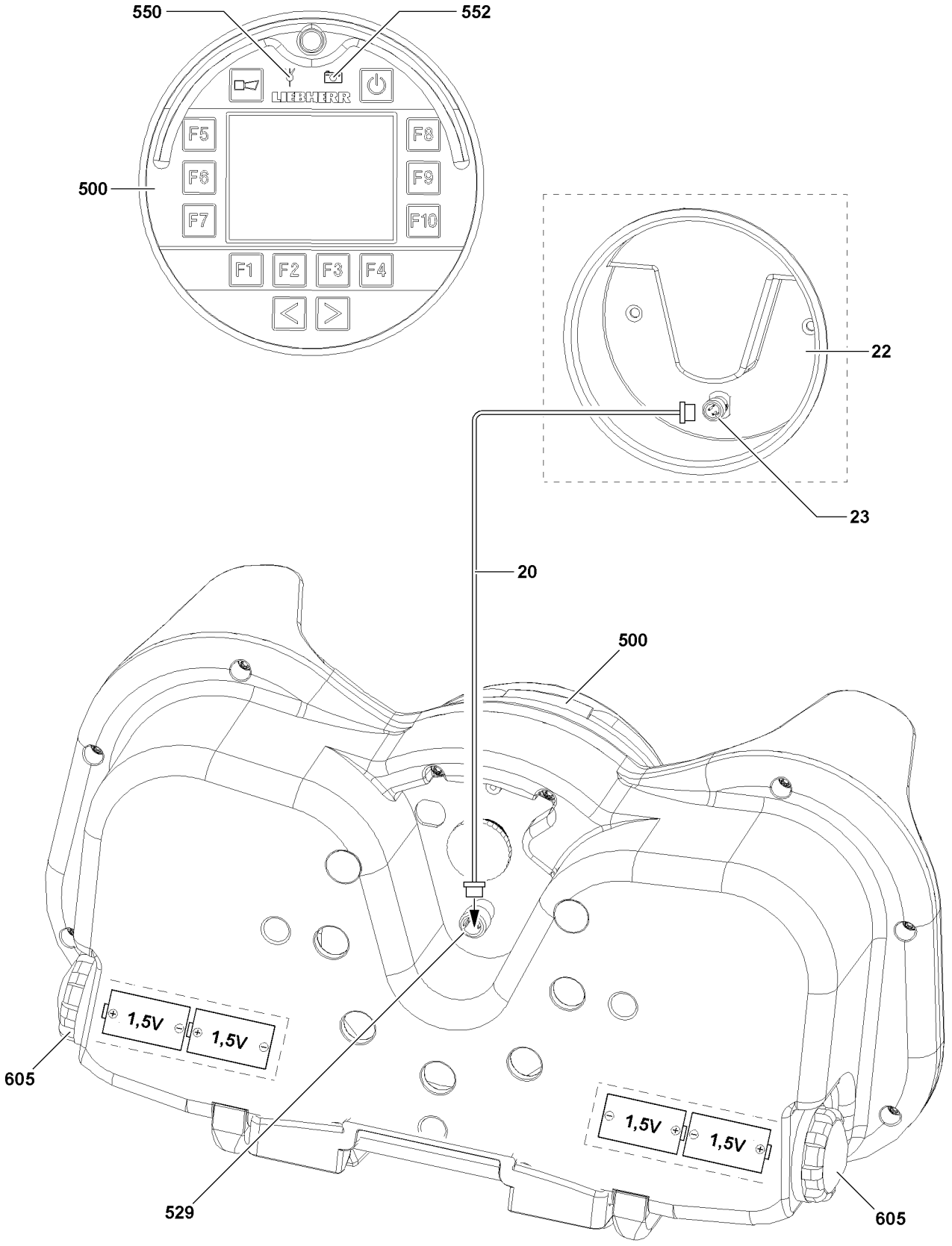
550
552
LIEBHERR
F5
F6
F7
F8
F9
F10
F1
F2
F3
F4
500
22
23
20
500
1,5V
1,5V
605
1,5V
1,5V
529
605

B113381

15.2 The displays remain dark

Note

▶ The LED **552** shows the charge condition of the BTT **500** and thereby the radio remote control.

▶ If the LED **552** does not light up after turning the BTT **500** on:
Insert the BTT **500** into the charging cradle **22**.

or

■ Place four charged batteries into the battery compartments **605**, see illustration.

NOTICE

Defective batteries!

Acid can emerge from defective batteries!

Emerging acid can cause damage on the radio remote control!

▶ Remove the batteries in time!

▶ Remove the batteries as soon as the supply of the radio remote control can be handled again via the BTT **500**.

Note

Usable batteries

▶ Four commercially available 1.5 Volt batteries (“Type C” or “Baby” or “L14/LR14”).

▶ Dimensions: Diameter 27 mm, height 50 mm

▶ If the LED **552** does not light up after inserting the BTT **500** into the charging cradle **22** or after inserting the batteries into the battery compartments **605**:
Contact Liebherr Service to determine the cause of the problem and further procedure.

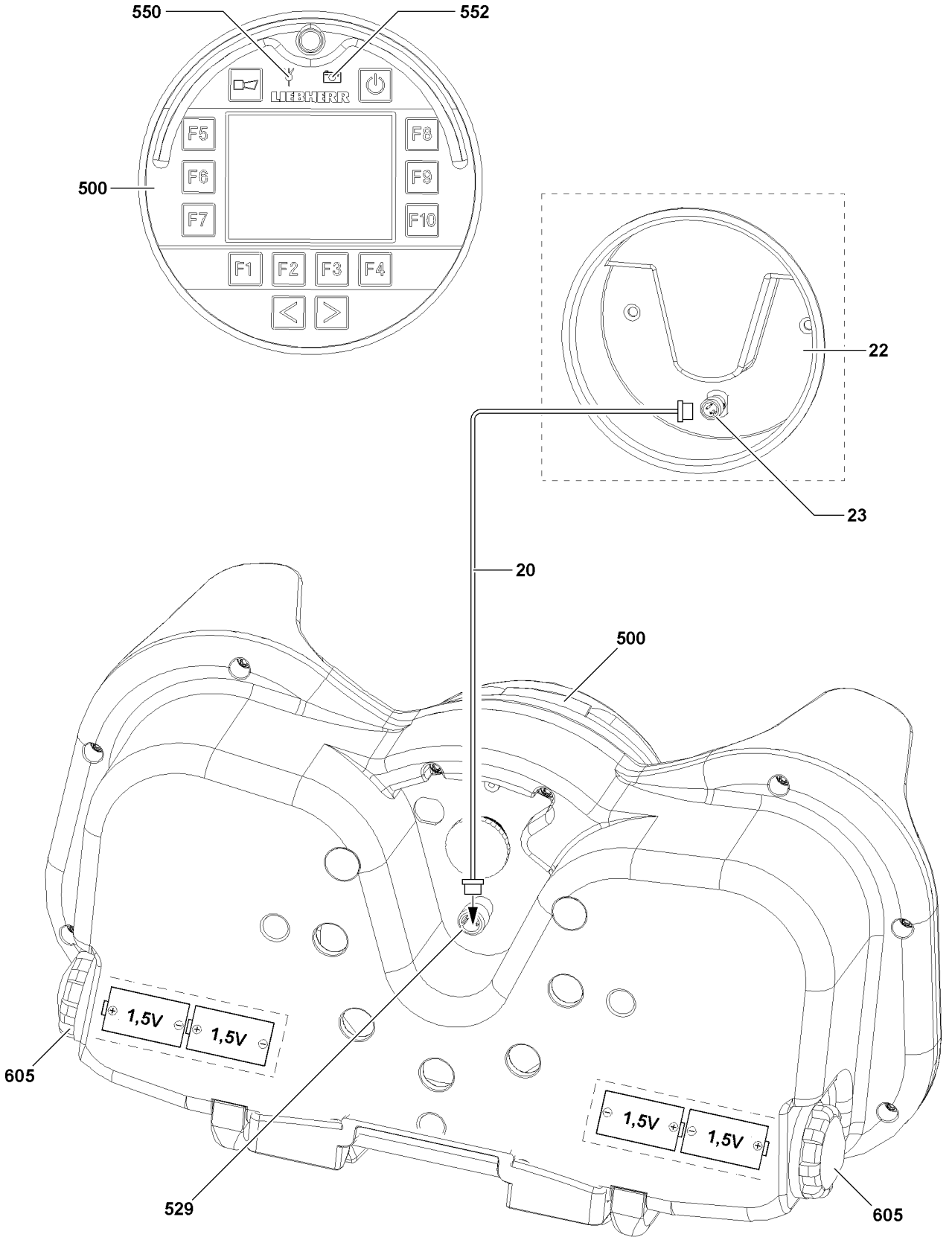
550
552
LIEBHERR
F5
F6
F7
F8
F9
F10
F1
F2
F3
F4
500
22
23
20
500
1,5V
1,5V
605
1,5V
1,5V
529
605

B113381

15.3 Is the radio connection faulty

If the radio connection to the BTT **500** is faulty or interrupted (Indicator light transmission signal **550** lights up red), then it can be bypassed with line **20**, see section “Bypassing the radio connection”.
The radio connection to the BTT **500** can become faulty or interrupted through the following occurrences:

– By interference signals from a nearby radio tower.
– The radio module on the BTT **500** or on the BTB is defective.
– The rechargeable battery in the BTT **500** is discharged.
– Due to bad selection of location by the operator.

15.4 Radio connection interrupted

Make sure that the following prerequisites are met:

– The line **20** to bypass the radio connection is on hand.
– The BTT **500** is turned on.
– The caps on the plug connection **23** and the plug connection **529** have been removed.

▶ Screw the line **20** in the charging cradle **22** onto the plug connection **23**.
▶ Screw the line **20** on the BTT **500** onto the plug connection **529**.

Result:

– The radio connection bypassed.

Note
If the radio connection cannot be bypassed, even though the BTT is connected via the line **20** with the charging cradle **22** then there is an error!
▶ Contact Liebherr Service to determine the cause of the problem and further procedure.

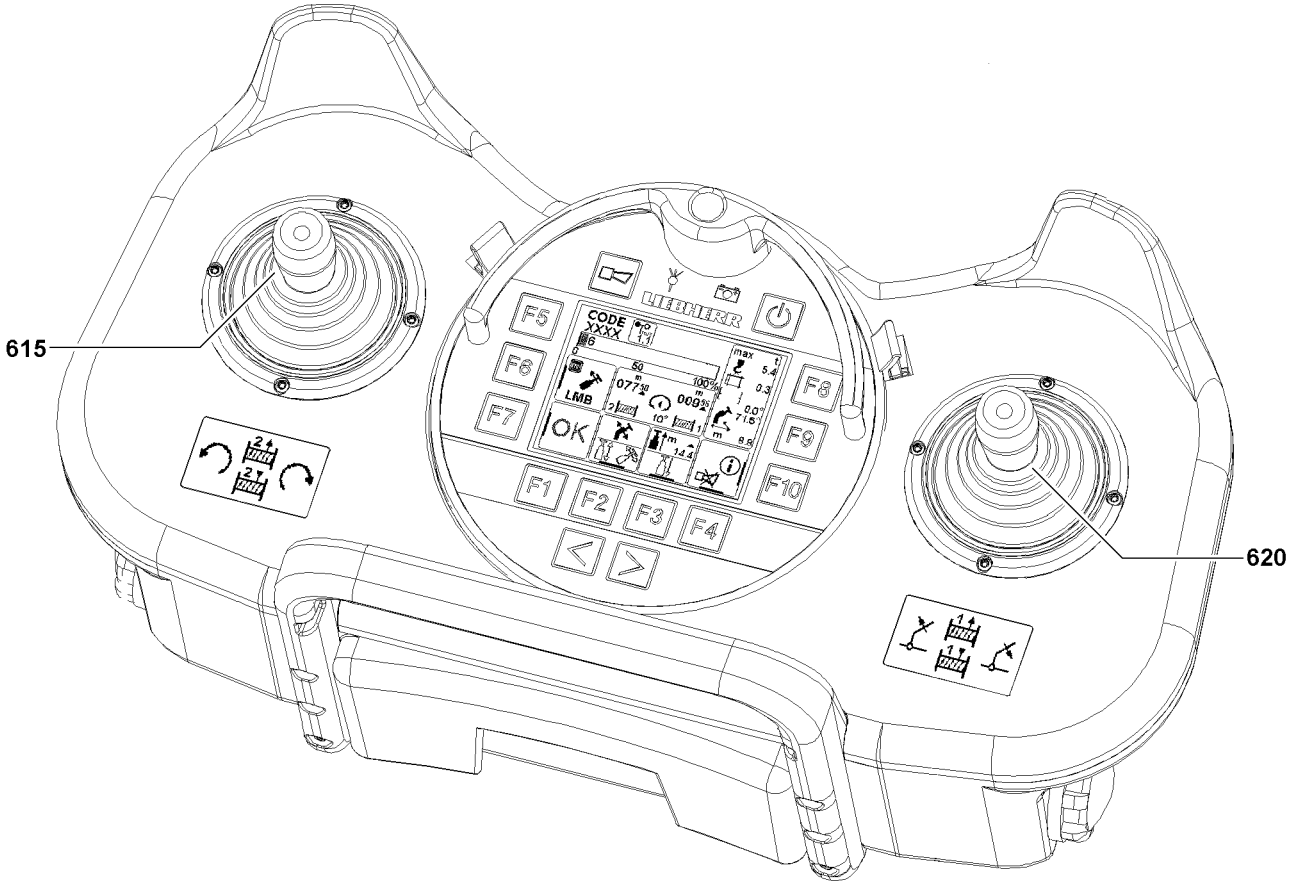

B113413

16 Inspection and maintenance

16.1 Inspecting the radio remote control

WARNING
Erroneous functions on the radio remote control!
Erroneous functions on the radio remote control can cause accidents!
Personnel can be killed or seriously injured!
This could result in property damage!
▶ Check the radio remote control for functionality before starting crane operation!

▶ Before starting crane operation, run through all crane movements individually without a load.

16.2 Maintenance notes for remote radio control system

– Protect the remote radio control console against moisture.
– Never clean the remote radio control using a water or steam jet cleaner.
– From time to time, check the dust covers on the manual control levers for leaks.
– If cracks occur on the bellows, replace them immediately. Dirt and moisture can infiltrate through cracks and cause damage on the manual control levers **615, 620**.

WARNING
Danger of accident!
▶ Never work with a defective radio remote control system!
▶ The repair of a defective radio remote control system may only be made by an expert technician, and only by using original spare parts from Liebherr-Werk Ehingen!
▶ If this is not observed, the **license for the radio remote control becomes invalid** and the required operational safety is no longer ensured!
▶ If this is not done, any warranty claims will be denied!

– In case of a technical defect, shut down the radio remote control system every time until the problem has been rectified.

▶ Turn the radio remote control off.
▶ Have the radio remote control system repaired properly in case of a defect.

7 Service and maintenance

B195219

1 Liebherr Service

Liebherr mobile cranes, whether truck-mounted, mobile or crawler cranes - are technically advanced products, which prove their worth daily even under tough conditions.
The high technical standards of these cranes provide functional security, resistance to failure and ease of maintenance.
Liebherr is continuously developing the drive and control components. The combination of well proven units and modern manufacturing methods produces cranes that are safe to operate and easy to maintain.
Several hundred cranes are built every year for the international market, supported by international service.
Liebherr's “After Sales Service” plays an important role at Liebherr, in ensuring operational readiness and high crane availability.
With Liebherr, service begins when the crane is handed over. Your crane operators will be professionally trained in line with their level of knowledge, and we devote much time to this.
We also train your workshop staff in all crane-specific matters, because we know that they can deal with more than just minor repairs themselves. Often there are specialists who can quickly and reliably carry out crane repairs.
We have special service advisers available who will solve any problems you may have. This phone contact saves time and money. You should take advantage of it as soon as possible.
Our service technicians are specialists with years of experience, who can be deployed from local support points. Naturally these experts have specialized knowledge and special tools.
But before you call these specialists, it is worth making use of the facilities for getting advice mentioned above.
Check the antislip coverings before stepping on them regarding their antislip properties and cleanliness. If dirty, clean antislip coverings with a strong brush to retain the antislip properties. For cleaning the surfaces, use commercially available cleaners. Flush with water.

2 General specifications

Note
Customers claims for warranties and refunds!
The buyer only has a claim to warranties and possible refund if only original Liebherr replacement parts, Liebherr service items and Liebherr lubricants are used for the Liebherr crane!
▶ Only original Liebherr replacement parts have been tested for crane operational use, and may be used without risking safety!

Note
Exclusion of liability!
In the event that replacement parts are used that are **not** Original Liebherr replacement parts and **not** Original Liebherr service items and lubricants, Liebherr-Werk Ehingen GmbH disclaims all liability for system functionality as well as for the parts!
▶ Use only original Liebherr spare parts!

WARNING
Danger of fatal injury due to damaged crane components!
If crane components, which were damaged, for example due to maintenance errors, are not replaced immediately, personnel can be fatally injured!
▶ Maintain mobile crane components according to the data in the maintenance intervals, the maintenance notes and the lubrication chart!
▶ Replace damaged crane components immediately!

NOTICE
Damage of crane components!
If mobile crane components are not maintained according to the maintenance intervals and maintenance guidelines in the individual chapter, or if other lubricants are used than specified in the lubrication chart, the respective crane components can be damaged and/or functionally fail!
The warranty for the respective crane components are voided!
▶ Maintain mobile crane components according to the data in the maintenance intervals, the maintenance notes and the lubrication chart!

What does “checking” mean
The term “checking” includes all required work,such as:
– Determining a specified value
– Cleaning
– Adjusting
– Refilling
– Replacing

3 Cleaning and care of the crane

3.1 Care instructions for sound insulation (soundproofing)

Sound insulation in the area of engines and other noise sources is an integral part of the total construction. It is your task to limit the noise generation of vehicles and the sound level in the workplace to the legally specified values in connection with sound insulation and the design of the equipment. They are therefore an integral part for the construction permits for the machines. They may not be removed, and if damaged, they must be replaced by original Liebherr replacement parts.
From a construction point of view, they have been designed to be maintenance-free. They have been equipped with surfaces that repel dirt, oil and water. They are very flame-resistant and some of them, depending on application, are fireproof.
For these reasons, these parts need minimal care. Any small dirt deposits can be disregarded, as the acoustic effectiveness of the parts is not reduced.

NOTICE
Sound insulation (soundproofing) damage!
By using unsuitable tools or cleaning methods, sound insulation can be destroyed or damaged during cleaning!
▶ Remove severe contamination with suitable tools, for example with soft plastic scrapers!
▶ Do not use tools with sharp edges!
▶ Only use steam cleaners with extreme care and with a sufficient distance to the sound insulation and with low water pressure!
▶ Do **not** use **solvents** for cleaning!

WARNING
Impurities from solvents or foreign substances!
For example, if sound insulation is polluted by solvents, motor oils, gear oils, hydraulic oils or fuels, such substances can ignite and significantly detrimentally change the fire performance of the sound insulation!
▶ If such contamination of the sound insulation occurs, **remove immediately** and replace it immediately with **original parts**!

3.2 Care instructions for the driver's cab and the crane cab

Note

- ▶ The steering wheel, center console, instrument panel cover, floor covering and dirty upholstery in the driver's cab and the crane cab should only be cleaned with warm water mixed with dishwashing detergent!
- ▶ Do not use any scouring agents!

3.3 Care instructions for cleaning the crane

NOTICE

Damage to exhaust system on engines with exhaust aftertreatment SCR!

If water gets into the exhaust pipe, sensors of the exhaust aftertreatment can be destroyed and the coating of the SCR catalytic converter can be washed out!

- ▶ Make sure that no water gets into the exhaust pipe!
- ▶ During cleaning, keep sufficient distance to the exhaust pipe!

4 Measures for work interruption or transport

4.1 Hydraulic cylinder

NOTICE

Corrosion danger to the hydraulic cylinders!

When using cranes under aggressive environmental conditions, for example at places with maritime climates and particularly salty air, hydraulic cylinders can corrode and thereby be destroyed or severely damaged!

Expensive and extensive repairs can result!

If the crane is taken out of operation for an extended period of time:

- ▶ Disassemble the crane!
- ▶ Fully retract all crane hydraulic cylinders! If the hydraulic cylinders can not be completely retracted, protect exposed areas of the piston rod from corrosion, for example by applying grease!
- ▶ Grease any exposed areas on the piston rods, for example on luffing cylinders and ballasting cylinders, especially carefully!

5 Maintenance work on gear components

The gear oils in travel, slewing and winch gears must be checked regularly through an oil or lubricant analysis. For interval data, check the Crane operating instructions, chapter 7.02 and 7.03. The intervals must be adhered to.

Through the oil analysis, degrees of wear of gear components, the composition of the mechanical wear debris, the viscosity of the oil, the degree of oil contamination and additional relevant properties of the oil can be determined. The oil analysis results therefore allow for a technical evaluation about the continued use of the gear or the oil.

Advantages of oil or lubricant analysis:

- The gear oil change intervals can be matched according to the operating conditions and the results of the oil analysis, without risk, effectively and economically.
- A just starting gear damage can be recognized in time and as a result, the correct time of gear replacement can be determined.
- Operating times or repairs can be planned more effectively.
- Am earlier repair of gear components protects from larger and unforeseen damage.
- Subsequent damage can therefore be avoided to the greatest possible extent.

NOTICE
Danger of property damage!
If oil analysis and oil change intervals are not adhered to, there is the danger of gear damage!
If the analysis results and possibly resulting recommendations for an earlier oil change or further maintenance work are not observed, there is the danger of gear damage!
- ▶ The oil analysis and oil change intervals must be strictly observed.
- ▶ If an earlier oil change is required due to oil analysis results: Change the oil.

5.1 Recommendations for taking oil samples

WARNING
Danger of burns!
When working on crane components at operating temperature, there is a danger of burns due to components or service fluids!
Personnel can be severely injured or killed!
- ▶ Carry out all work with upmost caution!
- ▶ Wear protective clothing!

Take oil sample:
- Immediately after stopping the gear.
- At normal operating temperature.
- Always take oil on the same location of the gear.
- Take oil always according to the same method.
- On gears with double slipring seal, also take sample from the slipring seal area.
- Take oil not right after an oil change.
- Take oil not right after adding larger amounts of oil.
- Fill oil only in a clean and dry sample container (recommendation: Fill oil into original sample containers!)

6 Maintenance work on the crane superstructure or boom

WARNING
Danger of falling!
During maintenance work on the crane superstructure or boom, personnel must be secured with appropriate safety measures to prevent them from falling! If this is not observed, working personnel can fall and be killed or severely injured!
- ▶ For all work on the crane where there is a danger of falling, take suitable safety measures!
- ▶ The crane superstructure or boom may not be accessed without suitable aids!
- ▶ Suitable aids are, for example: Lifting platforms, scaffoldings, ladders, assembly platforms, auxiliary crane.
- ▶ If railing are present on the crane superstructure, then they must be swung into operating position and secured for all work, see Crane operating instructions, chapter 2.06!
- ▶ Only step on such aids with clean shoes!
- ▶ Keep aids clean and free of snow and ice!
- ▶ If the work cannot be carried out with such aids nor from the ground, then the maintenance personnel must secure themselves with approved catch systems to avoid falling, see Crane operating instructions, chapter 2.04!
- ▶ It is prohibited to step on the driver's cab or cab roof and specially marked surfaces, see Crane operating instructions, chapter 2.05!

7 Maintenance and inspection guidelines

Note

- ▶ Carry out the maintenance and inspection work on the crane chassis according to operating hours or kilometers driven!
- ▶ Carry out the maintenance and inspection work on the crane superstructure according to operating hours!

Observe the following chapters for maintenance and inspection of the crane:

- Chapter 7.02: Maintenance intervals - Crane chassis [1)]
- Chapter 7.03: Maintenance intervals - Crane superstructure [1)]
- Chapter 7.04: Maintenance guidelines - Crane chassis [2)]
- Chapter 7.05: Maintenance guidelines - Crane superstructure [2)]
- Chapter 7.06: Fill quantities, lubrication chart

[1)] These chapters contain a list of service intervals for all maintenance work. Only the relevant work is to be carried out.
[2)] For individual components, the manufacturer's specifications must be observed.

WARNING

Danger of accidents during maintenance and inspection of crane components!
During maintenance and inspection work on crane components, there exists increased danger of accidents if maintenance and inspection guidelines are not observed!
Personnel can be severely injured or killed!

- ▶ Observe and adhere to the following listed warning notes and the generally applicable safety rules!

7.1 Warning notes

7.1.1 Preparatory work

WARNING

Fatal injury when driving or operating the crane during maintenance, inspection or repair work!
If the mobile crane is operated during maintenance, inspection or repair work, then personnel can be killed or severely injured!
This could result in high property damage!

- ▶ During maintenance, inspection or repair work, it is strictly prohibited to drive or operate crane!
- ▶ Show clearly with signs that maintenance, inspection or repair work is being carried out on the mobile crane!
- ▶ Use signs which show without a doubt that it is prohibited to drive and operate the crane! The national regulations regarding labeling on mobile cranes and on the signs must be observed!
- ▶ Carry out maintenance, inspection or repair work only with authorized and trained expert personnel.
- ▶ It is prohibited for unauthorized personnel to remain in the danger zone!

- ▶ Turn the engine on the crane superstructure and the crane chassis off!
- ▶ Apply the “parking brake crane chassis”.
- ▶ If possible:
  Lock the driver's cab and the crane cab.
- ▶ Hand the ignition key from the crane superstructure and the crane chassis to an authorized person.

7.1.2 Warning notes on risk of burns

WARNING
Risk of burns during maintenance or inspection work!
While carrying out maintenance or inspection work, you can get severe burns on hot surfaces of the crane components! This applies especially for the exhaust system or the travel gear!
- ▶ Let any components to be maintained or inspected cool off!
- ▶ Do not spill any service fluids over the hot components!
- ▶ Avoid short circuits in the electrical system, especially on the battery!
- ▶ Replace or change missing or defective protective insulation!

7.1.3 Warning notes for rotating parts

WARNING
Risk due to rotating parts!
If inspection work must be carried out while the engine is running, a significant danger exists due to rotating parts and the ignition system!
Personnel can be severely injured!
- ▶ Proceed especially careful!
- ▶ Never reach into rotating parts!
- ▶ Never reach into the cooler fan when the engine is warm! The cooler fan could turn on suddenly!

7.1.4 Warning notes for scalding risk

WARNING
Risk of scalding during maintenance or inspection work!
The cooling system is under pressure!
When the coolant reservoir is opened, hot coolant can escape explosively!
The most severe scalding on the entire body can result!
When the engine is warm:
- ▶ Do not open the cover of the coolant reservoir!
- ▶ To protect face, hands and arms from hot steam of hot coolant, cover the cap with a large rag when opening!

7.1.5 Warning notes on fire danger

DANGER
Danger of fire!
When working on fuel systems or on electrical systems, an increased danger of fire exists if the general safety rules are not observed!
Personnel can be severely injured or killed!
This can result in increased property damage!
- ▶ Disconnect the battery from the power supply!
- ▶ Do not smoke!
- ▶ Do not work near open flames!
- ▶ Keep a functioning fire extinguisher ready!

7.1.6 Improper maintenance

NOTICE
Damage of components!
In case of incorrect maintenance, severe functional defects and damage on the components can occur!
- ▶ Add correct and sufficient service fluids during maintenance!
- ▶ For all maintenance work, observe utmost cleanliness to prevent dirt from entering the inside of the components!
- ▶ Check components for leaks!
- ▶ Have leaking components sealed immediately and properly!

7.2 Checking the battery voltage

Note
If a crane is taken “out of service” and a user, such as the airplane warning light is turned on:
- ▶ Check the battery voltage in regular intervals. If necessary, recharge the battery.

7.3 Checking the antislip coverings

Check the antislip coverings before stepping on them regarding their antislip properties and cleanliness. If dirty, clean antislip coverings with a strong brush to retain the antislip properties. For cleaning the surfaces, use commercially available cleaners. Flush with water.

WARNING
Danger of falling!
If the following measures are not observed, personnel can fall down and be killed or severely injured!
- ▶ Keep antislip coverings clean and free of snow and ice!
- ▶ Only step on antislip coverings with clean shoes!
- ▶ Replace or renew missing or damaged antislip coverings!

7.4 Refueling

WARNING
Danger of fire!
Fuel is easily flammable and can cause fatal accidents in case of fire or open flames!
This could result in high property damage!
- ▶ Before refueling, turn the auxiliary heater or the engine preheating off!
- ▶ Fire, open flames and smoking are prohibited during the refueling procedure!

WARNING
Danger of poisoning!
Fuel is poisonous and hazardous to health!
- ▶ Do not allow for fuel to come in contact with skin, eyes or clothing!
- ▶ Do not breathe in fuel vapors!
- ▶ Keep children away from fuel!

If persons did come in contact with fuel:
- ▶ In case of eye contact, flush out the eyes immediately and consult a physician if necessary!
- ▶ Clean affected skin areas with clear water!

If fuel was swallowed:
- ▶ Go to a physician immediately!

NOTICE
Engine damage!
When using incorrect fuel, the engine and the fuel system can be severely damaged!
▶ Do not use gasoline on vehicles with Diesel engine!
▶ Do not mix Diesel fuel with gasoline!
If you have added incorrect fuel inadvertently:
▶ Do not turn the ignition on, have the fuel tank and fuel lines emptied completely by qualified expert personnel!

7.5 Refueling fuel tanks*

Note
▶ See danger notes in section “Refueling”.

7.6 Adding Urea solution

WARNING
Skin irritation and eye injuries!
Urea can cause skin irritation and eye injuries at contact!
▶ Do not allow for Urea to come in contact with skin, eyes or clothing!
If persons did come in contact with Urea:
▶ In case of eye contact, flush out the eyes immediately and consult a physician if necessary!
▶ Clean affected skin areas with clear water!
If Urea was swallowed:
▶ Flush the mouth with a lot of water! Then drink a lot of water and consult a physician, if necessary!

WARNING
Irritation of eyes and mucous membranes!
If the Urea tank cover is opened at high temperatures, ammonia vapors can emerge! If ammonia vapors are breathed in, then it can cause burning eyes, nose, throat and coughing!
▶ Do not breathe in ammonia vapors!

NOTICE
Danger of corrosion!
If Urea is spilled during refueling, affected surfaces can corrode!
▶ Flush affected areas immediately with lots of water!
▶ Do not overfill the tank!
If possible:
▶ Refuel on a gas pump with nozzle!

blank page!

B195219

1 Crane chassis maintenance and inspection schedule

Note

- ▶ Carry out maintenance work after reaching the specified operating hours or calendar intervals. The interval which occurs first is the deciding factor.
- ▶ The maintenance intervals complement each other. If a higher interval is coming up, then carry out the work according to the lower interval also.
- ▶ For the operating hour intervals, the hour meter of the crawler travel gear is the determining factor.
- ▶ The operating hour meter is visible on the BTT display, Menu “Engine operation”.

First main-te-nance after	Operating hour intervals			Calendar intervals			Work to be carried out
	10 h	100 h	1000 h	Daily	Weekly	Annu-ally	
Safety systems							
						X	Personal protective equipment Follow the instructions of the manufacturer
						X	Height rescue system Follow the instructions of the manufacturer
Fall protection equipment							
						X	Check protection points
						X	Check safety ropes
						X	Check the ladders for technically immaculate condition
						X	Check railings, steps and pedestals for safe function
						X	Check catwalks and open mesh flooring for safe function
Crane surface							
					X		Check accessible surfaces for cleanliness
						X	Check accessible surfaces for completeness and slip resistance
						X	Check labels for completeness and legibility
Travel gear							
		X					Check for leaks
	X						Grease the sprocket bearing if it is not lubricated via the central lubrication system

First main-te-nance after	Operating hour intervals			Calendar intervals			Work to be carried out
	10 h	100 h	1000 h	Daily	Weekly	Annu-ally	
		X					Check the mounting screws for tight seating
		500 h					Check the gear oil via oil analysis
200 h			4000 h			Every 4 years	Replace the gear oil
Crawler carrier							
		X					Check track rollers, carrier rollers with oil lubrication for leaks
	50 h				Every 4 weeks		Check the roll off surfaces of the track rollers / carrier rollers / glide elements for wear
	X				X		Check the idler, sprocket and guides for wear
						X	Grease guide rails on sliding section
						X	Lubricate the consoles
					Every 4 weeks		Lubricate the connector pins between crawler carrier and crawler center section or crawler carrier and cross carriers
Track chain							
		X					Check for damage
	50 h				Every 4 weeks		Check the chain tension, retension the track chain if necessary
	50 h						Retighten the bolts on the track pads until the specified torque is reached
	50 h				Every 4 weeks		Check the contact surfaces / glide surfaces of the chain links for wear
Chain tension cylinder							
				X			Check pretension pressure for the grease tensioner
Cross carrier							
	X				X		Check hydraulic cylinder for track adjustment for leaks and tight seating
	X				X		Clean and grease visible gliding surfaces
Assembly support							
					X		Check the hydraulic cylinder for leaks

First main-te-nance after	Operating hour intervals			Calendar intervals			Work to be carried out
	10 h	100 h	1000 h	Daily	Weekly	Annu-ally	
						X	Lubricate the bearing points of the support beams
Hydraulic cylinder							
					X		Check for leaks
Hydraulic hose lines							
				X			Check for leaks and damage
						X	Have safe working condition checked by expert
Central lubrication system							
				X			Check grease supply of central lubrication system. Fill the reservoir if the grease supply has dropped below 1/4 of the reservoir content.
		X					Check for correct function

B195219

1 Crane superstructure maintenance and inspection schedule

Note

- ▶ Carry out maintenance work after reaching the specified operating hours or calendar intervals. The interval which occurs first is the deciding factor!
- ▶ The maintenance intervals complement each other. If a higher interval is coming up, then carry out the work according to the lower interval also!

First main-te-nance after	Operating hour intervals			Calendar intervals			Work to be carried out
	250 h	500 h	1500 h	Daily	Weekly	Annu-ally	
Safety systems							
						X	Personal protective equipment Follow the instructions of the manufacturer
						X	Height rescue system Follow the instructions of the manufacturer
Fall protection equipment							
						X	Check protection points
						X	Check safety ropes
						X	Check the ladders for technically immaculate condition
						X	Check railings, steps and pedestals for safe function
						X	Check catwalks and open mesh flooring for safe function
Crane surface							
					X		Check accessible surfaces for cleanliness
						X	Check accessible surfaces for completeness and slip resistance
						X	Check labels for completeness and legibility
Fire extinguishing system							
						X	Carry out a visual inspection of the system For all other maintenance tasks, observe the instructions of the fire extinguisher manufac-turer.

First main-te-nance after	Operating hour intervals			Calendar intervals			Work to be carried out
	250 h	500 h	1500 h	Daily	Weekly	Annu-ally	
						Every 5 years	Replace trigger elements and extinguisher tank.
Diesel engine							
				X			Check the oil level For all other maintenance tasks, observe the instructions of the engine manufacturer
				X			Check the coolant level in the expansion tank
						Every 2 years	Replace coolant
SCR Exhaust after treatment							
			4500 h			Every 2 years	Replace foam and filter element of urea pump
Engine independent heater							
				X			Check the fluid level in the expansion tank
					Month-ly		operate for 10 minutes with cold engine and lowest fan setting
						X	Carry out service work before and after every heating period
						Every 2 years	Replace the fluid for the heating system
Air filter							
					X		Check monitoring device
						X	Clean, change the filter insert Observe the instructions of the engine manu-facturer
Slewing ring connection							
	X						Lubricate the gears
						X[1)]	Lubricate the slewing ring connection
250 h			X			X	Check the mounting screws for tight seating
						X	Check the tilt play
Rope winches							
250 h						X	Check the mounting screws for tight seating
				X			Check for leaks

First main-te-nance after	Operating hour intervals			Calendar intervals			Work to be carried out
	250 h	500 h	1500 h	Daily	Weekly	Annu-ally	
					X		Check the oil level
			200 h			X	Check the condition of the tooth flanks; determining factor is operating hours of the winch. (only LR 13000)
		X					Check the gear oil via oil analysis
			3000 h			Every 4 years	Replace the gear oil
						X	Check the remaining theoretical utilization life by a technical expert
						Every 4 years	Check the remaining theoretical utilization life by authorized specialist
Hoist gear brakes							
				X			Check for leaks
Lattice sections							
						X	Check cracks, damage and distortion
						X	Check protection points
						X	Check safety ropes
						X	Check railings and pedestals for safe function
						X	Check catwalks and open mesh flooring for safe function
Guy rods							
						X	Check for cracks, damage and distortion by a technical expert
						Every 4 years	Check for cracks, damage and distortion by an authorized inspector
						X	Checking the retaining elements
Relapse supports							
		X				X	Lubricate bearings
X[2), 6)]							Check the oscillation guard for easy move-ment
Relapse cylinder							
X[2), 6)]					X		Check for leaks
X[2), 6)]		X				X	Check pretension pressure (nitrogen)

First main-te-nance after	Operating hour intervals			Calendar intervals			Work to be carried out
	250 h	500 h	1500 h	Daily	Weekly	Annu-ally	
X[2), 6)]		X				X	Check the oil quantity
Pneumatic springs							
X[2), 5), 6)]		X				X	Check for correct function
A-bracket							
		X					Lubricate bearing
X[2), 6)]						X	Check the lever for the limit switch on the A-frame 3 for easy movement and reset of spring
X[2), 6)]						X	Check the rods with guide rail on the A-frame 2 and A-frame 3 for easy movement and distortion
Counterweight							
1,000 km		or 10,000 km				X	Check tightening torque of mounting screws
Concrete ballast plates (ballast container) (only LR 13000)							
				X			Check for damage
						Every 5 years	Check by licensing agency
Ballasting							
	X					X	Lubricate bearings
Press on pulleys of rope winches							
	X					X	Grease guides
Rope pulleys							
			X			X	Check for wear, damage, cracks and easy movement
			X			X	Lubricate
Crane ropes							
				X			Check cracks, damage and distortion
					Month-ly		Check, grease by expert personnel
						X	Check by technical expert

First main-te-nance after	Operating hour intervals			Calendar intervals			Work to be carried out
	250 h	500 h	1500 h	Daily	Weekly	Annu-ally	
						Every 4 years	Check by authorized inspector
Hook blocks							
		X				X	Grease hook
						X	Check distance dimension (y)
Crane operator's cab							
				X			Check instruments for function
				X			Check indicator lights for function
						X	Replace filter insert in water heater
				X			Check fluid level in expansion tank of engine control
Crane cab, extendable or inclinable							
		X				X	Check for correct function
		X				X	Lubricate bearings
Overload protection							
				X			Check for correct function
		X				X	Check length sensor for function
		X				X	Check length sensor rope for damage
Remote diagnostics device							
						X	Check for correct function
						X	Check the validity of the SIM card
Electrical system							
						X[3)]	Check cable connections and battery acid levels
Fuel system							
				X			Check for leaks
						X	Check condition and mounting
						X	Drain off water and sediments
						X	Clean preliminary filter for auxiliary fuel pump
	Every 50 h						Check fuel preliminary filter, drain off water if necessary
		Every 1000 h					Replace preliminary fuel filter

First main-te-nance after	Operating hour intervals			Calendar intervals			Work to be carried out
	250 h	500 h	1500 h	Daily	Weekly	Annu-ally	
Slewing gear							
250 h						X	Check the mounting screws for tight seating
				X			Check for leaks
					X		Check the oil level
		X					Check the gear oil via oil analysis
			4000 h			Every 4 years	Replace the gear oil
Turntable lock							
		X				X	Lubricate
		X				X	Check for correct function
Bearings							
						X	Checking the retaining elements
Pump distributor gear							
				X			Check for leaks
					X		Check the oil level
500 h			X			X	Replace the gear oil
Hydraulic hose lines							
				X			Check for leaks and damage
						X	Check for safe condition by expert
Hydraulic system							
				X			Check the oil level
					X		Check for leaks
250 h		X				X	Replace the servo pressure and replenishing pressure filter inserts
250 h		X				X	Replace return filter inserts (only for cranes with open hydraulic circuit)
250 h		X				X	Replace bleeder filter of hydraulic tank
500 h			X			X	Check hydraulic oil, required degree of purity: 20/18/15 Take oil sample and have it tested by oil supplier
Hydraulic cylinder							
					X		Check for leaks

First main-te-nance after	Operating hour intervals			Calendar intervals			Work to be carried out
	250 h	500 h	1500 h	Daily	Weekly	Annu-ally	
Hydraulic pressure accumulator (nitrogen)							
		X[4)]				X[4)]	Check pretension pressures
Air pressure system							
					X		Check for leaks
					X		Check operating pressure
					X		Check shut off pressure
					X		Check operation of automatic drain valve
						X	Replace air drier granular cartridges
						X	Clean air drier preliminary filter
Central lubrication system							
		X					Check for correct function
					X		Check the grease container fill level
Emergency control							
						X	Check for correct function
Lattice mast boom system							
X[6)]						X	Grease lube points of lattice sections
Telescopic boom with rope mechanism							
						X	Check telescopic boom for distortions and cracks
	X					X	Grease the sliding surfaces of the telescopic boom bearing
			X			X	Check change over pulleys of push out mechanics for damage and cracks
	X					X	Lubricate change over pulleys of telescoping mechanism
	X					X	Check mounting screws on change over pulleys for tight seating
250 h		X					Check, adjust rope mechanism
			20000 h			Every 10 years	Disassemble and check the boom
Telematik telescopic boom system							

First main-te-nance after	Operating hour intervals			Calendar intervals			Work to be carried out
	250 h	500 h	1500 h	Daily	Weekly	Annu-ally	
						X	Check telescopic boom system for distortion, damage and cracks
						X	Check hydraulic components for leaks and damage
		X				X	Check telescoping cylinder for proper con-dition
						X	Check pull knob retainer and mounting screws for tight seating
						X	Check mounting screws of push out cylinder for tight seating
						X	Check twist guard of cylinder pinning and telescopic boom pinning
		X				X	Check push out gripper for proper condition
		X				X	Check locking pins and locking bores for proper condition
		X				X	Check inner and outer sliding surfaces for proper condition
						X[5)]	Lubricate the gliding surfaces
						X[5)]	Grease guide rails on telescope cylinder
			20000 h			Every 10 years	Disassemble and check the boom
Telescopic boom guying							
						X	Check for distortions and cracks
					Every 3 months [5), 6)]		Lubricate the TA/TY-guying on the grease fittings
				X			Check guy winch for leaks
					Every 6 months		Check the oil level on the guy winch
250 h		X				X	Check the mounting screws for tight seating

First main-te-nance after	Operating hour intervals			Calendar intervals			Work to be carried out
	250 h	500 h	1500 h	Daily	Weekly	Annu-ally	
						X[4]	Check the rope connection between the guy rope and the auxiliary rope (only LTM 1400-7.1)
						Every 4 years	Replace gear oil of guy winch
Derrick ballast							
						X	Check frame, suspension and guide section for distortion and cracks

[1] every 3 months if the crane is not moved
[2] carry out a visual inspection before every start up.
[3] in hot climates 2 x a year
[4] note chapter 7.05, Crane superstructure maintenance instructions
[5] and as necessary
[6] during assembly

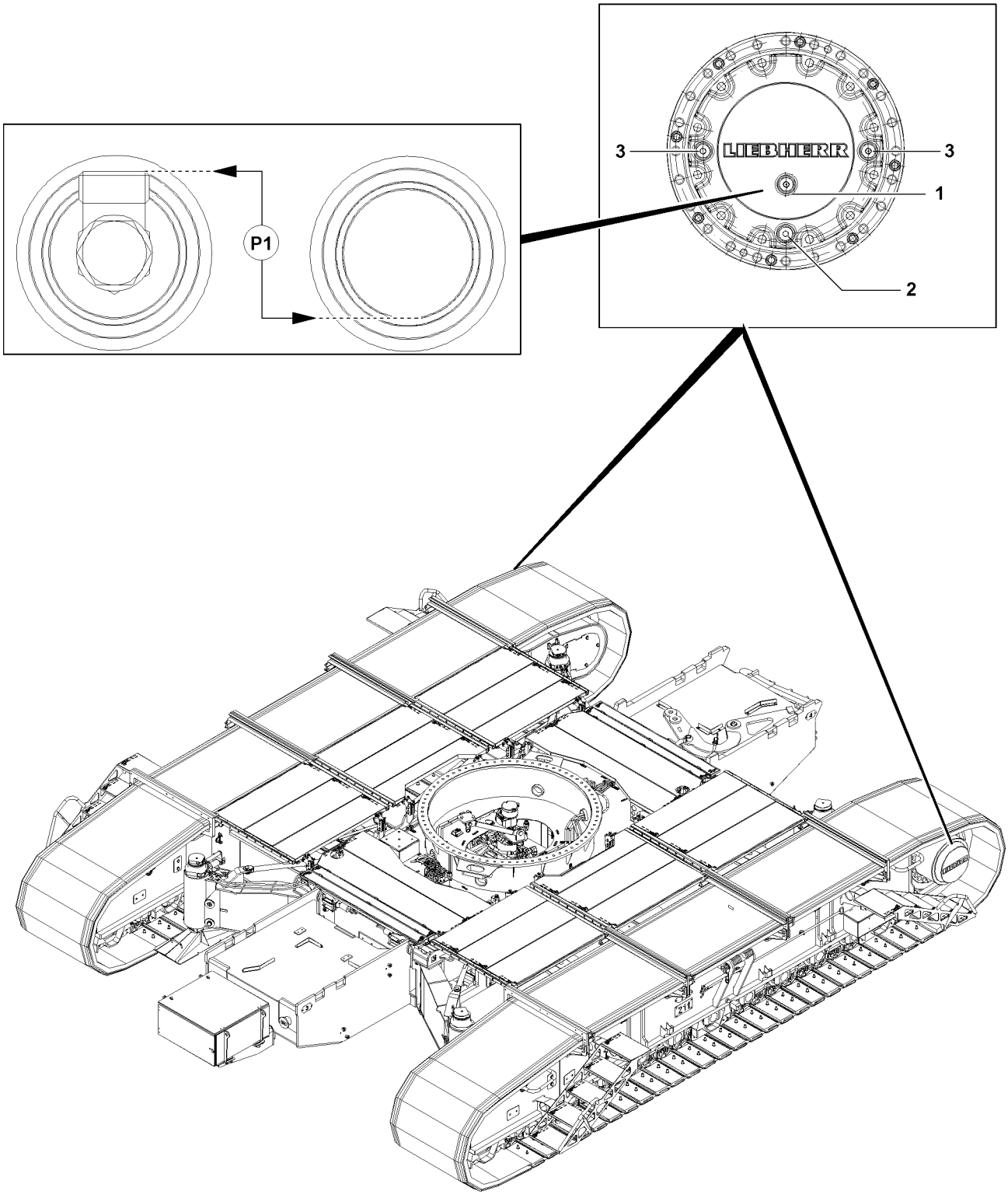

B118012

1 Servicing the travel gear

Note

- ▶ Use only service items and lubricants according to the Service fill!
- ▶ Adhere to the maintenance intervals as specified in chapter 7.02 of the Crane operating instructions!

The travel gear consists of:

– Planetary gear

WARNING

Danger of burns during maintenance and inspection work!

Severe burns can results due to the travel gear and oils at operating temperatures!

- ▶ Avoid direct body contact to heated components and fluids!

NOTICE

Dirt in travel gear!

If any dirt gets into the inside of the travel gear, gear damage can occur!

- ▶ Make sure that no dirt gets into the inside of the travel gear during maintenance work!

The following maintenance ports are on the planetary gear:

1 Oil level plug, oil level port

2 Oil drain plug, oil drain port

3 Oil filler plug, oil filler port

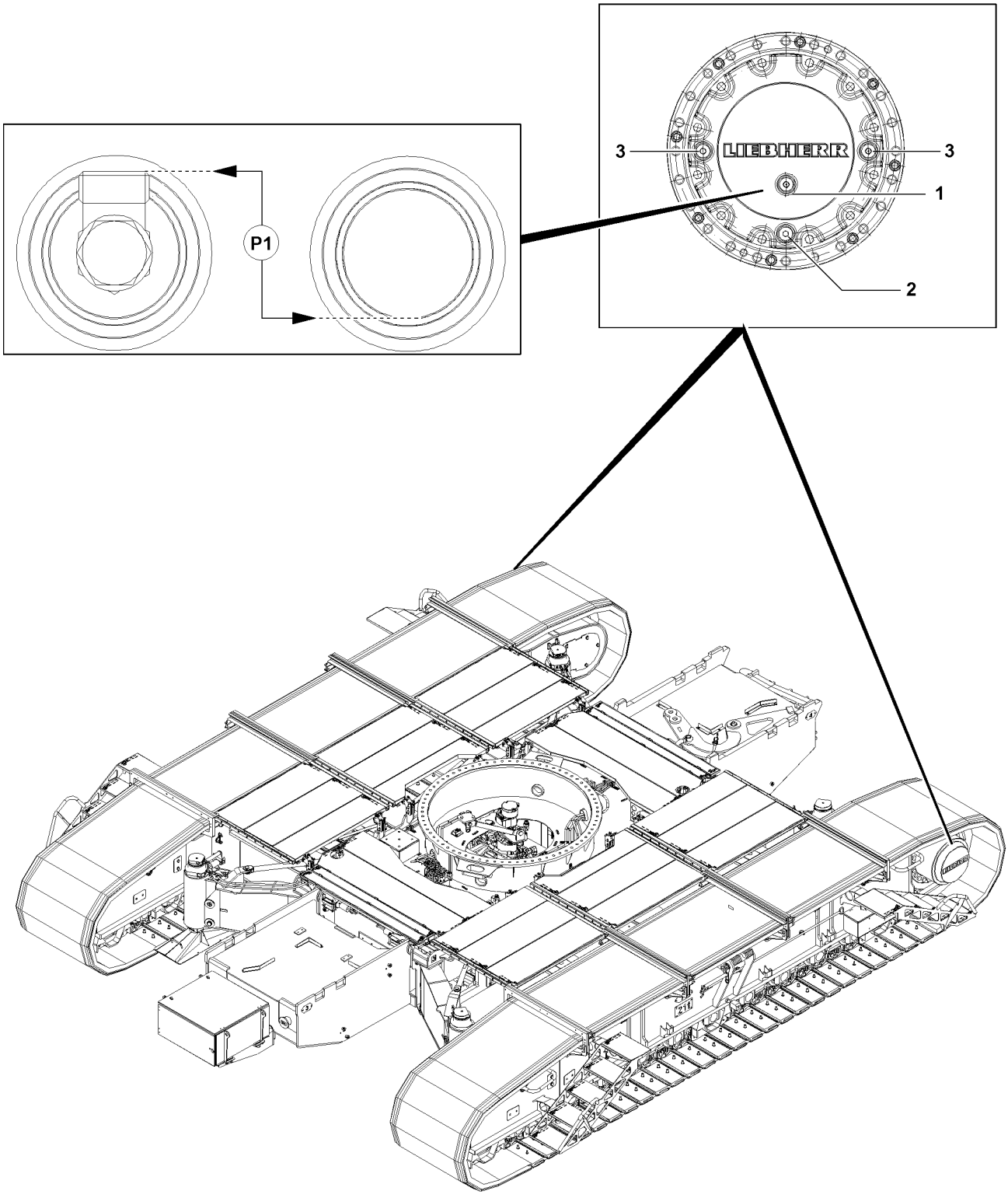

B118012

1.1 Checking for leaks

▶ Check visually to ensure that the travel gears do not leak.

1.2 Check the oil level

NOTICE
Damage to the travel gear!
If seals are used repeatedly, it can result in loss of oil!
Due to loss of oil, the travel gears can wear significantly and / or be damaged!
▶ Use the seals on the maintenance ports only once!

NOTICE
Varying oil level in planetary gear!
Depending on the position of the gears in the planetary gear, the oil level can vary slightly upward!
When opening the oil level plug, oil can emerge despite correct fill quantity!
▶ The fill height must be at least on the height of the point **P1**!
▶ If any oil emerged during the check, replace the same amount!

Make sure that the following prerequisites are met:
– The crane is in horizontal position.
– The travel gear is at a standstill.

Note
▶ To ensure a reliable oil level check, it must be ensured that the travel gears have been at a standstill for at least two minutes. This ensures that the oil has returned to the oil chamber completely!

▶ Open the oil level port carefully.

NOTICE
Insufficient oil fill quantity!
If the oil level drops below the fill level on point **P1**, the travel gears can be damaged!
▶ Add gear oil until the oil level is again on the fill level on point **P1**!

▶ If gear oil must be added:
Add oil on the oil filler port.
▶ If the oil level is on the fill level on point **P1**, then the oil level on the travel gear is OK.
▶ Close the maintenance ports tightly.

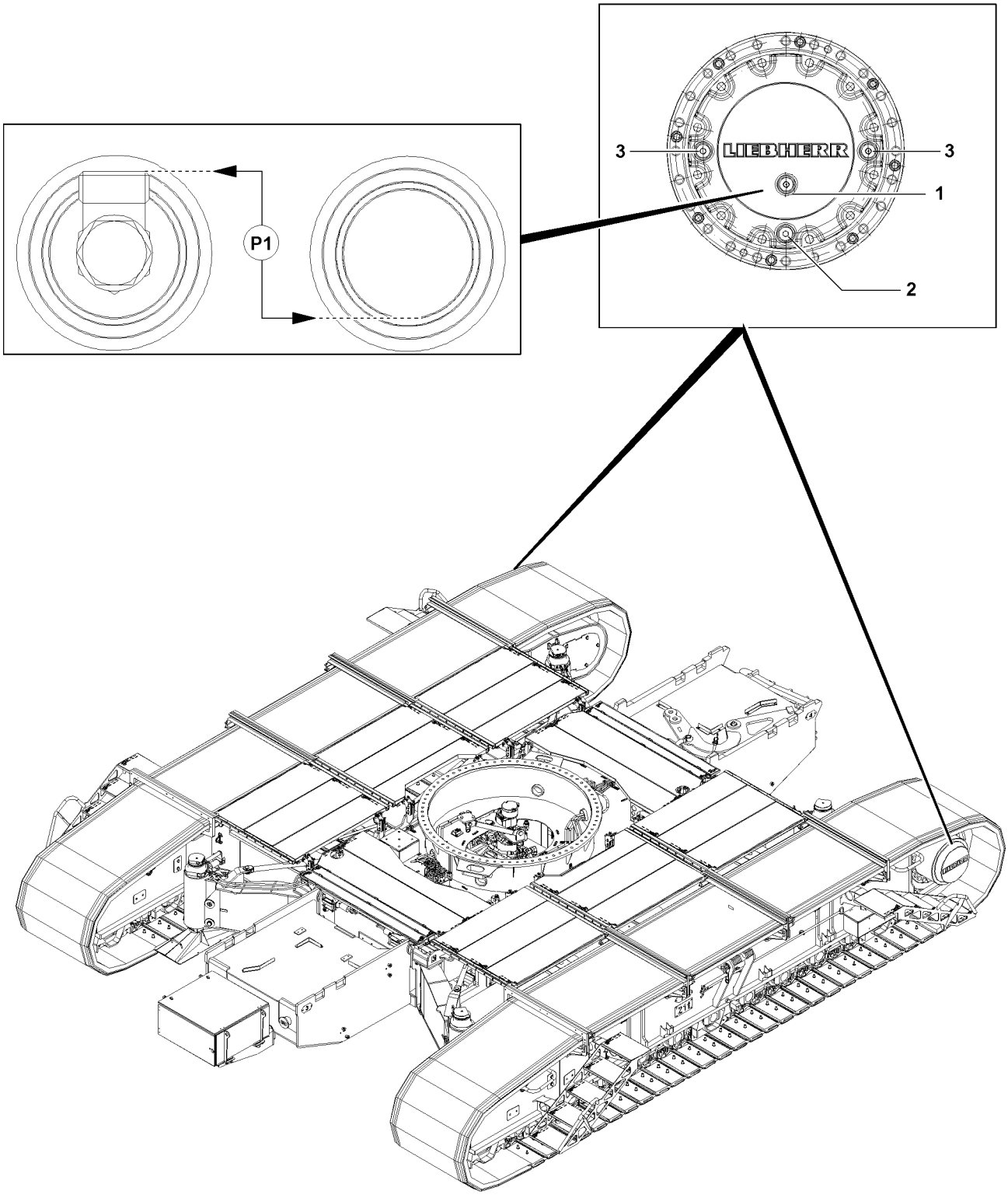

B118012

1.3 Changing oil on the planetary gear

NOTICE
Damage to the travel gear!
If seals are used repeatedly, it can result in loss of oil!
Due to loss of oil, the travel gears can wear significantly and / or be damaged!
▶ Use the seals on the maintenance ports only once!

Make sure that the following prerequisites are met:
– The crane is in horizontal position.
– The travel gear must be at a standstill.
– The travel gear is at operating temperature.
– A container to catch the used oil is available.

Note
▶ When selecting the container to catch the use oil, make sure that the container is sufficiently sized to be able to catch all the used oil!
▶ For fill quantity of planetary gear, see Chapter 7.06 in the Crane operating instructions!

▶ Remove the oil level plug **1**.
▶ Remove the oil drain plug **2** and drain oil into a suitable container.

Note
▶ Empty the planetary gear completely!

▶ Clean the oil drain plug **2** and the sealing surface.
▶ Close off the oil drain port **2** tightly.
▶ Add oil on an oil level plug **3** until it “stands” at the height of the fill level **P1** of the oil level port **1** or until it starts to run over.
▶ Clean the sealing surfaces.
▶ Close off the oil level ports **1** tightly.
▶ Close off the oil fill plug **3** tightly.

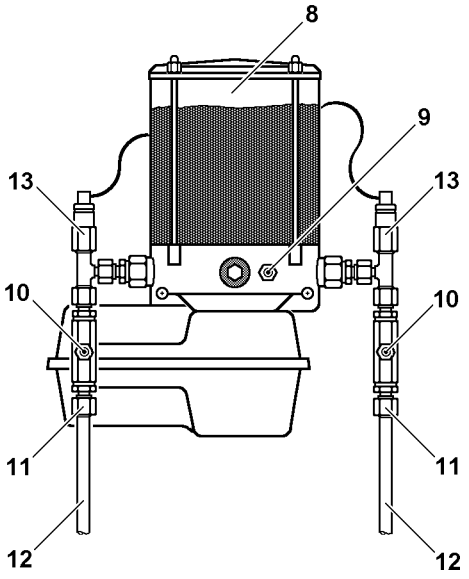

B118029

2 Servicing the central lubrication system of the crawler carrier

Note

- ▶ Use only service items and lubricants according to the Service fill.
- ▶ Adhere to the maintenance intervals as specified in chapter 7.02 of the Crane operating instructions.

If the crane is driven via the crawler travel gear, then the central lubrication system for the crawler carrier turns on automatically and supplies all grease points with the correct amount of grease.

NOTICE

Insufficient lubrication!

The lubrication film is removed over time due to environmental influences!

Due to insufficient lubrication, the crawler carriers are exposed to significant wear and can be damaged!

- ▶ If the crawler carriers are not moved for a period of more than three months, then it must be lubricated every quarter, possibly with an external grease pump!

Note

- ▶ When putting the crane back into service after an extended downtime, check the central lubrication system for function!
- ▶ When working on the central lubrication system, observe utmost cleanliness!
- ▶ Every crawler carrier has a separate grease pump with several lubrication circuits!
- ▶ Every lubrication circuit has its own main line **12**!

On the grease pump, see illustration, there are the following maintenance relevant components:

8	Grease container	
9	Grease fitting	• Filling the grease container
10	Grease fitting	• Fill the lube lines
11	Main line connection	
12	Main line	
13	Pressure relief valve	

2.1 Filling the grease container

NOTICE

Insufficient lubrication!

In case of insufficient lubrication, the grease lubrication points can run dry!

This could result in high property damage!

- ▶ Fill the grease container **8** before it is completely empty!

Note

- ▶ Do not deplete the grease container **8**!
- ▶ If the grease container **8** is empty, the central lubrication system must be bled!

- ▶ Fill the grease container **8** with an external grease pump via the grease fitting **9**.

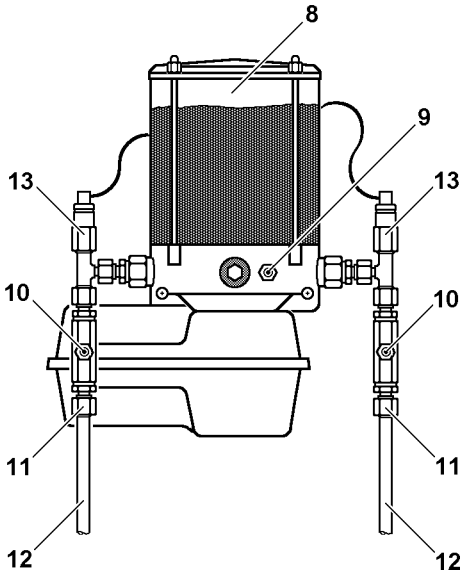

B118029

2.2 Bleeding the central lubrication system

NOTICE
Insufficient lubrication!
If there is air in the grease pump, lubrication points can run dry!
▶ Bleed the central lubrication system carefully!

The central lubrication system of the crawler travel gear can be bled two ways:
– By actuation of the grease pump by simulating the crawler operation.
– By separate actuation of the grease pump with the aid of the electric wiring diagram.

2.2.1 Bleeding by simulating crawler operation

WARNING
Crane can start to drive unintentionally!
If the foot rocker in the crane operator's cab or the manual control lever on the radio remote control console* is moved too far while bleeding the grease pump, then the track chain can start to move!
The crane can start to drive and catch personnel!
Personnel can be severely injured or killed!
▶ Actuate the foot rocker carefully while bleeding the grease pump!
▶ Watch the emergence of grease from the grease pump from a safe position!

▶ Fill the grease container **8** with an external grease pump via the grease fitting **9**.
▶ Fill the main lines **12** with an external grease pump via the grease fittings **10** until grease free of air bubbles emerges on all grease points.

Note
▶ Carry out the bleeding procedure individually for each main line connection **11**!
▶ Every crawler carrier has a separate grease pump!

▶ Unscrew the main line **12** from the main line connection **11**.
▶ Start the crane engine.
▶ Select crawler operation.
▶ Actuate the foot rocker / manual control lever of the crawler carrier of the grease pump which is being bled only so far that the track chain does not start to move.

Result:
– The grease pump starts to supply.
– The acoustic signal crawler operation sounds.

▶ Actuate the foot rocker / manual control lever only until grease free of air bubbles emerges on the main line connection **11**.
▶ Connect the main line **12** again.
▶ Actuate the foot rocker / manual control lever again until grease emerges again on at least one of the grease points in the bled lubrication circuit.

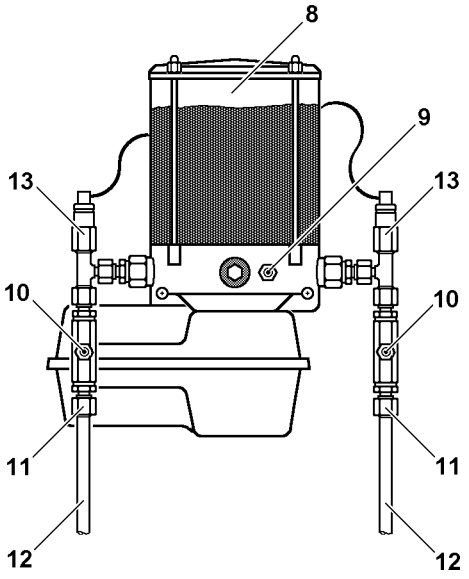

B118029

2.2.2 Bleeding by separate actuation of the grease pump

Note

▶ Work on the electrical system of the crane may only be carried out by authorized and trained expert personnel!

Make sure that the following prerequisite is met:

– The separate electric wiring diagram of the crane is available.

▶ Fill the grease container **8** with an external grease pump via the grease fitting **9**.

▶ Fill the main lines **12** with an external grease pump via the grease fittings **10** until grease free of air bubbles emerges on all grease points.

Note

▶ The bleeding procedure must be carried out individually for each main line connection **11**!

▶ Every crawler carrier has a separate grease pump!

▶ Unscrew the main line **12** from the main line connection **11**.

▶ Actuate the grease pump separately, see crane electric wiring plan.

Result:

– The grease pump starts to supply.

▶ Actuate the grease pump until grease free of air bubbles emerges on the main line connection **11**.

▶ Connect the main line **12** again.

▶ Actuate the grease pump again until grease emerges again on at least one of the grease points in the bled lubrication circuit.

2.3 Bleeding repaired lubrication lines

NOTICE

Insufficient lubrication!

If there is air in the lube lines, lubrication points can run dry!

▶ If the lubrication lines are repaired or replaced, make sure that they are completely filled with grease!

▶ Fill lubrication lines completely with grease before installation.

▶ Check repaired lubrication lines for function and leaks.

2.4 Intermediate lubrication of crawler carriers

▶ Fill the main line **12** with an external grease pump via the grease fitting **10** until grease free of air bubbles emerges on all grease points.

or

■ Actuate the foot rocker / manual control lever in crawler operation until the grease pump starts to supply, but the track chain does not yet start to move. Continue actuation until grease emerges on all lube points.

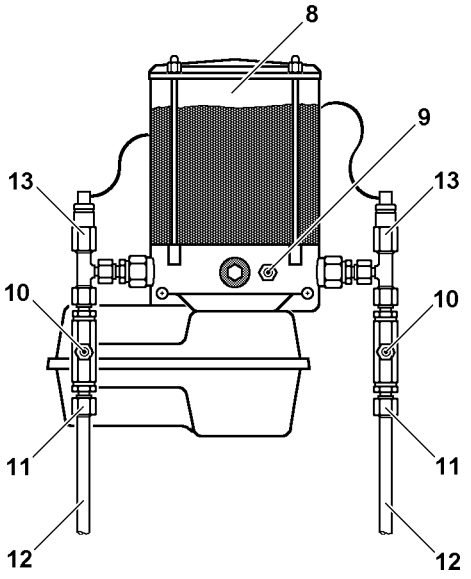

B118029

2.5 Troubleshooting on the central lubrication system of the crawler carrier

Problem	Cause	Remedy
The grease pump does not work	Electrical line interrupted, grease pump defective	Fix or replace the electrical line, replace the grease pump
Grease pump operates, but does not deliver	Air cushion in delivery piston, minimum fill level fallen below, grease pump element defective	Bleed grease pump, fill reservoir, replace grease pump element
No grease collar on all lube points	Grease pump does not work, system blocked	See “Grease pump does not work” or “Grease emerges via pressure relief valve”
No grease collar on several lube points	Supply lines to secondary distributors broken or leaking, screw connections leaking	Replace lines, tighten or replace screw connections
No grease collar on one lube point	Associated lube line broken or leaking, screw connection leaking	Replace line, tighten or replace screw fitting
Grease pump speed reduced	High system pressure, low ambient temperature	Check system / grease points, no damage: Lubricate manually once or twice in between [1)]
Grease emerges via pressure relief valve	System pressure too high, distributor blocked, system blocked, defective valve spring on pressure relief valve	Check system, replace distributor, repair blocked / seized bearing point, replace pressure relief valve

1) See section “Intermediate lubrication of crawler carriers”.

If a problem cannot be remedied, contact the Service Dept. at Liebherr-Werk Ehingen.

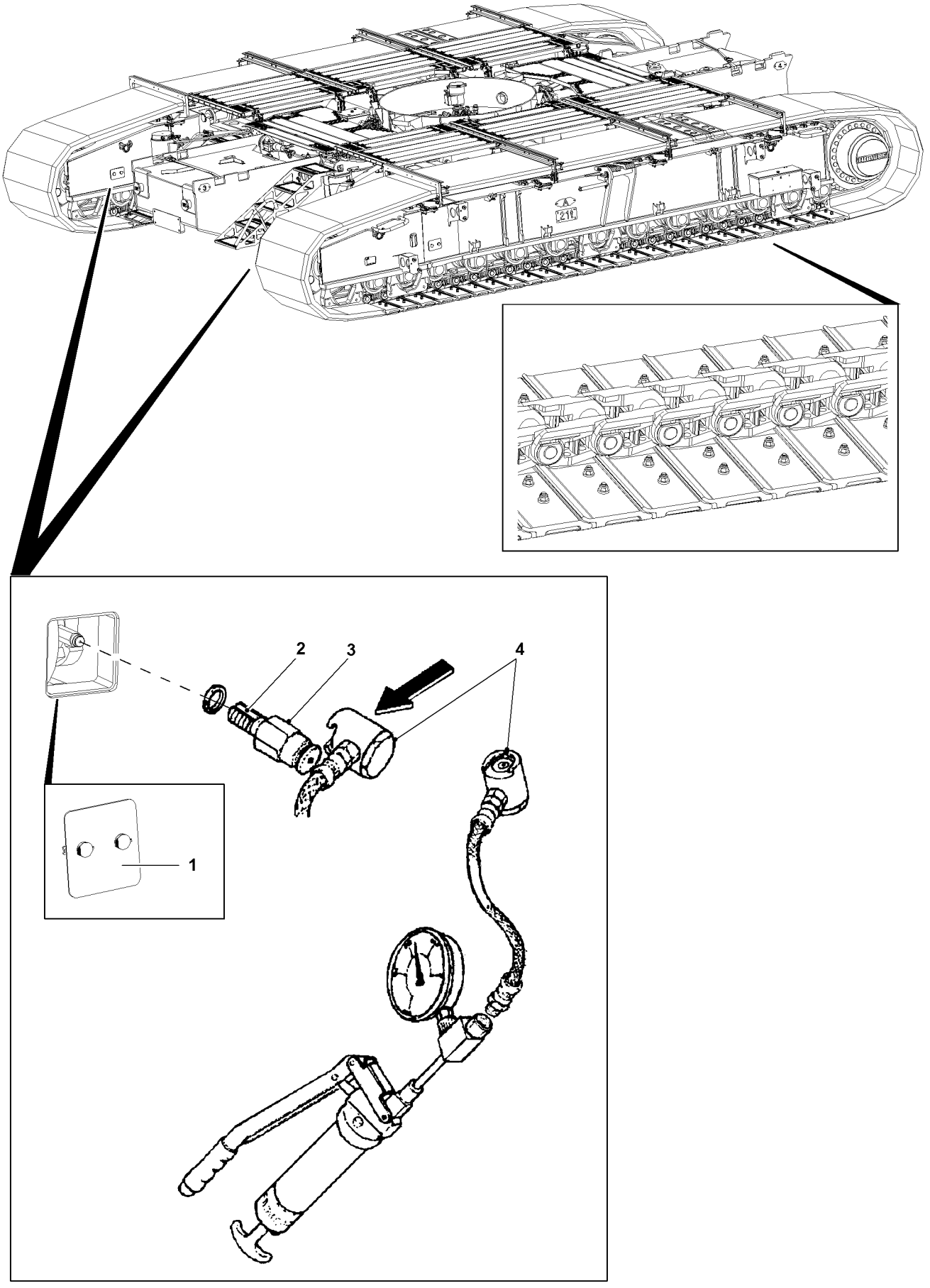

B118013

3 Crawler travel gear

In crawler operation, the components of the track chain wear and must therefore be checked in specified intervals, see chapter 7.02 of the Crane operating instructions and replaced with new components, if necessary.
The track chains are tensioned with tension cylinders, which are extended with a manual grease gun.
To release the tension of the track chains, reduce the pressure in the tension cylinder.

3.1 Tensioning the track chain

NOTICE
Damage to the track chain!
If the chain tension is not checked within the specified maintenance intervals, the track chain or the steel structure of the crawler carrier can be damaged!
▶ Observe and adhere to the maintenance intervals as specified in chapter 7.02 of the Crane operating instructions!
▶ Establish the permissible chain tension.

NOTICE
Foreign particles in track chains!
Foreign particles in the track chains and on the travel drive can cause damage!
▶ Before tensioning the track chains, check the track chains and the travel drives for foreign particles, such as rocks, and clean them, if necessary!

Make sure that the following prerequisites are met:
– The crane is in horizontal position.
– The manual grease gun with pressure gauge is on hand.

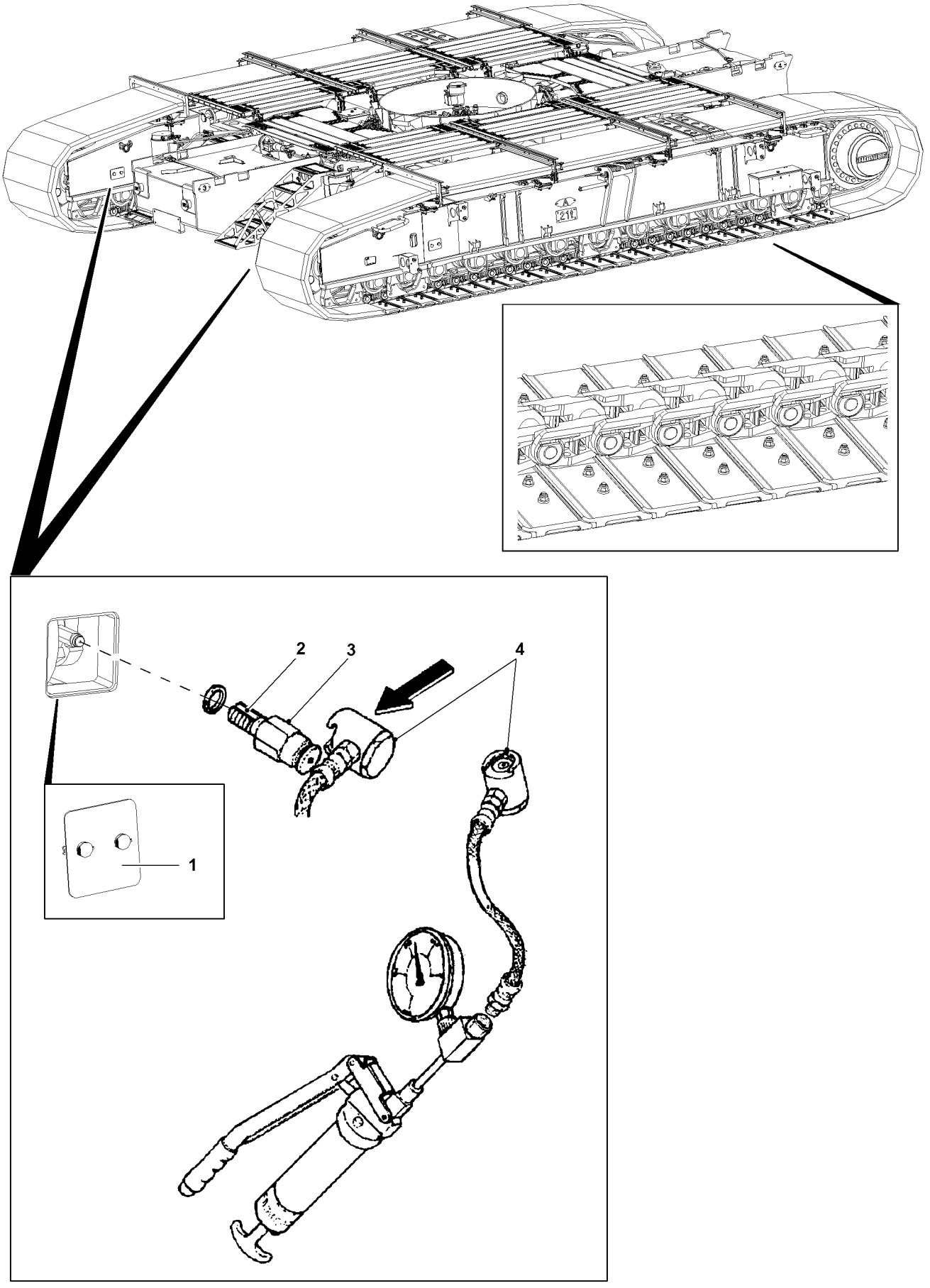

B118013

3.1.1 Tensioning procedure

▶ Unscrew the cover **1** on the inside of the crawler carrier.

▶ Attach the hose **4** of the manual grease gun to the grease fitting **3** of the tension cylinder to the stop position (push).

▶ Activate the manual grease gun until the pressure gauge shows a pressure of about **160 bar** to **180 bar** .

Result:

– The track chain is tensioned.

▶ Remove the pressure hose **4** from the grease fitting.

Troubleshooting

The pressure hose **4** does not detach from the grease fitting **3**?

The pressure in the pressure hose **4** is too high.

▶ Carefully loosen the pressure hose **4** on the manual grease gun, so that the pressure in the pressure hose is reduced.

▶ Remove the pressure hose **4** from the grease fitting **3**.

▶ Install the cover **1** on the inside of the crawler carrier.

▶ After the tensioning procedure, drive the track chain by about one track length straight ahead forwards and backwards.

Result:

– The tension in the lower chain area is relieved.

Note

▶ If necessary, repeat the tensioning procedure on the track chain.

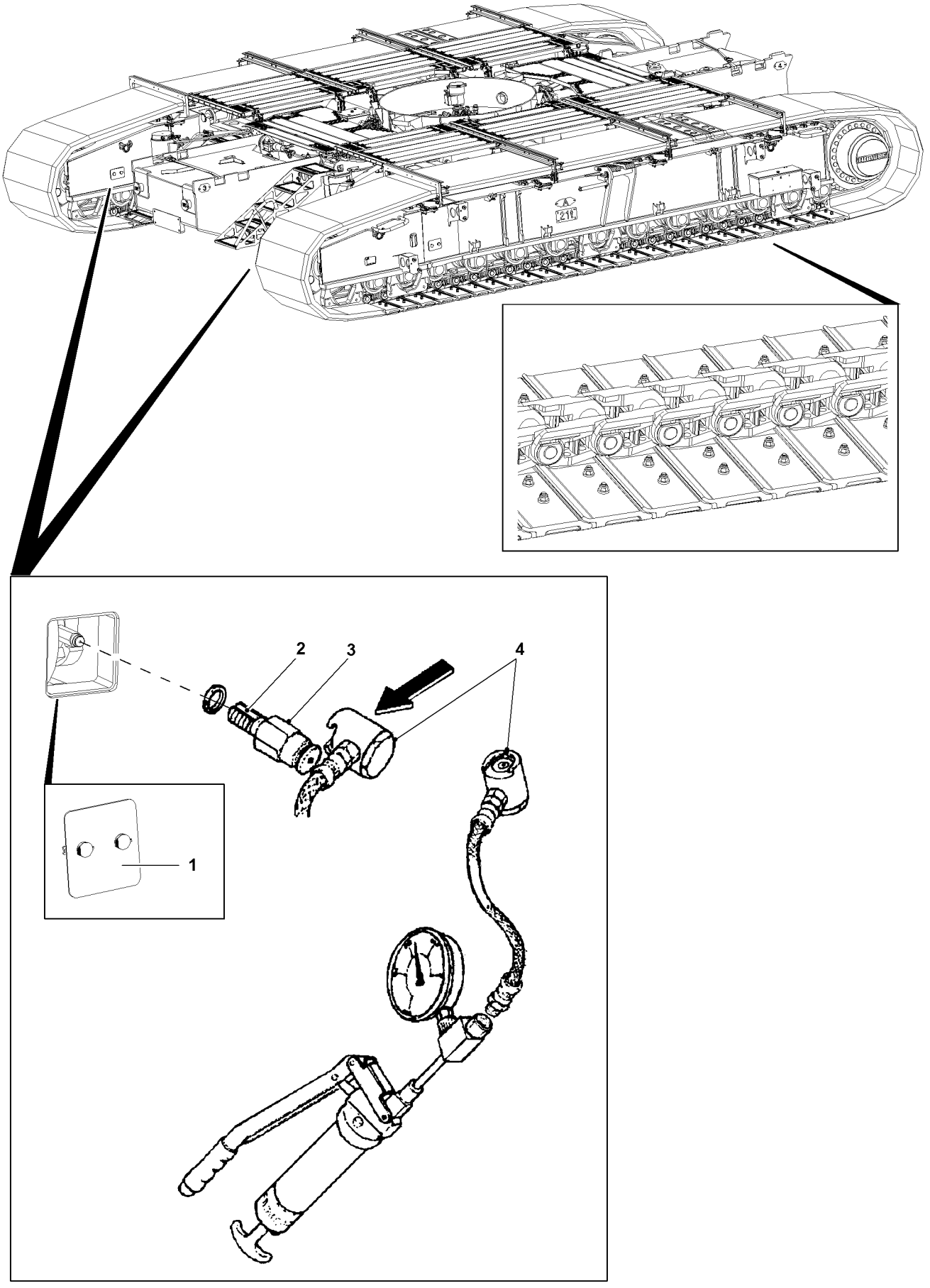

B118013

3.2 Relieving the track chain

NOTICE
Property damage due to high chain tension
▶ Establish the permissible chain tension.

WARNING
Danger of injury due to excess pressure!
Due to improper procedure when releasing the track chain, severe injuries to the face and especially the eyes can occur due to spraying grease.
▶ When releasing the grease fitting, do not look straight into the opening.
▶ The following steps for the release procedure must be strictly adhered to.

3.2.1 Release procedure

▶ Unscrew the cover **1** on the inside of the crawler carrier.
▶ Loosen the grease fitting **3** with extreme caution.
▶ Back the grease fitting **3** out carefully by 2 or 3 threads until grease can emerge from the groove **2**.
▶ Tighten the grease fitting **3** again.
▶ Install the cover **1** on the inside of the crawler carrier.

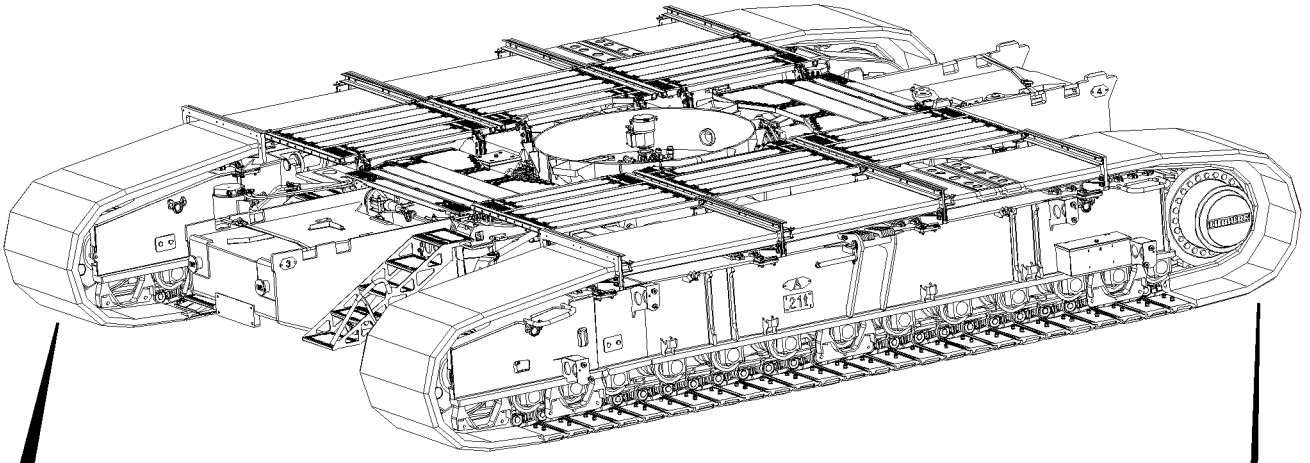

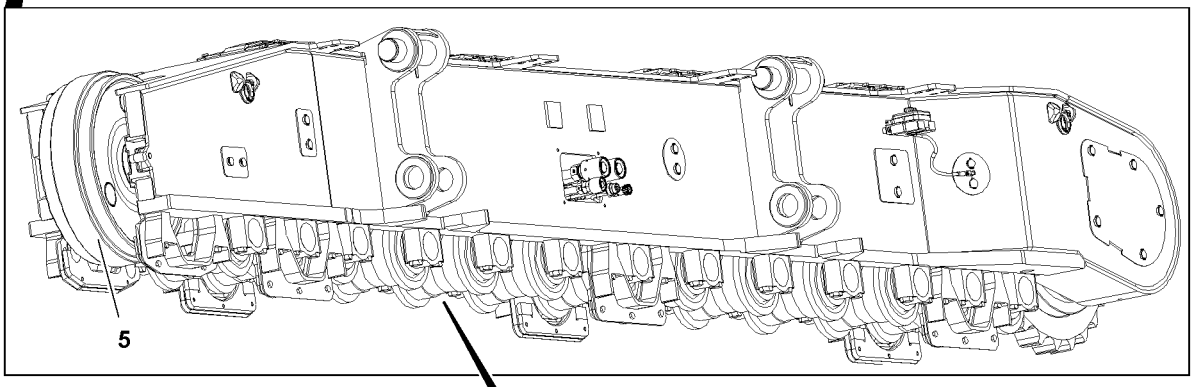

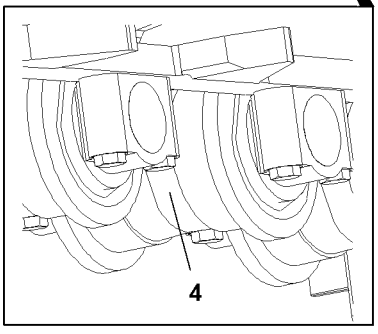

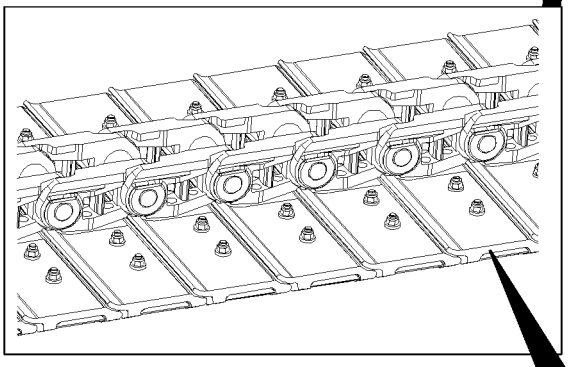

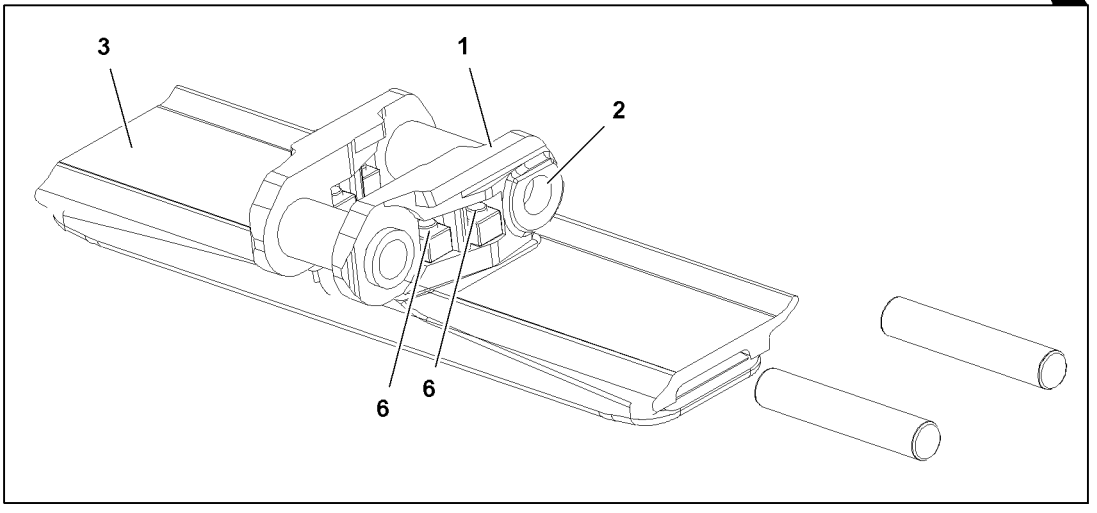

B118030

3.3 Wear data for crawler travel gear

WARNING
Track chain can be ripped off!
If the wear limit on the track pads, bolts or track rollers is exceeded, then the track chain can break off during crawler operation!
The crane can topple over and personnel can be severely injured or killed!
- ▶ Random inspections of the track pads, bolts and track rollers must be carried out within the specified intervals!
- ▶ During the random inspection of the track rollers, the first and last track roller on the crawler carrier must be included in the inspection!
- ▶ If a wear limit on the component is reached, then the component must be replaced or remachined!

NOTICE
Significant wear of crawler travel gear!
If an individual track pad must be replaced, then it may not be replaced with a track pad which shows a much lower degree of wear!
Significant height differences between the individual track pads, see illustration, lead to an increased mechanical stress on the track pads and the track rollers of the crawler carrier!
- ▶ Replace a defective track pad with a track pad which shows a similar degree of wear!

3.3.1 Components

Chain link **1**
Chain bushing **2**
Track pad **3**
Track roller **4**
Idler **5**
Track pad bolts **6**

3.3.2 Chain link

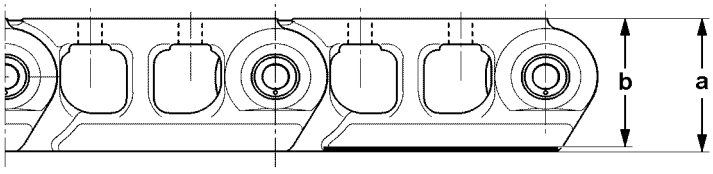

B111492

Component	Dimensions	
	New	Wear limit
	a	b
Chain link	XXXX mm	XXXX mm

3.3.3 Chain length (4 links)

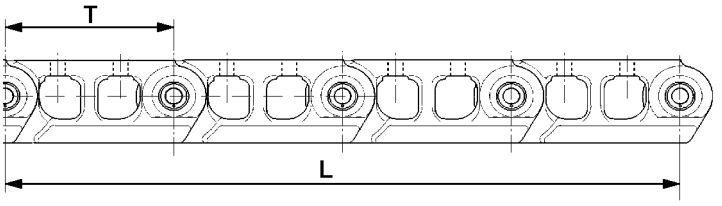

B111493

Component	Dimensions	
	New	Wear limit
Chain length L	XXXX mm	XXXXX mm
Chain pitch T	XXXX mm	

3.3.4 Chain bushing

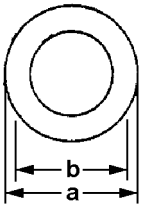

B198808

Component	Dimensions	
	New	Wear limit
	a	b
Chain bushing	Diameter XXX mm	Diameter XXX mm

3.3.5 Track pad

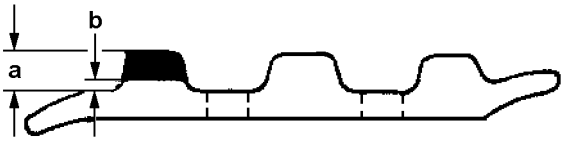

B198809

Component	Dimensions	
	New	Wear limit
	a	b
Track pad	XXX mm	xxx mm

3.3.6 Track roller

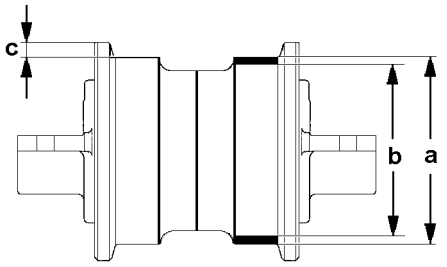

B111491

Component	Dimensions	
	New	Wear limit
Track roller	a = Diameter XXX mm	b = Diameter XXX mm
Distance **c** “Collar running surface”	c = XXX mm	c = XX mm

3.3.7 Idler

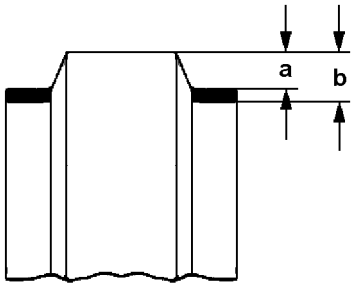

B198812

Component	Dimensions	
	New	Wear limit
	a	b
Idler	xxx mm	XXX mm

3.4 Installation of the track pads

The track pad bolts must be retightened after 50 operating hours.
For regular maintenance intervals for the track pad bolts refer to chapter 7.02 in the Crane operating instructions.

Track pad bolts	Tightening torque
1–1/8”	**2390 Nm ± 120 Nm**
M30x2	2380 Nm ± 120 Nm

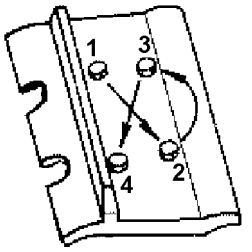

B199143

▶ Retighten the bolts in the order shown on the illustration.

blank page!

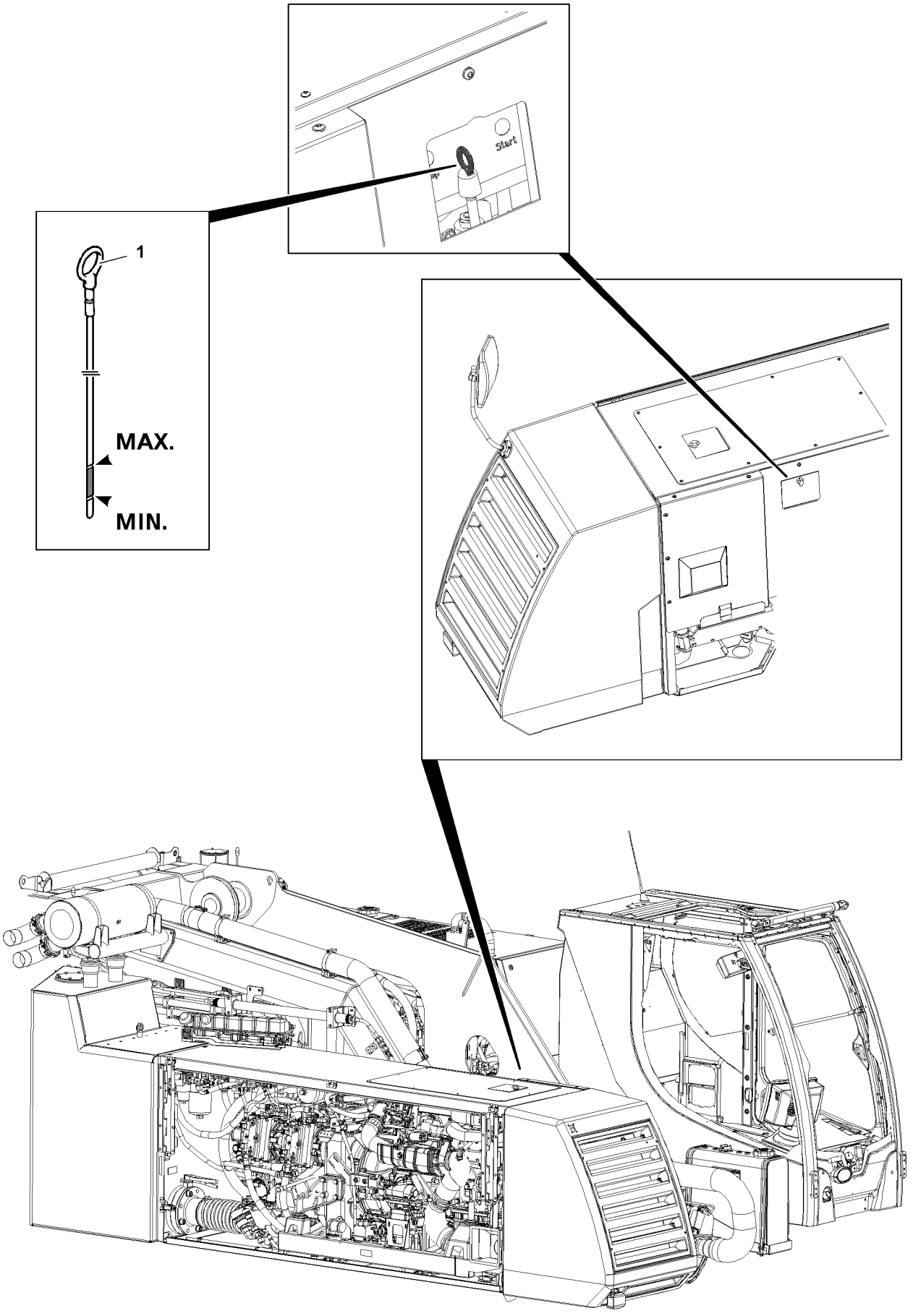

B117362

1 Diesel engine

Never step on fuel lines during maintenance or repair work in the engine area!

DANGER
Danger of fire!
- ▶ Make sure that the engine area is kept free of diesel fuel.
- ▶ Extreme cleanliness is vital, particularly during filter changes and bleeding. Wipe up any spilled fuel!
- ▶ When replacing the filter, it is recommended to put down cleaning rags before removing the filter in order to absorb fuel.

1.1 Engine oil

1.1.1 Checking the oil level with the dipstick

Make sure that the following prerequisites are met:
- – The crane is in horizontal position.
- – The diesel engine is turned off and the oil has collected in the oil pan.

▶ Remove the dipstick **1** and wipe it off.
▶ Reinsert the dipstick **1** and pull it out again.

The oil level must be between the min. and max. marks on the dipstick **1**.
▶ Check the oil level.

CAUTION
Danger of damaging the engine!
If the oil level has dropped below the minimum mark, add engine oil according to the Service schedule until the oil level is between the minimum and maximum marks.
▶ Add engine oil and check again.

▶ Reinsert the dipstick **1**.

1.1.2 Changing the oil

Refer to the separate operating instructions for “LIEBHERR Diesel engines”.

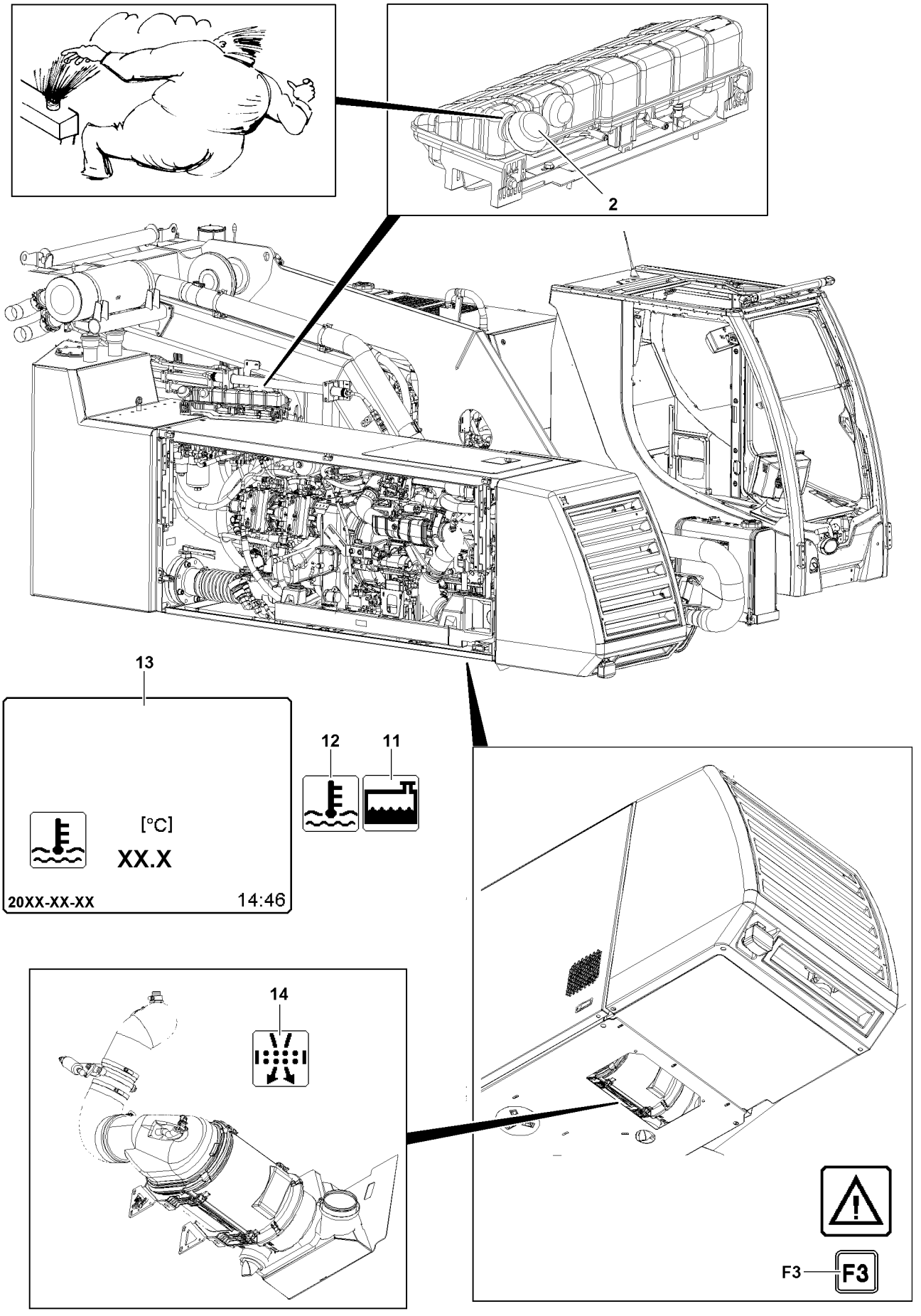

B117365

1.2 Coolant Engine cooling

The coolant level is monitored by the LICCON computer system. If, for example, the coolant level is too low, the warning icon on the function key **F3** is shown in red. By pressing the function key **F3** you get into the “monitoring field with monitoring functions”. There the icon **11** “Coolant level” is shown in red.

If the coolant temperature is too high, then in case of an error, the icon **12** in the “monitoring field with monitoring functions” is also shown in red.

The coolant temperature **13** of the diesel engine can also be shown in the individual control display on the LICCON monitor, see Crane operating instructions, chapter 4.02.

DANGER
Danger of skin burns!
▶ The diesel engine must be cold when checking the coolant.

▶ Turn the cap **2** on the filler neck of the water cooler expansion tank to the 1st notch.
▶ Release excess pressure.
▶ Remove the cap **2**.
▶ Check the coolant level.

Add coolant as specified in the Service schedule only on the filler neck of the water cooler expansion tank.
▶ Add coolant to overflow level if necessary.

1.3 Air filter

The air filters are monitored by the LICCON computer system. If an increased vacuum occurs in the suction line due to dirty filter inserts, then the warning icon on the function key **F3** is shown in red. By pressing the function key **F3** you get into the “monitoring field with monitoring functions”. There the icon “Air filter contaminated” **14** is shown in yellow.
▶ If the warning “Air filter contaminated” **14** appears:
Clean or replace filter insert.

1.4 Diesel particle filter*

DANGER
Danger of igniting the diesel particle filter*!
▶ The diesel particle filter* may only be regenerated under the supervision of operating personnel!

Carry out the operation and maintenance of the diesel particle filter* according to the separate operating instructions of the diesel particle filter* manufacturer.

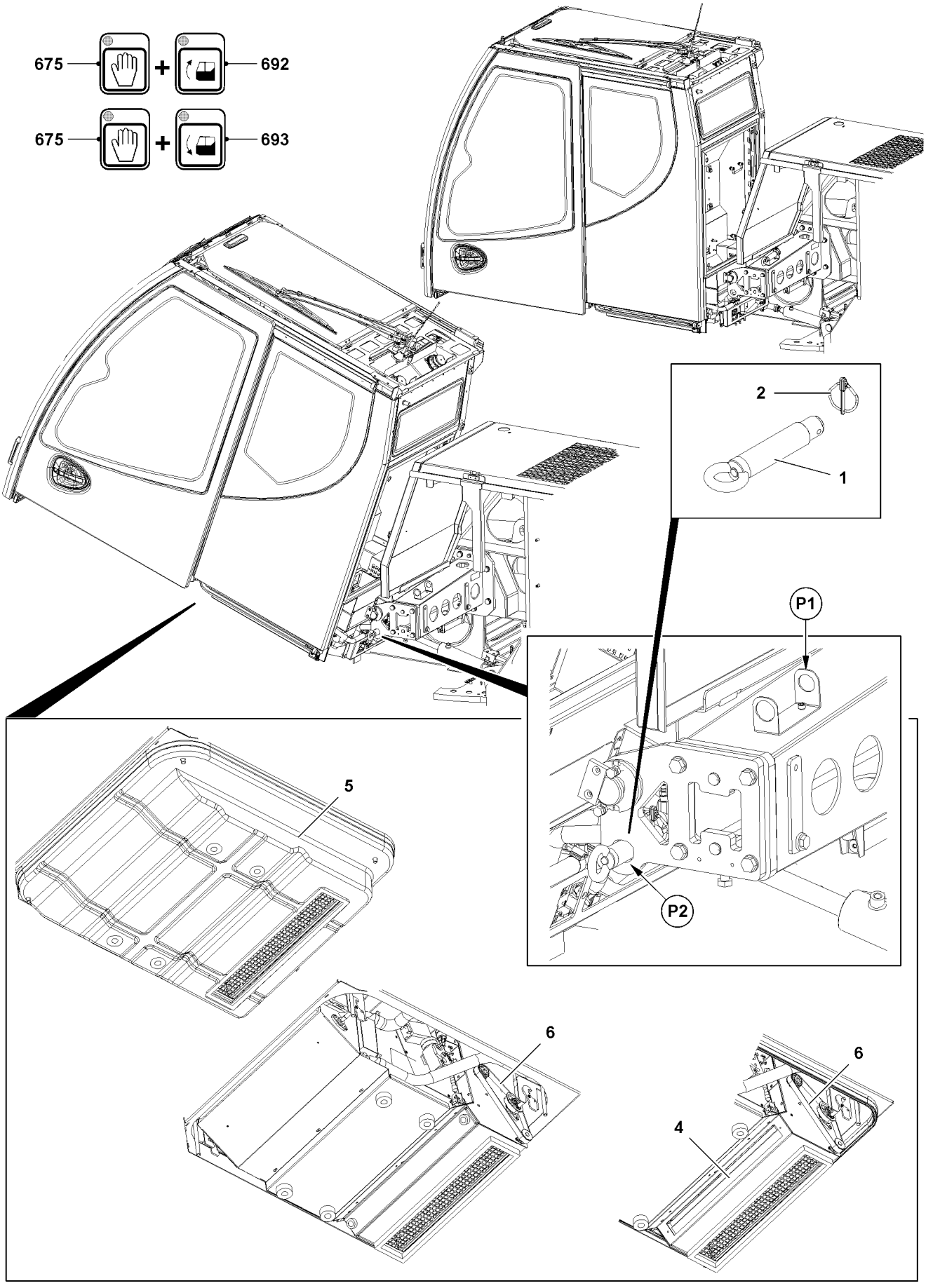

B117371

2 Securing the tiltable cab for maintenance work

The crane operator's cab can be tilted upward for maintenance work.

WARNING
Danger of accident!
Personnel can be severely injured or killed!
- ▶ While the crane operator's cab is tilted, it is prohibited for any persons or objects to remain within the danger zone of the crane operator's cab!
- ▶ Before stepping on the step, set the crane operator's cab into horizontal position.

2.1 Tilting crane operator's cab upward

Make sure that the following prerequisite is met:
- – The sliding door of the crane operator's cab is open and pushed into locking position.

WARNING
Danger of accident!
If the sliding door of the crane operator's cab is opened in inclined position, then the sliding door can move back suddenly!
Hands can be crushed or injured!
- ▶ Before tilting the crane operator's cab, open the sliding door of the crane operator's cab and slide it into locking position!
- ▶ When the crane operator's cab is tilted, it is prohibited to access the step!
- ▶ Leave the crane operator's cab with a suitable aid, such as a working platform!

▶ Activate the release key **675** and then press the control button **692**.

Result:
- – The crane operator's cab swings upward.

▶ Swing the crane operator's cab upward until the retaining pin **1** can be installed on point **P2**.
▶ Turn the engine off and pull the ignition key.

2.2 Installing the retaining pin

WARNING
Danger of crushing!
If maintenance work is carried out before the crane operator's cab is secured to prevent it from tilting, personnel can be killed or severely injured!
- ▶ Secure the crane operator's cab with the retaining pin **1** to prevent it from swinging downward uncontrolled!

▶ Release the retaining pin **1** on point **P1** and take it from the transport retainer.
▶ Install the retaining pin **1** on point **P2** and secure with locking pin **2**.

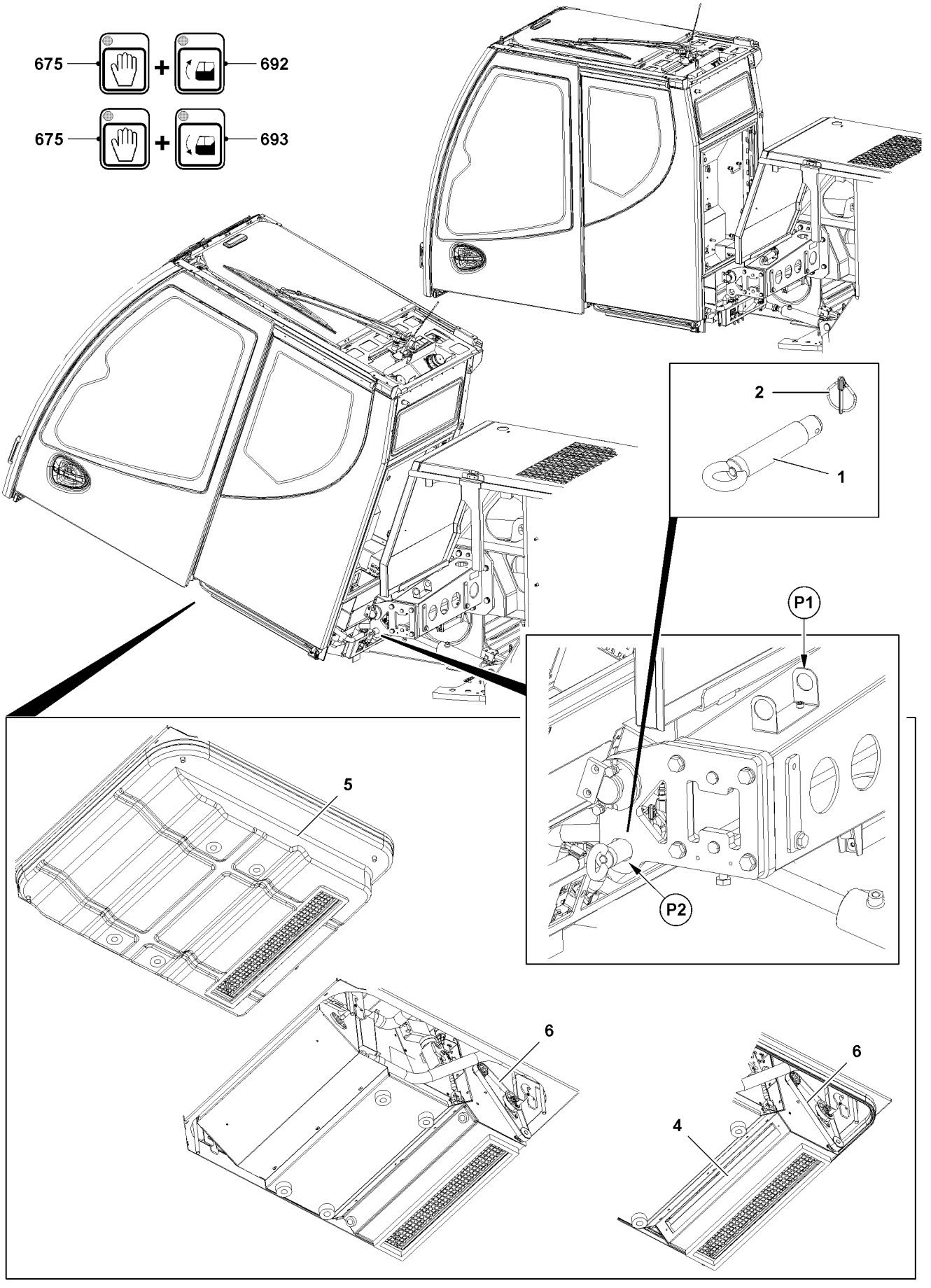

B117371

2.3 Replacing the filter insert

If a water heater **5** is installed in the crane operator's cab, then the filter insert **4** must be changed once a year, see Crane operating instructions, chapter 7.03.

Note

▶ The change cycle can change, depending on the area of application.

▶ Replace the filter insert **4** on the blower **6**.

2.4 Removing the retaining pin

▶ Release the retaining pin **1** on point **P2** and take it out.

▶ Install the retaining pin **1** on the transport retainer on point **P1** and secure with locking pin **2**.

2.5 Setting the crane operator's cab horizontally, illustration 1

WARNING

Danger of falling!

Personnel can be severely injured or killed!

▶ Access the crane operator's cab with a suitable aid, such as a working platform!

▶ While the crane operator's cab is tilted, it is prohibited for any persons or objects to remain within the danger zone of the crane operator's cab!

▶ Before stepping on the step, set the crane operator's cab into horizontal position.

▶ Activate the release key **675** and then press the control button **693**.

Result:

– The crane operator's cab swings downward.

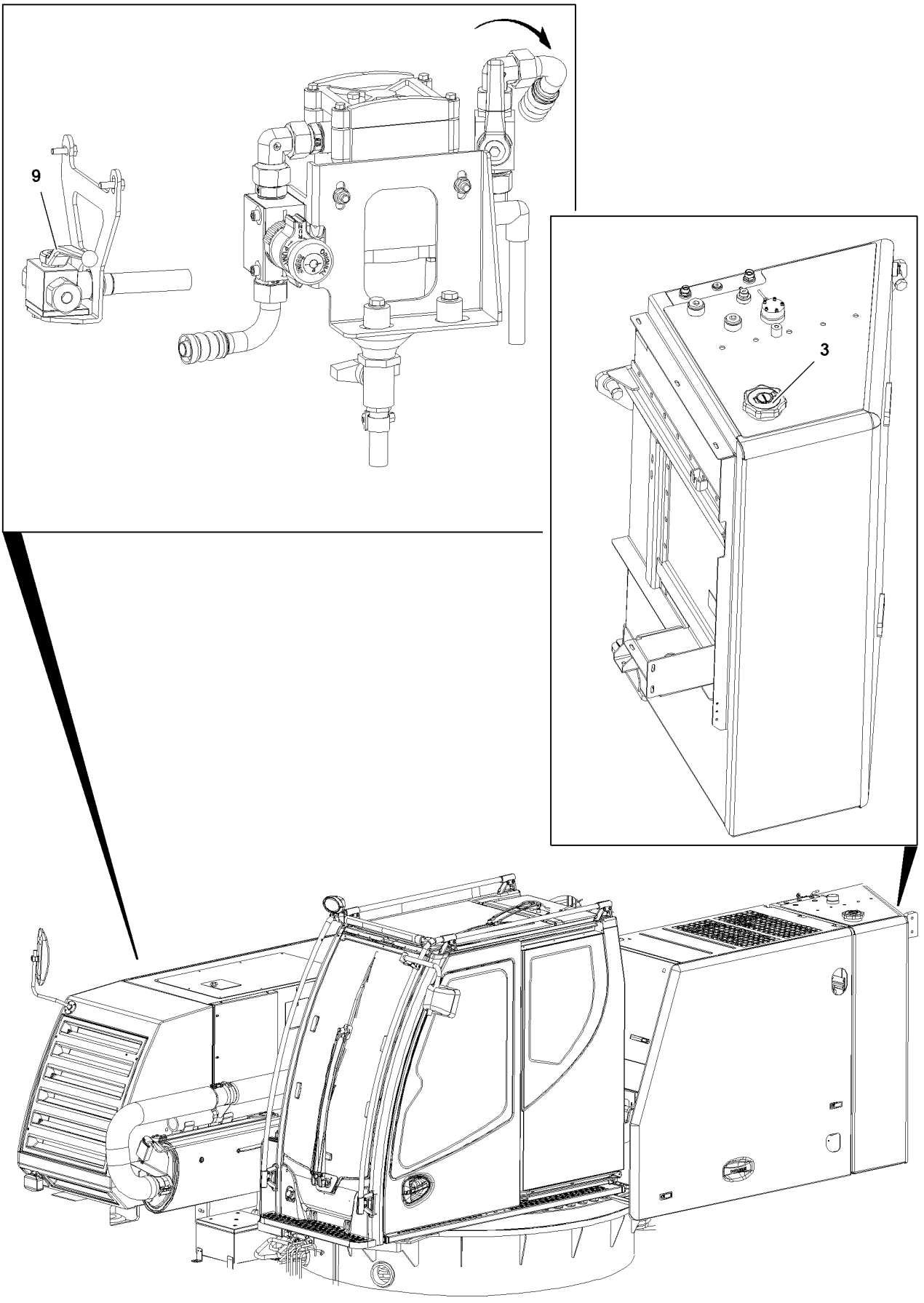

B117372

3 Fuel system

Note
▶ The fuel tank can be completely emptied with the drain valve **9**.

3.1 Refueling

Make sure that the following prerequisites are met:
– The crane is in horizontal position.
– The engine is turned off, the ignition is turned off.
– All railings and steps are swung into assembly position, see Crane operating instructions, chapter 2.06.

Note
▶ Also observe the danger notes in the Crane operating instructions, chapter 7.01.

▶ Access the crane, see Crane operating instructions, chapter 2.07.
▶ Open the tank cover **3**.
▶ Insert the fuel nozzle in the filler neck.
▶ Refuel the vehicle.
▶ After the refueling procedure:
Remove the fuel nozzle **11** from the filler neck **2**.
▶ Close the tank cover **3** and remove the fuel nozzle.

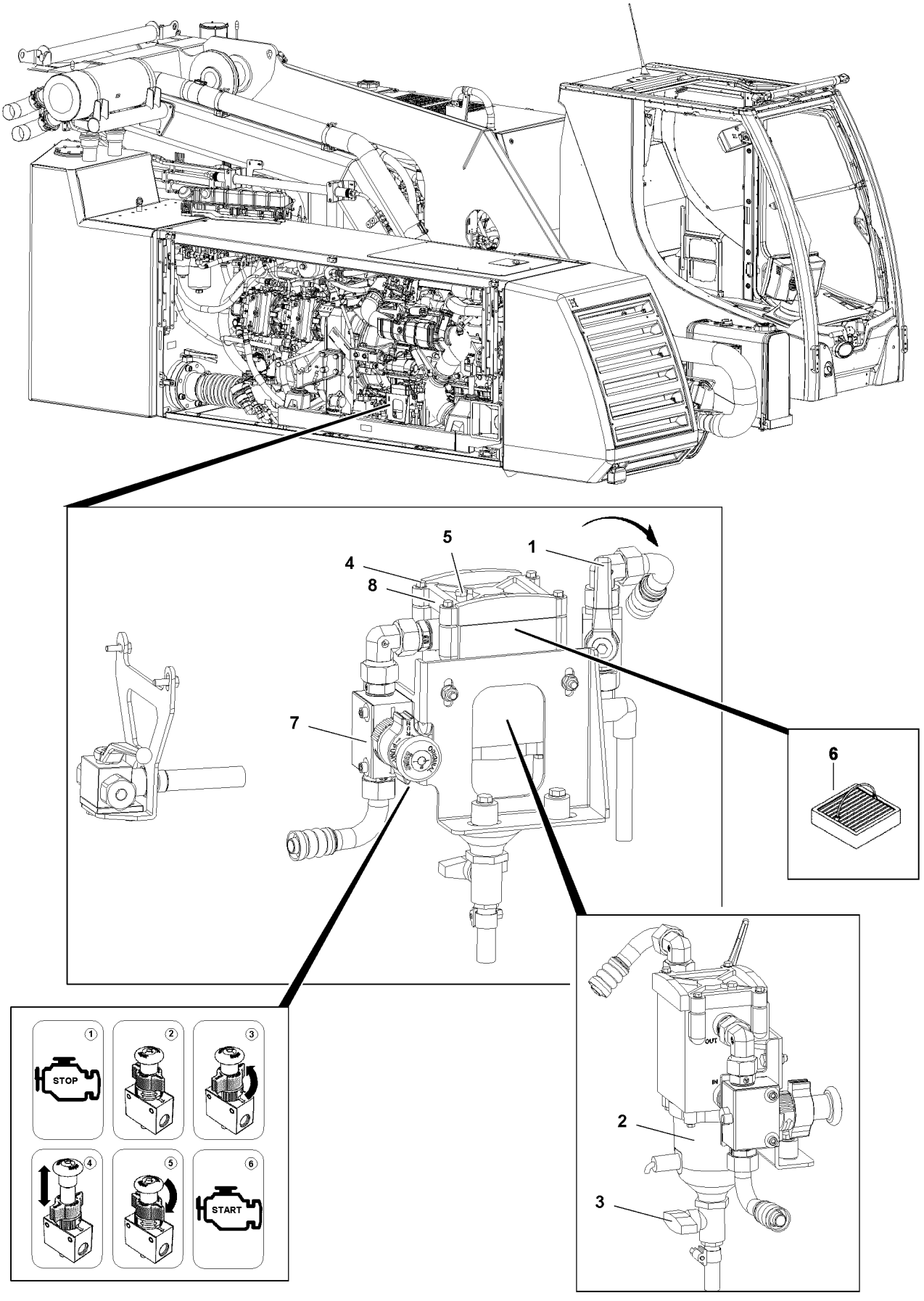

B117363

3.2 Fuel preliminary filter

3.2.1 Draining the fuel preliminary filter

Note

- The water separator **2** on the fuel preliminary filter must be drained according to the maintenance intervals or when an error message is shown.

- Turn the diesel engine off.
- Place a catch basin under the water separator.
- Close the ball valve **1**.
- Open the drain valve **3** and drain water until fuel emerges.
- Close the drain valve **3**.
- Open the ball valve **1**.
- Remove the catch basin and dispose of the fluid.

3.2.2 Cleaning the filter strainer

Note

- The filter strainer **6** on the fuel preliminary filter must be cleaned according to the maintenance intervals or when an error message is shown.

DANGER

Danger of fire and explosion!

- Do not smoke!
- Avoid open flames!
- Work only when the diesel engine is turned off!
- Maintain extreme cleanliness during all work!

- Turn the diesel engine off.
- Place a catch basin under the fuel preliminary filter.
- Close the ball valve **1**.
- Open the drain valve **3** until no more fuel emerges.
- Remove the catch basin and dispose of the fluid.
- Remove the screws **4** and remove the cover **8**.
- Remove the filter strainer **6** and clean it properly.
- Insert the cleaned filter strainer **6** properly.
- Install the cover **8** with seals properly.
- Properly tighten the screws **4**.
- Open the ball valve **1**.
- Open the breather screw **5**.
- Operate the hand pump **7** and properly bleed the fuel filter.
- Properly tighten the breather screw **5**.
- Start the diesel engine and check the fuel preliminary filter for leaks.

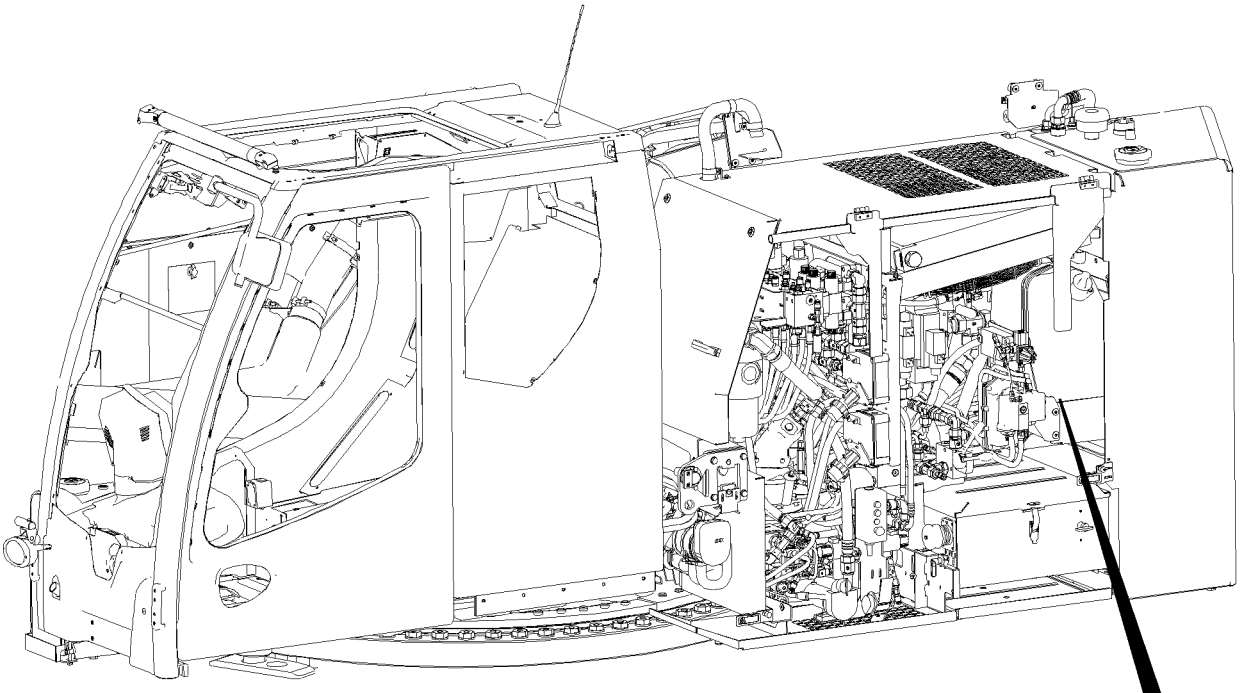

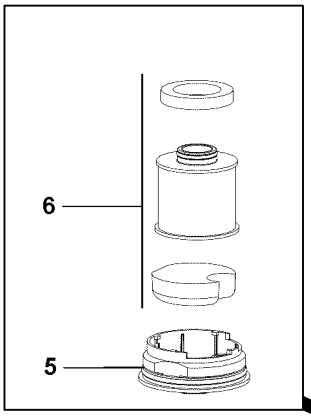

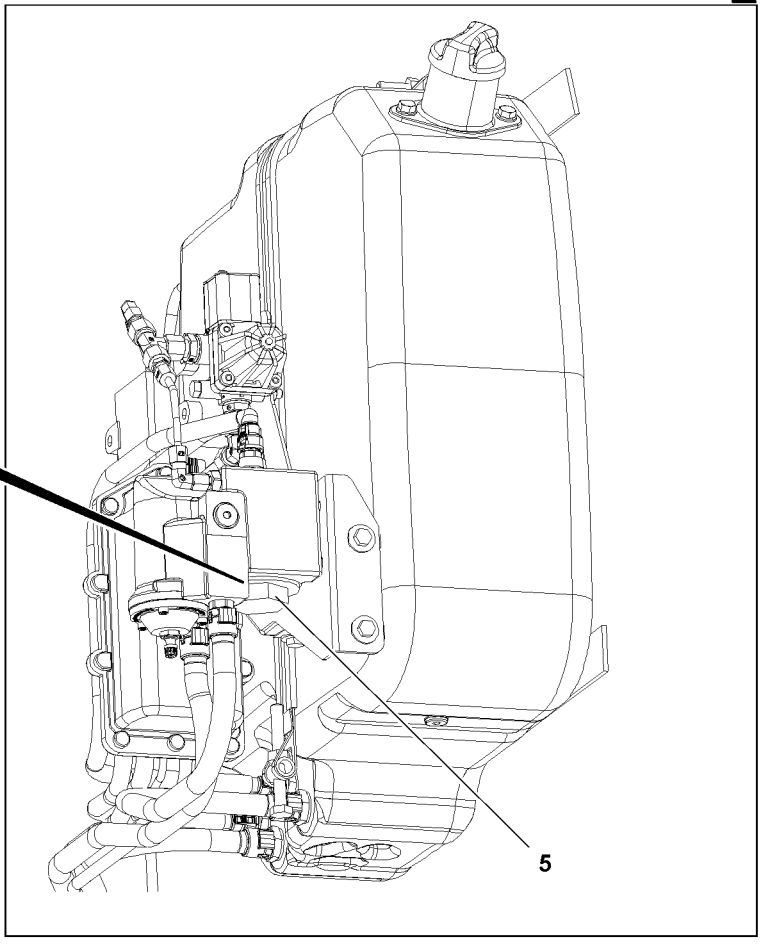

B117361

4 Urea system*

Note
▶ Urea system only for Diesel engines with exhaust aftertreatment system SCR (Selective Catalytic Reduction).

4.1 Adding Urea solution

Make sure that the following prerequisites are met:
– The auxiliary heater is turned off.
– The parking brake is applied.
– The Diesel engine and the ignition are turned off.

Note
▶ Also observe the danger notes in the Crane operating instructions, chapter 7.01.

▶ Open the tank cover **3** on the Urea tank **1**.
▶ Insert the fuel nozzle in the filler neck **2** of the Urea tank **1**.
▶ Refuel the vehicle.
▶ After the refueling procedure:
Remove the fuel nozzle and close the tank cover **3**.

4.2 Changing the urea filter

NOTICE
Danger of corrosion!
If urea is spilled, affected surfaces can corrode!
▶ Absorb the spilled urea and flush the affected areas immediately with a large amount of water!
▶ When handling urea, observe the general cautionary and sanitary protective measures!

Note
▶ Change the filter insert **6** for the urea pump **4** according to the data in the maintenance intervals, see Crane operating instructions, chapter 7.02!
▶ Also observe separate engine manufacturer's operating instructions.
▶ Change the filter insert **6** only when the pressure is relieved!

▶ Turn the diesel engine off.
▶ Remove the cover.
▶ Open the housing cover **5** and replace the filter insert **6**.
▶ Close the filter housing with the housing cover and tighten with a tightening torque of 15 Nm.
▶ If applicable, remove spilled urea and clean affected areas with plenty of water.

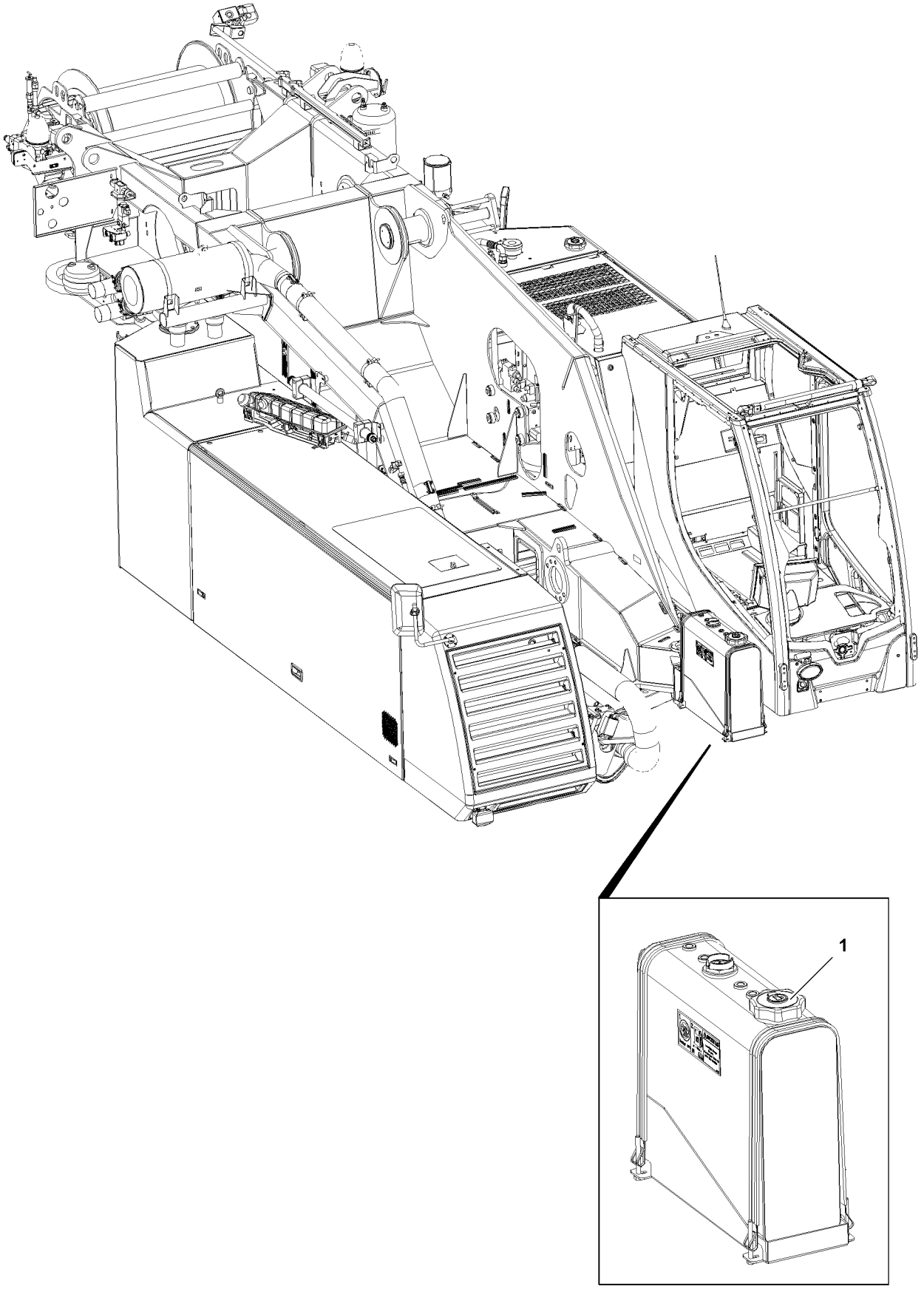

B117373

5 Fuel container*

The fuel container* is optional and is only required for operation with auxiliary heater.

5.1 Refueling fuel

Make sure that the following prerequisites are met:
- The crane is in horizontal position.
- The auxiliary heater is turned off.
- The engine and the ignition are turned off.
- All railings and steps are swung into assembly position, see Crane operating instructions, chapter 2.06.

Note
▶ Also observe the danger notes in the Crane operating instructions, chapter 7.01.

▶ Access the crane, see Crane operating instructions, chapter 2.07.
▶ Open the tank cover **1**.
▶ Insert the fuel nozzle in the filler neck.
▶ Refuel fuel.
▶ After the refueling procedure:
Remove the fuel nozzle from the filler neck.
▶ Close the tank cover **1** and remove the fuel nozzle.

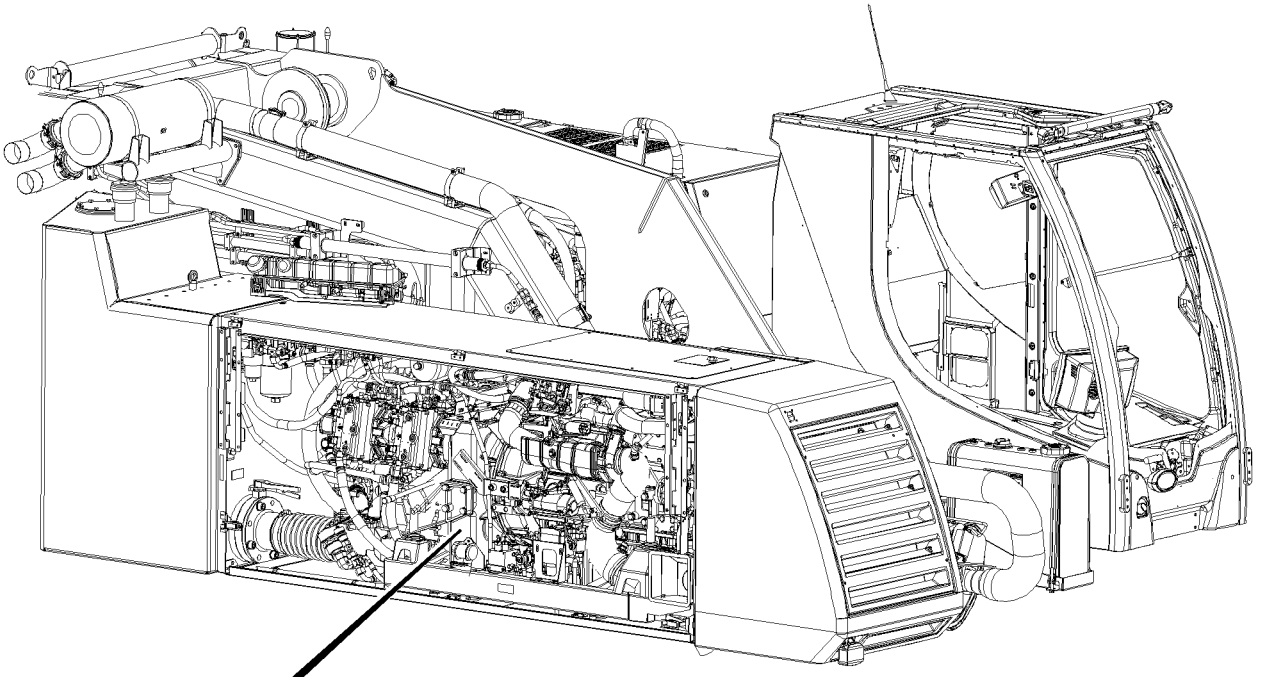

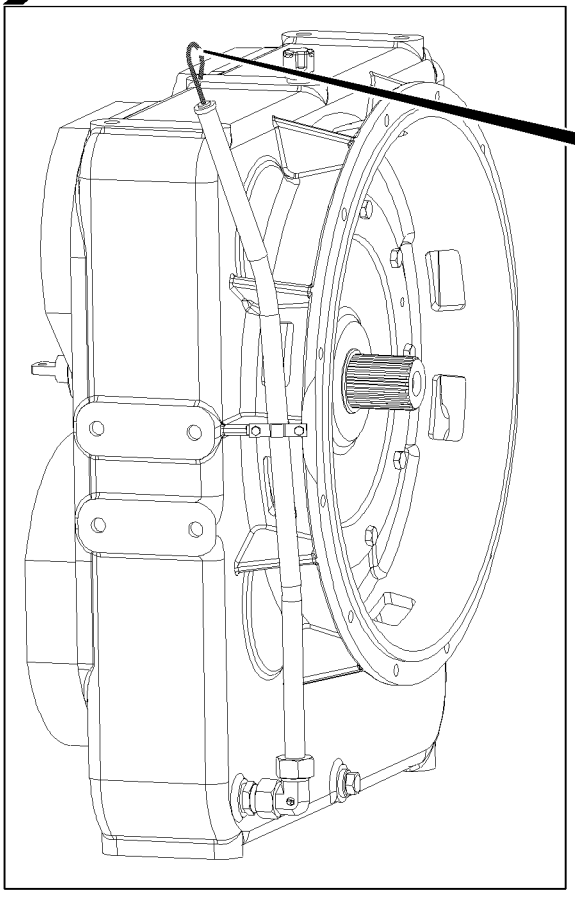

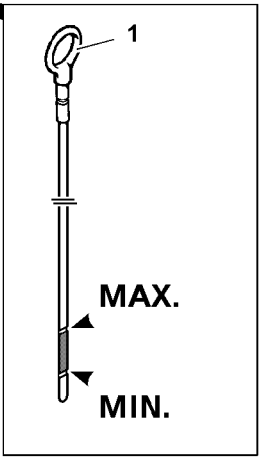

B117367

6 Pump distributor gear

Maintain utmost cleanliness during all work to prevent any dirt from entering the inside of the gear.

6.1 Checking the oil level

Ensure that the crane is horizontal.

▶ Remove the dipstick **1** and wipe it off.

▶ Reinsert the dipstick **1** and pull it out again.

The oil level must be between the min. and max. marks on the dipstick **1**.

▶ Check the oil level.

CAUTION

Danger of gear damage!

If the oil level has dropped below the minimum mark, add oil as shown in the Service schedule until the oil level is between the minimum and maximum marks.

▶ Add oil and check again.

▶ Reinsert the dipstick **1**.

6.2 Changing the oil

Make sure that the following prerequisites are met:

– The crane is in horizontal position.

– The gear has warmed up.

▶ Remove the oil filler plug **2**.

▶ Remove the oil drain plug **3** and drain the oil.

▶ Install the oil drain plug **3** with new seal and tighten.

▶ Add oil according to the Service schedule on the oil filler plug **2** until the oil level is between the min. and max. marks on the dipstick **1**.

▶ Install the oil filler plug **2** with new seal.

▶ Check the oil level.

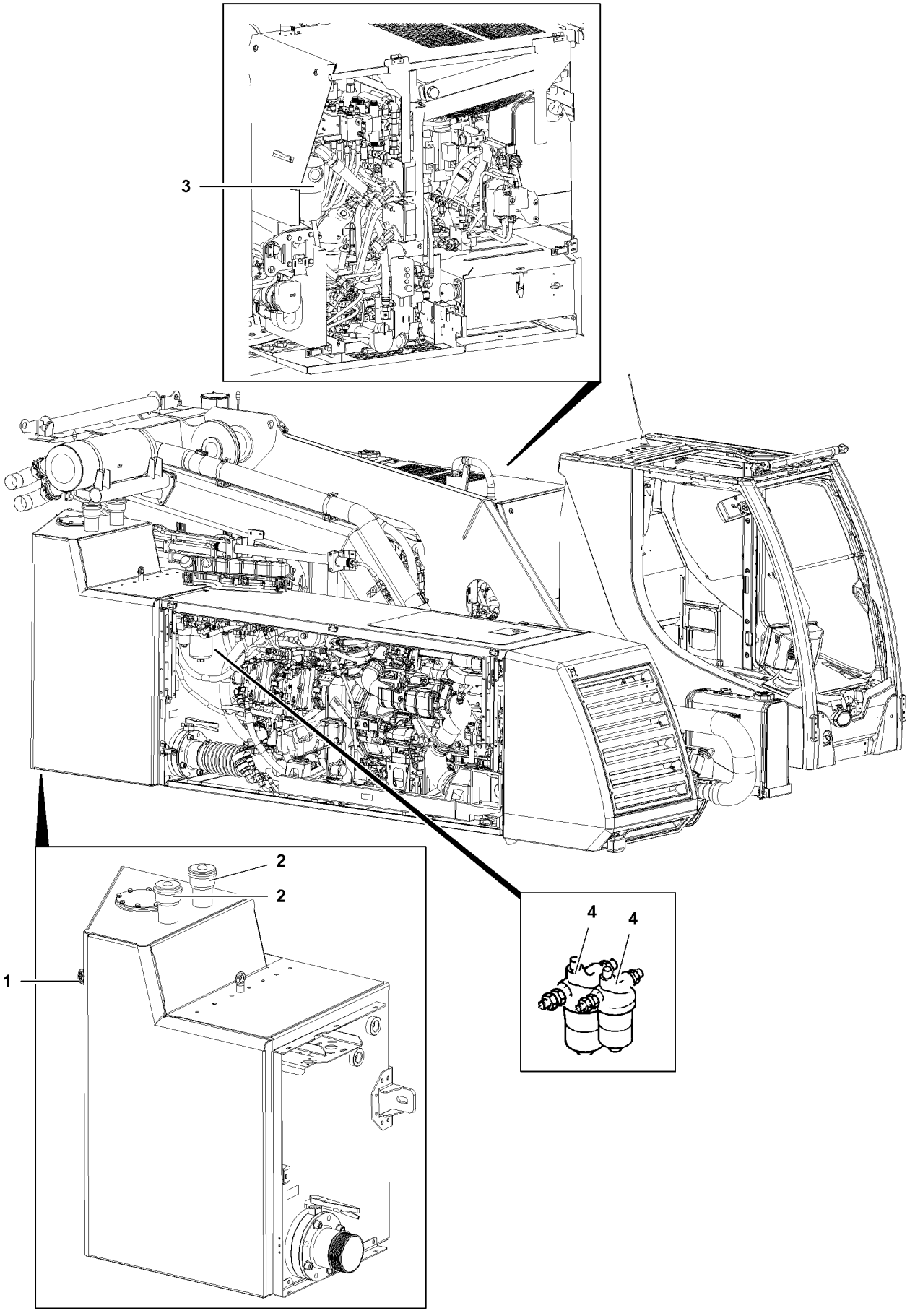

B117364

7 Hydraulic system

When adding oil, observe utmost cleanliness.

7.1 Hydraulic tank

7.1.1 Checking the oil level

Make sure that the following prerequisites are met:
– The crane is in horizontal position.
– The luffing cylinder and the telescoping cylinder are fully retracted.

The oil level must be in the center of the oil level sight gauge **1**.
▶ Check the oil level on the oil level sight gauge **1** of the hydraulic oil tank.

Troubleshooting
No oil is visible in the oil level sight gauge **1**?
▶ Add oil according to the Service schedule with a fine-mesh strainer until the oil level is visible in the center of the oil level sight gauge **1**.

7.1.2 Checking the vent / breather filter

▶ Open the cover with the turn lock.
▶ Check filters **2** for impurities (visual inspection).
▶ In the event of heavy contamination:
Replace the filters **2**.
▶ Close the cover with the turn lock again.
▶ Start the engine.
▶ Slowly run through all crane movements.
▶ Check the oil level again and add oil if necessary.

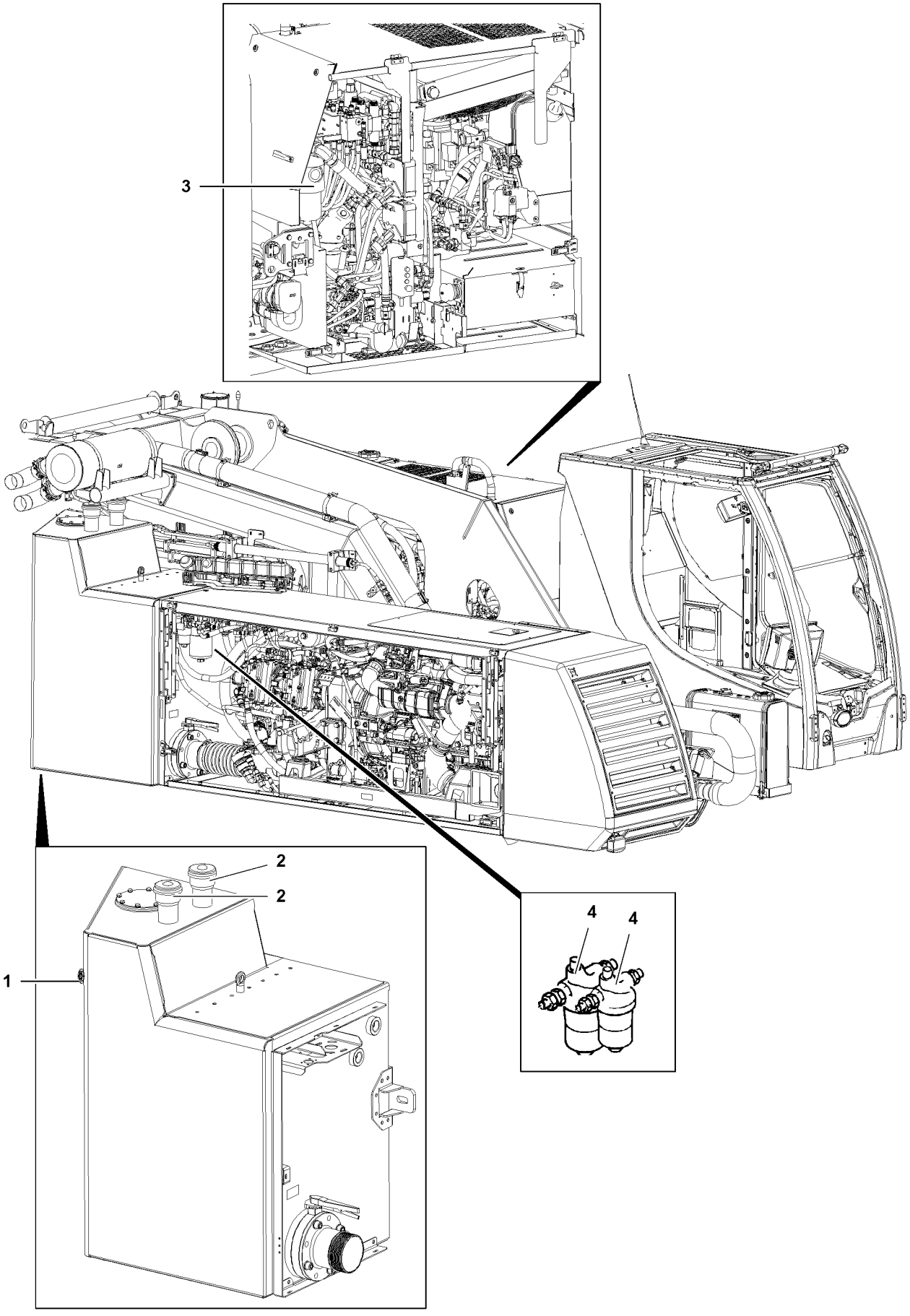

B117364

7.1.3 Return filter

One of the two return filters **3** is equipped with a maintenance indicator.

- ▶ If the red mark is visible when the oil is warmed up and ready for operation:
  Replace filter unit.
- ▶ Unscrew and remove both filter covers.
- ▶ Remove the filter units.
- ▶ Clean the sealing surface on the covers.
- ▶ Install new filter units.
- ▶ Lubricate the rubber seal rings in the covers with oil.
- ▶ Place both filter covers and tighten.
- ▶ Start the engine and check the filter for leaks.
- ▶ Check the oil level and add oil if necessary.

7.2 Pressure filters in the crane hydraulic

The pressure filters **4** are equipped with a maintenance indicator. If the red bar indicator is visible when the oil is at operating temperature, then the filter cartridge must be replaced.

- ▶ Turn the engine off.
- ▶ Release the filter cartridge and collect any escaping oil in a suitable container.
- ▶ Remove and dispose of the filter cartridge.
- ▶ Clean the sealing surface on the filter bracket.
- ▶ Lubricate the rubber seal ring on the new oil filter cartridge with oil.
- ▶ Install a new filter cartridge and tighten.
- ▶ Start the engine and check for leaks.
- ▶ Slowly run through all crane movements.

Result:

- This bleeds the hydraulic system.

- ▶ Check the oil level again and add oil if necessary.

7.3 Diaphragm reservoirs

Various diaphragm reservoirs are installed in the hydraulic system. The pretension pressures are specified in the hydraulic circuit diagram as well as on the individual diaphragm reservoirs. The pretension pressure must be measured separately in each diaphragm reservoir.

CAUTION
Risk of damaging the hydraulic system!
If the outside temperature fluctuates considerably, e.g. after transport to extremely hot or cold countries or in countries with considerable differences between the summer and winter temperatures, the gas accumulator pressures may change.

- ▶ Check the gas accumulator pressures and correct if necessary.

Make sure that the following prerequisite is met:

- The crane engine is turned off.
  This relieves the diaphragm reservoir at the fluid side.

DANGER
Danger of explosion!
The pressure in the nitrogen cylinder must be less than the maximum permissible operating pressure of the accumulator or the pressure gauge. Otherwise install a pressure reducer between the cylinder and the filling device.
▶ Do not use air or oxygen to fill the diaphragm reservoir.

The pretension pressure in the hydraulic reservoirs may only be checked by an expert with appropriate training and equipment. In addition, the national regulations for pressurized container inspections must also be observed.
▶ Check the pretension pressure with a testing and filling device and correct, if necessary.

7.4 Hydraulic hose lines

The hydraulic hose lines must be checked according to ISO 9927-1 by an **experienced technician** or **expert mechanic**, as required, depending on the duration of use and the operating conditions, but at least once a year.
Experienced technicians are persons who have adequate knowledge of cranes because of their professional background and experience and are adequately familiar with the relevant settings to detect deviations from the correct situation (i.e. specially trained personnel).
Expert mechanics are mechanics who have experience in the design, construction or maintenance of cranes and have adequate knowledge of the relevant settings and standards and the necessary equipment to perform an inspection, and are in a position to assess the safety standards of the crane and decide which action needs to be taken to ensure that the crane can continue to be operated safely.

Note
Note
▶ The applicable national regulations must also be complied with!

7.4.1 Checking the hydraulic hoses within area of responsibility of the German employer's liability insurance associations

At least once a year, an **expert** must inspect the hydraulic hoses to ensure they are in operationally safe condition. The crane must be inspected by an **authorized inspector** every four years from the day it was first licensed. After the 12th year of operation, the crane must be inspected annually by an authorized inspector.
The **expert** or **authorized inspector** must document the fact that the hydraulic hoses can continue to be used in the crane!
An expert is someone whose technical training and experience means that they have adequate knowledge in the field of hydraulic hoses and hose systems and are adequately familiar with the relevant national work safety regulations, accident prevention regulations, directives and generally accepted technical regulations (e.g. DIN standards, VDE regulations, technical regulations of other EU member states or other countries that have signed the European Economic Community agreement) that they are in a position to assess whether hydraulic hoses and hose systems are safe to work with.
An authorized inspector is someone employed by supervisory authorities. In Hamburg this is the Amt für Arbeitsschutz (work safety office) and in Hessen it is the technical supervisory offices or an authorized inspector employed by the professional associations.

7.4.2 Examples of possible defects in hose lines

DANGER
Risk of fire or accident!
If problems are discovered during inspections, then they must be remedied immediately or suitable measures are to be taken. Failure to do this can result in serious injury to persons, death or damage to property.
▶ Remedy problems or take suitable measures!

- Damage to the outer layer as far as the intermediate later (e.g. chafing, cuts and cracks).
- Outer layer brittleness (crack formation of the hose material).
- Deformation that differs from the natural shape of the hose or hose line, in depressurized as well as in pressurized condition or in bends, for example layer separation, bubbling, crushing or kinking.
- Leaks.
- Failure to follow installation instructions.
- Damage or deformation of hose fittings that inhibit the function and strength of the fitting or the hose / fitting connection.
- Hose slipping out of fitting.
- Fitting corrosion that inhibits function and strength.
- Storage time or usage period exceeded.

7.4.3 Maintenance of hose lines

- We recommend to check all hoses, hose lines and screw fittings daily, but at least every two weeks for leaks and externally recognizable signs of damage.
- Damaged parts must be replaced immediately! Oil spray can lead to injuries and fires!
- Hydraulic lines and hoses may not be repaired!
- Hoses that have already been used as a part of a hose line may not be reinstalled in hose lines.
- Always use Original Liebherr spare parts when replacing hoses and hose lines.
- Always ensure that the hoses are routed free of torsion. If high pressure hoses are being used, attach the screws of the half clamps or full flange at both ends of hose and then tighten.
- When using high pressure hoses with a bent fitting, tighten the end with the bent fitting first when tightening the flanges, then the end with the straight fitting.
- Any mounting clamps in the hose center may be attached and tightened only thereafter.
- Route the hoses in such a way that chafing with other hoses or other structures is prevented. Maintain a minimum clearance of approximately ½ the outer diameter of the hose to other parts. The clearance may never be less than 10 to 15 mm.

7.4.4 Replacing the hose lines

DANGER
Risk of fire or accident!
Failure to replace hose systems at appropriate intervals can cause serious injury to persons, death or damage to property.
▶ Replace hose lines according to appropriate intervals!

This must be documented in the crane's log book by the **expert** or the **authorized inspector**.
The service life of a hose line may not exceed six years, including a storage period of a maximum of two years (pay attention to the manufacturing date on the hoses). The duration of use can also be defined by the **expert** or **authorized inspector** in accordance with existing test and empirical data in the individual application areas, taking the usage conditions into consideration.

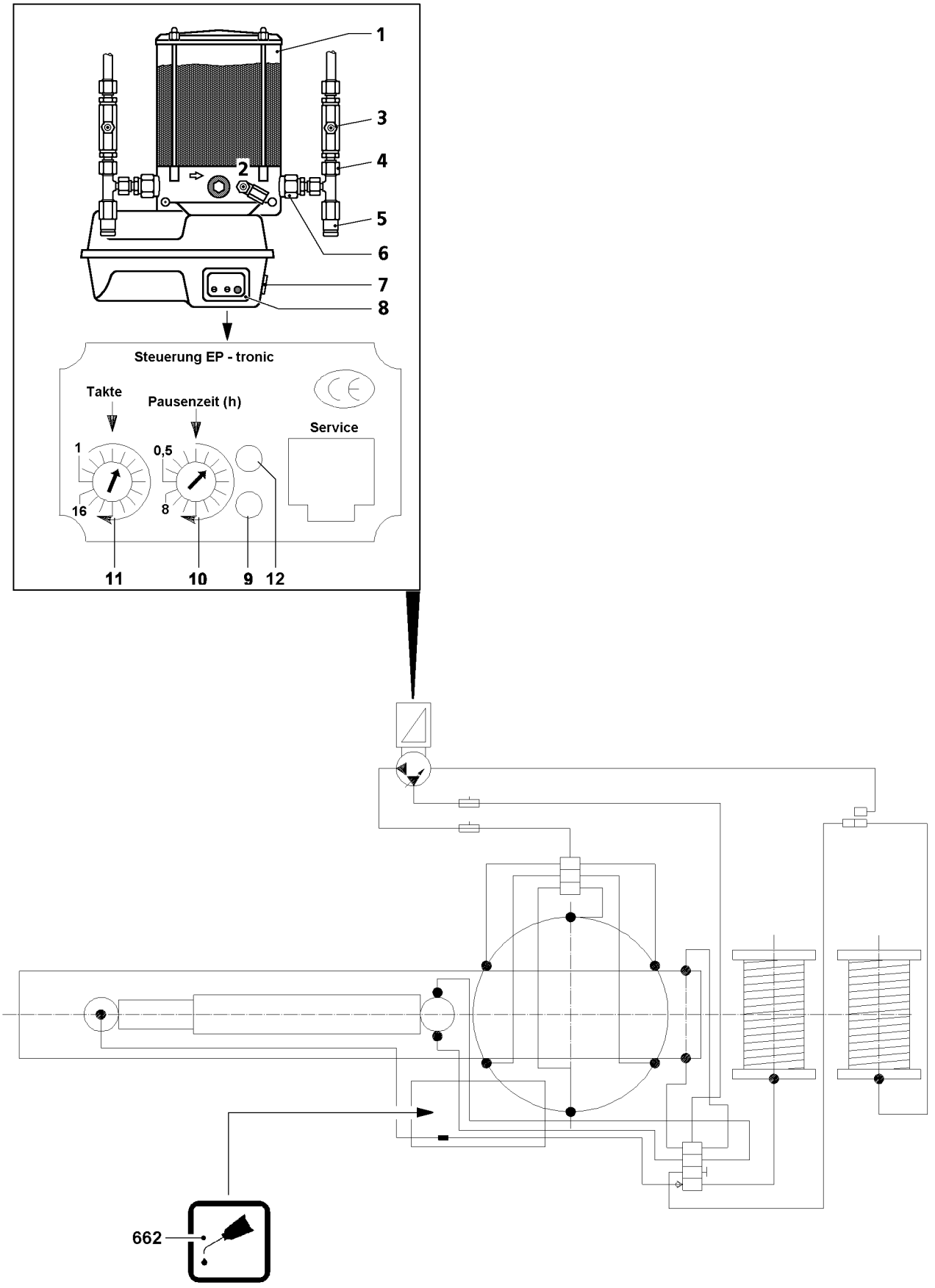
1
2
3
4
5
6
7
8
Steuerung EP - tronic
Takte
Pausenzeit (h)
Service
1
16
0,5
8
11
10
9
12
662

B117368

8 Central lubrication system

The crane superstructure is equipped with a central lubrication system. All grease points (refer to the overview on the left), the bearing of the pivot section, the bearings of the luffing cylinders and the winches are automatically supplied with the correct amount of grease.
If the crane has not been moved for more than 3 months, then it must be lubricated every 3 months with the push button **7** until grease emerges from all grease points. Then the relevant crane movement must be repeated several times and the lubrication procedure must be carried out again.

Note
▶ Cleaning is permitted in washing bays or with steam cleaners!

8.1 Pump operation period on central lubrication system

– Pump operation period: 6 cycles
– Pause time: 3 hours

8.2 Components of the system

– Grease container **1**
– Grease fitting **2**: Fill the central lubrication pump
– Grease fitting **3**: Fill the lube lines
– Pump outlet **4**
– Pressure relief valve **5**
– Pump element **6**
– Push button **7**
– Control **8**
– Green LED **9**: Function display
– Latched switch **10**: Pause time (h)
– Latched switch **11**: Cycles
– Red LED **12**: Fault display

8.3 Setting the cycles and cycle time

The cycle number and the cycle time are set in the factory.
Adjust cycle number using a latched switch **11**.
Adjust cycle time using latched switch **10**.

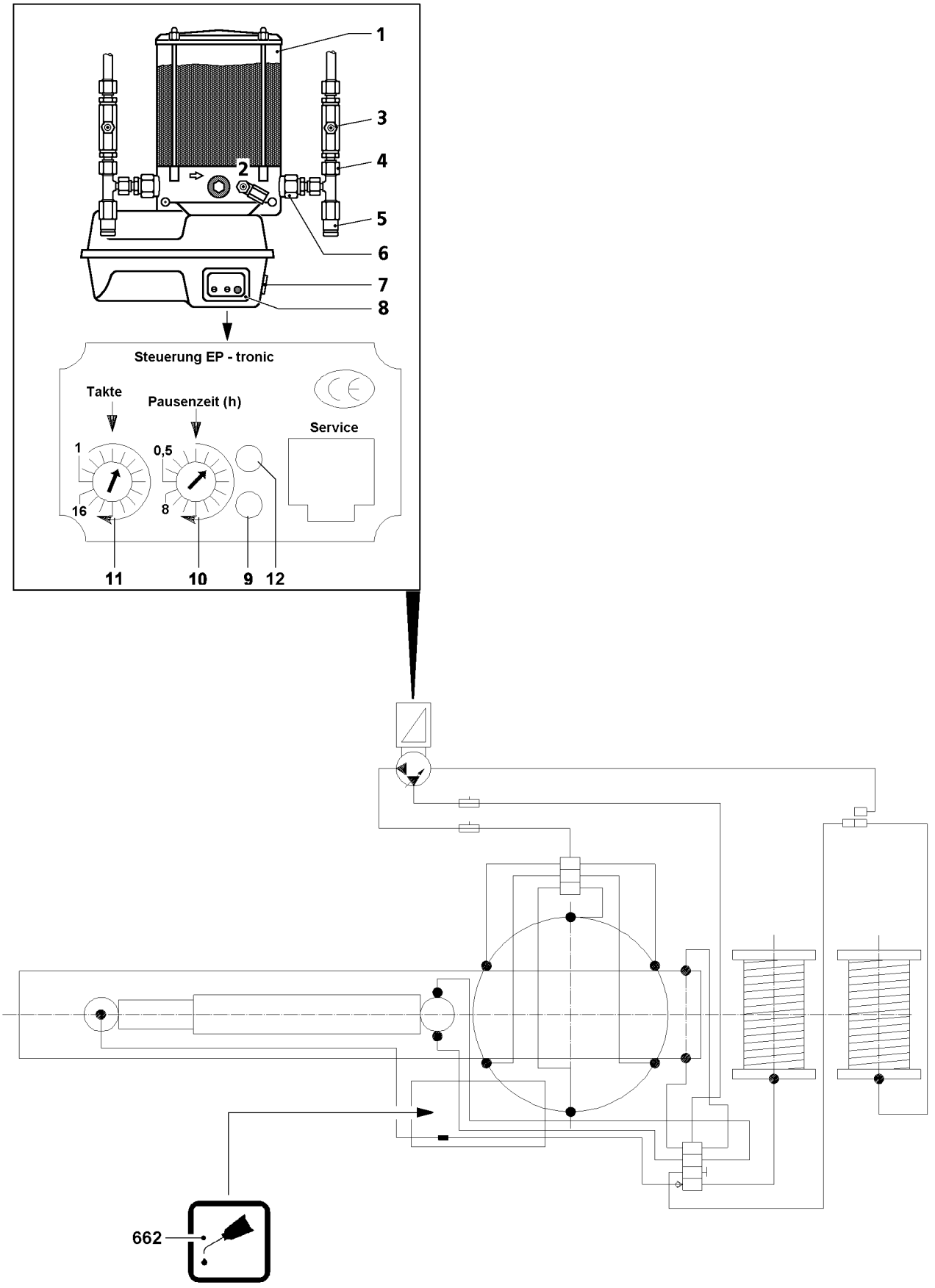
1
2
3
4
5
6
7
8
Steuerung EP - tronic
Takte
Pausenzeit (h)
Service
1
16
0,5
8
11
10
9
12
662

B117368

8.4 Intermediate lubrication

Intermediate lubrication can be performed manually after washing the crane, for example.

▶ Press the push button **7**.

Result:

– Components are greased.

8.5 Function check

Ensure that the ignition is on.

▶ Trigger 2 or 3 grease pulses using the push button **7**.

Result:

– Lubricant exits from the excess pressure valve.

8.6 Cycle control

The central lubrication system is progressively monitored. This means that a proximity switch converts the piston strokes of the central lubrication system distributor into electric control signals and relays them to the control unit. If the control signals are not present or incomplete, the indicator light **662** displays a malfunction or a problem by blinking.

8.6.1 Blinker code - cycle control

During operation

– Ignition on, ready for operation:
  The indicator light **662** lights up orange for 1.5 s and turns off.
  The green LED **9** and the red LED **12** light up for 1.5 s and turn off.
– Lubrication active:
  The indicator light **662** lights up yellow during the lubrication period.
  The green LED **9** lights up during the lubrication period.

In case of a problem

– Error of monitoring period of cycle input, lubrication time larger monitoring period cycle input.
  The indicator light **662** lights up orange for 1 s and is off for 1 s etc.
  The green LED **9** and the red LED **12** light up for 1 s and are off for 1 s etc.
– Error CPU, Error memory
  The indicator light **662** lights up red for 0.5 s and is off for 0.5 s etc.
  The red LED **12** lights up for 0.5 s and is off for 0.5 s etc.

8.7 Access to the automatic lubrication (intermediate lubrication)

After washing the crane, carry out intermediate lubrication processes or fill the grease lines with grease again after a repair.

▶ With the ignition turned on, press the red button **7** on the engine protection housing of the pump.

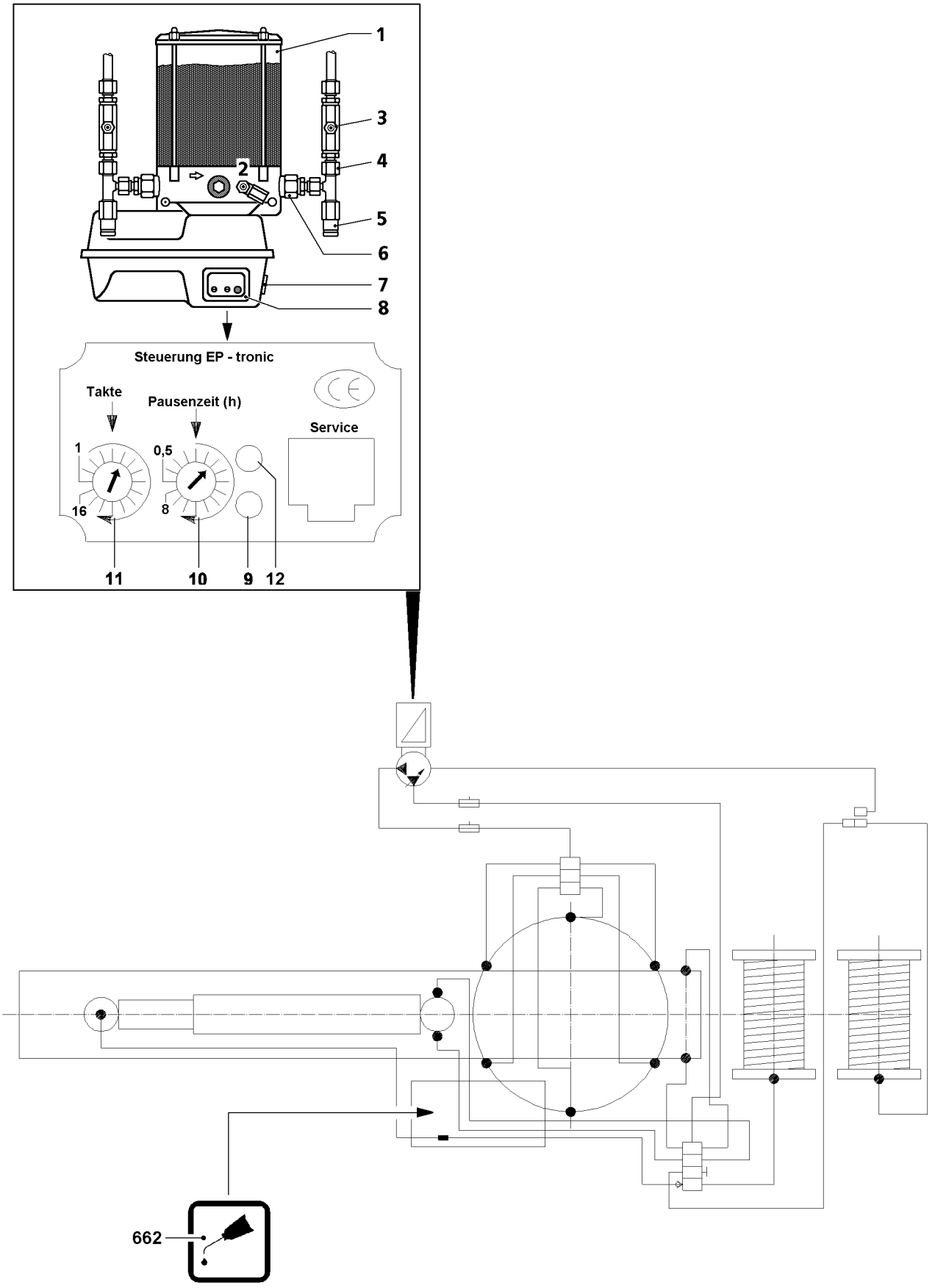
1
2
3
4
5
6
7
8
Steuerung EP - tronic
Takte
Pausenzeit (h)
Service
1
16
0,5
8
11
10
9
12
662

B117368

8.8 Filling the grease container

NOTICE
Risk of damage due to insufficient lubrication!
- ▶ There must always be sufficient grease in the grease container **1**!
- ▶ Observe utmost cleanliness when filling the grease container **1**!

▶ Fill the grease container **1** with a grease pump via the grease fitting **2** on the central lubrication pump.

8.9 Bleeding the central lubrication system

If the grease container **1** has been emptied, then it may be necessary to bleed the central lubrication system.
- ▶ Fill the grease container **1**.
- ▶ Unscrew the main line from the pump outlet **4**.
- ▶ Trigger additional lubricating pulses until there are no more air bubbles in the emerging grease at the pump outlet **4**.
- ▶ Reconnect the main line.
- ▶ Trigger an additional lubricating process.

8.10 Filling the lubrication lines

NOTICE
Risk of damage due to insufficient lubrication!
The lubrication lines must be refilled after any repair on components, which are lubricated with grease. If this is not observed, the component may run dry.
- ▶ Sufficient grease must be available in the grease lines after every repair on greased components!
- ▶ Observe utmost cleanliness when filling the grease lines!

▶ Add grease with an external grease pump via the grease fitting **3**.

or

- ■ With the ignition turned on, press the red button **7** on the engine protection housing of the pump.

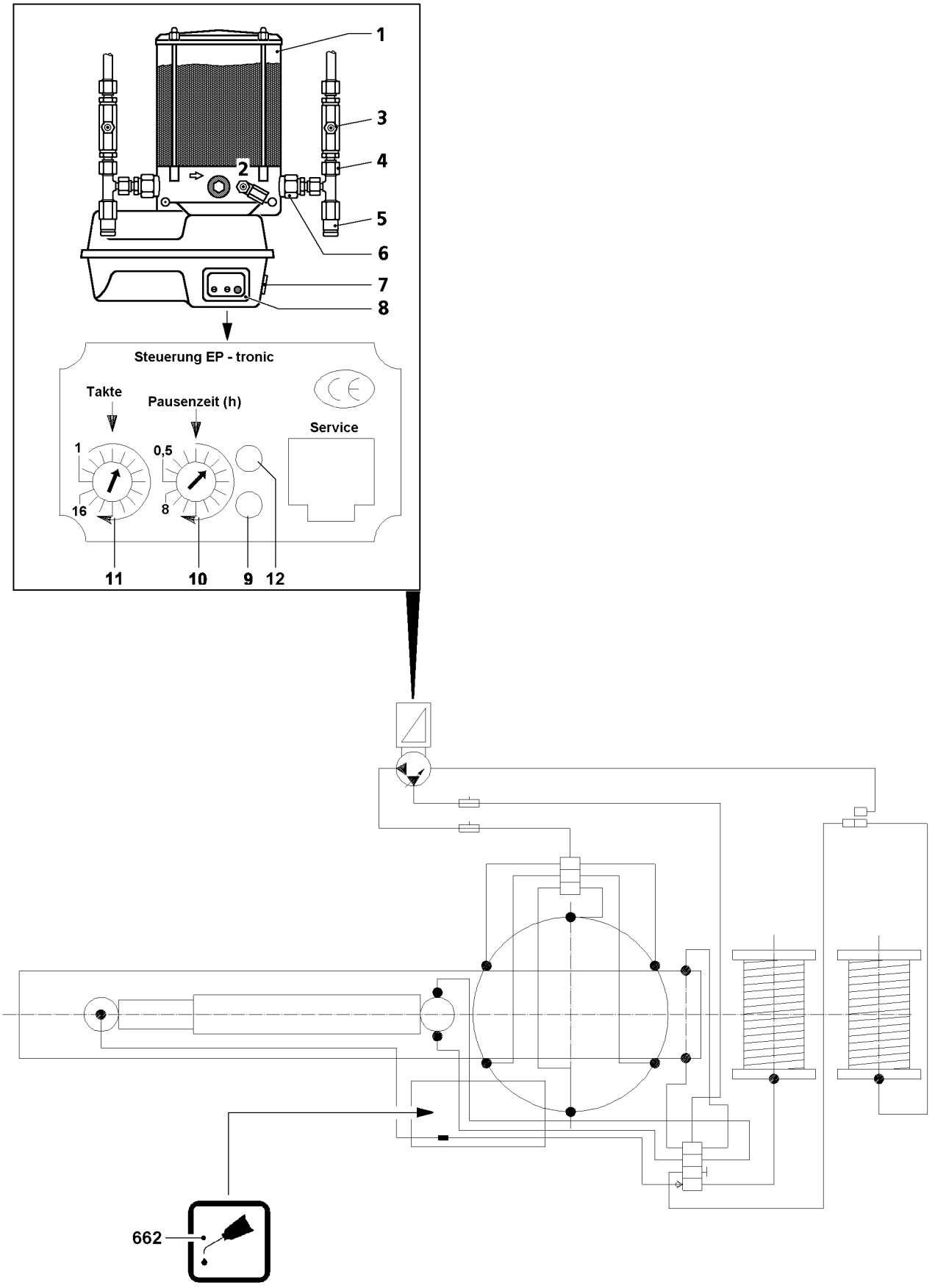
1
2
3
4
5
6
7
8
Steuerung EP - tronic
Takte
Pausenzeit (h)
Service
1
16
0,5
8
11
10
9
12
662

B117368

8.11 Troubleshooting on the central lubrication system

Problem	Cause	Remedy
Pump is not working	Integrated electronic control defective, electrical line interrupted, pump defective	Replace lower part of motor protection housing, replace electrical line, replace pump
Pump operates, but does not deliver	Air cushion in delivery piston has dropped below minimum fill level, pump element defective	Bleed pump, fill reservoir, replace pump element
No grease collar on all lube points	Pump not operating, interval time too high or cycle time too short, system blocked	See “Pump not operating” , reduce pause time or increase number of cycles, refer to “Grease emerges on pressure relief valve”
No grease collar on several lube points	Supply lines to secondary distributors broken or leaking, screw connections leaking	Replace lines, tighten or replace screw connections
No grease collar on one lube point	Associated lube line broken or leaking, screw connection leaking	Replace line, tighten or replace screw fitting
Pump speed reduced	High system pressure, low ambient temperature	Check system / bearing points, no damage: Try 1 or 2 intermediate lubrication operations.
Grease escapes at the pressure relief valve	System pressure too high, progressive distributor blocked, system blocked, defective valve spring	Check system, replace distributor, repair blocked / seized bearing point, replace pressure relief valve

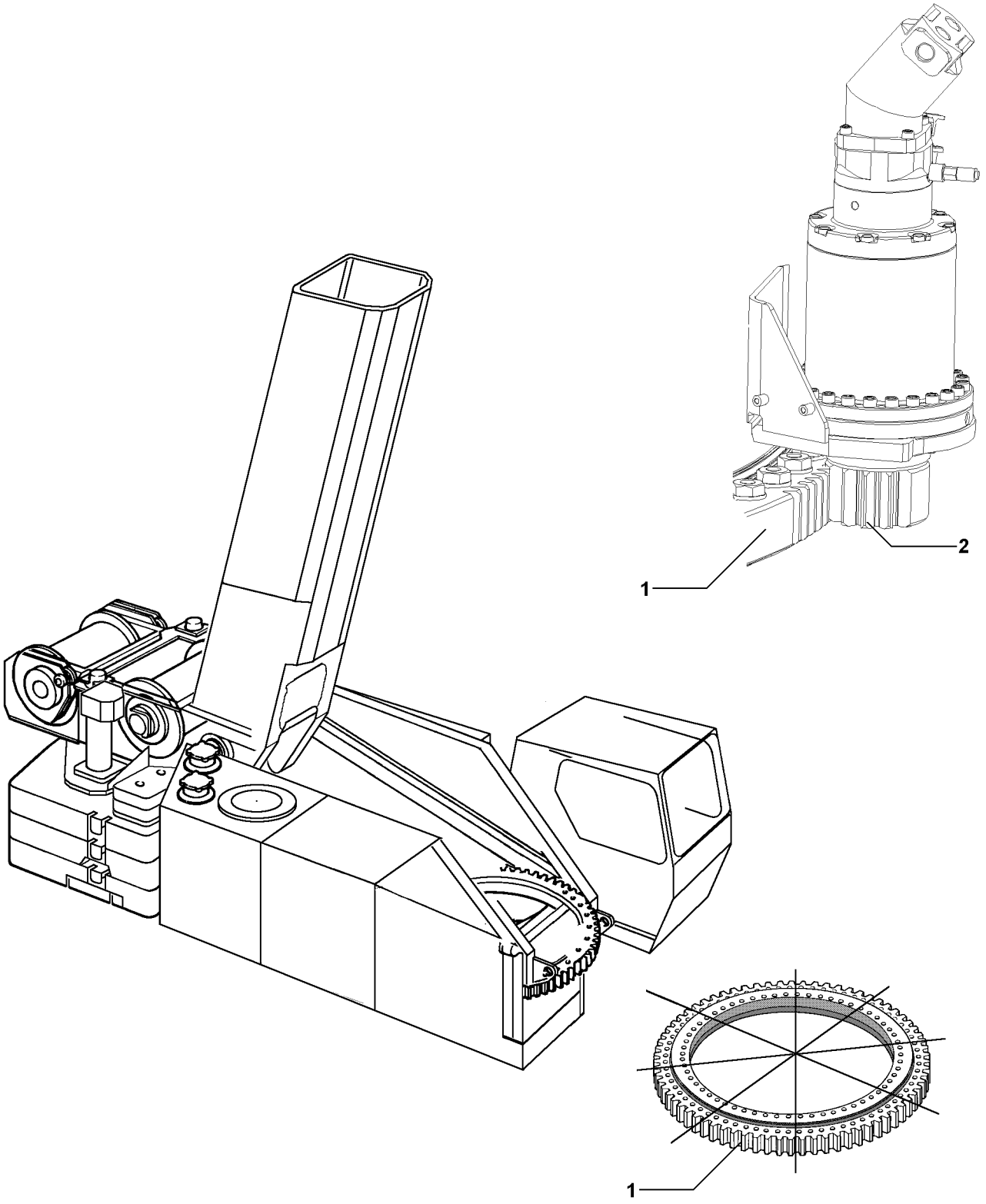

B105098

9 Slewing ring connection

9.1 Lubricate the slewing ring connection

Perform lubrication with extreme care before and after long operating intervals, particularly before and after any winter break, in order to provide the best possible corrosion protection.
If the crane has not been moved for more than 3 months, then it must be lubricated every 3 months with an external grease pump until grease emerges from all grease points, see also section of “Central lubrication system”. Then the relevant crane movement must be repeated several times and the lubrication procedure must be carried out again.

▶ Lubricate the slewing ring connection.

9.2 Lubricating the gear ring and the slewing gear pinion

Before and after extended breaks in service, grease the gear ring **1** and the slewing gear pinion **2** to ensure the best possible protection from corrosion.

▶ Grease the gear ring **1** and the slewing gear pinion **2** externally.

9.3 Tilt play of roller ring connection

The wear of the roller ring connection is determined by measuring the “tilt play” with the ring installed.

Note

▶ The determination of the “tilt play” must be carried out according to the **test instructions** of **Liebherr-Werk Ehingen GmbH**.

▶ Contact the Service Dept. at **Liebherr-Werk Ehingen GmbH** for **test instructions**.

DANGER

Danger of accident if tilt play of roller ring connection is too large!
If the permissible tilt play of 2.0 mm is exceeded, then safe crane operation is no longer possible.

▶ Replace the roller ring connection if the tilt play is larger than 2.0 mm!

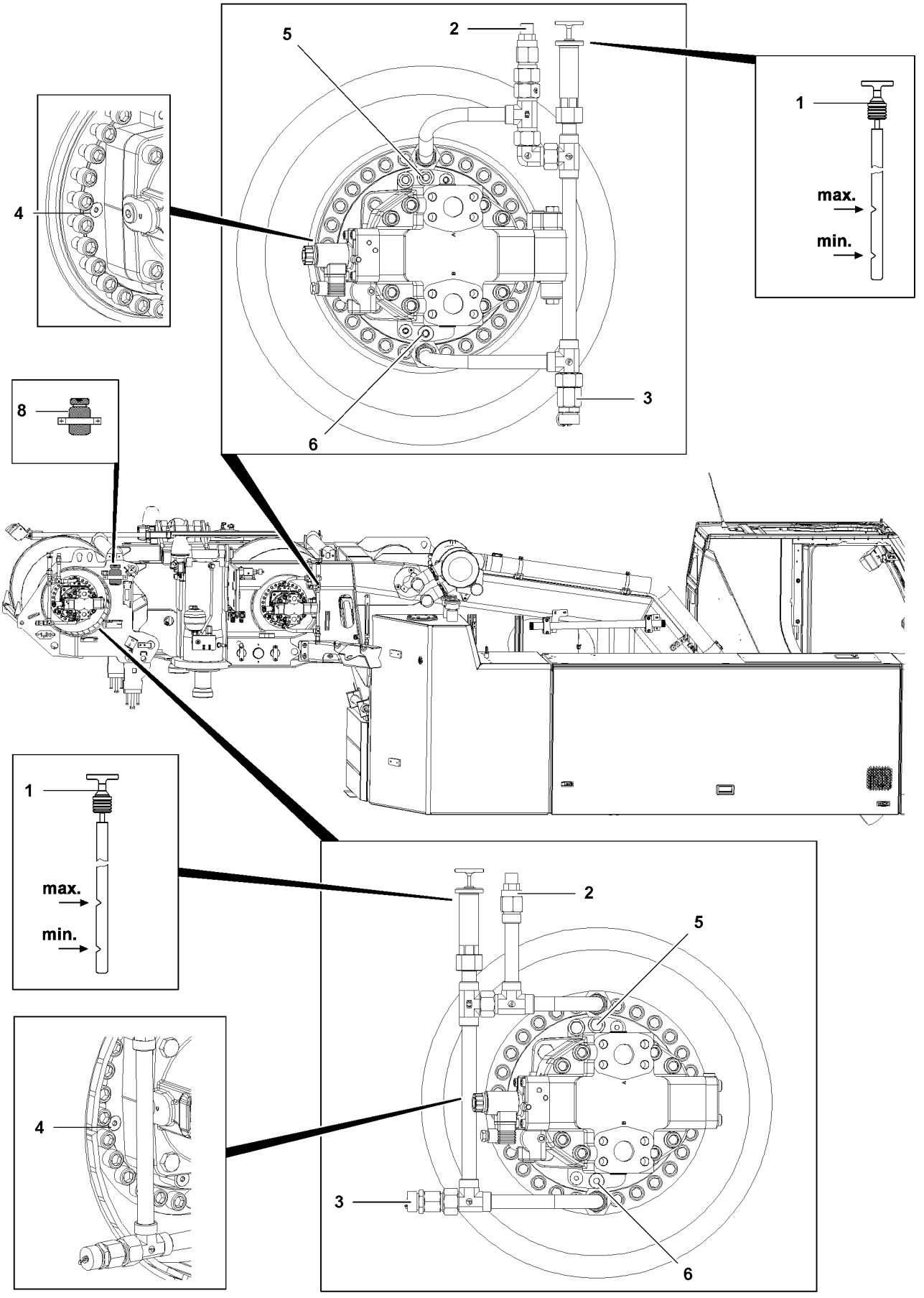

B117370

10 Hoist gears

Maintain utmost cleanliness during all work to prevent any dirt from entering the inside of the gear.

10.1 Winch 1, winch 2*

10.1.1 Overflow container

When the oil warms up in the hydraulic motor of winch 2*, the oil can enter the overflow container **8** via a check valve, but cannot flow back into the hydraulic system after cooling off. For this reason the oil that has collected in the overflow container must be disposed of at regular intervals.

10.2 Hoist gear

Make sure that the following prerequisites are met:

– The hoist gear is inactive.
– The crane is in horizontal position.

10.2.1 Checking the oil level

▶ Remove the dipstick **1** and wipe it off.
▶ Reinsert the dipstick **1** and pull it out again.

The oil level must be between the min. and max. marks on the dipstick **1**.

▶ Check the oil level.

CAUTION
Danger of gear damage!
If the oil level has dropped below the minimum mark, add oil as shown in the Service schedule until the oil level is between the minimum and maximum marks.

▶ Add oil and check again.

▶ Reinsert the dipstick **1**.

10.2.2 Changing the oil

▶ Unscrew the breather screw **2**.
▶ Remove the oil drain plug **3** with seal ring and drain the oil into a suitable container.
▶ Install the oil drain plug **3** with new seal ring and tighten.
▶ Unscrew the dipstick **1** to open the oil filler port.
▶ Add oil according to the Service schedule on the oil filler port.
▶ Screw in and tighten the breather screw **2**.
▶ Check the oil level as described above.

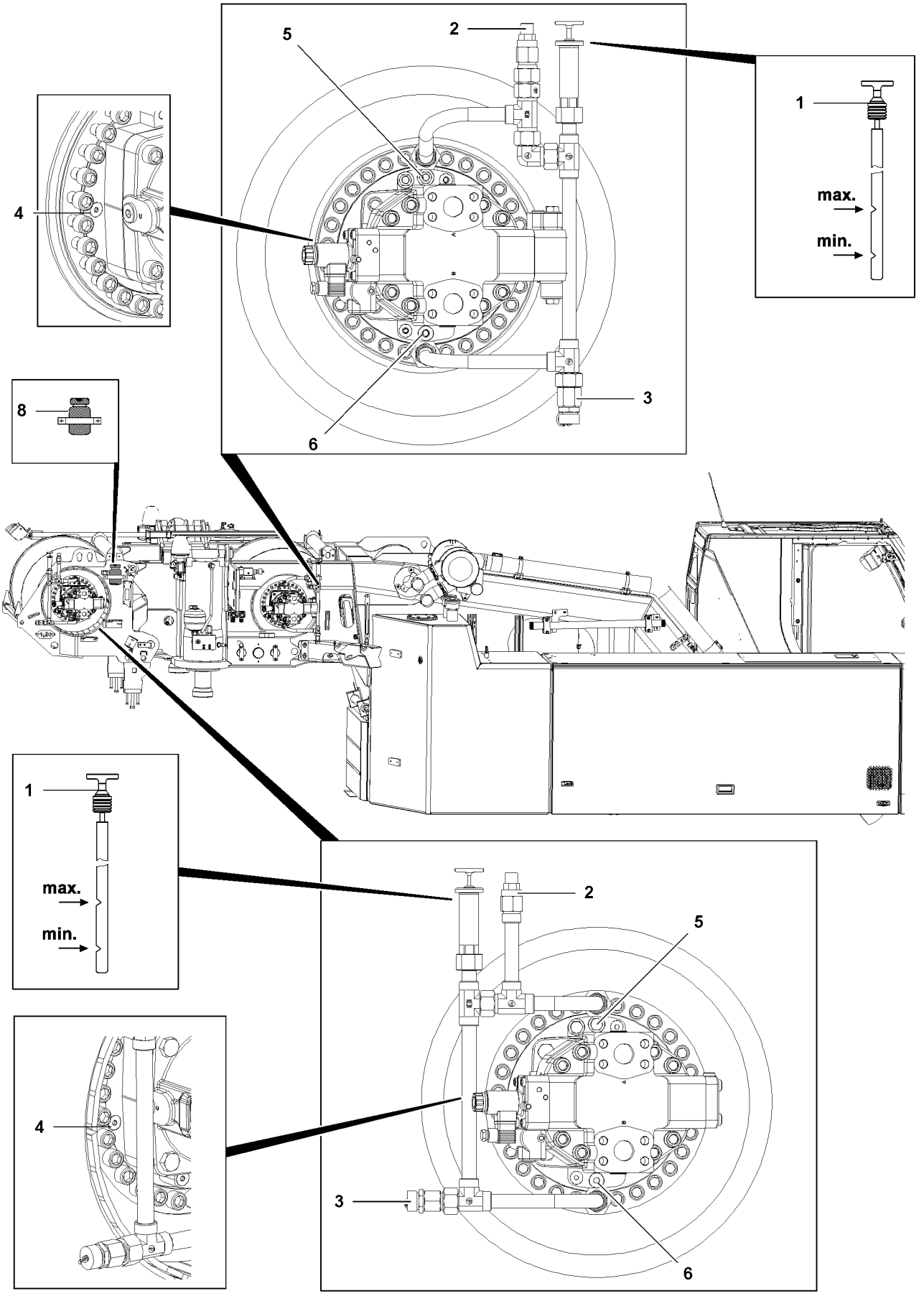

B117370

10.3 Winch brake

Make sure that the following prerequisites are met:
– The hoist gear is inactive.
– The crane is in horizontal position.

10.3.1 Checking the oil level

▶ Remove the screw **4**.

The oil level must reach the edge of the bore.
▶ Perform a visual inspection.

CAUTION
Danger of gear damage!
▶ If the oil level has dropped, add oil as specified in the Service schedule until it overflows on the filler port.

▶ Clean the sealing surfaces on the housing and on the plug.
▶ Reinstall the screw **4** and tighten.

10.3.2 Changing the oil

▶ Remove the oil filler plug **5** and clean the sealing surface.
▶ Remove the oil drain plug **6** with seal ring and drain the oil into a suitable container.
▶ Clean the oil drain plug **6** and sealing surface on the housing.
▶ Install the oil drain plug **6** with new seal ring and tighten.
▶ Add oil according to the Service schedule on the oil filler plug **5** until the oil starts to overflow on the opening **4**.
▶ Clean the oil filler plug **5** and reinstall it with a new seal ring and tighten.
▶ Check the oil level as described above.

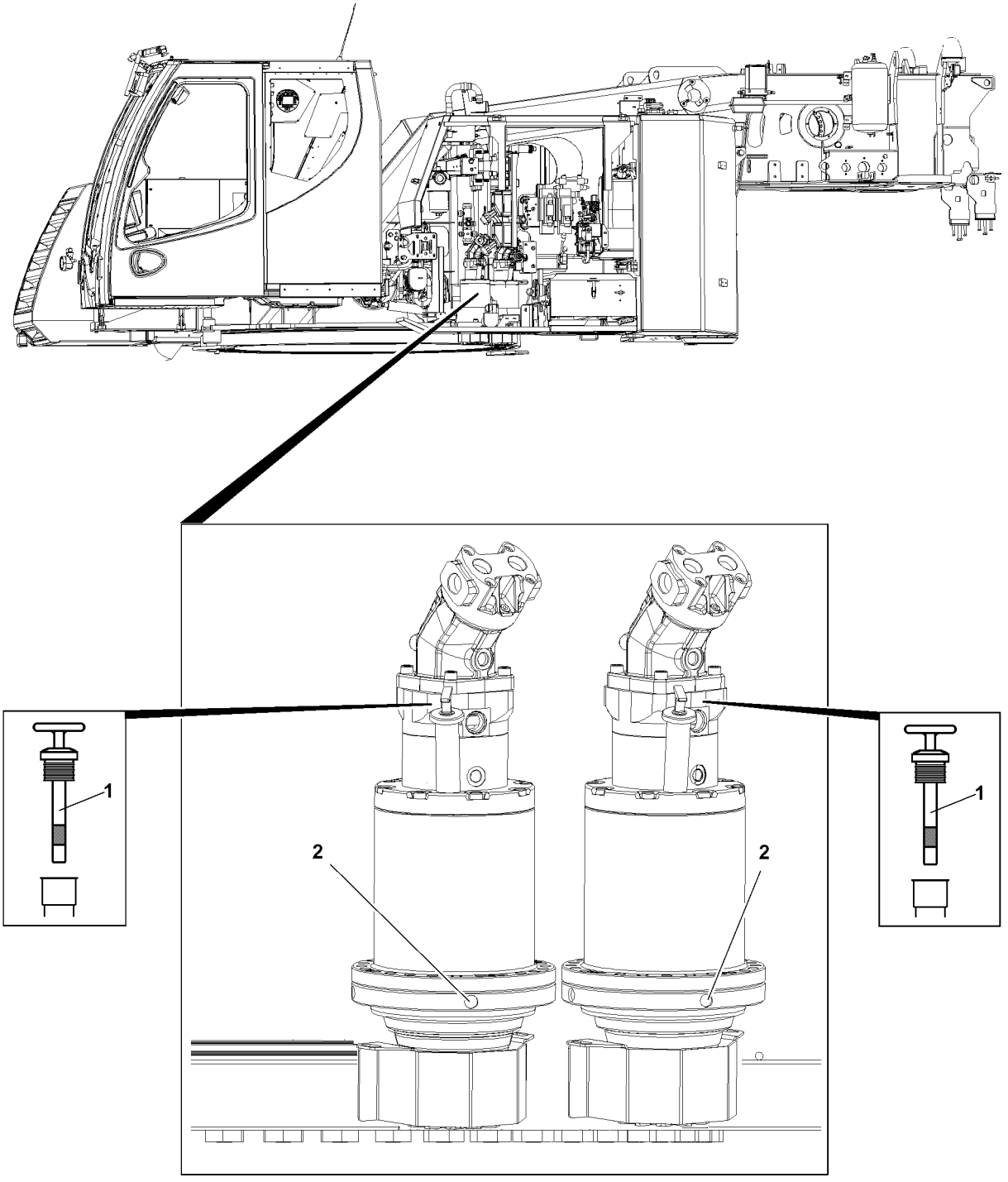

B117369

11 Slewing gear

Maintain utmost cleanliness during all work to prevent any dirt from entering the inside of the gear.

11.1 Checking the oil level

Make sure that the following prerequisites are met:
– The crane is in horizontal position.

▶ Remove the dipstick **1** and wipe it off.
▶ Reinsert the dipstick **1** and pull it out again.

The oil level must be between the two notches on the dipstick **1**.
▶ Check the oil level.

CAUTION
Danger of gear damage!
If the oil level has dropped below the lower notch, add oil as specified in the Service schedule until the oil level is between the two notches.
▶ Add oil and check again.

▶ Reinsert the dipstick **1**.

11.2 Changing the oil

Make sure that the following prerequisites are met:
– The crane is in horizontal position.
– The gear is warm.

▶ Open the oil filler port by unscrewing the dipstick **1**.
▶ Remove the oil drain plug **2** with the seal ring and drain the oil.
▶ Clean the oil drain plug **2** and sealing surface on the housing.
▶ Install the oil drain plug **2** with new seal ring and tighten.
▶ Add oil as specified in the Service schedule on the oil filler port until the oil level is between the two notches on the dipstick **1**.
▶ Close the oil filler port by screwing in the dipstick **1**.
▶ Check the oil level as described above.

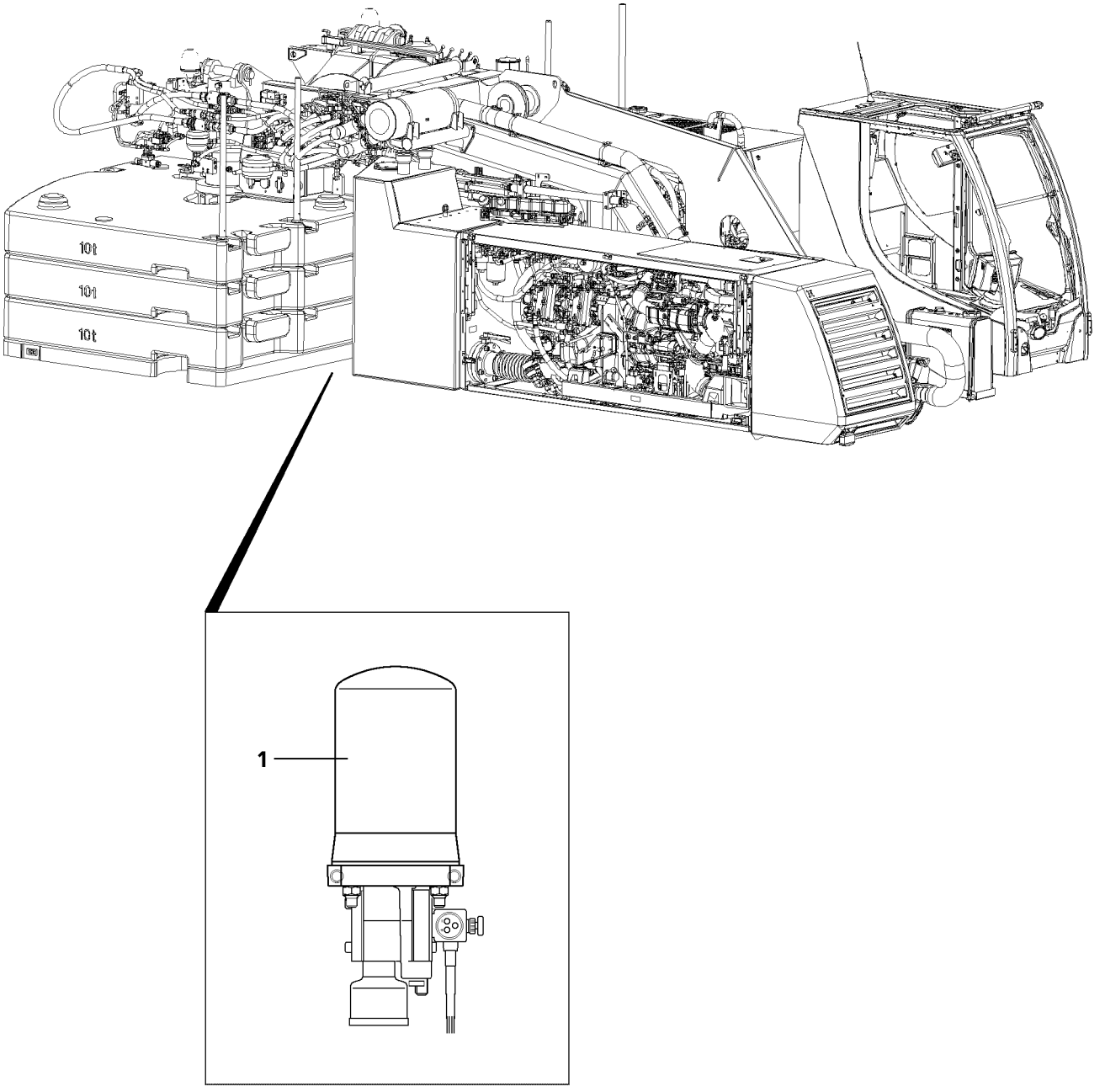

B118033

12 Air dryer of the compressed air system of the crane superstructure

The air dryer **1** of the compressed air system of the crane's superstructure is maintenance-free.

12.1 Replacing the granular cartridge

CAUTION
Danger!
The granular cartridge is under spring tension.
▶ Caution when replacing the granular cartridge.

▶ Replace the granular cartridge once a year.

13 Electrical system - Lighting

The maintenance of the electrical system is essentially limited to replacing defective fuses and bulbs and maintaining the batteries.

NOTICE
Damage to electrical system!
Never short circuit defective fuses with wire or similar items!
▶ Always replace defective fuses with fuses of the same amperage!
▶ If there is a repeat problem with the same fuse, check the electrical system!

13.1 Battery maintenance

DANGER
Danger of fatal injury!
▶ Always disconnect the batteries from the power circuits when working on the electrical system of the crane and during all welding work!

▶ Keep batteries dry and clean.
▶ Do not bring oil, grease, fuel or solvents into contact with the battery casting compound.
▶ Release dirty terminals, clean and grease them with an acid-free and acid-resistant grease.
▶ Check the acid levels in batteries at least once a year. In summer and in hot climate zones, check it at least twice a year.
▶ On conventional batteries, check electrolyte level at regular intervals and add distilled water to the specified “max mark”, if necessary.
▶ When adding distilled water:
Measure the acid concentration only after 30 minutes. The acid temperature for measuring should be + 20 °C if possible.

Proceed as follows when checking the battery charge:

Specific weight	Charge condition
1.28/1.23*	Well charged
1.20/1.16*	Semi-charged, recharge
1.12/1.08*	Discharged, recharge immediately

* in tropical countries

Reduced battery performance requires greater power requirements.

▶ Ensure that batteries are well charged, particularly during the colder months.

13.2 Mixing battery acid

▶ Ensure that work area is well ventilated.

DANGER

Risk of explosion!

▶ When mixing battery acid, always pour distilled water into the container first, then the concentrated sulphuric acid!

▶ Observe this order, otherwise explosions and spattering can occur!

▶ Stir the mixture with an acid-proof stick (glass or plastic).

Desired acid concentration kg/l	1.23	1.24	1.25	1.26	1.27	1.28
Volume ratio of concentrated sulphuric acid (96 %) to distilled water	1:3.8	1:3.6	1:3.4	1:3.2	1:3.0	1:2.8

When adding the battery acid, the acid level should be 15 mm above the top edge of the battery plates and the temperature of the acid should be approximately 15 °C.

▶ Add battery acid to battery.

Wait approximately 20 minutes before connecting the battery. By that time, it will be balanced out.

▶ Connect the battery after approximately 20 minutes.

13.3 Removing and recharging the battery

WARNING

Danger of injuries!

▶ Do not place tools on batteries and keep open flames away!

13.3.1 Removing the battery

Make sure that the following prerequisites are met:

– The engine is turned off.

– All electrical users are turned off.

NOTICE

Damage to alternator!

▶ Do not disconnect batteries unless the engine has been turned off!

▶ Carry out work in well ventilated rooms and avoid sparks.

▶ Disconnect the negative terminal first (ground cable), then the positive terminal.

- ▶ Remove the battery.
- ▶ Avoid spark formation caused by electrostatic charge. To avoid this, touch the ground support point in the driver's cab.
- ▶ Do not tilt or shake the battery.

13.3.2 Recharging the battery

NOTICE
Damage to battery!
- ▶ Recharge only with direct current, the strength of which does not exceed 1/10 of the battery capacity!

Recharging example: A battery with 170 Ah should be charged with a maximum charging current of 17.0 A.
- ▶ Frozen batteries must be thawed out before charging.
- ▶ Remove all plugs before charging.
- ▶ Provide ventilation during charging (risk of oxyhydrogen gas explosion!).
- ▶ Connect the battery to a battery charger (positive to positive and negative to negative).
- ▶ Turn on the battery charger after connecting the battery.

Stop charging immediately if:
- The acid temperature exceeds 55 °C (casing more than warm to the touch).
- The battery starts to give off gas.
- The acid concentration or the charging voltage has not changed for 2 hours.

- ▶ Turn the battery charger off after charging, then remove the connector cables individually from battery and battery charger.

13.3.3 Installing the battery

- ▶ Reinstall the battery tightly in the vehicle.
- ▶ Avoid spark formation caused by electrostatic charge. To avoid this, touch the ground support point in the driver's cab.
- ▶ Connect the positive terminal to the battery first, then the negative terminal (ground cable).
- ▶ Check that the terminals are tightly seated (low transfer resistance).
- ▶ Grease the terminals and terminal posts with acid-free and acid-resistant grease (use corrosion protection even for modern maintenance-free batteries).

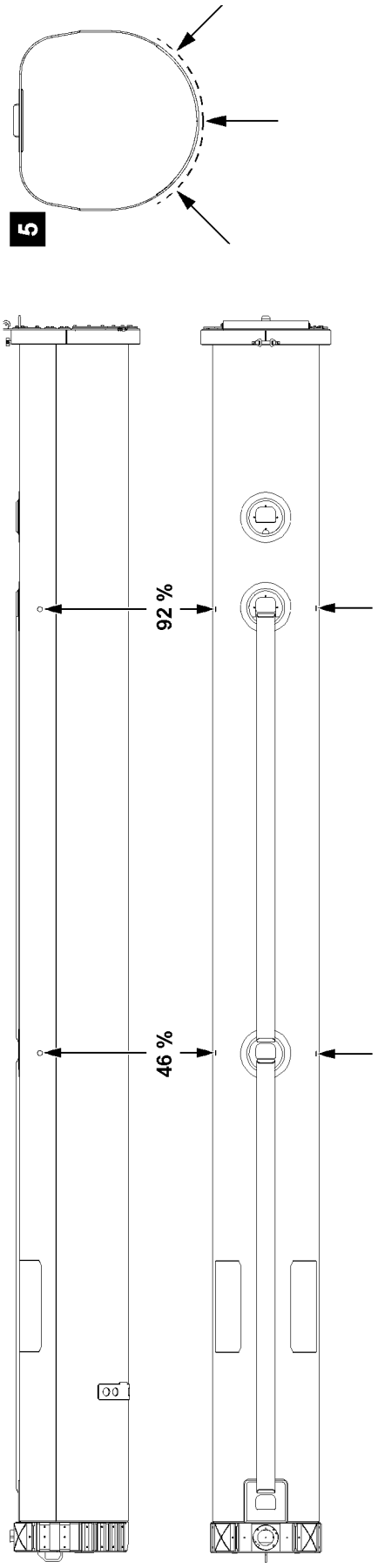

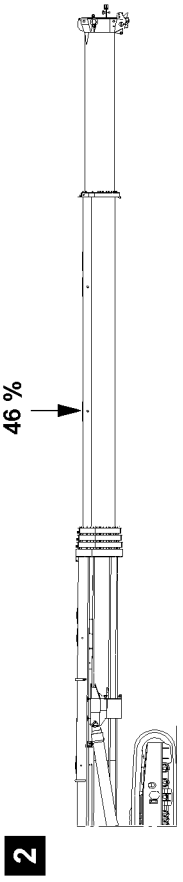

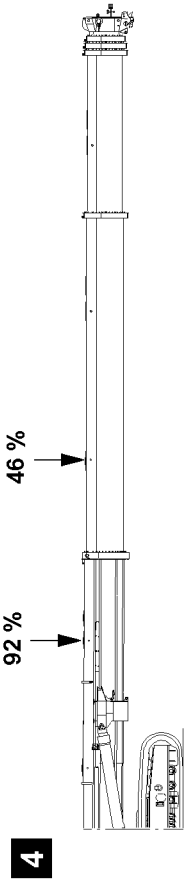

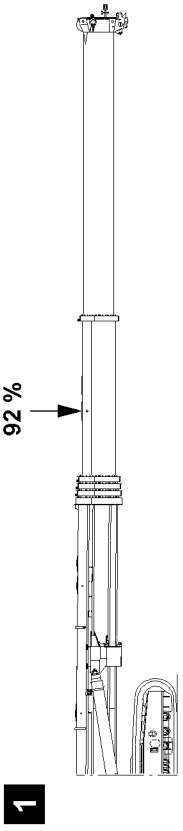

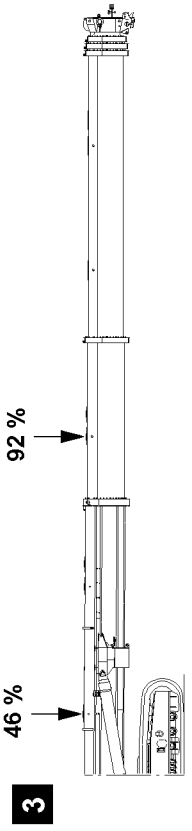

B117366

14 Telescopic boom

14.1 Lubricating the telescopic boom

WARNING
The crane can topple over!
When lubricating the telescopic boom and the specified extension conditions of the telescopes are deviated from, there is a danger of accidents!
The crane can topple over and personnel can be killed or severely injured!
- ▶ For lubrication, adhere to the specified extension conditions of the telescopes!
- ▶ Do not telescope out more telescopic sections than specified!

WARNING
Danger of accident!
During telescoping, no personnel may remain within the danger zone of the telescopic boom!
Personnel can be killed or seriously injured!
- ▶ Make sure that during telescoping no personnel remains within the danger zone of the telescopic boom!
- ▶ Lubricate the telescopic boom only in resting status!

Note
- ▶ For the gliding surfaces of the telescopic boom use special grease according to the Service schedule as lubricant, see Crane operating instructions, chapter 7.07.
- ▶ To grease the outer gliding surfaces, every telescopic section can be telescoped out individually to 100 %.
- ▶ The inner gliding surfaces of the telescopic sections (plastic glide bearing plates) are lubricated via grease fittings.
- ▶ The grease fittings can be accessed from the outside via inspection ports on both sides of the pivot section as well as on the telescopic sections.
- ▶ If the telescopic boom is pinned on the respective point, the grease fittings on the bearing shoes are automatically in the correct position.

Make sure that the following prerequisites are met:
- The crawler track is completely extended (track 6300 mm)
- The central ballast of 20.0 t is installed.
- At least a counterweight of 10.0 t is installed on the turntable.
- No hook block is reeved (reeved n=1).
- No telescopic boom extension is installed.
- The hoist rope is spooled up and secured on the winch.
- The LICCON overload protection has been set according to the set up configuration.
- The telescopic boom is in horizontal position (0°- main boom angle).
- The telescoping program is selected on the LICCON computer system, see Crane operating instructions, chapter 4.05.

Note
- ▶ The folding jib may be installed in transport position on the side of the telescopic boom.

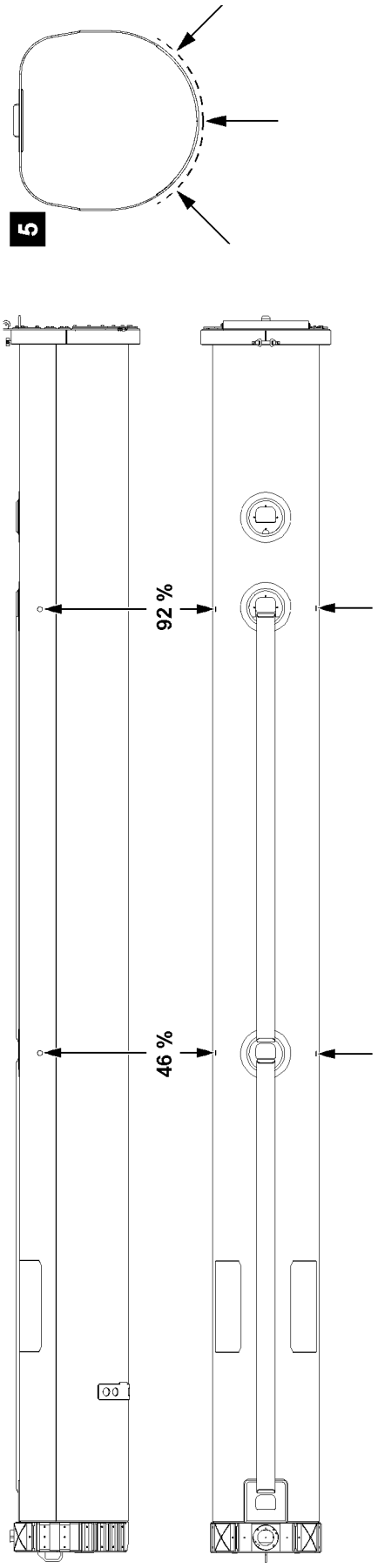

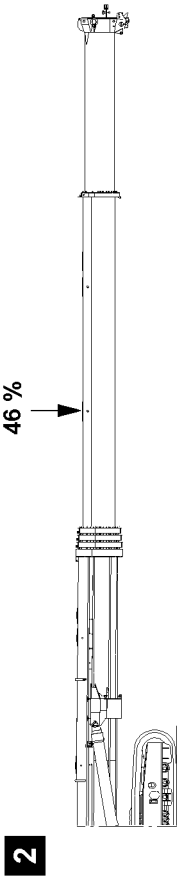

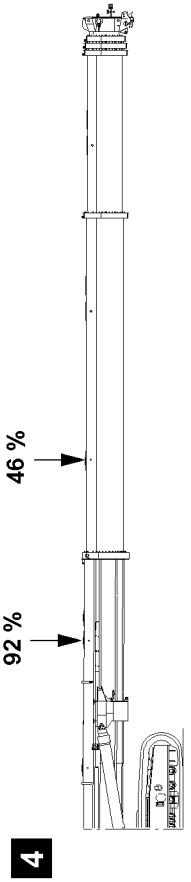

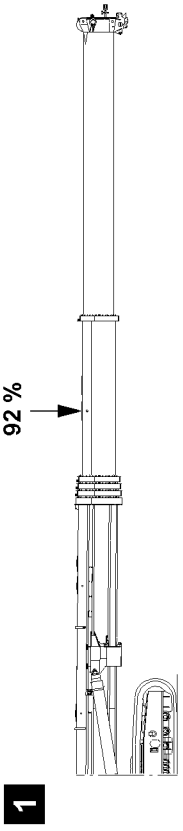

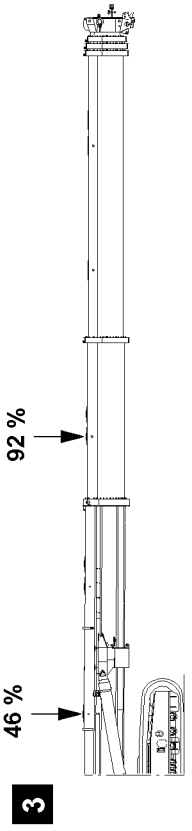

B117366

14.1.1 Lubricating on the inspection ports

Make sure that the following prerequisite is met:

– The telescopic boom is fully telescoped in.

Extension conditions of telescope	Lube points
(0/0/0/46/92)	Lubricate on the 92 % inspection ports on telescopic section 4, see illustration **1** .
(0/0/0/92/46)	Lubricate on the 46 % inspection ports on telescopic section 4, see illustration **2** .
(0/0/46/92/0)	Lubricate on the 92 % inspection ports on telescopic section 3.
(0/0/92/46/0)	Lubricate on the 46 % inspection ports on telescopic section 3.
(0/46/92/0/0)	Lubricate on the 92 % inspection ports on telescopic section 2.
(0/92/46/0/0)	Lubricate on the 46 % inspection ports on telescopic section 2.
(46/92/0/0/0)	Lubricate on the 46 % inspection ports on the pivot section and on the 92 % inspection ports on telescopic section 1, see illustration **3** .
(92/46/0/0/0)	Lubricate on the 92 % inspection ports on the pivot section and on the 46 % inspection ports on telescopic section 1, see illustration **4** .

▶ Run all extension conditions of the telescopes one after the other and lubricate the telescopic sections at the lube points.

14.1.2 Lubricating the gliding surfaces

▶ Telescope every telescopic section out individually to 100 % and spray special grease on the outer gliding surfaces, see illustration **5**.

Note

Optimum lubrication result

▶ To obtain an optimum lubrication result, let the sprayed on special grease cure four to eight hours before telescoping in!

B195219

1 Fill quantities

Note
- ▶ Fill the crane chassis, crane superstructure and equipment with the respective service fluids according to the specifications in the Service fill.
- ▶ The specified fill quantities (change quantities) are orientation values. The marks on the dipsticks, inspection ports and sight gauges are decisive for filling.
- ▶ The equipment depends on the purchased scope of delivery.

On mobile cranes with truck chassis:
- ▶ Observe the maintenance intervals and maintenance notes of the truck chassis manufacturer.

NOTICE
Danger of property damage!
- ▶ Do not mix synthetic oils with mineral oils!
- ▶ Adhere to the data in the Service fill!

1.1 Fill level check Diesel engine

- ▶ Check the engine oil according to the maintenance intervals and maintenance notes.
- ▶ Adhere to the operating instructions of the engine manufacturer.

1.2 Fill level check Anti-corrosion fluid / antifreeze

NOTICE
Danger of property damage!
- ▶ Do not mix different anti-correction / antifreeze fluids!
- ▶ Do not dilute ready mix anti-correction / antifreeze fluids!

The anti-corrosion / antifreeze fluids can be differentiated by their color.

Anti-corrosion / antifreeze fluids	Liebherr Antifreeze Organic SF Mix	Liebherr Antifreeze Mix
Color:	Magenta	Blue green

Note
If the anti-corrosion / antifreeze fluid is changed over:
- ▶ Empty the cooling system completely and flush!

- ▶ Check the anti-corrosion / antifreeze fluid according to the maintenance intervals and maintenance notes.

1.3 Fill level check Gear

- ▶ Check the gear oil according to the maintenance intervals and maintenance notes.

1.4 Fill level check Hydraulic tank

Note
The hydraulic oil level must be at 20 °C hydraulic temperature in the center of the sight gauge.
At lower hydraulic oil temperature:
▶ Warm up the hydraulic oil.
At higher hydraulic oil temperature:
▶ Cool off the hydraulic oil.

▶ Before the fill level check on the hydraulic tank:
Move all hydraulic cylinder completely in.
▶ On mobile cranes with level regulation:
Lower the level regulation of the vehicle completely.
▶ Check the hydraulic oil according to the maintenance intervals and maintenance notes.

2 Lubrication schedule

Note
▶ Fill the crane chassis, crane superstructure and equipment with the respective lubricants according to the specifications in the Service fill.
▶ The equipment depends on the purchased scope of delivery.
On mobile cranes with truck chassis:
▶ Observe the maintenance intervals and maintenance notes of the truck chassis manufacturer.

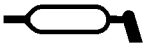

B107729

Note
▶ The lube points are marked with this icon.

blank page!

B195219

1 Specified service items and lubricants for Liebherr cranes

1.1 Service items and lubricants

Note

- ▶ To improve the cold start ability of the diesel engine at an ambient temperature below -10 °C, we recommend the use of the following engine oil:
- ▶ Viscosity grade SAE 5W-30 low ash according to specification ACEA E6.
- ▶ Liebherr Motoroil 5W-30 low ash, **LWE Id. No.: 11100934**!

Line	Usage	Ambient temperature for driving and crane operation	
		-25 °C to +50 °C	**-40 °C to +30 °C**
1	Diesel engine	**LWE Id. No.: 10663796** **Liebherr Motoroil 10W-40 low ash** SAE 10W-40 low ash and ACEA E6 Observe the instructions of the engine manufacturer **Below -20 °C** with pre-heating	**LWE Id. No.: 11100934** **Liebherr Motoroil 5W-30 low ash** SAE 5W-30 low ash and ACEA E6 Observe the instructions of the engine manufacturer **Below -20 °C** with pre-heating
2	Drive axle with differentials, planetary gear and installed distributor gear	**LWE Id. No.: 861901008** **Liebherr Gear Hypoid 90 EP** SAE 90 and API GL 5	**LWE Id. No.: 10425142** **Liebherr Syntogear Plus 75W-90** SAE 75W-90 and API GL 5
3	Axle drive ZF DK-7	**LWE Id. No.: 861901008** **Liebherr Gear Hypoid 90 EP** ZF TE-ML 05	**LWE Id. No.: 10425142** **Liebherr Syntogear Plus 75W-90** ZF TE-ML 05
4.1	Vehicle distributor gear KESSLER VG 1800, VG 2400, VG 2550, VG 2600, VG 3750 W 3750	**LWE Id. No.: 861901008** **Liebherr Gear Hypoid 90 EP** SAE 90 and API GL 5	**LWE Id. No.: 10425142** **Liebherr Syntogear Plus 75W-90** SAE 75W-90 and API GL 5

1.2 Service items and lubricants (continuation)

Line	Usage	Ambient temperature for driving and crane operation	
		-25 °C to +50 °C	**-40 °C to +30 °C**
4.2	Vehicle distributor gear ZF Passau, STEYR PUCH VG 1200, VG 1600, VG 2000, VG 3800	**LWE Id. No.: 861901008** **Liebherr Gear Hypoid 90 EP** ZF TE-ML 19	**LWE Id. No.: 10425142** **Liebherr Syntogear Plus 75W-90** ZF TE-ML 19
5	Offset gear (drop box) ZF Passau, STEYR PUCH	**LWE Id. No.: 861901008** **Liebherr Gear Hypoid 90 EP** ZF TE-ML 19	**LWE Id. No.: 10425142** **Liebherr Syntogear Plus 75W-90** ZF TE-ML 19
6.1	Pump distributor gear filled with **mineral** gear oil	**LWE Id. No.: 861901008** **Liebherr Gear Hypoid 90 EP** SAE 90 and API GL 5	**LWE Id. No.: 10425142** **Liebherr Syntogear Plus 75W-90** SAE 75W-90 and API GL 5
6.2	Pump distributor gear filled with **synthetic** gear oil	**LWE Id. No.: 861901208** **Liebherr Gear PG 220** CLP PG 220, DIN 51517-3 **WARNING: May not be mixed with other oils!**	**LWE Id. No.: 10664125** **Liebherr Gear PG 150** CLP PG 150, DIN 51517-3 **WARNING: May not be mixed with other oils!**
6.3	Pump distributor gear LTC 1055-3.1	**LWE Id. No.: 10425142** **Liebherr Syntogear Plus 75W-90** SAE 75W-90 and API GL 5	**LWE Id. No.: 10425142** **Liebherr Syntogear Plus 75W-90** SAE 75W-90 and API GL 5

1.3 Service items and lubricants (continuation)

Line	Usage	Ambient temperature for driving and crane operation	
		-25 °C to +50 °C	-40 °C to +30 °C
7.1	Powershift transmission ZF Torque converter transmission WG 120, WG 150, WG 180, WG 181, WG 200, WG 201	**LWE Id. No.: 8610240** **Liebherr Motoroil 10W-40** ZF TE-ML 03 **Below -20 °C** run until warm according to operating instructions	**LWE Id. No.: 861900608** **Liebherr Hydraulic-Gear ATF** ZF TE-ML 03 **Below -20 °C** run until warm according to operating instructions
7.2	Powershift transmission ZF torque converter WG 251* ZF ERGOPOWER WG 210, WG 260, WG 310 * also for ambient temperatures above -10 °C	**LWE Id. No.: 861900608** **Liebherr Hydraulic-Gear ATF** ZF TE-ML 03 **Below -20 °C** run until warm according to operating instructions	**LWE Id. No.: 861900608** **Liebherr Hydraulic-Gear ATF** ZF TE-ML 03 **Below -20 °C** run until warm according to operating instructions
8	Powershift transmission CLARK	**LWE Id. No.: 8610240** **Liebherr Motoroil 10W-40** SAE 10W-40 and ACEA E4 **Below -20 °C** run until warm according to operating instructions	**LWE Id. No.: 861900608** **Liebherr Hydraulic-Gear ATF** ATF Dexron II D and ALLISON C4 **Below -20 °C** run until warm according to operating instructions
9	Offset gear (drop box) ALLISON	**LWE Id. No.: 8610240** **Liebherr Motoroil 10W-40** SAE 10W-40 and API CF, ACEA E4 **Below -20 °C** run until warm according to operating instructions	**LWE Id. No.: 861900608** **Liebherr Hydraulic-Gear ATF** ATF Dexron II D or ALLISON C4 **Below -20 °C** run until warm according to operating instructions

1.4 Service items and lubricants (continuation)

Line	Usage	Ambient temperature for driving and crane operation	
		-25 °C to +50 °C	-40 °C to +30 °C
10.1	Automatic transmission ALLISON CLBT 740, 750, 754, 755 HT 755, HD 4560	**LWE Id. No.: 861900608** **Liebherr Hydraulic-Gear ATF** ATF Dexron III or ALLISON C4 **Below -20 °C** run until warm according to operating instructions	**LWE Id. No.: 861903708** **CASTROL Transynd** ATF Dexron III or ALLISON C4 **Below -20 °C** run until warm according to operating instructions
10.2	Automatic transmission ZF	**LWE Id. No.: 861900608** **Liebherr Hydraulic-Gear ATF** ZF TE-ML 14 **Below -20 °C** run until warm according to operating instructions	**LWE Id. No.: 861900608** **Liebherr Hydraulic-Gear ATF** ZF TE-ML 14 **Below -20 °C** run until warm according to operating instructions
11	Automatic transmission ZF AS-Tronic ZF TC-Tronic (basic gear) ZF TC-Tronic HD (basic gear)	**LWE Id. No.: 10218305** **ZF-Ecofluid M** ZF TE-ML 02	**LWE Id. No.: 10218305** **ZF-Ecofluid M** ZF TE-ML 02 **below -20 °C** preheat gear according to operating instructions
12.1	Torque converter coupling ZF TC HD	**LWE Id. No.: 10218305** **ZF-Ecofluid M** ZF TE-ML 02	**LWE Id. No.: 10218305** **ZF-Ecofluid M** ZF TE-ML 02 **below -20 °C** preheat gear according to operating instructions
12.2	Torque converter coupling ZF TC 2	**LWE Id. No.: 861900608** **Liebherr Hydraulic-Gear ATF** ZF TE-ML 14	**LWE Id. No.: 861900608** **Liebherr Hydraulic-Gear ATF** ZF TE-ML 14

1.5 Service items and lubricants (continuation)

Line	Usage	Ambient temperature for driving and crane operation	
		-25 °C to +50 °C	**-40 °C to +30 °C**
13	Gearbox ZF ECO-Split	**LWE Id. No.: 10218305** **ZF Ecofluid M** ZF TE-ML 02	**LWE Id. No.: 10218305** **ZF Ecofluid M** ZF TE-ML 02
14	Slewing gear	**LWE Id. No.: 861901208** **Liebherr Gear PG 220** CLP PG 220, DIN 51517-3 **WARNING: May not be mixed with other oils!**	**LWE Id. No.: 861901208** **Liebherr Gear PG 220** CLP PG 220, DIN 51517-3 **WARNING: May not be mixed with other oils!**
15.1	Rope winch	**LWE Id. No.: 861901208** **Liebherr Gear PG 220** CLP PG 220, DIN 51517-3 **WARNING: May not be mixed with other oils!**	**LWE Id. No.: 861901208** **Liebherr Gear PG 220** CLP PG 220, DIN 51517-3 **WARNING: May not be mixed with other oils!**
15.2	Rope winch LR 13000	**LWE Id. No.: 11000948** **Liebherr Universalfett 9900** KPF2N-25, DIN 51502	
16	Winch of telescopic boom guying	**LWE Id. No.: 861901208** **Liebherr Gear PG 220** CLP PG 220, DIN 51517-3 **WARNING: May not be mixed with other oils!**	**LWE Id. No.: 861901208** **Liebherr Gear PG 220** CLP PG 220, DIN 51517-3 **WARNING: May not be mixed with other oils!**

1.6 Service items and lubricants (continuation)

Line	Usage	Ambient temperature for driving and crane operation	
		-25 °C to +50 °C	-40 °C to +30 °C
17.1	Crane hydraulics Crane chassis and crane super-structure	**LWE Id. No.: 861903508** **Liebherr Hydraulic 37** HVLP, DIN 51524-3	**LWE Id. No.: 10293807** **Liebherr Hydraulic Plus Arc-tic** HVLPD HC, DIN 51524-3
17.2	Crane hydraulics Crane chassis and crane super-structure LTM 11200-9.1 LTR 11200 LR 13000, LR 1600/2, LR 1600/2-W LTC 1055-3.1	**LWE Id. No.: 10293807** **Liebherr Hydraulic Plus Arc-tic** HVLPD HC, DIN 51524-3	**LWE Id. No.: 10293807** **Liebherr Hydraulic Plus Arc-tic** HVLPD HC, DIN 51524-3
18	Brake system if hydraulically actuated	**LWE Id. No.: 861000108** **DOT 4** SAE J 1703e	**LWE Id. No.: 861000108** **DOT 4** SAE J 1703e
19	Clutch actuator	**LWE Id. No.: 861000108** **DOT 4** SAE J 1703e	**LWE Id. No.: 861000108** **DOT 4** SAE J 1703e
20	King pin bearing Drive shaft if **not** maintenance-free	**LWE Id. No.: 861301308** **Liebherr Spezialfett 9610 Plus** KP2K-20, DIN 51502	**LWE Id. No.: 10296825** **Liebherr Universalfett Arctic** KPFHC1N-60, DIN 51502
21	Glide and roller bearing roller bearing joint	**LWE Id. No.: 861301308** **Liebherr Spezialfett 9610 Plus** KP2K-20, DIN 51502	**LWE Id. No.: 10296825** **Liebherr Universalfett Arctic** KPFHC1N-60, DIN 51502

1.7 Service items and lubricants (continuation)

Line	Usage	Ambient temperature for driving and crane operation	
		-25 °C to +50 °C	**-40 °C to +30 °C**
22	Central lubrication system	**LWE Id. No.: 861301308** **Liebherr Spezialfett 9610 Plus** KP2K-20, DIN 51502	**LWE Id. No.: 10296825** **Liebherr Universalfett Arctic** KPFHC1N-60, DIN 51502
23	Boom lock	**LWE Id. No.: 861301308** **Liebherr Spezialfett 9610 Plus** KP2K-20, DIN 51502	**LWE Id. No.: 10296825** **Liebherr Universalfett Arctic** KPFHC1N-60, DIN 51502
24.1	Slewing ring connection Roller bearing	**LWE Id. No.: 861301308** **Liebherr Spezialfett 9610 Plus** KP2K-20, DIN 51502	**LWE Id. No.: 10296825** **Liebherr Universalfett Arctic** KPFHC1N-60, DIN 51502
24.2	Slewing ring connection LR 13000	**LWE Id. No.: 11000948** **Liebherr Universalfett 9900** KPF2N-25, DIN 51502	**LWE Id. No.: 10296825** **Liebherr Universalfett Arctic** KPFHC1N-60, DIN 51502
25	Support plate with equalization Glide shoes of cab guide on vehicle frame LTC 1045-3.1	**LWE Id. No.: 861303608** **Liebherr Teleskopfett 9613 Plus** KP2K-30, DIN 51502	**LWE Id. No.: 861303608** **Liebherr Teleskopfett 9613 Plus** KP2K-30, DIN 51502

1.8 Service items and lubricants (continuation)

Line	Usage	Ambient temperature for driving and crane operation	
		-25 °C to +50 °C	**-40 °C to +30 °C**
26	Sliding beam Plastic glide bearing Beam for track adjustment	**LWE Id. No.: 861303608** **Liebherr Teleskopfett 9613 Plus** KP2K-30, DIN 51502	**LWE Id. No.: 861303608** **Liebherr Teleskopfett 9613 Plus** KP2K-30, DIN 51502
27.1	Telescopic boom Plastic glide bearing	**LWE Id. No.: 861303608** **Liebherr Teleskopfett 9613 Plus** KP2K-30, DIN 51502	**LWE Id. No.: 861303608** **Liebherr Teleskopfett 9613 Plus** KP2K-30, DIN 51502
27.2	Telescopic boom Outer glide bearing	**LWE Id. No.: 861303308** **Liebherr Spezialfett 1336** KP2K-30, DIN 51502 Spray grease	**LWE Id. No.: 861303308** **Liebherr Spezialfett 1336** KP2K-30, DIN 51502 Spray grease
27.3	Telescopic boom Inner glide bearing (only during assembly)	**LWE Id. No.: 861303308** **Liebherr Spezialfett 1336** KP2K-30, DIN 51502 Spray grease	**LWE Id. No.: 861303308** **Liebherr Spezialfett 1336** KP2K-30, DIN 51502 Spray grease
28	Telescopic boom LTC 1045-3.1	**LWE Id. No.: 11491399** **Bechem Berulub PAL 1**	**LWE Id. No.: 11491399** **Bechem Berulub PAL 1**
29	Guide rail on Telescoping cylinder	**LWE Id. No.: 861303308** **Liebherr Spezialfett 1336** KP2K-30, DIN 51502 Spray grease	**LWE Id. No.: 861303308** **Liebherr Spezialfett 1336** KP2K-30, DIN 51502 Spray grease

1.9 Service items and lubricants (continuation)

Line	Usage	Ambient temperature for driving and crane operation	
		-25 °C to +50 °C	**-40 °C to +30 °C**
30	Gear ring rotary connection Slewing gear drive pinion	**LWE Id. No.: 861007708** **RHS-Fluid** OGPFOS-20, DIN 51502	**LWE Id. No.: 861007708** **RHS-Fluid** OGPFOS-20, DIN 51502
31	Running rope	**LWE Id. No.: 10173371** **Liebherr WR-Lube SC** Adhesive grease	**LWE Id. No.: 10173371** **Liebherr WR-Lube SC** Adhesive grease
32.1	Radiator fluid Diesel engine and heating system Color: Blue green	**LWE Id. No.: 11001829** **Liebherr Antifreeze Mix** Pre-mixed corrosion inhibitor / antifreeze **WARNING: May not be diluted and / or mixed with other corrosion inhibitors / antifreeze!**	**LWE Id. No.: 11001829** **Liebherr Antifreeze Mix** Pre-mixed corrosion inhibitor / antifreeze **WARNING: May not be diluted and / or mixed with other corrosion inhibitors / antifreeze!**
32.2	Radiator fluid Diesel engine and heating system Color: Magenta When changing to **Liebherr Anti-freeze Organic SF Mix** , empty the cooling system completely and flush.	**LWE Id. No.: 11494696** **Liebherr Antifreeze Organic SF Mix** Pre-mixed corrosion inhibitor / antifreeze **WARNING: May not be diluted and / or mixed with other corrosion inhibitors / antifreeze!**	**LWE Id. No.: 11494696** **Liebherr Antifreeze Organic SF Mix** Pre-mixed corrosion inhibitor / antifreeze **WARNING: May not be diluted and / or mixed with other corrosion inhibitors / antifreeze!**

1.10 Service items and lubricants (continuation)

Line	Usage	Ambient temperature for driving and crane operation	
		-25 °C to +50 °C	**-40 °C to +30 °C**
33.1	Travel gears Crawler crane	see data tag	see data tag
33.2	Travel gear LTR 1060 LTR 1100	**LWE Id. No.: 861901008** **Liebherr Gear Hypoid 90 EP** SAE 90 and API GL 5	**LWE Id. No.: 10425142** **Liebherr Syntogear Plus 75W-90** SAE 75W-90 and API GL 5
33.3	Travel gear LTR 11200	**LWE Id. No.: 861901208** **Liebherr Gear PG 220** CLP PG 220, DIN 51517-3 **WARNING: May not be mixed with other oils!**	**LWE Id. No.: 861901208** **Liebherr Gear PG 220** CLP PG 220, DIN 51517-3 **WARNING: May not be mixed with other oils!**
34	Recovery winch	See data tag and manufacturer's instructions	See data tag and manufacturer's instructions
35	Recovery winch rope	See manufacturer's instructions	See manufacturer's instructions
36	Steering uncoupling LTC 1045-3.1	**LWE Id. No.: 10800345** **Teflon-Spray**	**LWE Id. No.: 10800345** **Teflon-Spray**

8 Inspections of cranes

B195219

1 General

This crane was tested at the manufacturer's facilities prior to shipment in accordance with the valid ISO, FEM and DIN Standards and BGV D6 (BGG 905).
The safety level achieved during initial commissioning may not be attainable during operation. Examples of the root cause of such deviations include; e.g., wear and tear, corrosion, effects of external forces, changes in the environment and changes to the mode of operation.
The operator is responsible for taking the necessary steps to ensure that the level of safety is maintained.
The crane operator is therefore obligated to have the crane inspected by an **expert**, at intervals depending on the operational conditions but at least once per year, from the first day of vehicle registration.
The crane must be inspected by an **authorized inspector** every four years after it has been licensed.
The crane must be annually inspected by an **authorized inspector** after its twelfth year of operation.
To ensure the high safety standard of the crane, we recommend - no later than the 12th year, in the 20th year, in the 26th year and then every 4 years - to have the crane undergo a general inspection by an **authorized inspector**. At that time, in addition to the usual scope of inspection, all load carrying parts of the crane - the complete steel structure with all welding seams as well as all components and connecting devices - are to be subjected to a complete visual inspection. The following procedural notes for repeat inspections are to be observed for that.

WARNING
There is a risk of weakening the supporting components when major changes or repairs are made to the crane!
▶ In this case, the operator must have the crane reinspected by an authorized inspector before placing it back into service!

In addition, all respective local and national regulations also apply.
Expert: Is a person whose technical training and experience means that he has adequate knowledge in the field of inspecting technical equipment. They must be familiar with regulations on safety at work, as well as guidelines and standards that allow them to assess the safe condition of technical equipment (e.g. cranes). Potential experts are workshop staff and customer service engineers.

Note
▶ Experts are not authorized inspectors!

Authorized inspector: Is a person whose technical training and experience means that he has explicit knowledge in the field of inspecting technical equipment. They must be familiar with regulations on safety at work, as well as guidelines and standards that allow them to assess the safe condition of technical equipment (e.g. cranes). They are responsible for testing technical equipment and giving an expert opinion. Authorized inspectors can be active engineers.

Note
▶ Authorized inspectors are legally recognized experts who have received special training!

Periodic inspection are principally a visual inspection, where the inspector (either type) appraises the condition of the crane and its components.
The purpose of the inspections is to avoid accidents by detecting deficiencies early on. Any deficiencies determined by the inspector must be documented, corrected, and subsequently reinspected.
A number of important examples of items that are particularly important during the periodic crane inspections are listed in the following. We wish to advise that the authorized inspectors / experts take sole responsibility for the crane inspections that they carry out.

Note

▶ The inspection may not be solely limited to the following positions shown in the sample construction illustrations. Rather the **entire** crane structure must be subjected to a careful inspection!

A checklist for periodic inspections recommended for Liebherr mobile and crawler cranes is included in the appendix to assist the inspectors.
If the inspector has any questions they should be directed through our Service Department to Liebherr-Werk Ehingen GmbH's technical departments.

WARNING
Danger of accident!
▶ Adhere to the following inspection guidelines and intervals.

2 Inspection of carrying crane structures, especially steel structures

DANGER
Danger of fatal injury!
The crane structures, particularly steel constructions have to be checked by an expert or authorized inspector at least once a year. If this is not the case, they could fail and cause fatal injury or seriously damage the crane!
▶ Crane structures, particularly steel structures must be checked by an expert or an authorized inspector at least once a year!
▶ Shorten the inspection intervals when the crane is subjected to above-average load spectrums, for example when handling large material quantities or frequently erecting long boom systems.
▶ When the crane was subjected to excessive operating loads; e.g., due to an unusual impact, the crane structure, especially the steel structures must be inspected immediately!

Crane structures, especially steel structures, such as booms, turntables, chassis, support equipment (e.g., sliding beams or folding outriggers) must be carefully inspected, at the very least during the annual recommended crane inspections. Inspect welding seams especially through an intensive visual inspection.
If paint damage with corrosion (rust) is found on load carrying parts of the crane structure, especially on telescopic booms, lattice booms, lattice jibs, pull rods etc., then the rust must be removed, primed and painted.
During an electrolyte process, such as corrosion in combination with water, an atomic hydrogen is created, which causes to hydrogen induced corrosion with resulting cracks on high tensile fine grain construction steel.
If disassembly and assembly work on the crane is required to carry out the inspections, then they must be carried out by taking the manufacturer's data into account or in coordination with the crane manufacturer.
We would like to point out that the framework of mobile cranes is designed for a limited number of stress work cycles. This also determines the utilization or service life of the framework. The service life is not determined solely by the number of stress cycles. It also depends on the loads (load spectrum) applied during the time in operation.
Liebherr mobile and crawler cranes are designed for specific characteristics and movements, such as constant deployment of drive forces, only occasional operation and load conditions according to EN 13000:2010.
Liebherr mobile and crawler cranes are designed for assembly operation and - according to EN 13000:2010, chapter 4.1.2.1 - they can only take on a limited number of work cycles (N = 32000) when grouping them into collective class Q_1 = light (k_p = 0.125).
Example of a load collective according to grouping in collective class Q_1 = light (k_p = 0.125).

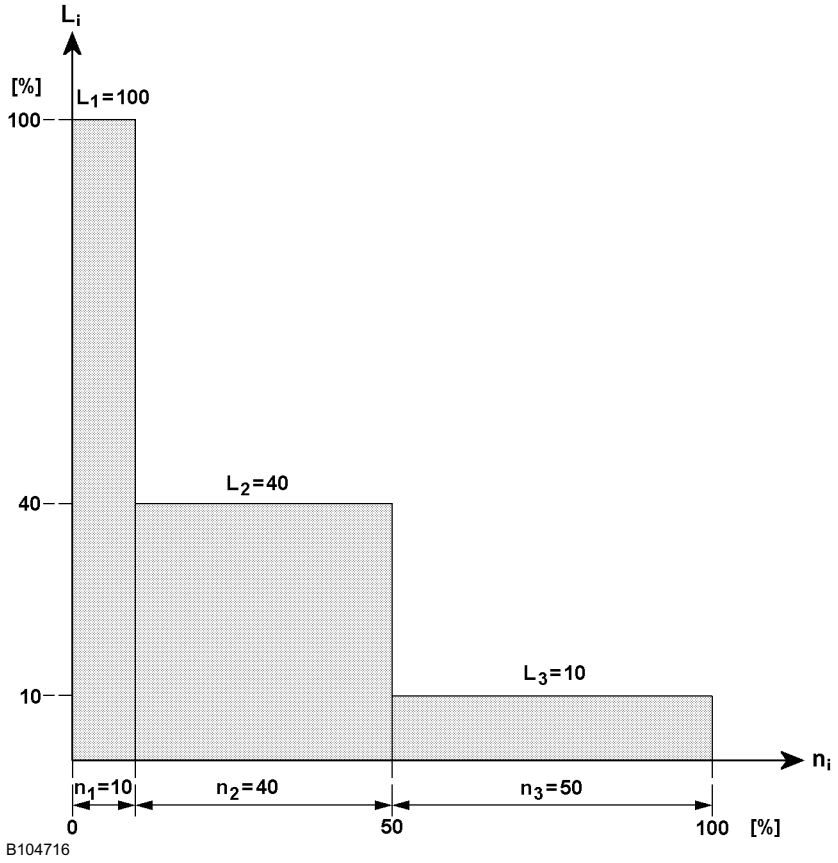

L_i: Load proportion in relation to maximum load [%]
n_i: Load cycles in relation to maximum number [%]

Note

- ▶ The service life of Liebherr mobile and crawler cranes can be drastically reduced, for example when used in magnet, grapple or material handling applications!
- ▶ Repeated inspection of crane structure, especially the steel structure and the welding seams must then be carried out in shorter intervals than specified.

For that reason, the steel structures and the welding joints must be subjected to an visual intensive inspection by the expert during the specified periodic inspections.

If any damage (such as cracks or suspicion of cracks) are apparent on any part of the steel structure, the total extent of the damage must be determined by qualified specialists using appropriate material testing methods, such as magnetic crack detection, ultrasound or x-rays. Thereafter, the qualified personnel must determine whether or not the damaged area can be repaired by welding or by other means.

The following basic sketches are samples of the load-bearing welding structures. The welding joints or seams or steel structural zones that require inspection may be present more than once and in various forms. The joints or zones must be inspected all around at the locations identified by arrows.

Note

- ▶ The scope and extent of all inspections remain the sole responsibility of the inspectors!
- ▶ The scope and results of tests should be documented to permit reproducibility. This documentation forms part of the crane records and should be safely stored during the entire service life of the crane!
- ▶ The following basic sketches are provided to assist the inspector. The illustrations are only examples and are not necessarily 100 % complete!

2.1 Repair welds

If defects such as cracks or permanent deformation are detected on load-bearing steel components, they should be immediately reported to the Service Department at **Liebherr-Werk Ehingen GmbH** (hereinafter called LWE).
Furthermore, the defect must immediately be appraised by an authorized inspector in accordance with standard welding technology rules. The inspector must immediately ascertain whether or not the crane can continue to be safely operated until the time of the repair.
The following items apply to the repair weld:

- Repair welds may only be carried out by **LWE** personnel or third party personnel contracted by **LWE**, with appropriate welding qualifications according to EN 287-1 for the subject material and welding method!
- The repair weld must be carried out in accordance with the latest revision of **LWE's** internal welding guideline ISR B 010!
- The repaired structural component must subsequently be subjected to a load test.
  The required test loads and boom configurations are to be determined by **LWE** Service!
  Successful test results are to be documented in the crane inspection log!
- We also refer to observing the accident prevention regulations “Principles for testing cranes by authorized inspectors or experts in accordance with UVV **Cranes** BGV D6 and BGG 905”!

WARNING
Danger of accidents in case of defective repair welds!
Due to defective repair welds, severe personnel and property damage can result!
▶ Observe and adhere to the instructions and welding regulations!

Note
Exclusion of liability!
For repair welds, which are not made by **LWE** personnel or by personnel authorized by **LWE**, Liebherr-Werk Ehingen GmbH excludes liability for the system functionality as well as for the parts!
▶ Have repair welds only made by **LWE** personnel or by personnel authorized by **LWE**!

blank page!

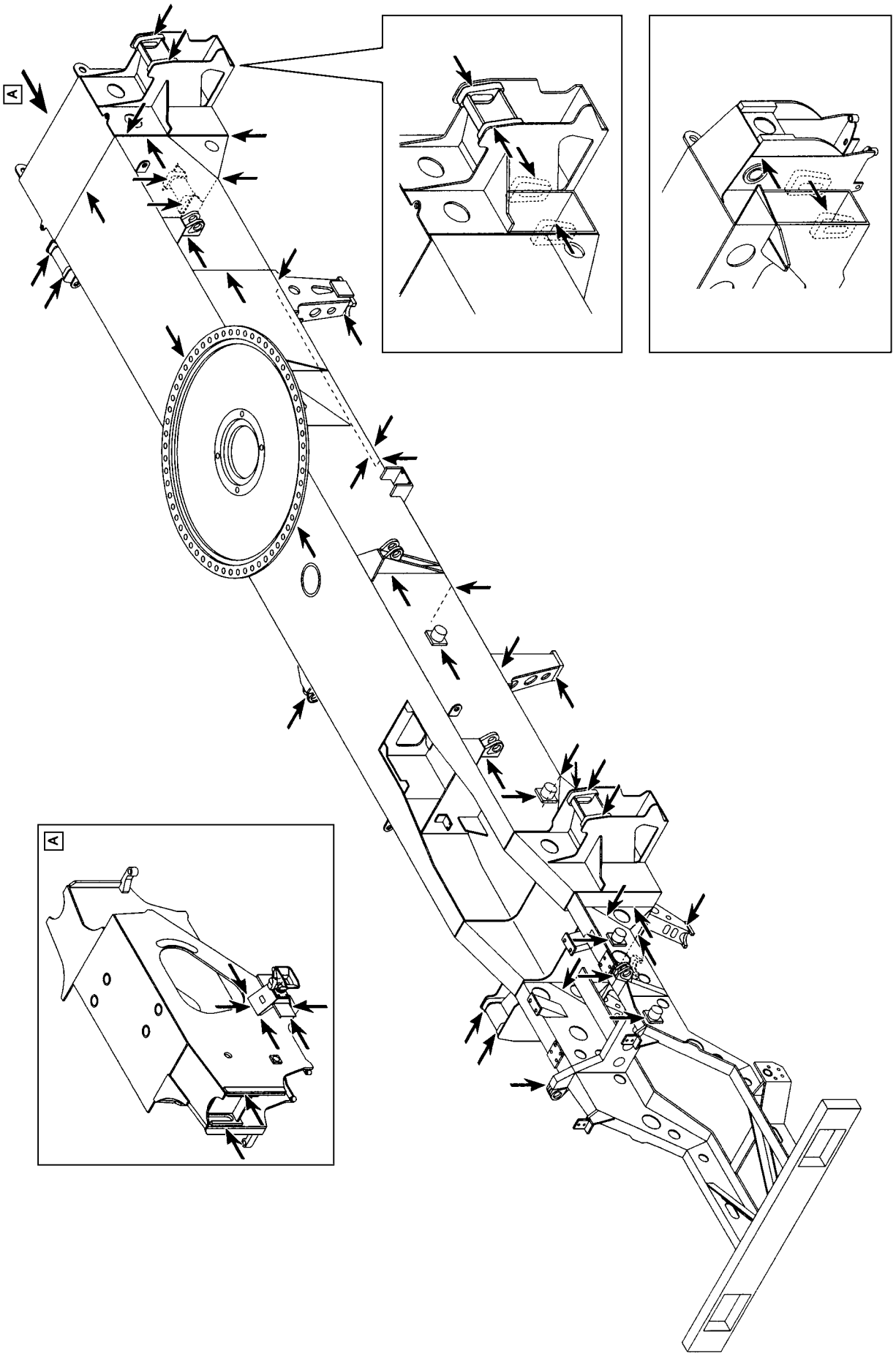

B185046

Example for vehicle frames

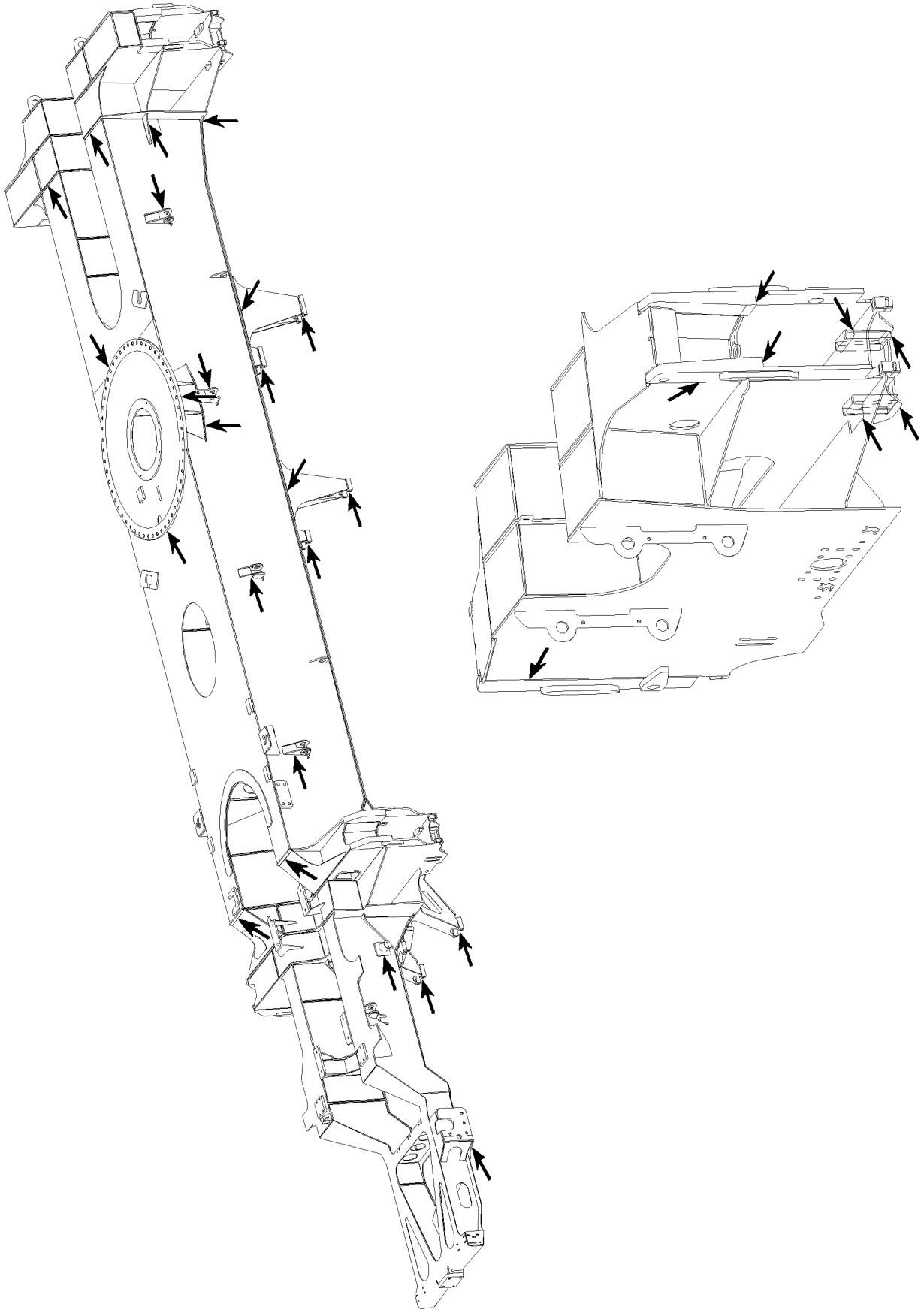

B105702

Example for vehicle frames

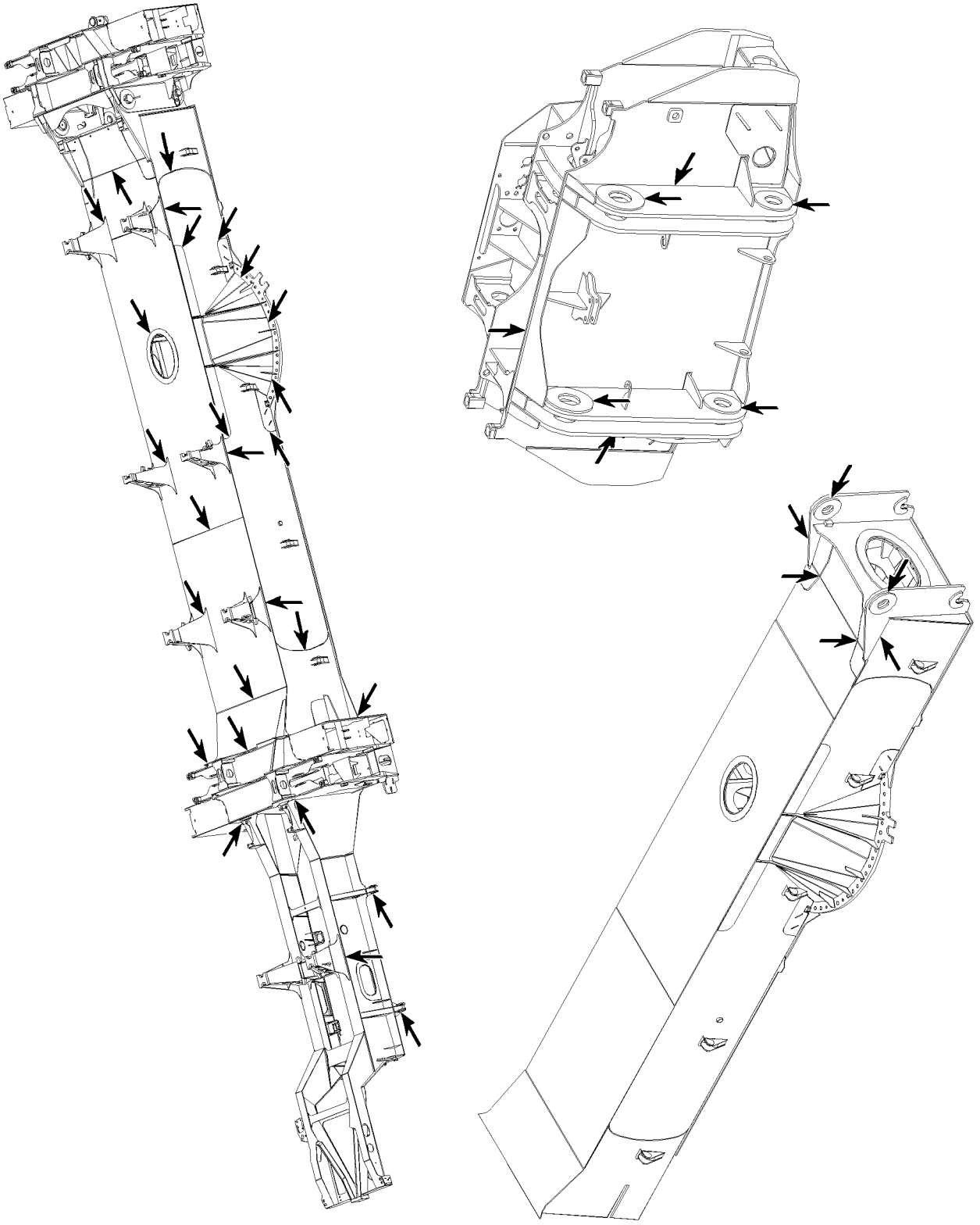

B105719

Example for vehicle frames

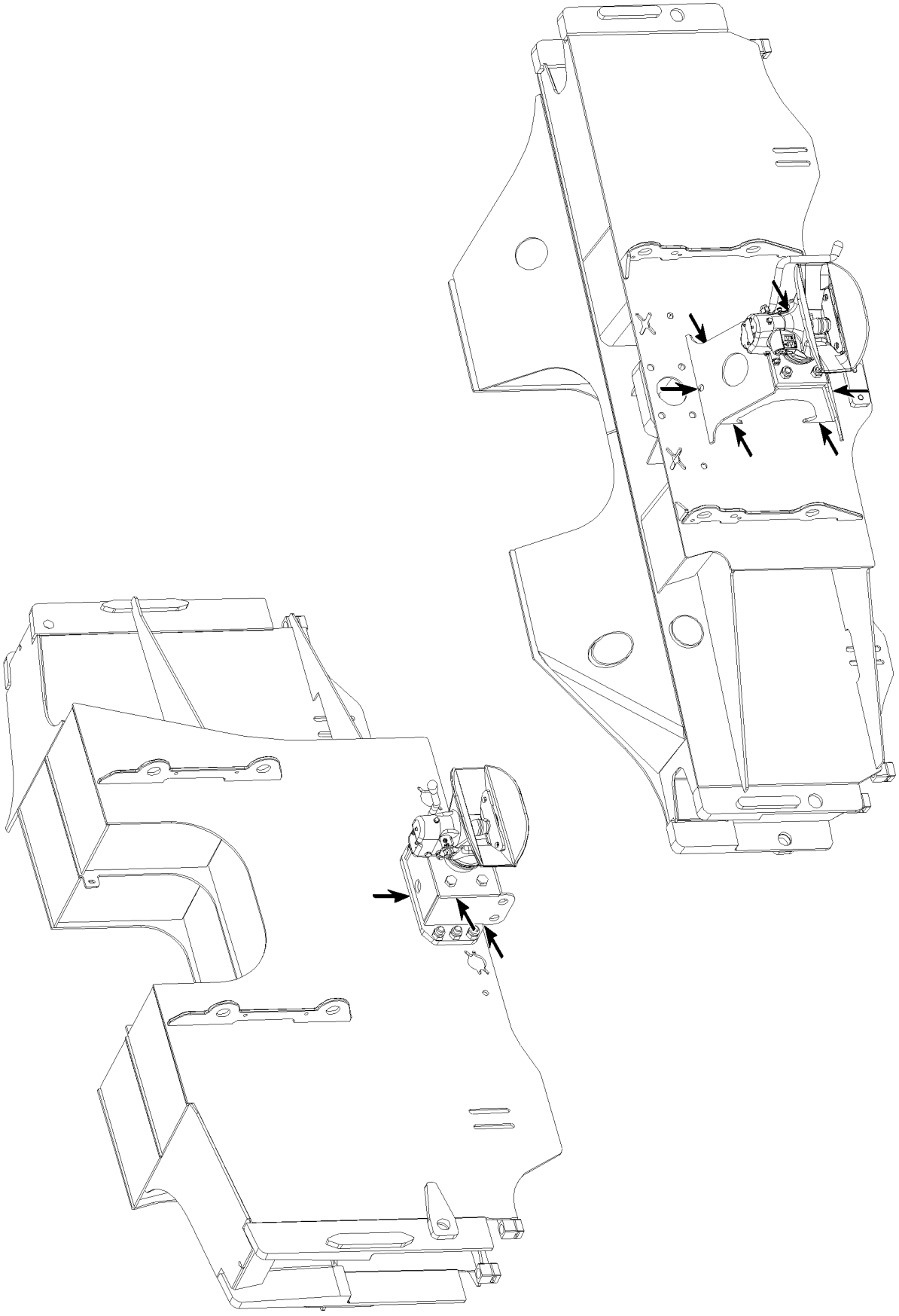

B105687

Example for tow coupling

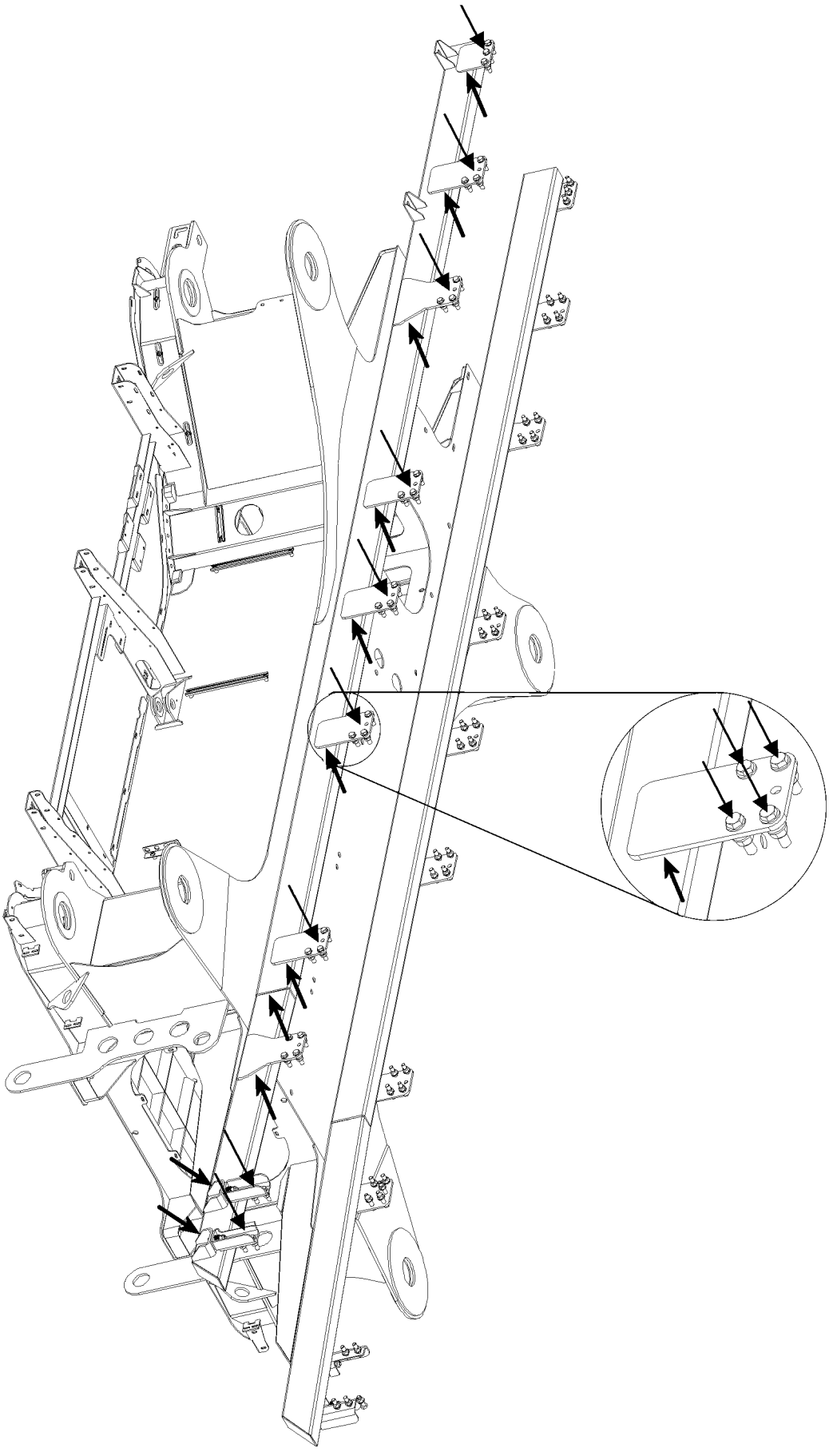

B113940

Example for intermediate frame

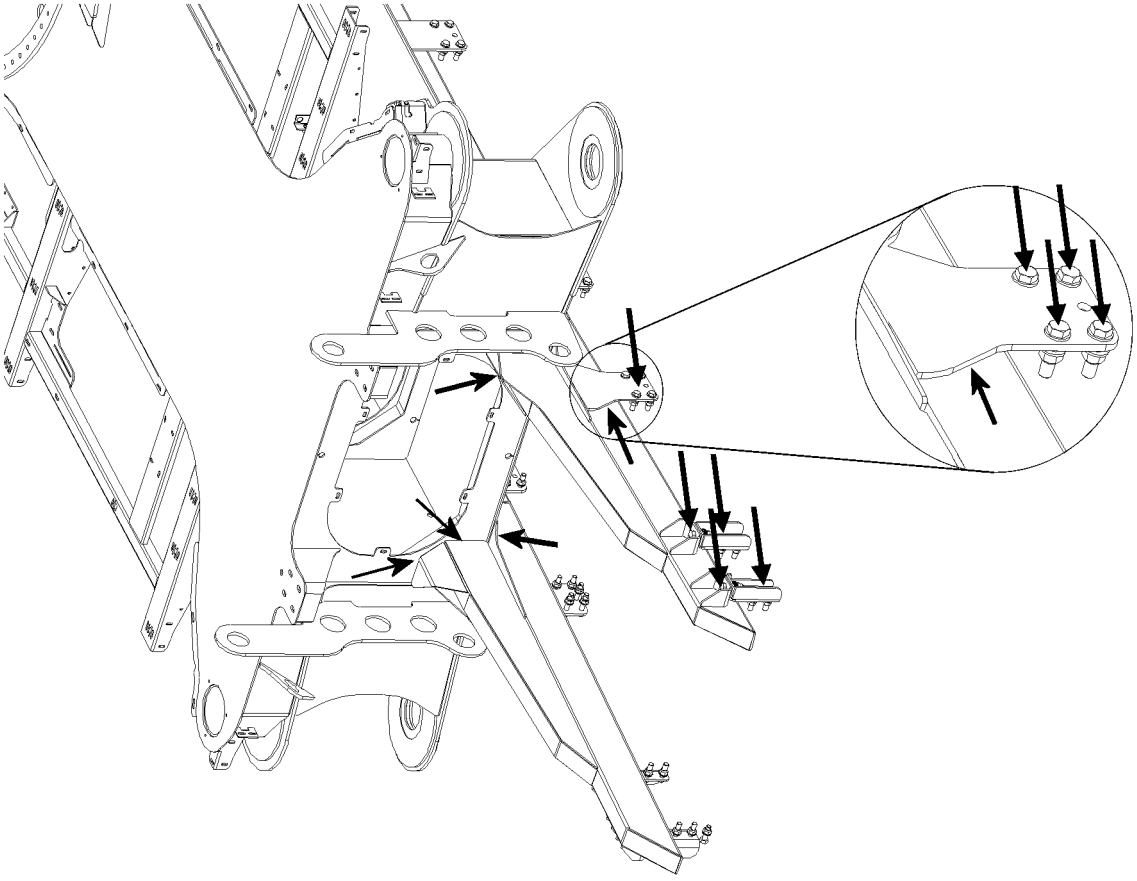

B114000 *Example for intermediate frame*

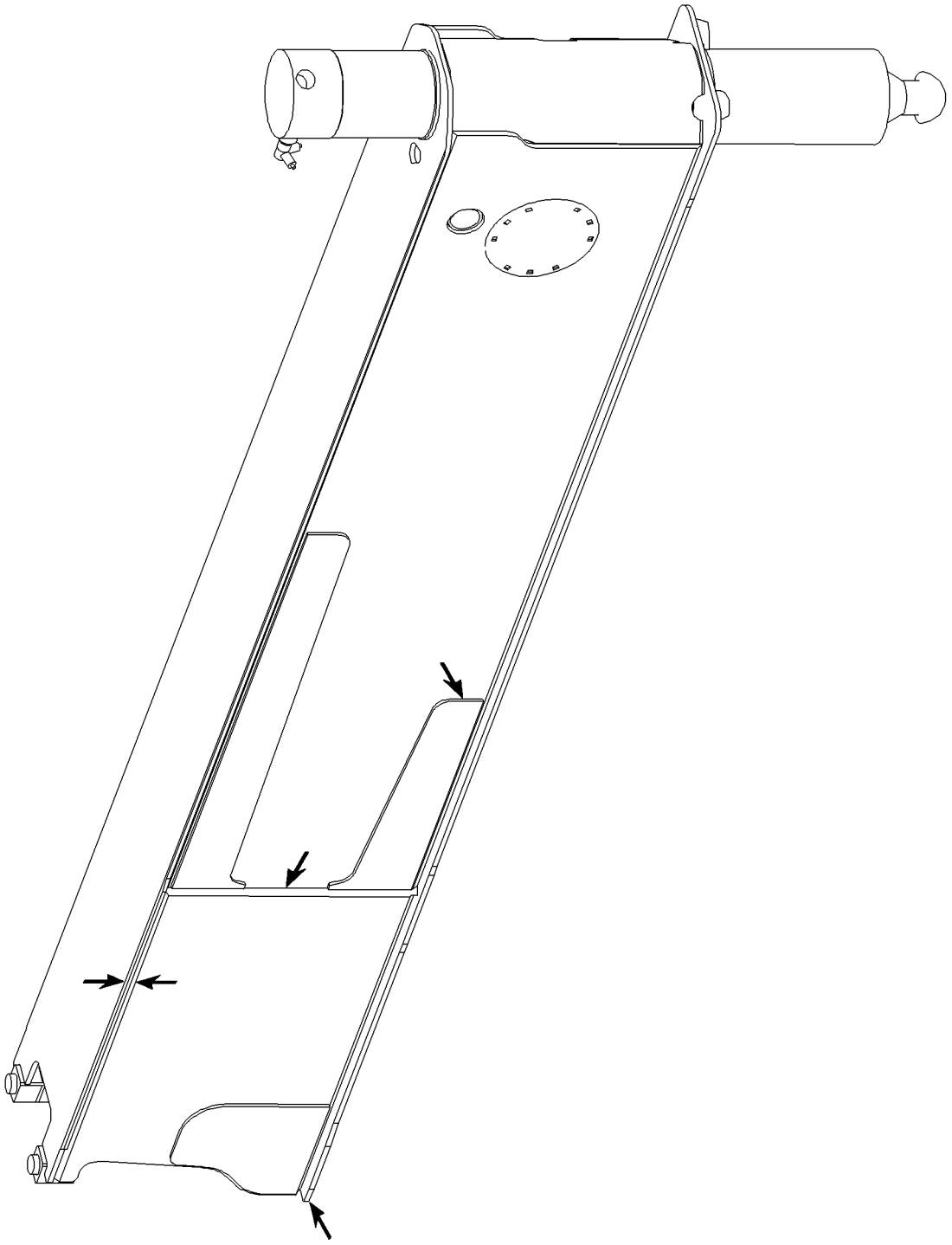

B105698

Example for sliding beam

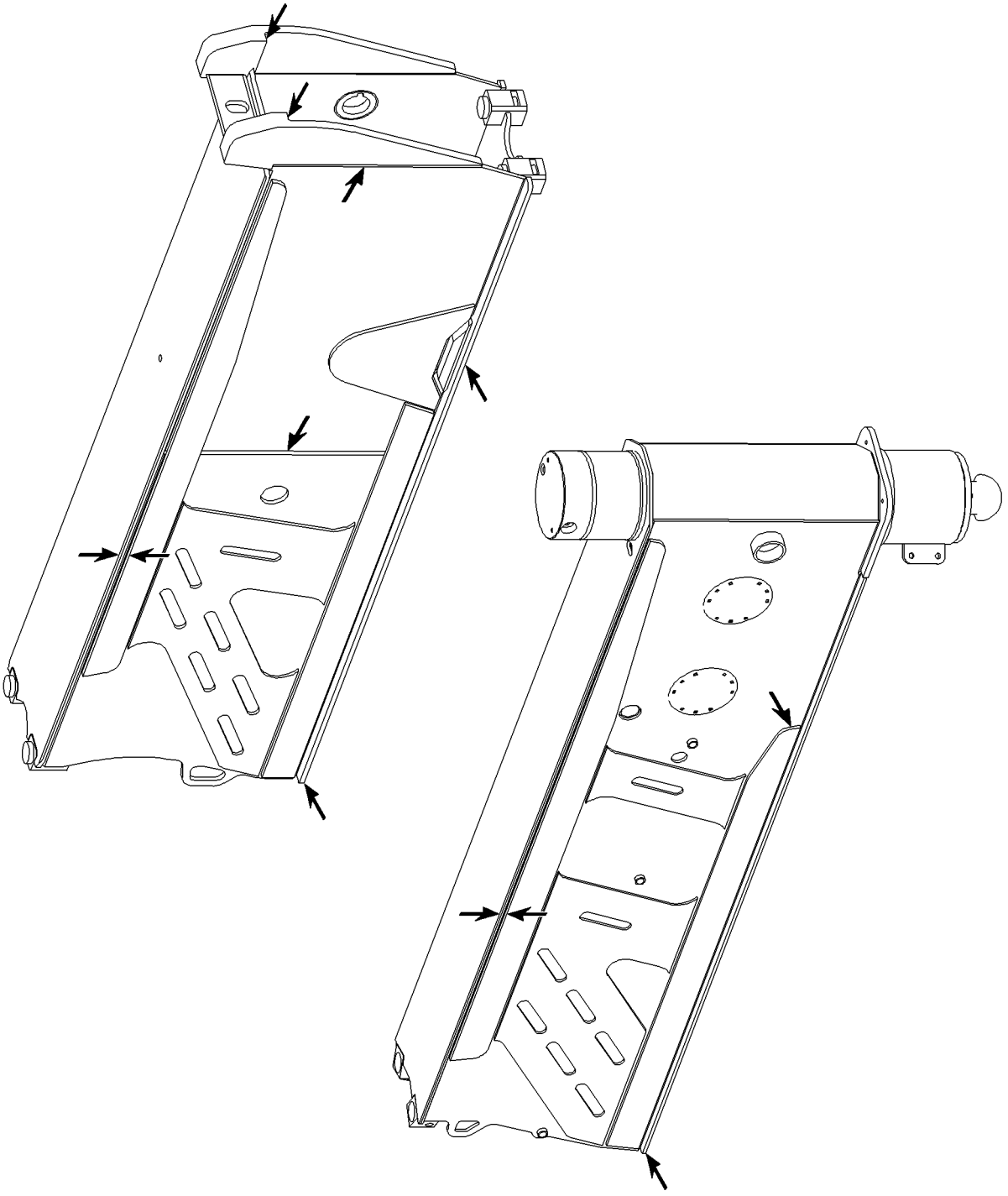

B105717 *Example for sliding beam*

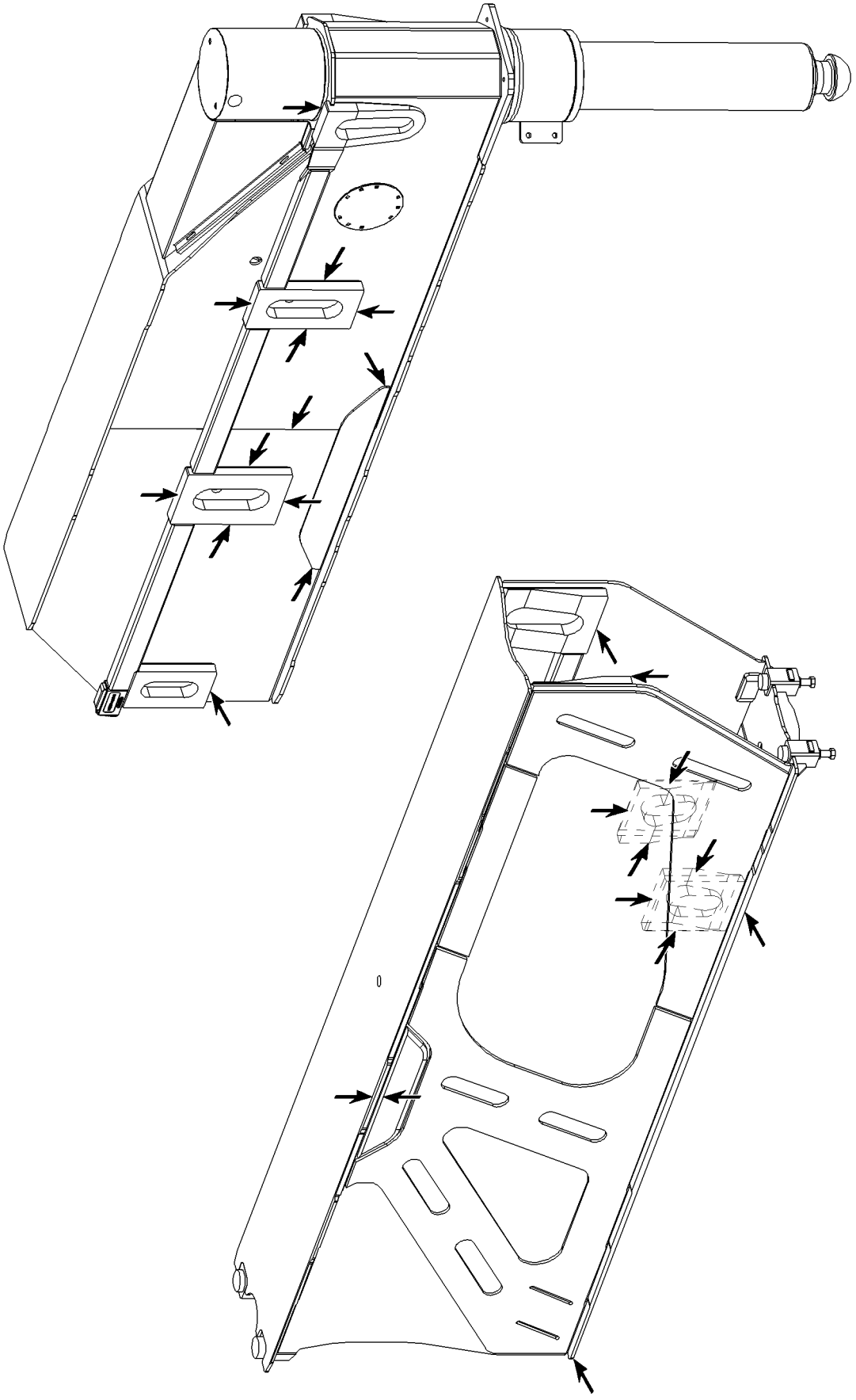

B105718

Example for sliding beam

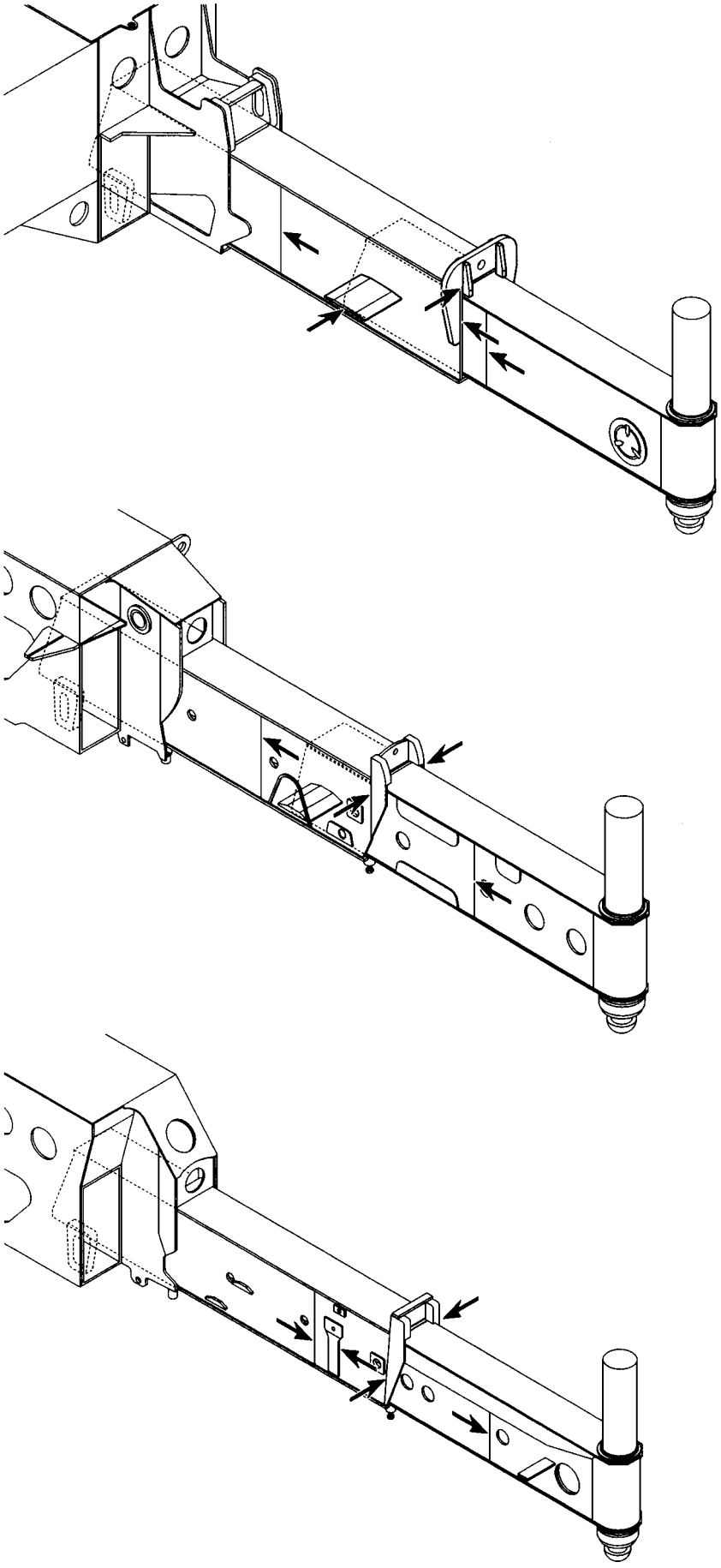

B185047 *Example for sliding beam*

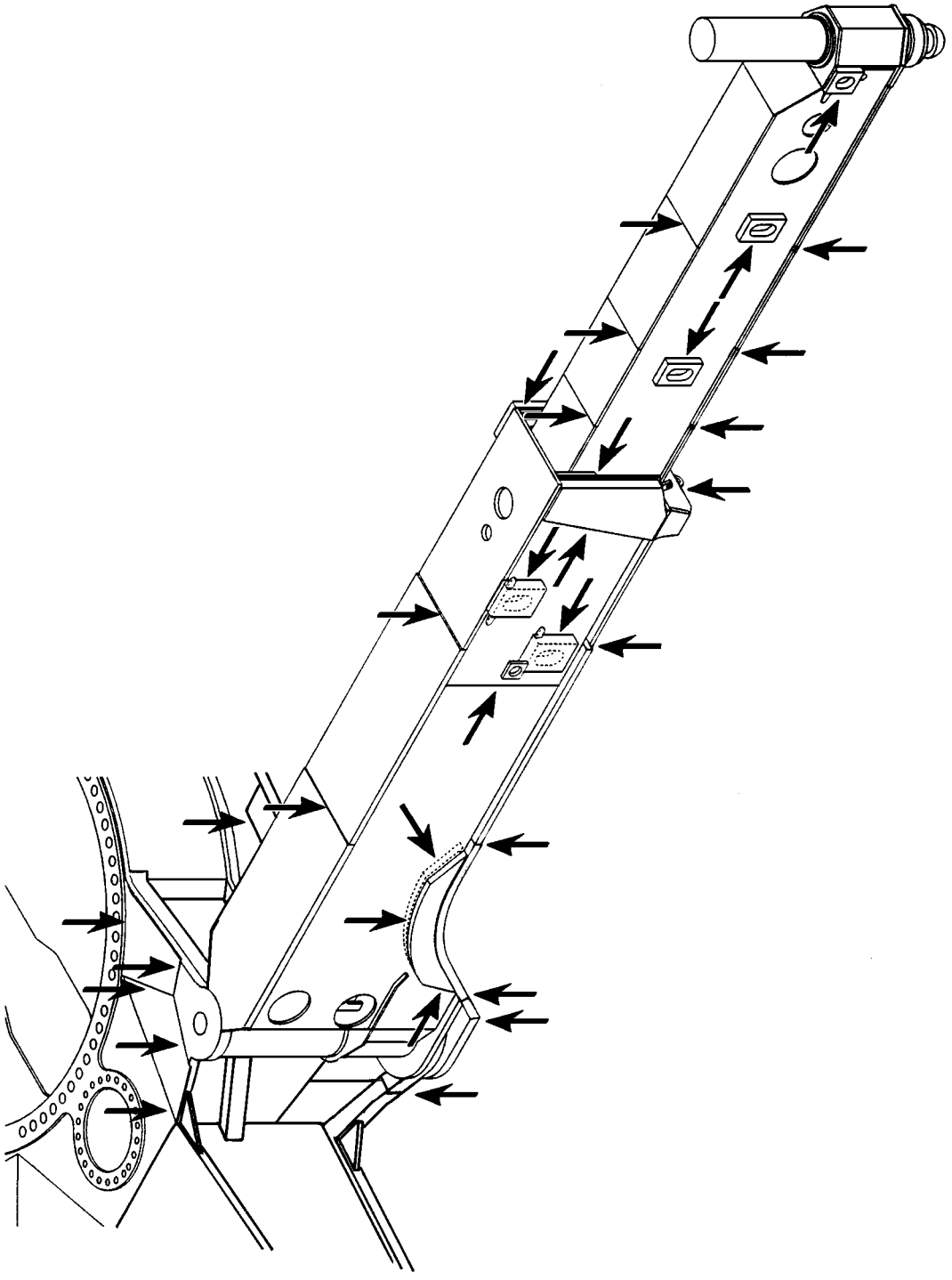

B185060 *Example for swingable sliding beam*

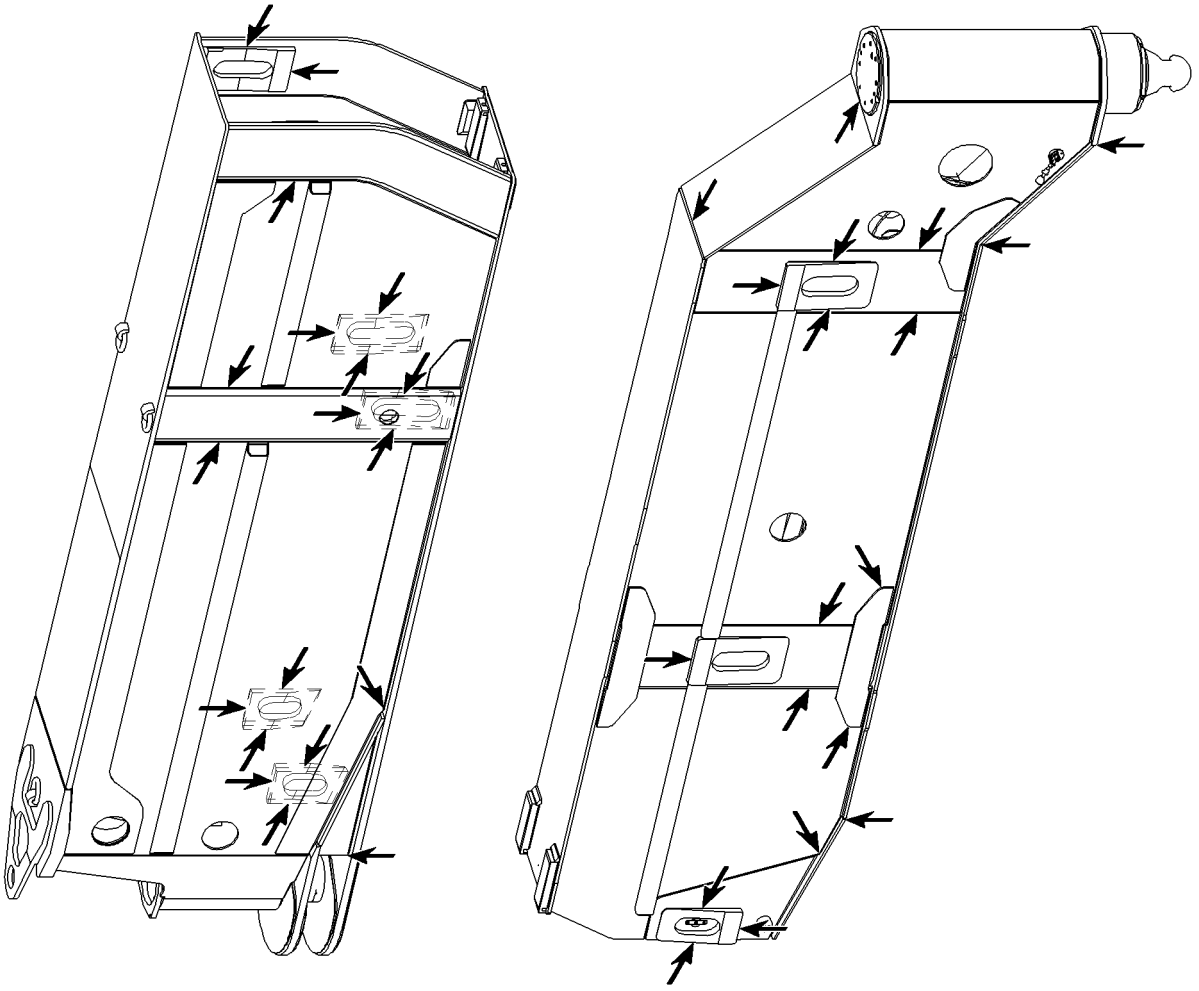

B105690 *Example for swingable sliding beam*

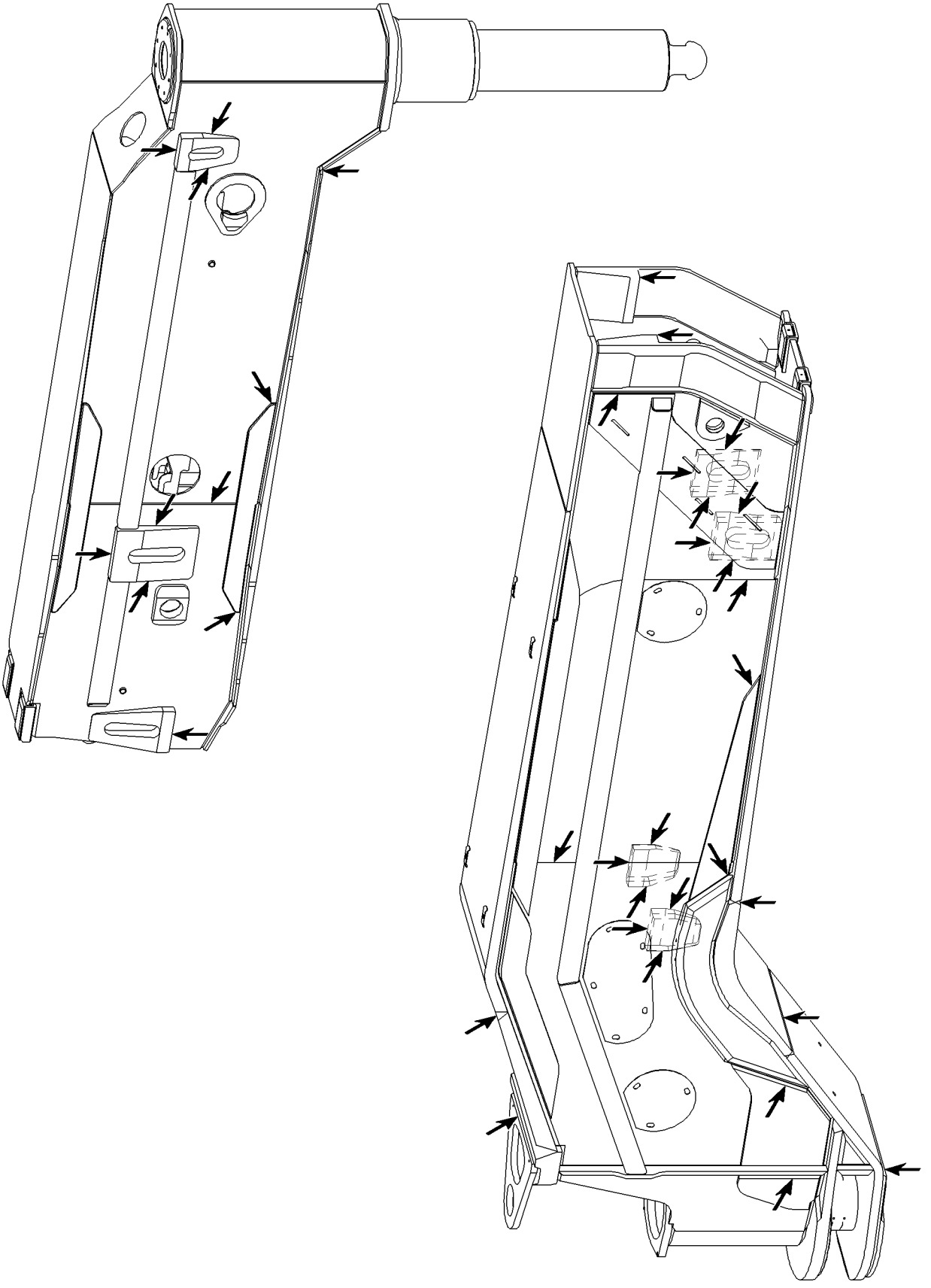

B105704

Example for swingable sliding beam

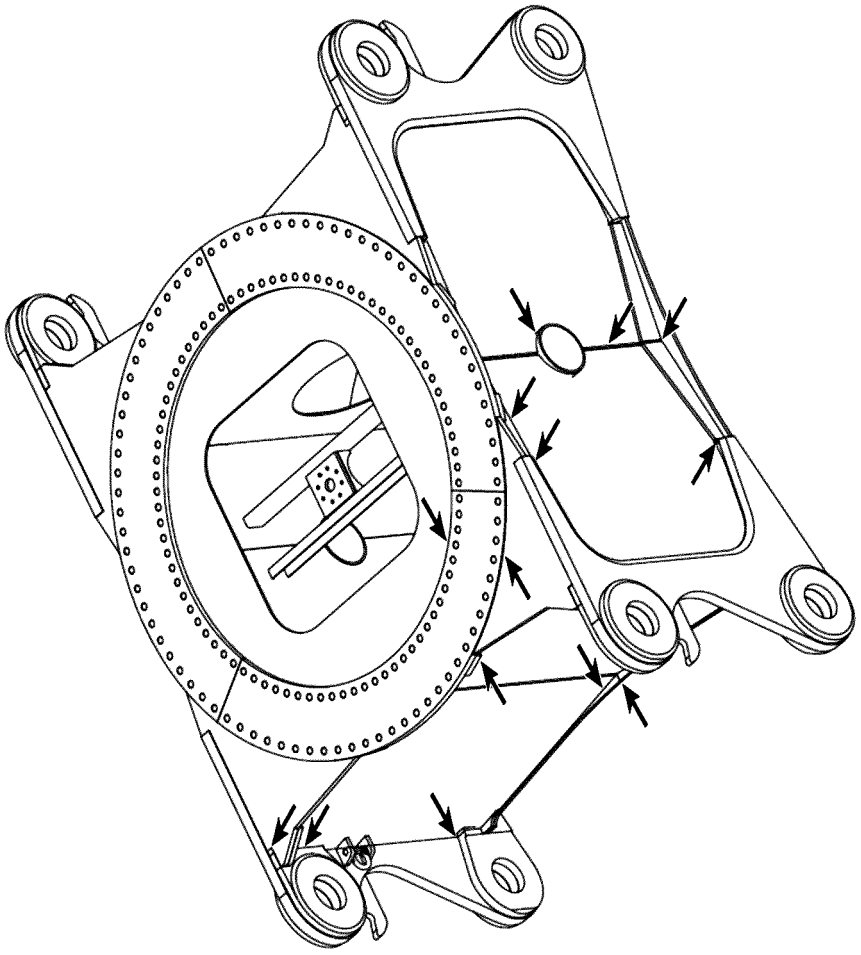

B105725 *Example for crawler center section*

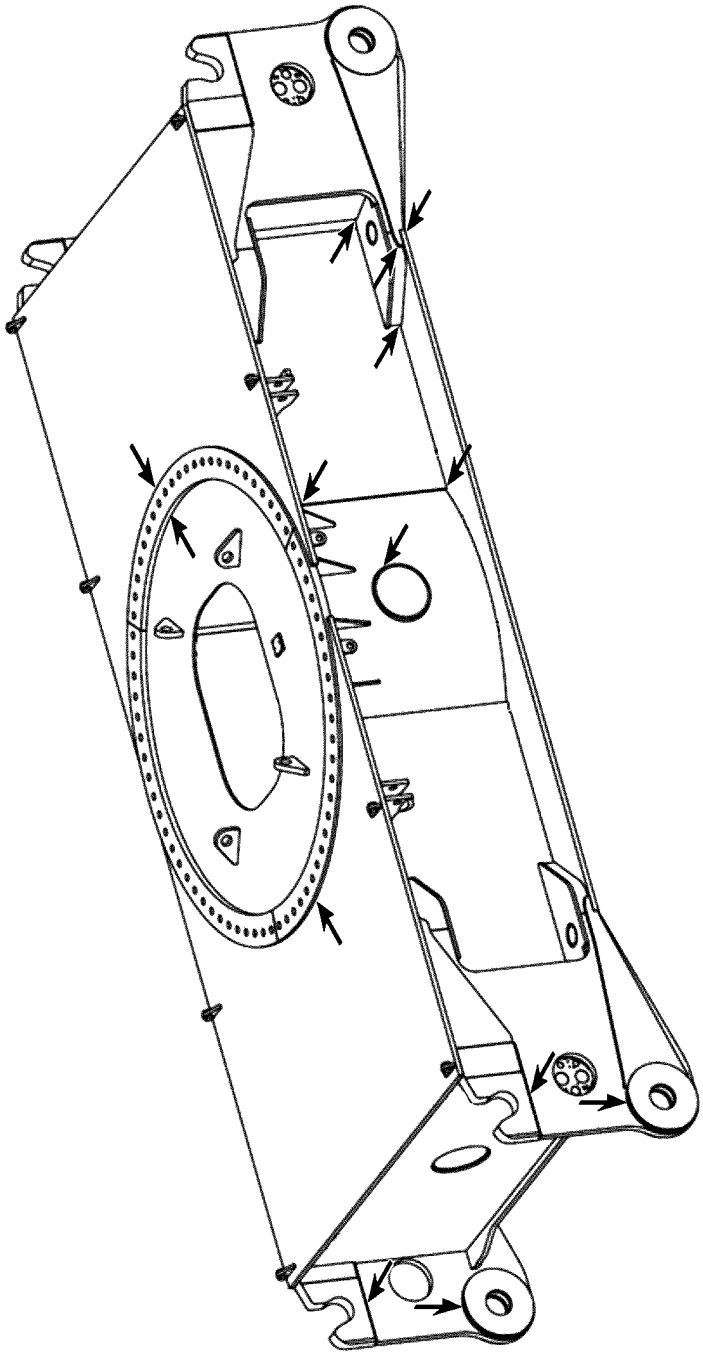

B105726

Example for crawler center section

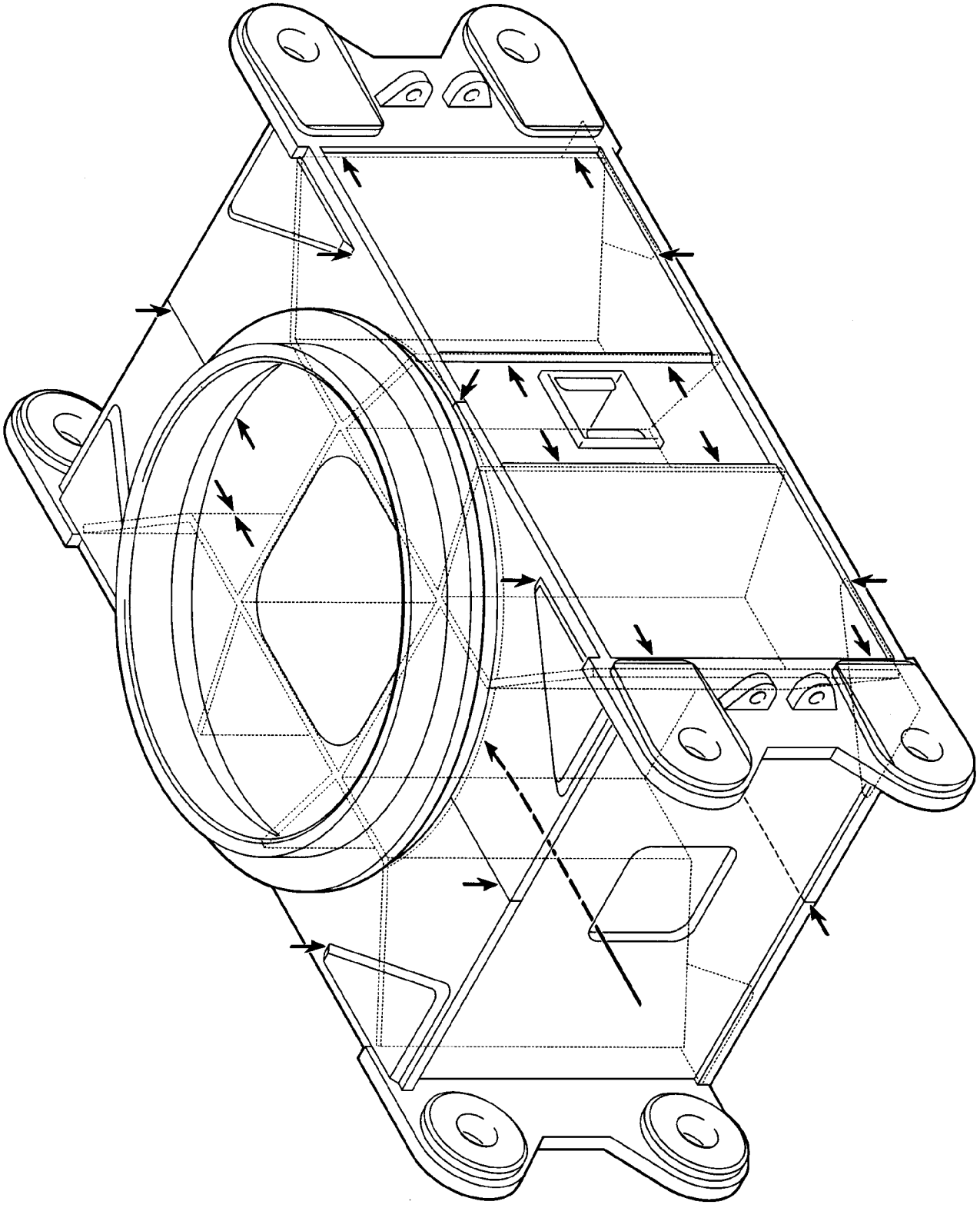

B187347 *Example for crawler center section*

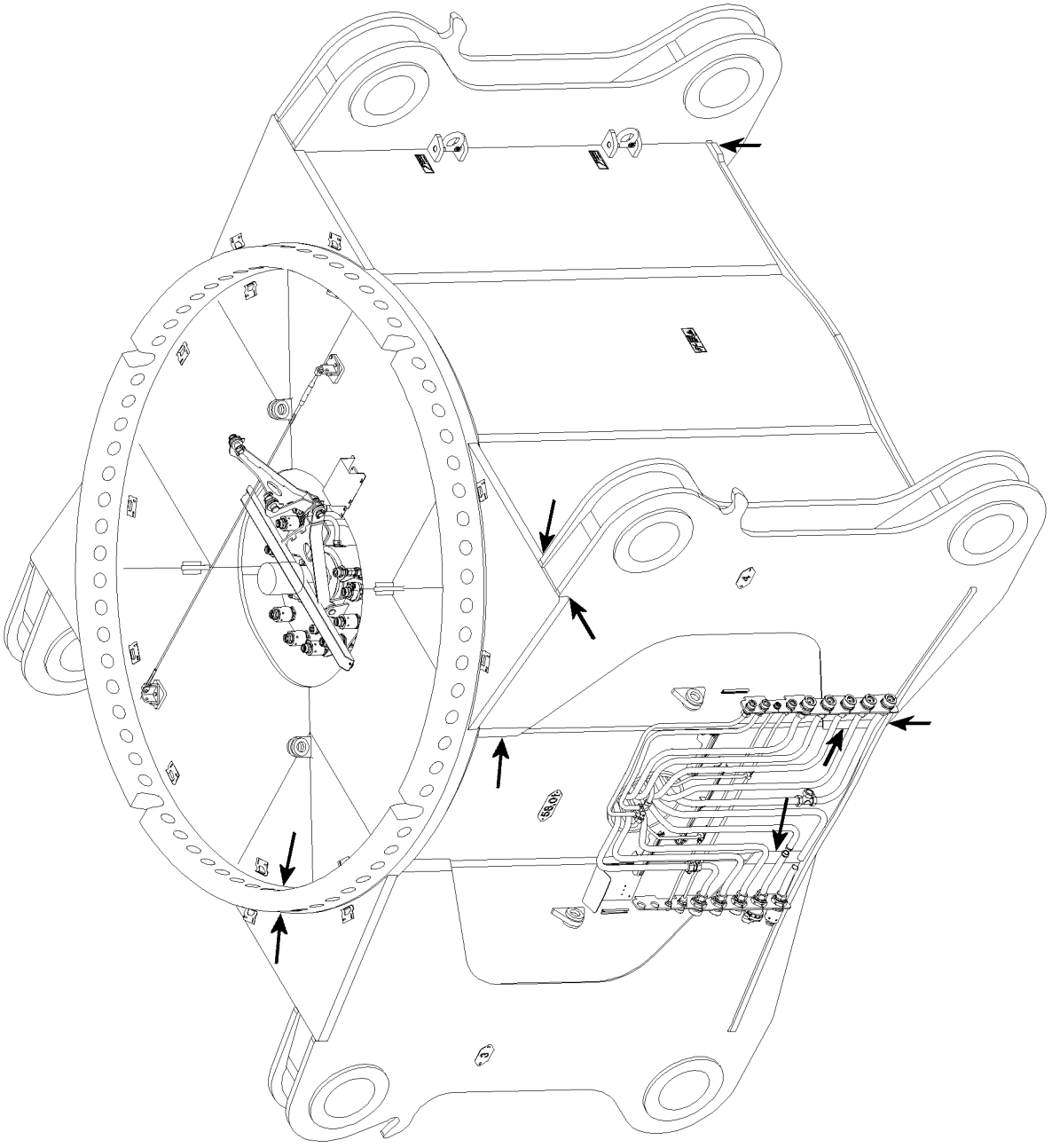

B115920 *Example for crawler center section*

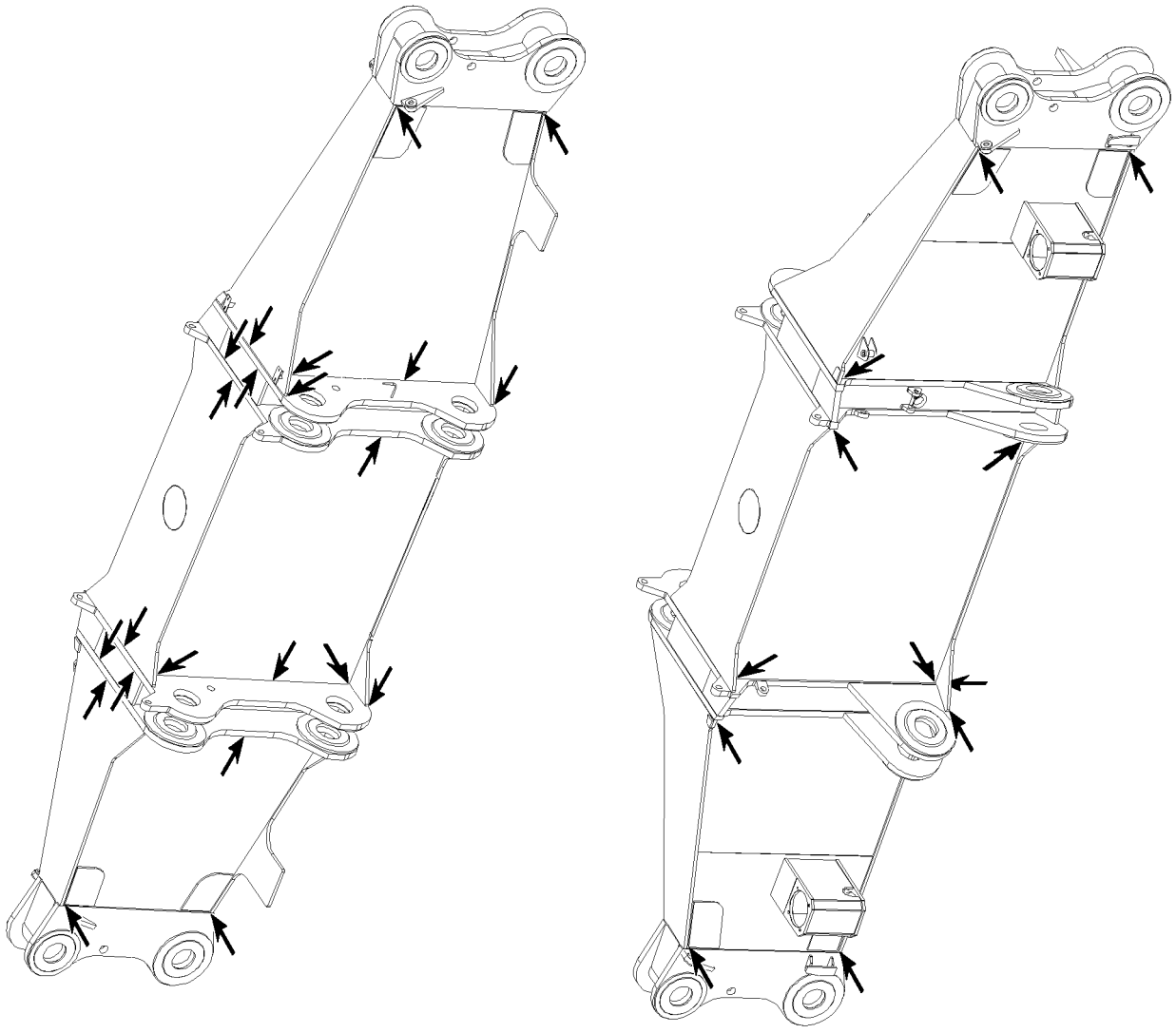

B105727 *Example for cross carrier*

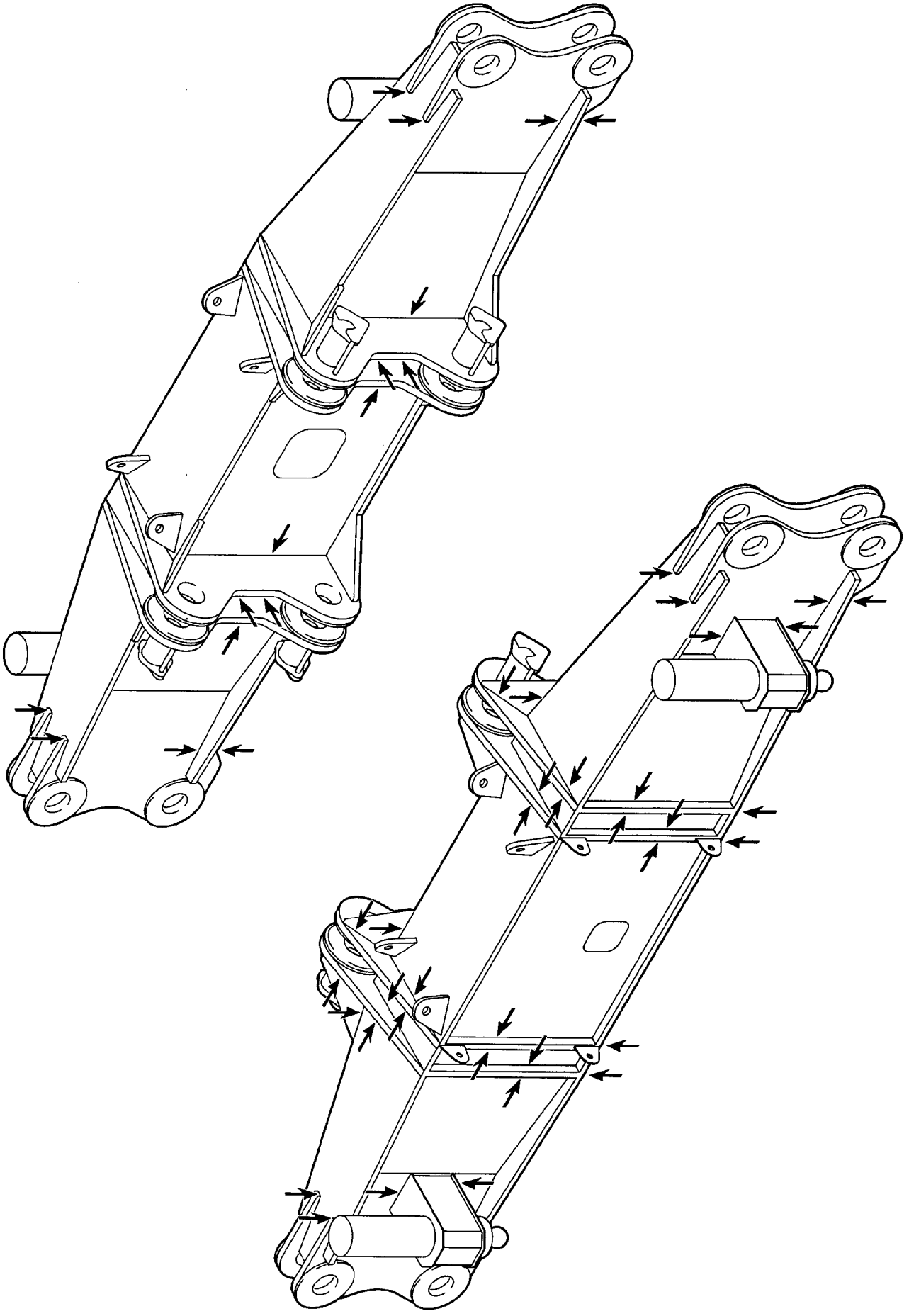

B187348

Example for cross carrier

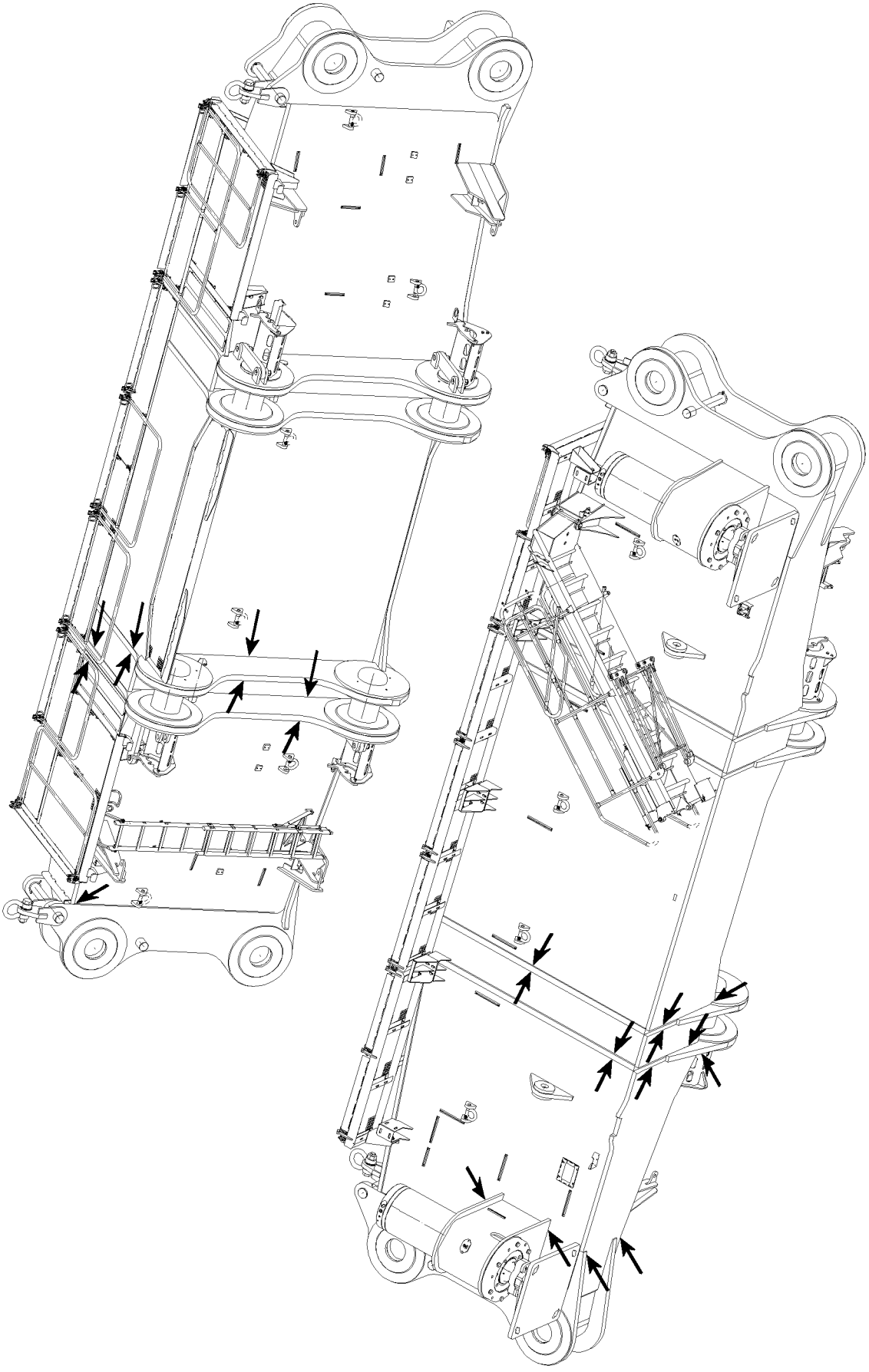

B115921

Example for cross carrier

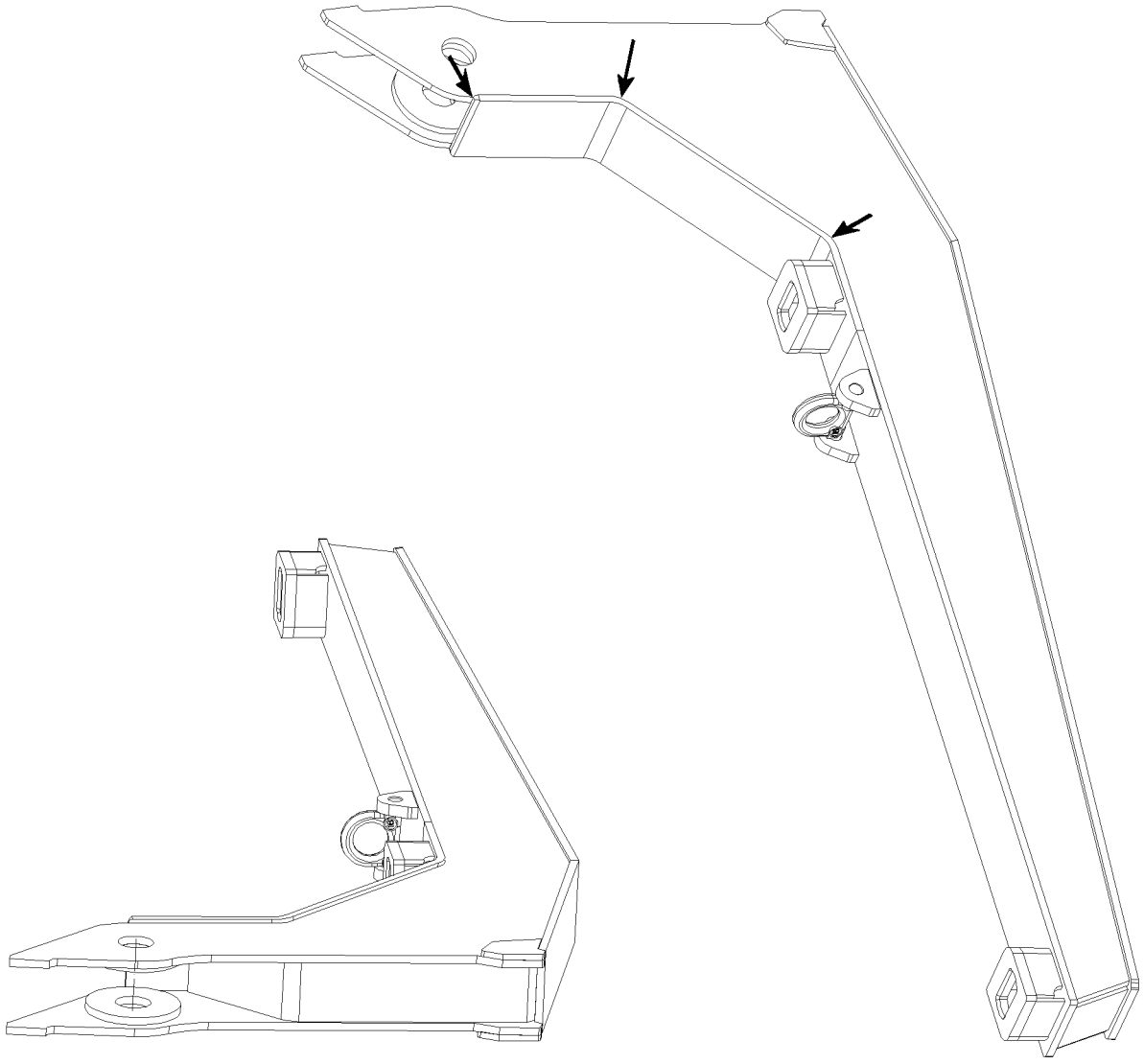

B115919 *Example for carrier for central ballast*

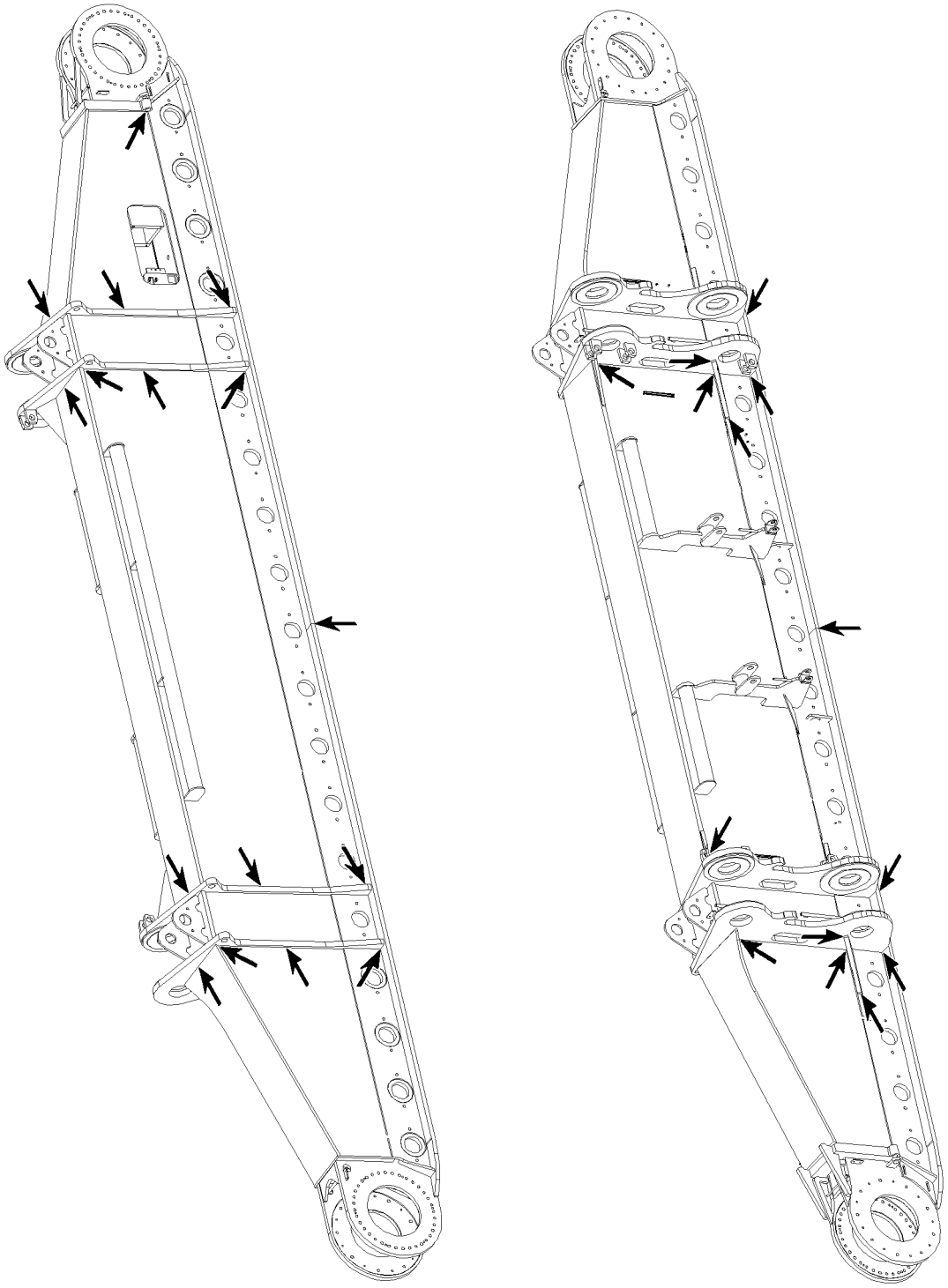

B105728

Example for crawler carrier

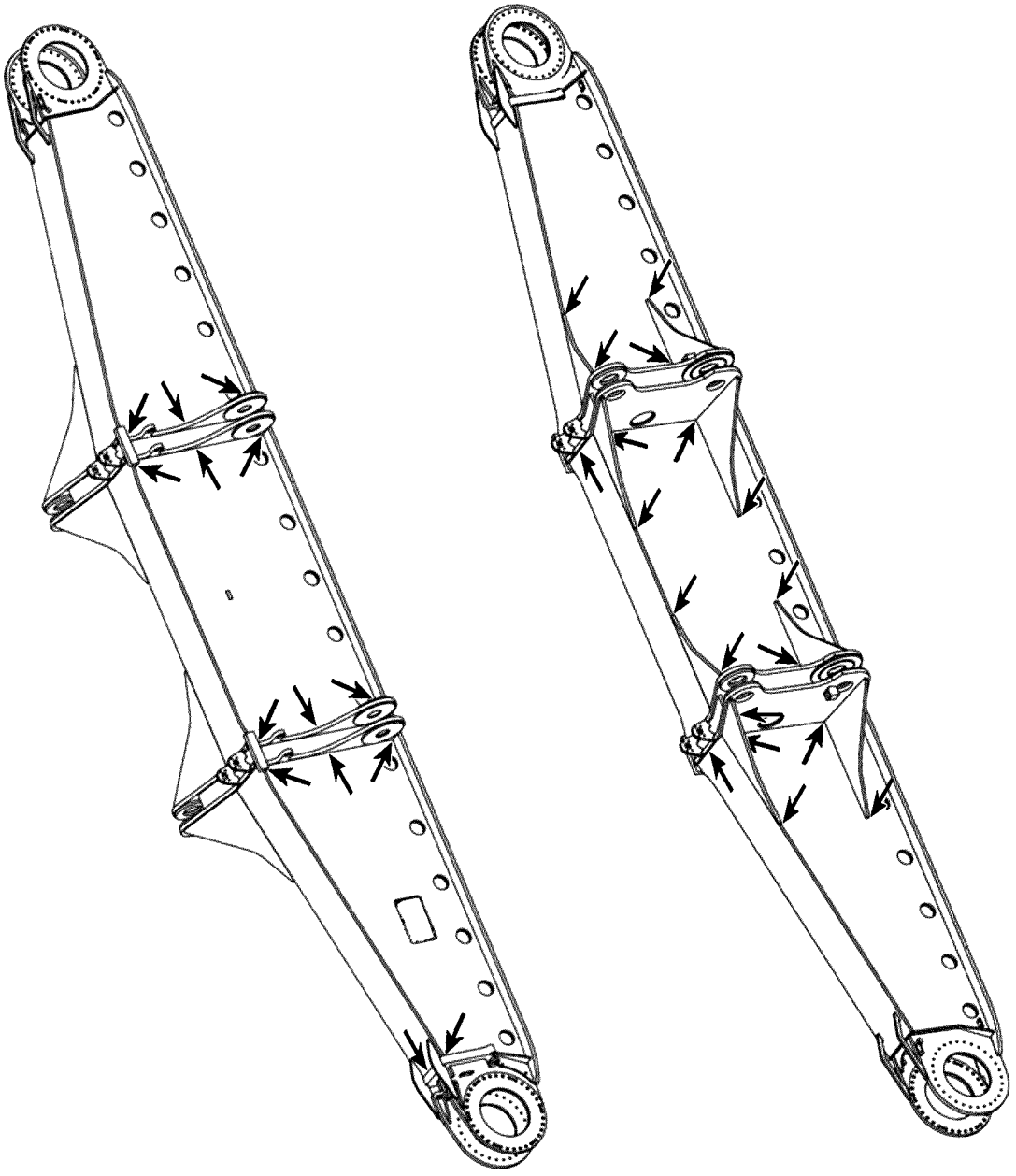

B105729 *Example for crawler carrier*

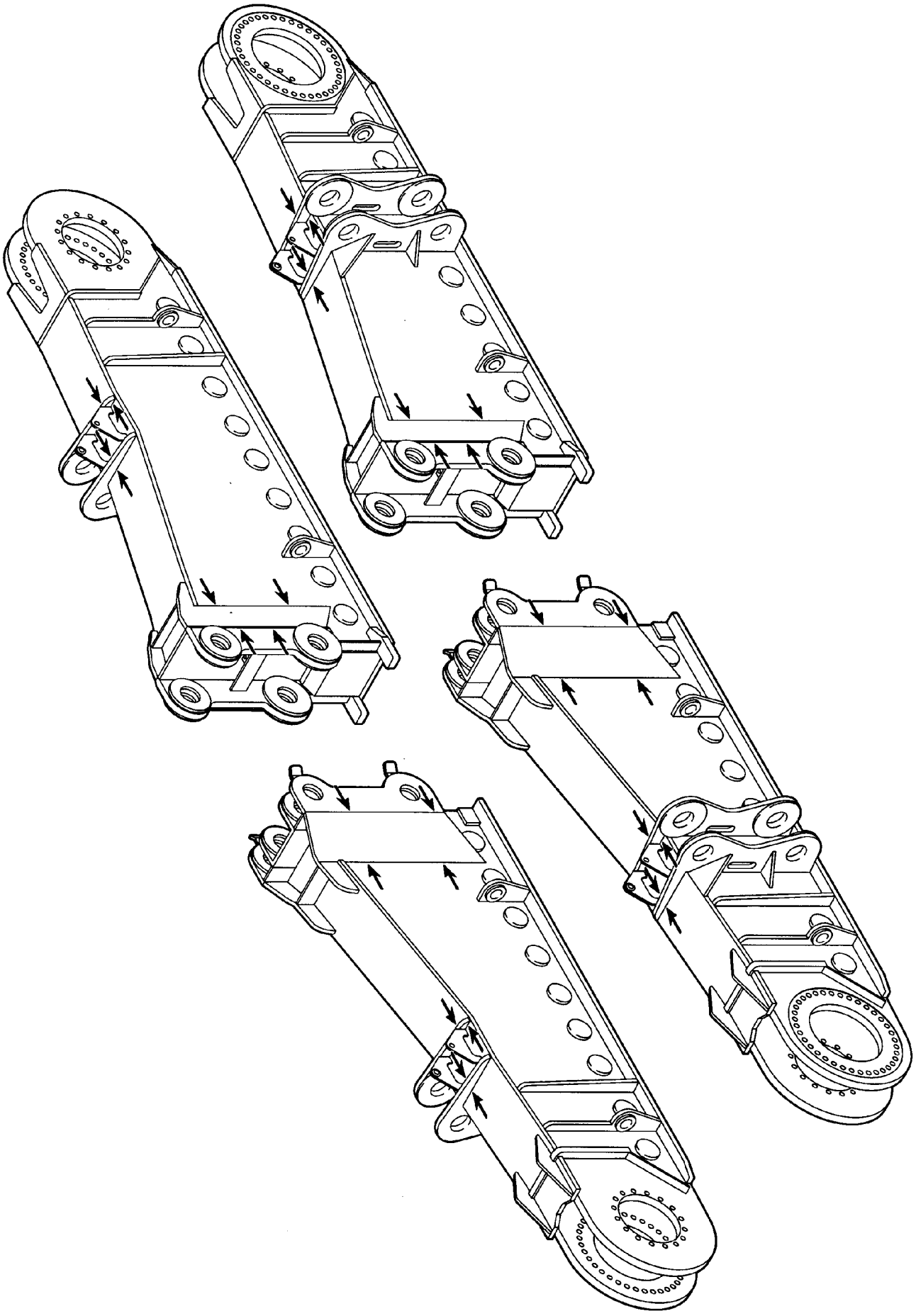

B187349

Example for crawler carrier

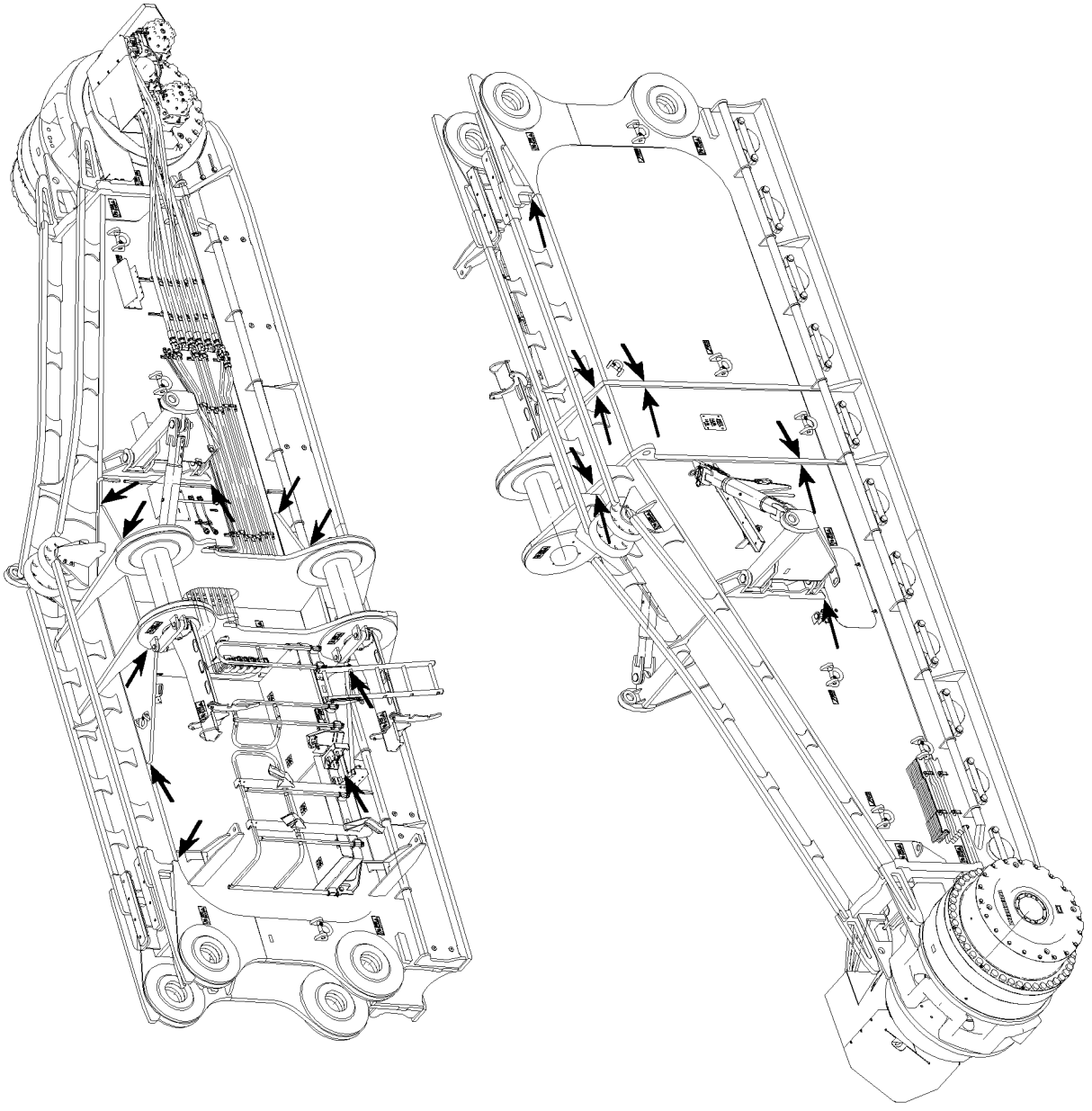

B115917 *Example for crawler carrier*

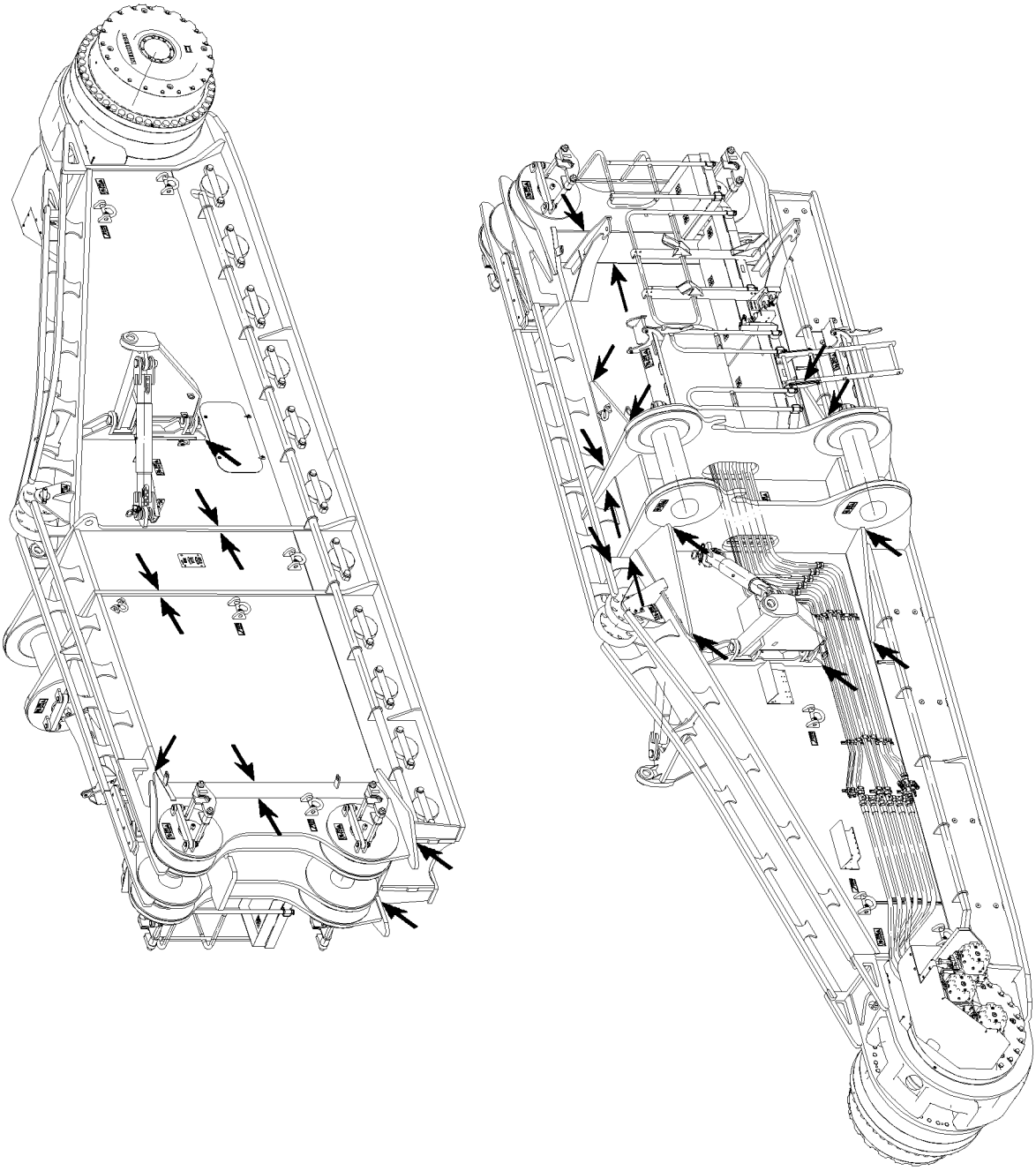

B115918

Example for crawler carrier

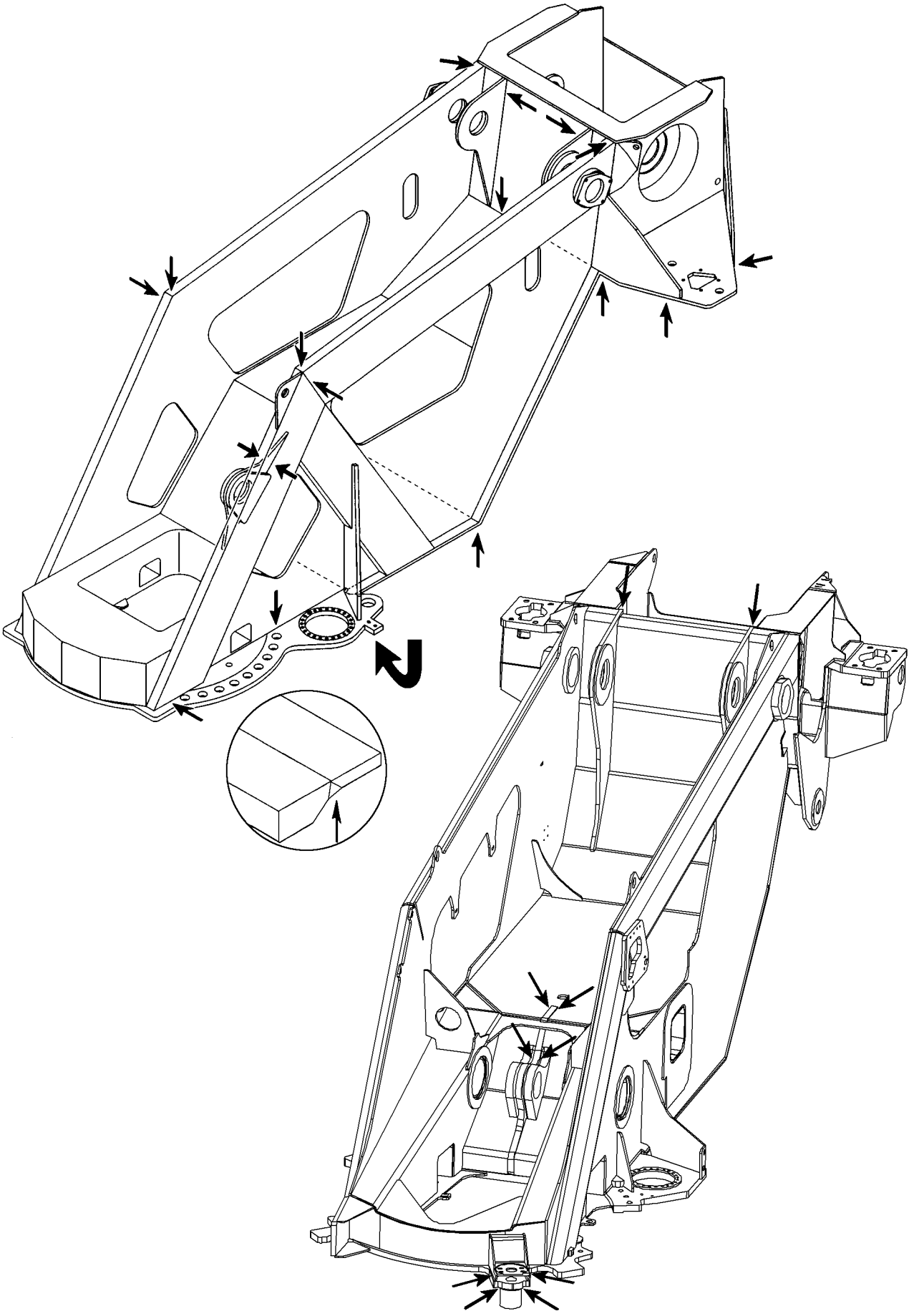

B185048

Example for turntable frame

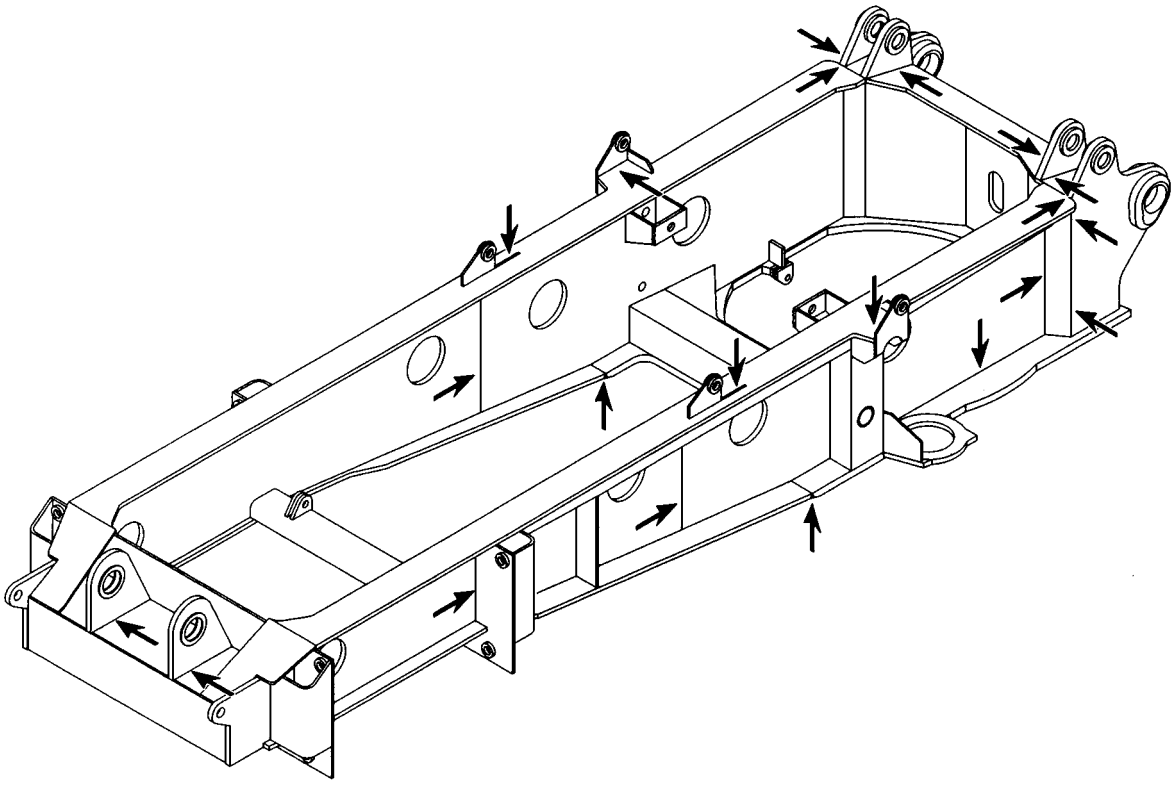

B185049 *Example for turntable frame*

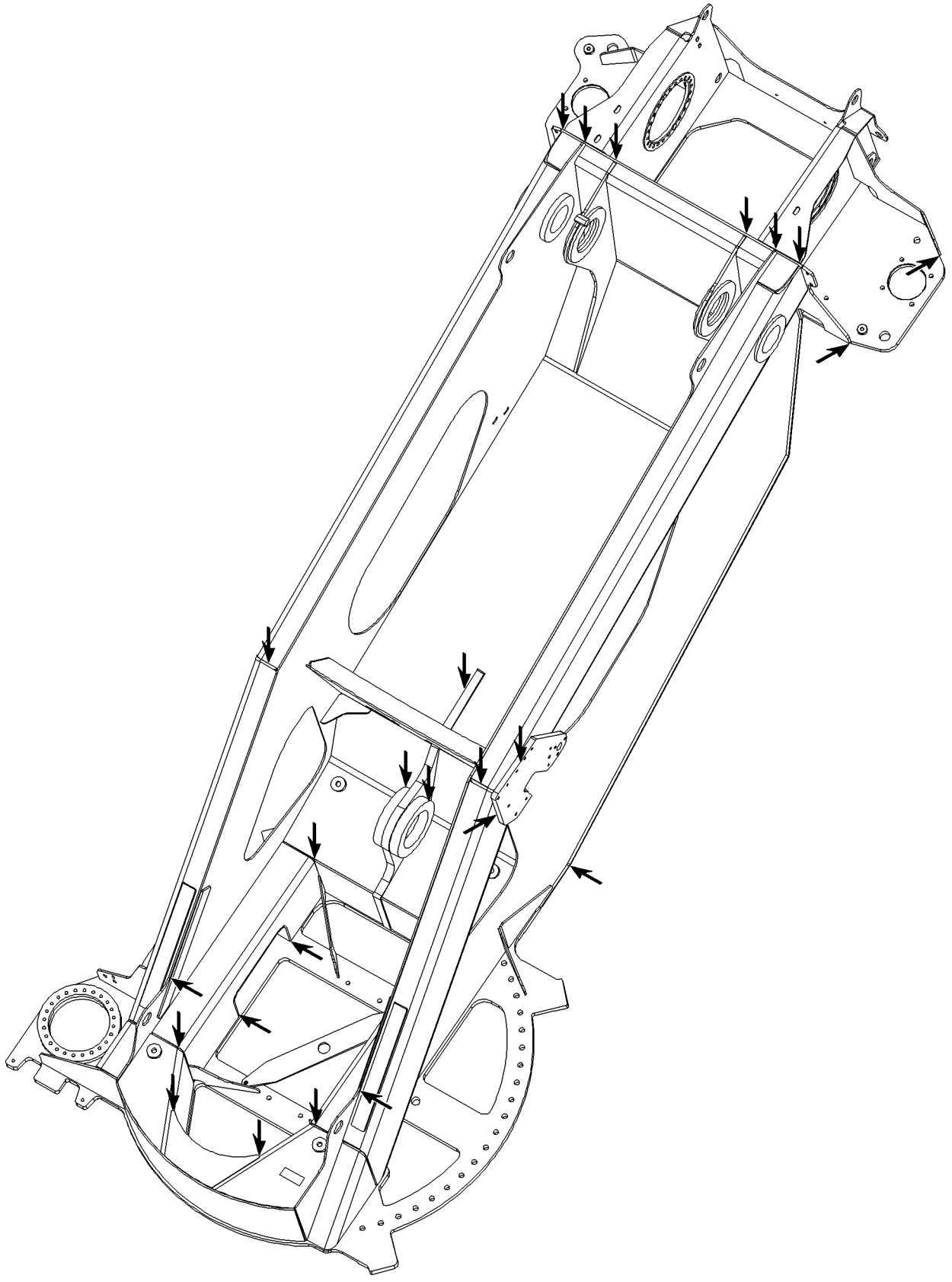

B105700

Example for turntable frame

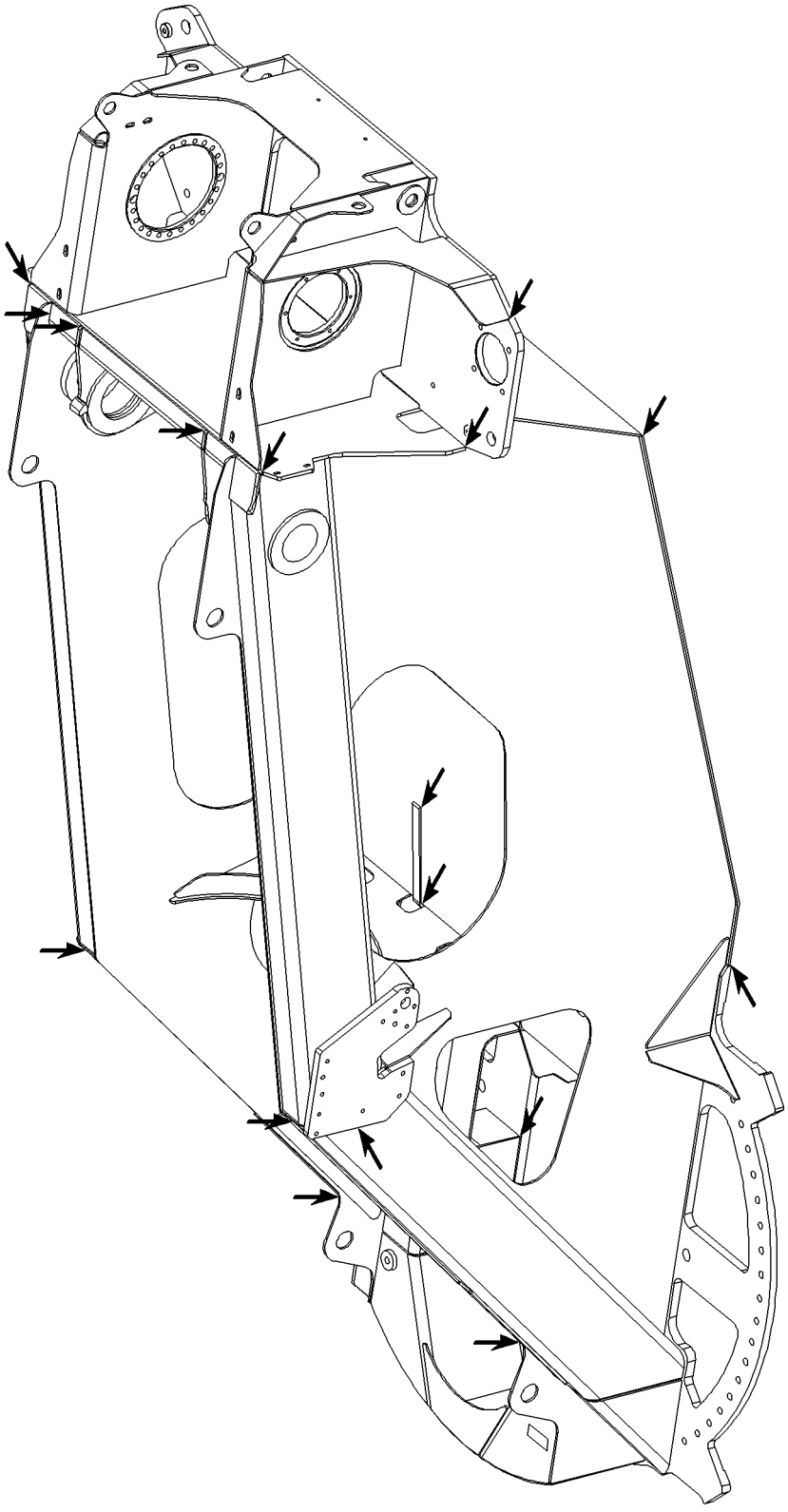

B105701 *Example for turntable frame*

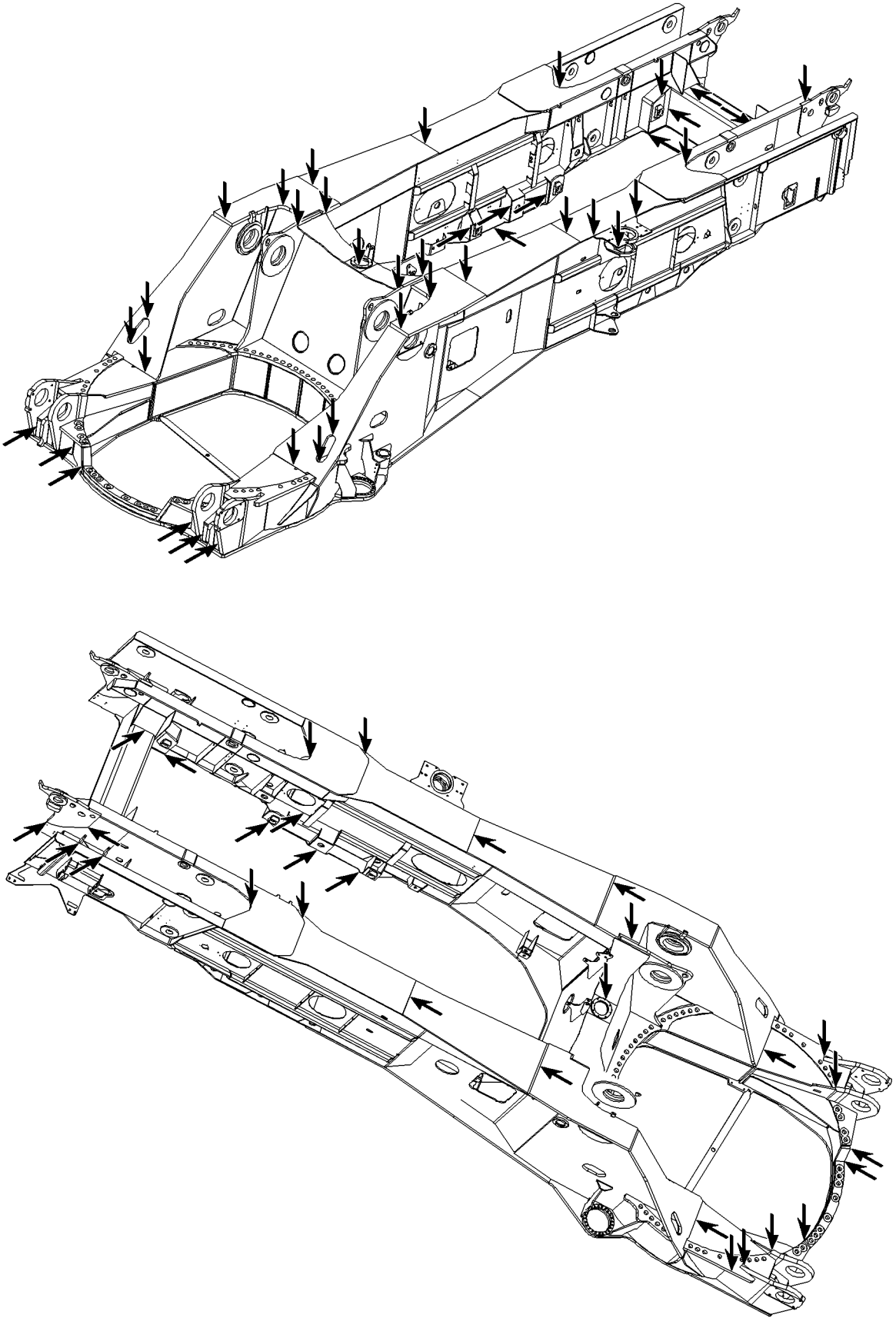

B105706

Example for turntable frame

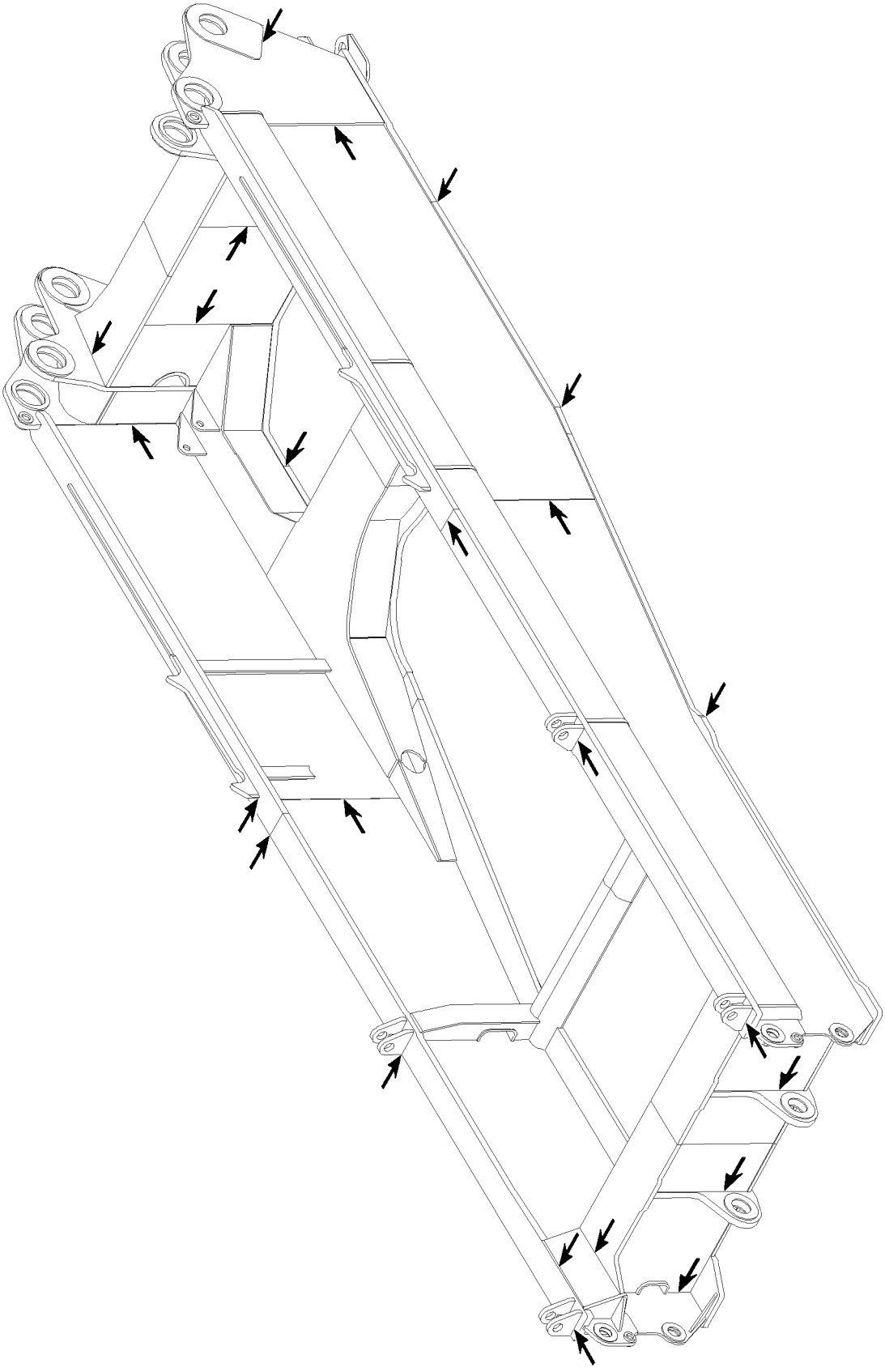

B105694

Example for turntable frame

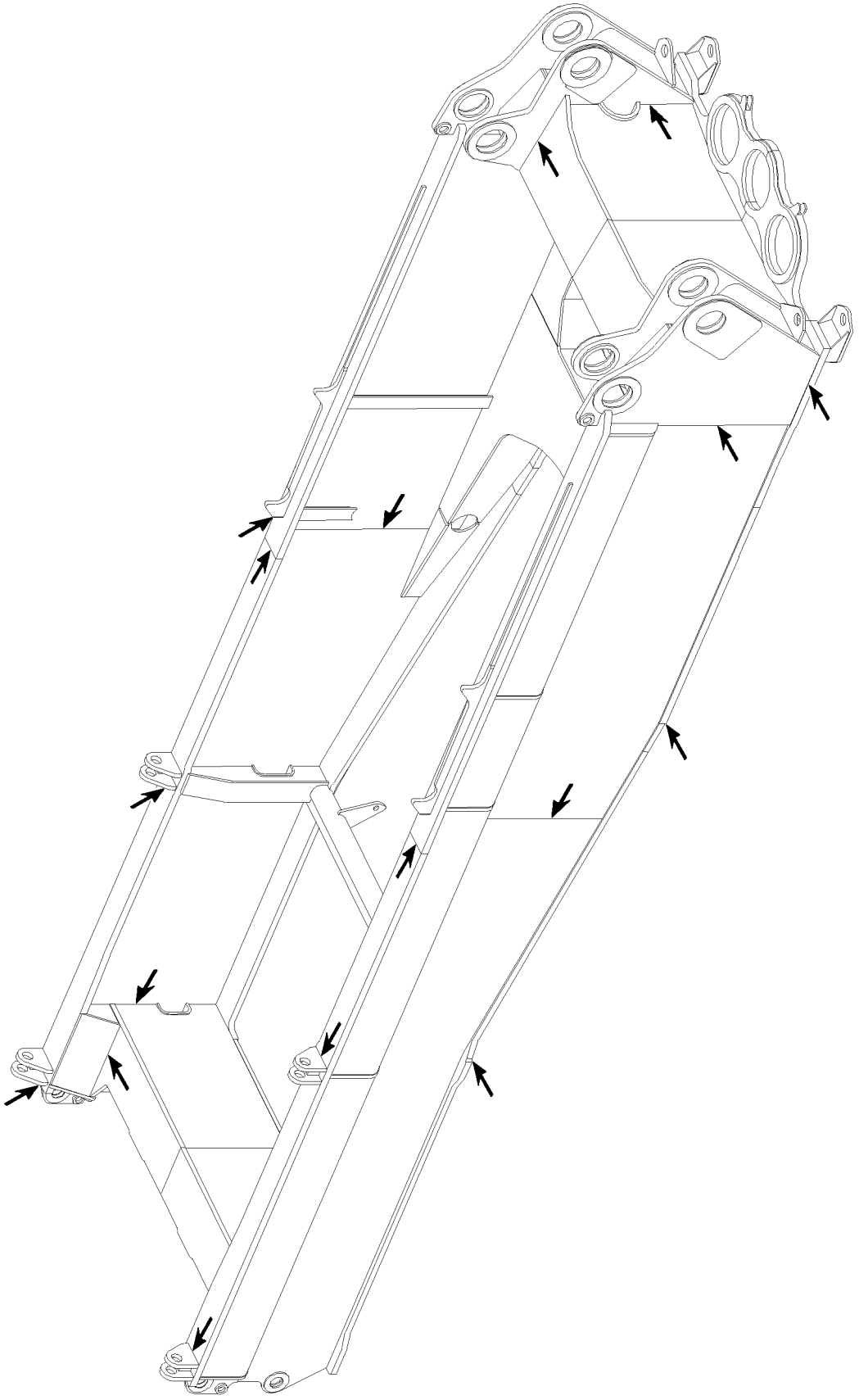

B105695

Example for turntable frame

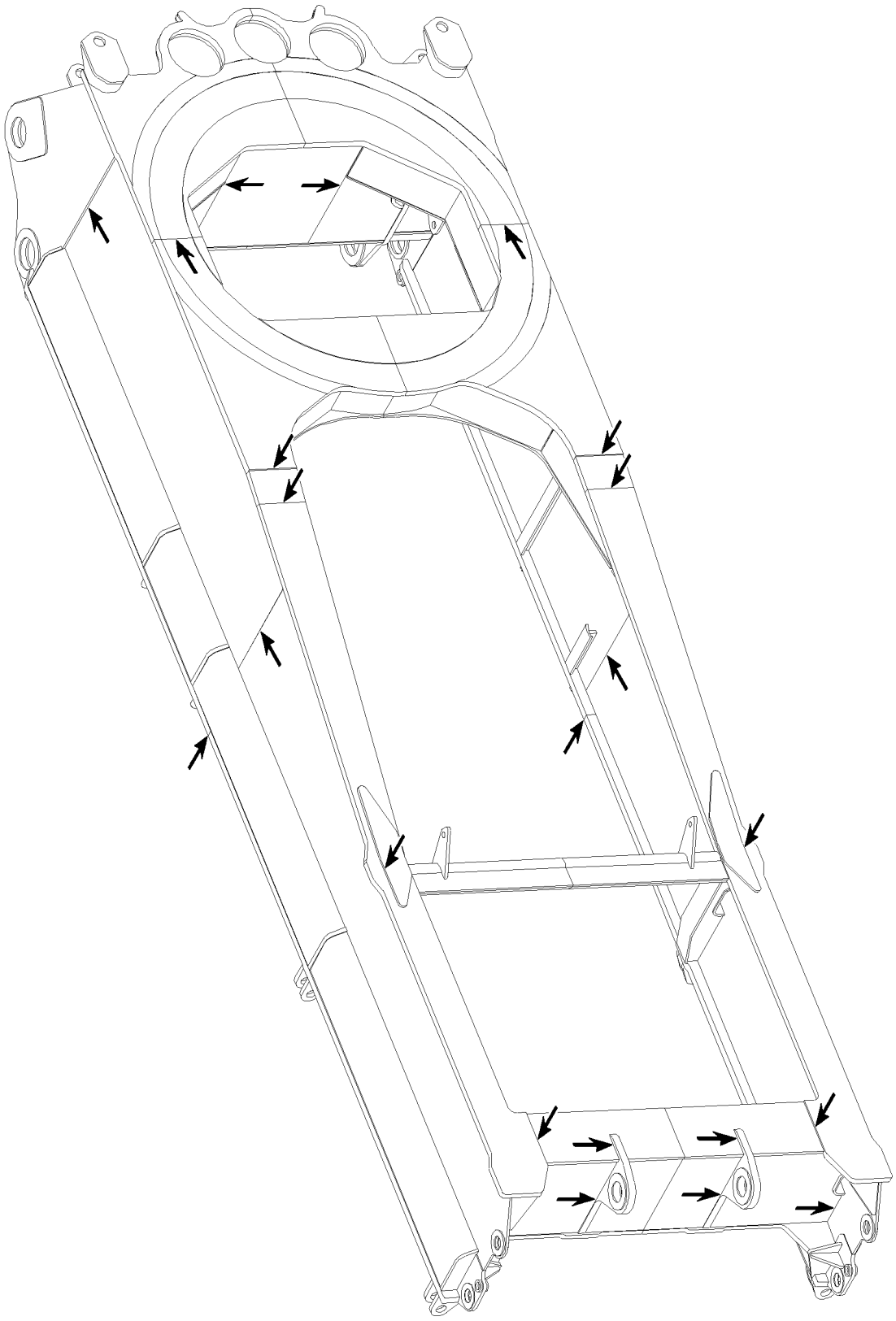

B105696

Example for turntable frame

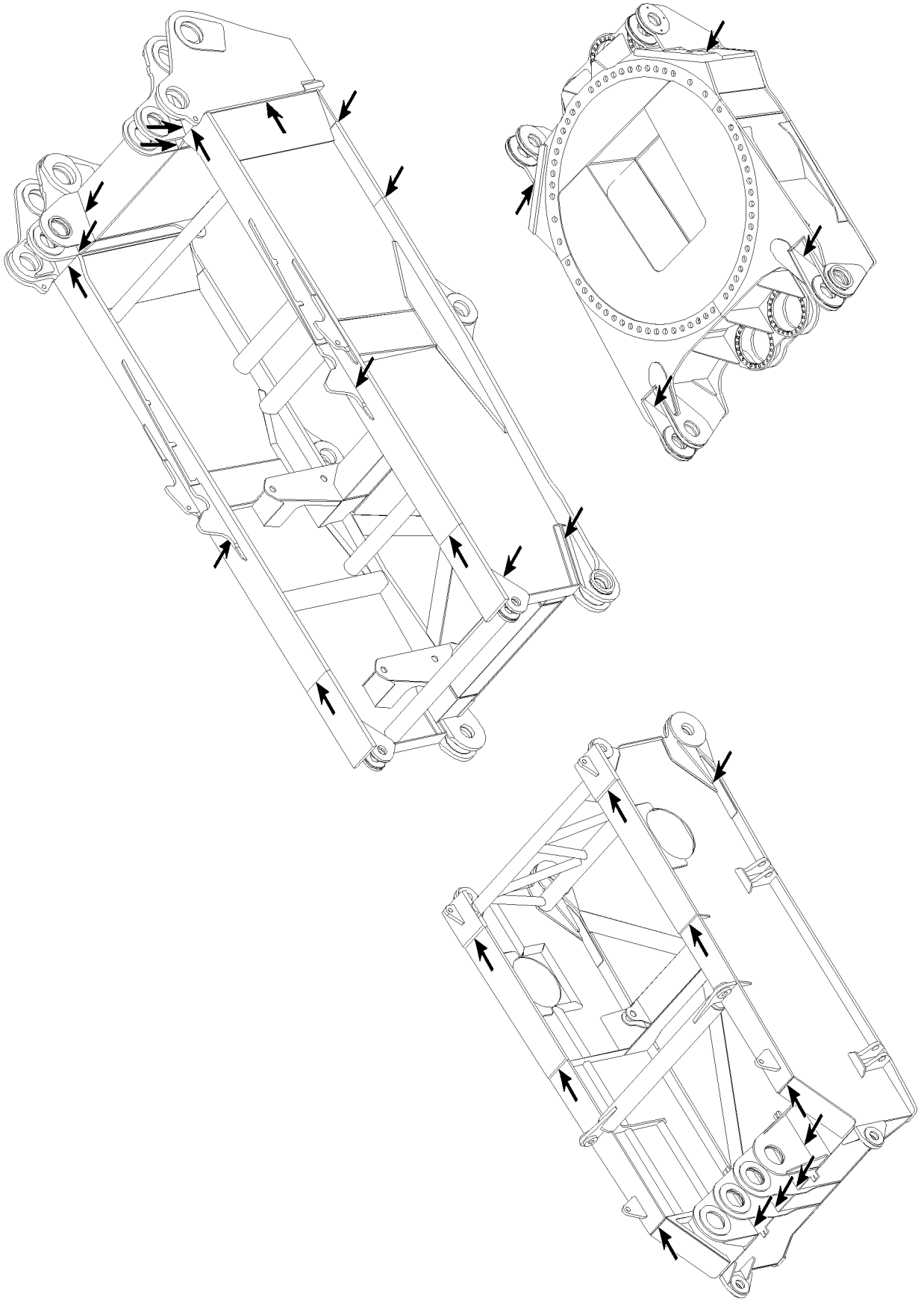

B105691

Example for turntable frame

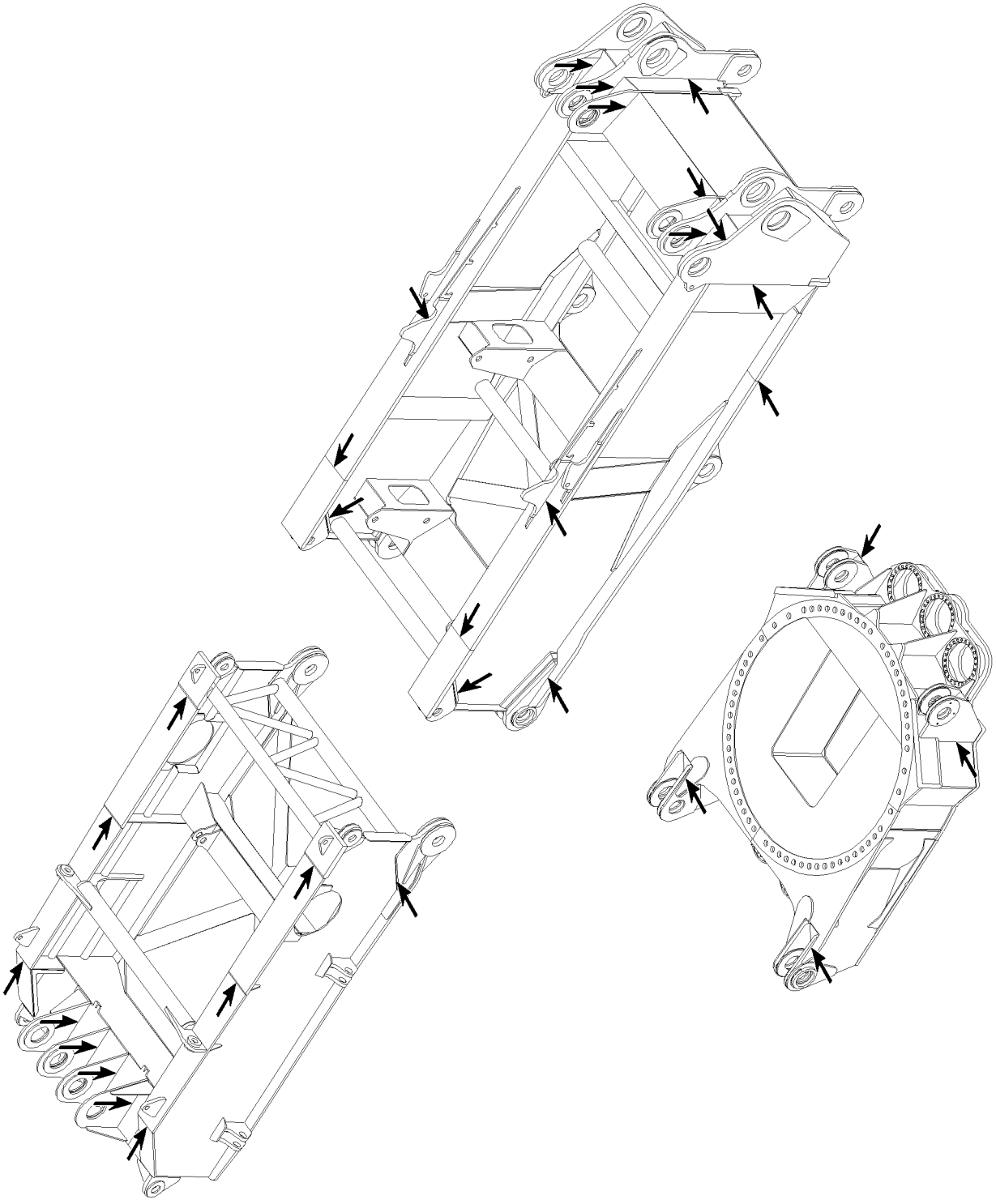

B105692 *Example for turntable frame*

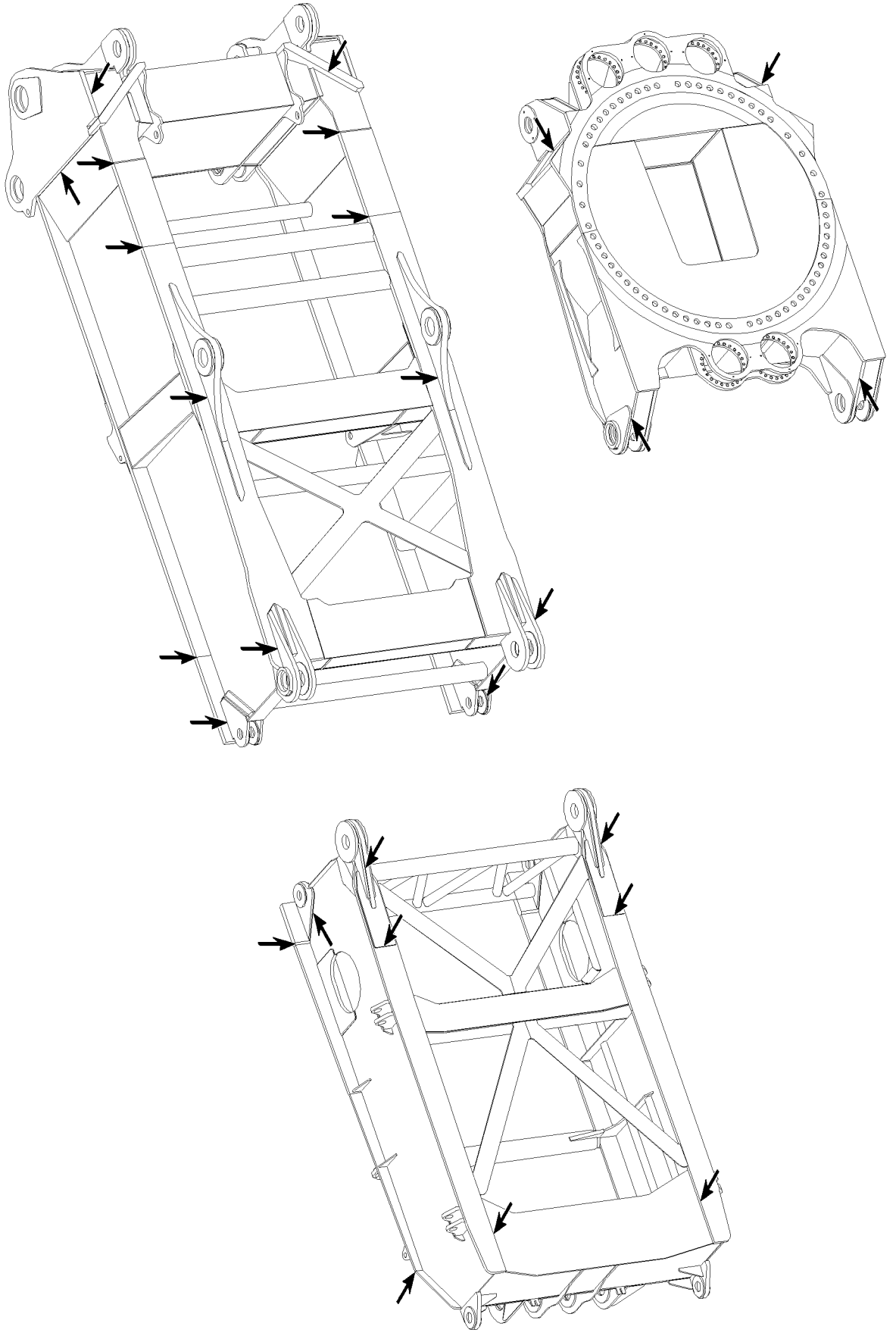

B105693

Example for turntable frame

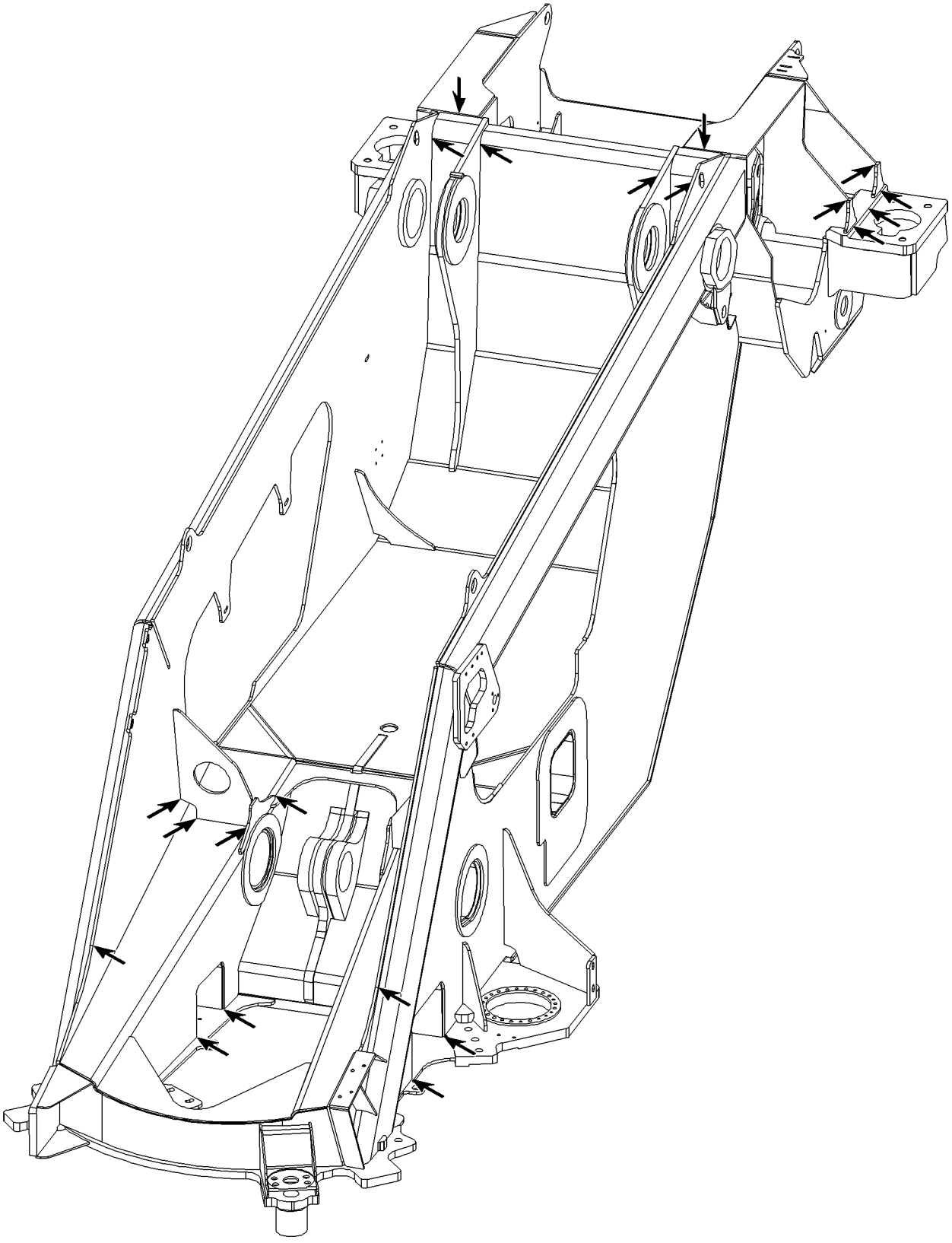

B105722

Example for turntable frame

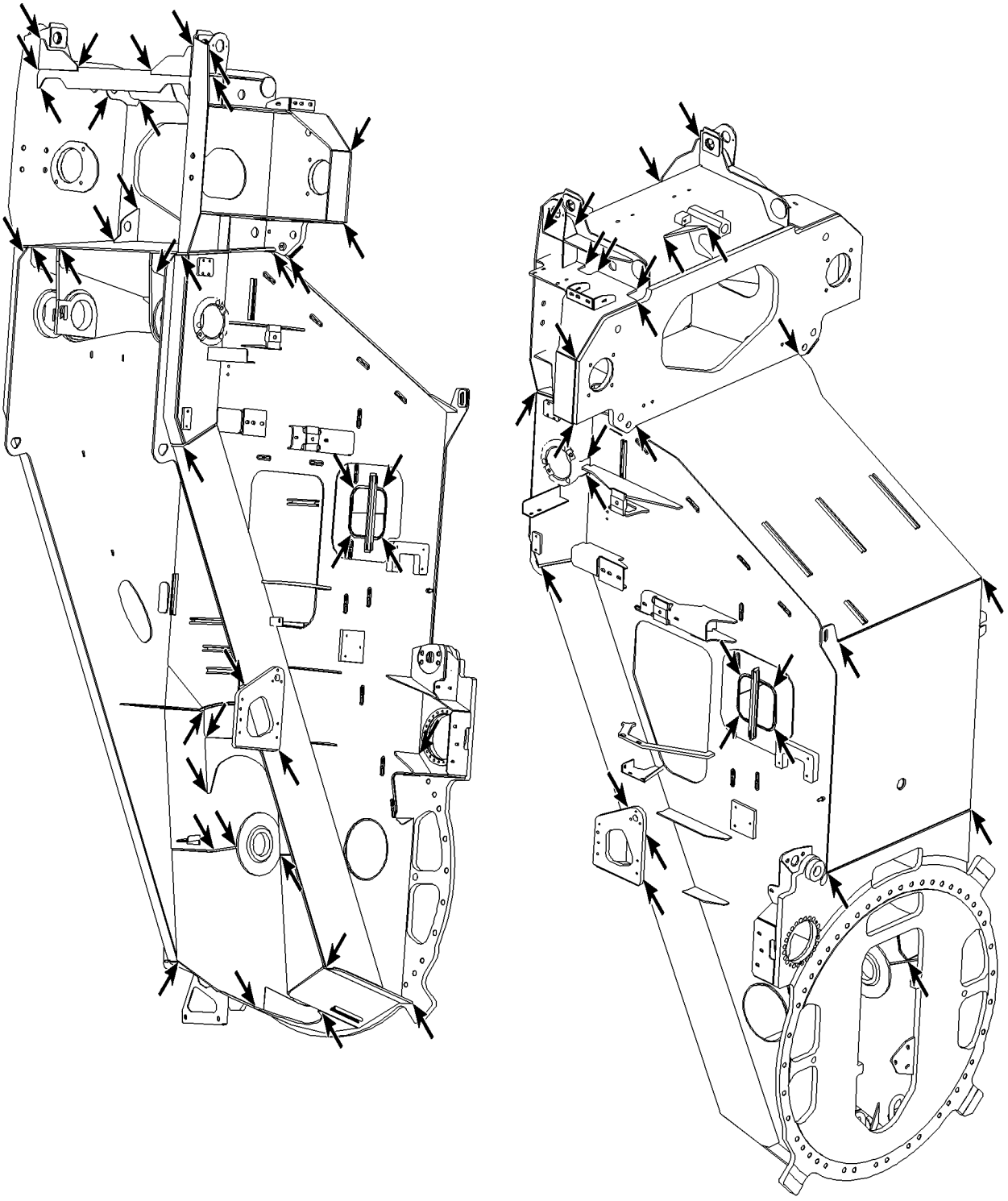

B105932

Example for turntable frame

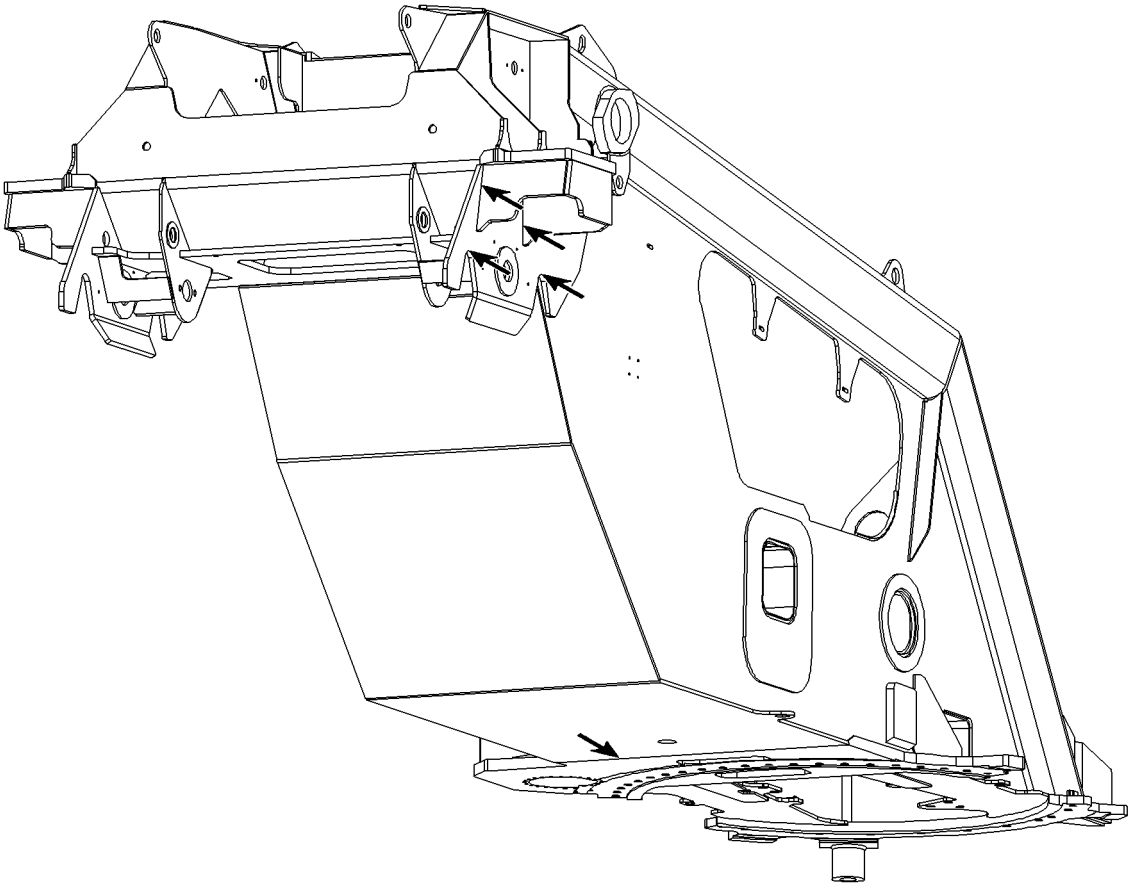

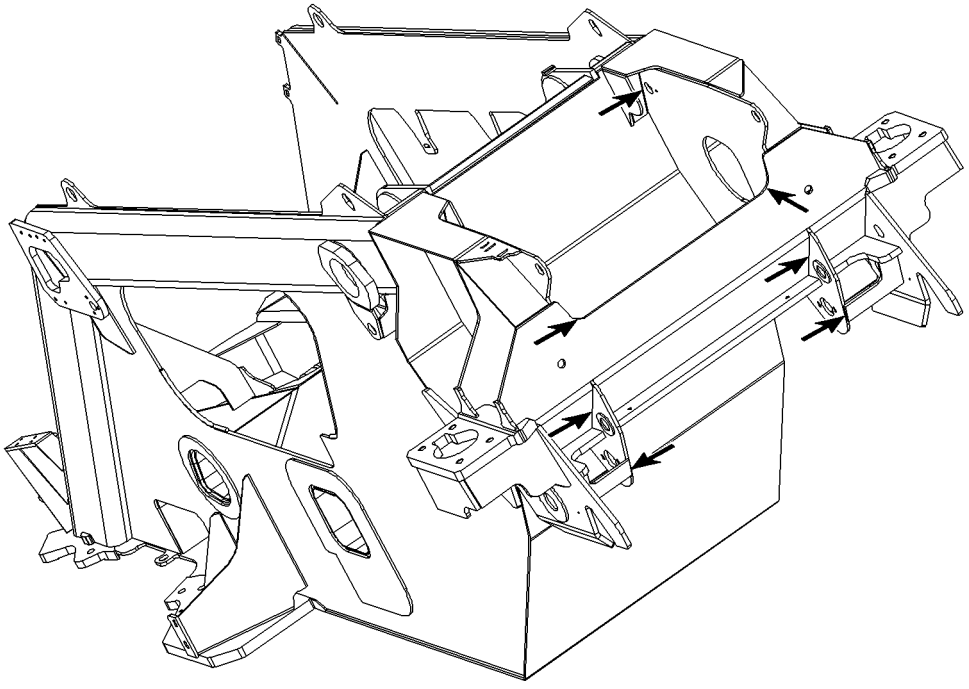

B105723 *Example for turntable frame*

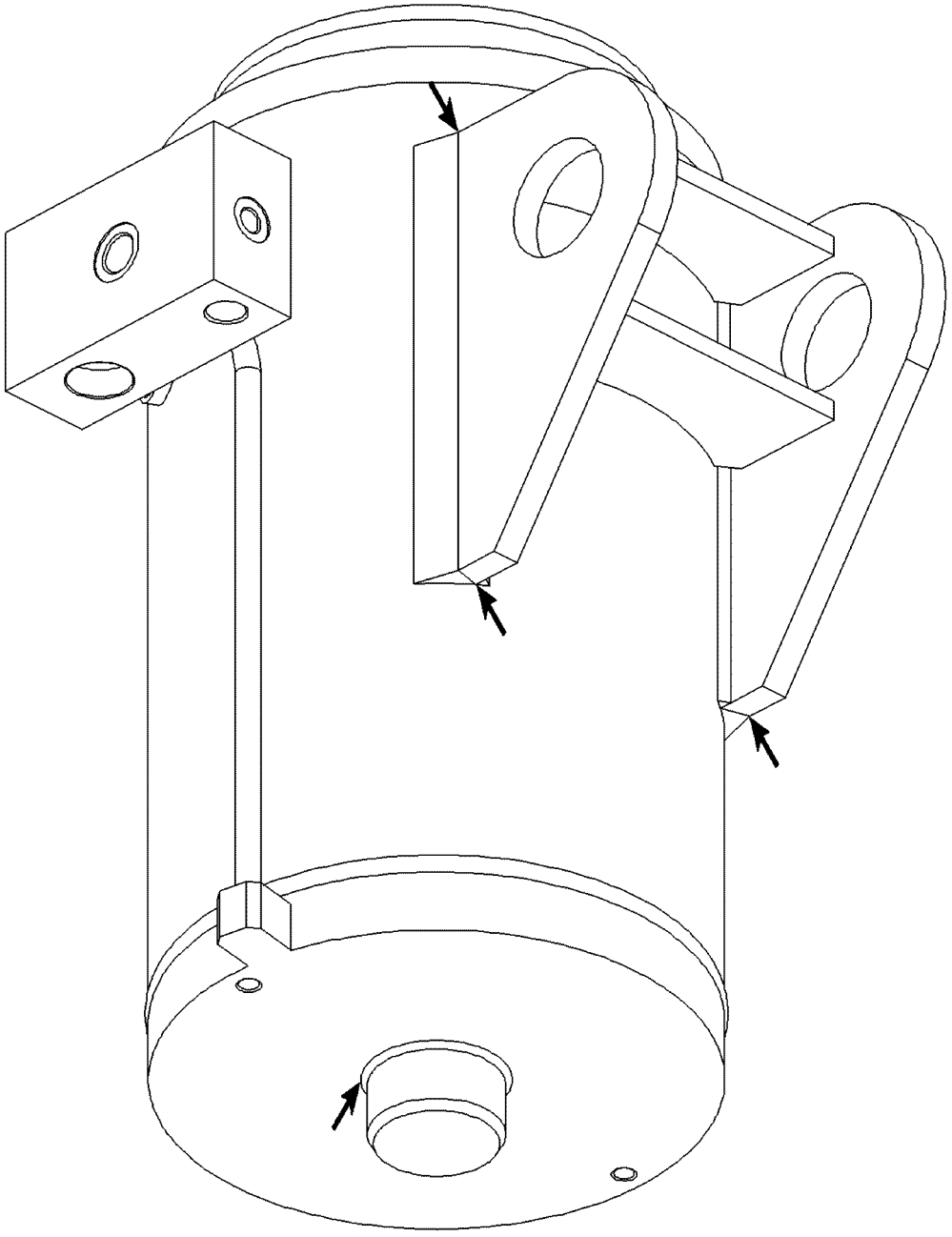

B105801 *Example for ballasting cylinder*

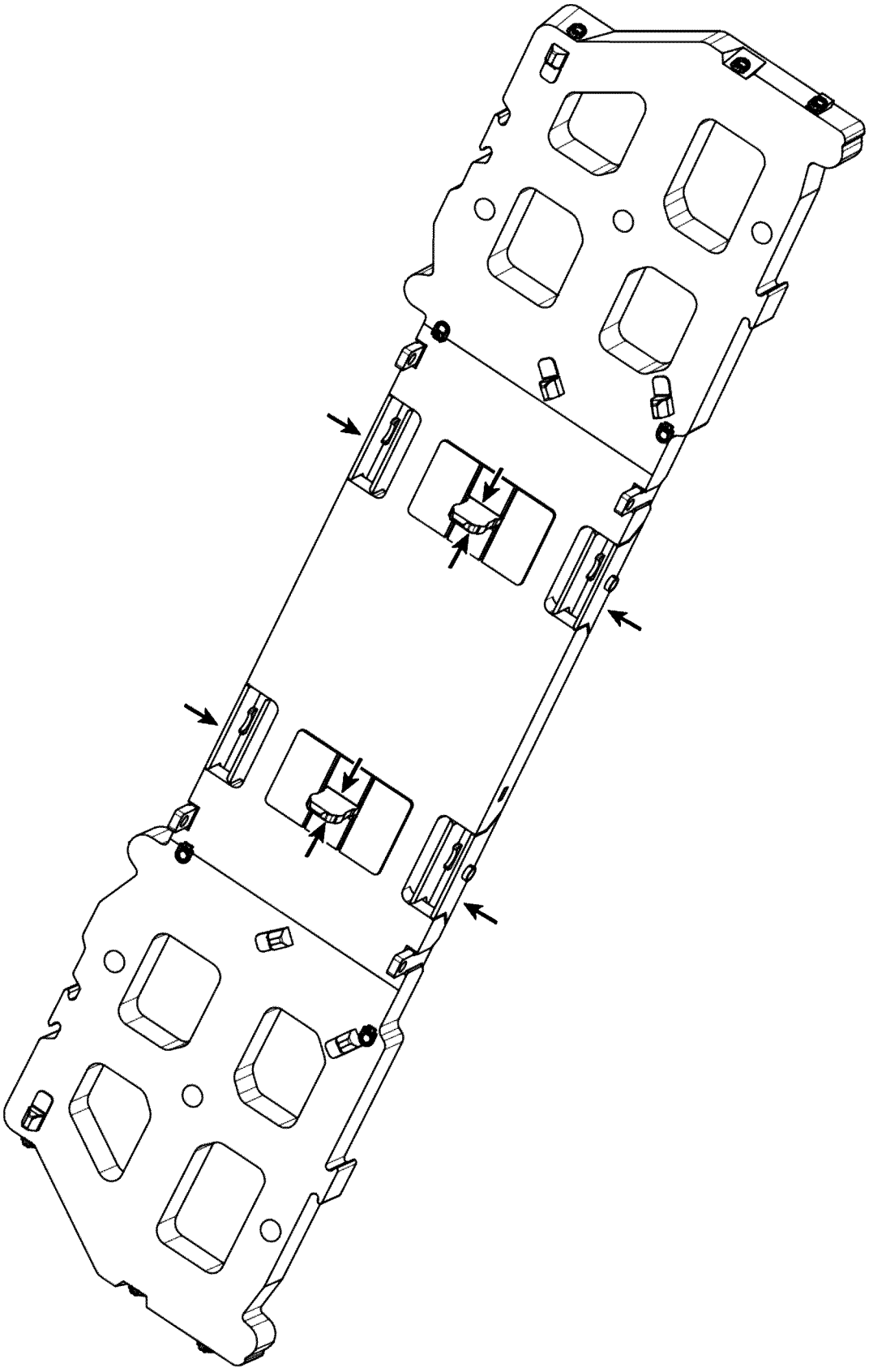

B105705

Example for mounting plate

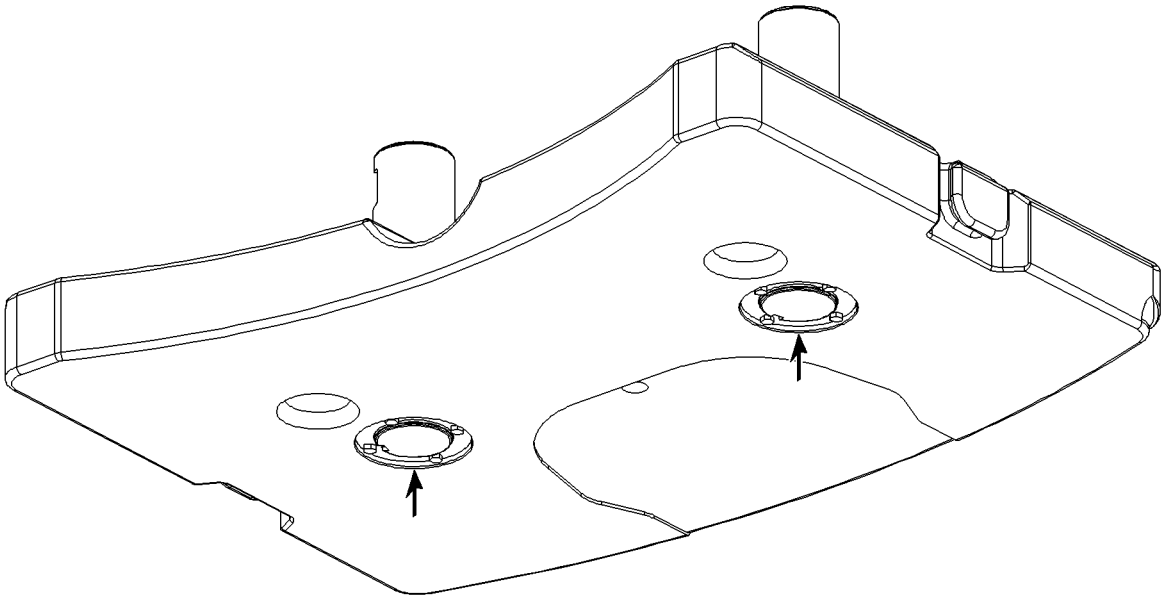

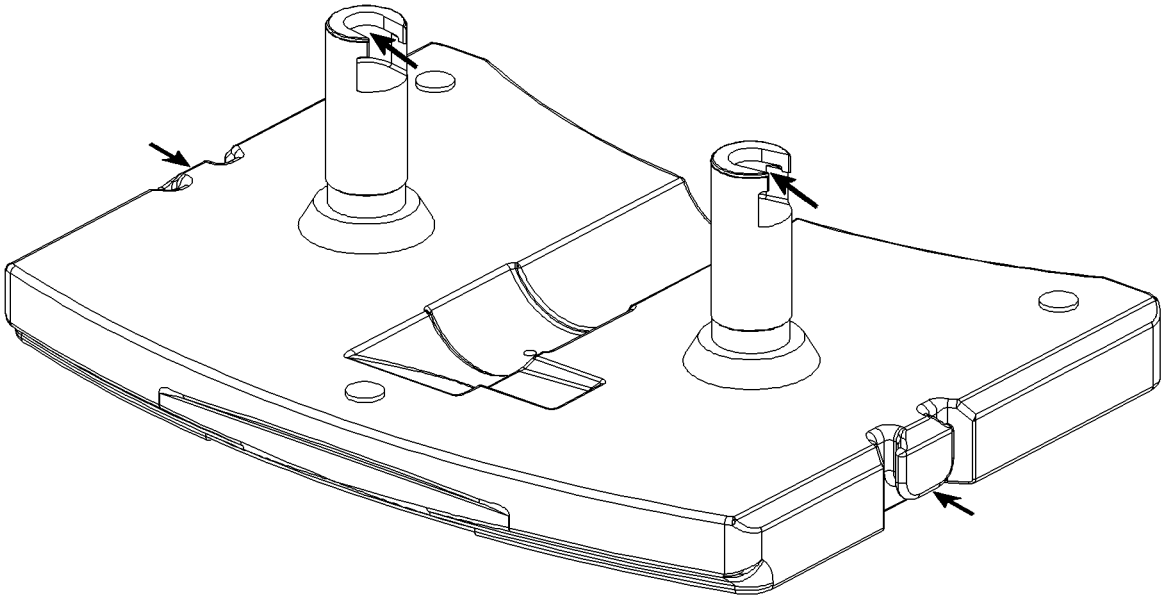

B105807

Example for base plate

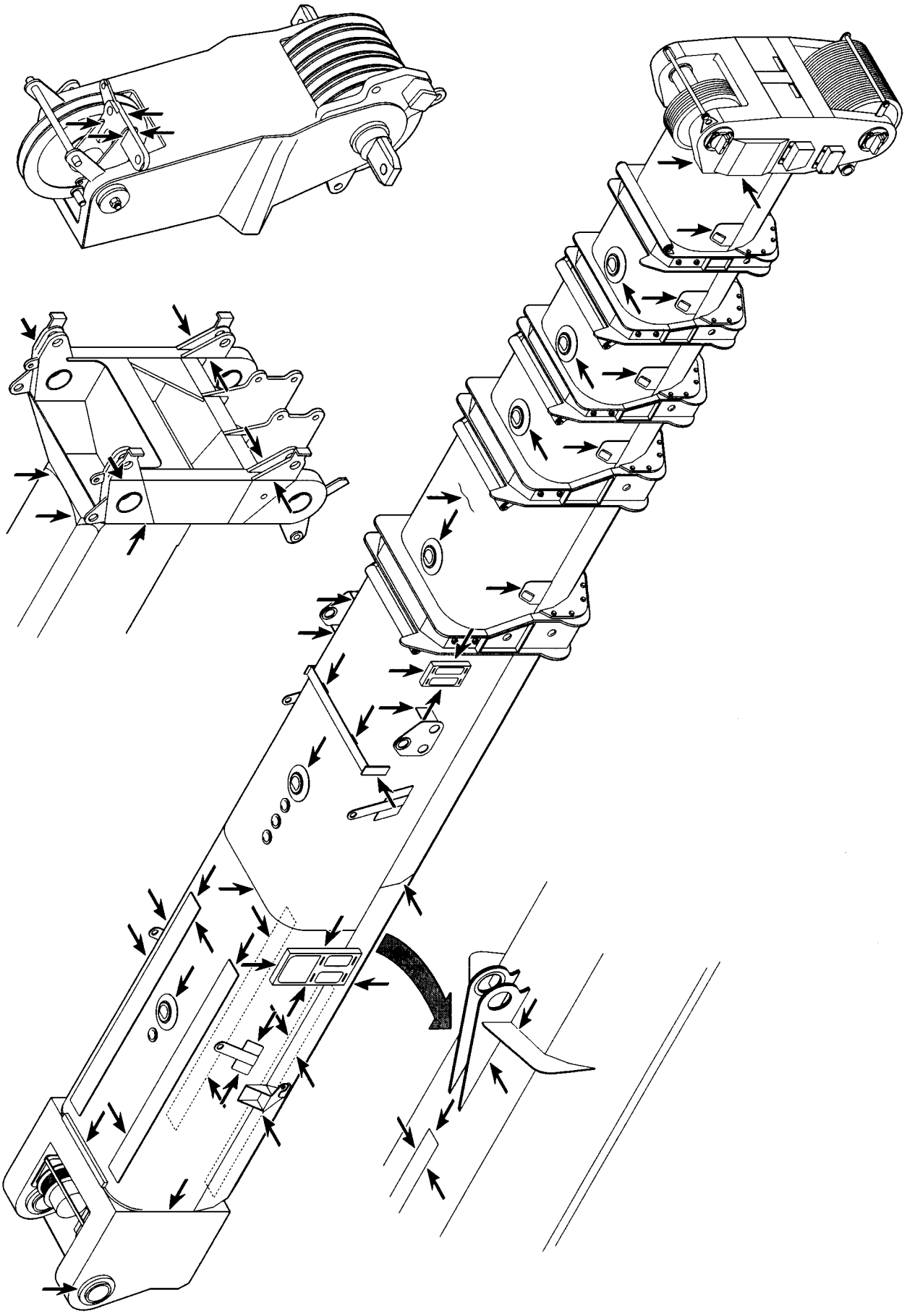

B185050

Example for telescopic boom

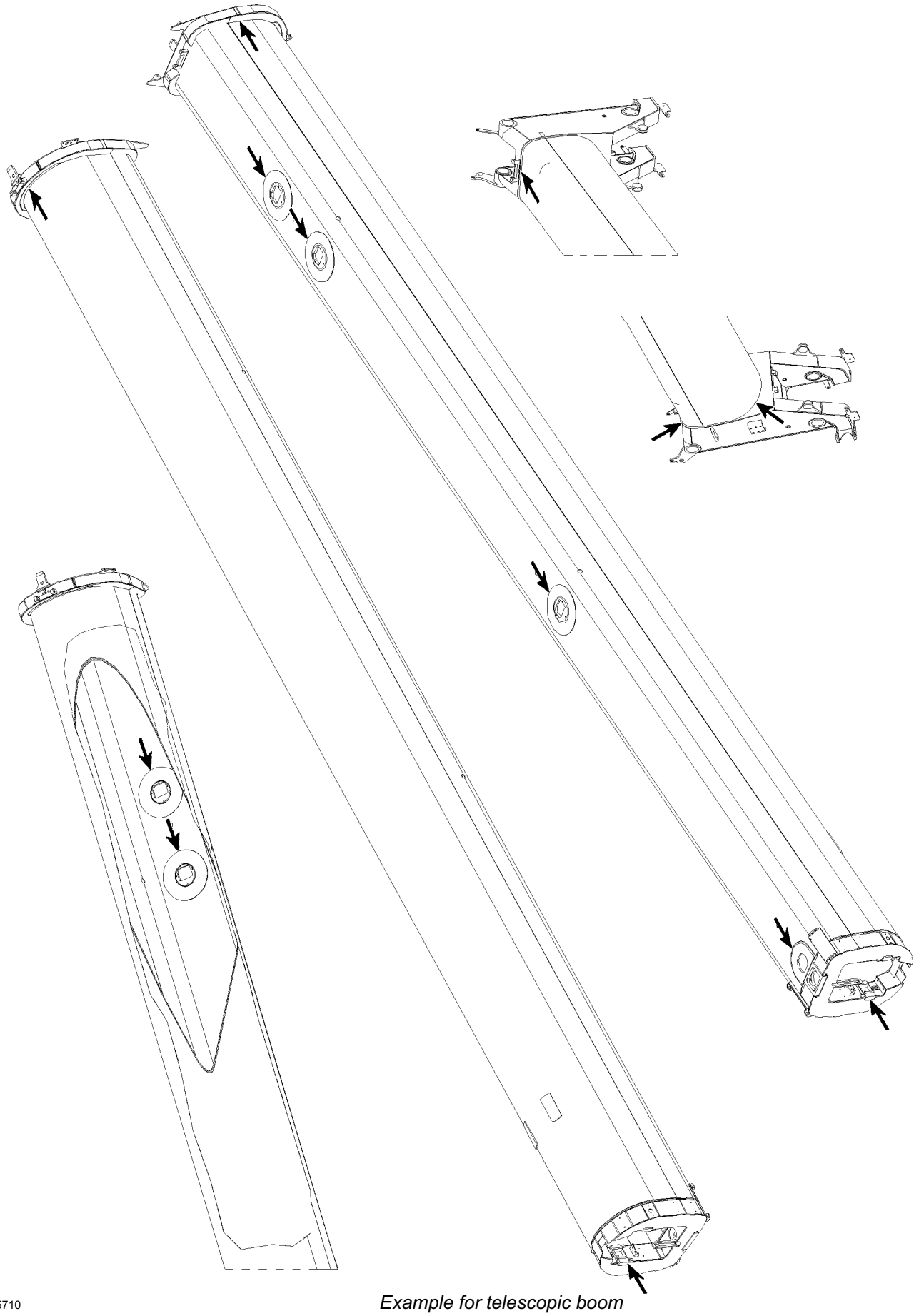

B105710

Example for telescopic boom

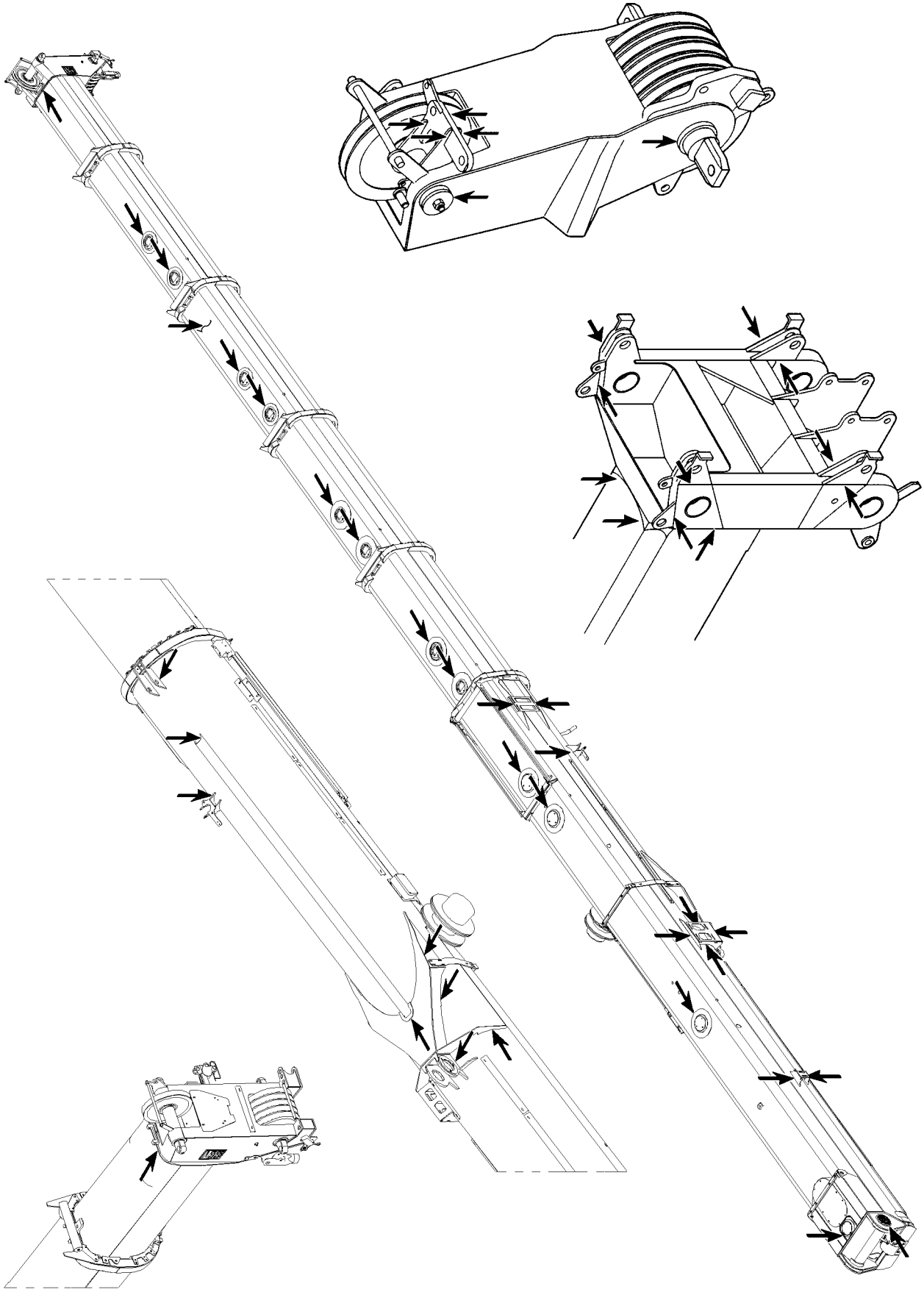

B105711

Example for telescopic boom

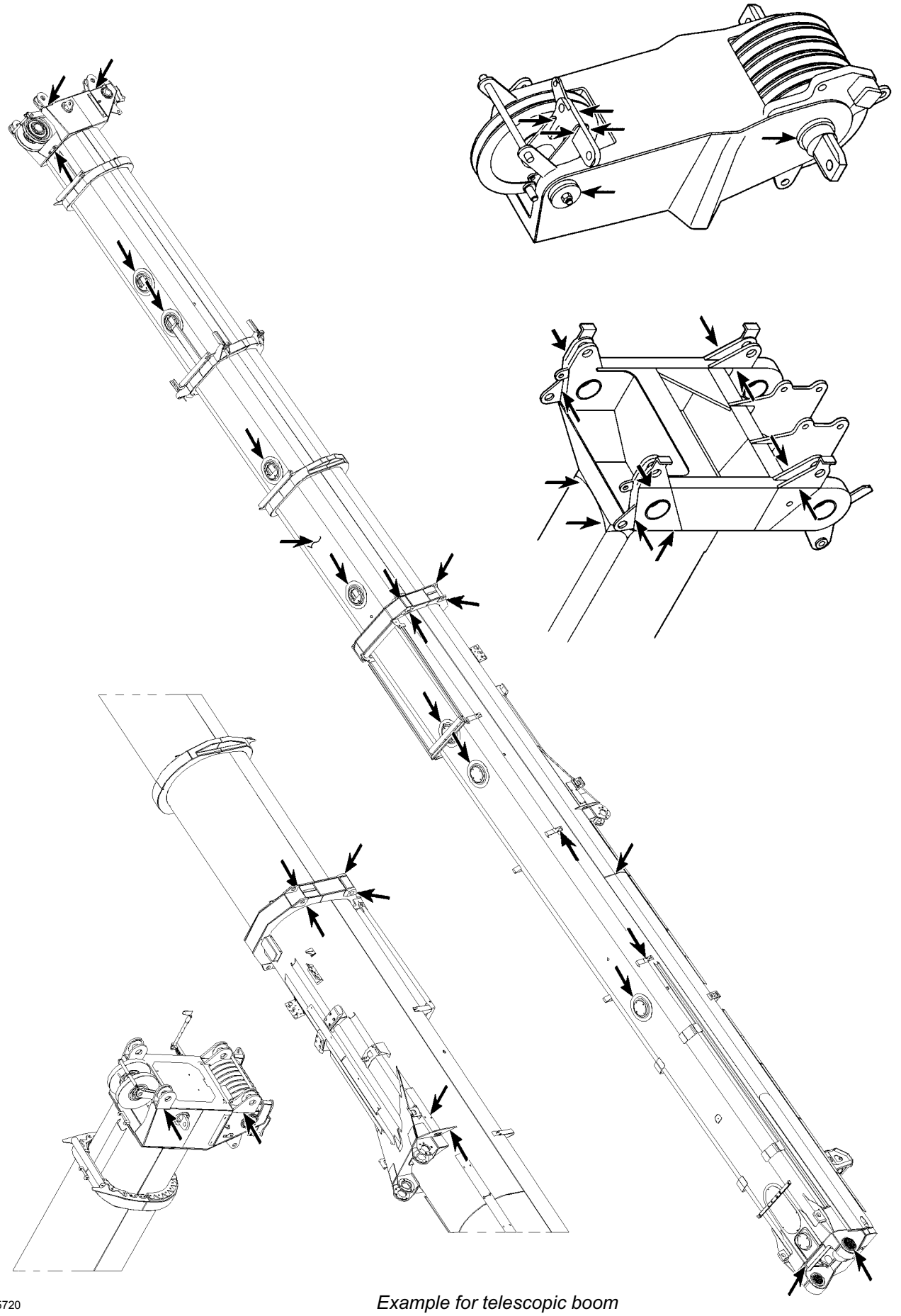

B105720

Example for telescopic boom

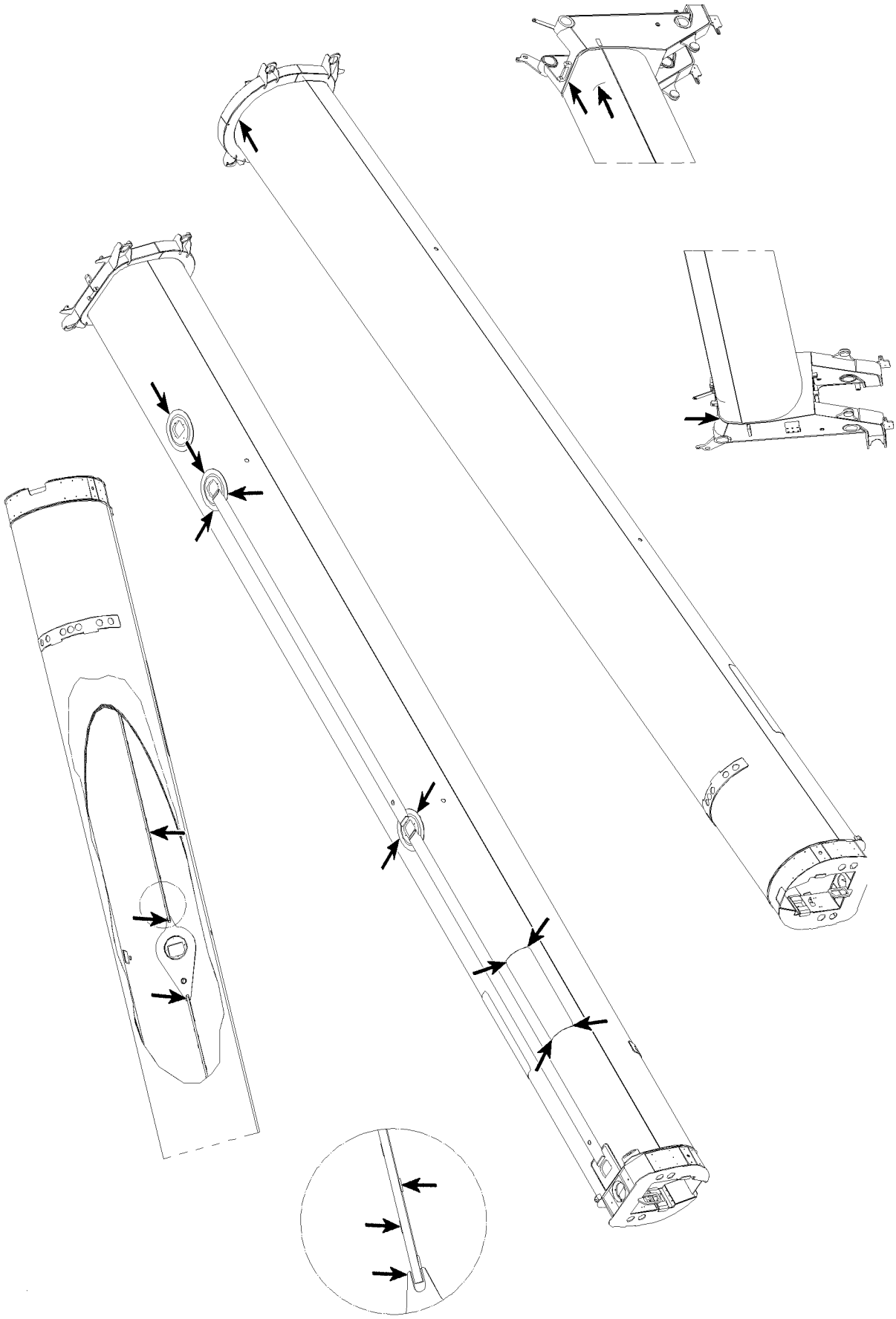

B105721

Example for telescopic boom

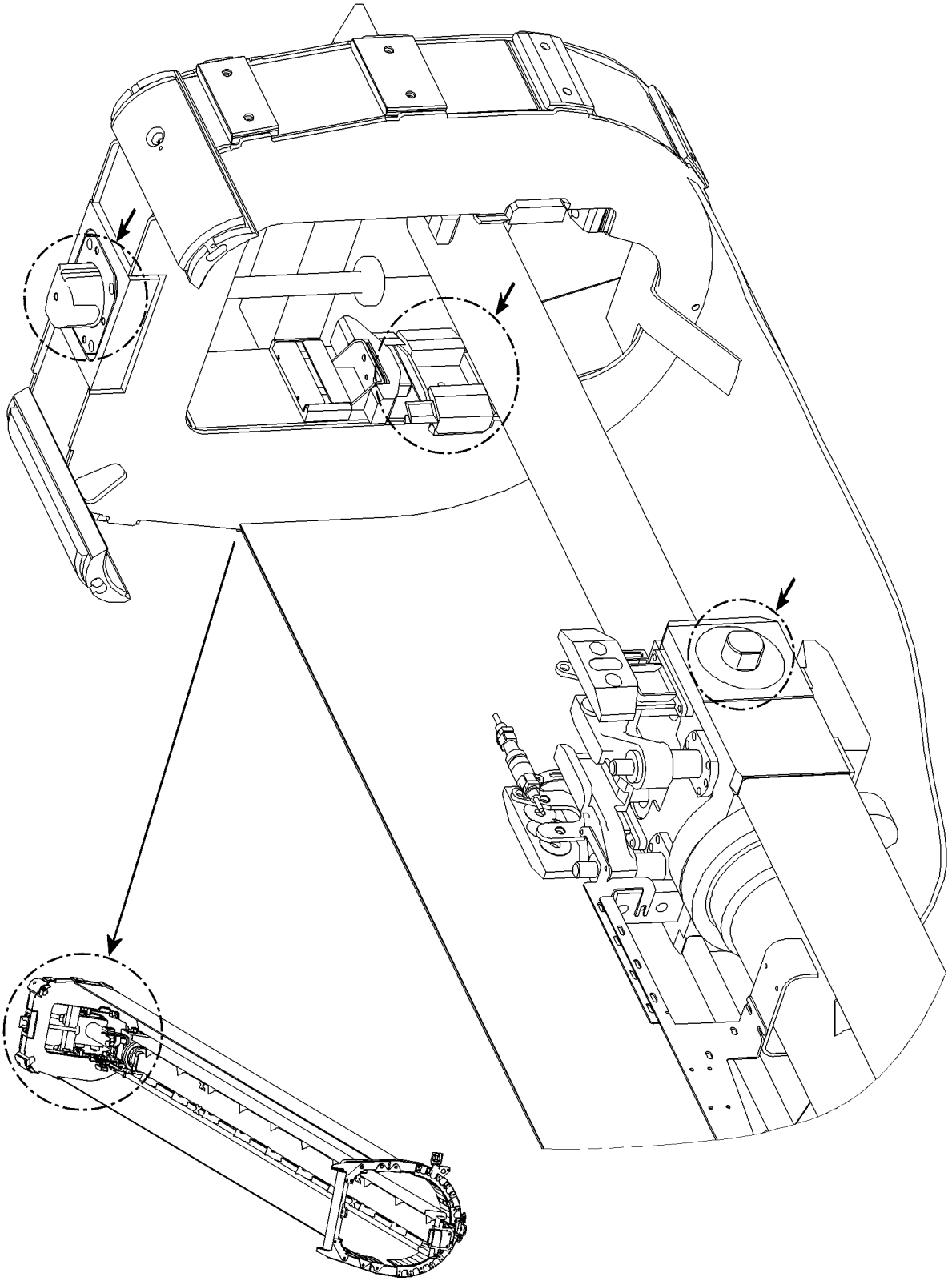

B105891 *Example for push out mechanics telescopic boom*

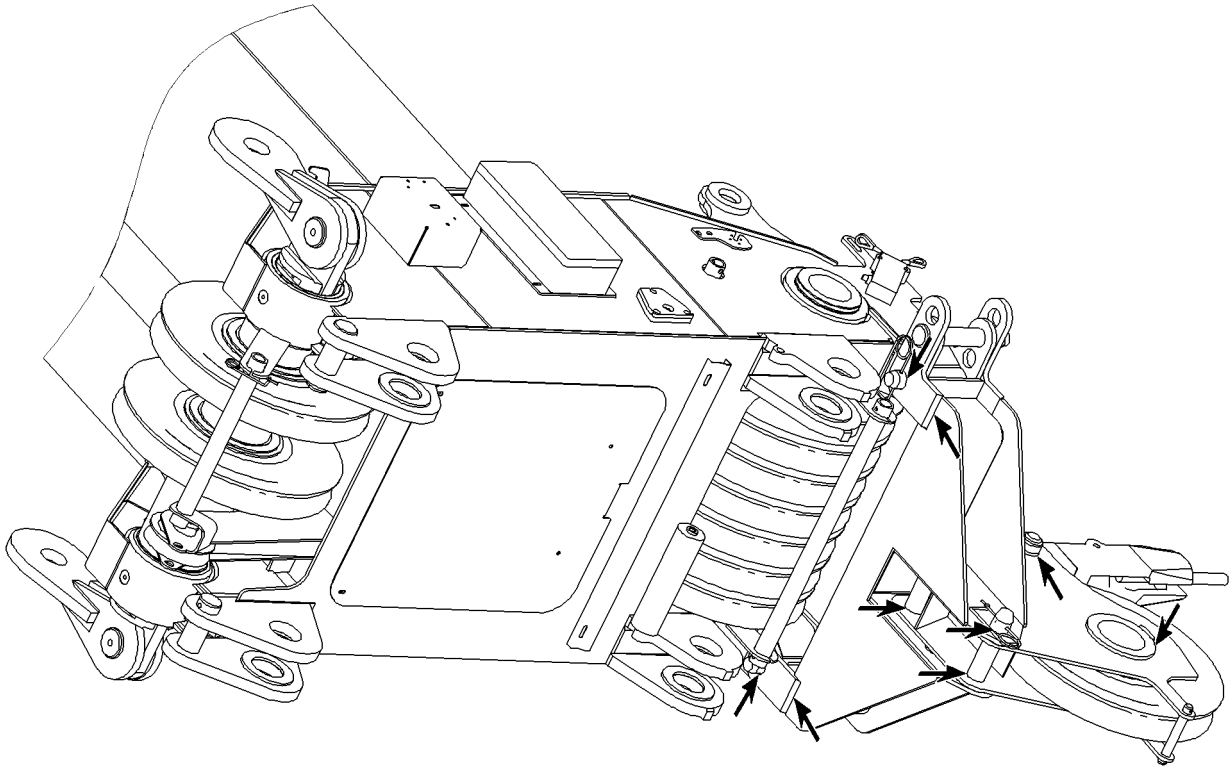

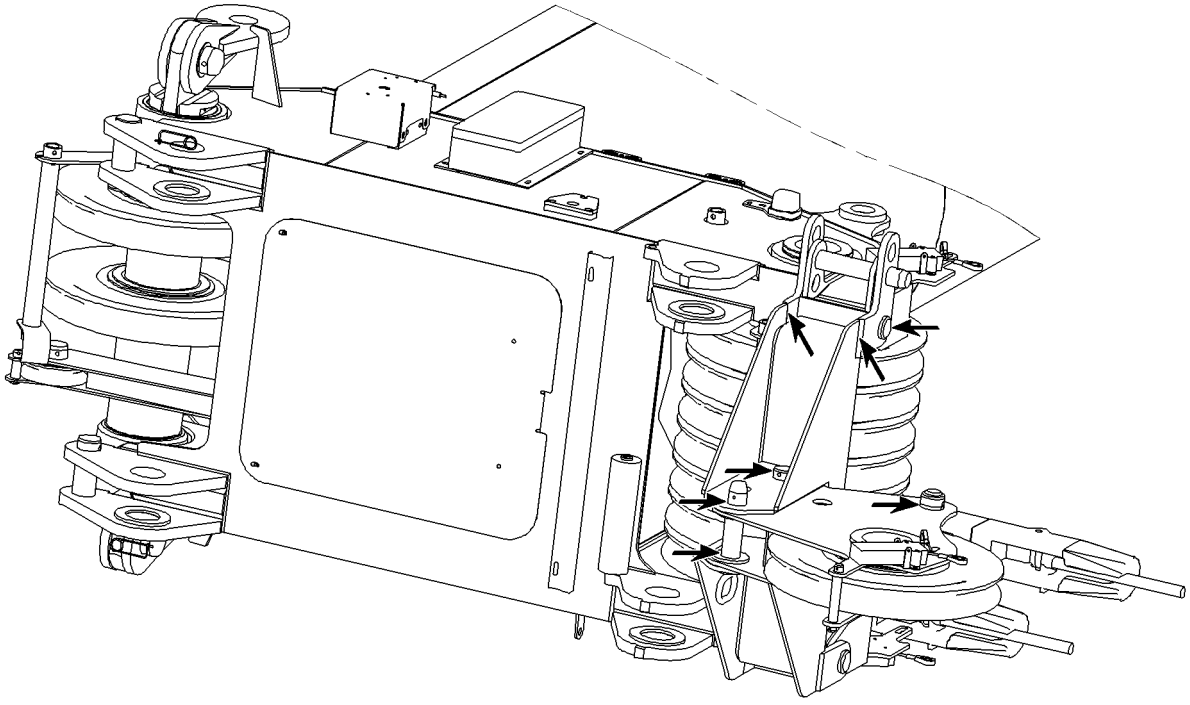

B105892 *Example for boom nose*

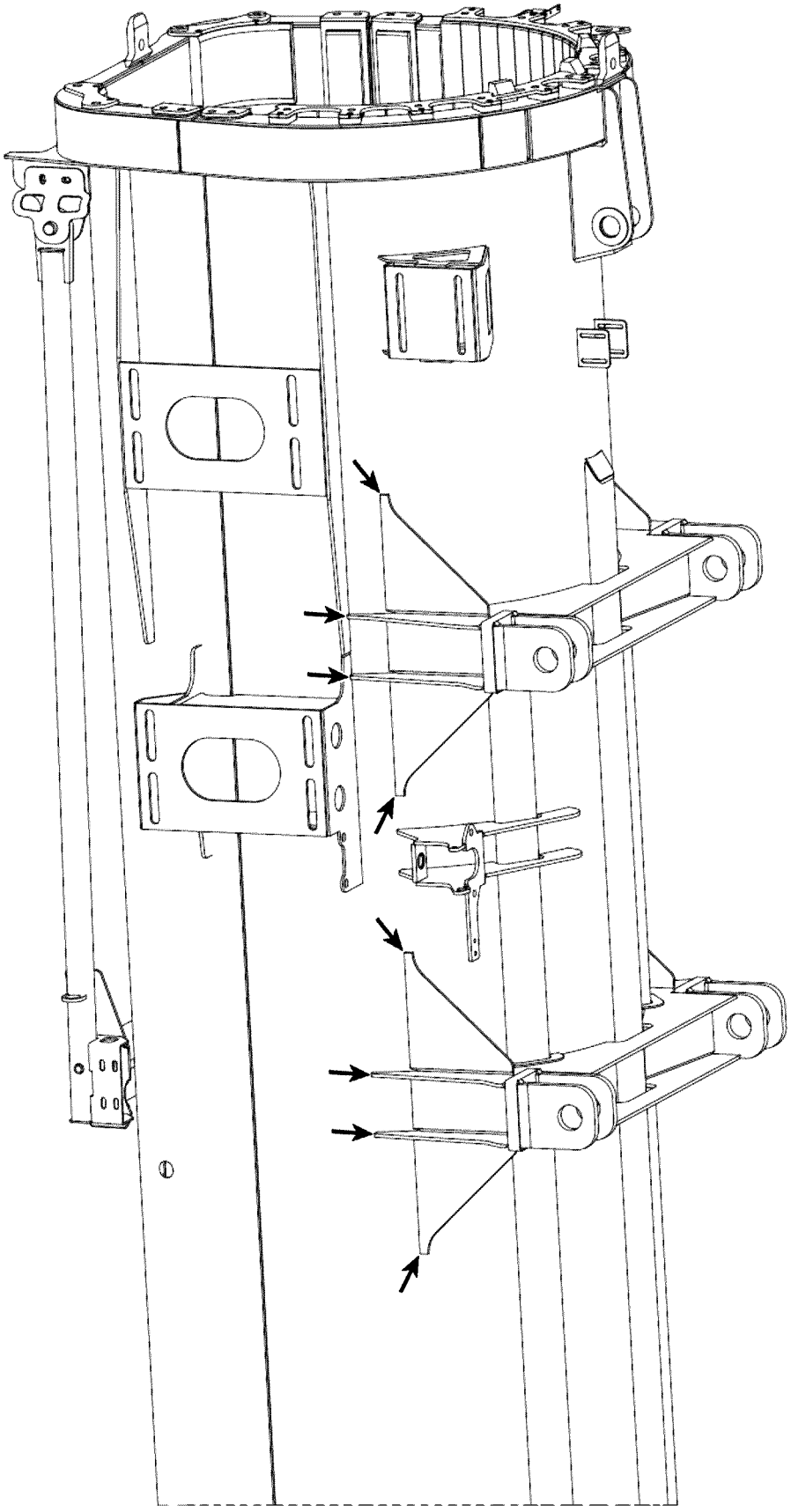

B105689

Example for dolly console

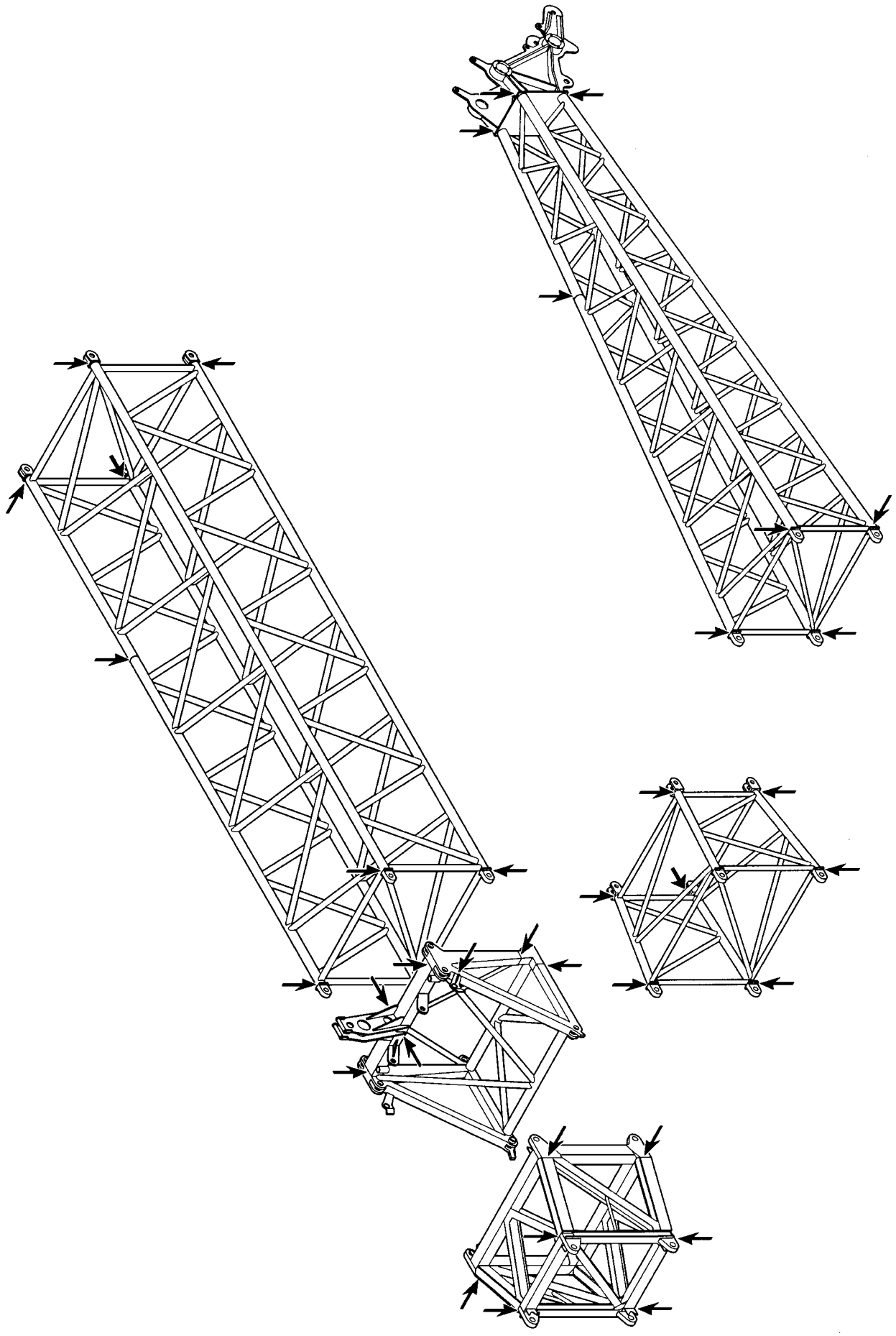

B185051

Example for lattice jib

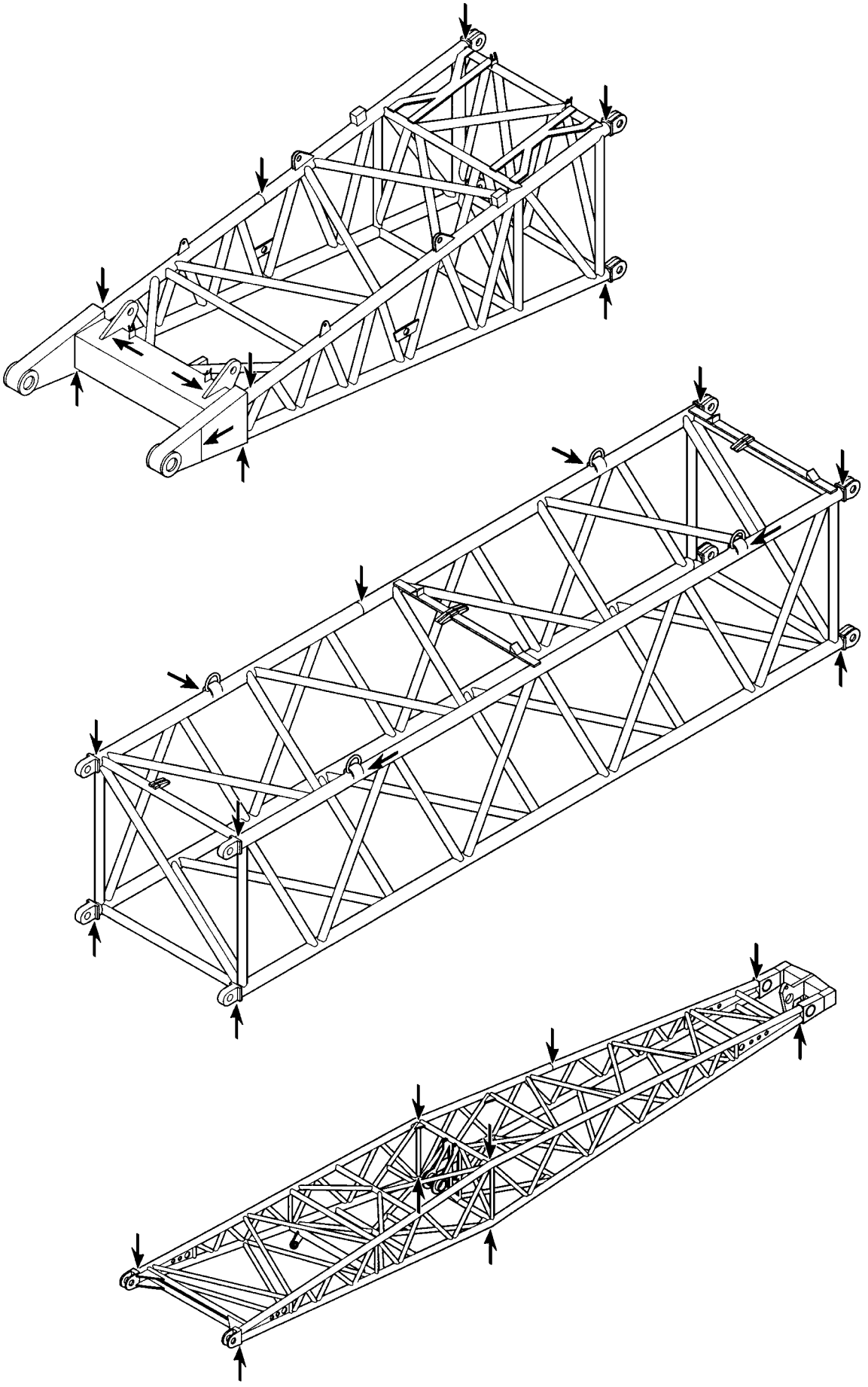

B185052

Example for NA / WA-frame

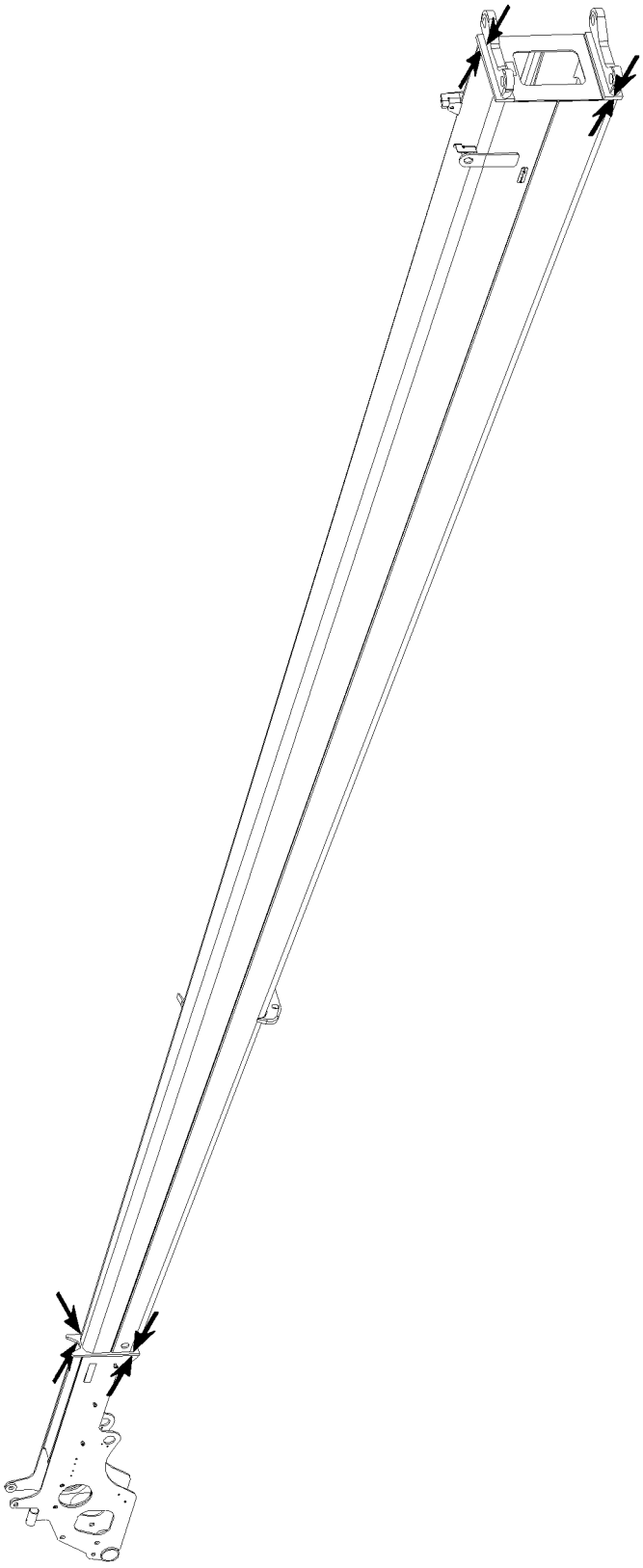

B105713

Example for end section

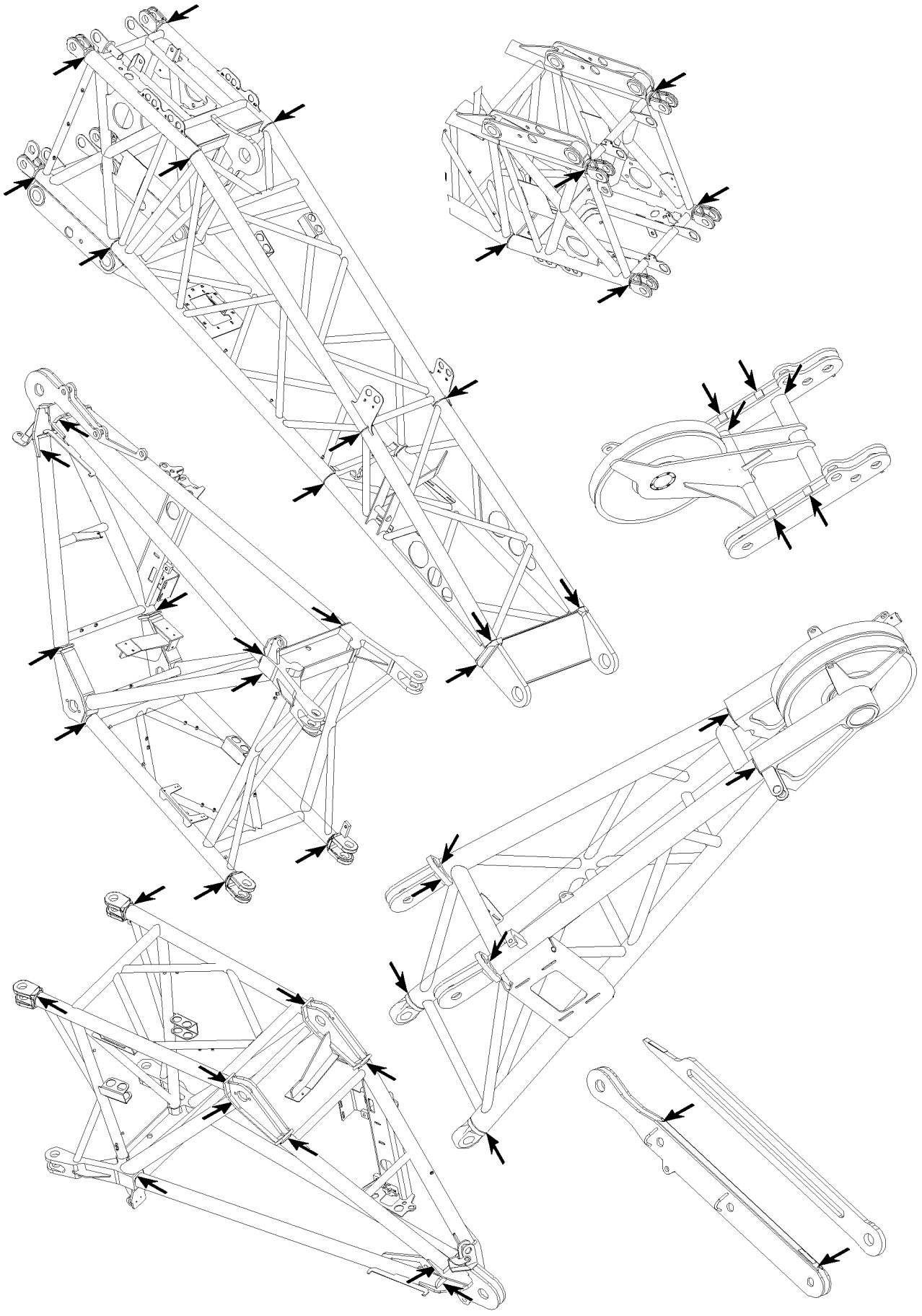

B105836

Example for pivot section, adapter and boom nose

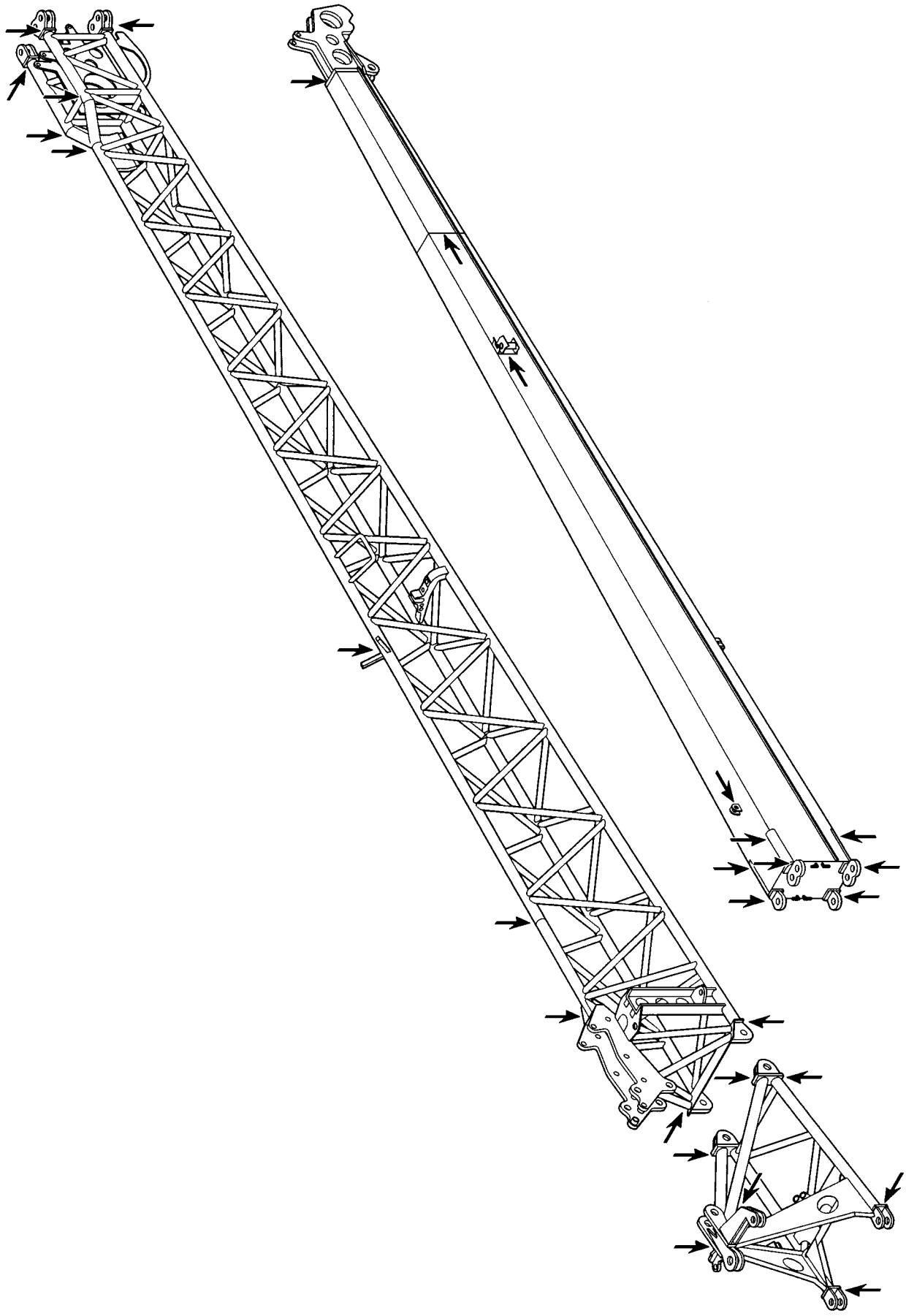

B185058

Example for folding jib

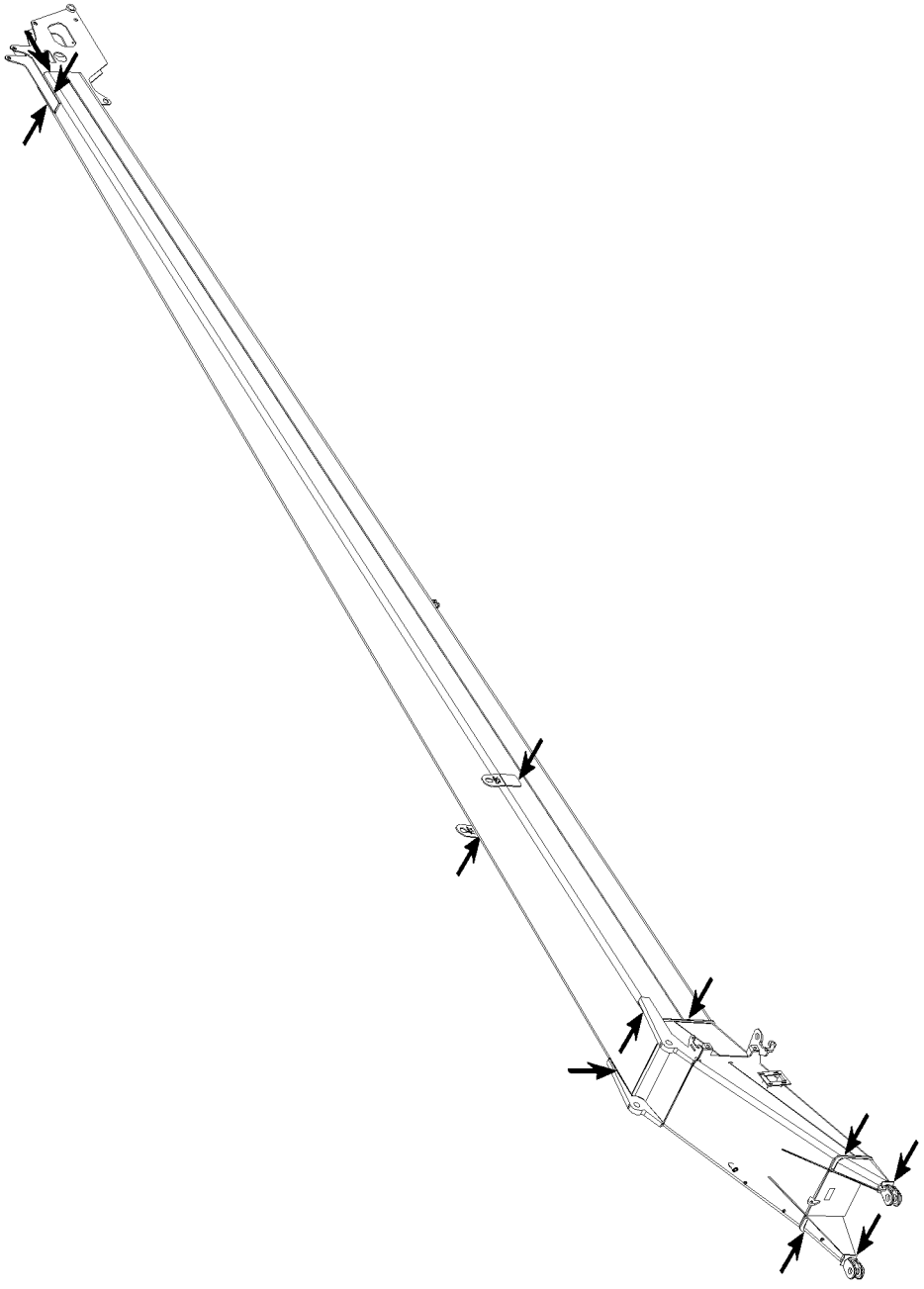

B105697

Example for folding jib

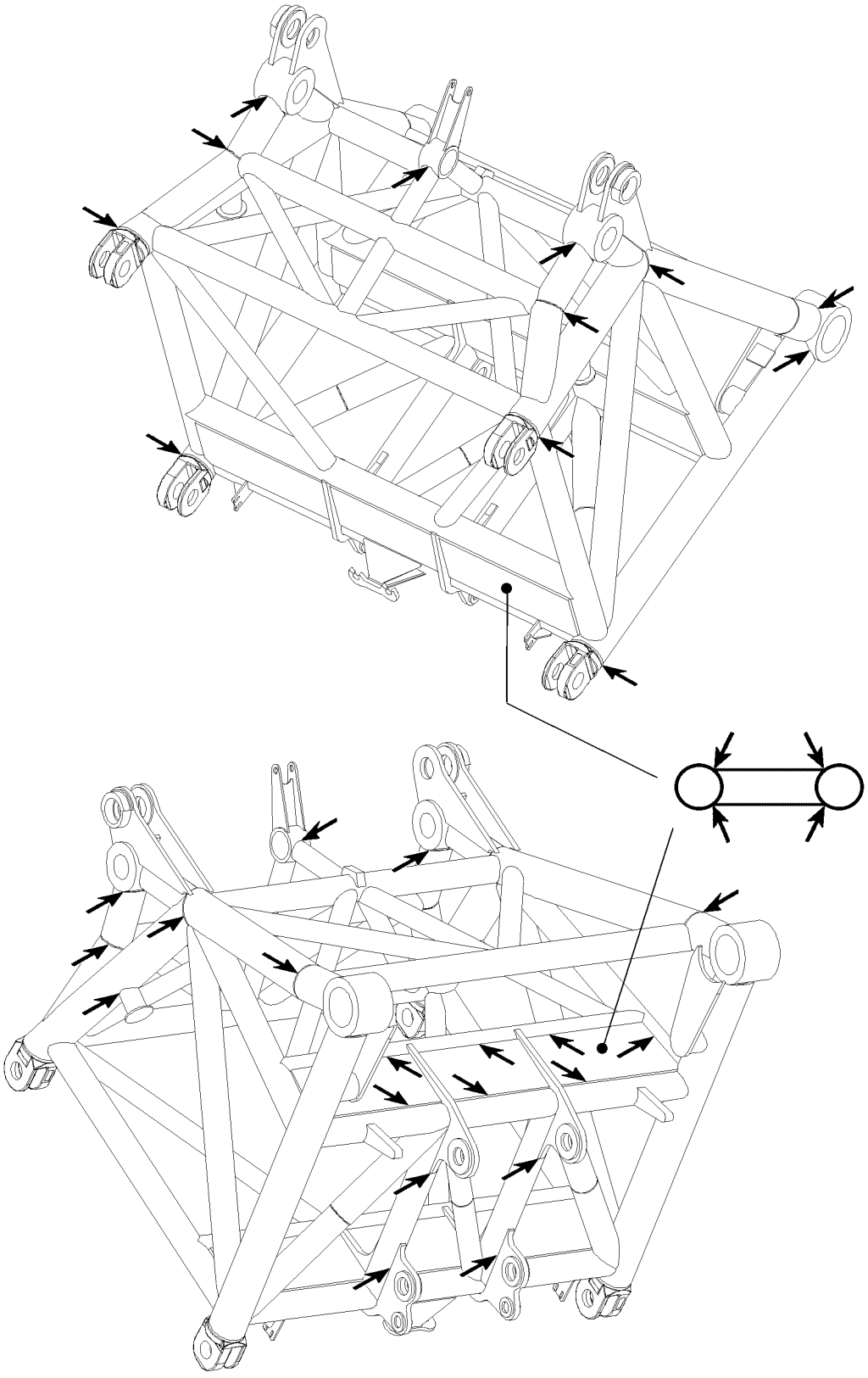

B105732 *Example for W-connector head*

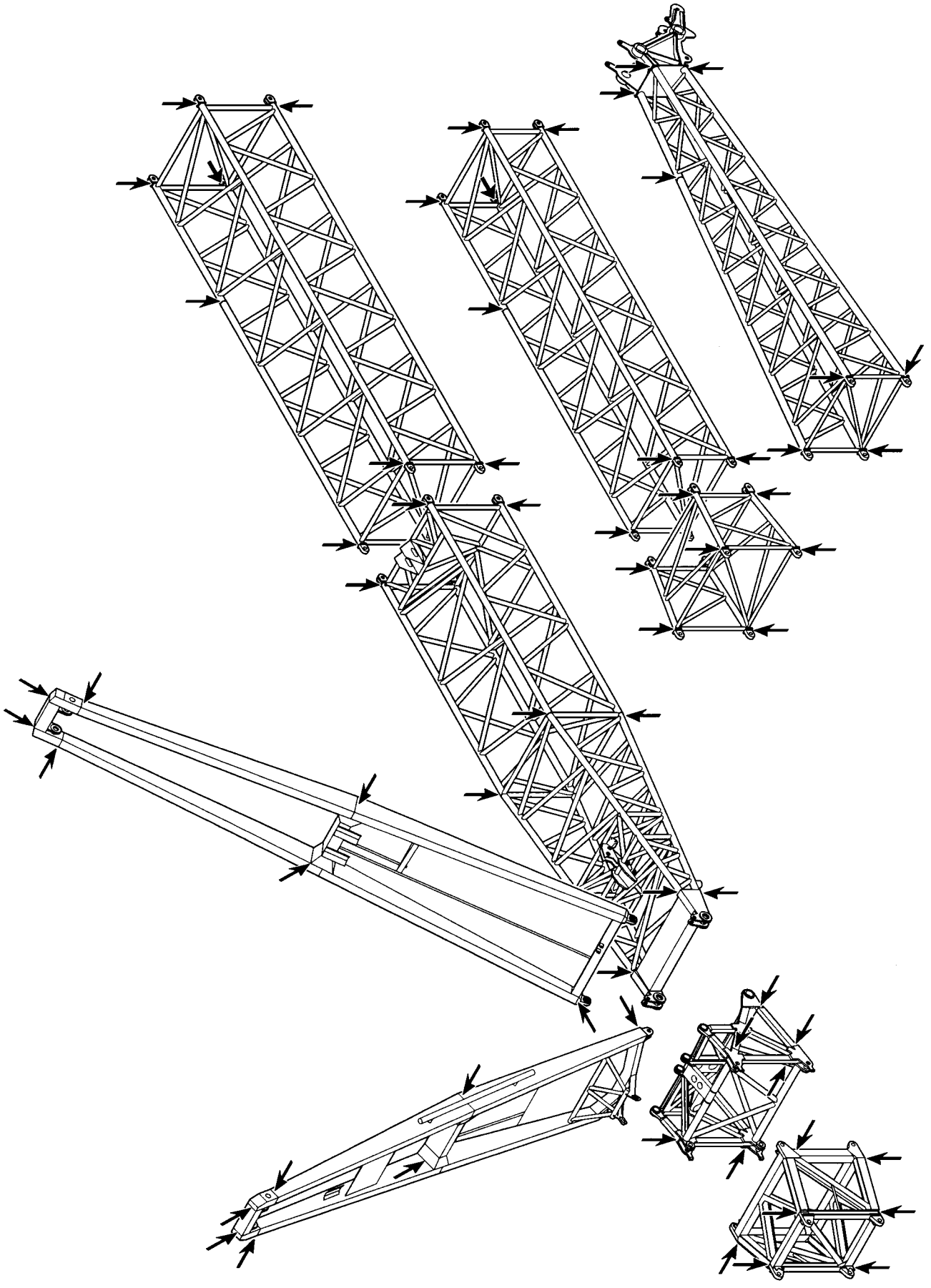

B185053

Example for assembly unit with lattice jib

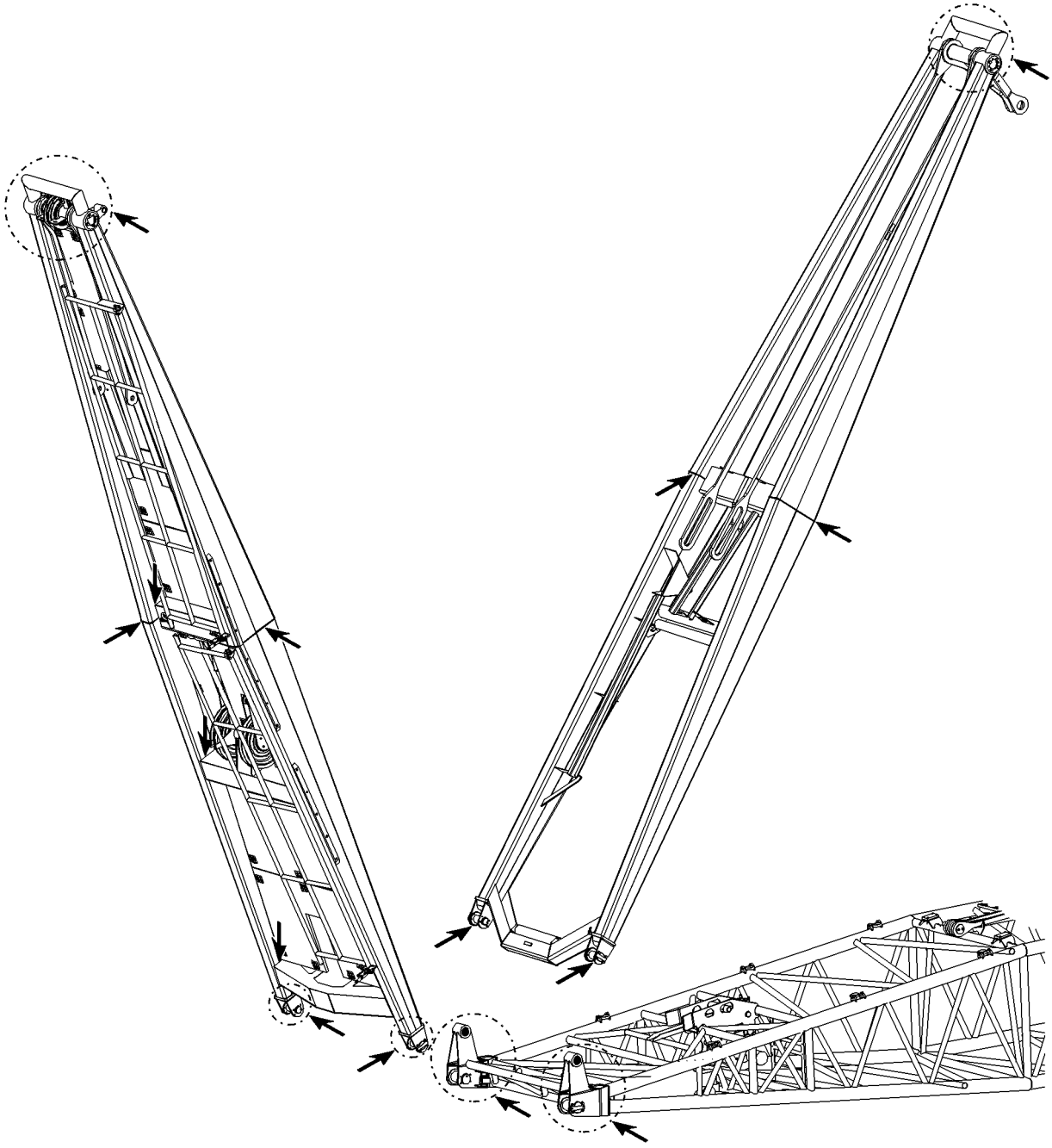

B105838

Example for NA frames

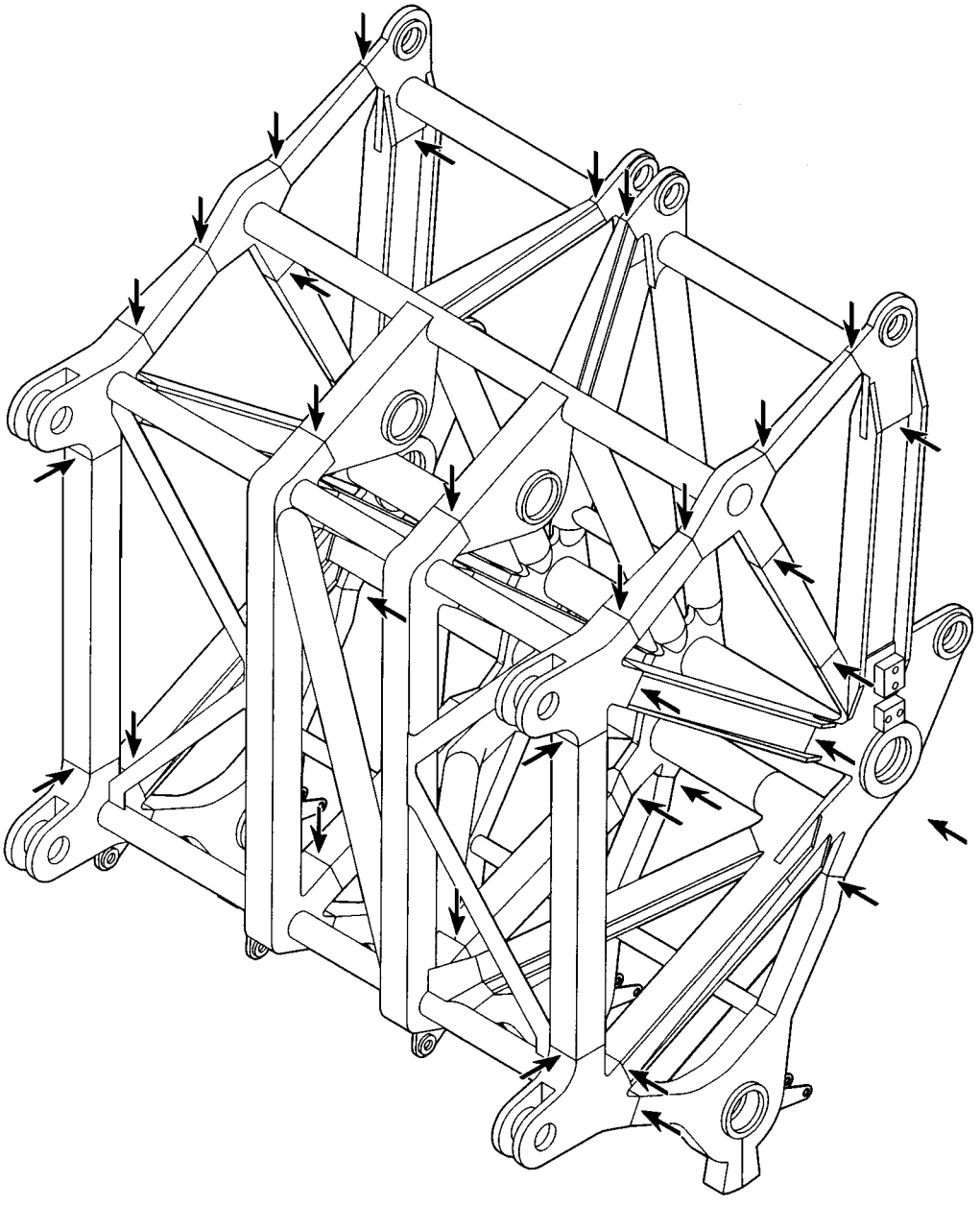

B185054

Example for pulley head

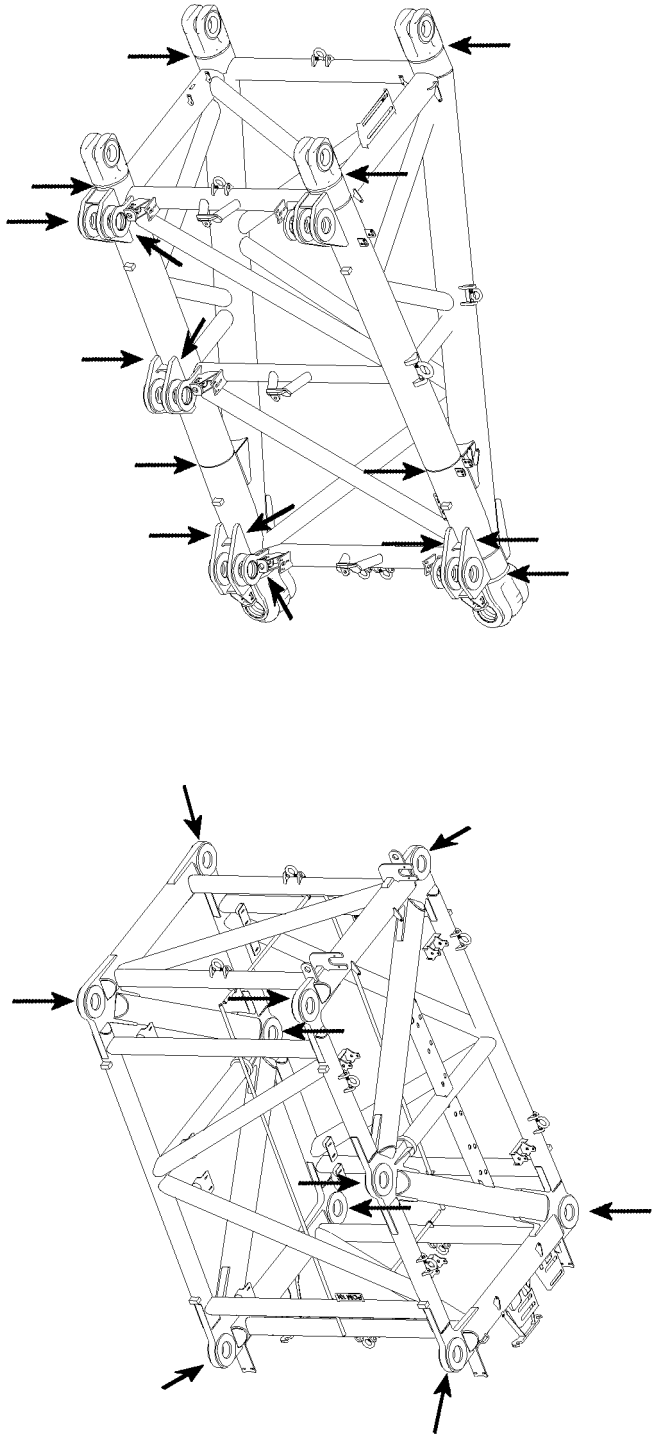

B116609 *Example for P-adapter*

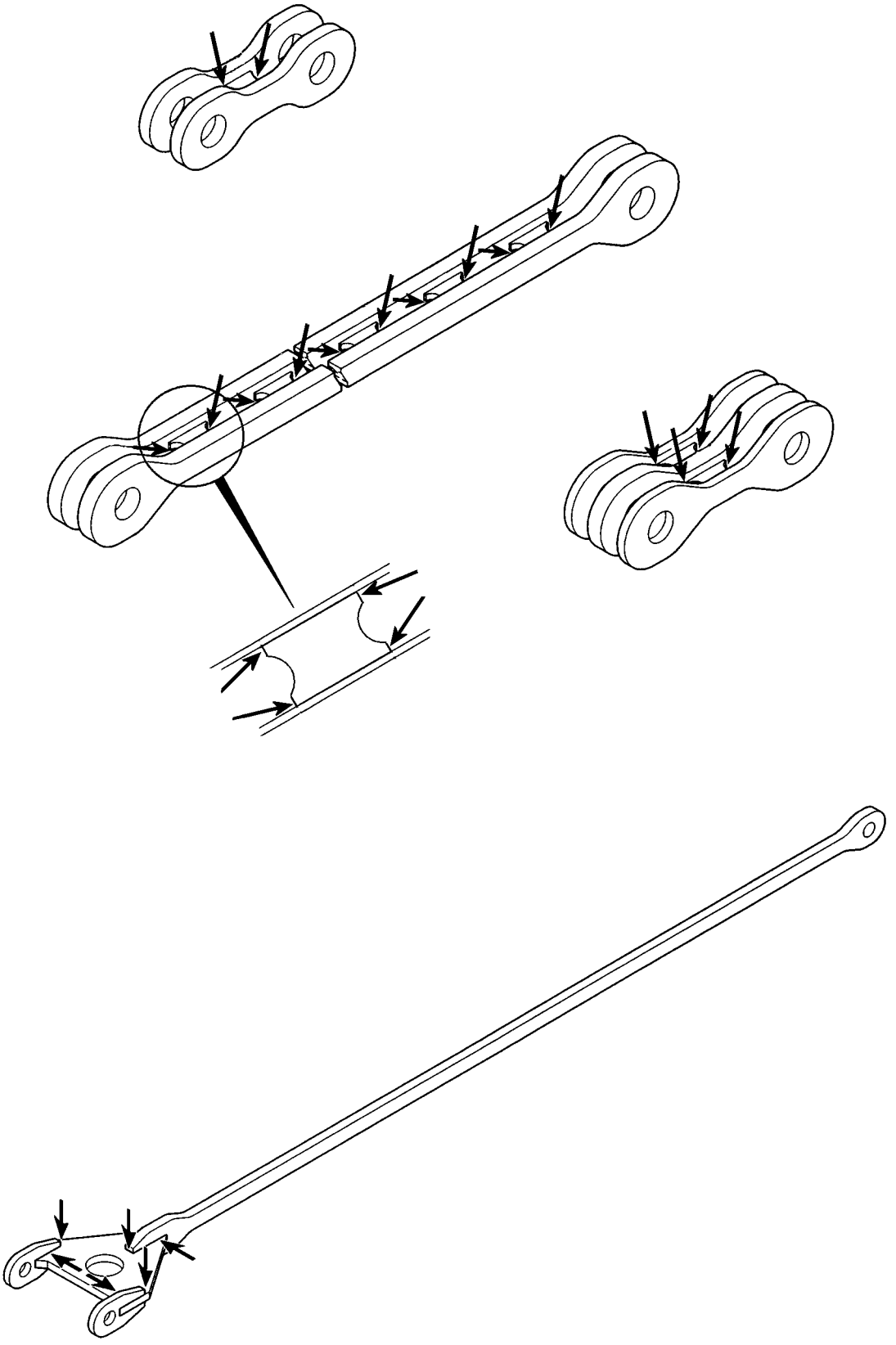

B185055

Example for guy rod

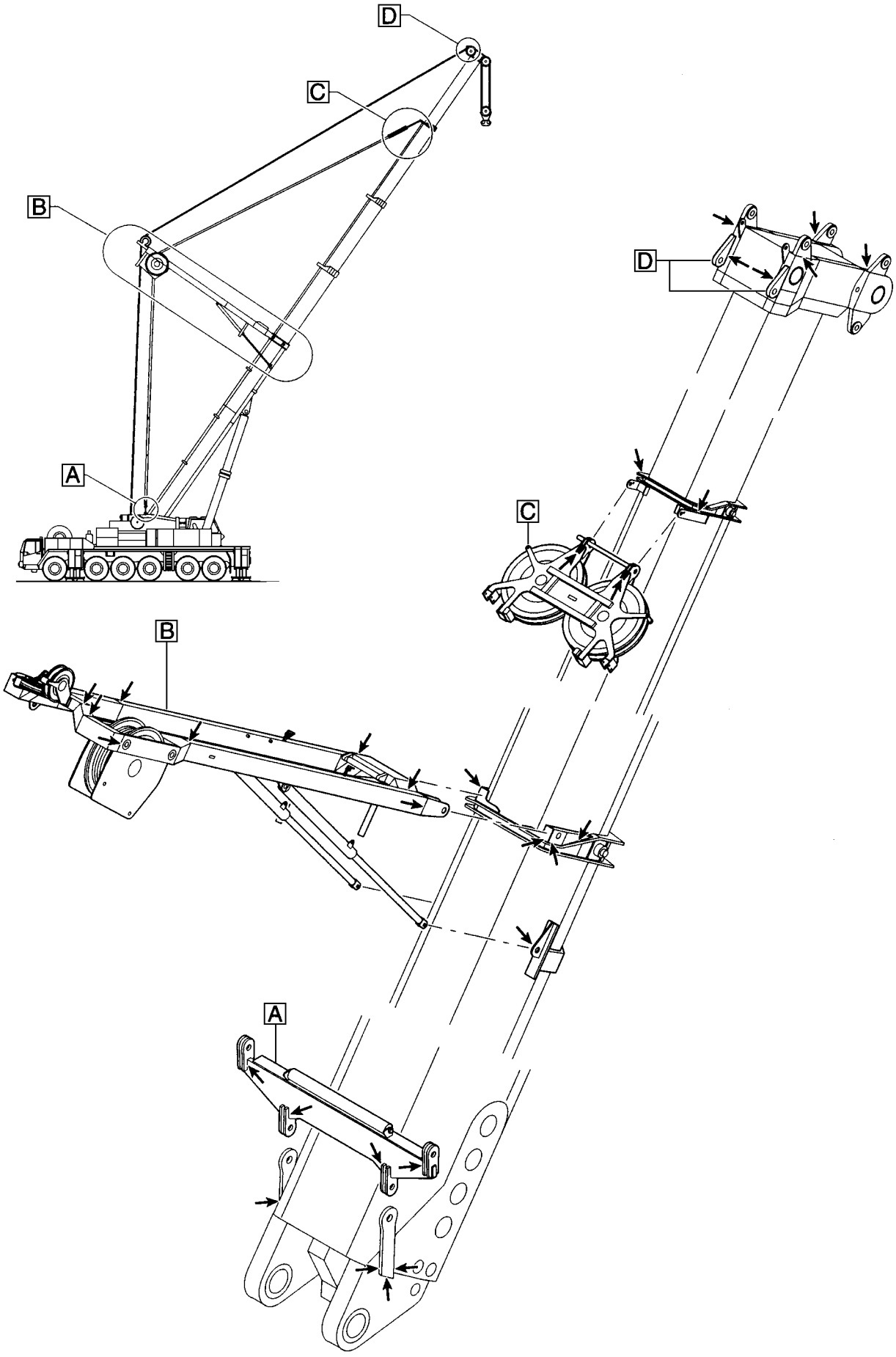

B185059

Example for TA-guying

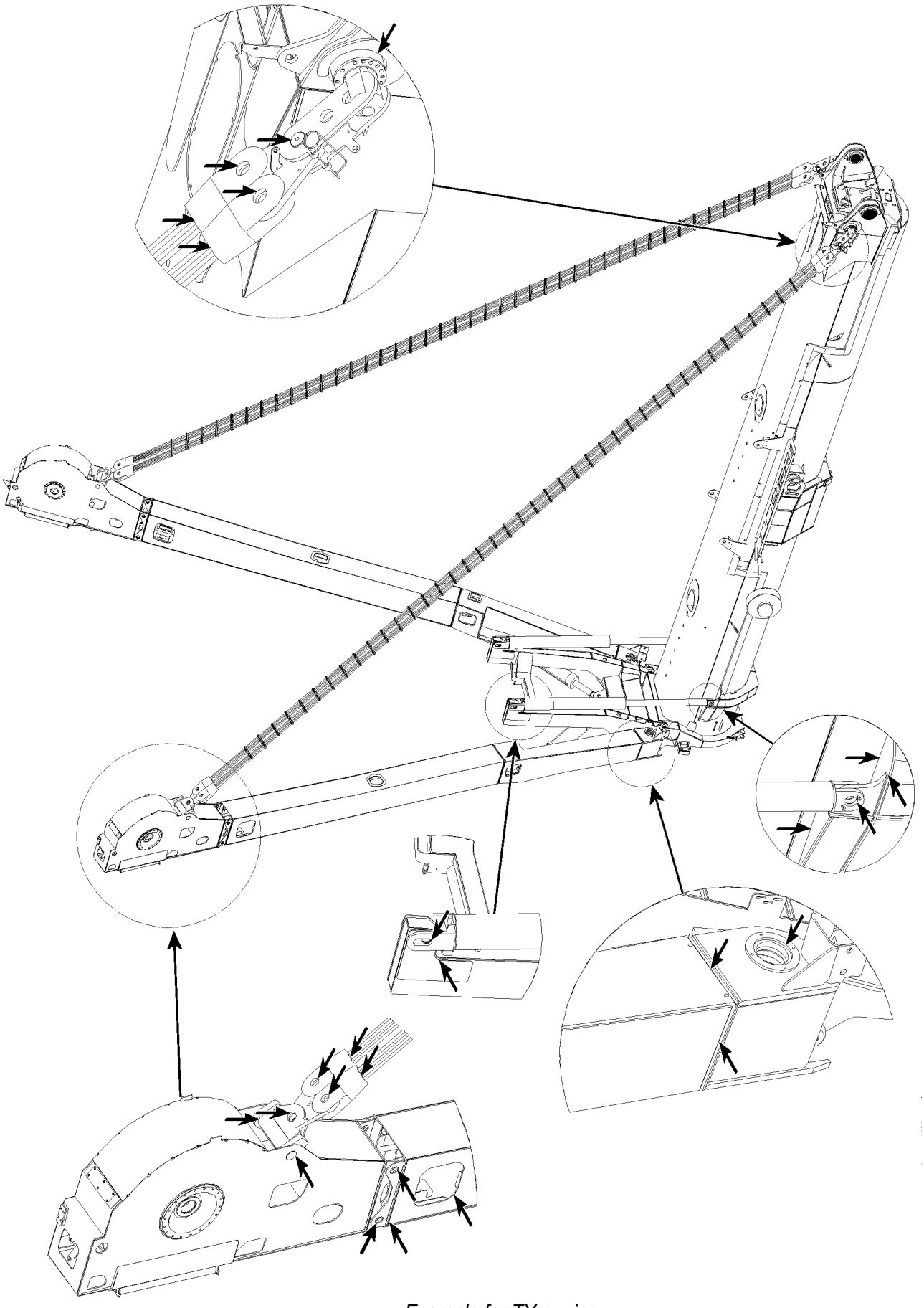

B105707

Example for TY-guying

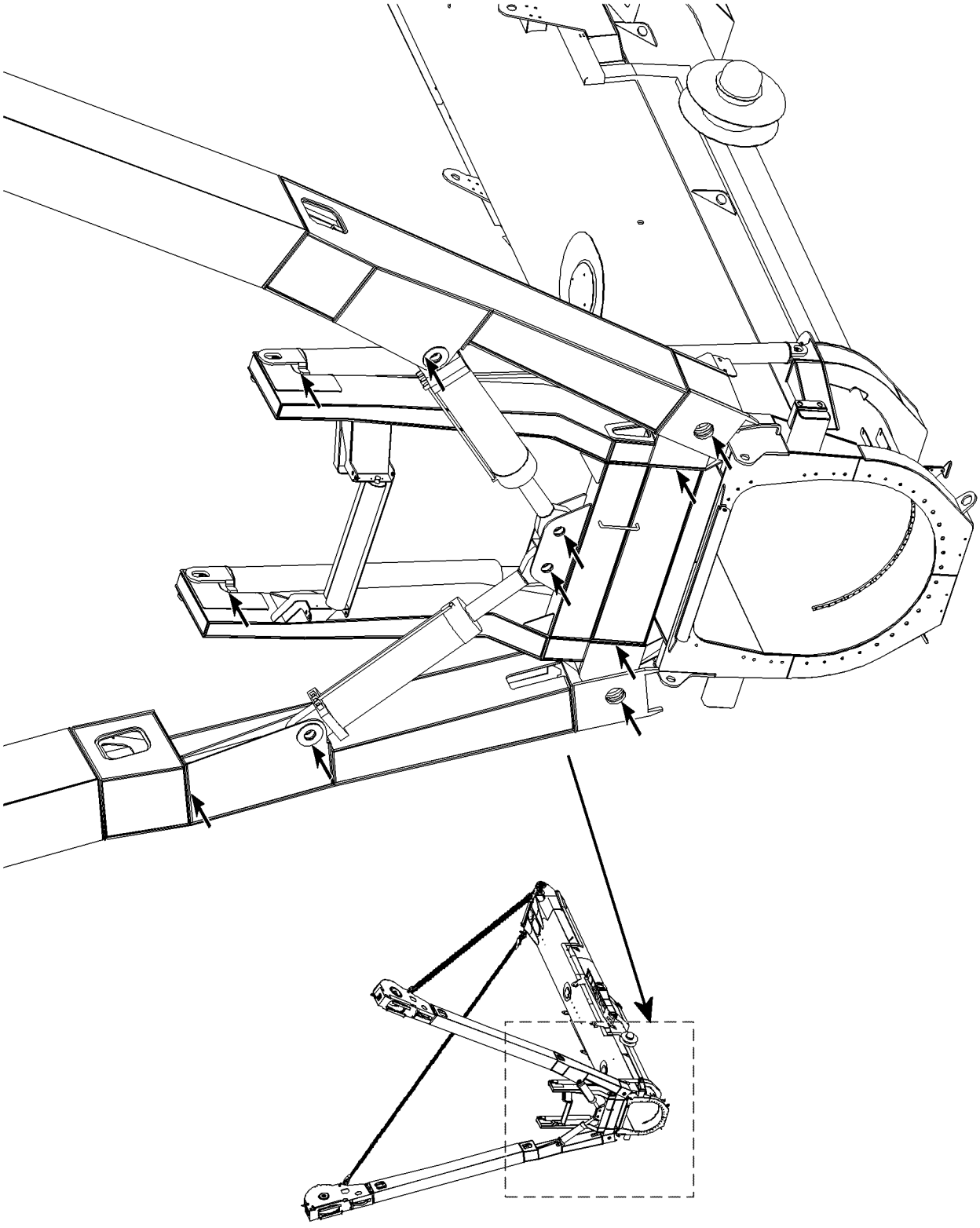

B105708

Example for TY-guying

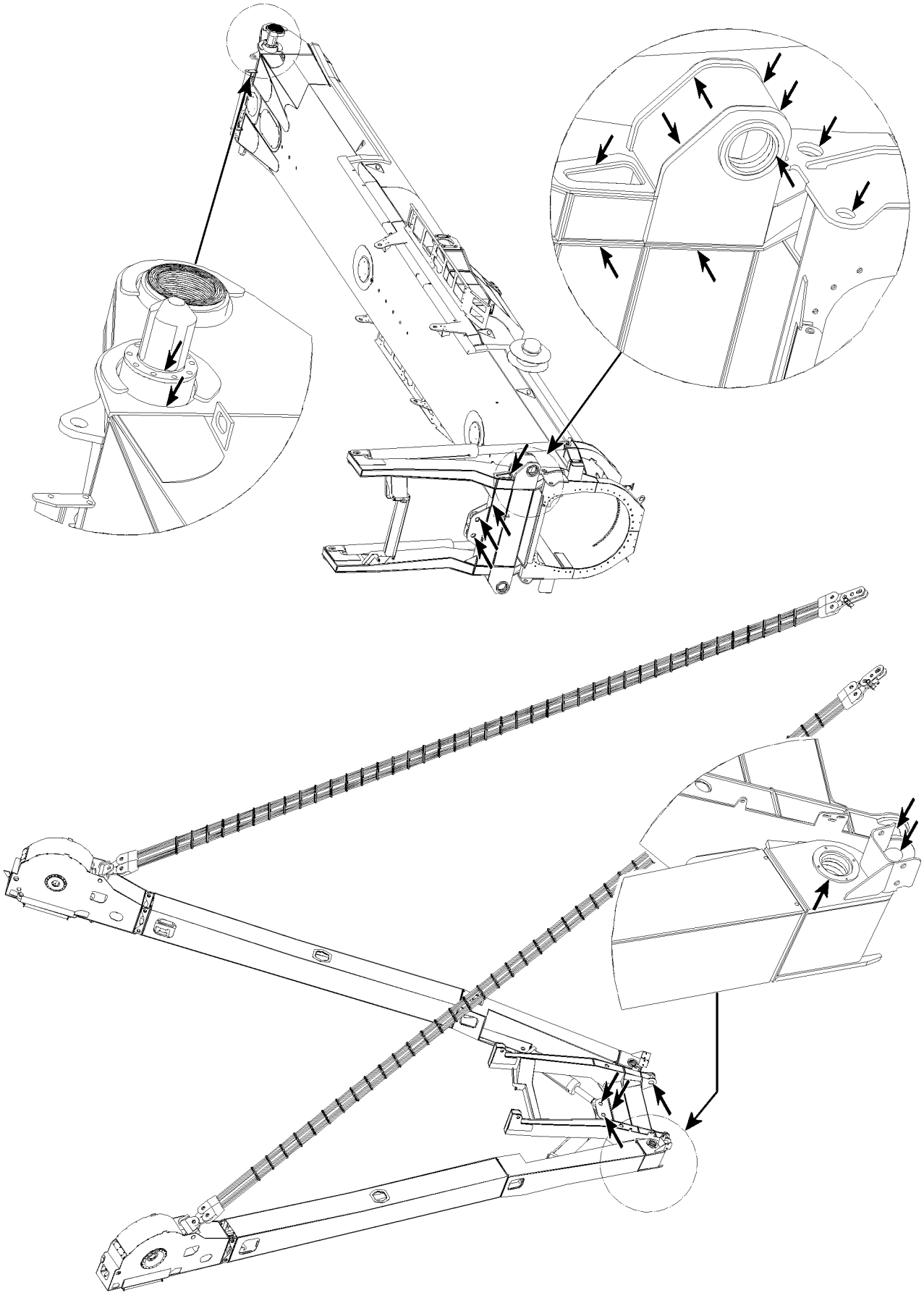

B105709

Example for TY-guying

2.2 Inspection of lattice sections

Note

- ▶ The illustration is only an example and is valid for all lattice sections!
- ▶ Check all diagonal and frame pipe connections!

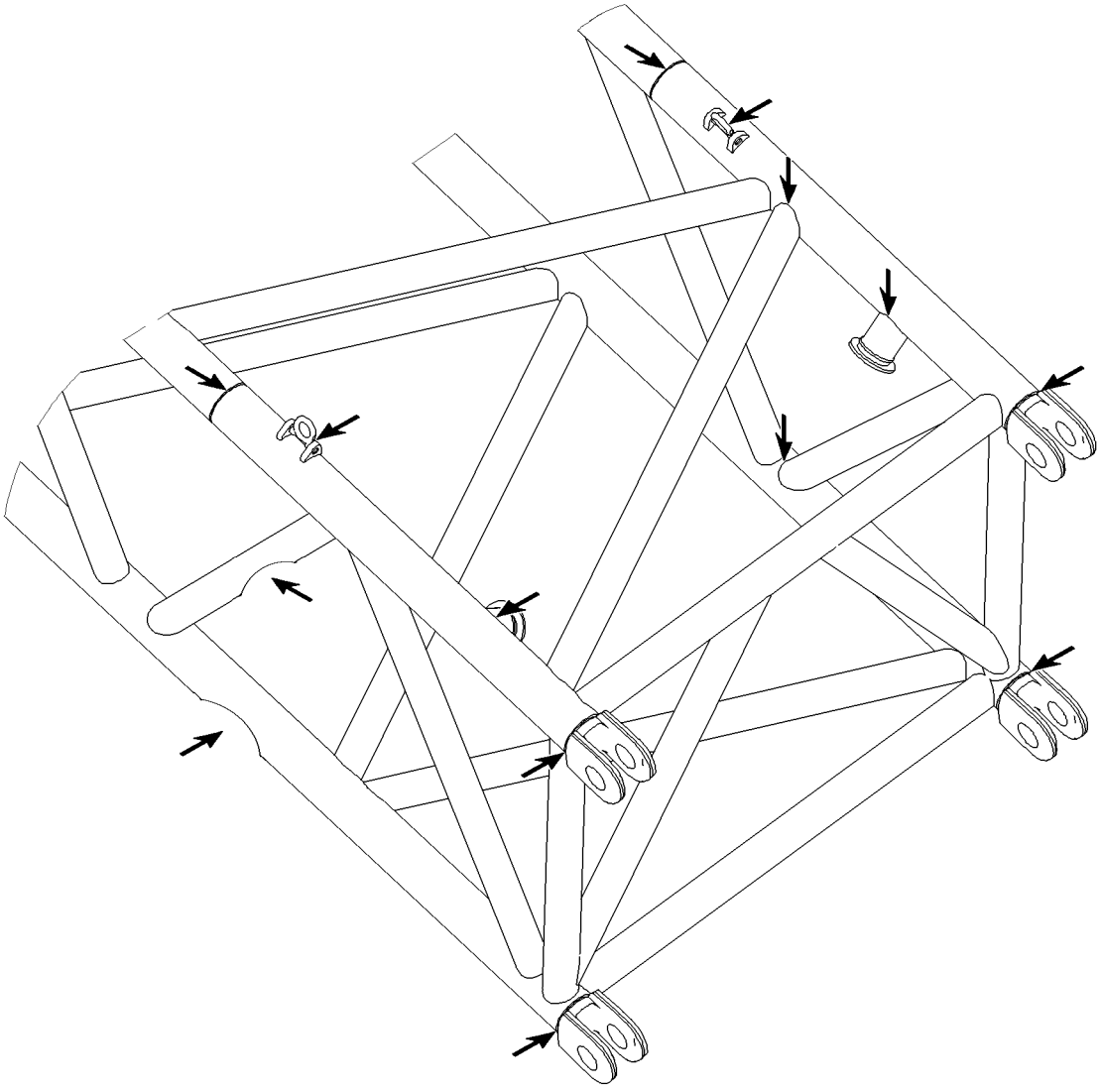

B105688

Example for lattice sections

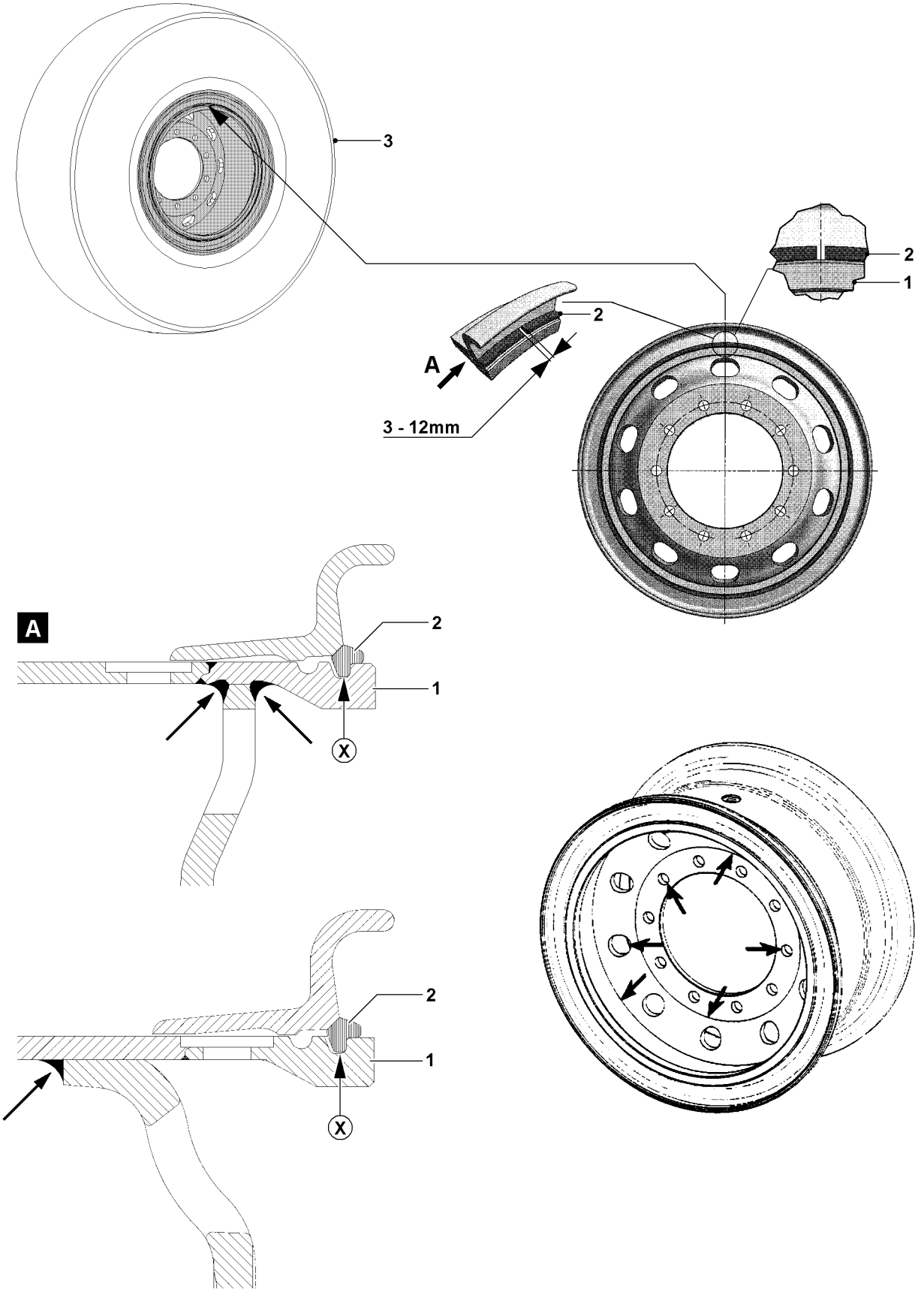

B107378

3 Inspection of tires and disk wheels

3.1 Inspection of tires

WARNING
Risk of accident if incorrect tires are used!
The use of improper tires and tires which do **not** meet the license permits may result in serious accidents with fatal injuries!
- ▶ Only tire types and sizes approved for this crane may be assembled on the crane.
- ▶ Regularly check the tires for damage, tread depth, foreign particles and tire pressures!
- ▶ Carefully remove any foreign particles stuck or wedged in the tire tread before starting to travel (for example: rocks)!

The tread depth of the tire may not fall below the legally specified minimum value.
- – Check the tread depth.
- – Check the tires for damage.
- – Make sure that the tire **3** is correctly seated on the disk wheel **1**. The tire bead must touch the inside and outside of the disk wheel evenly.

WARNING
Risk of fatal injury if the lock ring **2** is not properly seated!
Personnel can be severely injured or killed due to an incorrectly assembled lock ring **2**!
- ▶ Check to ensure that the lock ring is correctly seated!
- ▶ Consult with authorized and trained specialists if there is any doubt whether a lock ring **2** has been correctly assembled!

Indications of an incorrectly installed lock ring are present if:
- – The lock ring **2** is not completely seated with its entire circumference in the groove (point **X**) of the disk wheel, see illustration **A**.
- – The gap of the installed lock ring **2** is outside the permissible tolerance range of 3 mm to 12 mm.

3.2 Inspection of tire pressure

Make sure that the following prerequisites are met:
- – The tire **3** is correctly seated on the disk wheel.
- – The lock ring **2** correctly sits in the groove (point **X**) on the disk wheel, see illustration **A**.
- – The gap on the lock ring **2** is between 3 mm and 12 mm.

WARNING
Danger of fatal injury!
When checking the tire inflation pressure on the vehicle or after assembling tires, make sure that the lock ring **2** is correctly installed on the disk wheel.
If the tire pressure has dropped below 3 bar and the tires are improperly inflated, there is a risk of fatal injury if the lock ring **2** jumps off explosively.
- ▶ If the tire pressure is below 3 bar, the tire may only be inflated by authorized and trained specialists!
- ▶ If the lock ring **2** is not correctly seated on the disk wheel, it is essential that authorized and trained personnel are called in. Do **not** attempt to change the tire pressure yourself!
- ▶ Adhere to the specified tire pressure!

The tire pressure may not exceed or fall below the permitted range, otherwise the body of the tire could be damaged and tire failure may occur.

Note
▶ Always check the tire pressure when the tires are cold!
▶ The specified tire pressure must be within the tolerance range of ±0.2 bar!

Observe the tire pressure, which is approved for the tire installed on the crane. See Crane operating instructions, chapter 1.03.
– Check the tire pressure.

3.3 Inspection of disk wheels

The disk wheel is one of the most important safety relevant components on the vehicle.
The disk wheel is a welded steel structure and must be checked according to section 2.
In addition, at least during the annual specified inspection of cranes, the outside and the inside of the disk wheel must be visually inspected, taken the below listed points into account.
If cracks on the outside in the paint of the disk wheel can be seen, also recognizable by rust lines in the paint, then the disk wheel must be inspected closely for cracks. The “color penetration procedure” is recommended for this crack inspection.
In particular, the disk wheels must be inspected for cracks that are developing in the base material, as well as at the locations indicated by the arrows.
Any disk wheels that show evidence of cracks or crack formation must be replaced immediately.
After a mileage of maximum 40,000 km, the operator must routinely inspect the disk wheel regardless of the actual load spectrum.
The following safety and maintenance guidelines are the manufacturer's recommendations for avoiding safety risks caused by damaged disk wheels. In addition, the manufacturer can only provide a warranty in case of a claim if these guidelines have been observed.

Note
▶ Tires may only be changed by authorized and trained specialists!
▶ This applies both to dismounting and mounting of the tire on the disk wheel **1**!

Workshop personnel or authorized and trained specialists should check the wheels at the rim and the disk wheel for the following when changing the tires:
– Excessive rust or corrosion.
– Bent rim flanges.
– Cracks in the disk wheel.
– Cracks on the fastening circle to the brake drum on the inside or outside of the disk wheel.
– Welding seam connection on inside or outside of disk wheel.
– Damage to side and locking rings.
– Damaged wheel lugs or nuts.
– Worn out pin holes.
– Matching disk wheel parts.

WARNING
Danger of forced rupture!
Disk wheels with worn pin holes must be scrapped immediately. Repairing these highly-stressed disk wheel components causes structural changes in the material, which can lead to premature overload breakage!
▶ No welding work is permitted on rims and disk wheels, particularly repairs to worn bolt bores!

– If damaged disk wheel parts are discovered during the inspection:
  Remove and replace any damaged disk wheel components.
– If paint damage or minor rust formation is found:
  Recondition the wheels with commercially available paint after removing the rust. Pay special attention to a perfect surface on the tire seating surfaces.

4 Inspecting the hoist and retracting winches

The hoist and retracting winches are designed in sealed planetary gear version. These gears are sized for long service life and the drive shafts and gears are rated for endurance.
Even though the hoist and retracting winches are designed for long life, an external visual inspection is not adequate, since their life can be significantly affected by bad maintenance (insufficient oil), using oil that does not meet specification requirements, defective seals, improper operation or overloading.
The annual inspection must therefore be carried out by an **expert** in accordance with the following requirements.
The winches must be inspected by an **authorized inspector** every four years after the initial license.
Within the territorial validity of the BGV D6, after the 10th year in operation, counted from the first day of initial license, when the theoretical utilization time is not over, the winches must be checked annually by an **authorized inspector**.

4.1 Inspections

4.1.1 Inspection intervals

At least once a year, see Crane operating instructions, chapter 7.03.

4.1.2 Checking the oil level

Check the oil level with the dipstick.
For hoist and retracting winches **without** a dipstick, we recommend that the oil is drained and the amount compared to the specified oil quantity.

4.1.3 Evaluating oil color

Assume that the oil has been overheated if it is black and / or a burnt oil smell is detected. Change the oil.

4.1.4 Checking for solid foreign substances

As a rule, a qualified laboratory should carry out an oil analysis.
For simple testing, the following procedure can be used:
Drip the used oil on a specified filter fleece. Visual inspection with a magnifying glass may reveal coarse particles. If particles are detected, all the oil's properties must be examined by a qualified laboratory.

Note

- ▶ The evaluation of the foreign particles found in the oil must be made by a qualified laboratory!
- ▶ The maximum permissible quantity of foreign material measured by weight is 0.15 % of total oil weight!
- ▶ Maximum permissible foreign particle size from fine abrasion is 0.25 microns!
- ▶ If the above value have been exceeded, remove the gear and search for the cause of the increased abrasion!
- ▶ Damaged components must be replaced and the gear refilled with fresh oil!

NOTICE

Danger of property damage!

- ▶ Repairs may only be carried out by specialists with appropriate technical knowledge!

4.1.5 Visual inspection for leaks

The gears must be checked for leaks, since oil losses - in addition to polluting the environment - can lead to gear failure.

4.1.6 Inspecting the gear brakes

Check the brakes each time the gears are inspected.
In order to do so, proceed as follows:

– Attach a load, which creates 40 % of the maximum rope pull in the uppermost layer of the coil and raise it just off the ground.
– Remove the plug on the brake vent magnet.
  This means the brake remains applied when activated.
– Activate the winch in the lowering direction.

Note

▶ The brake may not slip, in other words, the winch may not turn. If the brake slips, contact the Service department at Liebherr-Werk Ehingen GmbH!
▶ Only operate the crane after it has been checked and approved for use by the Service department at Liebherr Werk Ehingen GmbH!

NOTICE

Danger of property damage!
▶ Only qualified personnel with specialized knowledge may be used to evaluate gears and brakes!

4.1.7 Documenting the completed inspection

The results of the annual inspections and maintenance work, including the steps taken, must be documented by the competent or authorized inspector, including attachments from the inspection labs and qualified service companies if applicable.
This documentation must be filed in the crane inspection log under the heading "Periodic inspections".

4.2 Requirements for monitoring the winches

4.2.1 Theoretical service life

The designer of your crane used a theoretical total operating time when designing and sizing the winches. This resulted in the theoretical service life of the equipment.
The winches of your crane are classified according to ISO 4301/1 as follows:

Winches	Classification
Power train group:	M3
Load spectrum:	L1
Load spectrum factor Km:	0.125
Theoretical service life D:	3200 h

Note

▶ The “theoretic service life” is not equal to the real (true) service life of a winch!

The actual life of the winch is affected by many additional outside factors; for example:

- Overloads caused by unapproved use of the crane.
- Inadequate maintenance: Oil is not changed in a timely manner.
- Improper operation:
  - Extreme acceleration or deceleration of the load.
  - Load falling into the ropes.
- Maintenance errors:
  - Using the wrong type of oil.
  - Too much or too little oil.
  - Contamination during oil change.
- Assembly errors during repair and maintenance.
- Undetected leakage.
- Incorrectly set safety devices.
- Hidden damage from accidents.
- Extreme environmental conditions:
  - Extreme low or high temperatures.
  - Corrosive atmosphere.
  - Dust and dirt.

4.2.2 Actually used part of the Service life

The crane operator is obligated to carry out an inspection of the crane at least once a year.
At this time, the actually used part of the theoretical service life must also be calculated. If necessary, the crane operator must contract an authorized inspector.
For the determination of the used part of the theoretical service life, the actual operating conditions (load spectrum) and the hoist gear operating hours for each inspection interval are to be determined.
The operator is responsible for the documentation in the crane inspection log.

Determining the operating conditions (load spectrum)

The load spectrum of the crane is divided into groups, please refer to ISO 4301/1.
Select one of the following load spectrums and record it in the crane inspection log for the respective inspection interval based on the actual operating conditions. A more precise determination of the load spectrum is permissible.

Load spectrum class: Light L1

Definition:

Power train or parts thereof are subjected to maximum stress only in exceptional cases, but normally only operate at very light loads.

Operating time rates:

10 % of the time at maximum load (dead load and 1/1 working load)

40 % of the time with dead load and 1/3 working load

50 % of the time only with dead load

Factor of load spectrum:

Km = 0.125

Graphic view:

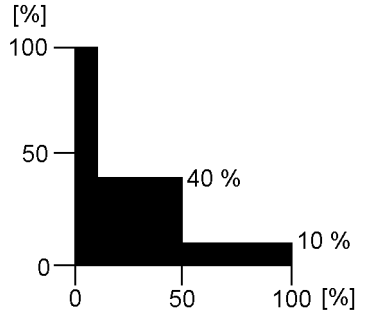

B195234

Note

▶ Load spectrum L1 with load spectrum factor Km = 0.125 is normally applied to cranes used for assembly operations!

Load spectrum class: Medium L2

Definition:

Power train or parts thereof are subjected to maximum load relatively often, but normally only operate at light load.

Operating time rates:

1/6 of the time at maximum load (dead load and 1/1 working load).

1/6 of the time with dead load and 2/3 working load.

1/6 of the time with dead load and 1/3 working load.

50 % of the time only with dead load

Factor of load spectrum:

Km = 0.25

Graphic view:

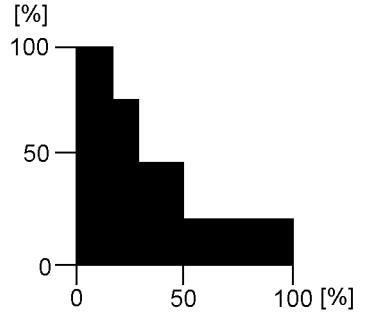

B195235

Load spectrum class: Heavy L3

Definition:

Power train or parts thereof are frequently subjected to maximum load and normally operate at medium load.

Operating time rates:

50 % of the time at maximum load (dead load and 1/1 working load)

50 % of the time only with dead load

Factor of load spectrum:

Km = 0.5

Graphic view:

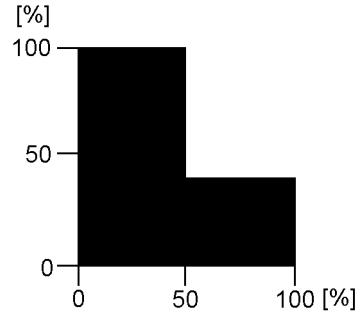

B195236

Load spectrum class: Very heavy L4

Definition:

Power train or parts thereof are regularly subjected to near maximum loads.

Operating time rates:

90 % of the time at maximum load (dead load and 1/1 working load)

10 % of the time only with dead load

Factor of load spectrum:

Km = 1

Graphic view:

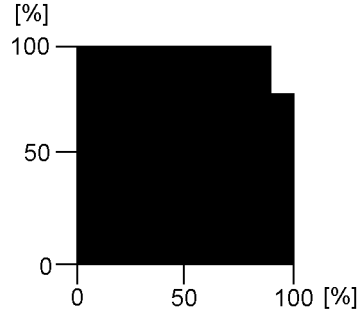

B195237

Determining the effective operating hours T_i

The effective operating hours calculated as follows must be entered into the crane inspection log for the respective inspection interval.
There are four different scenarios:

1.) Operating hour meter installed on every winch.
If an operating hour meter is installed on every winch, the effective operating hours T_i can be read directly during each inspection.

2.) Operating hour meter installed for the overall crane drive.
The winch proportion of the total superstructure operating hours must be estimated.
For cranes used in assembly operations, the operating time for the hoist winches can be estimated generally at 20 % of the total operating hours of the superstructure.

3.) One operating hours meter is used for both the crane engine and the crane drive
The winch proportion of the total crane operating hours must be estimated.
For cranes used in assembly operations, the operating time for the superstructure can be estimated at 60 % of the total operating hours of the crane. If the hoist winch proportion is estimated at 20 % of the superstructure operating hours (see previous item), then the result in relation to the **total** operating hours of the crane is: 12 %.

4.) No operating hour meter installed.
In this case, the operator must estimate and document the actual operating hours of the winch.
The approximate percentages stated above normally apply to main hoist winches. For auxiliary hoist winches or boom control winches, the proportion of the total operating hours can be significantly less and should therefore be estimated by the operator.

Determining the used proportion of the theoretical service life

For an inspection interval i (max. 1 year), the actually used proportion S_i of the theoretical Service life is derived from the formula:

$$S_i = \frac{Km_i}{Km} \times T_i$$

B195230

Abbreviation	Explanation
S_i	Used proportion of the theoretical service life.
Km	Load spectrum factor that was used to calculate the winch rates. This factor is provided in the Operating instructions.
Km_i	Load spectrum factor for inspection interval i according to section “Determining the operating conditions” .
T_i	Effective operating hours for inspection interval i according to section “Determining the effective operating hours T_i” .

The actually used proportion is subtracted from the remaining theoretical service life D_i after each inspection interval (see example).
If the remaining theoretical service life is not long enough to cover the next projected operating period, a general overhaul of the winch is required.

If the theoretical service life D has been reached (see chapter on “Theoretical service life”), then the winch may only be operated after conducting a general overhaul.
A general overhaul of the winch is required not later than 10 years after commissioning.
The general overhaul must be arranged by the operator and carried out by the manufacturer or the manufacturer's authorized representatives and must be documented in the inspection log. After the general overhaul, the manufacturer or the manufacturer's authorized representative will define a new theoretical service life D.
When the design life has not been reached after 10 years, continued operation of the winch without a general overhaul is acceptable, when the crane's authorized inspector has confirmed the accuracy of the actual usage calculation by signing the crane inspection log at each authorized inspection interval. In such a case, the authorized crane inspector must thoroughly inspect the winch. This comprises at least:

– External visual inspection (leakage, damage, deformation, etc.).
– Oil check, especially for metal residues.
– Load test at minimum and maximum rope tension and at maximum possible speed in both cases. At least one layer must be spooled up. Pay particular attention to any unusual noises during this load test.

The authorized crane inspector must confirm this inspection in the crane inspection log and must make a statement regarding suitability of the winch for continued operation. The next inspection must take place at the end of the 12th operating year and annually thereafter.

4.2.3 Example

According to the manufacturer's operating manual, a mobile crane with a separate operating hour meter for the crane engine and the crane drives is classified as follows:

– Power train group: M3
– Load spectrum: Light L1
– Factor of load spectrum: Km = 0.125
– Theoretical service life: D = 3200 h

Actual usage proportion S of the theoretical service life is calculated using the individual inspection intervals as follows:

First inspection (first year)

The crane was used for assembly work during the past year:
Load spectrum L1, in other words $Km_1 = 0.125$.
The superstructure hour meter indicates 800 h. The winch was operated about 20 % of the time; i.e. $T_1 = 160$ h.
The actual usage proportion S of the theoretical service life at the time of the first inspection is therefore:

$$S_1 = \frac{0{,}125}{0{,}125} \times 160\ \text{h} = 160\ \text{h}$$

B195231

Remaining theoretical service life:
$D_1 = 3200\ \text{h} - 160\ \text{h} = 3040\ \text{h}$
The above values are recorded in the crane inspection log.

Second inspection (second year)

The crane was used at a harbor for unloading work:
Load spectrum L3, in other words $Km_2 = 0.5$.
The superstructure hour meter indicates 2000 h; i.e., during this period:
2000 h – 800 h = 1200 h (800 h were used in the first year of operation)
The winch was operated about 40 % of the time; i.e. $T_2 = 480$ h.
The actual usage proportion S_2 of the theoretical service life at the time of the second inspection is therefore:

$$S_2 = \frac{0,5}{0,125} \times 480\ h = 1920\ h$$

B195232

Remaining theoretical service life:
D_2 = 3040 h – 1920 h = 1120 h

Third inspection (third year)

The crane was used for assembly work and occasionally at a harbor for unloading work:
Load spectrum L2, in other words Km_3 = 0.25.
The superstructure hour meter indicates 3000 h; i.e., during this period:
3000 h – 2000 h = 1000 h (2000 h were used in the first two years of operation)
The winch was operated about 30 % of the time; i.e. T_3 = 300 h.
The actual usage proportion S_3 of the theoretical service life at the time of the third inspection is therefore:

$$S_3 = \frac{0,25}{0,125} \times 300\ h = 600\ h$$

B195233

Remaining theoretical service life:
D_3 = 1120 h – 600 h = 520 h

4.2.4 Chart for determining the theoretically remaining service life

Chart 1 includes an example.
The remaining theoretical service life is to be documented in chart 2.

blank page!

B102588

Chart to determine the remaining theoretical service life of winch No. 1 (Main hoist winch)

Crane type:	LTM 1050			
Fabrication No.:	0010 540 08	S_i	=	Used part of theoretical service life since last inspection
Put in service :	12345	D_i	=	Remaining theoretical service life
Serial number of winch according to data tag:	0815	D_{i-1}	=	Remaining theoretical service life after previous inspection
Last general overhaul performed on:	.....	Km	=	Factor of load collective, which was taken for calculation of winch. This factor is to be taken from the Operating Manual
Configuration data of winch (see Operating Manual):				
Drive gear group:	M 3	Km_i	=	Factor of load collective in inspection interval i
Load collective:	Q 1 (L1)	T_i	=	Effective operating hours in inspection interval i
Factor of load collective Km:	0.125			
Theoretical service life D:	3200 hrs.	(*)		In the following pages, carry over the last line from the previous page.

Inspection interval No. (max. annually) i	Date of initial service data of inspection	Operating conditions since last inspection (load collective)	Factor of load connective Km_i	Total crane operating hours [h]	Operating hours of super-structure [h]	Operating hours of super-structure since last inspection [h]	Operating hours of winch [h]	Operating hours of winch since last inspection T_i [h]	Used part of theoretical service life D: $S_i = \frac{Km_i}{Km} \times T_i$ [h]	Remaining theoretical service life $D_i = D_{i-1} - S_i$ [h]	Name of inspector	Signature	Remarks	Name of expert	Signature
(*) 0	10.06.90	-	-	-	0				0	3200					
1	05.06.91	L1	0,125	-	800	800	-	160 (20 % of 800)	160	3040	Müller				
2	20.05.92	L3	0,5	-	2000	1200	-	480 (40 % of 1200)	1920	1120	Huber				
3	18.05.93	L2	0,25	-	3000	1000	-	300 (30 % of 1000)	600	520	Maier				
4															

C A U T I O N : **Perform general overhaul at least once every 10 years.** In case of deviation, see guidelines in this chapter.

General overhaul last performed on : .....

B102589

Chart to determine the remaining theoretical service life of winch No. ....

Crane type: .....
Fabrication No.: .....
Put in service: .....
Serial number of winch according to data tag: .....
Last general overhaul performed on: .....
Configuration data of winch (see Operating Manual): .....
Drive gear group: M.....
Load collective: Q.....(L.....)
Factor of load collective Km: .....
Theoretical service life D: .....

S_i = Used part of theoretical service life since last inspection
D_i = Remaining theoretical service life
D_{i-1} = Remaining theoretical service life after previous inspection
Km = Factor of load collective, which was taken for calculation of winch. This factor is to be taken from the Operating Manual
Km_i = Factor of load collective in inspection interval i
T_i = Effective operating hours in inspection interval i

*) In the following pages, carry over the last line from the previous page.

Inspection interval No. (max. annually) i	Date of initial service data of inspection	Operating conditions since last inspection (load collective)	Factor of load connective Km_i	Total crane operating hours [h]	Operating hours of super-structure [h]	Operating hours of super-structure since last inspection [h]	Operating hours of winch [h]	Operating hours of winch since last inspection T_i [h]	Used part of theoretical service life D: $S_i = \frac{Km_i}{Km} \times T_i$ [h]	Remaining theoretical service life $D_i = D_{i-1} - S_i$ [h]	Name of inspector	Signature	Remarks	Name of expert	Signature
(*)															

C A U T I O N : **Perform general overhaul at least once every 10 years.** In case of deviation, see guidelines in this chapter.

General overhaul last performed on : .....

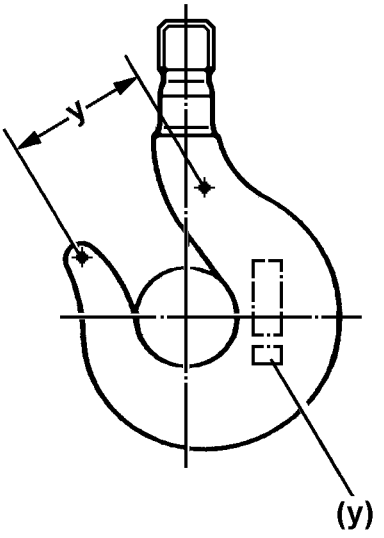

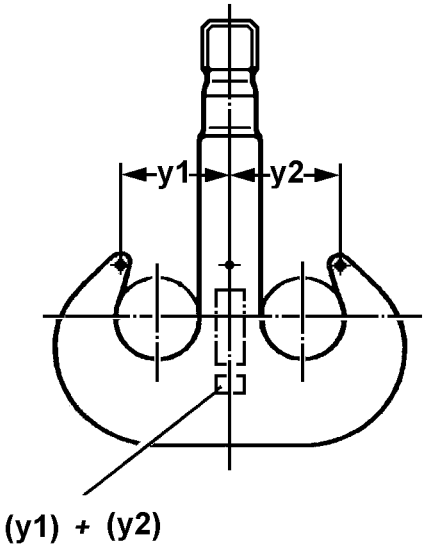

B195239

5 Inspecting the load hooks

The load hooks must be visually inspected annually by a competent inspector.
This inspection must be carried out by an authorized expert every 4 years.
The purpose of the inspections is to avoid accidents by detecting deficiencies early on.
Any deficiencies found by the expert must be documented, corrected and subsequently reinspected.

5.1 Inspection and monitoring procedure

5.1.1 Deformation

The hook should be inspected for distortion as required, but at least once a year; for example at the hook jaw.
The original dimensions, (y) or (y1) and (y2), are marked on the load hook itself.
Measure between the punch marks.

DANGER
Danger of accident!
Hook jaw distortion may not exceed 10 % of the original dimensions (y) or (y1) and (y2)!
▶ Do not use a load hook that exhibits greater expansion!
▶ Contact the Service department at Liebherr-Werk Ehingen GmbH!

5.1.2 Corrosion

DANGER
Risk of accidents due to corrosion and wear on the threads!
▶ Stop using the load hook!
▶ Contact the Service department at Liebherr-Werk Ehingen GmbH!

Unscrew the nut from the hook shank so that the threads can be checked for corrosion and wear every 4 years by an authorized expert.

6 Inspection of the rope feed mechanism in the telescopic boom

6.1 Checking the ropes of the rope feed mechanism

– For inspection of rope end mounts, see Crane operating instructions, chapter 7.05.
– For inspection of the pretension on the retraction ropes, see Crane operating instructions, chapter 7.05.
– Inspection of ropes for damage according to ISO 4309, see Crane operating instructions, chapter 8.04.

6.2 Checking the change over pulleys of the rope feed mechanism

DANGER
Danger of accident in case of damage or cracks!
▶ Replace the change over pulley immediately!

Check the entire change over pulley assemblies for damage and cracks once a year.
Also check for wear in the rope groove. Replace the change over pulley if the bottom of the rope groove has been run down up to 1/4 of the rope diameter.

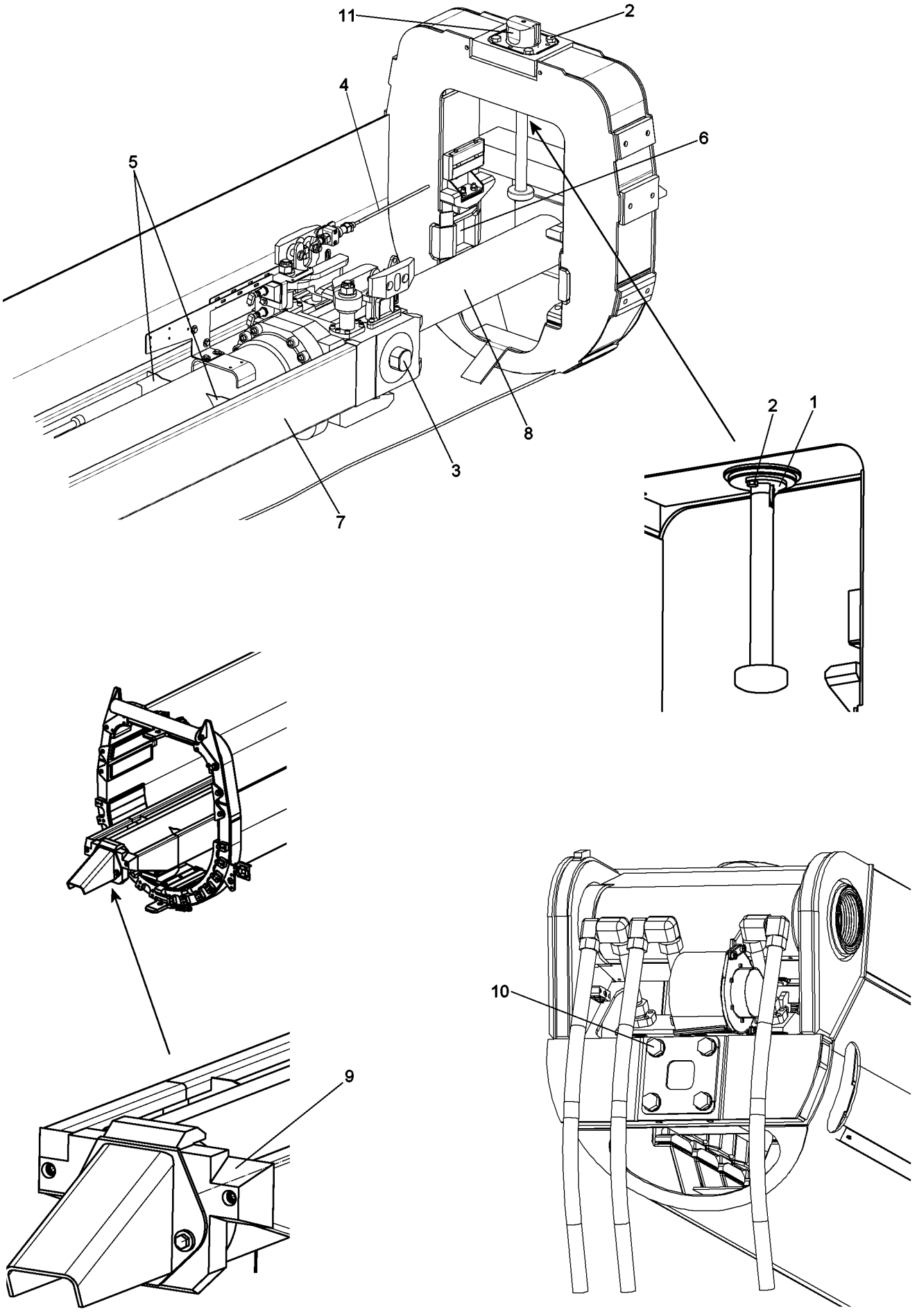
11
2
4
6
5
8
3
7
2
1
9
10
B109286

7 Inspection of locking system of telescopic boom

7.1 For cranes with pneumatic boom locking system

- To check the function, see Crane operating instructions, chapter 8.11.
- To check the pin wear pattern, see Crane operating instructions, chapter 8.11.
- To check the wear, see Crane operating instructions, chapter 8.11.
- To check the safety control, see Crane operating instructions, chapter 8.11.

7.2 For cranes with telescopic boom system Telematik

- Inspection of the pull knob safety **1** and all mounting screws **2** for tight seating
- Inspection of twist guards of cylinder pinning **3** and the telescopic boom pinning **11**
- Inspection of the length sensor rope **4** for damage
- Inspection of the cylinder barrel in the area of all welding seams **5** for crack formation
- Inspection of the locking pockets **6** for damage
- Grease the guide rail **7**
- In case of leakage: Inspection of the piston rod **8** for grooves
- Inspection of the wear pattern on the cylinder pinning **3** and the telescopic boom pinning **11**
- Inspection of guide rail **7** for distortion of contour
- Inspection of plastic guide **9** on cylinder bottom for damage
- Inspection of all mounting screws **10** on the push out cylinder for tight seating

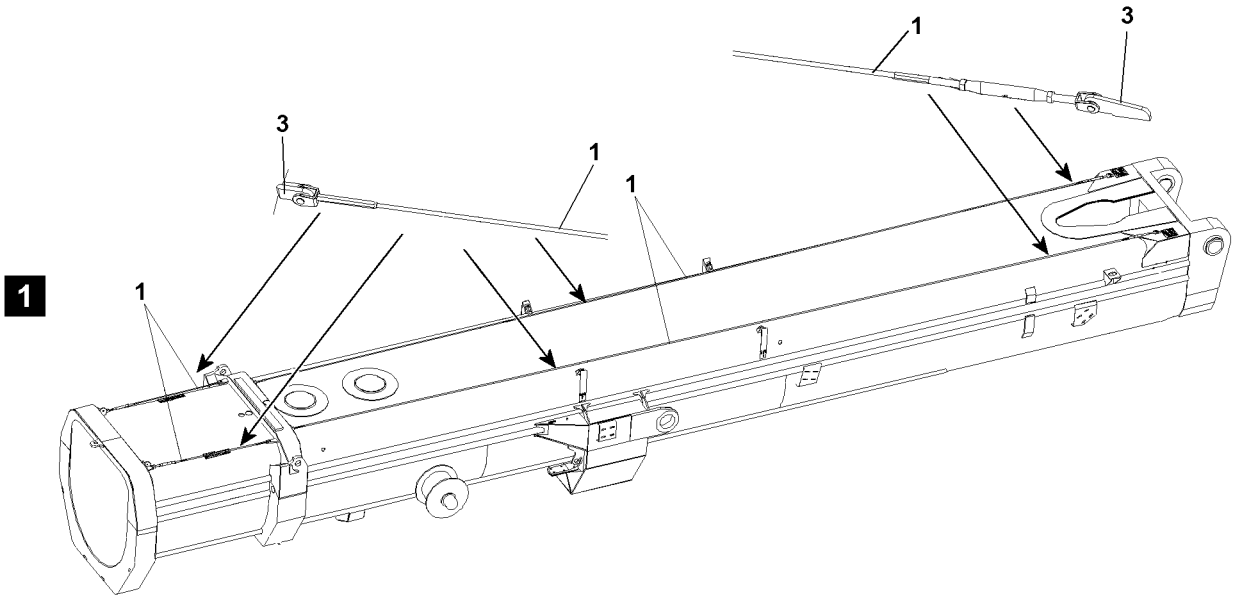

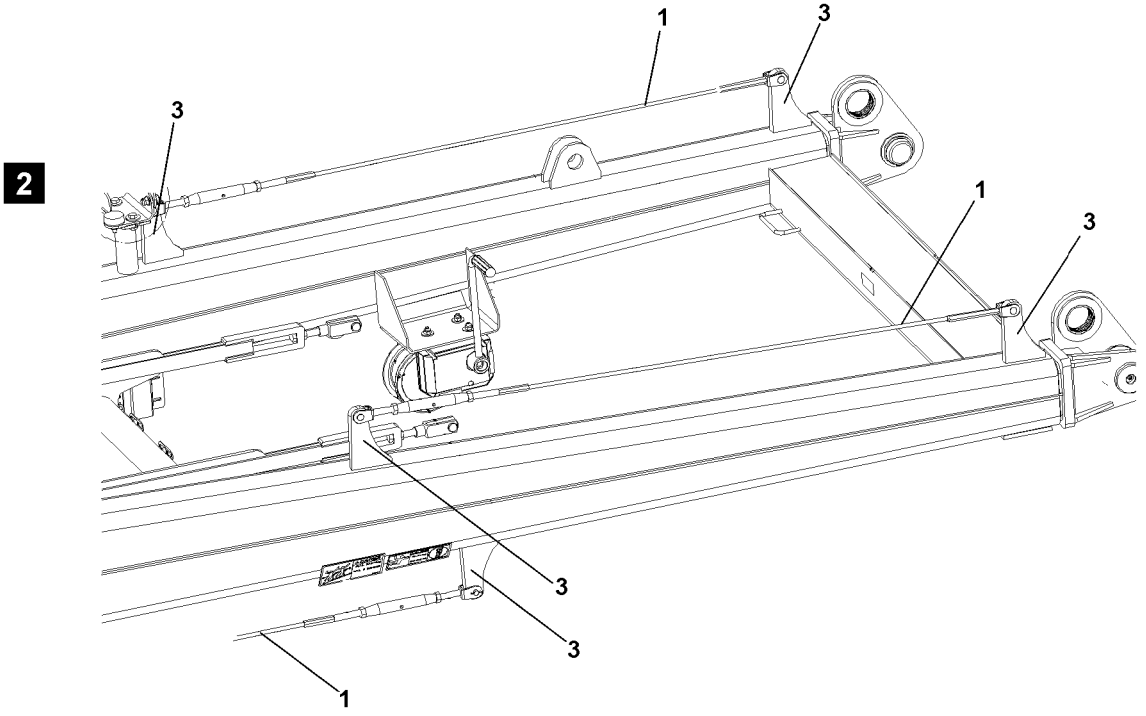

B112739

8 Inspection of retaining ropes and anchor points

WARNING
Danger of falls due to damaged retaining ropes or anchor points!
The retaining ropes **1** and anchor points **3** must be checked **at least once a year** by **expert personnel** for safety and damage!
If any defects are found on the retaining ropes **1** or anchor points **3** during the inspections, then the retaining ropes **1** or anchor points **3** must be replaced immediately by **expert personnel**! If this is not observed, assembly personnel could be killed or fatally injured in a fall!
- ▶ The rope pretension on the retaining ropes must be 800 N!
- ▶ Have damaged retaining ropes **1** or anchor points **3** replaced immediately by **expert personnel**!

Note
Document the inspections in writing!
- ▶ The scope and results of tests should be documented to permit reproducibility. This documentation forms part of the crane records and should be safely stored during the entire service life of the crane.

8.1 Check of rope pretension on telescopic booms, illustration 1

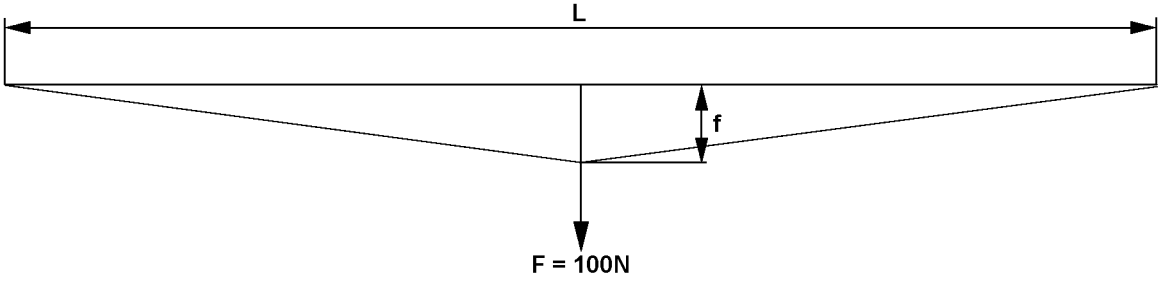

B112738

The rope pretension must be 800 N. This can be checked with the aid of a spring balance, which is pulled centered on the retaining rope. If the specified deflection (f) depending on the rope length (L) according to the following charts results for the raised load F = 100 N then the rope pretension of 800 N is set correctly.

Rope pretension is 800 N if:					
Rope length (L)	1.0 m	1.5 m	2.0 m	2.5 m	3.5 m
Deflection (f)	15 mm	25 mm	30 mm	40 mm	55 mm

Rope pretension is 800 N if:					
Rope length (L)	5.5 m	7.5 m	9.5 m	11.5 m	13.5 m
Deflection (f)	85 mm	115 mm	145 mm	180 mm	215 mm

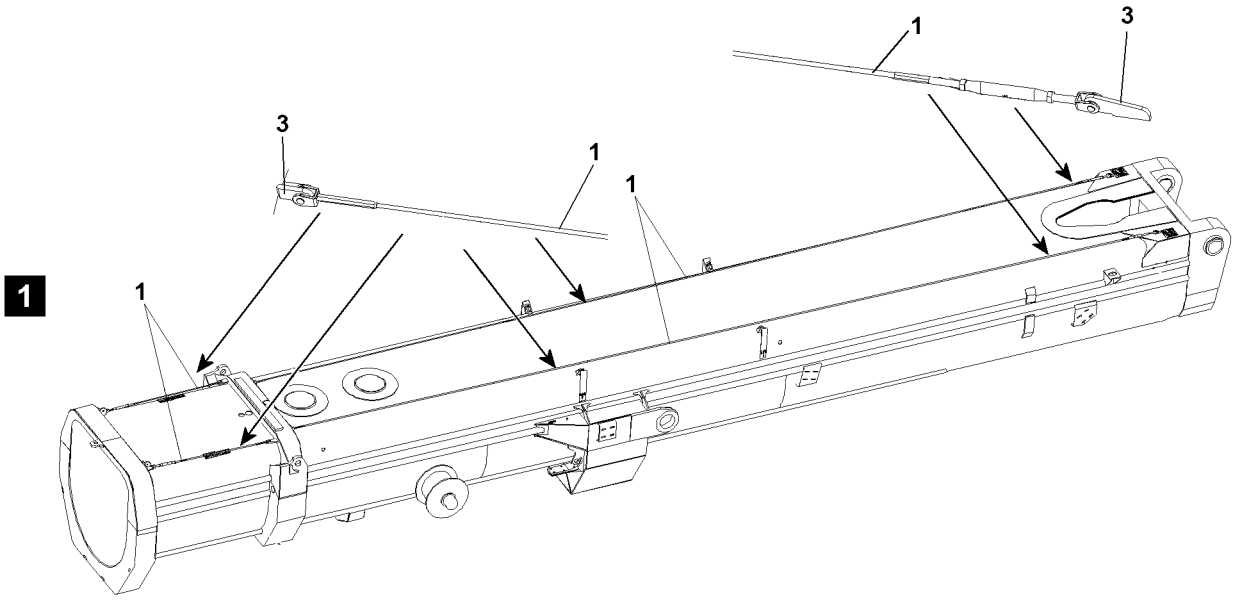

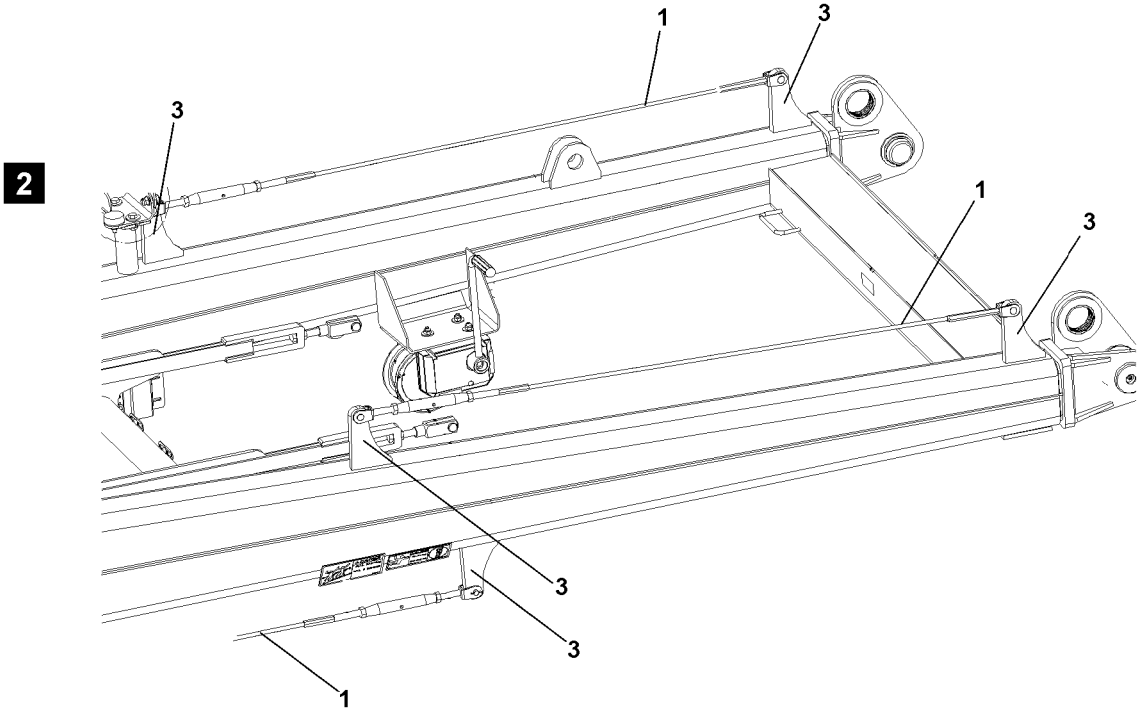

B112739

8.2 Check of rope pretension on lattice sections, illustration 2

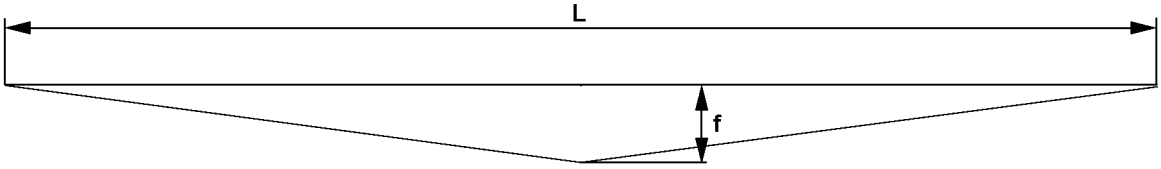

B117747

The rope pretension is 800 N, if a sag (f) according to the chart is present on the retaining rope according to the rope length (L).

Rope pretension is 800 N if:					
Rope length (L)	1.0 m	1.5 m	2.0 m	2.5 m	3.5 m
Deflection (f)	0	1 mm	2 mm	3 mm	6 mm

Rope pretension is 800 N if:					
Rope length (L)	5.5 m	7.5 m	9.5 m	11.5 m	13.5 m
Deflection (f)	15 mm	28 mm	45 mm	66 mm	90 mm

9 Inspection of membrane accumulator

Note

▶ The national regulations for pressurized container inspection must be observed!

The inspection of the membrane accumulators for specified gas pressure must be carried out by authorized and trained expert personnel, see Crane operating instructions, chapter 7.04, 7.05.

10 Inspection of relapse cylinders

WARNING

Fatal accidents due to defective relapse cylinders!

Loss of oil or corrosion can damage the relapse cylinders!

Safe crane operation is no longer ensured!

▶ Crane operation with defective relapse cylinders is prohibited!

10.1 Pressure test of relapse cylinders

The relapse cylinders must be inspected annually by an authorized expert. The purpose of the inspections is to avoid accidents by detecting deficiencies early on.

10.2 Checking the gas pressure and oil fill before operation

WARNING
Fatal accidents due to defective relapse cylinders!
Loss of oil or corrosion can damage the relapse cylinders!
Safe crane operation is no longer ensured!
- ▶ Before every operation: Carry out a visual inspection for leaks, damage and corrosion on the relapse cylinders.
- ▶ If any defects are found, the relapse cylinders must be inspected by the cylinder manufacturer!

The gas pressure and the oil fill must be checked by authorized and trained expert personnel for pressure tanks.

11 Inspection of the safety controls on the relapse cylinders

For inspection of the safety control or limit switches on the relapse cylinders and the boom A-frames, see Crane operating instructions, chapter 8.12.

12 Inspection of rope pulleys

DANGER
Danger of accident in case of damage or cracks!
- ▶ Replace rope pulley immediately!

Check the entire rope pulley assemblies for damage and cracks once a year.
If rope pulleys are subjected to any impacts (e.g., with buildings) or are otherwise overloaded, they must be visually inspected for damage or cracks immediately.
Also check for wear in the rope groove. Replace the rope pulley if the bottom of the rope groove has been run down up to 1/4 of the rope diameter.

13 Inspecting the function of the overload protection

Position the longest boom at minimum and maximum radius: Check the load indicator, using the hook block as a test load.
The indicator reading may not deviate by more than 10 % off the true load value at these two extreme positions.
Measure the indicated radius for the longest boom at its minimum radius and at a boom angle of 45°.
The indicator readings may not deviate more than 10 % off the measured radius.

14 Inspecting the roller slewing ring connection

For tilt play measurement, see Crane operating instructions, chapter 7.05

15 Inspection of the mounting of the load bearing equipment

Check that the mounting bolts for the roller slewing ring, winches, slewing gears and hitch are properly seated.

The slewing ring connection mounting bolts are pre-stressed at the factory, so that no loosening of the screw connections will occur during normal crane operation.

However, the screw connection may become overloaded and the bolts may be permanently stretched if the crane is overloaded or if the load is pulled free. It is therefore important to check these screws for tight seating during the annual crane inspection or after an overload.

Remove loose screws completely as well as the two adjacent screws on the right and left and check them for damage closely. Inspect the screws especially for cracks or permanent distortion. If a screw has been stretched by more than 0.2 % (in relation to its original length) or if cracks or other damage are detected, then the damaged screws must be replaced. If the screws have been stretched or there is other damage, then the adjacent screws must also be replaced.

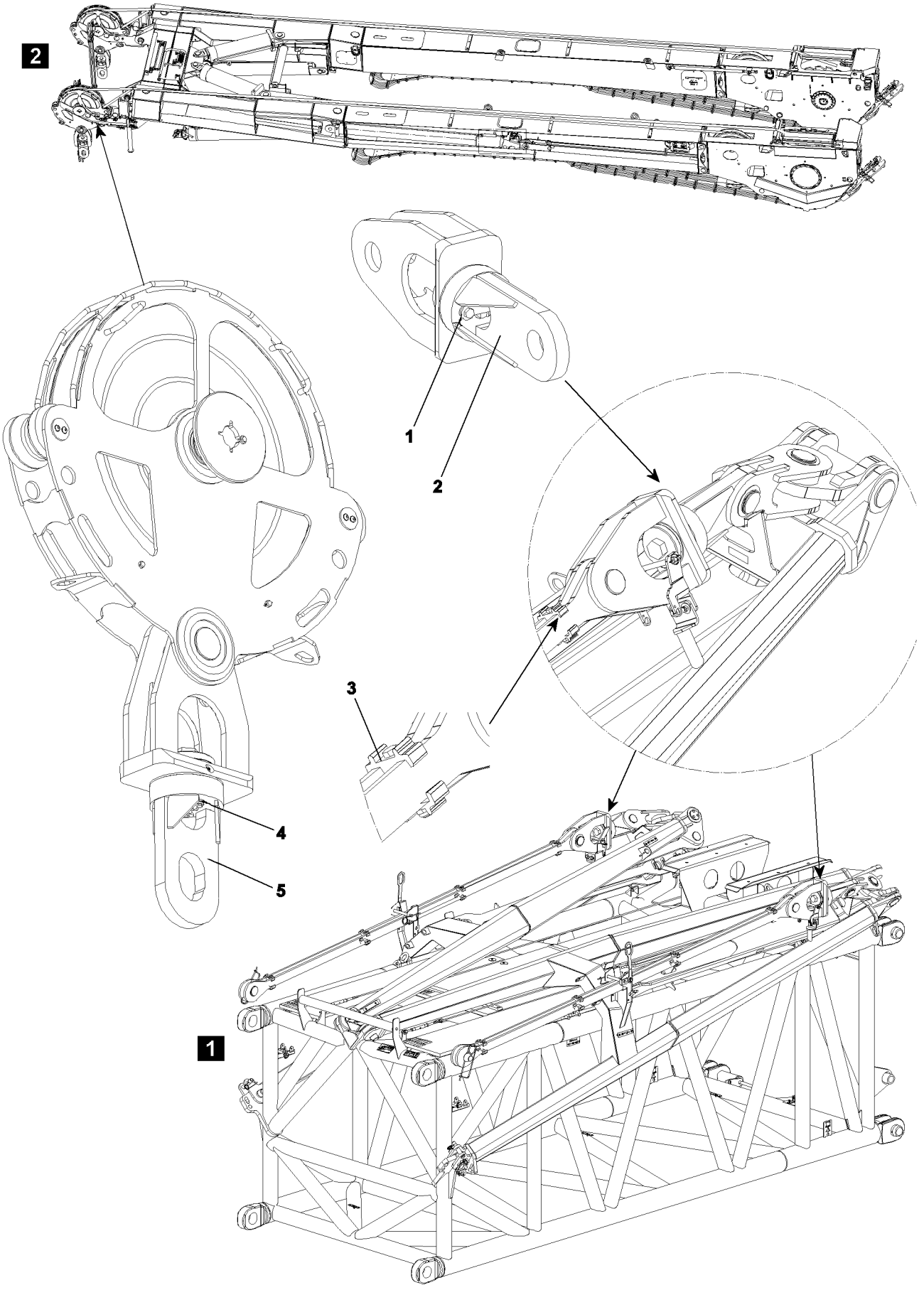

B109096

16 Inspection of the tele extension with eccentric, illustration 1

- Inspection of twist guard **1** for damage and loose screw connection.
- Inspection of rotator **2** for easy turnability.
- Inspection of all clamps **3** for damage and function.

17 Inspection of change over pulleys, illustration 2

- Inspection of twist guard **4** for damage and loose screw connection.
- Inspection of rotator **5** for easy turnability.

18 Inspection of the oil and fuel reservoirs

Visually check the oil and fuel tanks at least once a year for leaks and safe mounting.
Repairs may only be carried out by trained and knowledgeable specialists.
Improper repairs; e.g., welding, hard or soft soldering is not permitted, particularly if the Service department at Liebherr-Werk Ehingen GmbH has not been consulted!

19 Inspection of the auxiliary reeving winch, recovery winch and spare gear winch

Determine the service life of the auxiliary reeving winch, the recovery and spare gear winches from their respective original manufacturer.

20 Appendix

The following is a checklist to assist the inspector during the periodic inspections of Liebherr mobile and crawler cranes.

20.1 Inspection recommendations for periodic inspections of Liebherr mobile and crawler cranes

Company:	**Inspector:**
Crane manufacturer: LIEBHERR	**Crane type:**
Serial number:	**Stock number:**
Construction year:	**Date:**
Inspector's signature for No. 1 to 22:	

1. Inspection category: Crane document						
Component inspected	**A**	**B**	**C**	**D**	**E**	**Comments**
Crane inspection log						
Operating and installation instructions						
Crane control log						
Load chart manual						
Job planner						

2. Inspection category: Signs / identification						
Component inspected	**A**	**B**	**C**	**D**	**E**	**Comments**
Factory tag						
Load data						
Operating specifications label						
Prohibition and command signs						
Other safety signs						

3. Inspection category: Travel gear[1]						
Component inspected	**A**	**B**	**C**	**D**	**E**	**Comments**
Frame[2]						
Supports[3]						
Axles						
Wheels						

3. Inspection category: Travel gear[1]						
Component inspected	**A**	**B**	**C**	**D**	**E**	**Comments**
Tires						
Bearings						
Transmission						
Universal drive shaft						
Leaf springs / springs						
Shock absorbers						
Steering						
Brakes						
Hydraulic axle suspension						

4. Inspection category: Chassis[1]						
Component inspected	**A**	**B**	**C**	**D**	**E**	**Comments**
Coverings						
Treads						
Counterweight holders[2]						
Suspension equipment						
Accesses, ladders						
Hook block mounting[2]						
Boom support[2]						

5. Inspection category: Chassis - driver's cab[1]						
Component inspected	**A**	**B**	**C**	**D**	**E**	**Comments**
Doors						
Windows / windshields						
Windshield wipers						
Mirrors						
Seat						
Heater						
Ventilation						
Sound absorber						
Trip recorder						
First aid kit						

5. Inspection category: Chassis - driver's cab[1]						
Component inspected	**A**	**B**	**C**	**D**	**E**	**Comments**
Spare bulbs						
Hazard warning triangle						
Safety vest						

6. Inspection category: Chassis - drive[1]						
Component inspected	**A**	**B**	**C**	**D**	**E**	**Comments**
Combustion engine						
Exhaust system						
Fuel tank						
Filters						
Sound absorber						
Engine mount						
Oil levels						
Fuel lines						

7. Inspection category: Chassis - hydraulics[1]						
Component inspected	**A**	**B**	**C**	**D**	**E**	**Comments**
Oil container						
Filters						
Pumps						
Motors						
Valves						
Lines						
Hoses						
Cylinder						
Pressure limiting valves						

8. Inspection category: Chassis - pressurized air system[1]						
Component inspected	**A**	**B**	**C**	**D**	**E**	**Comments**
Compressor						
Filters						
Air tanks						
Valves						

8. Inspection category: Chassis - pressurized air system[1]						
Component inspected	**A**	**B**	**C**	**D**	**E**	**Comments**
Lines						
Hoses						
Cylinder						

9. Inspection category: Chassis - electrical system[1]						
Component inspected	**A**	**B**	**C**	**D**	**E**	**Comments**
Motors						
Generators						
Battery						
Switch						
Lines						
Fuses						
Resistors						
Lighting						
Brake lights						
Indicator lights						
Tail lights						
Working lights						
Signaling systems						
Indicator lights						
Battery switch						
Limit switches: Transmission, steering, drive train						
Support pressure indicator[2]						

10. Inspection category: Chassis - control devices[1]						
Component inspected	**A**	**B**	**C**	**D**	**E**	**Comments**
Engine regulation						
Transmission						
Couplings						
Circuits						
Brakes						
Steering						
Indicator displays						
Engine shut off line						

10. Inspection category: Chassis - control devices[1]						
Component inspected	**A**	**B**	**C**	**D**	**E**	**Comments**
Control of supports[2]						
Axle suspension						
Crane leveling						
Rear axle steering						

11. Inspection category: Superstructure						
Component inspected	**A**	**B**	**C**	**D**	**E**	**Comments**
Frame						
Coverings						
Treads						
Bearings						
Counterweights						
Relapse retainer						
Slewing ring connection: Tilt play						
Slewing ring connection: Mounting screws						
Slewing ring connection: Gears						
Slewing gear: Mounting screws						
Slewing gear: Gears						

12. Inspection category: Superstructure - crane operator's cab						
Component inspected	**A**	**B**	**C**	**D**	**E**	**Comments**
Doors						
Windows / windshields						
Windshield wipers						
Mirrors						
Seat						
Heater						
Ventilation						
Sound absorbers						
Joystick for working functions						
Gear shifts						
Safety: Crushing / shear locations						

13. Inspection category: Superstructure - Retaining and protection devices						
Component inspected	**A**	**B**	**C**	**D**	**E**	**Comments**
Accesses, ladders						
Handles						
Coverings						
Covers						
Hatches						
Treads						

14. Inspection category: Superstructure - drive train						
Component inspected	**A**	**B**	**C**	**D**	**E**	**Comments**
Combustion engine						
Exhaust system						
Fuel tank						
Filters						
Sound absorber						
Engine mount						
Fuel lines						

15. Inspection category: Superstructure - hydraulic system						
Component inspected	**A**	**B**	**C**	**D**	**E**	**Comments**
Oil container						
Filters						
Pumps						
Motors						
Valves						
Lines						
Hoses						
Cylinder						
Pressure limiting valves						
Lowering brake valves						
Brake control: Hoist gear						
Brake control: Slewing gear						

16. Inspection category: Superstructure - electrical system						
Component inspected	**A**	**B**	**C**	**D**	**E**	**Comments**
Motors						
Generators						
Batteries						
Switch						
Lines						
Fuses						
Resistors						
Lighting						

17. Inspection category: Superstructure - control systems						
Component inspected	**A**	**B**	**C**	**D**	**E**	**Comments**
Engine regulation						
Transmission						
Flexible couplings						
Circuits						
Engine shut off line						
Monitoring indicators						

18. Inspection category: Superstructure - rope drives						
Component inspected	**A**	**B**	**C**	**D**	**E**	**Comments**
Winch 1[3]						
Winch 2[3]						
Winch 3[3]						
Winch 4[3]						
Rope pulleys						
Rope end connection						
Rope for winch 1						
Rope for winch 2						
Rope for winch 3						
Rope for winch 4						
Guy ropes						

19. Inspection category: Superstructure - hook						
Component inspected	**A**	**B**	**C**	**D**	**E**	**Comments**
Pulleys						
Rope guards on pulleys						
Axle support						
Load hook						
Load hook mounting						
Hook retention						

20. Inspection category: Superstructure - safety and switch systems						
Component inspected	**A**	**B**	**C**	**D**	**E**	**Comments**
Hoist emergency limit switch I						
Hoist emergency limit switch II						
Lowering emergency limit switch I						
Lowering emergency limit switch II						
Boom emergency limit switch I						
Boom emergency limit switch II						
Luffing jib: Boom limit switch I						
Luffing jib: Boom limit switch II						
Load moment limiter						
Angle display: Boom						
Angle display: Luffing jib						
Angle display: Slewing gear						
Safety devices: Control						
Working range limitation						
Pressure sensors						
Speed sensor						
Wind sensor						
Sliding beam monitoring						
Support pressure indicator						
Incline display						
Length indicator: Radius, boom length						
Emergency off system						
Engine stop						

21. Inspection category: Boom						
Component inspected	**A**	**B**	**C**	**D**	**E**	**Comments**
Weld structure						
Rope pulleys						
Change over pulleys feed mechanism						
Luffing cylinder						
Telescoping cylinder						
Boom extension ropes						
Boom retraction ropes						
Boom bearings						
Boom pinning						
Guy rods						
Relapse cylinders						

22. Inspection category: Equipment						
Component inspected	**A**	**B**	**C**	**D**	**E**	**Comments**
Weld structure						
Rope pulleys						
Relapse cylinder						
Relapse support						
Oscillation guard						
A-frame bearings						
Pinning of components						
Guy rods with pinning						
Rods with guide rail on A-frame 2 and A-frame 3						
All limit switches with switch mechanism						

Inspection criteria:
A = present / complete
B = condition / maintenance
C = function
D = repair / replace
E = reinspection required

Evaluation:
Satisfactory = x
Unsatisfactory = -
Not required = 0

Comments:
[1] Inspection of the crane carrier vehicle road worthiness is also fulfilled if it has already been certified by the road traffic department certification authority. For cranes that are not certified for use on public roads, an expert or authorized inspector must conduct the required tests to validate the vehicle's road worthiness.
[2] These inspections must be carried out by an authorized inspector even if it has passed the road traffic department test and is certified.
[3] Inspection of the winches regarding the used portion of the theoretical service life.

B195219

1 Introduction

DANGER
Danger of fatal injury due to defective crane ropes!
▶ Please observe the following criteria.

The rope should be considered to be a wear part, which must be replaced if the inspection shows that its strength has reduced to such an extent that continued use may be dangerous.
Regular inspection of the rope is required in order to safely carry loads with correctly deployed equipment, meaning that the rope must be taken out of service at an appropriate point in time.
The take-down criteria with regard to wire breaks, wear, corrosion and deformation can be applied immediately under all application conditions. The different factors are dealt with in ISO 4309, which is intended to serve as a guideline to competent experts who are involved in the maintenance and inspection of cranes.
We recommend to carry out an annual inspection by an **expert** according to the following standard (ISO 4309).
The ropes should be inspected every 4 years by an **authorized inspector**.
The scope of the inspection and the inspection results must be traceably documented, see addendum 2. This documentation must be retained as part of the crane records!
The criteria that are covered here are intended to provide an appropriate safety margin for movement of loads with cranes until the rope is taken down.

2 Wire rope

2.1 Condition before installing

The rope is usually replaced with a rope that is of the same type as the original. If the spare part is of another type, the user must ensure that the rope characteristics are at least as good as those of the rope that was taken down.
Before installing a new wire rope, the grooves of the rope drums and pulleys must be checked in order to ensure that the spare ropes is placed correctly in the rope grooves (see section entitled “Inspection”).

2.2 Installation

When the rope is removed from the spool or unwound from a reel, it must be ensured that the rope is not twisted, otherwise loops, reverse bends or kinks could originate in the rope.
If the rope is looped over any part of the system when it is not under strain, these areas must be protected accordingly.
Before starting to use the rope on the system, the user must ensure that all components that are functionally associated with the wire rope in connection with the standing components have been set up in such a way that they will operate correctly.
To stabilize the wire rope, a few lifting procedures should be carried out at approximately 10 % of the normal load.

2.3 Maintenance

The maintenance of the wire ropes depends on the type of lifting device, its application, the environment as well as the type of rope that is used. If no other instructions from the crane or rope manufacturer are provided, the wire rope should be cleaned, if possible, and lubricated with grease or oil, particularly in areas in which the rope is subjected to bending when it runs over pulleys.
The kind of grease that is used must be suitable for steel ropes.
Lack of maintenance will reduce the service life of the rope, particularly if the crane is used in a corrosive environment and if re-lubricating is not possible because of the nature of the respective crane application.

2.4 Inspection according to ISO 4309

2.4.1 Frequency

Daily inspection

If possible, all visible parts of the ropes must be checked for general wear and distortion every working day. Special attention must be paid to the rope end connections. Any suspected changes in the condition of the rope must be reported and the rope must be inspected by a trained expert inspector in accordance with the section “Points to check on the rope”.
If the lower rope layers on the drum are used infrequently or not at all, periodically unwind and rewind the entire drum under pretension. A rope is most cost-effective if it is used over its entire length. For that reason, it is recommended to use an appropriate rope length when operating the crane over longer periods.

Note

▶ If a rope is newly placed, then it must be pretensioned and placed with a pretension of at least 10 % of the maximum rope pull.

Special inspection as described in section “Points to check on the rope”

The rope must be checked after any events that may have led to damage to the rope and / or the rope ends and whenever the rope is taken back into service after being taken down and then re-installed.

2.4.2 Checking the spooling behavior of the rope on the cable drum

To avoid spooling errors and associated rope damage, it is necessary to check the spooling behavior daily. If spooling errors are determined, the rope must be reeled off until there are only 3 rope coils on the winch. Thereafter, the rope is to be tensioned with a pretension of at least 10 % of the maximal rope pull and then placed again.

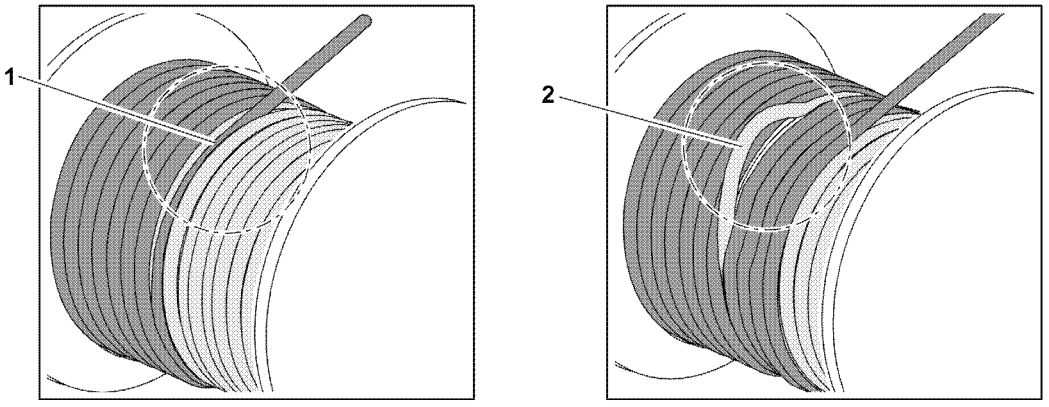

B103456

Possible spooling errors:
– Cutting into the lower rope layers **1**
– Loop formation in the lower rope layers **2**

2.4.3 Points to check on the rope

General

Although the entire length of the rope must be checked, particular attention must be paid to checking the following areas:

– At the rope end points on both sides, for movable as well as fixed ropes.
– The part of the rope that runs through the block or over rope pulleys; particular attention must be paid to parts of the rope that are on rope pulleys when under load (see appendix 1) in systems that carry out repeated movements.
– Parts of the rope that run over a compensation pulley.
– All parts of the rope that can be subjected to wear caused by external elements (e.g. protruding hatch surrounds).
– All parts of the rope that are subjected to the effects of heat.
– On the contact positions of the ropes when spooling up.
– Check the inside of the rope for corrosion and material fatigue.

The results of the inspection must be entered in the inspection log for the system (for typical example see section entitled “Rope inspection log” and appendix 2).

Checking the rope in the uphill pitch zones of the rope coil for flat sections

In the cross area of the coiled up rope layers, the rope is under more strain and can therefore be flattened. To void flat sections, the rope can be shortened on the rope drum fixed point.

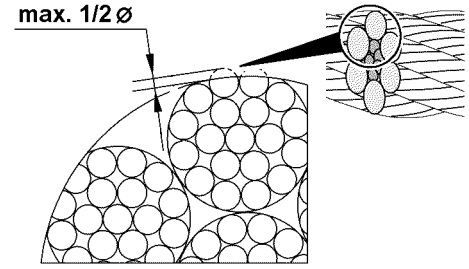

B103454

If the wires in the outer braids are flattened to no more than maximum half the wire diameter:

– Shorten the rope by a length of 1/3 of the rope drum circumference and reset.

DANGER

Rope breakage!

If the following measures are not observed, the rope can break, the load can fall down and fatally injure personnel!

▶ Take the rope down when the take down criteria is reached, as described in section “Take down criteria”!
▶ Take the rope down when the wires in the outer braids are flattened by more than half the wire diameter!

Rope suspension and connection systems - except loops

The rope must be examined at the exits of the rope suspension and connection system, since this area is particularly susceptible to initial signs of material fatigue (wire breaks) and corrosion. The rope suspension and connection systems must also be examined for signs of deformation or wear.
Rope suspension and connection systems with pressure sleeves must undergo the same checking, and the sleeve must be checked for cracks in the sleeve material and possible slippage of the rope in the sleeve.
Detachable rope suspension systems (cotters, rope clamps) must be checked for wire breaks inside and beneath the mount or fastening; it must also be examined whether the cotters and screwed-on rope clamps are firmly connected to the rope. This check should also ensure that the requirements of the rope suspension and connection systems standards and procedural guidelines are complied with.

2.5 Take-down criteria

The safe use of the rope is assessed in accordance with the following criteria:

1.) Number of wire breaks
2.) Broken wire nests
3.) Wire break increase rate
4.) Strand breaks
5.) Rope diameter reduction, including the reduction caused by damage to the rope core
6.) External and internal wear
7.) External and internal corrosion
8.) Deformation
9.) Damage caused by the effects of heat or arc welders

These individual factors must be taken into consideration in accordance with the relevant criteria during all examinations. However, rope quality deterioration frequently results from a combination of the individual factors, meaning that a worsening effect occurs that must be detected by an expert and that influences the decision as to whether the rope has reached its rope removal limit and whether it can continued to be used.
The inspector must investigate if the deterioration has been caused by a fault in the system; if this is the case remedial action should be recommended before placing a new rope.

2.5.1 Number of wire breaks

The number of wire breaks must be determined by visually inspecting the entire length of the rope. When a wire break is found, sections that are 30 × d (d = nominal rope diameter) in length are marked at both sides of this point. These sections must be examined extremely carefully. All wire breaks are now carefully counted in each section. Please compare the number of visible wire breaks with appendix 4. If the number of visible wire breaks is less than the number specified in the chart, then the area in which the most broken wires are found is marked over a length of 6 × d. Count the number of visible wire breaks again and compare the result with appendix 4. If the number of visible wire breaks is less than the number specified in the chart, then the rope does not have to be taken down yet.

Note
Defining the interval until the next inspection
▶ The interval until the next inspection is set depending on the number of visible wire breaks.

2.5.2 Broken wire nests

If the wire breaks are extremely close together and form wire nests, the rope must be taken down. If the frequency of such wire breaks occurs over a rope length of less than **6d** or is concentrated on one strand, taking the rope down is recommended, even if the number of wire breaks is less than the maximum number specified in the tables.

2.5.3 Wire break increase rate

For applications in which the main reason for damage to the rope is material fatigue, the first wire breaks will not occur until a certain time has elapsed, but the number of wire breaks will increase rapidly at ever-decreasing intervals.
Careful checking and logging of the increased number of wire breaks over time is recommended in these cases.

2.5.4 Strand breaks

If an entire strand breaks, the rope must be taken down.

2.5.5 Reduction in rope diameter caused by damage to core rope

The rope diameter can be reduced as a result to damage to the core because of:

1.) Internal wear and notching
2.) Internal wear due to friction between individual strands and wires in the rope, particularly if it is subjected to bending
3.) Steel core breakage
4.) Break in internal layers of multi-strand ropes

If the rope diameter (average of two diameter measurements) is reduced by 3 % of the nominal diameter (rotation resistant ropes) or 10 % of the nominal diameter of other ropes due to these factors, the ropes must be taken down, even if no wire breaks are visible.

Note
Diameter of new ropes
▶ New ropes can have an actual diameter that is greater than the nominal diameter, meaning that proportionally greater wear is possible.

2.5.6 External wear

Abrasion of outer wires of outer rope strands as a result of rubbing contact under pressure with the grooves in the rope reels and drums. This condition is particularly evident in moving ropes in the areas in which they come into contact with rope pulleys when the load is being moved and braked, and manifest themselves as flattened surfaces on the outer wires. Abrasion is exacerbated by a lack of or incorrect lubrication as well as the effects of dust.
Wear reduces the breaking strain of steel ropes because the cross section of the steel is reduced. The rope must be taken down if the actual rope diameter has reduced by 7 % or more because of outer wear, even if no wire breaks are visible.

2.5.7 External and internal corrosion

Corrosion is a particular problem in maritime climates and atmospheres that are polluted by industrial emissions, reducing breaking strain and accelerating material fatigue because of the reduction in the rope material cross section, leading to irregular surfaces which are the starting point for stress cracks. Extreme corrosion can reduce the elasticity of the rope.

1.) External corrosion
Corrosion of the outer rope wires can be determined by visual inspection.
2.) Internal corrosion
This condition is more difficult to detect than external corrosion.

Note
Internal corrosion
▶ If there are any signs of internal corrosion the rope must be checked by a competent expert.

DANGER
Occurrence of internal corrosion!
▶ If the suspicion of extreme internal corrosion is confirmed, the rope must be taken down immediately.

2.5.8 Rope deformations

A visible change to the rope structure is referred to as “rope deformation” and can cause a change at the deformation point that results in irregular rope tension.
A distinction is made between the following important types of cable deformation on the basis of the cable appearance (see following sections):

1.) Corkscrew-like deformation
2.) Basket formation
3.) Strands protruding from the rope
4.) Wire loop formation
5.) Flattening
6.) Reverse bends or knots
7.) Kinks

Corkscrew-like deformation (see appendix 3, table 1)

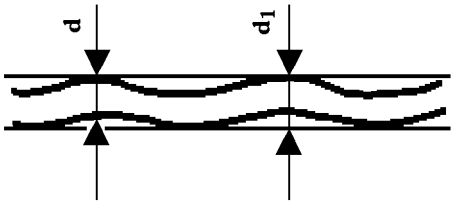

B195723

Corkscrew-like deformation

If there is any corkscrew-like deformation the rope must be taken down if the following condition is net:

$$d_1 > \frac{4\,d}{3}$$

B195722

d = nominal diameter of rope
d_1 = rope sheath diameter of the distorted rope

Basket formation (see appendix 3, table 2)

If there are kinks in the rope, it must be replaced immediately.

Strands protruding from the rope (see appendix 3, table 3)

The rope must be replaced immediately if this kind of deformation occurs.

Wire loop formation (see appendix 3, tables 4 and 5)

In this case, certain wires or groups of wires protrude from the rope at the side facing the rope pulley in the form of loops - this is normally the result of sudden strain. If serious deformation occurs, the rope must be taken down.

Flattening (see appendix 3, tables 8 and 9)

Flattening is the result of mechanical damage; if it is pronounced the rope must be replaced.

Reverse bends or knots (see appendix 3, tables 6 and 7)

If the rope has any reverse loops or knots it must be taken down immediately.

Kinks (see appendix 3, table 10)

Kinks are angled deformations in the rope caused by external influences. If there are kinks in the rope, it must be replaced immediately.

2.5.9 Damage caused by the effects of heat or arc welders

Steel ropes that have been subjected to extremely high temperatures, which can be detected externally because of the coloring that it causes, must be taken down.

2.5.10 Distortion on non-rotation resistance control ropes

Note

▶ The erection and control procedure must be carried out with a pretension of at least 10 % of the maximum rope pull.

For crane types with control winches for the boom control, especially the first rope layer of the control winch must be checked for rope dents and / or rope distortions.

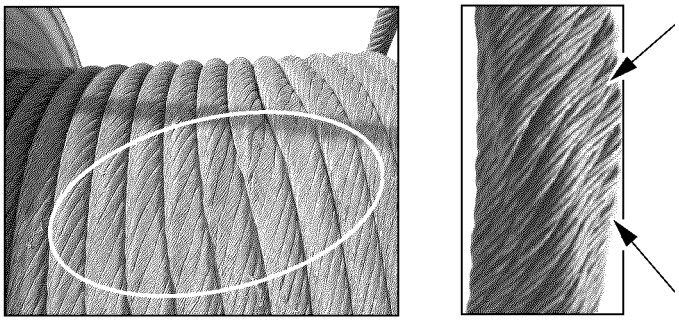

B114002

Distortions on control ropes

– At a distortion of more than 5 %, the control rope must be checked before every assembly and erection procedure and the distortion must be documented. Example for inspection protocol: See Addendum 2.

– At a distortion of more than 10 %, the control rope must be taken down.

Calculation formula for rope distortion

$$[V]\,\% = \frac{(d_{max} - d_{min})}{d} \times 100$$

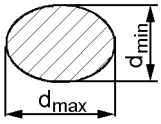

B114001

[V] % = rope distortion in %
d = control rope nominal diameter
$\mathbf{d_{max}}$ = largest diameter of distortion area
$\mathbf{d_{min}}$ = smallest diameter of distortion area

3 Operating behavior of steel ropes

Exact logging of information by the checker can be useful for predicting the behaviour of a certain type of steel rope on a crane. This information is useful for planning and adapting maintenance instructions and controlling the stocking of spare ropes. The use of such a prediction system should not cause the examinations to be less strict or the rope usage time to be extended beyond the criteria that are specified in the previous sections of this guideline for monitoring and taking down of crane ropes.

4 Condition of equipment that is functionally associated with the rope

Note
Groove radius
▶ The radius must not be smaller than the actual diameter of the rope.

Rope drums and pulleys must be checked at regular intervals in order to ensure that all these components rotate correctly in their bearings. Stiff or blocked rope pulleys wear rapidly and unevenly and cause serious rope abrasion. Ineffective compensation pulleys can lead to irregular rope tension. The radius at the bottom of the rope grooves of all rope pulleys and the drum must be suitable for the nominal diameter of the rope. If the radius has become too big or too small the rope groove must be reworked or the rope pulley replaced.

5 Rope inspection log

The user must provide a log for each of the regular inspections in which all rope inspection information is recorded. Typical example of a log - see appendix 2.

6 Rope storage and marking

Clean, dry rope storage facilities must be provided in order to prevent damage to ropes that are not in use; it must also be ensured that the ropes can be clearly and unambiguously assigned to their checking logs.

7 Wire ropes and rope end connections

DANGER
Risk of accident!
▶ Correct choice and use of the wire rope and the rope end connections are a decisive precondition for proper and accident-free crane operation.

The wire ropes and rope end connections selected in accordance with their usage. It must be determined whether a rotation-resistant or non-rotation free rope is required. The type of rope that is selected then determines the type of rope end connections that are used.

7.1 Rotation-resistant ropes and their rope end connections

Rotation-resistant ropes are special ropes that produce extremely little torque and twisting at the rope end connection when they are under strain.

Note
▶ Rotation-resistant ropes are used as **hoist ropes**.

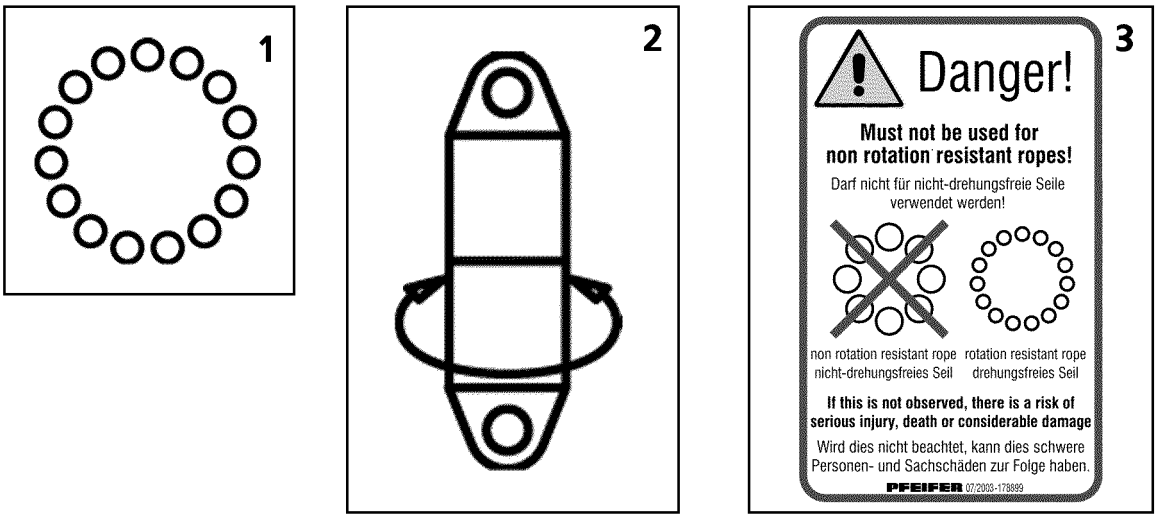

B195653

Typical rotation-resistant wire rope structures are ropes with 15 to 18 outer strands. Rotation-resistant ropes are symbolically depicted with 15 outer strands (circles) (see table **1**).
Rotation-resistant ropes can be optionally used with the following rope end connections:

– Rope end connection **rotating** in the form of a PFEIFER link **with** swivel or spin stabiliser / swivel.
– Rope end connection **non-rotating** in the form of a PFEIFER link **without** swivel or gib and cotter.

If possible, preference should be given to the use of a twisting rope end connection to reduce torsional stress with **rotation-resistant ropes** (see table **2**).

DANGER
Danger of severe injuries to personnel and property damage!
▶ **Never** use rotating rope end connections with non-rotation free ropes!

Note
Usage warning notes
▶ The usage warning notes on the rotating PFEIFER link with pulley indicates that this rope end connection may **not** be used for non-rotation free ropes (see table **3**)!

7.2 Non-rotation free ropes and their rope end connections

Non-rotation free ropes generate high torque levels at the rope end connection when they are under load. For this reason, the rope ends must be protected from twisting using an appropriate rope end connection to prevent the rope from unscrewing under strain!

Note
▶ Non-rotation free ropes are used as **guy ropes** or **control ropes**.

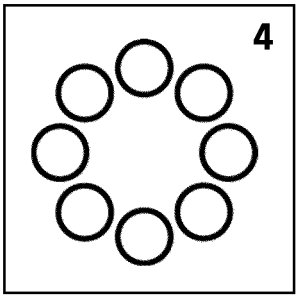

B195654

Typical non-rotation free wire rope structures are ropes with 8 to 10 outer strands. Twisting ropes are symbolically depicted with 8 outer strands (circles) (see table **4**).
Non-rotation free ropes can only be used with the following rope end connections:

– Rope end connection **non-rotating** in the form of a PFEIFER link **without** swivel or gib and cotter. A non-rotating rope end connection is also the mount of the rope on the fixed point of the winch drum.

DANGER
Danger of severe injuries to personnel and property damage!
▶ **Never** use rotating rope end connections with non-rotation free ropes!
▶ Never install a twist compensator / swivel!

Note
Usage warning notes
▶ The usage warning note on PFEIFER links without swivel and cotter indicates that this rope end connection may **not** be used for non-twist free ropes **in combination** with a twist compensator / swivel (see table **5**)!

blank page!

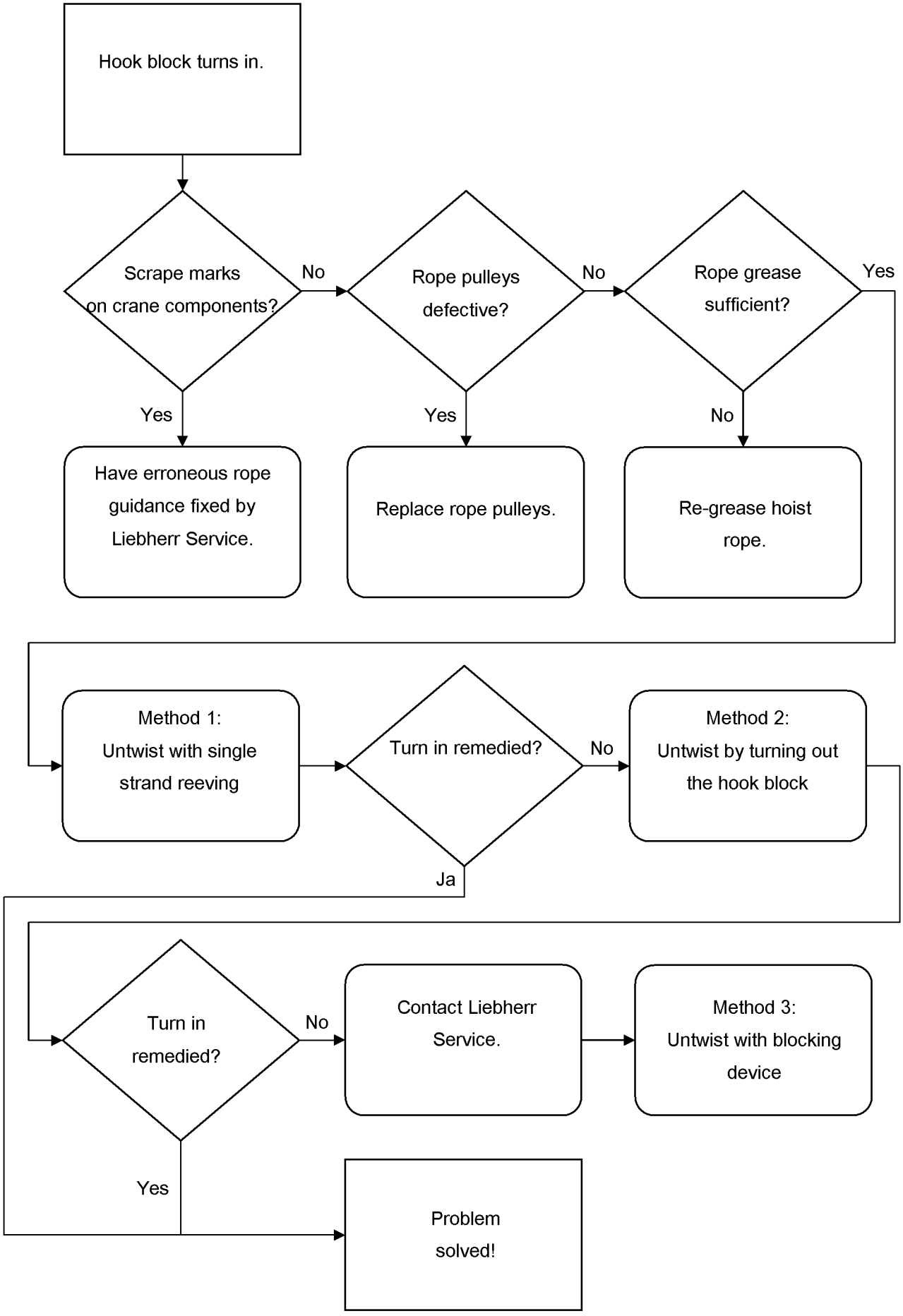
Hook block turns in.
Scrape marks on crane components?
No
Rope pulleys defective?
No
Rope grease sufficient?
Yes
Yes
Yes
No
Have erroneous rope guidance fixed by Liebherr Service.
Replace rope pulleys.
Re-grease hoist rope.
Method 1: Untwist with single strand reeving
Turn in remedied?
No
Method 2: Untwist by turning out the hook block
Ja
Turn in remedied?
No
Contact Liebherr Service.
Method 3: Untwist with blocking device
Yes
Problem solved!

B106181

8 Twisting caused by stretching in rotation-resistant ropes and its remedy

For procedure, see illustration opposite.

WARNING
Damage to the rope!
▶ Please proceed with extreme caution when performing the following actions.
▶ Observe the following instructions exactly.

8.1 General

The cause for the turn-in of the hook block can have various reasons. For that reason, check the crane first for the following peculiarities:

– Scrub marks: Are hoist rope scrub marks present on the crane components? If scrub marks are present, check the hoist rope pathway and rectify.
– Rope pulleys: Has the groove diameter become too small, or do the rope pulleys exhibit a negative profile?
  • Groove diameter dimensional stability must be present.
  • The rope groove must be uniformly smooth without a hoist rope negative profile.
  • If this is not the case, the rope pulley must be exchanged.
– Rope greasing: Has the hoist rope been sufficiently greased? If the rope surface is dry, the hoist rope must be re-greased.

If the crane does not display other features, the hoist rope must be spun out. Following, two methods are described by which the hoist rope can be spun out. The methods must be applied in the described sequence.

8.2 Turning out extremely rotation-resistant hoist ropes

8.2.1 Method 1: Spinning out with one strand reeve

1.) Reeve in the one strand hoist rope.
2.) Extend the boom to the maximal boom length and hook height.
3.) Lower hooks to approximately 1 m above the ground and allow the hoist rope to spin out.
4.) With an empty hook block, carry out one complete hoist cycle.
5.) Lower the hook again to approximately 1 m above the ground and allow the hoist rope to spin out again.
6.) Reeve the number of strands of hoist rope carefully and spin free where the twisting of the hook block is largest.
7.) Carry out at least two complete hoist cycles at maximum boom length and hook height, in order to divide the spin out onto the entire rope length.

If the hook block turns in further, method 2 must be used.

8.2.2 Method 2: Spinning out by turning out the hook block

1.) The hook block is reeved with the largest number of strands are twisted.
2.) Extend the boom completely and lower the hook block.
3.) Attach a load of approximately 10 % of the nominal rope pull on the hook block.
4.) Before lifting the load, an assistant must carry out the following measures: Rotate the twisted hook block to a straight position by hand until the rope strands no longer touch each other.
5.) Rotate the hook block further by a complete revolution, the rope strands touch each other again.
6.) Hold the hook block in the prescribed position until the load lifts off the ground.
   - **CAUTION:**
     When the hook block comes under load, it will attempt to rotate back to a straight position. Release the hook block.
7.) Move the load until approximately 15 m before the uppermost hook position of the completely extended boom.
8.) Lower load and set it down. The twisting should now be remedied.

If the hook block turns in further, then the process must be repeated. If this does not remedy the problem, contact Liebherr Service.

blank page!

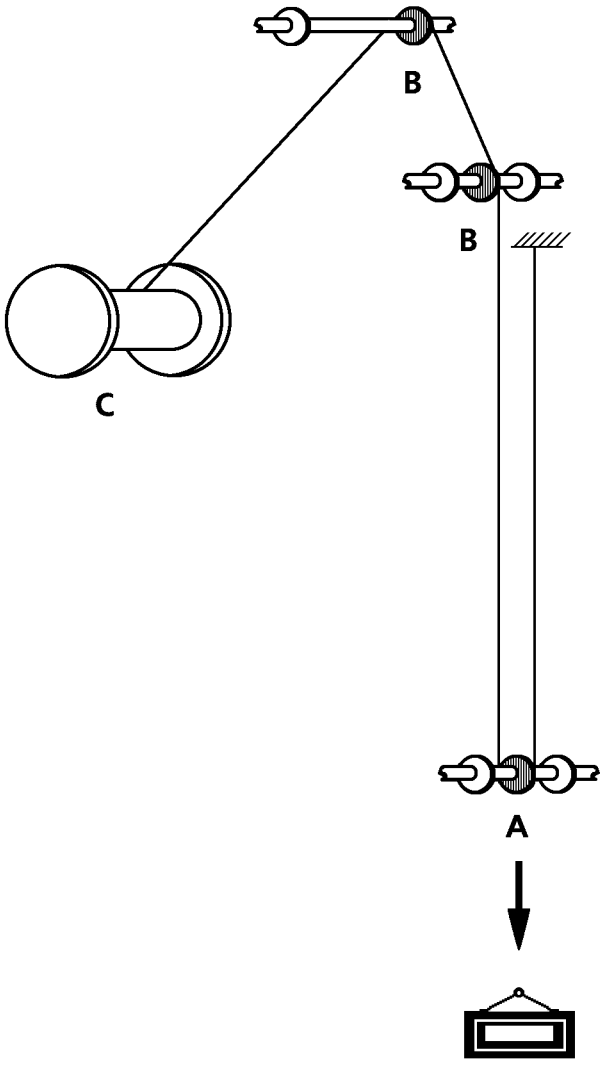

Fig. 1

B193940

A Hook block **B** Rope pulley **C** Rope drum

9 Appendix 1

Diagram of possible defects, with reference to different areas that must be considered during inspection:

1.) Check rope end connection at rope drum
2.) Examine for incorrect spooling up, which causes deformation (crushing) and wear, which can have serious consequences at rope crossing points
3.) Examine for wire breaks
4.) Examine for corrosion
5.) Look for deformation as a result of hook block loading
6.) Inspect parts of rope that run over rope pulleys for wire breaks and wear
   - Rope suspension and rope mountings:
   - Check for wire breaks and corrosion
   - Also inspect parts of rope that run on or next to compensating pulleys
7.) Look for deformation
8.) Check rope diameter
9.) Carefully check length of rope that runs through the hook block, particularly the part that rests on the rope pulley under load
10.) Check for wire breaks and surface wear
11.) Check for corrosion

Datasheet for ropes	Machine: ..... Application: .....
Construction:	Date fitted: .....
Direction of rope lay: RH / LH [1]	Date discarded: .....
Type of lay: Ordinary / Langs [1]	
Nominal diameter:	Minimum breaking load: .....
Tensile grade:	Working load: .....
Quality: ungalvanized / galvanized [1]	
Type of core:	Diameter measured: .....
steel / natural or synthetic textile / mixed [1]	under a load of: .....
Preformation:	
Length of rope:	
Type of termination:	

Visible broken wires		**Abrasion of outer wires**	**Corrosion**	**Reduction of rope diameter**	**Positions measured**	**Overall assessment**	**Damage and deformations**
Number in length of **6 d**	Number in length of **30 d**	Degree of deterioration [2]	Degree of deterioration [2]	%		Degree of deterioration [2]	Nature

	Date: ..... Signature: .....
Rope supplier:	Number of working hours: .....
Other observations:	Reasons for discard: .....

[1] Delete as applirope
[2] In these columns, describe the latter as: slight, medium, high, very high, discard.

B105034

10 Appendix 2

Typical example for an inspection log

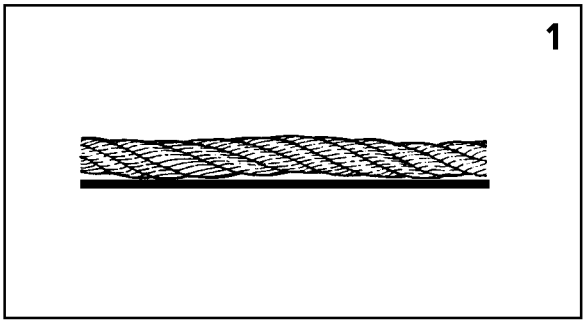

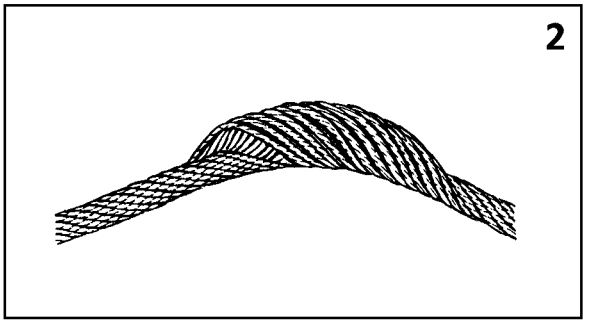

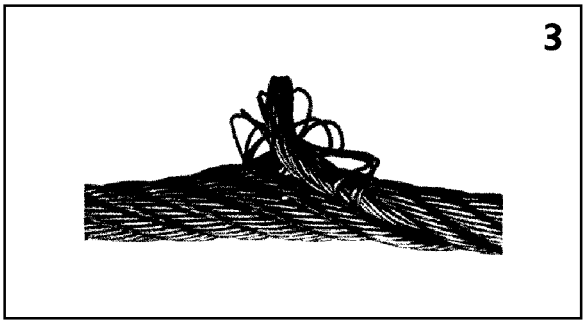

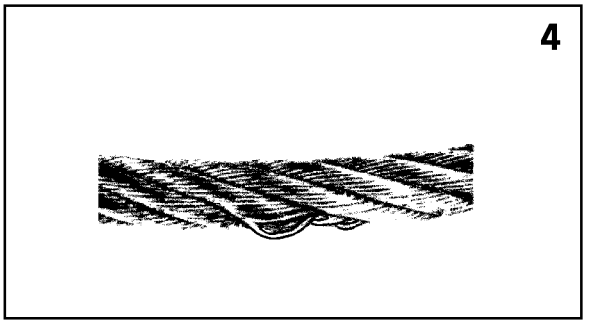

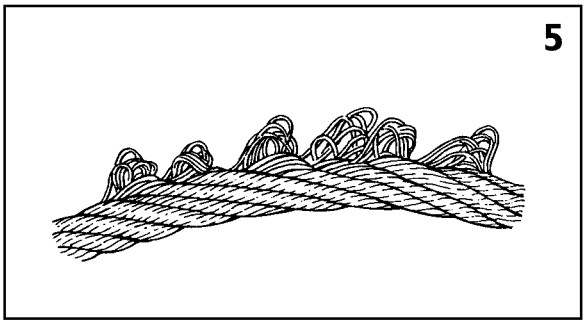

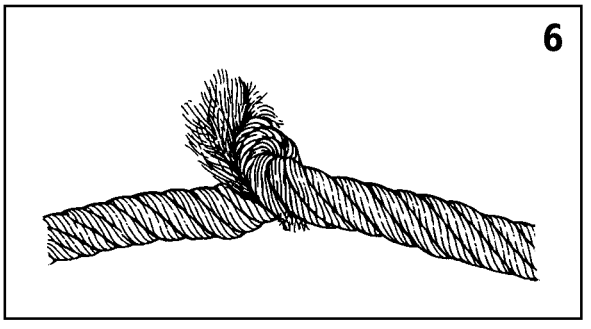

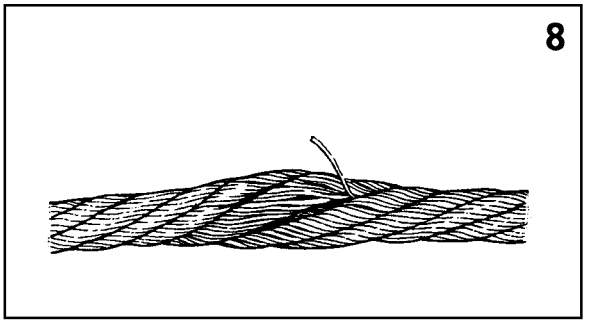

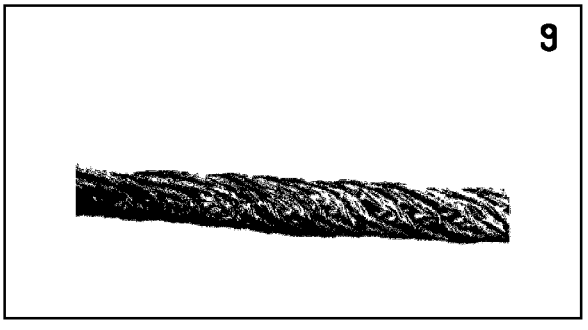

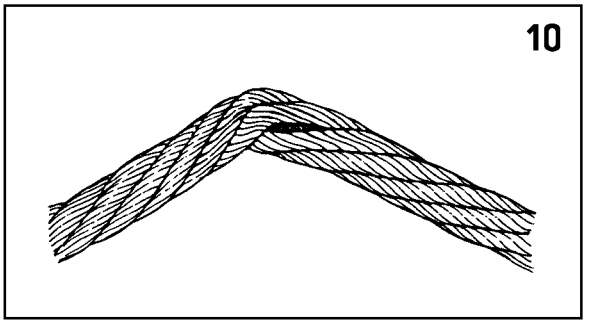

B194071

11 Appendix 3

Note
Depiction of deformation
The deformation that is depicted on many pictures is exaggerated in order to show it more clearly.
▶ The ropes that are shown would have had to be taken down long before they reached this stage.

Typical examples of damage that can occur to wire ropes:

– Picture **1**:
  Corkscrew-like deformation: deformation where rope is in the form of a spiral along its longitudinal axis.
  The rope must be taken down if the deformation exceeds the value that is mentioned in chapter “Take-down criteria”, section entitled “Corkscrew-like deformation”.
– Picture **2**:
  Basket formation on a multi-strand rope.
  Reason for immediate rope take-down.
– Picture **3**:
  Steel core rope exit, generally in combination with basket formation in the immediate vicinity.
  Reason for immediate rope take-down.
– Picture **4**:
  Only one strand is affected by loop formation, although the examination of a longer section of rope shows that the deformation is visible at regular intervals; normally deformation along the length of a lay.
  Reason for immediate rope take-down.
– Picture **5**:
  Serious worsening of the previous problem (see picture **4**) (typical of hoist rope in a ram system).
  Reason for immediate rope take-down.
– Picture **6**:
  A serious reverse bend or knot.
  Note the destroyed lay that leads to the exit of the fibre layer.
  Reason for immediate rope take-down.
– Picture **7**:
  A wire rope that has been kinked during installation but still taken into operation, and now suffers from localised wear and substandard rope tension.
  Reason for rope take-down.
– Picture **8**:
  Crushing as a result of local mechanical damage causing imbalance beneath the strands, resulting in wire breaks.
  Reason for rope take-down.
– Picture **9**:
  Crushing of a multi-strand rope caused by incorrect spooling up on the rope drum.
  Note increase in length of outer strands of lay. Here too, imbalance would occur under load.
  Reason for rope take-down.
– Picture **10**:
  Example of serious kinking.
  Reason for rope take-down.

12 Appendix 4

Guideline for number of wire breaks in accordance with ISO 4309
for power train classification groups M1, M2, M3 and M4

12.1 Wire ropes

12.1.1 Hoist ropes

Rope diameter	Number of visible broken wires requiring rope removal, over a length of	
	6 x rope diameter	30 x rope diameter
See chapter 1.03	2	4

Note
▶ If a rotation resistant hoist rope is placed on winch 5, then it can be used for the jib adjustment or as a hoist rope for the boom nose!

WARNING
Use of hoist rope as control rope!
Frequent jib adjustment movements with a rotation resistant hoist rope lead to significant wear and require premature take down of the hoist rope!
If it is not recognized in time that the rope needs to be taken down, the hoist rope can rip!
The crane can topple over and personnel can be severely injured or killed!
▶ In case of frequent jib adjustment movements, a non-rotation free control rope must be placed!
▶ Make sure that no spin stabilizer / swivels are used as rope end connections when using a non-rotation free control rope!
▶ Remove spin stabilizer or swivels!

12.1.2 Telescoping ropes

Note
▶ Installed in cranes with telescopic boom with rope mechanism!

Rope diameter	Number of visible broken wires requiring rope removal, over a length of	
	6 x rope diameter	30 x rope diameter
See chapter 1.03	7	14

12.1.3 Boom retraction ropes

Note
▶ Installed in cranes with telescopic boom with rope mechanism!

Rope diameter	Number of visible broken wires requiring rope removal, over a length of	
	6 x rope diameter	30 x rope diameter
See chapter 1.03	6	13

12.1.4 Assembly ropes

Note
▶ Installed in cranes with auxiliary winch!

Rope diameter	Number of visible broken wires requiring rope removal, over a length of	
	6 x rope diameter	30 x rope diameter
See chapter 1.03	2	4

12.1.5 Guy ropes, control ropes

Note
▶ Installed in cranes with boom guying and / or luffing lattice jib!

Rope diameter	Number of visible broken wires requiring rope removal, over a length of	
	6 x rope diameter	30 x rope diameter
See chapter 1.03	6	13

WARNING
Non-rotation free control ropes can rip off!
If a non-rotation free control rope is used in connection with a rotating rope end connection, the rope damage can occur or the control rope can rip off!
The crane can topple over and personnel can be severely injured or killed!
▶ Make sure that no spin stabilizer / swivels are used as rope end connections when using a non-rotation free control rope!
▶ Remove spin stabilizer or swivels!

9 General notes

B195219

1 Checks before start up

We recommend to carry out the following visual inspections in the engine compartment before start up:

- Check if all oil and fuel lines are leak-free and dry.
- Check if the injection pump, fuel and oil filters are leak-free.
- Check if the hydraulic units, the hydraulic motors for the fan drives and their supply lines are leak-free.
- Check if the exhaust system and exhaust flange are leak-free.
- Check if the exhaust flap retention flap is moveable.
  The return springs that open the exhaust flaps must function properly, because seized (therefore closed) exhaust flaps during engine operation will result in considerable overheating.
- Inspect electrical wiring and ensure that there is sufficient clearance to hot exhaust system piping and that it is properly fastened and that there is no insulation damage.
- Inspect the soundproofing mats for soiling from solutions and large quantities of oil or fuel, as well as other damage.
  Immediately remove any soundproofing mats that are excessively damaged or soiled and replace them with original parts.
  When cleaning the engine and gear compartments, observe the care instructions for the sound insulation, see Crane operating instructions, chapter 7.01.

2 Repair and maintenance tasks

Note

▶ Repair and maintenance tasks are to be carried out carefully!

Take particular precautions regarding cleanliness when replacing diesel and oil filters. Remove any diesel fuel or oil that has leaked. Perform a test run on the systems to ensure that there are no leaks.
The diesel engine V-room must be inspected regularly, and any oil or diesel fuel must be cleaned up, particularly after repairs and servicing. Any fuel that has collected in V-room can spread throughout the engine room while the crane is travelling on the road and can ignite if it comes into contact with hot surfaces.
We stress that all electrical wiring must be installed according to the regulations and must be properly fastened. Immediately repair any wiring insulation that exhibits signs of chafing or brittleness as a result of operational activities. Any wiring that is not in perfect condition is to be immediately and professionally replaced.
We would like to particularly emphasise that over time fuel and oil lines can become brittle or porous as they age. Any hoses that appear to be excessively porous should be replaced immediately, see crane maintenance chapter.

3 Important servicing

The following service tasks are to be carried out regularly:

- Check gearbox and engine oil levels regularly.
  Add oil as required during normal operation. If oil consumption or loss is unusually high, determine the cause and correct.

4 Maintenance notes for replacement parts

The following is to be considered when replacing drive components such as engine, gearbox or axles:

– Before start up, be sure to refill with the correct type of oil to the center of the min. - max. marks. For type of oil, refer to the data tag and service items and lubricants.
– Conduct initial maintenance according to chapter “Maintenance intervals”; thereafter, maintain in accordance with the specified periodic maintenance intervals.
– Maintain break-in instructions, see Crane operating instructions, chapter 2.02.

5 Recommendations for travel operation

NOTICE
Risk of engine damage!
If the permissible engine speed in exceeded, the engine can be seriously damaged!
▶ Do not exceed the permissible engine rpm!

6 Disposal of fuels and greases

Note
Engine, gearbox and hydraulic oils, brake fluids, grease and fuels are dangerous waste materials!
▶ These materials must be disposed of separately!
▶ These materials may not be disposed of in the ground or in any bodies of waters: wastewater systems, sewers or groundwater!
▶ Comply with the regulations specified by local authorities before disposing of any of these items or substances!

Note
Radiator fluid for diesel motors and heating systems are dangerous waste materials!
▶ Undiluted antifreeze / corrosion inhibitor must be handled as dangerous waste materials!
▶ Follow the regulations of the local authorities when disposing of used cooling fluids (mixture of antifreeze / corrosion inhibitor and tap water).

90 Appendix

B195219

1 Preface

This crane may only be used in flawless technical condition and according to its mission as well as with constant awareness of safety and dangers. Any problems, which could affect safety must be fixed immediately.

Note

▶ Modifications on the crane may only be made with written approval by Liebherr-Werk Ehingen GmbH.

1.1 Changes and updates for Operating instructions

Changes and updates for Operating instructions, which you receive in the circular as Customer information, must be filed in the Operating instructions for the respective crane under chapter 90.05.

Note

Procedure after receiving customer information!

▶ Attach the decals **1**, which are enclosed in the customer information to the footer of the respective chapter. See following example.

▶ Fill out the update confirmation form in chapter 90.05 of the operating instructions,

▶ Insert changes and updates under chapter 90.05 of the operating instructions.

B113870

Example:

A change or update affects the Crane operating instructions, chapter 2.04.

▶ Attach the decal **1** in the footer of chapter 2.04.

B195219

1 Update confirmation

Chapter	Change / update	Completed	
		on	by

2 Customer information

Index

1
1 Description of crane **25**

2
2 Safety **49**

3
3 Crane assembly **185**

4
4.Adjustment of track width **534**
4 Operation of crane superstructure **307**

5
5 Equipment **831**

6
6 Additional equipment **1153**

7
7725039 – Warning of high voltage **131**
772564008 – Swing range **131**
772580408 – Limitation of maximum travel speed **131**
7 Service and maintenance **1375**

8
8 Inspections of cranes **1489**

9
90 Appendix **1629**
9412158 – Read operating instructions **132**
97001802 – Falling platform **152**
97003109 – Access of step ladder **137**
97003110 – Fold the step ladder in and out **137**
97003112 – Maximum suspended load **142**
97004046 – Safety harness, maximum two persons **133**
97006167 – Identification of support base **137, 138**
97008514 – Warning of head injuries **138**
97009799 – Data logger **138**
97011336 – Permissible transport weights of the compone **153**
97011689 – Warning of crushing danger **140**
97011690 – Overload of cab is prohibited **140**
97012095 – Maximum load **139**
97012737 – Danger of accident **141**
97012949 – Maximum load **139**
97016304 – Notice sign for refueling **140**
97016392 – Crushing danger for feet **141**
97016911 – Risk of collision **148**
97023034 – Disassembly **141**
97027147 – Overloading of combi box is prohibited **133**
97036732 – Access via 3-point support **142**
97036733 – Fastening point **133**
97036734 – Rigging point **151**
97036735 – Fastening point for lattice section **135**
97036736 – Fastening point for lattice sections **135**
97036917 – Maximum suspended load **143**
97037383 – Notice sign for urea **143**
97037871 – Fastening points for lattice sections **136**
97037952 – Warning of fatal electric shock **143**
97038442 – Fastening point for lattice section **135**
97038452 – Fastening point for lattice sections **135**
97038454 – Fastening point for lattice sections **136**
97039035 – Suspended load Assembly unit **136**
97039753 – Danger of stumbling **147**
97041305 – Warning of overload of components **144**
97042797 – Warning of overload of components **144**
971494208 – Limitation of maximum travel speed **145**
971539808 – Warning notice for unpinning the auxiliary **145**
971539908 – Warning notice for unlocking the auxiliary **146**
973974408 – Permissible transport weights of the compon **152**
973974608 – Permissible transport weights of the compon **153**
976624808 – Fasten the load **155**
977055908 – Fastening point for swingable sliding beam **145**
978673908 – Warning of suspended load **146**
978674008 – Access for unauthorized personnel prohibite **147**
978674108 – Warning of crushing danger **147**
978674308 – Radio remote control **148**
978674408 – Danger of burning hands **148**
978674508 – Warning of rotating parts **149**
978674608 – Crushing danger for hands! **149**
978674808 – Personal protective equipment **149**
978674908 – Walking on the area is prohibited **150**
978675008 – Access prohibited **150**
978687408 – Rigging point **150**
978867108 – Warning of fatal electric shock **151**
979383308 – Notice sign for oil change **151**
979561108 – Counterweight **152**
9 General notes **1625**

A
Accessible walking and stepping surfaces Crane chassis **183**
Access to lattice sections or booms **74**
Access to the automatic lubrication (intermediate lubric **1453**
Access to the crane **172**
Acoustic and optical warning devices **565**
Activating the radio remote control **1309**

Adding service fluids **173**
Adding the engine independent auxiliary heater at igniti **1189**
Adding the engine-independent auxiliary heater in progra **1193**
Adding the engine-independent auxiliary heater manually **1185**
Adding Urea solution **1384, 1439**
Air filter **1429**
Air dryer of the compressed air system of the crane superstructure **1467**
Additional controls for certain crawler cranes **836**
Additional controls for cranes with crane support **836**
Additional controls for cranes with derrick boom **836**
Additional controls for cranes with luffing auxiliary bo **836**
Additional controls for freestanding crane operation (on **836**
Additional monitoring functions for engines without SCR- **1119, 1239**
Additional monitoring functions for engines with SCR-sys **1115, 1235**
Additional settings for travel operation **1347**
Adjusting the brightness level of the BTT display **1097, 1215**
Adjusting the consoles **497**
Adjusting the contrast of the BTT display **1097, 1215**
Adjusting the crane operator's seat **495**
Adjusting the folding jib angle hydraulically* **953**
Adjusting the heater / ventilation **503**
Adjusting the “lower” / “upper” air distribution **1163**
Adjusting the recirculating air / fresh air **1159**
Adjusting the track width from the crane operator's cab **539**
Adjusting the track width **535**
Adjusting the track width with the Bluetooth™ Terminal **545**
Adjusting the track width with the radio remote control **551**
Alarm functions **399, 1265**
Aligning the BTT to the crane **1099**
Aligning the crane **89**
Aligning the radio remote control to the crane **1217**
An error message occurs **1367**
Angular pulling **699**
Antifall guards on the crane **156**
Appendix 1 **1617**
Appendix 2 **1619**
Appendix 3 **1621**
Appendix 4 **1621**
Appendix **1590**
Ascent and descent on the crane chassis **175**
Assembling / disassembling the wedge lock **655**
Assembling / disassembly of hydraulic lines **879**
Assembling the auxiliary equipment* **761**
Assembling the crawler carrier **187**
Assembling the crawler carrier **229, 295**
Assembling the folding jib **893**
Assembling the hydraulic folding jib* **1135, 1297**
Assembling the separately transported auxiliary boom **1035**
Assembling the separately transported folding jib on the **919**
Assembling Winch 2* **993, 997**
Assembly **1011, 1075**
Assembly / disassembly **843**
Assembly / disassembly of booms **845**
Assembly / disassembly of electrical lines **880**
Assembly of counterweight **667**
Assembly of lattice sections for lattice mast cranes **867**
Assembly of lattice sections for telescopic cranes **855**
Assembly of the 3-piece folding jib **911**
Assembly of the 4-piece folding jib **915**
Assembly of the auxiliary boom carried on the crane **1029**
Assembly of the double folding jib carried on the crane **905**
Assembly of the single folding jib carried on the crane **899**
Assembly of winch 2 with auxiliary crane **997**
Assembly procedure **1075**
Assembly drawings **844**
Assembly winch 2 **993**
Assignment of the crane superstructure to the travel di **1349**
Assignment of the crane superstructure to the travel dir **731**
Attaching / removing the hoist limit switch weight **651**
Attaching the hoist limit switch weight **651**
Attaching the load **695**
Automatic support* **1131, 1251**
Automatic telescoping **613**
Auxiliary boom **1022**
Auxiliary boom **31**
Auxiliary boom (THK)* **31**
Auxiliary counterweight **35**
Auxiliary equipment **34**
Auxiliary guying **839**
Auxiliary jib **34**

B

Ballasting / turntable lock **1137, 1299**
Ballast plate **41**
Ball valve positions during emergency operation **1203**
Battery maintenance **1467**
Bleeding repaired lubrication lines **1411**
Bleeding the central lubrication system **1409, 1455**
Bleeding the heating system **1199**
Bleeding the heating system with engine independent auxi **1199**
Bleeding the heating system without engine independent a **1199**

Bleed the fuel line. **1201**
Block position of relapse cylinders when setting down th **836**
Bluetooth™ Terminal (BTT) **1082**
Boom nose - telescopic boom **1007**
Breaking away fixed loads **701**
Bypass for assembly and disassembly **877**
Bypassing the hoist top shut off **841**
Bypassing the hoist top shut off **817**
Bypassing the overload protection **839**
Bypassing the overload protection **840**
Bypassing during crawler assembly **878**
Bypass of overload protection **559**

C

Calculating the minimum required hook block weight **1058**
Calculation examples **1060**
Calculation of required length of transfers in rising / **707**
Calling up / closing the system screen **1097, 1215**
Care instructions for cleaning the crane **1379**
Care instructions for sound insulation (soundproofing) **1378**
Care instructions for the driver's cab and the crane cab **1379**
Carrying out the erection / take down procedures **821**
Catch bar **572**
Central ballast 10 t **42**
Central ballast combinations **285**
Central ballast **284**
Central ballast **33**
Central ballast during operation **285**
Central lubrication system **1451**
Change over manual control lever assignment **1285**
Changes and updates for Operating instructions **1631**
Changing oil on the planetary gear **1405**
Changing over mechanical folding jib from 0° to 22.5° or 45° **925**
Changing over mechanical folding jib from 22.5° or 45° to 0° **955**
Changing the folding jib by supporting it **933, 961**
Changing the folding jib with the hoist rope **927, 955**
Changing the manual control lever assignment **1317**
Changing the oil **1443, 1465**
Changing the operating mode of the slewing gear **479**
Changing the set up configuration **1335**
Changing the urea filter **1439**
Checking components on the crane superstructure **173**
Checking for leaks **1403**
Checking the antislip coverings **1383**
Checking the battery voltage **1383**
Checking the central ballast blocks **288**
Checking the central lubrication system **492**
Checking the change over pulleys of the rope feed mechan **1579**
Checking the connection type **1097, 1215**
Checking the coolant level **492**
Checking the fuel / engine oil level and the urea reserv **491**
Checking the gas pressure and oil fill before operation **1586**
Checking the general condition of the crane **489**
Checking the horn **513**
Checking the instruments after starting the engine **525**
Checking the oil level and filter on hydraulic tank **492**
Checking the oil level **1443, 1465**
Checking the oil level on the Diesel engine with the dip **491**
Checking the retaining elements **833**
Checking the rigging and fastening points **65**
Checking the ropes **833**
Checking the ropes of the rope feed mechanism **1579**
Checking the safety measures **89**
Checking the window cleaning fluid **492**
Check of rope pretension on lattice sections, illustrati **1585**
Check of rope pretension on telescopic booms, illustrati **1583**
Checks before starting to work with the crane **692**
Checks before start up **489, 1627**
Checks to be performed **1200**
Check the oil level **1403**
Cleaning and care of the crane **1378**
Climate control system* Crane cab **1169**
Component overview **1023**
Components of the system **1451**
Components on the crane **173**
Condition before installing **1601**
Condition of equipment that is functionally associated with the rope **1608**
Connecting the BTB and the BTT **1087**
Connecting the supply lines **995, 997**
Consideration of wind conditions **90**
Continuing operation with the engine independent auxilia **1191**
Control **34**
Control measures **834**
Control of crane movement “Telescoping” **607**
Control release **571**
Conversion chart for wind force **95**
Conversion chart for wind speed and dynamic pressure **95**
Coolant Engine cooling **1429**
Counterweight and / or ballast **112**
Counterweight combinations **661**
Counterweight **658**
Counterweight **34**
Crane cab with incline adjustment **59**
Crane cab with retracted / extended step **57**

Crane chassis maintenance and inspection schedule **1387**
Crane components **27**
Crane geometry and load information **391, 1257**
Crane movement - Telescoping **693**
Crane operation **574**
Crane operation **701**
Crane operation **114**
Crane operation in case of thunderstorms **116**
Crane operation planning **51**
Crane operation with a load **112**
Crane operation with auxiliary block* **657**
Crane operation with auxiliary block* on the telescopic boom **657**
Crane operation with radio remote control **1315**
Crane operator responsibilities **75**
Crane drive **33**
Crane driver's cab **34**
Crane speeds **38**
Crane start up and taking the crane out of service **488**
Crane superstructure **33**
Crane superstructure **29, 575**
Crane superstructure maintenance and inspection schedule **1391**
Crawler carrier assembly **186**
Crawler center section **39**
Crawler, complete, 2-grouser pads 1000 mm **40**
Crawler crane **38**
Crawler crane in crawler operation **724**
Crawler track **33**
Crawler track **27**
Crawler travel gear **1415**
Crawler travel gear menu **1101, 1219**
Customer information **1633**
Cycle control **1453**

“

“Crane operation” program **389**
“Set up” program areas **373**
“Set up” program **371**
“Telescoping” program **467**
“Two hook operation” with auxiliary boom* **755**
“Winch display” icon **455**

D

Danger zone of crane **53**
Descending from lattice sections or booms **74**
Destined use **115**
Determining the exact charge condition of the rechargeab **1097, 1215**
Determining the factor for reeving **1059**
Determining the rope weight for the rope diameter **1058**
Did an error message occur? **1149**
Diaphragm reservoirs **1447**
Diesel engine **1427**
Diesel particle filter* **1429**
Dimensions **37**
Disassembling the central ballast **297**
Disassembling the central ballast **251**
Disassembling the crawler carriers **237**
Disassembling the crawler carriers **249**
Disassembling the wedge lock **655**
Disassembly **1017, 1079**
Disassembly of counterweight **679**
Disassembly of separately transported auxiliary boom **1055**
Disassembly of the 3-piece folding jib **981**
Disassembly of the 4-piece folding jib **985**
Disassembly of the auxiliary boom **1049**
Disassembly of the separately transported folding jib **989**
Disassembly of winch 2 with auxiliary crane **1005**
Disassembly procedure **1081**
Disassembly winch 2 **999**
Disconnecting the connections to the crawler carrier **247**
Disengage / engage the coupling control on the pump dis **519**
Dismantling the auxiliary boom carried on the crane **1051**
Display for surface pressure and incline in the LICCON m **711**
Display for the center of gravity in the LICCON monitor **711**
Display for the incline in the LICCON monitor **713**
Display / operating element Bluetooth™ Terminal **1083**
Displays for center of gravity, surface pressure and incline in the LICCON monitor **710**
Displays in “Crane operation” program **471**
Disposal of fuels and greases **1628**
Distribution of surface pressure **717**
Documentation **75**
Driving from the crane operator's cab **703**
Driving the crane: Load chart available **719**
Driving the crane: No load chart is available **721**
Driving the crawler crane in normal travel **737, 1355**
Driving the crawler crane in parallel travel **743, 1361**
Driving the transport vehicle out **227**
Driving uphill / downhill **722**
Driving with load on the hook **720**
Driving without load on the hook **721**
Danger of being crushed! **701**
Danger of crushing when closing the windows **53**
Danger of falling! **702**
Dangerous conditions without shut off **836**
Dangers when working together with several cranes **103**

E

Emergency exist crane cab **63**
Emergency exit **61**
Emergency exit - driver's cab **61**
Emergency operation with emergency operation unit **1205**

EMERGENCY STOP switch / EMERGENCY OFF switch **571**
Emergency take-down **1202**
Endangering air traffic **89**
Engine oil **1427**
Engine speed **577**
Ending crane operation **119**
Ending crane operation **119**
Ending radio operation **1341**
Erection **951, 1045, 1077**
Erection procedure **951, 1045**
Erection / take down for crawler cranes **881**
Erection / take down for mobile cranes **881**
Erection / take down **880**
Error messages **363**
Establishing the connection to the crawler carrier **233**
Establishing the electrical connection **1077**
Establishing the electrical connections on the double fo **945**
Establishing the electrical connections on the single fo **943**
Establishing the electrical / hydraulic connections **1077**
Establishing the hydraulic connection **1077**
Establishing the hydraulic connections **937**
Exhaust systems and other crane components with high tem **53**
Extending / retracting the crawler carriers **1105, 1223**
Extending the cross carrier **193**
Electrical connections **943**
Electrical connections on auxiliary boom **1039**
Electrical system **34**
Electrical system - Lighting **1467**
Emergency control **1203**

F

Fastening counterweight plates **663**
Fastening point **1009, 1023**
Fastening points “folding jib complete” **887**
Fastening points “separated folding jib” **891**
Fastening points winch 2 **991**
Fastening positions for assembly / disassembly of the **847**
Fastening the central ballast blocks **289, 299**
Fastening the counterweight plate **663**
Fastening the counterweight plates and receptacle plate **663**
Fastening the counterweight with cross beam **665**
Fasten the hook block **1141, 1303**
Fast mode (Rapid gear) **577**
Filling the grease container **1407, 1455**
Filling the lubrication lines **1455**
Fill level check Anti-corrosion fluid / antifreeze **1475**
Fill level check Diesel engine **1475**
Fill level check Gear **1475**
Fill level check Hydraulic tank **1476**
Fill quantities **1475**
Fill quantities, lubrication schedule **1474**
First aid measures after rescue **75**
Folding jib **34**
Folding jib - TK **882**
Folding jib (TK)* **31**
Folding jib variations **883**
Folding jib with extension (TVK)* **31**
Folding jib with hydraulic* angle adjustment **953**
Folding the boom nose into operating position, illustrat **1013**
Folding the boom nose into transport position, illustrat **1017**
Footboard / step **501**
For cranes with pneumatic boom locking system **1581**
For cranes with telescopic boom system Telematik **1581**
Foreword to appendix **1630**
Frame **33**
Fuel container* **1441**
Fuel preliminary filter **1437**
Fuel system **1435**
Function check **947, 1015, 1453**
Function description of Telematik **611**
Function keys **1229**
Function keys in Menu Assembly functions **1295**
Function keys in the crawler travel gear menu **1103, 1221**
Function keys in the operating screen Radio remote contr **1255**
Function keys in the support menu **1127, 1247**
Function keys in the “Test system” menu **1145, 1307**
Function “Luffing in with suspended load” **1327**
Fan / blower adjustment **1167**
Fastening and hook points **163**
Fastening and hook points on folding jib / folding jib e **167**
Fastening and hook points on the crane superstructure **163**
Fastening and hook points on the telescopic boom **165**

G

General safety technical guidelines **52**
General specifications **1377**
Gravity actuated relapse retainer **573**
Grounding **90**
Grounding the crane **90**
Grounding the load **90**
Guiding crane sections, lattice sections or crane compo **845**
Guiding the load **701**
Guy rods **838**
General control measures before crane operation **835**
General for BTT **1089**
General **53, 361, 557, 575, 775, 883, 991, 1009, 1023, 1073, 1207, 1491**

General **75, 123, 701, 893, 965, 1025, 1049, 1155, 1183, 1203, 1317, 1613**
General hand signals **104**

H

Hoist gear 2 **990**
Hoist gear 2 with rope **43**
Hoist gear **34, 1461**
Hoist gear, hoist rope **113**
Hoist gears **1461**
Hoist limit switch **1015**
Hoist limit switch “Hoist top” **565**
Hook block overview **1063**
Hook blocks **1056**
Hook blocks **45**
Horizontal movements **107**
Hydraulically adjustable folding jib (TNZK)* **31**
Hydraulically adjustable folding jib with extension (TVN **31**
Hydraulic connections **937**
Hydraulic cylinder **1379**
Hydraulic hose lines **1448**
Hydraulic safety valves **572**
Hydraulic system **1445**
Hydraulic tank **1445**
Hydraulic track width adjustment **33**
Handling of hook blocks **1063**
Hand signals for guidance **104**
Heater / engine preheating / Air conditioning system Crane operator’s cab **1154**
Heating the crane cab **1155**
Height dependent wind speeds according to EN 13000:2010 **96**

I

Identification of sliding beam **153**
Identification Track width retracted **154**
Implementing speed reduction **479**
Important check before swinging out the hydraulic foldin **897**
Important information for BTT **1085**
Important servicing **1627**
Index **1635**
Indicator lights on the BKE “652” **353**
Inspecting the function of the overload protection **1586**
Inspecting the hoist and retracting winches **1567**
Inspecting the load hooks **1579**
Inspecting the radio remote control **1373**
Inspecting the roller slewing ring connection **1586**
Inspection according to ISO 4309 **1602**
Inspection and maintenance **1373**
Inspection and monitoring procedure **1579**
Inspection of carrying crane structures, especially steel structures **1492**
Inspection of change over pulleys, illustration 2 **1589**
Inspection of crane wire ropes **1600**
Inspection of disk wheels **1566**
Inspection of lattice sections **1563**
Inspection of locking system of telescopic boom **1581**
Inspection of membrane accumulator **1585**
Inspection of relapse cylinders **1585**
Inspection of retaining ropes and anchor points **1583**
Inspection of rope pulleys **1586**
Inspection of the auxiliary reeving winch, recovery winch and spare gear winch **1589**
Inspection of the mounting of the load bearing equipment **1587**
Inspection of the oil and fuel reservoirs **1589**
Inspection of the rope feed mechanism in the telescopic boom **1579**
Inspection of the safety controls on the relapse cylinders **1586**
Inspection of the tele extension with eccentric, illustration 1 **1589**
Inspection of tire pressure **1565**
Inspection of tires and disk wheels **1565**
Inspection of tires **1565**
Inspection recommendations for periodic inspections of **1590**
Inspections **1567**
Installation **1601**
Installation of the track pads **1423**
Installing the auxiliary boom **1025**
Installing the auxiliary weights **1065**
Installing the boom nose on the telescopic boom **1011**
Installing the central ballast block on the front **295**
Installing the central ballast block on the rear **291**
Installing the central ballast **287**
Installing the central ballast **229**
Installing the chassis platform **169**
Installing the hoist gear 2* **671**
Installing the hook device on the ladder **159**
Installing the hose couplings in operating or neutral po **937**
Installing the hydraulic hose drum **941**
Installing the retaining pin **1431**
Installing the retaining pipes into position for assembl **161**
Installing the retaining pipes in transport position **161**
Installing the single blocks **1065**
Installing the steps in ascent and descent position at a **179**
Installing the steps in ascent or descent position at a **177**
Installing the steps in transport position **181**
Installing the support plates **207**
Installing the wedge lock **655**
Instructions to resume the crane movement **791**
Intermediate lubrication **1453**
Intermediate lubrication of crawler carriers **1411**
Intermediate section **35**

Interrupting crane operation **118**
Interruption of crane operation. **118**
Introduction **1601**
Is the radio connection faulty? **1151**
Is the radio connection faulty **1371**
Icon explanation in assembly function menu **1133, 1295**
Icon explanation in crawler travel gear menu **1101, 1219**
Icon explanation in engine operation menu **1109, 1229**
Icon explanation in support menu **1125, 1245**
Identification **75**

J

Job planning **50**
Joint lifting of a load with two cranes **103**

L

LICCON overload protection **558**
Liebherr Service **1377**
Lifting heights **45**
Lifting hook **44**
Lifting / lowering **589**
Lifting / lowering on cranes with one winch **589**
Lifting / lowering on cranes with two winches **591**
Lifting / lowering the hook **1321**
Lifting / lowering the hydraulic folding jib* **1139, 1301**
Lifting / lowering the load exclusively with the auxili **757**
Lifting / lowering the load with the main boom and auxi **759**
Lifting of personnel **115**
Lifting the counterweight from the central ballast **687**
Lifting the load **699**
Limit switch Boom system **572**
Limit switch Luffing accessories **572**
Limit switch Telescopic boom **572**
Limit switch winch spooled out **567**
Loading the crane onto the transport vehicle **253, 305**
Load take up with cross bar **697**
Lowering the crane **235**
Lowering the hook block if slack rope forms **1060**
Lubricate the slewing ring connection **1459**
Lubricating the gear ring and the slewing gear pinion **1459**
Lubricating the telescopic boom **1471**
Lubrication schedule **1476**
Luffing **583**
Luffing gear **34**
Luffing the boom **1323**
Luffing the hydraulic folding jib* on cranes with one w **587**
Luffing the hydraulic folding jib* on cranes with two w **587**
Luffing the telescopic boom **583**
LICCON computer system **558, 581**
LICCON job planer **86**
Leveling instruments **563**
LICCON computer system after engine start **531**
LICCON computer system **360**

M

Maintenance **123, 1601**
Maintenance guidelines - Crane chassis **1400**
Maintenance guidelines - Crane superstructure **1425**
Maintenance intervals Crawler chassis **1385**
Maintenance notes for remote radio control system **1373**
Maintenance notes for replacement parts **1628**
Maintenance work on gear components **1379**
Maintenance work on the crane superstructure or boom **1380**
Manual control lever in the crawler travel gear menu **1221**
Manual control lever in the support menu **1247**
Manual rope winches for assembly support of components **837**
Manual support **1129, 1249**
Manual telescoping **621**
Master switch assignment for machines with one winch **323**
Master switch assignment for machines with two winches **329**
Maximum surface pressure **37**
Maximum values of F-load display reached **829**
Measurement of wind speed **92**
Measures for work interruption or transport **1379**
Measures in case of problems **1149, 1367**
Mechanically actuating the hoist limit switch, illustrat **943**
Menu Assembly functions **1133, 1295**
Menu “Climate control settings” **1155**
Menu Engine operation **1109, 1229**
Menu Support **1123, 1243**
Menu Test system **1145, 1307**
Minimum required hook block weight **1057**
Mixing battery acid **1468**
Monitored auxiliary and winch display **1273**
Monitored auxiliary functions **441**
Monitoring functions for engine **1111, 1231**
Monitoring functions during crane operation **419**
Monitoring of surface pressure and center of gravity **433**
Monitoring the engine functions in radio operation **1337**
Movement on the crane **53**
Machine related movements **109**
Maintaining the engine independent heater **1199**
Maintanance intervals - Crane superstructure **1390**
Maintenance and inspection guidelines **1381**
Maintenance and service - General **1376**

N

Non-rotation free ropes and their rope end connections **1609**
Notice sign regarding vehicle height **132**
Notice Weight sliding beam **155**
Non-accessible surfaces **183**

O

Operating buttons on the BKE “653” **354**
Operating buttons on the BKE for release control “654” **357**
Operating console **353**
Operating element Bluetooth™ Terminal **689**
Operating elements for special cases at operation of the **775**
Operating elements for the crawler operation **727**
Operating elements, General **311**
Operating elements LICCON Monitor **367**
Operating elements LMB emergency operation **315**
Operating elements on camera - monitor* **317**
Operating elements on control consoles **319**
Operating elements on control platform **309**
Operating elements on the operating and control unit (BKE) **353**
Operating interface “Setting window” **473**
Operating modes **751**
Operating screen radio remote control **1253**
Operating status of crane **778**
Operating the engine-independent auxiliary heater **1183**
Operating the left touch display **1157**
Operating the test system **1145, 1307**
Operating the windshield wiper / windshield washer syste **507**
Operation Bluetooth™ Terminal **1147**
Operation with auxiliary pulley block on pivot section* **761**
Operation with boom nose* on lattice jib **753**
Operation with boom nose* on the telescopic boom **751**
Other operating elements **463**
Overload protection **361**
Overview Load chart **791**
Overview of acoustic / optical warnings **781**
Overview of counterweight **659**
Obligations of the crane operator **77**
Opening / closing the front window of the crane operator **511**
Operating and control instruments **309, 1209**
Operating and control instruments on the crane superstructure **308**
Operating behavior of steel ropes **1607**

P

Permitted ground pressure for crawler cranes **85**
Permitted ground pressure for mobile cranes **85**
Personal protective equipment **67, 157**
Pin connections **845**
Pinning the turntable with the Bluetooth™ Terminal **689**
Placing the counterweight as an assembly with the cross **671**
Placing the counterweight down with the crane **669**
Placing the hoist / control ropes **833**
Platforms on the crane chassis **169**
Pneumatic springs for assembly support of components **837**
Positioning the support cylinders in operating position **217**
Power-Save and Stand-by mode in the LICCON computer system **481**
Preface **1631**
Preheating the hydraulic oil with the Hydraulic oil preheating* **515**
Preparatory work before swinging in hydraulic folding j **967**
Preparatory work **951, 1045**
Preparing a ladder **159**
Preparing for driving the crane **717**
Preparing the hook block for crane operation **1067**
Preparing the hook block for removal **1069**
Prerequisite for disassembly **967**
Prerequisites for lifting of personnel **115**
Prerequisites for operation with crane LTM 1220 **969**
Prerequisites for operation with crane LTR 1220 **969**
Prerequisites for driving the crane (crawler operation) **705**
Preselection of slewing speed **595**
Pressure filters in the crane hydraulic **1447**
Pressure test of relapse cylinders **1585**
Procedure for shut off of crane movements **774**
Procedure for special cases at operation of the LICCON o **803**
Procedure in case of fogged up windows **1181**
Procedure in case of slack rope **1060**
Product description **32**
Pump distributor gear **1443**
Pump operation period on central lubrication system **1451**
Parking brake - Slewing gear **601**
Parking the vehicle **120**
Perform function tests **1200**
Periodic crane inspections **1490**
Permissible ground pressures **84**

Q

Quick test Overload protection **557**
Quick test Crane geometry **557**

R

Recommendations for travel operation **1628**
Reeving in the hoist rope **923**
Reeving in the hoist rope **923, 1015, 1037**
Reeving in the hook block **641**

Reeving in, T-operation **763**
Reeving out the hoist rope on the telescopic boom head **897, 1027**
Reeving plans **760**
Reeving plans **761**
Reeving procedure **637**
Reeving the hoist rope with the auxiliary reeving rope **637**
Reeving the hook block in and out **641**
Reeving TK / TVK / TNZK / TVNZK operation **773**
Refueling fuel **1441**
Refueling fuel tanks* **1384**
Refueling **1383, 1435**
Release of the button block on the BTT **1085**
Releasing the supply lines **999, 1005**
Relieving the track chain **1419**
Removing and recharging the battery **1468**
Removing hoist gear 2* **679**
Removing the auxiliary weights **1069**
Removing the boom nose on the telescopic boom **1021**
Removing the central ballast block on the front **301**
Removing the central ballast block on the rear **305**
Removing the chassis platform **171**
Removing the folding jib **965**
Removing the hoist limit switch weight **653**
Removing the hydraulic hose drum **939**
Removing the load hook* **649**
Removing the double folding jib carried on the crane **975**
Removing the retaining pin **1433**
Removing the single blocks **1069**
Removing the single folding jib carried on the crane, p **971, 973**
Removing winch 2* **1005**
Removing winch 2 **999**
Repair and maintenance tasks **1627**
Repair welds **1494**
Replacing components of the heater **1201**
Replacing the filter insert **1433**
Replacing the granular cartridge **1467**
Requirements for monitoring the winches **1568**
Rescuing the assembly personnel **75**
Resuming crane operation **119**
Resumption of crane operation **119**
Retaining pipes on the crane superstructure **161**
Retract / extend the ballasting cylinders with the Blue **689**
Retracting the cross carriers **269**
Rigging the crane on the transport vehicle **283**
Rope end connections **635**
Rope diameter **38**
Rope inspection log **1608**
Rope pulleys **833**
Rope reeving **634**
Rope reeving **657**
Rope storage and marking **1608**
Rotation-resistant ropes and their rope end connections **1608**
Radio connection interrupted **1371**
Radio remote control **1206**
Ram work or pulling sheet piles **702**
Receptacle plate **40**
Recommendations for taking oil samples **1380**

S

Safety notes for external power feed (100 V AC to 400 V AC) **116**
Safety signs on the ladders **125**
Safety technical instructions for working with a load **691**
Safety technical notes for assembly and disassembly **832**
Securing and removing the load hook* **647**
Securing the assembly personnel against falling **73**
Securing the load hook* **647**
Securing the tiltable cab for maintenance work **1431**
Selecting the location, illustrations 1 to 3 **81**
Service fluids and lubricants **1477**
Service items and lubricants (continuation) **1480, 1481, 1482, 1483, 1484, 1485, 1486, 1487, 1488**
Service items and lubricants **1479**
Servicing the central lubrication system of the crawler carrier **1407**
Servicing the travel gear **1401**
Setting a new set up configuration and new hoist rope re **533**
Settings and status displays on the BTT **1097, 1215**
Setting the counterweight with the ballasting device dow **681**
Setting the crane operator's cab horizontally, illustrat **1433**
Setting the cycles and cycle time **1451**
Setting the LICCON overload protection **751, 753, 757**
Setting the operating mode and set up configuration **371**
Safety bar **59**
Safety equipment **555**
Short description - “Assembling the crane” **189**
Showing the setting window “Speed reduction master switc **477**
Shut off of crane movement **791**
Signs **131**
Signs on the crane **130**
Single hook operation **1015**
Slewing gear brake (pedal) **599**
Slewing gear **1465**
Slewing gear **34, 599**
Slewing ring connection **1459**
Slopes and excavations, illustrations 4 and 5 **84**
Special auxiliary boom **44**
Special cases at operation of the LICCON overload protec **775**
Special functions **411**
Specified service items and lubricants for Liebherr cranes **1479**
Speeds **37**

Stand-by mode **485, 581**
Starting and stopping the engine **519**
Starting the crane with the BTT **1311**
Starting the crane with the ignition switch **1313**
Starting the engine from the crane operator's cab **523**
Starting the program **467, 471**
Start menu of the BTT **1093**
Start menu of the radio remote control **1211**
Start screen BTT **1091**
Start up of radio remote control **1309**
Steering ability **719**
Suitable distribution of surface pressure **719**
Supplementary national guidelines / limitations for dri **709**
Supplementary service work **1626**
Supplied fall arrest system (safety harness and height s **71**
Support **87**
Supporting the crane **87, 219, 239**
Suspended load fastening point **134**
Swinging the boom nose into operating position, illustra **1011**
Swinging the boom nose into transport position, illustra **1019**
Swinging the folding brackets out **205**
Swinging the rope guide pulley into operating position **923**
Swinging the rope guide pulley into transport position **963**
Switching the slewing gear to freewheeling **605**
System start of the LICCON computer system **365**
Safety equipment **34**
Safety devices on the crane **563**
Safety guidelines for ladders **123**

T

Taking over the previously selected set up configuration **531**
Taking up the counterweight with the ballasting device **673**
Technical data **36**
Tele extension 7 m **43**
Telescopic boom extension fastening points **1073**
Telescopic boom extension **1072**
Telescopic boom extension **34**
Telescopic boom **1471**
Telescopic boom **34**
Telescopic boom distortion because of sunshine on one si **692**
Telescopic boom (T) **29**
Telescoping **607**
Telescoping **1329**
Tensioning the track chain **1415**
Terminology **26**
The crane engine is running **581**
The function key line (crane operation) **459**
The function keys **1109**
The function keys in the assembly functions menu **1133**
The displays remain dark? **1151**
The displays remain dark **1369**
The menus (operating functions) **337**
The Power-Save mode **481**
The setting window “Speed reduction master switch” **473**
The “Working range limitation” program* **471**
Tilting crane operator's cab upward **1431**
Tilting the crane cab* **505**
Tilt play of roller ring connection **1459**
Touch displays **319**
Tracks **33**
Traffic endangerment and environmental damage **54**
Transporting components **837**
Transporting lattice sections **837**
Transporting the hook block **697**
Travel / crane engine **33**
Travel operation with radio remote control **1343**
Travel drive **33**
Travel drives / hydraulic motors / track rollers **708**
Travel route **706**
Travel speeds **37**
Troubleshooting on the central lubrication system **1457**
Troubleshooting on the central lubrication system of the **1413**
Turning crawler operating modes on / off **733, 1351**
Turning crawler operation on / off **1227**
Turning **595**
Turning out extremely rotation-resistant hoist ropes **1613**
Turning / driving in reverse **120**
Turning the Bluetooth™ Terminal on via the ON / OFF b **1147**
Turning the BTT on via the ignition switch **1147**
Turning the crane superstructure **597, 1319**
Turning the engine off **529**
Turning the heater on **1173**
Turning the Hydraulic oil preheating* on **515**
Turn the crane engine off **1339**
Twisting caused by stretching in rotation-resistant ropes and its remedy **1613**
Two hook operation **750**
Two hook operation **1015**
Take-down criteria **1604**
Taking on a load **695**

U

Unreeving the hoist rope **963, 1047**
Unreeving the hoist rope **1047**
Unreeving the hook block **645**
Update confirmation **1632**
Update confirmation **1633**
Urea system* **1439**
Use of insertion plates into the track chains **708**
Use of double-stranded height safety equipment, illustration 2 **73**

Use of single-stranded height safety equipment, illustration 1 **73**
User interface **467, 471**
Unpinning / pinning the rope retaining pin **963**

V

Vibration sensor **579**
Vibrations **37**
Visual check for damage **692**
Vertical movements **105**

W

Walking and stepping surfaces **183**
Walking on lattice sections or booms **74**
Walking on the telescopic boom **74**
Warning notes **1381**
Warranted maximum sound power level **144**
Wear data for crawler travel gear **1421**
Weights **38, 838**
Welding work on the load **117**
Winch 1, winch 2* **1461**
Winch 2 **35**
Winch brake **1463**
Waiting for the boot up phase **531**
Wind influences in crane operation **98**
Wind influences during erection and take down **98**
Wind influences when the “Crane is not in service” **99**
Wind speed sensor **567**
Wind speed, wind gust speed and wind direction **91**
Wire rope **1601**
Wire ropes and rope end connections **635, 1608**
Wire ropes **635, 1622**
Working in the vicinity of electricity transmission line **702**
Working in the vicinity of transmitters **101**
Working on lattice sections or booms **74**
Working on the auxiliary boom **73**
Working on the crane superstructure or boom **76**
Working on the telescopic boom head **73**
Working ranges of several cranes overlap **103**
Working with a load **690**
Workplace-related emission value **37**
Work station - Crane operator's cab **495**