LIEBHERR

Crawler crane with lattice mast

LR 1600/2

LR 1600-2-001

Operating instructions

BAL No.: 18101-07-02

Serial No.	
Date	

ORIGINAL OPERATING INSTRUCTIONS

The operating instructions are part of the crane!

They must always be available within reach!

The regulations for crane operation must be observed!

Liebherr-Werk Ehingen GmbH
Postfach 1361
D-89582 Ehingen / Donau
+49 (0) 7391 502–0
+49 (0) 7391 502–3399
info.lwe@liebherr.com
www.liebherr.com

Preface

Manufacturer

Liebherr - Werk Ehingen GmbH
P.O. Box 1361
D-89582 Ehingen / Donau
+49 (0) 7391 502–0
+49 (0) 7391 502–3399
info.lwe@liebherr.com
www.liebherr.com

General

This crane was built according to the state of technology and recognized safety technical regulations. Despite that, danger to body and life for the user and / or third persons or damage to the crane and / or other material assets is still possible.

This crane may only be used:
- in impeccable technical condition.
- for destined use.
- by trained personnel, which acts in a safety and danger conscious way.
- when no safety relevant problems are present.
- when no modifications were made on the crane.

Any problems, which could affect safety must be fixed immediately.

Modifications on the crane may only be made with written approval by Liebherr-Werk Ehingen GmbH.

Data logger

This crane is equipped with a data recording device. Among others, the following data is recorded:
- Date and time of day
- Entered set up configuration of the crane
- Actual load
- Percentage of utilization of the crane
- Boom radius (working radius)
- Main boom angle, luffing jib angle
- Total telescopic boom length, length of each telescopic section
- Every actuation of bypass devices

The recorded data can be read with a respective software.

Safety and warning display

The safety and warning display is directed to all persons who work with the crane.

The terms **DANGER**, **WARNING**, **CAUTION** and **NOTICE** used in the crane documentation are intended to point out certain rules of conduct to all persons working with the crane.

LWE/LR 1600-2-001/18101-07-02/en

copyright © Liebherr-Werk Ehingen GmbH 2018

Warning signs	Signal word	Explanation
	DANGER	Designates a dangerous situation which will lead to death or serious injury if it is not prevented. [1)]
	WARNING	Designates a dangerous situation, which can lead to death or serious injury if it is not prevented. [1)]
	CAUTION	Designates a dangerous situation, which can lead to slight or medium-grade injuries if it is not prevented. [1)]
	NOTICE	Designates a dangerous situation, which can lead to property damage if it is not prevented.

[1)] This could also result in property damage.

Additional notes

The term **Note** is used in the crane documentation to make all persons working with the crane aware of useful information and tips.

Sign	Signal word	Explanation
	Note	Designates useful information and tips.

Crane documentation

The crane documentation is comprised of:
- all supplied documents on paper and in digital form.
- all supplied programs and applications.
- all subsequently supplied information, updates and addenda for the crane documentation.

The crane documentation:
- makes it possible for you to operate the crane safely.
- supports you to utilize the permissible application possibilities of the crane.
- provides you with information about the functionality of important components and systems.

Note
Terminology in the crane documentation.
Certain expressions are used in the crane documentation.
▶ In order to avoid misunderstandings, the same expressions should always be used.

Translations from the German version of the crane documentation: The crane documentation has been translated to be best of one's knowledge. Liebherr-Werk Ehingen GmbH assumes no liability for translation errors. The German version of the crane documentation is solely applicable for factual accuracy. If you find any errors or if any misunderstandings arise when reading the crane documentation, please contact Liebherr-Werk Ehingen GmbH immediately.

LWE/LR 1600-2-001/18101-07-02/en

copyright © Liebherr-Werk Ehingen GmbH 2018

WARNING
Danger of accident due to incorrect operation of the crane!
Incorrect operation of the crane can lead to accidents!
Personnel can be killed or seriously injured!
This could result in property damage!
- ▶ Only authorized and trained expert personnel are permitted to work on the crane.
- ▶ The crane documentation is part of the crane and must be accessible on the crane.
- ▶ The crane documentation and on-site regulations and specifications (such as accident prevention regulations) must be observed.

Using the crane documentation:
- **makes it easier** to become familiar with the crane.
- **avoids** problems due to improper operation.

Observing the crane documentation:
- **increases** reliability in use.
- **extends** the service life of the crane.
- **minimizes** repair costs and downtime.

Place the crane documentation accessible in the driver's cab or in the crane cab.

WARNING
Outdated version of crane documentation!
If subsequently supplied information, updates and addenda to the crane documentation are not observed and added, there is a danger of accidents!
Personnel can be killed or seriously injured!
This could result in property damage!
- ▶ Observe and add all subsequently supplied information, updates and addenda for the crane documentation.
- ▶ Make sure that all affected persons always know and understand the latest version of the crane documentation.

WARNING
Crane documentation is not understood!
If parts of the crane documentation are not understood and the tasks are carried out on or with the crane, then there is a danger of accidents!
Personnel can be killed or seriously injured!
This could result in property damage!
- ▶ Clear up open questions regarding the crane documentation with Liebherr Service before carrying out the respective task.

This documentation may not be reproduced or duplicated, distributed or used for purposes of competition, neither in part nor in excerpts. All rights are expressly reserved in accordance with copyright laws.

All accident prevention guidelines, operating instructions, load charts etc. are based on destined use of the crane.

LWE/LR 1600-2-001/18101-07-02/en

copyright © Liebherr-Werk Ehingen GmbH 2018

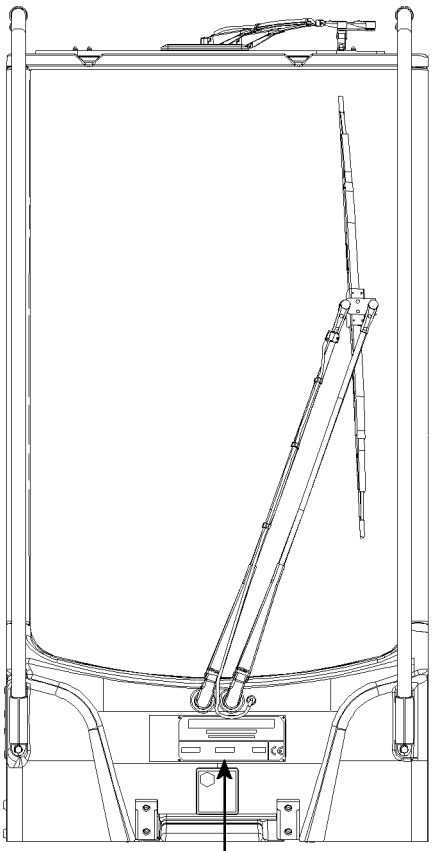

1

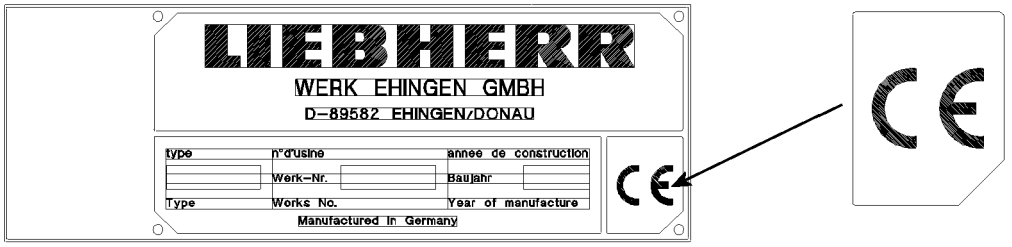

2

LWE/LR 1600-2-001/18101-07-02/en

Fig.110001

copyright © Liebherr-Werk Ehingen GmbH 2018

CE marking

The CE marking is a mark according to EU laws:
- Cranes with CE-marking are compliant with the European Directives applicable at the moment of placing the cranes on the market, and in particular European machinery directive 2006/42/EC and product standard EN 13000! Data tag Crane with CE-marking, see illustration **1**.
- Cranes that are operated outside the respective area of application of the European machinery directive do not require a CE marking. Data tag Crane without CE marking, see illustration **2**.
- It is prohibited to market and operate cranes without CE marking, which do not meet the product-specific regulations valid in Europe, when a CE marking is specified for the country, especially in the single European market.
- It is prohibited to operate cranes with a tipping load utilization of 85 % or a bypass device that does not comply with EN 13000 within the European Union or in countries that only permit a lower tipping load utilization! The national regulations apply. These cranes may not have a CE marking!

EU Declaration of Conformity

Upon delivery of the equipment with a CE marking, the EU Declaration of Conformity according to Directive 2006/42/EC is provided directly after the cover sheet. The EU Declaration of Conformity is valid in the following form and language in all countries of the European Union, as well as in countries that recognise the Directives of the European Union. Keep the EU Declaration of Conformity in a safe place.

Note
- ▶ This declaration of conformity is only valid when this mobile crane meets the directives and standards stated in this EU Declaration of Conformity. This applies especially for the programming and function of the safety-relevant overload protection. The CE sign must be removed if changes were made on the crane, which do not conform to the stated directives and standards. These include in particular a tipping load utilization (85% load charts) that are not permissible in Europe and a changed version of the bypass device for the overload protection.
- ▶ If this modified mobile crane is re-imported later into a country which is within the validity range of the EC machine directive, then the importer is responsible for the verification and the written confirmation, that the condition of the mobile crane at importation into the EC meets the directives and standards, which are stated in this declaration of conformity.
- ▶ The complete documentation of the crane must be complete and present in the official language of the community of the member state, in which the machine is placed into service and / or where it is operated.
- ▶ For the verification and confirmation we recommend that the importer contacts the crane manufacturer or a person authorized by him.
- ▶ After writing confirmation of the importer on the mobile crane manufacturer, the mobile crane may be labelled again with a CE label and the EU Declaration of Conformity become valid again. For this crane the directives and standard valid at initial delivery consequently continue to apply.

LWE/LR 1600-2-001/18101-07-02/en

copyright © Liebherr-Werk Ehingen GmbH 2018

EU Declaration of conformity

If changes are made to the equipment that were not approved in writing by Liebherr-Werk Ehingen GmbH, then this EU declaration of conformity becomes invalid.
Also observe the note regarding validity on the back of the page.

Type of machine:	**Mobile crane**
Type:	**XXX**
Serial No.:	**XXX**
Year of construction:	**XXX**
Power output of the diesel engine:	**XXX kW / XXX rpm**
L_{WA} measured[1)]:	**XXX dB**
L_{WA} guaranteed[1)]:	**XXX dB**

We herewith declare that the above declared machine in its delivery condition complies with all relevant provisions of the following EU Directives:

- **Directive 2006/42/EC of the European Parliament on machinery**
- **Directive 2005/88/EC of the European Parliament amending the Directive 2000/14/EC relating to noise emission[1)]**
- **Directive 2014/53/EU of the European Parliament relating to the making available on the market of radio equipment**

Applied harmonized standards:

EN 13000:2010 + A1:2014 Cranes – Mobile cranes

Applied evaluation procedure according to Annex VIII of Directive 2000/14/EC
Name of the notified body:

TÜV Rheinland LGA Products GmbH, D-90014 Nürnberg, Identification No.: 0197

Authorized agent for the compilation of the technical documentation:

Head of Design Department
Dr.-Hans-Liebherr-Straße 1
89584 Ehingen/Donau

[1)] during crane operation

Ehingen

_____
(Head of Design Department)

Liebherr-Werk Ehingen GmbH
Dr.-Hans-Liebherr-Straße 1
89584 Ehingen
Germany
04.07.2017_en

LIEBHERR

Fig.147811-en: Reprint of the crane's EU Declaration of Conformity

Destined use

The destined use of the crane consists solely in vertical lifting and lowering of free and non-adhered loads, whose weight and center of gravity are known.

To do so, a hook or hook block approved by Liebherr must be reeved on the hoist rope and it may only be operated within the permissible crane configurations.

LWE/LR 1600-2-001/18101-07-02/en

copyright © Liebherr-Werk Ehingen GmbH 2018

Driving with the crane, with or without an attached load is only permissible if a corresponding driving or load chart is available. The set up configurations intended for it and the safety conditions must be observed according to the corresponding crane documentation.

Any other use or any other exceeding utilization is **not** destined use.

Destined use also includes the adherence of the required safety guidelines, conditions, prerequisites, set up conditions and working steps in the crane documentation (for example: Operating instructions, load charts, erection and take down charts, job planner).

The manufacturer is **not** liable for damages, which are caused by non-destined use or improper use of the crane. Any associated risk it is carried solely by the owner, the operator and the user of the crane.

Non-destined use

Non-destined use is:
- Working outside the permissible set up configurations according to the load chart.
- Working outside the permissible boom radii and slewing ranges according to the load chart.
- Selecting load charts, which do not correspond to the actual set up configuration.
- Selection of a set up configuration via code or via manual entry, which does not correspond to the actual set up configuration.
- Working with bypassed / deactivated safety equipment, for example bypassed load torque limiter or with bypassed hoist limit switch.
- Increasing the boom radius of the lifted load after a LMB shut-off, for example by diagonally pulling the load.
- Using the support pressure display as information in order to utilize the crane up to the tipping limit!
- Use of equipment parts which are not approved for the crane.
- Operation of the crane in an area exposed to explosion hazards.
- Using the crane at sports and recreational events, especially for "Bungee" jumps and / or "Dinner in the sky".
- On-road driving in an impermissible travel condition (axle load, dimension).
- Driving with the equipment in place in an impermissible travel condition.
- Pushing, pulling or lifting loads with the level control, the sliding beams or the support cylinders.
- Pushing, pulling or lifting loads by actuating the slewing gear, the luffing gear or the telescoping gear.
- Ripping stuck objects loose with the crane.
- Utilizing the crane for a longer period of time for material handling tasks.
- Releasing the crane suddenly (grapple or dumping operation).
- Utilizing the crane when the weight of the load is suspended on the crane is changed, for example by filling a container suspended on the load hook, except:
  - The load torque limiter was checked before for function with a known load.
  - The crane cab is occupied.
  - The crane is operational.
  - The container size is selected in such a way that an overload of the crane with full load is eliminated within the valid used load chart.

The crane may **not** be used for:
- Fastening a stuck load for which the weight and center of gravity are not known and which is released only by flame cutting, for example.
- Letting persons drive along outside the driver's cab.
- Transporting personnel in the crane cab while driving.
- Transporting personnel with the load handling equipment and on the load.
- Transporting of persons with work baskets (cherry pickers), if the national regulations of the responsible work safety organization are not observed.
- Transporting loads and objects on the crane chassis.
- Transporting loads and objects on the crane superstructure.
- Transporting loads and objects on the boom lattice sections and / or the crane boom.
- Two hook operation without auxiliary equipment.
- Extended material handling operation.
- Crane operation on a floating device if the conditions in chapter „Crane on a floating device“ are not fulfilled and the written release by **Liebherr Werk Ehingen GmbH** is not present.

LWE/LR 1600-2-001/18101-07-02/en

copyright © Liebherr-Werk Ehingen GmbH 2018

The crane documentation must be read and used by all persons who are involved in use, operation, assembly and maintenance of the crane.

Ambient temperature

The crane is designed for an ambient temperature of -20 °C to +50 °C.

If the ambient temperature is lower than -20 °C the crane must be modified with „auxiliary equipment for working at low temperatures“.

WARNING
Working at low temperatures without the corresponding auxiliary equipment!
The crane components can be damaged and fail. The load can rip off.
Death or severe bodily injuries.

If the crane is operated at an ambient temperature lower than -20 °C:
- ▶ Make sure that the crane is equipped with the corresponding „auxiliary equipment for working at low temperatures“. Observe and adhere to the Crane operating instructions, chapter 2.08.
- ▶ Use the operating fluids for the corresponding ambient temperature in time. Observe and adhere to the Crane operating instructions, chapter 7.07.

Safety equipment

Special attention must be paid to the safety equipment built into the crane. The safety equipment must constantly be checked for functionality. The crane may not be operated if the safety equipment are not working or not working correctly.

Note
Your motto must always be:
- ▶ **Safety first!**

The crane has been built in accordance with the applicable regulations for crane operation and travel operation and has been approved by the relevant authorities.

Equipment and spare parts

WARNING
Danger of fatal injury if original equipment parts are **not** used!
If the crane is operated with equipment parts, which are **not** original, then the crane can fail and cause fatal accidents!
Crane components can be damaged!
- ▶ Operate the crane only with original equipment parts!
- ▶ Crane operation with equipment parts, which do **not** belong to the crane is prohibited!
- ▶ If there is any doubt about the origin of equipment parts, contact Liebherr Service!

WARNING
The crane permit and the manufacturer's warranty will become void!
If any original installed parts are modified, manipulated or replaced (e.g. removal of parts, installation of non-original Liebherr parts), both the crane permit and the manufacturer's warranty will become void.
- ▶ Leave installed original parts unchanged!
- ▶ Do not remove installed original parts!
- ▶ Use only Original Liebherr spare parts!
- ▶ If there is any doubt about the origin of spare parts, contact Liebherr Service!

For ordering equipment and spare parts, always keep the crane number handy and provide it.

LWE/LR 1600-2-001/18101-07-02/en

copyright © Liebherr-Werk Ehingen GmbH 2018

Definition of directional data for mobile cranes

Driving forwards: Driving with the driver's cab on the front.

Driving in reverse: Driving with the taillights of the crane chassis on the front.

Front, **rear**, **right**, **left** in the **driver's cab** refer to the crane chassis. The driver's cab is always in the front.

Front, **rear**, **right**, **left** in the **crane cab** refer to the crane superstructure. Front is always in direction of the placed down boom.

0° crane superstructure slewing angle: The boom points in the longitudinal direction to the rear past the rear of the vehicle.

180° crane superstructure slewing angle: The boom points in the longitudinal direction to the front past the driver's cab.

Definition of directional data for crawler cranes

Driving forward driving forward from the view of the crane operator seated in the crane cab. Turntable in 0° or 180° position.

Driving reverse driving backward from the view of the crane operator seated in the crane cab. Turntable in 0° or 180° position.

Front, **rear**, **right**, **left** always orient themselves on the **crawler track** from the position of the chain tension devices. The chain tension devices on the crawler track are always on the front.

Front, **rear**, **right**, **left** refer to the direction of view of the crane operator seated in the **crane cab**. Front is always in direction of the placed down boom.

Optional equipment and functions

The equipment marked with ***** and the functions are optionally available and are **not** part of the standard crane (optional equipment).

Conversion chart

	Initial unit	Multiplication factor	Target unit
Length	mm	0.03937	in
	in	25.4000	mm
	mm	0.00328	ft
	ft	304.8	mm
	cm	0.39370	in
	in	2.5400	cm
	cm	0.0328	ft
	ft	30.48	cm
	m	39.37	in
	in	0.0254	m
	m	**3.281**	**ft**
	ft	**0.3048**	**m**
	km	0.62137	mile
	mile	1.6093	km

LWE/LR 1600-2-001/18101-07-02/en

copyright © Liebherr-Werk Ehingen GmbH 2018

	Initial unit	Multiplication factor	Target unit
Surface	cm^2	0.155	in^2
	in^2	6.4516	cm^2
	m^2	**10.764**	**ft^2**
	ft^2	**0.0929**	**m^2**
Volume	cm^3	0.06102	in^3
	in^3	16.387	cm^3
	m^3	35.3147	ft^3
	ft^3	0.0283	m^3
	l	0.001	m^3
	m^3	1000	l
	l	61.024	in^3
	in^3	0.016387	l
	l	0.0353	ft^3
	ft^3	28.32	l
	l	0.264178	US. liq. gal
	US. liq. gal	3.7853265	l
Mass (weight)	kg	2.20462	lb
	lb	0.45359	kg
	t	**2204.62**	**lb**
	lb	**0.0004536**	**t**
	t	1.1023	short ton US (tn. sh.)
	short ton US (tn. sh.)	0.90718	t
	t	**0.45359**	**kip**
	kip	**2.20462**	**t**
Mass / length	kg/m	0.055998	lb/in
	lb/in	17.857781	kg/m
	kg/m	0.67197	lb/ft
	lb/ft	1.48816	kg/m
Force	N	0.2248	lbf
	lbf	4.4483986	N
	kN	**224.809**	**lbf**
	lbf	**0.0044483986**	**kN**
Turning moment	Nm	8.85075	lbf·in
	lbf·in	0.112984	Nm
	Nm	0.73756	lbf·ft
	lbf·ft	1.3559	Nm
Performance	HP (DIN HP)	0.7355	kW
	kW	1.3596	HP (DIN HP)

LWE/LR 1600-2-001/18101-07-02/en

copyright © Liebherr-Werk Ehingen GmbH 2018

	Initial unit	Multiplication factor	Target unit
Speed	m/s	39.37	in/s
	in/s	0.0254	m/s
	m/s	**3.28084**	**ft/s**
	ft/s	**0.3048**	**m/s**
	km/h	0.62137	mph (mi/h)
	mph (mi/h)	1.60935	km/h
	m/s	2.2369	mph (mi/h)
	mph (mi/h)	0.44704	m/s
Pressure	kPa (kN/m²)	0.01	bar
	bar	100	kPa (kN/m²)
	bar	14.5038	psi
	psi	0.06895	bar
	kPa (kN/m²)	**0.145038**	**psi**
	psi	**6.894759**	**kPa (kN/m²)**
	N/cm²	1.450377	psi
	psi	0.6894759	N/cm²
	N/m²	0.000145038	psi
	psi	6894.759	N/m²
	t/m²	204.81	lbs/ft²
	lbs/ft²	0.0048828	t/m²
Load-related surface	m²/t	0.004882	ft²/lbs
	ft²/lb	204.81	m²/t
Temperature	**°C**	**([°C] · 1.8) + 32**	**°F**
	°F	**([°F] - 32) / 1.8**	**°C**

Conversion chart

LWE/LR 1600-2-001/18101-07-02/en

copyright © Liebherr-Werk Ehingen GmbH 2018

LWE/LR 1600-2-001/18101-07-02/en

copyright © Liebherr-Werk Ehingen GmbH 2018

Contents

1 Description of crane

1.01 Terminology		1
1	Component overview crawler travel gear	3
2	Component overview turntable	4
3	Boom component overview	5
4	Winch component overview	6
5	Component overview derrick ballast	6
6	Ground connection	7
7	S // SL // SL(HS) // SL9-boom combinations	8
8	SLF // SL3F // SL8F3-boom combinations	10
9	SDBW/B // SLDB/BW // SL2DBW/B-boom combinations	12
10	SW // SWF-boom combinations	14
11	SDWBW/B // SDWVB/BW-boom combinations	16
12	SL2DFB/BW // SL4DFB/BW // SL5DFBW/B-boom combinations	18
13	SL10DFB/B2 // SL11DB/B2- boom combinations	20
14	SL13DFB/B2 // SL14DB/B2-boom combinations	22
15	HSDBW/B // HSLDB/BW // HSL2DBW/B-boom combinations	24
16	HSDWBW/B // HSDWVB/BW-boom combinations	26
17	HSL2DFB/BW // HSL4DFB/BW-boom combinations	28
1.02 Product description		1
1	Crawler travel gear	2
2	Crane superstructure	2
3	Winches	4
4	Boom systems / boom combinations	4
5	Auxiliary equipment	5
1.03 Technical data		1
1	Crane	5
2	Noise emission	6
3	Vibrations	6
4	Crane speeds	6
5	Crane surface pressure	6
6	Load handling equipment	6
7	Hoist ropes	7
8	Control ropes	7
9	Guy ropes	7
10	Assembly rope	7
11	Dimensions and weights of the crane components	7
12	Crawler carrier	8
13	Turntable with crawler center section with SA-frame with Quick Connection	8
14	Turntable with crawler center section with SA-frame without Quick Connection	9
15	Turntable with crawler center section without SA-frame with Quick Connection	9
16	Turntable with crawler center section without SA-frame without Quick Connection	10
17	Crawler center section	10
18	Turntable with a Quick Connection with SA-frame	11
19	Turntable with Quick connection without SA-frame	11

LWE/LR 1600-2-001/18101-07-02/en

copyright © Liebherr-Werk Ehingen GmbH 2018

20	SA-frame with winch 4	12
21	Mechanical auxiliary support	12
22	Winch 1	12
23	Winch 2	13
24	Counterweight platform	13
25	Central ballast platform	13
26	Ballast plate for central ballast / counterweight / derrick ballast	14
27	S-pivot section 10 m	14
28	S-intermediate section 3 m	15
29	S-intermediate section 6 m	15
30	S-intermediate section 12 m	15
31	SW-end section	16
32	SL-reducer 6.75 m	16
33	LI-intermediate section 6 m	17
34	LI-intermediate section 12 m	17
35	F-connector head	17
36	Boom nose	18
37	Roller set 300 t	18
38	Roller set 320 t	18
39	Roller cart	19
40	F-assembly unit	19
41	F-intermediate section 6 m , 1916.06	19
42	F-intermediate section 12 m , 1916.06	20
43	F-end section	20
44	D-pivot section 9.5 m	20
45	D-end section 8.5 m	21
46	D-intermediate section 6 m , 2420.16	21
47	D-intermediate section 12 m , 2420.20	21
48	W-pivot section 10.75 m with pivot section WA-frame 1 (transport unit 1)	22
49	WA-frame 1 and WA-frame 2, end sections (transport unit 2)	22
50	WA-frame 2, pivot section (transport unit 3)	22
51	W-connector head	23
52	Ballast trailer	23
53	Complete guide for ballast trailer	24
54	Ballast trailer with wheel drive	24
55	Complete guide with adapter, for ballast trailer	25
56	Ballast pallet suspended ballast	25
57	Suspended ballast guide B2, pivot section	25
58	Suspended ballast guide B2, intermediate section	26
59	Suspended ballast guide B2, end section	26

2 Safety

2.03 Job planning		1
1	Planning Crane operation	3
2.04 Technical safety instructions		1
1	Dangers on the crane	3
2	Danger zone of crane	4
3	Traffic endangerment and environmental damage	5
4	Endangering air traffic	5

LWE/LR 1600-2-001/18101-07-02/en

copyright © Liebherr-Werk Ehingen GmbH 2018

5	Movement on the crane	6
6	Emergency exit	6
7	Personal protective equipment	8
8	Securing persons to prevent them from falling	14
9	Rescuing the assembly personnel	16
10	Extendible step	16
11	Transport	22
12	Fastening	24
13	Heated crane components	24
14	Crane operator responsibilities	24
15	Selecting the location	26
16	Slopes and excavations	30
17	Loads on the ground due to crane operation	33
18	Support	37
19	Aligning the crane	39
20	Checking the safety measures	40
21	Safety guidelines in case of external power supply	41
22	Grounding	41
23	Working in the vicinity of transmitters	43
24	Crane operation in case of thunderstorms	44
25	Wind influences	45
26	Lifting a load with two cranes	51
27	Overlapping of working ranges of several cranes	53
28	Hand signals for guidance	54
29	Travel operation	62
30	Crane operation	64
31	Lifting of personnel	70
32	Securing personnel on shut off crane	72
33	Welding work on the load	74

2.04.10 Ladders	1

1	Intended use	2
2	Safety instructions	2
3	Safety signs	3
4	Ladder inspection	12
5	User guidelines	12
6	Assembling the ladder	14
7	Ladder access	22

2.05 Signs on the crane	1

1	Warning signs	3
2	Command and prohibition signs	7
3	Notice signs	11

2.05.10 Labeling of the load carriers	1

1	Identifications on the hook block or load hook	3
2	Identifications on single hook or double hook	4
3	Identifications on auxiliary weights	5

2.06 Fall protection equipment on the crane	1

1	Personal protective equipment	3
2	Fall arrest equipment on the crane chassis	5

LWE/LR 1600-2-001/18101-07-02/en

copyright © Liebherr-Werk Ehingen GmbH 2018

3	Installing the fall arrest equipment on the crane operator's cab	9
4	Fall arrest equipment on the crane superstructure	11
5	Fall arrest equipment o the pivot sections and lattice mast boom	15

2.08 Working in low temperatures 1

1	Auxiliary equipment	3
2	Ambient temperatures below -20 °C	3
3	Maintenance	7

2.15 General technical safety instructions for operation with a ballast trailer 1

1	Safety guidelines	3
2	Inspecting tires and disk wheels	4

2.25 Crane on floating body 1

1	Non-destined use	3
2	Destined use	3
3	Floating device	3
4	Operating conditions	3
5	Crane transport on floating devices	4
6	Increased corrosion	5

3 Crane assembly

3.01 Crawler carrier assembly 1

1	Component overview crawler travel gear	3
2	Dimensions and weights	3
3	Installing the assembly supports	5
4	Assembly / disassembly of the crawler carriers with the auxiliary crane	11
5	Assembly / disassembly of the crawler carriers with SA-frame	27
6	Disassembling the assembly support	49

3.02 Turntable assembly 1

1	Turntable with Quick Connection*	3
2	Installing the turntable	7
3	Removing the turntable	11

3.03 Central ballast 1

1	Central ballast combinations	3
2	Installing the central ballast	5
3	Removing the central ballast	9

3.04 Mechanical auxiliary support 1

1	Installing the mechanical auxiliary support	3

3.05 SA-frame assembly 1

1	Component overview SA-frame	3
2	Attachment points SA-frame	3
3	Assemble SA-frame	5
4	Disassemble SA-frame	13

3.06 Assembly conditions 1

1	Assembly conditions for operation on crawlers	3

3.07 Hoist winch assembly 1

LWE/LR 1600-2-001/18101-07-02/en

copyright © Liebherr-Werk Ehingen GmbH 2018

1	Component overview	3
2	Dimensions and weights	3
3	Assembling winch 1	5
4	Removing winch 1	13
5	Assembly and disassembly of winch 1	17

4 Operation of crane superstructure

4.01 Operating and monitoring instruments on the crane superstructure 1

1	Operating and monitoring instruments	3
2	Equipment in the cab	3
3	Operating units in the cab	7

4.02 LICCON computer system 1

1	General	3
2	LICCON computer system boot up	7
3	Operating mode preselection on the LICCON computer system	7
4	Operating elements of the LICCON computer system on monitor 0	11
5	The set up program	15
6	The winch - pulley head assignment screen	39
7	The Crane operation program on monitor 0	59
8	Operating elements of the LICCON computer system on monitor 1	129
9	The Crane operation program on monitor 1	131
10	The Control parameter program	175
11	The Support program	183
12	The Working range limitation program*	197
13	The Engine monitoring program	201
14	LICCON computer system in stand-by mode	209

4.03 Start up and shut down of crane 1

1	Power supply for the crane*	3
2	Checks before start up	7
3	Work station - Crane operator's cab	15
4	Starting and stopping the engine	25
5	LICCON computer system after engine start	35
6	Load weighing and load display	41

4.04 Safety equipment 1

1	Prerequisites for crane operation	3
2	Overload protection of LICCON computer system	3
3	Wind warning device	7
4	Hoist limit switch „Hoist top“	7
5	Limit switch „Winch spooled out“	9
6	EMERGENCY OFF switch*	11
7	Control release	11
8	Hydraulic safety valves	11
9	Limit switch	13
10	Angle sensors	15
11	Test brackets (KMD = force test box)	15
12	Acoustical / optical warning	17
13	Bypassing the safety devices	21

LWE/LR 1600-2-001/18101-07-02/en

copyright © Liebherr-Werk Ehingen GmbH 2018

4.05 Crane operation 1
1 LICCON computer system 3
2 Winch and master switch assignment to operating modes 3
3 Carrying out crane movements 5

4.07 Counterweight 1
1 Component overview 3
2 Fastening points 4
3 Permissible counterweight assemblies 5
4 Installing the counterweight 6
5 Disassembling the counterweight 15

4.08 Working with a load 1
1 Safety guidelines 3
2 Checks before starting to work with the crane 4
3 Crane movement - Telescoping 5
4 Taking on a load 7
5 Crane operation 13
6 Crane rope pretension 15

4.10 Driving from the crane cab 1
1 Prerequisites for driving / moving crawler cranes (crawler operation) 3
2 Driving with a load and / or Derrick ballast 8
3 Driving without a load and without derrick ballast 9
4 Driving uphill / downhill 11
5 Driving the crawler crane 21

5 Equipment

5.01 Technical safety instructions for assembly and disassembly 1
1 Equipment 2
2 Rope pulleys 2
3 Ropes 2
4 Control measures 3
5 Relapse cylinders 6
6 Pneumatic springs 6
7 Manual rope winches 6
8 Weights 7
9 Guy rods 7
10 Auxiliary guying 7
11 Bypassing the overload protection 8
12 Bypassing the hoist top shut-off 10
13 Pin connections 10
14 Retaining elements 13
15 Assembling / disassembling 21
16 Erecting / taking down 65

5.02 SA-frame 1
1 SA-frame 3

5.03 Boom systems 1
1 Boom components 2
2 Arrangement of intermediate sections and guy rods on the booms / boom systems 2

LWE/LR 1600-2-001/18101-07-02/en

copyright © Liebherr-Werk Ehingen GmbH 2018

3	Auxiliary guying	5
5.05 D-boom		1
1	Components and attachment points	3
2	Assembly D-boom	5
3	Disassembly	33
5.07 SW/SDW boom combination		1
1	Component overview W-boom system	3
2	Fastening points W-transport units	3
3	Assembling the W-boom system	5
4	Operating the crane	35
5	Disassembling the W-boom system	37
5.08 WV-lattice jib		1
1	Overview WV-lattice jib	3
2	Assembling the WV-boom system	5
3	Operating the crane	17
4	Disassembling the WV-boom system	19
5.10 Boom nose		1
1	Overview of boom nose components	3
2	Assembling the 36 t boom nose on the SW-end section	5
3	Erecting / taking down the boom	11
4	Crane operation	13
5	Disassembling the 36 t boom nose	15
5.13 SLF-boom combination		1
1	Component overview	3
2	Fastening points	3
3	Assembling the auxiliary jib	4
4	Operating the crane	31
5	Disassembling the auxiliary jib	33
5.14 Roller set		1
1	W-connector head components	3
2	SW-end section and roller set components	3
3	Combinations of boom heads / end sections with roller sets	4
4	Assembling / disassembling the roller set	5
5.17 SWF-boom combination		1
1	Component overview	3
2	Assembling SWF-boom	5
3	Operating the crane	21
4	Disassembling the SWF-booms	23
5.19 Hook blocks		1
1	Procedure in case of slack rope	3
2	Hook block overview	5
3	Installing a double hook block for single operation	7
4	Installing a double hook block for parallel operation	17
5	Single hook blocks	29
5.30 Pin pulling device		1

LWE/LR 1600-2-001/18101-07-02/en

copyright © Liebherr-Werk Ehingen GmbH 2018

1	Pin pulling device	3
2	Hydraulic oil level	3
3	Pin pulling device	4
4	Pinning and unpinning the pin with pin pulling cylinder 2	6
5	Pinning and unpinning the pin with pin pulling cylinder 3	7

5.35 Derrick ballast - ballast trailer 1

1	Component description and general notes	3
2	Assembling the ballast trailer	9
3	Setting the ballast trailer radii	33
4	Steering programs	35
5	Driving with the ballast trailer	55
6	Crane operation with derrick ballast	67
7	Removing the ballast trailer	87
8	Emergency operation with a defective CPU	103
9	Maintenance intervals for the ballast trailer	111
10	Maintenance	113
11	Lubrication and fill quantities	115

5.36.10 Derrick ballast - suspended ballast 1

1	Component overview of suspended ballast	3
2	Fastening points	4
3	Derrick ballast radii and standing levels	7
4	Derrick ballast radii and standing levels - standard crane	11
5	Derrick ballast radii and standing levels - narrow track crane	14
6	Assembling	19
7	Assembling the suspended ballast guide*	20
8	Assembling the suspended ballast pallet	31
9	Ballasting the suspended ballast pallet	38
10	Function check before lifting the derrick ballast	41
11	Lifting and lowering the derrick ballast using the pull cylinders	42
12	Crane operation with derrick ballast	44
13	Crawler operation with derrick ballast	56
14	Disassembly	57
15	Setting down the suspended ballast pallet	58
16	Removing the ballast plates	59
17	Disassembling the suspended ballast pallet	61
18	Disassembling the suspended ballast guide*	67

5.38 S/SL-boom 1

1	Component overview S-pivot section	3
2	Attachment points	3
3	Assembling the S/SL boom	5
4	Operating the crane	41
5	Disassembling the S/SL boom	43

5.39 LD/SLD/SD-boom combination 1

1	Component overview	3
2	Fastening points	3
3	Assembling the SLD / SD-boom	6
4	Operating the crane	57
5	Disassembling the SLD / SD-boom	57

LWE/LR 1600-2-001/18101-07-02/en

copyright © Liebherr-Werk Ehingen GmbH 2018

5.42 HS-auxiliary jib 1
1 Auxiliary jib „HS“ 3
2 Installing the auxiliary jib „HS“ on the SL-boom 5
3 Erecting the SL-boom 15
4 Operating the crane 21
5 Removing the auxiliary jib „HS“ 23

5.61 Roller cart 1
1 Overview components pulley cart 3
2 Installing / removing the pulley cart 5

6 Auxiliary equipment

6.02 Crane operator's cab heater / engine preheating / air conditioning system 1
1 Heating the crane cab 3
2 Menu „Climate control settings“ 3

6.05 Emergency take down 1
1 Emergency operation 3
2 Emergency operation with assembly plate Variation 1 (V1) 9
3 Emergency operation of slewing gear(s) with assembly plate Variation 1 (V1) 15
4 Emergency operation with assembly plate(s) Variation 2 (V2) 19
5 Emergency operation slewing gear(s) with assembly plate(s) Variation 2 (V2) 29
6 Emergency operation of winch 4 (W IV) on the LR1600/2 and LR1600/2-W 33
7 Ending emergency operation 37

7 Maintenance and service

7.01 Maintenance and service - General 1
1 Technical safety instructions 3
2 Warranty and coverage 7
3 Liebherr Service 7
4 Taking an oil sample 8
5 Taking care of the crane 8
6 Disposal 14

7.02 Maintenance intervals - Crawler chassis 1
1 Maintenance and inspection schedule 3

7.02.50 Maintenance intervals - Ballast trailer 1
1 Maintenance and inspection schedule 3

7.03 Maintenance intervals - Crane superstructure 1
1 Maintenance and inspection schedule 2

7.03.50 Maintenance intervals - Crane boom 1
1 Maintenance and inspection schedule 3

7.04 Maintenance instructions - Crane chassis 1
1 Travel gear 3
2 Planetary gear and miter gear 5
3 Travel brake 7
4 Central lubrication system 9
5 Tensioning the crawler chain 13

LWE/LR 1600-2-001/18101-07-02/en

copyright © Liebherr-Werk Ehingen GmbH 2018

7.05 Maintenance instructions - Crane superstructure 1
1 Crane engine 3
2 Pump distributor gear 9
3 Hydraulic system 11
4 Slewing ring connection 17
5 Central lubrication system 19
6 Hoist gear 1 to 6, illustration 1 29
7 Assembly winch, illustration 2 31
8 Slewing gear 33
9 Air dryer of the compressed air system of the crane superstructure 35
10 Electrical system - Lighting 35

7.05.50 Maintenance instructions - Crane boom 1
1 Lattice mast boom 3
2 Rope pulleys and guide pulleys 4
3 Crane ropes 4

7.06 Fill quantities, lubrication chart 1
1 Crane chassis 3
2 Crane superstructure 5

7.07 Operating fluids and lubricants 1
1 Specified service fluids and lubricants for Liebherr cranes 3

7.15 Procedure in case of problems 1
1 Procedure to follow in case of a problem 3
2 Measures in clear problem cases 7
3 Carry out error diagnostics 17
4 Measures for defective components 19

8 Inspections of cranes

8.01 Periodic crane inspections 1
1 General information 3
2 Inspection of carrying crane structures, especially steel structures 4
3 Inspection of locking system of telescopic boom 79
4 Inspection of safety ropes and anchor points 81
5 Inspection of load handling equipment and assembly aids 83
6 Inspection of fastening equipment 84
7 Inspection of diaphragm reservoir 84
8 Inspection of relapse cylinders 84
9 Inspection of rope pulleys 85
10 Inspection of carrier rollers 85
11 Inspection of extension conditions of sliding beams 87
12 Inspection of the function of the overload protection 87
13 Inspecting the pin connections 87
14 Inspection of slewing ring connection 87
15 Inspection of the mounting of the load bearing equipment 88
16 Inspection of the tele extension with eccentric, illustration 1 89
17 Inspection of change over pulleys, illustration 2 90
18 Inspection of the oil and fuel tanks 90

8.03 Inspecting of winches 1

LWE/LR 1600-2-001/18101-07-02/en

copyright © Liebherr-Werk Ehingen GmbH 2018

1	Inspecting the hoist and retracting winches	3
2	Inspection of the auxiliary reeving winch, recovery winch and spare wheel winch	4
3	Monitoring the winches	5

8.04 Inspection of crane wire ropes 1

1	Crane ropes	3
2	Importance of inspection	3
3	Personal protective equipment	3
4	Qualification Inspection personnel	3
5	Unscheduled inspection	3
6	Intervals	4
7	Areas	4
8	Documenting inspection results	5
9	Wire ropes and rope end connections	5
10	Degree of severity	7
11	Abbreviations Rope diameter	7
12	Distortions and mechanical damage	8
13	Removal criteria Overview	8
14	Checking for broken strands	9
15	Determining the number of broken wires	9
16	Checking the rope end connection	14
17	Checking of rope diameter	14
18	Corrosion	17
19	Corkscrew-like distortion	19
20	Basket formation	20
21	Protruding, distorted insert or strand	21
22	Loop formation	22
23	Kinking or rope loops pulled closed	23
24	Buckles	24
25	Effects of heat, arcs	25
26	Combined degree of severity	25
27	Flattenings	25
28	Current checklist	28

8.05 Inspection of load hooks 1

1	Safety guidelines	3
2	Inspection intervals	3
3	Inspecting and monitoring the load hook	3

8.06 Inspection of hydraulic hose lines 1

1	Safety guidelines	3
2	Inspection intervals	3
3	Checking the end of the service life	3
4	Inspecting the hydraulic hose lines for damage	4
5	Inspecting the hydraulic hose lines for leaks	5
6	Documenting the inspection	5
7	Replacing hydraulic hose lines	5

8.12 Inspection of safety controls on the relapse supports 1

1	S-boom relapse retainer	3
2	Derrick relapse retainer	5
3	W-lattice jib	7

LWE/LR 1600-2-001/18101-07-02/en

copyright © Liebherr-Werk Ehingen GmbH 2018

8.14 Inspection of accumulator pressure in relapse cylinder 1
1 Checking jib stop cylinder pressure 3

8.15 Inspection of guy rods 1
1 Safety guidelines 3
2 Inspection intervals 3
3 Checking the guy rods 3

8.17 Inspection of ladders 1
1 Safety instructions 3
2 Inspection intervals 3
3 Inspecting the ladders 3
4 Inspection sheet and check list 3

8.90 Inspection chart for cranes 1
1 Inspection chart for recurring inspections of Liebherr cranes 3

90 Appendix

90.01 Preface to the appendix 1
1 Foreword 3

90.05 Update confirmation 1
1 Change confirmation form 3
2 Update confirmation 3
3 Customer information 4

LWE/LR 1600-2-001/18101-07-02/en

copyright © Liebherr-Werk Ehingen GmbH 2018

1 Description of crane

LWE/LR 1600-2-001/18101-07-02/en

copyright © Liebherr-Werk Ehingen GmbH 2018

LWE/LR 1600-2-001/18101-07-02/en

copyright © Liebherr-Werk Ehingen GmbH 2018

1.01 Terminology

1	Component overview crawler travel gear	3
2	Component overview turntable	4
3	Boom component overview	5
4	Winch component overview	6
5	Component overview derrick ballast	6
6	Ground connection	7
7	S // SL // SL(HS) // SL9-boom combinations	8
8	SLF // SL3F // SL8F3-boom combinations	10
9	SDBW/B // SLDB/BW // SL2DBW/B-boom combinations	12
10	SW // SWF-boom combinations	14
11	SDWBW/B // SDWVB/BW-boom combinations	16
12	SL2DFB/BW // SL4DFB/BW // SL5DFBW/B-boom combinations	18
13	SL10DFB/B2 // SL11DB/B2- boom combinations	20
14	SL13DFB/B2 // SL14DB/B2-boom combinations	22
15	HSDBW/B // HSLDB/BW // HSL2DBW/B-boom combinations	24
16	HSDWBW/B // HSDWVB/BW-boom combinations	26
17	HSL2DFB/BW // HSL4DFB/BW-boom combinations	28

LWE/LR 1600-2-001/18101-07-02/en

copyright © Liebherr-Werk Ehingen GmbH 2018

LWE/LR 1600-2-001/18101-07-02/en

Fig.195219

copyright © Liebherr-Werk Ehingen GmbH 2018

1 Component overview crawler travel gear

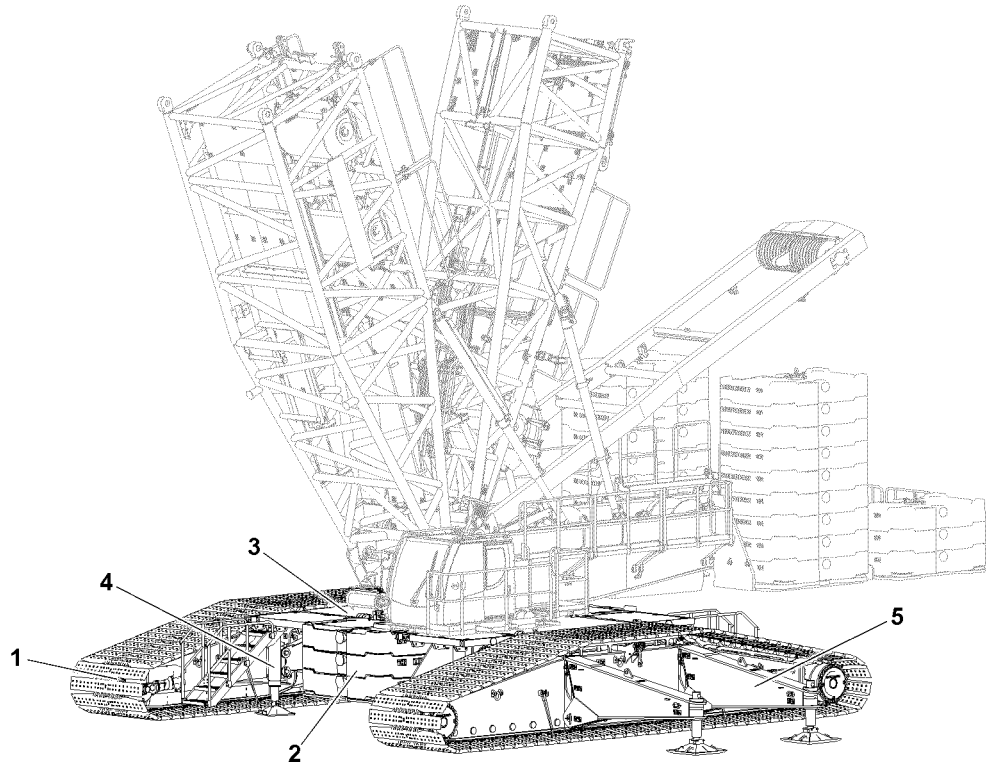

Fig.147687: Component overview crawler travel gear

1 Crawler carrier
2 Central ballast
3 Crawler center section
4 Hydraulic assembly supports
5 Mechanical auxiliary supports

LWE/LR 1600-2-001/18101-07-02/en

copyright © Liebherr-Werk Ehingen GmbH 2018

2 Component overview turntable

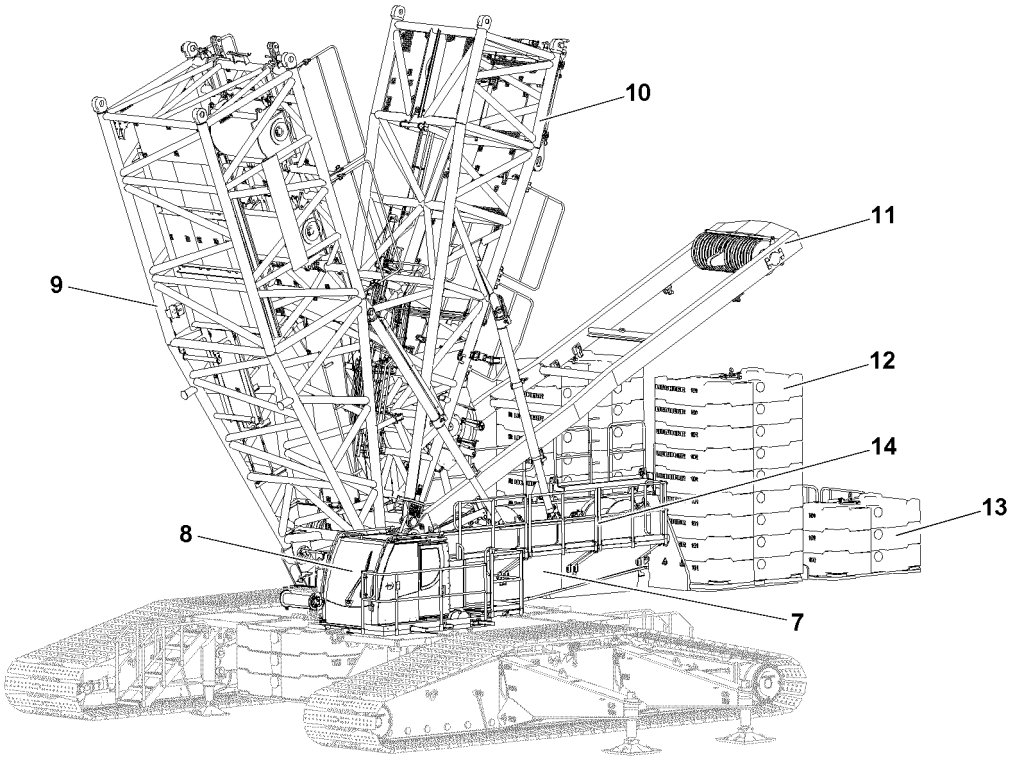

Fig.147688: Component overview turntable

7 Turntable
8 Crane operator's cab
9 S-pivot section
10 D-pivot section
11 SA-frame
12 Counterweight
13 Turntable extension with counterweight
14 Turntable catwalks and railing

LWE/LR 1600-2-001/18101-07-02/en

copyright © Liebherr-Werk Ehingen GmbH 2018

3 Boom component overview

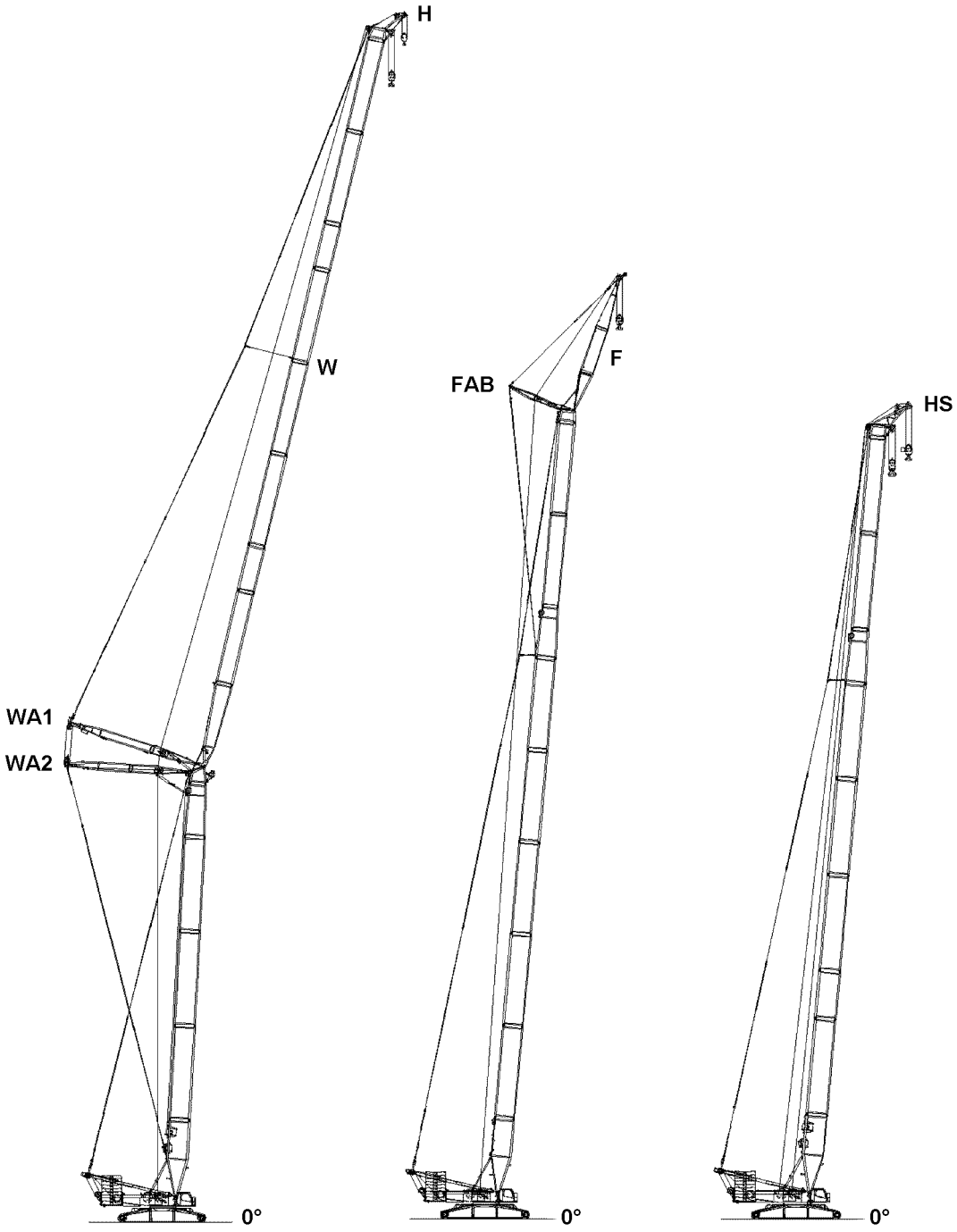

Fig.147691: Boom component overview

WA1 WA-frame 1
WA2 WA-frame 2
W Luffing lattice jib
H Boom nose
HS Auxiliary jib
FAB F-guying frame
F Fixed lattice jib

LWE/LR 1600-2-001/18101-07-02/en

copyright © Liebherr-Werk Ehingen GmbH 2018

4 Winch component overview

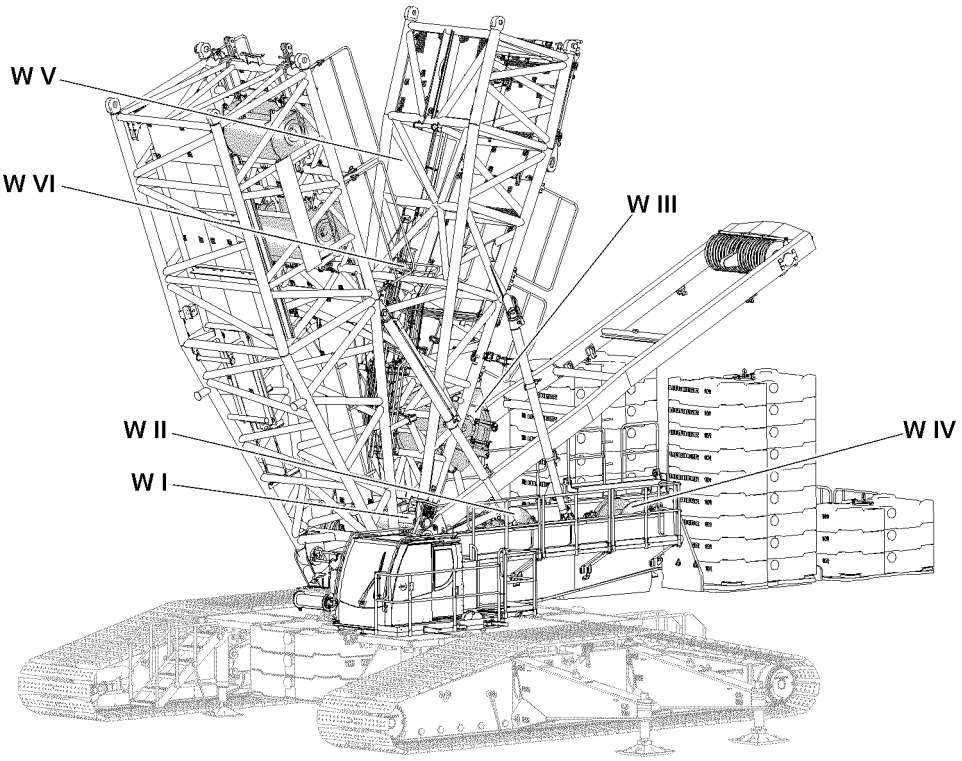

Fig.147689: Winch component overview

WI Winch 1
WII Winch 2
WIII Winch 3
WIV Winch 4
WV Winch 5
WVI Winch 6

5 Component overview derrick ballast

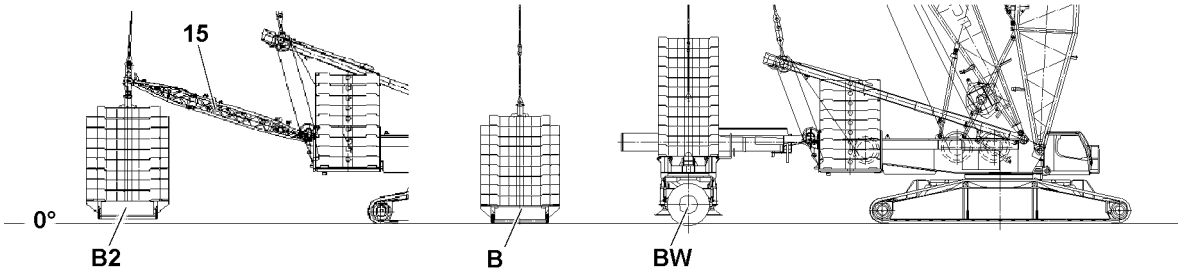

Fig.147690: Component overview derrick ballast

15 Suspended ballast guide
B Derrick ballast - suspended ballast
B2 Derrick ballast - suspended ballast with mechanical suspended ballast guide
BW Ballast trailer

Note
▶ The ballast trailer **BW** and the suspended ballast **B** are generally referred to as the **derrick ballast**.

LWE/LR 1600-2-001/18101-07-02/en

copyright © Liebherr-Werk Ehingen GmbH 2018

6 Ground connection

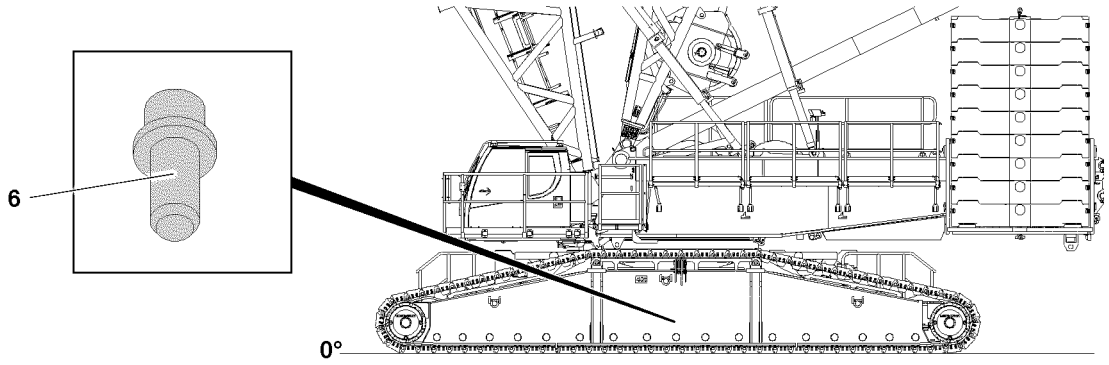

Fig.147692: Ground connection

6 Ground connection

Note

Ground the crane:

▶ Observe and adhere to the instructions in chapter 2.04.

copyright © Liebherr-Werk Ehingen GmbH 2018

7 S // SL // SL(HS) // SL9-boom combinations

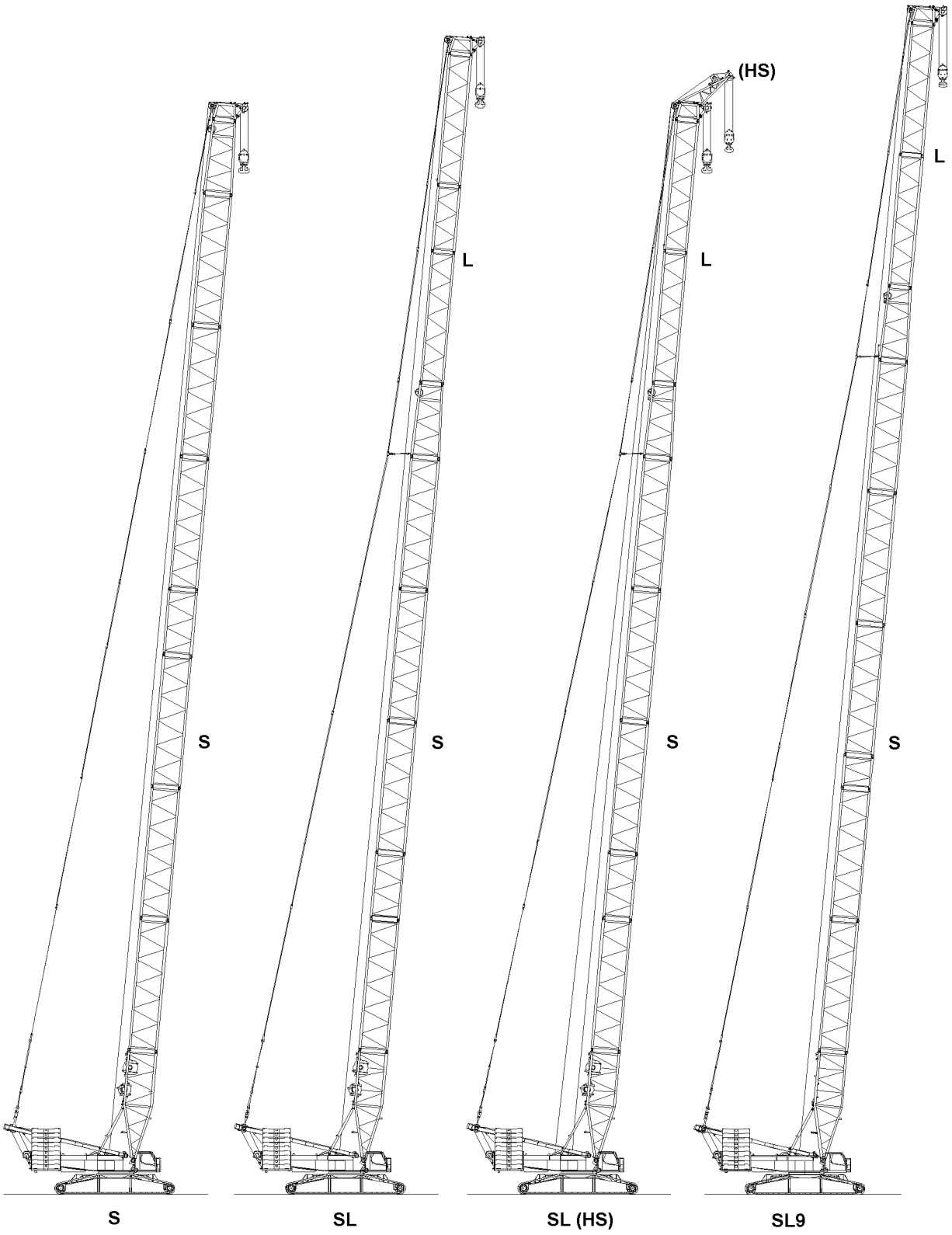

Fig.147694: S // SL // SL(HS) // SL9

LWE/LR 1600-2-001/18101-07-02/en

copyright © Liebherr-Werk Ehingen GmbH 2018

WARNING
The crane can topple over!
- ▶ Make sure that all boom systems are installed only according to the respective assembly chapters and the associated rod plans.
- ▶ Make sure that danger notes for assembly and for crane operation are observed and adhered to.
- ▶ The use of the following boom illustrations for assembly purposes is prohibited.

S Main boom
- Heavy-duty version

SL Main boom
- Heavy-duty version, supplemented on top with light lattice sections **L**

SL9 Main boom
- Heavy-duty version, supplemented on top with light lattice sections **L**
- **SL9** Variation

HS Auxiliary jib
- Auxiliary jib with own load chart

LWE/LR 1600-2-001/18101-07-02/en

copyright © Liebherr-Werk Ehingen GmbH 2018

8 SLF // SL3F // SL8F3-boom combinations

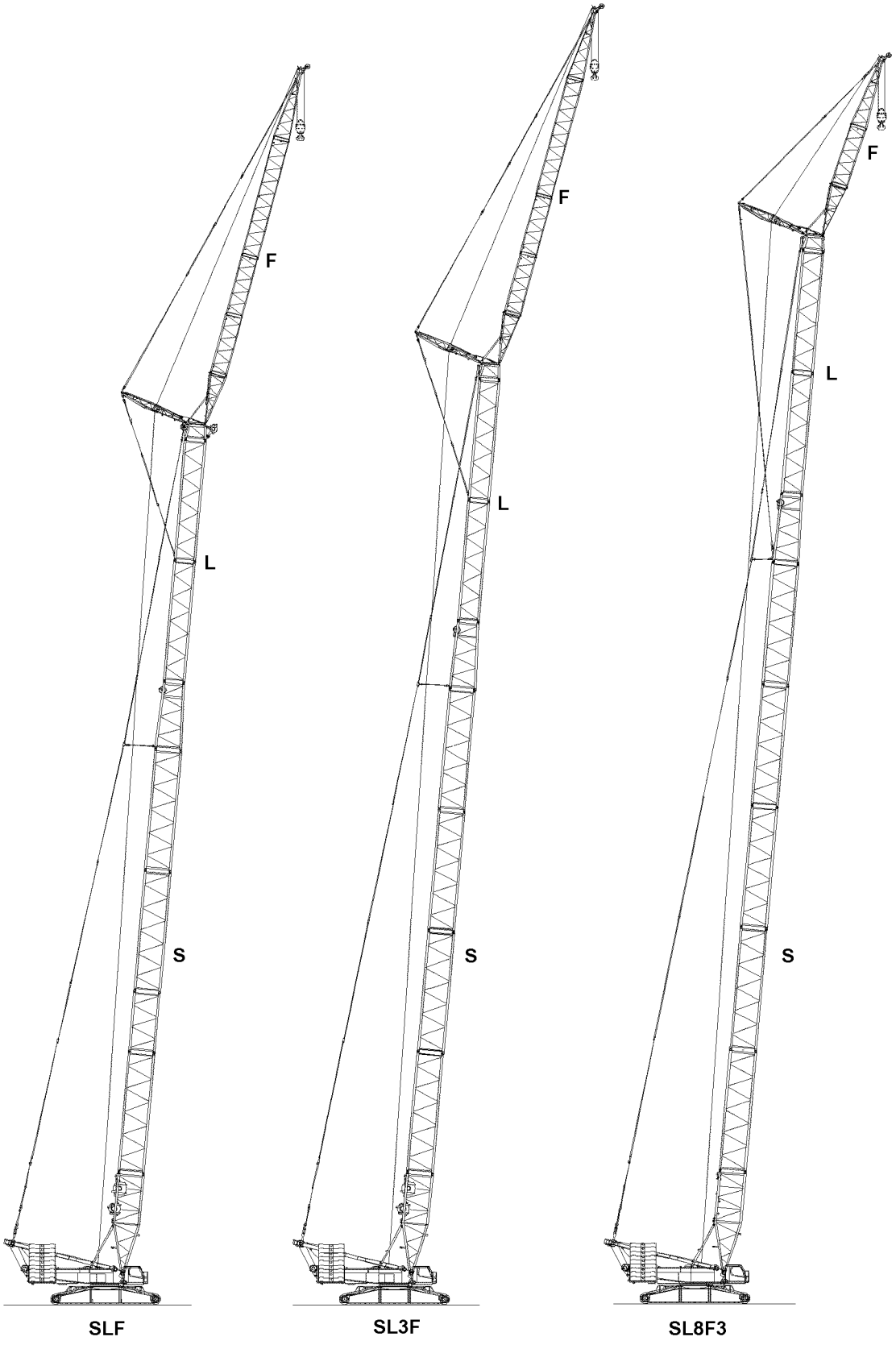

Fig.147693: SLF // SL3F // SL8F3

LWE/LR 1600-2-001/18101-07-02/en

copyright © Liebherr-Werk Ehingen GmbH 2018

WARNING
The crane can topple over!
- ▶ Make sure that all boom systems are installed only according to the respective assembly chapters and the associated rod plans.
- ▶ Make sure that danger notes for assembly and for crane operation are observed and adhered to.
- ▶ The use of the following boom illustrations for assembly purposes is prohibited.

S Main boom
- Heavy-duty version

SL Main boom
- Heavy-duty version, supplemented on top with light lattice sections **L**

SL3 Main boom
- Heavy-duty version, supplemented on top with light lattice sections **L**
- **SL3** Variation

SL8 Main boom
- Heavy-duty version, supplemented on top with light lattice sections **L**
- **SL8** Variation

F Fixed jib
- Light version

F3 Fixed jib
- With fiber guy ropes and auxiliary lugs

LWE/LR 1600-2-001/18101-07-02/en

copyright © Liebherr-Werk Ehingen GmbH 2018

9 SDBW/B // SLDB/BW // SL2DBW/B-boom combinations

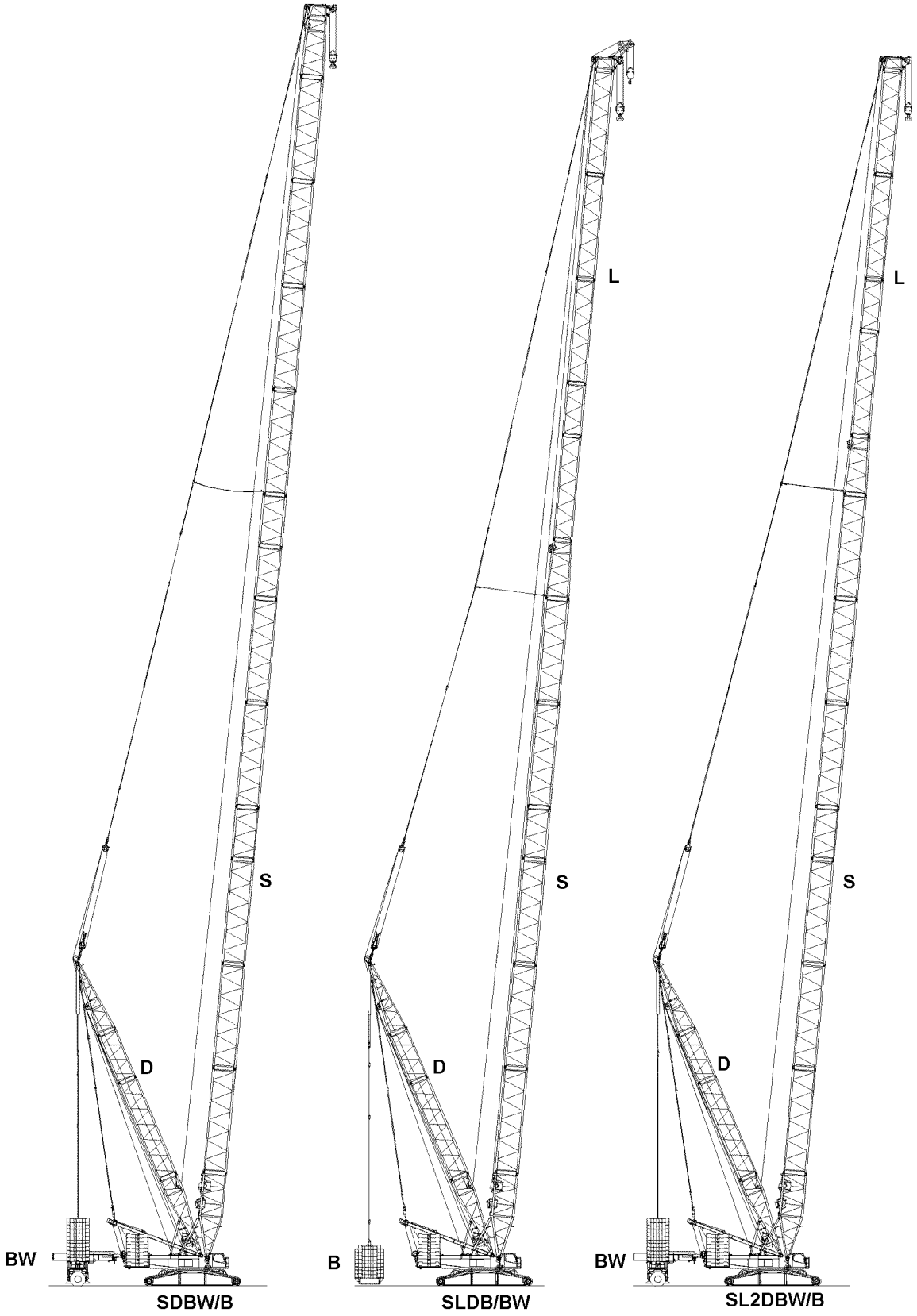

Fig.147695: SDBW/B // SLDB/BW // SL2DBW/B

LWE/LR 1600-2-001/18101-07-02/en

copyright © Liebherr-Werk Ehingen GmbH 2018

WARNING
The crane can topple over!
- ▶ Make sure that all boom systems are installed only according to the respective assembly chapters and the associated rod plans.
- ▶ Make sure that danger notes for assembly and for crane operation are observed and adhered to.
- ▶ The use of the following boom illustrations for assembly purposes is prohibited.

S Main boom
- Heavy-duty version

SL Main boom
- Heavy-duty version, supplemented on top with light lattice sections **L**

SL2 Main boom
- Heavy-duty version, supplemented on top with light lattice sections **L**
- **SL2** Variation

D Derrick boom
- Alone as assembly device or in connection with SD or SLD

B Suspended ballast
- Derrick ballast

BW Ballast trailer
- Derrick ballast

LWE/LR 1600-2-001/18101-07-02/en

copyright © Liebherr-Werk Ehingen GmbH 2018

10 SW // SWF-boom combinations

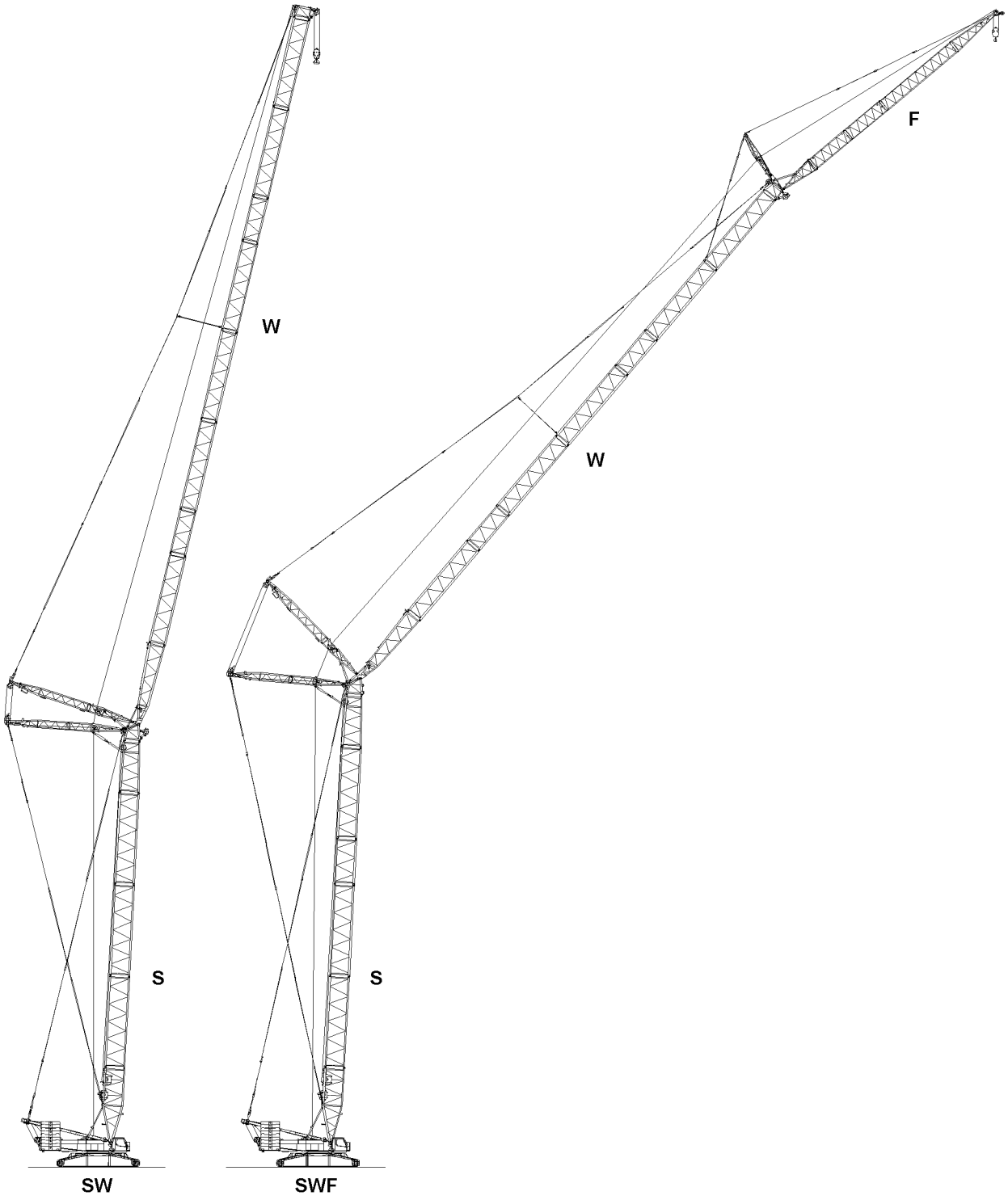

Fig.147696: SW // SWF

LWE/LR 1600-2-001/18101-07-02/en

copyright © Liebherr-Werk Ehingen GmbH 2018

WARNING
The crane can topple over!
- ▶ Make sure that all boom systems are installed only according to the respective assembly chapters and the associated rod plans.
- ▶ Make sure that danger notes for assembly and for crane operation are observed and adhered to.
- ▶ The use of the following boom illustrations for assembly purposes is prohibited.

S Main boom
- Heavy-duty version

W Luffing jib
- Heavy-duty version

F Fixed jib
- Light version

LWE/LR 1600-2-001/18101-07-02/en

copyright © Liebherr-Werk Ehingen GmbH 2018

11 SDWBW/B // SDWVB/BW-boom combinations

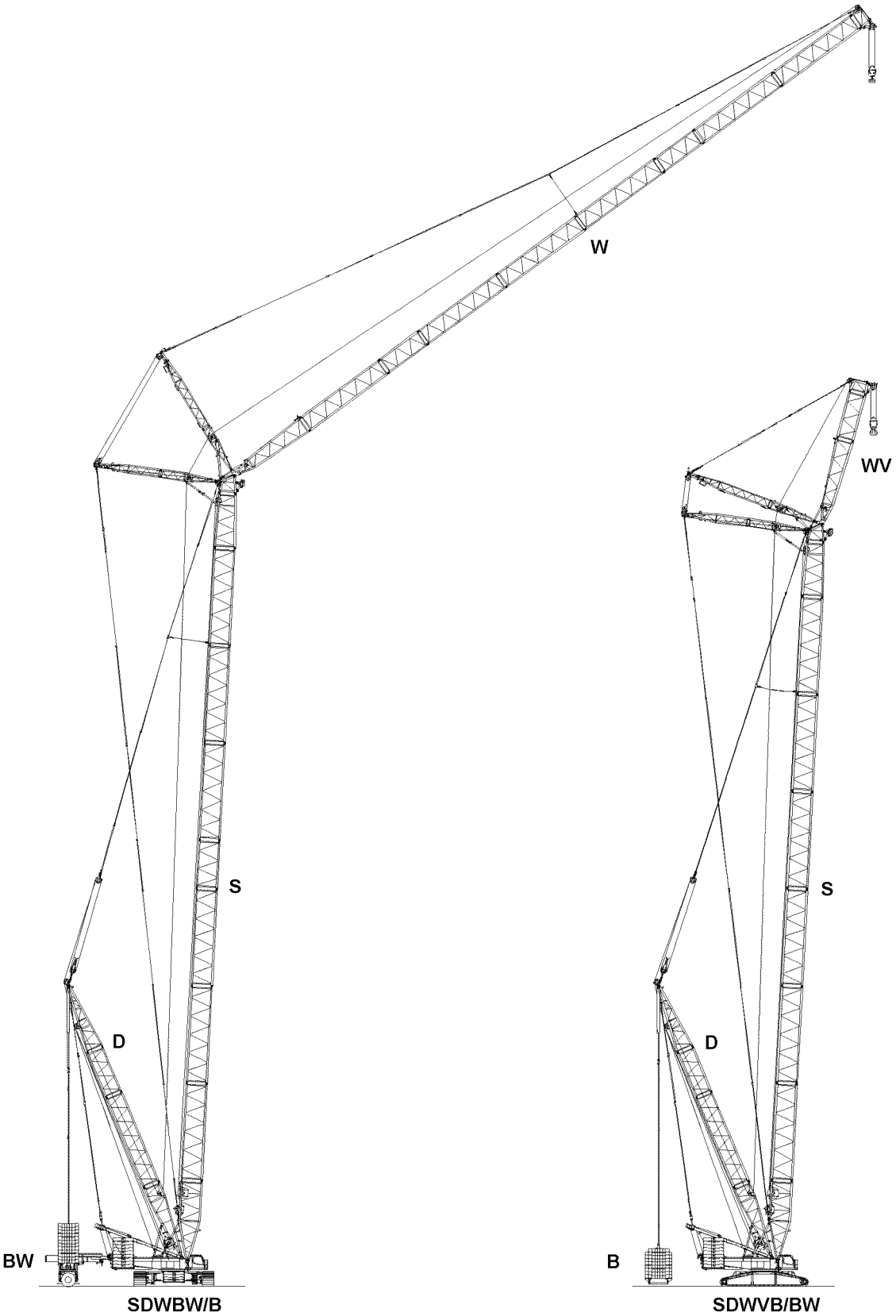

Fig.147697: SDWBW/B // SDWVB/BW

LWE/LR 1600-2-001/18101-07-02/en

copyright © Liebherr-Werk Ehingen GmbH 2018

WARNING
The crane can topple over!
- ▶ Make sure that all boom systems are installed only according to the respective assembly chapters and the associated rod plans.
- ▶ Make sure that danger notes for assembly and for crane operation are observed and adhered to.
- ▶ The use of the following boom illustrations for assembly purposes is prohibited.

S Main boom
- Heavy-duty version

D Derrick boom
- Alone as assembly device or in connection with SD or SLD

W Luffing jib
- Heavy-duty version

V Fixed jib
- Heavy-duty version

B Suspended ballast
- Derrick ballast

BW Ballast trailer
- Derrick ballast

LWE/LR 1600-2-001/18101-07-02/en

copyright © Liebherr-Werk Ehingen GmbH 2018

12 SL2DFB/BW // SL4DFB/BW // SL5DFBW/B-boom combinations

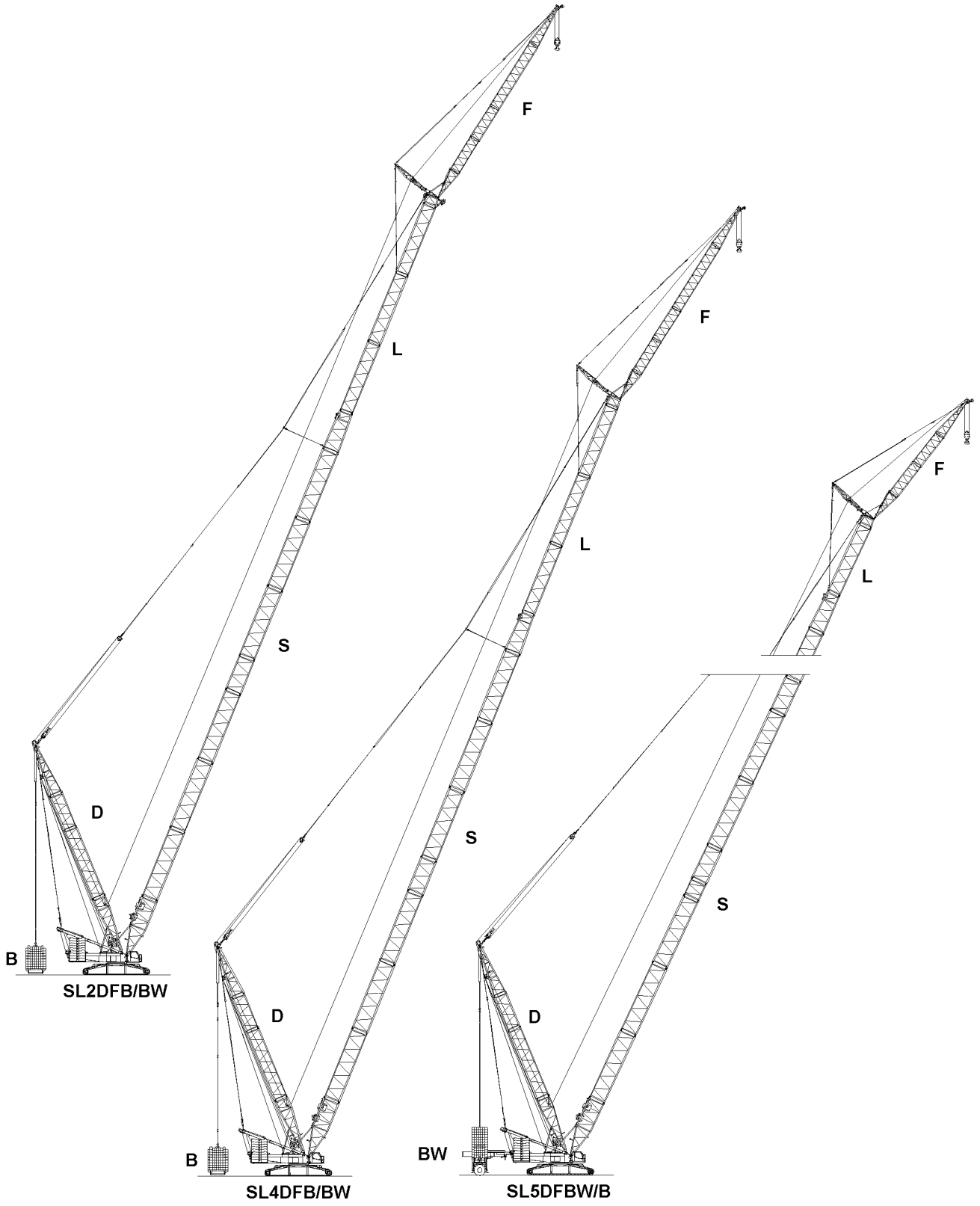

LWE/LR 1600-2-001/18101-07-02/en

Fig.147698: SL2DFB/BW // SL4DFB/BW // SL5DFBW/B

copyright © Liebherr-Werk Ehingen GmbH 2018

WARNING
The crane can topple over!
- ▶ Make sure that all boom systems are installed only according to the respective assembly chapters and the associated rod plans.
- ▶ Make sure that danger notes for assembly and for crane operation are observed and adhered to.
- ▶ The use of the following boom illustrations for assembly purposes is prohibited.

SL Main boom
- Heavy-duty version, supplemented on top with light lattice sections **L**

Main boom variations SL:
- **SL2** Main boom
- **SL4** Main boom
- **SL5** Main boom

D Derrick boom
- Alone as assembly device or in connection with SD or SLD

F Fixed jib
- Light version

B Suspended ballast
- Derrick ballast

BW Ballast trailer
- Derrick ballast

LWE/LR 1600-2-001/18101-07-02/en

copyright © Liebherr-Werk Ehingen GmbH 2018

13 SL10DFB/B2 // SL11DB/B2- boom combinations

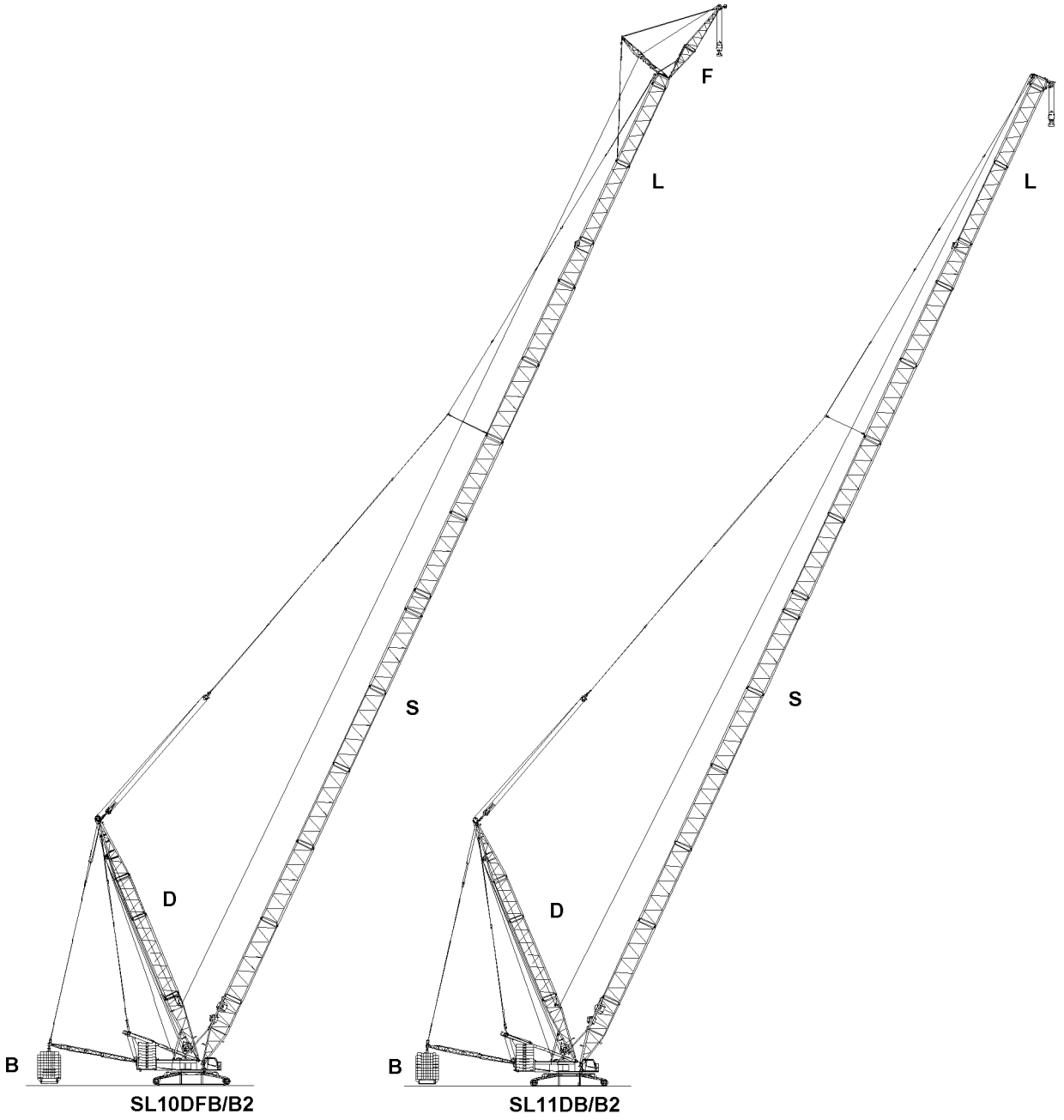

Fig.147699: SL10DFB/B2 // SL11DB/B2

LWE/LR 1600-2-001/18101-07-02/en

copyright © Liebherr-Werk Ehingen GmbH 2018

WARNING
The crane can topple over!
- ▶ Make sure that all boom systems are installed only according to the respective assembly chapters and the associated rod plans.
- ▶ Make sure that danger notes for assembly and for crane operation are observed and adhered to.
- ▶ The use of the following boom illustrations for assembly purposes is prohibited.

SL Main boom
- Heavy-duty version, supplemented on top with light lattice sections **L**

Main boom variations SL:
- **SL10** Main boom
- **SL11** Main boom

D Derrick boom
- Alone as assembly device or in connection with SD or SLD

F Fixed jib
- Light version

B Suspended ballast
- Derrick ballast

BW Ballast trailer
- Derrick ballast

LWE/LR 1600-2-001/18101-07-02/en

copyright © Liebherr-Werk Ehingen GmbH 2018

14 SL13DFB/B2 // SL14DB/B2-boom combinations

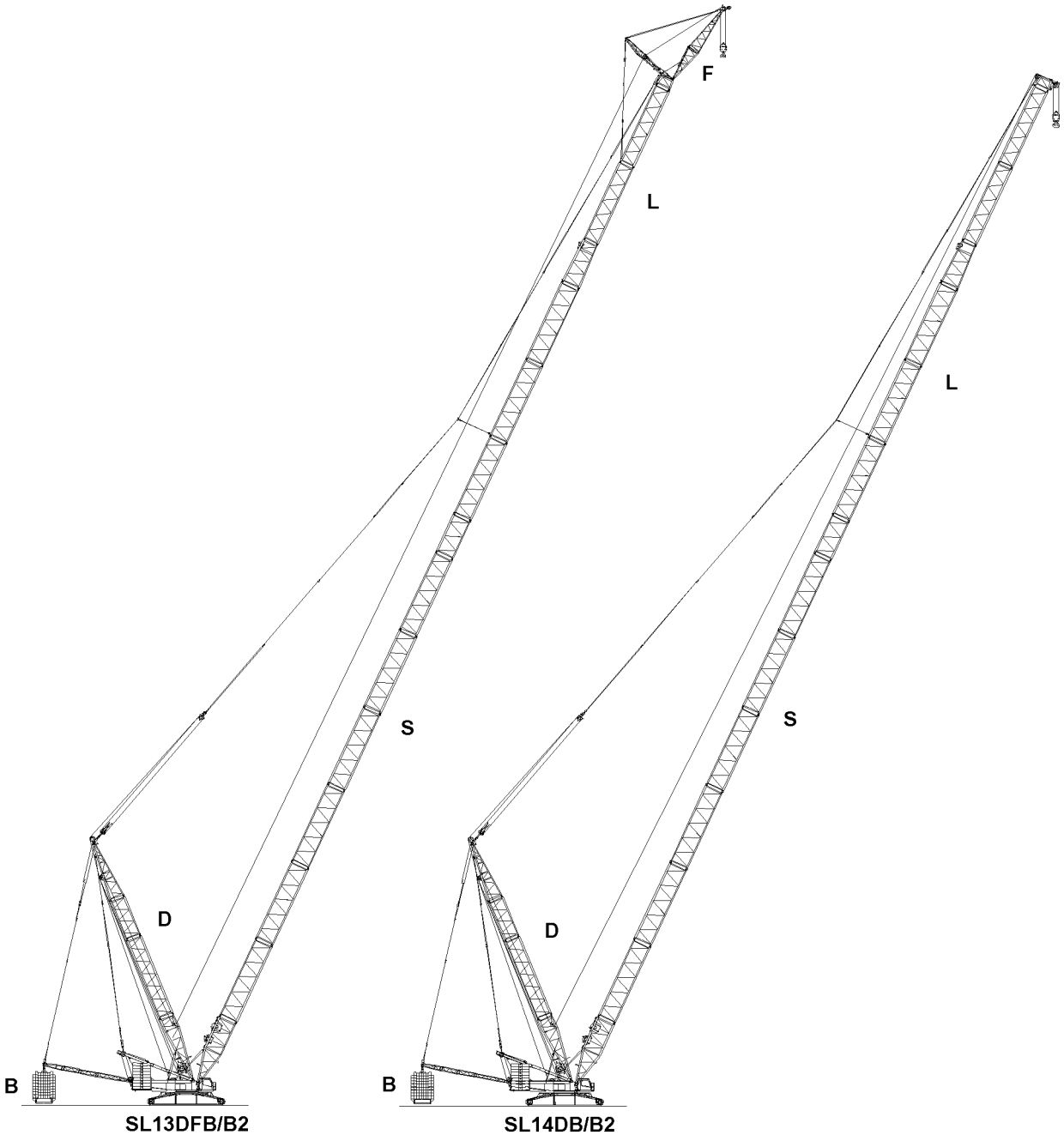

Fig.147700: SL13DFB/B2 // SL14DB/B2

LWE/LR 1600-2-001/18101-07-02/en

copyright © Liebherr-Werk Ehingen GmbH 2018

WARNING
The crane can topple over!
- ▶ Make sure that all boom systems are installed only according to the respective assembly chapters and the associated rod plans.
- ▶ Make sure that danger notes for assembly and for crane operation are observed and adhered to.
- ▶ The use of the following boom illustrations for assembly purposes is prohibited.

SL Main boom
- Heavy-duty version, supplemented on top with light lattice sections **L**

Main boom variations SL:
- **SL13** Main boom
- **SL14** Main boom

D Derrick boom
- Alone as assembly device or in connection with SD or SLD

F Fixed jib
- Light version

B Suspended ballast
- Derrick ballast

BW Ballast trailer
- Derrick ballast

LWE/LR 1600-2-001/18101-07-02/en

copyright © Liebherr-Werk Ehingen GmbH 2018

15 HSDBW/B // HSLDB/BW // HSL2DBW/B-boom combinations

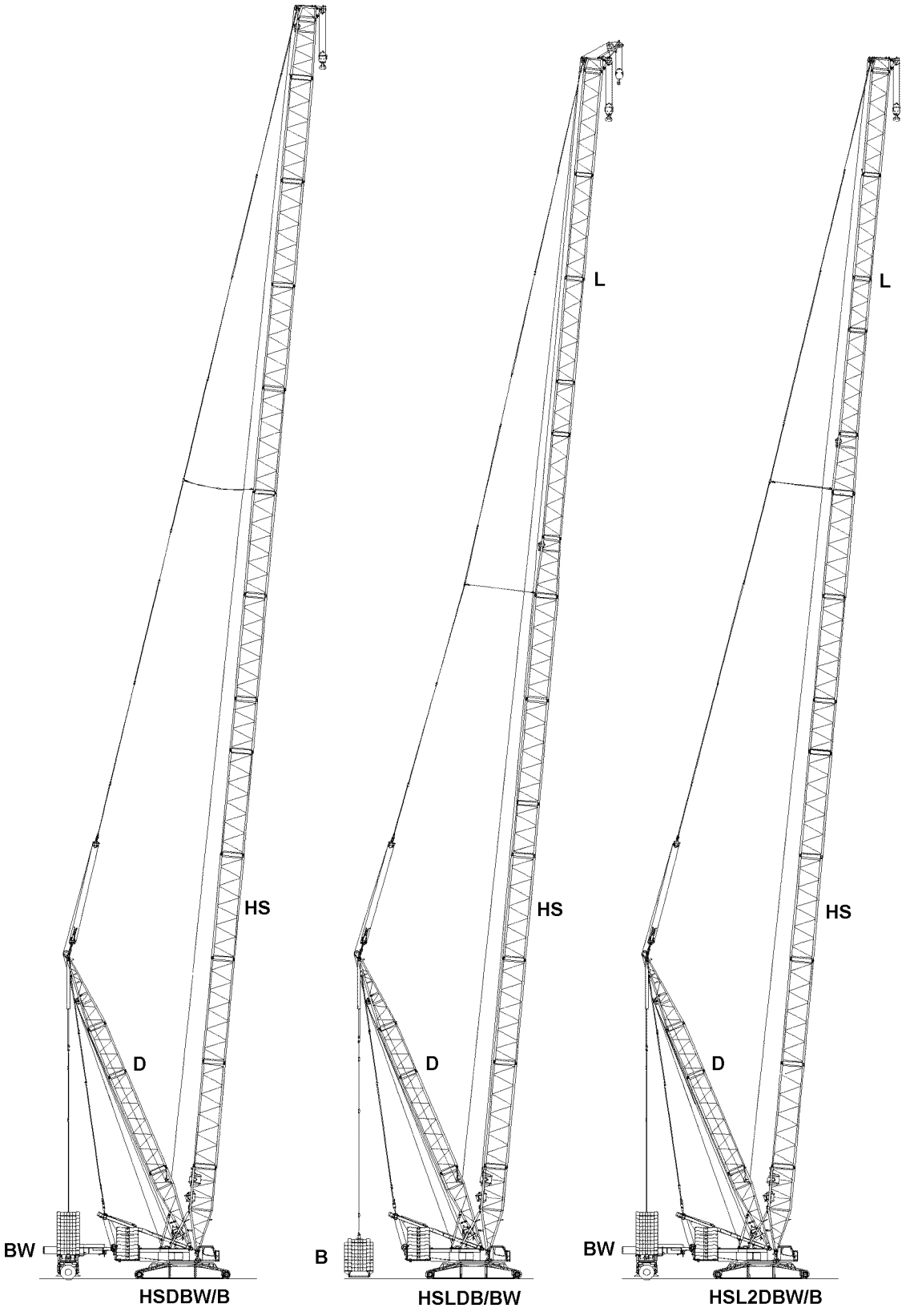

Fig.147703: HSDBW/B // HSLDB/BW // HSL2DBW/B

LWE/LR 1600-2-001/18101-07-02/en

copyright © Liebherr-Werk Ehingen GmbH 2018

WARNING
The crane can topple over!
- ▶ Make sure that all boom systems are installed only according to the respective assembly chapters and the associated rod plans.
- ▶ Make sure that danger notes for assembly and for crane operation are observed and adhered to.
- ▶ The use of the following boom illustrations for assembly purposes is prohibited.

HS Main boom
- Heavy duty version

HSL Main boom
- Heavy duty version, supplemented on top with light lattice sections **L**

HSL2 Main boom
- Heavy duty version, supplemented on top with light lattice sections **L**
- **HSL2** Variation

D Derrick boom
- Alone as assembly device or in connection with HSD or HSLD

B Suspended ballast
- Derrick ballast

BW Ballast trailer
- Derrick ballast

LWE/LR 1600-2-001/18101-07-02/en

copyright © Liebherr-Werk Ehingen GmbH 2018

16 HSDWBW/B // HSDWVB/BW-boom combinations

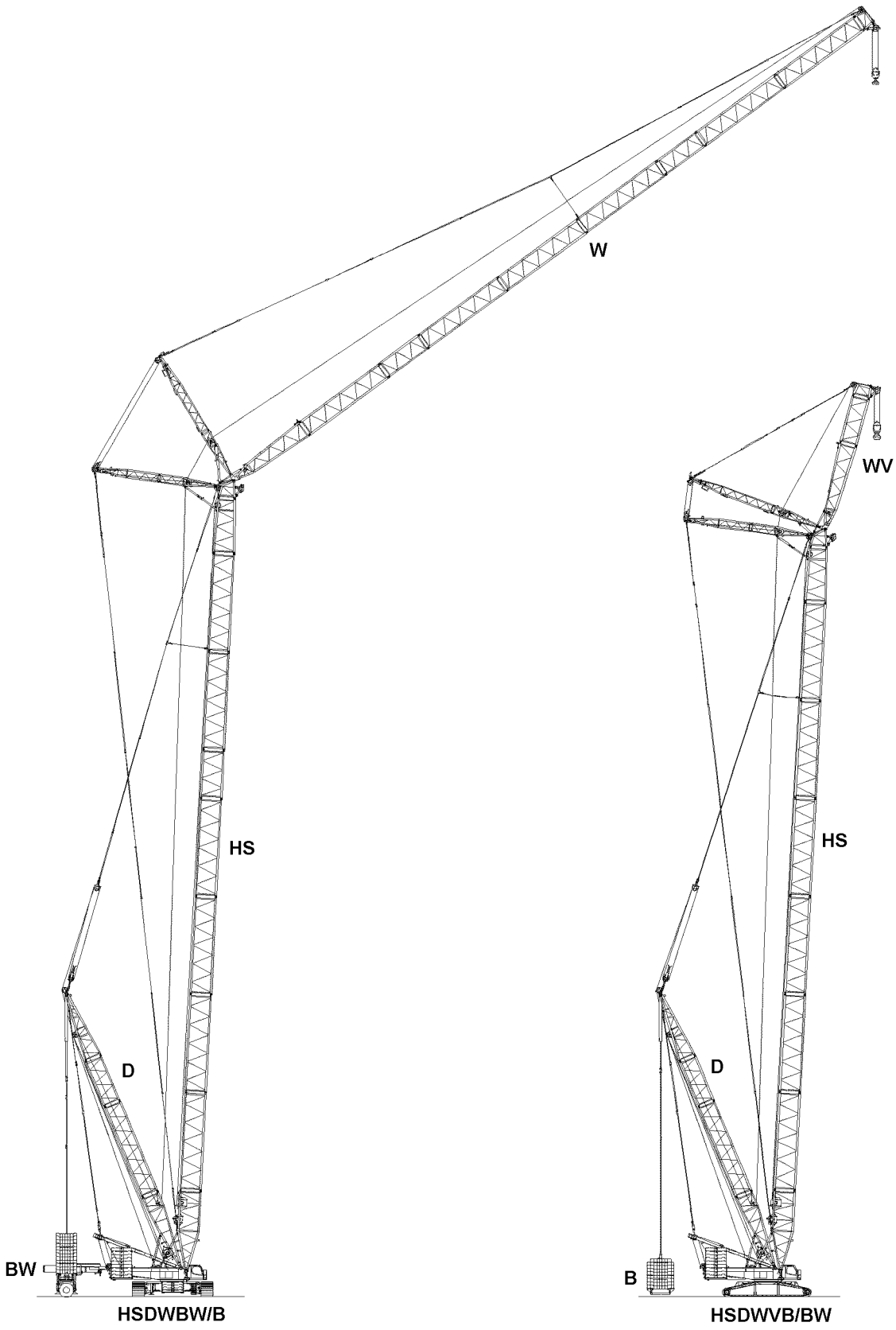

Fig.147701: HSDWBW/B // HSDWVB/BW

LWE/LR 1600-2-001/18101-07-02/en

copyright © Liebherr-Werk Ehingen GmbH 2018

WARNING
The crane can topple over!
- ▶ Make sure that all boom systems are installed only according to the respective assembly chapters and the associated rod plans.
- ▶ Make sure that danger notes for assembly and for crane operation are observed and adhered to.
- ▶ The use of the following boom illustrations for assembly purposes is prohibited.

HS Main boom
- Heavy duty version

D Derrick boom
- Alone as assembly device or in connection with HSD or HSLD

W Luffing jib
- Heavy-duty version

V Fixed jib
- Heavy-duty version

B Suspended ballast
- Derrick ballast

BW Ballast trailer
- Derrick ballast

LWE/LR 1600-2-001/18101-07-02/en

copyright © Liebherr-Werk Ehingen GmbH 2018

17 HSL2DFB/BW // HSL4DFB/BW-boom combinations

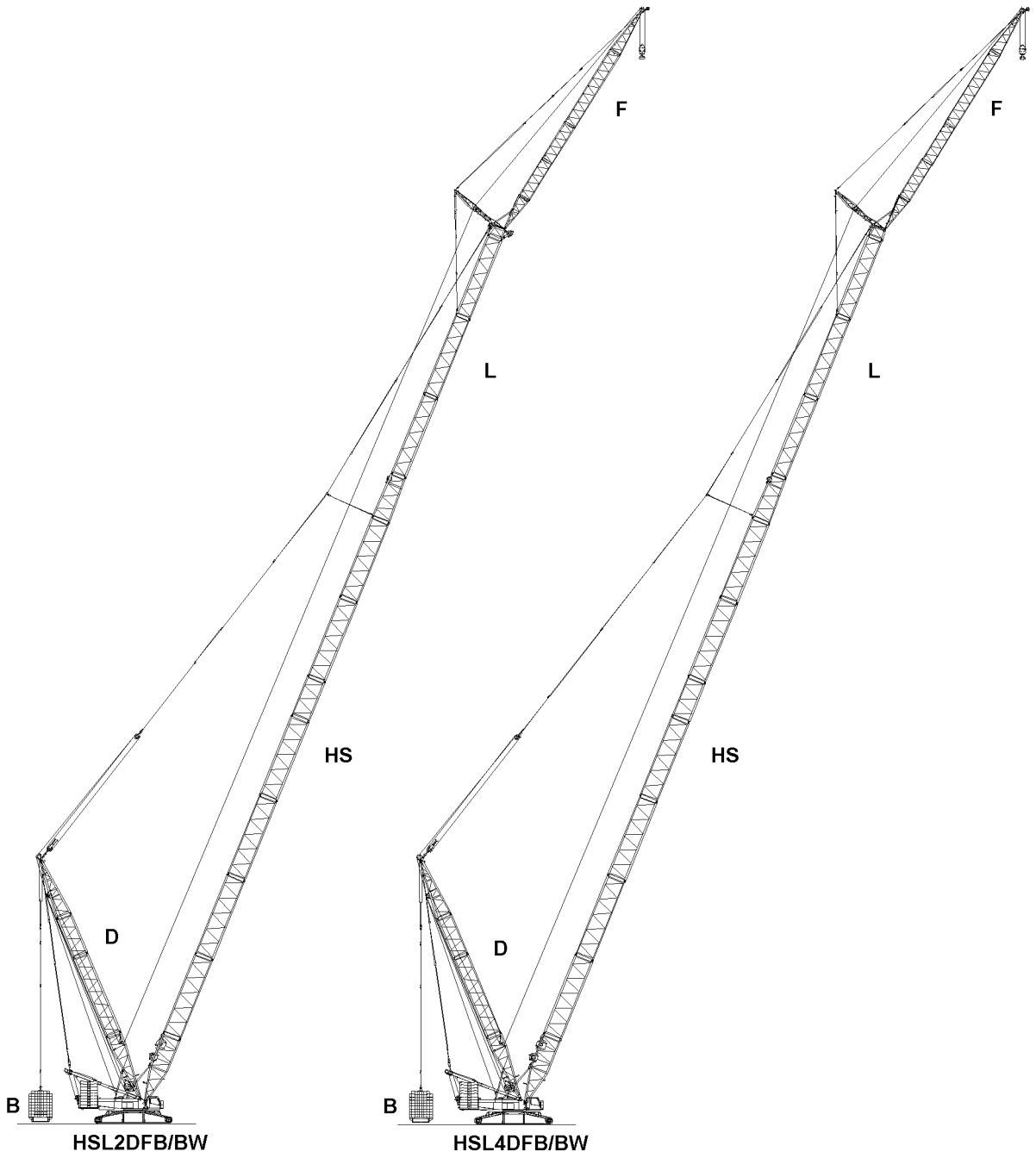

LWE/LR 1600-2-001/18101-07-02/en

Fig.147702: HSL2DFB/BW // HSL4DFB/BW

copyright © Liebherr-Werk Ehingen GmbH 2018

WARNING
The crane can topple over!
- ▶ Make sure that all boom systems are installed only according to the respective assembly chapters and the associated rod plans.
- ▶ Make sure that danger notes for assembly and for crane operation are observed and adhered to.
- ▶ The use of the following boom illustrations for assembly purposes is prohibited.

HSL Main boom
- Heavy duty version, supplemented on top with light lattice sections **L**

Main boom variations HSL:
- **HSL2** Main boom
- **HSL4** Main boom

D Derrick boom
- Alone as assembly device or in connection with HSD or HSLD

F Fixed jib
- Light version

B Suspended ballast
- Derrick ballast

BW Ballast trailer
- Derrick ballast

LWE/LR 1600-2-001/18101-07-02/en

copyright © Liebherr-Werk Ehingen GmbH 2018

Empty page!

LWE/LR 1600-2-001/18101-07-02/en

copyright © Liebherr-Werk Ehingen GmbH 2018

1.02 Product description

1	Crawler travel gear	2
2	Crane superstructure	2
3	Winches	4
4	Boom systems / boom combinations	4
5	Auxiliary equipment	5

LWE/LR 1600-2-001/18101-07-02/en

copyright © Liebherr-Werk Ehingen GmbH 2018

1 Crawler travel gear

1.1 Frame / crawler center section

- In-house manufactured, distortion-resistant welded structure made from high-strength, close-grained structural steel
- The crawler carriers can be removed and can be assembled / disassembled by the crane itself

1.2 Crawler travel gear

- Maintenance free, dirt protected crawler travel gear with flat track pads, consisting of a crawler center section and two crawler carriers
- Pad width: 1.5 m or 2.0 m *****
- Track width: 8.4 m

1.3 Central ballast*

- 2 platforms each 2.5 t
- Total central ballast 65 t
- 6 counterweight plates each 10.0 t

1.4 Drive

- Hydraulic travel drives with planetary gears
- The crawler chains can be controlled independently and in the opposite direction
- There is no preferred travel direction

1.5 Travel power

- Stepless speed from 0 km/h to 1.09 km/h

2 Crane superstructure

2.1 Turntable frame

- In-house manufactured, distortion-resistant welded structure made from high-strength, close-grained structural steel
- Connection to crawler travel gear via 3-row roller rotary connection, 360° slewable
- Quick-Connection **QC***

2.2 Diesel engine

- Number of cylinders: 6
- Make: LIEBHERR
- Water cooled

Note

▶ Depending on one of the respective crane configurations, one of the following engine types is installed on the crane, see also separate Diesel engine operating instructions.

LWE/LR 1600-2-001/18101-07-02/en

copyright © Liebherr-Werk Ehingen GmbH 2018

2.2.1 Engine type D 846 A7

- Performance: 370 KW at 1900 rpm
- Maximum torque: 2355 Nm at 1500 rpm

2.2.2 Engine type D 856 A7 SCR

- Performance: 390 KW at 1900 rpm
- Maximum torque: 2503 Nm at 1350 rpm

2.3 Crane drive

- Hydraulic via pump distributor gear with four axial piston variable displacement pumps with power regulation, closed oil circuits
- Axial piston pumps in open circuit for luffing and telescoping

2.4 Crane control

- Servo control with electronic synchronous run device
- Energy recycling when lowering the load
- All movements are carried out independently of each other via joysticks (master switch)

2.5 Slewing gear

- Hydraulically driven via axial piston pumps and planetary gears
- Disk brakes spring loaded and hydraulically vented
- Slewing speed steplessly regulated from 0 rpm to 0.95 rpm

2.6 Crane cab

- Steel plate design with safety glass
- Operating and control instruments
- Air conditioned
- Slewable to the side
- Can be tilted to the rear

2.7 Safety equipment

- LICCON overload display
- Hoist limitation
- Electronic incline display
- Safety valves against pipe and hose breaks
- Wind warning system
- Airplane warning light

2.8 Camera monitoring

- 2 color monitors
- 3 cameras for winches and turntables in the rear

2.9 Counterweight

- Consists of two consoles, each 5.0 t
- 18 counterweight plates each 10.0 t

LWE/LR 1600-2-001/18101-07-02/en

copyright © Liebherr-Werk Ehingen GmbH 2018

- Total counterweight 190 t

2.10 Electrical system

- Modern data bus technology
- Direct current 24 V
- 2 batteries, each 143 Ah

3 Winches

- Winches hydraulically driven via axial piston variable displacement pumps and integrated planetary gear
- Disk brakes spring loaded and hydraulically vented

3.1 Winch 1

- Hoist winch

3.2 Winch 2

- Hoist winch

3.3 Winch 3

- Control winch for main boom for derrick operation

3.4 Winch 4

- Intake gear

3.5 Winch 5

- Adjustment luffing lattice jib

3.6 Winch 6

- Auxiliary hoist gear

4 Boom systems / boom combinations

4.1 Boom systems

Note

▶ See chapter 1.01.

LWE/LR 1600-2-001/18101-07-02/en

copyright © Liebherr-Werk Ehingen GmbH 2018

5 Auxiliary equipment

5.1 Mechanical auxiliary support

- To erect long boom combinations without derrick ballast

5.2 Hydraulic assembly support

- Lifting of basic machine for assembly / disassembly
- Consisting of 4 support cylinders, including support plates, installed on the crawler center section

5.3 Hydraulic assembly cylinder

- For self-assembly / disassembly of crawler travel gear

5.4 Pin pulling device

- Including mobile hydraulic aggregate
- For assembly / disassembly of pins on crawler travel gear and center section as well as boom intermediate sections

LWE/LR 1600-2-001/18101-07-02/en

copyright © Liebherr-Werk Ehingen GmbH 2018

Empty page!

LWE/LR 1600-2-001/18101-07-02/en

copyright © Liebherr-Werk Ehingen GmbH 2018

1.03 Technical data

1	Crane	5
2	Noise emission	6
3	Vibrations	6
4	Crane speeds	6
5	Crane surface pressure	6
6	Load handling equipment	6
7	Hoist ropes	7
8	Control ropes	7
9	Guy ropes	7
10	Assembly rope	7
11	Dimensions and weights of the crane components	7
12	Crawler carrier	8
13	Turntable with crawler center section with SA-frame with Quick Connection	8
14	Turntable with crawler center section with SA-frame without Quick Connection	9
15	Turntable with crawler center section without SA-frame with Quick Connection	9
16	Turntable with crawler center section without SA-frame without Quick Connection	10
17	Crawler center section	10
18	Turntable with a Quick Connection with SA-frame	11
19	Turntable with Quick connection without SA-frame	11
20	SA-frame with winch 4	12
21	Mechanical auxiliary support	12
22	Winch 1	12
23	Winch 2	13
24	Counterweight platform	13
25	Central ballast platform	13
26	Ballast plate for central ballast / counterweight / derrick ballast	14
27	S-pivot section 10 m	14
28	S-intermediate section 3 m	15
29	S-intermediate section 6 m	15
30	S-intermediate section 12 m	15
31	SW-end section	16
32	SL-reducer 6.75 m	16
33	LI-intermediate section 6 m	17
34	LI-intermediate section 12 m	17
35	F-connector head	17
36	Boom nose	18
37	Roller set 300 t	18
38	Roller set 320 t	18
39	Roller cart	19
40	F-assembly unit	19
41	F-intermediate section 6 m , 1916.06	19
42	F-intermediate section 12 m , 1916.06	20
43	F-end section	20
44	D-pivot section 9.5 m	20
45	D-end section 8.5 m	21
46	D-intermediate section 6 m , 2420.16	21

LWE/LR 1600-2-001/18101-07-02/en

copyright © Liebherr-Werk Ehingen GmbH 2018

47	D-intermediate section 12 m , 2420.20	21
48	W-pivot section 10.75 m with pivot section WA-frame 1 (transport unit 1)	22
49	WA-frame 1 and WA-frame 2, end sections (transport unit 2)	22
50	WA-frame 2, pivot section (transport unit 3)	22
51	W-connector head	23
52	Ballast trailer	23
53	Complete guide for ballast trailer	24
54	Ballast trailer with wheel drive	24
55	Complete guide with adapter, for ballast trailer	25
56	Ballast pallet suspended ballast	25
57	Suspended ballast guide B2, pivot section	25
58	Suspended ballast guide B2, intermediate section	26
59	Suspended ballast guide B2, end section	26

LWE/LR 1600-2-001/18101-07-02/en

copyright © Liebherr-Werk Ehingen GmbH 2018

Empty page!

LWE/LR 1600-2-001/18101-07-02/en

copyright © Liebherr-Werk Ehingen GmbH 2018

LWE/LR 1600-2-001/18101-07-02/en

Fig.195219

copyright © Liebherr-Werk Ehingen GmbH 2018

1 Crane

All dimension data in meters (m)

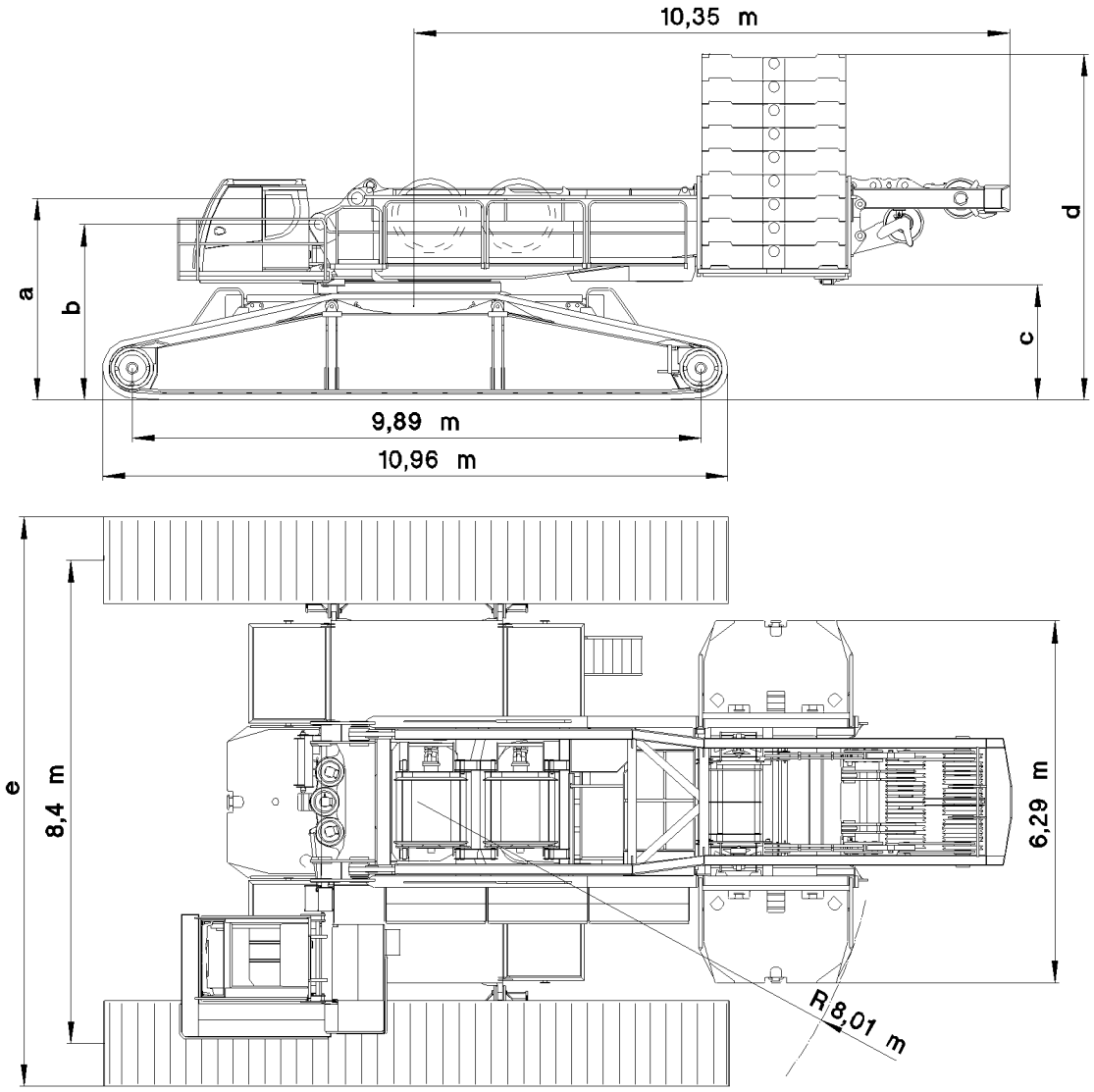

Fig.126805: Crane

Component	a	b	c	d
Crawler travel gear with Quick Connection	3.8 m	3.4 m	2.3 m	6.3 m
Crawler travel gear without Quick Connection	3.5 m	3.1 m	2.0 m	6.0 m

Component	Track pad width	e
Crawler travel gear	1.5 m	9.9 m
Crawler travel gear	2.0 m	10.4 m

LWE/LR 1600-2-001/18101-07-02/en

copyright © Liebherr-Werk Ehingen GmbH 2018

2 Noise emission

Control platform Crane cab	
Sound pressure level [L_{pA}], according to EN13000	73 db(A)

3 Vibrations

Vibrations transferred to the operator	Value
Total vibration value to which the upper body limbs are exposed	Not more than 2.5 m/s²
Effective value of weighted acceleration to which the entire body is exposed	Not more than 0.5 m/s²

4 Crane speeds

Note
▶ The crane speeds refer to an engine rpm of 1900 rpm !

Drives	Speed
Winch 1	0 m/min to 132 m/min for a single strand
Winch 2	0 m/min to 132 m/min for a single strand
Winch 3	0 m/min to 130 m/min for a single strand
Winch 5	0 m/min to 132 m/min for a single strand
Winch 6	0 m/min to 94 m/min for a single strand
Winch 4	2 x 78 m/min for a single strand

Drives	RPM
Slewing gear	0 rpm to 0.95 rpm

5 Crane surface pressure

Note
▶ Determination of the crane's surface pressure, see the LICCON job planner operating instructions.

6 Load handling equipment

Note
▶ For load handling equipment, see load chart manual.

LWE/LR 1600-2-001/18101-07-02/en

copyright © Liebherr-Werk Ehingen GmbH 2018

7 Hoist ropes

	Rope diameter	Rope category number RCN
Winch 1	28 mm	See Rope certificate
Winch 2	28 mm	See Rope certificate
Winch 6 (Type 1)	28 mm	See Rope certificate
Winch 6 (Type 2)	25 mm	See Rope certificate

8 Control ropes

	Rope diameter	Rope category number RCN
Winch 3	28 mm	See Rope certificate
Winch 4	28 mm	See Rope certificate
Winch 5	28 mm	See Rope certificate

9 Guy ropes

	Rope diameter	Rope category number RCN
Auxiliary guying	34 mm	See Rope certificate

10 Assembly rope

	Rope diameter	Rope category number RCN
Assembly winch	8 mm	See Rope certificate

11 Dimensions and weights of the crane components

Note

- ▶ The following listed weights are reference values and may not match your crane exactly.
- ▶ The illustrations of crane components / crane parts are examples and may not apply exactly to your crane.

WARNING

Danger of accidents when handling crane components / crane parts!

- ▶ Make sure that the actual weight is known before fastening crane components / crane parts.
- ▶ Check the weight label on the crane components / crane parts.
- ▶ Fasten crane components / crane parts solely with approved and sufficiently load bearing fastening equipment.
- ▶ Make sure that crane components / crane parts are fastened only on the intended fastening points.

LWE/LR 1600-2-001/18101-07-02/en

copyright © Liebherr-Werk Ehingen GmbH 2018

12 Crawler carrier

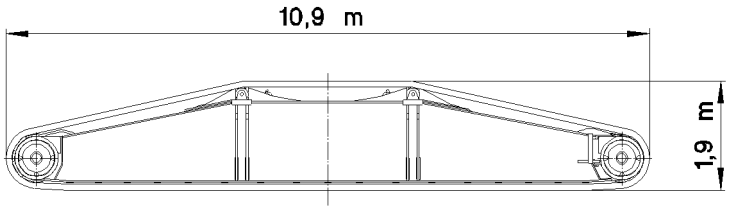

Fig.119973: Crawler carrier

Component	Track pad width	Weight	Width
Crawler carrier with two travel drives	1.5 m	35.0 t	1.8 m
Crawler carrier with two travel drives	2.0 m	38.0 t	2.0 m

13 Turntable with crawler center section with SA-frame with Quick Connection

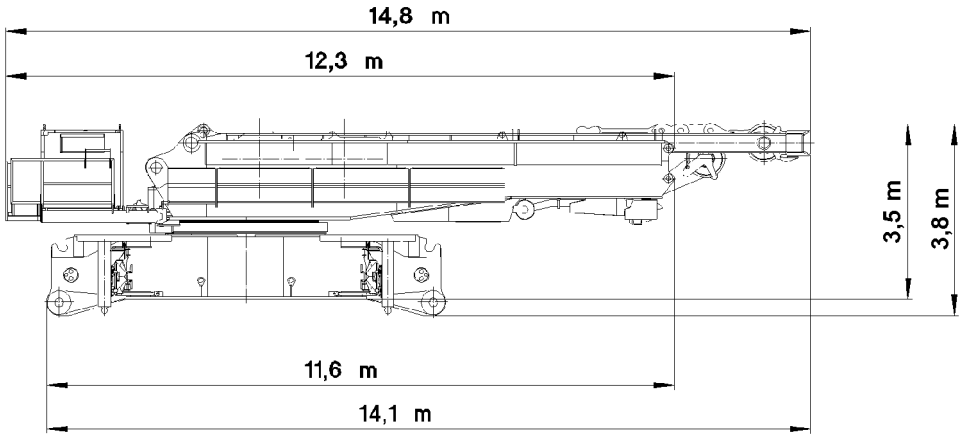

Fig.149469: Turntable with crawler center section with SA-frame with Quick Connection

The following applies in general for the weight data of assembly connections:
- Inclusive of 3 slewing gears
- Winches including ropes
- SA-frame with roller set

Component	Weight	Width
Turntable with SA-frame and winch 4 with rope With crawler center section and assembly support Without winch 1 and winch 2	75.1 t	3.0 m

LWE/LR 1600-2-001/18101-07-02/en

copyright © Liebherr-Werk Ehingen GmbH 2018

14 Turntable with crawler center section with SA-frame without Quick Connection

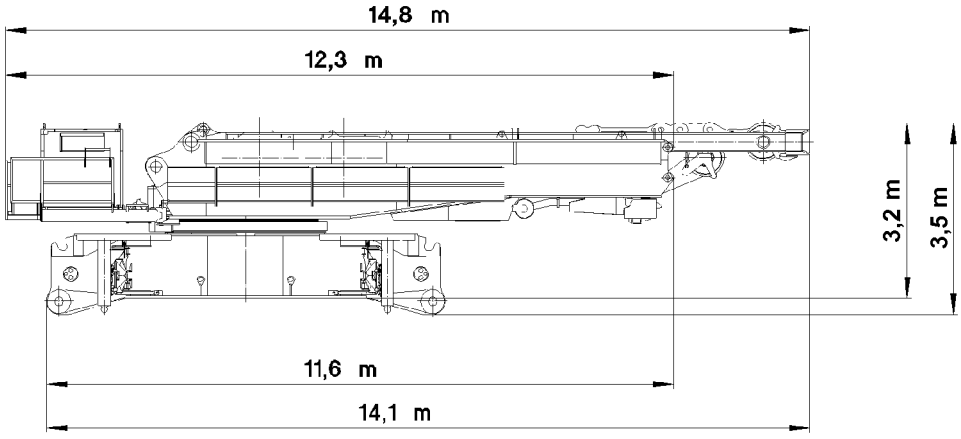

Fig.149470: Turntable with crawler center section with SA-frame without Quick Connection

The following applies in general for the weight data of assembly connections:
- Inclusive of 3 slewing gears
- Winches including ropes
- SA-frame with roller set

Component	Weight	Width
Turntable with SA-frame and winch 4 with rope With crawler center section and assembly support Without winch 1 and winch 2	75.1 t	3.0 m

15 Turntable with crawler center section without SA-frame with Quick Connection

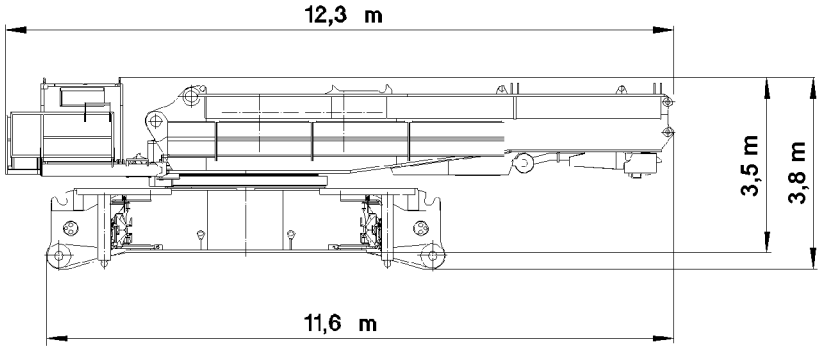

Fig.149471: Turntable with crawler center section without SA-frame with Quick Connection

The following applies in general for the weight data of assembly connections:
- Inclusive of 3 slewing gears

copyright © Liebherr-Werk Ehingen GmbH 2018

Component	Weight	Width
Turntable without SA-frame With crawler center section and assembly support Without winch 1 and winch 2	61.3 t	3.0 m

16 Turntable with crawler center section without SA-frame without Quick Connection

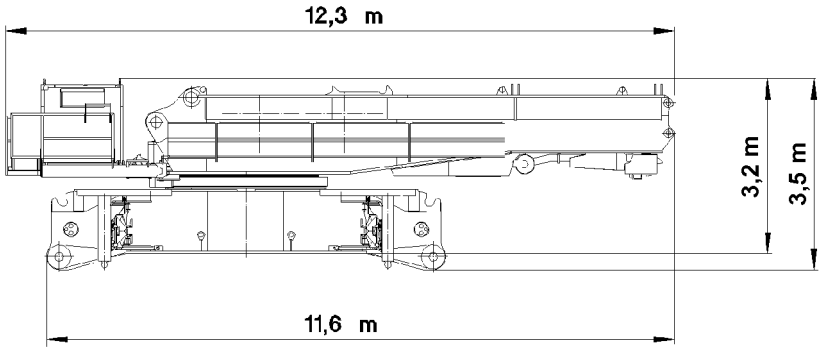

Fig.149472: Turntable with crawler center section without SA-frame without Quick Connection

The following applies in general for the weight data of assembly connections:
– Inclusive of 3 slewing gears

Component	Weight	Width
Turntable without SA-frame With crawler center section and assembly support Without winch 1 and winch 2	57.6 t	3.0 m

17 Crawler center section

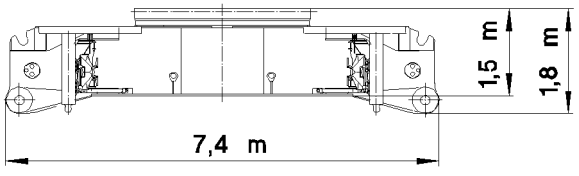

Fig.119975: Crawler center section

Component	Weight	Width
Crawler center section	27.5 t	3.0 m

LWE/LR 1600-2-001/18101-07-02/en

copyright © Liebherr-Werk Ehingen GmbH 2018

18 Turntable with a Quick Connection with SA-frame

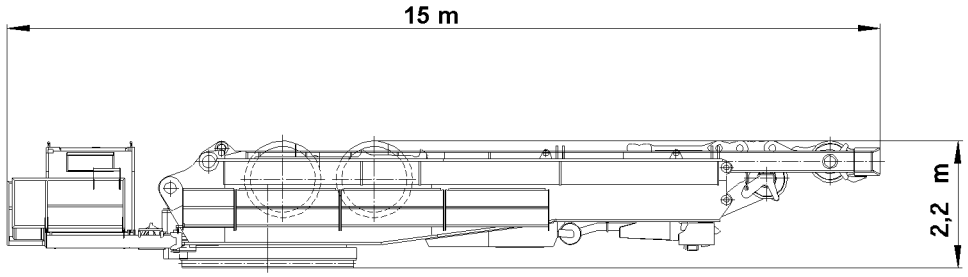

Fig.149473: Turntable with a Quick Connection with SA-frame

The following applies for the weight data of assembly connections:
- Inclusive of 3 slewing gears
- Winches including ropes
- SA-frame with roller set

Component	Weight	Width
Turntable with winch 1, winch 2 and winch 4 and SA-frame	64.5 t	3.0 m

19 Turntable with Quick connection without SA-frame

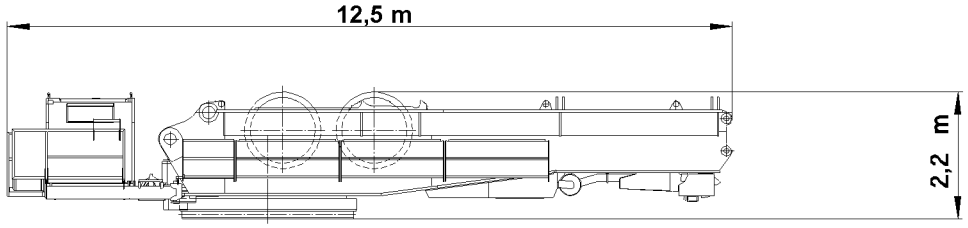

Fig.149474: Turntable with Quick connection without SA-frame

The following applies for the weight data of assembly connections:
- Inclusive of 3 slewing gears
- Winches including ropes

Component	Weight	Width
Turntable with winch 1, winch 2, without winch 4, and SA-frame	47.5 t	3.0 m

LWE/LR 1600-2-001/18101-07-02/en

copyright © Liebherr-Werk Ehingen GmbH 2018

20 SA-frame with winch 4

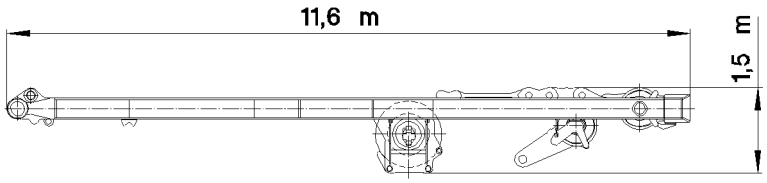

Fig.119978: SA-frame with winch 4

Component	Weight	Width
SA-frame with winch 4 including rope and roller set	17.0 t	2.7 m

21 Mechanical auxiliary support

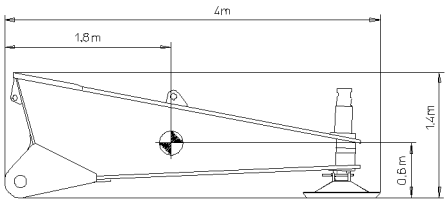

Fig.119974: Mechanical auxiliary support

Component	Weight	Width
Mechanical auxiliary support	2.3 t	0.9 m

22 Winch 1

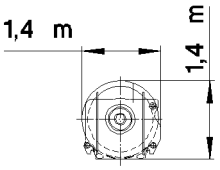

Fig.119979: Winch 1

Component	Weight	Width
Winch 1 with rope	7.5 t	2.0 m

LWE/LR 1600-2-001/18101-07-02/en

copyright © Liebherr-Werk Ehingen GmbH 2018

23 Winch 2

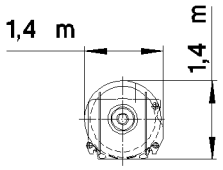

Fig.119980: Winch 2

Component	Weight	Width
Winch 2 with rope	7.5 t	2.0 m

24 Counterweight platform

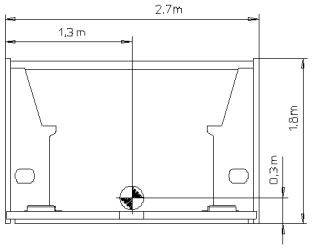

Fig.120040: Counterweight platform

Component	Weight	Width
Counterweight platform	5.0 t	1.8 m

25 Central ballast platform

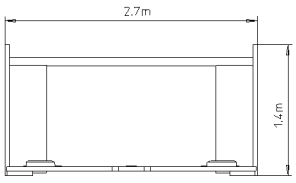

Fig.120039: Central ballast platform

Component	Weight	Width
Central ballast platform	2.5 t	2.0 m

LWE/LR 1600-2-001/18101-07-02/en

copyright © Liebherr-Werk Ehingen GmbH 2018

26 Ballast plate for central ballast / counterweight / derrick ballast

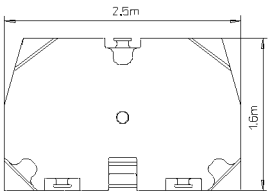

Fig.120041: Ballast plate for central ballast / counterweight / derrick ballast

Note
▶ The ballast plates are used as central ballast, counterweight and as derrick ballast.

Component	Weight	Thickness
Ballast plate	10.0 t	0.5 m
Ballast plate	7.5 t	0.4 m

27 S-pivot section 10 m

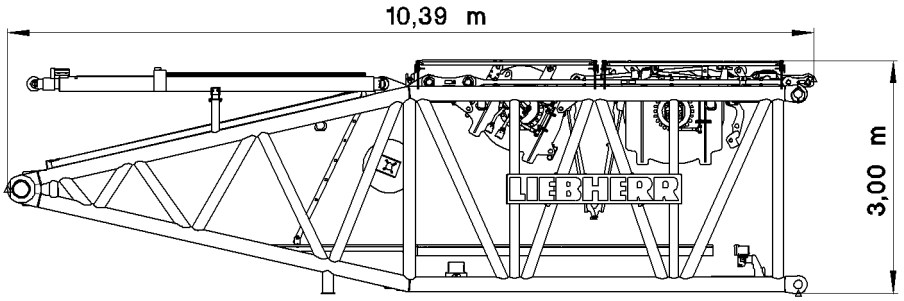

Fig.120042: S-pivot section 10 m

Component	Weight	Width
S-pivot section complete[1)]	25.5 t	3.0 m
S-pivot section complete[2)]	26.5 t	3.0 m

1) Winch 6 with rope (rope diameter 25 mm)
2) Winch 6 with rope (rope diameter 28 mm)

LWE/LR 1600-2-001/18101-07-02/en

copyright © Liebherr-Werk Ehingen GmbH 2018

28 S-intermediate section 3 m

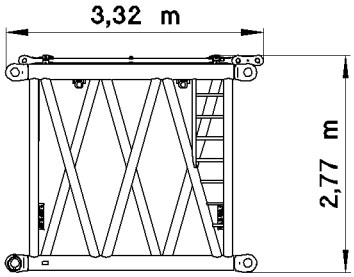

Fig.120043: S-intermediate section 3 m

Component	Weight	Width
S-intermediate section 3 m **2825.25**	3.0 t	3.0 m

29 S-intermediate section 6 m

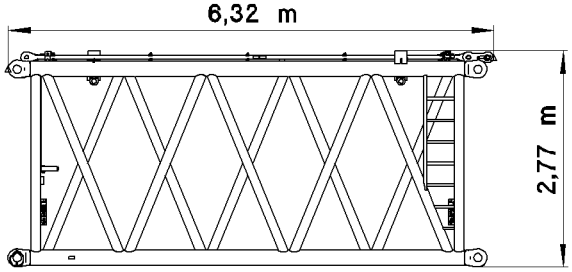

Fig.120044: S-intermediate section 6 m

Component	Weight	Width
S-intermediate section 6 m **2825.25**	5.3 t	3.0 m
S-intermediate section 6 m **2825.20**	4.6 t	
S-intermediate section 6 m **2825.16**	4.4 t	

30 S-intermediate section 12 m

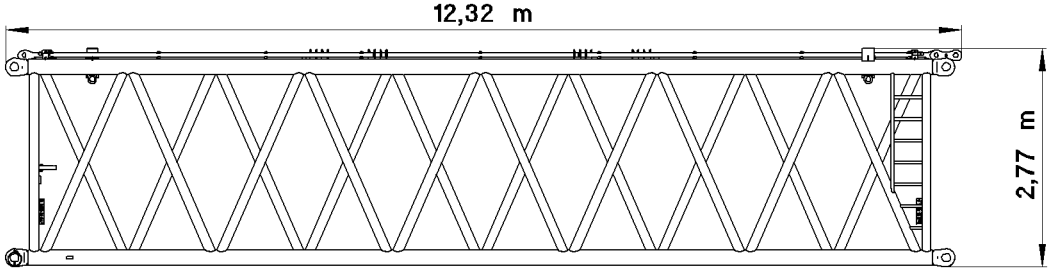

Fig.120045: S-intermediate section 12 m

copyright © Liebherr-Werk Ehingen GmbH 2018

Component	Weight	Width
S-intermediate section 12 m **2825.45**	11.1 t	3.0 m
S-intermediate section 12 m **2825.25**	9.2 t	
S-intermediate section 12 m **2825.20**	8.3 t	
S-intermediate section 12 m **2825.20 FLM**	9.3 t	
S-intermediate section 12 m **2825.16Z**	7.7 t	
S-intermediate section 12 m **2825.16**	7.7 t	

31 SW-end section

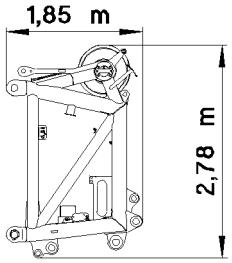

Fig.120049: SW-end section

Component	Weight	Width
SW-end section	4.5 t	2.7 m

32 SL-reducer 6.75 m

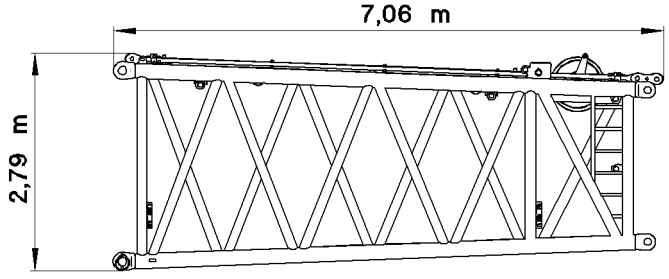

Fig.120046: SL-reducer 6.75 m

Component	Weight	Width
SL-reducer section with S-guy rods	5.0 t	3.0 m

LWE/LR 1600-2-001/18101-07-02/en

copyright © Liebherr-Werk Ehingen GmbH 2018

33 LI-intermediate section 6 m

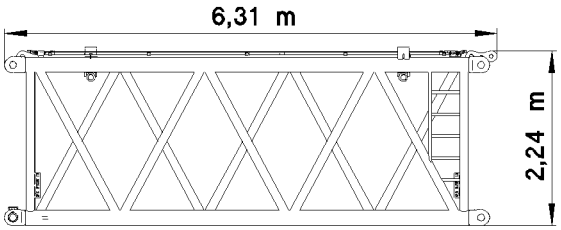

Fig.120048: LI-intermediate section 6 m

Component	Weight	Width
LI-intermediate section 6 m , **2420.12**	3.0 t	2.6 m
LI-intermediate section 6 m , **2420.10**	2.8 t	

34 LI-intermediate section 12 m

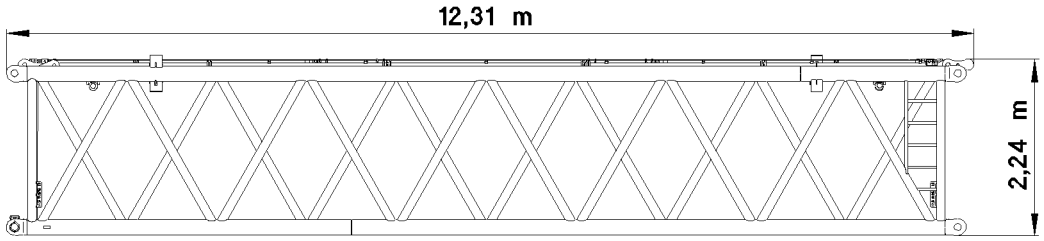

Fig.120047: LI-intermediate section 12 m

Component	Weight	Width
LI-intermediate section 12 m , **2420.12**	5.2 t	2.6 m
LI-intermediate section 12 m , **2420.10Z**	4.9 t	
LI-intermediate section 12 m , **2420.10**	4.7 t	
LI-intermediate section 12 m , **2420.09F**	5.1 t	

35 F-connector head

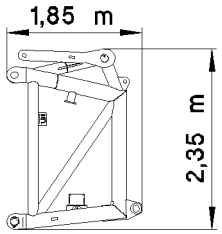

Fig.120050: F-connector head

LWE/LR 1600-2-001/18101-07-02/en

copyright © Liebherr-Werk Ehingen GmbH 2018

Component	Weight	Width
F-connector head	1.9 t	2.7 m

36 Boom nose

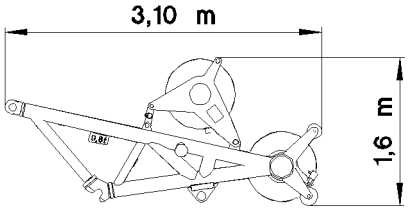

Fig.120051: Boom nose

Component	Weight	Width
Boom nose	0.9 t	1.5 m

37 Roller set 300 t

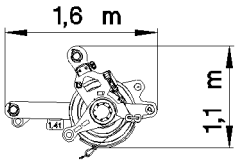

Fig.120052: Roller set 300 t

Component	Weight	Width
Roller set 300 t	1.4 t	1.3 m

38 Roller set 320 t

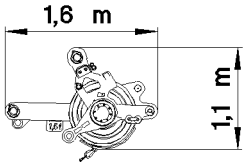

Fig.120053: Roller set 320 t

Component	Weight	Width
Roller set 320 t	1.5 t	1.4 m

LWE/LR 1600-2-001/18101-07-02/en

copyright © Liebherr-Werk Ehingen GmbH 2018

39 Roller cart

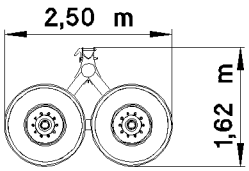

Fig.120054: Roller cart

Component	Weight	Width
Roller cart	1.5 t	1.8 m

40 F-assembly unit

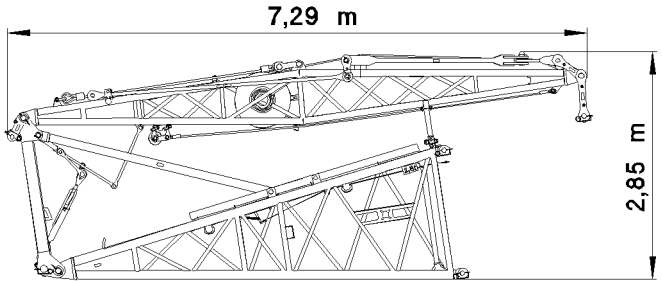

Fig.120055: F-assembly unit

Component	Weight	Width
Assembly unit	2.7 t	2.8 m

41 F-intermediate section 6 m , 1916.06

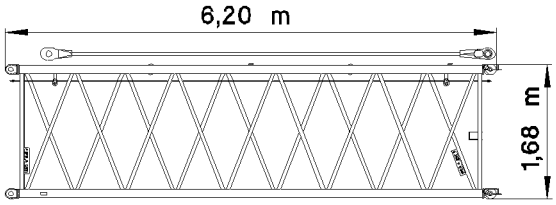

Fig.120056: F-intermediate section 6 m , 1916.06

Component	Weight	Width
F-intermediate section 6 m , 1916.06	1.0 t	2.0 m

LWE/LR 1600-2-001/18101-07-02/en

copyright © Liebherr-Werk Ehingen GmbH 2018

42 F-intermediate section 12 m , 1916.06

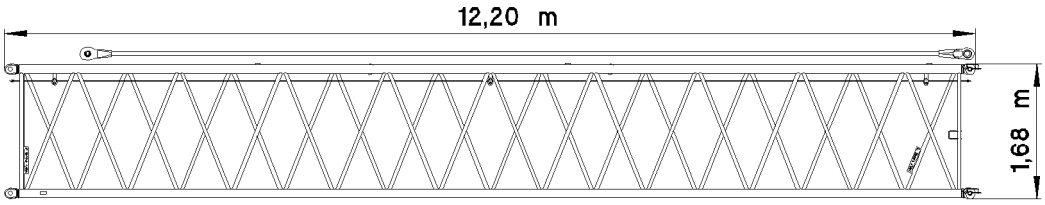

Fig.120057: F-intermediate section 12 m , 1916.06

Component	Weight	Width
F-intermediate section 12 m , 1916.06	1.7 t	2.0 m

43 F-end section

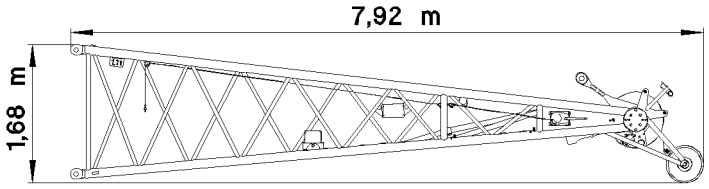

Fig.120058: F-end section

Component	Weight	Width
F-end section	1.7 t	2.0 m

44 D-pivot section 9.5 m

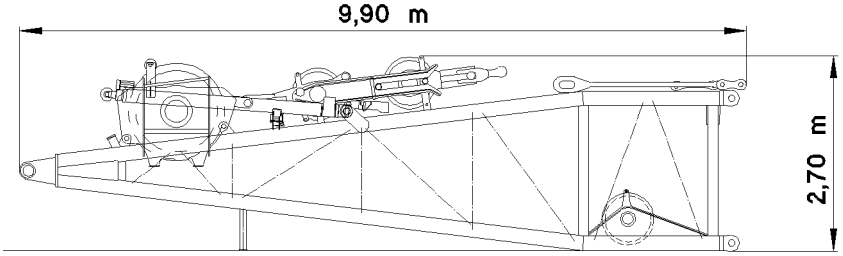

Fig.120059: D-pivot section 9.5 m

Component	Weight	Width
D-pivot section 9.5 m	22.8 t	3.0 m

LWE/LR 1600-2-001/18101-07-02/en

copyright © Liebherr-Werk Ehingen GmbH 2018

45 D-end section 8.5 m

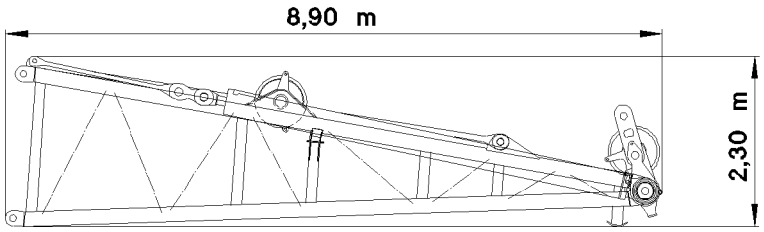

Fig.120060: D-end section 8.5 m

Component	Weight	Width
D-end section 8.5 m	13.3 t	2.7 m

46 D-intermediate section 6 m , 2420.16

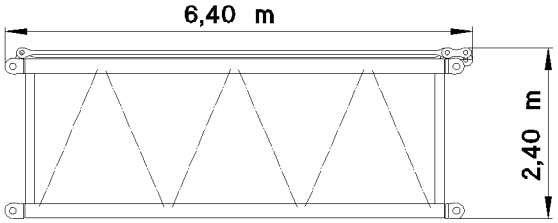

Fig.120071: D-intermediate section 6 m , 2420.16

Component	Weight	Width
D-intermediate section 6 m , 2420.16	4.4 t	2.6 m

47 D-intermediate section 12 m , 2420.20

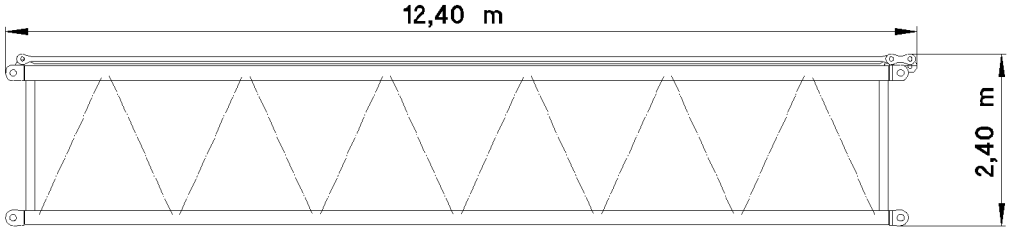

Fig.120072: D-intermediate section 12 m , 2420.20

Component	Weight	Width
D-intermediate section 12 m , 2420.20	8.1 t	2.6 m

LWE/LR 1600-2-001/18101-07-02/en

copyright © Liebherr-Werk Ehingen GmbH 2018

48 W-pivot section 10.75 m with pivot section WA-frame 1 (transport unit 1)

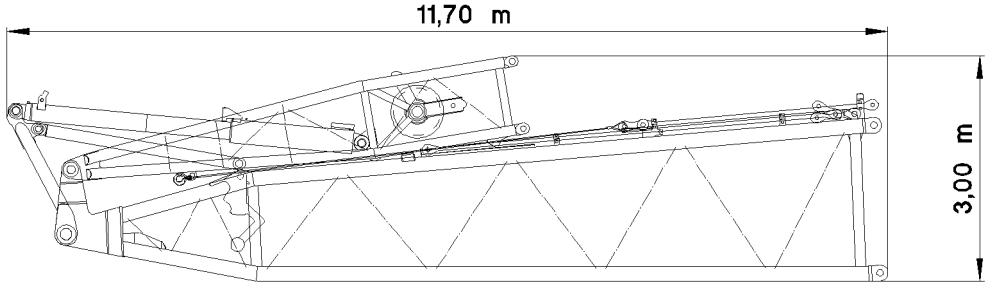

Fig.120073: W-pivot section 10.75 m with pivot section WA-frame 1 (transport unit 1)

Component	Weight	Width
W-pivot section with pivot section WA-frame 1	12.0 t	2.8 m

49 WA-frame 1 and WA-frame 2, end sections (transport unit 2)

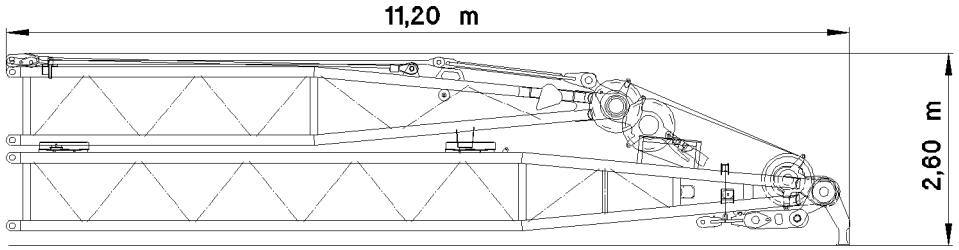

Fig.120074: WA-frame 1 and WA-frame 2, end sections (transport unit 2)

Component	Weight	Width
WA-frame 1 and WA-frame 2 end sections	8.7 t	2.7 m

50 WA-frame 2, pivot section (transport unit 3)

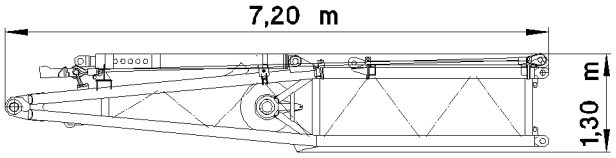

Fig.120075: WA-frame 2, pivot section (transport unit 3)

LWE/LR 1600-2-001/18101-07-02/en

copyright © Liebherr-Werk Ehingen GmbH 2018

Component	Weight	Width
WA-frame 2, pivot section	3.6 t	2.7 m

51 W-connector head

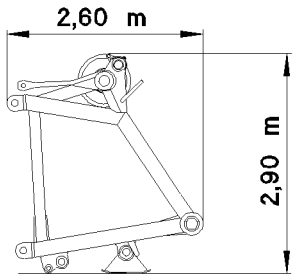

Fig.120076: W-connector head

Component	Weight	Width
W-connector head	5.0 t	2.7 m

52 Ballast trailer

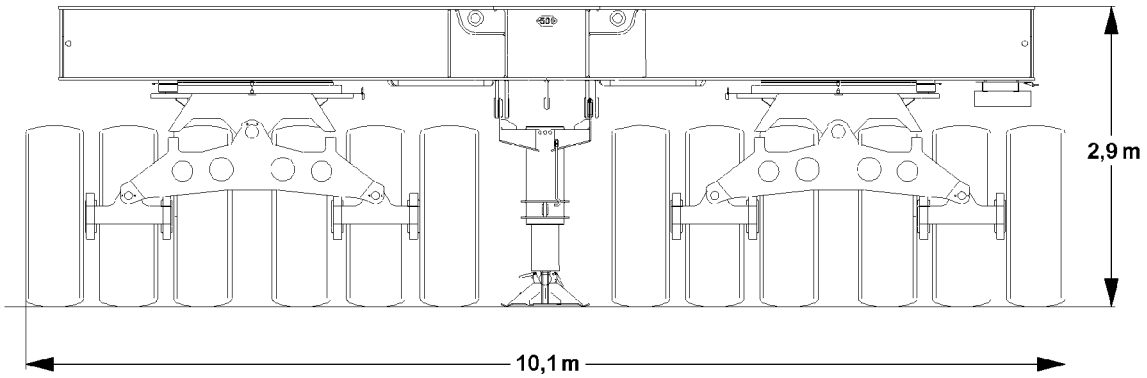

Fig.120077: Ballast trailer

Component	Weight	Width
Ballast trailer	47.2 t	2.9 m

LWE/LR 1600-2-001/18101-07-02/en

copyright © Liebherr-Werk Ehingen GmbH 2018

53 Complete guide for ballast trailer

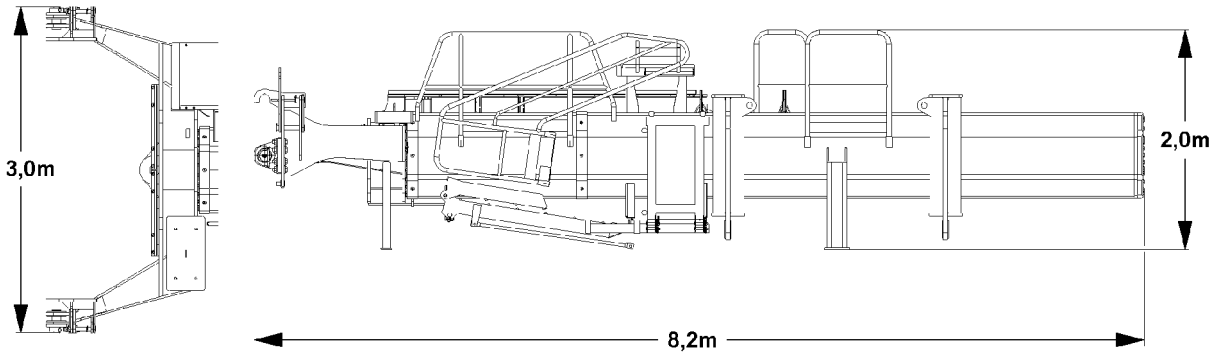

Fig.120078: Complete guide for ballast trailer

Component	Weight	Width
Complete guide for ballast trailer	15.9 t	3.0 m

54 Ballast trailer with wheel drive

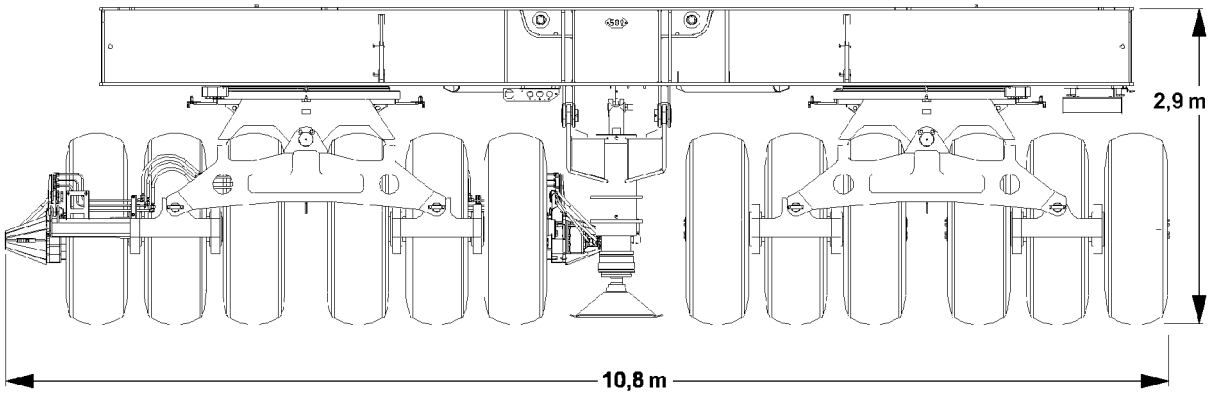

Fig.120079: Ballast trailer with wheel drive

Component	Weight	Width
Ballast trailer with wheel drive	50.0 t	2.9 m

LWE/LR 1600-2-001/18101-07-02/en

copyright © Liebherr-Werk Ehingen GmbH 2018

55 Complete guide with adapter, for ballast trailer

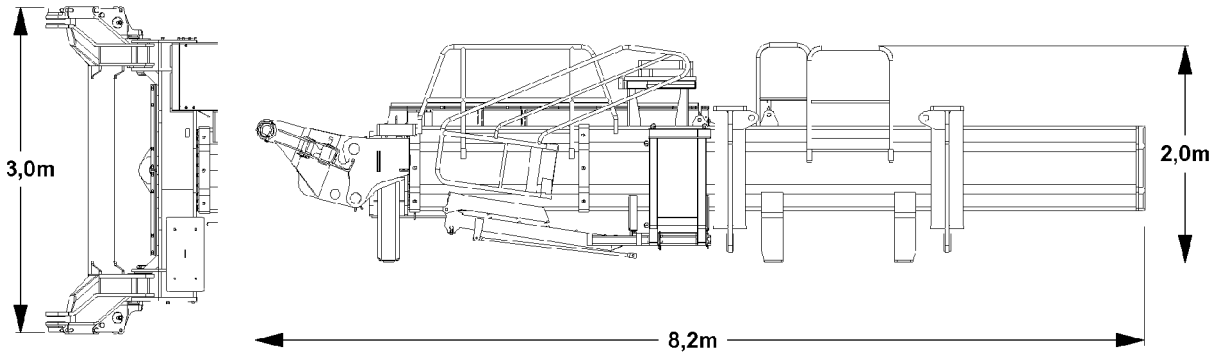

Fig.120080: Complete guide with adapter, for ballast trailer

Component	Weight	Width
Complete guide with adapter, for ballast trailer	15.9 t	3.0 m

56 Ballast pallet suspended ballast

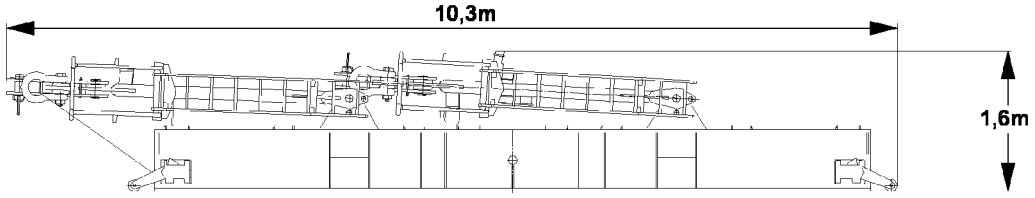

Fig.120081: Ballast pallet suspended ballast

Component	Weight	Width
Ballast pallet suspended ballast	11.0 t	2.4 m

57 Suspended ballast guide B2, pivot section

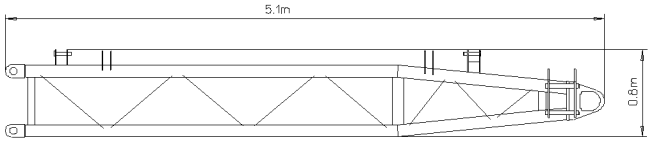

Fig.120082: Suspended ballast guide B2, pivot section

Component	Weight	Width
Suspended ballast guide B2, pivot section	1.2 t	3.1 m

LWE/LR 1600-2-001/18101-07-02/en

copyright © Liebherr-Werk Ehingen GmbH 2018

58 Suspended ballast guide B2, intermediate section

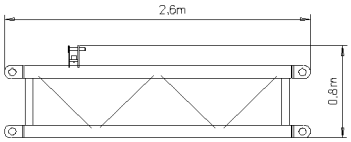

Fig.120083: Suspended ballast guide B2, intermediate section

Component	Weight	Width
Suspended ballast guide B2, intermediate section	0.6 t	2.9 m

59 Suspended ballast guide B2, end section

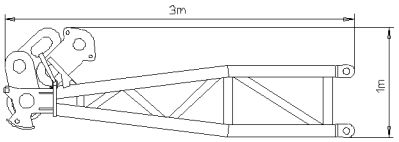

Fig.120084: Suspended ballast guide B2, end section

Component	Weight	Width
Suspended ballast guide B2, end section	1.4 t	4.3 m

LWE/LR 1600-2-001/18101-07-02/en

copyright © Liebherr-Werk Ehingen GmbH 2018

2 Safety

LWE/LR 1600-2-001/18101-07-02/en

copyright © Liebherr-Werk Ehingen GmbH 2018

LWE/LR 1600-2-001/18101-07-02/en

copyright © Liebherr-Werk Ehingen GmbH 2018

2.03 Job planning

1 Planning Crane operation 3

LWE/LR 1600-2-001/18101-07-02/en

copyright © Liebherr-Werk Ehingen GmbH 2018

LWE/LR 1600-2-001/18101-07-02/en

Fig.195219

copyright © Liebherr-Werk Ehingen GmbH 2018

1 Planning Crane operation

In addition to a perfectly working crane and a well-trained crew, the **planning for crane operation** is an important principle for safe crane operation.

WARNING
Missing information!
Death, severe bodily injuries, property damage.
▶ Obtain the required information and adhere to it.

Obtain the following information before crane operation and adhere to it:
- Type of crane operation
- National laws and regulations
- Height and width clearance measurements
- When mobile crane: Job site, distance and travel route
- Space prerequisites at the job site
- Electrical transmission lines with voltage data
- Movement restrictions caused by buildings
- Weight and dimensions of the load(s) to be lifted
- Geometric form and air resistance coefficient of the load(s) to be lifted
- Required lifting height and boom projection
- Ground bearing capacity at the job site
- Required space for the assembly and disassembly of the crane
- Weather data and weather forecasts

Assemble the equipment for crane operation:
- Hook block / load hook
- Auxiliary boom
- Fastening equipment
- Counterweight
- Base materials for support plates

LWE/LR 1600-2-001/18101-07-02/en

copyright © Liebherr-Werk Ehingen GmbH 2018

Empty page!

LWE/LR 1600-2-001/18101-07-02/en

copyright © Liebherr-Werk Ehingen GmbH 2018

2.04 Technical safety instructions

1	Dangers on the crane	3
2	Danger zone of crane	4
3	Traffic endangerment and environmental damage	5
4	Endangering air traffic	5
5	Movement on the crane	6
6	Emergency exit	6
7	Personal protective equipment	8
8	Securing persons to prevent them from falling	14
9	Rescuing the assembly personnel	16
10	Extendible step	16
11	Transport	22
12	Fastening	24
13	Heated crane components	24
14	Crane operator responsibilities	24
15	Selecting the location	26
16	Slopes and excavations	30
17	Loads on the ground due to crane operation	33
18	Support	37
19	Aligning the crane	39
20	Checking the safety measures	40
21	Safety guidelines in case of external power supply	41
22	Grounding	41
23	Working in the vicinity of transmitters	43
24	Crane operation in case of thunderstorms	44
25	Wind influences	45
26	Lifting a load with two cranes	51
27	Overlapping of working ranges of several cranes	53
28	Hand signals for guidance	54
29	Travel operation	62
30	Crane operation	64
31	Lifting of personnel	70
32	Securing personnel on shut off crane	72
33	Welding work on the load	74

LWE/LR 1600-2-001/18101-07-02/en

copyright © Liebherr-Werk Ehingen GmbH 2018

LWE/LR 1600-2-001/18101-07-02/en

Fig.195219

copyright © Liebherr-Werk Ehingen GmbH 2018

Note

▶ The illustrations in this chapter are only examples. The illustrations may differ depending on the crane model.

1 Dangers on the crane

1.1 California Proposition 65

Proposition 65 of the US State of California warns against chemicals that are known to cause cancer, birth defects and other reproductive harm.

For additional information, see the website: **www.P65Warnings.ca.gov**.

Proposition 65
WARNING: This product can expose you to chemicals, which are known to the State of California to cause cancer, birth defects or other reproductive harm. For more information see: www.P65Warnings.ca.gov.

Fig.147844: Example of a Proposition 65 sign for USA: Chemicals

Proposition 65 WARNING: This product can release chemicals that have been classified by the state of California to cause cancer, birth defects and other reproductive harm.

1.2 Exhaust emissions

Proposition 65 of the US State of California warns against chemicals that are known to cause cancer, birth defects and other reproductive harm.

Proposition 65
WARNING: This product can expose you to chemicals, including exhaust emissions, which are known to the State of California to cause cancer. For more information see: www.P65Warnings.ca.gov.

Fig.147842: Example of a Proposition 65 sign for USA: Exhaust emissions

WARNING

Exhaust emissions!

Damage to health such as cancer.

▶ Avoid exposure to exhaust emissions.
▶ Avoid breathing in exhaust emissions.
▶ **Always** work in properly ventilated spaces.
▶ Use personal protective equipment, such as dust masks with micro-particle filters.

1.3 Lead and lead compounds

Proposition 65 of the US State of California warns against chemicals that are known to cause cancer, birth defects and other reproductive harm.

LWE/LR 1600-2-001/18101-07-02/en

copyright © Liebherr-Werk Ehingen GmbH 2018

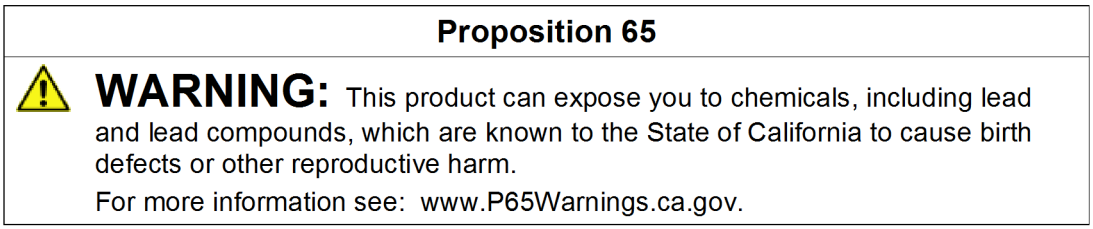

Fig.147843: Example of a Proposition 65 sign for USA: Lead and lead compounds

WARNING
Batteries, battery poles, battery terminals and other battery components contain lead and lead compounds!
Damage to health such as birth defects and other reproductive harm.
- ▶ Avoid direct contact with batteries and their components.
- ▶ Do not touch them with bare hands.
- ▶ Use personal protective equipment: **Always** wear protective gloves.
- ▶ After handling: Wash hands thoroughly.
- ▶ Dispose of disused batteries in an environmentally acceptable manner according to local regulations.

1.4 Hydraulic oil, diesel fuel, operating fluids

WARNING
Due to technical defects or open tank covers, hydraulic oil, diesel fuel or service fluids spill out!
Dirt from the road and ground.
Traffic endangerment: Danger of skidding, death, severe bodily injuries.
Environmental pollution: Death, severe damage to health.
- ▶ Remedy the technical defect immediately.
- ▶ Securely close the tank cover after refuelling.
- ▶ Immediately and thoroughly remove traces of hydraulic oil, diesel fuel, operating fluids.
- ▶ Avoid skin contact with hydraulic oil, diesel fuel and operating fluids.
- ▶ Use personal protective equipment, such as protective gloves.

1.5 Heated crane components

WARNING
Heated crane components! Hot surfaces!
Severe burns.
This applies in particular to exhaust systems, engines and transmissions.
- ▶ Let the components cool down before touching them.
- ▶ Proceed with special caution near heated crane components.
- ▶ Avoid skin contact with hot surfaces.
- ▶ Use personal protective equipment, such as protective gloves.

2 Danger zone of crane

2.1 Crane in operation

The danger zone of the crane is made up of the areas which are accessed during crane operation by the load or by movements of the crane or the crane components.

LWE/LR 1600-2-001/18101-07-02/en

copyright © Liebherr-Werk Ehingen GmbH 2018

WARNING
Do not stay in danger zone!
Personnel within the danger zone can be hit by falling loads or components.
Personnel in the danger zone can be caught by moving crane components or loads.
Fatal or severe injuries can be the result.
- ▶ Warn any personnel within the danger zone with the warning device of the crane.
- ▶ After the warning is issued, wait and ensure that no personnel remains within the danger zone.
- ▶ If required, block off the danger zone with a safety distance.

2.2 Crane out of service

Place the crane out of service, failure to comply with the regulations represents considerable danger for the entire area around the crane.

WARNING
Actual wind speed higher than the wind speed permitted for the crane set up configuration!
Personnel within the danger zone can be hit by a toppling crane or crane components.
- ▶ Make sure that the condition of the crane complies with the regulations and the wind speed charts.
- ▶ If required, block off the danger zone with a safety distance.

WARNING
Icing on the boom!
Personnel within the danger zone can be hit by a falling ice.
- ▶ Make sure that there are no persons in the danger zone.
- ▶ If required, block off the danger zone with a safety distance.

3 Traffic endangerment and environmental damage

WARNING
Danger of slipping and skidding!
If the road becomes contaminated due to technical defects, open tank covers or leaking hydraulic oil, then this would pose a severe traffic endangerment.
Fatal accidents can result.
- ▶ Remove oil immediately and thoroughly.

4 Endangering air traffic

When working with crane, heights are reached which could endanger air traffic. This applies especially to areas near airports.

WARNING
Endangering air traffic!
If no protective measures are taken, this can result in endangerment to air traffic.
- ▶ Get the approval from agency responsible for air traffic.
- ▶ Install the airplane warning light on the boom head and turn it on.
- ▶ If the airplane warning lights is operated for a longer period of time, with the engine turned off, then the battery can be discharged and as the result the airplane warning light turns off. To prevent the battery from discharging, an external electrical power supply must be established.

LWE/LR 1600-2-001/18101-07-02/en

copyright © Liebherr-Werk Ehingen GmbH 2018

5 Movement on the crane

WARNING
Danger of slipping and falling!
The traction of steps, walkways and hand rails changes due to effects of the weather, such as wetness, ice, snow, frost and dirt.
Personnel can be severely injured or killed.
The crane can be damaged.

- ▶ Step on the walkways and steps only by taking the present conditions into account, such as icing in winter or dirt.
- ▶ Step or place a load only on the approved walkways and steps.
- ▶ Observe the signage.
- ▶ Replace damaged safety signs (warning signs) immediately.

6 Emergency exit

6.1 Emergency exit - driver's cab

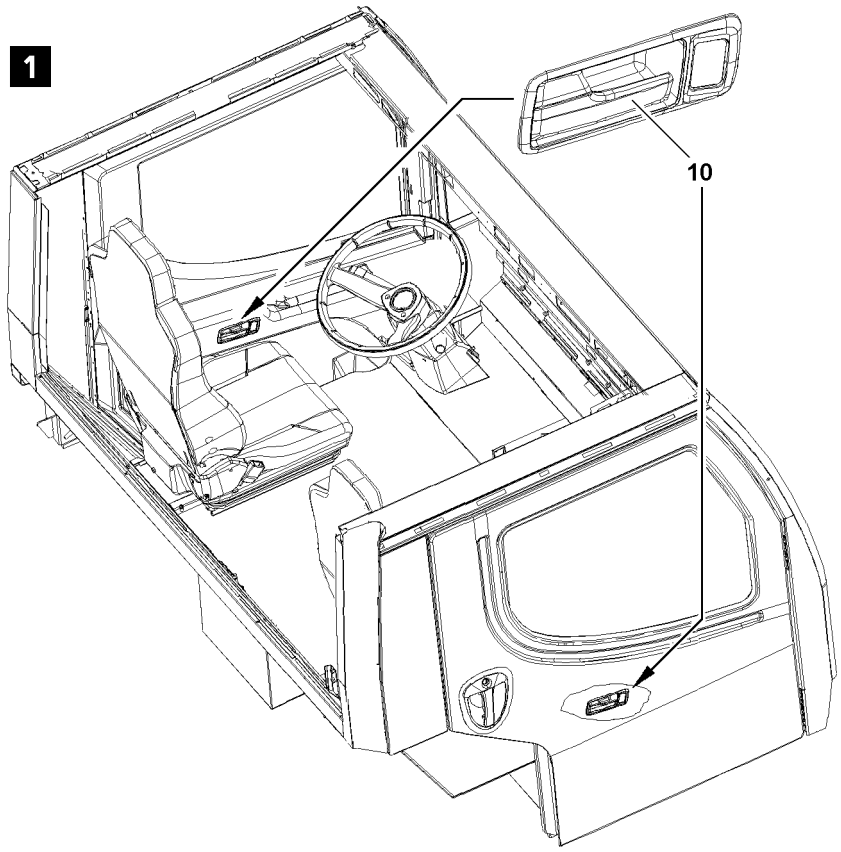

Fig.120932: Example for emergency exit - driver's cab

The driver's cab can be exited through the „left driver's door" or the „right passenger door", see illustration **1**.

Note

- ▶ Exit the driver's cab through the „left driver's door" or the „right passenger door", see illustration **1**: Pull and open the door handle **10** on the „left driver's door" or the „right passenger door".

LWE/LR 1600-2-001/18101-07-02/en

copyright © Liebherr-Werk Ehingen GmbH 2018

6.2 Emergency crane cab exit

WARNING
Danger of falling!
If the crane driver cannot leave the crane cab through the door or if the crane cab is tilted, then there is a danger of falling during the emergency exit.
Death or severe injuries.
▶ Exit carefully in an emergency.

During the emergency exit there is an increase danger of accidents:
▶ Accept help from others.

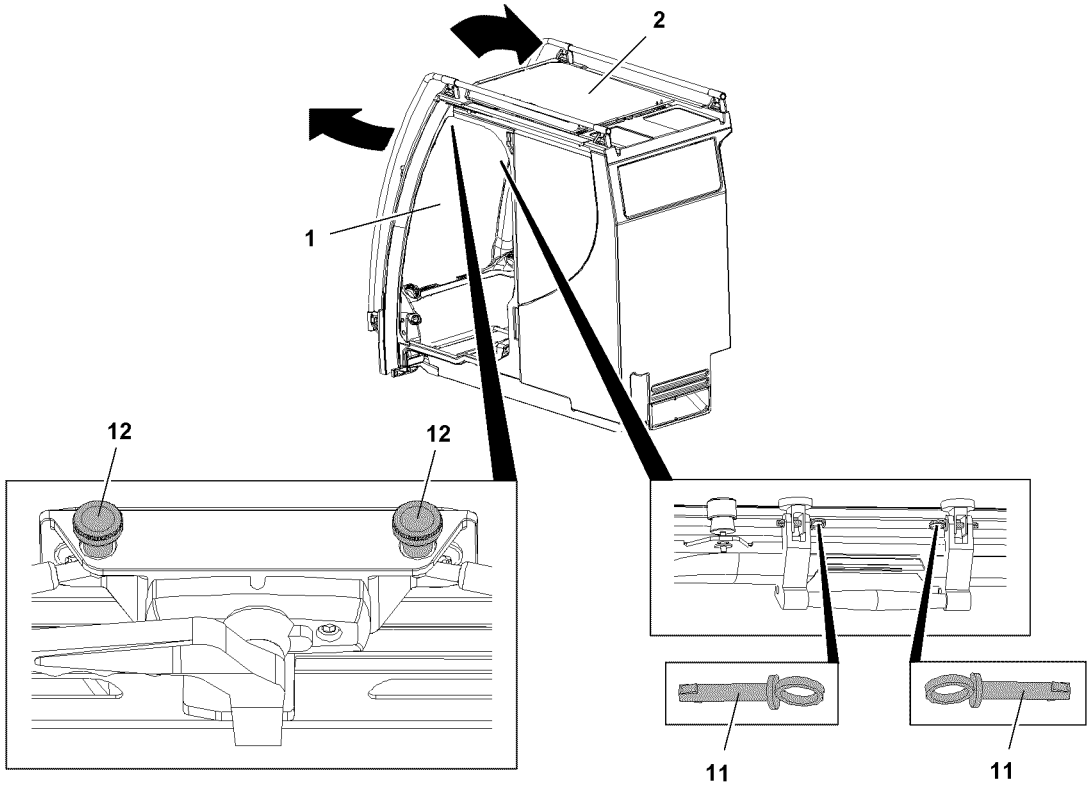

Fig.121111: Examples for emergency exit from the crane cab

If the emergency exit through the door is not possible, then the crane cab can be exited through additional openings.

The following openings are possible:
– **1** Front window
– **2** Roof window

6.2.1 Emergency exit through front window

– Unlock all turn handles.
– Open the front window **1**.
– Leave the crane cab through the front window **1**.

6.2.2 Emergency exit through the roof window

There are two ways to unlock the roof window **2** for the emergency exit:
– Unpin both pins **11**.
– Release both thumbscrews **12**.

– Unlock all turn handles.

copyright © Liebherr-Werk Ehingen GmbH 2018

– Unlock the roof window **2** for the emergency exit.
– Open the roof window **2**.
– Leave the crane cab through the roof window **2**.

6.2.3 Emergency exit with EMERGENCY hammer*

Certain crane types carry an EMERGENCY hammer* in the crane cab.

– Knock the front window out with the EMERGENCY hammer* or a suitable object.
– Leave the crane cab.

7 Personal protective equipment

When working on the crane, the required personal protective equipment according to national regulations and accident prevention regulations must be provided and used.

Personal protective equipment includes the following:
– Supplied fall arrest system (safety harness and height safety equipment)
– Supplied height rescue system
– Head protection with chin strap
– Safety shoes
– Protective gloves
– Safety goggles
– Warning apparel
– Hearing protection
– Respiratory protection

WARNING
Personal protective equipment when working on the crane not used!
Death, severe bodily injuries.

The crane operator must ensure the following:
▶ The personal protective equipment is made available.
▶ The provided personal protective equipment is taken along and used.
▶ The operating instructions and maintenance instructions of the manufacturer for the personal protective equipment are observed and complied with.
▶ The product identifications are regularly checked for damage.
▶ Personal protective equipment with damaged product identification is replaced immediately.
▶ Damaged fall arrest systems with height rescue systems will be replaced immediately and handed over to an authorized inspector.
▶ Personal protective equipment is checked for damage and completeness before use.
▶ Defective or damaged personal protective equipment is replaced immediately with functioning protective equipment.

7.1 Supplied fall arrest system

When no other safety measures are possible for working in the presence of a fall hazard, the supplied fall arrest system must be used.

A fall with a fall arrest system cannot exclude an injury. The fall arrest system reduces however the severity of the injuries.

WARNING
Persons not secured!
Personnel can fall down. Death, severe bodily injuries.
▶ Use the supplied fall arrest system.

LWE/LR 1600-2-001/18101-07-02/en

copyright © Liebherr-Werk Ehingen GmbH 2018

WARNING
Fall arrest system damaged!
Personnel can fall down. Death, severe bodily injuries.
- ▶ Do **not** use a damaged fall arrest system.
- ▶ Replace a damaged fall arrest system immediately with a new fall arrest system.
- ▶ Do **not** use the fall arrest system as fastening equipment for loads.
- ▶ Protect the fall arrest system from external influences.

The fall arrest system must be protected against the following external influences:
- Extreme temperatures
- Guiding the connecting devices over or around sharp edges
- Chemical influences
- Electrical influences
- Cuts, wear
- Climatic effects

Note

If the fall arrest system (safety harness and height safety equipment) is not available or is damaged:
- ▶ Order is from Liebherr-Werk Ehingen GmbH.

Identification and operating instructions
- The supplied fall arrest system must be clearly and permanently identified.
- If the identification is no longer legible, then the supplied fall arrest system must be immediately replaced and handed over to an authorized inspector.
- The operating instructions must be available in the language of the user country.
- If the crane and the relative personal protective equipment is sold to another country, then the purchaser must make sure that the complete documentation, such as the operating instructions, the manufacturer's operating instructions, inspection log and maintenance documents, are available in the language of the user country.

7.1.1 Safety harness with height safety equipment

The fall arrest system consists of the following components:
- Safety harness **1** approved according to **EN 361**
- Single strand height safety equipment **2** approved according to **EN 360** (for horizontal use and sharp edges)
- or two strand height safety equipment **3** approved according to **EN 360** (for horizontal use and sharp edges)

Fall arrest systems that are not obtained from Liebherr-Werk Ehingen GmbH are **not** designed for the crane structure.

WARNING
Impermissible fall arrest system!
Personnel can fall down. Death, severe bodily injuries.
- ▶ Utilize exclusively a fall arrest system from Liebherr-Werk Ehingen GmbH.

LWE/LR 1600-2-001/18101-07-02/en

copyright © Liebherr-Werk Ehingen GmbH 2018

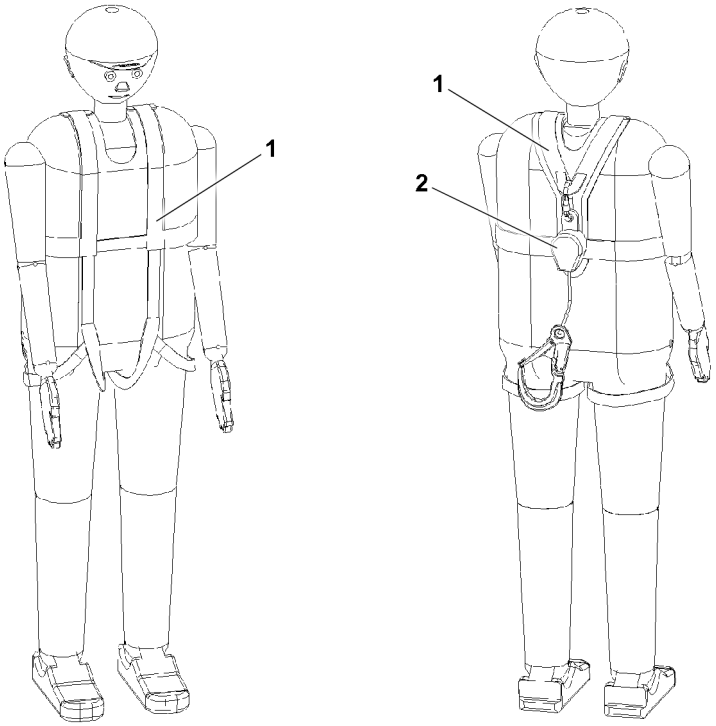

*Fig.146453: Example of a safety harness **1** with a single strand height safety equipment **2***

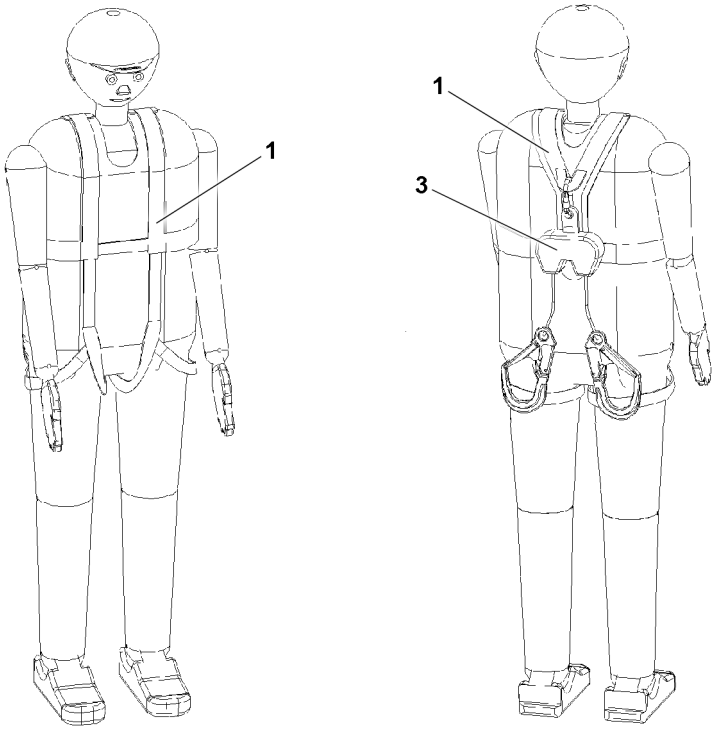

*Fig.146454: Example of a safety harness **1** with a two strand height safety equipment **3***

Prior to crane operation:
- Make sure that the fall arrest system is completely available and functional.
- Check the fall arrest system before use for visible defects. In the case of visible defects: Replace the fall arrest system immediately.

Handling the supplied fall arrest system:
- Observe and comply with the operating instructions of the fall arrest system.
- Check the fall arrest system before use for visible defects.

LWE/LR 1600-2-001/18101-07-02/en

copyright © Liebherr-Werk Ehingen GmbH 2018

- The fall arrest system must be work where no other fall protection equipment, such as railings, can be installed for technical reasons.
- The fall arrest system is effective from a height of 2.5 m. The fall space must be free of obstacles.
- Do **not** change the configuration of the fall arrest system.
- Do **not** lengthen or shorten the fall arrest rope.
- A fall absorber is integrated in the height safety equipment. Do **not** use an additional fall absorber.
- Fasten the fall arrest system only to the hook points, safety ropes and fastening points designed for this purpose. See chapter 2.06.

Behavior in the case of a fall, damage or impairment of the functionality:
- In the case of damage or impairment of the functionality: Replace the fall arrest systems immediately and hand then over to an authorized inspector.
- After every fall: Take down the fall arrest system immediately and hand it over to an authorized inspector. The results must be documented in the fall arrest system inspection log book.
- Only after a written approval may the fall arrest system be reused. The approval must be provided in writing and documented.
- Fall arrest systems that are no longer approved must **not** be used. Unapproved fall arrest systems must be disposed of and replaced with new fall arrest systems.

Storage of the fall arrest system:
- Store the fall arrest system dry and without the effect of UV radiation in the corresponding transport bag.

The operator must ensure the following:
- Personnel must be instructed at least once a year on how to use the supplied fall arrest system (safety harness and height safety equipment) with practical exercises. Performance of the instruction and exercises must be documented.
- The safety harness and height safety equipment must be checked at least once a year by an authorized inspector. The results must be documented in the fall arrest system inspection log book.

Single strand height safety equipment

The single strand height safety equipment is equipped with a belt strap. Single strand height safety equipment is provided for all cranes that do not have walking surfaces with safety ropes.

Use the supplied height safety equipment with extendable belt strap and snap hook with swivel according to **EN 362 Class A**.

Two strand height safety equipment

The two strand height safety equipment is equipped with two belt straps. Height safety equipment with two belt straps are provided for cranes with walking surfaces and two ropes as fastening device on the left and right hand side of the walking surface, for example lattice sections, lattice booms, possibly telescopic booms or assembly units.

Use the supplied height safety equipment with two extendable belt straps and snap hooks with swivel according to **EN 362 Class A**.

WARNING
Height safety equipment incorrectly used!
Personnel can fall down. Death, severe bodily injuries.

When two safety ropes are present on the booms, lattice sections or other components:
- ▶ Only use the height safety equipment with two belt straps.
- ▶ Hook one belt strap with snap hook for the fall arrest system per safety rope.
- ▶ When transferring to new safety equipment, a snap hook for the fall arrest system must **always** be hooked.

7.2 Height rescue system

The height rescue system is only supplied on certain crane types.

LWE/LR 1600-2-001/18101-07-02/en

copyright © Liebherr-Werk Ehingen GmbH 2018

The height rescue system is an evacuation and rescue device. It is used to lift the fallen person to be able to unhook him from the height safety equipment and to lower him by rope.

The height rescue system consists of the following components:
- Rappelling rescue device
- Telescopic rod for hooking the snap hook on the safety harness

WARNING
Height rescue system not present!
Fallen person cannot be saved. Suspension trauma, death, severe bodily injuries.
▶ Always have the height rescue system ready.

WARNING
Height rescue system damaged!
Personnel cannot be saved.
▶ Do **not** use a damaged height rescue system.
▶ Replace a damaged height rescue system immediately with a new height rescue system.
▶ Protect the height rescue system from external influences.

The height rescue system must be protected against the following external influences:
- Extreme temperatures
- Chemical influences
- Electrical influences
- Cuts, wear
- Climatic effects

Prior to crane operation:
- Make sure that the height rescue system is completely available and functional.
- Check the height rescue system before use for visible defects. In the case of visible defects: Replace the height rescue system immediately.

Handling the height rescue system:
- Observe and comply with the operating instructions of the height rescue system.
- Do **not** change the configuration of the height rescue system.

Behavior in the case of a fall, damage or impairment of the functionality:
- In the case of damage or impairment of the functionality: Replace the height rescue system immediately and hand it over to an authorized inspector.
- After every use: Hand the height rescue system over to authorized inspector. The results must be documented in the height rescue system inspection log book.
- Only after a written approval may the height rescue system be reused. The approval must be provided in writing and documented.
- Height rescue systems that are no longer approved must **not** be used. Unapproved height rescue systems must be disposed of and replaced with new height rescue systems.

Storage of the height rescue system:
- Store the height rescue system dry and without the effect of UV radiation in the corresponding transport bag.

The operator must ensure the following:
- Personnel must be instructed at least once a year on how to use the height rescue system with practical exercises. Performance of the instruction and exercises must be documented.
- The height rescue system must be checked at least once a year by an authorized inspector. The results must be documented in the height rescue system inspection log book.

7.3 Hard hat

Wear a hard hat with a chin strap, if head injuries are possible. For example, due to:
- Striking
- Falling, tipping or flying objects
- Oscillating objects

LWE/LR 1600-2-001/18101-07-02/en

copyright © Liebherr-Werk Ehingen GmbH 2018

Replace the hard hat immediately if:
- If is struck with force
- It has visible defects
- When reaching the maximum service life specified by the manufacturer

An industrial hard hat can protect against striking fixed objects and falling or oscillating objects, but **not** against falling loads.

WARNING
Suspended and falling loads!
Death, severe bodily injuries.
▶ Do **not** remain under suspended loads.

7.4 Protective gloves

Wear protective gloves, if hand injuries are possible. For example, due to:
- Pointy or sharp objects
- Hot surfaces

When working with ropes: Protective gloves must be puncture proof.

7.5 Safety shoes

Wear safety shoes, if foot injuries are possible. For example, due to:
- Oscillating or falling parts
- Pointy or sharp objects
- Impact or trapping
- Slipping on slippery ground or surfaces

7.6 Warning apparel

Avoid accidents: Wear reflecting, signal color warning clothing, when personnel must be visible and recognizable.

The „warning clothing“ category includes, for example:
- Safety vest
- Safety jacket
- Safety pants

7.7 Safety goggles

Wear safety goggles when eye injuries are possible. For example, due to:
- Corrosive fluids
- Pressurized fluids
- Flying parts

7.8 Hearing protection

Wear hearing protection when there is danger of hearing damage due to noise.

7.9 Respiratory protection

Wear respiratory protection when there is danger of damage due to polluted air.

7.10 Aids for work at a height

All work at a height, when there is a danger of falling, must be carried out with suitable aids.

Part of the category „Aids for working at a height“ are, for example:
- Work platforms

LWE/LR 1600-2-001/18101-07-02/en

copyright © Liebherr-Werk Ehingen GmbH 2018

- Scaffolding
- Assembly platform
- Catwalks
- Ladders

When working at a height, working on a work platform, scaffolding, assembly platform, catwalk or similar is preferential to working on a ladder.

WARNING
Persons not secured when working at a height!
Personnel can fall down. Death, severe bodily injuries.

When work platforms, scaffolding, catwalks or similar are not available and the work cannot be carried out from the ground:
▶ Secure personnel with the supplied fall arrest system to prevent falling.

When fall protection equipment such as hook points, safety ropes and fastening points are available on the crane:
▶ Secure personnel with the fall arrest system to the fall protection equipment. See chapter 2.06.

When stepping on a ladder:
▶ Do not hold any objects in your hands.
▶ Adhere to the 3-point support. See chapter 2.04.10.

Rules when using the aids:
- Step on the ladder only with clean shoes.
- Keep it free from heavy dirt deposits.
- Keep it free of snow and ice.

8 Securing persons to prevent them from falling

WARNING
Danger of falling!
▶ Wear the supplied fall arrest systems (safety harnesses and height safety equipment) correctly.
▶ When accessing a ladder, do not hold any objects in your hands.
▶ When accessing a ladder, adhere to the 3-point support. See the Crane operating instructions, chapter 2.04.10.

8.1 Working on the telescopic boom head and / or auxiliary boom

Reeve the hoist rope in or out on the pulley head:
- For ladder work, use the supplied ladder. For fastening and hook points, see Crane operating instructions, chapter 2.06.
- For cranes that carry a ladder along **with** a hook device:
  Use the hook device to secure the ladder.
- For cranes, which carry a ladder along **without** hook device:
  Use the rigging belt to secure the ladder.
- When ascending, the assembly personnel must ensure a 3-point support.
- If there is a danger of falling, the assembly personnel must hook themselves with the snap hooks of the fall arrest system on the fastening points and secure themselves against falling.

LWE/LR 1600-2-001/18101-07-02/en

copyright © Liebherr-Werk Ehingen GmbH 2018

8.2 Walking on the telescopic boom

WARNING
Danger of falling!
The assembly personnel can fall down by slipping on the telescopic boom and be killed or severely injured!
- ▶ The telescopic boom may only be accessed if assembly personnel is protected with suitable safety measures to prevent them from falling.
- ▶ If safety ropes are present on the telescopic boom, then the assembly personnel must hook themselves with the supplied fall arrest system on the safety ropes of the telescopic boom on the left and right with both snap hooks and secure themselves against falling.
- ▶ Without safety measures, it is **strictly** prohibited to step on the telescopic boom.

Assembly of the hoist rope or the TY-guying:
- During assembly, the assembly personnel must hook themselves on the fastening devices on the left and right with both snap hooks of the fall arrest system and secure themselves against falling.

8.3 Accessing the lattice sections or booms

Climbing the ladder:
- When ascending, the assembly personnel must ensure a 3-point support.

Changing from ladder to catwalk **without** transition aid:
- From a transition height above 1.8 m: **Before** transitioning, assembly personnel must hook at least one snap hook of the fall arrest system to a safety rope and secure themselves against falling.

Changing from ladder to catwalk **with** transition aid:
- **After** transitioning, the assembly personnel must hook at least one snap hook of the fall arrest system on a safety rope and secure themselves against falling.

8.4 Walking on lattice sections or booms

Walking on catwalks:
- When walking on catwalks, the assembly personnel must hook themselves on the safety ropes on the left and right with both snap hooks of the fall arrest system and secure themselves against falling.
- When changing the fall arrest system over to a new lattice section, the assembly personnel must be hooked with at least one snap hook of the fall arrest system one safety device.

8.5 Working on lattice sections or booms

Pinning, unpinning the lattice sections of pull rods:
- During pinning, unpinning of lattice sections or pull rods, the assembly personnel must hook themselves on the safety ropes on the left and right with both snap hooks of the fall arrest system and secure themselves against falling.

Fastening the lattice sections:
- When fastening the lattice sections, the assembly personnel must hook themselves on the safety ropes on the left and right with both snap hooks of the fall arrest system and secure themselves against falling.

8.6 Descending from lattice sections or booms

Accessing the ladder **without** transition aid:
- From a transition height above 1.8 m: **Before** stepping on the ladder, assembly personnel must hook at least one snap hook of the fall arrest system to a safety rope and secure themselves against falling.
- When stepping on the ladder, the assembly personnel must ensure a 3-point support.
- The snap hook of the fall arrest system may only be unhooked after standing safely on the ladder (3-point support).

LWE/LR 1600-2-001/18101-07-02/en

copyright © Liebherr-Werk Ehingen GmbH 2018

Accessing the ladder **with** transition aid:
– When stepping on the ladder, the assembly personnel must ensure a 3-point support.

Climbing down the ladder:
– When descending, the assembly personnel must ensure a 3-point support.

9 Rescuing the assembly personnel

The height rescue system is only supplied on certain crane types.

The height rescue system, consisting of the rappelling rescue device, is an evacuation and rescue device. It is used to lift the fallen person to be able to unhook him from the height safety equipment and to lower him by rope.

WARNING
Danger of falling!
- ▶ The assembly personnel must be instructed and trained properly in the correct handling of the height rescue system. Annual practice instructions and drills must be carried out.
- ▶ The supplied height rescue system must be kept available.
- ▶ The operating instructions of the manufacturer for the height rescue system must be observed and adhered to.
- ▶ The height rescue system must be checked annually by authorized and trained expert personnel and documented in the inspection log book.

9.1 First aid measures after rescue

WARNING
Danger of fatal injury!
- ▶ After the rescue, the patient must be positioned with the upper body raised (in seated or squatting position).
- ▶ Immediate flat position or even shock position can be fatal.

10 Extendible step

An extendible step allows comfortable entry into the crane cab as well as safe exit from the crane cab to the crane chassis.

10.1 Extendable step for cranes on tires

The description for an „extendable step for cranes on tires“ only applies for cranes that drive on tyres.

LWE/LR 1600-2-001/18101-07-02/en

copyright © Liebherr-Werk Ehingen GmbH 2018

10.1.1 Crane superstructure in the 0° position or 180° position

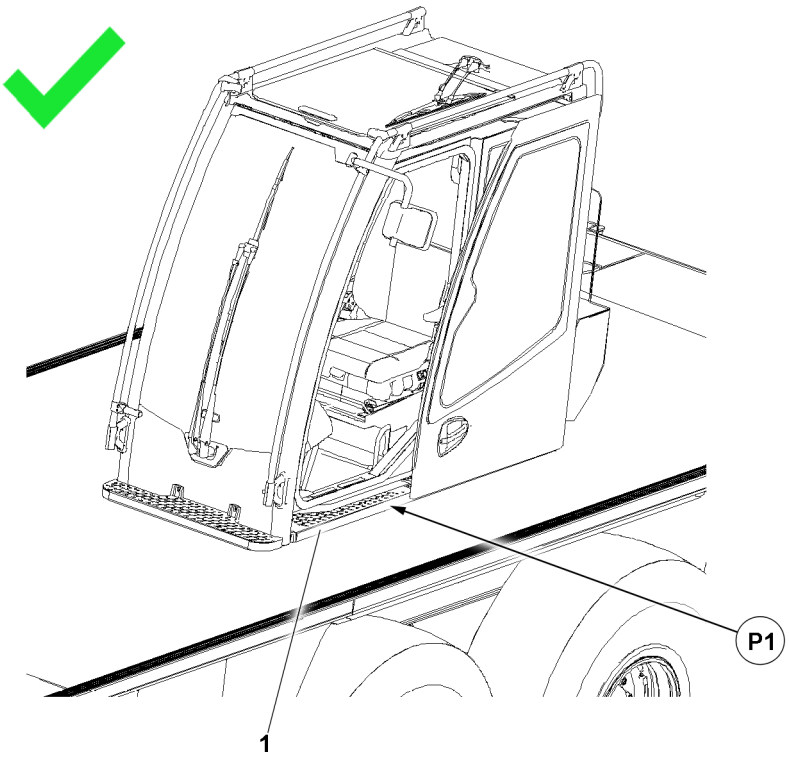

Fig.147868: Crane superstructure in the 0° position or 180° position: Step retracted

Before entering or exiting the crane cab, the following prerequisites must be met:
- The crane superstructure is in the 0° position or 180° position.
- The step **1** under the crane cab is retracted in position **P1**.
- The crane cab with incline adjustment is in 0° position.
- Folding ladders are folded into the ascent and descent position.

Note

▶ When all folding ladders are folded into the ascent and descent position, then a safe descent is possible from every position. See chapter 2.07.

LWE/LR 1600-2-001/18101-07-02/en

copyright © Liebherr-Werk Ehingen GmbH 2018

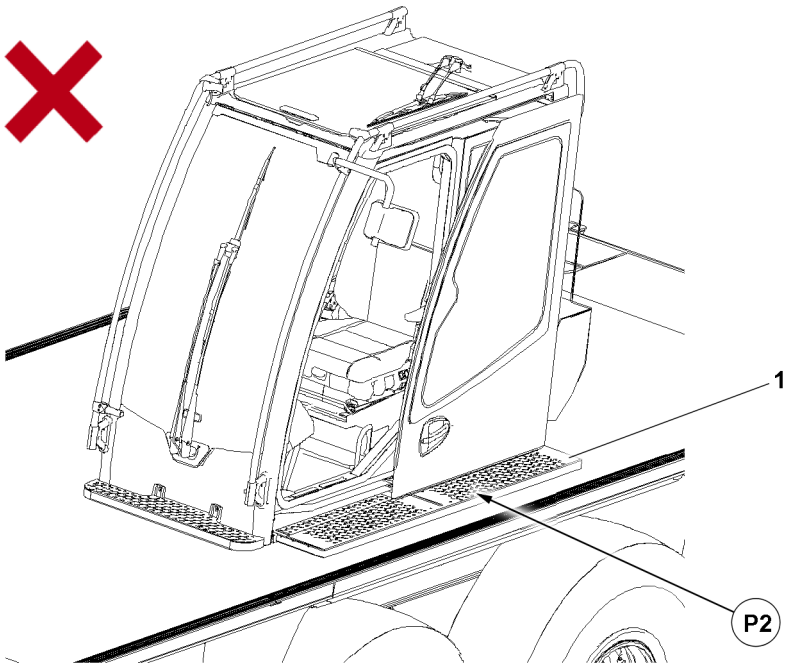

*Fig.147869: Crane superstructure in the 0° position or 180° position: Step **not** retracted*

WARNING
The crane superstructure is in 0°-position or in 180°-position and the step **1** is **not** retracted!
Personnel can fall when entering / exiting.
Death, severe bodily injuries.
▶ Before entering or exiting: Retract the step **1** completely.

If the step **1 cannot** be retracted:
▶ Guarantee safe entry / exit: Set up suitable climbing aids, such as a ladder or a platform.

LWE/LR 1600-2-001/18101-07-02/en

copyright © Liebherr-Werk Ehingen GmbH 2018

10.1.2 Crane superstructure turned

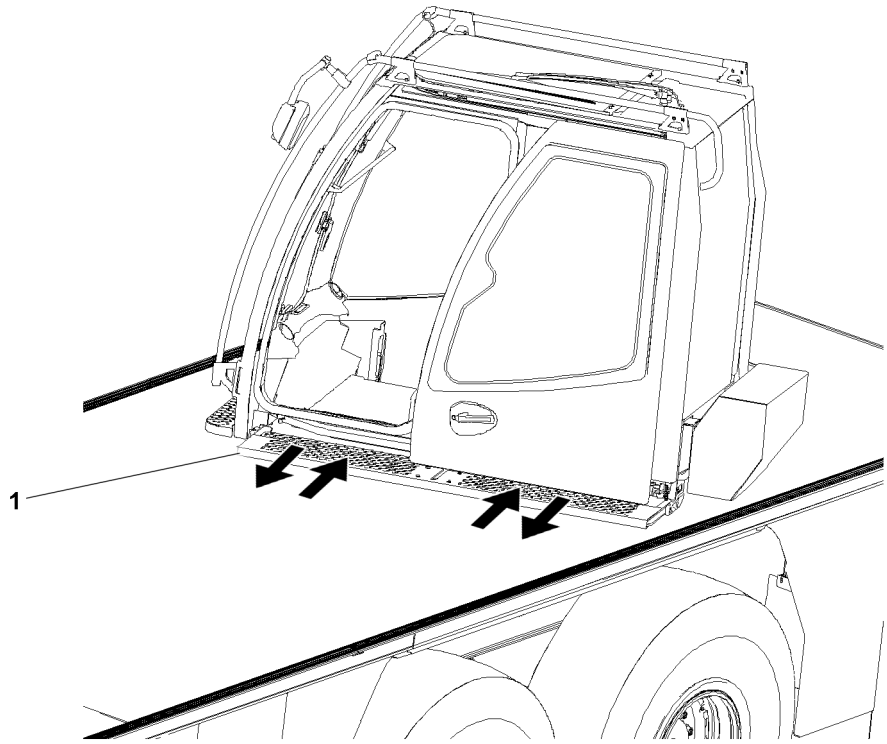

Fig.147870: Crane superstructure turned: Step extended

Before entering or exiting the crane cab, the following prerequisites must be met:
- The crane superstructure is swung to the point where a safe access to walkable surfaces of the crane chassis is ensured.
- The step **1** under the crane cab is extended.
- For a crane cab with incline adjustment, the crane cab is in the 0° position.
- All folding ladders are folded into the ascent and descent position.

10.2 Extendable step for LTR cranes

The description for an „extendable step for LTR cranes“ only applies for LTR cranes.

LWE/LR 1600-2-001/18101-07-02/en

copyright © Liebherr-Werk Ehingen GmbH 2018

10.2.1 Extendable step for LTR 1060 and LTR 1100

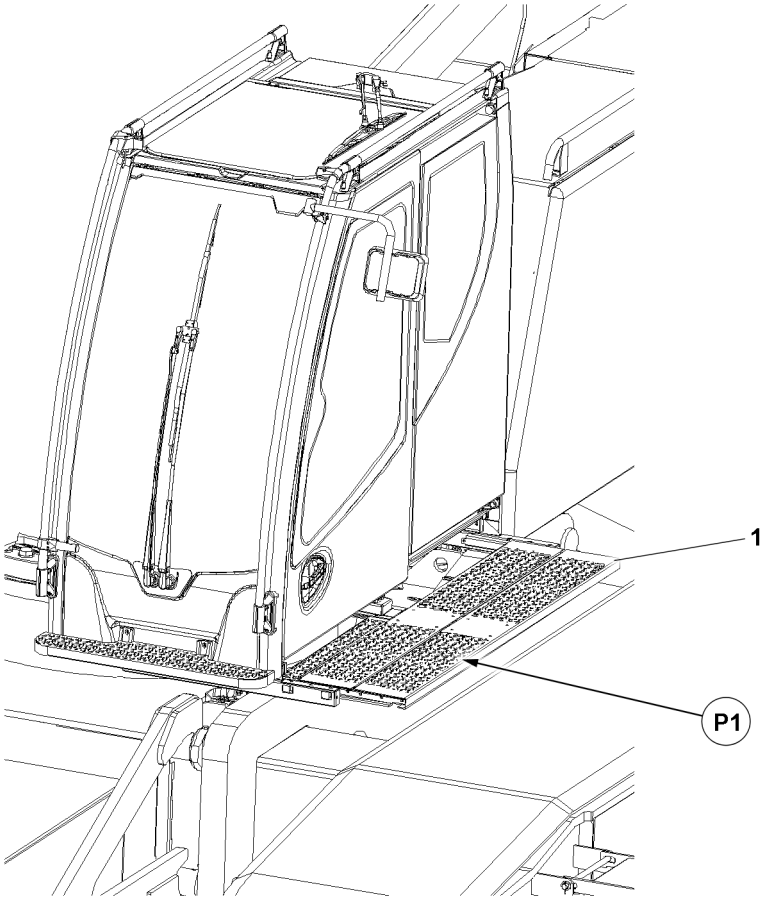

Fig.149549: Extendable step for LTR 1060 and LTR 1100

Ascending and descending takes place on the walking surfaces of the crawler chain. „Accesses to the crane“ see chapter 2.07.

Before entering or exiting the crane cab, the following prerequisites must be met:
- The crane superstructure is in the 0° position or 180° position.
- The crane cab with incline adjustment is in 0° position.
- The step **1** under the crane cab is extended in position **P1**.

WARNING
The crane superstructure is in 0°-position or in 180° position and the step **1** is **not** extended!
Personnel can fall when entering / exiting.
Death, severe bodily injuries.
▶ Before entering or exiting: Extend the step **1** completely.

If the step **1 cannot** be extended:
▶ Guarantee safe entry / exit: Set up suitable climbing aids, such as a ladder or a platform.

LWE/LR 1600-2-001/18101-07-02/en

copyright © Liebherr-Werk Ehingen GmbH 2018

10.2.2 Extendable step for LTR 1220

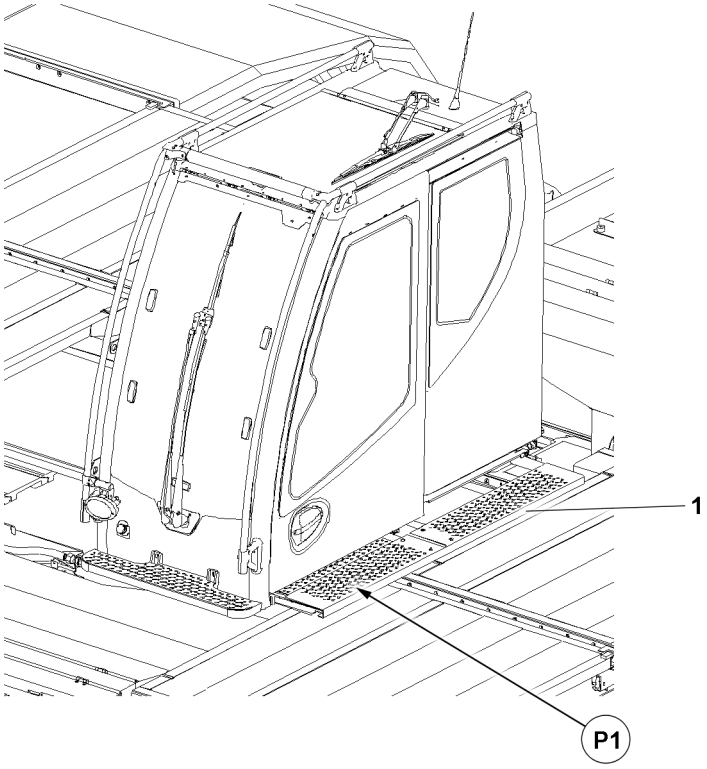

Fig.149550: Extendable step for LTR 1220

Ascending and descending takes place on the walking surfaces of the crane chassis. „Accesses to the crane“ see chapter 2.07.

Before entering or exiting the crane cab, the following prerequisites must be met:
- The crane superstructure is turned to the point where a safe access to walkable surfaces of the crane chassis is ensured.
- For a crane cab with incline adjustment, the crane cab is in the 0° position.
- The step **1** under the crane cab is extended in position **P1**.

10.3 Crane cab with incline adjustment

WARNING
Danger of falling!
If the crane cab cannot be swung from an inclined position (for example 20° position) to the 0° position, for example due to a problem, then utmost caution must be used when entering / exiting the crane cab.
There is a danger of falling. Personnel can be severely injured or killed.
- ▶ For safety reasons, we recommend to take advantage of outside help.
- ▶ If necessary, have platforms or other suitable entry aids set up to ensure safe exit from the crane cab.

WARNING
Danger of accident!
If the door of the crane cab is opened in inclined position, then the door can move back suddenly. Hands can be crushed or injured.
- ▶ When the crane cab is in inclined position, open the door carefully.

copyright © Liebherr-Werk Ehingen GmbH 2018

10.4 Securing bracket

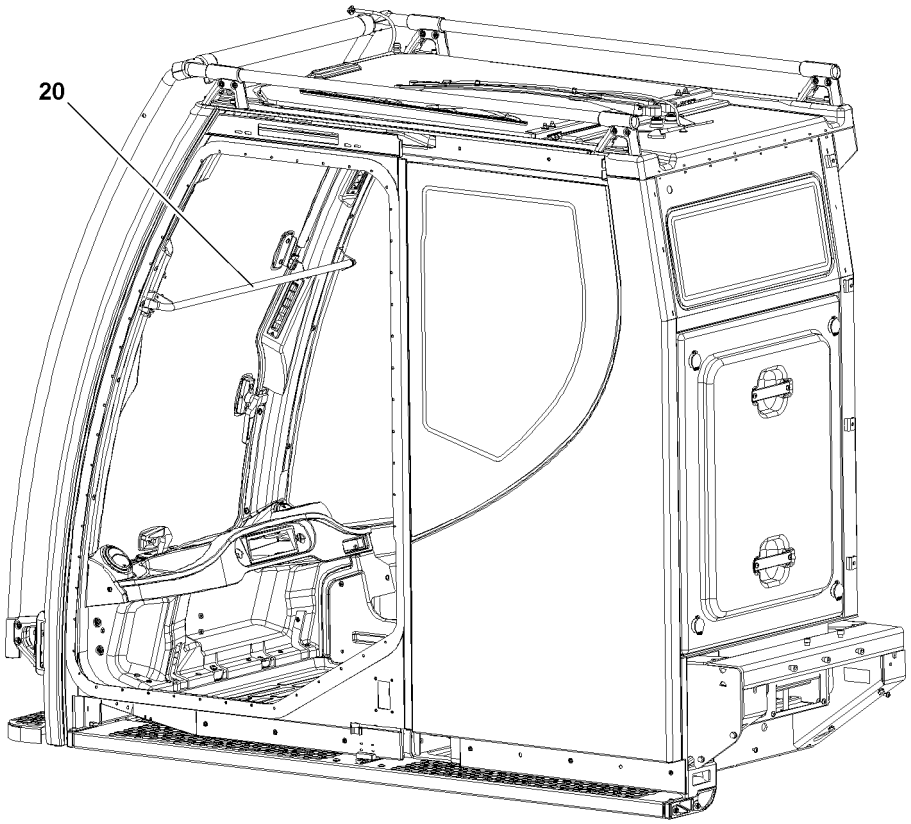

Fig.121158: Example for crane cab with securing bracket

Note

- The securing bracket **20** is installed to protect the crane operator from a danger of falling when the front window is open.
- Do not use the securing bracket **20** as a handle.

10.5 Closing the side window pane

WARNING

Danger of crushing!

Never close the side window pane carelessly or uncontrolled. Significant crushing injuries can occur.

- During closing, watch the side window pane as it moves up.
- Make sure that no personnel or objects are crushed.

11 Transport

WARNING

Error during transport!

Death, severe bodily injuries, property damage.

- To avoid accidents, observe and follow the notes provided in the following sections.

LWE/LR 1600-2-001/18101-07-02/en

copyright © Liebherr-Werk Ehingen GmbH 2018

11.1 Crane and crane components

Follow the notes provided below to safely transport the crane and crane components:
- Close the crane cab and all cover doors.
- Use suitable transport vehicles.
- Use rigging devices with sufficient load capacity.
- Regularly check the rigging points and fastening points. See the Crane operating instructions, chapter 8.01.
- Properly support and secure the components on the transport vehicle.
- Use special transport devices. See the Crane operating instructions, chapter 3.80.

11.2 Lattice sections

Follow the notes provided below to safely transport the telescoped lattice sections:
- Securely rig the lattice sections on the transport vehicle and secure them together in at least two independent points.
- When rigging points are present: Secure both lattice sections with suitable rigging elements and clamping elements on the rigging points on the transport vehicle.
- If there are no rigging points available: Use suitable rigging devices to secure directly on the components on the transport vehicle.

11.3 Mobile cranes

Follow the notes provided below for the safe transport of mobile cranes.
- To ensure the largest possible frictional coefficient to the transport surface, clean the wheels before transport.
- When driving on the transport vehicle, check the easy movement of the vehicle with the aid of a guide to avoid hitting too hard.
- Apply the parking brake. See the Crane operating instructions, chapter 3.04.
- Lower the crane with the level control to obtain a center of gravity as low as possible. Level control, see Crane operating instructions, chapter 3.03
- Stopping the mobile crane: Place wedges under the wheels. See the Crane operating instructions, chapter 2.04.
- Close the driver's cab.

11.4 Accelerating, changing the load

NOTICE
Permissible acceleration exceeded!
Damage to crane.
- ▶ Observe the maximum permissible longitudinal acceleration of 1.0 g.
- ▶ Observe the maximum permissible lateral acceleration of 0.8 g.
- ▶ Offloading and running is prohibited during rail transport.

If higher accelerations are expected (sea transport, rail transport, maneuvering operation):
- ▶ Carry out the special measures to secure the crane and crane components.

NOTICE
Frequent dynamic load change!
Premature fatigue of load bearing crane components.
- ▶ Demount and properly secure components with large masses.
- ▶ Prior to transport: Have the rigging points and crane structures checked for damage by an authorized inspector. See chapter 8.01.

LWE/LR 1600-2-001/18101-07-02/en

copyright © Liebherr-Werk Ehingen GmbH 2018

12 Fastening

WARNING
Defective fastening equipment or fastening points!
The load can fall down.
- ▶ Make sure that the fastening points and fastening equipment are in a perfect condition.
- ▶ Regularly check the rigging points and fastening points. See the Crane operating instructions, chapter 8.01.
- ▶ Check the fastening equipment regularly. See the Crane operating instructions, chapter 8.01.

WARNING
Load bearing capacity of the fastening equipment is **not** sufficient!
The load can fall down.
- ▶ Determine the weight of the crane component to be fastened.
- ▶ Fasten the components solely with approved and sufficiently load bearing fastening equipment.

WARNING
Component incorrectly fastened!
The load can fall down.
- ▶ Attach the components only on the intended fastening points.

13 Heated crane components

WARNING
Danger of burns!
You can get severely burnt on the surfaces of hot components.
This applies especially to exhaust systems, the engines and the respective gears in the crane chassis and in the crane superstructure.
- ▶ Let the components cool down before touching them.
- ▶ Proceed with special caution near heated crane components.

14 Crane operator responsibilities

14.1 General

The crane operator's primary responsibility is to use and operate the crane in a manner that is safe for both himself and others.

The following important safety guidelines will help you achieve this.

Many crane accidents are caused by crane control errors.

WARNING
Danger due to operating error!
- ▶ In your interest and in the interest of others, make sure that you know your crane. Also learn to recognize all dangers connected with the work to be carried out.

Operating errors, which are made again and again during travel operation or crane operation are especially careless while working, in particular:
- – Swinging too quickly
- – Stopping the load too quickly
- – Pulling the load at an angle
- – Allowing slack rope formation

LWE/LR 1600-2-001/18101-07-02/en

copyright © Liebherr-Werk Ehingen GmbH 2018

- Overloading the crane
- Driving too fast with a load and / or equipment on an uneven road
- Error when fastening the load
- Unsuitable operation; especially angular pulling, breaking away stuck loads
- Wind action on suspended loads
- Errors during on-road driving, for example:
  - Overspeeding the engine when driving downhill
  - Driving with turned on differential lock
- Crashing into bridges, roofs or high voltage wires due to insufficient headroom
- Inadequate support; support base, substructure under the support plates
- Errors during assembly or removal of booms
- Incorrect positioning of the crane when it is taken out of service
- Exceeding the permissible wind speeds in operation and when out of service

In many cases, crane damage is caused by improper maintenance:
- Insufficient oil, grease or antifreeze
- Contamination
- Broken cable wires, defective tires, worn components
- Emergency limit switch or load torque limiter (LMB) not operating properly
- Brake and clutch failure
- Hydraulic defects; for example cracked hoses
- Loose bolts

14.2 Working on the crane superstructure or boom

WARNING
Danger of falling!
When working on the crane superstructure or boom, personnel must be secured with appropriate safety measures to prevent them from falling. If this is not observed, working personnel can fall and be killed or severely injured.

- ▶ For all work on the crane where there is a danger of falling, suitable safety measures must be taken.
- ▶ The crane superstructure or the boom may not be accessed without suitable aids.
- ▶ Suitable aids are, for example: Lifting platforms, scaffoldings, ladders, assembly platforms, auxiliary crane.
- ▶ If railing are present on the crane superstructure, then they must be swung into operating position and secured for all work, see Crane operating instructions, chapter 2.06.
- ▶ Step on aids and stepping surfaces on the crane only with clean shoes.
- ▶ Keep aids and stepping surfaces on the crane clean and free from snow and ice.
- ▶ If the work cannot be carried out with such aids nor from the ground, then the assembly personnel must secure themselves with supplied fall arrest systems to avoid falling, see section „Personal protective equipment“.
- ▶ It is prohibited to step on the driver’s cab or crane cab roof and specially marked surfaces, see Crane operating instructions, chapter 2.05.

14.3 Obligations of the crane operator

1. Before starting to work, the crane operator must check the brake function and the emergency shut off devices. He must monitor the condition of the crane for obvious defects. On wireless controlled cranes, he must check the assignment of control unit and crane.
2. The crane operator must cease crane operation in case of problems endangering the safety.
3. The crane operator must report all defects on the crane to the appropriate supervisor, also to his replacement in case of crane change.
4. The crane operator must make sure that:
   - All control systems are set to neutral or idle position before release of the energy supply to the drive components.

LWE/LR 1600-2-001/18101-07-02/en

copyright © Liebherr-Werk Ehingen GmbH 2018

- The control systems are set to neutral or idle position and the energy supply is shut off before leaving the control platform.
- When taking down the control unit for wireless control, the control unit is secured to prevent unauthorized persons from turning it on.

5. The crane operator must ensure that cranes subjected to wind are not operated past the limits which were set by the crane manufacturer, and that the boom is taken down at least when the critical wind speeds for the crane are reached and at the end of the work.
6. The crane operator must monitor the load during all crane movements or the load handling equipment when moving the crane without a load, if they could cause a dangerous situation. If observation is not possible, then the crane operator may move the crane only with the aid of a guide.
7. The crane operator must give warning signs when necessary.
8. The crane operator may not move loads over personnel.
9. Any loads attached by hand may only be moved by the crane operator after he received a clear sign from the person who attached the load, the guide or any other responsible party which was assigned to that task by the contractor. If signals must be used to communicate with the crane operator, then these signals must be agreed upon before use between the responsible party and the crane operator. If the crane operator determines that the loads are not properly attached, then he may not move these loads.
10. As long as a load is suspended on the crane, the crane operator must keep the control systems within reach. This does not apply for the towing of vehicles with towing cranes.
11. The crane operator may not run up operationally to end positions that are only limited by the emergency limit switches.
12. After a load torque limiter was triggered, the crane operator may not pick up an overload by pulling in / raising the boom.
13. The crane operator may **not** bypass the overload protection to increase the hoisting power of the crane.

15 Selecting the location

In the following illustrations 1 to 3 the possible situations are shown as an example.

It is very important to choose an appropriate placement location in order to minimize safety risks.

It must always be possible to take down the crane in order to take down the crane in a timely manner in the case of unexpected weather conditions.

It must always be possible to position the crane in a safe out of service position.

LWE/LR 1600-2-001/18101-07-02/en

copyright © Liebherr-Werk Ehingen GmbH 2018

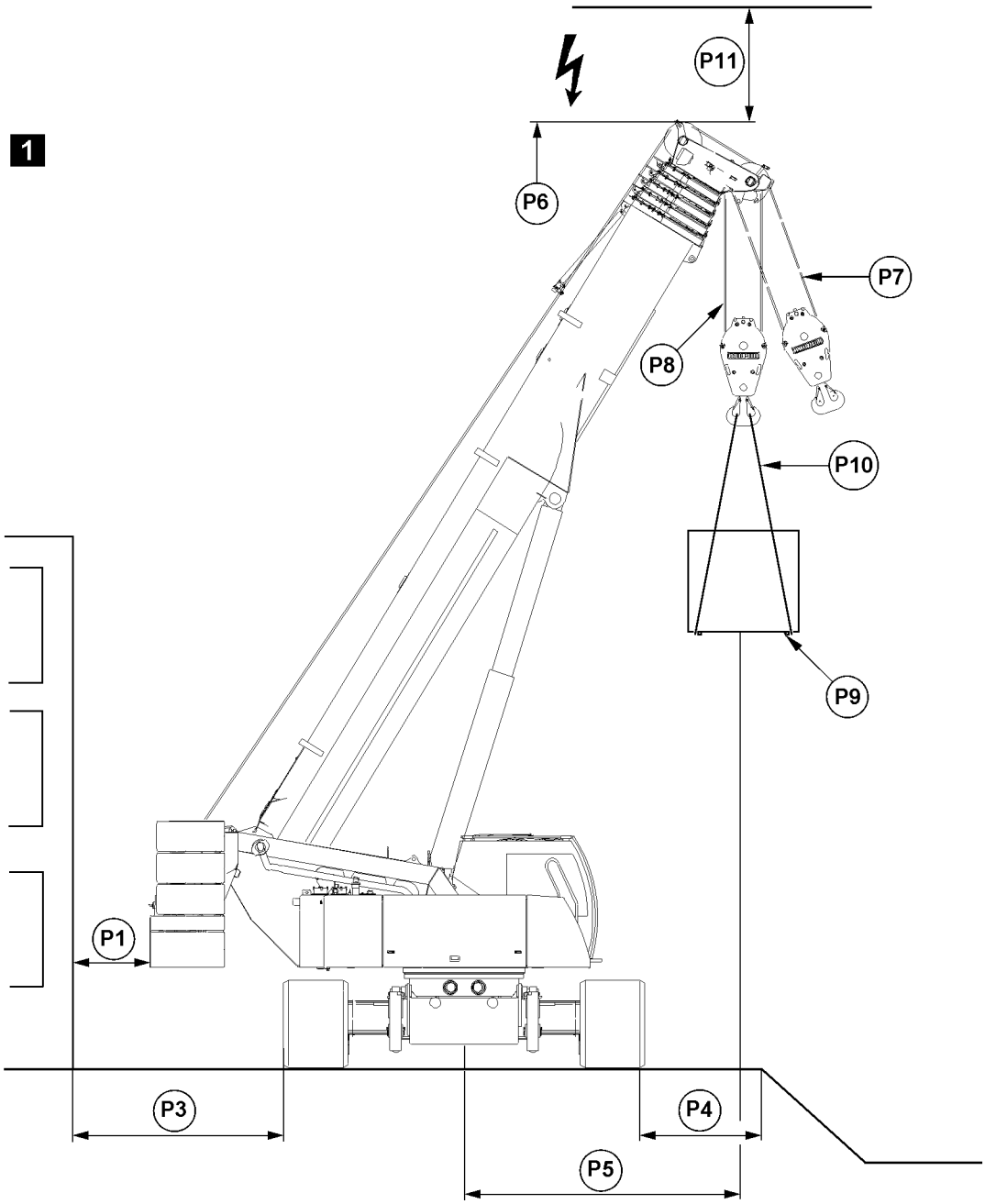

Fig.121166: Example for crawler crane with telescopic boom

LWE/LR 1600-2-001/18101-07-02/en

copyright © Liebherr-Werk Ehingen GmbH 2018

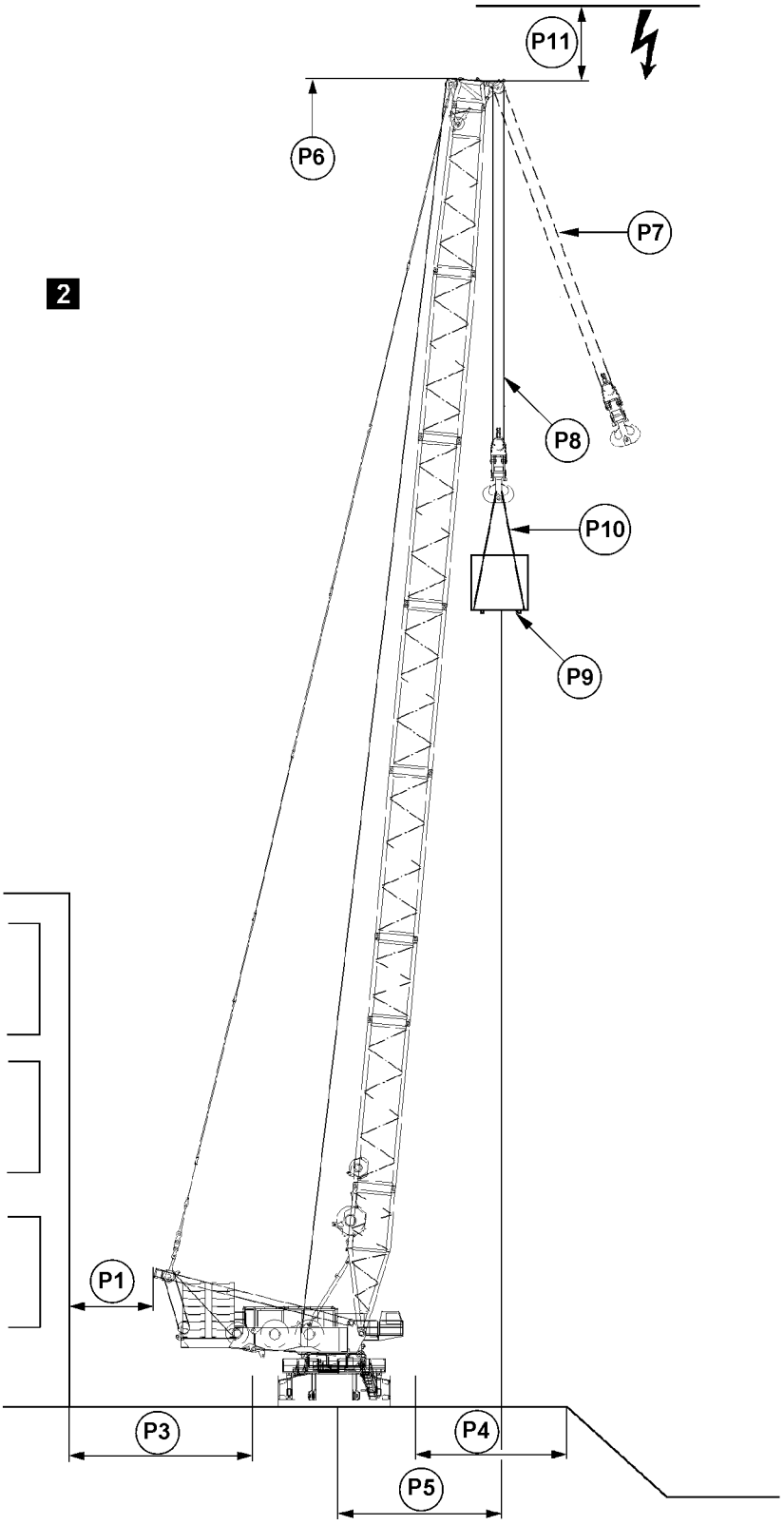

Fig.121167: Example for crawler crane with lattice mast boom

LWE/LR 1600-2-001/18101-07-02/en

copyright © Liebherr-Werk Ehingen GmbH 2018

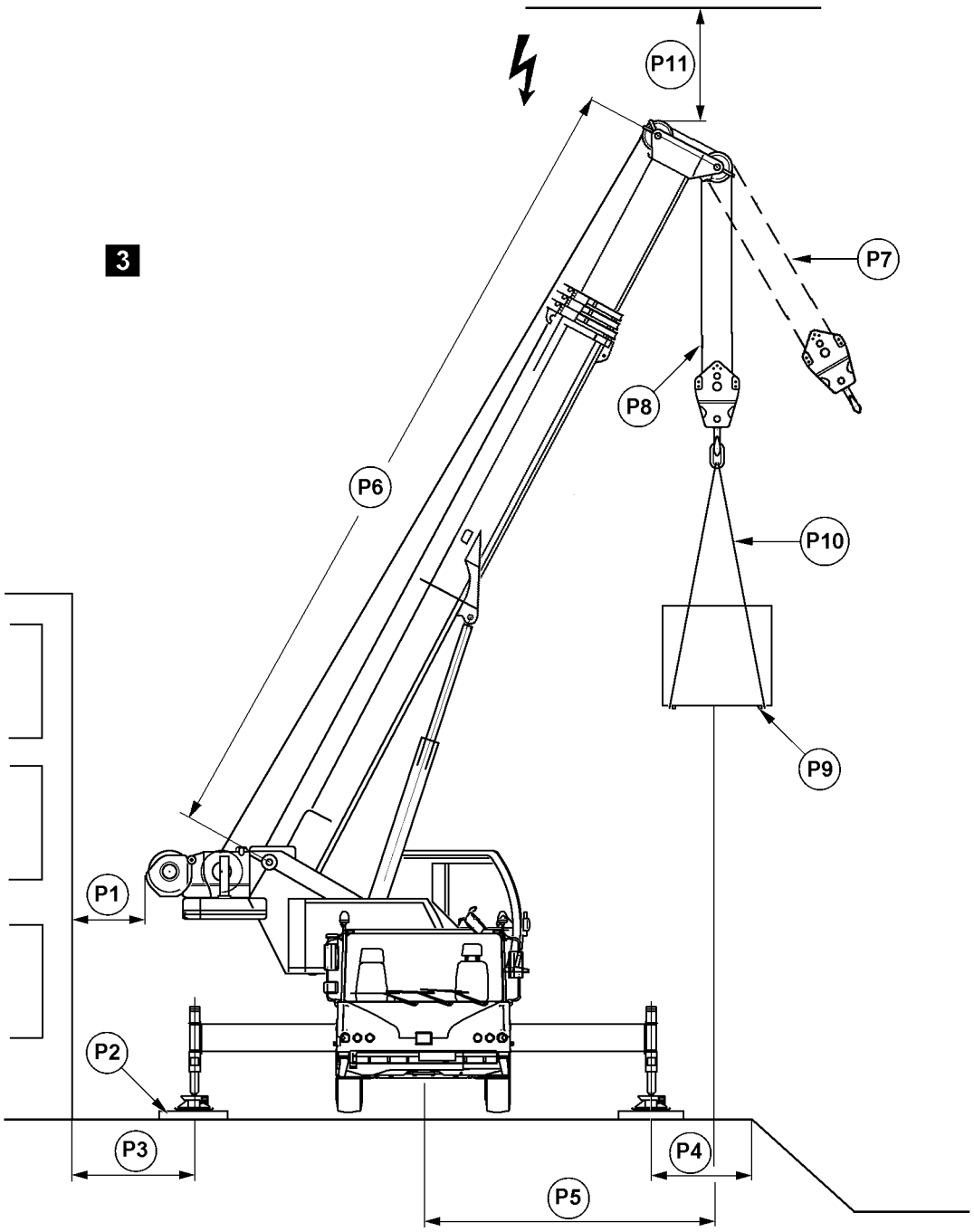

Fig.121168: Example for mobile cranes

DANGER
Danger of accidents due to ground with **insufficient** load bearing capacity!
If the crane is supported or driven on ground with **insufficient** load bearing capacity, then the crane can topple over and kill personnel.
- ▶ Only support or drive the crane on ground with sufficient load bearing capacity.
- ▶ Act responsibly when planning and selecting the crane location and route.
- ▶ Observe the following points.

LWE/LR 1600-2-001/18101-07-02/en

copyright © Liebherr-Werk Ehingen GmbH 2018

Sign	When selecting the placement location for the crane, observe and adhere to the following:
P1	Select the placement location in such a way that crane movements can be carried out without collision and that the supports can be extended to the support base specified in the load charts Make sure that no personnel is injured or killed Always keep a safety distance of 0.5 m. If this is not possible, block the danger zone off
P2	When crane support is required: Support the crane correctly and support the support plates large enough according to the load bearing capacity of the ground and the placement location
P3	Maintain a safe distance from basements or similar
P4	Maintain a safe distance from slopes or similar
P5	Select a boom radius as low as possible
P6	Select the correct boom length for the load case
P7	Angular pull is prohibited
P8	Select the correct reeving of the hoist rope for the load case
P9	Keep in mind the weight and the wind exposure surface of the load
P10	Select fastening equipment according to the weight of the load, the type of attachment and the incline angle
P11	Maintain a sufficient distance from electrical overhead wiring

16 Slopes and excavations

In the following illustrations 4 and 5 the possible situations are shown as an example.

The crane may not be set up too close to slopes or excavations. Maintain adequate safety distance **A** and safety distance **B** in accordance with the type of soil.

LWE/LR 1600-2-001/18101-07-02/en

copyright © Liebherr-Werk Ehingen GmbH 2018

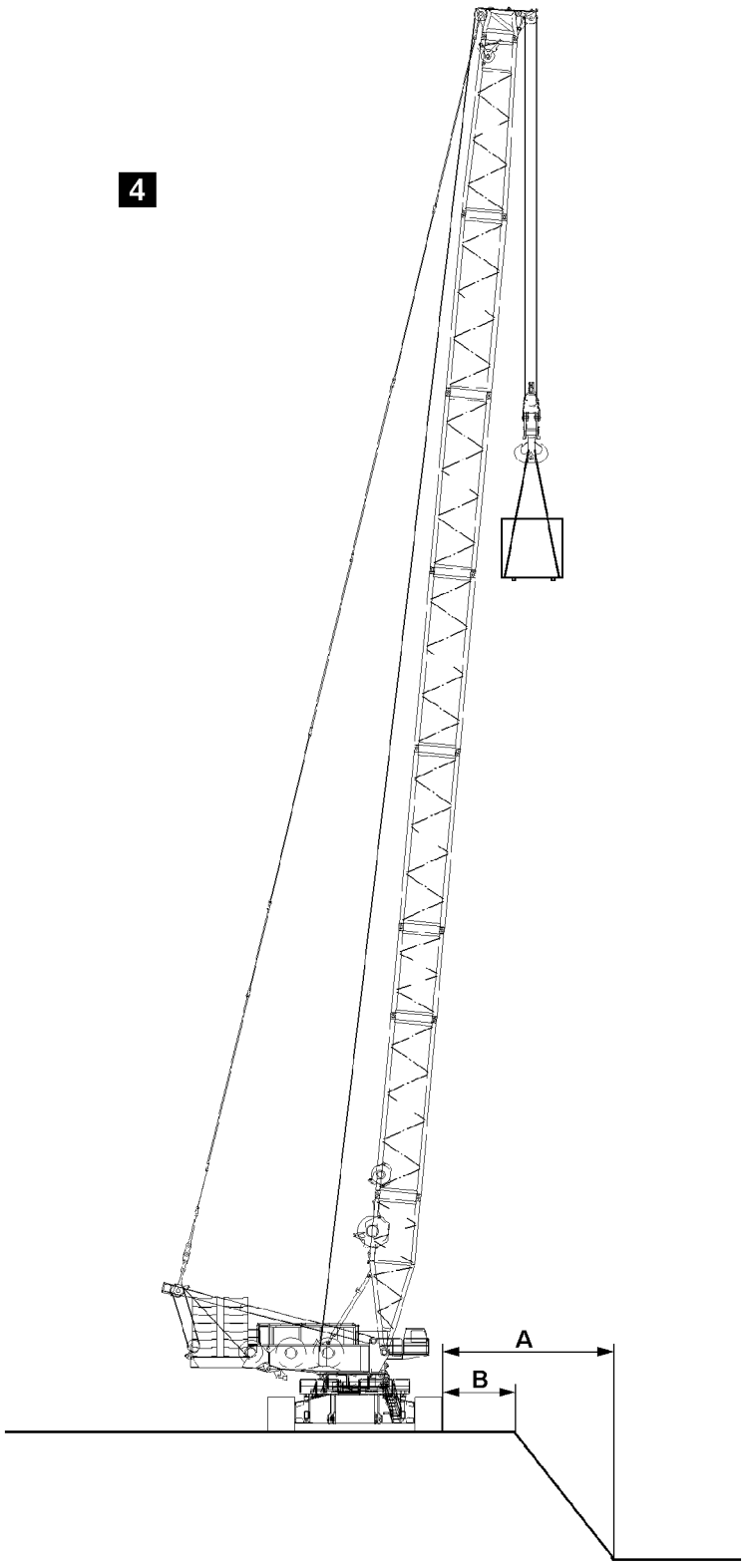

Fig.121162: Example for crawler cranes

A Distance from the bottom of excavation

B Distance from the excavation

LWE/LR 1600-2-001/18101-07-02/en

copyright © Liebherr-Werk Ehingen GmbH 2018

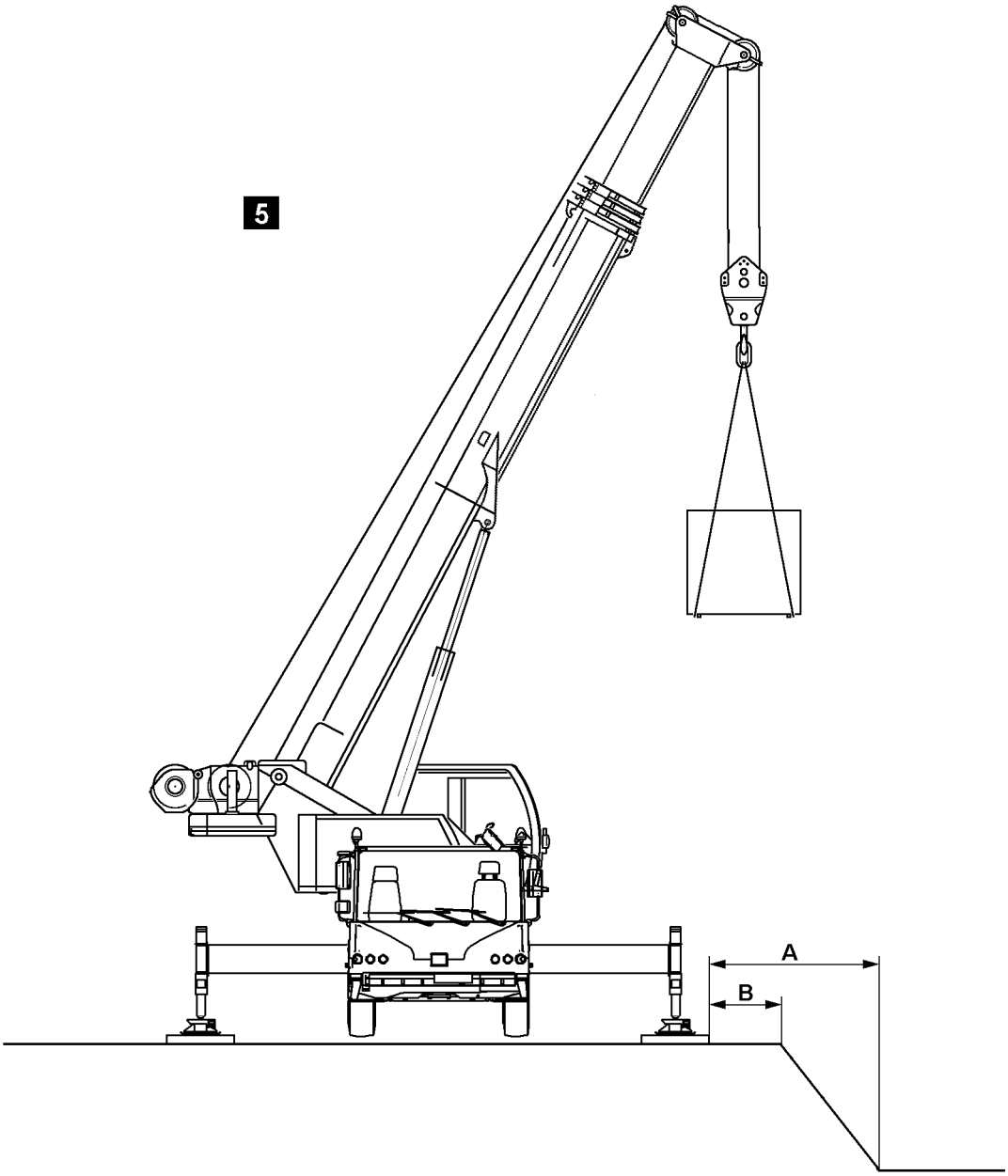

Fig.121163: Example for mobile cranes

A Distance from the bottom of excavation

B Distance from the excavation

WARNING
Safety distance **A** or safety distance **B** are too small!
The edge or the slope or the edge of the excavation can cave in.
The crane can topple over. Death, severe bodily injuries, property damage.
▶ Maintain the safety distance **A** and safety distance **B**.

Have the safety distance **A** and safety distance **B** calculated by a soil expert or geologist.

LWE/LR 1600-2-001/18101-07-02/en

copyright © Liebherr-Werk Ehingen GmbH 2018

17 Loads on the ground due to crane operation

Note

▶ Take into account that on a crane with high counterweight the crawler pressures or support forces at low load can be higher than at high load.

17.1 Load burdens on the ground on cranes on crawlers

For cranes on crawlers significant forces are transferred via the track pads of the crawlers into the ground (crawler pressures).

– The ground must be able to safely withstand the resulting pressure.
– If the area of the track pads is inadequate, then the crawlers must be supported from below according to the load bearing capacity of the ground.
– The required substructure can be calculated from the load bearing capacity of the ground and the crawler pressures of the crane.

WARNING

Load bearing capacity of the ground insufficient!
The ground can give, the crane can topple over.
Death or severe bodily injuries.

▶ Support large enough, according to the load bearing capacity of the ground with suitable materials, such as wooden beams or steel plates.

To obtain an even pressure distribution over the substructure surface:

▶ Set the crawlers centered on the substructure.

Note

▶ The respective ideal crawler pressure can be determined with the job planner program.

17.2 Load burdens on the ground on cranes on supports

When the crane is supported, significant forces (support forces) are transferred by the support cylinders via the support plates to the ground.

The ground must be able to safely withstand the resulting pressure.

If the support plate surface area is inadequate, then the support plates must be supported from below according to the load bearing capacity of the ground.

The required support surface areas can be calculated from the load bearing capacity of the ground and the support forces of the crane.

WARNING

Load bearing capacity of the ground insufficient!
The ground can give, the crane can topple over.
Death or severe bodily injuries.

▶ Support large enough, according to the load bearing capacity of the ground with suitable materials, such as wooden beams or steel plates.

To obtain an even pressure distribution over the substructure surface:

▶ Set the support plates centered on the substructure.

LWE/LR 1600-2-001/18101-07-02/en

copyright © Liebherr-Werk Ehingen GmbH 2018

17.3 Examples for the load bearing capacity of the ground

	Soil type	Permissible ground pressure [kN/m²]
1.	Organic ground:	
	Peat, sludge, muck	0
2.	Uncompacted fill:	
	Construction debris	0 to 100
3.	Non-cohesive ground:	
	Sand, gravel, rocks and mix	200
4.	Cohesive soil:	
	a) Clayed silt, mixed with topsoil	120
	b) Silt, consisting of poor clay and coarse clay	130
	c) Plastic clay, consisting of potter's clay and fill	
	Stiff	90
	Semi-solid	140
	Solid	200
	d) Mixed granular ground, clay to sand, gravel and rocky areas	
	Stiff	150
	Semi-solid	220
	Solid	330
5.	Rock in evenly solid condition:	
	a) Brittle, with traces of decomposition	1500
	b) Not brittle	4000

Examples: Permissible ground pressure of the ground

If there is any doubt about the load bearing capacity of the ground at the placement location, soil tests must be carried out by an authorized inspector, for example with a ram penetrometer.

17.4 Calculation examples

The following are general calculation examples. The values are used only to explain the calculation steps. The crane specific values are in chapter 1.03 of the crane operating instructions.

Example: Calculation of ground pressure of support plates for cranes on supports		□
Support force according to Crane operating instructions, chapter 1.03 for example: 720 kN	720 kN	
Surface of square support plate with 550 mm side length according to chapter 1.03, for example: 0.55 m x 0.55 m = 0.3 m²	0.3 m²	
80 % as carrying surface of support plate: 0.3 m² x 0.8 = 0.24 m²	0.24 m²	
Ground pressure = Support force / load bearing surface support plate	720 kN / 0.24 m² = 3000 kN/m²	
Ground pressure per support:	**3000 kN/m²**	

Example: Calculation of ground pressure

LWE/LR 1600-2-001/18101-07-02/en

copyright © Liebherr-Werk Ehingen GmbH 2018

- The value of the ground pressure is far higher than the permissible ground pressure for all types of granular soil.
- If this crane is utilized on bedrock, gravel type of ground, permissible ground pressure 200 kN/cm² , then the support surface must be increased.

Example: Calculation of required support surface for cranes on supports		□
Support force according to Crane operating instructions, chapter 1.03 for example: 720 kN	720 kN	
Ground pressure from chart *Permissible ground pressures* for example: 200 kN/m²	200 kN/m²	
Required support surface = Support force / permissible ground pressure	720 kN / 200 kN/m² = 3.6 m²	
Required support surface per support:	**3.6 m²**	

Example: Calculation of support surface

- The surface of the substructure for each support plate must be at least **3.6 m²**.
- The height of the substructure must be selected depending on the load distribution angle.

Note

▶ The corresponding ideal support forces can be determined with the Job planner.

17.5 LICCON job planner

The calculation of support forces and crawler pressures with the LICCON job planner are based on idealized assumptions: level and homogenous ground, rigid crane structure, no consideration in regard to wind.

Side deformations of the boom system due to wind, incline position and elastic compliance of the steel structure can lead to increase of support forces or to increase of crawler pressures.

The determination of the values, taking wind load on the crane and the load into account, as well as the elastic deformation of the crane can only be carried out by the crane manufacturer or a qualified authorized inspector.

LWE/LR 1600-2-001/18101-07-02/en

copyright © Liebherr-Werk Ehingen GmbH 2018

17.5.1 Example for crane on crawler with derrick boom, suspended ballast and short (main) boom system

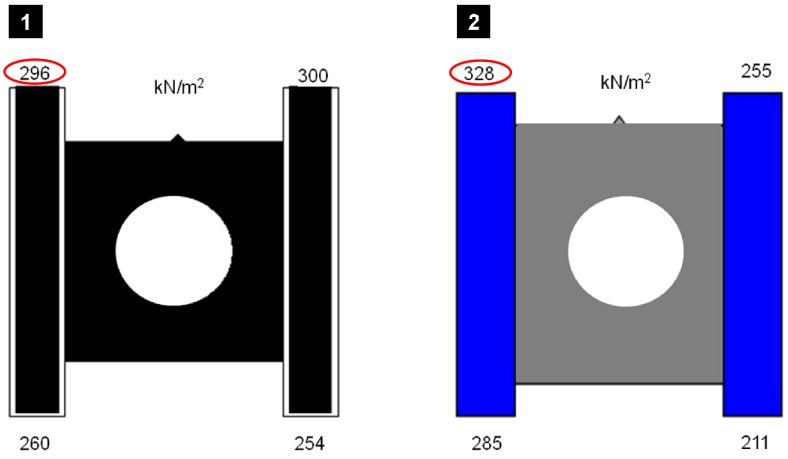

Fig.125052: Example for crane on crawler with derrick boom, suspended ballast and short (main) boom system

Illustration 1: Idealized crawler pressures from Job planner calculated with the aid of a rigid body system and no consideration regarding wind

Illustration 2: Idealized crawler pressures with consideration of elastic deformation and wind on crane and load

17.5.2 Example for crane on crawler with derrick boom, suspended ballast and long (main) boom system

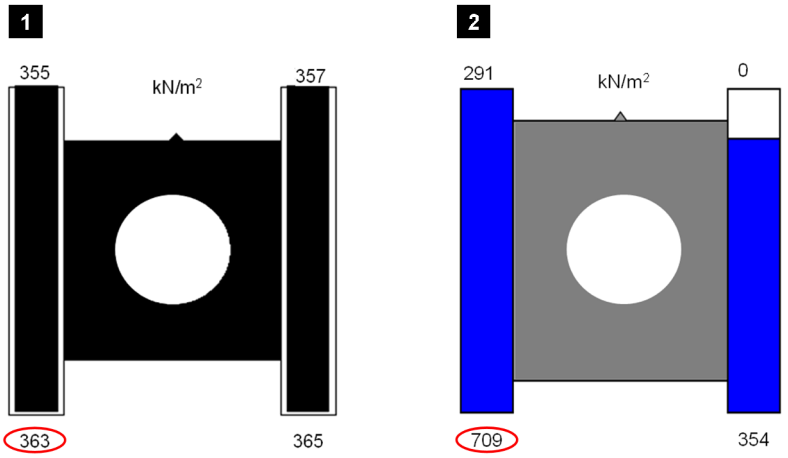

Fig.125053: Example for crane on crawler with derrick boom, suspended ballast and long (main) boom system

Illustration 1: Idealized crawler pressures from Job planner calculated with the aid of a rigid body system and no consideration regarding wind

Illustration 2: Idealized crawler pressures with consideration of elastic deformation and wind on crane and load

LWE/LR 1600-2-001/18101-07-02/en

copyright © Liebherr-Werk Ehingen GmbH 2018

17.5.3 Example for crane on supports

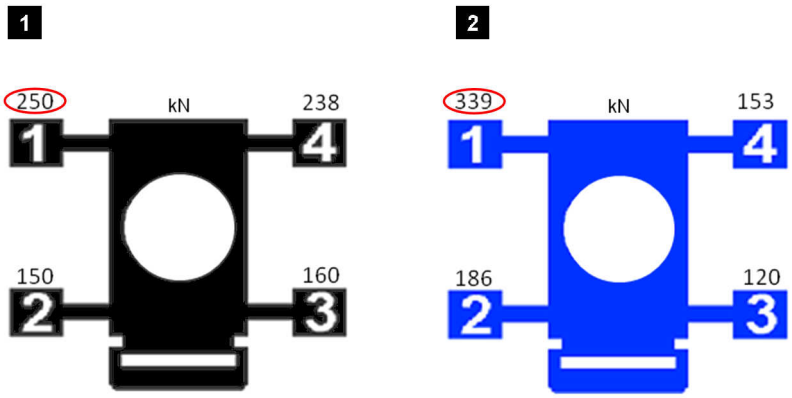

Fig.125054: Example for crane on supports

Illustration 1: Support forces from Job planner calculated with the aid of a rigid body system and no consideration regarding wind

Illustration 2: Support forces with consideration of elastic deformation and wind on crane and load

18 Support

18.1 Support plates

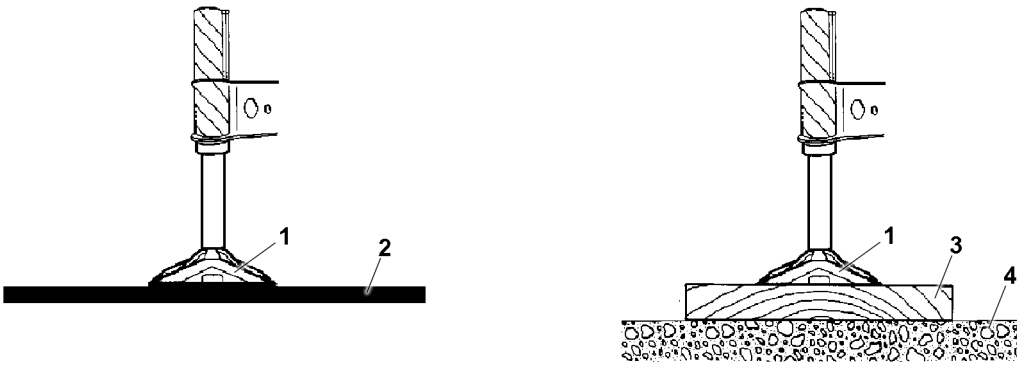

Fig.144244: Support plates

1	Support plate	**3**	Substructure
2	Ground (**no** substructure necessary)	**4**	Ground (substructure necessary)

When supporting the crane, the support plates must lay horizontally on the ground or on the substructure.

WARNING
The support plate are **not** laying horizontally!
The crane can topple over, death, property damage.
▶ Before supporting the crane, align the support plates horizontally.

copyright © Liebherr-Werk Ehingen GmbH 2018

18.2 Supporting the crane

WARNING
The crane is **not** horizontally aligned!
The crane can topple over, death, property damage.
▶ Align the crane horizontally to 0.0° during the support procedure.

DANGER
The crane can topple over!
When actuating the supports with attached load and / or at loaded derrick ballast guying, the incline and the force conditions of the entire boom system change.
There is **no** shut-off by the LICCON overload protection.
The crane can topple over.
Personnel can be severely injured or killed.
▶ When a load is suspended it is prohibited to actuate the support.
▶ When the derrick ballast guying is loaded it is prohibited to actuate the support.

It is absolutely essential that the crane be supported with the support base exactly in accordance with the load chart to ensure safe crane operation.

The correspondence of the sliding beams placement surfaces must be observed to ensure proper force transfer between the sliding beams.

The crane may only be supported in these extension conditions.

WARNING
The crane can topple over!
If only the sliding beams on the load side are extended, then the crane can topple over and kill personnel.
▶ Move all 4 sliding beams and support cylinders out according to the data in the load chart and pin.
▶ In intermediate positions between the support bases, do **not** support.
▶ Pin the sliding beams to support base according to the load chart.
▶ Fully insert and secure the pins.

WARNING
Risk of toppling the crane due to incorrect extension of the sliding beams!
The load suspended on the hook causes tension and deformation of the hoist rope and telescopic boom. The same applies for operation with lattice jib and guy ropes. If the load falls from the fastening ropes or if the fastening or hoist rope breaks in this situation, a sudden relief occurs. The boom snaps back quickly. This can cause the crane to topple over.
Despite previous assumption, it might become necessary to swing the load to the opposite side. This can cause the crane to topple over.
The boom and / or counterweight momentum may cause the crane to topple when turning from the longitudinal vehicle direction.
▶ Extend all 4 sliding beams and support cylinders according to the data in the load chart.

18.3 Supporting the crane with *variable support*

When supporting the crane with *variable support* special measures are required. These measures are described in detail in the Crane operating instructions, chapter 6.26.

LWE/LR 1600-2-001/18101-07-02/en

copyright © Liebherr-Werk Ehingen GmbH 2018

19 Aligning the crane

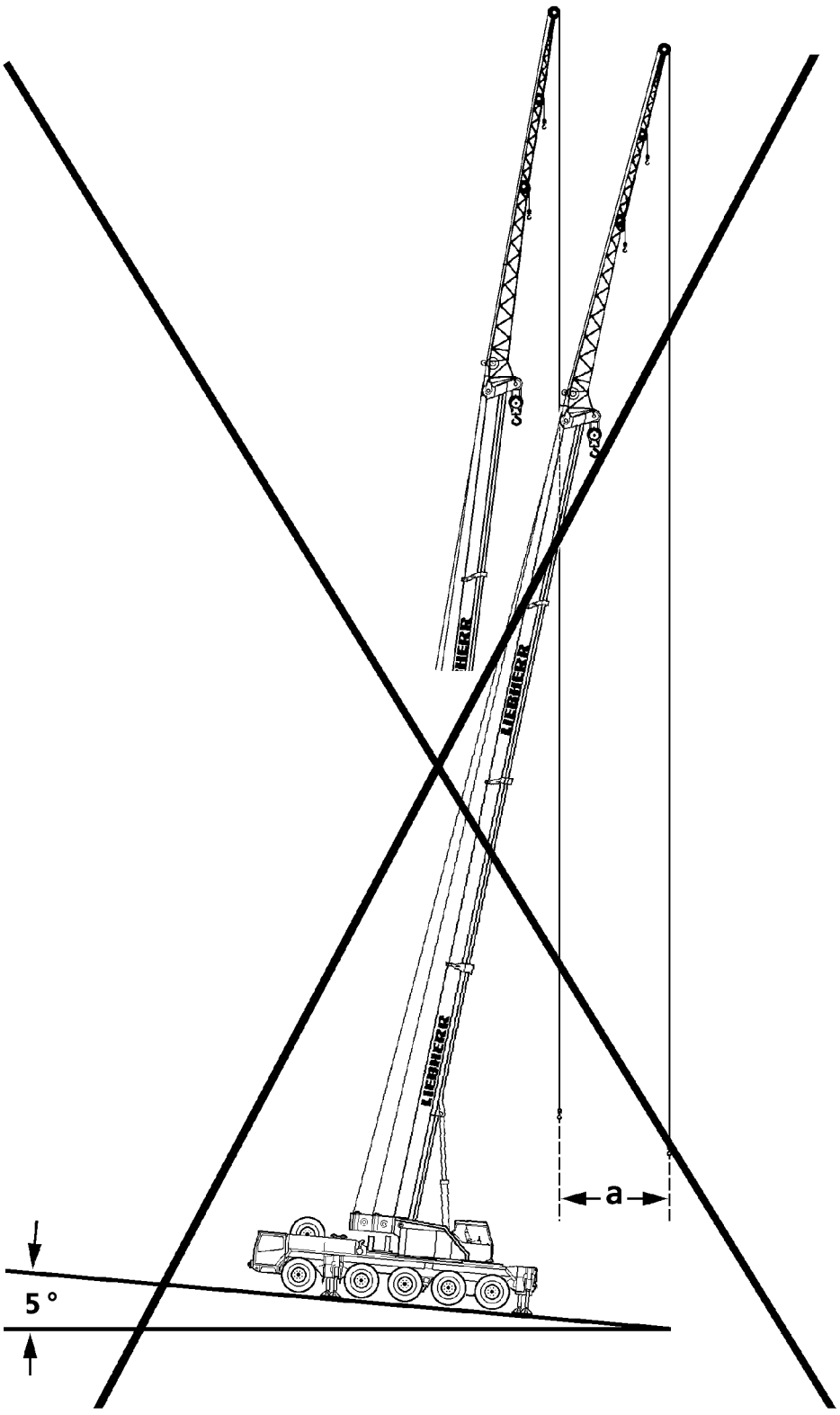

*Fig.121164: Example for **non-permissible** incline position*

In addition to the proper substructure for the supports, the horizontal alignment of the crane is of utmost importance for safe crane operation.

LWE/LR 1600-2-001/18101-07-02/en

copyright © Liebherr-Werk Ehingen GmbH 2018

DANGER
The crane can topple over due to the incline position!
If the crane is positioned at an incline, and if the boom is turned towards the slope, then the boom radius is increased as a result.
It is possible that the slewing gear can no longer hold the crane superstructure and, in extreme cases, the crane can topple over.
Personnel can be severely injured or killed.
▶ Align the crane horizontally before starting crane operation.

If the horizontal alignment of the crane has to be readjusted:
▶ Set the load down on the ground before readjusting the crane.

For cranes on crawlers, readjustment is **not** possible:
▶ If possible, use load charts for limited terrain incline.

Example: At a boom length of 50 m , an incline position of the crane by only 5° at a boom radius of 10 m causes an increase of the radius of a = 4 m.

20 Checking the safety measures

- The placement location has been selected so that all planned lifts included in the load chart for the erected set up configuration can be lifted.
- The load bearing capacity of the ground is adequate.
- There is safe clearance to excavations and slopes.
- There are no live transmission wires within the working range of the crane.
- There are no obstacles that will hinder required crane movements.
- The crane is horizontally aligned.
- When crane support is required:
  - All four sliding beams and support cylinders have been extended according to the support base given in the load chart.
  - The sliding beams have been secured with pins to prevent them from moving.
  - The support plates are pinned and secured in the operating position.
- On mobile cranes:
  - The axle suspension is blocked.
  - The axles are relieved, which means the tires do not touch the ground.

LWE/LR 1600-2-001/18101-07-02/en

copyright © Liebherr-Werk Ehingen GmbH 2018

21 Safety guidelines in case of external power supply

Fig.197720

A potential danger exists when supplying a crane with an external power supply from a low voltage distribution system (100 V AC to 400 V AC).

A special electrical hazard is present when a protective conductor is interrupted (caused by the mechanical stress on flexible supply lines or the service connection), loose terminal connections, high wire or contact resistance, mixed up conductors, defective or missing protective equipment (FI / fault interrupters) in combination with a body contact on the crane.

WARNING
Danger of fatal injury if the body conducts current!
Water and / or defective devices can cause hazardous stray voltages when touched. The person touching the crane is subject to lethal currents.
▶ The external supply cable must be in good working order.

Make sure that the external flexible supply cable is in good working order.

Where applicable, we recommend the use of a power isolating transformer.

22 Grounding

22.1 Grounding the crane

For the location of the ground connection, see chapter 1.01 or chapter 3.01.

WARNING
Danger of fatal injury due to electric shock!
There is a danger of electrical shock, if the crane is not properly grounded.
▶ Properly ground the crane.
▶ Make sure that there is a potential equalization between the crane and the ground.

LWE/LR 1600-2-001/18101-07-02/en

copyright © Liebherr-Werk Ehingen GmbH 2018

The crane must be grounded before start up:
- Near transmitters (radio and TV transmitters, radio stations, etc.)
- Near high frequency switching stations
- In case of severe possibility of thunderstorms or potential thunderstorms

The crane can become electrostatically charged, especially if the crane is equipped with synthetic support mats or if the support mats are placed on insulating materials (such as wooden planks).

22.2 Grounding the load

WARNING
Danger of fatal injury due to electric shock!
There is a danger of electrical shock, if the load is not properly grounded.
▶ Properly ground the load.
▶ Make sure that there is a potential equalization between the load and the ground.

The load must be grounded before start up:
- Near transmitters (radio and TV transmitters, radio stations, etc.)
- Near high frequency switching stations
- In case of severe possibility of thunderstorms or potential thunderstorms

The load can become electrostatically charged, even if the crane is grounded. This applies in particular if a hook block with pulleys made of synthetic material and non-conductive fastening equipment (for example plastic or manila ropes) are used.

LWE/LR 1600-2-001/18101-07-02/en

copyright © Liebherr-Werk Ehingen GmbH 2018

23 Working in the vicinity of transmitters

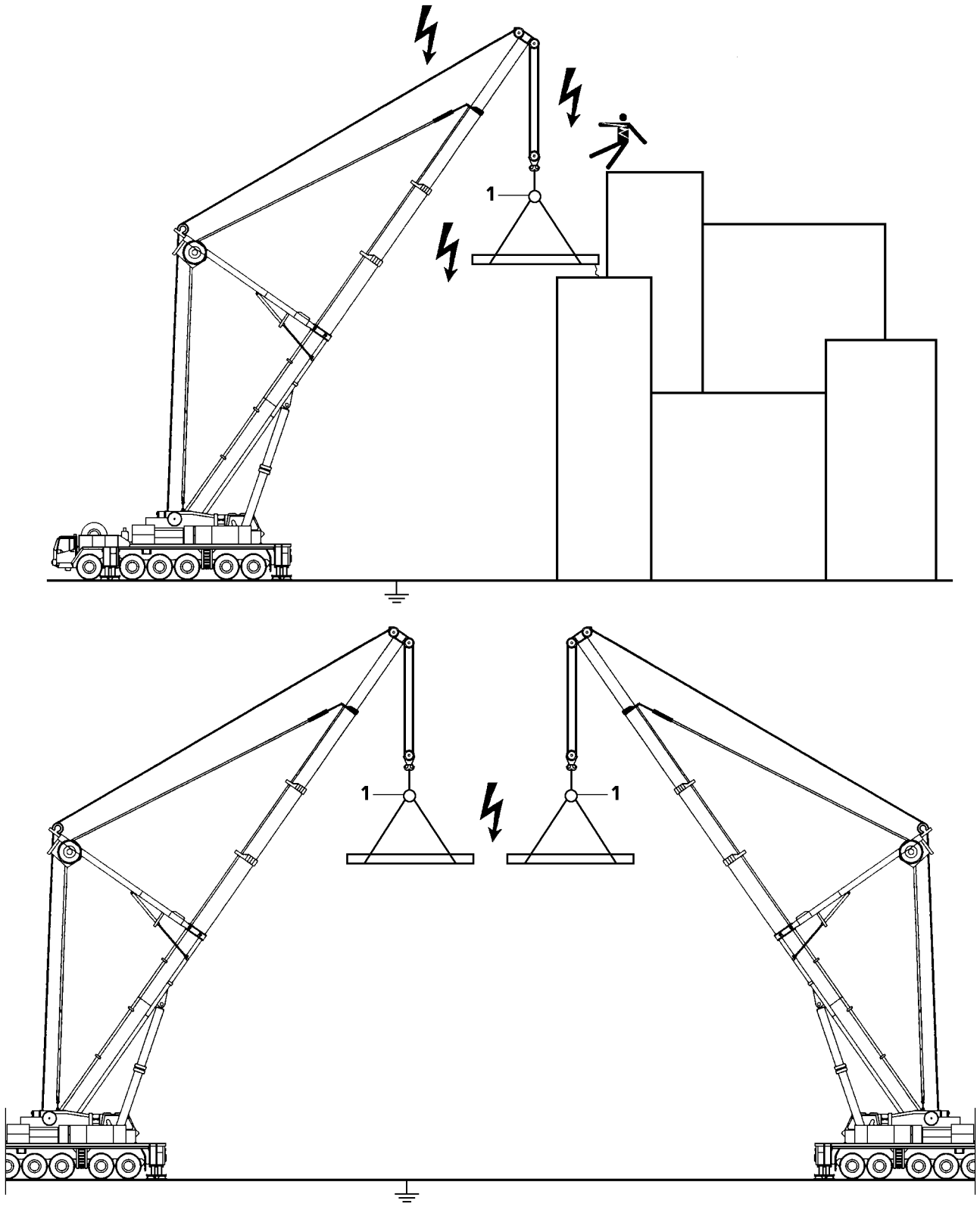

Fig.121165: Example for electrostatic charge

Strong electromagnetic fields are likely to be present if the construction site is close to a transmitter.

These electromagnetic fields can pose direct or indirect danger to persons or objects, for example:

- Effect on human organs due to temperature increase

LWE/LR 1600-2-001/18101-07-02/en

copyright © Liebherr-Werk Ehingen GmbH 2018

- Danger of burns or inflammation due to temperature increase
- Spark or electric arc formation

DANGER
Danger due to electromagnetic fields!
▶ Before operating a crane in the vicinity of transmitters, be sure to consult with Liebherr-Werk Ehingen GmbH.
▶ Also consult a high frequency specialist.

High frequency (HF) radiation from a transmitter requires supplementary work safety protection and special environmental specifications for crane operators and personnel:

1. Each crane must be „fully“ grounded. Check visually or with a simple continuity tester to ensure that ladder, crane cab and rope pulleys are grounded.
2. All personnel working on the crane or with large metal objects must protect themselves from burns by wearing non-conductive synthetic gloves and suitable clothing while working.
3. There is no need to panic if you feel your hand warm up. Always work under the assumption that the respective workpiece, structural steel member or support is „hot“.
4. The temperature of objects affected by high frequency radiation depends on their „size“. Cranes, carriers and coverings, for example, are „hotter“.
5. Contact with other crane loads is not permitted when operating the crane (arcing). Since defects caused by burns considerably reduce rope’s load bearing capacity, any such occurrences must be reported immediately to the customer service of Liebherr-Werk Ehingen GmbH so that the ropes can be inspected.
6. An insulator **1** is required at all times between the crane load hook and fastening equipment. It is strictly prohibited to remove this insulator **1**.
7. Do not touch the ropes above the insulator **1**.
8. Loads that are attached to the crane may not be touched by any unprotected parts of the body after the load has been lifted or set down.
9. Do not work with a bare upper torso or in short pants, this is prohibited.
10. To minimize absorption of high-frequency radiation, larger loads should be transported horizontally if possible.
11. Loads must be grounded, or additional insulation used (rubber material between the object and gloves) when manual work is required.
12. Use a suitable measuring instrument to check the „temperature“ of the workpiece.
    For example, if 500 V can be measured on a workpiece at a distance of 1 cm to 2 cm , then the workpiece may not be touched with bare hands.
    The greater the distance, the higher the voltage is on the object:
    At 10 cm distance, approx. 600 V are present, at 30 cm distance approx. 2000 V are present.
13. When refueling the crane, it must be ensured that no sparks are created within a radius of 6 m , neither by handling larger metallic parts nor by other work.
14. To avoid secondary accidents, use personal protective equipment when working on components that are high off the ground.
15. Any accidents and unexpected events must immediately be reported to the local construction supervisor and the safety engineer.

24 Crane operation in case of thunderstorms

In weather conditions, which can include lightning:
- Stop work on the crane.
- If possible, take the load down.
- If possible, telescope the boom in and / or take it down in the boom receptacle and bring it into a safe condition.

If this is not possible, the crane cab must remain occupied by the crane operator to keep the crane and the load always under control.

LWE/LR 1600-2-001/18101-07-02/en

copyright © Liebherr-Werk Ehingen GmbH 2018

WARNING
Danger of accidents due to lightning strikes!
▶ Make sure that there are no persons in the immediate area of the crane.

25 Wind influences

Note
▶ The wind speeds are valid for a 360° wind direction for a 3-second wind gust at the highest point of the crane.

WARNING
Disregard of permissible wind speeds!
If the permissible wind speeds are disregarded, the crane can topple over. Personnel can be severely injured or killed.
▶ It is prohibited to erect the crane to measure the wind speed.
▶ Observe the permissible wind speeds depending on the assembly / crane conditions and act accordingly, see following chart.

Assembly / crane conditions	Reference for permissible wind speed
Erection and take-down of various boom configurations	Wind speed charts and / or erection and take-down charts
Crane operation	Load chart manual
When the permissible wind speed according to the load charts is exceeded in crane operation, then **crane operation is prohibited**	Wind speed charts
Interruption of crane operation when crane remains equipped	Wind speed charts
Crane out of operation, when crane remains equipped	Wind speed charts

Note
No wind speed charts available!

For a set up configuration for which no wind speed charts are available:
▶ Observe and adhere the maximum wind speeds of the load charts.

The wind load on the crane boom has **not** been taken into account for the planning of crane operation with the LICCON job planner.
– As a result, the actual values of the support force and / or the crawler pressure can be significantly higher than the values determined with the LICCON Job planner.
– The wind affecting the crane and the load, the elastic distortion of the crane structure, incline position as well as wind exposure surface (A_w) per ton of hoist load larger than 1.2 m^2/t can significantly increase the support force and / or the crawler pressure.

WARNING
Increase of support force and / or the crawler pressure!
The resulting pressure on the ground becomes larger.
The permissible ground pressure can be exceeded.
▶ Do not exceed the permissible ground pressure.

LWE/LR 1600-2-001/18101-07-02/en

copyright © Liebherr-Werk Ehingen GmbH 2018

Note
- ▶ The determining factor for all crane work in the actual wind speed at the job site of the crane.
- ▶ The current wind speed can be checked at the nearest weather bureau.
- ▶ Be aware that the wind speed on the boom jib is higher than near the ground.
- ▶ Always observe the national valid regulations.

25.1 Wind speed charts for a *variable support*

For *variable support*: Observe and adhere to the wind speed charts according to the support base for the smallest extension length of the sliding beams.

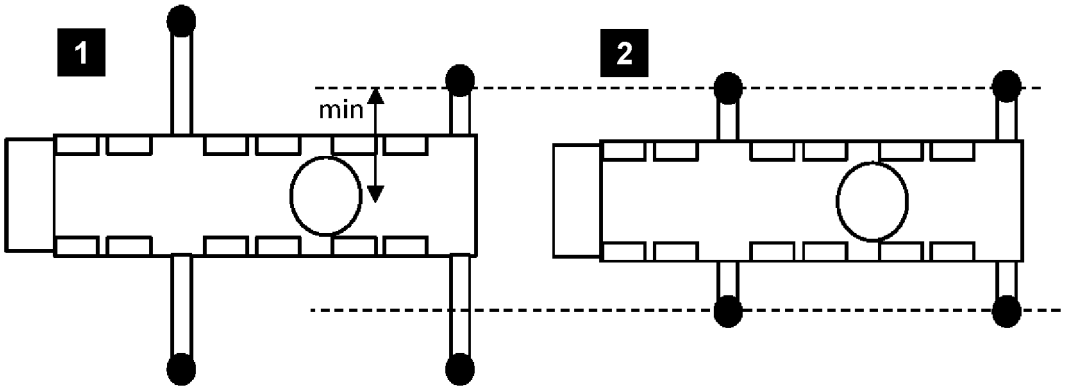

Fig.121577: Example for the selection of wind speed charts for a variable support

Example for the selection of wind speed charts for a *variable support*:
- The crane is supported with *variable support* according to illustration **1**.
- Select wind speed charts according to the support base in illustration **2**.

Note
No wind speed charts available!

If the smallest extension length of a sliding beam is less than those of the wind speed charts on hand:
- ▶ Observe and adhere the maximum wind speeds of the load charts.

25.2 Wind speed, wind gust speed and wind direction

The depiction of the wind is made by statement of wind speed (wind force), wind gust speed and wind direction.

High above the ground, the wind is less influenced by the surface condition of the ground. In the lower layers of the atmosphere, the wind speed is reduced by the ground friction. One differentiates between roughness of terrain, influence of obstacles and influence of terrain contours. Vegetation, buildings etc have great influence on the wind speed, wind gust speed and wind direction.

The site selection is thus especially important for wind measurement.

The wind speed, wind gust speed and wind direction are subject to significant time and local fluctuations. For that reason it is important to have reliable information regarding the expected wind speed, wind gust speed and wind direction during a load lift and to carry out exact wind measurements.

For mobile cranes, always assume a wind load of 360°. The determining factor is the „3 second gust speed“ on the highest point of the boom.

25.3 Measurement of wind speed

The anemometer installed on the crane boom measures the wind speed on the tip of the boom and shows the current wind speed in the crane cab.

LWE/LR 1600-2-001/18101-07-02/en

copyright © Liebherr-Werk Ehingen GmbH 2018

The function of the anemometer must be checked every time before erection of the boom by manually actuating the shell start for easy movement and proper function.

Before lifting a load, especially with large wind exposure surface, the wind speed and the wind direction expected during the lift must be known. Information can be obtained for example at the local weather bureau. The determining factor is the „3 second gust speed“ on the highest point of the boom.

WARNING
Overload of crane!
The acoustic wind warning is only issued if the standard wind exposure surface in the load chart is exceeded (wind surface per ton load: 1 m^2 , drag coefficient: 1.2) given wind speed.
If the permissible wind speed must be reduced for loads due to large wind exposure surfaces, no acoustic wind warning is issued.
There is no shut-off of crane movement.

- ▶ The wind exposure surface and the wind resistance coefficient for the load to be lifted must be known.
- ▶ The maximum permissible wind speed specified in the load chart must be reduced for large wind exposure surfaces as described in the load chart manual chapter "Wind influences during crane operation".

For safe determination of wind speed, the crane must be turned before application by 360°. The highest measured value while doing so must be compared with the „maximum permissible wind speed“ for the load according to the load chart. Thus the possibility that the result of the measurement is distorted due to nearby buildings, cranes or components is eliminated.

In gusty wind conditions, the probability of sudden high wind speed increases. In gusty wind conditions no large surface loads may be lifted.

Note

- ▶ If in doubt and in case of questions for further information and / or training in the area of „Wind influences in crane operation“ contact the Customer Service at Liebherr-Werk Ehingen GmbH.

25.4 Conversion chart for wind force

Note

- ▶ The influence of the wind on the surrounding is described clearly in the Beaufort scale to provide an orientation for the crane driver.
- ▶ The wind force of the Beaufort scale refers to the wind speed determined over 10 minutes at a height of 10 m.

Wind force		Wind speed		Effect of the wind
Beaufort number	Designation	[m/s]	[km/h]	Inland
0	Calm	0 to 0.2	1	Calm, smoke rises vertically
1	Slight air movement (draft)	0.3 to 1.5	1 to 5	Wind direction is shown only by observing the trail of smoke, not by the wind sock
2	Light breeze	1.6 to 3.3	6 to 11	Wind can be felt on the face, the leaves rustle, wind sock moves slightly
3	Gentle breeze	3.4 to 5.4	12 to 19	Leaves and small twigs in constant motion Wind extends a flag
4	Moderate breeze	5.5 to 7.9	20 to 28	Swirls up dust and loose paper, moves twigs and thin branches

LWE/LR 1600-2-001/18101-07-02/en

copyright © Liebherr-Werk Ehingen GmbH 2018

Wind force		Wind speed		Effect of the wind
Beaufort number	Designation	[m/s]	[km/h]	Inland
5	Fresh breeze	8.0 to 10.7	29 to 38	Small deciduous trees begin to sway, whitecaps form at sea
6	Strong breeze	10.8 to 13.8	39 to 49	Thicker branches move; telephone lines begin to whistle, umbrellas are difficult to use
7	Near gale	13.9 to 17.1	50 to 61	Entire trees swaying; difficult to walk into wind
8	Gale force wind	17.2 to 20.7	62 to 74	Breaks branches off trees, impedes walking in open areas considerably
9	Gale	20.8 to 24.4	75 to 88	Minor damage to property (chimney caps and roofing tile are blown off)
10	Severe storm	24.5 to 28.4	89 to 102	Trees are uprooted, significant damage to property
11	Violent storm	28.5 to 32.6	103 to 117	Extensive, widespread storm damage
12	Hurricane	32.7 and more	118 and more	Major destruction

Beaufort scale

25.5 Height dependant wind speed

Note

- The maximum permissible wind speed (v_{max}) and the maximum permissible wind speed according to the load chart (v_{max_TAB}) always refer to the 3 second wind gust speed, which is present at the maximum height of the crane.
- Instead of the 3 second wind gust speed, weather information services often report a wind speed (v_m), which is averaged within a time period of 10 minutes (so-called 10 minute average). It refers to the wind force on the Beaufort scale, normally to the medium value of the wind speed, which is determined within a time from of 10 minutes at a height of 10 m above ground or above sea level.
- The determining factor for the calculation of the 3 second wind gust speed in maximum height of the crane is significantly higher than the medium value of the wind speed, which is determined over a time of 10 minutes at a height of 10 m above ground.

Note

- The following chart shows the 3-second wind gust speed depending on the height and the Beaufort number and / or the wind speed determined over a time of 10 minutes at a height of 10 m.
- With the aid of this chart the 3-second wind gust speed for a certain height can be determined.

Beaufort number	3	4	5[a]	5	6	7[a]	7	8	9	10
v_m [m/s[b]]	5.4	7.9	**10.1**	10.7	13.8	**14.3**	17.1	20.7	24.4	28.4
z [m]	v(z) [m/s]									
10	7.6	11.1	**14.1**	15.0	19.3	**20.0**	23.9	29.0	34.2	39.8
20	8.1	11.9	**15.2**	16.1	20.7	**21.5**	25.7	31.1	36.6	42.7
30	8.5	12.4	**15.8**	16.8	21.6	**22.4**	26.8	32.4	38.2	44.5
40	8.7	12.8	**16.3**	17.3	22.3	**23.1**	27.6	33.4	39.4	45.8
50	8.9	13.1	**16.7**	17.7	22.8	**23.6**	28.3	34.2	40.3	46.9

LWE/LR 1600-2-001/18101-07-02/en

copyright © Liebherr-Werk Ehingen GmbH 2018

Beaufort number	3	4	5[a]	5	6	7[a]	7	8	9	10
60	9.1	13.3	**17.0**	18.0	23.3	**24.1**	28.8	34.9	41.1	47.9
70	9.3	13.5	**17.3**	18.3	23.6	**24.5**	29.3	35.5	41.8	48.7
80	9.4	13.7	**17.6**	18.6	24.0	**24.8**	29.7	36.0	42.4	49.4
90	9.5	13.9	**17.8**	18.8	24.3	**25.1**	30.1	36.4	42.9	50.0
100	9.6	14.1	**18.0**	19.1	24.6	**25.4**	30.4	36.9	43.4	50.6
110	9.7	14.2	**18.2**	19.2	24.8	**25.7**	30.8	37.2	43.9	51.1
120	9.8	14.3	**18.3**	19.4	25.1	**25.9**	31.1	37.6	44.3	51.6
130	9.9	14.5	**18.5**	19.6	25.3	**26.2**	31.3	37.9	44.7	52.0
140	10.0	14.6	**18.7**	19.8	25.5	**26.4**	31.6	38.2	45.1	52.5
150	10.0	14.7	**18.8**	19.9	25.7	**26.6**	31.8	38.5	45.4	52.9
160	10.1	14.8	**18.9**	20.1	25.9	**26.8**	32.1	38.8	45.7	53.2
170	10.2	14.9	**19.1**	20.2	26.0	**27.0**	32.3	39.1	46.0	53.6
180	10.3	15.0	**19.2**	20.3	26.2	**27.1**	32.5	39.3	46.3	53.9
190	10.3	15.1	**19.3**	20.4	26.4	**27.3**	32.7	39.5	46.6	54.2
200	10.4	15.2	**19.4**	20.6	26.5	**27.4**	32.8	39.8	46.9	54.6

[a] Wind stages for the crane in operation:

1 light	v_m = 10.1 m/s	at z = 10 m	v(z) = 14.1 m/s	q(z) = 125 N/m²
2 normal	v_m = 14.3 m/s	at z = 10 m	v(z) = 20.0 m/s	q(z) = 250 N/m²

[b] Upper limit of Beaufort scale

3-second wind gust speed depending on the height and the Beaufort number and / or the wind speed determined over a time of 10 minutes at a height of 10 m

Sign	Unit	Definition
v_m	[m/s]	Wind speed determined over a time of 10 minutes at a height of 10 m
z	[m]	Height above level ground
v(z)	[m/s]	Speed effective at height z, decisive for the calculation of a 3 second gust
q(z)	[N/m²]	At a height z effective quasi-static back pressure, determined from v(z)

Symbol

25.6 Wind influences during erection and take-down

WARNING
The crane can topple over!
If a boom or a boom system is erected or taken down and the expected wind speeds are larger than the maximum permissible wind speeds according to the wind speed chart, then the crane can topple over and fatally injure personnel.

- ▶ If wind speeds are expected which are larger than the maximum permissible wind speeds for erection, then erection of the boom or erection of the boom system is prohibited.
- ▶ If wind speeds are expected, which are larger than the maximum permissible wind speeds for take-down, then the boom or the boom system must be taken down immediately.

copyright © Liebherr-Werk Ehingen GmbH 2018

WARNING
Wind speed higher than permissible!
When the permissible wind speed for „Crane out of operation“ is higher than the permissible wind speed for take-down: Take-down of the boom is not permissible in case of unexpected increase of wind speed.
The crane can topple over. Death, severe injury, property damage.
- ▶ If wind speeds are expected that are higher than the maximum permissible wind speeds for "Crane out of operation", then take the equipment and the boom down.
- ▶ Always take the boom down for safety reasons if weather conditions are unclear, see the Erection and take-down charts.
- ▶ Observe the permissible wind speeds for take-down.

25.7 Wind influences during crane operation

WARNING
The crane can topple over!
Unforeseeable factors, such as sudden wind gusts on the crane and the load cannot be exactly predicted in advance.
- ▶ The size and shape of the load has a significant influence on the permissible wind speed during crane operation.
- ▶ Carry out a professional job planning with authorized and trained expert personnel. All environmental conditions, such as weather forecast and wind speeds must be taken into account.
- ▶ The authorized and trained expert personnel must have sufficient knowledge in the area of „Wind influences in crane operation“.

Note
- ▶ Calculation examples are included in the load charts. If you need further information, contact Liebherr-Werk Ehingen GmbH.

Depending on crane application, for example:
1. Lifting of large surfaced loads.
2. Working with long boom combinations.
3. Erection and take-down of boom combinations.

The crane operator must check with appropriate information sources about the expected wind speeds, at:
1. The start of crane operation.
2. Interruption of crane operation.
3. Resumption of crane operation.

WARNING
The crane can topple over!
If the crane is operated at wind speeds which are larger than the maximum permissible wind speeds according to the load chart, then the crane can topple over and kill personnel.
- ▶ If wind speeds are expected that are larger than the maximum permissible wind speeds for the equipped crane, then the equipment and the boom must be taken down.
- ▶ If wind speeds are expected that are larger than the maximum permissible winds speeds for crane operation, then it is prohibited to lift a load.

LWE/LR 1600-2-001/18101-07-02/en

copyright © Liebherr-Werk Ehingen GmbH 2018

25.8 Wind influences for „Crane out of operation“

WARNING
The crane can topple over. Death, severe injury, property damage!
If the crane is taken out of operation in set up condition and the expected wind speeds are higher than the maximum permissible wind speeds according to the wind chart, then the crane can topple over and fatally injure personnel.

- ▶ If wind speeds are expected that are higher than the maximum permissible wind speeds for „Crane out of operation“, then take the equipment and the boom down.
- ▶ Always take the boom down for safety reasons if weather conditions are unclear, see the Erection and take-down charts.
- ▶ Observe the permissible wind speeds for take-down.

26 Lifting a load with two cranes

Before lifting a load with two cranes, the crane operator or a representative of the operator must determine the work sequence and assign a responsible supervisory person for the operation. The responsible supervisor must monitor the operation and remain in constant contact with the crane operators.

WARNING
Overload and toppling of the cranes!
If the load is not lifted or lowered exactly evenly by both cranes, then the center of gravity changes.
The cranes can be overloaded and topple over.
Personnel can be killed or seriously injured.

- ▶ Make sure that the cranes are horizontally aligned.
- ▶ Observe the national valid standards, regulations and accident prevention guidelines.
- ▶ Determine the utilization degree of the cranes in operation, depending on the complexity of the load lift.
- ▶ Plan for sufficient safety reserves.
- ▶ Avoid side load on the boom.
- ▶ Carry out crane movements synchronously and slowly.

Note

- ▶ The total weight and the center of gravity of the load must be known exactly.
- ▶ Carry out the job planning in detail and with care.
- ▶ Avoid fastening points below the center of gravity of the load.

When the operational conditions or the work to be carried out require:

- ▶ Set up an assembly plan and operating instructions for the operation.

In the drawing is shown how the center of gravity for the load changes if the load is lifted or lowered unevenly. Already a slight incline of the load can cause the crane to be overloaded.

If the load on crane 2 **(F_2)** is lowered, the load on crane 1 **(F_1)** increases. Crane 1 can thereby be overloaded.

LWE/LR 1600-2-001/18101-07-02/en

copyright © Liebherr-Werk Ehingen GmbH 2018

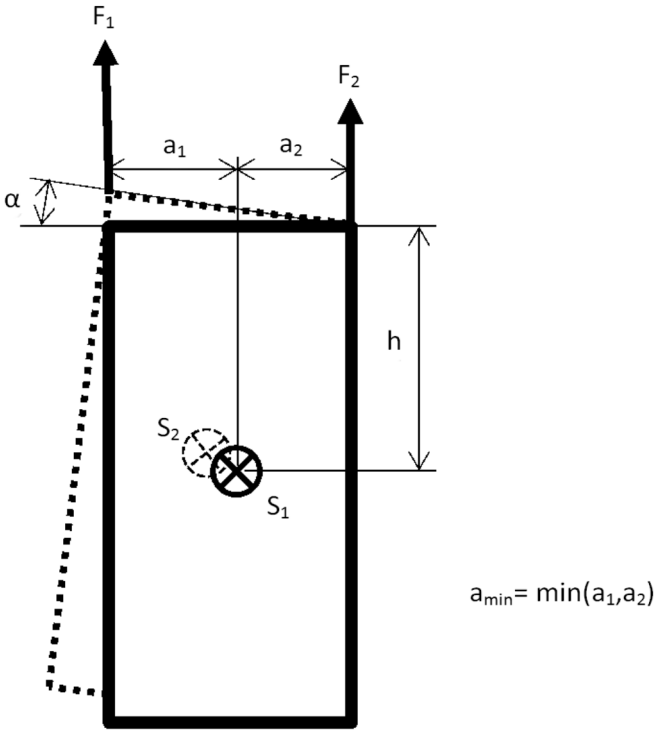

Fig.124126: Geometric conditions

F_1	Load on crane 1	**F_2**	Load on crane 2
S_1	Center of gravity of load	**S_2**	Center of gravity of load at incline position
h	Vertical distance between center of gravity of load and fastening points	**α**	Angle of load at incline position
a_1	Horizontal distance between center of gravity of load and fastening point crane 1	**a_2**	Horizontal distance between center of gravity of load and fastening point crane 2
a_{min}	Smallest horizontal distance between center of gravity of load and fastening point (minimum from a_1 and a_2)		

The following diagram shows the dependence of the ratio of h/a_{min} at a maximum permissible incline position of the load of 3° in reference to the permissible load utilization of cranes in percentages.

LWE/LR 1600-2-001/18101-07-02/en

copyright © Liebherr-Werk Ehingen GmbH 2018

Fig.124127: Maximum permissible load utilization

x Ratio of h to a_{min}

y Maximum permissible load utilization in percentages, if α is smaller or equal to 3°

Example: A ratio h to a_{min} of 6, when retaining the incline position of the load of maximum 3° results in a maximum permissible load utilization of both cranes of approx. 76 % each.

27 Overlapping of working ranges of several cranes

WARNING
Danger of collision!
If the working ranges of several cranes overlap, there is a danger of collision.
Personnel can be injured or killed.
Significant property damage can result.
- ▶ The contractor or his representative must determine the work sequence in detail in advance.
- ▶ The contractor or his representative must ensure flawless communication between crane operators.
- ▶ The crane operators must ensure through calm operating mode, that no collisions occur due to uncontrolled movements. The crane operators must have been trained and instructed accordingly.

If the communication between the crane operators is not ensured by sound or visual connection, then suitable measures must be taken, such as using radio communication, guides or similar. When using derrick booms or TY-guying, it is necessary to proceed with extreme caution as these components protrude far past the rear turning radius of the turntable.

Note
- ▶ If guides are used, then the signals must be agreed upon between them and the crane operators, see section „Hand signals for guidance“.

LWE/LR 1600-2-001/18101-07-02/en

copyright © Liebherr-Werk Ehingen GmbH 2018

28 Hand signals for guidance

For all crane movements, the crane operator must always keep the load as well as the crane hook or load handling equipment when the crane is not loaded, in his field of vision.

WARNING
Danger of accident if standing under suspended loads!
- ▶ Always keep loads in sight.
- ▶ Standing under suspended loads is prohibited.

If this is not possible, the crane operator may only operate the crane if he is signed by an assigned guide.

The operator may be guided by hand signals or a two-way radio. It must be ensured that there are no misunderstandings.

WARNING
Danger of accident caused by misunderstood hand signals!
- ▶ Hand signals must be mutually agreed upon and clearly executed.
- ▶ In any case, the **national regulations** must be observed.

28.1 Hand signals

28.1.1 Starting operation, follow my instructions

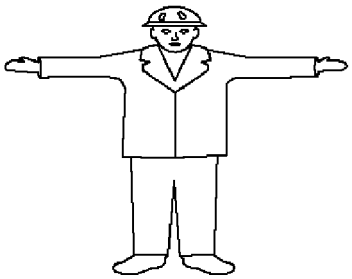

Fig.111700: Starting operation, follow my instructions

Both arms stretched out horizontally with hands open and palms directed to the front.

28.1.2 Stop (normal stop)

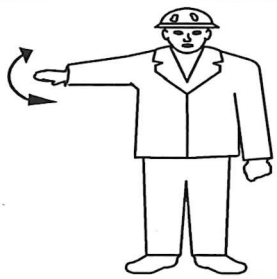

Fig.144245: Stop (normal stop)

Arm stretched out, palm of hand facing down, move the arm horizontally backward and forward.

LWE/LR 1600-2-001/18101-07-02/en

copyright © Liebherr-Werk Ehingen GmbH 2018

28.1.3 Emergency stop (quick stop)

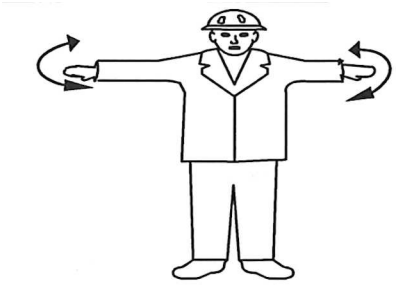

Fig.144246: Emergency stop (quick stop)

Both arms stretched out, both hand palms facing down, move arms horizontally backward and forward.

28.1.4 Ending operation, no longer follow my instructions

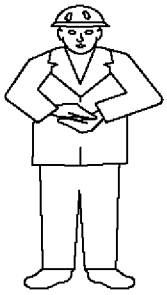

Fig.111703: Ending operation, no longer follow my instructions

Fold hands together at chest height in front of body.

28.1.5 Creeper gear or very slow movement

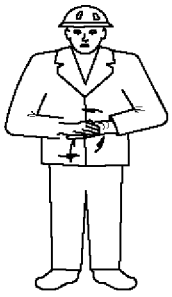

Fig.111704: Creeper gear or very slow movement

Rub palms together in circular motion. After this sign, all other applicable hand signals apply.

LWE/LR 1600-2-001/18101-07-02/en

copyright © Liebherr-Werk Ehingen GmbH 2018

28.2 Vertical movements

28.2.1 Showing the vertical distance

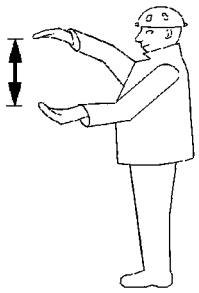

Fig.121364: Showing the vertical distance

Both arms stretched out in front of the body one on top of the other, with opposing palms.

28.2.2 Lifting / lowering a load with even speed

Fig.111706: Lifting / lowering a load with even speed

Lift one arm overhead with closed hand and index finger pointing upward, with small horizontal circular movements with forearm.

28.2.3 Lifting slowly

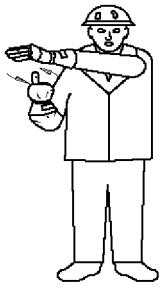

Fig.121365: Lifting slowly

Give lift signal with one hand, the other palm is not moving and positioned over the hand, which gives the signal.

LWE/LR 1600-2-001/18101-07-02/en

copyright © Liebherr-Werk Ehingen GmbH 2018

28.2.4 Lowering the load while stationary

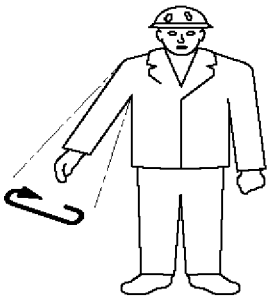

Fig.111708: Lowering the load while stationary

Point one arm away from the body, downward, with hand closed and index finger pointing down. Make small circular movements with forearm.

28.2.5 Lowering slowly

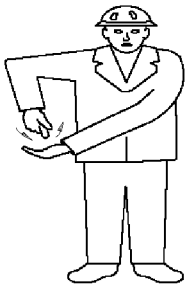

Fig.121366: Lowering slowly

Give lowering signal with one hand, do not move the other palm and hold it under the hand, pointing to the hand which gives the signal.

28.3 Horizontal movements

28.3.1 Driving / swinging in the specified direction

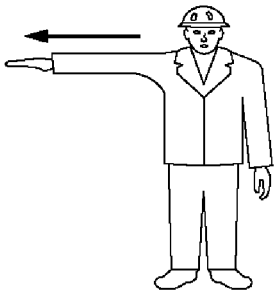

Fig.111710: Driving / swinging in the specified direction

Hold stretched out arm horizontally into the desired direction, with the hand open and the palm pointing down.

copyright © Liebherr-Werk Ehingen GmbH 2018

28.3.2 Moving away from me

Fig.111711: Moving away from me

Stretch out both arms simultaneously with forearms in front, with both hands open and the palms pointing down. Move the forearms repeatedly between the horizontal and vertical position up and down.

28.3.3 Moving toward me

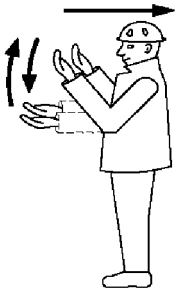

Fig.111712: Moving toward me

Stretch out both arms simultaneously with forearms vertically, with both hands open and the palms pointing to the rear. Move the forearms repeatedly up and down.

28.3.4 Moving both track chains

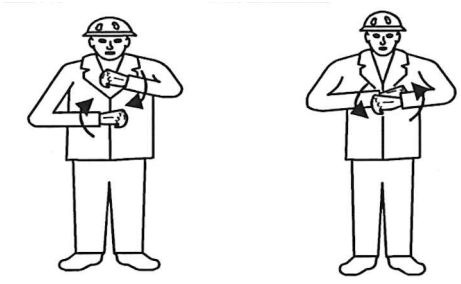

Fig.144247: Moving both track chains

Turn both fists around each other in front of the body in direction of the movement (forward or reverse).

LWE/LR 1600-2-001/18101-07-02/en

copyright © Liebherr-Werk Ehingen GmbH 2018

28.3.5 Moving one track chain

Fig.144248: Moving one track chain

Lift one fist to show blockage of chain on one side. Turn the other fist vertically in front of the body to signal movement of the opposite chain.

28.3.6 Showing the horizontal distance

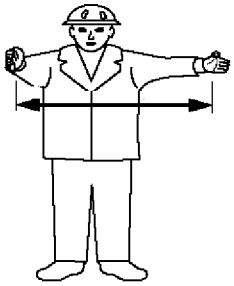

Fig.121380: Showing the horizontal distance

Keep both arms stretched out horizontally in front of the body with the palms opposite each other.

28.3.7 Transfer (between two cranes or two hooks)

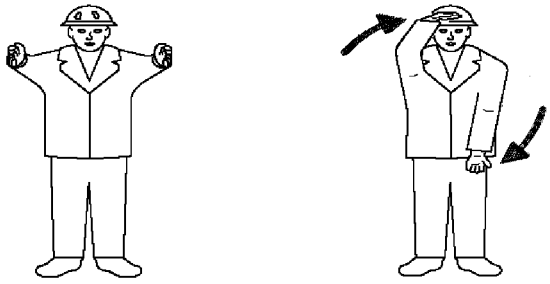

Fig.121368: Transfer (between two cranes or two hooks)

Hold both arms stretched out to the front, parallel and horizontally and turn by 90° in direction of the transfer.

WARNING
Load bearing capacity is **not** sufficient!
The crane can topple over, death, property damage.
▶ Make sure that the load bearing capacity of the individual crane and hook is sufficient even if the transfer of the load is suddenly asymmetric.

LWE/LR 1600-2-001/18101-07-02/en

copyright © Liebherr-Werk Ehingen GmbH 2018

28.4 Machine related movements

28.4.1 Lifting with main winch

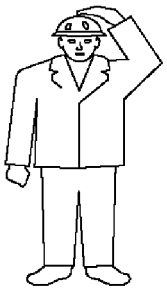

Fig.111719: Lifting with main winch

Place on hand on your head and hold the other arm on the side of the body.

After this signal all other hand signals apply only for the main winch.

Note

- If two or more main winches are present, then the signaller can show the number of the crane by pointing to it or signal with one finger.

28.4.2 Lifting with auxiliary winch

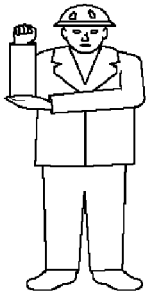

Fig.111720: Lifting with auxiliary winch

Hold one forearm vertically with closed hand and touch the elbow of this arm with the other hand.

After this signal all other hand signals apply only for the auxiliary winch.

28.4.3 Lifting the boom

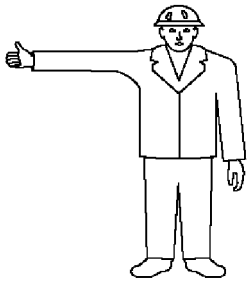

Fig.111721: Lifting the boom

Hold one arm horizontally with thumb directed upward.

LWE/LR 1600-2-001/18101-07-02/en

copyright © Liebherr-Werk Ehingen GmbH 2018

28.4.4 Lowering the boom

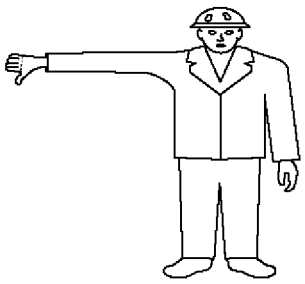

Fig.111722: Lowering the boom

Hold one arm horizontally with thumb directed downward.

28.4.5 Extending the boom

Fig.144249: Extending the boom

Hold both hands (with closed fists) stretched out to the front, with both thumbs directed away from each other.

28.4.6 Retracting the boom

Fig.144250: Retracting the boom

Hold both hands (with closed fists) stretched out to the front, with both thumbs directed toward each other.

LWE/LR 1600-2-001/18101-07-02/en

copyright © Liebherr-Werk Ehingen GmbH 2018

28.4.7 Lifting the boom and lower the load at the same time

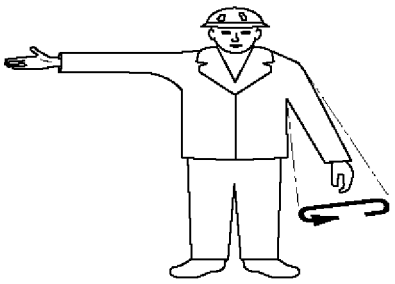

Fig.111725: Lifting the boom and lower the load at the same time

Hold one arm stretched out horizontally with thumb directed upward and stretch the other arm downward and away from the body, make small flat circles with the forearm.

28.4.8 Lowering the boom and lift the load at the same time

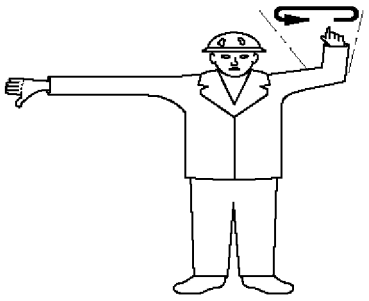

Fig.111726: Lowering the boom and lift the load at the same time

Hold one arm stretched out with thumb pointing down, stretch the other forearm upward and make small flat circles.

29 Travel operation

29.1 Starting to drive

Before starting to drive the crane
- Close all doors.
- Keep the doors closed during the travel operation.

LWE/LR 1600-2-001/18101-07-02/en

copyright © Liebherr-Werk Ehingen GmbH 2018

29.2 Turning / driving in reverse

WARNING
Danger of accidents when turning or driving in reverse!
When turning or driving in reverse, personnel can be overlooked and killed.
Objects can be severely damaged.
- ▶ When turning or driving in reverse, the driver must act in such a way that he does not endanger other traffic participants.
- ▶ The driver may only drive in reverse or reset when persons or devices are **not** endangered. If this can **not** be ensured, then he must use a guide.
- ▶ An acoustical back up warning device will never replace the guide.
- ▶ Make sure that there are no persons or objects behind the vehicle when driving in reverse.
- ▶ Make sure that no personnel is injured or killed.
- ▶ Make sure that no objects are damaged.
- ▶ Driving in reverse is only permissible at slow driving speed (maneuvering speed).
- ▶ Adhere to the national regulations.

29.3 Driving with a trailer

Driving with a trailer depends on the weight of the mobile crane. The minimum weight of the mobile crane in trailer mode is 70 percent of the permissible total weight.

Number of axles	Permissible total weight of the mobile crane	Minimum weight of the mobile crane in trailer mode
4	48000 kg	Approx. 33000 kg
5	60000 kg	Approx. 42000 kg
6	72000 kg	Approx. 50000 kg

29.3.1 Driving with a reduced load

The load of the vehicle crane has been reduced to a range between the permissible total weight and the minimum weight for trailer mode. The load of the vehicle crane can be reduced by disassembling equipment.

The vehicle crane has a different, strong braking behavior. The vehicle crane can reeve out.

29.3.2 Driving with an extremely reduced load

The load of the vehicle crane has been reduced to the minimum weight for trailer mode or less. The load of the vehicle crane can be reduced extremely for example by disassembling the telescopic boom and by disassembling other equipment.

WARNING
Driving with a trailer with an extremely reduced load!
The mobile crane has a different, strong braking behavior. The mobile crane can reeve out.
Danger of accident, death, property damage.
- ▶ In the case of an extremely reduced load, do **not** drive the crane vehicle with a trailer.

29.4 Stopping the mobile crane

Make sure that the following prerequisites are met:
- – The mobile crane is standing on load bearing, level and tractive ground.
- – The parking brake is applied.

LWE/LR 1600-2-001/18101-07-02/en

copyright © Liebherr-Werk Ehingen GmbH 2018

WARNING
Parking brake is **not** applied!
The mobile crane can roll off, death, property damage.
▶ Park the mobile crane exclusively with applied parking brake.

– Turn off the ignition and pull out the ignition key.

When a battery master switch is present:
– Turn off the battery master switch and remove the switch cams.

WARNING
Downhill or uphill slope is too large!
The mobile crane can roll off, death, property damage.
▶ Park the mobile crane at an downhill or uphill slope of no more than maximum 18 %.

Under the following conditions the mobile crane must be additionally secured with wheel chocks to prevent it from rolling off:
– The mobile crane is parked on a slope or an incline.
– The mobile crane is defective, particularly when the brake system is defective.

WARNING
Wedges incorrectly placed!
The mobile crane can roll off, death, property damage.
▶ So that the wedges have an immediate braking action and hold the mobile crane in park position: Place all wedges tightly directly under the wheel.
▶ Place all specified wedges.
▶ All wedges must counteract the downhill slope force.

If necessary:
– Place the wedges.

30 Crane operation

30.1 Before starting to work

Before starting to work with the crane:
– Close all doors.
– Keep the doors closed during crane operation.

30.2 While working with the crane

WARNING
Defective crane!
Death, severe bodily injuries, property damage.

If an erroneous function of a crane movement is recognized during crane operation:
▶ Telescope the boom in all the way and take it down, find the source of the problem and remedy it.

LWE/LR 1600-2-001/18101-07-02/en

copyright © Liebherr-Werk Ehingen GmbH 2018

30.3 Crane operation with a load

WARNING
The crane can topple over!
If the crane is in condition which is **not** operationally safe, the crane can topple over or crane components can fall down.
Personnel can be severely injured or killed.
- ▶ Before starting to work, the crane operator must ensure that the crane is in operationally safe condition.
- ▶ If safe crane operation cannot be ensured by the crane operator, then crane operation is prohibited until an operationally safe condition for the crane is established.
- ▶ Safety equipment, for example: Load torque limiter, hoist limit switch, brakes must be fully functioning, otherwise crane operation is prohibited.

Make sure that the following prerequisites are met:
- The load torque limiter must be adjusted according to the current set up configuration of the crane.
- The loads given in the load chart may not be exceeded.
- The crane may never be subjected to a load that exceeds what is specified in the load charts.
- The weight, center of gravity and dimensions of the load to be lifted must be known.
- Load carriers, load handling and fastening equipment must be in accordance with specified requirements.

Note
- ▶ Make sure that the weight of the hook block and the weight of the fastening equipment is subtracted from the load given in the load chart, see the following chart.

Example:		
Maximum permissible load according to chart		30.000 t
Weight of the hook block	350 kg	- 0.350 t
Weight of the fastening rope	50 kg	- 0.050 t
Actual load capacity of the crane		= **29.600 t**

The weight of the load to be lifted, in this example, may not exceed **29.6 t.**

DANGER
There is a high danger of accidents should the following points not be observed!
- ▶ Observe the following points.

There is a great danger of accident if:
- The load torque limiter is not set in accordance with the current crane set up configuration and is therefore not able to provide proper protection.
- The load torque limiter is defective or taken out of operation.
- The hoist limit switches are defective or not functioning.
- For crawler cranes and mobile cranes with luffing lattice jib:
  The angle sensor and the force test brackets are not functioning.
- For mobile cranes and crawler cranes with support:
  The sliding beams of the hydraulic support are not extended to the dimensions specified in the load chart.
- On crawler cranes:
  The crawlers are not supported with stable base material sufficiently large for the ground conditions.
- For mobile cranes and crawler cranes with support:
  The support plates are not supported with stable materials large enough for the ground conditions.
- Angular pulling is performed.

LWE/LR 1600-2-001/18101-07-02/en

copyright © Liebherr-Werk Ehingen GmbH 2018

Angular pulling to the side is particularly dangerous, because the boom has only minimal lateral resistance momentum.
Angular pull is prohibited.

- Load attached during disassembly is too heavy and is freely suspended on the crane after release.
- The load hook is used to break away stuck loads.
  Even if the weight of a stuck load does not exceed the permissible load capacity, the crane can topple over backwards if the load is suddenly released due to the tension of the boom, which can cause it to tip backwards.
- Working when the wind is excessively strong.
  Comply with the load chart specifications.
- The crane is not levelled and the load is slewed in the direction of the slope.
- If improper control of crane movements cause the suspended load to swing like a pendulum.
- The loads and boom radii specified in the load charts are exceeded.
- When working in the vicinity of electricity transmission lines:
  - The electricity transmission lines were not turned off by expert electricians.
  - The danger zone was not covered or blocked off.

WARNING
Danger of current transfer!
If electricity transmission lines are not shut off nor covered nor blocked off, then there is an increased danger of accident due to current transfer.
▶ Adhere to the safety distance according to the following chart.

If the crane becomes electrified despite having taken all necessary precautions, proceed as follows:
▶ Remain calm!
▶ Do not leave the crane cab.
▶ Warn people outside: Stay in place and do not touch the crane.
▶ Move the crane away from the danger zone.

Nominal voltage	Safety clearance	
Up to 50 kV	4 m	10 ft
More than 50 kV to 200 kV	5 m	15 ft
More than 200 kV to 350 kV	7 m	20 ft
More than 350 kV to 500 kV	8 m	25 ft
More than 500 kV to 750 kV	11 m	35 ft
More than 750 kV to 1000 kV	14 m	45 ft
More than 1000 kV	Determination by power supplier or authorized electrician	Determination by power supplier or authorized electrician

Safety distance to electrical power lines depending on the nominal voltage

30.3.1 Counterweight and / or ballast

The type of counterweight and / or ballast required depends on the weight of the load to be lifted and the boom radius required for crane operation. The deciding factor for the selection of the counterweight and / or ballast is the data in the corresponding load chart.

WARNING
The crane can topple over!
If the counterweight and / or ballast is not installed according to the load chart, then the crane can topple over and fatally injure personnel.
▶ Install the counterweight and / or ballast according to the load chart.

LWE/LR 1600-2-001/18101-07-02/en

copyright © Liebherr-Werk Ehingen GmbH 2018

30.3.2 Hoist gear, hoist rope

The lifting capability of the crane depends on the pull force of the hoist gear and the number of possible hoist rope reevings. When using a single strand, the crane can only lift a load that is pulled by the hoist gear.

If the load to be lifted is heavier than the pull force if the hoist gear, then the hoist rope must be reeved as needed according to the principle of a pulley between the pulley head on the boom and the hook block.

When reeving, carefully observe the load chart specifications and the operating instructions.

WARNING
Hoist rope failure!
If the maximum pull force of the hoist gear is exceeded, the hoist rope can break or the hoist gear can be damaged.
The load can fall and kill personnel.
▶ Observe the maximum tensile force of the hoist gear.

30.3.3 Hydraulically adjustable auxiliary boom

WARNING
Impermissible luffing of the auxiliary boom!
Damage to the auxiliary boom due to collision with the ground or other objects. Component failure.
Death, severe bodily injuries, property damage.
▶ Do **not** luff the auxiliary boom down onto the ground or other objects by means of hydraulic adjustment.
▶ Do **not** luff the auxiliary boom down onto the ground or other objects by means of luffing down the main boom.

30.4 Interrupting crane operation

WARNING
Impermissible weather conditions!
If the crane is exposed to impermissible weather conditions during interruption of crane operation, situations can occur which could bring the crane into an unsafe condition.
Toppling crane, death, severe bodily injuries, property damage.
▶ Get the weather forecast for the entire period during which the crane is set up.

If the predicted wind speeds are above the permissible values according to the load chart and / or the wind speed chart:
▶ Take the boom and equipment down in time before impermissible wind speeds occur. See Crane operating instructions, wind speed charts and Erection and take down charts.

When wind conditions are present, which are above the permissible values of the wind speed chart and the boom can no longer be taken down:
▶ Make sure that there is no danger for persons, crane and surrounding area. Secure the crane and surrounding area of the crane far enough against access. Warn persons in the surrounding area and bring them in safety.

A weather forecast includes information about:
– Changing weather conditions
– Wind
– Ice
– Precipitation
– Flooding
– Lightning

LWE/LR 1600-2-001/18101-07-02/en

copyright © Liebherr-Werk Ehingen GmbH 2018

WARNING
Defective crane!
Death, severe bodily injuries, property damage.

If a crane movement occurs during the interruption of crane operation:
▶ Make sure, when an unintentional crane movement occurs, for example as a result of leak, no danger for persons, crane and surrounding is created.

Leaks can occur all on pressurized hydraulic cylinders, for example on the following cylinders:
– Support cylinder
– Luffing cylinder
– Telescoping cylinder
– Control cylinder

Note
▶ Movements can occur on hydraulic cylinders also as a result of changing oil temperature.

WARNING
Set up crane is not supervised!
Situations during interruption of crane operation may occur which could cause the crane to become unsafe if left unsupervised.
Toppling crane, death, severe bodily injuries, property damage.
▶ Always watch the crane and keep it under control.

If the crane is in set up condition:
▶ Do **not** leave the crane.

If the crane can **not** be constantly kept under control:
▶ Take the equipment down and telescope the boom in and place it down.
▶ The boom on the crane may only be placed down if the predicted wind speeds according to the wind speed charts are less than the maximum permissible wind speeds during assembly and disassembly.
▶ Before the crane is unsupervised: Establish an emergency plan.
▶ Carry out the measures listed below.

Note
▶ An emergency plan includes information how the crane is brought into a safe condition if an unforeseen event occurs.

If possible:
– Take down and secure the equipment, see the erection and take-down charts.
– Telescope the boom in and secure it. The crane boom may only be telescoped when the prevalent wind speed is lower than the wind speed indicated in the load chart for the boom.
– Take the boom down and secure it. The crane boom may only be placed down if the wind speeds are lower than the maximum permitted wind speeds according to the wind speed charts or does not exceed them according to the assembly / disassembly instructions.

On mobile cranes:
– Lift the axles to the maximum position and block the hydraulic suspension.

On lattice mast cranes:
– Set the Derrick ballast, if present, down on the ground.
– Place the load completely on the ground and unhook it from the crane hook.
– Remove the fastening ropes from the hook.

– Place the load completely on the ground and unhook it from the crane hook.
– Remove the fastening ropes from the hook.

When the hook block remains installed:
– Lift the hook block into the highest position.
– Make sure that the hook block does not touch other crane parts or obstacles.

LWE/LR 1600-2-001/18101-07-02/en

copyright © Liebherr-Werk Ehingen GmbH 2018

- Make sure that all measures were taken to keep the crane in a safe condition if something happens.
- If possible, turn the engines off.
- Set all control levers into neutral position or into a locked position.
- Turn all secondary systems off, except systems, which are required for restart.
- Establish the energy supply and functionality of safety equipment.
- Close off all control devices, which are not in use.
- Disconnect all control devices, which are connected with cables, if possible, and secure them to prevent unauthorized use.
- Secure control devices without cables to prevent unauthorized use.
- Make sure that the batteries in control devices without cables are charged.
- Make sure that access to the crane and operation for unauthorized personnel is excluded: Lock the driver's cab and the crane cab.
- Secure all keys to prevent unauthorized access.

If the construction site has limited space:
- The decision not to take the boom down while the crane is unsupervised can only be made by an authorized and qualified crane operator, who is familiar with the construction site.
- Make sure that no danger can occur for persons, crane and its surroundings should something unforeseen happen.
- Make sure for the duration of the interruption of crane operation, that the predicted wind speeds do not exceed the permissible values for the respective set up configuration, see wind speed chart.
- If the wind speed charts do not provide values for the set up condition, the permissible wind speed in the load chart shall be observed.

If crane operation with a set up crane is interrupted:
- Make sure measures are initiated in time by trained, qualified personnel to bring the crane into a safe condition if anything happens.
- Make sure that no danger can occur for persons, crane and its surroundings should something unforeseen happen.

If the predicted wind speeds are above the permissible values:
- Bring the boom and equipment in time into a permissible condition before impermissible wind speeds occur, depending on the predicted wind speed, or take it down completely on the ground. See Crane operating instructions, wind speed charts and Erection and take down charts.
- Telescope the telescopic boom in and luff down to 0°. Position the boom and auxiliary boom, see the Crane operating instructions, wind speed charts and erection and take-down charts.

Situations are for example:
- Vandalism
- The ground giving way due to severe rain
- Melting ice under the supports
- Storm and thunderstorm
- Storm and wind
- Lightning
- Flooding
- Earthquakes
- Landslides
- Washouts
- For mobile cranes and crawler cranes with support:
  Yielding of support cylinders (leak, temperature changes)
- For cranes with a telescopic boom:
  Yielding of luffing cylinders (leak, temperature changes)

30.5 Resuming crane operation

Before resuming crane operation, the crane operator is obligated, among others, but not exclusively, to check the crane condition, the safety equipment, as well as the environmental conditions.

LWE/LR 1600-2-001/18101-07-02/en

copyright © Liebherr-Werk Ehingen GmbH 2018

WARNING
Danger of accident!

When the crane operator leaves the crane cab:
▶ Before resuming work, check the operating mode setting and reset, if necessary.

30.6 Ending crane operation

Before the crane operator may leave the crane, the following prerequisites must be met:
- Place the load fully on the ground and unhook from the crane hook.
- On crane with telescopic boom: Telescope the telescopic boom in all the way and take the boom down in the boom receptacle.
- For a crane with a lattice mast boom: Take the lattice mast boom down and disassemble if necessary.
- Bring the control lever (master switch) to the 0-position.
- Apply the parking brake on the crane chassis.
- Turn the engine off and pull out the ignition key.
- When a battery master switch is present: Turn off the battery master switch and remove the switch cams.
- Lock the crane cab.
- Secure the crane to prevent unauthorized use.
- For mobile crane: Make sure that the driver's cab is **not** occupied. Lock the driver's cab. Secure the crane to prevent it from rolling off unintentionally, see section „Parking the vehicle".
- Make sure that no danger can occur for persons, crane and its surroundings should something unforeseen happen.

31 Lifting of personnel

31.1 Intended use

- The destined use of the crane is **lifting of loads**.
- **Lifting of personnel** is **not** considered to be destined use of the crane.

Note
▶ These instructions do **not** apply for work platforms, which are attached on the crane boom and are used to lift personnel. This subject is governed by international standards for mobile aerial work platforms.

WARNING
Non-designated use of the crane!
Personnel can be severely injured or killed.
▶ The crane is **not** intended to lift personnel.
▶ Lifting persons on the variable support is prohibited.
▶ The crane may **not** be used for recreational purposes and exhibitions, such as lifting personnel for shows, bungee jumping or Dinner in the sky.
▶ The crane may **not** be used for lifting of devices with personnel on them or under the device, such as lifting of tents.
▶ Exception: If lifting of personnel for special work situations is the least dangerous possibility to carry out the work, then personnel may be lifted or brought into a suspended position when using lifting cages (cherry pickers).

31.2 Prerequisites for lifting of personnel

Make sure that the following prerequisites are met:
- Lifting personnel with cranes is permissible by national and local laws in the country where this crane application is carried out.

LWE/LR 1600-2-001/18101-07-02/en

copyright © Liebherr-Werk Ehingen GmbH 2018

DANGER
Lifting of personnel!
Accidents which occur when lifting personnel often result in severe injuries or even death.
- ▶ This exceptional application is within the scope of responsibility of the user and is only permitted if the requirements and instructions in the next sections are observed and adhered to.
- ▶ The company, the supervisor, the crane operator and auxiliary personnel must proceed especially carefully and safety conscious.
- ▶ Before the lifting procedure, a meeting must be held with all associated personnel.
- ▶ The following warning notes and safety regulations must be strictly observed.

31.2.1 Legal prerequisites

Make sure that the following prerequisites are met:
- Special arrangements were made for the use of the lifting cage (cherry picker) according to the requirements of national laws.
- If required by national laws: The use of the crane to lift personnel is reported to the state agency for occupational health and safety. The lifting procedure may possibly require a special permit.
- Before the implementation of the lifting procedure with the aid of a work-specific risk analysis for the possibility of rescuing personnel in emergencies was defined.
- To rescue personnel in emergencies, precautionary measures must be present on the crane, if they are required by national laws.
- The measures for safe operation near power lines, depending on the conditions on the job site and the national laws / national regulations were observed and adhered to.

31.2.2 Prerequisites for crane equipment and accessories

Make sure that the following prerequisites are met:
- The hoist gear to lift personnel must also be able to be moved in emergency operation.
- Before lifting personnel, the crane was inspected. No damage was found.
- The lifting cage (cherry picker) is utilized according to national laws and / or standards and according to intended purpose.
- Before lifting personnel, the lifting cage (cherry picker) was carefully inspected. No damage was found.
- Every emergency rescue device was inspected and its operational readiness was determined, if required by national laws.
- Any hooks in use must be equipped with a latch, which prevents the hook mouth to open. According to national laws, the latch must be manually closable or lockable or must automatically close via a spring.

31.2.3 Inspection before start up

Make sure that the following inspections are made before starting up the lifting cage (cherry picker):
- On every new construction site and after every modification or repair: To ensure the operating safety of the lifting cage (cherry picker) and the lifting equipment, a test with 125 % of the nominal load carrying capacity of the lifting cage (cherry picker) without personnel must be carried out. During the test, the lifting cage (cherry picker) may only be lifted just above the ground.
- A test lift with loaded lifting cage (cherry picker) without personnel must be carried out. The weight in the lifting cage (cherry picker) for the test lift must be at least as large as the weight of the personnel and the weight with the work equipment carried along. For this test lift, the course of all planned movements of the lifting procedure must be simulated.
- This test lift must be carried out for every location on a construction site, where personnel must be carried.

31.2.4 Prerequisites for operation with lifting cage (cherry picker)

Make sure that the following prerequisites are met for operation with lifting cage (cherry picker):
- The personnel and technical prerequisites for safe use and operation of the emergency control of the crane are present.
- The emergency control for emergency rescue of the person in the lifting cage is functioning.

LWE/LR 1600-2-001/18101-07-02/en

copyright © Liebherr-Werk Ehingen GmbH 2018

– The rope pull is limited to 50 % of the maximum rope pull.
– The crane is utilized only to 50 % of its maximum load bearing capacity of the valid load chart.

32 Securing personnel on shut off crane

32.1 Terms and abbreviations

– PSAgA: Personal protective equipment to prevent falling
– HSG: Height safety device

32.2 Intended use

Cranes are **not** designed to protect personnel against falling.

When the following prerequisites are met, the personnel protection may be permissible:
– A justified individual case is present.
– A project-specific written risk assessment and work procedure for the precise case by the employer is on hand.
– The specific safety measures are strictly adhered to.
– The crane is intended by the manufacturer for personnel protection.

Limitations for movement and operation:
– Moving the secured person on the crane **from** job site and **to** job site is impermissible.
– Moving the secured person on the crane **from** job site and **to** job site is permissible only in case of a rescue operation.
– Operation of the crane by the secured person is impermissible.

32.3 Prerequisites

WARNING
Prerequisites for personnel protection are **not** met!
Danger of accident. Death, severe bodily injuries.
▶ Carry out the personnel protection on the shut off crane only when **all** prerequisites in this section have been met.

Make sure that the following prerequisites are met:
– The country-specific, legal regulations are being observed.
– The written risk assessment shows:
  • Technical protective measures with at least the same protective effect are **not** available.
  • The normal fastening devices can **not** be used.
  • Personnel protection on the shut off crane is the safest and most useful method to carry out this work.
– Last transport and personnel protection occur independent of each other:
  • Do **not** carry out personnel protection at the same time as load transport. Simultaneous personnel movement is impermissible.
  • Riding along on the load is impermissible.
– Determination of fastening points and rescue plan for the precise case is on hand from the employer.

32.3.1 Personnel and qualification

Make sure that the following prerequisites for personnel and qualification are met:
– The crane operator is suited and competent to operate the crane.
– Person, which is secured, must be trained in handling the PSAgA.
– The following persons are present on the job site and separately instructed:
  • A supervisor

LWE/LR 1600-2-001/18101-07-02/en

copyright © Liebherr-Werk Ehingen GmbH 2018

  - The crane operator
  - The required number of rescue staff according to the rescue plan
- Access protection, fall protection on the shut off crane is made in accordance with the project-specific risk assessment on hand and the measures to be taken.
- The supervisor monitors the safe execution of work. He may **not** take part in the work.
- An effective communication must be ensured between crane operator and the secured person.

32.3.2 PSAgA, rescue equipment and tools

Make sure that the following prerequisites and measures are met:
- Use only HSG (height safety device) according to EN 360 in connection with a safety harness according to EN 361 to secure the person.
- Connecting device is suited for the occurring stress on the edges, see Manufacturer's documentation or device identification.
- Recurring inspections have been made. There are **no** visible defects present.
- At least 1 m connecting device of the maximum possible extension length of the HSG (height safety device) must remain in the housing.
- Fasten the HSG (height safety device) with two separate connecting devices (for example Securing on crane hook and on crane pulley block).
- Position the crane in such a way that the HSG (height safety device) is at least 5 m and plumb **over** the person, which is being secured.
- Do **not** exceed the maximum permissible deflection of the HSG (height safety device)
- Keep the required space **underneath** the person, which is being secured.
- All required objects (tools, building material) for the work are secured to prevent them from falling.

32.3.3 Crane

Make sure that the following prerequisites are met:
- The maintenance intervals and periodic crane inspections have been adhered to. There are **no** visible defects present.
- The load on the crane hook in any possible position is at least 600 kg , see Load chart (take the crane pulley block into account).
- Ensure sufficient load bearing capacity: For the load cases catching, pendular fall and possible angular pull adhere to the manufacturer's instructions.
- The crane is secured against movements and inadvertent movement (remote control is deactivated, crane control is activated).
- Only for aligning loads in the end position: Carry out a minimum of crane movements with the least possible speed.
- The overload protection is active.
- Auxiliary booms are **not** used.

32.4 Fastening device

Make sure that the following prerequisites are met:
- The crane hook is equipped with the hook safety.
- On the carrying device two connecting devices separated from each other can be fastened.
- HSG (height safety device) is redundantly fastened.
- Suitable fastening devices according to EN 795 Type B are on hand:
  - Round sling or fastening rope with steel core
  - Belt loop
- Textile components must be protected against greases, oils and other aggressive substances.
- Use only steel carabiners according to EN 362 with Tri-Lock function.

32.5 Rescue

A person in an accident must be lifted or lowered with the aid of the crane.

Carry out the following measures to ensure a safe rescue operation:
- Determine the rescue plan and rescue chain at the preparation of the mission.

LWE/LR 1600-2-001/18101-07-02/en

copyright © Liebherr-Werk Ehingen GmbH 2018

- Ensure the rescue of a person involved in an accident immediately with locally available means and trained personnel.
- Have the rescue mission coordinated by another person, with visual and voice contact to the crane operator, ground personnel as well as to the person, which is rescued.

32.6 Additional risks

Make sure that the following risks are taken into account:
- Wind effect and environmental influences.
- Crushing and shearing points.
- Endangerment by additional cranes, for example material transport.

33 Welding work on the load

Note
▶ The load must also be grounded.

In case of welding work on the load, the screw clamp of the welding unit must be attached on the work piece to avoid current flow via hoist rope, crane superstructure or crane chassis.

LWE/LR 1600-2-001/18101-07-02/en

copyright © Liebherr-Werk Ehingen GmbH 2018

2.04.10 Ladders

1	Intended use	2
2	Safety instructions	2
3	Safety signs	3
4	Ladder inspection	12
5	User guidelines	12
6	Assembling the ladder	14
7	Ladder access	22

LWE/LR 1600-2-001/18101-07-02/en

copyright © Liebherr-Werk Ehingen GmbH 2018

1 Intended use

Ladders are mobile work equipment that can be used in different locations. Ladders can be used to perform minor work at heights in cases where the use of other equipment would not be appropriate.

Ladders are designated for the ascent and descent of personnel.

Ladders may only be used as described. Any other use is considered unintended use and is therefore forbidden.

The manufacturer is **not** liable for damage caused by unintended use or improper usage.

2 Safety instructions

The ladders are built according to the present level of technology and recognized safety technical regulations. Despite that, during their use dangers to life and physical condition of the user and / or third parties can occur.

Ladders may exclusively be used in a flawless technical condition and according to their missions as well as with constant awareness of safety and dangers.

Changes to the structure may exclusively be made with written approval of the manufacturer.

The ladders that are illustrated are an example. Ladders with the same functional principle may appear differently.

WARNING
Safety instructions not observed!
Personnel can fall, death, severe bodily injuries.
- ▶ Observe and adhere to the assembly and safety instructions for ladders.
- ▶ Observe and adhere to the safety signs on the ladders.
- ▶ Install and secure the ladders properly.
- ▶ Use ladders exclusively if you are healthy enough to do this.
- ▶ Climb up / down the ladder with the 3-point support.
- ▶ Use the rungs as handles.
- ▶ Step into the rungs deep enough.
- ▶ Never bring the ladder to a new position during use.
- ▶ Do not use damaged ladders and replace them immediately.
- ▶ Repair the ladder exclusively through authorized service facilities.

2.1 Ladder categories

Ladders are divided into two categories according to the most up-to-date specifications:
- Ladders for industrial use
- Ladders for private use

Ladders for industrial use are tested according to the strictest criteria. Only use ladders for industrial use.

Ladders are marked according to their category allocation by a corresponding pictogram. See section „Safety signs“.

LWE/LR 1600-2-001/18101-07-02/en

copyright © Liebherr-Werk Ehingen GmbH 2018

2.2 Stationary stability

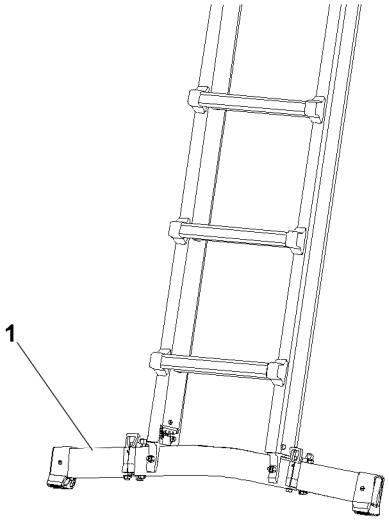

Fig.149993: Ladder with cross beam

According to the most up-to-date regulations, ladders with a length of more than 3 m must have a larger standing width. These ladders are equipped with a cross beam **1**.

2.3 Retrofitting old ladders

It is not mandatory to retrofit old ladders. It is the responsibility of the industrial user to ensure, in accordance with the operational safety regulation by means of a risk assessment, that the safety of the work equipment is ensured for all work tasks.

Older ladders that no longer corresponds with the state of technology according to current regulations, can continue to be used, **if** their safety has been checked **and** guaranteed.

3 Safety signs

Note

- ▶ The safety signs and instructions on the ladders must be complete and always legible.
- ▶ Observe and adhere to the manufacturer's operating instructions.

LWE/LR 1600-2-001/18101-07-02/en

copyright © Liebherr-Werk Ehingen GmbH 2018

3.1 Symbols until the end of 2017

Sign	Explanation
	Read the operating instructions
	Maximum number of users on one ladder
	Maximum load
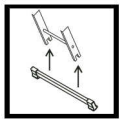	In the case of ladders that have a cross beam, the cross beam must be assembled before the first use
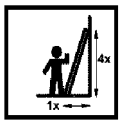	Correct set up angle 65° to 75°
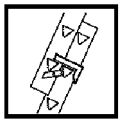	Before use: Engage the lift out safety
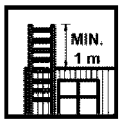	Ladder overhang above the exit level
	Secure the upper / lower end of the ladder
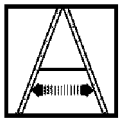	Before use: Tension the safety struts on stepladders

LWE/LR 1600-2-001/18101-07-02/en

copyright © Liebherr-Werk Ehingen GmbH 2018

Sign	Explanation
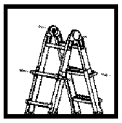	Before use: Engage the locking pin joints and pull pin locks
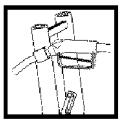	To open / close the tank cover and to ascent / descent: Insert the fuel nozzle into the retainer
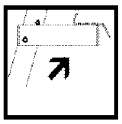	Before setting up the ladder Fold out the platform
	Before use: Check the ladder for damage
	Check the legs of the ladder
	Do not use the three uppermost rungs of an extension ladders as rungs to stand on
	Do not use the four uppermost rungs / steps of a stepladder without a platform to stand on
	Do not use the two uppermost rungs of a stepladder with integrated extension ladder as rungs to stand on
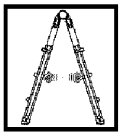	If hinged ladders are used as stepladders: Spread the ladder legs to the stop
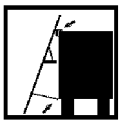	Place the upper placement angle flat. Hold the belt on tension

LWE/LR 1600-2-001/18101-07-02/en

copyright © Liebherr-Werk Ehingen GmbH 2018

Sign	Explanation
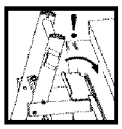	Hook the hook on the platform of the refueling ladder on the vehicle
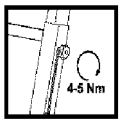	Tighten the star knob on the beam extension tightly
	Do **not** use a damaged ladder
	Preclude any contaminants on the ground
	Make sure the upper end of the ladder is placed correctly. Place the ladder only on safe surfaces
	Only one person may climb up / down on any accessible leg of the ladder
	Avoid leaning out to the side. Keep the body's center of gravity between the ladder beams
	Face the ladder when climbing up / down the ladder
	Use the ladder only with suitable shoes
	Do not use a stepladder as a leaning ladder

LWE/LR 1600-2-001/18101-07-02/en

copyright © Liebherr-Werk Ehingen GmbH 2018

Sign	Explanation
	Do **not** use the inner section of multi-part hinged ladders without outer sections as a stepladder
	Crushing danger
	Set the ladder up on horizontal and solid ground
	Set the ladder up on solid ground
	Use the ladder in the correct set up direction
	Do not carry along bulky objects or objects over 10 kg on the ladder
	It is not permitted to step off the ladder to the side
	During transport, pay attention to danger due to power lines
	Do not use the ladder as a walkway
	Do not transport snow and ice shovels over the ladder. Use hooks!

LWE/LR 1600-2-001/18101-07-02/en

copyright © Liebherr-Werk Ehingen GmbH 2018

Sign	Explanation
	Danger due to shearing point
	Do not use the ladder with the cross beam folded in
	Do not use a ladder under the influence of drugs or alcohol
	Do not use a ladder to climb up to another lever
	Make sure that both ladder sections are opened completely and secured. Avoid an incorrect ladder position
	Only use the platform ladder with a locked spreader lock
	Only permissible ladder rungs / platforms may be used as standing and stepping surfaces. Other surfaces such as placement surfaces for cable clips or attachment hooks may **not** be used as standing and stepping surfaces
	If a crossbars is part of the scope of delivery of the mobile platform ladder: Only use a mobile platform ladder with the crossbar assembled
	If auxiliary weights are part of the scope of delivery of the mobile platform ladder: Only use the platform ladder with the auxiliary weights assembled

LWE/LR 1600-2-001/18101-07-02/en

copyright © Liebherr-Werk Ehingen GmbH 2018

Sign	Explanation
	If a foot brake is installed on the mobile platform ladder: Use the foot brake
	Make sure that the joint is locked
	In unfavorable weather conditions, do **not** use the ladder in the open

3.2 Symbols from 2018

Sign	Explanation
	Danger of falling!
	Read the operating instructions
	Maximum load
	Ladder for professional use
	Ladder for private use
	Maximum number of users on one ladder

copyright © Liebherr-Werk Ehingen GmbH 2018

Sign	Explanation
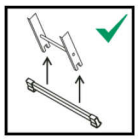	In the case of ladders that have a cross beam, the cross beam must be assembled before the first use
	Correct set up angle 65° to 75°
	Always keep a firm grip: When ascending and descending and when working on the ladder
	Ladder overhang above the exit level
	Before use: Engage the lift guards
	Do **not** use a damaged ladder
	Only use the ladder with the cross beam folded out
	Prior to use: The hinges and locks must be engaged
	Use the ladder in the correct set up direction
	Only use the ladder with appropriate footwear

LWE/LR 1600-2-001/18101-07-02/en

copyright © Liebherr-Werk Ehingen GmbH 2018

Sign	Explanation
	Do **not** use the ladder if physically impaired or under the influence of drugs or alcohol
	Do **not** use the ladder on uneven or unsteady surface
	Do **not** use the ladder on a slippery or contaminated surface
	Do **not** place the ladder on unsuitable surfaces
	Do **not** carry along bulky objects or objects over 10 kg on the ladder
	Do **not** use the top three rungs as rungs to stand on
	Avoid leaning out to the side. Keep the body's center of gravity between the ladder beams
	Avoid working with a side load
	Climb up and down the ladder while facing it
	Do **not** use a stepladder as a leaning ladder

copyright © Liebherr-Werk Ehingen GmbH 2018

Sign	Explanation
	Prior to use: Tension the safety struts on stepladders
	For stepladders without a platform: Do **not** use the top two rungs as rungs to stand on
	It is not permitted to step off to the side from the ladder
	When transporting or using the ladder, be aware of any danger due to overhead wires
	Do **not** use the ladder as a walkway

4 Ladder inspection

Make sure that the following conditions are met:
- All ladders are inspected at lease every 12 months. See chapter 8.17.
- The inspection may be made exclusively by authorized and trained expert personnel.
- The results of the inspection are documented.

5 User guidelines

Make sure that the following prerequisites are met before using the ladder:
- A risk evaluation had been made.
  The national legal regulations have been taken into account.
- People are physically able to use a ladder.
- The ladder is suited for the respective application.
- The ladder is complete and not damaged (visual inspection).
- The ladder is free of contaminants, such as:
  - Ice
  - Snow
  - Frost
  - Wet paint
  - Lubricants
- The legs of the ladders are not worn.
- Screws and connections have been checked for tight seating.
- The base is:

LWE/LR 1600-2-001/18101-07-02/en

copyright © Liebherr-Werk Ehingen GmbH 2018

- Level
- Horizontal
- Slip-resistant
- Unmoveable

When climbing up the ladder:
- Set the ladder up in the correct set up angle.
- Secure the locking devices of the ladder.
- Tension the spreaders of the stepladder.
- Do **not** set up the ladder from above.
- Do **not** set the ladder on braces or steps.
- Avoid the risk of a collision with pedestrians, vehicles or doors.
- Place the leaning ladder only suitably stable contact surfaces with both rails.

When using the ladder:
- Make sure that no children are playing on the ladders.
- Subject the ladder to no more than maximum 150 kg.
- Use the ladder exclusively as described in section „Ladder access“.
- Do **not** use the ladder outside in strong wind.
- Do **not** subject the ladder horizontally to excessive loads in side assembly work.
- Face the ladder when climbing up or down the ladder.
- Step on the ladder with suitable shoes.
- Do not use the ladder as a walkway.
- Secure the ladder to prevent it from being knocked over inadvertently.
- For leaning ladders, do not step on the uppermost three steps / rungs, in reference to the ladder placement point.
- For stepladders, do not step on the uppermost two steps / rungs.
- Do not work too long on the ladder without pauses. Tiredness is a safety risk.
- When working on a ladder, hold on tightly with one hand.
  If this is not possible: Take additional safety measures, such as: Use the WORK POSITIONING SYSTEM (WPS).

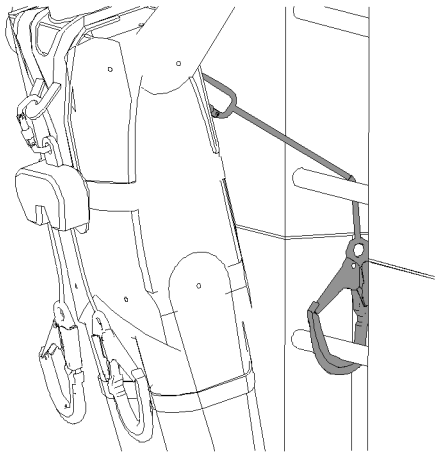

Fig.126746: Example of how to use the WPS

For repair, maintenance and storage of a ladder:
- Have repairs and maintenance made by expert personnel according to the manufacturer’s instructions.
- Store the ladders according to the manufacturer’s instructions.

Before transporting the ladders:
- Lock and secure the ladders in their provided transport retainers.

LWE/LR 1600-2-001/18101-07-02/en

copyright © Liebherr-Werk Ehingen GmbH 2018

6 Assembling the ladder

6.1 Supplied cross beam

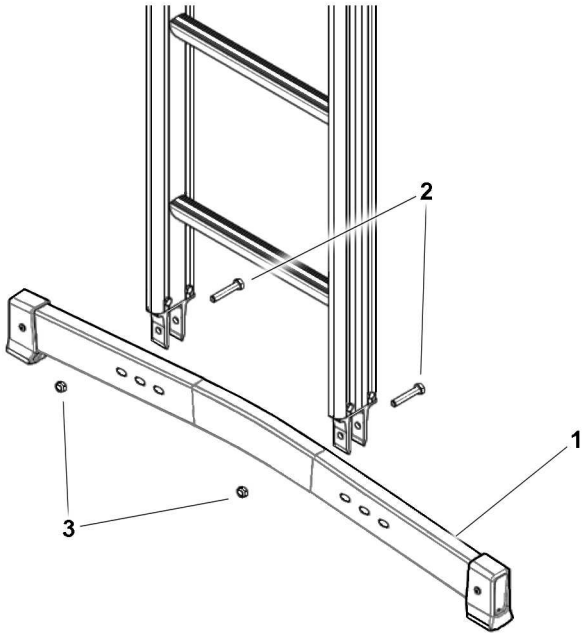

Fig.149565: Assembling the cross beam

Depending on the type of ladder and the delivery condition, the cross beam must be assembled prior to use.

Required tools:
- 2 x 13 mm wrenches
- The screws and nuts are included in the delivery scope

Tightening torque:
- Approx. 8 Nm

▶ Position the cross beam **1** centrally between the cross beam fasteners.
▶ Secure the cross beam **1** with screws **2** and nuts **3**.
▶ Before using the ladder: Make sure that the screws **2** and nuts **3** are tightened correctly.

LWE/LR 1600-2-001/18101-07-02/en

copyright © Liebherr-Werk Ehingen GmbH 2018

6.2 Folding cross beam

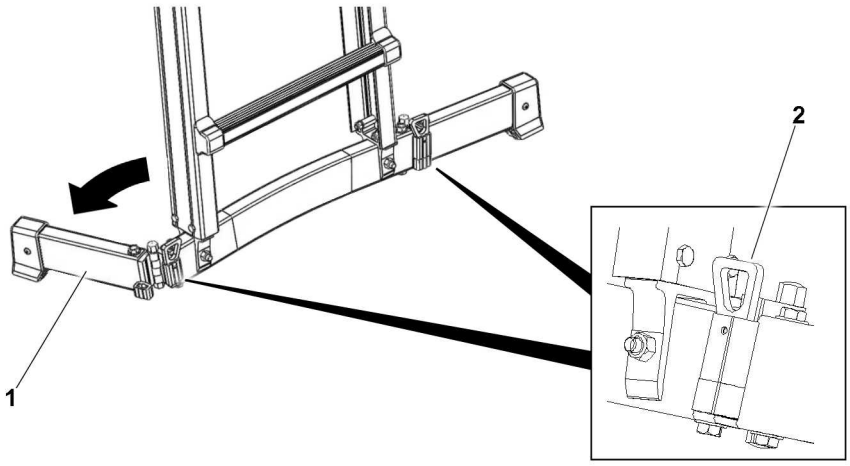

Fig.149566: Using the folding cross beam

Depending on the type of Ladder, the folding cross beam must be brought into the operating position prior to use and brought to the transport position after use.

6.2.1 Bringing the cross beam into the operating position

- ▶ Swing the folding cross beam **1** on both sides into the operating position.
- ▶ Make sure that the retaining element **2** is engaged.
- ▶ Before using the ladder: Make sure that both retaining elements **2** have engaged.

6.2.2 Bringing the cross beam into the transport position

- ▶ Unlock the retaining element **2**.
- ▶ Swing the folding cross beam **1** on both sides into the transport position.
- ▶ Before storing the ladder: Make sure that both retaining elements **2** have engaged.

6.3 Cross beams for platform ladder

For platform ladders, the supplied cross beams must be assembled prior to use.

Required tools:
- 2 x 13 mm wrenches
- The screws and nuts are included in the delivery scope

LWE/LR 1600-2-001/18101-07-02/en

copyright © Liebherr-Werk Ehingen GmbH 2018

6.3.1 Assembling the cross beam without wheels

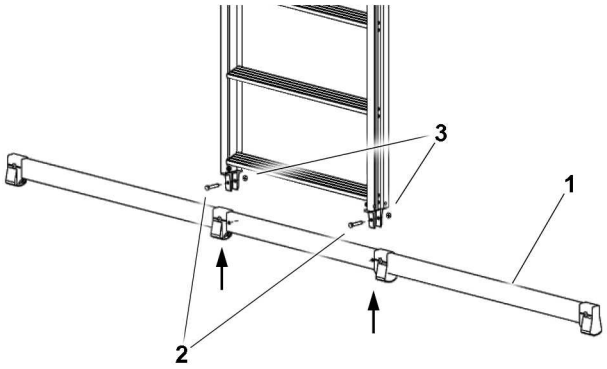

Fig.149595: Assembling the cross beam

- ▶ Position the cross beam **1** centrally between the cross beam fasteners.
- ▶ Secure the cross beam **1** with two screws **2** and two nuts **3**.
- ▶ Tighten the screws **2** by hand.

6.3.2 Assembling the cross beam with wheels

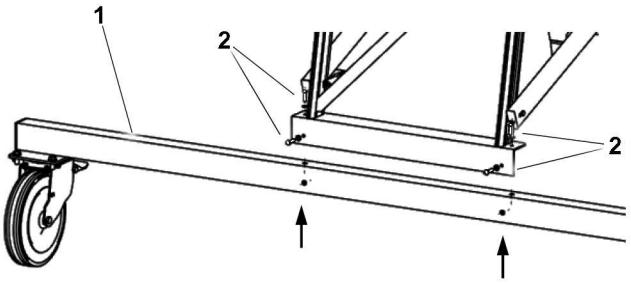

Fig.149596: Assembling the cross beam

- ▶ Position the cross beam **1** centrally between the cross beam fasteners.
- ▶ Secure the cross beam **1** with four screws **2** and four nuts.
- ▶ Tighten the screws **2** by hand.
- ▶ Before using the ladder: Make sure that all screws and nuts are correctly tightened.

6.4 Platform ladder

At least two people are required for ladder assembly and removal.

6.4.1 Assembling the platform ladder

WARNING
Platform ladder not correctly assembled!
Personnel can fall down. Death, severe bodily injuries.
- ▶ Before the platform ladder is correctly assembled: Do **not** step on or load the platform ladder.

LWE/LR 1600-2-001/18101-07-02/en

copyright © Liebherr-Werk Ehingen GmbH 2018

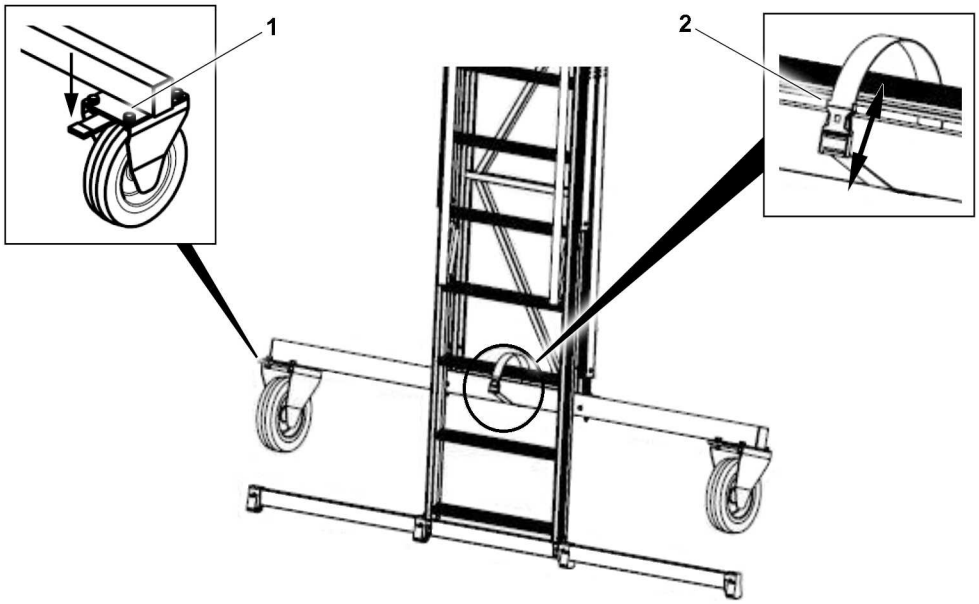

Fig.149597: Preparing the ladder

- ▶ Secure both pulleys **1**.
- ▶ Erect the ladder with two people.
- ▶ Release the rigging belt **2**.

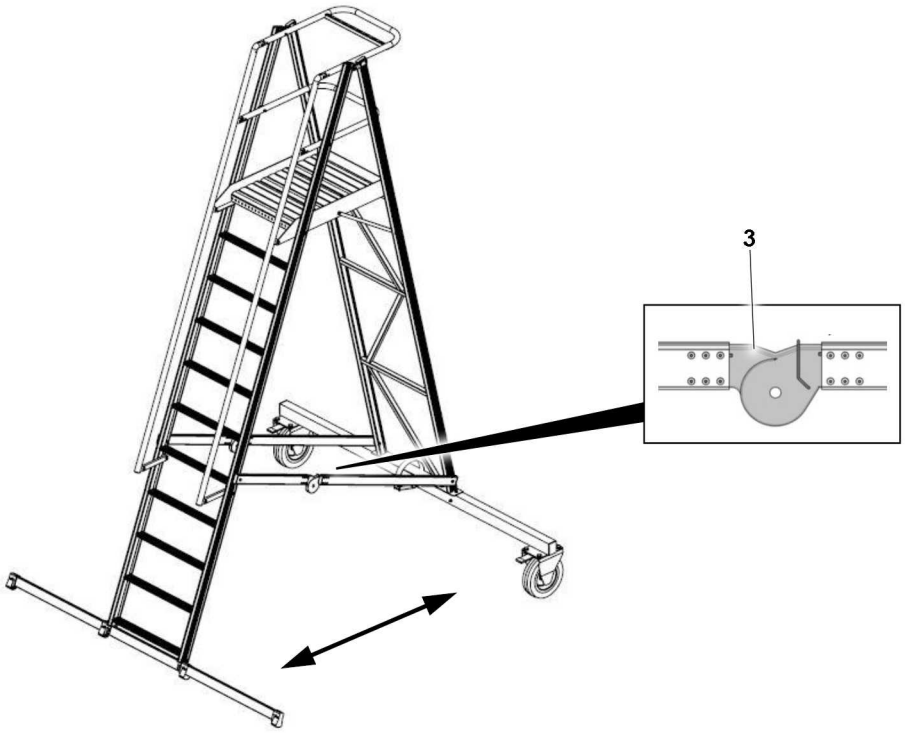

Fig.149598: Setting up the ladder

- ▶ Each half of the ladder is held by a person.
- ▶ Until both hinges **3** engage audibly: Carefully guide the ladder halves away from each other. When doing so, the platform surface will fold out automatically.

Result:

– The ladder is now assembled.

LWE/LR 1600-2-001/18101-07-02/en

copyright © Liebherr-Werk Ehingen GmbH 2018

6.4.2 Dismantling the platform ladder

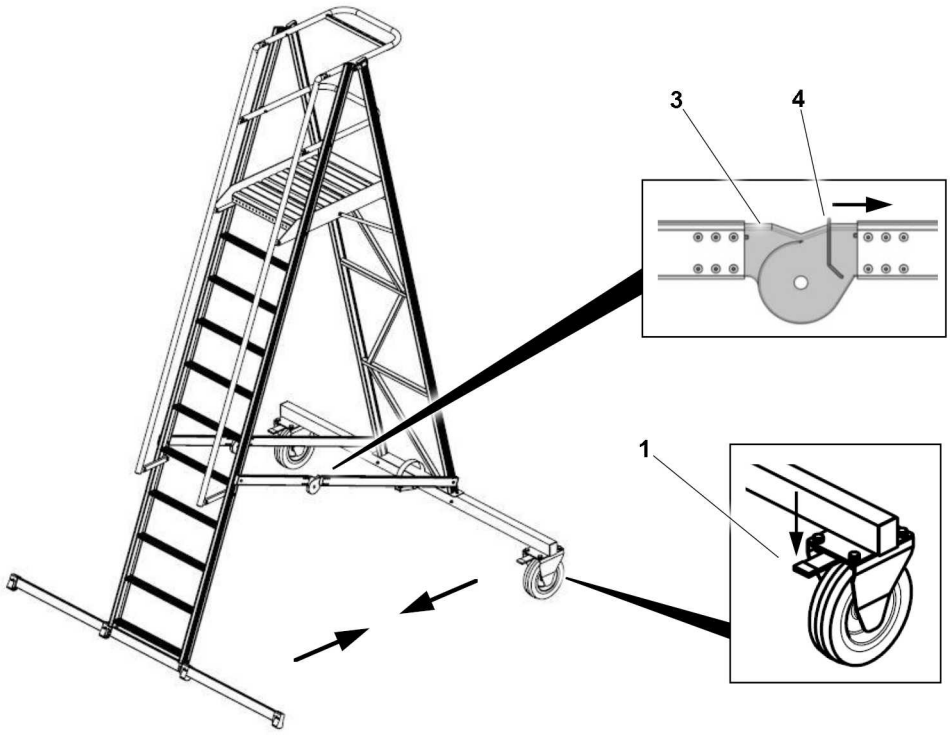

Fig.149599: Releasing the hinges

- ▶ Secure both pulleys **1**.
- ▶ Unlock the locking bracket **4** in the hinge **3** on both sides.
- ▶ Each half of the ladder is held by a person.
- ▶ Carefully guide the ladder halves toward each other. When doing so, the platform surface will fold together automatically.

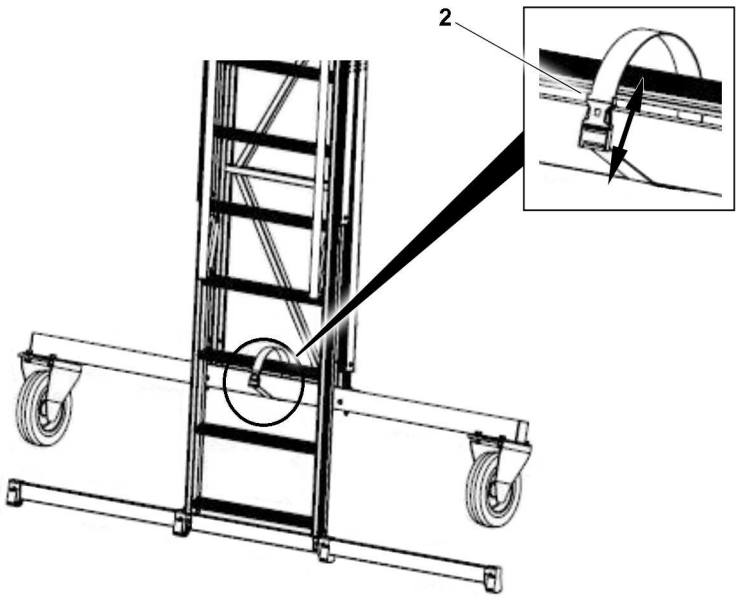

Fig.149600: Securing the ladder in the transport position

- ▶ Secure the rigging belt **2** on the cross beam and rung.
- ▶ Make sure that the clasp on the rigging belt **2** is closed.

LWE/LR 1600-2-001/18101-07-02/en

copyright © Liebherr-Werk Ehingen GmbH 2018

Result:
– The ladder is dismantled and secured in the transport position.

6.5 Hinged ladders

Hinged ladders can be used as leaning ladders or stepladders.

To adjust a part of the ladder, both hinges on opposite sides must be actuated.

6.5.1 Using a hinged ladder as a leaning ladder

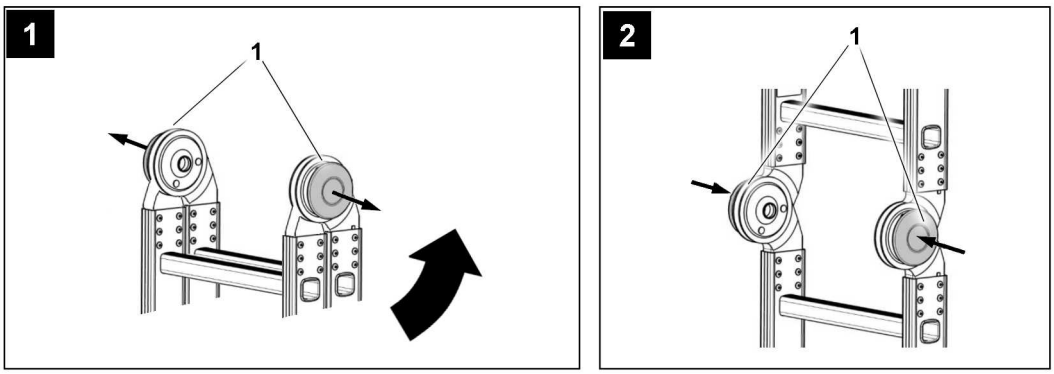

Fig.149567: Using a hinged ladder as a leaning ladder

▶ Release the hinges **1**.
▶ Until the hinges **1** engage again: Spread out the legs to the stop.
▶ Before using the hinged ladder as a stepladder: Make sure that the hinges **1** have engaged.

6.5.2 Bringing the leaning ladder into the transport position

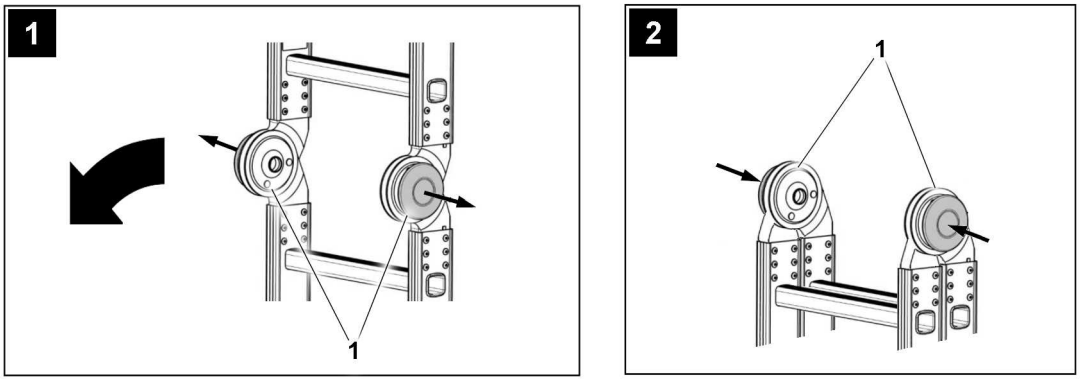

Fig.151625: Bringing the leaning ladder into the transport position

▶ Release the hinges **1**.
▶ Until the legs lie together and the hinges **1** engage: Fold the legs together.

Result:
– The hinged ladder is now in the transport position. The hinged ladder can now be stored.

LWE/LR 1600-2-001/18101-07-02/en

copyright © Liebherr-Werk Ehingen GmbH 2018

6.5.3 Using a hinged ladder as a stepladder

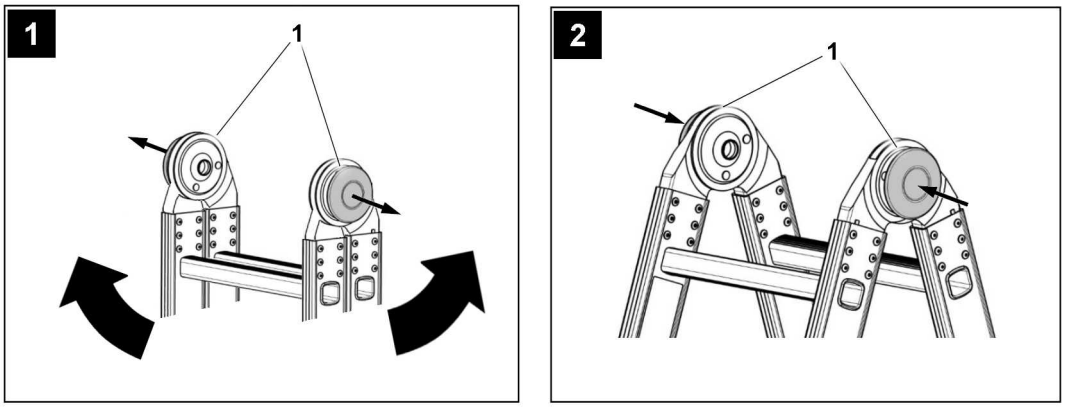

Fig.149568: Using a hinged ladder as a stepladder

- ▶ Release the hinges **1**.
- ▶ Until the hinges **1** engage again: Spread out the legs.
- ▶ Before using the hinged ladder as a stepladder: Make sure that the hinges **1** have engaged.

6.5.4 Bringing the stepladder into the transport position

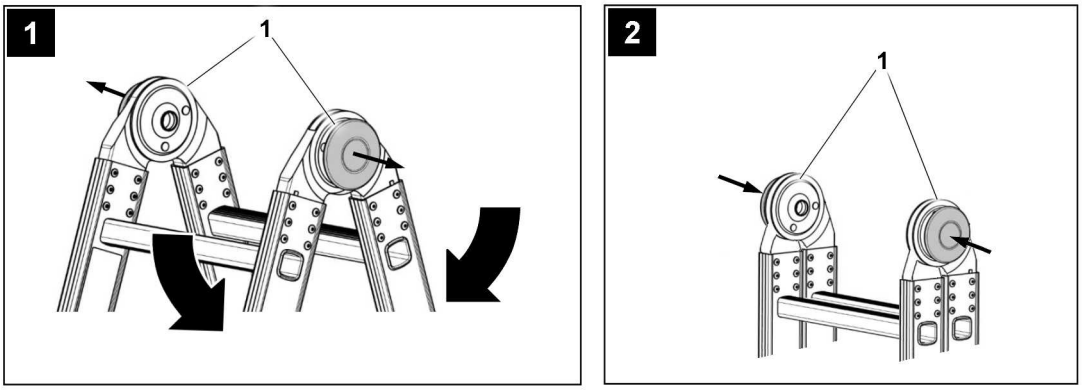

Fig.151607: Bringing the stepladder into the transport position

- ▶ Release the hinges **1**.
- ▶ Until the legs lie together and the hinges **1** engage: Fold the legs together.

Result:

– The hinged ladder is now in the transport position. The hinged ladder can now be stored.

LWE/LR 1600-2-001/18101-07-02/en

copyright © Liebherr-Werk Ehingen GmbH 2018

6.6 Multi-purpose ladder with height adjustment

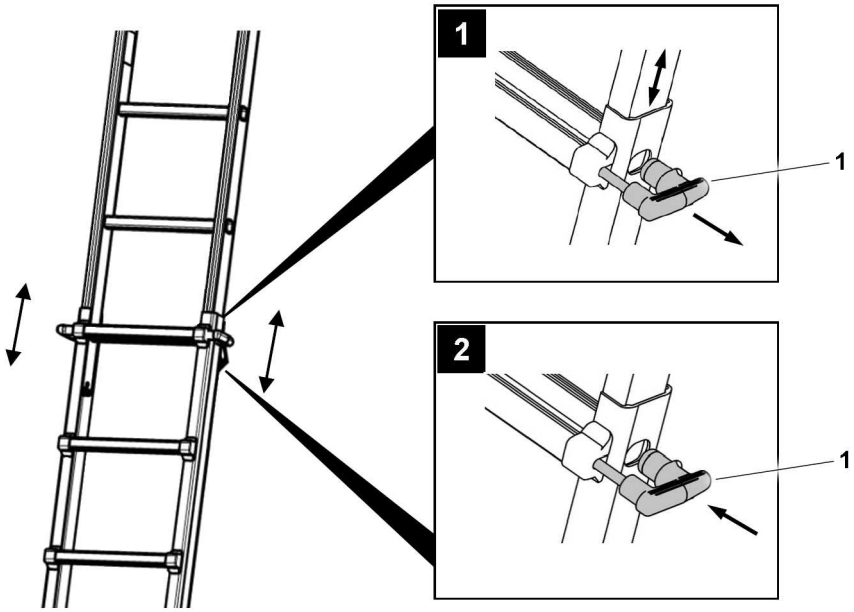

Fig.149570: Ladder with height adjustment

Multi-purpose ladders have a height adjustment device.

- ▶ Release the handle **1** on both sides.
- ▶ Pull out or push in the ladder to the desired length.
- ▶ Lock the ladder with the handle **1** on both sides.
- ▶ Before using the ladder: Make sure that both handles **1** have engaged.

6.7 Extension ladder

Only pull out or push in the ladder when it is laid down.

LWE/LR 1600-2-001/18101-07-02/en

copyright © Liebherr-Werk Ehingen GmbH 2018

6.7.1 Pushing out the upper ladder section

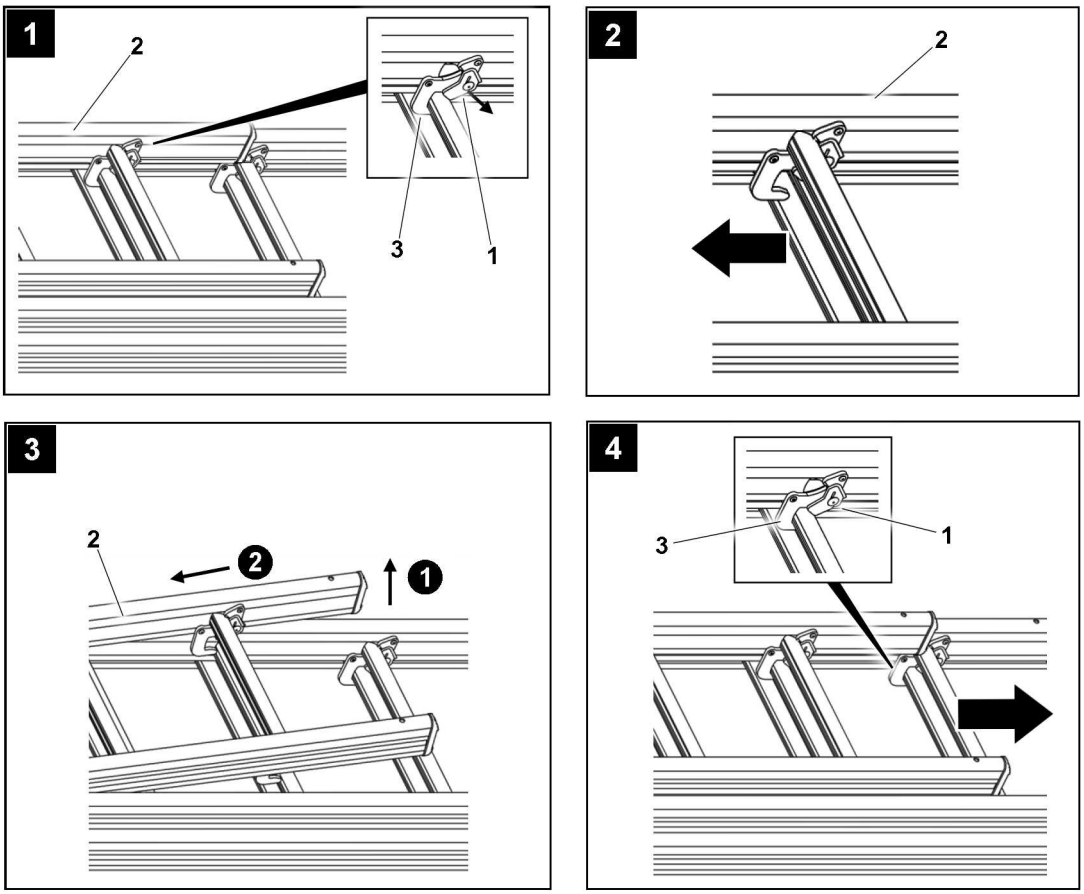

Fig.149569: Pushing out the ladder

- ▶ Release the lock **1** on the securing hook **3** on the upper ladder section **2**.
- ▶ Move the upper ladder section **2** slightly at the same time.
- ▶ Now swing the ladder section **2** outward and push it out to the desired length.
- ▶ Refit the securing hooks **3**.
- ▶ Make sure that the lock **1** re-engages.

6.7.2 Pushing out the middle ladder section

- ▶ Pull out and lock the middle ladder section in the same manner.

6.7.3 Pushing the extension ladder together

- ▶ Push together and lock the middle ladder section.
- ▶ Subsequently push together and lock the upper ladder section.

7 Ladder access

Wearing the personal protection equipment to prevent falling and the ladder safeguard depend on the type of work, among others.

7.1 Ladder safeguards

The ladder can be secured to prevent it from sliding away to the side by:

– Restraint device, for example: Tether or side stops on component

LWE/LR 1600-2-001/18101-07-02/en

copyright © Liebherr-Werk Ehingen GmbH 2018

– Friction lock, for example: Rubber caps or plastic caps on the end of the ladder beam at direct placement on a surface

The ladder can be secured to prevent it from tipping to the rear by:
– The correct placement angle

7.2 3-point support

A 3-point support is ensured when:
– Two hands have a safe hold and one leg is standing safely.
– Two legs are standing safely and one hand has a safe hold.
– Two legs are standing safely in straddle position on a stepladder which can be accessed from both sides, on the third respective rungs / steps from the top. The user locks the ladder with the knees.
– Two legs are standing safely and at the same time, the body is leaned on higher rungs / steps of the leaning (extension) ladder. The center of gravity of the body must always be between the two ladder beams.
– A WORK POSITIONING SYSTEM (WPS) is used.

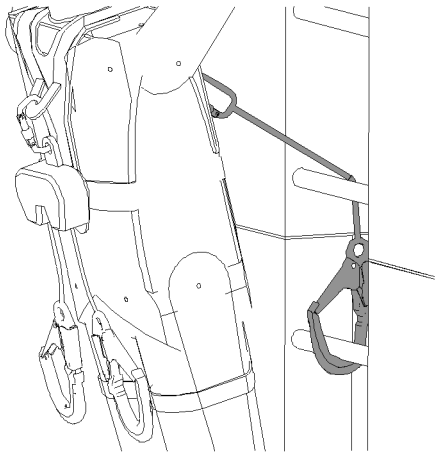

Fig.126746: Example of how to use the WPS

7.3 Light and / or heavy work

The following lists various light and heavy work

Examples for light work:
– Installing / removing retaining pins or spring retainers
– Fastening components, disengaging fastening equipment
– Pushing the transition aid out / in
– Establishing / disconnecting electrical or hydraulic connection between components
– Actuating the hand pump for the folding jib
– Reeving the auxiliary winch in / out
– Setting up / taking down foldable railings
– Carrying out maintenance and inspection work
– Refueling the crane chassis and / or crane superstructure

Examples for heavy work:
– Knocking the connector pins in / out
– Installing / removing the wind warning
– Reeving the hoist rope in / out
– Installing / removing the connector pin with assembly aid (hydraulic cylinder or mechanical assembly tool)
– Installing / removing the rope lock

LWE/LR 1600-2-001/18101-07-02/en

copyright © Liebherr-Werk Ehingen GmbH 2018

7.4 Removing the end section on the conical leaning ladder

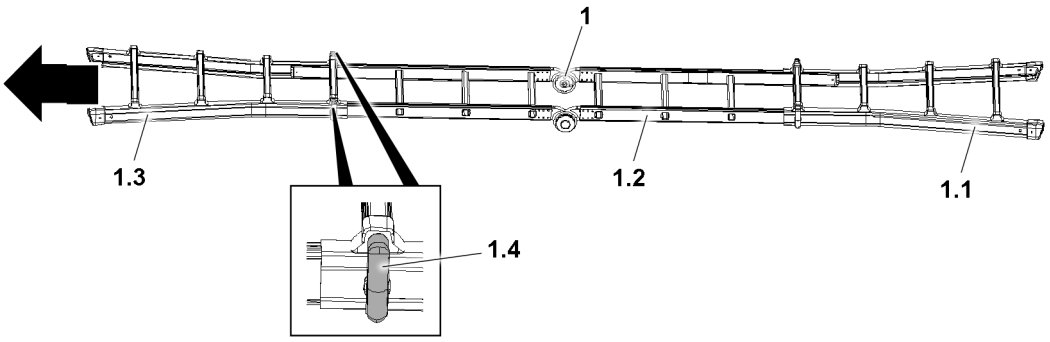

*Fig.126873: Leaning ladder **1***

The leaning ladder **1** consists of the following components:
- **1.1** Base
- **1.2** Center section
- **1.3** End section
- **1.4** Locks

When the end section **1.3** is wider than the leaning tube on the telescopic boom or the intended placement surface, the leaning ladder **1** cannot be placed fully expanded. In order to position the leaning ladder **1** fully expanded, the end section **1.3** must be disassembled and removed.

CAUTION
Fingers in the spring range of the lock **1.4**!
Finger crushing when locking and unlocking.
▶ Grip the lock **1.4** outside of the spring range.

▶ Release the locks **1.4** on the left and right.
▶ Slide the end section **1.3** out of the center section **1.2** and remove it.

LWE/LR 1600-2-001/18101-07-02/en

copyright © Liebherr-Werk Ehingen GmbH 2018

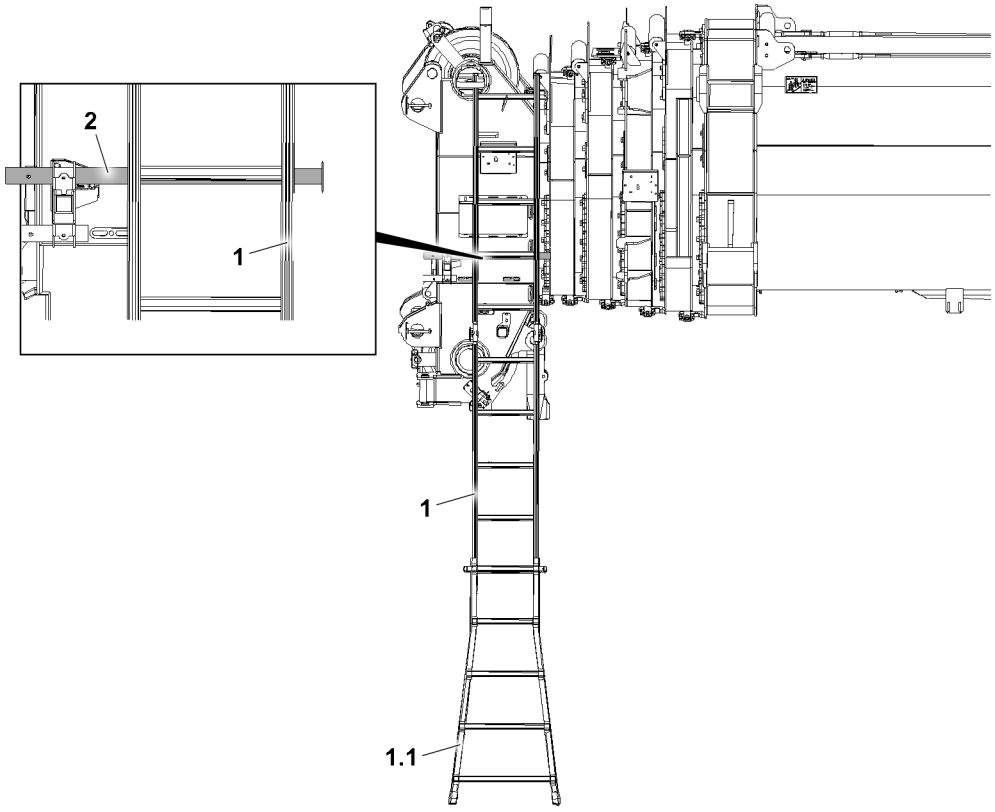

*Fig.126874: Leaning ladder **1** placed on the leaning tube **2***

When placing the leaning ladder **1**, the base **1.1** must be placed on the ground.

▶ Place the leaning ladder **1** on the leaning tube **2** or the intended placement surface.

WARNING
The leaning ladder **1** is wider than the leaning tube **2** or the intended placement surface!
Assembly personnel can fall when stepping on the leaning ladder **1** and be severely injured.
▶ When stepping on the leaning ladder **1** make sure that the leaning ladder **1 is not** wider than the leaning tube **2** or the intended placement surface.

▶ Climb on the leaning ladder **1**. Carry out the assembly work.

Before leaving the jobsite, the end section **1.3** must be reinstalled.

▶ Before leaving the jobsite: Install the end section **1.3**.
▶ Secure the leaning ladder **1** in transport position.

copyright © Liebherr-Werk Ehingen GmbH 2018

7.5 Types of ladders

7.5.1 Stepladder

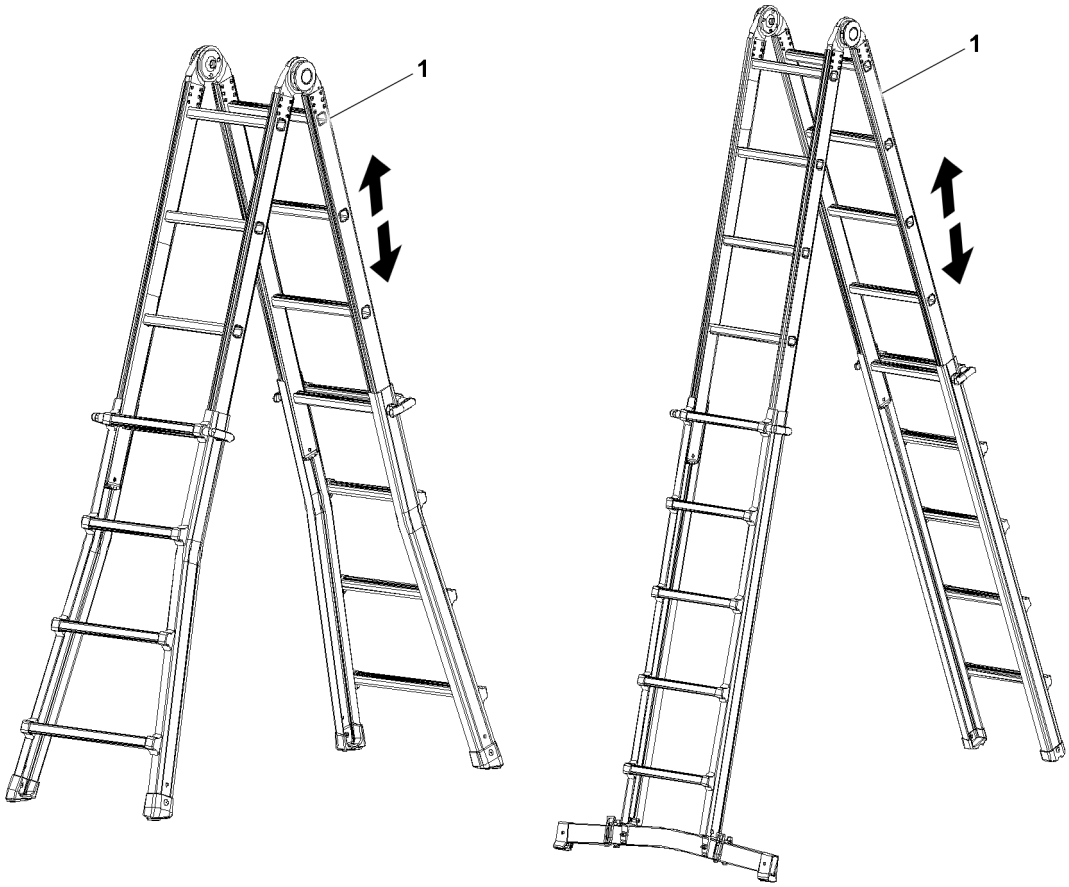

Fig.149996: Example of stepladders

WARNING
Transitioning from a stepladder **1** to other components!
Personnel can fall, death, severe bodily injuries.
▶ Do **not** transition from a stepladder **1** to other components.

WARNING
3-point support not adhered to!
Personnel can fall, death, severe bodily injuries.
▶ When using stepladders **1**, adhere to the 3-point support.
▶ Adhere to the prerequisites and conditions for the use of stepladders **1**.

Prerequisites for the use of stepladders **1**:
– Make sure that the weight of the tool carried along does not weigh more than 10 kg.

Access	Work
Maximum rise to the third rung / step from the top	Maximum rise to the third rung / step from the top
3-point support required	3-point support required
	Rise to 1 m: Personal protective equipment to prevent falling not required

LWE/LR 1600-2-001/18101-07-02/en

copyright © Liebherr-Werk Ehingen GmbH 2018

Access	Work
	Rise above 1 m to 7 m **Light work**: Personal protective equipment to prevent falling not required
	Rise above 1 m to 7 m **Heavy work**: Personal protective equipment to prevent falling required

*Conditions for access and work on stepladders **1***

7.5.2 Leaning ladder

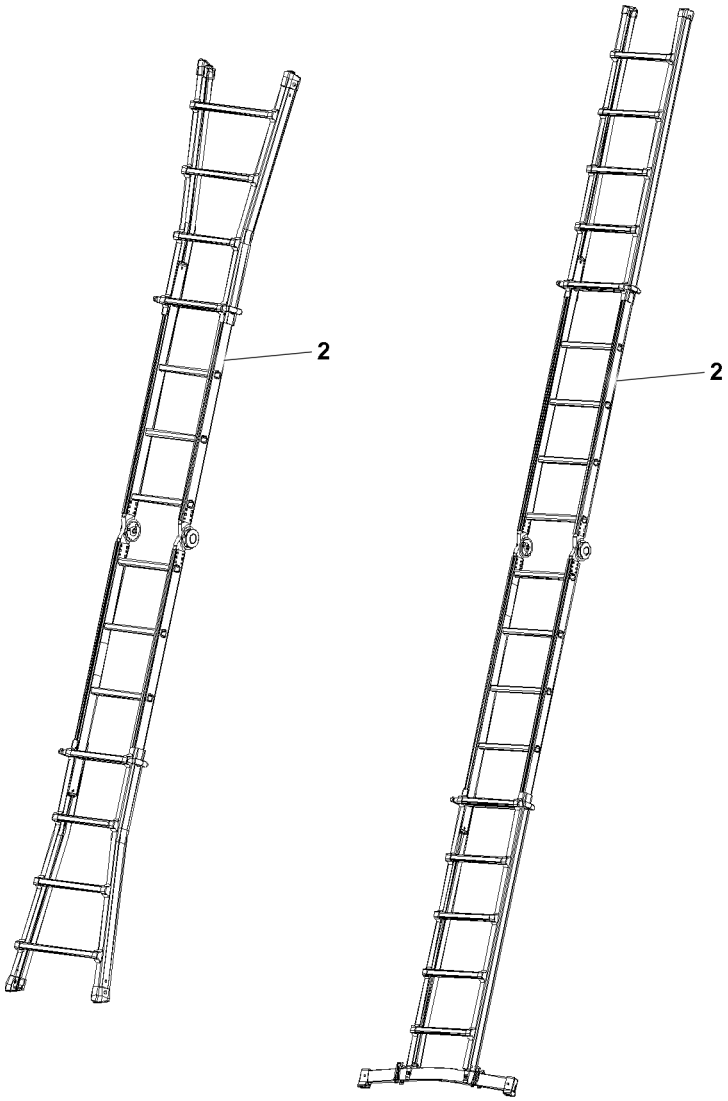

Fig.149997: Example of leaning ladders

LWE/LR 1600-2-001/18101-07-02/en

copyright © Liebherr-Werk Ehingen GmbH 2018

WARNING
3-point support not adhered to!
Personnel can fall, death, severe bodily injuries.
▶ When using leaning ladders **2**, adhere to the 3-point support.
▶ Adhere to the prerequisites and conditions for the use of leaning (extension) ladders **2**.

Prerequisites for the use of leaning (extension) ladders **2**:
- Make sure that the leaning ladder **2** is positioned onto a level placement surface.
- Make sure that the leaning ladder **2** is placed in an incline angle of 65° to 75° (approx. 1:4) to the horizontal.
- Make sure that the ladder overhang when leaning it on components is selected in such a way that the leaning ladder **2** is safely placed when subjected to a load / flex due to ascending persons.
- Make sure that the weight of the tool carried along does not weigh more than 10 kg.

Access	Work
Maximum rise to the fourth rung / step from the top, in reference to the placement point	Maximum rise to the fourth rung / step from the top, in reference to the placement point
3-point support required	3-point support required
	Rise to 1 m: Ladder safeguard not required Personal protective equipment to prevent falling not required
	Rise above 1 m to 7 m **Light work**: Ladder safeguard required Personal protective equipment to prevent falling not required
	Rise above 1 m to 7 m **Heavy work**: Ladder safeguard and protection to prevent it from tipping to the rear required Personal protective equipment to prevent falling required

*Conditions for access and work on leaning (extension) ladders **2***

LWE/LR 1600-2-001/18101-07-02/en

copyright © Liebherr-Werk Ehingen GmbH 2018

7.5.3 Leaning ladder with transition

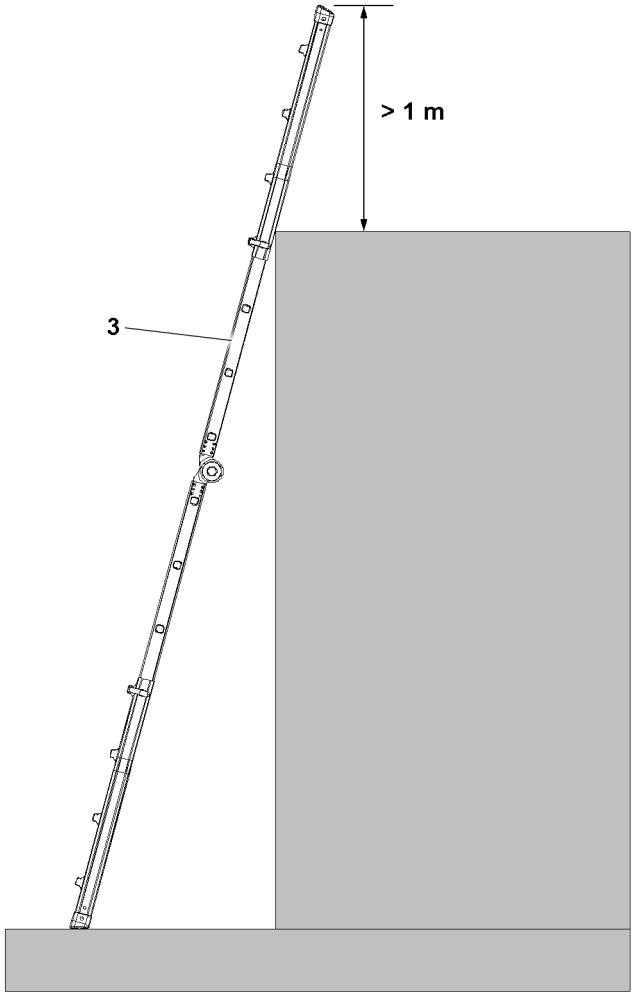

Fig.151626: Examples for leaning ladders with ladder overhang above the exit level

Leaning ladders can be used for transitioning.

WARNING
3-point support not adhered to!
Personnel can fall, death, severe bodily injuries.
▶ When transitioning, adhere to the 3-point support.
▶ Adhere to the prerequisites and conditions for the use of leaning ladders as a transition **3**.

Prerequisites for the use of leaning ladders as a transition **3**:
- Make sure that the leaning ladder **3** is positioned onto a level placement surface.
- Make sure that the leaning ladder **3** is placed in an incline angle of 65° to 75° (approx. 1:4) to the horizontal.
- Make sure, for transitioning to higher work locations, when no other safehold possibilities are available, that the ladders beams of the leaning ladder go past the placement location by at least 1 m.
- Make sure that the transition area is slip-resistant.
- Make sure that the ladder position can be recognized from above.
- Make sure that the contact point of the ladder on the component is selected such that it will not be deformed or swing away due to the load of the person climbing up the ladder.
- Make sure that the weight of the tool carried along does not weigh more than 10 kg.

LWE/LR 1600-2-001/18101-07-02/en

copyright © Liebherr-Werk Ehingen GmbH 2018

Access	Transition
Maximum rise to a rung / step below the placement edge	Maximum rise to a rung / step below the placement edge
3-point support required	3-point support required
Personal protective equipment to prevent falling not required	Personal protective equipment to prevent falling not required
	Rise to 1 m: Ladder safeguard not required
	Rise above 1 m to 7 m: Ladder safeguard required

*Conditions for access and transition to leaning (extension) ladders with transition **3***

7.5.4 Vertical ladder with transition aid

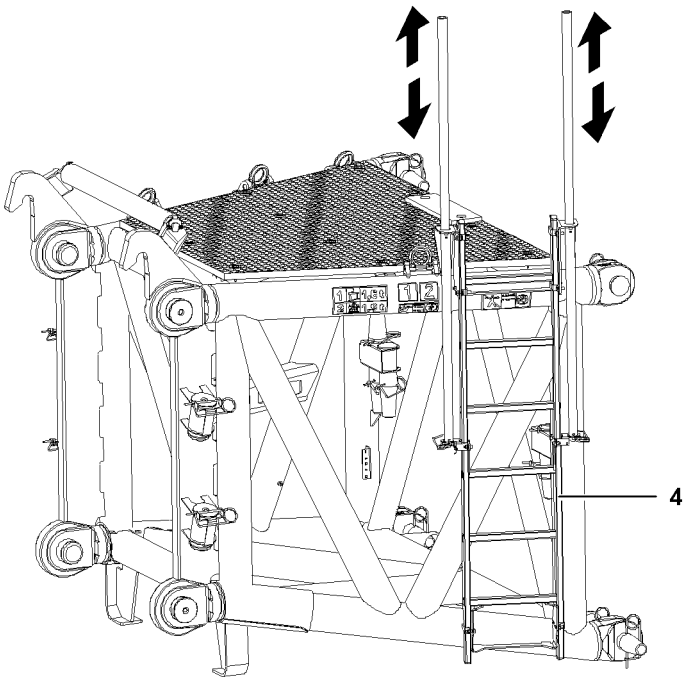

Fig.121178: Example for vertical ladder with transition aid

WARNING
Persons not secured!
Personnel can fall, death, severe injuries.

When using vertical ladders with transition aid **4**:
▶ Adhere to the 3-point support.

Before transitioning:
▶ Hook the personal protective equipment to prevent falling on a suitable location (for example: uppermost rung, safety rope or separate hook point).
▶ Adhere to the prerequisites and conditions for the use of vertical ladders with transition aid **4**.

LWE/LR 1600-2-001/18101-07-02/en

copyright © Liebherr-Werk Ehingen GmbH 2018

Prerequisites for the use of vertical ladders with transition aid **4**:
- Make sure, a centered grip reachable from the transition edge and a possibility to support oneself with the second hand is present for transitioning.
- Make sure that the transition area is slip-resistant.
- Make sure that the ladder position can be recognized from above.
- Make sure that the weight of the tool carried along does not weigh more than 10 kg.

Access	Work
3-point support required	3-point support required
If necessary: Use a WORK POSITIONING SYSTEM (WPS) at a suitable hook point	If necessary: Use a WORK POSITIONING SYSTEM (WPS) at a suitable hook point

*Conditions for access and work on vertical ladders with transition aid **4***

Ascent	Transition
3-point support required	3-point support required
Rise to 5 m: Personal protective equipment to prevent falling not required	Rise to 1.8 m: Without transition aid: Personal protective equipment to prevent falling not required
Rise above 5 m: Fall arrest system with moving along fall arrest device or back protection required	Rise above 1.8 m: Without transition aid: Personal protective equipment to prevent falling required

*Conditions for ascent and transition to vertical ladders with / without transition aid **4***

7.5.5 Platform ladder

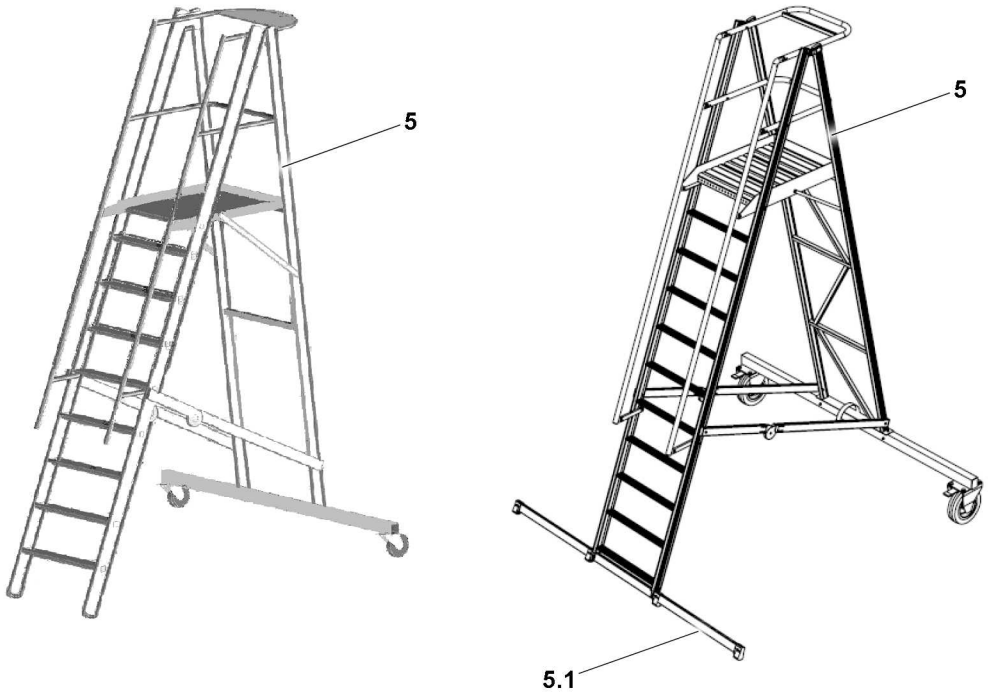

Fig.149995: Example of platform ladders

A platform ladder **5** with a cross beam **5.1** offers more stability. It is recommended to use a platform ladder with a cross beam.

LWE/LR 1600-2-001/18101-07-02/en

copyright © Liebherr-Werk Ehingen GmbH 2018

WARNING
Transitioning from a platform ladder **5** to other components!
Personnel can fall, death, severe bodily injuries.
▶ Do **not** transition from a platform ladder **5** to other components.

WARNING
3-point support not adhered to!
Personnel can fall, death, severe bodily injuries.

When using platform ladders **5**:
▶ Adhere to the 3-point support.
▶ Adhere to the prerequisite and conditions for the use of platform ladders **5**.

Prerequisite for the use of platform ladders **5**:
– Make sure that the weight of the tool carried along does not weigh more than 10 kg.

Access	Working on the ladder	Working on the platform
Maximum rise to platform height	Maximum rise to platform height	Maximum height: Platform height
3-point support required	3-point support required	
	Rise to 1 m: Personal protective equipment to prevent falling not required	
	Rise above 1 m to 7 m **Light work**: Personal protective equipment to prevent falling not required	Platform height **Light work**: Personal protective equipment to prevent falling not required
	Rise above 1 m to 7 m **Heavy work**: Personal protective equipment to prevent falling required	Platform height **Heavy work**: Personal protective equipment to prevent falling required

*Conditions for access and work on platform ladders **5***

LWE/LR 1600-2-001/18101-07-02/en

copyright © Liebherr-Werk Ehingen GmbH 2018

2.05 Signs on the crane

1	Warning signs	3
2	Command and prohibition signs	7
3	Notice signs	11

LWE/LR 1600-2-001/18101-07-02/en

copyright © Liebherr-Werk Ehingen GmbH 2018

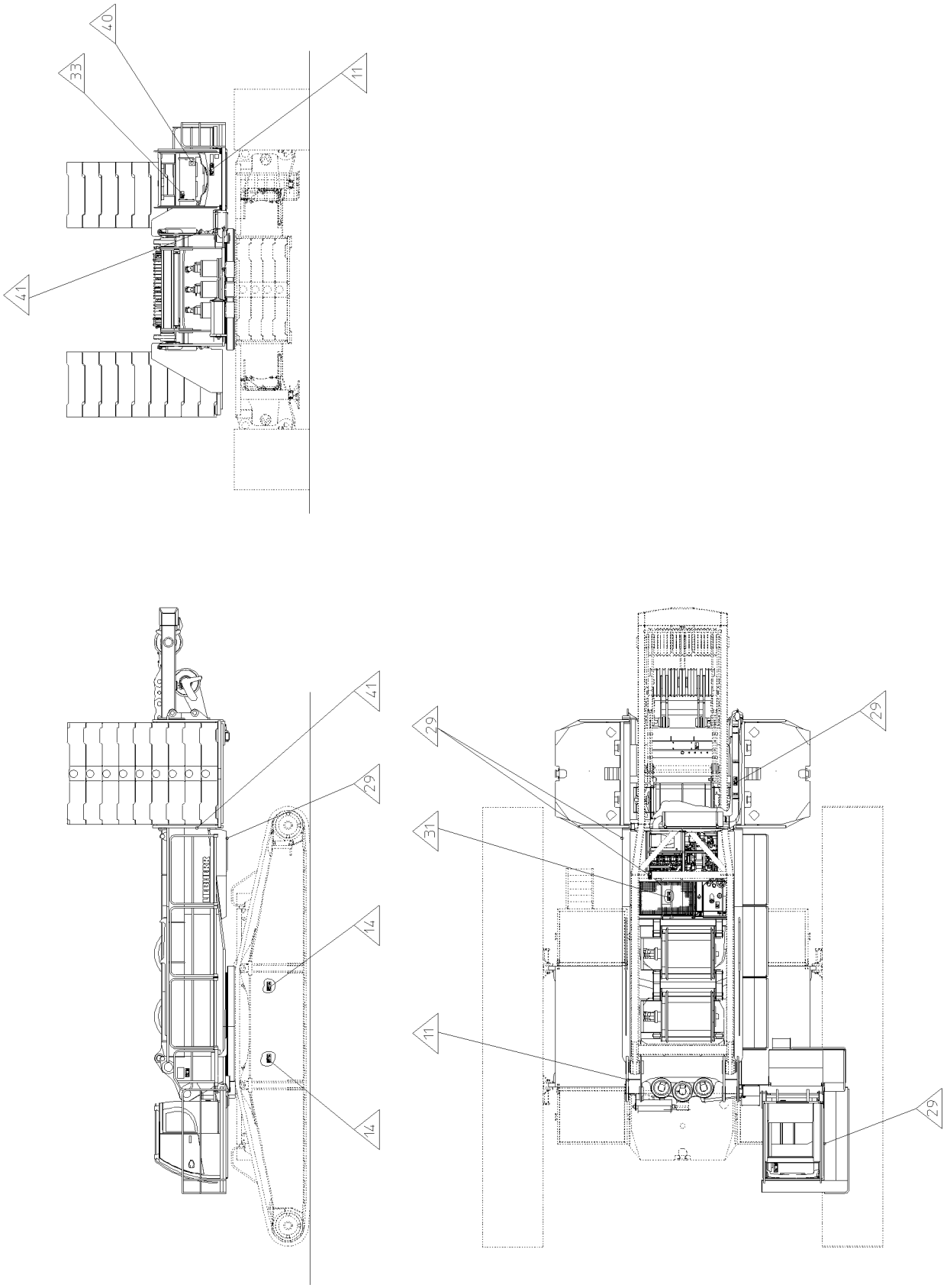

Fig.108905

LWE/LR 1600-2-001/18101-07-02/en

copyright © Liebherr-Werk Ehingen GmbH 2018

1 Warning signs

Note
- ▶ Warning signs are safety signs, which warn of a risk or danger!
- ▶ For that reason, all warning signs on the crane must be complete and always legible!
- ▶ Replace damaged warning signs immediately!

1.1 Warning of suspended load (position 11)

Fig.106026

DANGER
Risk of fatal injury under suspended load!
- ▶ Standing under suspended loads is prohibited!
- ▶ Keep away from the working range of the machine!

1.2 Warning of crushing danger (position 14)

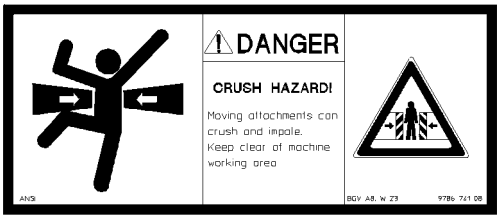

Fig.106027

DANGER
Risk of fatal injury!
- ▶ It is prohibited for anyone to remain in areas, where there is a crushing danger!
- ▶ Keep away from the working range of the machine!

1.3 Danger of burning hands (position 29)

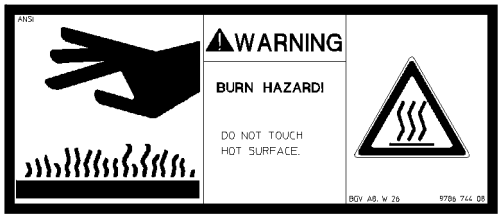

Fig.106028

copyright © Liebherr-Werk Ehingen GmbH 2018

WARNING
Risk of burns!
▶ Do not touch hot surfaces!

1.4 Warning of rotating parts (position 31)

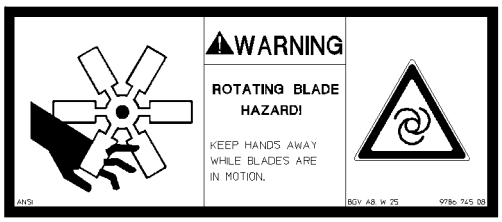

Fig.106029

WARNING
Rotating parts!
The rotating fan blade can cause finger and hand injuries!
▶ Keep your hands away from the rotating fan blade!

1.5 Warning of fatal electric shock (position 33)

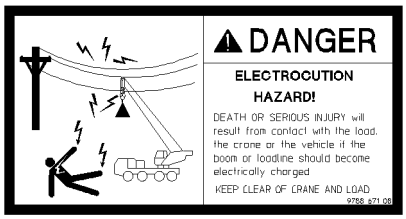

Fig.106814

DANGER
Danger of fatal injury due to electric shock!
If the boom or the hoist rope is under electric current, then death or severe injuries can occur if anyone touches the crane, the vehicle or the load!
▶ Keep away from the crane and the load!

LWE/LR 1600-2-001/18101-07-02/en

copyright © Liebherr-Werk Ehingen GmbH 2018

1.6 Warning of high voltage (position 40)

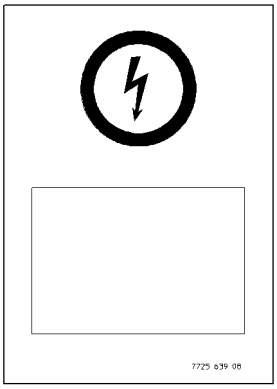

Fig.106031

Note
▶ Only for certain countries!

1.7 Slewing range (position 41)

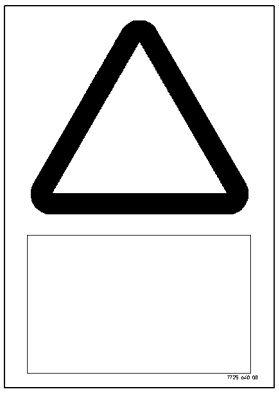

Fig.106032

Note
▶ Only for certain countries!

LWE/LR 1600-2-001/18101-07-02/en

copyright © Liebherr-Werk Ehingen GmbH 2018

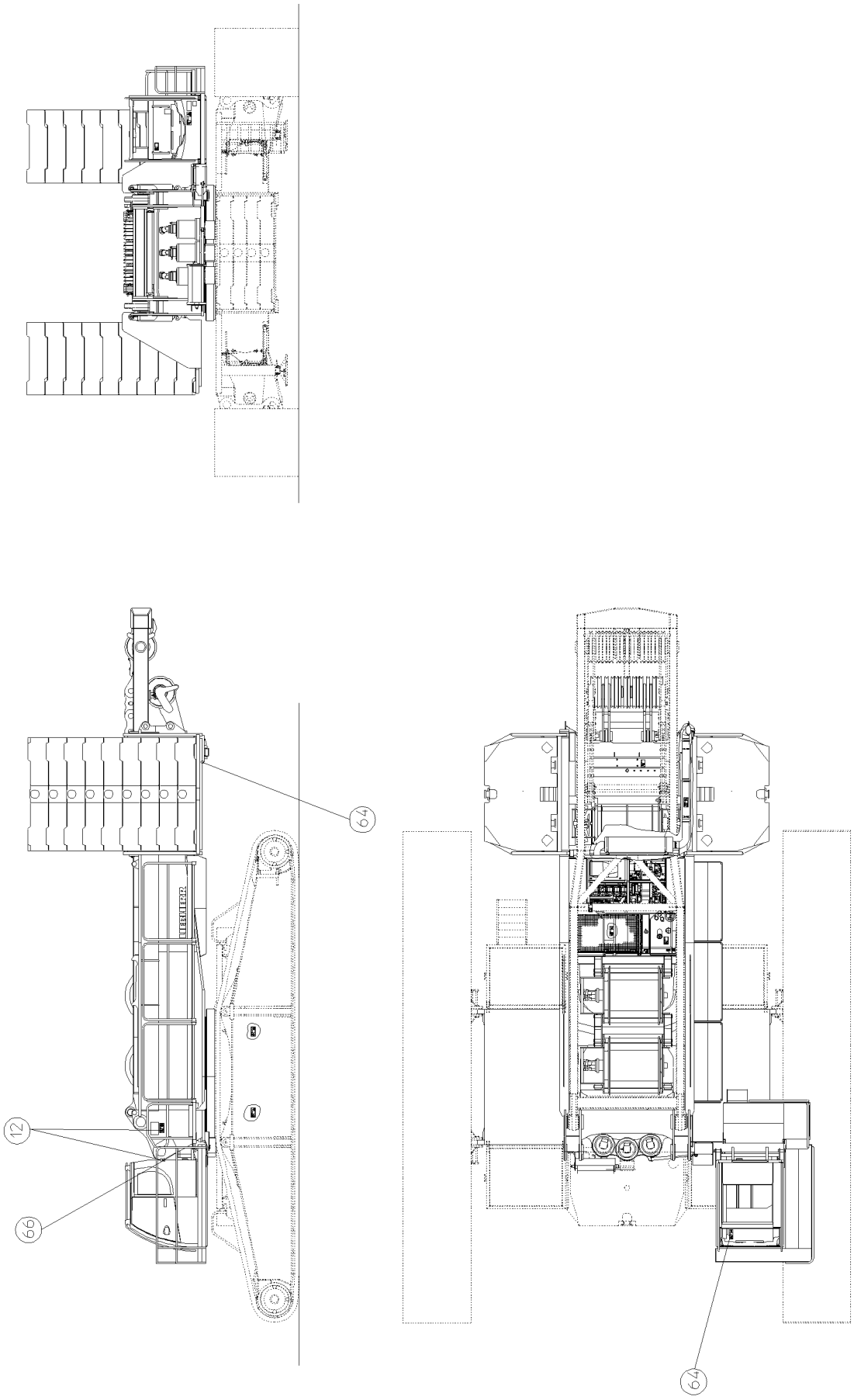

LWE/LR 1600-2-001/18101-07-02/en

Fig.108906

copyright © Liebherr-Werk Ehingen GmbH 2018

2 Command and prohibition signs

2.1 Command sign

Note
- ▶ Command signs are safety signs, which dictate a certain behavior!
- ▶ For that reason, all command signs on the crane must be complete and always legible!
- ▶ Replace damaged command signs immediately!

2.2 Prohibition sign

Note
- ▶ Prohibition signs are safety signs, which prohibit a behavior, which could result in danger!
- ▶ For that reason, all prohibition signs on the crane must be complete and always legible!
- ▶ Replace damaged prohibition signs immediately!

2.2.1 Access for unauthorized personnel prohibited (position 12)

Fig.106037

DANGER
Risk of fatal injury!
If the crane is accessed by unauthorized personnel, life threatening injuries can occur!
- ▶ Access is strictly prohibited during crane operation!

2.2.2 Access to the area is prohibited (position 64)

Fig.106038

WARNING
Risk of injury!
If the prohibited area is accessed, injuries can occur!
- ▶ Do not access the area!

copyright © Liebherr-Werk Ehingen GmbH 2018

2.2.3 Access prohibited (position 66)

Fig.106039

WARNING
Risk of falling!
If the crane is accessed by unauthorized personnel, life threatening injuries can occur!
▶ Do not get on the crane!

LWE/LR 1600-2-001/18101-07-02/en

copyright © Liebherr-Werk Ehingen GmbH 2018

Empty page!

LWE/LR 1600-2-001/18101-07-02/en

copyright © Liebherr-Werk Ehingen GmbH 2018

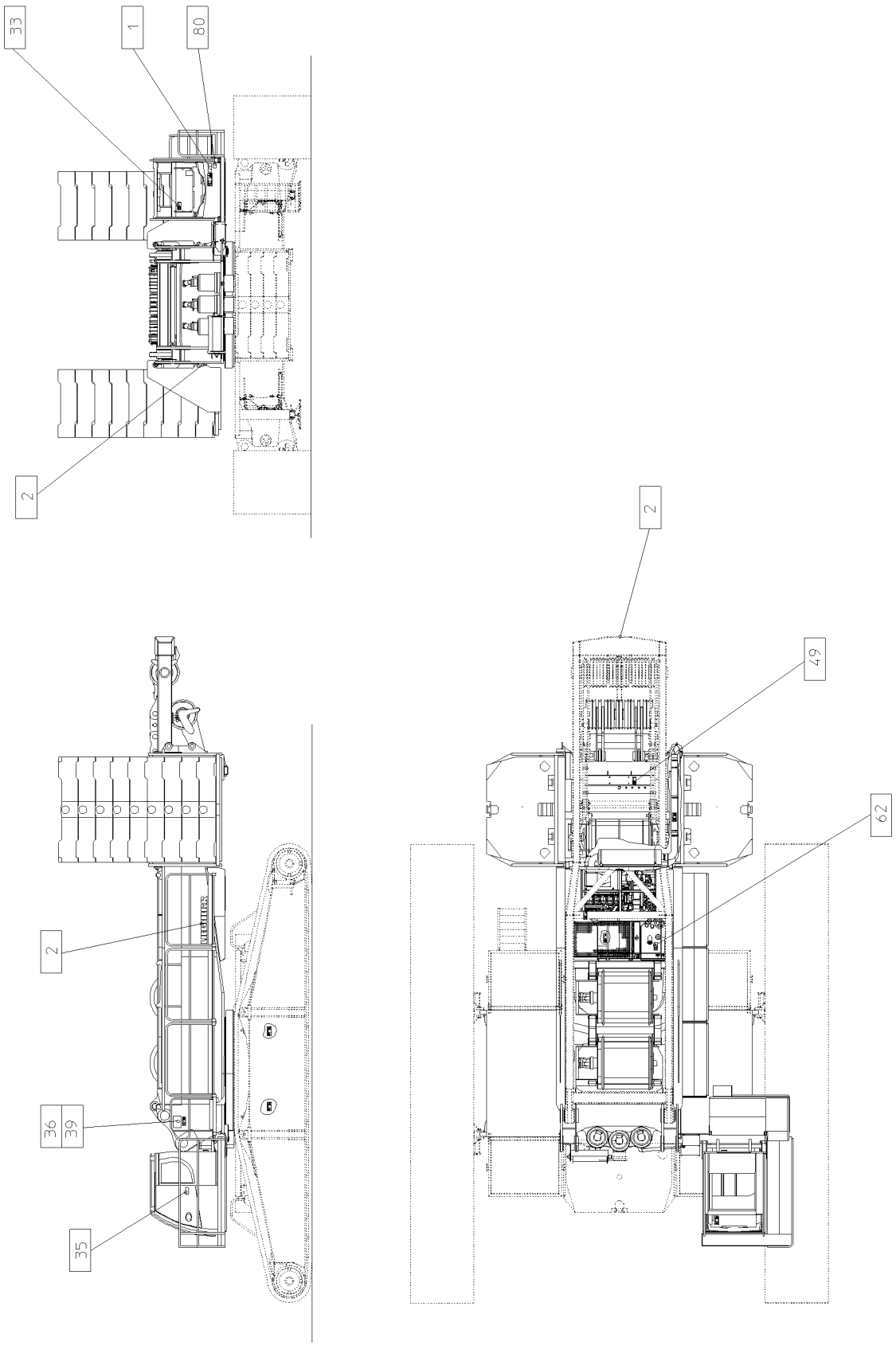

Fig.108907

LWE/LR 1600-2-001/18101-07-02/en

copyright © Liebherr-Werk Ehingen GmbH 2018

3 Notice signs

Note
- ▶ Notice signs are signs, which provide additional notes in text form and a pictogram!
- ▶ For that reason, all notice signs on the crane must be complete and always legible!
- ▶ Replace damaged notice signs immediately!

3.1 Read the operating instructions (position 35)

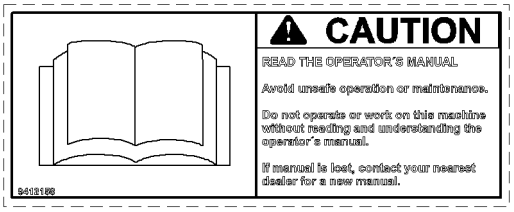

Fig.106048

CAUTION
Read and observe the operating instructions!
- ▶ Avoid unsafe operation and dangerous maintenance!
- ▶ The crane may only be operated if the contents of the operating instructions have been read and understood!
- ▶ If the operating instructions are lost, request a new manual from your nearest dealer!

3.2 Transport weights of components (position 36)

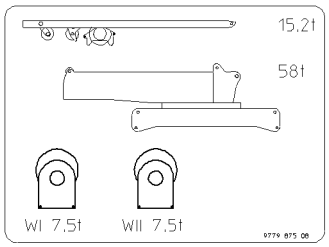

Fig.108913

copyright © Liebherr-Werk Ehingen GmbH 2018

3.3 Transport weights of components (position 39)

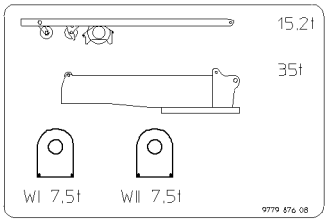

Fig.108914

3.4 Notice sign for refuelling (position 49)

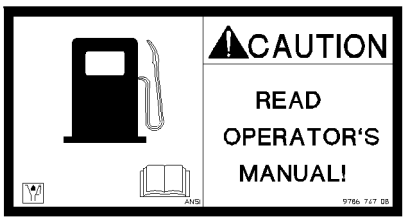

Fig.106049

CAUTION
Property damage to the engine!
If the crane is refuelled with fuel not specified in the operating instructions, then engine damage can occur!
▶ Observe the operating instructions!

3.5 Notice sign for hydraulic oil tank (position 62)

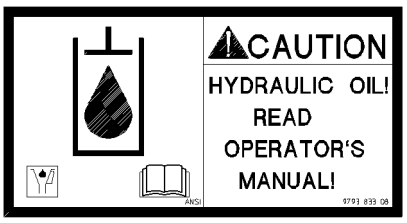

Fig.108912

LWE/LR 1600-2-001/18101-07-02/en

copyright © Liebherr-Werk Ehingen GmbH 2018

NOTICE
Damage to hydraulic components!
If oil is added, which does not meet the specifications of the lubrication chart, hydraulic components can be damaged!
▶ When filling the hydraulic oil tank, make sure to add oil according to the lubrication chart!

3.6 Warranted maximum sound output level (position 80)

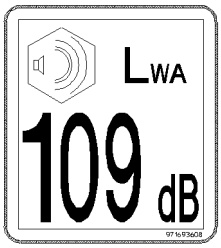

Fig.106889

LWE/LR 1600-2-001/18101-07-02/en

copyright © Liebherr-Werk Ehingen GmbH 2018

Empty page!

LWE/LR 1600-2-001/18101-07-02/en

copyright © Liebherr-Werk Ehingen GmbH 2018

2.05.10 Labeling of the load carriers

1	Identifications on the hook block or load hook	3
2	Identifications on single hook or double hook	4
3	Identifications on auxiliary weights	5

LWE/LR 1600-2-001/18101-07-02/en

copyright © Liebherr-Werk Ehingen GmbH 2018

LWE/LR 1600-2-001/18101-07-02/en

Fig.195219

copyright © Liebherr-Werk Ehingen GmbH 2018

1 Identifications on the hook block or load hook

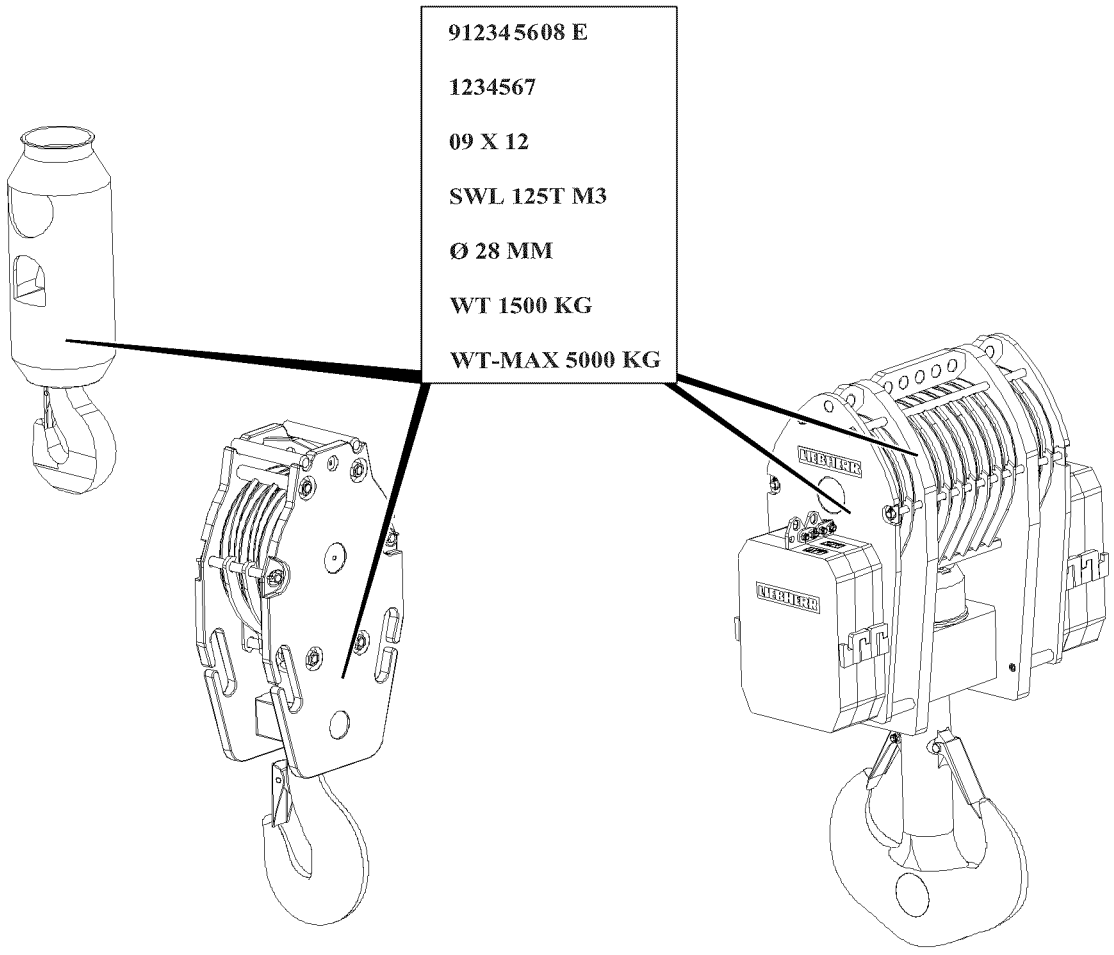

Fig.118509: Identifications on the hook block or load hook

Note

- ▶ The load hooks and hook blocks approved for this crane type can be found in the load chart.
- ▶ The hook blocks shown are examples only and can deviate from the existing hook block.

Punch mark area	Explanation
912345608 E	Liebherr ID no., „E = entschärft (deburred)“
123456	Series or factory test number
09 X 12	Month of construction / supplier marks / year of construction
SWL 125T M3	SWL (Safe Working Load) = Load carrying capacity for power train group M3
Ø 28 mm	Hoist rope diameter
WT 1500 Kg	WT (Weight Tare) = Own weight (without auxiliary weights)

copyright © Liebherr-Werk Ehingen GmbH 2018

Punch mark area	Explanation
WT-MAX 5000 Kg	WT-Max = Maximum permissible own weight of lower pulley block and total number of progressively installed auxiliary weights
	Limits the number of installed auxiliary weights
	Determination via addition of assembled own weights (number of auxiliary weights + hook block)

Identifications on the hook block or load hook

2 Identifications on single hook or double hook

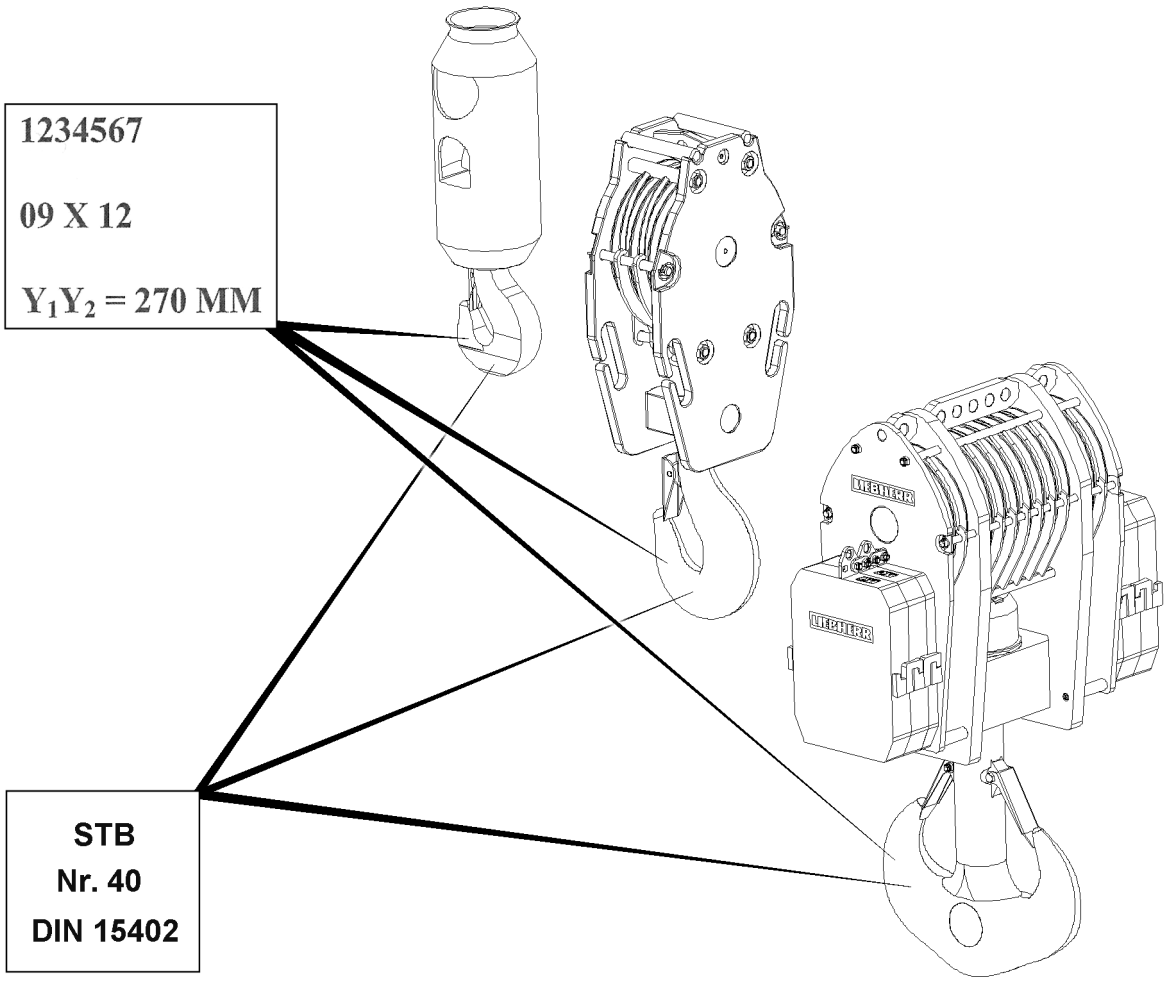

Fig.149061: Identifications on single hook or double hook

Punch mark area	Explanation
STB	Hook manufacturer
40-T	Hook number + strength class according to DIN 15 400
DIN	Hook shape according to DIN 15 401 /DIN 15 402
123456	Series or factory test number

LWE/LR 1600-2-001/18101-07-02/en

copyright © Liebherr-Werk Ehingen GmbH 2018

Punch mark area	Explanation
09 X 12	Month of construction / supplier marks / year of construction
Y1Y2 = 270 mm	Dimension Y or dimension Y1 and dimension Y2 according to DIN (= Test dimensions for recurrent tests)

Identifications on single hook or double hook

3 Identifications on auxiliary weights

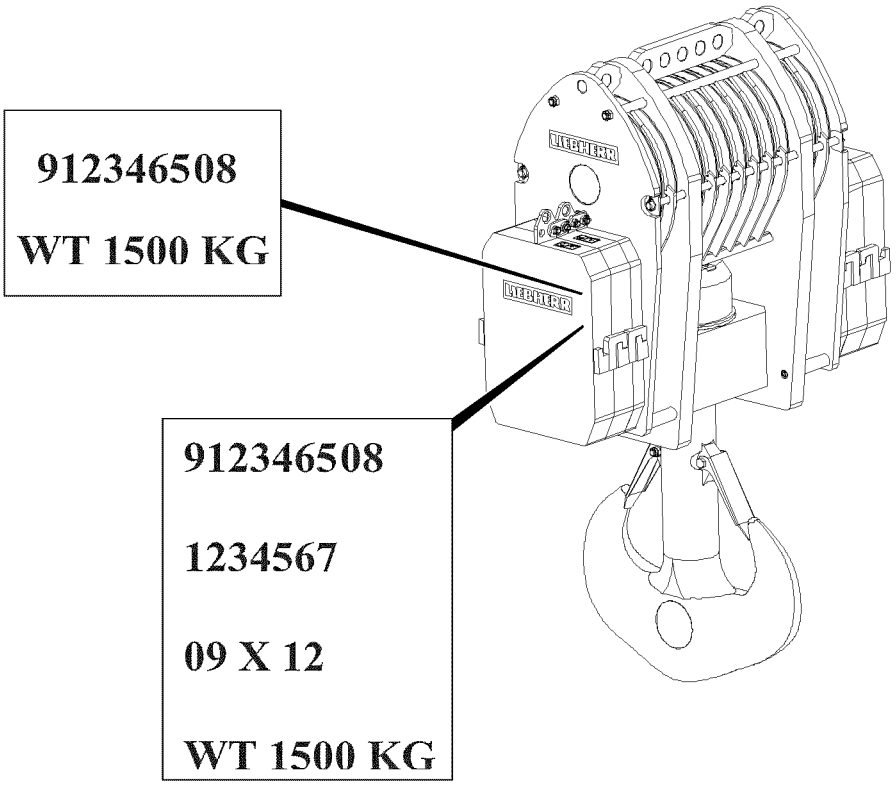

Fig.118511: Identifications on auxiliary weights

Note

▶ The own weight of the individual auxiliary weight is noted on the side on the respective auxiliary weight.

3.1 Identifications on auxiliary weights at delivery

Punch mark area	Explanation
912346508	Liebherr ID no.
WT 1500 Kg	WT (Weight Tare) = Own weight of individual auxiliary weight

Identifications of auxiliary weights at delivery

copyright © Liebherr-Werk Ehingen GmbH 2018

3.2 Identifications on auxiliary weights for reorder

Punch mark area	Explanation
912346508	Liebherr ID no.
123456	Series or factory test number
09 X 12	Month of construction / supplier marks / year of construction
WT 1500 Kg	WT (Weight Tare) = Own weight of individual auxiliary weight

Identifications of auxiliary weights at reorder

LWE/LR 1600-2-001/18101-07-02/en

copyright © Liebherr-Werk Ehingen GmbH 2018

2.06 Fall protection equipment on the crane

1	Personal protective equipment	3
2	Fall arrest equipment on the crane chassis	5
3	Installing the fall arrest equipment on the crane operator's cab	9
4	Fall arrest equipment on the crane superstructure	11
5	Fall arrest equipment o the pivot sections and lattice mast boom	15

LWE/LR 1600-2-001/18101-07-02/en

copyright © Liebherr-Werk Ehingen GmbH 2018

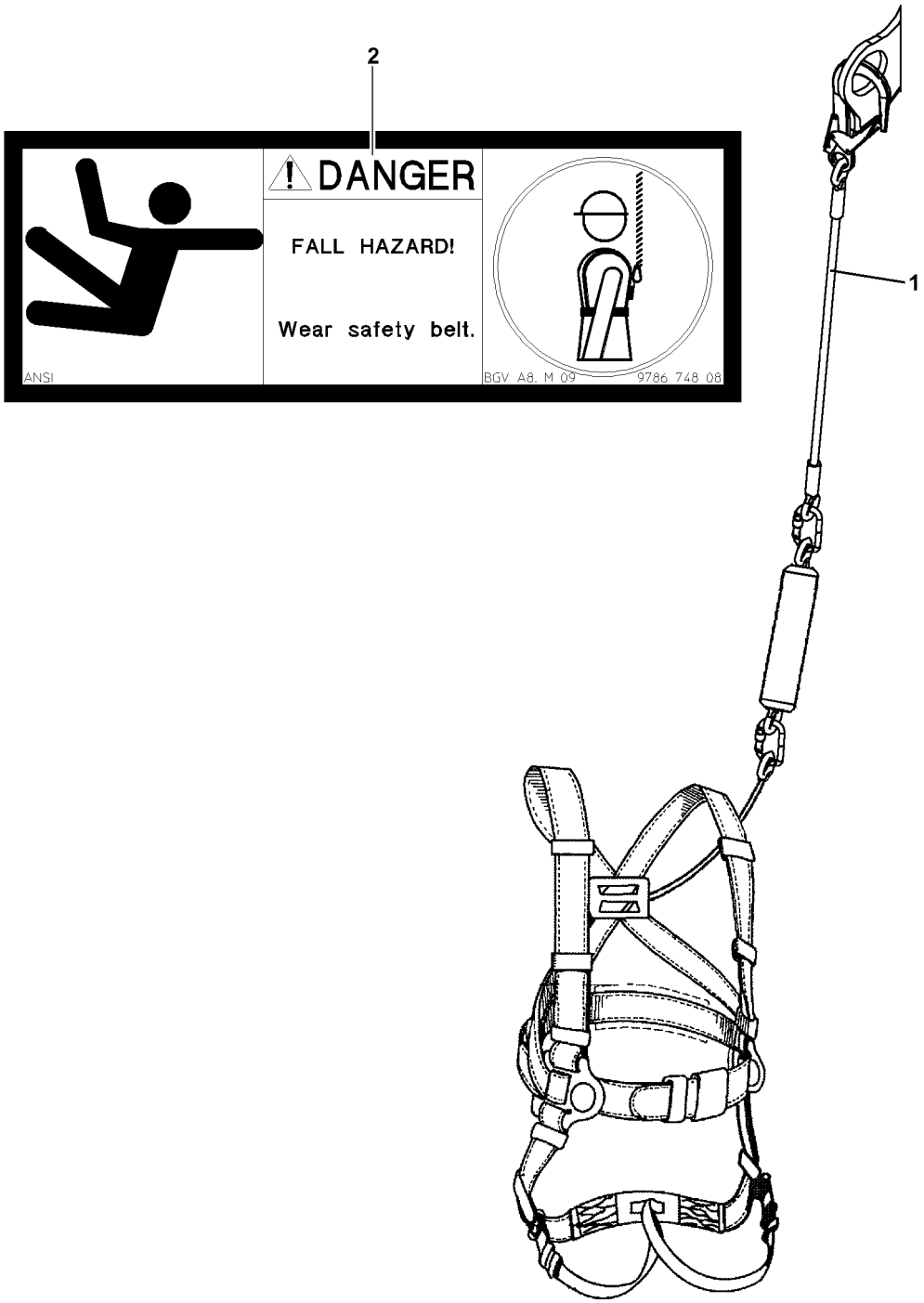

LWE/LR 1600-2-001/18101-07-02/en

Fig.109011

copyright © Liebherr-Werk Ehingen GmbH 2018

1 Personal protective equipment

WARNING
Risk of falling!
During assembly / disassembly, inspection and maintenance work, personnel must be secured with appropriate fall protection equipment to prevent them from falling. If this is not observed, assembly personnel can fall and suffer life-threatening or fatal injuries!

- ▶ If railings are present for the crane, then they must be brought into the corresponding position and secured for installation / removal, inspection and maintenance work!
- ▶ All work, where there is a danger of falling must be carried out with suitable aids (for example: lifting platforms, scaffoldings, ladders, auxiliary crane)!
- ▶ If the work cannot be carried out with such aids nor from the ground, then the assembly personnel must secure themselves with approved fall arrest systems to avoid falling, see Crane operating instructions, chapter 2.04!
- ▶ Fasten personal protective equipment and permissible fall arrest systems before all assembly / disassembly work, maintenance and testing work!
- ▶ Only step on such aids with clean shoes!
- ▶ Keep aids clean and free of snow and ice!
- ▶ During all assembly / disassembly work, maintenance work and inspections, travel or crane operation is prohibited!

Note

- ▶ The sign **2** marks the fastening points and other possibilities (such as railings, retaining ropes), where assembly personnel must hook in the approved fall arrest system **1** to secure themselves against falling!

LWE/LR 1600-2-001/18101-07-02/en

copyright © Liebherr-Werk Ehingen GmbH 2018

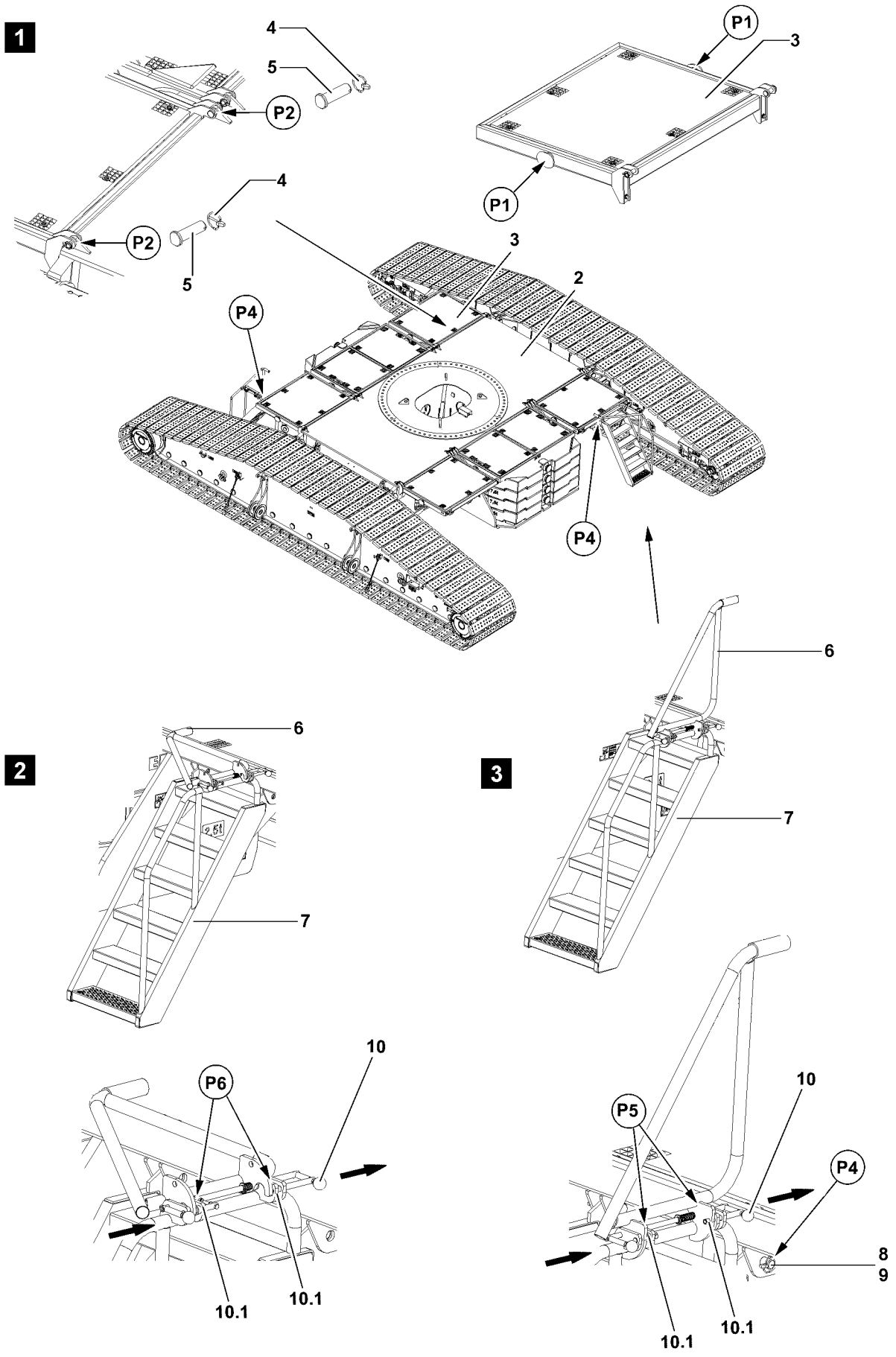

Fig.110808

LWE/LR 1600-2-001/18101-07-02/en

copyright © Liebherr-Werk Ehingen GmbH 2018

2 Fall arrest equipment on the crane chassis

WARNING
Working aloft!
When working aloft, there is a danger of falling! Personnel can be severely injured or killed!
▶ Properly assemble and secure all fall arrest equipment, such as pedestals, catwalks, ladders and railings on the crane chassis!

WARNING
Incorrect handling of the fastening equipment!
If fastening equipment cannot be attached correctly and if it is not secured sufficiently to prevent it from loosening up, loads can fall down. Personnel can be severely injured or killed!
▶ Make sure that the fastening equipment is correctly attached on the fastening points and that it is secured sufficiently to prevent it from loosening up!

2.1 Pedestals on the crane chassis

2.1.1 Installing the front and rear pedestals

WARNING
Falling pedestal!
If the pedestals falls down, personnel can be severely injured or killed!
▶ Do not remove the auxiliary crane until the pedestal **3** is pinned on both sides on points **P2** and until it is secured with the linch pins **4** on both sides!

▶ Attach the pedestal **3** on the points **P1** on the auxiliary crane and lift.
▶ Push the pedestal **3** in on both sides on the brackets on points **P2** on the crawler center section **2**.
▶ Pin the pedestal **3** on the crawler center section **2**: Insert the pins **5** on points **P2** from the inside to the outside and secure with linch pins **4**.
▶ Install three each pedestals on the front and rear on the crawler center section **2**.
▶ Unhook the auxiliary crane from the pedestal **3**.

2.1.2 Removing the front and rear pedestals

▶ Attach the pedestal **3** on the points **P1** to the auxiliary crane.
▶ Tension the fastening equipment.
▶ Unpin the pedestal **3** on the crawler center section **2**: Remove the linch pin **4** on both sides and unpin the pins **5** on points **P2**.
▶ Lift the pedestal **3** with auxiliary crane and remove.
▶ Place the pedestal **3** down.
▶ Remove all pedestals.

LWE/LR 1600-2-001/18101-07-02/en

copyright © Liebherr-Werk Ehingen GmbH 2018

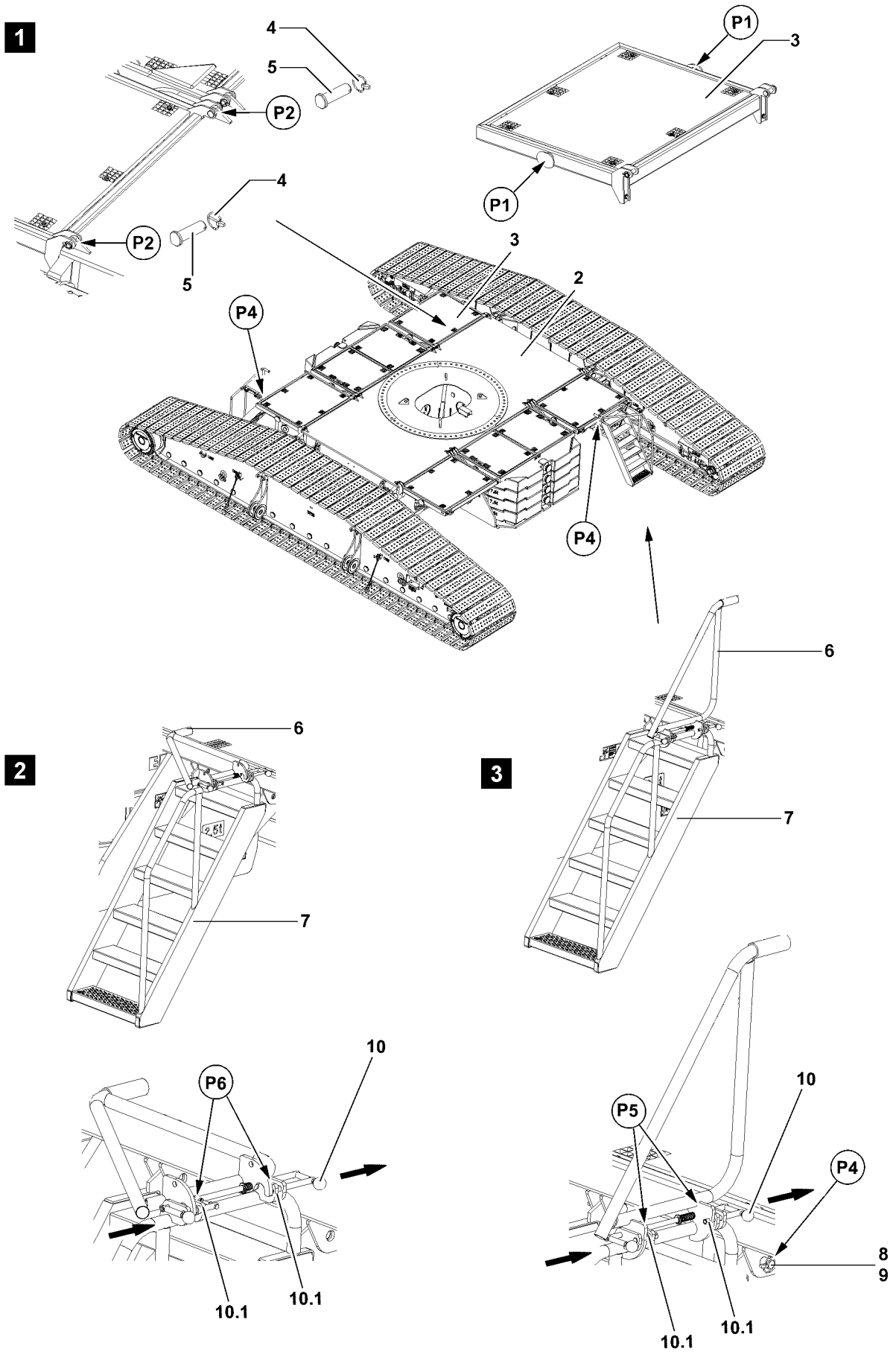

Fig.110808

LWE/LR 1600-2-001/18101-07-02/en

copyright © Liebherr-Werk Ehingen GmbH 2018

2.2 Steps on the crane chassis

2.2.1 Installing the steps

- ▶ Attach the step **7** with the auxiliary crane and position under the pedestals **3** on points **P4**.
- ▶ Pin the steps **7** on the pedestal **3**: Insert the pins **8** on points from the inside to the outside and secure with linch pins **9**.
- ▶ Install the second steps.

2.2.2 Steps during crane operation

NOTICE
Damage of steps!
If the hand rails **6** are not folded to the side before crane operation or before driving the crane, then the hand rails **6** can be damaged during crane operation!
▶ Before crane operation, fold the hand rails **6** to the side!

Make sure that the following prerequisite is met:
– The hand rails **6** are folded upward.

Fold the hand rails to the side

▶ Pull the lever **10** on both sides to the rear until the pins **10.1** are unpinned on the points **P5**.

When the pins **10.1** are unpinned on the points **P5**:
▶ Hold the level **10** pulled to the rear and fold the hand rail **6** to the side.
▶ Slowly release the lever **10** until the pins **10.1** are pinned on the points **P6**.

2.2.3 Steps during crane standstill

WARNING
When working aloft, there is a danger of falling!
If the hand rails **6** are not folded up and secured before stepping on the steps **7**, then persons can fall down! Personnel can be severely injured or killed!
▶ Before stepping on the ladders, fold the hand rails **6** up and secure!

NOTICE
Damage of steps!
If the hand rails **6** are not folded to the side before crane operation or before driving the crane, then the hand rails **6** can be damaged during crane operation!
▶ Before crane operation, fold the hand rails **6** to the side!

Make sure that the following prerequisite is met:
– The hand rails **6** are folded to the side.

Fold the hand rails up

The lever **10** is actuated simultaneously from top and bottom.

▶ Pull the lever **10** on both sides to the rear until the pins **10.1** are unpinned on the points **P6**.

When the pins **10.1** are unpinned on the points **P6**:
▶ Hold the level **10** pulled to the rear and fold the hand rail **6** up.
▶ Slowly release the lever **10** until the pins **10.1** are pinned on the points **P5**.

LWE/LR 1600-2-001/18101-07-02/en

copyright © Liebherr-Werk Ehingen GmbH 2018

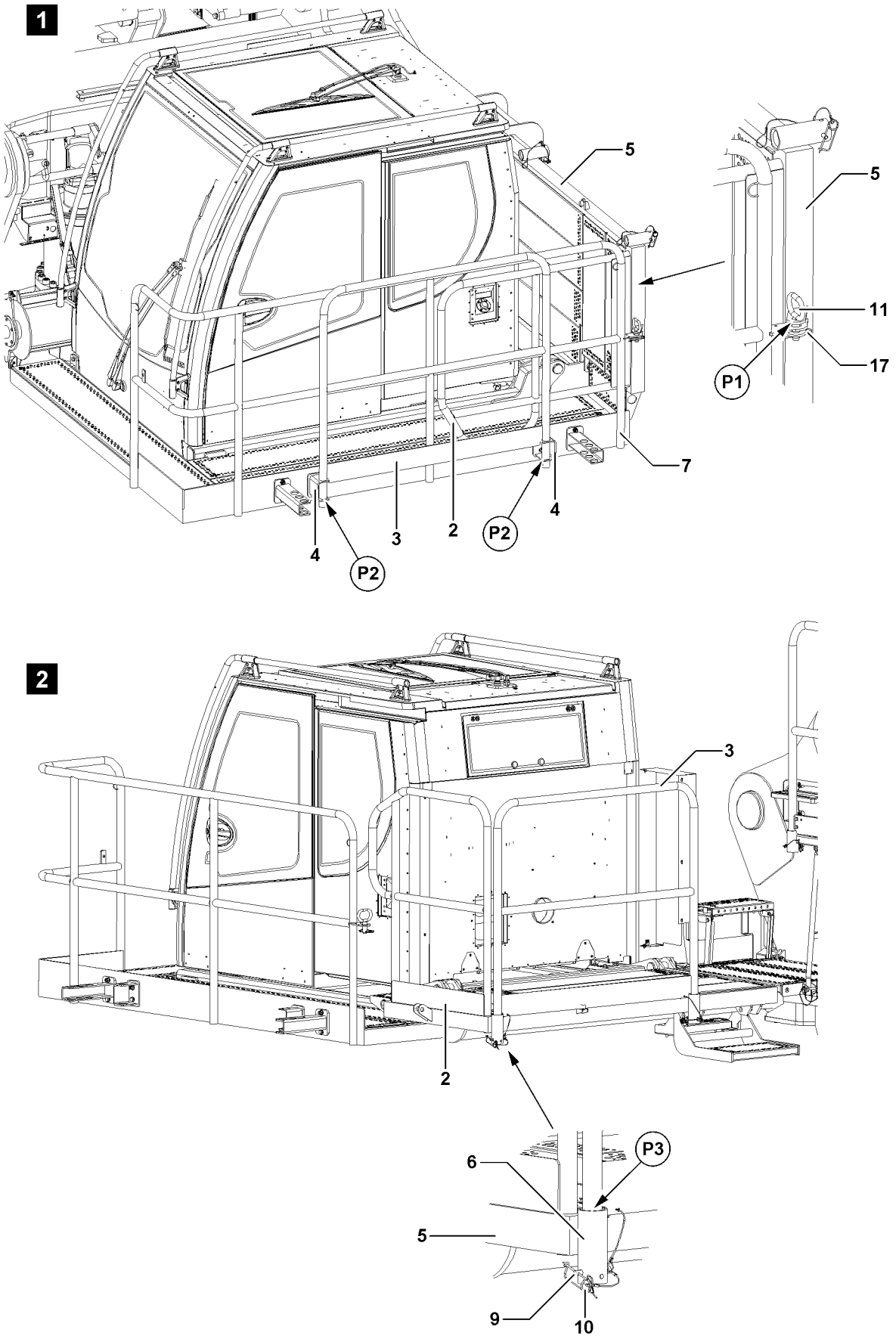

Fig.110377

LWE/LR 1600-2-001/18101-07-02/en

copyright © Liebherr-Werk Ehingen GmbH 2018

3 Installing the fall arrest equipment on the crane operator's cab

3.1 Installing the pedestal

WARNING
Folding down of pedestal!
If the pedestal **5** folds down by itself, then personnel can be severely injured or killed!
- ▶ Fold the pedestal **5** carefully by hand!
- ▶ Make sure that there is no one under the pedestal **5** during the folding procedure!

At assembly, the pedestal **5** is folded down with installed railing **2**, see illustration **1**.

- ▶ Unpin the pedestal **5** on the railing **7**: Remove the linch pin **17** on point **P1** and unpin the pin **11**.
- ▶ Fold the pedestal **5** into horizontal position.
- ▶ Insert the pin **11** on point **P1** and secure with pin **11**.

3.2 Assembling the railings

- ▶ On points **P2** remove the spring retainers **10** and unpin the pins **9**.
- ▶ Remove the railing **3** from the retainers **4** on points **P2**.
- ▶ Insert the railing **3** on the points **P3** in the receptacles **6**, see illustration **2**.
- ▶ Pin the railing **3** on the pedestal **5**: Insert the pins **9** and secure with spring retainers **10**.

3.3 Disassembling the pedestal

WARNING
Folding down of pedestal!
If the pedestal **5** folds down by itself, then personnel can be severely injured or killed!
- ▶ Fold the pedestal **5** carefully by hand!
- ▶ Make sure that there is no one under the pedestal **5** during the folding procedure!

- ▶ Unpin the railing **3** on the pedestal **5**: Remove the spring retainers **10** and unpin the pin **9**, see illustration **2**.
- ▶ Insert the railing **3** on the points **P2** in the receptacles **4** and secure with pin **9** and spring retainer **10**.
- ▶ Remove the linch pin **17** and unpin the pin **11**.
- ▶ Fold the pedestal **5** into vertical position.
- ▶ Pin the pedestal **5** on the railing **7**: Insert the pin **11** on point **P1** and secure with linch pin **17**.

LWE/LR 1600-2-001/18101-07-02/en

copyright © Liebherr-Werk Ehingen GmbH 2018

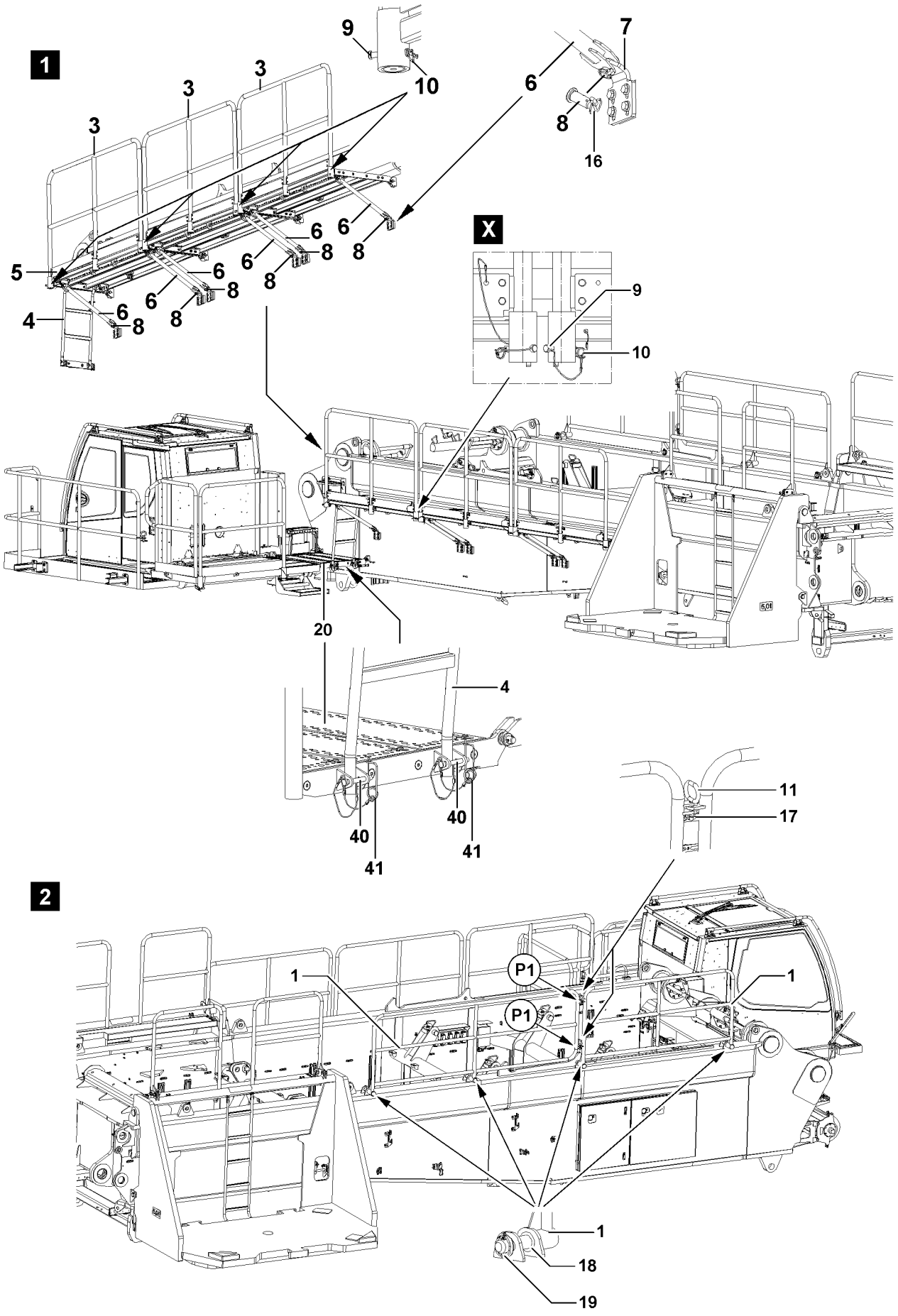

Fig.110374

LWE/LR 1600-2-001/18101-07-02/en

copyright © Liebherr-Werk Ehingen GmbH 2018

4 Fall arrest equipment on the crane superstructure

WARNING
When working aloft, there is a danger of falling!
If fall protection equipment (railings) is intended for winches, for example, or assembly units, then it must be properly assembled and secured!
▶ Properly assemble and secure all fall arrest equipment, such as catwalks, pedestals, ladders and railings on the crane superstructure!

Retaining elements for a railing **3**, see detail **X**:
– A pin **9** and a spring retainer **10** are installed with a rope on the railing **3**.
– A pin **9** and a spring retainer **10** are installed with a rope on the pedestal **5**.

4.1 Assembling pedestals and ladder

WARNING
Risk of falling!
Before any assembly / disassembly work, maintenance and inspections, the assembly personnel must wear approved fall arrest systems!
During assembly and disassembly, personnel must be secured with appropriate aids to prevent them from falling!
If this is not observed, assembly personnel could fall and suffer life-threatening or fatal injuries!
▶ For assembly / disassembly work, maintenance work and inspections, install all railings **3**, railings **20**, ladder **4**, pedestals **5** properly, swing into horizontal position and secure!
▶ Step on ladders only with „clean shoes“!
▶ Keep ladders clean and free of snow and ice!
▶ Replace damaged ladders immediately!
▶ Set up all ladders stable and safe to access!

▶ Fold all pedestals **5** horizontally and swing the supports **6** on retainers **7**, see illustration **1**.
▶ Pin all supports **6** on retainer **7**: Insert the pins **8** and secure with linch pins **16**.
▶ Unpin the pedestal **20** and fold into horizontal position.
▶ Pin the ladder **4** on the pedestal **20**: Insert the pins **40** and secure with spring retainers **41**.

4.2 Assembling the railings

▶ Insert the railing **3** in the pedestals **5**, see illustration **1**.
▶ Pin the railings **3** with pins **9** on the pedestals **5** and secure with spring retainers **10**.
▶ Insert both railings **1** on top on the turntable into the bores **18** and secure with linch pins **19**, illustration **2**.
▶ Pin both railings **1** on points **P1** with pins **11** and secure with linch pins **17**.

LWE/LR 1600-2-001/18101-07-02/en

copyright © Liebherr-Werk Ehingen GmbH 2018

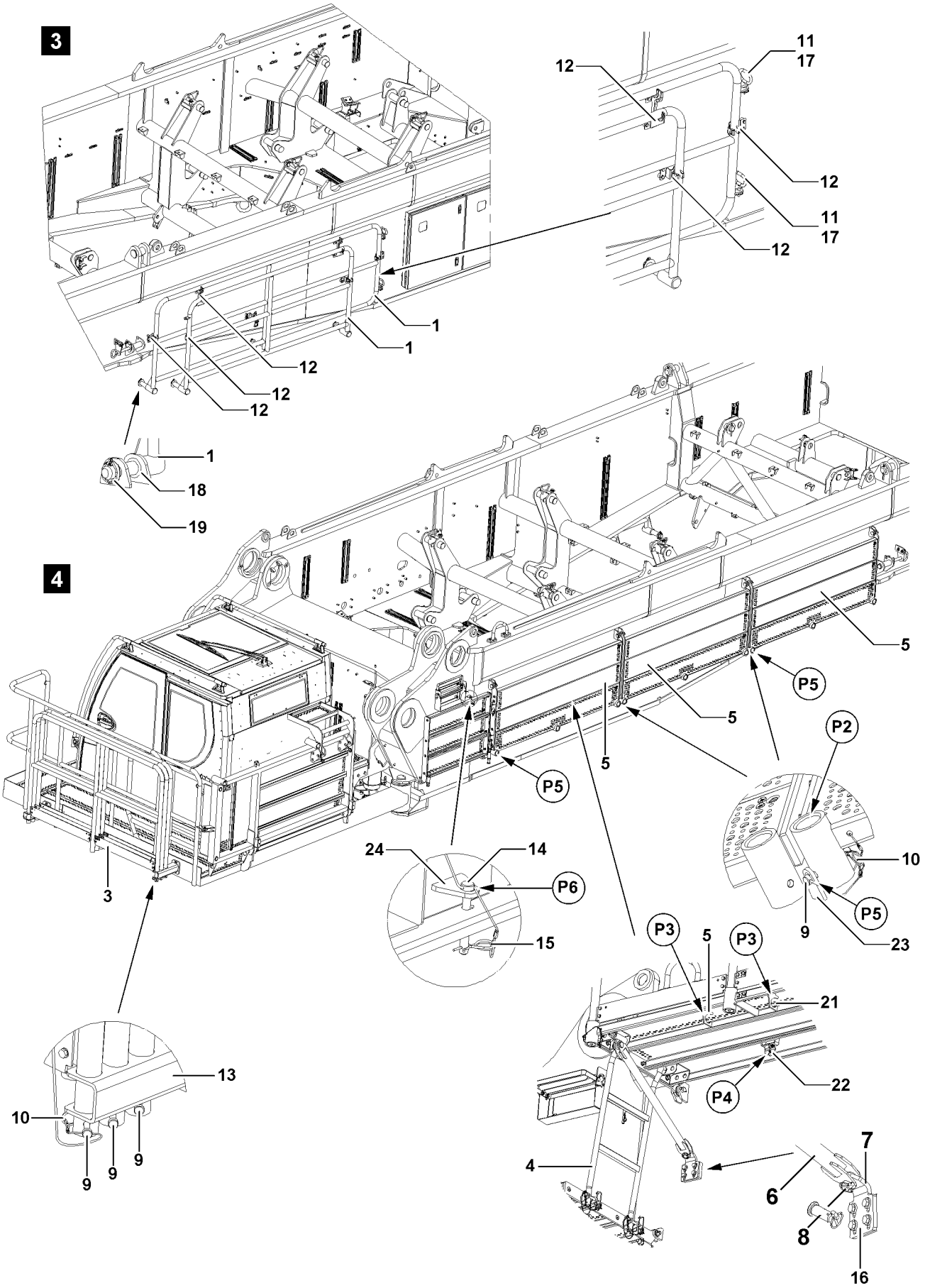

Fig.110375

LWE/LR 1600-2-001/18101-07-02/en

copyright © Liebherr-Werk Ehingen GmbH 2018

4.3 Removing the catwalks for transport

- ▶ Separate both railings **1** from each other: Remove the linch pin **17** and unpin the pins **11** see illustration **3**.
- ▶ Unpin the railing **1** on the turntable: Remove the linch pin **19** and pull the railing **1** from the bores **18**.

The wide railing is attached on the inside, the short railing on the outside.

- ▶ Attach the railings **1** on the retainers **12** on the turntable.
- ▶ Unpin the railings **3** on the pedestals **5**: Remove the spring retainers **10** and unpin the pin **9**, see illustration **4**.
- ▶ Pull the railings **3** from the pedestals **5** and insert into the retainers **13**.
- ▶ Insert the railings **3** into the retainers **13** and secure with pins **9** and with spring retainers **10** on one side.
- ▶ Unpin the ladder **4** on the pedestal **20**: Remove spring retainers **41** and unpin pins **40**.

WARNING
Folding down of pedestal!
If a pedestal **5** folds down by itself, then personnel can be severely injured or killed!
- ▶ Make sure that the pedestal **5** is secured in horizontal position when folding the supports **6** in!

- ▶ Unpin the support **6** on retainer **7**: Remove the linch pin **16** and unpin the pin **8**.
- ▶ Fold the supports **6** in and place them into the retainers **21** on the points **P3**.
- ▶ Fold the ladder **4** in and attach in the retainer **22** on point **P4**.
- ▶ Fold the pedestals **5** down.
- ▶ Pin the pedestal **5** on the brackets **23**: Insert the pins **9** on the points **P5** and secure with linch pins **10**.
- ▶ Fold the pedestal **20** up and pin on the bracket **24**: Insert the pin **14** on point **P6** and secure with linch pin **15**.

LWE/LR 1600-2-001/18101-07-02/en

copyright © Liebherr-Werk Ehingen GmbH 2018

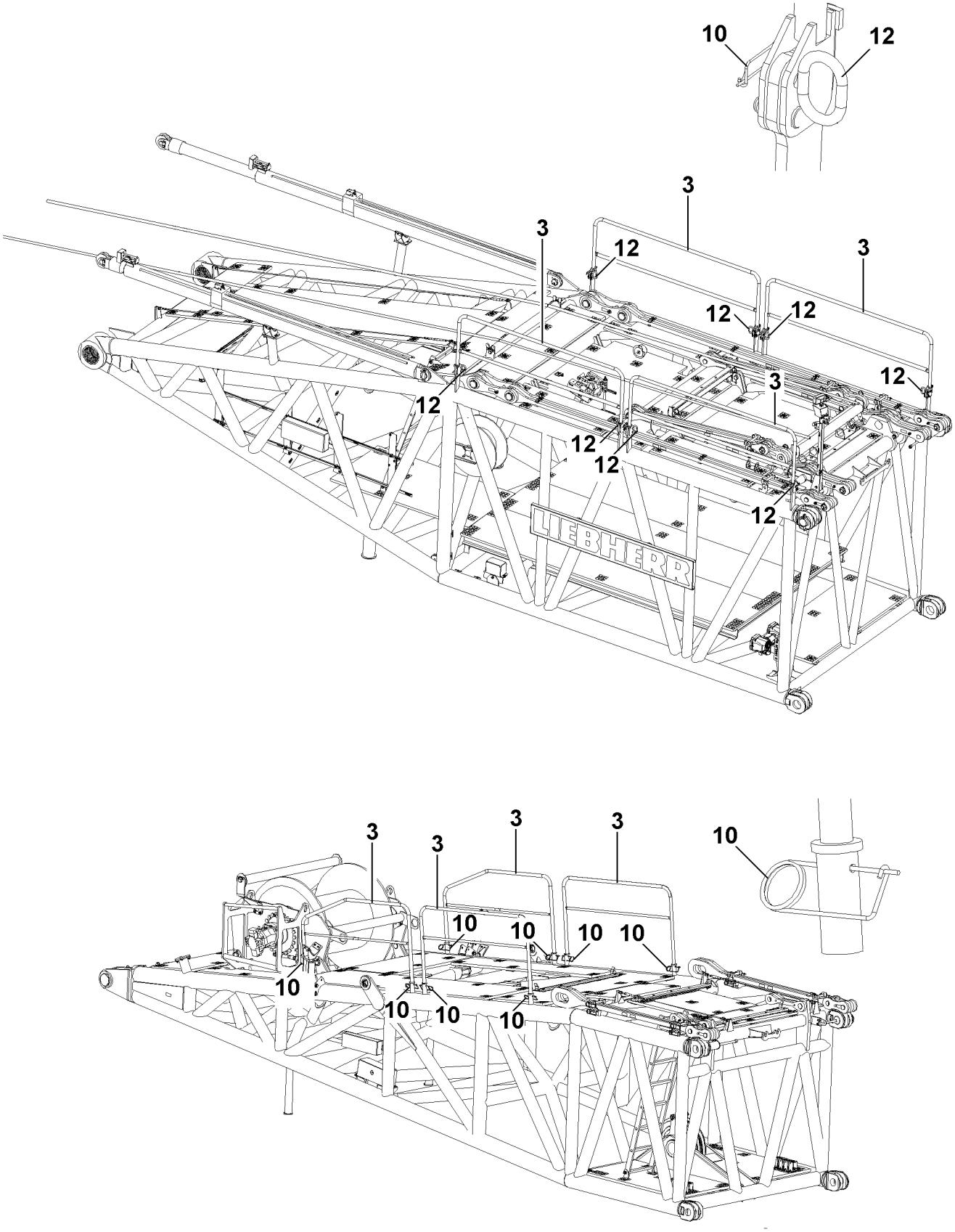

LWE/LR 1600-2-001/18101-07-02/en

Fig.105374

copyright © Liebherr-Werk Ehingen GmbH 2018

5 Fall arrest equipment o the pivot sections and lattice mast boom

5.1 Assembling the railing on the S-pivot section and the derrick pivot section

WARNING
Risk of falling!
Before any assembly / disassembly work, maintenance and inspections, the assembly personnel must wear approved fall arrest systems!
During assembly and disassembly, personnel must be secured with appropriate aids to prevent them from falling.
If this is not observed, assembly personnel could fall and suffer life-threatening or fatal injuries!

- ▶ For assembly / disassembly work, maintenance work and inspections on the S-pivot section and the derrick pivot section, install all railings **3** and secure!
- ▶ Step on the S-pivot section and the derrick pivot section only with „clean shoes“!

- ▶ Swing the railing **3** on the S-pivot section into position, pin with pins **12** and secure with spring retainers **10**.
- ▶ Push the railings **3** on the derrick pivot section into position and secure with spring retainers **10**.

LWE/LR 1600-2-001/18101-07-02/en

copyright © Liebherr-Werk Ehingen GmbH 2018

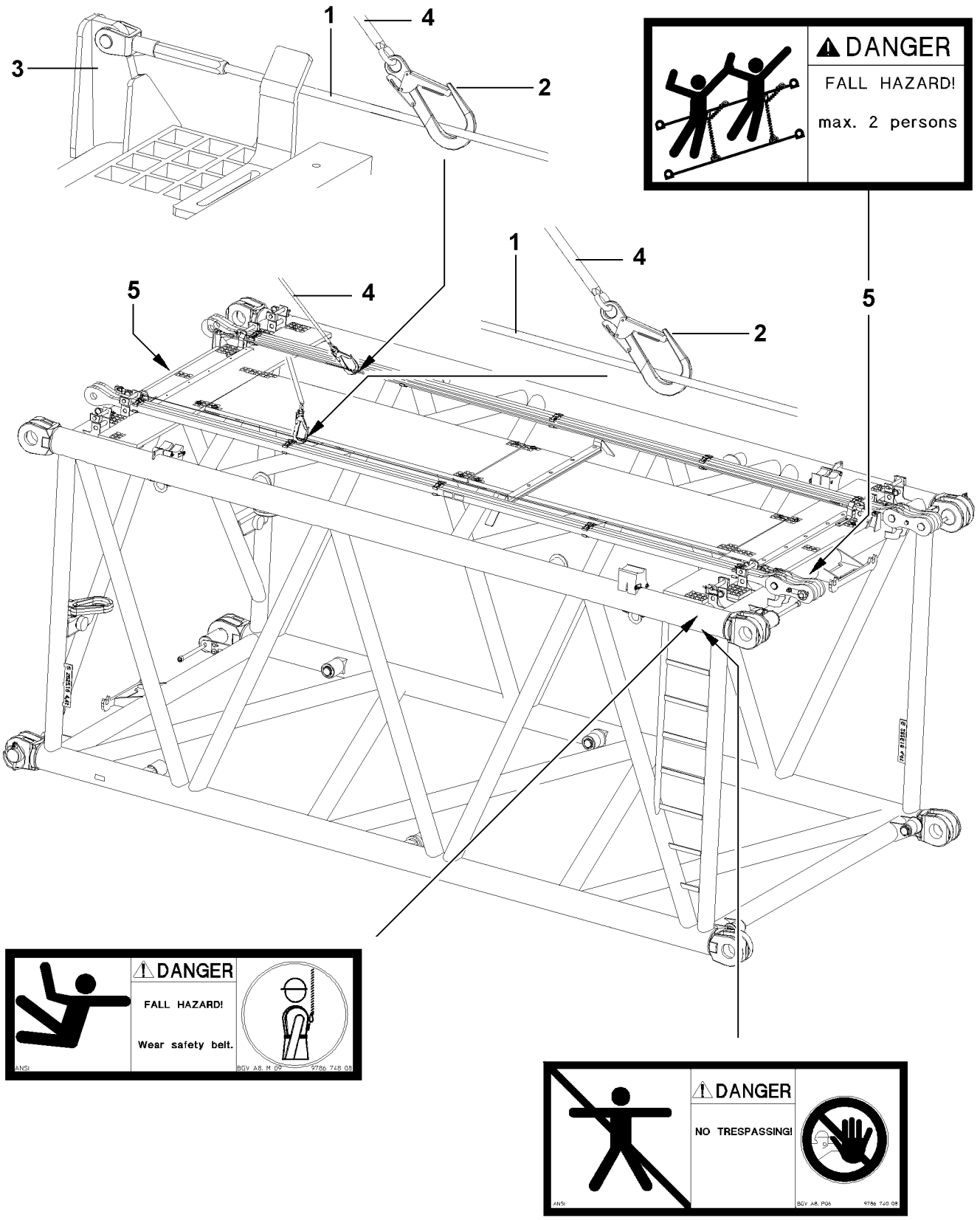

LWE/LR 1600-2-001/18101-07-02/en

Fig.107341

copyright © Liebherr-Werk Ehingen GmbH 2018

5.2 Retaining ropes on the lattice sections

On the lattice sections, on the upper left and right hand side, are retaining ropes **1** assembled as fall arrest equipment.

NOTICE
Danger of damage!
▶ Never hang loads or objects on the retaining ropes **1**!

WARNING
Risk of falling!
During assembly and disassembly, personnel must be secured with appropriate aids to prevent them from falling. If this is not observed, assembly personnel could fall and suffer life-threatening or fatal injuries!
▶ Any work, where there is a danger of falling must be carried out with suitable aids (for example: lifting platforms, scaffoldings, ladders, auxiliary crane)!
▶ If the work cannot be carried out with such aids nor from the ground, then the assembly personnel must secure themselves with approved fall arrest systems **4** to avoid falling, see Crane operating instructions, chapter 2.04!
▶ The assembly personnel must hook themselves for all installation / removal work, maintenance and inspection work on the lattice mast boom with approved fall arrest systems **4** on the retaining ropes **1** on the left and right hand side with both snap hooks **2** and secure themselves to prevent them from falling! (for example: Fall arrester with self-actuating blocking function and an automatic tension and pull in device for the connectors)!
▶ The connector must be set to a length as short as possible so that is it impossible to hit the ground in case of a fall!
▶ Fall absorbers may not be used, because they stretch too much in case of a fall!
▶ On the retaining ropes **1** on the left and right hand side, no more than **maximum two persons** may hook themselves with the snap hooks **2** and secure themselves to prevent falls, see sign **5**!
▶ Changing the snap hooks **2** over is only permissible on the connecting points from lattice section to lattice section!
▶ When changing the snap hook **2** from lattice section to lattice section, one snap hook **2** must always be hooked on one retaining rope **1**!
▶ Never release both snap hooks **2** simultaneously from the retaining ropes **1**!
▶ Before any assembly / disassembly work, maintenance and inspection work it must be ensured that all obstacles below have been removed from the work place and that there is sufficient clearance in case of a fall!
▶ During all assembly / disassembly work, maintenance work and inspections, travel or crane operation is prohibited!

5.3 Replacing retaining ropes subjected by a fall

WARNING
Danger of accidents due to fall subjected retaining ropes!
If fall subjected retaining ropes **1** are not replaced after a fall, then the retaining ropes can fail in case of another fall! The assembly personnel can be killed or severely injured!
▶ **Expert personnel** must immediately replace any retaining ropes **1** which were subjected in a fall and inspect the respective anchor points **3** for damage!
▶ If the anchor points **3** are damaged, then they must be replaced immediately by **expert personnel**!

LWE/LR 1600-2-001/18101-07-02/en

copyright © Liebherr-Werk Ehingen GmbH 2018

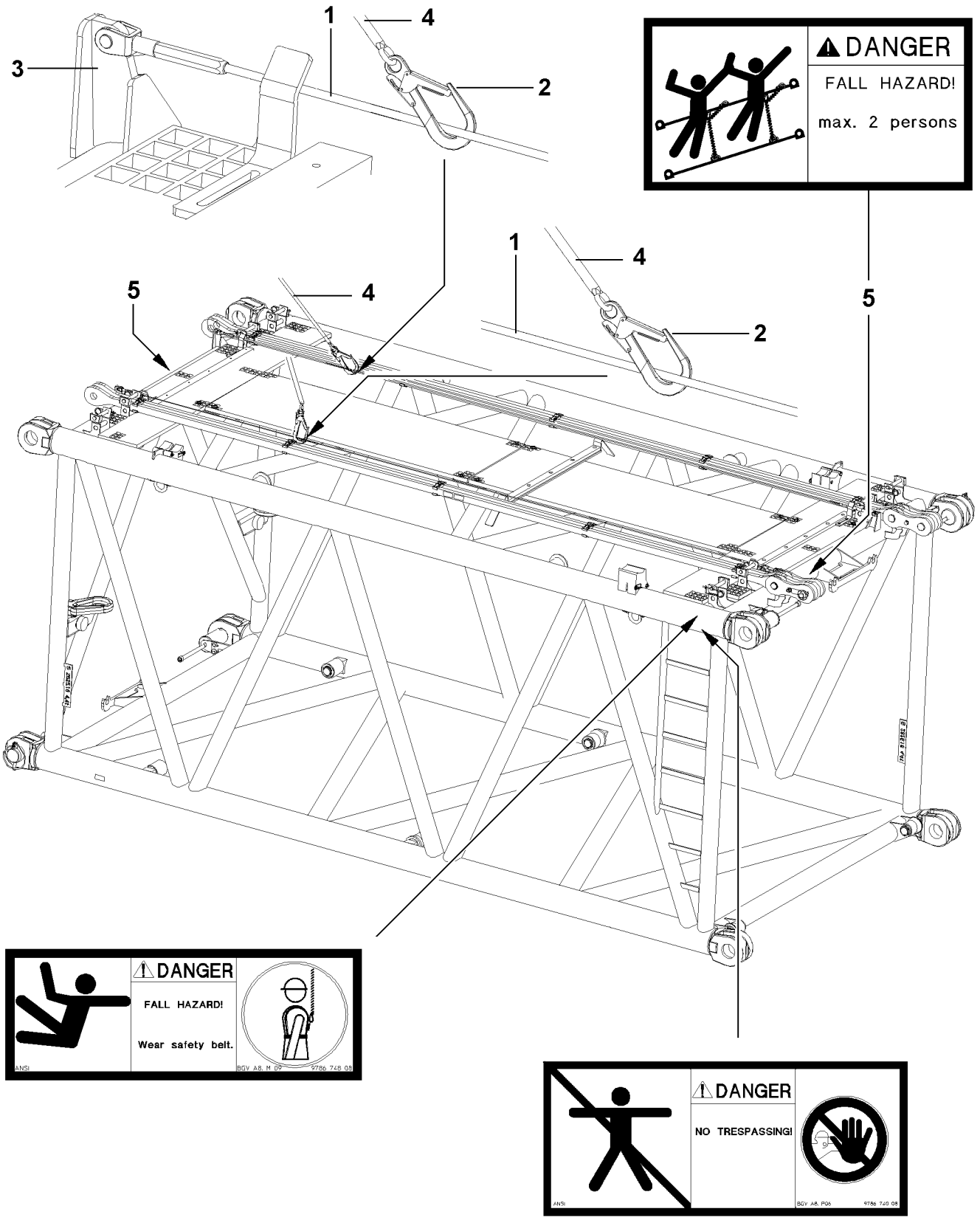

LWE/LR 1600-2-001/18101-07-02/en

Fig.107341

copyright © Liebherr-Werk Ehingen GmbH 2018

5.4 Inspection of retaining ropes and anchor points

WARNING
Danger of falls due to damaged retaining ropes or anchor points!
The retaining ropes **1** and anchor points **3** must be inspected **at least once a year** by **expert personnel** for safety and damage!
If any defects are found on the retaining ropes **1** or anchor points **3** during the inspections, then the retaining ropes **1** or anchor points **3** must be replaced immediately by **expert personnel**! If this is not observed, assembly personnel could be killed or fatally injured in a fall!
▶ Have damaged retaining ropes **1** or anchor points **3** replaced immediately by **expert personnel**!

5.5 Documenting the inspections in writing

Note
▶ The scope and results of tests should be documented to permit reproducibility. This documentation forms part of the crane records and should be safely stored during the entire service life of the crane.

LWE/LR 1600-2-001/18101-07-02/en

copyright © Liebherr-Werk Ehingen GmbH 2018

Empty page!

LWE/LR 1600-2-001/18101-07-02/en

copyright © Liebherr-Werk Ehingen GmbH 2018

2.08 Working in low temperatures

1	Auxiliary equipment	3
2	Ambient temperatures below -20 °C	3
3	Maintenance	7

LWE/LR 1600-2-001/18101-07-02/en

copyright © Liebherr-Werk Ehingen GmbH 2018

LWE/LR 1600-2-001/18101-07-02/en

Fig.195219

copyright © Liebherr-Werk Ehingen GmbH 2018

1 Auxiliary equipment

Without „auxiliary equipment for working at low temperatures“, the crane can be operated and stored at ambient temperatures between -20 °C and +50 °C.

At ambient temperatures below -20 °C , the crane must be modified with „auxiliary equipment for working at low temperatures“.

WARNING
Working at low temperatures without the corresponding auxiliary equipment!
The crane components can be damaged and fail. The load can rip off.
Death or severe bodily injuries.

If the crane is operated at an ambient temperature lower than -20 °C:
- ▶ Make sure that the crane is equipped with the corresponding „auxiliary equipment for working at low temperatures“.
- ▶ Match the operating fluids in time to the ambient temperature.

2 Ambient temperatures below -20 °C

2.1 Winter operation

Low temperatures, such as snow, frost and ice can impair crane operation and cause problems on the crane. Freezing takes place often at low temperatures.

WARNING
Snow and ice on the crane components!
The crane components can be damaged and fail.
Personnel can fall from the accesses!
- ▶ Remove the snow and ice from all accesses, steps and catwalks.
- ▶ Remove the snow and ice from all rope pulleys and winches.
- ▶ Remove the snow and ice from the hose drum and limit switch.
- ▶ Remove the snow and ice from the crane.

WARNING
Snow and ice below the support plates or the crawler carriers!
The crane can slip and fatally injure personnel.
- ▶ Remove the snow and ice on top and below the support plates.
- ▶ Remove the snow and ice on top and below the crawler carrier.
- ▶ Remove the snow and ice from the travel gear.

Prerequisites for start up with the ambient temperature below -20 °C
- – The hose drum and cable are easily movable.
- – All rope pulleys are easily movable.
- – The view from the crane cab is free. The mirrors are free of snow and ice.
- – Fastening equipment is approved for the ambient temperatures present.
- – The load fastening points are approved for the ambient temperatures present.

LWE/LR 1600-2-001/18101-07-02/en

copyright © Liebherr-Werk Ehingen GmbH 2018

2.2 Preheating time

Crane components	Preheating time
Engine preheating up to start at -40 °C ambient temperature	45 minutes
Preheat the hydraulic system in the crane superstructure and the crane chassis	30 minutes
Preheat the crane cab / driver's cab for start up at the same time up to 5 °C	10 minutes
Total preheating time	**75 minutes**

2.3 Engine preheating

If the ambient temperature is lower than -20 °C the chassis engine and / or superstructure engine must be preheated before starting.

Depending on the crane type, a chassis engine and / or a superstructure engine is installed.

The preheating of the chassis engine is described in the Crane operating instructions, chapter 6.01.

The preheating of the superstructure engine is described in the Crane operating instructions, chapter 6.02.

▶ Preheat the chassis engine and / or the superstructure engine.
▶ Start the chassis engine and / or the superstructure engine.

When the chassis engine and / or the superstructure engine has reached its operating temperature:
▶ Turn off engine preheating.

2.4 Preheating the hydraulic oil

If the ambient temperature is lower than -20 °C the hydraulic oil must be preheated prior to crane operation.

NOTICE
Hydraulic oil **not** preheated!
The hydraulic system can be damaged during crane operation.
▶ Preheat the hydraulic oil to at least 20 °C before crane operation.
▶ Retract and extend all the hydraulic cylinders in an unloaded state over the entire stroke multiple times.

WARNING
Persons in the area of the hoist movement!
Personnel can be injured.
▶ Observe the area of the hoist movement.
▶ Make sure that there are **no** persons in the area of the hoist movement.

2.4.1 Turning the hydraulic oil preheating on

Make sure that the following prerequisites are met:
– The engine is running.
– Hydraulic oil preheating is available.

The hydraulic oil preheating is described in the Crane operating instructions, chapter 4.03.

▶ Turn the hydraulic oil preheating on.

When the hydraulic oil is preheated:
▶ Turn the hydraulic oil preheating off.

LWE/LR 1600-2-001/18101-07-02/en

copyright © Liebherr-Werk Ehingen GmbH 2018

2.4.2 Supporting the crane

The supporting of the mobile crane is described in the Crane operating instructions, chapter 3.05.

All support plates must be supported with suitable and stable materials.

If moveable support plates are not available, the support plates must be supported **on one side of the crane** with greased polyamide plates.

WARNING
No movable support plates or crane **not** supported with greased polyamide plates!
The sliding beams can bend. The support plates can suddenly move to the side.
The load can swing and fatally injure personnel.
▶ Use moveable support plates.

If there are no movable support plates available:
▶ Support the support plates **on one side of the crane** with greased polyamide plates.

When supporting the crane, extend the support cylinder a maximum of 50 %.

The wheels must not come in to contact with the ground after the crane is supported.

▶ Support the support plates when necessary.
▶ Support the crane.

2.4.3 Cranes with lattice mast boom

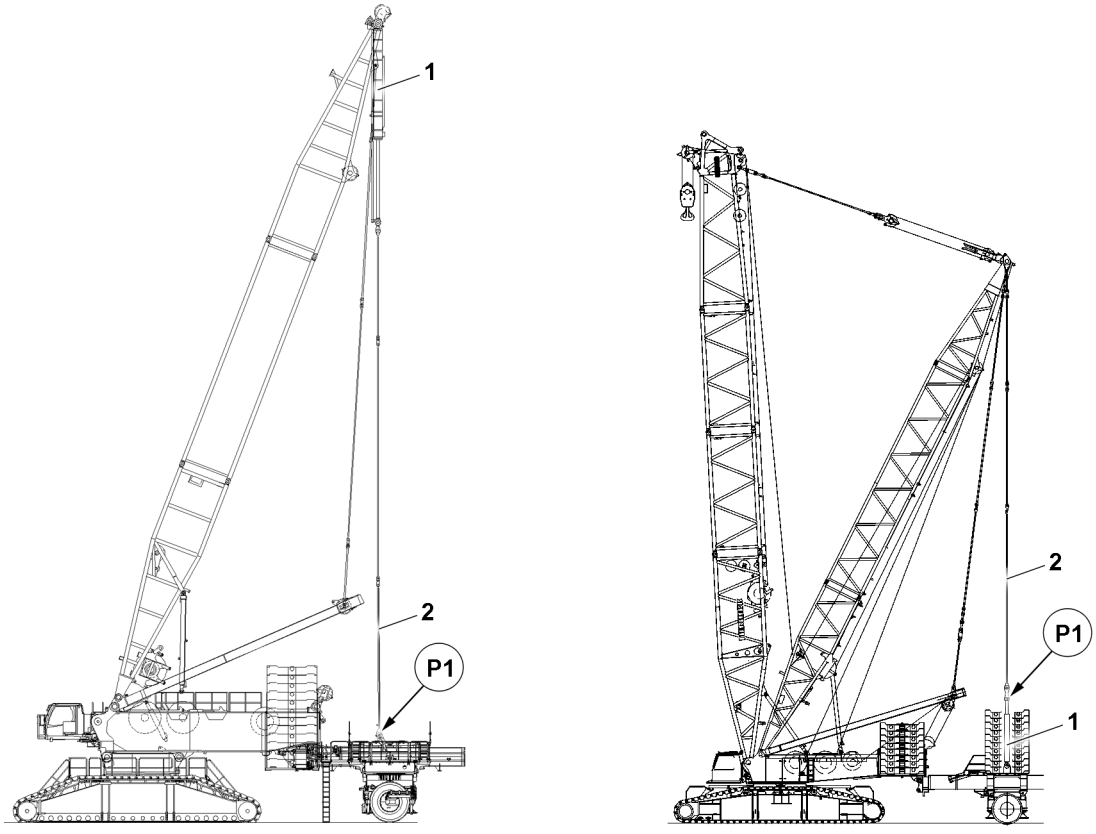

Fig.126875: Removing the guy rods on the derrick ballast

At ambient temperatures of less than -20 °C , the pull cylinders must be preheated by means of retraction and extension. Before the pull cylinders can be preheated, the guy rods **2** must be removed at position **P1** on the derrick ballast.

Disassembly and assembly of the guy rods **2** on the derrick ballast is described in the Crane operating instructions, chapter 5.35 and chapter 5.36.

LWE/LR 1600-2-001/18101-07-02/en

copyright © Liebherr-Werk Ehingen GmbH 2018

▶ Remove the guy rods **2** at position **P1** on the derrick ballast.

NOTICE
Danger of collision!
Damage of the guy rods, derrick ballast or other components.
▶ When retracting and extending the guy rods, avoid contact with other components.

▶ Retract and extend the pull cylinders **1** in an unloaded state over the entire stroke multiple times.

When additional hydraulic cylinders are installed on the crane with lattice mast:
▶ Retract and extend the hydraulic cylinders in an unloaded state over the entire stroke multiple times.

2.4.4 Cranes with telescopic boom

Make sure that the following prerequisites are met:
– The crane is supported and horizontally aligned.
– No load is hanging on the hook

▶ Retract and extend the luffing cylinder in an unloaded state over the entire stroke multiple times.
▶ Retract and extend the telescoping cylinder in an unloaded state over the entire stroke multiple times.

2.5 Assembling / disassembling the crane component

Below an ambient temperature of -20 °C the danger of damage is greater if the crane component is struck during assembly or disassembly. Especially the counterweight is subject to greater danger of damage if struck.

NOTICE
Striking of the crane component during assembly or disassembly!
Crane components can be damaged.
▶ Do **not** strike the crane component during assembly and disassembly
▶ Carry out all work slowly and with utmost caution.

2.6 Reduce rope pull

When working at an ambient temperature below -20 °C Liebherr-Werk Ehingen recommends reducing the rope pull.

The rope pull on the hoist rope can be reduced by increasing the rope reeving.

Note
Increase of rope reeving!
Due to the increased rope reeving, the hoist rope length may not be sufficient for lowering the hook block to the ground.
▶ Pay attention to rope length.

NOTICE
Rope reeving higher than specified in the load chart!
Danger of slack rope formation due to a too low hook block weight. Damage of hoist rope.
▶ Increase the hook block weight accordingly.

▶ Increase the rope reeving specified in the load chart.

2.7 Increase the hook block weight

The calculation of the minimum required hook block weight is described in the load chart.

LWE/LR 1600-2-001/18101-07-02/en

copyright © Liebherr-Werk Ehingen GmbH 2018

Ambient temperature	Increase the hook block weight
-21 °C to -30 °C	Increase the minimum required hook block weight by 10 %.
-31 °C to -40 °C	Increase the minimum required hook block weight by 15 %.

▶ Increase the minimum required hook block weight depending on the ambient temperature. Observe and adhere to the „hook block weight“ charts.

Note
▶ Observe and comply with the permissible hook block weights for erection and take down of the boom systems in the erection and take down charts.

2.8 Crane operation

In case of an ambient temperature below -20 °C , crane operation requires an anticipatory working procedure adapted to the weather conditions.

WARNING
Sudden acceleration and deceleration of crane movements!
Crane components can break.
Death or severe bodily injuries.
▶ Accelerate and decelerate crane movements sensitively and with utmost caution.

2.8.1 Decrease crane utilization

Cranes with lattice mast boom

In the case of cranes with pull cylinders in the derrick ballast guying, if the ambient temperature is between -30 °C and -40 °C the maximum derrick ballast must be reduced. The maximum load is also reduced due to the reduction of the maximum derrick ballast.

Note
▶ Take load reduction into account during job planning.

▶ Reduce the maximum derrick ballast between an ambient temperature of -30 °C and -40 °C by 15 %.

Cranes with telescopic boom

In the case of cranes with a telescopic boom, if the ambient temperature is between -30 °C and -40 °C crane utilization must be reduced.

▶ Reduce the crane utilization at an ambient temperature between -30 °C and -40 °C by 15 %.

3 Maintenance

3.1 Load bearing crane structures

Checking the load bearing crane structure is described in the Crane operating instructions, chapter 8.01.

▶ The load bearing crane structure must be subjected more frequently to a visual inspection.

LWE/LR 1600-2-001/18101-07-02/en

copyright © Liebherr-Werk Ehingen GmbH 2018

3.2 Rope pulleys and hydraulic cylinders

Checking the rope pulleys and the hydraulic cylinders is described in the Crane operating instructions, chapter 8.01.

▶ The rope pulleys and hydraulic cylinders must be subjected more frequently to a visual inspection.

LWE/LR 1600-2-001/18101-07-02/en

copyright © Liebherr-Werk Ehingen GmbH 2018

2.15 General technical safety instructions for operation with a ballast trailer

1	Safety guidelines	3
2	Inspecting tires and disk wheels	4

LWE/LR 1600-2-001/18101-07-02/en

copyright © Liebherr-Werk Ehingen GmbH 2018

LWE/LR 1600-2-001/18101-07-02/en

Fig.195219

copyright © Liebherr-Werk Ehingen GmbH 2018

1 Safety guidelines

WARNING
Danger of falling!
- ▶ During assembly or disassembly work on the ballast trailer, assembly personnel must be secured with appropriate aids! If this is not observed, assembly personnel can fall and suffer life-threatening or fatal injuries!

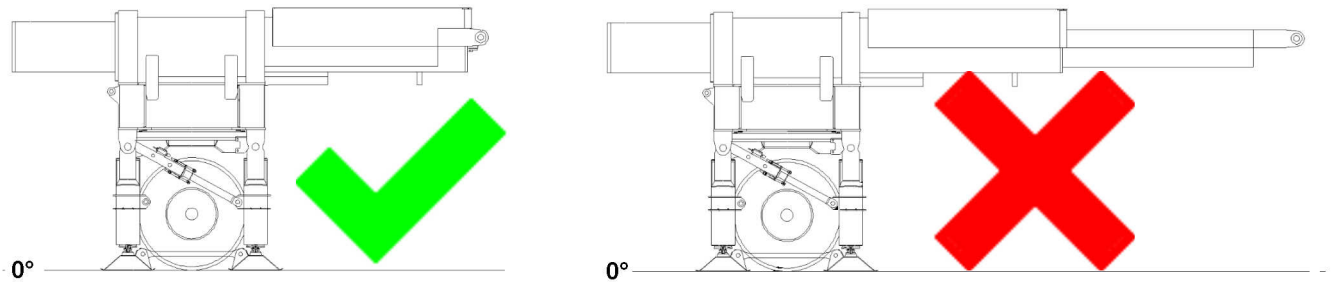

Fig.144267: Ballast trailer correctly parked // ballast trailer incorrectly parked

WARNING
Ballast trailer tipping danger!
If the following notes are not observed, the freestanding ballast trailer or the ballast trailer which needs to be disassembled can tip over.
Death, severe bodily injuries, property damage.
- ▶ The ballast trailer may only be parked on level ground with a sufficient load bearing capacity.
- ▶ The ballast trailer may only be unpinned from the crane and parked if the ballast trailer guide is fully retracted.
- ▶ The ballast trailer may only be unpinned from the crane and parked if there is sufficient ballast on the ballast trailer to ensure the stability of the ballast trailer.
- ▶ To unpin and disassemble the ballast trailer from the crane, it may be necessary for the ballast trailer guides to not be fully retracted. This is only permissible when in chapter 5.35 the procedure for this is fully described and specifically permitted. The specifications and prerequisites in chapter 5.35 must be observed and adhered to.
- ▶ The ballast trailer may only be unpinned from the crane and parked if the support cylinders are extended and the tires are relieved.
- ▶ The ballast trailer may only be unpinned from the crane and parked if the brace on the support cylinders is pinned and secured.

WARNING
Danger of fatal injury if the permissible travel speed is exceeded!
If the permissible travel speed is exceeded, the tires can be damaged.
Death, severe bodily injuries, property damage.
As a result, significant property damage can occur on the crane and on the ballast trailer.
- ▶ The travel speed of the ballast trailer when turning or driving with maximum ballast on the tires may be not more than maximum 1 km/h (0.28 m/s).

LWE/LR 1600-2-001/18101-07-02/en

copyright © Liebherr-Werk Ehingen GmbH 2018

WARNING
The crane can topple over if the level of the roadway differs!
Due to impermissible level differences between the ballast trailer roadway and the crane placement level, the entire crane system can be pulled back suddenly.
The relapse cylinders can run out to the block position. The relapse cylinders and the boom system can be damaged.
Death, severe bodily injuries, property damage.
- ▶ Do not exceed or fall below the permissible level difference between the ballast trailer roadway and the crane placement level.
- ▶ The travel path of the crane or the circular path of the ballast trailer must be level and of sufficient load bearing capacity.
- ▶ The permissible level difference of the ballast trailer travel path and crane travel path for „towing“ and „parallel driving“ may be no more than maximum 250 mm.
- ▶ The permissible level difference of the ballast trailer path and the crane travel path in relation to the crane travel path for circular driving may be no more than maximum 250 mm - based on a constant uphill incline or constant downhill incline on a 90° turning range.

WARNING
The crane can topple over!
If the following notes are not observed, the crane can topple over.
Death, severe bodily injuries, property damage.
- ▶ When lifting or lowering the ballast trailer, pay attention to the horizontal alignment of the ballast trailer.
- ▶ The assembly or disassembly work must be carried out according to chapter 5.35 **or** chapter 5.11.

NOTICE
Danger of damage to the crane and the ballast trailer!
Due to steering movements on the crawler tracks while driving parallel, the crane and the ballast trailer can be significantly damaged.
- ▶ For parallel travel, steering the crawler track is prohibited.
- ▶ For parallel travel, the side tire distortion on the wheel sets must be observed by an instructed person over the entire travel route of the crane. If the tires distort by more than 100 mm , then the position of the wheel sets must be corrected.

Note
General technical safety instructions!
- ▶ The ballast trailer guy rods must be assembled and secured according to the rod plan. The numbering on the rod plan must be identical to the numbering on the guy rods.

2 Inspecting tires and disk wheels

Note
- ▶ See chapter 8.01.

WARNING
Danger of fatal injury when using non-approved tires!
Due to the use of tires that are not explicitly approved by **LIEBHERR-Werk Ehingen GmbH**, uncontrollable operation conditions on the ballast trailer can occur due to the heavy load.
The tires can be destroyed and the ballast trailer as well as the crane can be significantly damaged.
Death, severe bodily injuries, property damage.
- ▶ Use only spare tires that have been approved in writing by **LIEBHERR-Werk Ehingen GmbH**.
- ▶ Using spare tires that have been not explicitly approved in writing by **LIEBHERR-Werk Ehingen GmbH** is prohibited.

LWE/LR 1600-2-001/18101-07-02/en

copyright © Liebherr-Werk Ehingen GmbH 2018

NOTICE
Damage to tires!
Due to external environmental influences (for example: rain, wind, snow, rime, frost, sun exposure) and the great weight load on the tires by the ballast trailer, the tires can become porous and the body can loose its original strength.
- ▶ The tires must be replaced according to the data of the tire manufacturer at least after 5 years, or if an expert representative of the tire manufacturer states in writing, after extensive inspection of the tires, that the tires can be utilized for an additional operation period stated by the expert representative.

Note
Tightening torque of ballast trailer tires!
- ▶ The tightening torque for the wheel lugs is 600 Nm.
- ▶ Check the wheel lugs according to the specified maintenance intervals for tight seating, see chapter 7.02.

2.1 Tires with air inflation

It is imperative to comply with the following instructions:
- After extended downtime, the inflation pressure must be checked before using the ballast trailer.
- The tires must be protected against UV rays during extended downtimes with tarps or wooden boards.

Note
Inflation pressure of ballast trailer tires!
- ▶ The inflation pressure in all tires that were approved in writing by **LIEBHERR-Werk Ehingen GmbH** is **10 bar**.
- ▶ Check the inflation pressure according to the specified maintenance intervals for tight seating, see chapter 7.02.

WARNING
Danger of accident due to damaged ballast trailer tires!
Due to extended downtime of the crane, when the ballast trailer tires are not relieved with supports, the tires can become irregular.
As a result, the tires can be destroyed and the ballast trailer as well as the crane can be significantly damaged.
Death, severe bodily injuries, property damage.
- ▶ During extended downtimes, the ballast trailer tires must always be relieved by the supports.

WARNING
Danger of accident due to damaged ballast trailer tires!
When driving the crane on insufficiently prepared ground, the tires can become damaged or punctured by large rocks or other foreign matter.
As a result, the ballast trailer as well as the crane can be significantly damaged.
Death, severe bodily injuries, property damage.
- ▶ The travel route of the crane or the ballast trailer must be level, of sufficient load bearing capacity and free of rocks or other foreign matter.
- ▶ The travel route of the crane must be walked off personally in advance by the crane operator.
- ▶ Rocks and other foreign matter on the travel route must be removed before starting to travel.
- ▶ If the crane operator cannot ensure that the ballast trailer tires may not be damaged when driving the crane, then the ballast trailer tires must be foamed with a special foam approved by **LIEBHERR-Werk Ehingen GmbH**. Contact **LIEBHERR-Werk Ehingen GmbH** in this regard.
- ▶ If you decide to foam the ballast trailer tires, then ballast trailer operation is only permissible if all tires of the ballast trailer have been foamed according to the specifications of **LIEBHERR-Werk Ehingen GmbH**.

LWE/LR 1600-2-001/18101-07-02/en

copyright © Liebherr-Werk Ehingen GmbH 2018

2.2 Tires foamed with special foam

The tires of the ballast trailer are foamed with a special, high quality foam.

Due to extended downtime of the crane, when the ballast trailer tires are not relieved with supports, the tires can become irregular.

It is imperative to comply with the following instructions:

- Relieve the tires on the ballast trailer if it is at a standstill for more than 2 h via the support cylinders.
- The tires must be protected against UV rays during extended downtimes with tarps or wooden boards.

WARNING
Danger of fatal injury when using non-approved tire foams!
Due to the use of tire foams that are not explicitly approved by **LIEBHERR-Werk Ehingen GmbH**, uncontrollable operation conditions on the ballast trailer can occur due to the heavy load.
The tires can be destroyed and the ballast trailer as well as the crane can be significantly damaged.
Death, severe bodily injuries, property damage.

- ▶ Use of spare tires filled with water, air or special foam of lower quality is prohibited.
- ▶ Using spare tires that have been not explicitly approved in writing by **LIEBHERR-Werk Ehingen GmbH** is prohibited.

WARNING
Danger of accident due to retreaded tires!
If tires foamed with the special foam are retreaded, the usage properties can be significantly changed in a negative manner.
The tires can be destroyed and the ballast trailer as well as the crane can be significantly damaged.
Death, severe bodily injuries, property damage.

- ▶ Tires which are filled with special foam may not be retreaded, unless written approval has been provided by the tire manufacturer.

LWE/LR 1600-2-001/18101-07-02/en

copyright © Liebherr-Werk Ehingen GmbH 2018

2.25 Crane on floating body

1	Non-destined use	3
2	Destined use	3
3	Floating device	3
4	Operating conditions	3
5	Crane transport on floating devices	4
6	Increased corrosion	5

LWE/LR 1600-2-001/18101-07-02/en

copyright © Liebherr-Werk Ehingen GmbH 2018

LWE/LR 1600-2-001/18101-07-02/en

Fig.195219

copyright © Liebherr-Werk Ehingen GmbH 2018

1 Non-destined use

WARNING
Non-destined use!
The boom can break off. The crane can topple over.
Death, severe injuries, property damage.
▶ Only use the crane as intended.
▶ Comply with the operating conditions and notes provided in this chapter.

Liebherr mobile cranes and crawler cranes are **not** designed for special requirements according to „EN 13852-2, Cranes - Offshore cranes“ or other offshore specifications and regulations.

For a precise definition of **non**-destined use, see the preface to the crane operating instructions.

2 Destined use

Liebherr mobile cranes and crawler cranes are only designed for assembly work and erection work and can only withstand a limited number of load cycles.

Liebherr mobile cranes and crawler cranes are designed for special properties and movements: evenly distributed drive forces, only occasional operation and load conditions according to „EN 13000, Cranes - Mobile cranes“ and comparable international standards.

For a precise definition of destined use, see the preface to the crane operating instructions.

3 Floating device

The term floating device includes all floating devices such as barges and ships.

The floating device must fulfil the prerequisites for crane operation.

4 Operating conditions

Observe the areas of responsibility:
– The crane contractor and crane operator are responsible for ensuring that the conditions for crane operation at the job site are fulfilled. It is strongly recommended to consult a naval engineer.
– The correct functional, technical and static interaction between the crane and the floating device is the sole responsibility of the crane contractor and the crane operator. This must be clarified and checked before operating the crane on a floating device.

Observe the following to ensure the safe operation of the crane on floating devices:
– Comply with all country-specific, legal specifications and conditions.
– Perform a risk assessment according to the Occupational Safety and Health Act to ensure safe working conditions.
– Outrigger forces or crawler pressures generated by crane operation must be safely supported by the steel construction of the floating device.
– Assemble and operate the crane according to manufacturer specifications.
– Comply with the maximum permissible lateral deflection angle between the hoist rope and the rope pulley. The deflection angle consists of the lateral elastic deformation of the boom system, the inclination of the crane supporting surface and a possible diagonal pull on the hoist rope.

  Maximum permissible deflection angle:
  • 2.5° with a hoist rope diameter of less than 23 mm
  • 5° with a hoist rope diameter of 23 mm or more
– The conditions when working on a floating device must correspond with the conditions on land.

LWE/LR 1600-2-001/18101-07-02/en

copyright © Liebherr-Werk Ehingen GmbH 2018

– Lifting and lowering loads in very calm waters and on very calmly moving floating devices correspond to the lifting and lowering a load on land.

4.1 Floating device, supported

Observe the following to ensure the safe operation of the crane on supported floating devices:
– For crawler cranes, observe the maximum permissible ground inclination of the crane of ±0.3°, see the load charts.
– Supported cranes must be horizontally aligned (0°).

4.2 Floating device, not supported

Observe the following to ensure the safe operation of the crane on **non** supported floating devices:
– Crane operation on a floating device is only permissible in very calm waters.
– Crane operation is only permissible on a floating device with a main boom (no derrick operation, no operation with luffing jib permitted).
– The inclination of the floating device may **not** exceed the maximum permissible ground inclination of the crane according to the load chart.
– Before the crane is operated on the floating device: The inclination of the floating device in the lateral and longitudinal direction must be calculated in advance. This incline results from the interaction of the crane with the floating device.
– Comply with the maximum permissible ground inclination according to the load charts:
  • ±0.3° for cranes operating on a crawler travel gear.
  • 0° for cranes operating on outriggers.
– The load values must be reduced when the above indicated include values are exceeded.
– Load charts for higher permissible ground inclinations (for example 1°, 2°) can be provided upon request of LWE customers only for operation with a „main boom“ and with a „main boom + jib boom“.
– LTR 1060, LTR 1100 and LTR 1220 are programmed with load charts that permit operation up to a maximum ground inclination of 4°. The crane's respective maximum permissible ground inclination depends on the crane's operating mode.

5 Crane transport on floating devices

Observe the areas of responsibility:
– The crane contractor is solely responsible for transporting the crane on a floating device.
– The crane contractor and crane operator are responsible for the assembly and disassembly of the crane on the floating device.

Observe the following to ensure the safe transport of the crane on floating devices:
– Secure the crane during „transport on a floating device“ so that the following is prevented:
  • Damage and releasing of components on the crane
  • Slipping of the crane
  • Inadvertent turning of the superstructure
  • Capsizing of the floating device
– Transport at sea can have a negative impact on the structural strength / stability and the fatigue limit of the crane.

  Make sure that the following measures are carried out prior to „transport on a floating device“:
  • Take the boom down and support it using adequate means.
  • With telescope cranes: Disassemble the counterweight plates and secure on the floating device.
  • On crawler cranes: Support the turntable and counterweight using adequate means and secure against slipping.
  • Observe and adhere to the specifications for transporting the crane and the crane components, see Crane operating instructions, chapter 3.80.

LWE/LR 1600-2-001/18101-07-02/en

copyright © Liebherr-Werk Ehingen GmbH 2018

6 Increased corrosion

Extremely salty air near the sea can cause severe corrosion on the crane.

Increased corrosion can cause premature damage to the components (for example, the hydraulic cylinder, wire ropes, electrical and electronic components, driver's cab).

Submerging the hook block in water causes damage to the hook block and the rope.

The crane contractor and the crane operator are solely responsible for preventing severe corrosion.

Measures for preventing corrosion:
- Avoid direct contact between the crane and its components with salt water.
- Do **not** submerge the hook block in water.

Measures for detecting premature damage:
- Have the crane checked regularly and extensively by a qualified person.

LWE/LR 1600-2-001/18101-07-02/en

copyright © Liebherr-Werk Ehingen GmbH 2018

Empty page!

LWE/LR 1600-2-001/18101-07-02/en

copyright © Liebherr-Werk Ehingen GmbH 2018

3 Crane assembly

LWE/LR 1600-2-001/18101-07-02/en

copyright © Liebherr-Werk Ehingen GmbH 2018

LWE/LR 1600-2-001/18101-07-02/en

copyright © Liebherr-Werk Ehingen GmbH 2018

3.01 Crawler carrier assembly

1	Component overview crawler travel gear	3
2	Dimensions and weights	3
3	Installing the assembly supports	5
4	Assembly / disassembly of the crawler carriers with the auxiliary crane	11
5	Assembly / disassembly of the crawler carriers with SA-frame	27
6	Disassembling the assembly support	49

LWE/LR 1600-2-001/18101-07-02/en

copyright © Liebherr-Werk Ehingen GmbH 2018

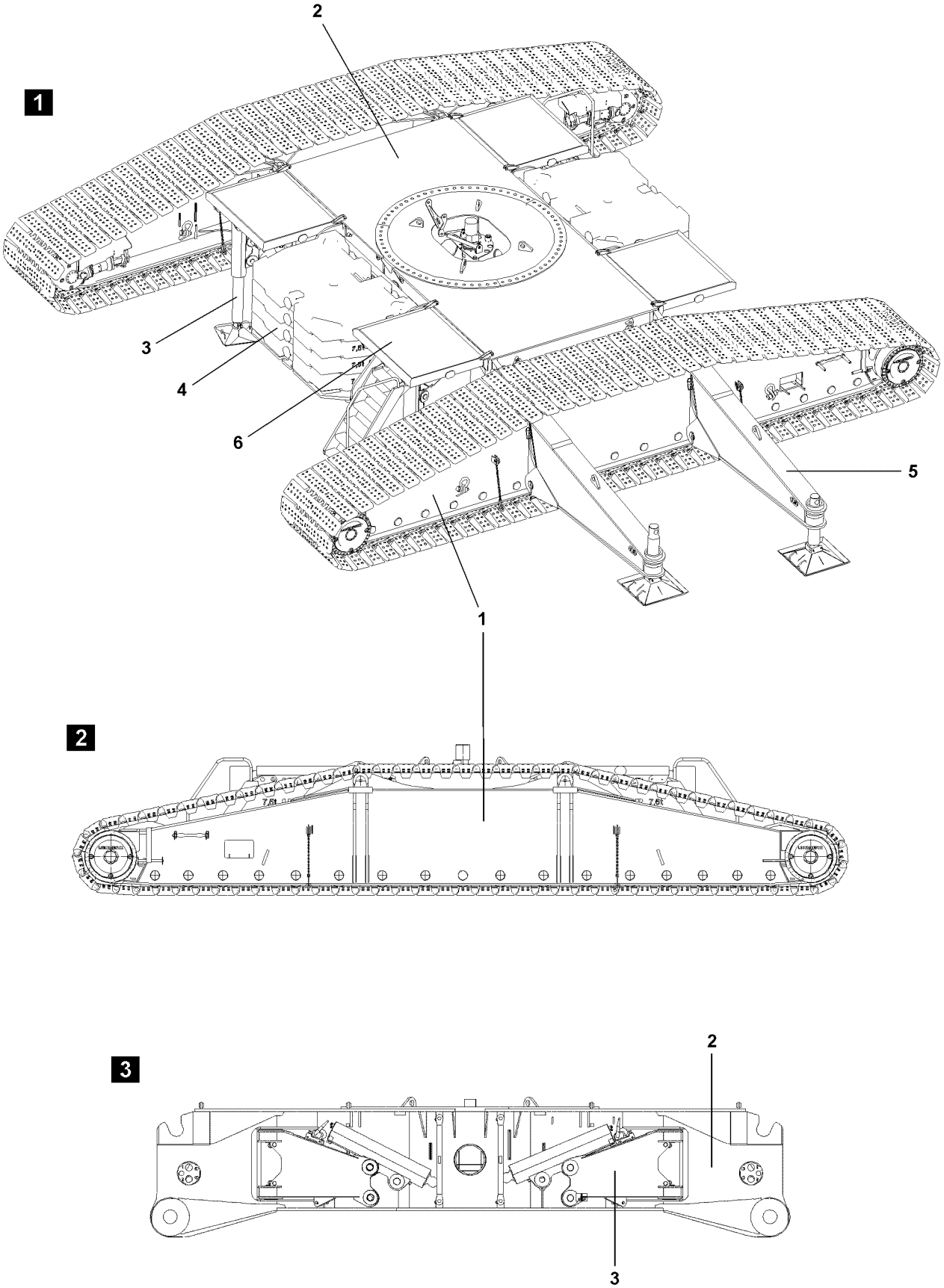

LWE/LR 1600-2-001/18101-07-02/en

Fig.108929

copyright © Liebherr-Werk Ehingen GmbH 2018

1 Component overview crawler travel gear

1 Crawler carrier with track pads
2 Crawler center section with rotary connection
3 Hydraulic assembly supports
4 Central ballast
5 Mechanical auxiliary support
6 Catwalks

2 Dimensions and weights

Note
▶ See Crane operating instructions, chapter 1.03.

LWE/LR 1600-2-001/18101-07-02/en

copyright © Liebherr-Werk Ehingen GmbH 2018

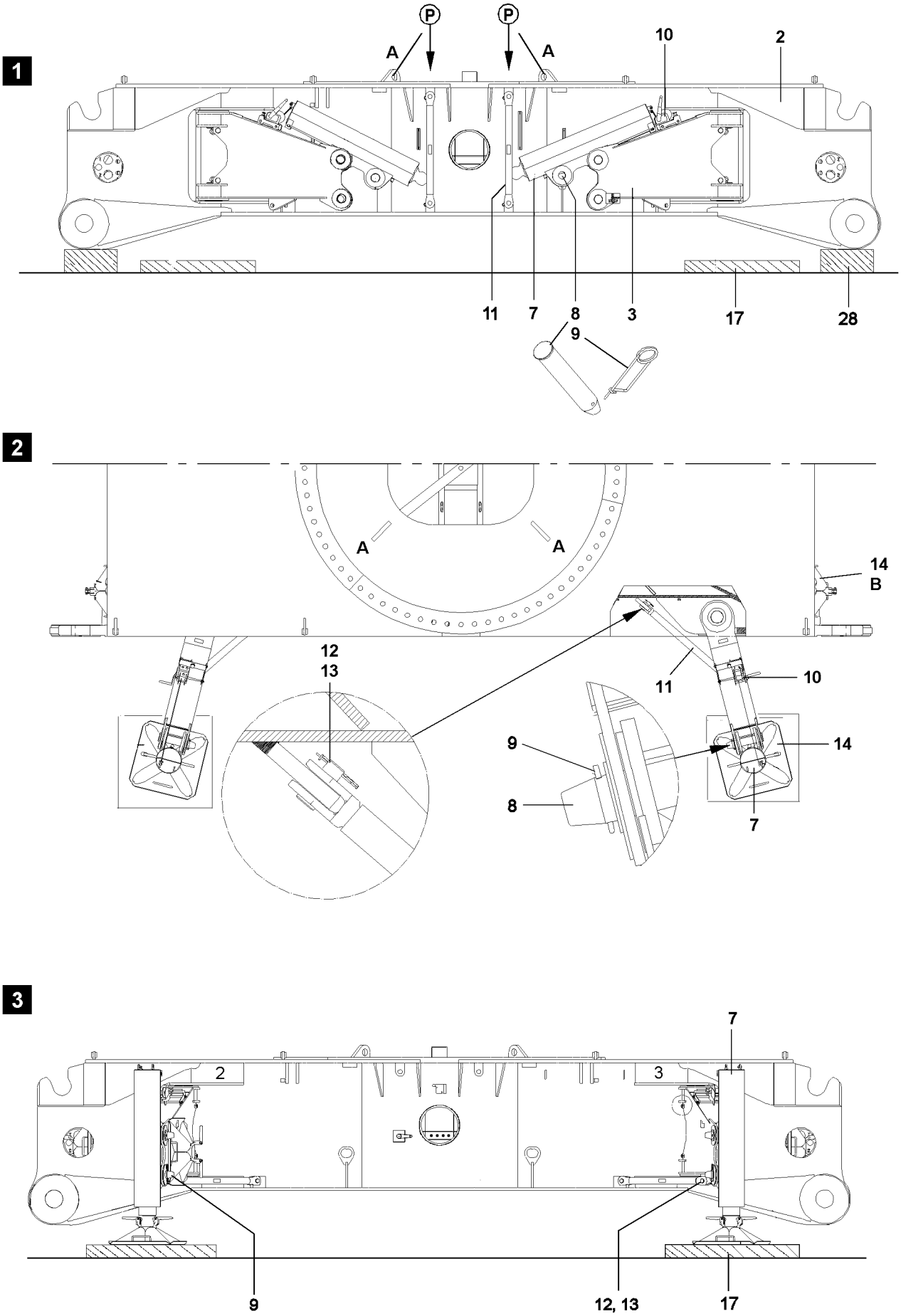

Fig.107164

LWE/LR 1600-2-001/18101-07-02/en

copyright © Liebherr-Werk Ehingen GmbH 2018

3 Installing the assembly supports

Make sure that the following prerequisites are met:
- An auxiliary crane with sufficient load carrying capacity is available.
- The placement location must be level and have adequate load-bearing capacity.

3.1 Supporting the crawler center section

WARNING
Danger of accidents due to improper support!
If the crawler center section is not properly supported, then it can sink into the ground.
Death, severe bodily injuries, property damage.
- ▶ The support must be able to safely take on the weight of the crawler center section, the turntable and the crawler carrier.
- ▶ The support must be made large enough for the ground conditions, with solid materials, such as wood, steel or concrete slabs, see Crane operating instructions, chapter 2.04.

Make sure that the following prerequisite is met:
- Suitable material must be available for the support of the crawler center section.

Note
- ▶ The support **28** must be high enough so that the support plates **14** with support **17** fit under the vertically positioned hydraulic cylinders **7**.
- ▶ Support the crawler center section **2** with hardwood timbers or other suitable materials from below.

- ▶ Attach the fastening equipment on the four fastening brackets **A**.
- ▶ Lift the crawler center section **2** with the auxiliary crane and set it onto the support **28**.

LWE/LR 1600-2-001/18101-07-02/en

copyright © Liebherr-Werk Ehingen GmbH 2018

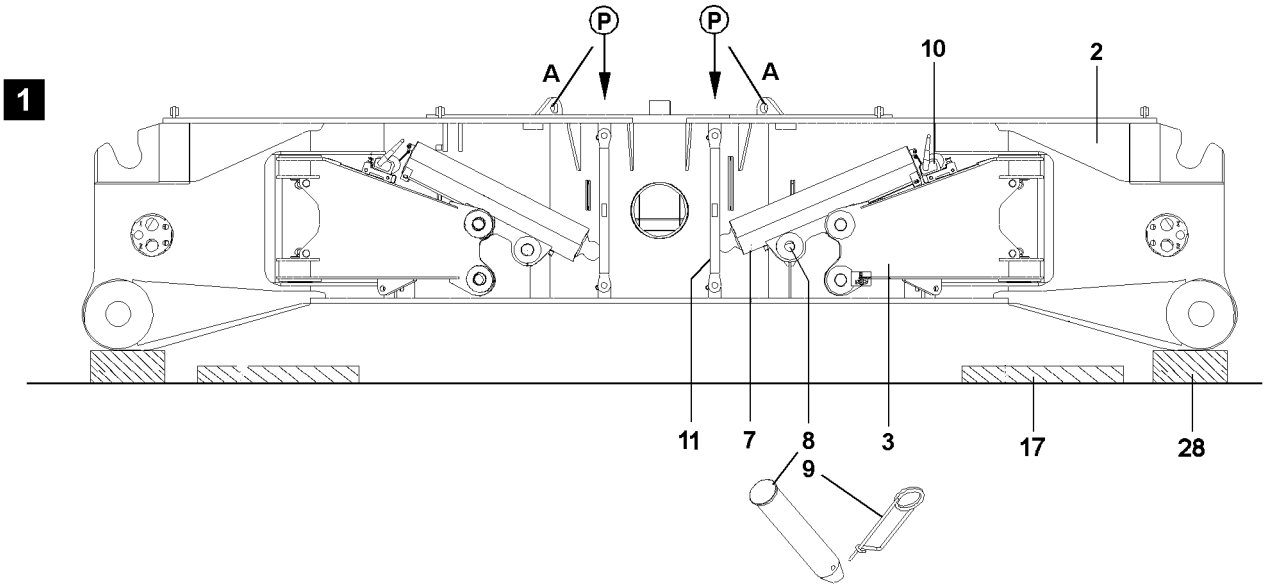

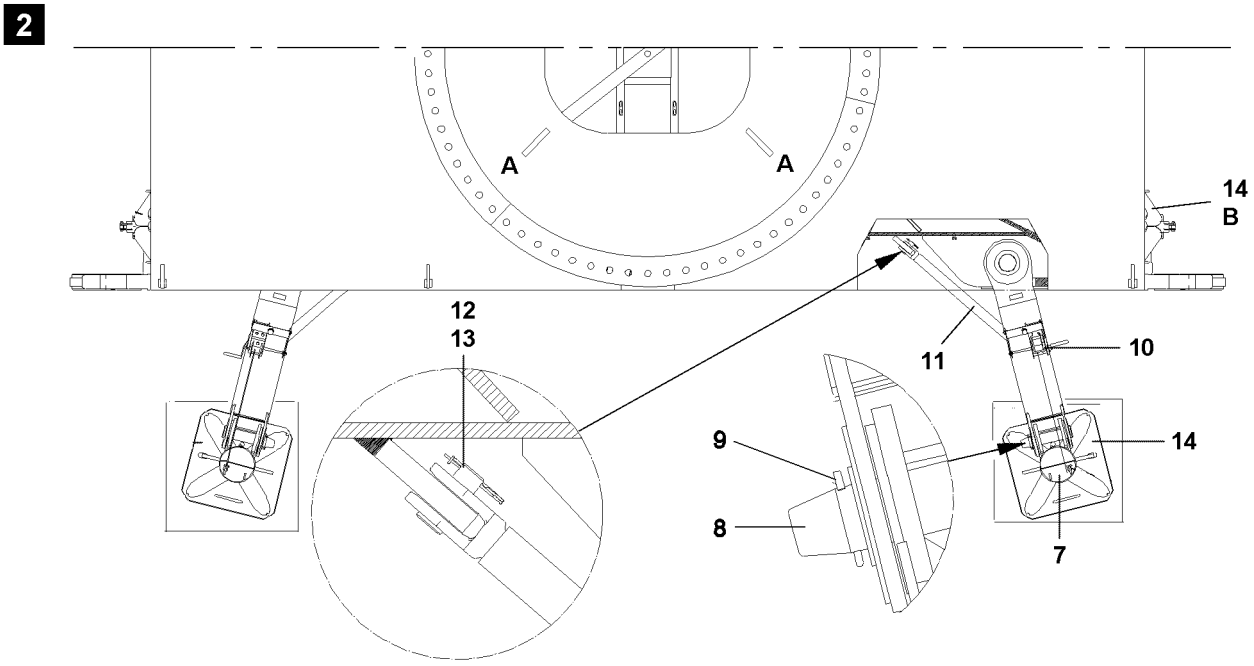

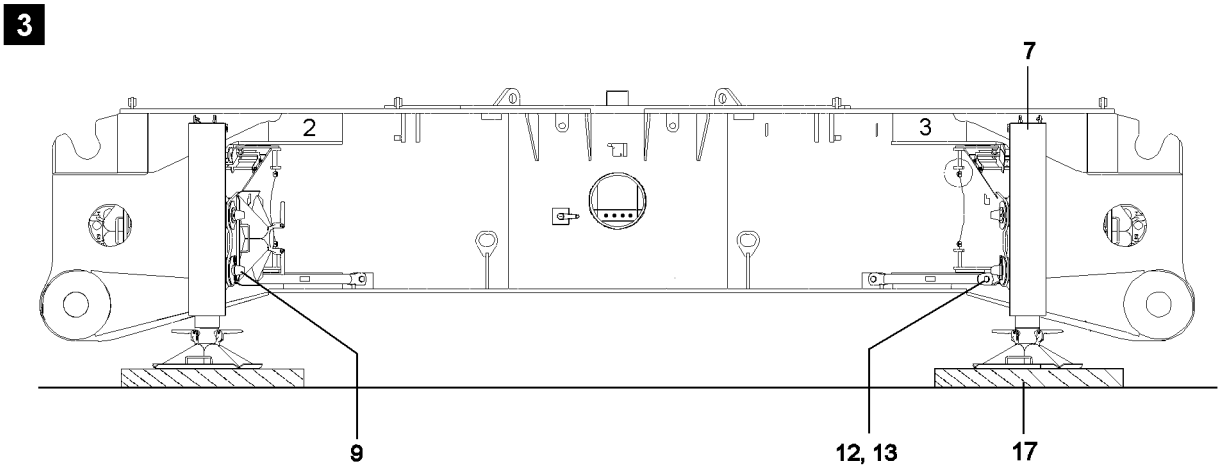

Fig.107164

LWE/LR 1600-2-001/18101-07-02/en

copyright © Liebherr-Werk Ehingen GmbH 2018

3.2 Installing the assembly supports

Note

▶ For the assembly of the crawler carriers with the SA-frame, the turntable must be assembled, see crane operating instructions chapter 3.02.

The swinging out and locking procedure of the assembly support is the same for all four assembly supports and is therefore described only once.

Make sure that the following prerequisite is met:

– The rope for the rope winch **10** is secured on the eyehook on the hydraulic cylinder **7**.

▶ Unpin the pin **8**: Remove the spring retainer **9** and unpin the pin **8**.

Before the rope winch **10** can be put into operation, the spring latch must be pulled and the rope winch **10** must be pushed to the side until the crank can be rotated freely and the spring latch engages again by itself.

▶ Pull the spring latch up and hold.
▶ Push the rope winch **10** in direction of the crank to the outside until the spring latch engages again by itself.

Result:

– The rope winch is locked in operating position.

▶ Lift the hydraulic cylinder **7** from the transport retainer by spooling up the rope winch **10**.
▶ Swing the assembly support **3** out.
▶ Remove the brace **11** from the transport position **P**: Remove the spring retainer **13** and unpin the pin **12**.
▶ Pin the brace **11** on the crawler center section and on the assembly support: Pin in the pin **12** and secure with spring retainer **13**, see illustration **2** and illustration **3**.
▶ Spool out the rope winch **10** and lower the hydraulic cylinder **7**.
▶ Pin the hydraulic cylinder **7** on the assembly support **3** on the bottom: Insert the pin **8** and secure with spring retainer **9**.

WARNING

Danger of accidents due to improper support!
If the crawler center section is not properly supported, then it can sink into the ground.
Death, severe bodily injuries, property damage.

▶ The support must be able to safely take on the weight of the crawler center section, the turntable and the crawler carrier.
▶ The support must be made large enough for the ground conditions, with solid materials, such as wood, steel or concrete slabs, see Crane operating instructions, chapter 2.04.

▶ Take the support plates **14** from the transport retainer **B** and place them on the supporting bases **17**.
▶ Align the support plates **14** to the hydraulic cylinders **7**.
▶ Establish the hydraulic connections from the hydraulic aggregate of the pin pulling device to the hydraulic cylinders **7**, see Crane operating instructions, chapter 5.30.

LWE/LR 1600-2-001/18101-07-02/en

copyright © Liebherr-Werk Ehingen GmbH 2018

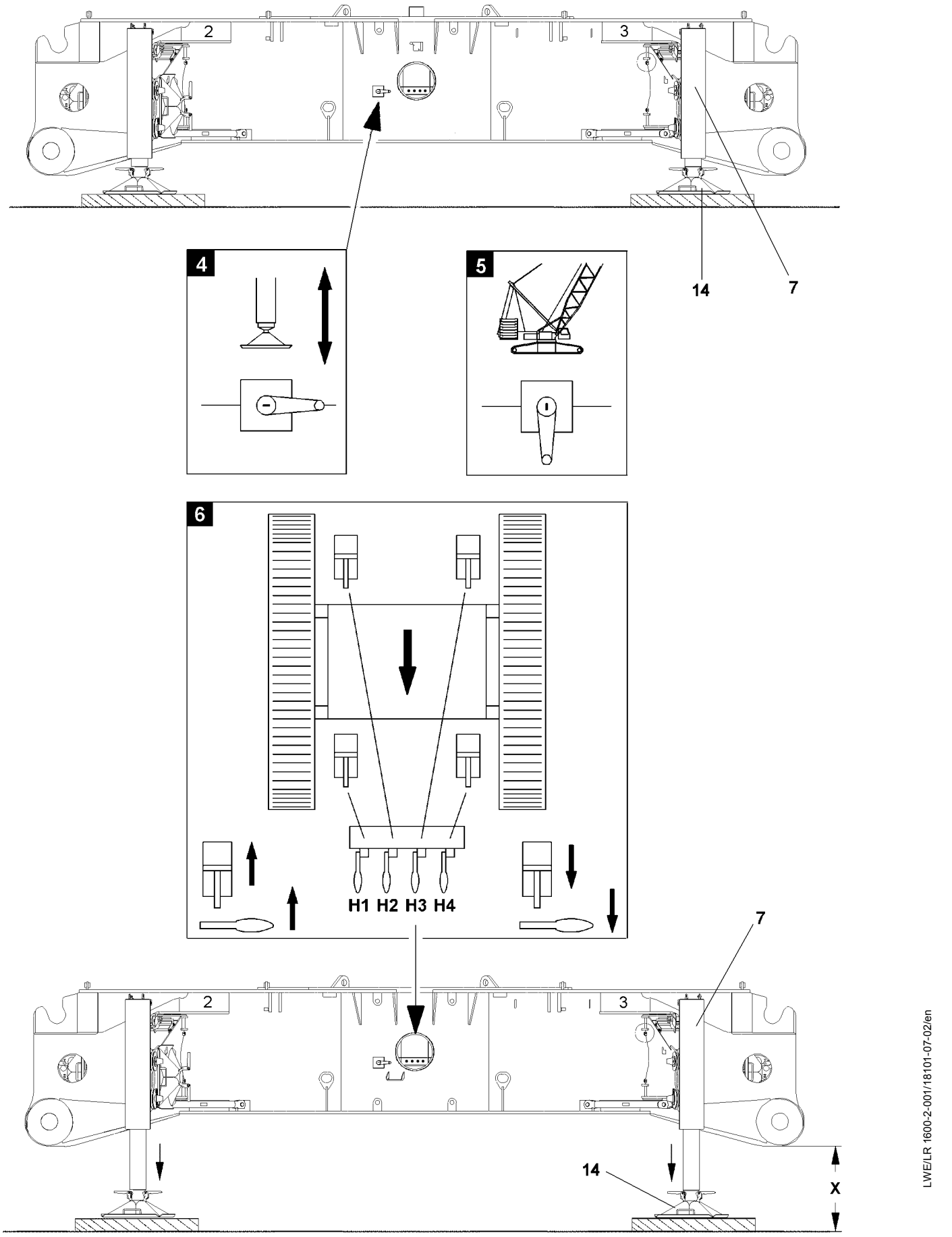

LWE/LR 1600-2-001/18101-07-02/en

Fig.108933

copyright © Liebherr-Werk Ehingen GmbH 2018

3.3 Lifting the crawler center section

Make sure that the following prerequisites are met:
- The assembly supports are locked with braces.
- The hydraulic cylinders pinned and secured.
- The support plates are properly supported.
- The ball valve is set to „Assembly support“, see illustration **4**.

Ball valve positions	
Illustration **4**	Assembly support
Illustration **5**	Crane operation / crawler carrier installation with SA-frame

Function assignment of manual levers for the support cylinders	
H1	Manual lever for the hydraulic cylinder, right front
H2	Manual lever for the hydraulic cylinder, right rear
H3	Manual lever for the hydraulic cylinder, left rear
H4	Manual lever for the hydraulic cylinder, left front

▶ Turning the hydraulic aggregate on with the pin pulling device.
▶ Actuate the manual lever and enter the hydraulic cylinder **7** into the receptacle of the support plates **14**.
▶ Close the receptacle.

Note
▶ Lift the crawler center section so that the crawler carriers can be installed without restriction.
▶ Move the hydraulic cylinders out evenly.

▶ Actuate the hand lever **H1**, hand lever **H2**, hand lever **H3** and hand lever **H4**.

Result:

– The four hydraulic cylinders **7** move out.

WARNING
Danger of tipping the crawler center section!
If the hydraulic cylinders **7** are moved out unevenly, the crawler center section can tip over.
Death, severe bodily injuries, property damage.
▶ When lifting the crawler center section, pay attention to the horizontal alignment, check visually.

▶ After supporting and aligning the crawler center section, set the ball valve to „Crane operation / crawler carrier installation“, see illustration **5**.
▶ Turning the hydraulic aggregate off with the pin pulling device.

LWE/LR 1600-2-001/18101-07-02/en

copyright © Liebherr-Werk Ehingen GmbH 2018

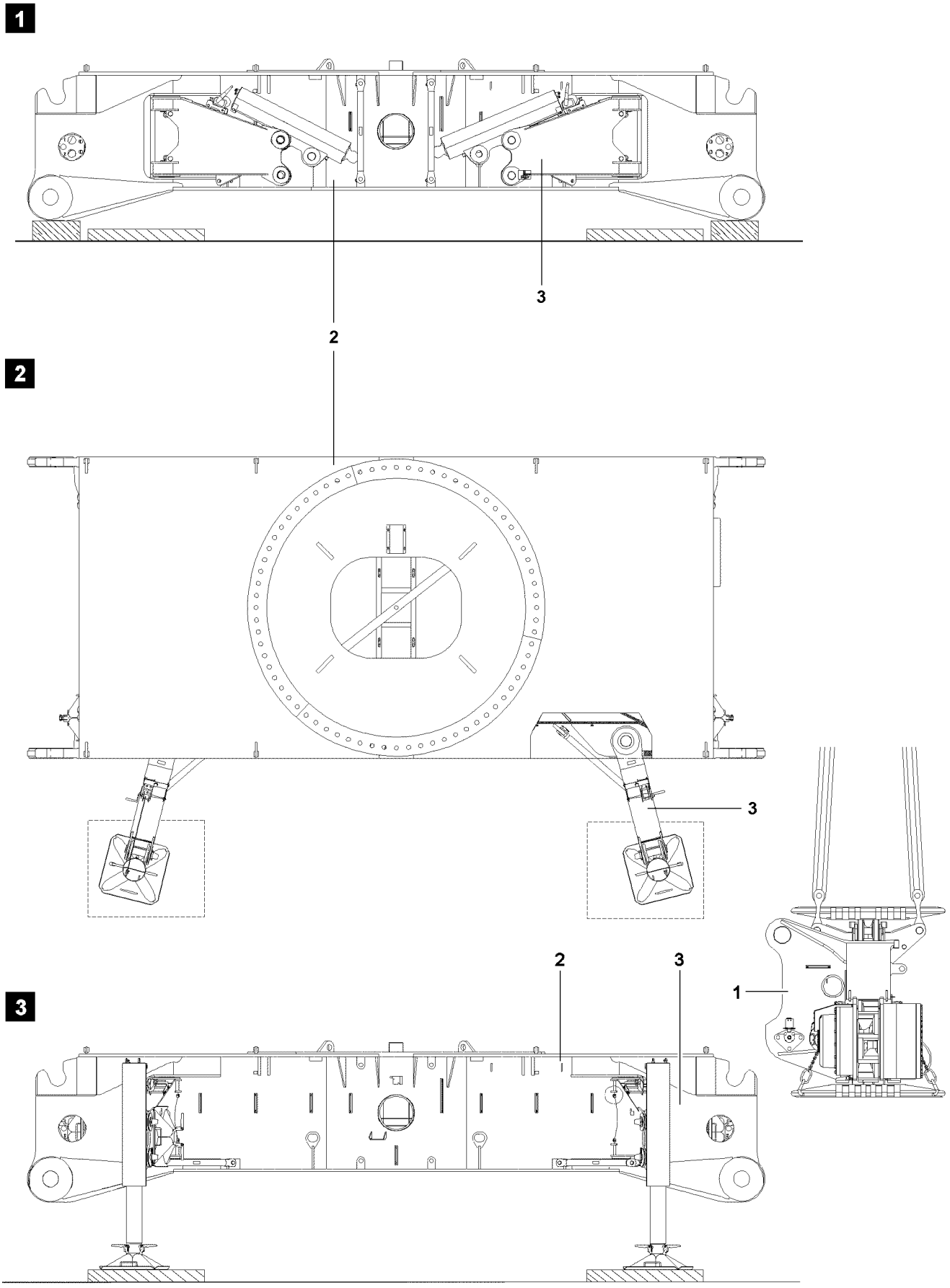

LWE/LR 1600-2-001/18101-07-02/en

Fig.106601

copyright © Liebherr-Werk Ehingen GmbH 2018

4 Assembly / disassembly of the crawler carriers with the auxiliary crane

4.1 Assembly of crawler carriers with the auxiliary crane

WARNING
Danger of falling!
During assembly / disassembly, inspection and maintenance work, assembly personnel must be secured with appropriate aids to prevent them from falling.
Death, severe bodily injuries, property damage.

- ▶ All work aloft, where there is a danger of falling must be carried out with suitable aids.
- ▶ If aids are not available and work cannot be carried out from the ground, then the assembly personnel must secure themselves with the supplied fall arrest system to prevent falling, see Crane operating instructions, chapter 2.04.
- ▶ If fall protection equipment is available, then it must be used, see Crane operating instructions, chapter 2.06.
- ▶ When lifting, lowering, swinging crane parts in and out, no persons may remain in the danger zone.
- ▶ When closing or opening boom systems during boom assembly or boom disassembly, no persons may remain on the boom system or in the danger zone.
- ▶ If railings are present for the crane, then they must be brought into the corresponding position and secured for assembly / disassembly work.
- ▶ Only step on the aids, ladders and catwalks with clean shoes.
- ▶ Keep aids, ladders and catwalks free of heavy dirt, snow and ice.
- ▶ During all assembly and disassembly work, maintenance work and inspections, travel or crane operation is prohibited.
- ▶ Remaining on a suspended load is prohibited.
- ▶ Stepping or walking on crane components and lattice sections, which have an incline of more than 20° is prohibited.
- ▶ For all assembly work, the crane driver of the main crane must be in voice contact with the crane driver / crane drivers of the auxiliary crane / auxiliary cranes.
- ▶ For assembly tasks, the crane driver may only initiate crane movements when the responsible guide has explicitly released the movement.

WARNING
Danger of impact / crushing!
When installing / removing crane components with the auxiliary crane, crane components can start to swing back and forth.
When lifting / lowering and positioning crane components, there is an increased danger of impacts / crushing.
Death, severe bodily injuries, property damage.

- ▶ Make sure that personnel cannot be caught by components.
- ▶ Make sure that the crane is horizontally aligned.
- ▶ When working in danger zones: Use aids to protect limbs.
- ▶ Guide components with suitable aids to minimize oscillation.

Make sure that the following prerequisites are met:

- – An auxiliary crane with sufficient load carrying capacity is available.
- – The assembly supports are installed.
- – The crawler center section is raised: The support cylinders are moved out.

LWE/LR 1600-2-001/18101-07-02/en

copyright © Liebherr-Werk Ehingen GmbH 2018

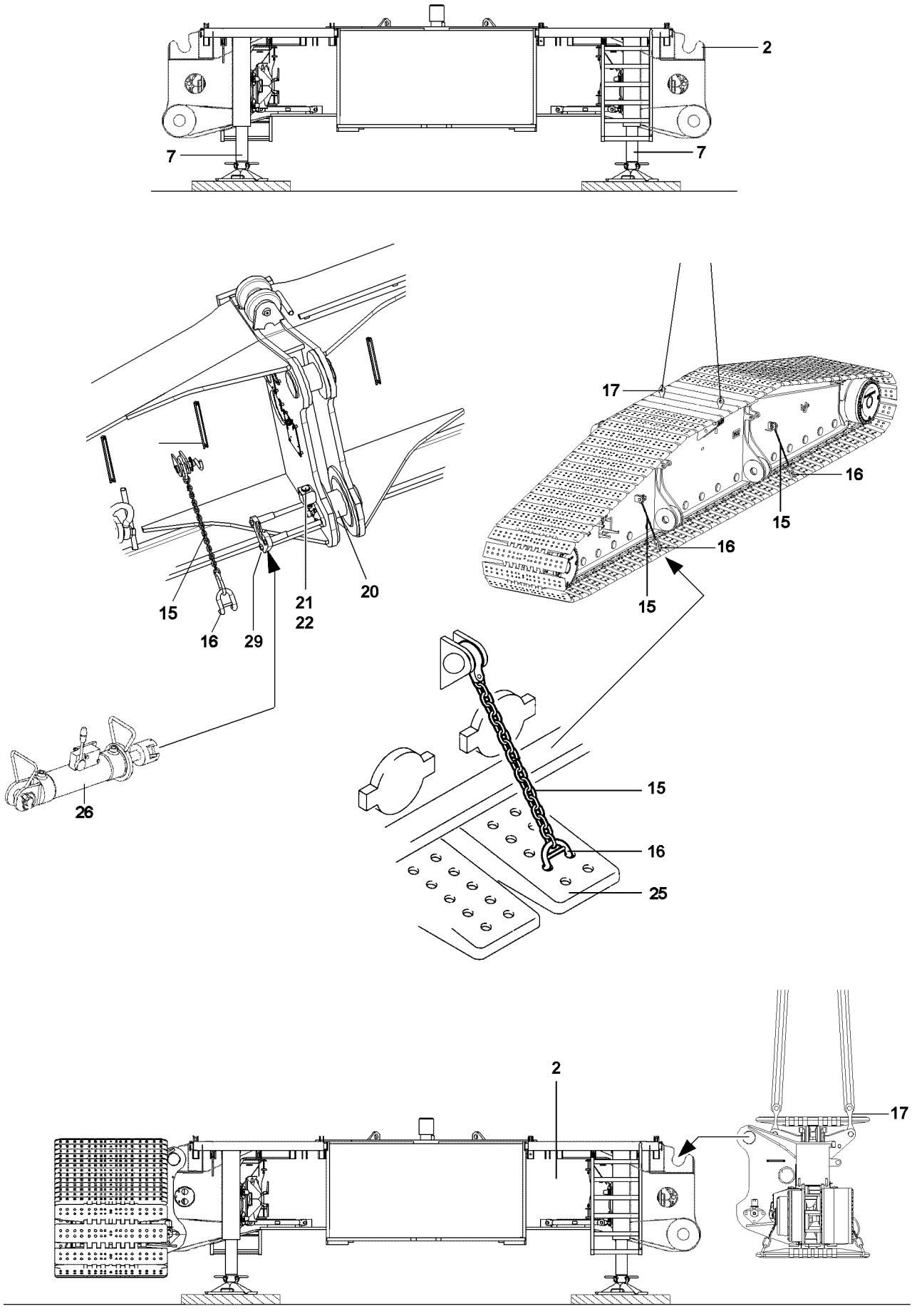

LWE/LR 1600-2-001/18101-07-02/en

Fig.107372

copyright © Liebherr-Werk Ehingen GmbH 2018

4.1.1 Preparing the crawler carrier for assembly

Note
▶ Hang in **two** chains **15** per crawler carrier side.

The track pads **25** must be secured before assembly of the crawler carriers with the chains **15** to prevent sag.

▶ Hang in the chains **15** with the bars **16** on the track pads.

Note
▶ The brackets **27** must be swung between the track pads **25**, „upward“.

▶ Swing the brackets **27** upward.

4.1.2 Assembling the crawler carrier

Note
▶ For assembly of the crawler carriers with the auxiliary crane the turntable is installed.
▶ Note the identification on the crawler carrier and the crawler center section.
▶ The crawler carrier and the crawler center section are marked with numbers.

WARNING
Danger of accidents due to improper support!
If the crawler center section is not properly supported, then it can sink into the ground.
Death, severe bodily injuries, property damage.
▶ The support must be able to safely take on the weight of the crawler center section, the turntable and the crawler carrier.
▶ The support must be made large enough for the ground conditions, with solid materials, such as wood, steel or concrete slabs, see Crane operating instructions, chapter 2.04.

Make sure that the following prerequisites are met:
– The track pads are secured with chains **15** to prevent them from hanging down.
– The pin pulling cylinder **26** is connected on the hydraulic aggregate.

LWE/LR 1600-2-001/18101-07-02/en

copyright © Liebherr-Werk Ehingen GmbH 2018

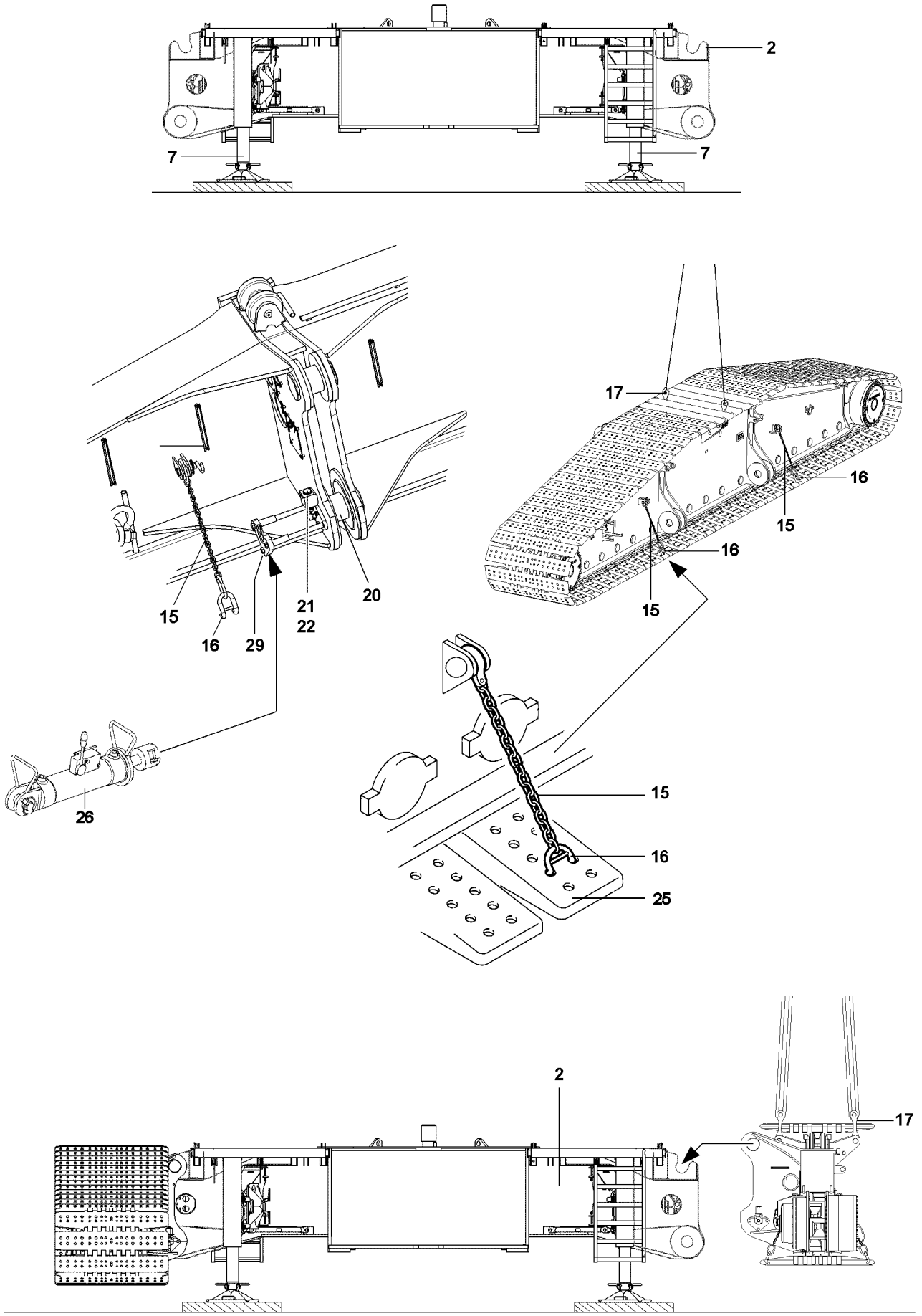

LWE/LR 1600-2-001/18101-07-02/en

Fig.107372

copyright © Liebherr-Werk Ehingen GmbH 2018

Note

- For assembly of the crawler carriers on the crawler center section, the assembly procedure and the process are identical for both crawler carrier sides.
- For that reason, the assembly of the crawler carrier is only described for one side as an example.

- Attach the fastening equipment on the brackets **27** of the crawler carrier.
- Swing in the crawler carrier with the auxiliary crane carefully to the pin points on the crawler center section **2**.
- Hang the crawler carrier on the crawler center section **2** on top.
- Insert the pin pulling cylinder **26** into the pin pulling device.

NOTICE

Danger of property damage!

If the following notes are not observed, the pin pulling device can be damaged.

- The retaining pin **21** must be secured in the upper position with the spring retainer **22**.

- Pin in the pin **20** with the pin pulling cylinder **26** and secure with retaining pin **21**.
- Secure the retaining pin **21** with spring retainer **22**.
- Remove the fastening equipment.

NOTICE

Damage to the brackets **17**!

- After removing the fastening equipment, the brackets **17** must be swung down.

- Swing the brackets **17** down.

LWE/LR 1600-2-001/18101-07-02/en

copyright © Liebherr-Werk Ehingen GmbH 2018

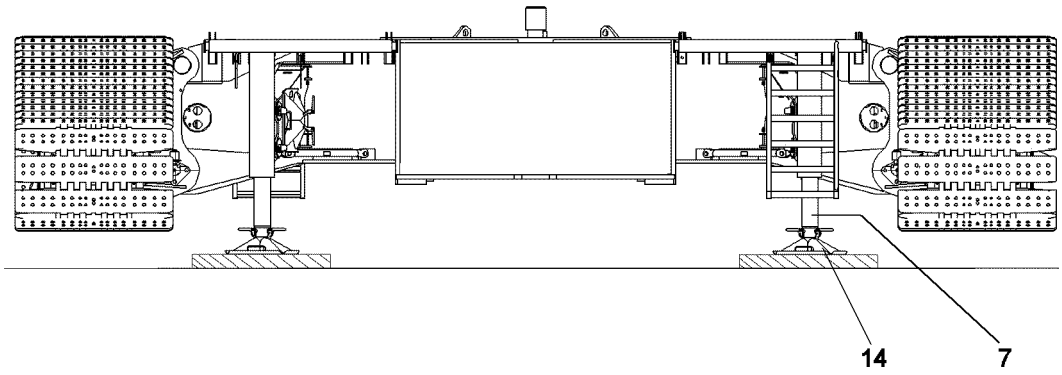

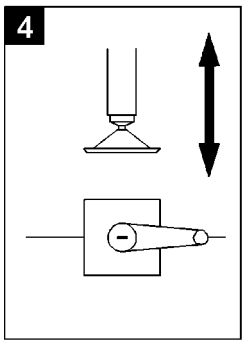

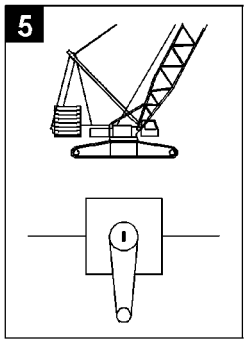

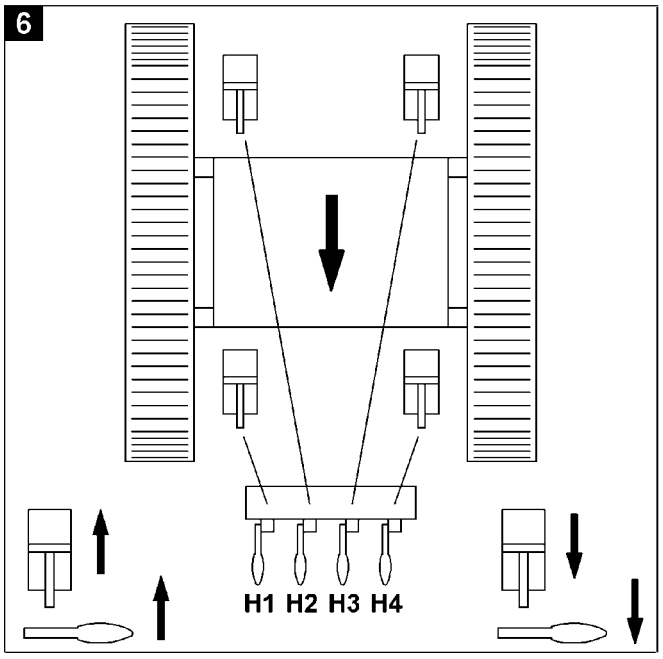

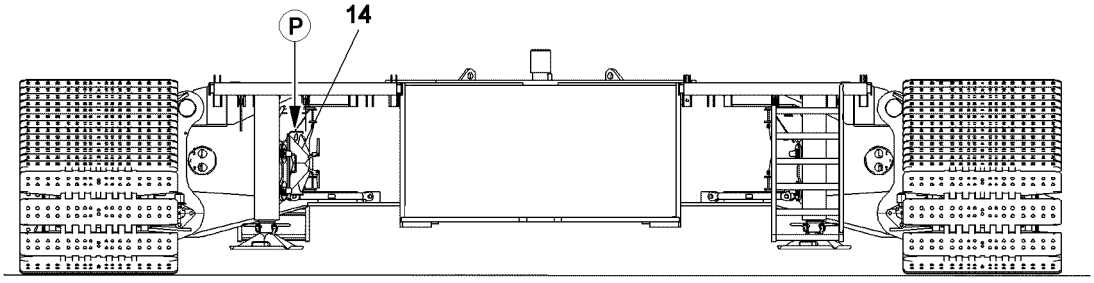

Fig.108930

LWE/LR 1600-2-001/18101-07-02/en

copyright © Liebherr-Werk Ehingen GmbH 2018

4.1.3 Lowering the crawler track

WARNING
Danger of tipping the crawler travel gear over!
If the hydraulic cylinder **7** are move in unevenly, the crawler travel gear can tip over.
Death, severe bodily injuries, property damage.
▶ When lowering the crawler travel gear, pay attention to the horizontal alignment, check visually.

▶ Actuate the hand lever **H1**, hand lever **H2**, hand lever **H3** and hand lever **H4**.

Result:

– The hydraulic cylinders **7** move in.

▶ Move the hydraulic cylinders **7** in until both crawler carriers on the ground and the support plates **14** are relieved.
▶ Open the receptacle on the support plates **14**.
▶ Move the hydraulic cylinders **7** completely in.
▶ Secure the support plates **14** in parking position **P**.
▶ Disengage the chains **15** on the track pads.

4.1.4 Establishing the hydraulic and electrical connections to the crawler travel gear

Make sure that the following prerequisite is met:
– Both crawler carriers are properly installed, pinned and secured.

Hydraulic connections

When connecting and releasing hydraulic lines with quick couplings, make sure that the coupling procedure is carried out correctly.

DANGER
Danger of accident due to loss of pressure or leakage!
Incorrectly coupled or self-loosening quick couplings (particularly return lines) can result in serious accidents due to component failure.
▶ Check that the quick couplings have been properly connected before using the crane.

▶ Release the pressure in the hydraulic system before connecting or disconnecting. Turn the engine off and wait for short time.
▶ Connect the coupling components (sleeve and connector) and screw together with the hand-tightened nut.
▶ Tighten the hydraulic coupling by hand. Rotate the hand-tightened nut until it reaches a tangible, fixed stop position.
▶ Establish the hydraulic connections.

Electrical connections

▶ Establish the electrical connections, see separate electrical wiring diagram.

4.1.5 Assembling / disassembling the turntable

Note
▶ For assembly / disassembly of the turntable, see Crane operating instructions, chapter 3.02.

LWE/LR 1600-2-001/18101-07-02/en

copyright © Liebherr-Werk Ehingen GmbH 2018

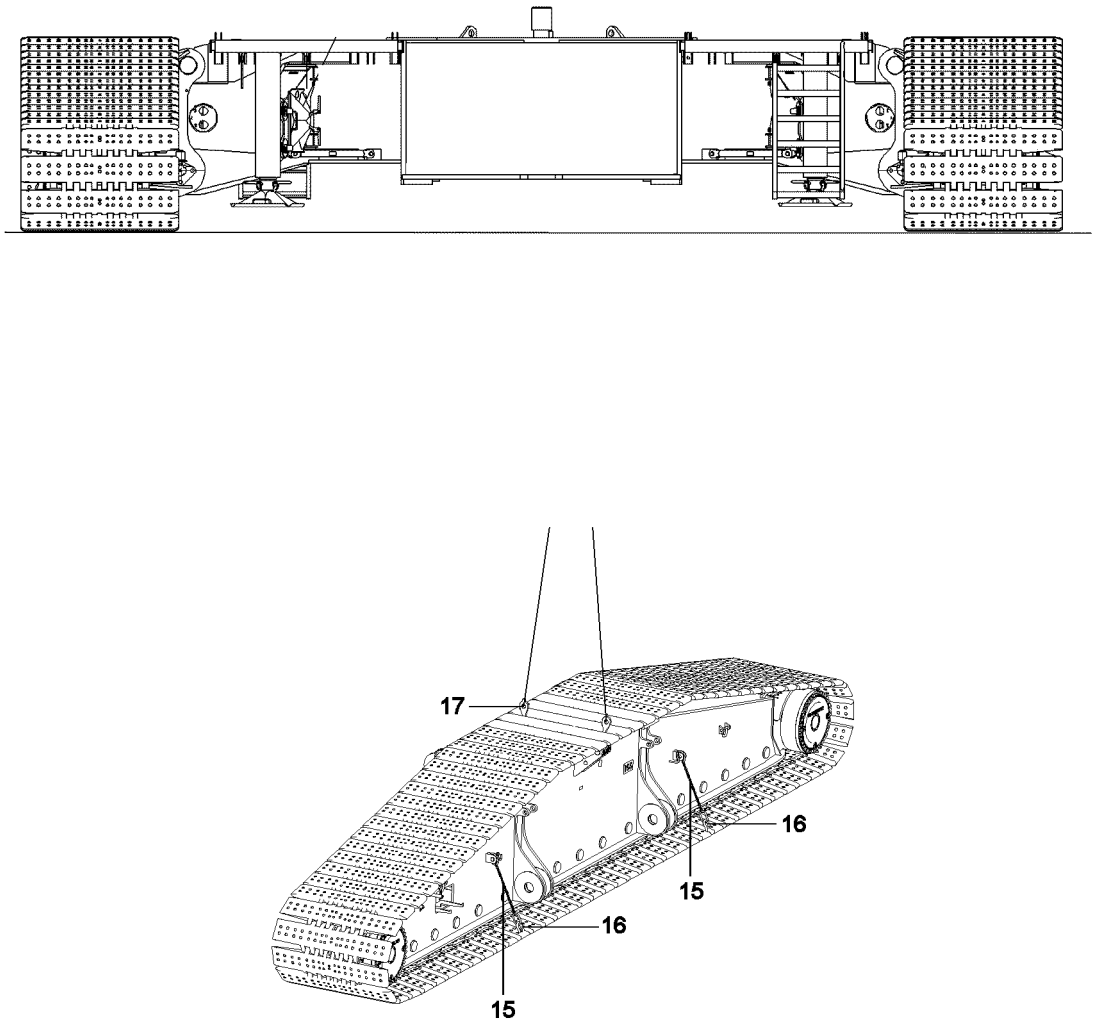

LWE/LR 1600-2-001/18101-07-02/en

Fig.106602

copyright © Liebherr-Werk Ehingen GmbH 2018

4.2 Disassembly of crawler carrier with the auxiliary crane

WARNING
Danger of falling!
During assembly / disassembly, inspection and maintenance work, assembly personnel must be secured with appropriate aids to prevent them from falling.
Death, severe bodily injuries, property damage.
- ▶ All work aloft, where there is a danger of falling must be carried out with suitable aids.
- ▶ If aids are not available and work cannot be carried out from the ground, then the assembly personnel must secure themselves with the supplied fall arrest system to prevent falling, see Crane operating instructions, chapter 2.04.
- ▶ If fall protection equipment is available, then it must be used, see Crane operating instructions, chapter 2.06.
- ▶ When lifting, lowering, swinging crane parts in and out, no persons may remain in the danger zone.
- ▶ When closing or opening boom systems during boom assembly or boom disassembly, no persons may remain on the boom system or in the danger zone.
- ▶ If railings are present for the crane, then they must be brought into the corresponding position and secured for assembly / disassembly work.
- ▶ Only step on the aids, ladders and catwalks with clean shoes.
- ▶ Keep aids, ladders and catwalks free of heavy dirt, snow and ice.
- ▶ During all assembly and disassembly work, maintenance work and inspections, travel or crane operation is prohibited.
- ▶ Remaining on a suspended load is prohibited.
- ▶ Stepping or walking on crane components and lattice sections, which have an incline of more than 20° is prohibited.
- ▶ For all assembly work, the crane driver of the main crane must be in voice contact with the crane driver / crane drivers of the auxiliary crane / auxiliary cranes.
- ▶ For assembly tasks, the crane driver may only initiate crane movements when the responsible guide has explicitly released the movement.

WARNING
Danger of impact / crushing!
When installing / removing crane components with the auxiliary crane, crane components can start to swing back and forth.
When lifting / lowering and positioning crane components, there is an increased danger of impacts / crushing.
Death, severe bodily injuries, property damage.
- ▶ Make sure that personnel cannot be caught by components.
- ▶ Make sure that the crane is horizontally aligned.
- ▶ When working in danger zones: Use aids to protect limbs.
- ▶ Guide components with suitable aids to minimize oscillation.

Make sure that the following prerequisites are met:
- – The turntable is removed.
- – An auxiliary crane is available.
- – The disassembly location must be level and have adequate load-bearing capacity.
- – Suitable material must be available for the support of the assembly supports.
- – The support plates are installed.

LWE/LR 1600-2-001/18101-07-02/en

copyright © Liebherr-Werk Ehingen GmbH 2018

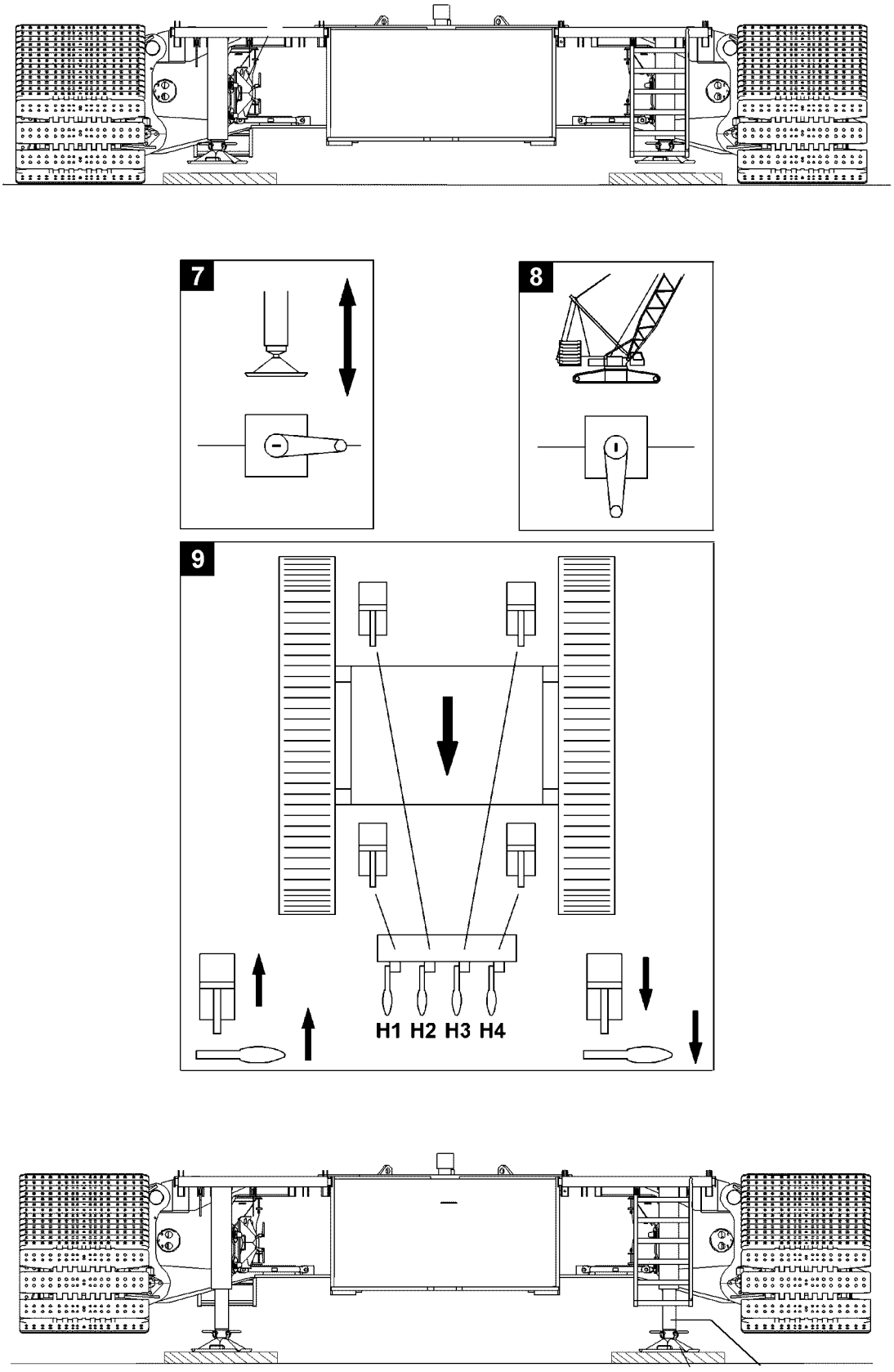

LWE/LR 1600-2-001/18101-07-02/en

Fig.107374

copyright © Liebherr-Werk Ehingen GmbH 2018

4.2.1 Disconnecting the hydraulic and electrical connections to the crawler travel gear

Hydraulic connections

When connecting and releasing hydraulic lines with quick couplings, make sure that the coupling procedure is carried out correctly.

DANGER
Danger of accident due to loss of pressure or leakage!
Incorrectly coupled or self-loosening quick couplings (particularly return lines) can result in serious accidents due to component failure.
▶ Check that the quick couplings have been properly connected before using the crane.

▶ Release the pressure in the hydraulic system before connecting or disconnecting. Turn the engine off and wait for short time.
▶ Install the coupling components (sleeve and plug) with the hand-tightened nut.
▶ Disconnect the coupling sections.
▶ Properly store the hydraulic hoses on the crawler carrier.
▶ Protect the coupling sections with caps to prevent contamination and damage.
▶ Disconnect the hydraulic connections.

Electrical connections

▶ Unplug the electrical connections, see separate electrical wiring diagram.

LWE/LR 1600-2-001/18101-07-02/en

copyright © Liebherr-Werk Ehingen GmbH 2018

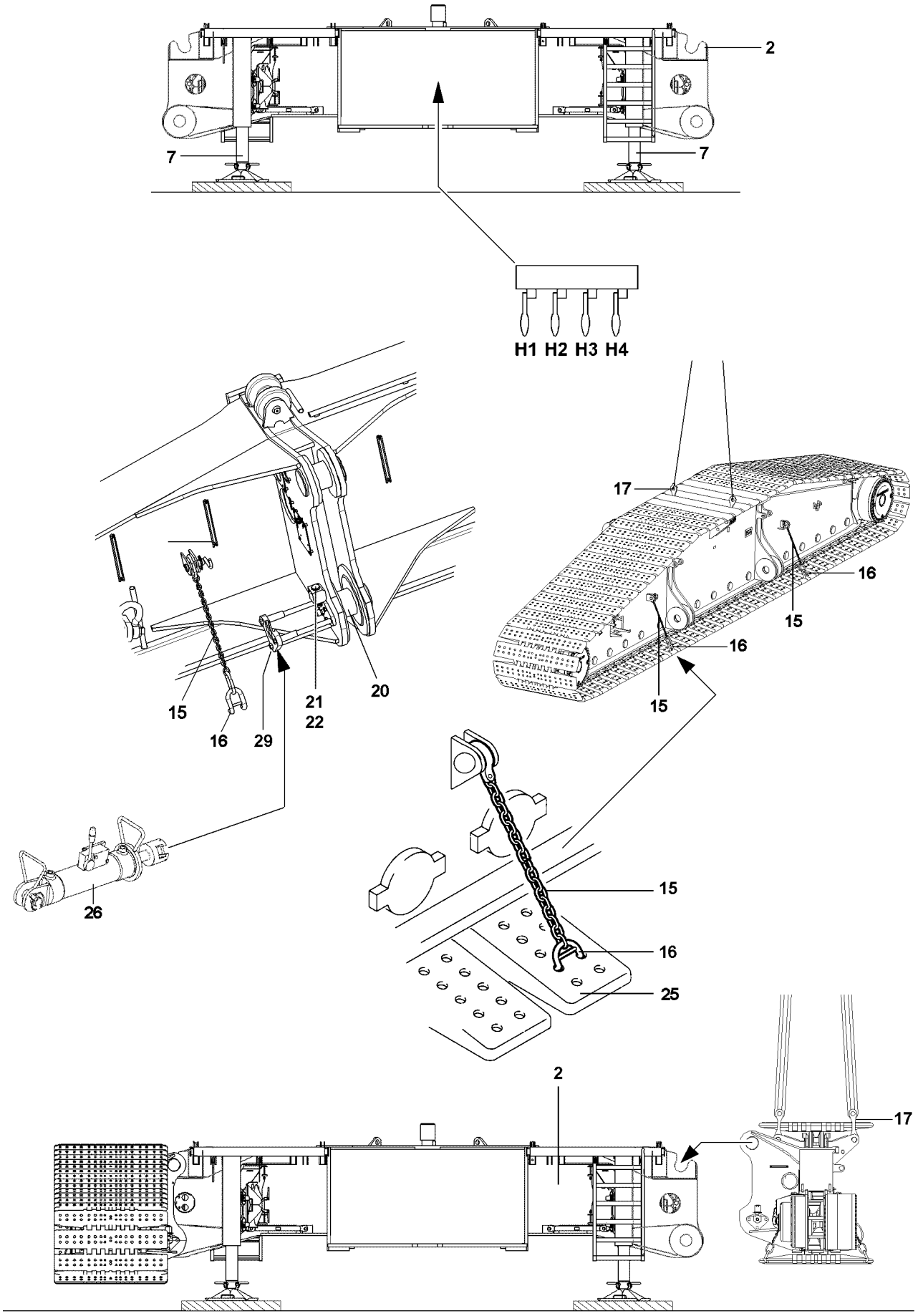

LWE/LR 1600-2-001/18101-07-02/en

Fig.107122

copyright © Liebherr-Werk Ehingen GmbH 2018

4.2.2 Preparing the crawler carrier for disassembly

Note
▶ Hang in **two** chains **15** per crawler carrier side.

The track pads **25** must be secured before removal of the crawler carriers with the chains **15** to prevent sag.

▶ Hang in the chains **15** with the bars **16** on the track pads.

Note
▶ The brackets **17** must be swung between the track pads **25**, „upward“.

▶ Swing the brackets **17** upward.

4.2.3 Lift the crawler track

WARNING
Danger of accidents due to improper support!
If the assembly support is not properly supported, then it can sink into the ground.
Death, severe bodily injuries, property damage.
▶ The supporting base must take on the weight of the crawler travel gear safely.
▶ The support must be made large enough for the ground conditions, with solid materials, such as wood, steel or concrete slabs, see Crane operating instructions, chapter 2.04.

Make sure that the following prerequisites are met:
– The ball valve is set to „assembly support“.
– The hydraulic aggregate of the pin pulling device is turned on.

▶ Establish the hydraulic connections from the hydraulic aggregate of the pin pulling device to the hydraulic cylinders **7**.

Note
▶ Lift the crawler travel gear so that the crawler carriers can be removed without restriction.
▶ Move the hydraulic cylinders out evenly.

▶ Actuate the hand lever **H1**, hand lever **H2**, hand lever **H3** and hand lever **H4**.

Result:

– The four hydraulic cylinders **7** move out.

LWE/LR 1600-2-001/18101-07-02/en

copyright © Liebherr-Werk Ehingen GmbH 2018

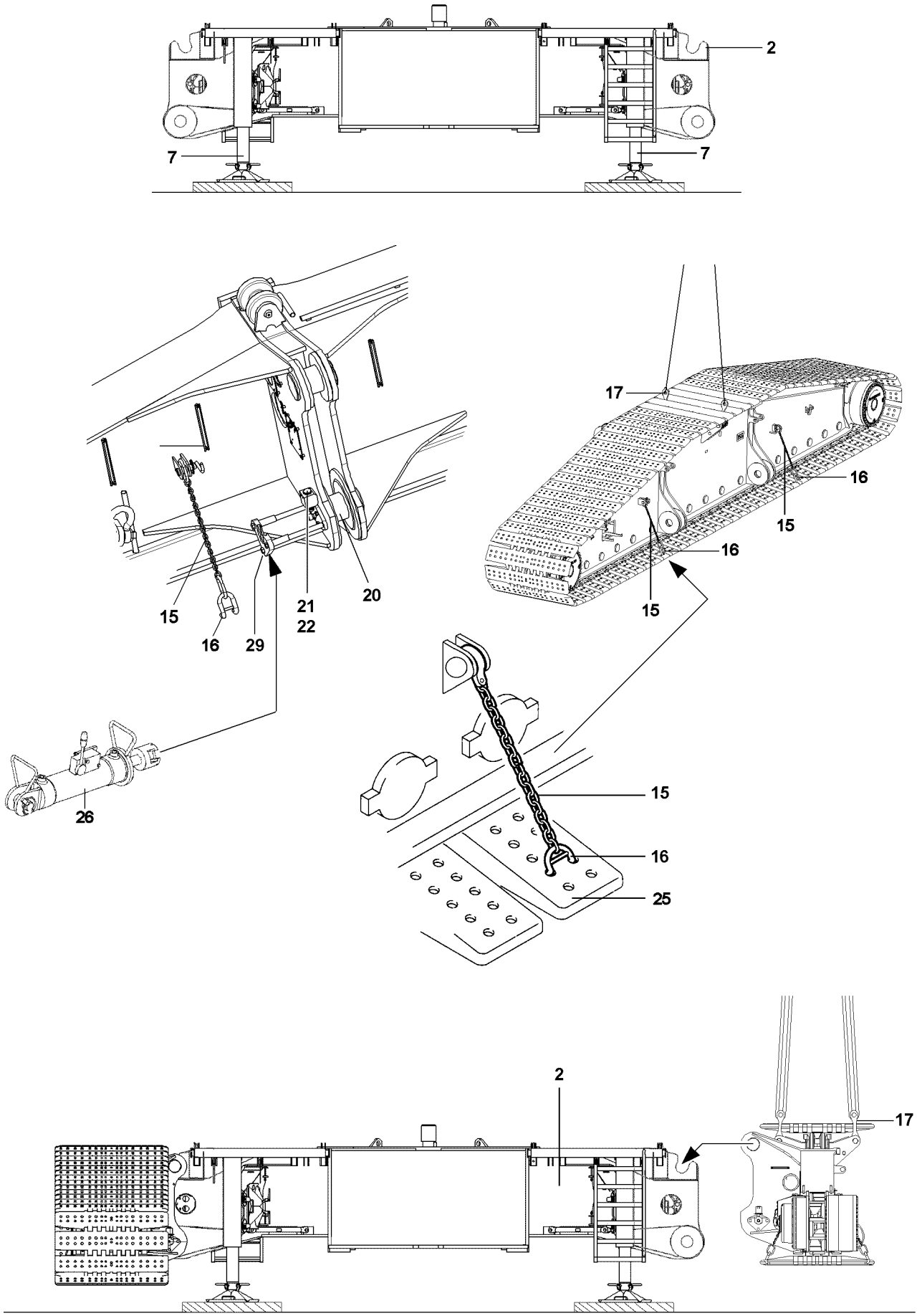

LWE/LR 1600-2-001/18101-07-02/en

Fig.107372

copyright © Liebherr-Werk Ehingen GmbH 2018

4.2.4 Disassembling the crawler carriers

Make sure that the following prerequisites are met:
- The turntable is removed.
- The crawler travel gear is raised.

Note
- ▶ For disassembly of the crawler carriers, the disassembly process and the process for both crawler carrier sides is identical.
- ▶ For that reason, the disassembly of the crawler carriers is only described for one side as an example.

▶ Attach the fastening equipment on the brackets **17** of the crawler carrier.

Unpin and release the crawler carrier **1** on the crawler center section **2** on the bottom.

▶ Remove the spring retainer **22** and unpin the retaining pin **21**.

NOTICE
Danger of property damage!
If the following notes are not observed, the pin pulling device can be damaged.
▶ The retaining pin **21** must be secured in the upper position with the spring retainer **22**.

▶ Secure the retaining pin **21** in the „up“ position with spring retainer **22**.
▶ Unpin the pin **20** with the hydraulic pin pulling device.
▶ Lift the crawler carrier **1** with the auxiliary crane.

When the crawler carrier is raised above the fastening points:
▶ Swing the crawler carrier **1** out.
▶ Set the crawler carrier **1** down on the ground.
▶ Remove the fastening equipment.

4.2.5 Disassembling the assembly support

Note
▶ See section „Disassembling the assembly support“.

copyright © Liebherr-Werk Ehingen GmbH 2018

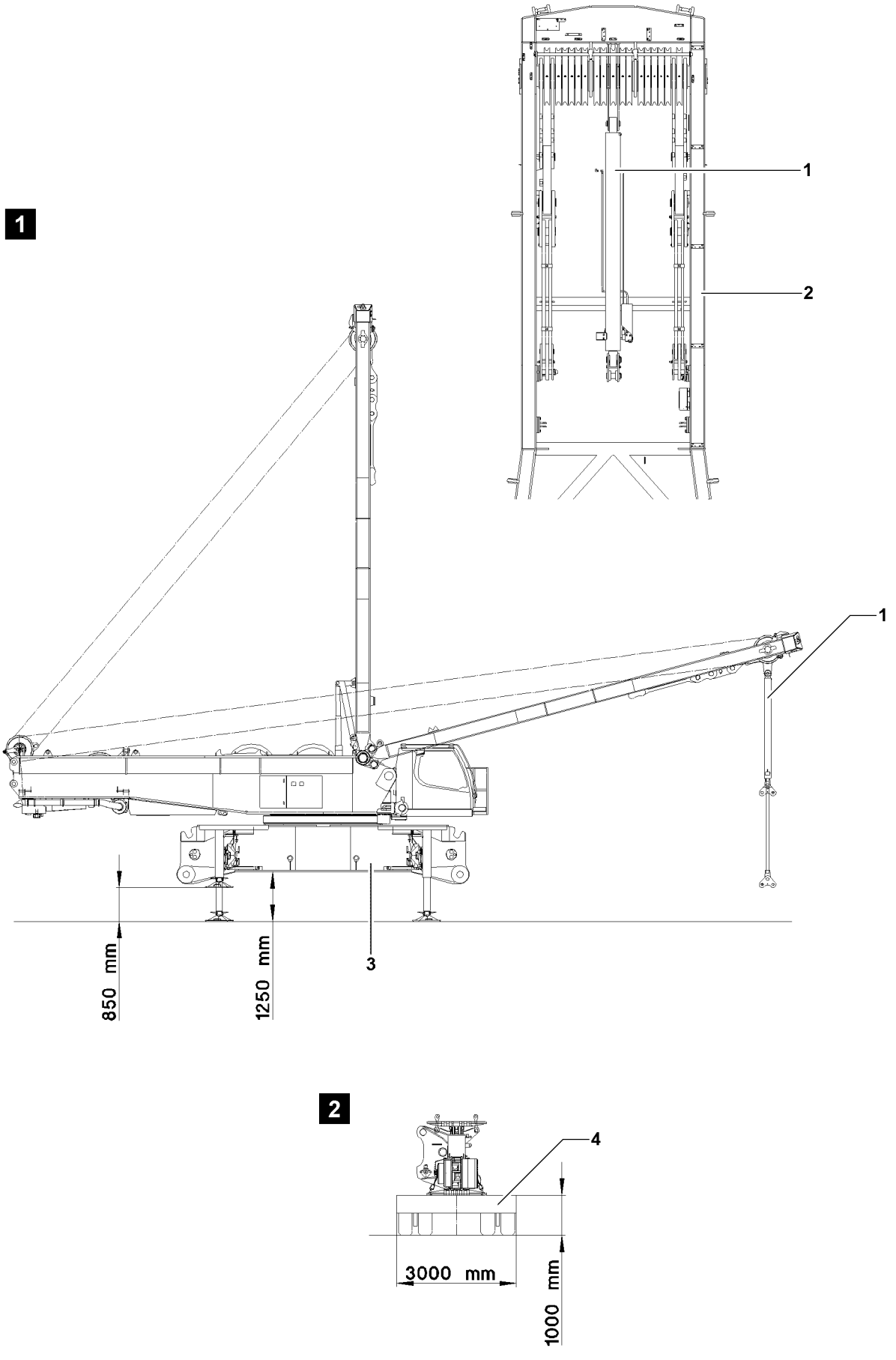

LWE/LR 1600-2-001/18101-07-02/en

Fig.107286

copyright © Liebherr-Werk Ehingen GmbH 2018

5 Assembly / disassembly of the crawler carriers with SA-frame

WARNING
The crane can topple over!
If the SA-frame is not in „vertical“ position before supporting the crane, the crane can topple over.
Death, severe bodily injuries, property damage.
- ▶ Make sure that the ground has sufficient load bearing capacity to take on the weight of the crane safely.
- ▶ Make sure that the SA-frame is erected vertically before the assembly support is moved out and the crane is supported.

Make sure that the following prerequisite is met:
- The SA-frame is erected to 90° (vertical position), see Crane operating instructions, chapter 5.02.

5.1 Assembly of the crawler carrier with SA-frame

WARNING
Danger of falling!
During assembly / disassembly, inspection and maintenance work, assembly personnel must be secured with appropriate aids to prevent them from falling.
Death, severe bodily injuries, property damage.
- ▶ All work aloft, where there is a danger of falling must be carried out with suitable aids.
- ▶ If aids are not available and work cannot be carried out from the ground, then the assembly personnel must secure themselves with the supplied fall arrest system to prevent falling, see Crane operating instructions, chapter 2.04.
- ▶ If fall protection equipment is available, then it must be used, see Crane operating instructions, chapter 2.06.
- ▶ When lifting, lowering, swinging crane parts in and out, no persons may remain in the danger zone.
- ▶ When closing or opening boom systems during boom assembly or boom disassembly, no persons may remain on the boom system or in the danger zone.
- ▶ If railings are present for the crane, then they must be brought into the corresponding position and secured for assembly / disassembly work.
- ▶ Only step on the aids, ladders and catwalks with clean shoes.
- ▶ Keep aids, ladders and catwalks free of heavy dirt, snow and ice.
- ▶ During all assembly and disassembly work, maintenance work and inspections, travel or crane operation is prohibited.
- ▶ Remaining on a suspended load is prohibited.
- ▶ Stepping or walking on crane components and lattice sections, which have an incline of more than 20° is prohibited.
- ▶ For all assembly work, the crane driver of the main crane must be in voice contact with the crane driver / crane drivers of the auxiliary crane / auxiliary cranes.
- ▶ For assembly tasks, the crane driver may only initiate crane movements when the responsible guide has explicitly released the movement.

WARNING
Danger of impact / crushing!
When installing / removing crane components with the auxiliary crane, crane components can start to swing back and forth.
When lifting / lowering and positioning crane components, there is an increased danger of impacts / crushing.
Death, severe bodily injuries, property damage.
- ▶ Make sure that personnel cannot be caught by components.
- ▶ Make sure that the crane is horizontally aligned.
- ▶ When working in danger zones: Use aids to protect limbs.
- ▶ Guide components with suitable aids to minimize oscillation.

LWE/LR 1600-2-001/18101-07-02/en

copyright © Liebherr-Werk Ehingen GmbH 2018

Note

- The weight of the crawler carrier, depending on the equipment configuration, is a maximum of 38 t , see Crane operating instructions, chapter 3.01.
- The assembly support on the crawler central section is connected to the turntable hydraulics.

LWE/LR 1600-2-001/18101-07-02/en

copyright © Liebherr-Werk Ehingen GmbH 2018

Empty page!

LWE/LR 1600-2-001/18101-07-02/en

copyright © Liebherr-Werk Ehingen GmbH 2018

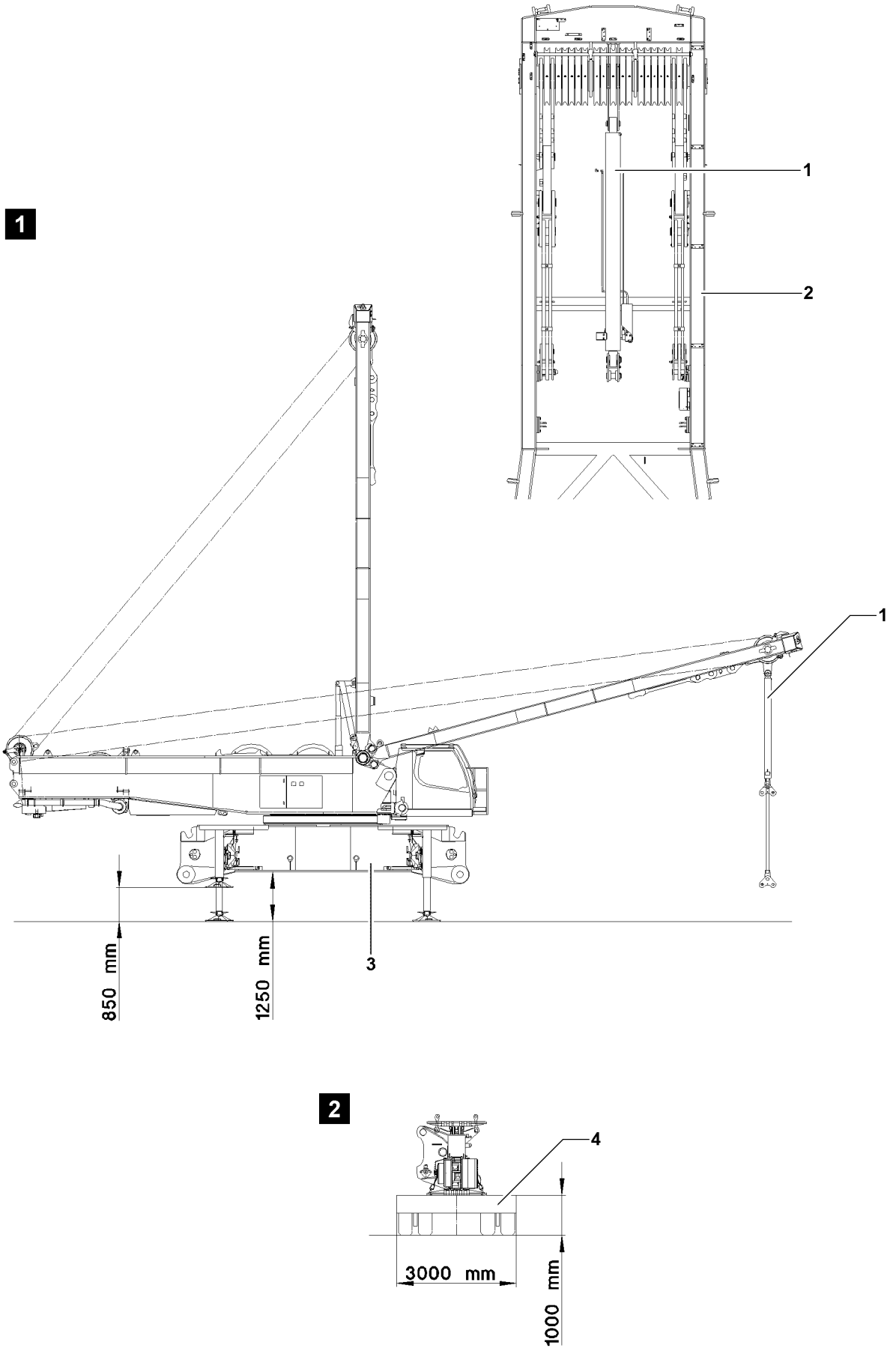

LWE/LR 1600-2-001/18101-07-02/en

Fig.107286

copyright © Liebherr-Werk Ehingen GmbH 2018

Note

- ▶ The assembly cylinder **1** lies unsecured on the SA-frame **2**.
- ▶ The assembly cylinder **1** has a stroke of 2300 mm.
- ▶ The load can be measured with the assembly cylinder **1**.

Note

- ▶ Function assignment for the manual lever for retracting / extending the support cylinder, see section „Lifting the crawler center section“.

Note

- ▶ For assembly on supports, the SA-frame must stand vertically.

Make sure that the following prerequisites are met:

- The crane must be aligned horizontally.
- The placement location must be level and have adequate load-bearing capacity.
- The operating mode „SA-frame“ has been set and confirmed on the LICCON computer system.
- The maximum height of the transport vehicle **4** may not exceed 1000 mm , see illustration **2**.
- The hydraulic support cylinders are moved out to 850 mm , see illustration **1**.

LWE/LR 1600-2-001/18101-07-02/en

copyright © Liebherr-Werk Ehingen GmbH 2018

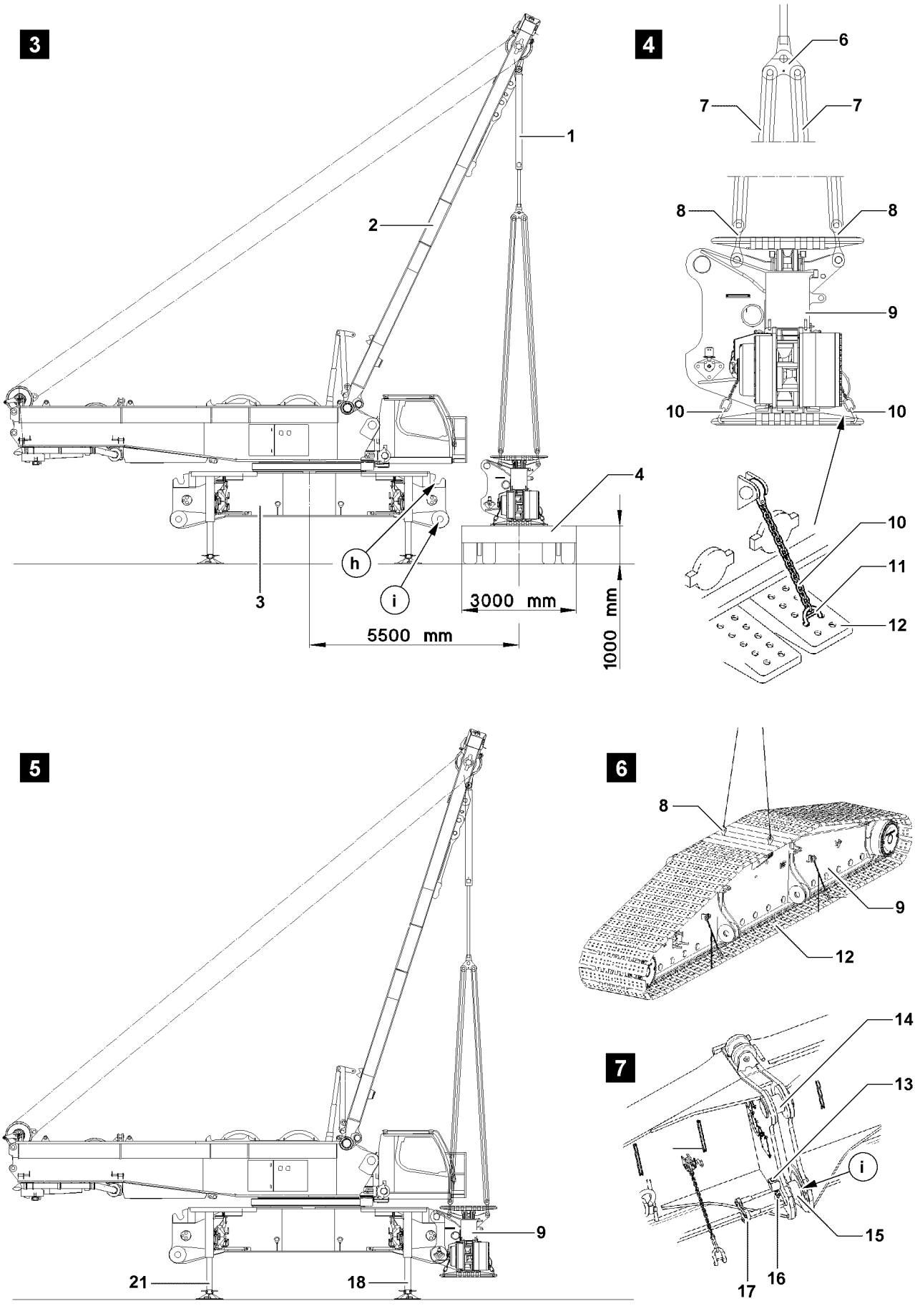

Fig.107285

LWE/LR 1600-2-001/18101-07-02/en

copyright © Liebherr-Werk Ehingen GmbH 2018

5.1.1 Assembling the first crawler carrier

NOTICE
Damage to crane!
If the following instructions are not observed, the crane can topple over or be severely damaged when unloading the crawler carrier.
- ▶ Make sure that the crane is horizontally aligned.
- ▶ The maximum permissible distance of 5500 mm between the crawler carrier and the center of the turntable may not be exceeded, see illustration **3**.
- ▶ The specifications in the load charts SA-operation must be adhered to.

Preparing the crawler carrier for assembly

NOTICE
Damage to the crawler carrier!
If the track pads are not secured with transport retainers against sagging, the crawler carrier can be severely damaged.
- ▶ Secure the track pads **12** before assembly of the crawler carrier **9** with the chains **10** against sagging.

- ▶ Hang the chains **10** with the bars **11** on the track pads **12**, see illustration **4**.

Note
- ▶ The brackets **8** must be swung through between the track pads **12**, „upward“.

- ▶ Swing the brackets **8** „upward“.

LWE/LR 1600-2-001/18101-07-02/en

copyright © Liebherr-Werk Ehingen GmbH 2018

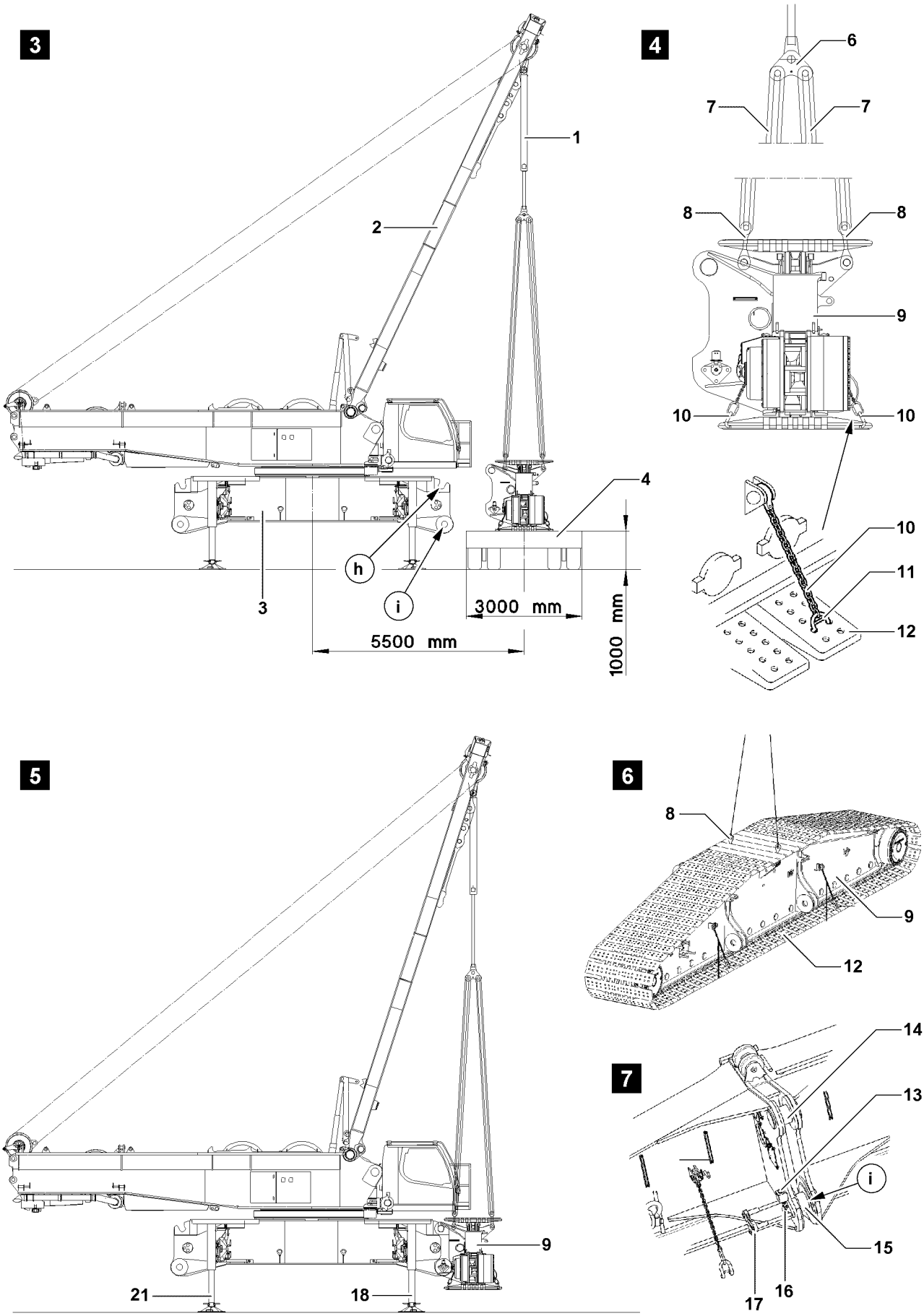

Fig.107285

LWE/LR 1600-2-001/18101-07-02/en

copyright © Liebherr-Werk Ehingen GmbH 2018

Assembling the crawler carrier

Note
- ▶ Note the identification on the crawler carrier and the crawler center section.
- ▶ The crawler carrier and the crawler center section are marked with numbers.

▶ Luff the SA-frame **2** down until the assembly cylinder **1** is centered above the crawler carrier **9**.

Note
- ▶ The assembly cylinder **1** may not be moved out all the way.
- ▶ If the assembly cylinder **1** is completely moved out and the limit switch position is reached, an error display occurs on the LICCON monitor and the LMB-Stop.

▶ Move the assembly cylinder **1** out: Actuate master switch 2.
▶ Pin the fastening ropes **7** on the assembly device **6** and secure with locking pins.
▶ Move the assembly cylinder **1** in until the fastening ropes **7** are tensioned: Actuate master switch 2.
▶ Lift the crawler carrier **9** with the assembly cylinder **1** from the transport vehicle **4**: Slowly move the assembly cylinder **1** in with master switch 2.
▶ Carefully luff the SA-frame **2** up.
▶ Swing the crawler carrier **9** with the SA-frame **2** to the receptacle on the crawler center section **3**.
▶ Bring the crawler carrier **9** carefully into the crawler center section **3**.
▶ Lower the crawler carrier **9** onto the crawler center section **3**: Hang the pins **14** on points **h**.

NOTICE
Pin is not released!
If the pin **15** is secured upon pinning through the retaining pin, the pin pulling device can be damaged.
▶ Secure retaining pin **13** before pinning in position above with spring retainer.

▶ Hang the pin pulling cylinder on the screw **16** and retainer **17**, see illustration **7**.
▶ Pin in the pins **15** with the pin pulling cylinder on the pin points **i** and secure with retaining pins.
▶ Secure the retaining pins **13** with spring retainer.
▶ Release the fastening ropes **7** from the brackets **8** on the crawler carrier **9**.

WARNING
The crane can tip over!
If the support cylinders are moved out / in unevenly, the crane can tip over.
Death, severe bodily injuries, property damage.
▶ When moving the support cylinders in / out, pay attention to the horizontal alignment, check visually.

▶ Move the support cylinder in evenly until the first crawler carrier **9** is standing on the ground.

When the first crawler carrier **9** is standing on the ground:
▶ Move the support cylinders **18** in all the way.
▶ Move the support cylinder **21** out until the angle between the ground and the crawler center section is approx. 1.4°.

WARNING
Danger of tipping over!
Before turning the turntable, if the first assembled crawler carrier is not positioned on the ground, there is a danger of tipping over.
Death, severe bodily injuries, property damage.
▶ Before turning the turntable: Set the first installed crawler carrier on the ground.
▶ Hydraulic support cylinder **18** must be retracted completely on the crawler side.

▶ Turn the turntable by 180°.

LWE/LR 1600-2-001/18101-07-02/en

copyright © Liebherr-Werk Ehingen GmbH 2018

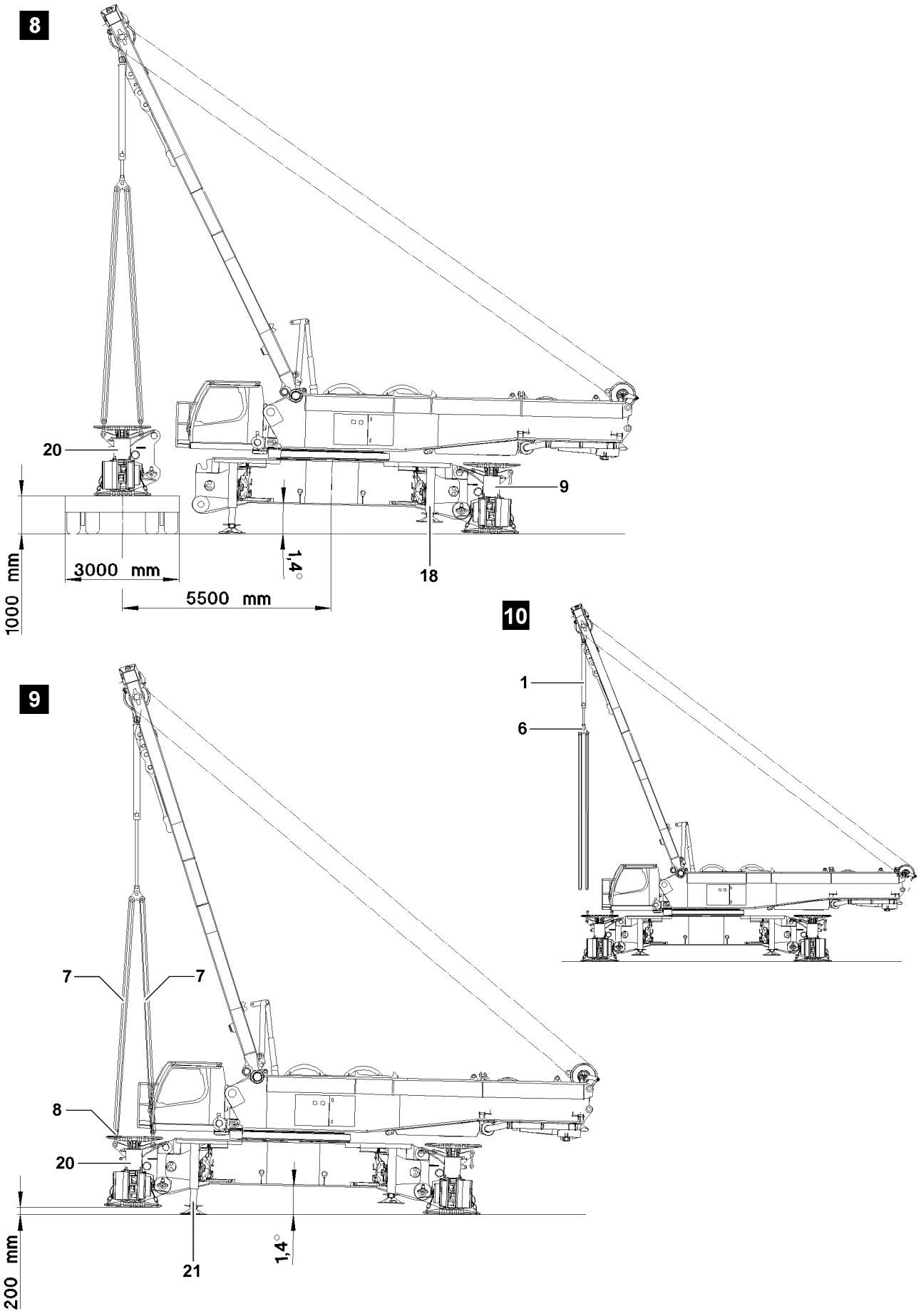

Fig.107367

LWE/LR 1600-2-001/18101-07-02/en

copyright © Liebherr-Werk Ehingen GmbH 2018

5.1.2 Assembly of the second crawler carrier

Make sure that the following prerequisites are met:
- The first installed crawler carrier **9** is standing on the ground.
- The second crawler carrier **20** is prepared for assembly.
- The hydraulic support cylinders **18** on the crawler side are fully moved in.
- The crane is inclined in direction of the assembled crawler carrier by approx. 1.4°, see illustration **8**.
- The turntable is turned by 180°.

Note
▶ Procedure for assembly of the second crawler carrier **20**, see section „Assembling first crawler carrier“.

When the second crawler carrier **20** is installed:
▶ Set the second crawler carrier on the ground: Move the support cylinder **21** in evenly.
▶ Remove the chains **10** on the track pads **12** and secure on the crawler carriers, see illustration **10**.
▶ Move the support cylinders **21** in all the way.

Note
▶ The hydraulic support must remain fully swung out.

▶ Unpin the fastening ropes **7** on the brackets **8** and on the assembly device **6**.

NOTICE
Damage to the brackets **8**!
▶ After removing the fastening equipment, the brackets **8** must be swung down.

▶ Swing the brackets **8** down.
▶ Move the assembly cylinder **1** in completely.

5.1.3 Establishing the hydraulic connection to the crawler travel gears

Make sure that the following prerequisite is met:
- Both crawler carriers are properly installed, pinned and secured.

When connecting and releasing hydraulic lines with quick couplings, make sure that the coupling procedure is carried out correctly.

DANGER
Loss of pressure or leakage!
Incorrectly coupled or self-loosening quick couplings (particularly return lines) can result in serious accidents due to component failure.
▶ Check that the quick couplings have been properly connected before using the crane.

▶ Release the pressure in the hydraulic system before connecting or disconnecting. Turn the engine off and wait for short time.
▶ Connect the coupling components (sleeve and connector) and screw together with the hand-tightened nut.
▶ Tighten the hydraulic coupling by hand. Rotate the hand-tightened nut until it reaches a tangible, fixed stop position.
▶ Establish the hydraulic connections.

5.1.4 Establishing the electrical connection to the crawler travel gears

▶ Establish the electrical connections, see separate electrical wiring diagram.

LWE/LR 1600-2-001/18101-07-02/en

copyright © Liebherr-Werk Ehingen GmbH 2018

11

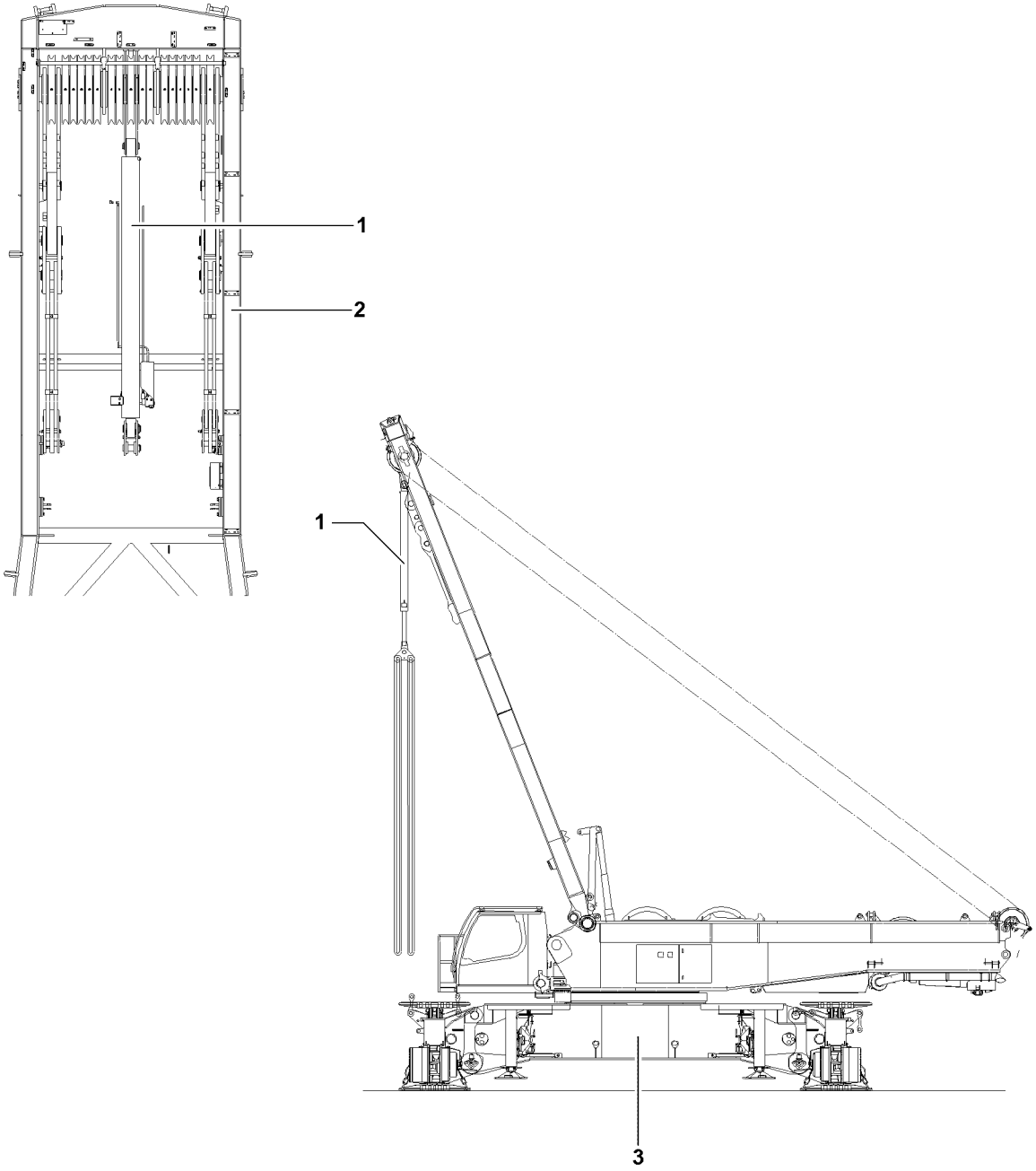

12

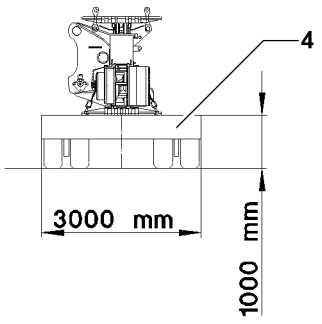

LWE/LR 1600-2-001/18101-07-02/en

Fig.107457

copyright © Liebherr-Werk Ehingen GmbH 2018

5.2 Disassembly of the crawler carrier with SA-frame

WARNING
Danger of falling!
During assembly / disassembly, inspection and maintenance work, assembly personnel must be secured with appropriate aids to prevent them from falling.
Death, severe bodily injuries, property damage.
- ▶ All work aloft, where there is a danger of falling must be carried out with suitable aids.
- ▶ If aids are not available and work cannot be carried out from the ground, then the assembly personnel must secure themselves with the supplied fall arrest system to prevent falling, see Crane operating instructions, chapter 2.04.
- ▶ If fall protection equipment is available, then it must be used, see Crane operating instructions, chapter 2.06.
- ▶ When lifting, lowering, swinging crane parts in and out, no persons may remain in the danger zone.
- ▶ When closing or opening boom systems during boom assembly or boom disassembly, no persons may remain on the boom system or in the danger zone.
- ▶ If railings are present for the crane, then they must be brought into the corresponding position and secured for assembly / disassembly work.
- ▶ Only step on the aids, ladders and catwalks with clean shoes.
- ▶ Keep aids, ladders and catwalks free of heavy dirt, snow and ice.
- ▶ During all assembly and disassembly work, maintenance work and inspections, travel or crane operation is prohibited.
- ▶ Remaining on a suspended load is prohibited.
- ▶ Stepping or walking on crane components and lattice sections, which have an incline of more than 20° is prohibited.
- ▶ For all assembly work, the crane driver of the main crane must be in voice contact with the crane driver / crane drivers of the auxiliary crane / auxiliary cranes.
- ▶ For assembly tasks, the crane driver may only initiate crane movements when the responsible guide has explicitly released the movement.

WARNING
Danger of impact / crushing!
When installing / removing crane components with the auxiliary crane, crane components can start to swing back and forth.
When lifting / lowering and positioning crane components, there is an increased danger of impacts / crushing.
Death, severe bodily injuries, property damage.
- ▶ Make sure that personnel cannot be caught by components.
- ▶ Make sure that the crane is horizontally aligned.
- ▶ When working in danger zones: Use aids to protect limbs.
- ▶ Guide components with suitable aids to minimize oscillation.

Note
- ▶ The weight of the crawler carrier, depending on the equipment configuration, is a maximum of 38 t , see Crane operating instructions, chapter 3.01.
- ▶ The assembly support on the crawler central section is connected to the turntable hydraulics.

Note
- ▶ The assembly cylinder **1** lies unsecured on the SA-frame **2**.
- ▶ The assembly cylinder **1** has a stroke of 2300 mm.
- ▶ The load can be measured with the assembly cylinder **1**.

Note
- ▶ Function assignment for the manual lever for retracting / extending the support cylinder, see section „Assemble assembly supports“.

copyright © Liebherr-Werk Ehingen GmbH 2018

Make sure that the following prerequisites are met:
- The crane must be aligned horizontally.
- The placement location must be level and have adequate load-bearing capacity.
- The operating mode „SA-frame“ has been set and confirmed on the LICCON computer system.
- The maximum height of the transport vehicle **4** may not exceed 1000 mm , see illustration **12**.
- Suitable material must be available for the support of the assembly supports.
- The support plates are installed.

LWE/LR 1600-2-001/18101-07-02/en

copyright © Liebherr-Werk Ehingen GmbH 2018

Empty page!

LWE/LR 1600-2-001/18101-07-02/en

copyright © Liebherr-Werk Ehingen GmbH 2018

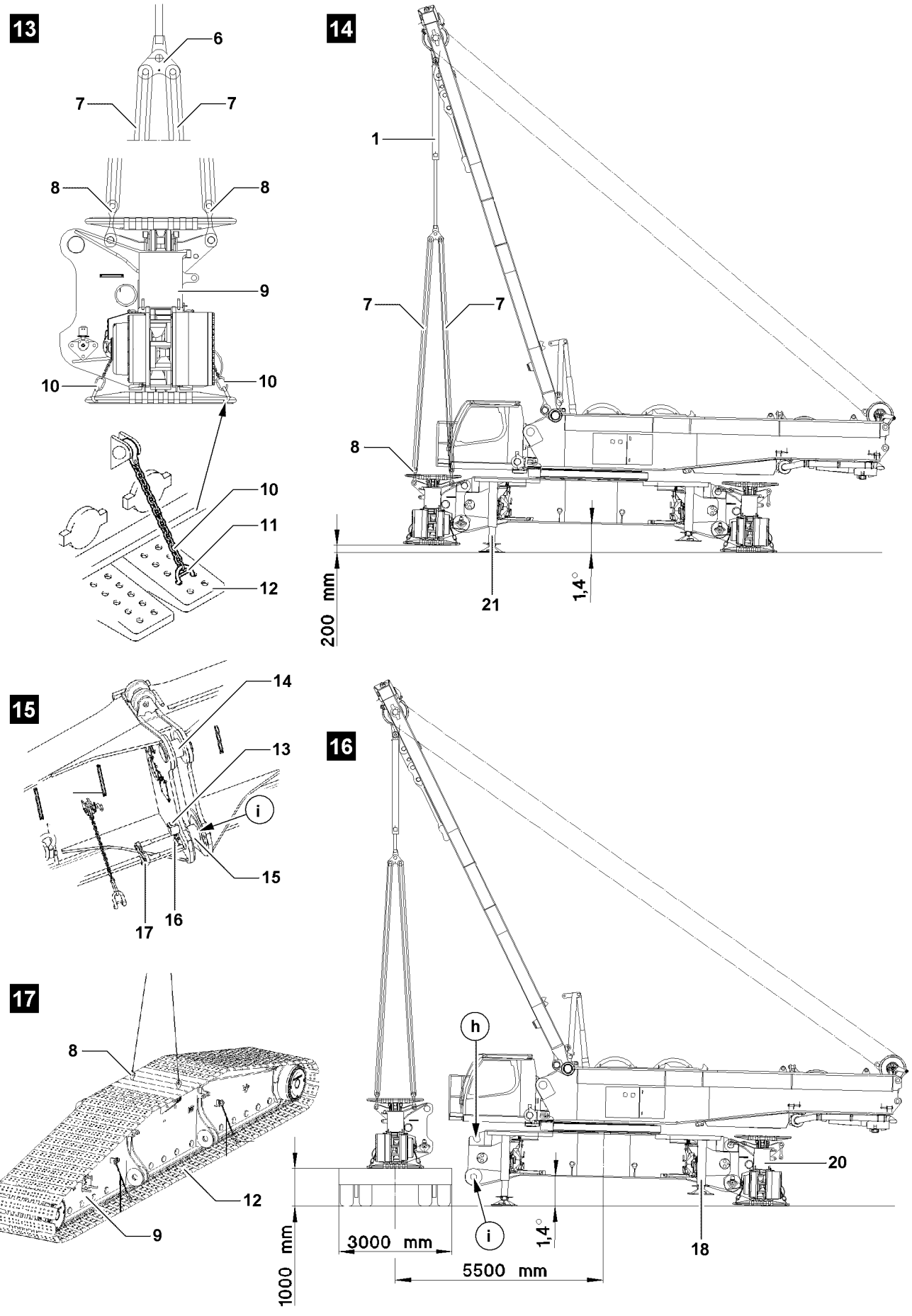

Fig.107368

LWE/LR 1600-2-001/18101-07-02/en

copyright © Liebherr-Werk Ehingen GmbH 2018

5.2.1 Disconnecting the hydraulic connection to the crawler travel gears

Make sure that the following prerequisite is met:
– Both crawler carriers are properly installed, pinned and secured.

When connecting and releasing hydraulic lines with quick couplings, make sure that the coupling procedure is carried out correctly.

DANGER
Loss of pressure or leakage!
Incorrectly coupled or self-loosening quick couplings (particularly return lines) can result in serious accidents due to component failure.
▶ Check that the quick couplings have been properly connected before using the crane.

▶ Release the pressure in the hydraulic system before connecting or disconnecting. Turn the engine off and wait for short time.
▶ Connect the coupling components (sleeve and connector) and screw together with the hand-tightened nut.
▶ Tighten the hydraulic coupling by hand. Rotate the hand-tightened nut until it reaches a tangible, fixed stop position.
▶ Establish the hydraulic connections.

5.2.2 Disconnecting the electric connection to the crawler travel gears

▶ Disconnect the electrical connections, see separate electrical wiring diagram.

5.2.3 Disassembling the first crawler carrier

Preparing the crawler carrier for disassembly

Note
▶ The track pads **12** of both crawler carriers must stand in such a way that the brackets **8** can be swung through between the track pads **12** „upward“, see illustration **13**.

NOTICE
Damage to the crawler carrier!
If the track pads are not secured with transport retainers against sagging, the crawler carrier can be severely damaged.
▶ Secure the track pads **12** before assembly of the crawler carrier **9** with the chains **10** against sagging.

▶ Hang the chains **10** with the bars **11** on the track pads **12**, see illustration **13**.

Note
▶ The brackets **8** must be swung through between the track pads **12**, „upward“.

▶ Swing the brackets **8** „upward“.

LWE/LR 1600-2-001/18101-07-02/en

copyright © Liebherr-Werk Ehingen GmbH 2018

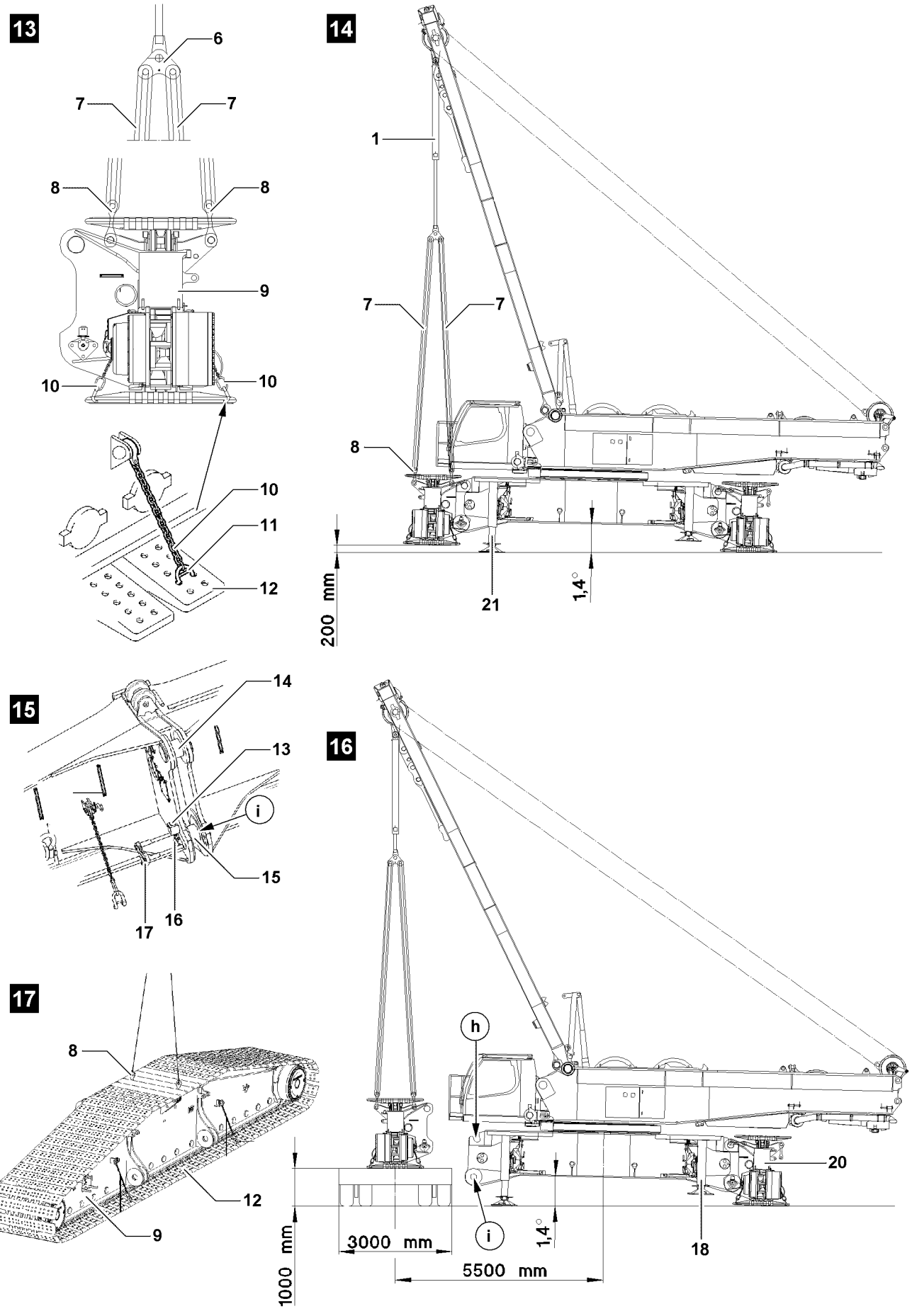

Fig.107368

LWE/LR 1600-2-001/18101-07-02/en

copyright © Liebherr-Werk Ehingen GmbH 2018

Disassembling the first crawler carrier

WARNING
Danger of accidents due to improper support!
If the assembly support is not properly supported, then it can sink into the ground.
Death, severe bodily injuries, property damage.
- ▶ The supporting base must take on the weight of the crawler travel gear safely.
- ▶ The support must be made large enough for the ground conditions, with solid materials, such as wood, steel or concrete slabs, see Crane operating instructions, chapter 2.04.

- ▶ Lift the first crawler carrier off the ground: Move the support cylinder **21** in until the angle between ground and crawler center section is approx. 1.4°, see illustration **14**.
- ▶ Luff the SA-frame **2** down until the assembly cylinder **1** is centered above the crawler carrier **9**.

Note
- ▶ The assembly cylinder **1** may not be moved out all the way.
- ▶ If the assembly cylinder **1** is completely moved out and the limit switch position is reached, an error display occurs on the LICCON monitor and the LMB-Stop.

- ▶ Move the assembly cylinder **1** out: Actuate master switch 2.
- ▶ Pin the fastening ropes **7** on the assembly device **6** and secure with locking pins, see illustration **13**.

NOTICE
Pin is not released!
If the pin **15** is secured upon unpinning through the retaining pin, the pin pulling device can be damaged.
- ▶ Secure securing pins **13** before unpinning in position „above“ with spring retainer, see illustration **15**.

- ▶ Hang the pin pulling cylinder on the screw **16** and retainer **17**.
- ▶ Unpin the pin **15** with the pin pulling cylinder.
- ▶ Hang the pin pulling cylinder on the screw **16** and retainer **17**.
- ▶ Unpin the pins **15** with the pin pulling cylinder on the pin points **i**.
- ▶ Remove the pin pulling cylinder.
- ▶ Move the assembly cylinder **1** in until the fastening ropes **7** are tensioned: Actuate master switch 2.
- ▶ Lift the crawler carrier **9** with the assembly cylinder **1** and unhook on point **h**: Slowly move the assembly cylinder **1** in with master switch 2.
- ▶ Luff the SA-frame **2** carefully up and place the crawler carrier **9** on the transport device.
- ▶ Release the fastening ropes **7** from the brackets **8** on the crawler carrier **9**.

NOTICE
Damage to the brackets **8**!
- ▶ After removing the fastening equipment, the brackets **8** must be swung down.

- ▶ Swing the brackets **8** down.

LWE/LR 1600-2-001/18101-07-02/en

copyright © Liebherr-Werk Ehingen GmbH 2018

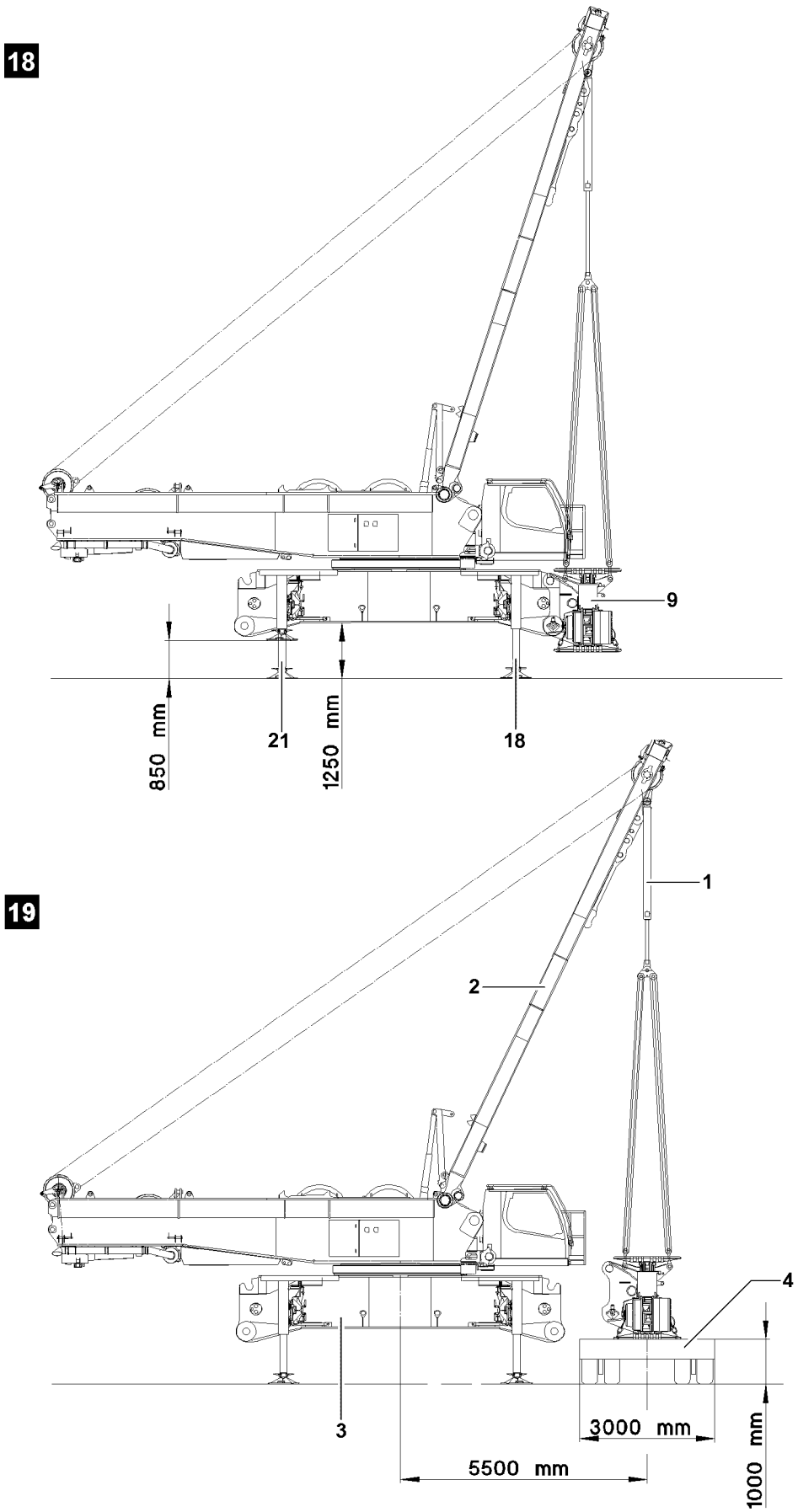

LWE/LR 1600-2-001/18101-07-02/en

Fig.107456

copyright © Liebherr-Werk Ehingen GmbH 2018

Moving the assembly support out

WARNING
The crane can tip over!
If the support cylinders are moved out / in unevenly, the crane can tip over.
Death, severe bodily injuries, property damage.
▶ When moving the support cylinders in / out, pay attention to the horizontal alignment, check visually.

▶ Move the support cylinder **18** out until the crane is in horizontal position.
▶ Move all support cylinders out evenly to at least 850 mm.
▶ Turn the turntable by 180°.

Disassembling the second crawler carrier

Make sure that the following prerequisites are met:
– The first crawler carrier is assembled.
– The second crawler carrier is prepared for assembly.
– The hydraulic support cylinders are moved out to at least 850 mm.
– The turntable is turned by 180°.

Note
▶ Procedure for disassembly of the second crawler carrier, see section „Disassemble first crawler carrier“.

When the second crawler carrier is disassembled:
▶ Disassemble assembly supports, see section „Disassembling the assembly supports“.

LWE/LR 1600-2-001/18101-07-02/en

copyright © Liebherr-Werk Ehingen GmbH 2018

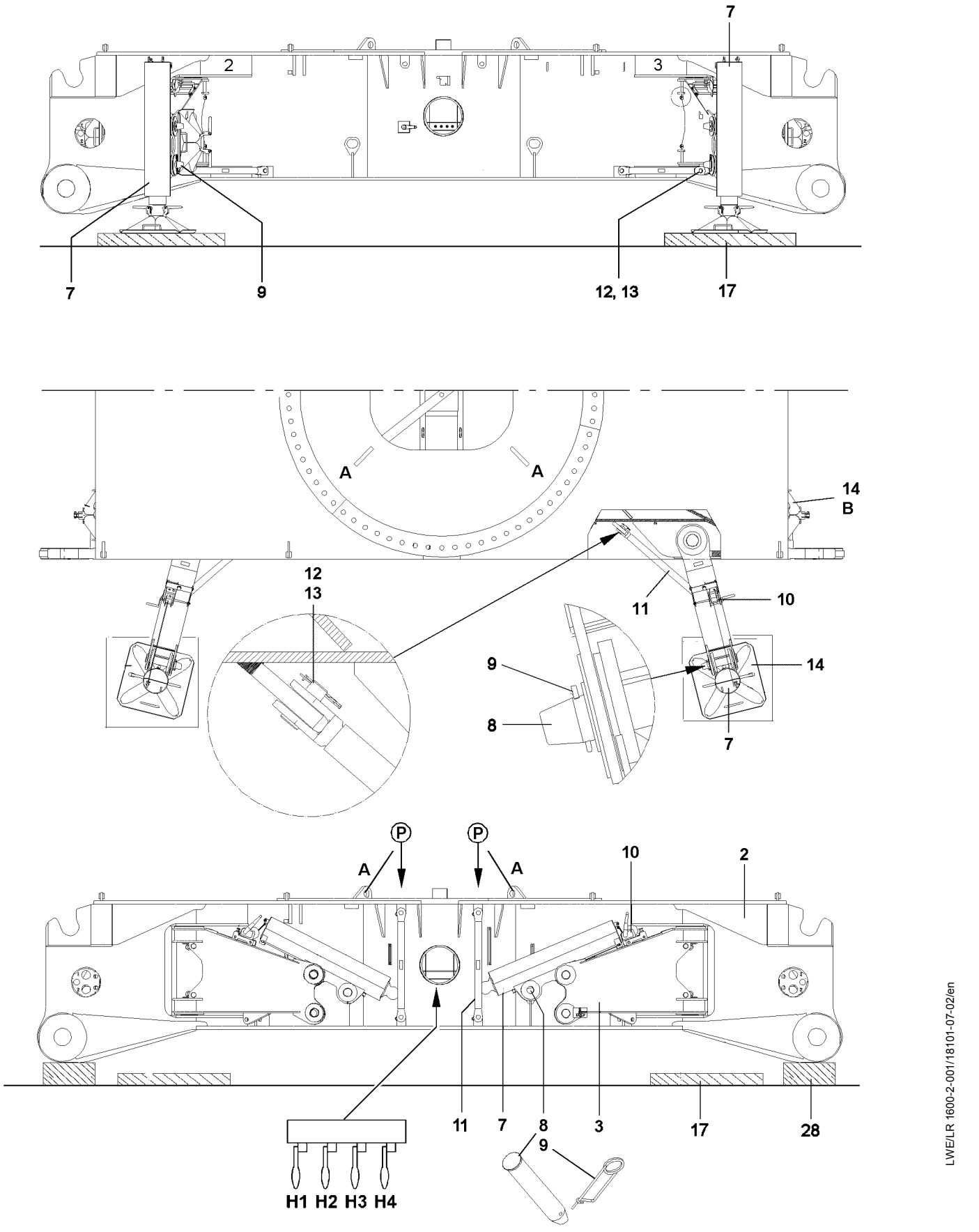

Fig.107166

LWE/LR 1600-2-001/18101-07-02/en

copyright © Liebherr-Werk Ehingen GmbH 2018

6 Disassembling the assembly support

Note

▶ For the disassembly of the assembly supports, the turntable must be disassembled, see Crane operating instructions, chapter 3.02.

6.1 Supporting the crawler center section

Make sure that the following prerequisites are met:
– The crawler carriers **1** are completely disassembled.
– The disassembly location is level and sufficiently load bearing.

Note

▶ The support **28** must be high enough so that the hydraulic cylinders **7** can be completely moved in and folded down in transport position.
▶ The support **28** must take on the weight of the crawler center section **2** safely.

▶ Support the crawler center section **2** with hardwood timbers or other suitable materials from below.

6.2 Lowering the crawler center section to the support

Make sure that the following prerequisite is met:
– The crawler center section is supported properly with materials of sufficient load-bearing capacity.

WARNING
Danger of tipping the crawler center section!
If the hydraulic cylinders **7** are moved in unevenly, the crawler center section can tip over.
Death, severe bodily injuries, property damage.
▶ When lowering the crawler center section, pay attention to the horizontal alignment, check visually.

▶ Actuate the hand lever **H1**, hand lever **H2**, hand lever **H3** and hand lever **H4**.

Result:

– The hydraulic cylinders **7** move in.

▶ Move the hydraulic cylinders **7** in and set the crawler center section **2** on the supporting base **28**.

When the crawler center section has been placed on the supporting base:
▶ Open the receptacle on the support plates **14**.
▶ Move the hydraulic cylinders **7** completely in.
▶ Fasten the support plates **14** in transport position **B**.

LWE/LR 1600-2-001/18101-07-02/en

copyright © Liebherr-Werk Ehingen GmbH 2018

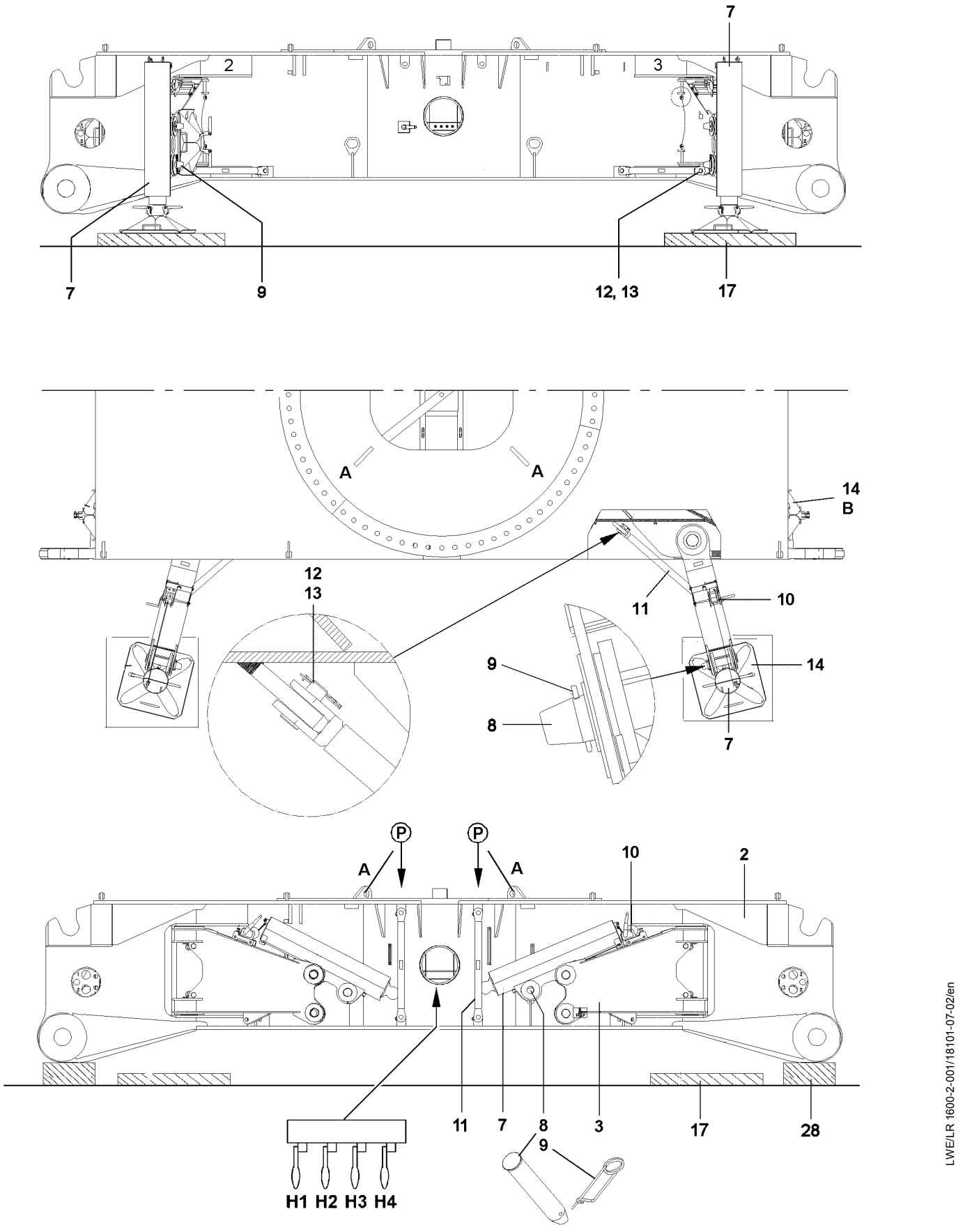

Fig.107166

LWE/LR 1600-2-001/18101-07-02/en

copyright © Liebherr-Werk Ehingen GmbH 2018

6.3 Disassembling the assembly supports

The swinging in and locking procedure of the assembly support is the same for all four assembly supports and is therefore described only once.

- ▶ Unpin the pin **8**: Remove the spring retainer **9** and unpin the pin **8**.
- ▶ Pull the hydraulic cylinder **7** in transport position - „to the rear“ by spooling the rope winch **10** up.
- ▶ Unpin the brace **11** on the crawler center section and on the assembly support: Remove the spring retainer **13** and unpin the pin **12**.
- ▶ Install the brace **11** in transport position **P** on the crawler center section: Use pin **12** and spring retainer **13**.
- ▶ Swing the assembly support **3** in until it locks on the crawler center section.

When the assembly support **3** is locked on the crawler center section:

- ▶ Secure the assembly support **3** with pin **8** spring retainer **9**.
- ▶ Bring the rope winch **10** into transport position: Pull the spring latch up and hold.
- ▶ Push the rope winch **10** in direction of crawler center section until the spring latch engages again by itself.

Result:

– The rope winch **10** is locked in operating position.

LWE/LR 1600-2-001/18101-07-02/en

copyright © Liebherr-Werk Ehingen GmbH 2018

Empty page!

LWE/LR 1600-2-001/18101-07-02/en

copyright © Liebherr-Werk Ehingen GmbH 2018

3.02 Turntable assembly

1	Turntable with Quick Connection*	3
2	Installing the turntable	7
3	Removing the turntable	11

LWE/LR 1600-2-001/18101-07-02/en

copyright © Liebherr-Werk Ehingen GmbH 2018

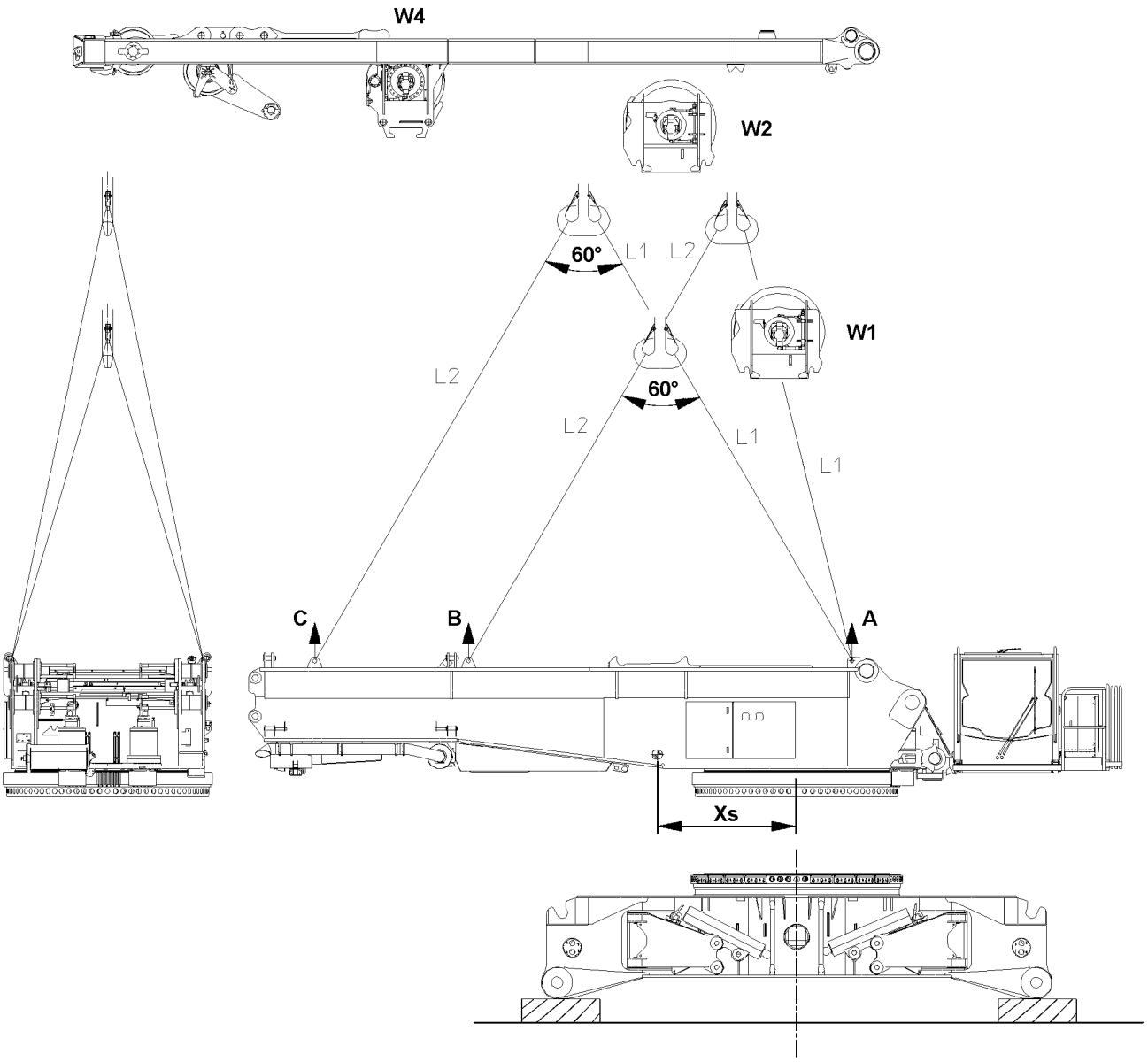

LWE/LR 1600-2-001/18101-07-02/en

Fig.105486

copyright © Liebherr-Werk Ehingen GmbH 2018

1 Turntable with Quick Connection*

For transport, the turntable can be separated from the crawler center section by the Quick Connection* device. In that case, the turntable as well as the crawler center section are each transported on a separate transport vehicle.

1.1 Load take-up with an auxiliary crane

		Load			Center of gravity	Length of tackle	
	Weight	**A**	**B**	**C**	**Xs**	**L1**	**L2**
Turntable with 2 slewing gears	33.90 t	18.59 t	15.31 t	–	-1.69 m	L1 = L2	
+ SA-Bracket with winch 4 and rope	51.40 t	24.44 t	–	26.96 t	-3.24 m	L1 = L2	
+ Winch 1 with 1050 m rope	58.90 t	30.94 t	–	27.96 t	-2.86 m	L1 = L2	
+ Winch 2 with 1050 m rope	66.40 t	35.93 t	–	30.47 t	-2.74 m	L1 = L2	
Turntable + center section + 2 slewing gears	61.30 t	42.05 t	19.25 t	–	-0.94 m	6.3 m	7.1 m
+ SA-Bracket with winch 4 and rope	78.80 t	37.10 t	41.70 t	–	-2.12 m	L1 = L2	
+ Winch 1 with 1050 m rope	86.30 t	43.20 t	43.10 t	–	-1.95 m	L1 = L2	
+ Winch 2 with 1050 m rope	93.80 t	47.16 t	46.64 t	–	-1.94 m	L1 = L2	

LWE/LR 1600-2-001/18101-07-02/en

copyright © Liebherr-Werk Ehingen GmbH 2018

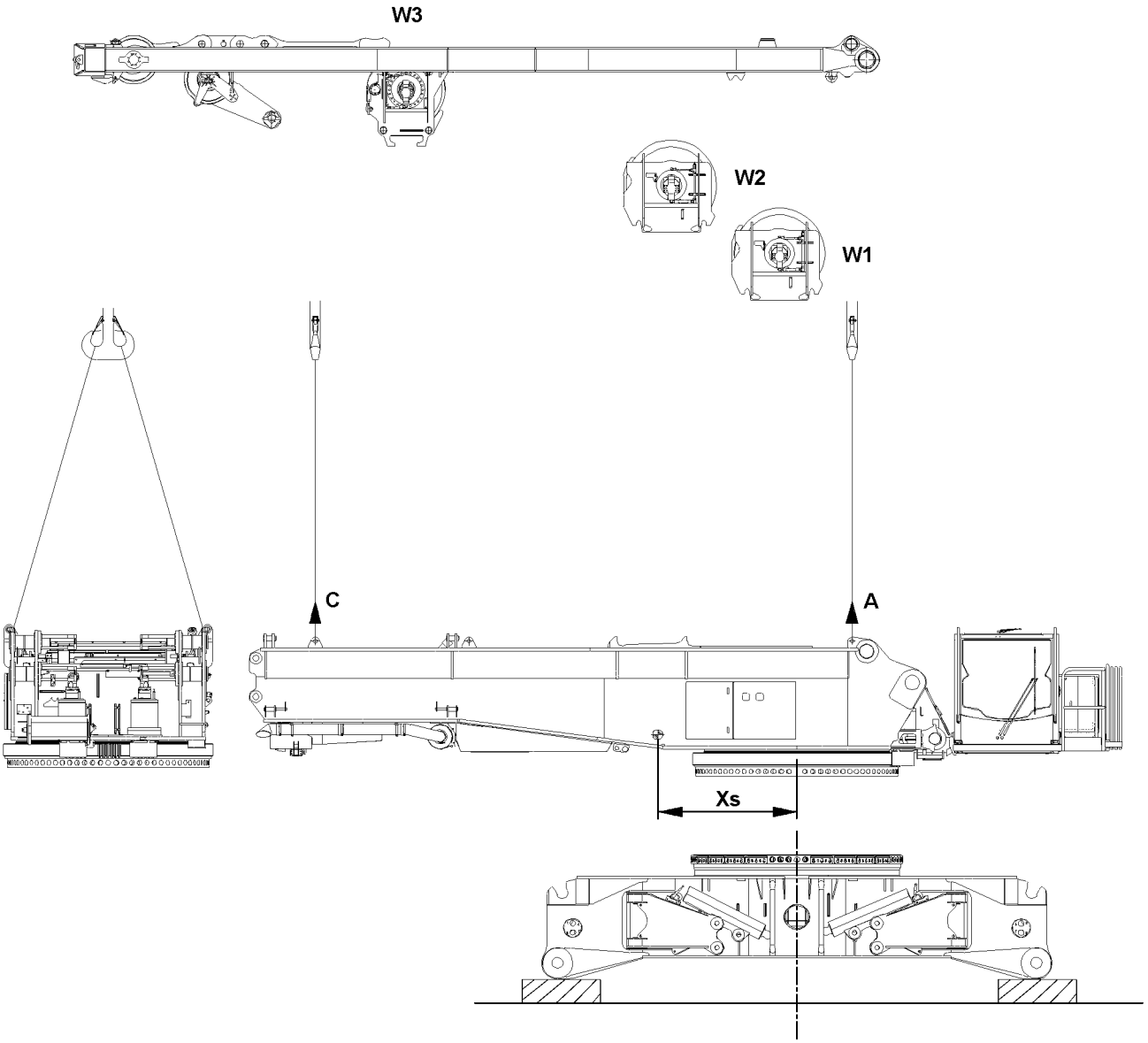

LWE/LR 1600-2-001/18101-07-02/en

Fig.105487

copyright © Liebherr-Werk Ehingen GmbH 2018

1.2 Load take-on with two auxiliary cranes

		Load		Center of gravity
	Weight	**A**	**C**	**Xs**
Turntable with 2 slewing gears	33.90 t	22.97 t	10.93 t	-1.69 m
+ 1 slewing gear	0.55 t	+0.60 t	-0.05 t	
+ Winch 1 with 1050 m rope	7.50 t	+6.49 t	+1.01 t	
+ Winch 2 with 1050 m rope	7.50 t	+4.97 t	+2.53 t	
+ SA-Bracket with winch 4 and rope	17.50 t	+1.46 t	+16.04 t	
Turntable, complete	66.40 t	35.93 t	30.47 t	-2.74 m
Turntable + center section with 2 slewing gears	61.30 t	47.56 t	13.74 t	-0.94 m
+ 1 slewing gear	0.55 t	+0.60 t	-0.05 t	
+ Winch 1 with 1050 m rope	7.50 t	+6.49 t	+1.01 t	
+ Winch 2 with 1050 m rope	7.50 t	+4.97 t	2.53 t	
+ SA-Bracket with winch 4 and rope	17.50 t	+1.46 t	+16.04 t	
Turntable, cpl. + center section	93.80 t	60.50 t	33.30 t	-1.94 m

1.3 Lift the turntable from transport vehicle

Make sure that the following prerequisites are met:
- One or two auxiliary cranes are available.
- The corresponding tackle is available, see charts.
- The tackle is pinned on the turntable, according to the data in the charts.

DANGER
Incorrect tackle points!
If the tackle is attached on the turntable on the incorrect tackle points, the tackle can be overloaded or the turntable can tip over. Personnel can be severely injured or killed!
- ▶ Attach the tackle only in the tackle points A, B or C, see charts.
- ▶ Tension the tackle.
- ▶ Lift the turntable.

LWE/LR 1600-2-001/18101-07-02/en

copyright © Liebherr-Werk Ehingen GmbH 2018

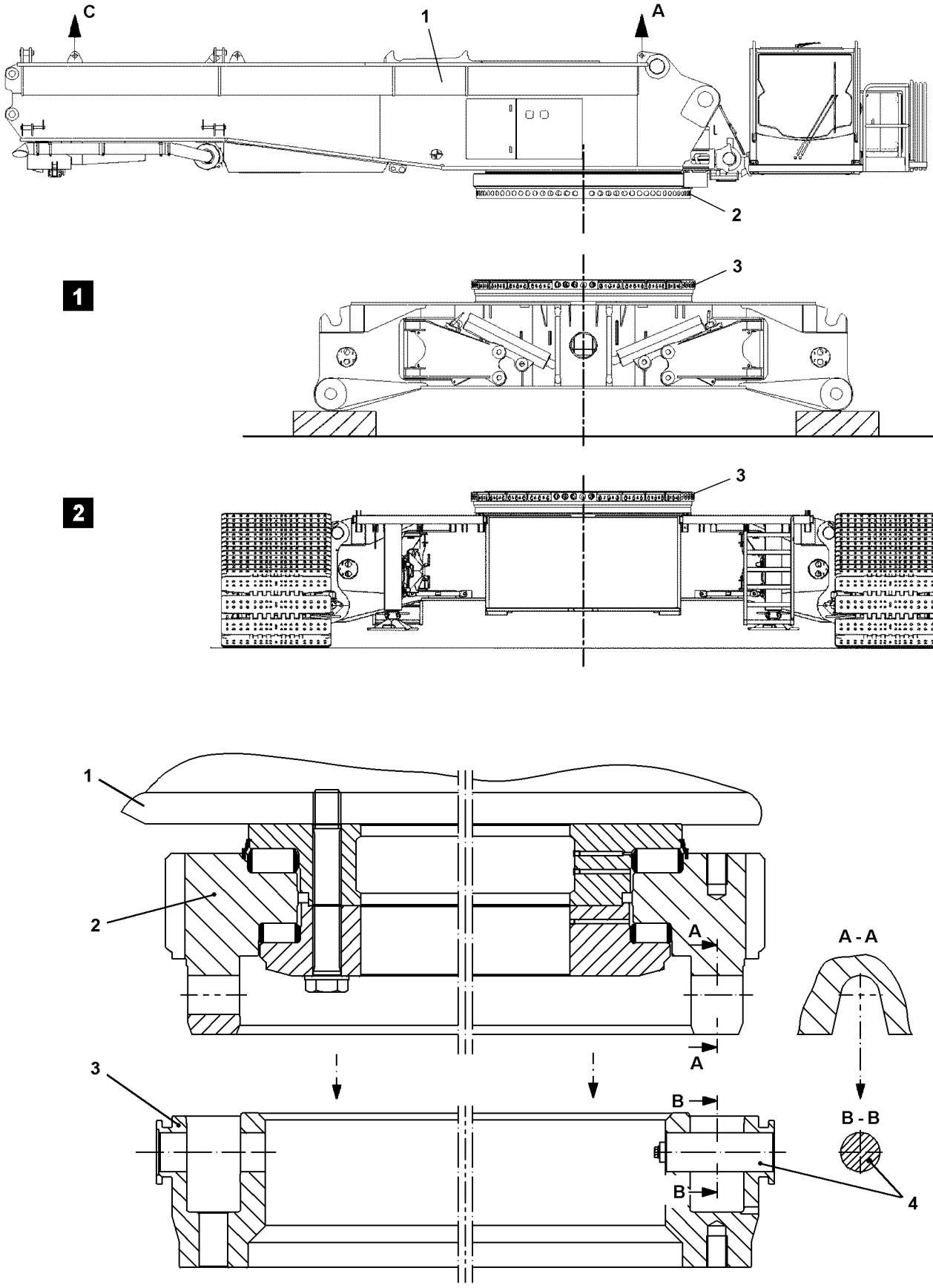

LWE/LR 1600-2-001/18101-07-02/en

Fig.105488

copyright © Liebherr-Werk Ehingen GmbH 2018

2 Installing the turntable

The turntable **1** can be installed on:
- **Fig. 1**, center section installed underneath.
- **Fig. 2**, center section with installed crawler carrier.

NOTICE
Property damage!
If the rotary connection is dirty, severe damage can occur, even requiring replacement!
▶ Clean the upper section, the lower section as well as the pins properly.

Before setting the turntable onto the crawler center section, the placement surfaces or the contact surfaces as well as the pin bores on the upper section **2** and thelower section **3** on the rotary connection must be cleaned.

Make sure that the following prerequisites are met:
- The crawler or the center section is horizontally aligned.

2.1 Placing the turntable on the crawler center section

Make sure that the following prerequisites are met:
- The two centering pins **4** are installed and secured on the lower section **3** of the rotary connection.
- Thecentering pins **4**are greased with water repellent grease.

DANGER
Risk of accident!
It is prohibited for anyone to remain within the slewing range of the auxiliary crane and under the turntable when swinging the turntable in and lowering it.
▶ Swing the turntable **1** with the auxiliary crane slowly over the horizontally aligned crawler center section.

Note
▶ Pay attention to the alignment of the turntable or the receptacles **A-A** to the centering pins **4**.
▶ Before lowering it, bring the turntable into position in such a way that the receptacles **A-A** are positioned over the centering pins **4** on the lower section **3**.
▶ Lower the turntable **1** slowly.

DANGER
Risk of crushed limbs!
During the installation of the upper and lower section of the rotary connection, fingers and hands can be crushed and limbs can be severed.
▶ Do not reach with your hands into the danger zone.

▶ Lower the turntable **1** into the lower section to the point where the upper section is not yet touching but the tackle are still under „tension“.
▶ Carefully place the turntable **1** on the crawler center section.

LWE/LR 1600-2-001/18101-07-02/en

copyright © Liebherr-Werk Ehingen GmbH 2018

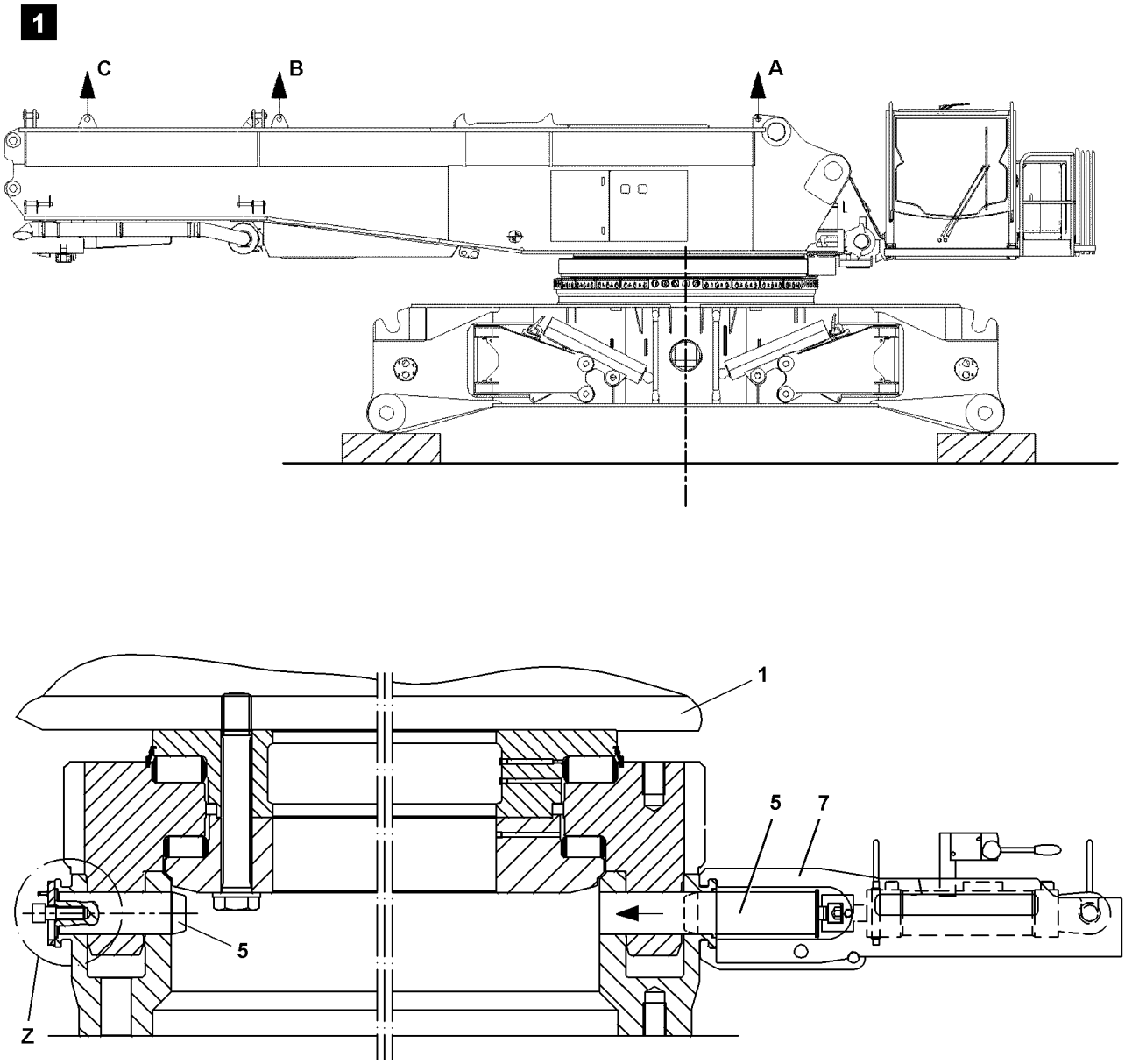

LWE/LR 1600-2-001/18101-07-02/en

Fig.105489

copyright © Liebherr-Werk Ehingen GmbH 2018

2.2 Pinning the Quick Connection

Make sure that the following prerequisites are met:
- The turntable **1** is seated in lengthwise direction on the supported center section.
- The pin holes are open on the circumference of the roller slewing ring.
- The tackle is still under „tension“.
- Theconnector pins **5**are greased with water repellent grease.

2.2.1 Pinning

▶ Insert all connector pins **5**around the circumference of the roller slewing ring by hand.

Note
▶ Align all pin holes by lifting or lowering the turntable.
▶ Use a hydraulic pin pulling device **7** to pin hard to insert pins.

DANGER
Danger of accidents if connector pins loosen up by themselves!
Tipping of turntable.
▶ After pinning, secure the connector pins **5** immediately.
▶ Secure the connector pins **5** with retaining bars **6**.

▶ Attach the retaining bars **6**and secure all connector pins **5** around the circumference of the roller slewing ring, see fig. **U,Z**.

2.2.2 Establishing the hydraulic connection to the turntable

Ensure that the following preconditions are met:
- The turntable is pinned and secured on the rotary connection.

The hydraulic connection from the rotary connection in the crawler center section to the turntable is established with quick couplers.

Note
▶ The matching quick couplings are marked.
▶ To connect or release the hydraulic lines with quick couplers, see chapter 5.01.

▶ Establish the hydraulic connections.

LWE/LR 1600-2-001/18101-07-02/en

copyright © Liebherr-Werk Ehingen GmbH 2018

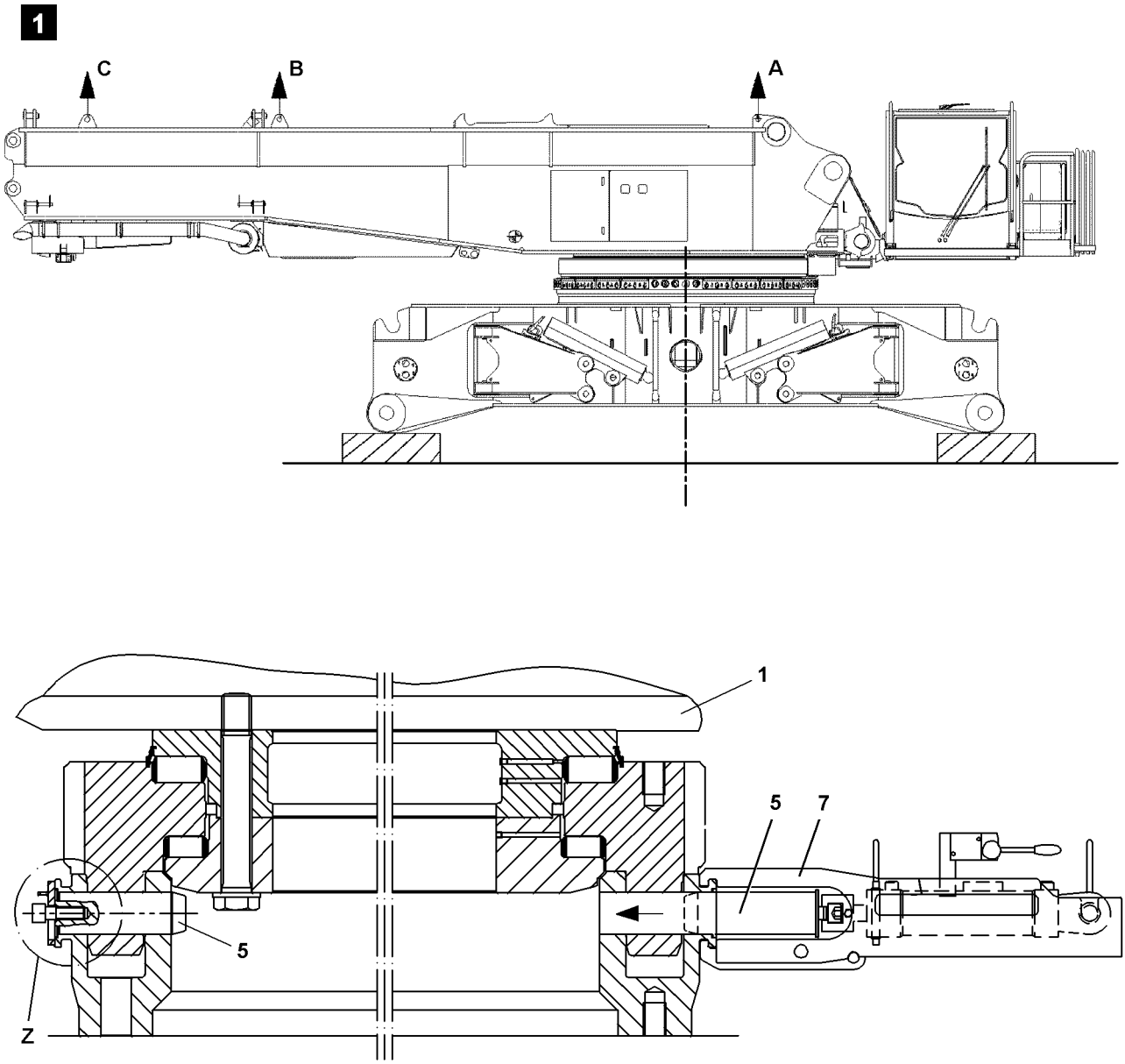

LWE/LR 1600-2-001/18101-07-02/en

Fig.105489

copyright © Liebherr-Werk Ehingen GmbH 2018

3 Removing the turntable

Make sure that the following prerequisites are met:
- One or two auxiliary cranes are available.
- The turntable ballast and the boom system are removed.
- The crawler carriers are removed.
- The crawler center section is supported from below and horizontally aligned.
- The hydraulic connections on the rotary connection are separated.
- The corresponding tackle is available, see charts.
- The tackle is pinned on the turntable, according to the data in the charts.

NOTICE
Disconnect the hydraulic connection!
Connections become damaged!
▶ Make sure that all hydraulic connections between the rotary connection and the turntable are separated.

3.1 Disassembly

▶ Tighten the tackle with the auxiliary crane.
▶ Release and remove the retaining bars **6**, see fig. **U,Z**.
▶ Unpin all connector pins **5** around the circumference of the roller slewing ring with the pin pulling device.

NOTICE
Remove connector pins.
The roller slewing ring becomes damaged!
▶ Before lifting the turntable with the auxiliary crane, make sure that all connector pins on the Quick Connection are fully unpinned.

▶ Carefully lift the turntable from the crawler center section.

DANGER
Risk of accident!
Danger of fatal injury if anyone remains within the swing range of the auxiliary crane and under the turntable!
▶ It is prohibited for anyone to remain within the swing range of the auxiliary crane and under the turntable!

▶ Slowly swing the turntable **1** with the auxiliary crane away from the crawler center section.

LWE/LR 1600-2-001/18101-07-02/en

copyright © Liebherr-Werk Ehingen GmbH 2018

Empty page!

LWE/LR 1600-2-001/18101-07-02/en

copyright © Liebherr-Werk Ehingen GmbH 2018

3.03 Central ballast

1	Central ballast combinations	3
2	Installing the central ballast	5
3	Removing the central ballast	9

LWE/LR 1600-2-001/18101-07-02/en

copyright © Liebherr-Werk Ehingen GmbH 2018

25 t

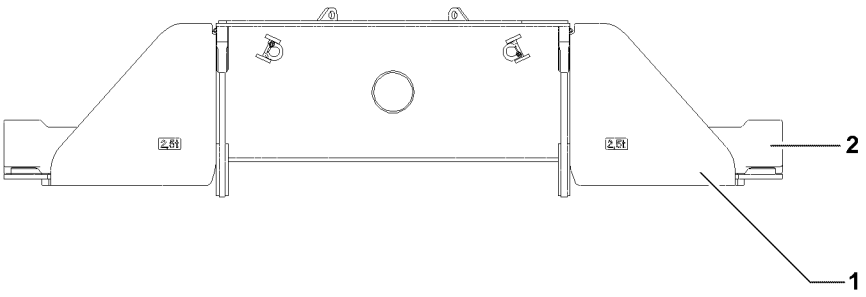

65 t

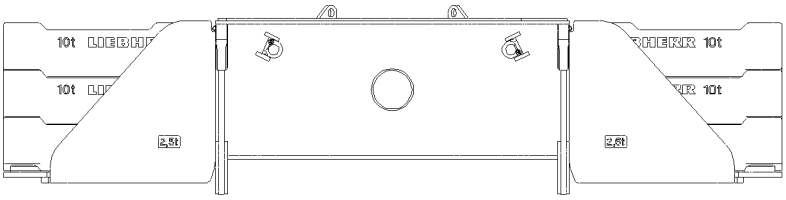

LWE/LR 1600-2-001/18101-07-02/en

Fig.105187

copyright © Liebherr-Werk Ehingen GmbH 2018

1 Central ballast combinations

The consoles and the central ballast plates are marked with their own weight.

Weights:
- Console **1**: 2.5 t
- Central ballast plate **2**: 10 t

Central ballast	Combination	Individual weight
0 t	2 x console **1**	2.5 t

Central ballast	Combination	Individual weight
25 t	2 x console **1**	2.5 t
	2 x central ballast plate **2**	10 t

Central ballast	Combination	Individual weight
65 t	2 x console **1**	2.5 t
	6 x central ballast plate **2**	10 t

LWE/LR 1600-2-001/18101-07-02/en

copyright © Liebherr-Werk Ehingen GmbH 2018

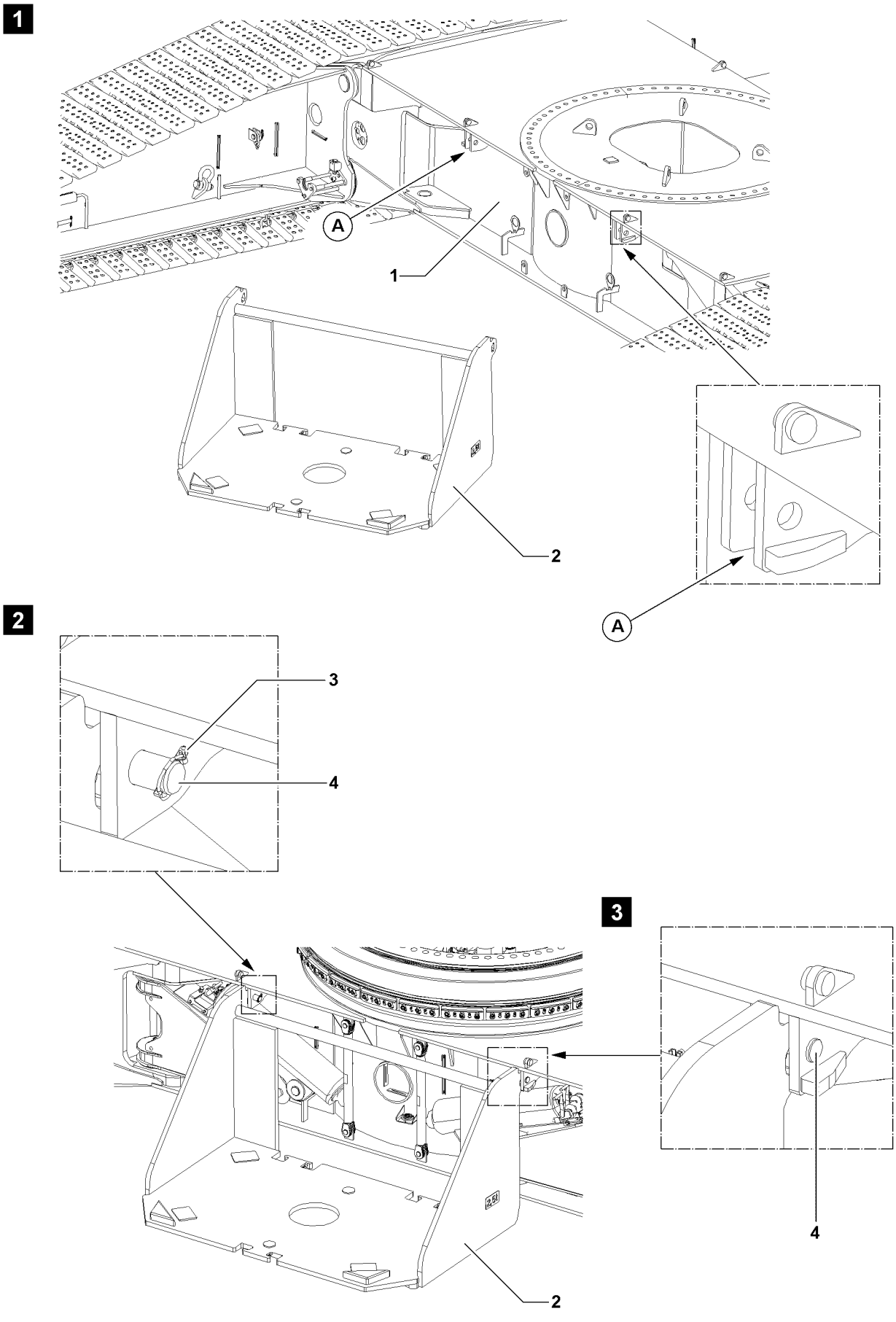

Fig.105188

LWE/LR 1600-2-001/18101-07-02/en

copyright © Liebherr-Werk Ehingen GmbH 2018

2 Installing the central ballast

Make sure that the following prerequisites are met:
- the installation of the crawler carrier is completed
- all connections between the crawler center section and the crawler carrier are pinned and secured
- both crawler carriers are standing on the ground
- an auxiliary crane is available

WARNING
Falling components and central ballast plates!
At assembly, the components and central ballast plates can fall down. Personnel can be severely injured or killed!
▶ Make sure that no persons or objects are within the danger zone.

2.1 Installing the console

Make sure that the following prerequisites are met:
- The pin **4** is unpinned on point **A**, see fig. **1**.

Note
▶ The weight of the console is 2.5 t.

▶ Hang the console **2** onto the auxiliary crane.
▶ Guide the console **2** with the auxiliary crane between the brackets on point **A**.
▶ Insert the pin **4** and secure with folding pin **3**, see fig. **2** and fig. **3**.

LWE/LR 1600-2-001/18101-07-02/en

copyright © Liebherr-Werk Ehingen GmbH 2018

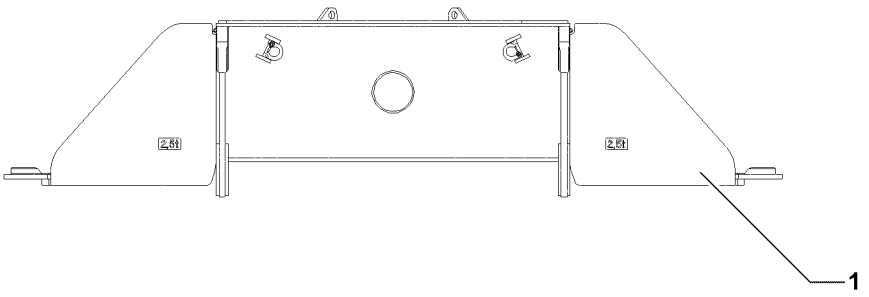

4

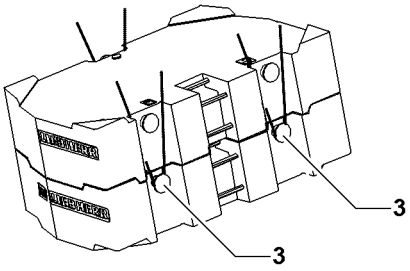

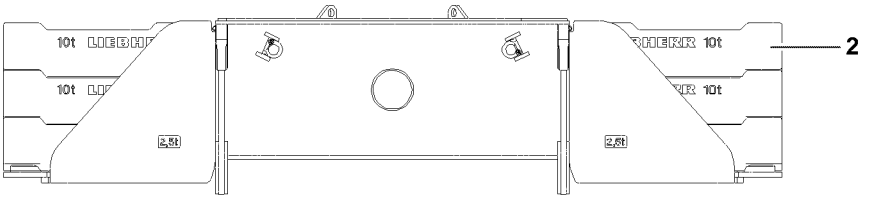

LWE/LR 1600-2-001/18101-07-02/en

Fig.105232

copyright © Liebherr-Werk Ehingen GmbH 2018

2.2 Placing the central ballast

Make sure that the following prerequisites are met:
– the consoles **1** are pinned and secured on the crawler center section

WARNING
Crane can topple over!
If the placed central ballast deviates during crane operation from the specifications in the load charts, then the crane can be damaged or topple over. Personnel can be severely injured or killed!
▶ Place the central weight according to the data in the load chart.

WARNING
Falling central ballast plates!
If more than the permissible central ballast plates lifted, then the fastening points **3** are overloaded and the central ballast plates can fall down. Personnel can be severely injured or killed!
▶ Lift no more than maximum 20 t with the ropes, 3 fastening points.
▶ Replace damaged central ballast plates.

WARNING
Incorrect handling of tackle!
If tackle cannot be attached correctly and if it is not secured sufficiently to prevent it from loosening up, loads can fall down. Personnel can be severely injured or killed!
▶ Make sure that the tackle is correctly attached on the fastening points **3** and that it is secured sufficiently to prevent it from loosening up.

WARNING
Danger of crushing!
If the following note is not observed, personnel can be severely injured.
▶ When placing the ballast plates, it is prohibited for anyone to remain between the ballast frame and the crawler carriers.

Place the central ballast

Note
▶ Place the central ballast plates individually or as a central ballast assembly, maximum 20 t.
▶ 20 t central ballast assembly **without** console, see fig. **4**

▶ Hang central ballast plate **2** or central ballast assembly, see fig. **4**, onto the auxiliary crane and place on the consoles **1**.

LWE/LR 1600-2-001/18101-07-02/en

copyright © Liebherr-Werk Ehingen GmbH 2018

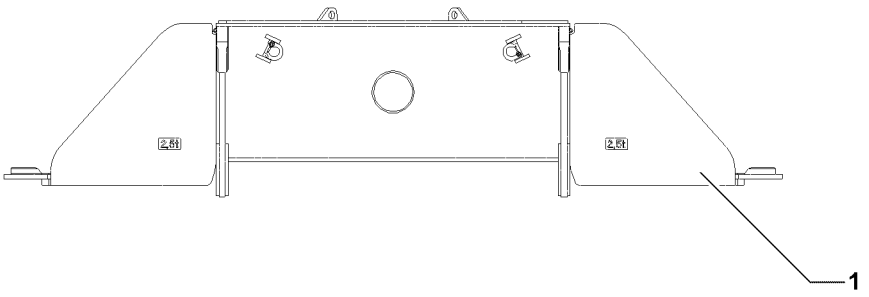

4

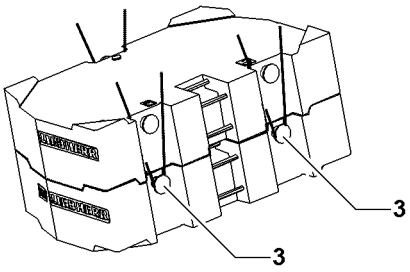

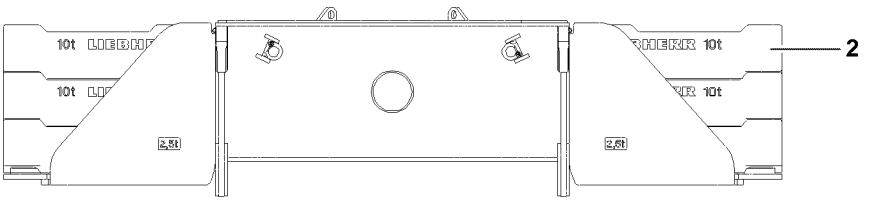

LWE/LR 1600-2-001/18101-07-02/en

Fig.105232

copyright © Liebherr-Werk Ehingen GmbH 2018

3 Removing the central ballast

Make sure that the following prerequisites are met:
- an auxiliary crane is available
- both crawler carriers are standing on the ground

WARNING
Falling components and central ballast plates!
At disassembly, the components and central ballast plates can fall down. Personnel can be severely injured or killed!
▶ Make sure that no persons or objects are within the danger zone.

3.1 Removing the central ballast plates

WARNING
Falling central ballast plates!
If more than the permissible central ballast plates are lifted, then the fastening points **3** are overloaded and the central ballast plates can fall down. Personnel can be severely injured or killed!
▶ Lift no more than maximum 20 t with the ropes, 3 fastening points.
▶ Replace damaged central ballast plates.

WARNING
Incorrect handling of tackle!
If tackle cannot be attached correctly and if it is not secured sufficiently to prevent it from loosening up, loads can fall down. Personnel can be severely injured or killed!
▶ Make sure that the tackle is correctly attached on the fastening points **3** and that it is secured sufficiently to prevent it from loosening up.

WARNING
Danger of crushing!
If the following note is not observed, personnel can be severely injured.
▶ When placing the ballast plates, it is prohibited for anyone to remain between the ballast frame and the crawler carriers.

Removing the central ballast plates

Note
▶ Place the central ballast plates individually or as a central ballast assembly, maximum 20 t.
▶ 20 t central ballast assembly **without** console, see fig. **4**

▶ Hang central ballast plate **2** or central ballast assembly, see fig. **4**, onto the auxiliary crane and remove from the consoles **1**.

LWE/LR 1600-2-001/18101-07-02/en

copyright © Liebherr-Werk Ehingen GmbH 2018

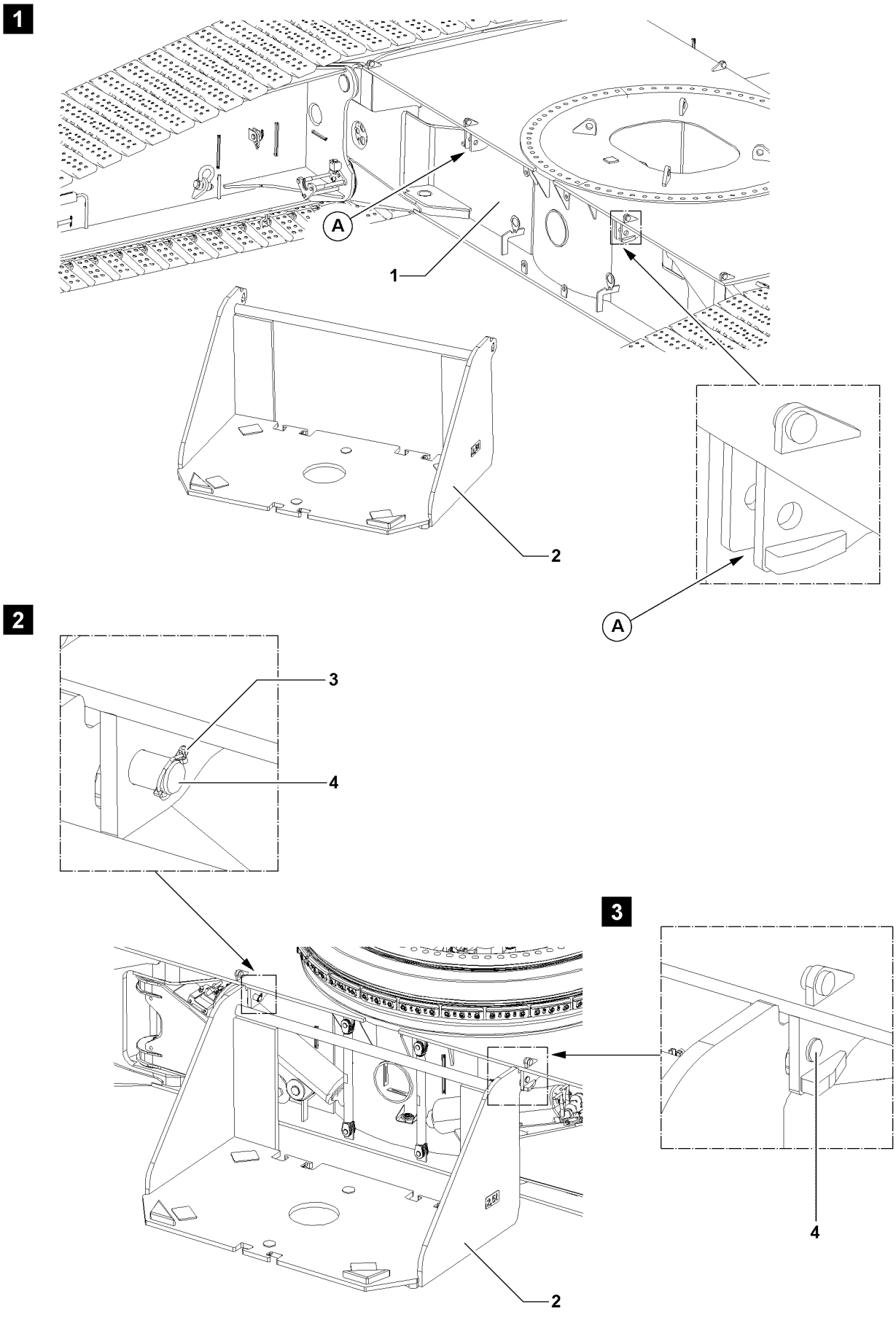

Fig.105188

LWE/LR 1600-2-001/18101-07-02/en

copyright © Liebherr-Werk Ehingen GmbH 2018

3.2 Removing the console

Note
▶ The weight of the console is 2.5 t.

▶ Hang the console **2** onto the auxiliary crane.
▶ Tighten the tackle with the auxiliary crane.
▶ Remove the retainer **3** and unpin the pin **4**.
▶ Pull the console **2** with the auxiliary crane from the brackets on point **A**.

LWE/LR 1600-2-001/18101-07-02/en

copyright © Liebherr-Werk Ehingen GmbH 2018

Empty page!

LWE/LR 1600-2-001/18101-07-02/en

copyright © Liebherr-Werk Ehingen GmbH 2018

3.04 Mechanical auxiliary support

1 Installing the mechanical auxiliary support 3

LWE/LR 1600-2-001/18101-07-02/en

copyright © Liebherr-Werk Ehingen GmbH 2018

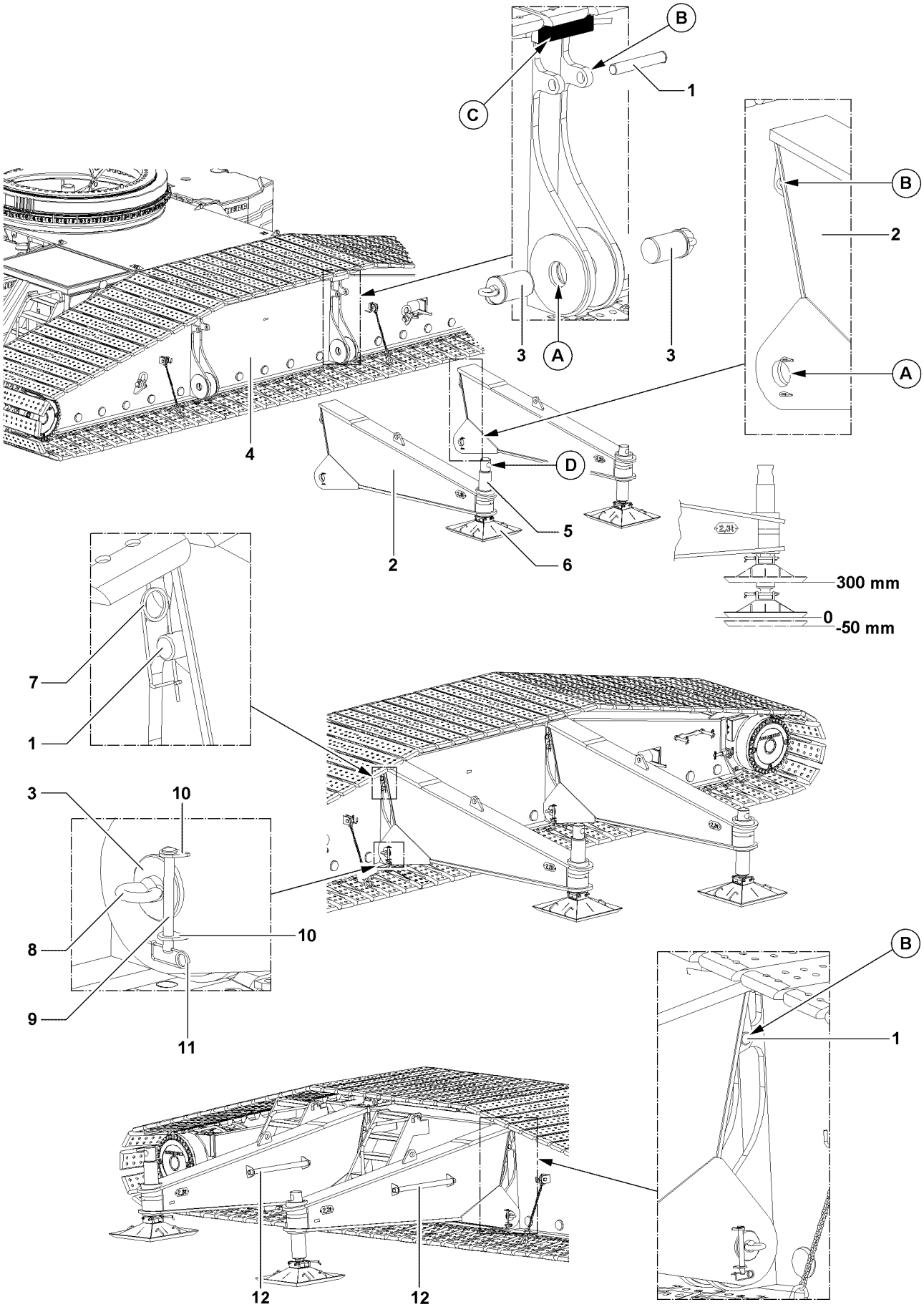

Fig.105233

LWE/LR 1600-2-001/18101-07-02/en

copyright © Liebherr-Werk Ehingen GmbH 2018

1 Installing the mechanical auxiliary support

Make sure that the following prerequisites are met:
- The crawler carriers are installed.
- The crane is aligned in horizontal direction.
- The ground has sufficient load bearing capacity in the area of the support pads.
- An auxiliary crane is available.

Note
▶ The mechanical auxiliary support is required to erect or take down long boom combinations and can be installed on the left or right crawler carrier.

WARNING
The crane can topple over!
If long boom combinations are erected or taken down without mechanical auxiliary support **2**, then the crane can topple over. Personnel can be severely injured or killed!
▶ Observe and adhere to the data in the erection and take down charts!
▶ Pin the mechanical auxiliary support **2** on the crawler carrier **4** and turn the spindle to lay the support pads on the ground.

1.1 Attaching the mechanical auxiliary support

Note
▶ The installation of the mechanical auxiliary support **2** is the same for both support beams on the left and right hand side!

▶ Hang the mechanical auxiliary support **2** on the auxiliary crane and swing into pin position.
▶ Align the mechanical auxiliary support **2**: Make sure that the pin bores of the auxiliary support and the crawler carrier align in points **A** and in points **B**.
▶ Insert the pins **3** each from the left and right on point **A**.
▶ Secure the pins **3** from the left and right: Insert the pins **9** into brackets **10** and secure with spring retainer **11**.
▶ Insert the pin **1** on point **B** and secure with spring retainer **7**.
▶ Remove the mechanical auxiliary support from the auxiliary crane.

LWE/LR 1600-2-001/18101-07-02/en

copyright © Liebherr-Werk Ehingen GmbH 2018

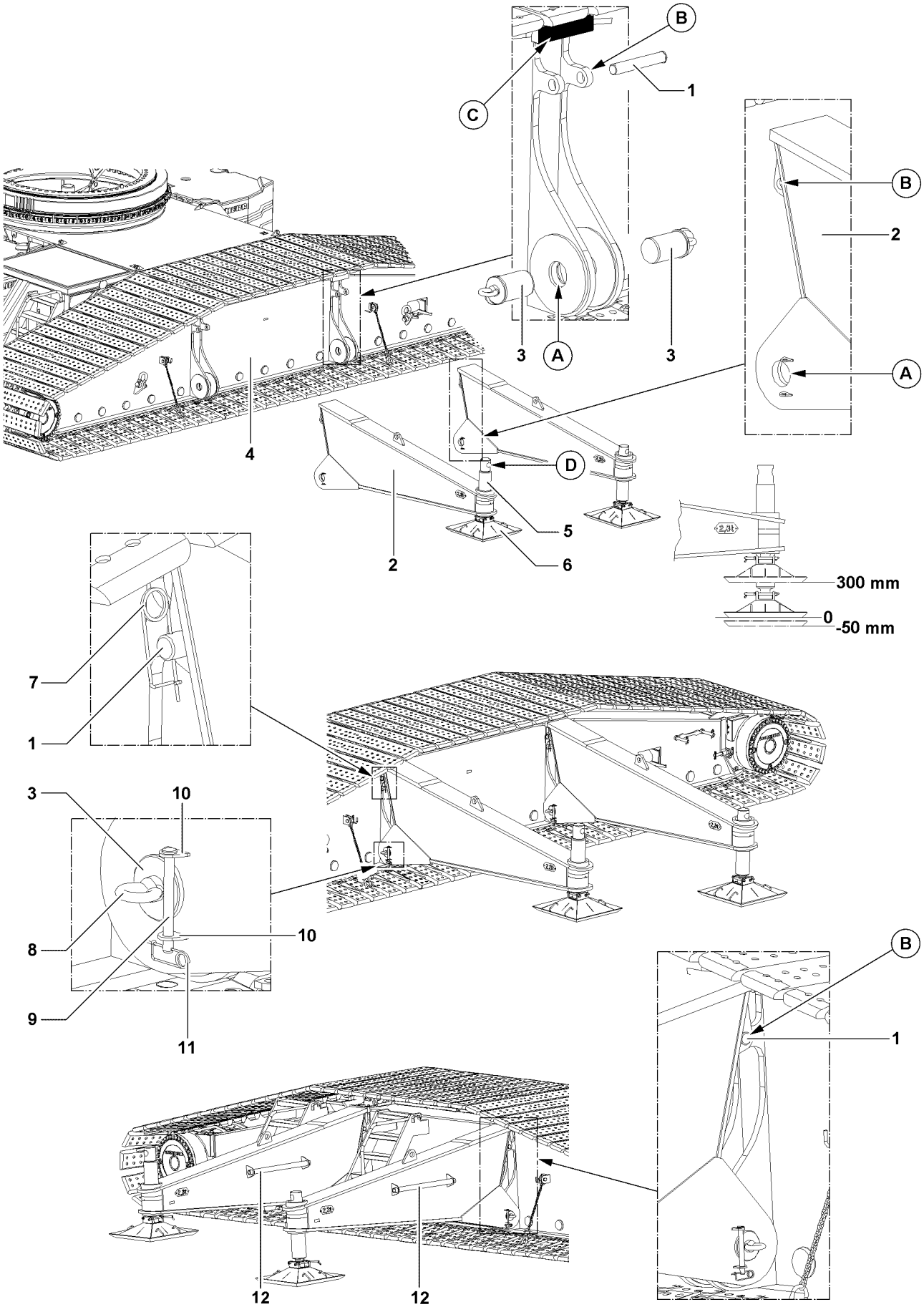

Fig.105233

LWE/LR 1600-2-001/18101-07-02/en

copyright © Liebherr-Werk Ehingen GmbH 2018

1.2 Adjusting the mechanical auxiliary support

Note

- ▶ The mechanical auxiliary support is only an erection and take down aid device.
- ▶ Due to the mechanical auxiliary support, the stability momentum of the crane increases toward the side, on which the auxiliary support is installed.

DANGER

The crane can topple over!

If the load moments are increased due to the use of the mechanical auxiliary support, the crane can topple over and severely or fatally injure personnel.

- ▶ The support pads must be made large enough for the ground conditions, use solid materials, such as wood, steel or concrete slabs, see chapter 2.04.

WARNING

Jerky movements of the boom system!

If the mechanical auxiliary support **2** is not placed on the crawler carrier **4** at point **C**, then the boom system can move jerkily during erection and take down.

Personnel can be severely injured or killed! The crane can be damaged.

- ▶ Turn the support pad **6** with the spindle **5** until the mechanical auxiliary support **2** touches at point **C**.

Note

- ▶ Adjustment range of support pad: - 50 mm to + 300 mm.

- ▶ Remove the pipe **12** from the transport retainer on the mechanical auxiliary support.
- ▶ Insert the pipe **12** at point **D** into the bore on the spindle **5**.
- ▶ Extend the support pad **6** by turning the spindle **5** with the pipe **12** downward until it is „tensioned“ and placed horizontally on the base support and has contact to the placement surface **C** on the crawler carrier.

LWE/LR 1600-2-001/18101-07-02/en

copyright © Liebherr-Werk Ehingen GmbH 2018

Empty page!

LWE/LR 1600-2-001/18101-07-02/en

copyright © Liebherr-Werk Ehingen GmbH 2018

3.05 SA-frame assembly

1	Component overview SA-frame	3
2	Attachment points SA-frame	3
3	Assemble SA-frame	5
4	Disassemble SA-frame	13

LWE/LR 1600-2-001/18101-07-02/en

copyright © Liebherr-Werk Ehingen GmbH 2018

1

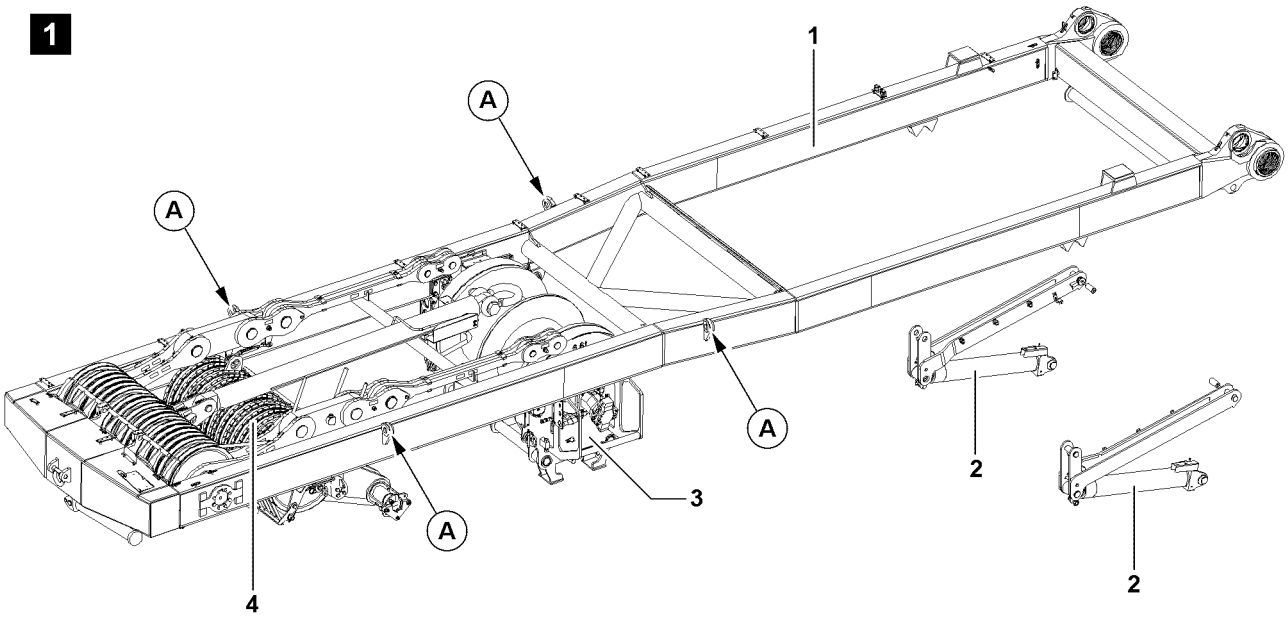

2

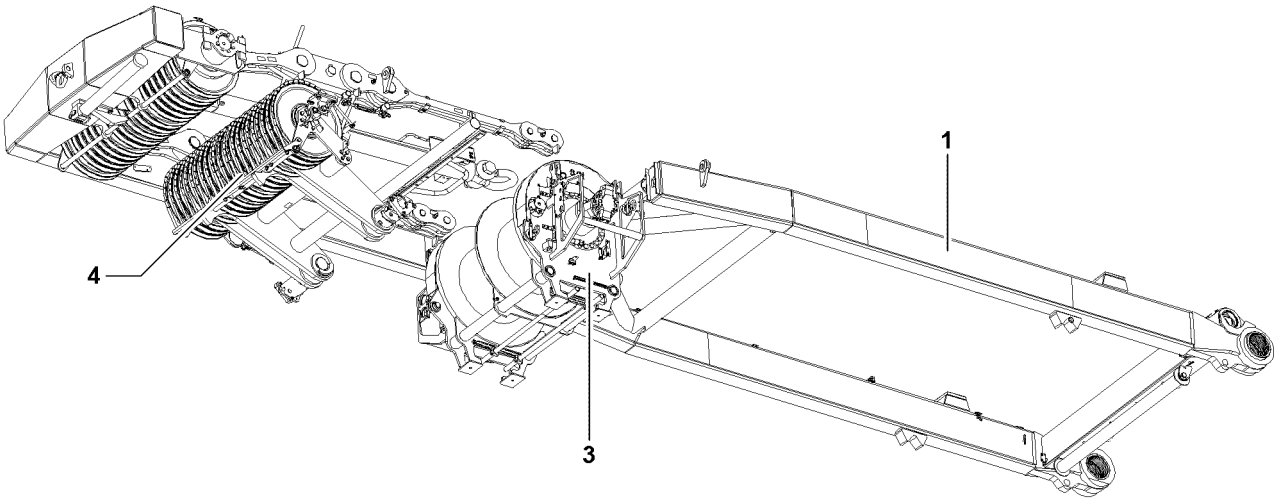

LWE/LR 1600-2-001/18101-07-02/en

Fig.107281

copyright © Liebherr-Werk Ehingen GmbH 2018

1 Component overview SA-frame

Position	Component	Weight
1	SA-frame	
3	Intake gear winch 4	
4	Roller bearings	
	SA-frame complete	17.5 t
2	Erection cylinder	

2 Attachment points SA-frame

WARNING
Danger of accident due to incorrect attachment!
Life-threatening situations can arise due to improper or incorrect attachment of the corresponding components!
▶ The corresponding components must be attached on the intended points **A**!

LWE/LR 1600-2-001/18101-07-02/en

copyright © Liebherr-Werk Ehingen GmbH 2018

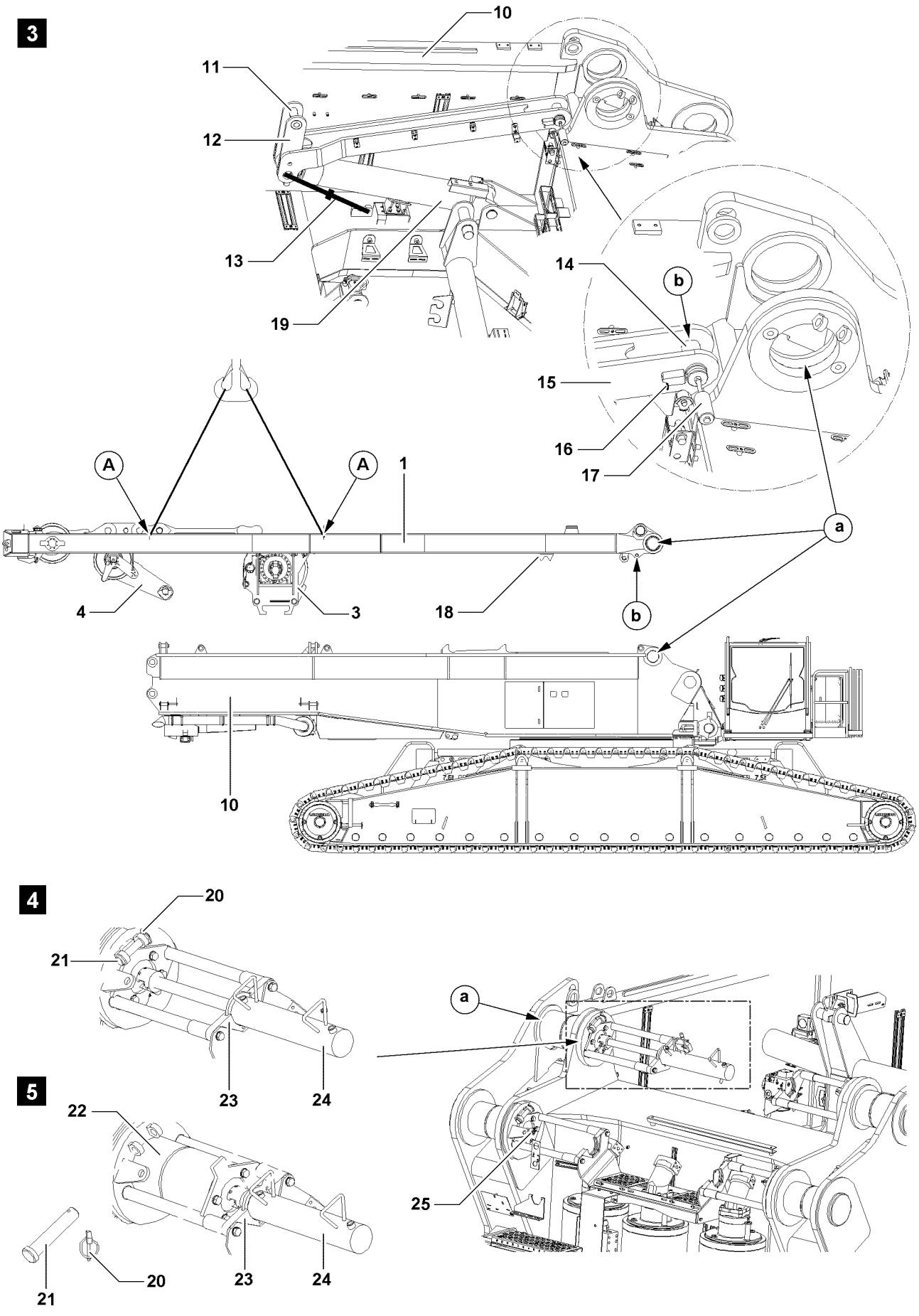

Fig.107282

LWE/LR 1600-2-001/18101-07-02/en

copyright © Liebherr-Werk Ehingen GmbH 2018

3 Assemble SA-frame

3.1 Pin the SA-frame on the turntable

Note

▶ Guarantee equally long tackle such that the SA-frame can be horizontally positioned over the turntable.

NOTICE

Collision of components!

If the SA-frame is positioned with the auxiliary crane on the turntable, roller bearings and hoist gear can collide with the turntable. Components can be damaged.

▶ Make sure that the roller bearing **4** does not collide with the turntable **10**.

▶ Make sure that the intake gear winch 4 **3** does not collide with the turntable **10**.

Ensure that the following prerequisite is met:

– unpin the pins **22** on both sides,

– unpin the pins **14** on both sides.

▶ Remove the linch pin **20** and unpin pins **21** see illustration **5**.

Result:

– The pin **22** cannot be pinned.

▶ Attach the pin pulling cylinder **24** between the retainer **23** and the pull screw **25**.

▶ Attach SA-frame **1** with auxiliary crane on the attachment points.

▶ Position SA-frame **1** with auxiliary auxiliary crane on the turntable **10** so that pinning points **a** and pinning points **b** align.

▶ Insert the pins **22** on both sides.

▶ Remove the pin pulling device **24**.

▶ Secure the pin **22**: Insert the pin **21** and secure with linch pin **20**.

▶ Pull, turn and latch spring pin **16** on both sides.

▶ Pin pins **14** with pin device **17**.

▶ Pins **16** should be pinned on both sides and secured with spring retainers **14**.

NOTICE

SA frame damage!

If the turnbuckle is not unpinned before the operation, the SA-frame is damaged.

▶ Unpin turnbuckle **13** before operation.

▶ Lay down SA-frame **1** completely: Make sure that the pins **11** lie on both sides of the plate **18**.

LWE/LR 1600-2-001/18101-07-02/en

copyright © Liebherr-Werk Ehingen GmbH 2018

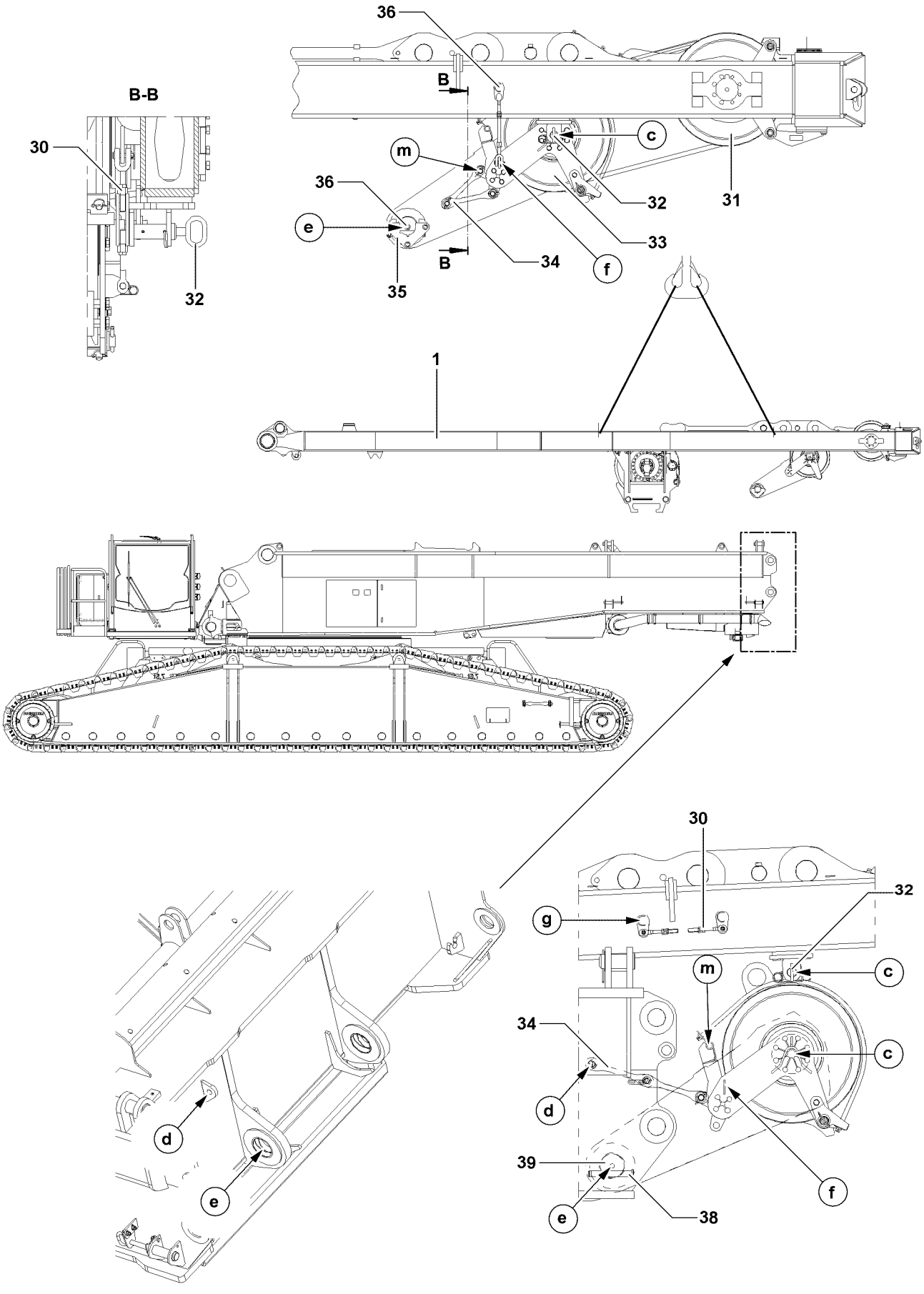

Fig.107283

LWE/LR 1600-2-001/18101-07-02/en

copyright © Liebherr-Werk Ehingen GmbH 2018

3.2 Pin roller bearings.

Ensure that the following prerequisite is met:
- align pinning points **e**.

▶ Hang the pin pulling cylinder on the retainer **35** and on the screw **36**.
▶ Insert the pin **39** and secure with pins **38**.
▶ Remove the pin pulling device.
▶ Hang pulley set **33** onto the auxiliary crane and and lightly lift until the retaining pin **32** may be unpinned.
▶ Unpin retaining pins **32**.
▶ Unpin turnbuckle **30** on the point **f** and pin and secure in park position **g**.
▶ Unpin and release the scissor clamping device **34** on the pinning point **m**.
▶ Lower pulley set **33** until scissor clamping device **34** may be pinned on pinning point **d**.
▶ Pin withscissor clamping device **34** on pinning point **d** and secure with cotter pin.
▶ Lower pulley set **33** with auxiliary crane, until pulley set **33** hangs completely in the rope reeving.
▶ Remove the auxiliary crane.

LWE/LR 1600-2-001/18101-07-02/en

copyright © Liebherr-Werk Ehingen GmbH 2018

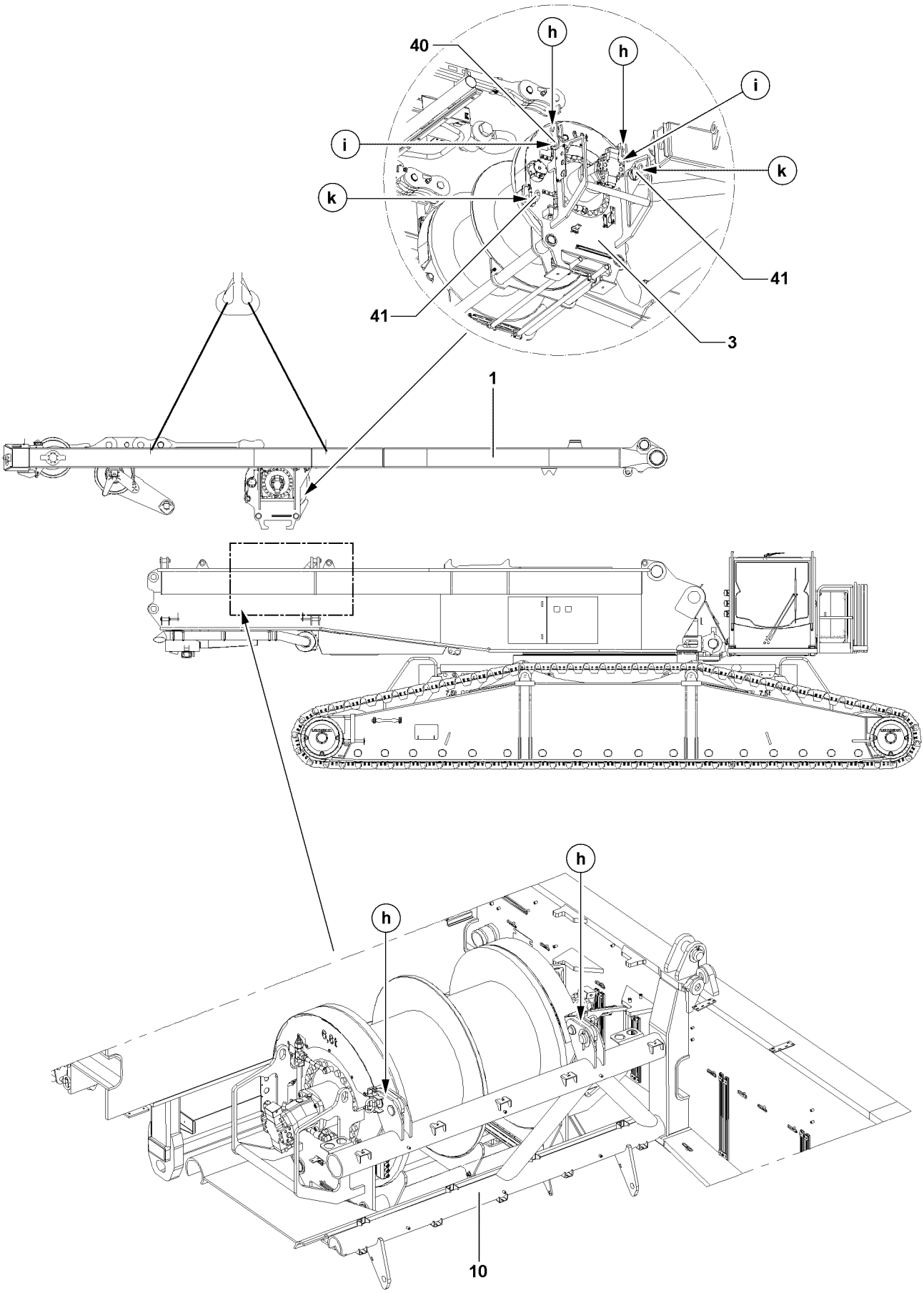

LWE/LR 1600-2-001/18101-07-02/en

Fig.107284

copyright © Liebherr-Werk Ehingen GmbH 2018

3.3 Pin intake gear winch 4 on turntable

- ▶ Connect intake gear winch 4 **3** with turntable **10**: Pin locking pin **41** on the pinning points **k** and secure with spring retainers.
- ▶ Separate intake gear winch 4 **3** from SA-frame **1**: Remove spring retainers on the pinning points **i** and unpin locking pins **40**.
- ▶ Secure the locking pins **40** on both sides with spring retainers in the parking positions **h**.

LWE/LR 1600-2-001/18101-07-02/en

copyright © Liebherr-Werk Ehingen GmbH 2018

LWE/LR 1600-2-001/18101-07-02/en

Fig.195219

copyright © Liebherr-Werk Ehingen GmbH 2018

3.4 Establishing the electrical connections

Note

▶ For production of the electrical connections on the SA-boom, the separate electrical diagram is to be employed.

▶ Establish electric connections between turntable and SA-frame.
▶ Establish electric connections between turntable and intake gear winch 4.

3.5 Establish the hydraulic connections.

When hydraulic lines are connected and disconnected with quick-release couplings, make sure that the coupling procedure is being performed correctly.

DANGER

Risk of accident due to loss of pressure or leakage!
Incorrectly coupled or self-loosening quick-release couplings (particularly return lines) can result in serious injury due to component failure!

▶ Check that the quick-release couplings have been properly connected before using the crane.

Note

▶ To connect or release the hydraulic lines with quick couplers, see chapter 5.01.

▶ Release the pressure in the hydraulic system before connecting and disconnecting. Turn the engine off and wait for short time.
▶ Assembling coupling components (sleeve and connector) by using hand-tightened nut.
▶ Combine coupling components.

LWE/LR 1600-2-001/18101-07-02/en

copyright © Liebherr-Werk Ehingen GmbH 2018

1

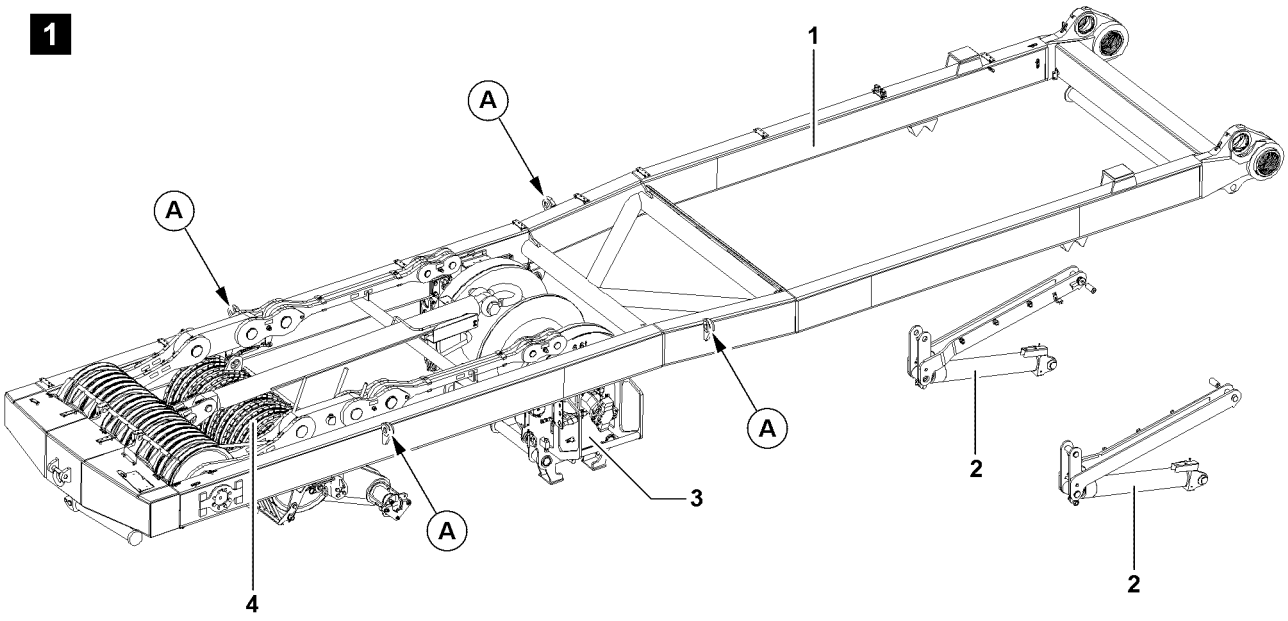

2

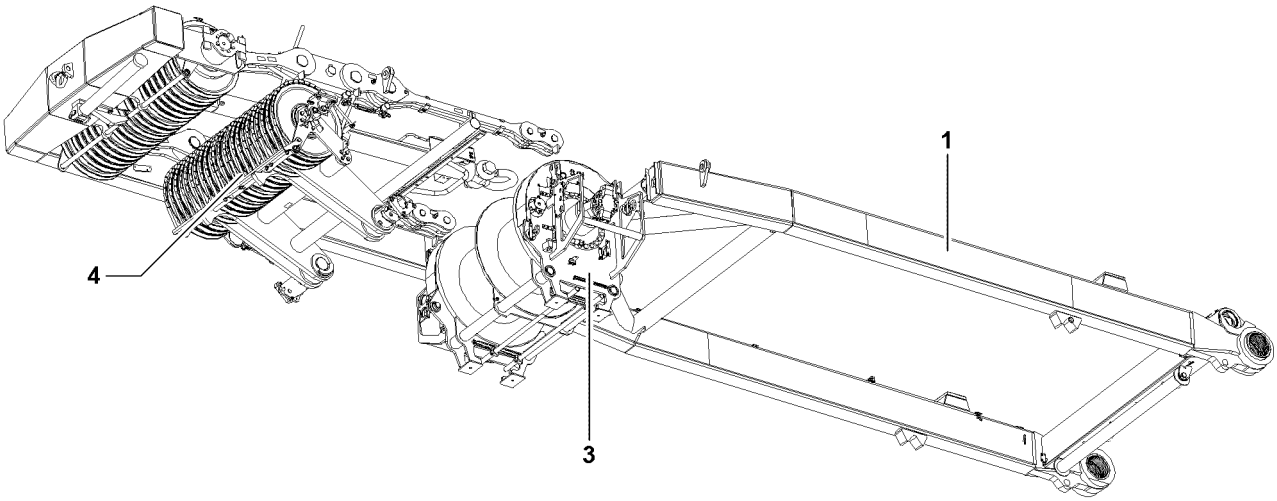

LWE/LR 1600-2-001/18101-07-02/en

Fig.107281

copyright © Liebherr-Werk Ehingen GmbH 2018

4 Disassemble SA-frame

Ensure that the following prerequisite is met:
- roller bearings are found in transport position: SA-frame is found in the 0° position.

4.1 Disconnect the electrical connections

- ▶ Separate and properly store electrical connections between turntable and SA-frame.
- ▶ Separate and properly store electrical connections between turntable and winch 4.

4.2 Disconnect the hydraulic connections.

When hydraulic lines are connected and disconnected with quick-release couplings, make sure that the coupling procedure is being performed correctly.

Note
- ▶ To connect or release the hydraulic lines with quick couplers, see chapter 5.01.

- ▶ Release the pressure in the hydraulic system before connecting and disconnecting. Turn the engine off and wait for short time.
- ▶ Loosen coupling components (sleeve and connector) by using hand-tightened nut.
- ▶ Separate coupling components.
- ▶ Properly store hydraulic hoses on the the SA-frame on the turntable.
- ▶ Fitting the coupling components with protective caps against contamination and damage.

LWE/LR 1600-2-001/18101-07-02/en

copyright © Liebherr-Werk Ehingen GmbH 2018

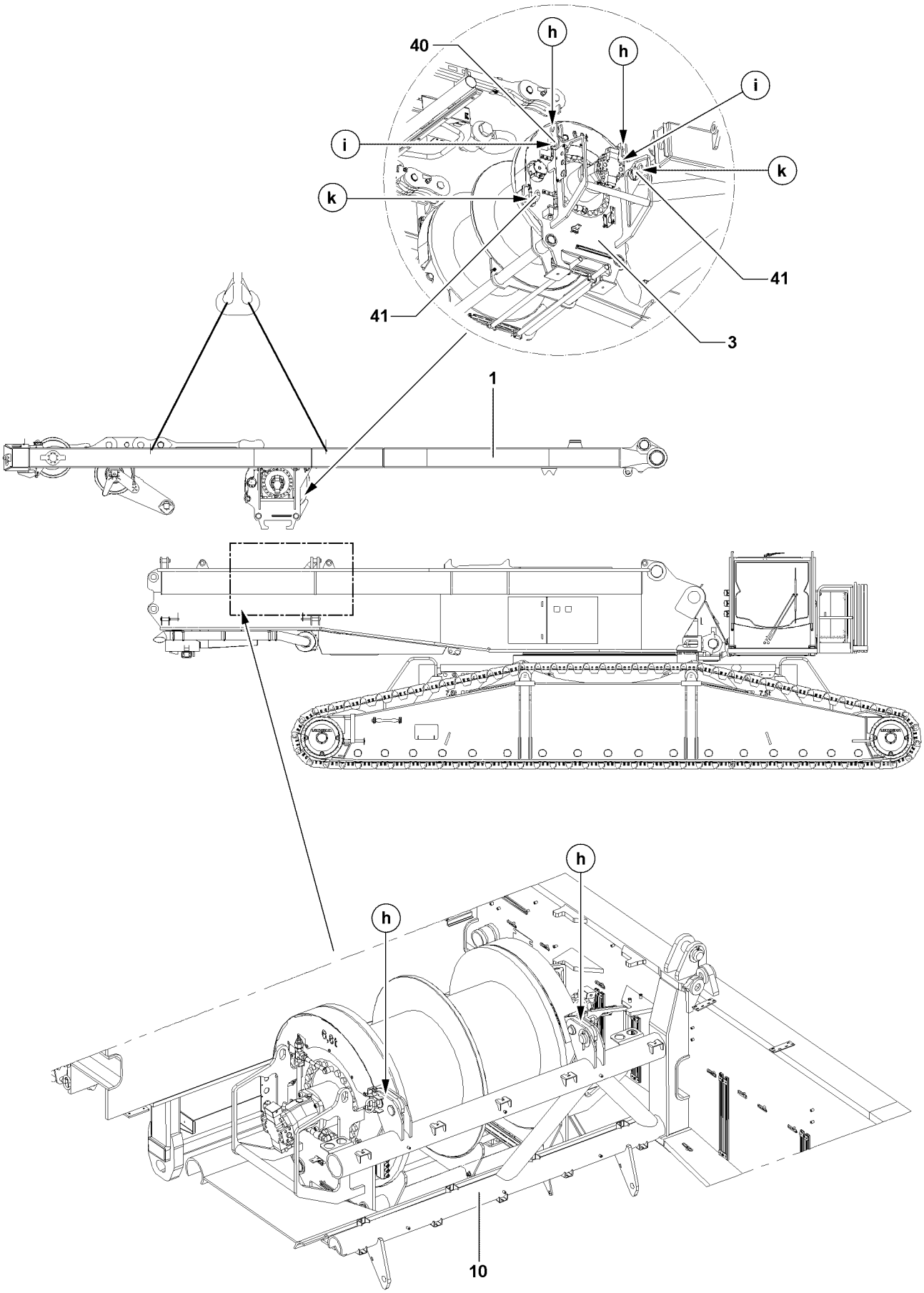

LWE/LR 1600-2-001/18101-07-02/en

Fig.107284

copyright © Liebherr-Werk Ehingen GmbH 2018

4.3 Prepare intake gear winch 4 for transport

- ▶ Separate intake gear winch 4 **3** from turntable **10**: Remove spring retainers on the pinning points **k** on both sides and unpin locking pins **41**.
- ▶ Connect intake gear winch 4 **3** with SA-frame **1**: Release and unpin the socket pin **40** from the park positions **h**.
- ▶ Pin locking pin **40** on the pinning points **i** and secure with spring retainers.

LWE/LR 1600-2-001/18101-07-02/en

copyright © Liebherr-Werk Ehingen GmbH 2018

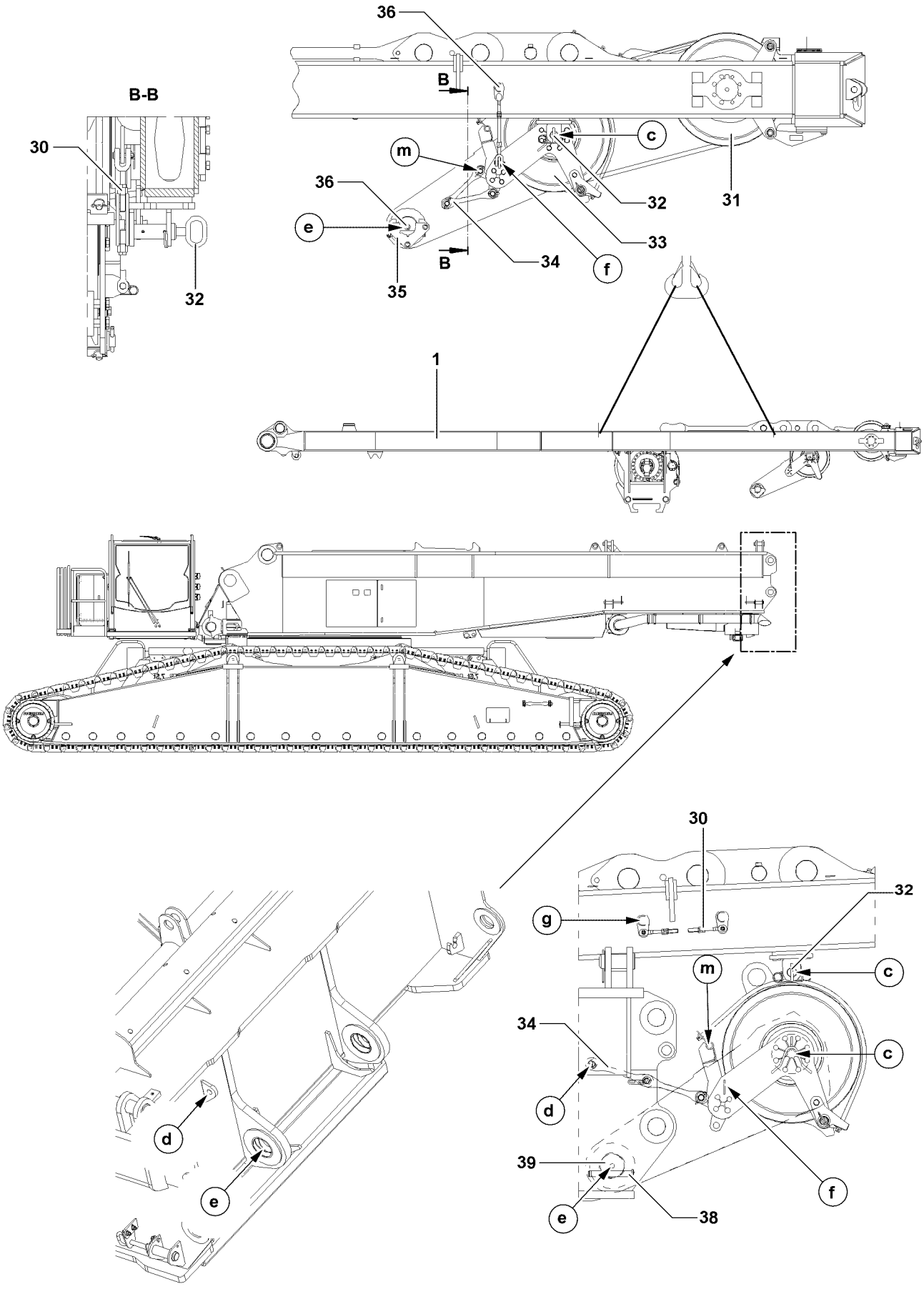

Fig.107283

LWE/LR 1600-2-001/18101-07-02/en

copyright © Liebherr-Werk Ehingen GmbH 2018

4.4 Preparing the roller bearings for transport

- ▶ Attach and lift pulley set **33** on auxiliary crane until scissor clamping device **34** may be pinned on pinning point **d**.
- ▶ Unpin and release the scissor clamping device **34** on the pinning point **d**.
- ▶ Pin with scissor clamping device **34** on pinning point **m** and secure with cotter pin.
- ▶ Lift pulley set **33** until pinning points **c** align.
- ▶ Pin locking pin **32** in the pinning point **c** on both sides.
- ▶ Unpin turnbuckle **30** on the park position **g** and pin and secure on position **f**.
- ▶ Remove the auxiliary crane.
- ▶ Hang the pin pulling cylinder on the retainer **35** and on the screw **36**.
- ▶ Release pin **39**: Unpin the pin **38**.
- ▶ Unpin the pin **39**.
- ▶ Remove the pin pulling device.

LWE/LR 1600-2-001/18101-07-02/en

copyright © Liebherr-Werk Ehingen GmbH 2018

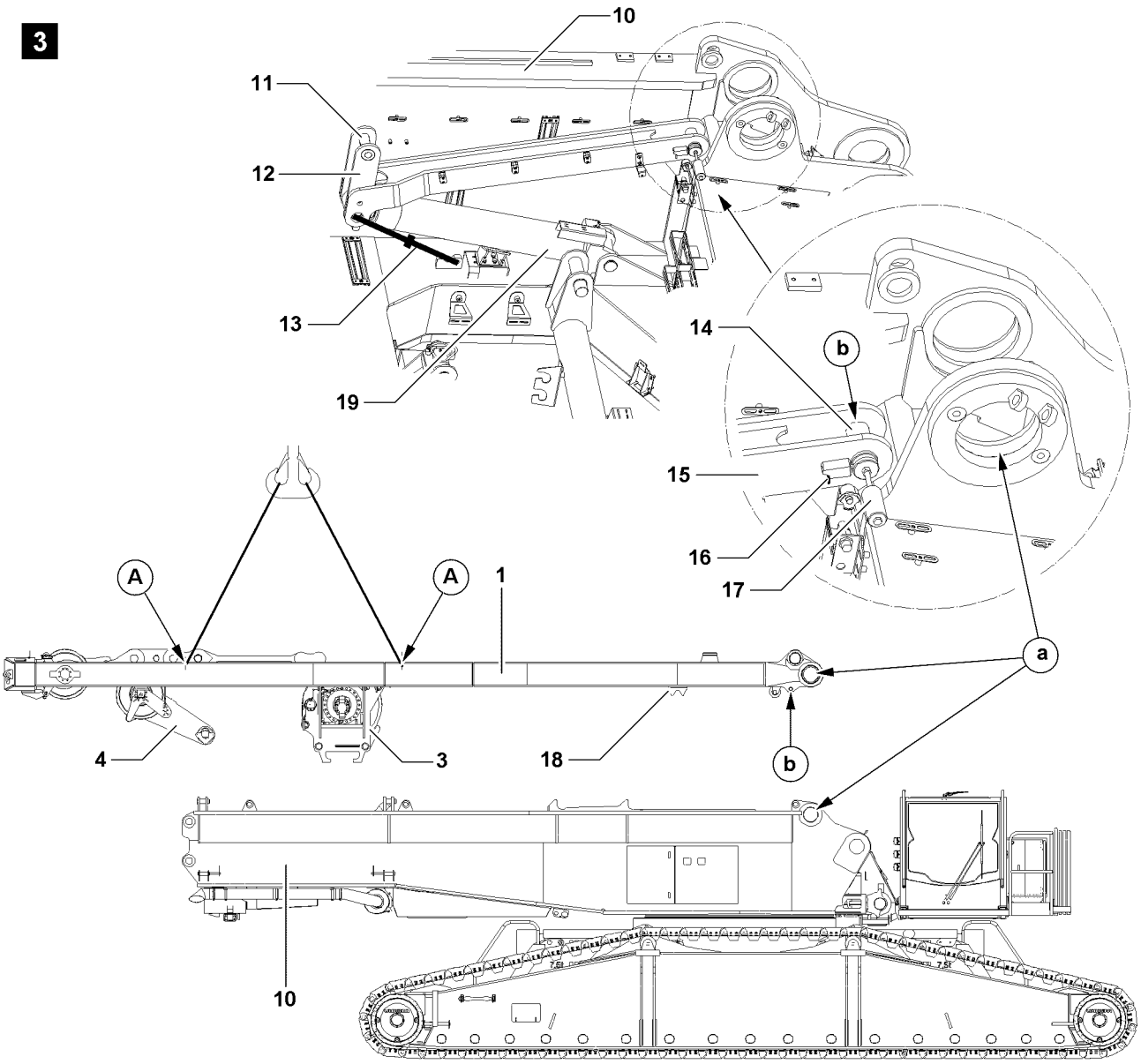

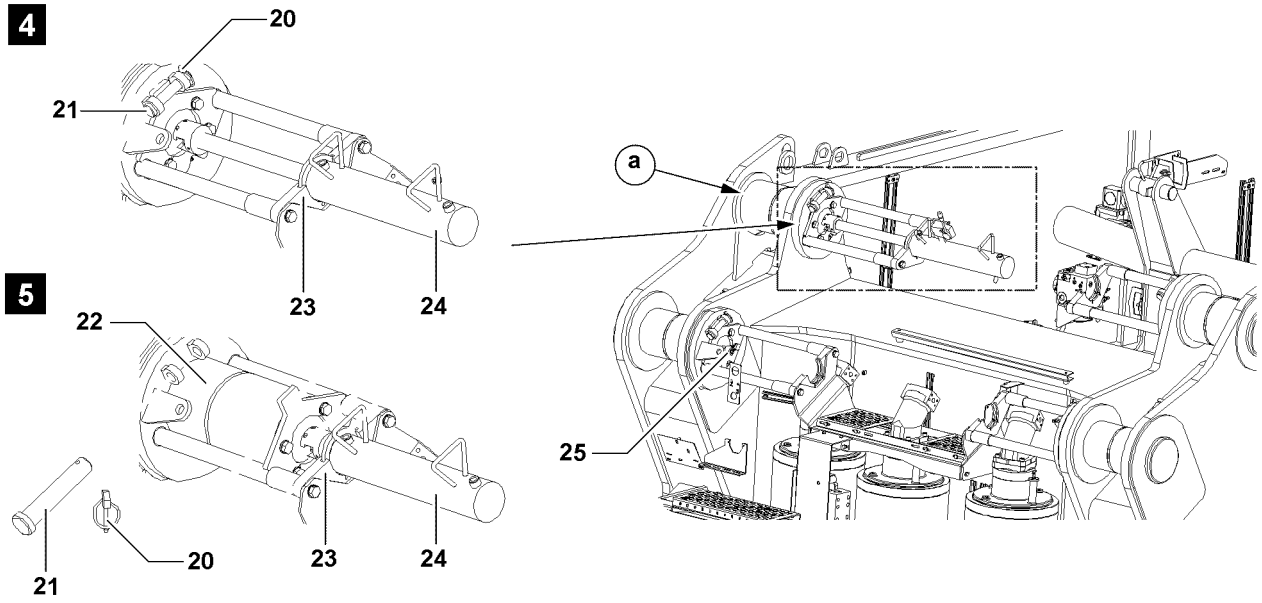

Fig.107282

LWE/LR 1600-2-001/18101-07-02/en

copyright © Liebherr-Werk Ehingen GmbH 2018

4.5 Unpin the SA-frame on the turntable

Ensure that the following prerequisites are met:
- intake gear winch 4 is in transport position,
- roller bearings are in transport position.

▶ Secure support cylinder **19**: Assembling the turnbuckle **13**.
▶ Pull, turn and latch spring pin **16** on both sides.
▶ Unpin pins **14** with pin device **17**.
▶ Pins **16** should be pinned on both sides and secured with spring retainers **14**.
▶ Attach the pin pulling cylinder **24** between the retainer **23** and the pull screw **25**.
▶ Release pin **22**: Remove the linchpin **20** and unpin the pin **21**.
▶ Unpin the pin **22** on both sides.
▶ Remove the pin pulling device **24**.

Result:

– SA-frame **1** is disassembled and can be lifted with the auxiliary crane.

4.6 Remove the SA-frame from the turntable

Note
▶ Guarantee equally long tackle such that the SA-frame can be horizontally lifted from the turntable.

NOTICE
Collision of components!
If the SA-frame is lifted with the auxiliary crane on the turntable, roller bearings and hoist gear can collide with the turntable. Components can be damaged.
▶ Make sure that the roller bearing **4** does not collide with the turntable **10**.
▶ Make sure that the intake gear winch 4 **3** does not collide with the turntable **10**.

▶ Attach SA-frame **1** with auxiliary crane on the attachment points.
▶ Carefully lift and remove SA-frame **1**.

LWE/LR 1600-2-001/18101-07-02/en

copyright © Liebherr-Werk Ehingen GmbH 2018

Empty page!

LWE/LR 1600-2-001/18101-07-02/en

copyright © Liebherr-Werk Ehingen GmbH 2018

3.06 Assembly conditions

1 Assembly conditions for operation on crawlers 3

LWE/LR 1600-2-001/18101-07-02/en

copyright © Liebherr-Werk Ehingen GmbH 2018

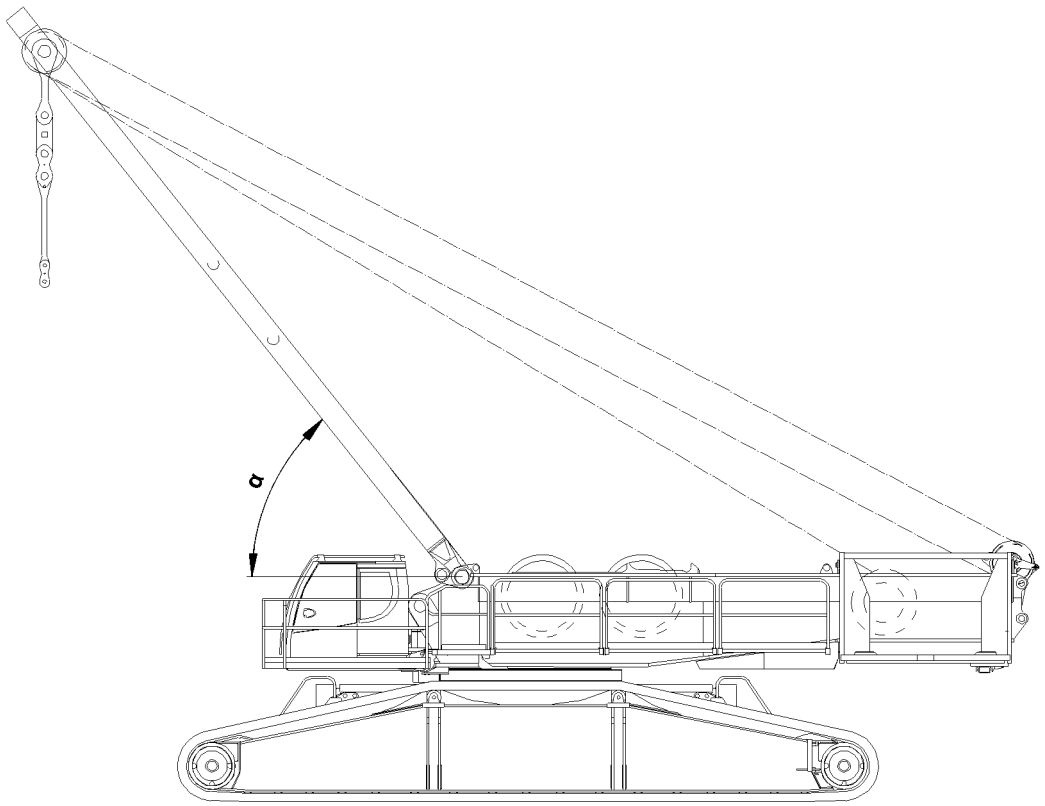

LWE/LR 1600-2-001/18101-07-02/en

Fig.104917

copyright © Liebherr-Werk Ehingen GmbH 2018

1 Assembly conditions for operation on crawlers

1.1 Definition of assembly conditions

Note
▶ Assembly condition with crawler and turntable extension, see the assembly drawing.

Note
▶ Assembly conditions for operation on a crawler and with installed turntable extension (e.g. SL8F, SL9) are particularly susceptible to falling backward. The turntable extension must always be assembled in accordance with chapter 4.07.10 or the corresponding assembly drawings.

Note
▶ Always check the following charts in context.

The assembly conditions take the following components into account:
- **1** SA-frame
- **2** Winch I
- **3** Winch II
- **4** Winch IV

Assembly condition	SA-frame, angle α	Winch I	Winch II	Winch IV	S-pivot section
1	Placed down	–	–	With rope	–
2	90°	–	–	With rope	–
3	90°	Without rope	–	With rope	–
4	90°	With rope	–	With rope	–
5	90°	With rope	With rope	With rope	–
6	Smaller than 60°	With rope	With rope	With rope	Installed (laying on the ground)

1.2 Permissible turntable ballast - ballast combinations

Note
▶ Definition of assembly conditions, see chart section „Definition of assembly conditions“.

Assembly condition	360° on crawler 8.7 m x 8.4 m Central ballast			
	65 t	25 t	5 t	0 t
1	130 t	90 t	70 t	70 t
2	150 t	130 t	90 t	90 t
3	150 t	130 t	110 t / 115 t	90 t

LWE/LR 1600-2-001/18101-07-02/en

copyright © Liebherr-Werk Ehingen GmbH 2018

Assembly condition	360° on crawler 8.7 m x 8.4 m Central ballast			
	65 t	**25 t**	**5 t**	**0 t**
4	170 t	130 t	110 t / 115 t	90 t
5	170 t	130 t	110 t / 115 t	110 t / 115 t
6	190 t	150 t	130 t	110 t / 115 t

Maximum permissible turntable ballast depending on assembly condition and central ballast

LWE/LR 1600-2-001/18101-07-02/en

copyright © Liebherr-Werk Ehingen GmbH 2018

3.07 Hoist winch assembly

1	Component overview	3
2	Dimensions and weights	3
3	Assembling winch 1	5
4	Removing winch 1	13
5	Assembly and disassembly of winch 1	17

LWE/LR 1600-2-001/18101-07-02/en

copyright © Liebherr-Werk Ehingen GmbH 2018

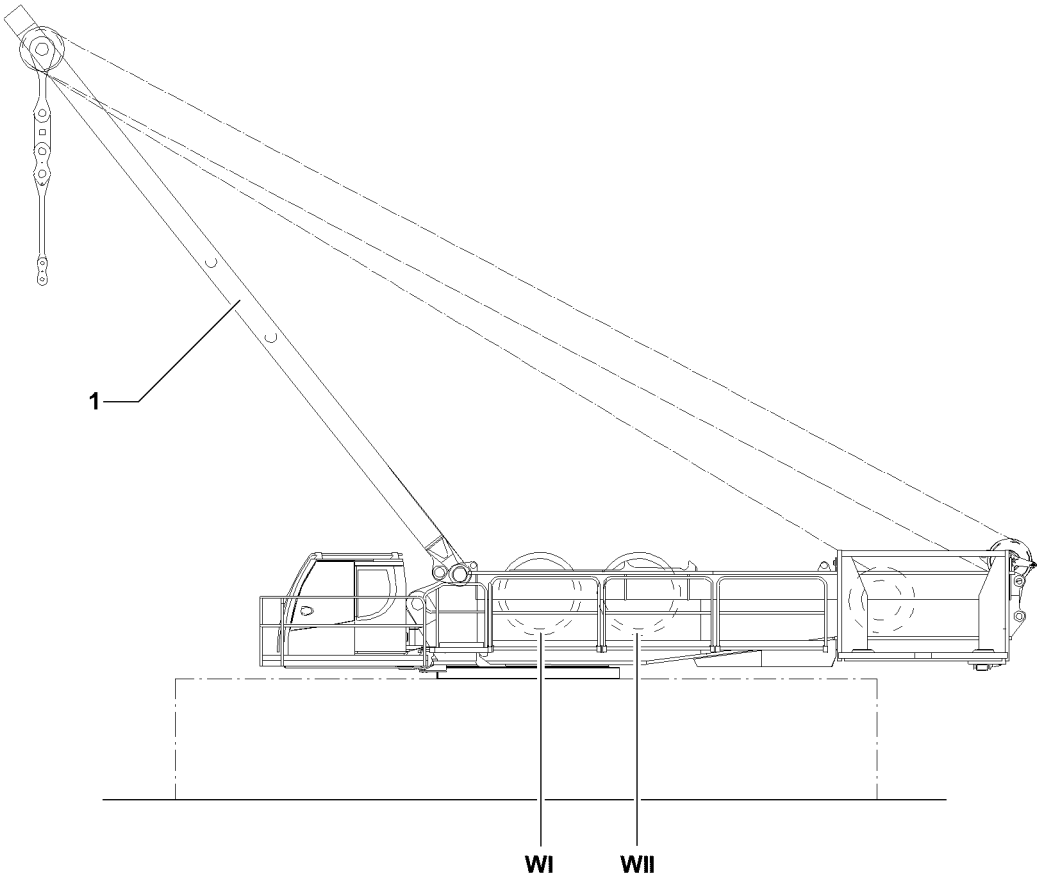

LWE/LR 1600-2-001/18101-07-02/en

Fig.111744

copyright © Liebherr-Werk Ehingen GmbH 2018

1 Component overview

1 SA-frame
WI Winch 1
WII Winch 2

2 Dimensions and weights

Note
▶ See Crane operating instructions, chapter 1.03!

LWE/LR 1600-2-001/18101-07-02/en

copyright © Liebherr-Werk Ehingen GmbH 2018

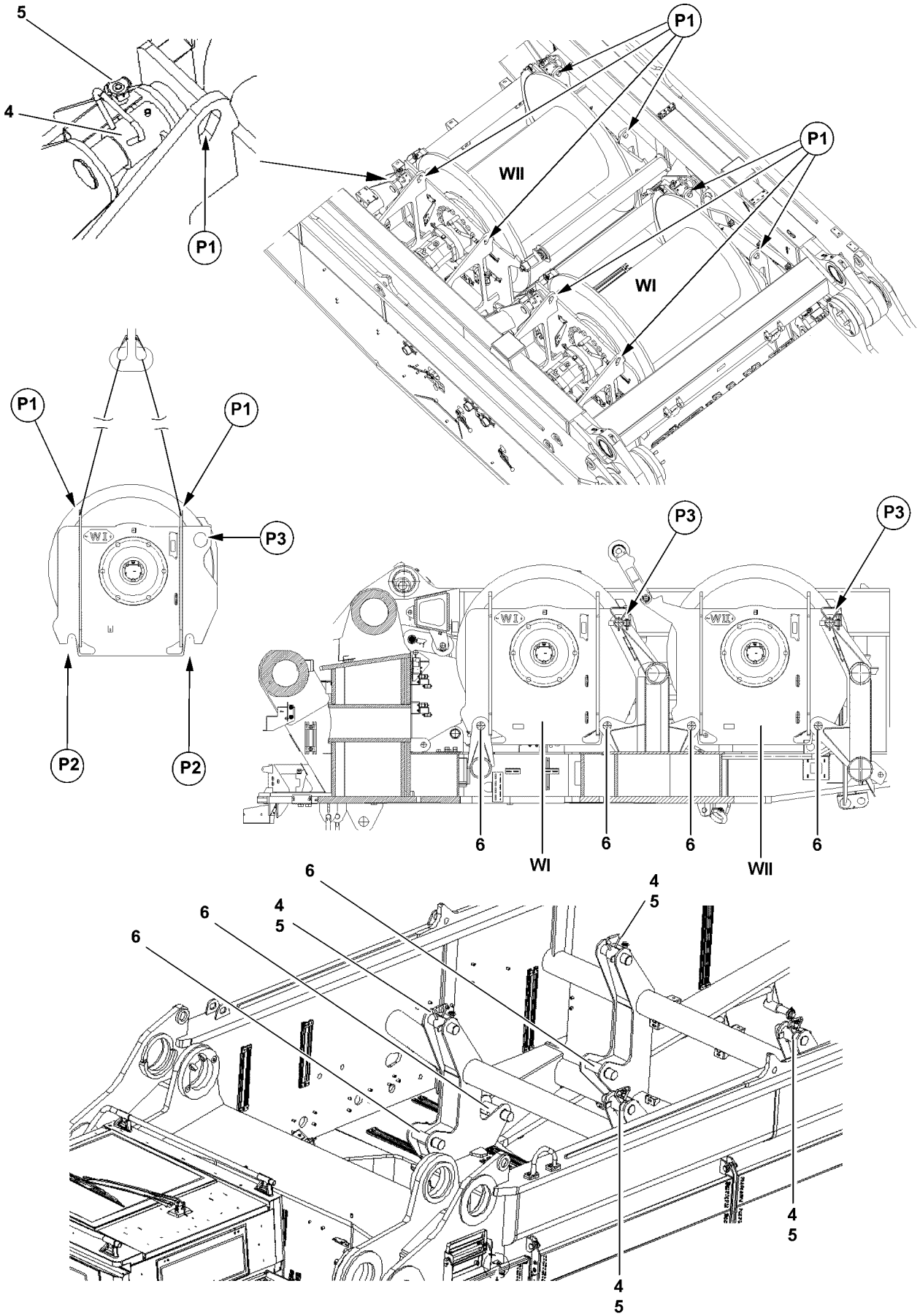

Fig.110972

LWE/LR 1600-2-001/18101-07-02/en

copyright © Liebherr-Werk Ehingen GmbH 2018

3 Assembling winch 1

WARNING
Risk of falling!
During assembly / disassembly work, personnel must be secured with appropriate aids to prevent them from falling. If this is not observed, assembly personnel can fall and suffer life-threatening or fatal injuries!

- ▶ Any assembly work, where there is a danger of falling must be carried out with suitable aids (for example lifting platform, scaffolding, ladder, auxiliary crane)!
- ▶ If the work cannot be carried out with such aids nor from the ground, then the assembly personnel must secure themselves with approved fall arrest systems to avoid falling, see Crane operating instructions, Chapter 2.04!
- ▶ Approved fall arrest systems must be hung into the respective fastening points on the crane, see Crane operating instructions, chapter 2.06!
- ▶ If railings are present on the components, then they must be brought into the corresponding position and secured for assembly / disassembly work!
- ▶ Step on aids and fall protection equipment only with clean shoes!
- ▶ Keep aids and fall protection equipment clean and free from snow and ice!
- ▶ During all assembly and disassembly work, maintenance work and inspections, travel and crane operation is prohibited!

WARNING
Components not pinned and secured!
If a component is released from the auxiliary crane before having been pinned and secured, the component will fall down! Personnel can be severely injured or killed!

- ▶ Do not disengage the auxiliary crane until the corresponding component is pinned and secured!

WARNING
Danger of impact / crushing!
When installing / removing counterweight components with the auxiliary crane, crane components can start to swing back and forth!
When lifting / lowering and positioning crane components, there is an increased danger of impacts / crushing!
Personnel can be caught and severely injured or killed!

- ▶ Make sure that personnel cannot be caught by components!
- ▶ When working in danger zones: Use aids to protect limbs!
- ▶ Guide components with suitable aids to minimize oscillation!

LWE/LR 1600-2-001/18101-07-02/en

copyright © Liebherr-Werk Ehingen GmbH 2018

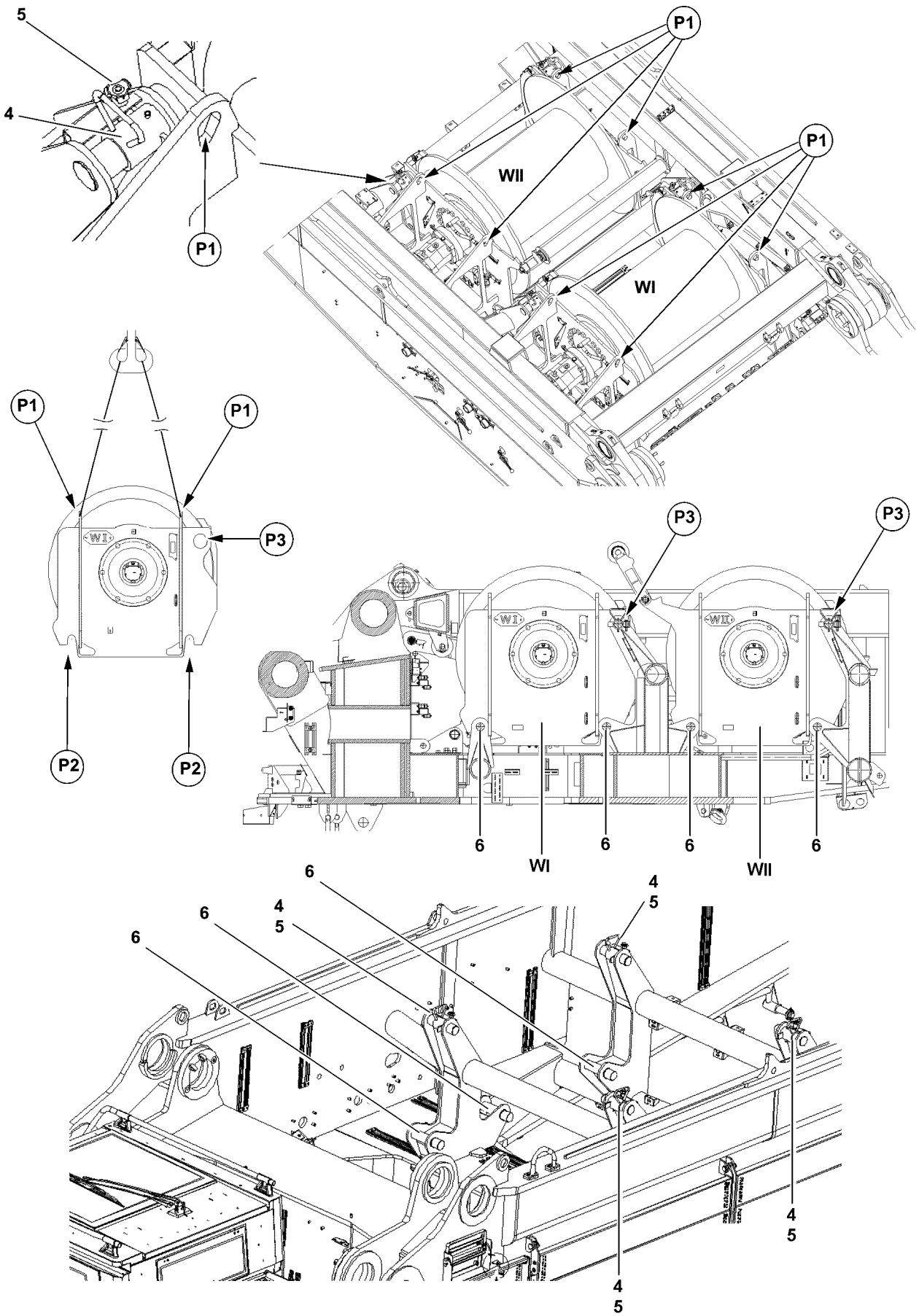

Fig.110972

LWE/LR 1600-2-001/18101-07-02/en

copyright © Liebherr-Werk Ehingen GmbH 2018

3.1 Lifting winch 1 from the flatbed trailer

Make sure that the following prerequisites are met:
- The installation of the turntable is completed.
- The crane is aligned in horizontal direction.
- An auxiliary crane with sufficient load carrying capacity is available.

WARNING
Danger of accident due to incorrect attachment!
Life-threatening situations can arise if the winch 1 is incorrectly or improperly attached!
Personnel can be severely injured or killed!
- ▶ Winch 1 must be attached on the intended receptacle point, point **P1**!
- ▶ Make sure that the tackle is correctly attached on winch 1 and that it is secured sufficiently to prevent it from loosening up!

- ▶ Attach the tackle on the receptacle points, point **P1**.
- ▶ Bring the tackle to „tension“.
- ▶ Release and remove the transport retainers on the flatbed trailer.

WARNING
Falling components!
When lifting winch 1 from the flatbed trailer, components or winch 1 can fall down!
Personnel can be severely injured or killed!
- ▶ Make sure that there are no persons within the danger zone!

- ▶ Lift winch 1 with the auxiliary crane from the flatbed trailer.

LWE/LR 1600-2-001/18101-07-02/en

copyright © Liebherr-Werk Ehingen GmbH 2018

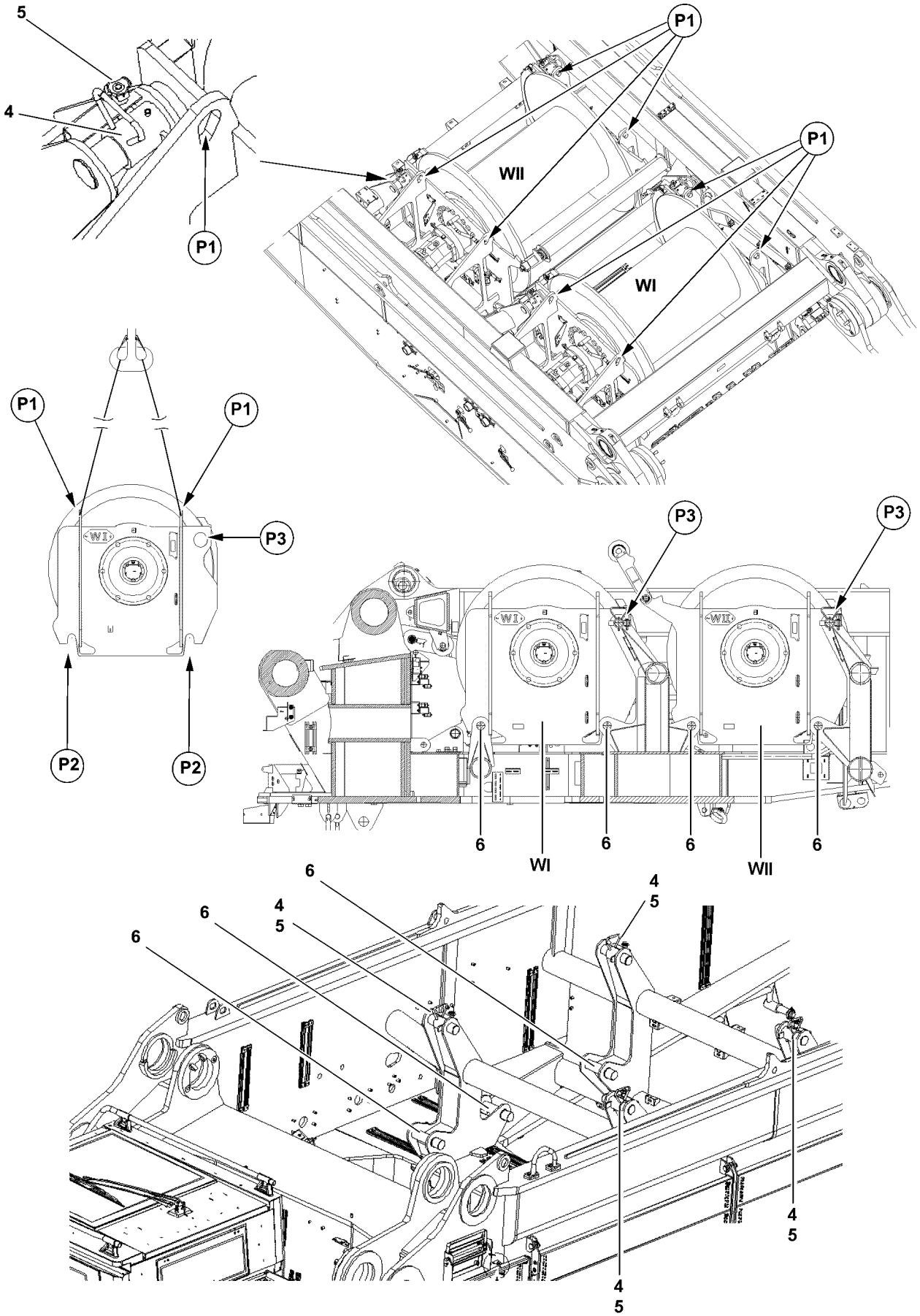

Fig.110972

LWE/LR 1600-2-001/18101-07-02/en

copyright © Liebherr-Werk Ehingen GmbH 2018

3.2 Setting winch 1 into the turntable

Make sure that the following prerequisites are met:
- The SA-frame is aligned / placed down to the point where the assembly area of winch 1 is easily accessible.
- The pin bores are clear.

WARNING
Danger of accident when swinging in and lowering winch 1!
When swinging in and lowering winch 1 on the turntable, limbs can be crushed or even severed!
Personnel can be severely injured or killed!
▶ Make sure that there are no persons within the danger zone!
▶ Do not reach with your hands into the danger zone!

NOTICE
Property damage!
If the following note is not observed, damage can result to the crane or winch 1!
▶ When moving winch 1 in with the SA-frame, it must be ensured that winch 1 does not hit against the SA-frame!

Note
▶ Check to ensure that the alignment of winch 1 or the receptacles, point **P2** to the pins **6** on the turntable is exact!
▶ Before lowering, bring winch 1 into position that the receptacles, point **P2** are above the pins **6** on the turntable!

▶ Move winch 1 in with the auxiliary crane between the SA-frame.
▶ Lower winch 1 slowly.

When winch 1 is aligned:
▶ Set winch 1 carefully on the pins **6** on the turntable.

3.3 Pinning winch 1 with the turntable

Make sure that the following prerequisites are met:
- Winch 1 is seated on the pins **6**.
- The tackle between winch 1 and the auxiliary crane is „tensioned“.

▶ Insert the pins **4**, point **P3**.

WARNING
The pins can loosen up by themselves!
▶ Secure pins **4** immediately after pinning with ball locking pins **5**!

When all pins **4** are completely pinned:

▶ Secure the pins **4** with ball locking pins **5**.
▶ Remove the tackle on winch 1.

LWE/LR 1600-2-001/18101-07-02/en

copyright © Liebherr-Werk Ehingen GmbH 2018

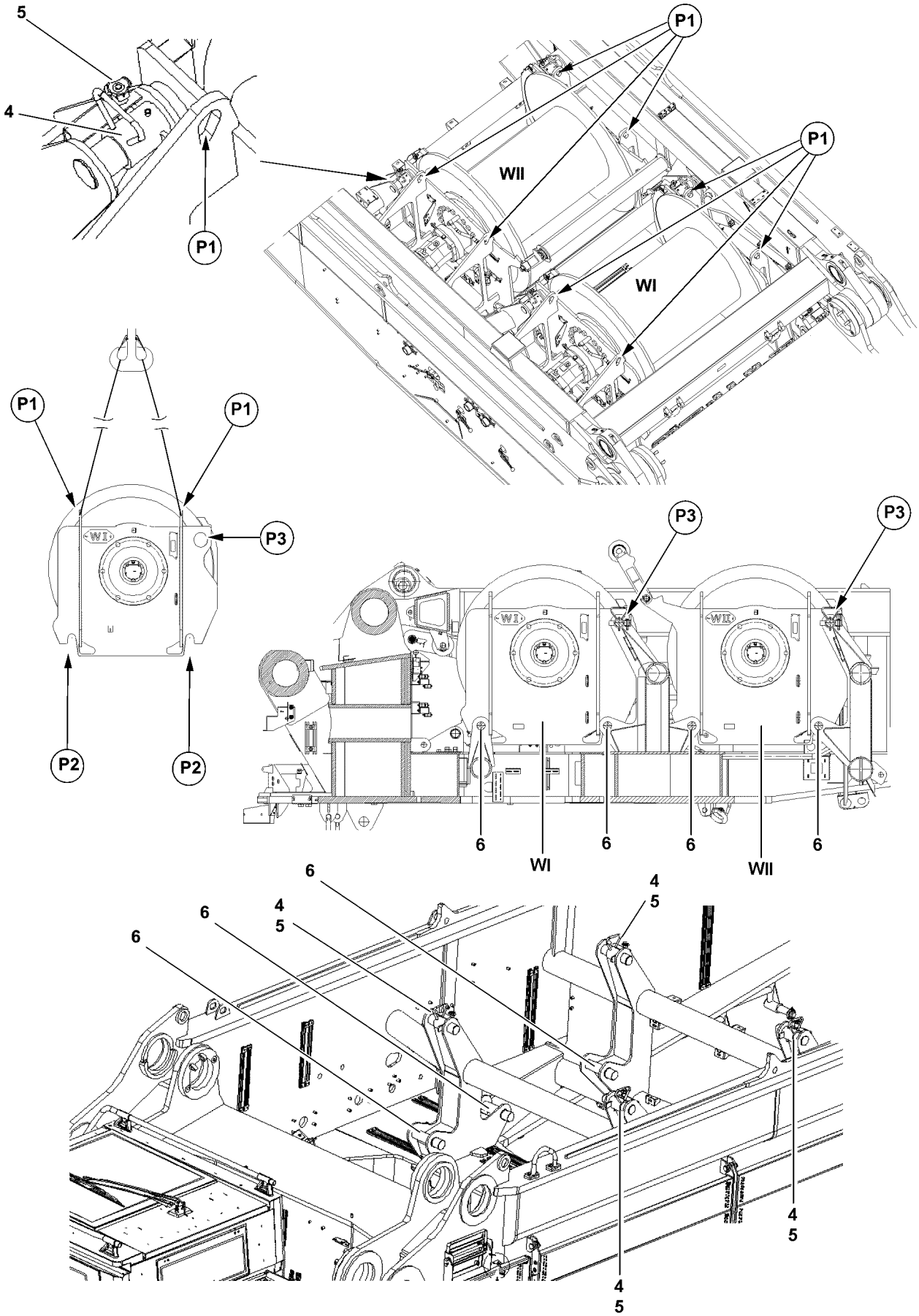

Fig.110972

LWE/LR 1600-2-001/18101-07-02/en

copyright © Liebherr-Werk Ehingen GmbH 2018

3.4 Establishing the connection to the turntable

Make sure that the following prerequisite is met:
– The winch is properly installed, pinned and secured.

3.4.1 Establishing the hydraulic connections to winch 1

The hydraulic connections of winch 1 are made with quick couplings.

When connecting hydraulic lines with quick couplings, make sure that the coupling procedure is carried out correctly.

WARNING
Pressure in the hydraulic lines!
If the pressure supply is not interrupted before connecting / releasing the hydraulic lines, the hydraulic oil can escape with high pressure!
Personnel can be severely injured or killed!
▶ Release the pressure in the hydraulic system before connecting / disconnecting: Interrupt the pressure supply and wait for a short time!

WARNING
Loss of pressure or leakage!
Incorrectly coupled or self-loosening quick-release couplings (particularly return lines) can result in serious accidents due to component failure!
▶ Check that the quick-release couplings have been properly connected before using the crane!

▶ Assemble coupling components (sleeve and connector) and screw together using hand-tightened nut.
▶ Tighten hydraulic coupling by hand. Rotate hand-tightened nut until it reaches a tangible, fixed stop position.
▶ Establish the hydraulic connection to winch 1.

3.4.2 Establishing the electrical connections to winch 1.

▶ Establish the electrical connections to winch 1, see electric wiring diagram.

3.4.3 Establishing the connections of the central lubrication system to winch 1

▶ Establish the connections of the central lubrication system to winch 1.

LWE/LR 1600-2-001/18101-07-02/en

copyright © Liebherr-Werk Ehingen GmbH 2018

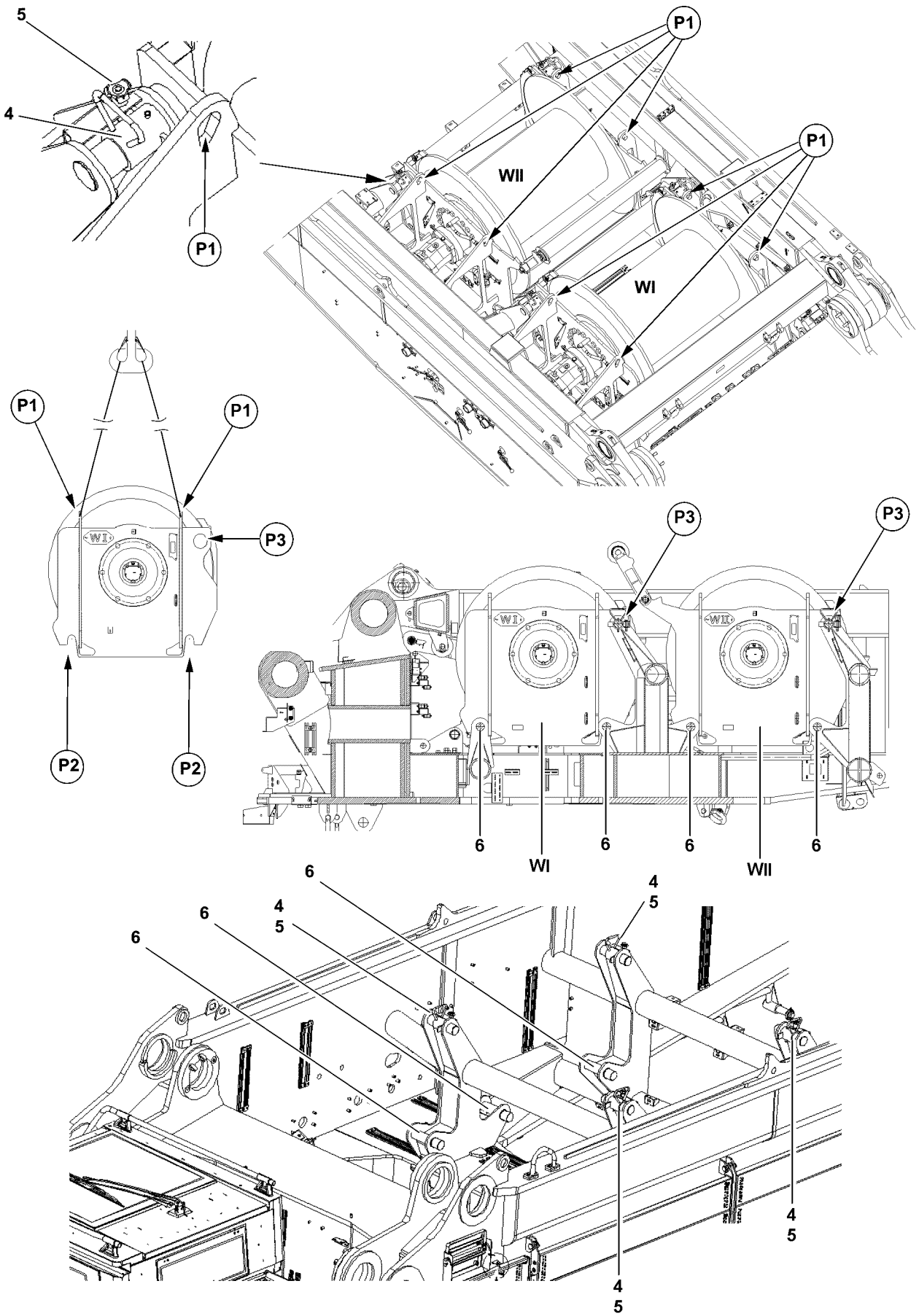

Fig.110972

LWE/LR 1600-2-001/18101-07-02/en

copyright © Liebherr-Werk Ehingen GmbH 2018

4 Removing winch 1

WARNING
Risk of falling!
During assembly / disassembly work, personnel must be secured with appropriate aids to prevent them from falling. If this is not observed, assembly personnel can fall and suffer life-threatening or fatal injuries!

- ▶ Any assembly work, where there is a danger of falling must be carried out with suitable aids (for example lifting platform, scaffolding, ladder, auxiliary crane)!
- ▶ If the work cannot be carried out with such aids nor from the ground, then the assembly personnel must secure themselves with approved fall arrest systems to avoid falling, see Crane operating instructions, Chapter 2.04!
- ▶ Approved fall arrest systems must be hung into the respective fastening points on the crane, see Crane operating instructions, chapter 2.06!
- ▶ If railings are present on the components, then they must be brought into the corresponding position and secured for assembly / disassembly work!
- ▶ Step on aids and fall protection equipment only with clean shoes!
- ▶ Keep aids and fall protection equipment clean and free from snow and ice!
- ▶ During all assembly and disassembly work, maintenance work and inspections, travel and crane operation is prohibited!

WARNING
Components not pinned and secured!
If a component is released from the auxiliary crane before having been pinned and secured, the component will fall down! Personnel can be severely injured or killed!

- ▶ Do not disengage the auxiliary crane until the corresponding component is pinned and secured!

WARNING
Danger of impact / crushing!
When installing / removing counterweight components with the auxiliary crane, crane components can start to swing back and forth!
When lifting / lowering and positioning crane components, there is an increased danger of impacts / crushing!
Personnel can be caught and severely injured or killed!

- ▶ Make sure that personnel cannot be caught by components!
- ▶ When working in danger zones: Use aids to protect limbs!
- ▶ Guide components with suitable aids to minimize oscillation!

LWE/LR 1600-2-001/18101-07-02/en

copyright © Liebherr-Werk Ehingen GmbH 2018

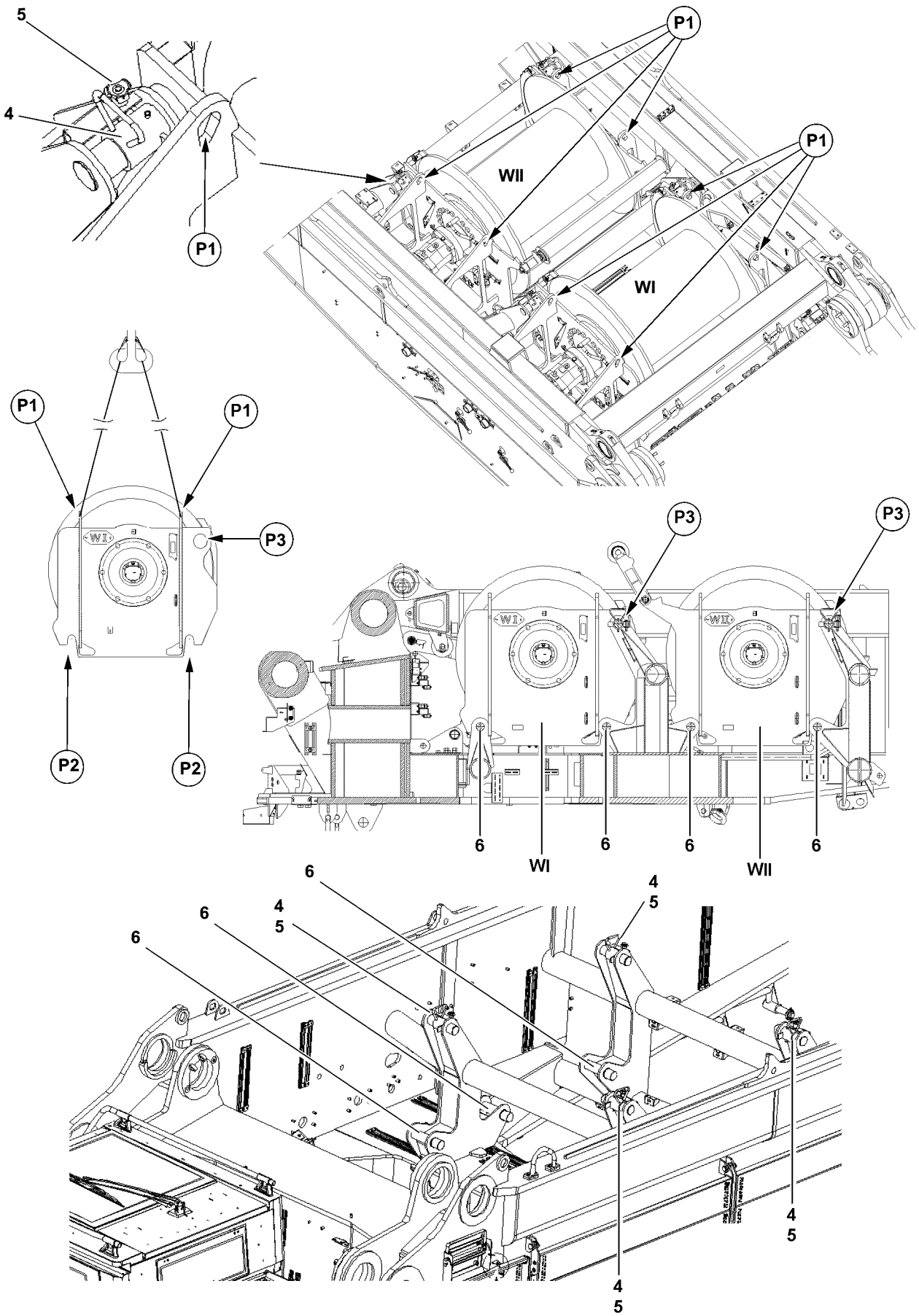

Fig.110972

LWE/LR 1600-2-001/18101-07-02/en

copyright © Liebherr-Werk Ehingen GmbH 2018

4.1 Disconnecting the connections to winch 1

Make sure that the following prerequisite is met:
– The hoist rope is completely spooled up.

4.1.1 Disconnecting the hydraulic connections to winch 1

When releasing hydraulic lines with quick-release couplings, make sure that the uncoupling procedure is carried out correctly.

WARNING
Pressure in the hydraulic lines!
If the pressure supply is not interrupted before connecting / releasing the hydraulic lines, the hydraulic oil can escape with high pressure!
Personnel can be severely injured or killed!
▶ Release the pressure in the hydraulic system before connecting / disconnecting: Interrupt the pressure supply and wait for a short time!

▶ Release the hydraulic coupling by hand.
▶ Disconnect the hydraulic connection to winch 1.

4.1.2 Disconnecting the electrical connections to winch 1

▶ Disconnect the electrical connections to winch 1.

4.1.3 Disconnecting the connections of the central lubrication system to winch 1

▶ Disconnect the connections to winch 1.

LWE/LR 1600-2-001/18101-07-02/en

copyright © Liebherr-Werk Ehingen GmbH 2018

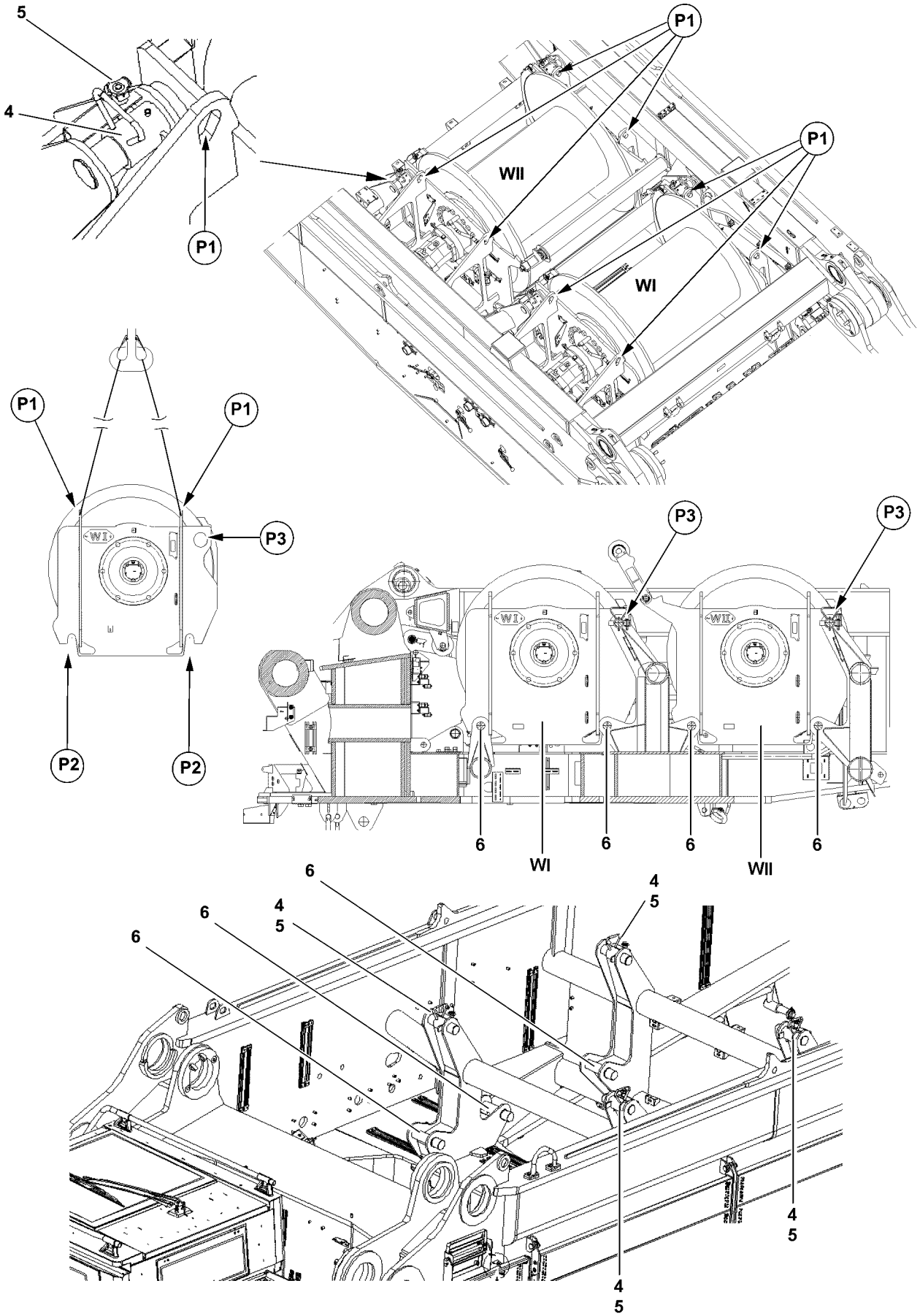

Fig.110972

LWE/LR 1600-2-001/18101-07-02/en

copyright © Liebherr-Werk Ehingen GmbH 2018

4.2 Unpinning winch 1 on the turntable

Make sure that the following prerequisites are met:
- The hydraulic connections are disconnected.
- The electrical connections are disconnected.
- The connections of the central lubrication system are disconnected.
- The SA-frame is aligned / placed down to the point where the assembly area of winch 1 is easily accessible.
- An auxiliary crane with sufficient load carrying capacity is available.
- The tackle is attached on the receptacle points, point **P1** of winch 1.

▶ Bring the tackle to „tension“.
▶ Release the ball locking pins **5**.
▶ Unpin the pin **4**.

NOTICE
Damage to the connector parts!
By lifting winch 1, the connector lines can be damaged!
▶ Make sure that all hydraulic and electrical connections are disconnected!
▶ Make sure that the connections to the central lubrication system as disconnected!
▶ Make sure that all pins are removed!

NOTICE
Property damage!
If the following note is not observed, damage can result to the crane or winch 1!
▶ When moving winch 1 out with the SA-frame, it must be ensured that winch 1 does not hit against the SA-frame!

When the pins **4** are unpinned:

▶ Lift winch 1 carefully with the auxiliary crane.

WARNING
Falling components!
When lifting winch 1 from the turntable, components or winch 1 can fall down!
Personnel can be severely injured or killed!
▶ Make sure that there are no persons within the danger zone!

▶ Move winch 1 out.

When winch 1 is moved out:
▶ Set winch 1 on the flatbed trailer.
▶ Remove the auxiliary crane.

5 Assembly and disassembly of winch 1

The assembly or disassembly of winch 1 is to be carried out according to the assembly or disassembly of winch 1.

LWE/LR 1600-2-001/18101-07-02/en

copyright © Liebherr-Werk Ehingen GmbH 2018

Empty page!

LWE/LR 1600-2-001/18101-07-02/en

copyright © Liebherr-Werk Ehingen GmbH 2018

4 Operation of crane superstructure

LWE/LR 1600-2-001/18101-07-02/en

copyright © Liebherr-Werk Ehingen GmbH 2018

LWE/LR 1600-2-001/18101-07-02/en

copyright © Liebherr-Werk Ehingen GmbH 2018

4.01 Operating and monitoring instruments on the crane superstructure

1	Operating and monitoring instruments	3
2	Equipment in the cab	3
3	Operating units in the cab	7

LWE/LR 1600-2-001/18101-07-02/en

copyright © Liebherr-Werk Ehingen GmbH 2018

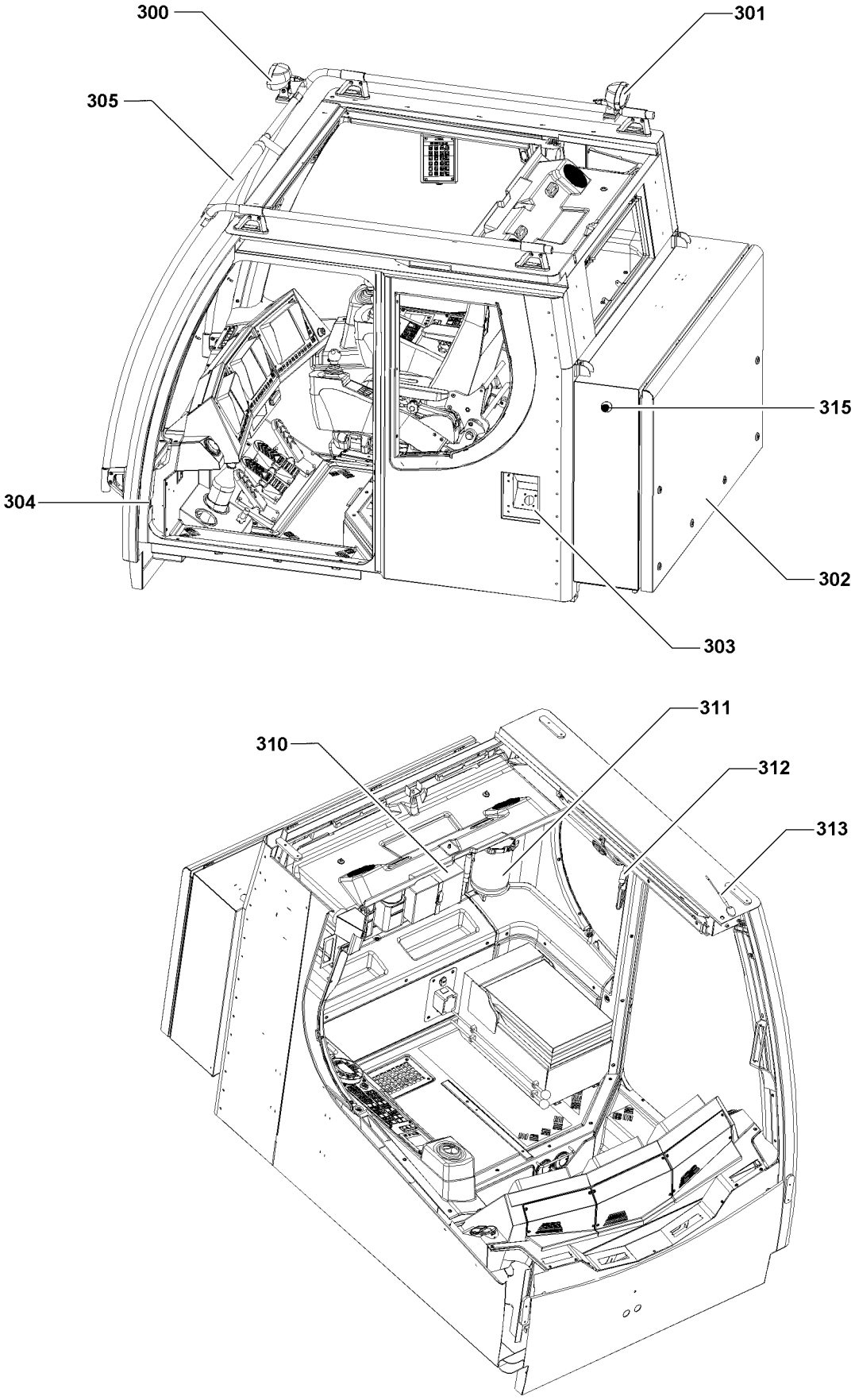

Fig.104888

LWE/LR 1600-2-001/18101-07-02/en

copyright © Liebherr-Werk Ehingen GmbH 2018

1 Operating and monitoring instruments

This chapter describes the elements in the cab and is divided into:
- General equipment in the cab
- Operating units in the cab

2 Equipment in the cab

2.1 Installations in the cab

300 Working floodlight, front

301 Working floodlight, rear

302 Control cabinet

303 Reservoir for window cleaning fluid

304 Door contact switch

305 Three color light
- LMB-warnings are optically shown

313 Antenna

2.2 Emergency equipment

310 First aid kit

311 Fire extinguisher

312 Emergency hammer

315 EMERGENCY OFF switch

LWE/LR 1600-2-001/18101-07-02/en

copyright © Liebherr-Werk Ehingen GmbH 2018

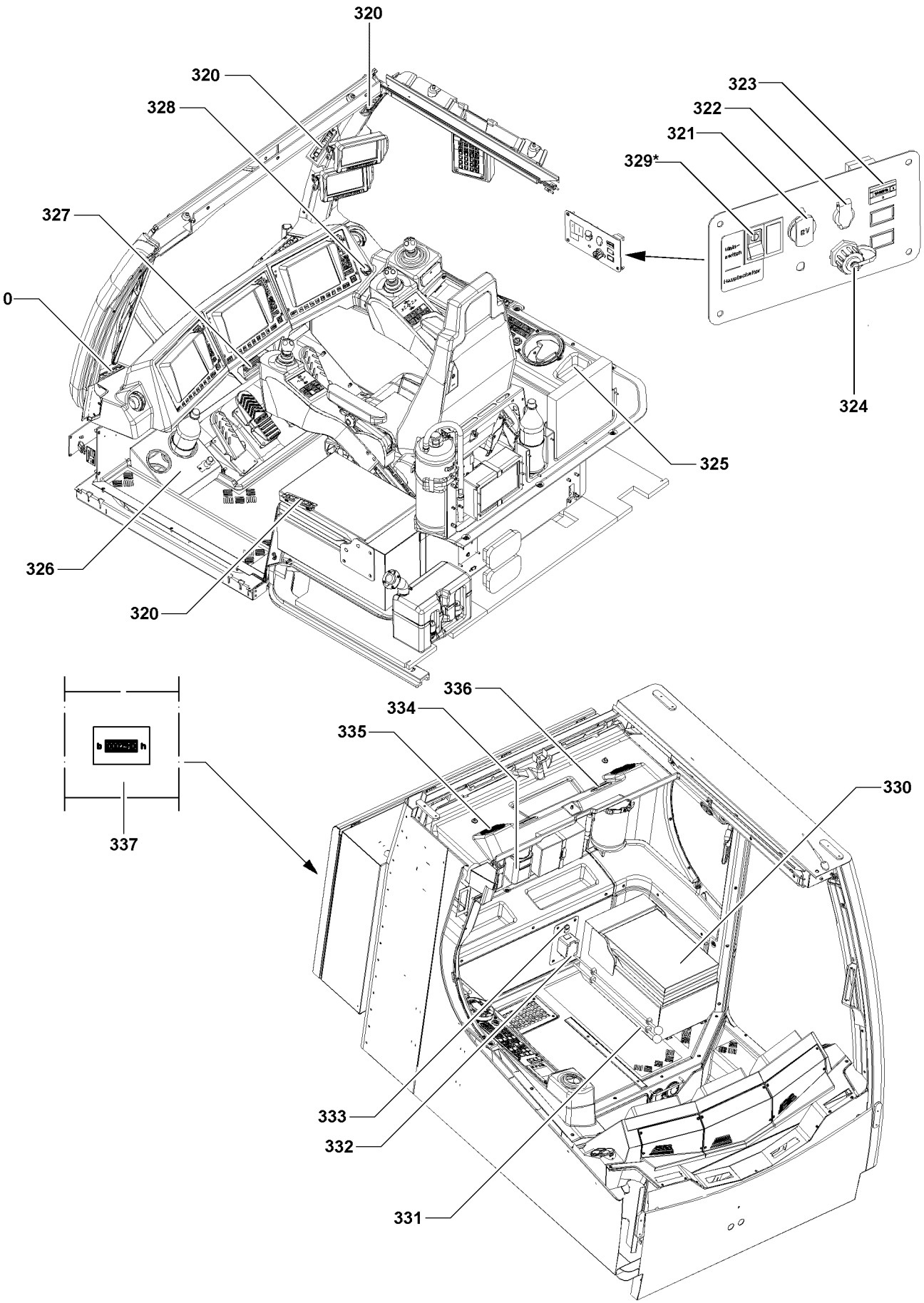

Fig.113578

LWE/LR 1600-2-001/18101-07-02/en

copyright © Liebherr-Werk Ehingen GmbH 2018

2.3 Interfaces

321 12 V socket

322 24 V socket

324 LAN socket

332 230 V socket*

333 12 V socket

2.4 Interior equipment

320 Outlet nozzles

323 Operating hour meter
- Recording of crane operating hours

325 Compartment

326 Drink holder

327 Radio

328 Cigarette lighter

329 Toggle switch*
- Shut off / turn on main current circuit

330 Emergency seat

331 Manual control lever

334 Drink holder

335 Speaker

336 Interior lights

337 Operating hour meter
- Recording of crawler operating hours
- **Note:**
  The operating hour meter for the crawlers is located in the control cabinet!

LWE/LR 1600-2-001/18101-07-02/en

copyright © Liebherr-Werk Ehingen GmbH 2018

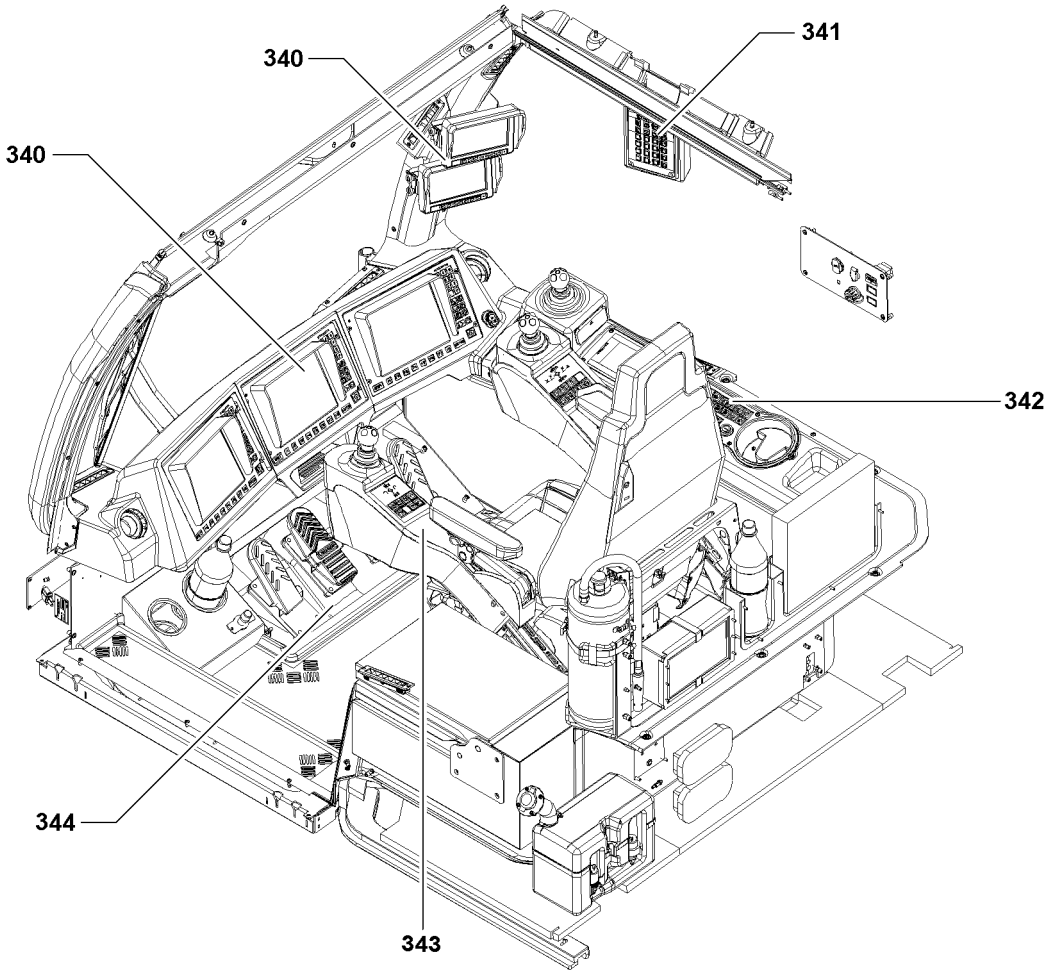

LWE/LR 1600-2-001/18101-07-02/en

Fig.104890

copyright © Liebherr-Werk Ehingen GmbH 2018

3 Operating units in the cab

The following operating units are in the cab:

340 Monitors and displays
341 Operating and control unit - BKE
342 Instrument panel
343 Control platform
344 Pedal carrier

LWE/LR 1600-2-001/18101-07-02/en

copyright © Liebherr-Werk Ehingen GmbH 2018

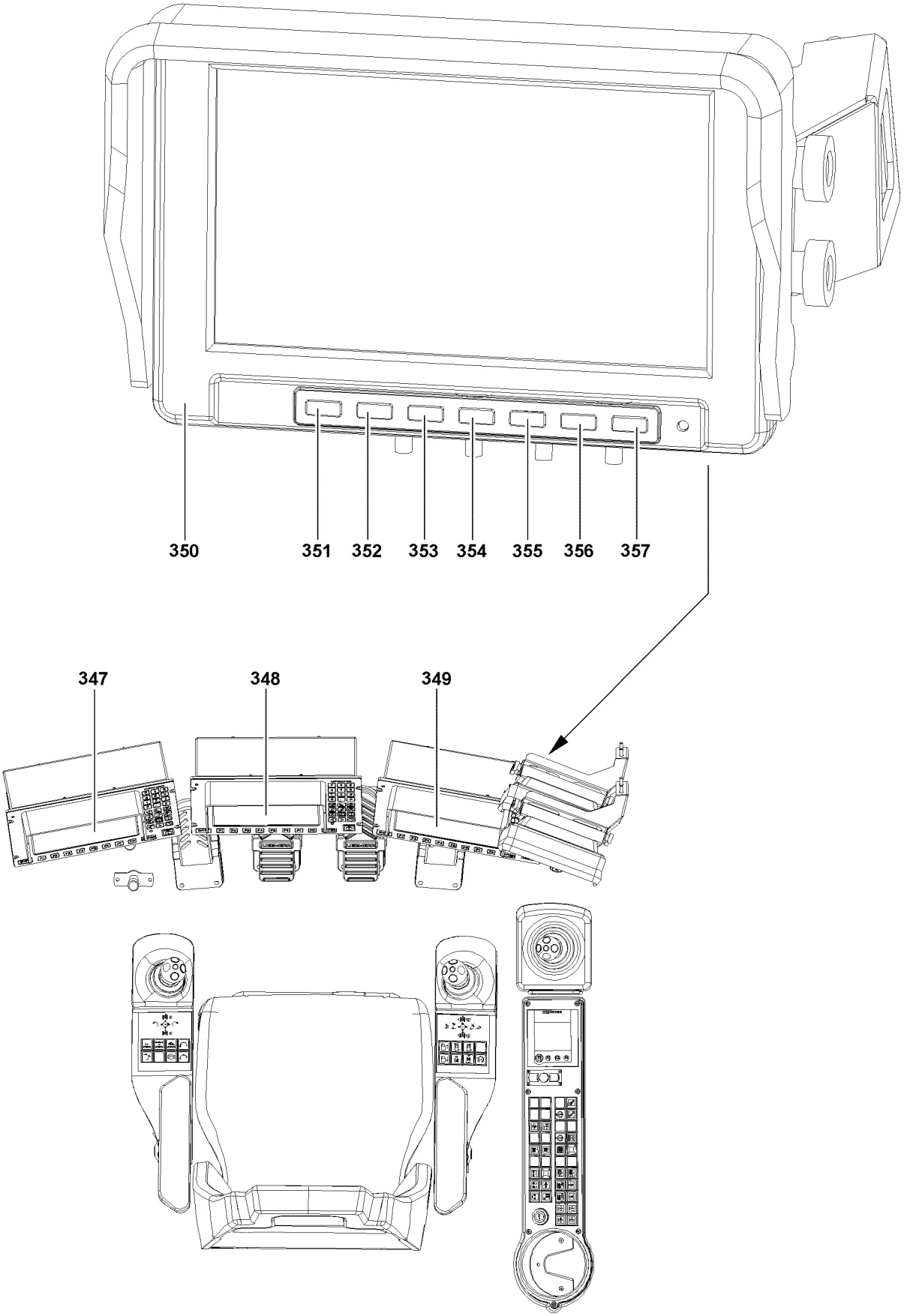

LWE/LR 1600-2-001/18101-07-02/en

Fig.104891

copyright © Liebherr-Werk Ehingen GmbH 2018

3.1 Monitors and displays

3.1.1 LICCON computer system

347 LICCON monitor 2
- User interface for „LICCON job planner“

348 LICCON monitor 1
- User interface for operation with „derrick“ boom

349 LICCON monitor 0
- User interface for entry of equipment configurations and for crane operation

LWE/LR 1600-2-001/18101-07-02/en

copyright © Liebherr-Werk Ehingen GmbH 2018

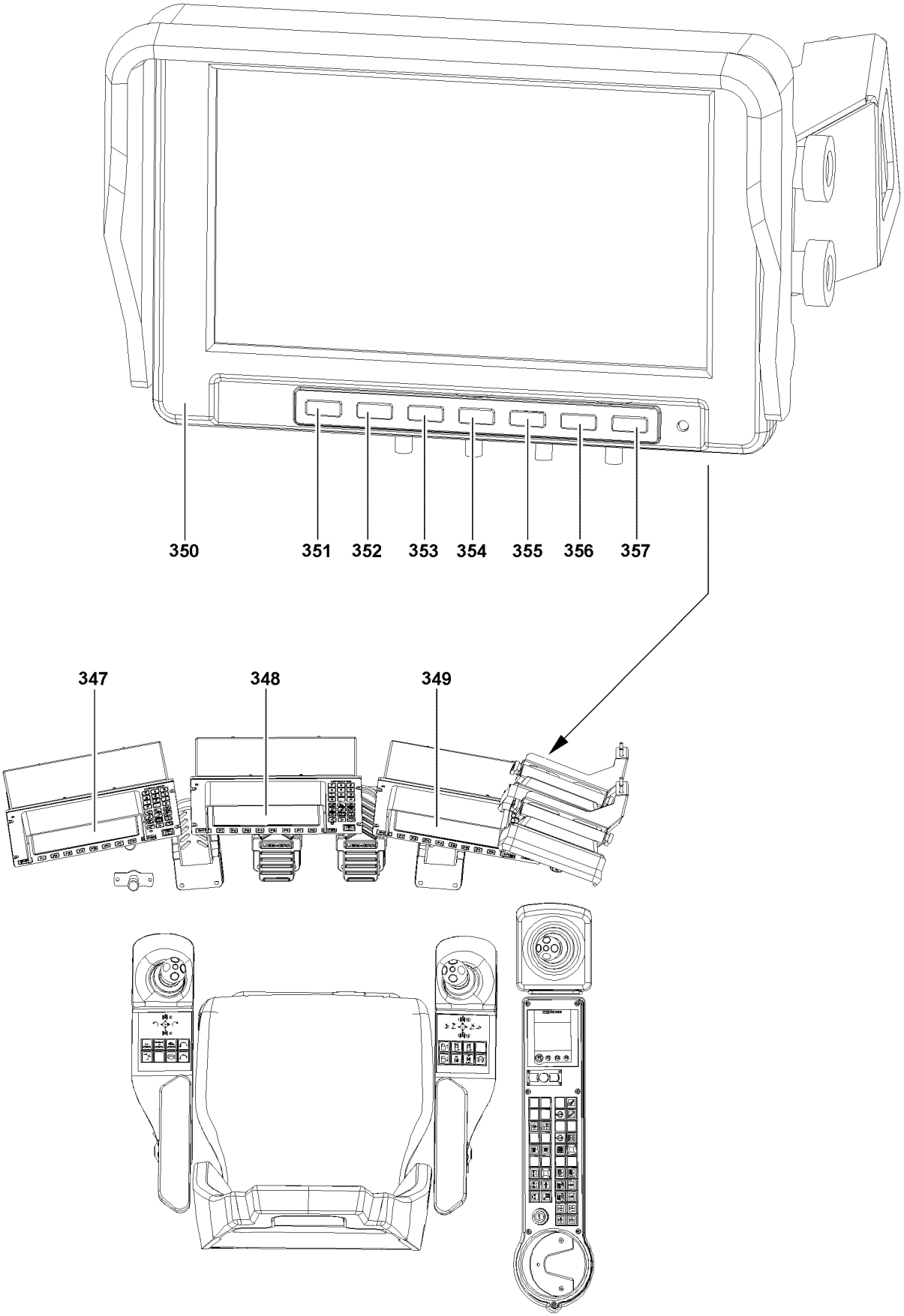

LWE/LR 1600-2-001/18101-07-02/en

Fig.104891

copyright © Liebherr-Werk Ehingen GmbH 2018

3.1.2 Camera monitoring

350 TFT monitor

357 Button
- Monitor on / off

351 Button „MODE“
- By pressing the button „MODE“ the system changes between the individual display modes:
  – Single display mode
  – Split display mode
  – Tripled or quadrupled display mode

352 „Camera selection“ key
- By pressing the button „Camera selection“ the system changes between the cameras:
  – Single display mode: Change between camera 1 and camera 2.
  – Split display mode: Change between cameras 1/2, cameras 2/3, cameras 3/4 and camera 4/1
  – Tripled or quadrupled display mode: Button has no function.

353 Menu button
- By pressing the „Menu“ button, menus for various adjustments are called up and changed over, in the following order:
  – Color: Adjustment of color saturation
  – Brightness: Brightness adjustment
  – Contrast: Contrast adjustment
  – Standard: Reset to default settings
  – Volume: Volume adjustment
  – Language: Language adjustment (English, French, German, Spanish, Italian, Portuguese, Polish)
  – Reflection: Reflection of camera view Return to the main menu with „Enter“. End menu with „End“.

354 „Minus“ key
- By pressing the „Minus“ key, the value of a setting is reduced.

355 „Plus“ key
- By pressing the „Plus“ key, the value of a setting is increased.

356 „Change between day / night“ key
- Press the „Change between day / night“ button to match the brightness of the display to the time of day.

LWE/LR 1600-2-001/18101-07-02/en

copyright © Liebherr-Werk Ehingen GmbH 2018

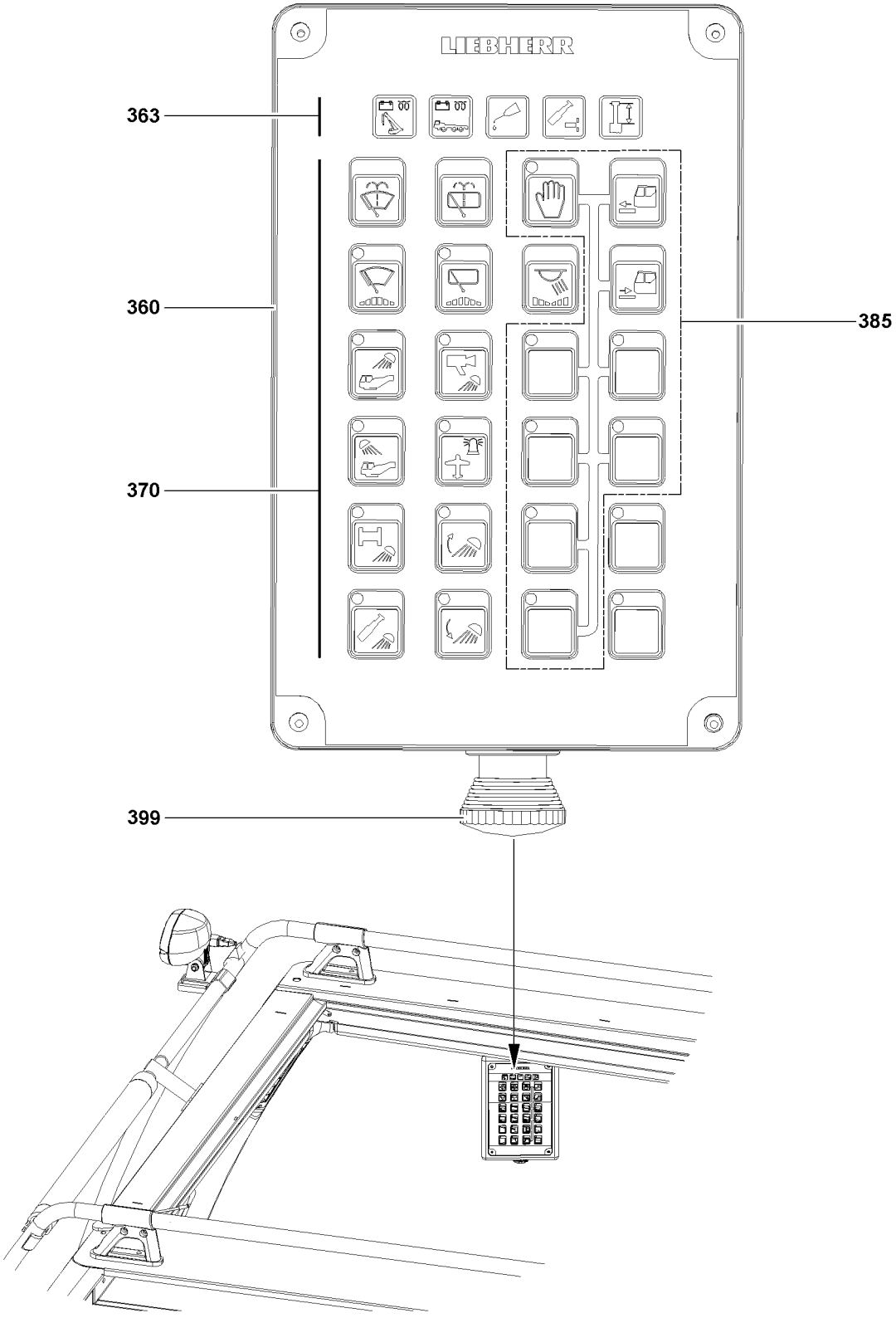

Fig.104892

LWE/LR 1600-2-001/18101-07-02/en

copyright © Liebherr-Werk Ehingen GmbH 2018

3.2 Operating elements on the operating and control unit (BKE)

3.2.1 Operating console

Note
▶ The indicator lights as well as the operating keys are described in detail in the following sections!

360 Operating console
- Housing with indicator lights and buttons

399 EMERGENCY OFF switch
- Impact switch

363 Indicator lights on the BKE

370 Operating buttons on the BKE
- Standard assignment

385 Operating buttons on the BKE
- Standard assignment for release controls

3.2.2 Indicator lights on the BKE „363“

Position	Button	LED condition	Description
364	Engine monitoring superstructure	Yellow	Engine preheating active
		Yellow / red blinking	Engine ready to start
		Yellow blinking	Engine preheating Error / problem
		Off	Engine is running (after engine has been started)
		Red	The engine is running, the alternator does not charge
		Red blinking	Engine is running in emergency operation
365		**Note:**	Indicator light **not** assigned!
366	Central lubrication	Yellow + red (orange)	Functional readiness (is shown after engine start for 1.5 s)
		Yellow	Lubrication active
		Red	Error / problem
		Off	Central lubrication not active
367		**Note:**	Indicator light **not** assigned!
368		**Note:**	Indicator light **not** assigned!

LWE/LR 1600-2-001/18101-07-02/en

copyright © Liebherr-Werk Ehingen GmbH 2018

3.2.3 Operating buttons on the BKE „370“

Note

▶ With the LEDs in the operating buttons, the operating conditions and problems can be recognized quickly and reliably by the crane driver!

Position	Button	Function	LED	Description
371	Window washer system „front“	„On“	–	Clean the window: By pressing and holding the button „Front“ or „Roof“
				Note: After releasing the button „Front“ or „Roof“, three additional wipe movements are carried out before the wiper blades return to their original position.
372	Window washer system „Roof“	„Off“	–	By releasing the button „Front“ or „Roof“
373	Window wiper „Front“			**Note:** There are three different wipe stages: 1. Wiper „On“: Continuous operation 2. Intermittent 1: Wipe with long pauses 3. Intermittent 2: Wipe with short pauses 4. Wiper „Off“
374	Window wiper, „roof“			Every time the button „Front“ or „Roof“ is pressed, the wipe stages change incrementally
		„On“	Lights up	By pressing the button „Front“ or „Roof“
		„Off“	Off	By pressing the button „Front“ or „Roof“ longer than one second until a „beep“ sounds **or** By pressing the button „Front“ or „Roof“ until the LED is off **or** Ignition „Off“
375	Interior light cab	„On“ (100 %)	–	By opening the door **or** By pressing the button
		Dim	–	There are three different dimmer stages: 1. 75 %

LWE/LR 1600-2-001/18101-07-02/en

copyright © Liebherr-Werk Ehingen GmbH 2018

Position	Button	Function	LED	Description
				2. 50 % 3. 25 % 4. Interior light „Off“ When the interior light is turned on: Each time the button is pressed, the brightness is reduced incrementally.
		„Off“	–	By pressing the button for longer than one second **or** By pressing the button until the lighting turns „Off“ **or** If the following conditions are present simultaneously for longer than 30 s: – Driver's seat not occupied – Door closed – Engine „Off“
376	 Floodlight on rear of turntable	„Off“	Off	By pressing the button
		„On“	Lights up	By pressing the button
		„On“	Blinks	Error / problem
377	 Floodlight on front of turntable	„Off“	Lights up	By pressing the button
		„On“	Lights up	By pressing the button
		„On“	Blinks	Error / problem
378	 Floodlight, winch	„Off“	Off	By pressing the button
		„On“	Lights up	By pressing the button
		„On“	Blinks	Error / problem
379	 Floodlight pivot section	„Off“	Off	By pressing the button
		„On“	Lights up	By pressing the button
		„On“	Blinks	Error / problem
380	 Camera illumination	„Off“	Off	By pressing the button
		„On“	Lights up	By pressing the button

copyright © Liebherr-Werk Ehingen GmbH 2018

Position	Button	Function	LED	Description
		„On“	Blinks	Error / problem
381	Airplane warning light		**Note:**	There are two different lighting types for the airplane warning light: Continuous light and flashing light 1. Airplane warning light **continuous light** on (LED turns on) 2. Airplane warning light **flashing light** on (LED flashes) 3. Airplane warning light off (LED off) Pressing the „airplane warning light“ button < 0.5 s , changes the light status: OFF ⇒ continuous light ⇒ flashing light ⇒ OFF
		„Off“	Off	Pressing the „airplane warning light“ button ≥ 1 s with continuous light Continuous light ⇒ OFF
382	Floodlight swing „boom“ up	„Off“	Off	By pressing the button
		„On“	Lights up	By pressing the button
		„On“	Blinks	Error / problem
383	Floodlight swing „boom“ down	„Off“	Off	By pressing the button
		„On“	Lights up	By pressing the button
		„On“	Blinks	Error / problem

3.2.4 Operating buttons on the BKE „385“

Note
▶ For this crane, there are no functions which require a release!

Note
▶ The „release button“ is active for 30 s. If an operating button is pressed during this time, the release time is reset to 30 s. The release stops after 30 s!
▶ A function is triggered by activation of the „release button“ and then pressing the corresponding operating button!
▶ For the listed button combinations, hold the corresponding operating button until the desired end position is reached!

LWE/LR 1600-2-001/18101-07-02/en

copyright © Liebherr-Werk Ehingen GmbH 2018

Position	Button	Function	LED	Description
385			**Note:**	For this crane, there are no functions which require a release. After actuating the „release button“, the functions, which require a release can be activated.
	Release button	„On“	Lights up	By pressing the button
		„Off“	Off	By pressing the button **or** as long as no button is pressed, which requires a release: Automatically after 30 s
385+386	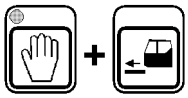		**Note:**	Key combination **not** assigned!
385+387	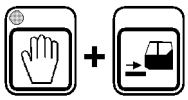		**Note:**	Key combination **not** assigned!

LWE/LR 1600-2-001/18101-07-02/en

copyright © Liebherr-Werk Ehingen GmbH 2018

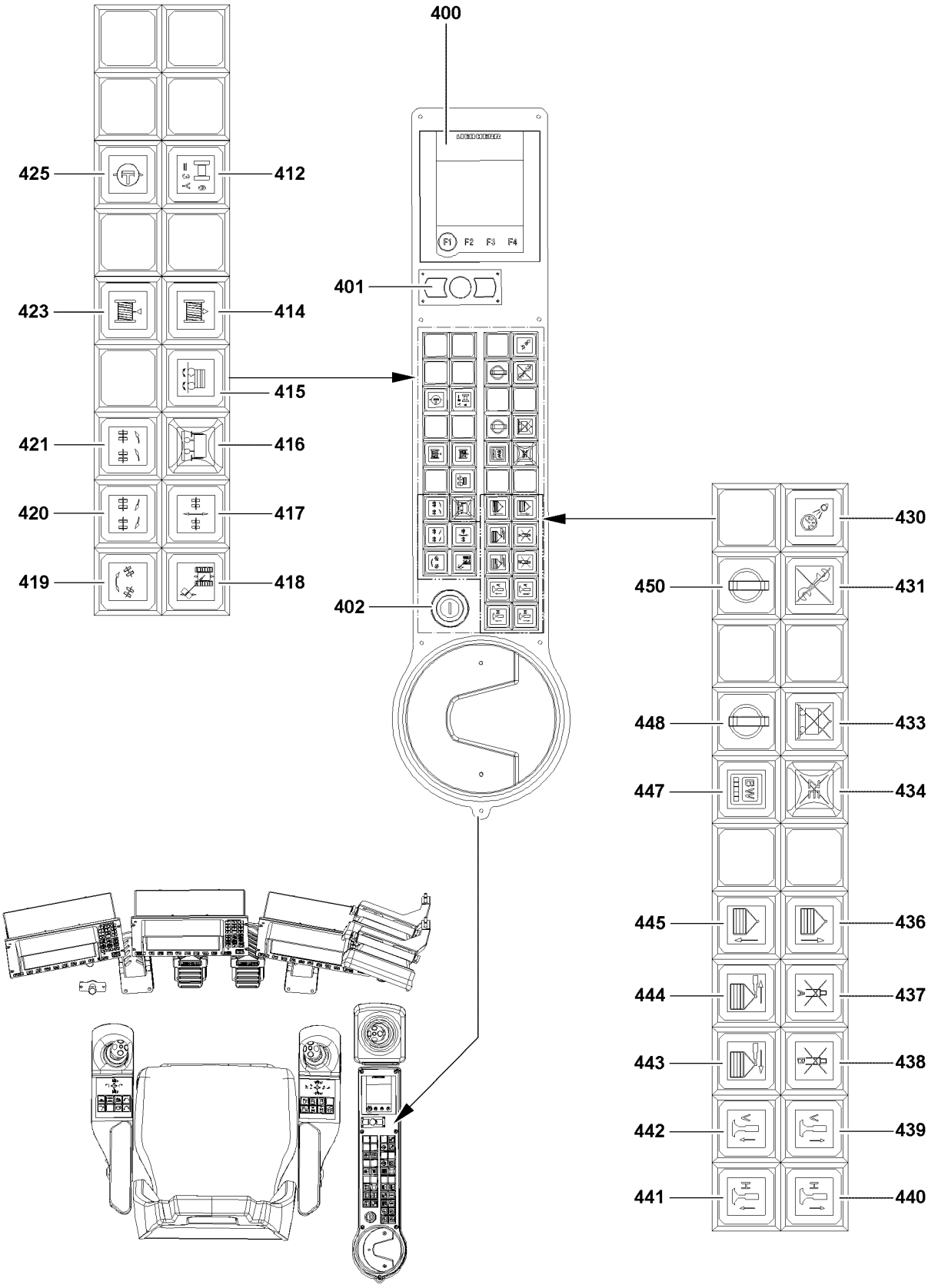

LWE/LR 1600-2-001/18101-07-02/en

Fig.113688

copyright © Liebherr-Werk Ehingen GmbH 2018

3.3 Instrument panel

400 Touch display
- Heater and air conditioning system

Note

▶ Refer to chapter 6.01 of the crane operating instructions for a detailed description of the heater / air conditioning and ventilation settings!

401 Micro module (Mouse)
- Operation LICCON job planner

402 Ignition switch
- Engine

412 Switch
- Assignment of winch 6 on master switch MS3y

414 Button
- Spooling the assembly winch up

415 Switch with indicator light*
- Ballast trailer drive

416 Warning light
- Ballast trailer support retracted

417 Button with indicator light
- Turn ballast trailer wheels into travel position (towing)

418 Button with indicator light
- Turn ballast trailer wheels into parallel driving position

419 Button with indicator light
- Turn ballast trailer wheels into turning position (circular travel)

420 Button with indicator light
- Steering, turn ballast trailer wheels to the right

421 Button with indicator light
- Steering, turn ballast trailer wheels to the left

423 Button
- Spool the assembly winch out

425 Switch with indicator light
- Pressure supply for auxiliary users

LWE/LR 1600-2-001/18101-07-02/en

copyright © Liebherr-Werk Ehingen GmbH 2018

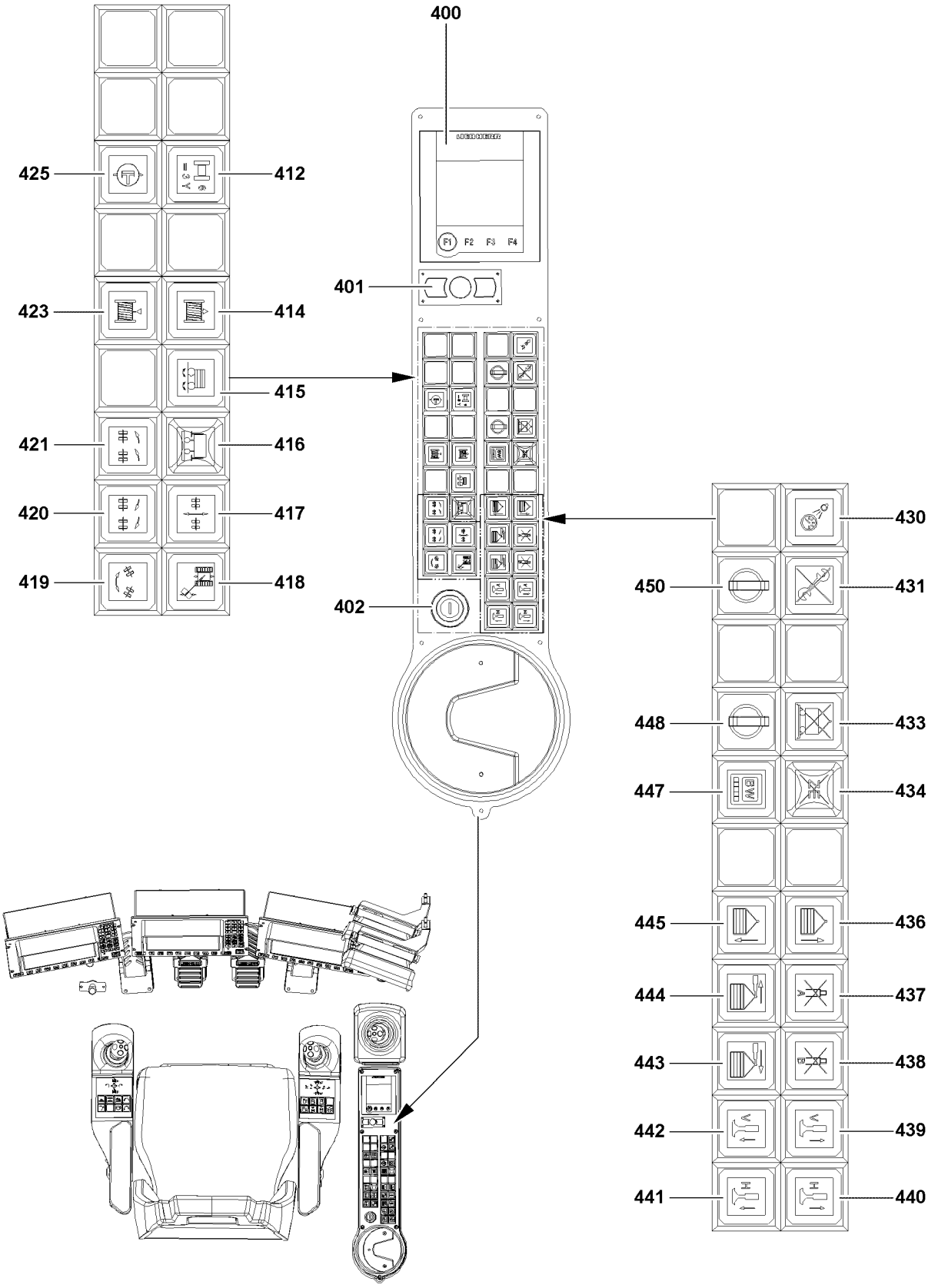

Fig.113688

LWE/LR 1600-2-001/18101-07-02/en

copyright © Liebherr-Werk Ehingen GmbH 2018

430 Switch with indicator light
- Instrument panel illumination, reading light

431 Button with indicator light
- Turn off self-retention of the key button **450**

433 Button with warning light
- Ballast trailer not lifted off.
  - Press the button **433** to turn off “Ballast trailer lifted off”. The warning light in the button turns off.

434 Warning light
- Control ballast trailer is not running or one of the turn sensors or length sensors is defective or missing.

436 Button
- Pull derrick ballast up

437 Button
- Stop cylinder (A) on the derrick ballast

438 Button
- Stop cylinder (B) on the derrick ballast

439 Button
- Support cylinder ballast trailer front up

440 Button
- Support cylinder ballast trailer rear up

441 Button
- Support cylinder ballast trailer rear down

442 Button
- Support cylinder ballast trailer front down

443 Button
- Telescope ballast trailer out

444 Button
- Telescope ballast trailer in

445 Button
- Lowering the derrick ballast

447 Switch with indicator light
- Switch monitor 1 to test system ballast trailer
  Note:
  Can only be switched over when the engine is off.

448 Key button
- Ballast trailer lifted off, see chapter 5.35 of the crane operating instructions.
  - Press momentarily to turn on “Ballast trailer lifted off”, self retention. The warning light in the button **433** blinks.

450 Assembly key button
- Press momentarily to preselect Operating mode Assembly, self retention
  DANGER
  The assembly key button **450 bypasses the safety equipment!**
  Observe the technical safety instructions, see chapter 5.01 of the crane operating instructions!
- **Note:**
  „Assembly turned on“ is shown by: Indicator light in button **431**, icon on monitor and three color light and warning light on rear of turntable.

LWE/LR 1600-2-001/18101-07-02/en

copyright © Liebherr-Werk Ehingen GmbH 2018

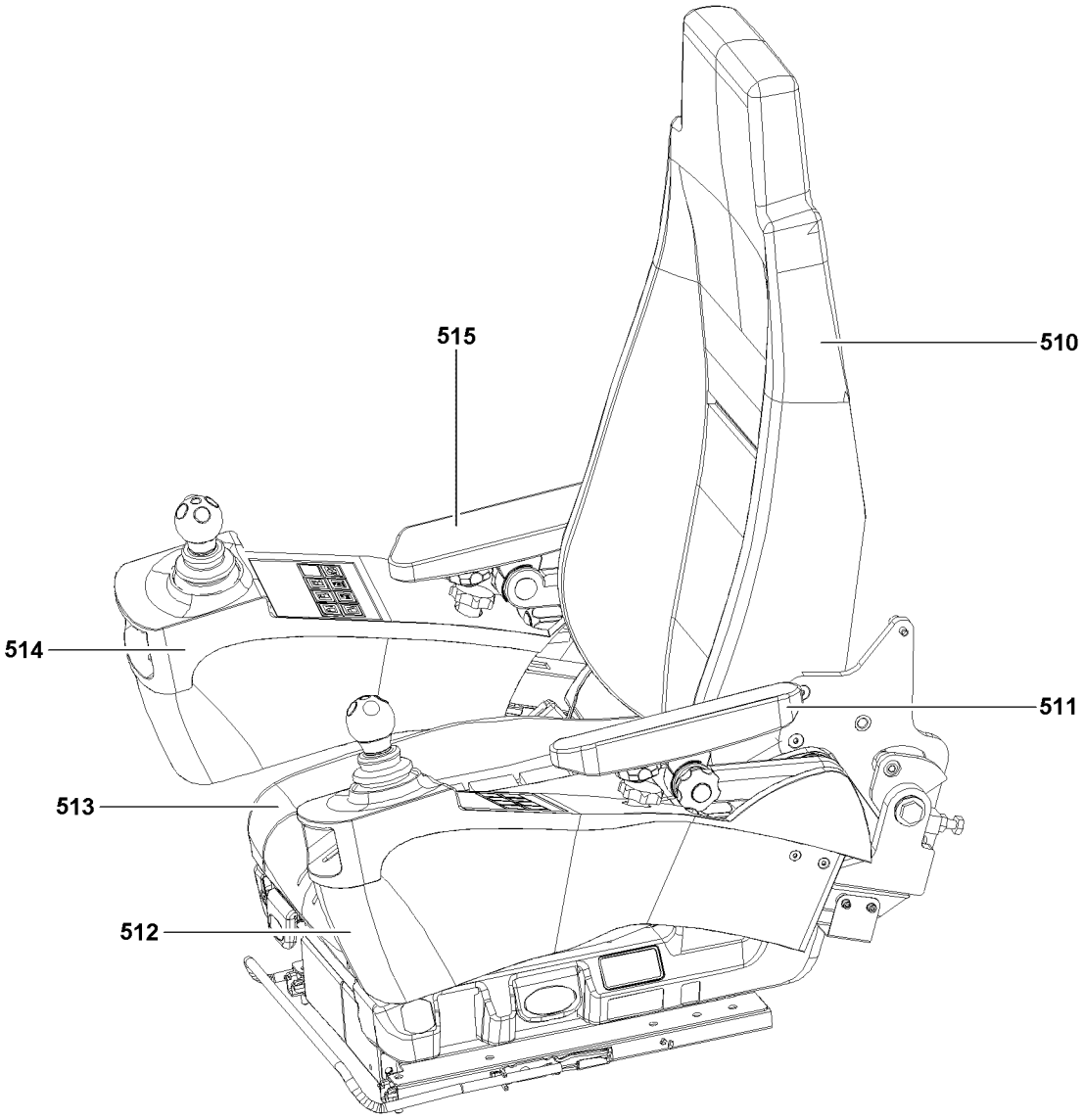

LWE/LR 1600-2-001/18101-07-02/en

Fig.104895

copyright © Liebherr-Werk Ehingen GmbH 2018

3.4 Operating elements on control platform

The control platform consists of the following elements:

510 Crane operator's seat
511 Left armrest
512 Control panel, left
513 Seat contact switch
514 Control panel, right
515 Right armrest

LWE/LR 1600-2-001/18101-07-02/en

copyright © Liebherr-Werk Ehingen GmbH 2018

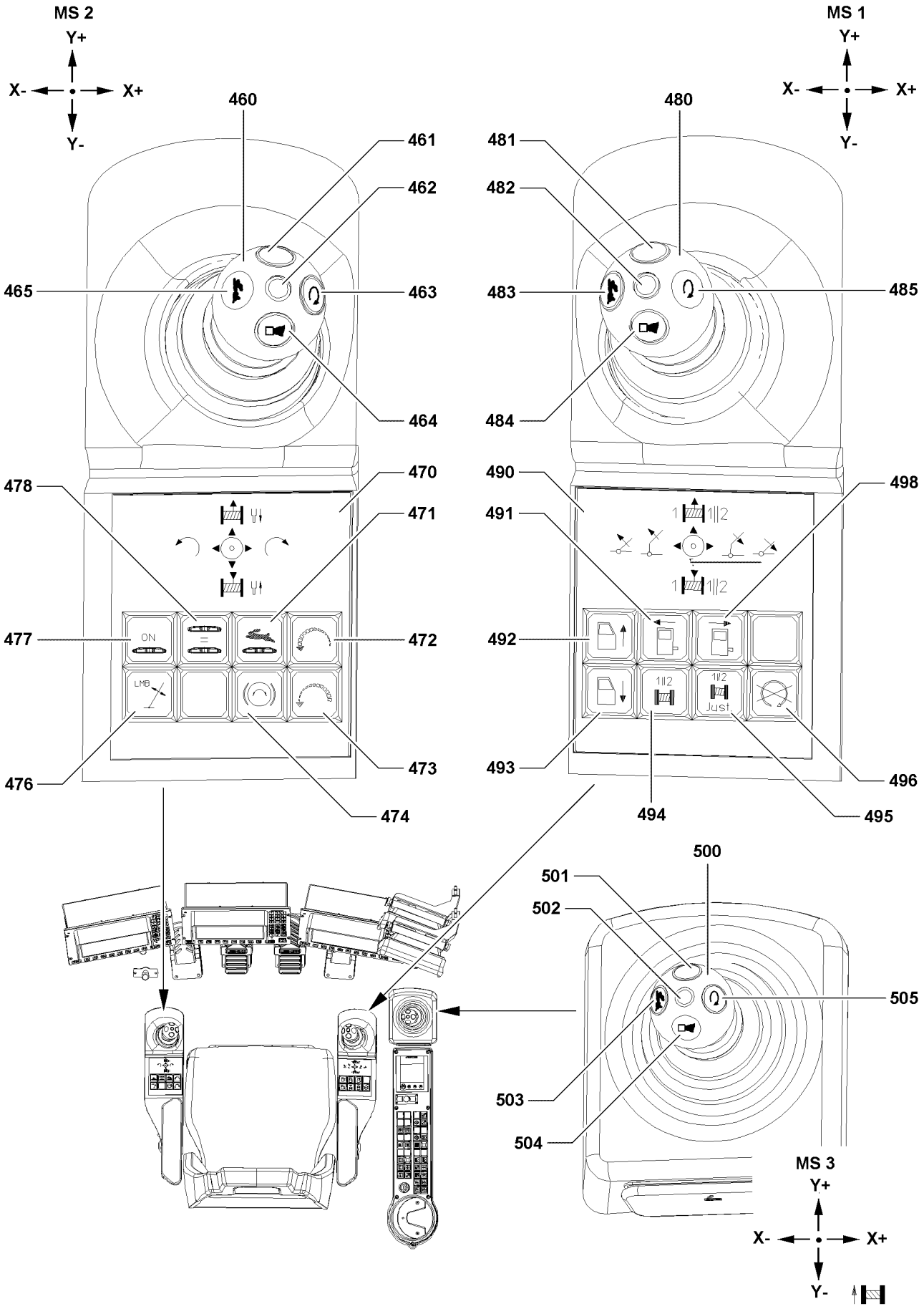

Fig.104894

LWE/LR 1600-2-001/18101-07-02/en

copyright © Liebherr-Werk Ehingen GmbH 2018

3.4.1 Operating elements on the control panels

Control panel, left

Master switch assignment MS 2:

460 Master switch - left (MS 2)
- **Note:**
  For assignment of master switch to operating modes, see chart, chapter 4.05.

461 Button
- Bypass of the seat contact switch **or** if the seat contact switch is actuated: Addition of the vibration sensor **462**.

462 Vibration sensor
- Turn sensor and winches

463 Button
- Engine rpm lock
  Note:
  By pressing the button **463** the engine rpm is locked in the current state.

464 Button
- Horn

465 Button
- Power Plus addition, crane operation

Instruments Control panel:

470 Instruments Control panel

471 Switch with indicator light
- Crawler rapid gear On / Off

472 Button
- Increase engine rpm

473 Button
- Decrease engine rpm

474 Switch with indicator light
- Turn slewing gear brake slewing gear off / on
  Note:
  Indicator light lights up when the slewing gear brake is „on“.

476 Button
- Bypassing of overload protection, used to luff up at overload
  DANGER
  The bypass may only be used if the overload was caused by luffing down at freely suspended load and the crane operator is absolutely certain that luffing up the load will take it out of the overload range.

477 Switch with indicator light
- Crawler operation On / Off

478 Switch with indicator light
- Crawler parallel driving On / Off

LWE/LR 1600-2-001/18101-07-02/en

copyright © Liebherr-Werk Ehingen GmbH 2018

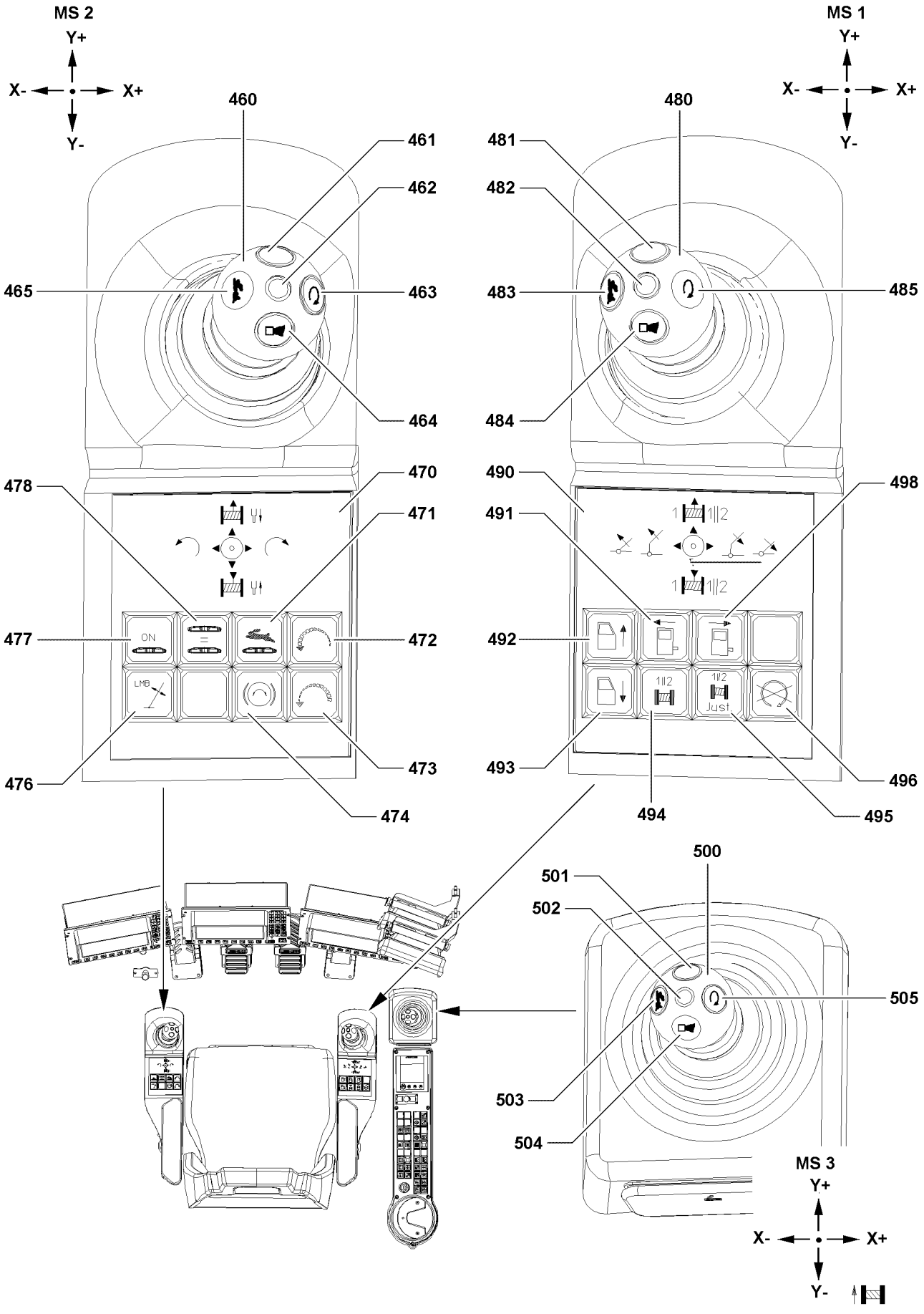

Fig.104894

LWE/LR 1600-2-001/18101-07-02/en

copyright © Liebherr-Werk Ehingen GmbH 2018

Control panel, right

Master switch assignment MS 1:

480 Master switch - right (MS 1)

481 Button
- Bypass of the seat contact switch **or** if the seat contact switch is actuated: Addition of the vibration sensor **482**.

482 Vibration sensor
- Turn sensor and winches

483 Button
- Power Plus addition, crane operation

484 Button
- Horn

485 Button
- Engine rpm lock
  Note:
  By pressing the button **485** the engine rpm is locked in the current state.

Instruments Control panel

490 Instruments Control panel

491 Button
- Swing the cab into working position

492 Button
- Tilt the cab upward

493 Button
- Tilt the cab downward

494 Switch with indicator light
- Parallel operation Winch 1II2

495 Button
- Adjust parallel control winch 1II2
  Note:
  Adjust only with parallel hook blocks, parallel control Winch 1II2.

496 Button
- Engine stop

498 Button
- Swing the cab into transport position

LWE/LR 1600-2-001/18101-07-02/en

copyright © Liebherr-Werk Ehingen GmbH 2018

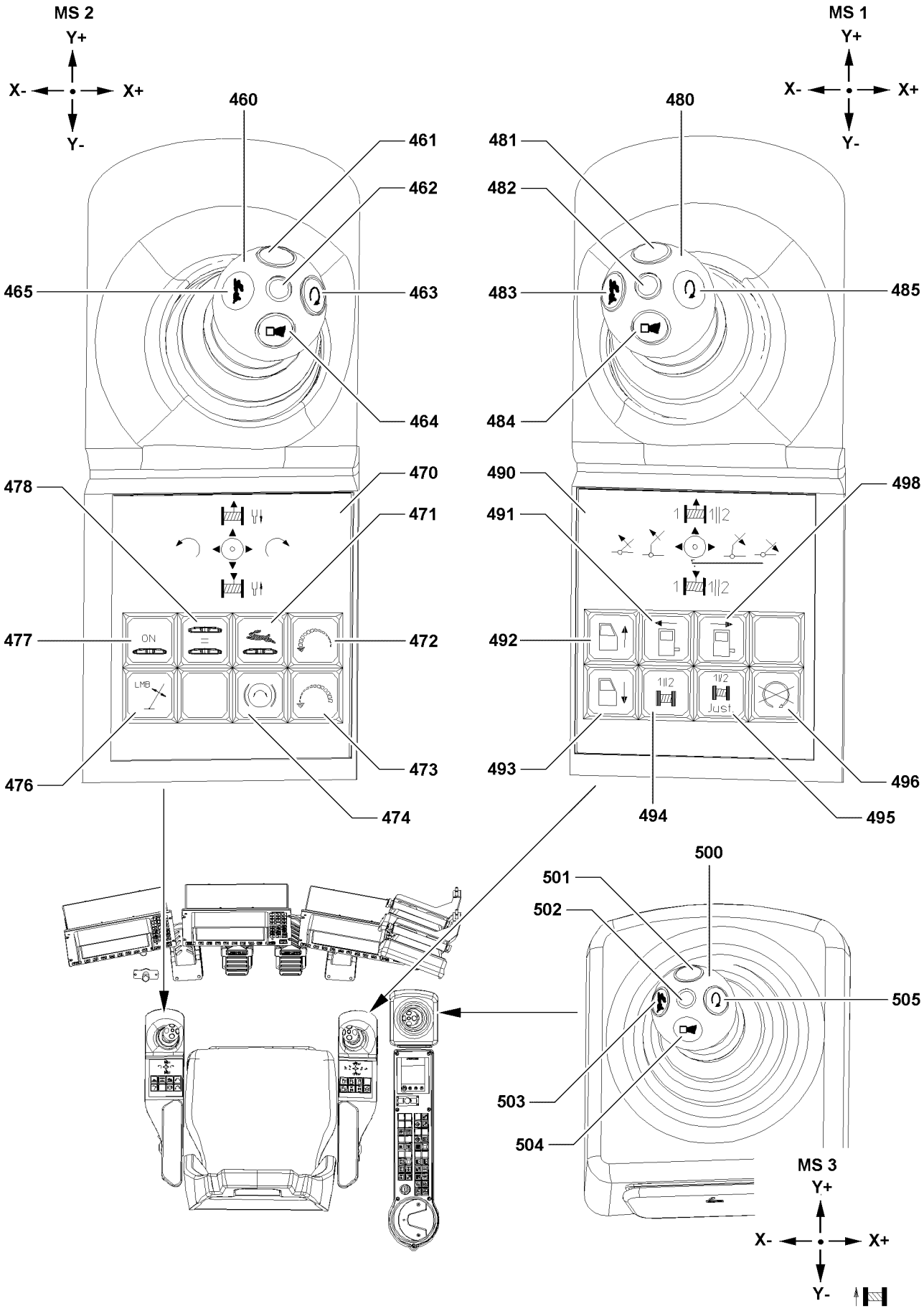

Fig.104894

LWE/LR 1600-2-001/18101-07-02/en

copyright © Liebherr-Werk Ehingen GmbH 2018

3.4.2 Operating elements Master switch (MS) 3

500 Master switch (MS 3)

501 Button
- Bypass of the seat contact switch **or** if the seat contact switch is actuated: Addition of the vibration sensor **502**.

502 Vibration sensor
- Turn sensor and winches

503 Button
- Power Plus addition, crane operation

504 Button
- Horn

505 Button
- Engine rpm lock
  Note:
  By pressing the button **505** the engine rpm is locked in the current state.

3.4.3 Operating elements crane operator's seat

Note

▶ For detailed description of operating elements to adjust the crane operator's seat, see chapter 4.03 of the crane operating instructions!

LWE/LR 1600-2-001/18101-07-02/en

copyright © Liebherr-Werk Ehingen GmbH 2018

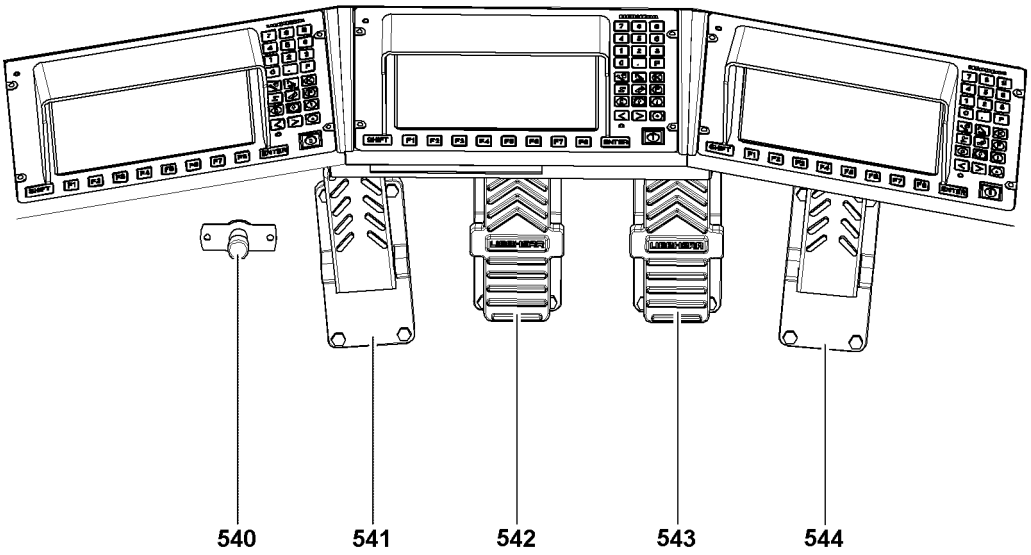

LWE/LR 1600-2-001/18101-07-02/en

Fig.104896

copyright © Liebherr-Werk Ehingen GmbH 2018

3.5 Pedal carrier

540 Foot button
- Freewheeling slewing gear

541 Pedal
- Slewing gear brake

542 Foot rocker (MS4)
- Drive the crawler forward or backward on the left hand side

543 Foot rocker (MS5)
- Drive the crawler forward or backward on the right hand side

544 Pedal
- Engine regulation

LWE/LR 1600-2-001/18101-07-02/en

copyright © Liebherr-Werk Ehingen GmbH 2018

Empty page!

LWE/LR 1600-2-001/18101-07-02/en

copyright © Liebherr-Werk Ehingen GmbH 2018

4.02 LICCON computer system

1	General	3
2	LICCON computer system boot up	7
3	Operating mode preselection on the LICCON computer system	7
4	Operating elements of the LICCON computer system on monitor 0	11
5	The set up program	15
6	The winch - pulley head assignment screen	39
7	The Crane operation program on monitor 0	59
8	Operating elements of the LICCON computer system on monitor 1	129
9	The Crane operation program on monitor 1	131
10	The Control parameter program	175
11	The Support program	183
12	The Working range limitation program*	197
13	The Engine monitoring program	201
14	LICCON computer system in stand-by mode	209

LWE/LR 1600-2-001/18101-07-02/en

copyright © Liebherr-Werk Ehingen GmbH 2018

LWE/LR 1600-2-001/18101-07-02/en

Fig.199898

copyright © Liebherr-Werk Ehingen GmbH 2018

1 General

Note

- ▶ The monitor illustrations in this chapter are only examples!
- ▶ The numerical values in the individual icons and charts do not have to necessarily match the crane exactly!
- ▶ Numbers and letters can be replaced by place holders!
- ▶ In addition, many of the illustrations show the maximum configuration of the LICCON monitor with icons!
- ▶ In normal crane operation, an identical display will **not** appear on the LICCON monitor!

The LICCON computer system is a computer system for controlling and monitoring mobile and crawler cranes. In addition to the LICCON overload protection (Load moment limitation = **LMB**) there are a number of application programs that can be used for controlling and monitoring the crane movements.

Currently the LICCON computer system includes the following application programs:

- Set up program
- Crane operation program
  - Crane operation program on monitor 0
  - Crane operation program on monitor 1
- Control parameter program
- Support program (only narrow track crawler track)
- Working range limitation program*
- Engine monitoring program
- LICCON computer system in stand-by mode

The electrical and electronic components are linked via data bus transmission technology (Liebherr System Bus = LSB).

LWE/LR 1600-2-001/18101-07-02/en

copyright © Liebherr-Werk Ehingen GmbH 2018

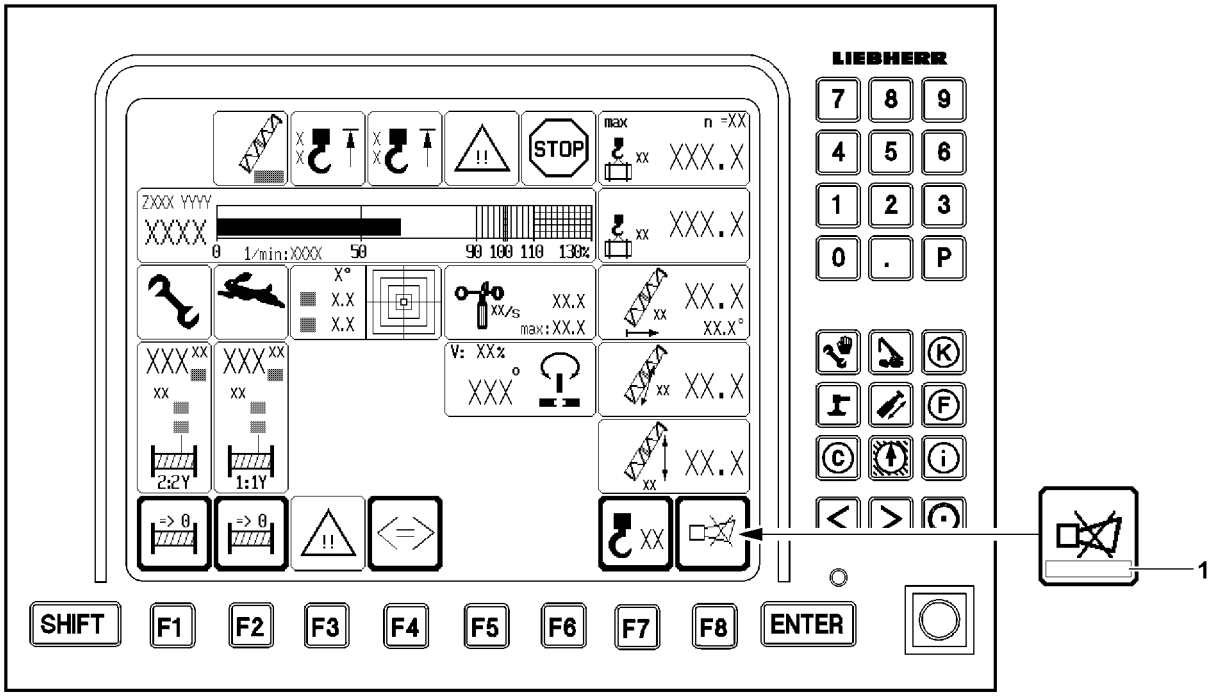

LWE/LR 1600-2-001/18101-07-02/en

Fig.112991

copyright © Liebherr-Werk Ehingen GmbH 2018

1.1 LICCON Overload protection (LMB)

The LICCON overload protection is implemented in microprocessor CPU 0 of base assembly 0. The LICCON computer system works on the principle of comparing the current / actual load with the „maximum permissible load according to the load chart and reeving“.

1.1.1 Actual load

The current load is determined by recording variable values.

The **load on the crane** results from the load momentum and the boom momentum together. It exerts a force in the boom guying, which is measured by force test sensors.

The **boom momentum** is calculated from angle sensor information (boom angle) and the crane data (boom weights) for the set operating mode.

The **radius** is calculated with data from the angle sensors (boom angle) and the geometric data for the set operating mode. This also takes into account the boom flexation due to its own weight and the weight of the load.

The actual load is calculated from the total load, the boom momentum and the boom radius.

1.1.2 Maximum load according to load chart and reeving

Crane data such as load charts, boom weights and geometry data are stored in the central data memory of the LICCON computer system.

The „maximum load according to the load chart and reeving“ is constantly determined for the set crane configuration, for the set reeving and for the calculated radius, based on the load charts.

1.1.3 Comparison

The actual load and the „maximum load according to the loading chart and reeving“ are compared. When they approach the specified limit, an advance warning is issued. If the specified limit is exceeded, a LMB STOP is triggered by the LICCON overload protection due to overload. When a LMB STOP is triggered, load moment increasing crane movements are shut off.

1.2 Error messages

The LICCON computer system monitors the crane permanently for operating / system errors.

If errors occur, error messages **1** are issued. Error messages appear in the horn icon of LICCON monitor 0.

Note

- ▶ Always pay attention to error messages **1**!
- ▶ For procedure in case of error messages, see Diagnostics manual and the respective chapter in the Crane operating instructions!

LWE/LR 1600-2-001/18101-07-02/en

copyright © Liebherr-Werk Ehingen GmbH 2018

1

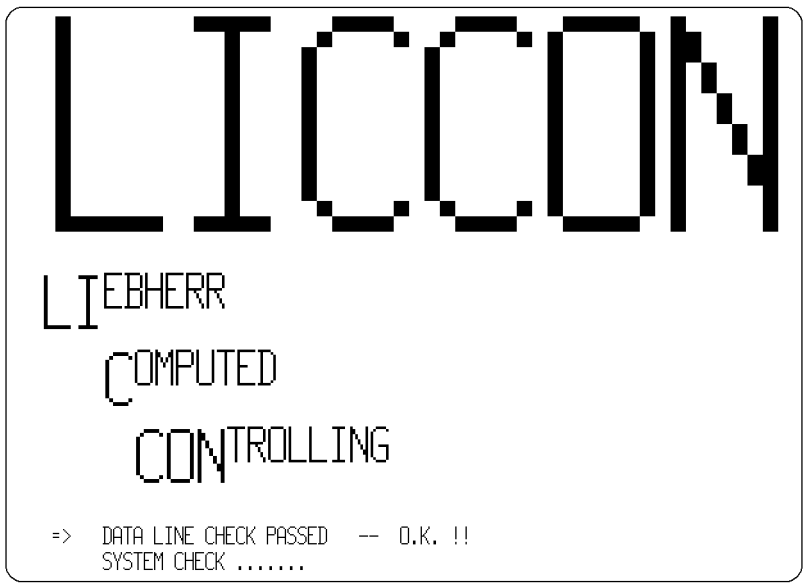

2

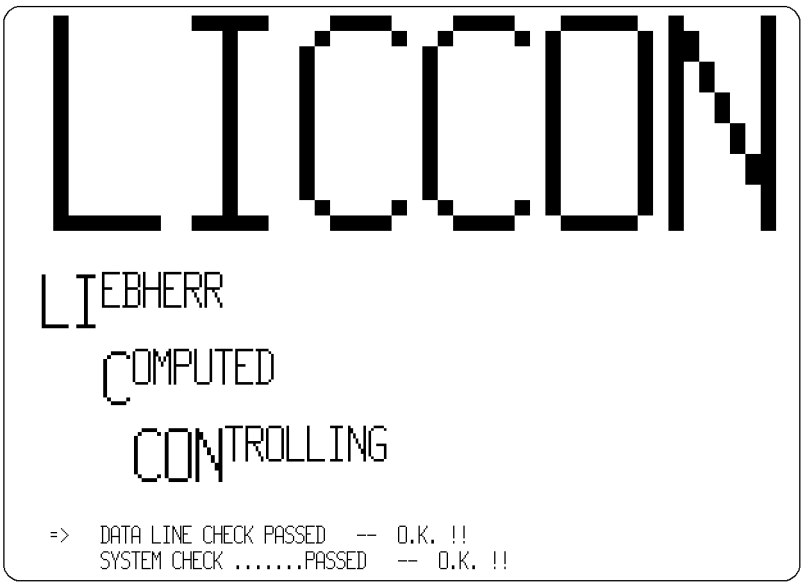

3

Fig.199899

LWE/LR 1600-2-001/18101-07-02/en

copyright © Liebherr-Werk Ehingen GmbH 2018

2 LICCON computer system boot up

There are two operating modes for the LICCON computer system:
- LICCON computer system in normal mode (crane engine turned on).
- LICCON computer system in stand-by mode (crane engine turned off).

Starting in normal mode:
- Boot up of LICCON computer system in connection with a started crane engine.

Starting in stand-by mode:
- See Section „LICCON computer system in stand-by mode“.

After it is turned on, the LICCON computer system performs a self test.

First the connections from the microprocessor CPU (ZE 0) to the monitor are checked. If no error was found during the test, then the monitor shows the message „O.K. !!“, see illustration **1**.

If the test finds no connection problems, there is a system test of all the microprocessor CPUs (CPU). The incremental sequence of the self test can be monitored on the 7 segment displays of the CPUs. If no error was found during the system test, then the monitor shows the message „O.K. !!“, see illustration **2**.

Shortly after that, this general initialisation screen appears on the monitor, see illustration **3**.

Note
Errors during LICCON computer system boot up!
If an error is found while the LICCON computer system boots up, then the boot up procedure is interrupted!
▶ For procedure if an error occurs while the LICCON computer system boots up, see Diagnostics manual!

3 Operating mode preselection on the LICCON computer system

WARNING
Danger of accident due to deviating set up configuration!
If the equipment set up configuration and the operating mode of the crane set on the LICCON computer system **does not** match, then the crane can be overloaded unnoticed and topple over!
Personnel can be severely injured or killed!
▶ In the operating mode preselection, only the operating mode may be selected which actually corresponds to the equipment set up configuration of the crane!

When the starting procedure is completed successfully after a successful self test of the LICCON computer system, the following appears on:

- **LICCON Monitor 0** for approx. 3 seconds the operating mode preselection screen.
- **LICCON Monitor 1** the title screen with the words: **„LIEBHERR-WERK EHINGEN“**

LWE/LR 1600-2-001/18101-07-02/en

copyright © Liebherr-Werk Ehingen GmbH 2018

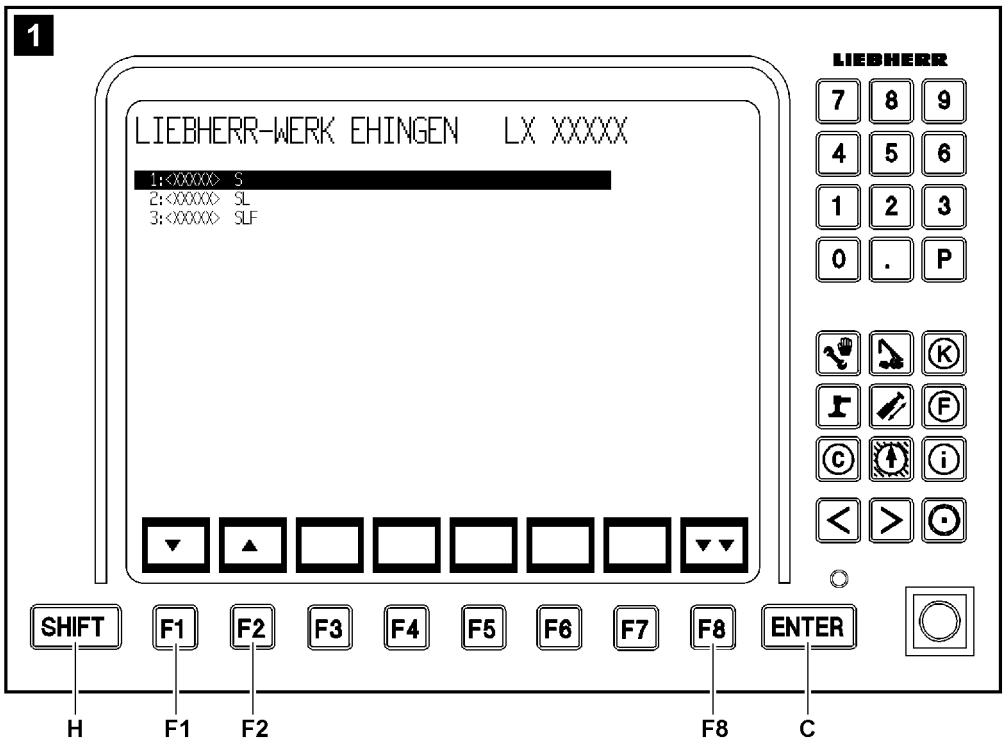

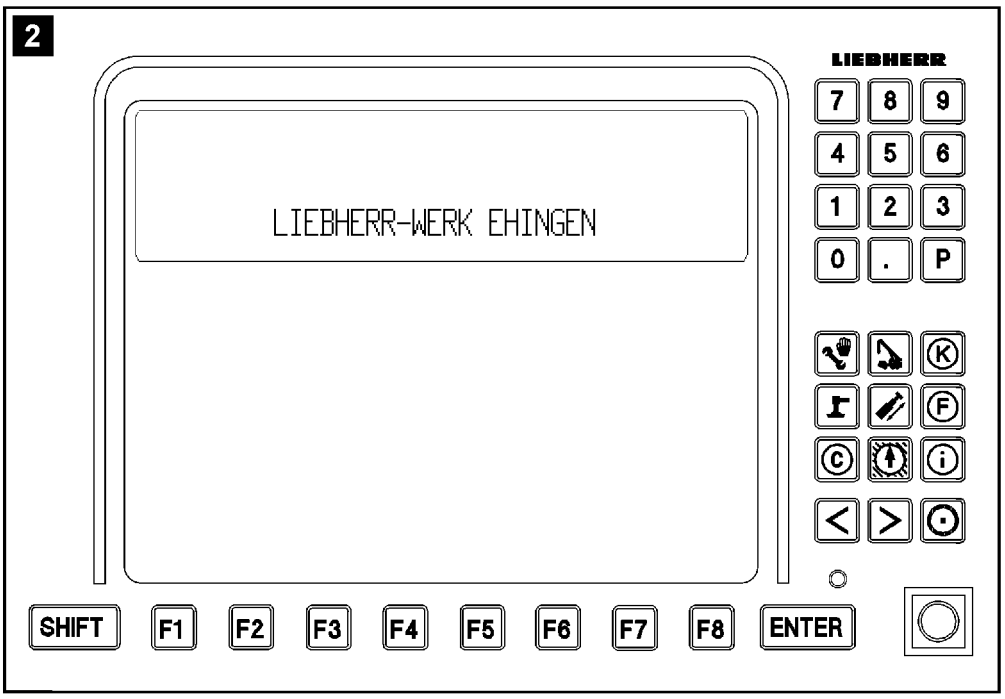

LWE/LR 1600-2-001/18101-07-02/en

Fig.112992

copyright © Liebherr-Werk Ehingen GmbH 2018

3.1 LICCON Monitor 0

After successful starting procedure, the operating mode preselection screen appears on the **LICCON monitor 0** for approximately three seconds, see illustration **1**.

Note

- ▶ The operating mode preselection screen is skipped if the crane only has one level! For example: The crane has only one S-boom (only S-operation possible)! In this case, the system changes directly into the set up screen for the only possible level!
- ▶ If the memory loses its data (for example as a result of a cold start) the previous operating mode is „rejected“ and the first operating mode in the operating mode selection menu is activated! In this case, the corresponding set up screen appears!

The function key **F1** or the function key **F2** is pressed within three seconds when the operating mode preselection screen appears.

Result:

– The operating mode preselection screen is retained until the settings are confirmed by pressing the function key **F8** or the ENTER key **C**.

Note

- ▶ If neither the function key **F1** nor the function key **F2** are pressed within three seconds, then the last active operating mode remains set. The corresponding set up screen appears automatically!

To select the required operating mode group for crane operation, press the function key **F1** (cursor down) or function key **F2** (cursor up).

Note

- ▶ The selected operating mode group is highlighted in black in the operating mode preselection screen on the monitor!

Press the function key **F8** or the ENTER key **C**.

Result:

– The set operating mode group is taken over into the LICCON computer system and the set up program appears with the corresponding set up screen.

3.2 LICCON Monitor 1

After successful starting procedure, the title screen with the words appears on the **LICCON monitor 1**: **„LIEBHERR-WERK EHINGEN“**, see illustration **2**.

Note

- ▶ Depending on the set up configuration of the crane, it is possible that a note for an operating mode appears!

LWE/LR 1600-2-001/18101-07-02/en

copyright © Liebherr-Werk Ehingen GmbH 2018

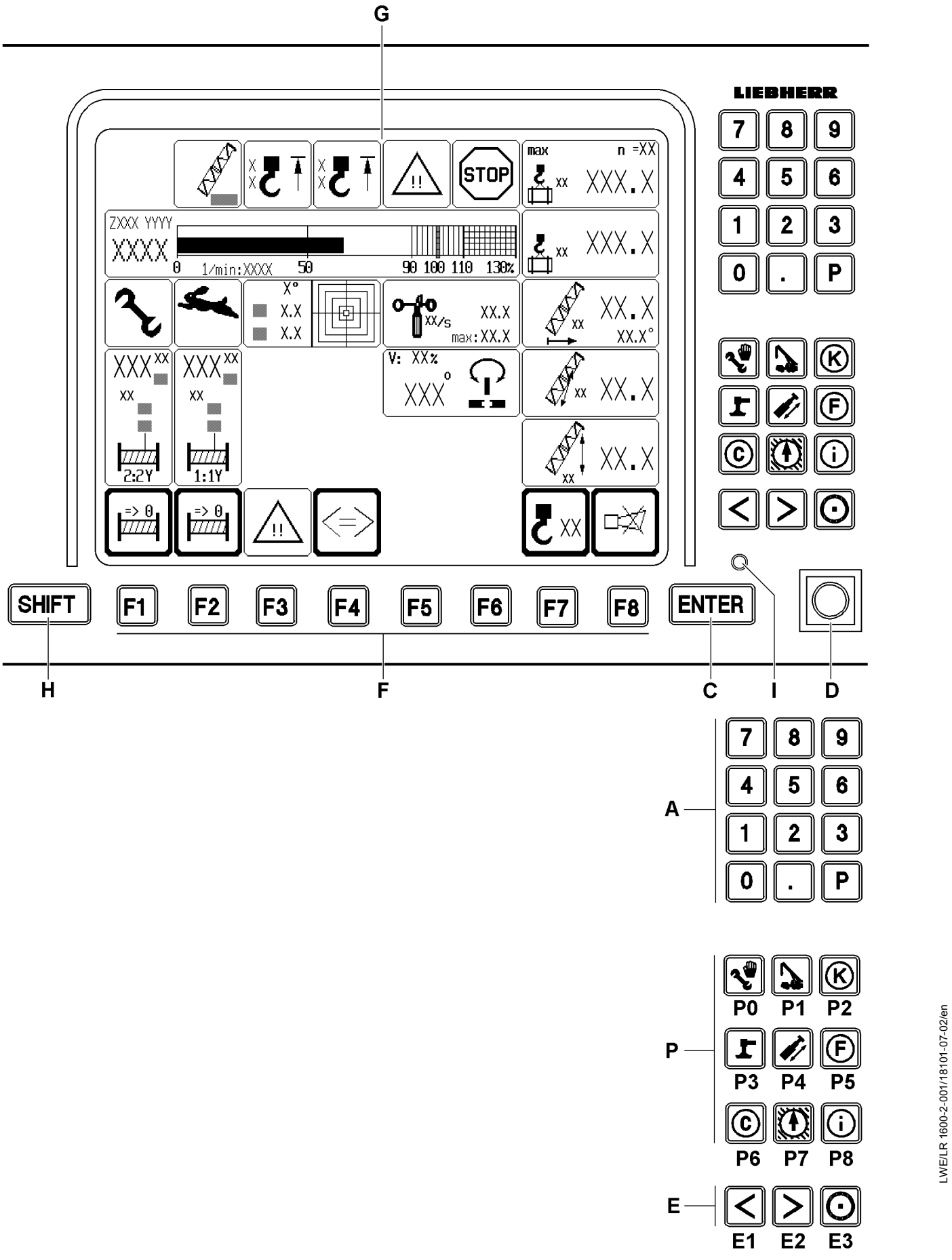

Fig.112357

LWE/LR 1600-2-001/18101-07-02/en

copyright © Liebherr-Werk Ehingen GmbH 2018

4 Operating elements of the LICCON computer system on monitor 0

The functions of the individual monitor operating elements are program-dependent and can differ, depending on the LICCON program which is currently running. This will be described in more detail in the description of the individual LICCON programs.

A Keypad

P Program keys
- Selection of the individual LICCON programs

P0 Set up
- SHIFT **H** and program key **P0**: Engine monitoring

P1 Crane operation

P2 Crane acceptance
- Correction coefficients (program blocked - for LIEBHERR service personnel only)

P3 Crane support
- Only narrow track crawler track!

P4 —
- Program key not assigned!

P5 Winch - pulley head assignment
- Selecting a pulley head and assigning it to winches
- Enter a hook block weight, if necessary

P6 Control parameter

P7 Working range limitation*****

P8 Test system
- **Note:**
  Description Test system, see Diagnostics manual!

C Input key ENTER
- Confirmation of changes

D Bypass key button
- Zero position (not actuated):
  Normal operation.
- Touching:
  Hoist limit switch and / or LICCON overload protection bypassed

LWE/LR 1600-2-001/18101-07-02/en

copyright © Liebherr-Werk Ehingen GmbH 2018

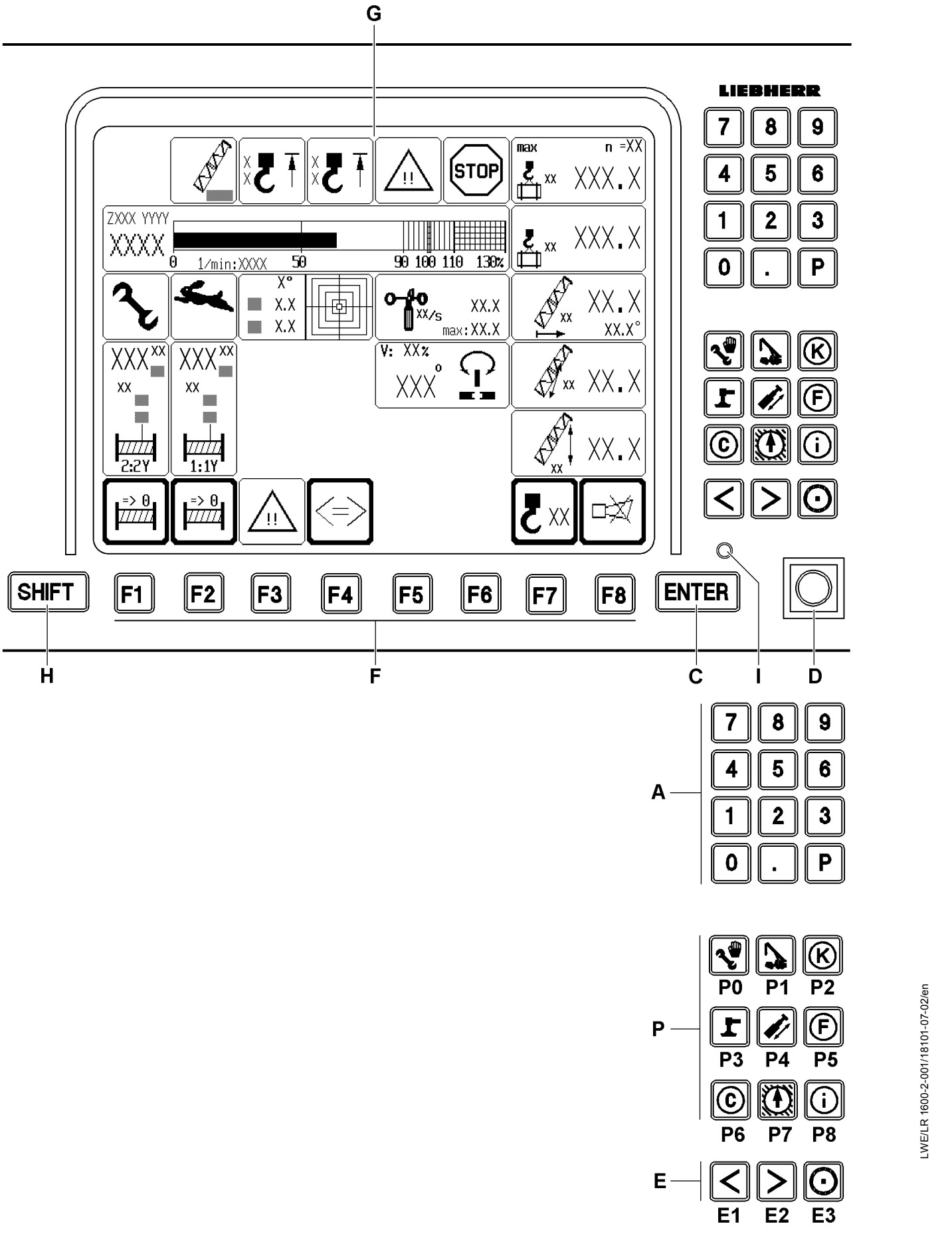

Fig.112357

LWE/LR 1600-2-001/18101-07-02/en

copyright © Liebherr-Werk Ehingen GmbH 2018

E Special function keys
- Monitor brightness adjustment
- Key combination **E3** and **E1**: Turn background illumination on / off.
- Key combination **E3** and **E2**: Brightness adjustment in three stages.
- **Note:**
  Additional functions of the special function keys are program-dependent and are further explained in the description of the individual LICCON programs!

F Function keys
- The function keys should always be viewed in conjunction with the function key icon line displayed on the monitor

G Display
- Display of the individual programs (example: Crane operation program)

H SHIFT key
- Change over key
- Second-level key assignments, for example „Supervisory function“

I LED display
- Monitor supply voltage present

LWE/LR 1600-2-001/18101-07-02/en

copyright © Liebherr-Werk Ehingen GmbH 2018

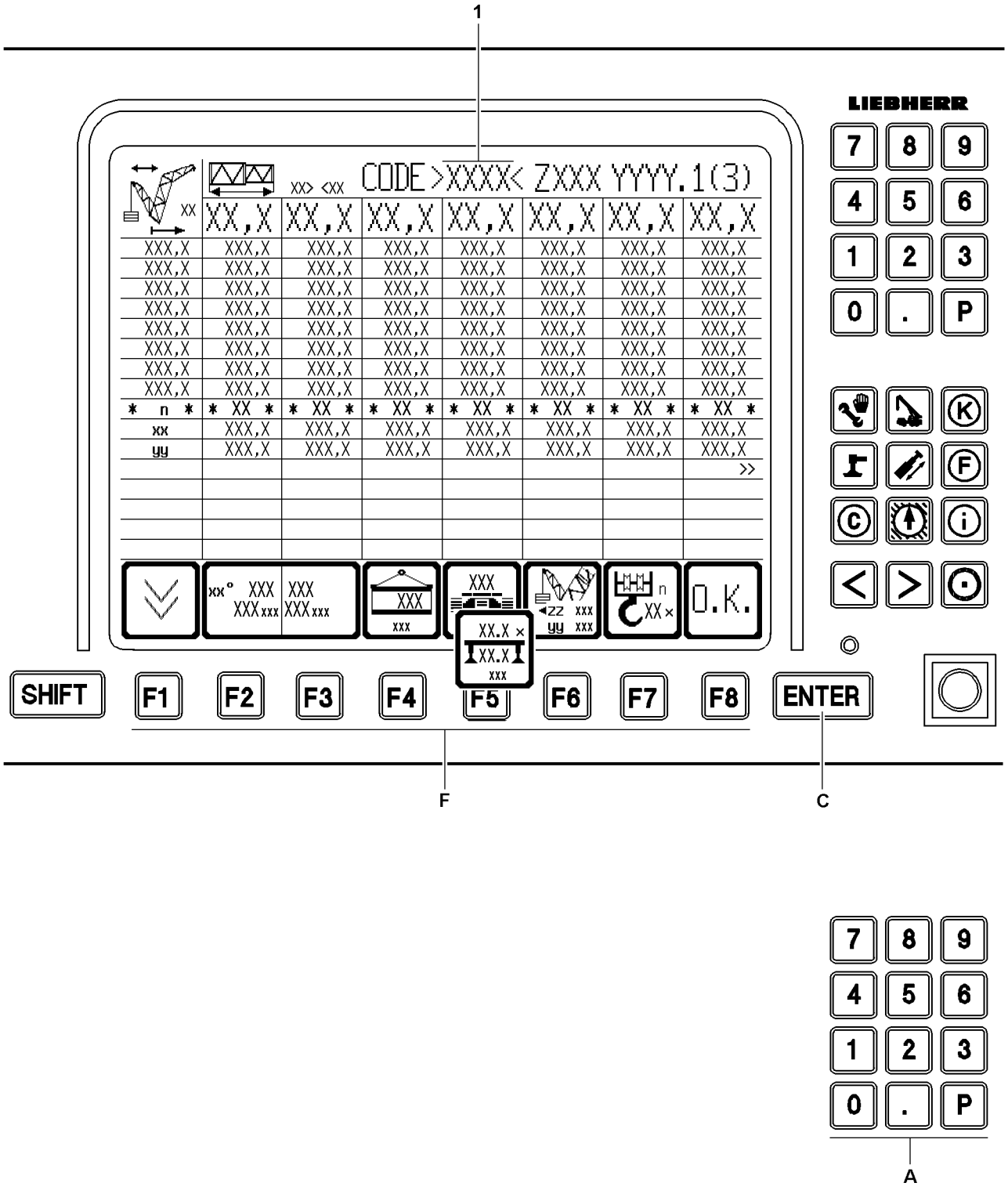

LWE/LR 1600-2-001/18101-07-02/en

Fig.112996

copyright © Liebherr-Werk Ehingen GmbH 2018

5 The set up program

After the LICCON computer system boots up correctly, it changes automatically into the set up program.

Note

▶ All entries and settings, which are to be made by the crane operator in the set up program can only be carried out on **LICCON monitor 0**!

Note

Adjustment and display of set up configuration and reeving!

▶ Normally, the most recently run set up configuration and the reeving used at that time will be automatically set and displayed!

▶ If the computer system is started for the first time after set up of the crane, then the first valid set up configuration appears in the set up screen (first valid operating mode and reeving number „0“)!

▶ After a new start of the computer system, due to a „cold start“ (for example: battery or CPU change), the first valid configuration appears in the set up screen (first valid operating mode and reeving number „0“)!

In the Set up program, the crane operator can set the current operating mode, the current set up configuration of the crane and the reeving number of the hoist rope.

In addition, in the set up program he can also see all the load charts programmed into the LICCON computer system.

5.1 Setting the operating mode and set up configuration

The crane operator can select the operating mode and the set up configuration with the function keys **F** or by entering a 4-digit short code **1**.

5.1.1 Setting the operating mode and set up configuration via the function keys

The function keys **F** are explained in the section „Function key line“ in this chapter.

▶ Select the respective function keys **F**.

▶ Press the ENTER key **C** to confirm and accept the settings.

Result:

– The data of the selected load chart can be viewed.

5.1.2 Setting the operating mode and set up configuration via the 4-digit short code

▶ Enter a 4-digit short code **1** with the keypad **A** on the **LICCON monitor 0**.

▶ Press the ENTER key **C** to confirm and accept the settings.

Result:

– The data of the selected load chart can be viewed.

LWE/LR 1600-2-001/18101-07-02/en

copyright © Liebherr-Werk Ehingen GmbH 2018

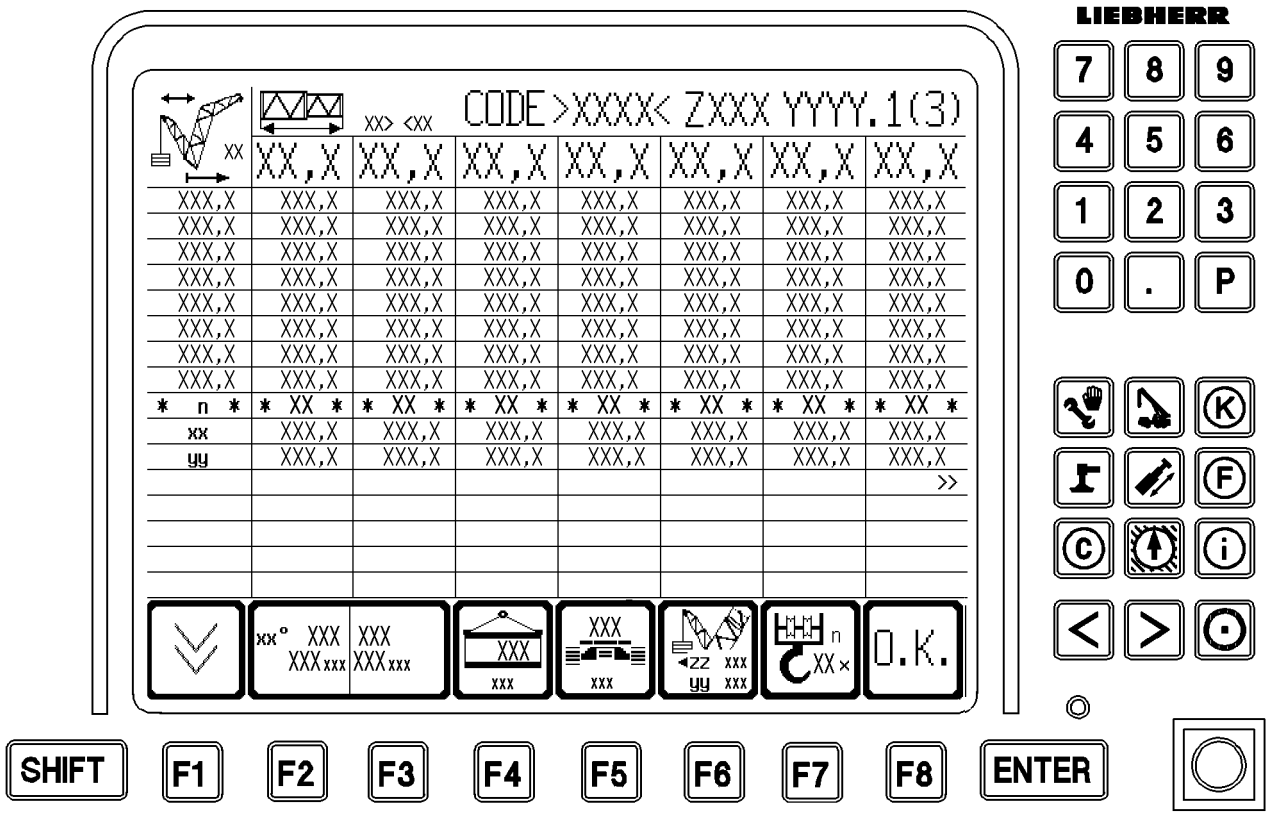

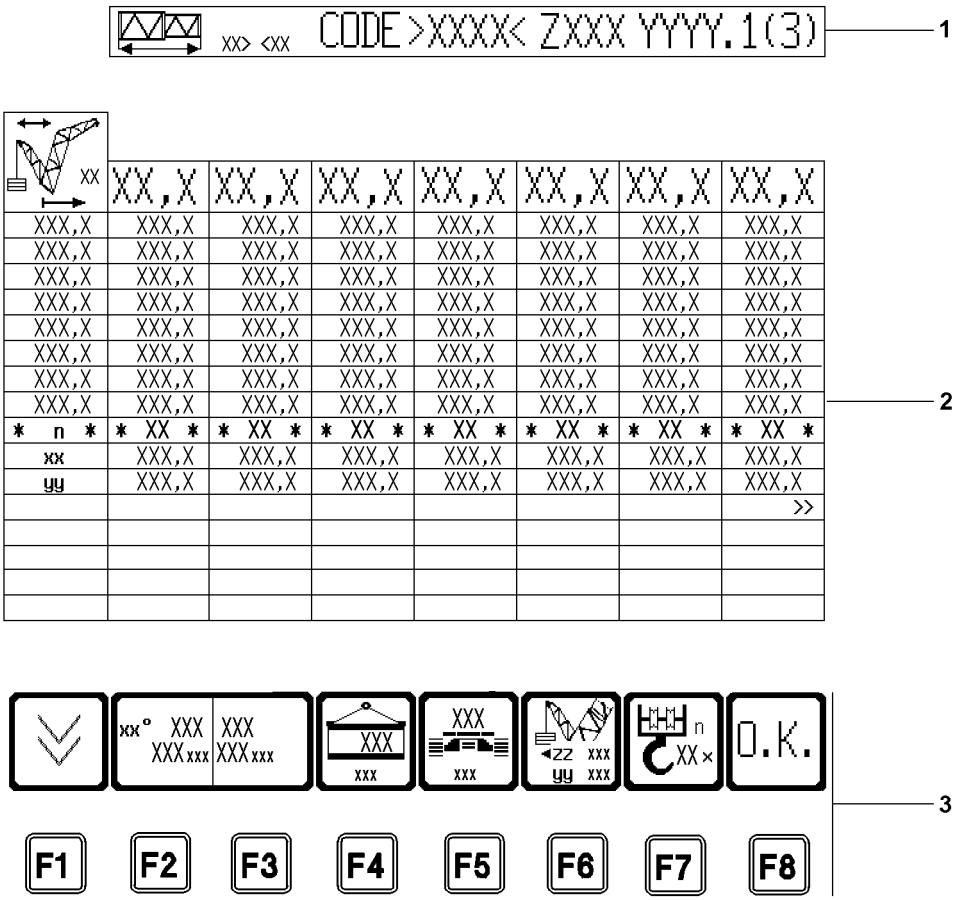

Fig.113279

LWE/LR 1600-2-001/18101-07-02/en

copyright © Liebherr-Werk Ehingen GmbH 2018

5.2 Set up program areas

Note
- ▶ The monitor illustrations in this chapter are only examples!
- ▶ The numerical values in the individual icons and charts do not have to necessarily match the crane exactly!
- ▶ Numbers and letters can be replaced by place holders!
- ▶ The programmed load charts for the crane are binding!

The monitor is divided into three areas in the Set up program:

1 General information line

2 Display area of load chart values

3 Function key line with assigned icons

5.2.1 General information line

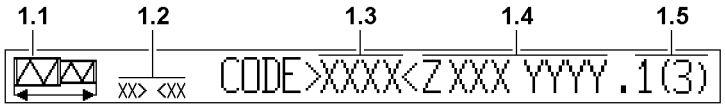

Fig.111920

1.1 Main boom length icon
- The icon is identical for all operating modes.

1.2 Measuring unit
- For the programmed length units (LE) and weight units (GE)

1.3 4-digit short code
- It is located next to the text „CODE“ inside angled brackets
- Each short code uniquely identifies a crane configuration. The valid set up configuration and their associated short code numbers for the crane can be found in the load chart manual of the crane.

1.4 Organization number
- For internal Liebherr load chart administration

1.5 Page number
- Relates to the currently displayed part of the load chart
- Separated from the organization number with „.“
- The total number of pages in this load chart is in parentheses

LWE/LR 1600-2-001/18101-07-02/en

copyright © Liebherr-Werk Ehingen GmbH 2018

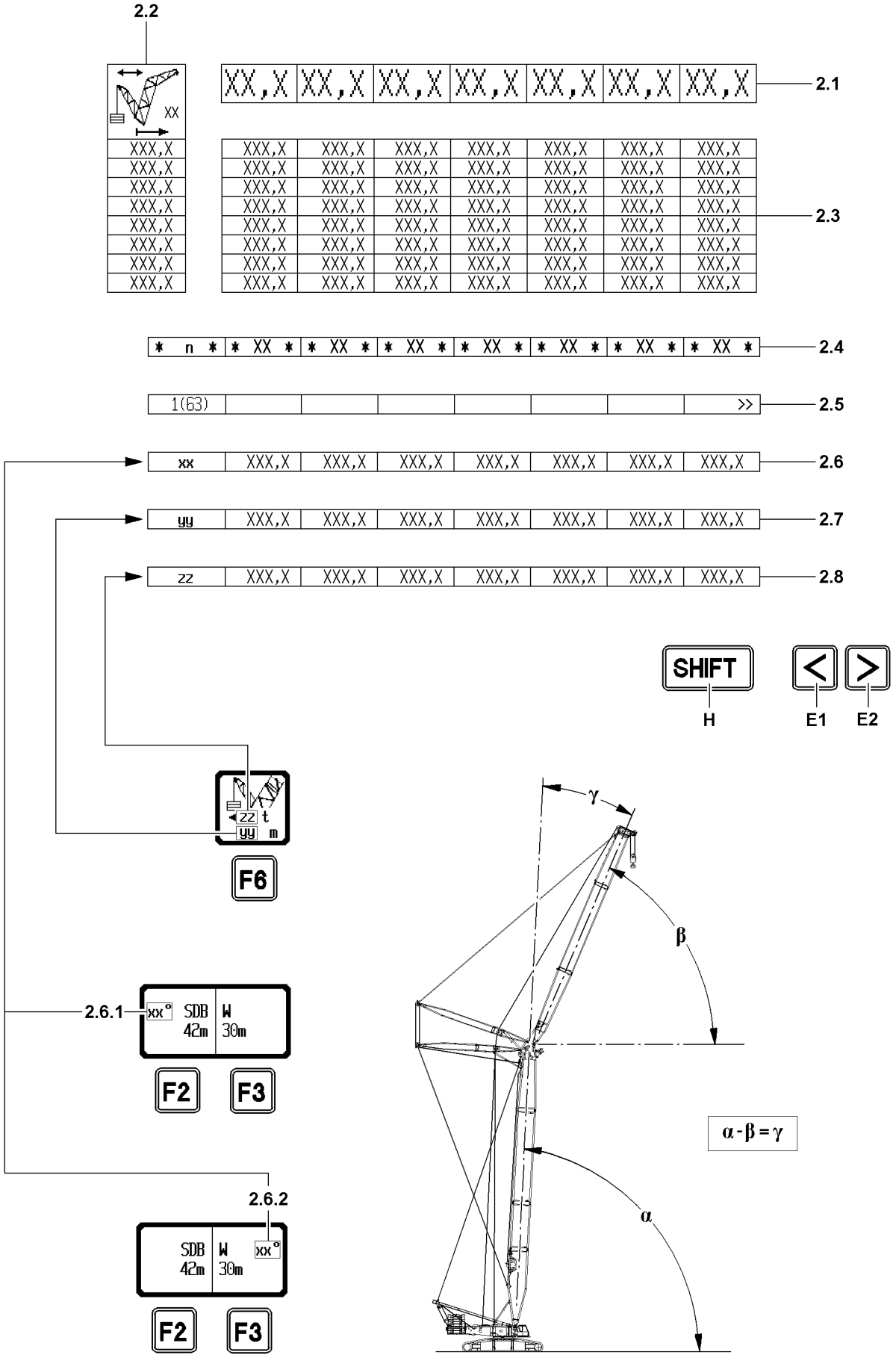

Fig.113278

LWE/LR 1600-2-001/18101-07-02/en

copyright © Liebherr-Werk Ehingen GmbH 2018

5.2.2 Display area of load chart values

2.1 Main boom lengths
- In [m] or [ft]
- Maximum of 7 columns per display page

Note
View „Boom radius“ icon **2.2**!
- ▶ Depending on the operating mode of the crane, the view changes from the „Boom radius“ icon **2.2**!
- ▶ In the illustration, the „Boom radius“ icon **2.2** shows an operating mode with (luffing) auxiliary boom / accessory, derrick boom and derrick ballast!

2.2 „Boom radius“ icon
- In [m] or [ft]
- Maximum 10 lines of radius values
- Vertical axis of load value field

2.3 Load value field
- Columns under the main boom lengths and in the lines to the right of radius values
- Load values depending on boom length and radius

2.4 Reeving number of hoist rope
- * n *
  n = Reeving number of the hoist rope between the boom head and hook block, in order to be able to lift the maximum load in the corresponding load chart column in single winch operation
- Enter and confirm the reeving on the LICCON monitor 0, according to the reeving on the boom head

NOTICE
Special equipment necessary!
- ▶ If a load value in the column exceeds that of a load that can be lifted with the maximum possible reeving, then there is an exclamation mark beside the reeving number („!“). This exclamation mark indicates that special equipment is needed to lift this load!

Note
Parallel operation of hoist winches!
- ▶ For parallel operation of hoist winches (1**II**2), when reeving in the hoist rope, enter the total reeving of winch 1 and winch 2 on the LICCON computer system!
- ▶ **Example**: Winch 1 and winch 2 are each reeved 7ways, the total reeving is therefore n=14!
- ▶ The total reeving **must** always show an even number value in parallel operation!

LWE/LR 1600-2-001/18101-07-02/en

copyright © Liebherr-Werk Ehingen GmbH 2018

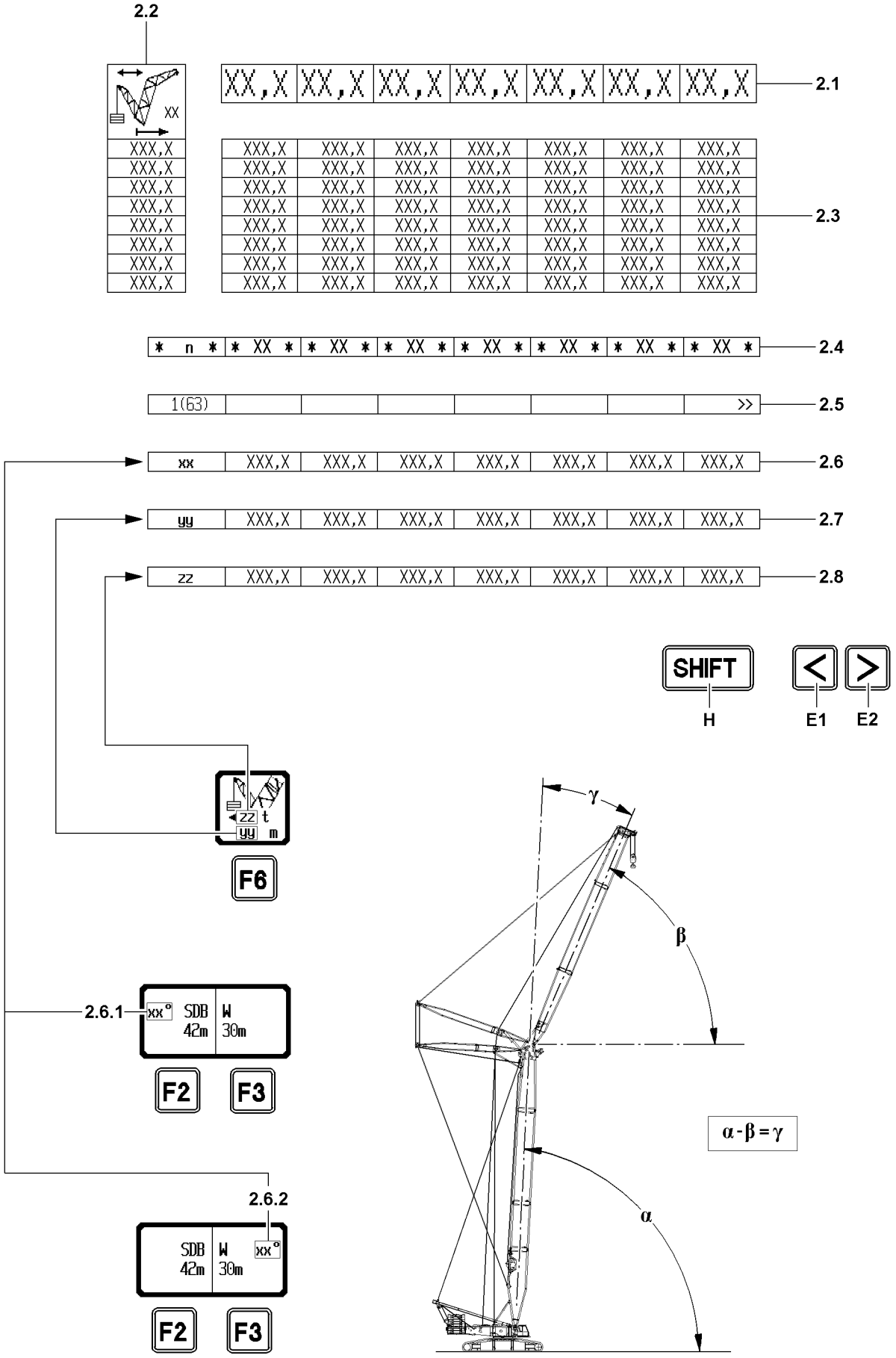

Fig.113278

LWE/LR 1600-2-001/18101-07-02/en

copyright © Liebherr-Werk Ehingen GmbH 2018

2.5 Line for special displays
- If a load chart consists of more than seven columns, it cannot be fully displayed because of the size of the monitor. In that case, marking arrows in the first or the seventh field in this line indicate that there are additional chart columns to the left or right of the displayed chart. They can be shown by pressing the key **E1** or the key **E2**.
- **Note:**
  Using the key combination **SHIFT** and key **E1** or SHIFT **H** and key **E2**, you can, where possible, scroll left or right by 7 load chart columns (corresponds to 1 page)!

2.6 Boom angle
- Line **xx**
- In [°]
- **Note:**
  Appears **only** in operating modes with luffing auxiliary boom / accessory!

2.6.1 Boom angle main geometry
- Appears „**xx°**“ in main geometry status icon (for example: **„xx° SDB“**) means **„xx°“** = main boom angle **α** in [°].
- In the line **xx** the main boom angles are listed, which must be set in order to be able to lift the load values in the corresponding load chart column.

2.6.2 Boom angle auxiliary geometry
- Appears „**xx°**“ in auxiliary geometry icon (for example: **„W“ „ xx°“**) then means **„xx°“** = relative angle auxiliary boom / accessory **γ** in [°].
- In the load chart columns, the relative angles auxiliary boom / accessory, which must be set to be able to lift the load values in the corresponding load chart column are listed next to each other.

Note
- ▶ Main boom angle **α**: The angle of the main boom to the placement surface of the crane!
- ▶ Angle auxiliary boom / accessory **β**: The angle of the auxiliary boom / accessory to the placement surface of the crane!
- ▶ Relative angle auxiliary boom / accessory **γ**: The angle of the auxiliary boom / accessory is determined relative to the main boom!

LWE/LR 1600-2-001/18101-07-02/en

copyright © Liebherr-Werk Ehingen GmbH 2018

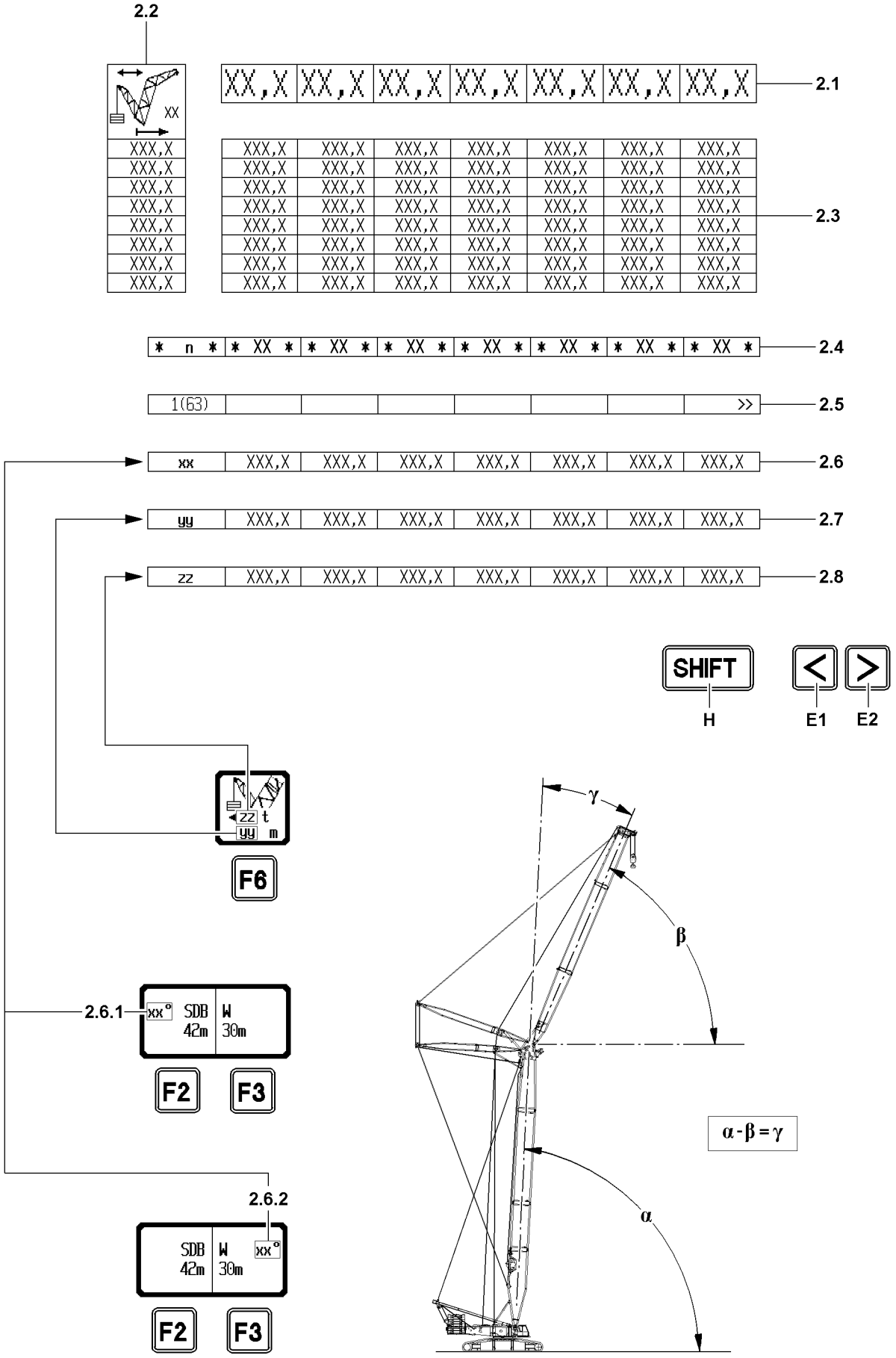

Fig.113278

LWE/LR 1600-2-001/18101-07-02/en

copyright © Liebherr-Werk Ehingen GmbH 2018

2.7 Derrick ballast radius
- Line **yy**
- In [m] or [ft]
- **Note:**
  Appears **only** in operating modes with derrick ballast!
- In the line **yy** the derrick ballast radii are listed, which must be set in order to be able to lift the load values in the corresponding load chart column.

2.8 Derrick ballast weight
- Line **zz**
- In [t] or [lbs]
- **Note:**
  Appears **only** in operating modes with derrick ballast!
- In the line **zz** the derrick ballast weights are listed, which must be attached in order to be able to lift the load values in the corresponding load chart column.

LWE/LR 1600-2-001/18101-07-02/en

copyright © Liebherr-Werk Ehingen GmbH 2018

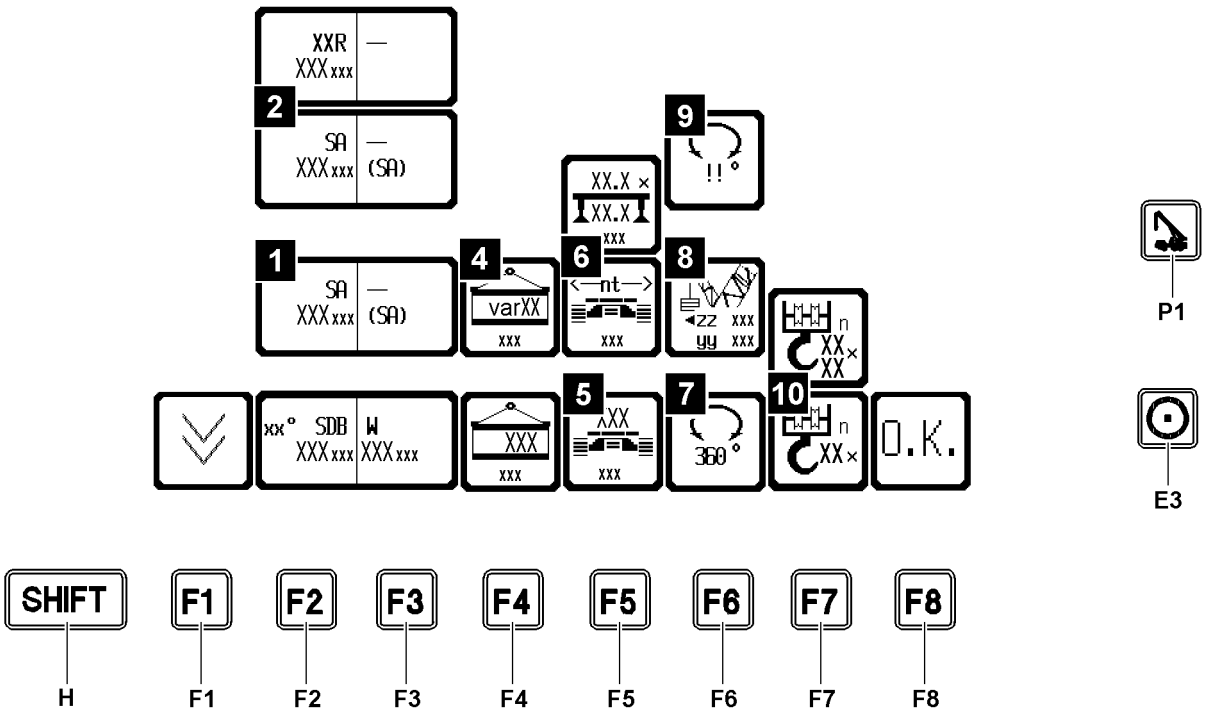

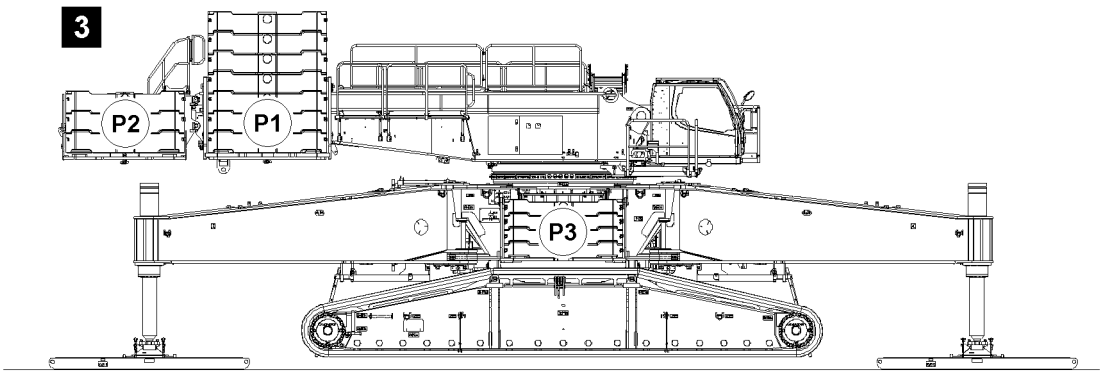

LWE/LR 1600-2-001/18101-07-02/en

Fig.113447

copyright © Liebherr-Werk Ehingen GmbH 2018

5.2.3 Function key line in the set up program

The function key line consists of function keys **F1** to **F8** and the function key icon bar above it. The function keys correspond to the various function key icons above them.

Various functions are indicated by the function key icons, or they may refer to changes of:
- Operating mode and
- set up configuration.

Not all function keys have to be assigned icons on the LICCON monitor. This depends on the program selection.

Pressing a function key changes the appearance of the icon above, its meaning, or its textual content.

F1 Vertical paging
- Depending on the size of the monitor, up to 10 load chart lines can be displayed at once. If a chart consists of more than 10 lines, then the display is spread over several pages. When pressing a key, the next page of the load chart will be displayed, and the number of the current page in the „general information line“ will be counted up by 1. When the last page is reached, page 1 will appear again after pressing the function key **F1**.

F2 Main boom geometry
- Adjustment possibility of different main boom operating modes and main boom lengths of the crane (if available). The types are described by abbreviations (for example: **SDB** = heavy main boom, derrick boom and suspended ballast) and length data in the icon.
- **Note (only standard crawler track):**
  In addition to the main boom operating modes, the assembly operating mode SA can be set via the function key **F2**, see illustration **1**.
- **Note (only narrow track crawler track):**
  In addition to the main boom operating modes, the assembly operating mode SA as well as the operating mode XXR (back equipped, no crane operation - only for driving the crane) can be set via the function key **F2**, see illustration **2**.

SHIFT and **F2**
- Press the key combination SHIFT **H** and program key **F2**:
  Previous main boom geometry (if available).

LWE/LR 1600-2-001/18101-07-02/en

copyright © Liebherr-Werk Ehingen GmbH 2018

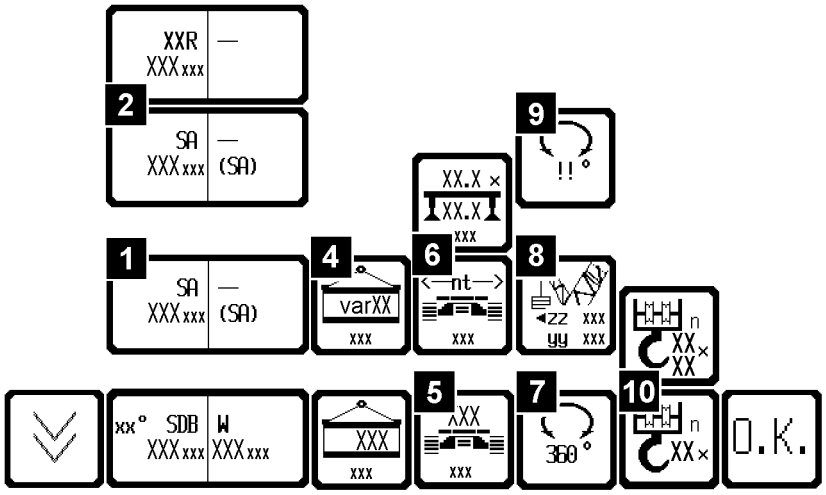

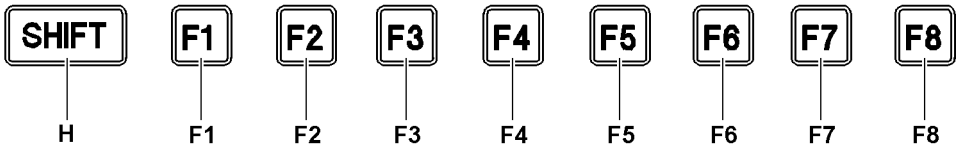

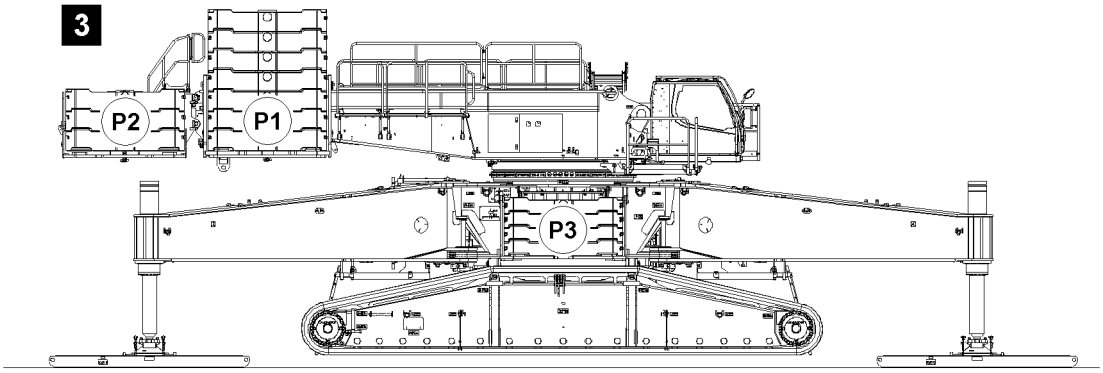

LWE/LR 1600-2-001/18101-07-02/en

Fig.113447

copyright © Liebherr-Werk Ehingen GmbH 2018

F3 Boom geometry auxiliary boom / accessory
- Adjustment possibility of different auxiliary boom operating modes and auxiliary boom lengths of the crane (if available). The types are described by abbreviations (for example: **W** = luffing lattice jib) and length data in the icon.
  Possibly additional angle data is noted in the icon.
- **Note:**
  Pressing the function key **F2** and / or the function key **F3** removes all data (operating mode, set up configuration) from the monitor and sets the short code in the general information line to „CODE >????<"!
- **Operating mode data:**
  - Boom length icon in the general information line
  - Length units and weight units
  - Load chart organization number
  - Boom radius icon
  - Boom length data
- **Set up dependent data:**
  - Numbering of current page number and total number of pages in load chart
  - Radius values in length units
  - Load values in weight units

Note
Pressing the function key **F2** and / or the function key **F3** removes all data (operating mode, set up configuration) from the monitor and sets the short code in the general information line to „CODE >????<"!
▶ Confirm the new set up configuration, see description function key **F8**.

SHIFT and **F3**
- Press the key combination SHIFT **H** and program key **F3**:
  Previous auxiliary boom geometry (if available).

LWE/LR 1600-2-001/18101-07-02/en

copyright © Liebherr-Werk Ehingen GmbH 2018

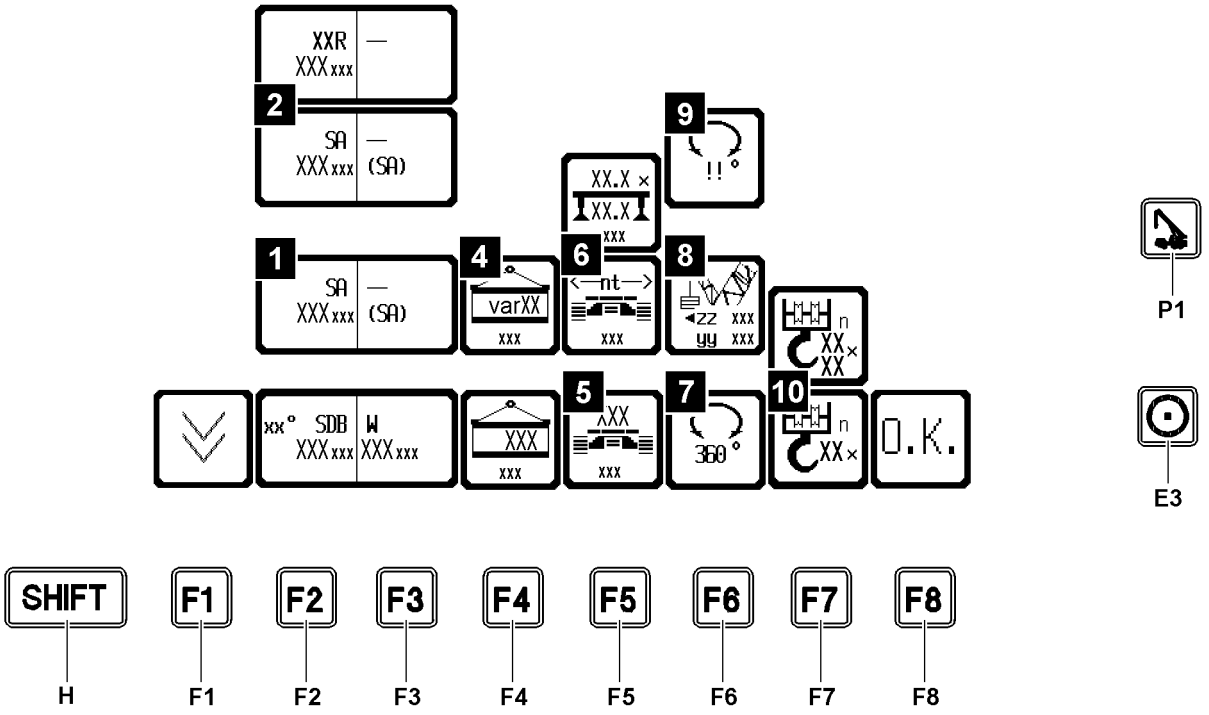

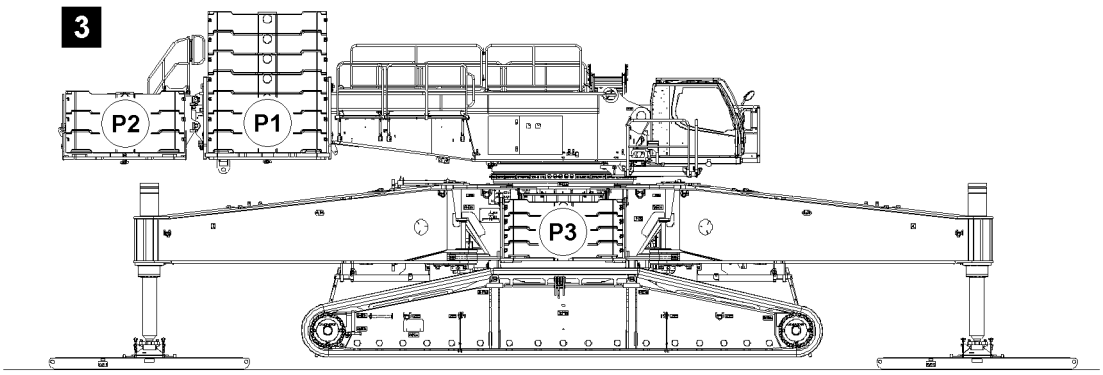

LWE/LR 1600-2-001/18101-07-02/en

Fig.113447

copyright © Liebherr-Werk Ehingen GmbH 2018

F4 Counterweight

- Adjustment possibility for current counterweight, which must be on the turntable in order to obtain the values in the current chart. When pressing a key, the following icon appears with additional text in the counterweight icon.
- Example:
  „ 110 t “ = total counterweight of 110 t
- **Note (only narrow track crawler track,** illustration **3):**
  The counterweight can be shown on certain variations by a coding (illustration **4**), see chart.

Coding (illustration 4)	Turntable (P1)	Turntable extension (P2)	Central ballast (P3)	Overall
var1	90 t	67.5 t	65 t	90 t / 67.5 t / 65 t
var2	90 t	67.5 t	45 t	90 t / 67.5 t / 45 t
var3	90 t	47.5 t	45 t	90 t / 47.5 t / 45 t
var4	90 t	27.5 t	45 t	90 t / 27.5 t / 45 t

F5 Crane chassis

- Adjustment possibility „Set up configuration chassis“ (for example: crawler, support, central ballast variation).
- **Note (only standard crawler track,** illustration **5):**
  For operating modes where there are various central ballast variations, this can be set with function key **F5**.
- **Note (only narrow track crawler track,** illustration **6):**
  For operating modes where there are various crane chassis variations, this can be set with function key **F5**.

LWE/LR 1600-2-001/18101-07-02/en

copyright © Liebherr-Werk Ehingen GmbH 2018

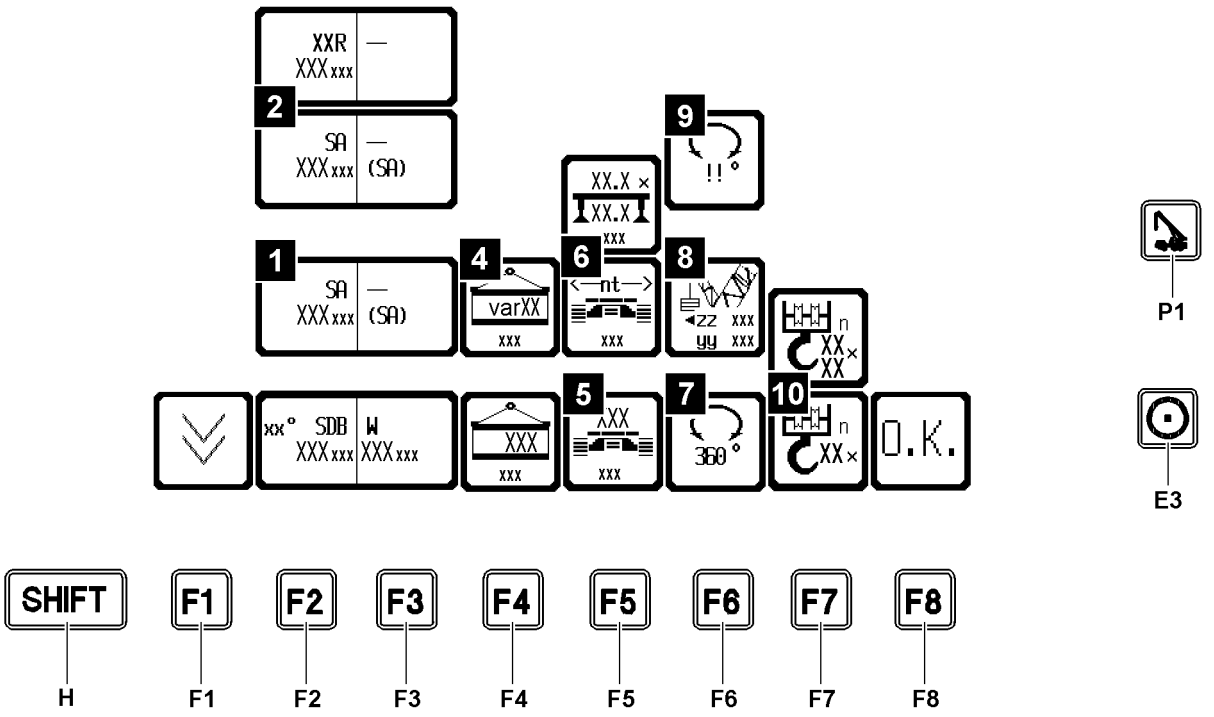

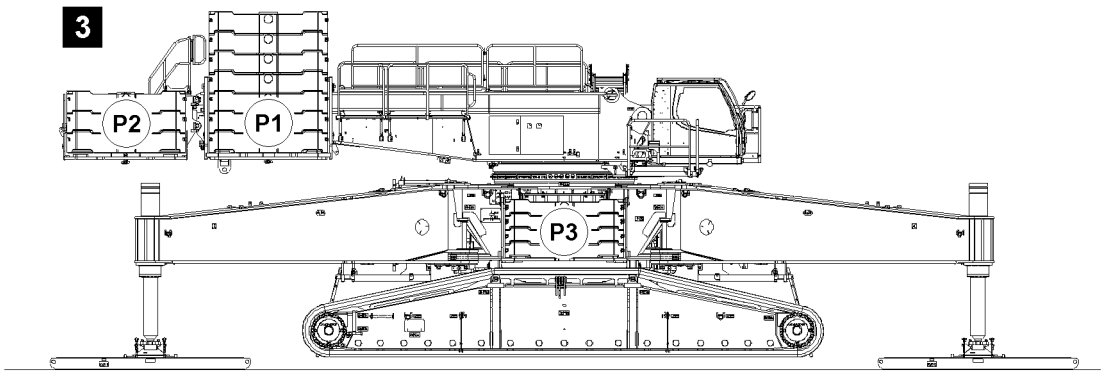

LWE/LR 1600-2-001/18101-07-02/en

Fig.113447

copyright © Liebherr-Werk Ehingen GmbH 2018

Note

- ▶ For crane operating modes without derrick ballast, the slewing range icon crane superstructure appears at **F6**!
- ▶ For crane operating modes with derrick ballast, the derrick ballast radius icon appears at **F6**!

F6 Slewing range crane superstructure
- Slewing range icon 360° - Slewing range crane superstructure not restricted, illustration **7**

or

F6 Derrick ballast radius
- See illustration **8**
- Set the set up configuration derrick ballast radius **yy** in [m] or [ft]
- Set the set up status derrick ballast weight **zz** in [t] or [lbs]

or

F6 Slewing range crane superstructure
- **Note (only narrow track crawler track,** illustration **9):**
- The crane superstructure may not be turned (operating mode dependent)

F7 Hoist rope reeving
- Adjustment possibility for the **number of hoist rope strands on the boom** to obtain a certain load carrying capacity
- Press the key: Reeving number on boom is increased by 1.

SHIFT and **F7**
- Press the key combination SHIFT **H** and program key **F7**: Reeving number on boom is reduced by 1.

Note

- ▶ The displayed number of hoist rope strands (reeving) in the icon will be increased with every keystroke by one counter, up to a fixed maximum value (depending on operating mode)! If the maximum value is exceeded, the counter starts again at the minimum value!
- ▶ If the set value is still within the minimum and maximum values when switching to another operating mode, it remains valid! Otherwise it will be set to the minimum value for the new operating mode!
- ▶ After a „cold start“ (for example loss of data in the memory), the display of the hoist rope reeving is at „0“!

Note

Parallel operation of hoist winches!

- ▶ For parallel operation of hoist winches (1**II**2), when reeving in the hoist rope, enter the total reeving of winch 1 and winch 2 on the LICCON computer system!
- ▶ **Example**: Winch 1 and winch 2 are each reeved 7ways, the total reeving is therefore n=14!
- ▶ The total reeving **must** always show an even number value in parallel operation!

LWE/LR 1600-2-001/18101-07-02/en

copyright © Liebherr-Werk Ehingen GmbH 2018

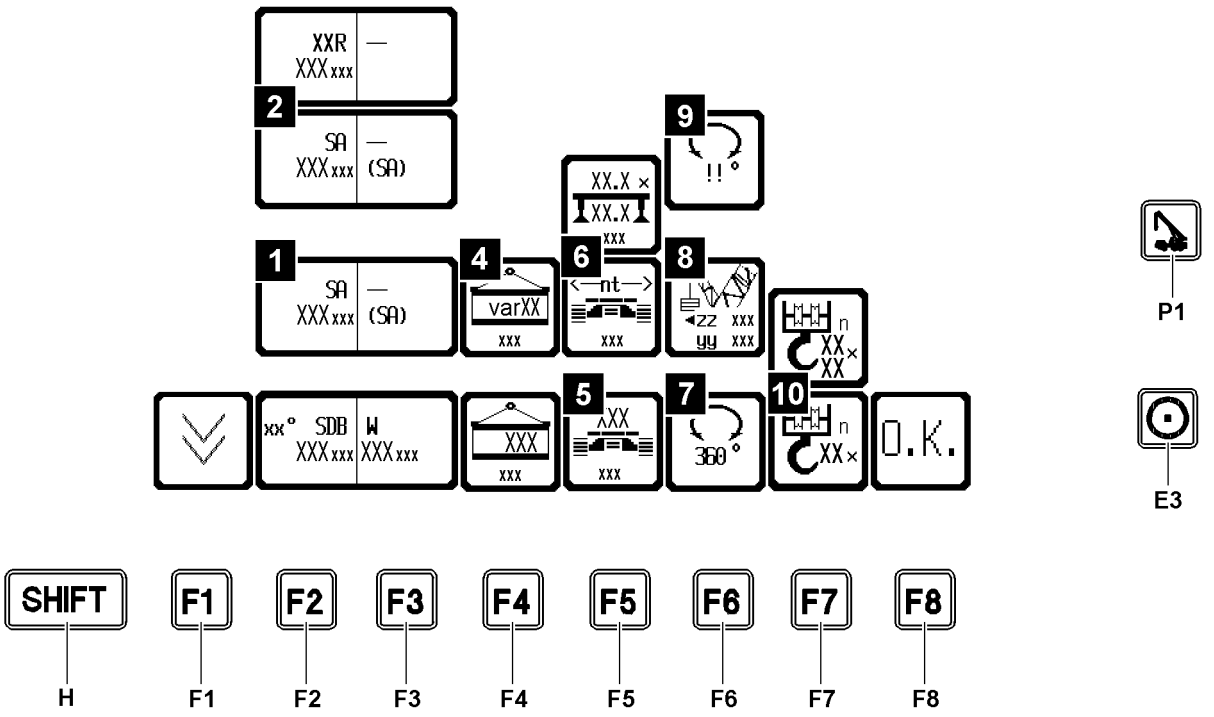

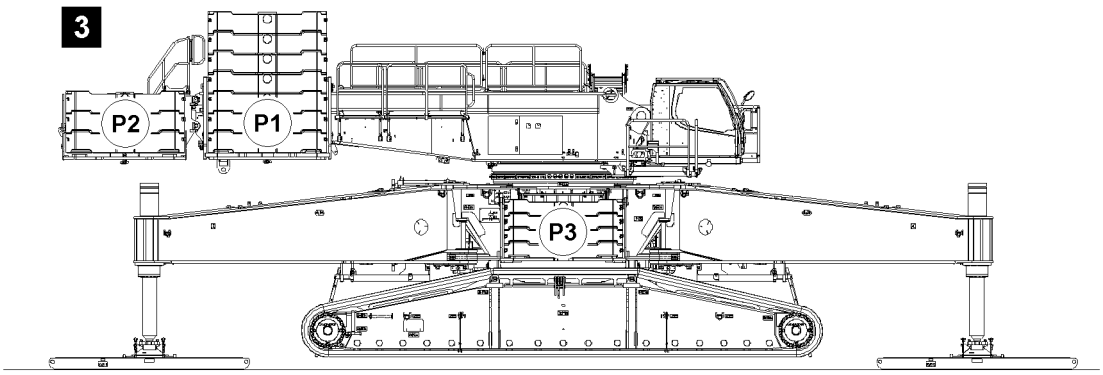

LWE/LR 1600-2-001/18101-07-02/en

Fig.113447

copyright © Liebherr-Werk Ehingen GmbH 2018

E3 and **F7**
- Adjustment possibility for the **number of hoist rope strands on the boom nose** to obtain a certain load carrying capacity.
- Press the key: Reeving number on boom nose***** (upper number in „Hoist rope reeving“ icon) is increased by 1.

SHIFT and **E3** and **F7**
- Press the key combination SHIFT **H** and special function key **E3** and function key **F7**: Reeving number on boom nose***** (upper number in „Reeving“ icon) is reduced by 1.

Note
Display reeving boom nose!
- ▶ The reeving for the boom nose is only shown (illustration **10**) if the boom nose is assembled!
- ▶ If the boom nose is installed during operation, then the reeving of the boom nose must be correctly entered in the set up program!

F8 Confirmation key
- For confirmation of selected set up configuration
- **Prerequisites:**
  - The entry of the set up configuration must be completed all the way. A valid short code is shown and in the chart field are load values.
  - The external conditions for this set up configuration, if stipulated, must be met.
  - The crane may not be utilized by more than 20 % in the previous set up configuration (applies only if the load suspended on the hook is heavier than 0.5 t). Switching to the crane operation program can otherwise only be done with the program key **P1**. In that case, the newly entered set up configuration is not accepted.

Note
- ▶ Make sure that the selected set up configuration (short code) and the hoist rope reevings are taken over after switching into the operating screen!

Note
Display of operating errors from the set up program!
- ▶ Operating errors created in the set up program are displayed in the icon above the function key **F8** and are saved in the error stack for about 5 seconds!
- ▶ If the function key **F8** is pressed within 5 seconds, the program will switch automatically to the error determination screen in the test system and the error will be displayed documentarily!
- ▶ The operating error will not be saved!
- ▶ Operating errors are always placed on top in the error stack, see Diagnostics manual!

LWE/LR 1600-2-001/18101-07-02/en

copyright © Liebherr-Werk Ehingen GmbH 2018

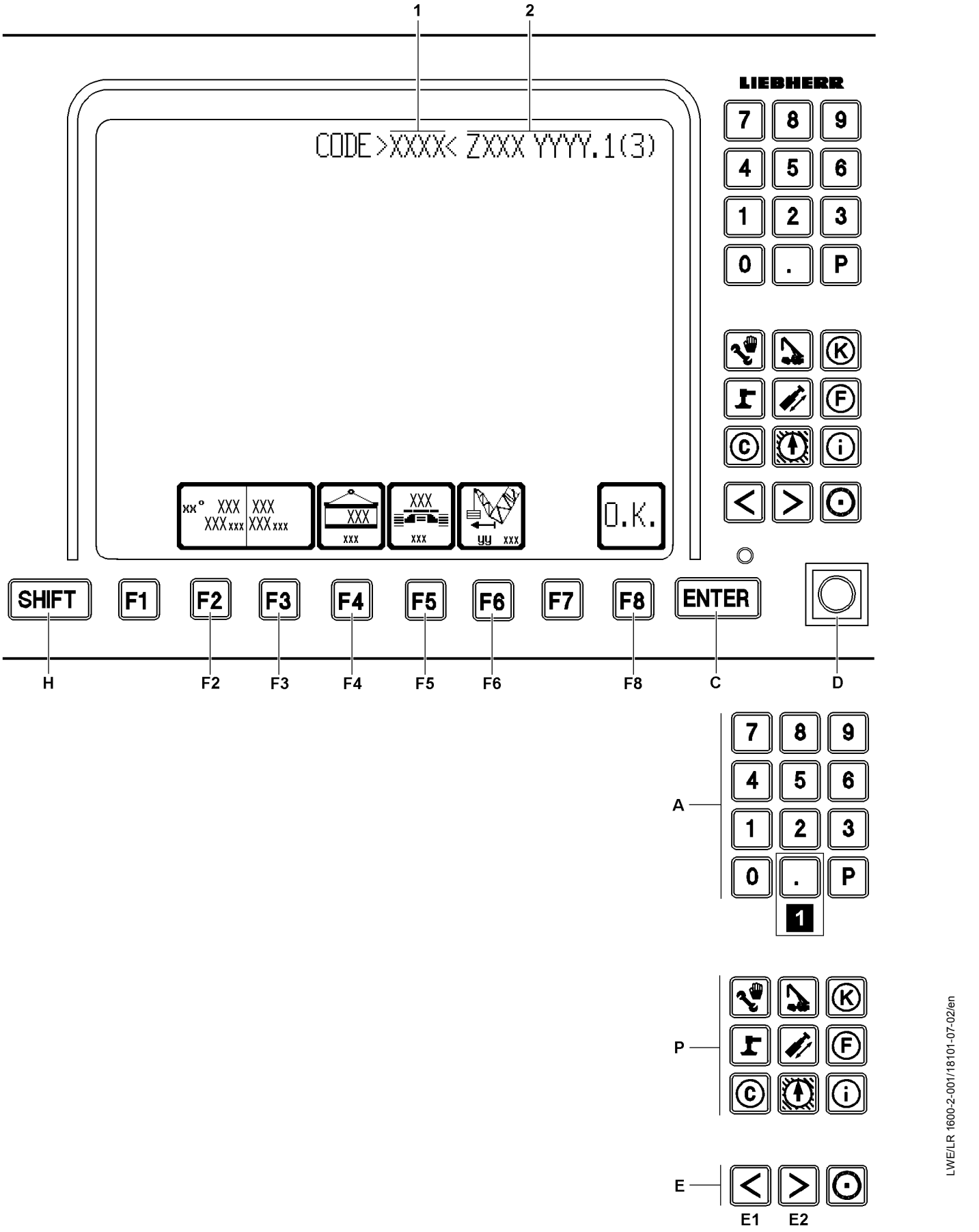

Fig.112308

LWE/LR 1600-2-001/18101-07-02/en

copyright © Liebherr-Werk Ehingen GmbH 2018

5.2.4 Operating errors in the set up program

A Keypad
- Pressing the keypad deletes all operating mode and set up configuration dependent data from the monitor
- The keys **0** to **9** on the keypad can be used to enter the short code directly into the LICCON monitor
- The key **P** and the key „**.**“ (illustration **1**) have no function in the set up program

P Program keys
- Selection of individual programs. The settings in the set up program are discarded and the set up configuration and reeving, which were last confirmed with the function key **F8** (OK) are continued to be used.
  A program currently running **cannot** be called again using its program key.

C Input key ENTER
- Confirmation of input both for short codes **1** as well as for any change in the set up configuration via the function keys
- **ENTER** after entering the short code, the short code **1** is searched for in all stored load charts. If the matching load chart has been programmed, it will be displayed in full. Otherwise there is an error message in the form of „????“ in the second part of the organization number **2** and the acoustic signal „Horn“ sounds.
- **ENTER** after a changing the operating mode using the function key **F2** and the function key **F3** searches for this operating mode. If successful, sets its first set up configuration and displays the load chart and its short code **1**. In the event of an error, the short code **1** remains on „CODE ????“, the organization number **2** is displayed as „ZXXX????“ and the acoustic signal „Horn“ sounds.
- **ENTER** after a change in the set up configuration with the function keys **F4** and **F5** as well as the function key **F6** this load chart (if the chart exists) displays with short code **1** on the monitor. In the event of error, the short code **1** remains on „CODE ????“ and the acoustic signal „Horn“sounds.

Note
Use of place holders
▶ The Short code **1** and the Organization number **2** are shown in this chapter with place holders (for example XXXX or ZXXX) instead of real numbers and letters!

D Bypass key button
- Has no function in the Set up program

LWE/LR 1600-2-001/18101-07-02/en

copyright © Liebherr-Werk Ehingen GmbH 2018

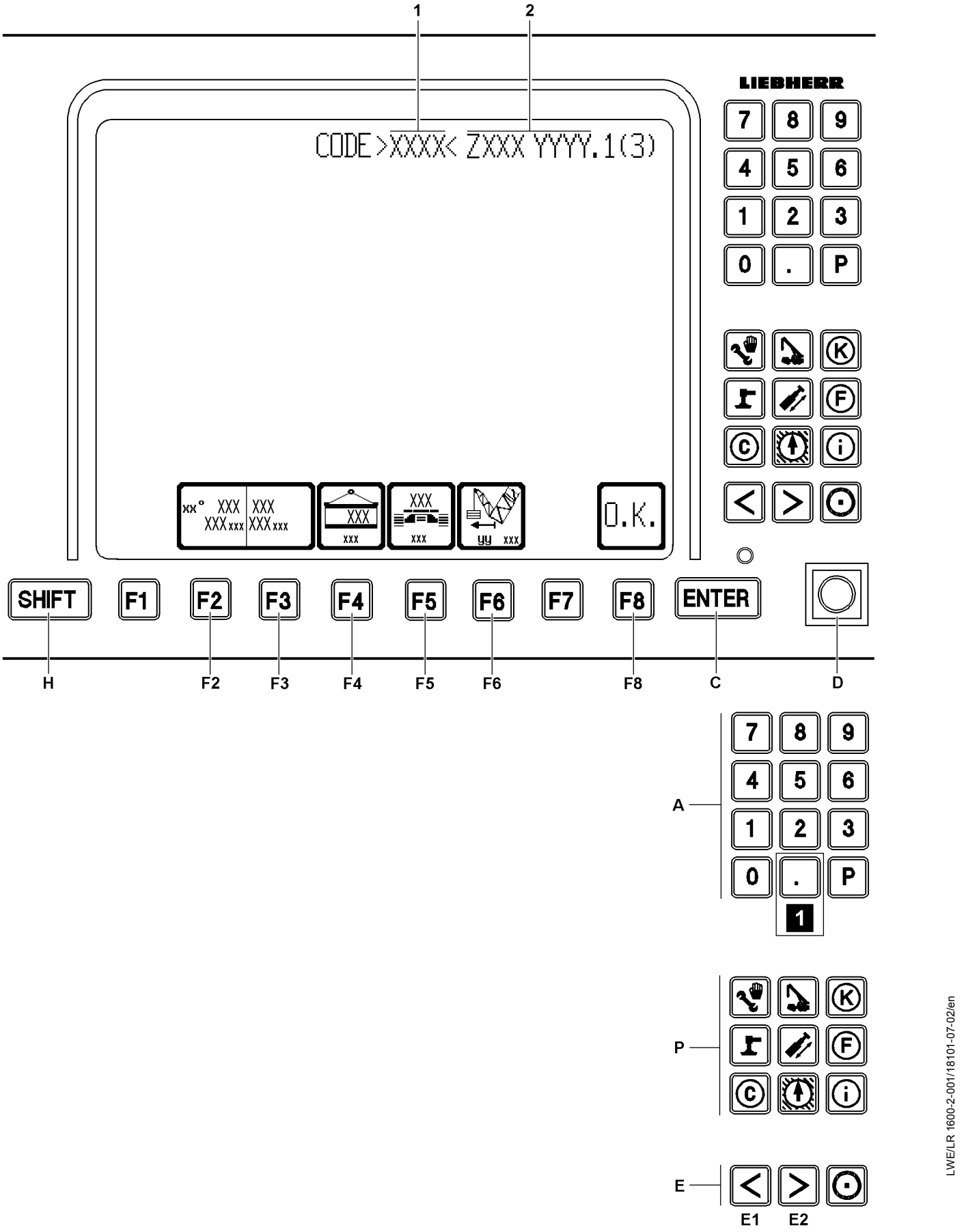

Fig.112308

LWE/LR 1600-2-001/18101-07-02/en

copyright © Liebherr-Werk Ehingen GmbH 2018

E Horizontal paging
- **Note:**
  The key **E1** and key **E2** only have a function if this is indicated in the „Line for special displays“!
- If a load chart consists of more than 7 columns, the first display of the set up configuration only shows columns 1 to 7
- Pay attention to the double arrow on the right (>>) and / or on the left (<<) edge of the line of the load chart! It points to additional columns in the respective direction!
- Press the key **E1** to display the next left chart column
- Press the key **E2** to display the next right chart column
- **Note:**
  Using the key combination SHIFT **H** and key **E1** or SHIFT **H** and key **E2**, you can, where possible, scroll left or right by 7 load chart columns (corresponds to 1 page)!

H SHIFT key
- For example Supervisory function
- By pressing and holding down the SHIFT **H** key and then pressing one of the function keys, which must correspond to the corresponding function, the previous main boom geometry, the auxiliary boom geometry and the previous reeving are reset
- **Note:**
  See section „The function key line in the set up program“!

LWE/LR 1600-2-001/18101-07-02/en

copyright © Liebherr-Werk Ehingen GmbH 2018

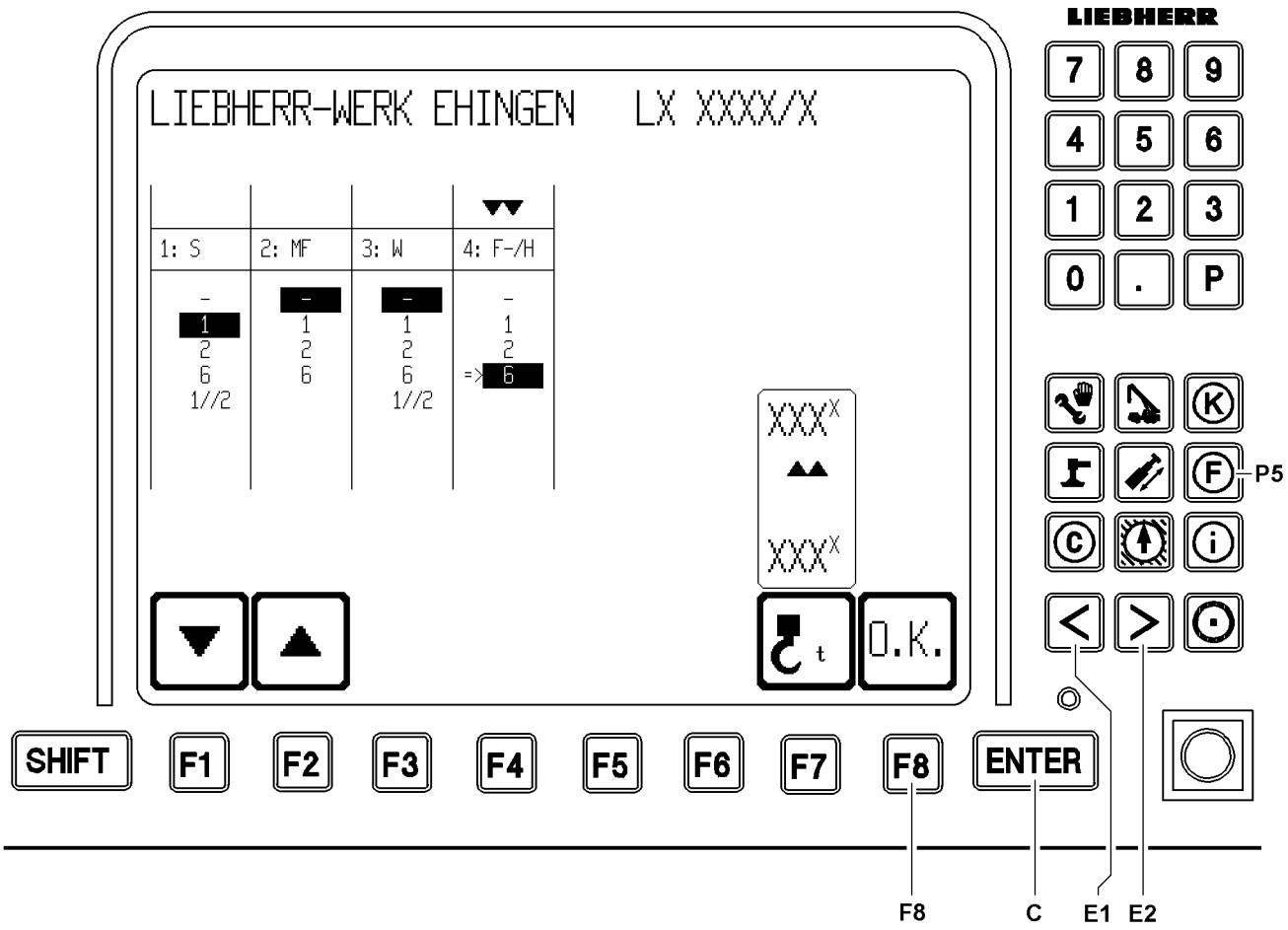

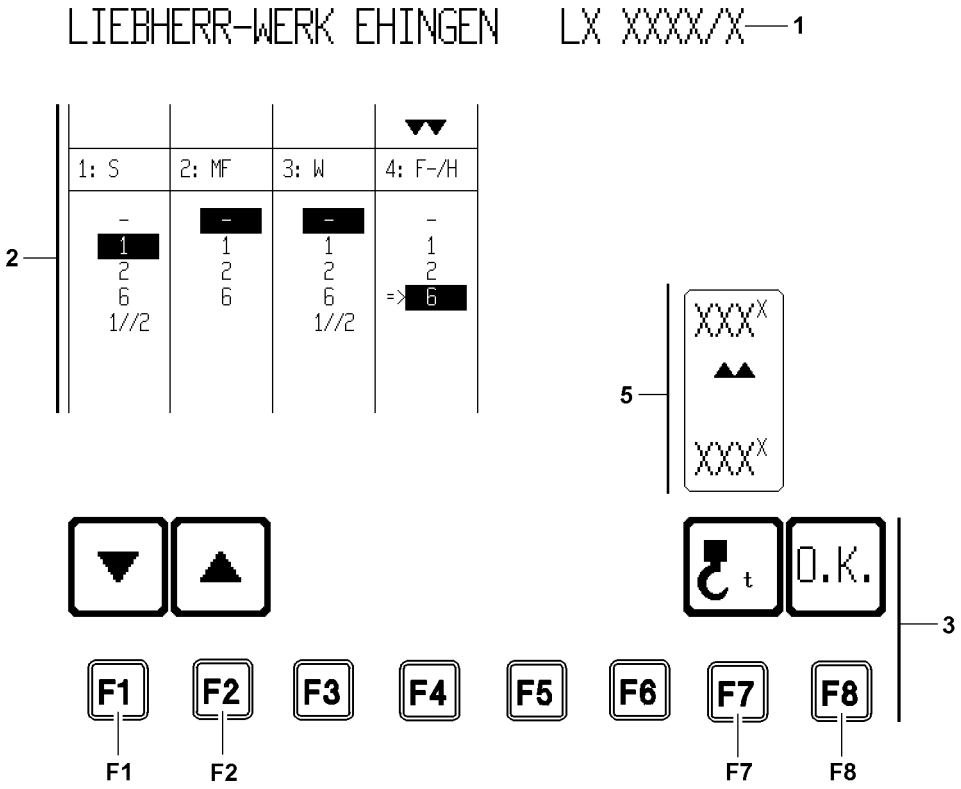

Fig.113268

LWE/LR 1600-2-001/18101-07-02/en

copyright © Liebherr-Werk Ehingen GmbH 2018

6 The winch - pulley head assignment screen

After the set equipment set up has been confirmed in the „Set up“ program with the function key **F8** (OK), the set up parameters are taken over by the LICCON computer system and the „winch - pulley head assignment screen“ appears automatically.

6.1 Starting the winch - pulley head assignment screen

In the „winch - pulley head assignment scren“, the crane operator must assign the winch(es) required for crane operation to the corresponding pulley heads (S, MF, W, F-/H).

When the Hook block weight icon **5** appears, a hook block weight appropriate for the operating mode to erect and take down the boom or the boom systems according to the erection and take down charts must be determined.

By pressing the function key **F8** (OK) in the „Set up“ program, the LICCON computer system changes automatically into the „winch - pulley head assignment screen“.

Starting the „winch - pulley head assignment screen“:

▶ Press the function key **F8** (OK) in the set up screen.
or
Press the program key **P5**.

6.2 Areas in the winch - pulley head assignment screen

The LICCON monitor is divided into three areas in the „winch - pulley head assignment“:

1 Crane type identification

2 Assignment overview
- For the „winch - pulley head assignment“

3 Function key line

5 Hook block weight icon
- Appears if hook block weight entry is required.

LWE/LR 1600-2-001/18101-07-02/en

copyright © Liebherr-Werk Ehingen GmbH 2018

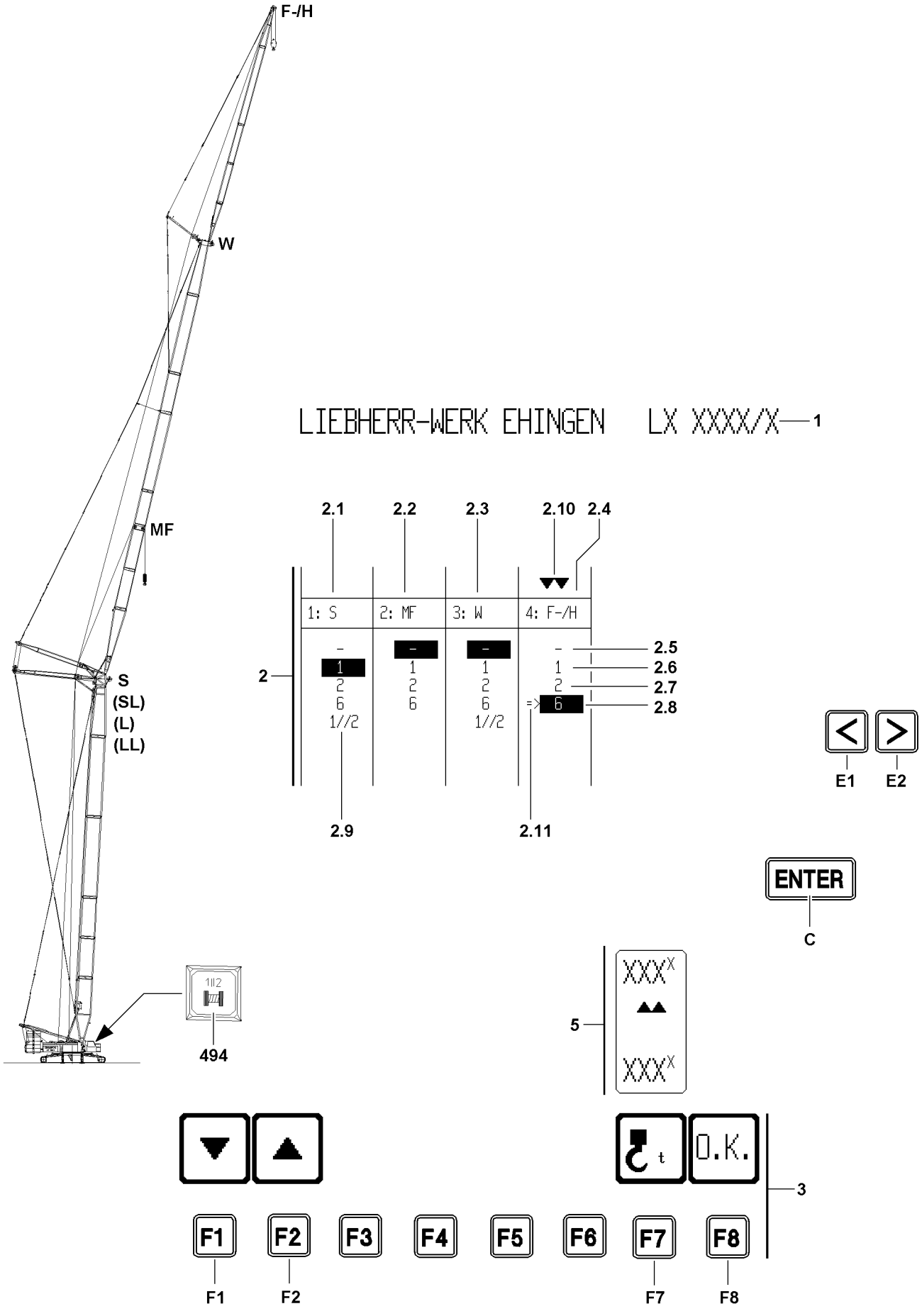

Fig.113266

LWE/LR 1600-2-001/18101-07-02/en

copyright © Liebherr-Werk Ehingen GmbH 2018

6.3 User interface

1 Crane type identification

2 Assignment overview
- **Note:**
  The winches are assigned to the pulley heads within the assignment overview.

2.1 „Pulley head 1“
- Pulley head on main boom
- Valid for main boom operating modes (L, LL, SL, S, if present)

2.2 „Pulley head 2“*****
- „Midfall“ (MF)
- Pulley head on the center pulley of the luffing jib

2.3 „Pulley head 3“
- Pulley head on the „luffing jib*****“

2.4 „Pulley head 4“
- Pulley head on the „fixed jib*****“ **or** on the „boom nose*****“

2.5 No winch assigned

2.6 Winch 1
- Not selected

2.7 Winch 2
- Not selected

2.8 Winch 6*****
- Selected (background is black)

2.9 Winch 1 and winch 2 in parallel operation
- Not selected

2.10 Selector arrow
- Double arrow pointing down
- Select pulley head

2.11 Winch selector
- Arrow to the right
- Select winch, which is to be assigned to the pulley head

3 Function key line

5 Hook block weight icon
appears if hook block weight entry is required

LWE/LR 1600-2-001/18101-07-02/en

copyright © Liebherr-Werk Ehingen GmbH 2018

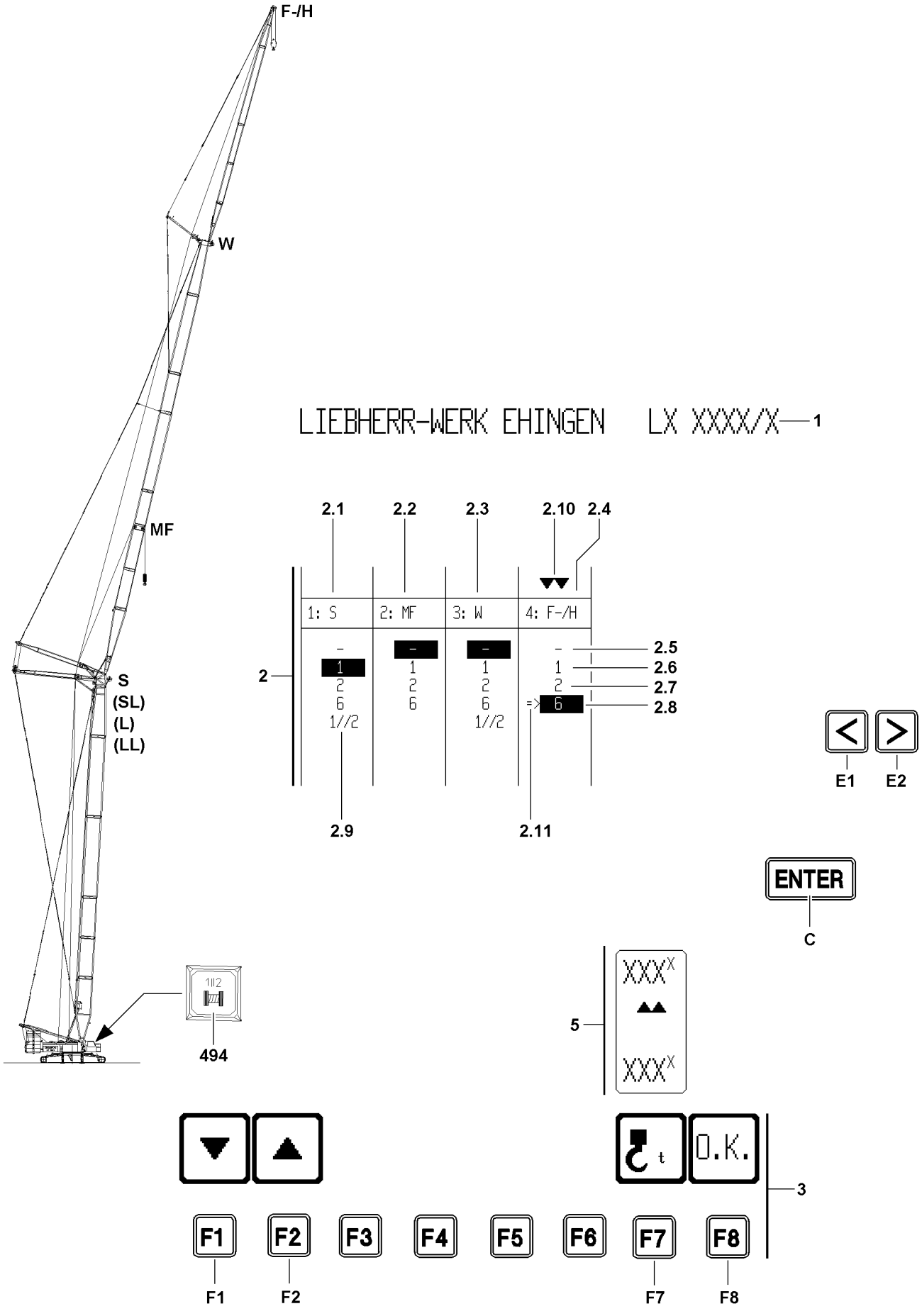

Fig.113266

LWE/LR 1600-2-001/18101-07-02/en

copyright © Liebherr-Werk Ehingen GmbH 2018

F1 Function key
- Move winch selector **2.11** „down“

F2 Function key
- Move winch selector **2.11** „up“

F8 Function key „OK“
- Confirmation of settings in the „winch - pulley head assignment screen“ and take over of settings into the „crane operation“ program

C ENTER
- According to winch selection:
  - The winch selected with the winch selector **2.11**, after pressing the ENTER **C** key, is highlighted in black and is therefore preselected.
- According to entry of a hook block weight:
  - The entered hook block weight is accepted after pressing the ENTER **C** key from the input field into the current input value.

E1 Special function key
- Move the selector arrow **2.10** to the left to select the pulley head
  Note:
  The winch selector **2.11** is taken over into the corresponding column at the same time with the selector arrow **2.10**!

E2 Special function key
- Move the selector arrow **2.10** to the right to select a pulley head
  Note:
  The winch selector **2.11** is taken over into the corresponding column at the same time with the selector arrow **2.10**!

LWE/LR 1600-2-001/18101-07-02/en

copyright © Liebherr-Werk Ehingen GmbH 2018

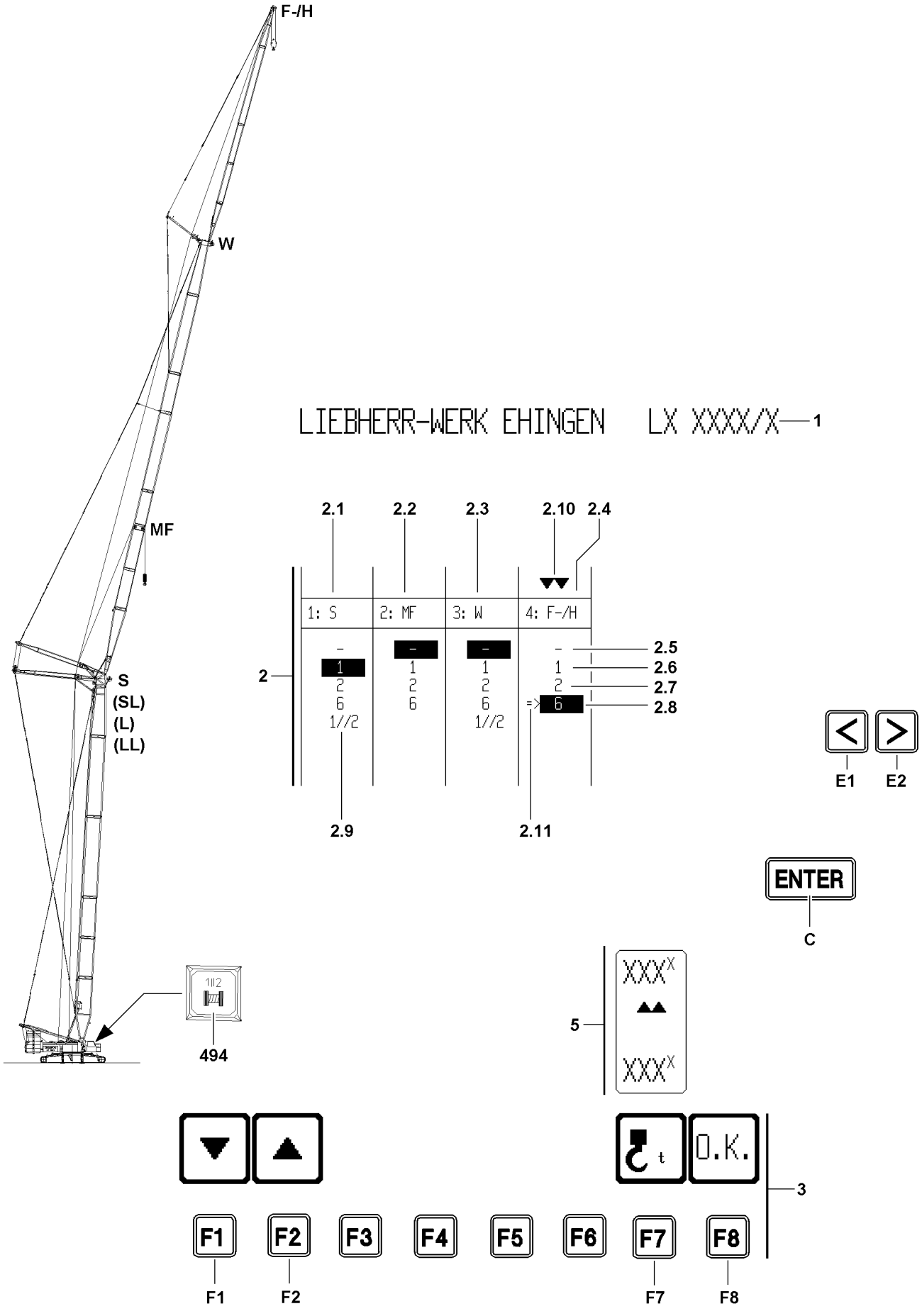

Fig.113266

LWE/LR 1600-2-001/18101-07-02/en

copyright © Liebherr-Werk Ehingen GmbH 2018

6.4 Selecting a pulley head and assigning it to winches

Make sure that the following prerequisites are met:
- The set up parameters from the set up screen have been confirmed by pressing the function key **F8** „OK“.
- The „winch - pulley head assignment screen“ is shown on the LICCON monitor.

DANGER
The crane can topple over!
If an incorrect winch is assigned to a pulley head, then there is the possibility that the LICCON overload protection does not recognize an overload condition or recognizes it too late, since a thick hoist rope is assumed for the calculation of the „load capacity“, even though actually a thin hoist rope has been placed (the „load capacity“ might be calculated too large in such a case)!
If an incorrect winch is assigned to a pulley head, then there is the possibility that the LICCON overload protection does not recognize an overload condition or recognizes it too late, since a hoist rope lever arm, which is too small, is assumed for the calculation of the „actual load“ and as a result, the „actual load“ will be calculated too small!
The crane can be overloaded unnoticed and topple over!
Personnel can be severely injured or killed!
▶ The crane operator must ensure that the „winch - pulley head assignment“ matches the installed boom system and the set operating mode!

WARNING
Impermissible „winch - pulley head assignment“!
If a „winch - pulley head assignment“ is recognized by the LICCON computer system as impermissible, then the following display appears - after take over of the settings with the function key **F8** (OK) – on the winch icons of the crane operating screen (for winch 1, winch 2 and winch 6): „ **??**“
▶ **Crane operation with impermissible settings is prohibited!**
▶ The crane operator must carefully check the settings in the „set up“ program and in the „winch - pulley head assignment“ and correct them, if necessary!
▶ The crane operator must ensure that the „winch - pulley head assignment“ matches the installed boom system and the set operating mode!
▶ The crane operator must ensure that the „winch - pulley head assignment“ has been taken over by the control correctly after confirmation of the settings with the function key **F8** (OK)! The correct boom identifications must appear in the winch icons in the crane operating screen! If necessary, recheck the settings!
▶ If there is any doubt, contact the Service Dept. at Liebherr-Werk Ehingen GmbH!

LWE/LR 1600-2-001/18101-07-02/en

copyright © Liebherr-Werk Ehingen GmbH 2018

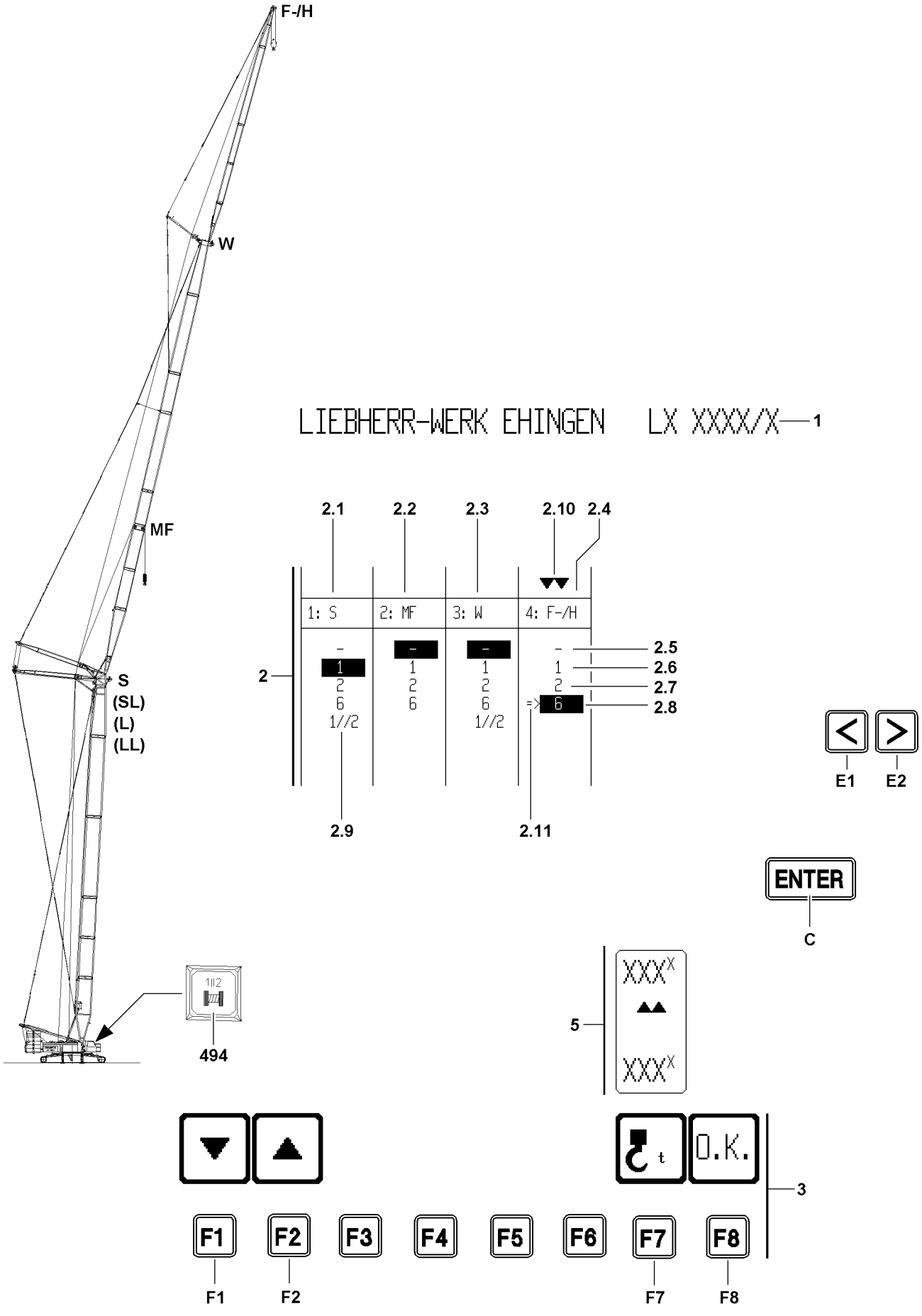

Fig.113266

LWE/LR 1600-2-001/18101-07-02/en

copyright © Liebherr-Werk Ehingen GmbH 2018

6.4.1 Selecting a pulley head

Note

- ▶ The pulley heads are located in such a way that the radius increases from pulley head 1 to pulley head 4!
- ▶ A crane equipment consists of maximum four pulley heads!
- ▶ The selection of the desired pulley head by the selector arrow **2.10** is made by pressing the special function key **E1** or the special function key **E2**!

Move the selector arrow **2.10** into the desired column.

Move the selector arrow to the left

▶ Press the special function key **E1**.

Result:

– The selector arrow **2.10** and the winch selector **2.11** move by one column to the „left“.
– The winch selector **2.11** jumps automatically to the selected winch (black background).

Move the selector arrow to the right

▶ Press the special function key **E2**.

Result:

– The selector arrow **2.10** and the winch selector **2.11** move by one column to the „right“.
– The winch selector **2.11** jumps automatically to the selected winch (black background).

When the required pulley head is selected:
▶ Select the winch(es) as outlined in section „Assigning winch(es)“!

LWE/LR 1600-2-001/18101-07-02/en

copyright © Liebherr-Werk Ehingen GmbH 2018

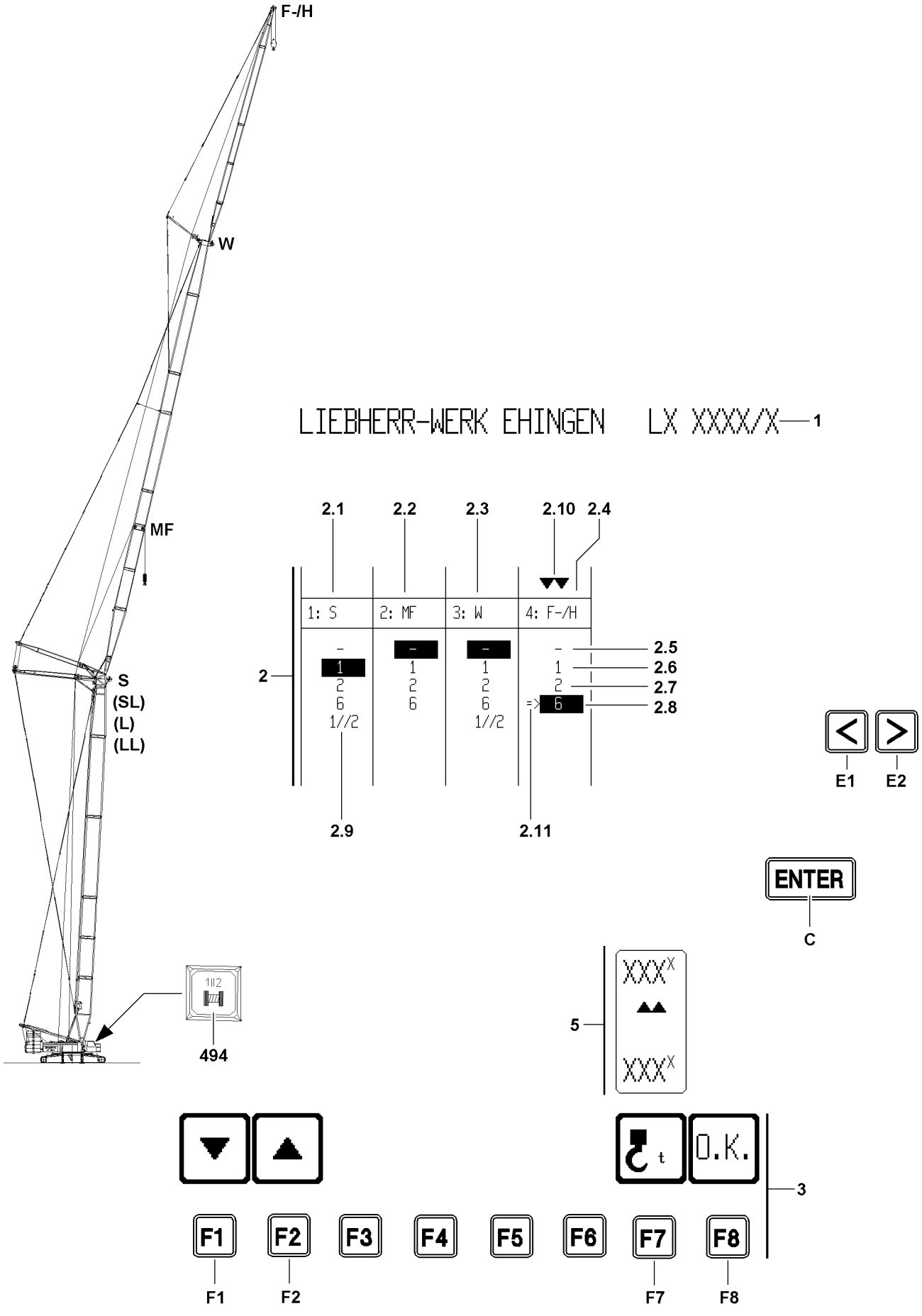

Fig.113266

LWE/LR 1600-2-001/18101-07-02/en

copyright © Liebherr-Werk Ehingen GmbH 2018

6.4.2 Assigning winch(es)

WARNING
The crane can topple over!
Due to incorrect settings during the winch assignment, dangerous operating situations can occur, up to toppling the crane!
Personnel can be severely injured or killed!
- ▶ At winch assignment of winch 1 and winch 2 in parallel operation (1 / 2), turn the switch **494** (parallel operation) in the control console on the right on!
- ▶ At winch assignment of winch 1 and winch 2 in single operation, turn the switch **494** in the control console on the right **off**!

Note
- ▶ The winch selector **2.11** is coupled to the selector arrow **2.10** and moves automatically into the same column as the selector arrow **2.10**. The winch selector **2.11** „jumps“ automatically to the selected winch (black background)!
- ▶ The winch required for crane operation is selected by pressing the function key **F1** and the function key **F2**. This selection is confirmed by pressing the ENTER **C** key!
- ▶ A winch which is already assigned to another pulley head is ignored and passed over when the function key is pressed. The winch selector **2.11** jumps automatically to the next „free“ winch!
- ▶ One winch can only be assigned to one pulley head!

Note
- ▶ For pulley heads, which are not assembled, **or** which are assembled but no winch is to be assigned to them, instead of a winch, the sign „no winch selected“ **2.5** must be assigned!

Make sure that the following prerequisite is met:
- – The desired pulley head is selected.

copyright © Liebherr-Werk Ehingen GmbH 2018

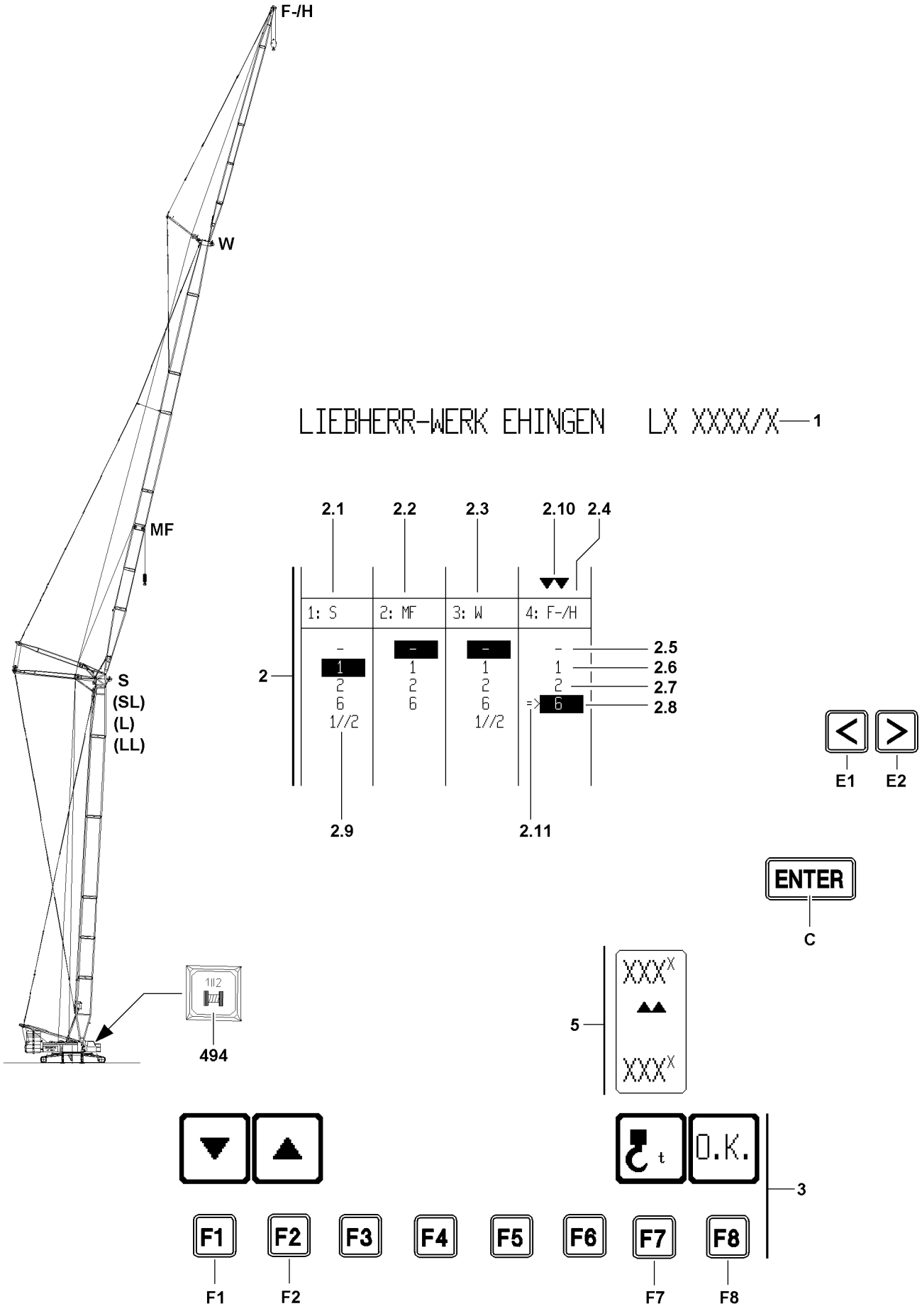

Fig.113266

LWE/LR 1600-2-001/18101-07-02/en

copyright © Liebherr-Werk Ehingen GmbH 2018

Move the winch selector „down“

▶ Press the function key **F1**.

Result:

– The winch selector **2.11** moves „down“.

Move the winch selector „up“

▶ Press the function key **F2**.

Result:

– The winch selector **2.11** moves „up“.

Confirm the selection

If the desired winch is assigned to a pulley head, the crane operator must confirm the setting for this pulley head with ENTER **C**.

▶ Every assignment of a winch to a pulley head must be confirmed separately with the ENTER **C** key!

Result:

– The selected winch is highlighted in black.

6.4.3 Taking over the settings into the crane operating screen

If the „winch - pulley head assignment“ is completed for all required pulley heads, the data is taken over into the crane operating view and the control by pressing the function key **F8** „OK“.

▶ Press the function key **F8** „OK“.

Result:

– The settings are completely taken over into the control.
– The crane operating screen appears on the LICCON monitor.

LWE/LR 1600-2-001/18101-07-02/en

copyright © Liebherr-Werk Ehingen GmbH 2018

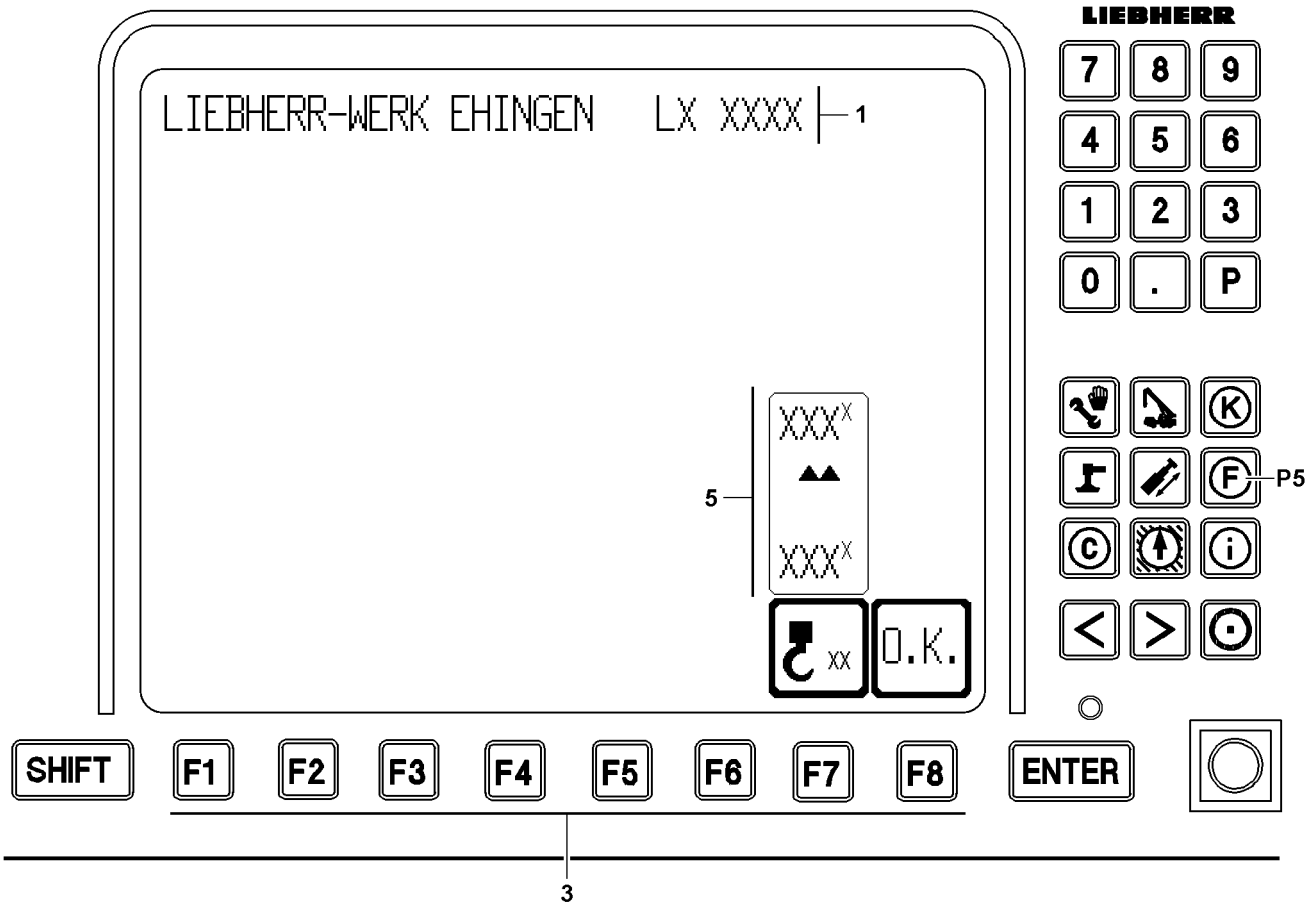

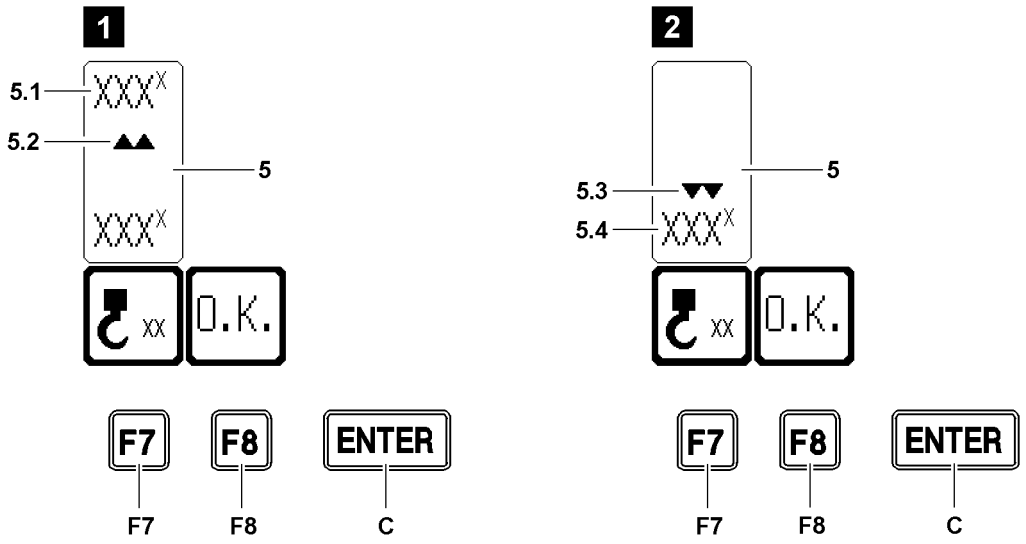

LWE/LR 1600-2-001/18101-07-02/en

Fig.113267

copyright © Liebherr-Werk Ehingen GmbH 2018

6.5 Input window hook block weight

After the selected set up configuration was confirmed in the set up program with the function key **F8**, the set up parameters are taken over by the LICCON computer system. Then the input window for the hook block weight appears automatically if a hook block weight entry is required.

WARNING
Deviation from specifications of erection and take down charts!
In case of a deviation from the specifications of the erection and take down charts, the crane can be overloaded and topple over!
Personnel can be severely injured or killed!

- ▶ The entered value must be taken from the erection and take down charts, depending on the selected set up configuration!
- ▶ If the actual weight of the hook block exceeds the permissible hook block weight, then the hook block must be carried along for erection / take down of the boom!
- ▶ The entered hook block weight is recorded with the data logger!

6.5.1 Starting the input window hook block weight

In the input window hook block weight, the crane operator must determine a hook block weight corresponding on the operating mode for erection / take down of the boom systems according to the erection / take down charts.

▶ Press the function key **F8** in the set up configuration screen.
or
Press the program key **P5**.

Result:

– The input window hook block weight appears.

6.6 User interface

1 Crane type identification
3 Function key line
5 Hook block weight icon
5.1 Input field for the hook block weight
5.2 Double arrow pointing up
  • Input field is active, illustration **1**
5.3 Double arrow pointing down
  • Current input value is active, illustration **2**
5.4 Current input value of hook block weight

LWE/LR 1600-2-001/18101-07-02/en

copyright © Liebherr-Werk Ehingen GmbH 2018

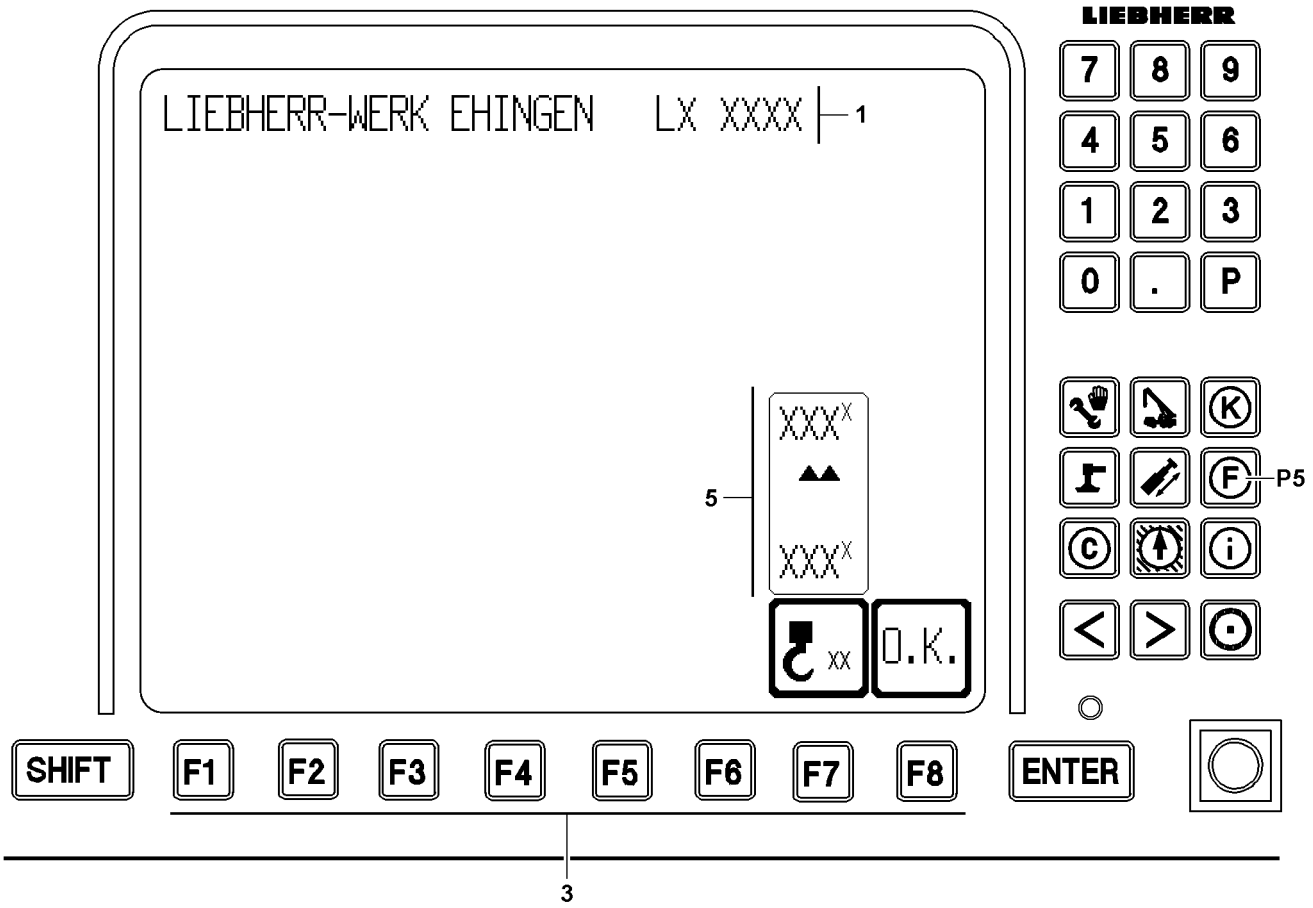

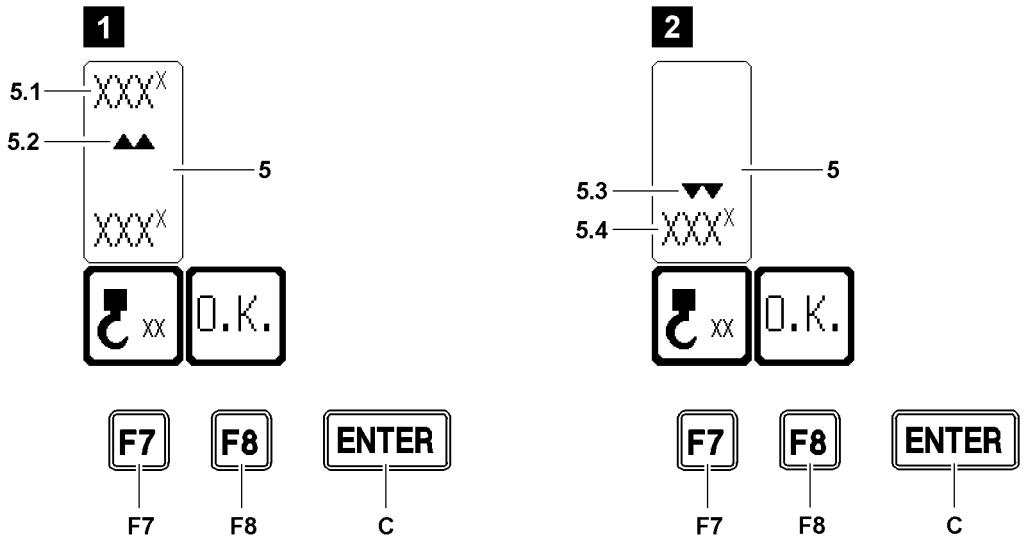

LWE/LR 1600-2-001/18101-07-02/en

Fig.113267

copyright © Liebherr-Werk Ehingen GmbH 2018

6.7 Enter the hook block weight

To be able to erect / take down a boom system, a valid hook block weight must first be entered in the input window hook block weight on the LICCON computer system and confirmed.

Take permissible weight of the hook block must be taken according to the selected set up configuration from the erection and take down charts.

Make sure that the following prerequisite is met:
– A valid set up configuration is entered and confirmed.

▶ Press the function key **F7**.

Double arrow up **5.2** is shown, input field hook block weight **5.1** is active.
▶ Enter the hook block weight via the keypad.

When the entered hook block weight is shown in the input field hook block weight **5.1**:
▶ Press the ENTER **C** key.

Result:

– The hook block weight is taken over as current input value hook block weight **5.4**, illustration **2**.
– The input field hook block weight **5.1** is faded out.
– Double arrow down **5.3** is shown.

Note
▶ By pressing the function key **F7** again, the entered hook block weight can be changed!

When the entered hook block weight has been accepted:
▶ Press the function key **F8**(OK).

Result:

– The entered hook block weight is accepted into the LICCON computer system.
– The crane operating screen appears.

Problem remedy
When luffing the boom up / down **with the hook block**, the maximum load according to the load chart and reeving is exceeded and a LMB stop is triggered?
▶ Place the hook block down and carry it along.

Problem remedy
When erecting / taking down the boom **with the hook block**, a higher value than the actual weight on the hook block is shown in the „Current load“ icon (crane operating screen)?
▶ For further procedure, see section „Adapt the input value hook block weight“.

Problem remedy
When erecting / taking down the boom **without the hook block** (load weighting), a value of more than 0 t is shown in the „Current load“ icon (crane operating screen)?
▶ For further procedure, see section „Adapt the input value hook block weight“.

LWE/LR 1600-2-001/18101-07-02/en

copyright © Liebherr-Werk Ehingen GmbH 2018

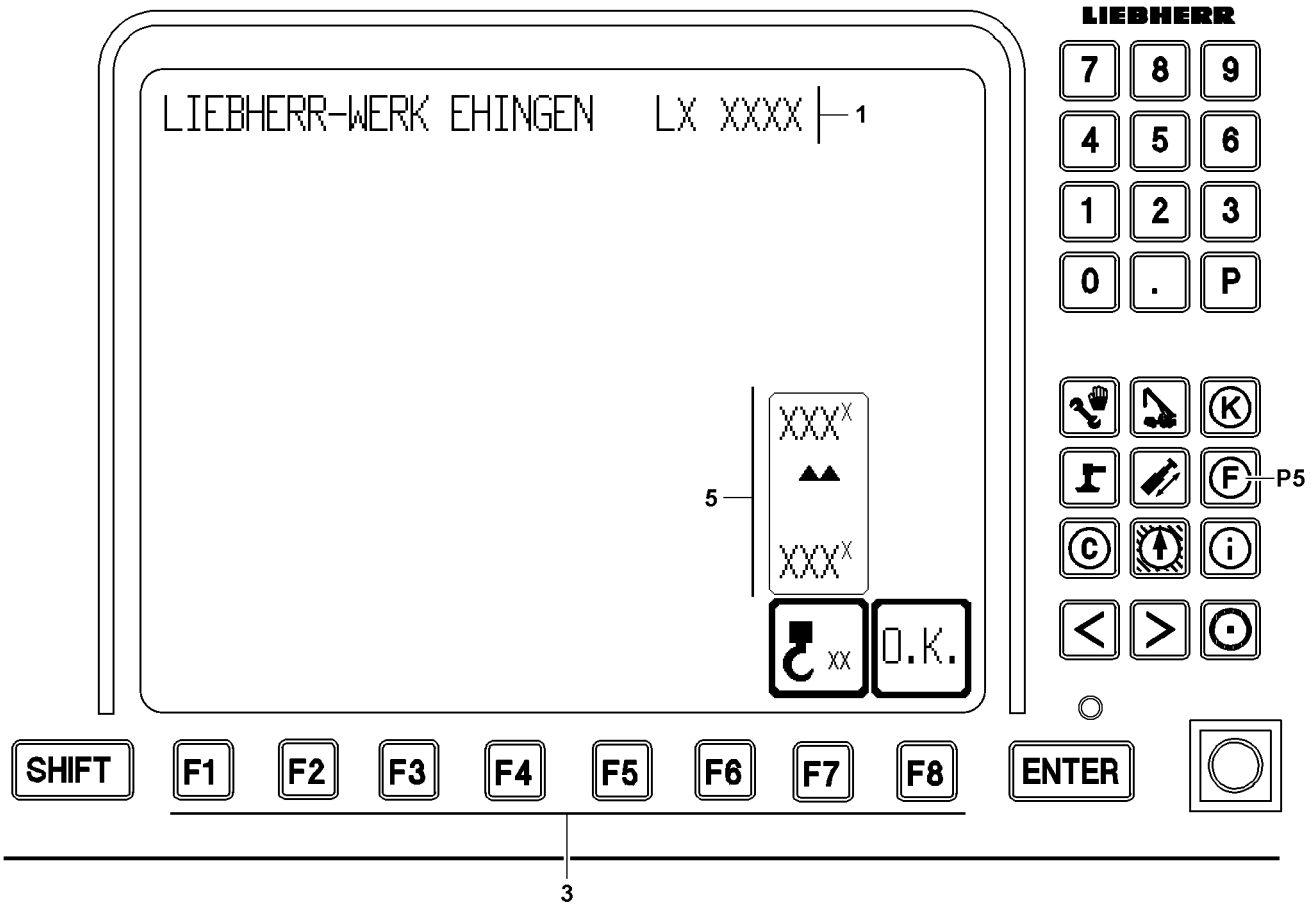

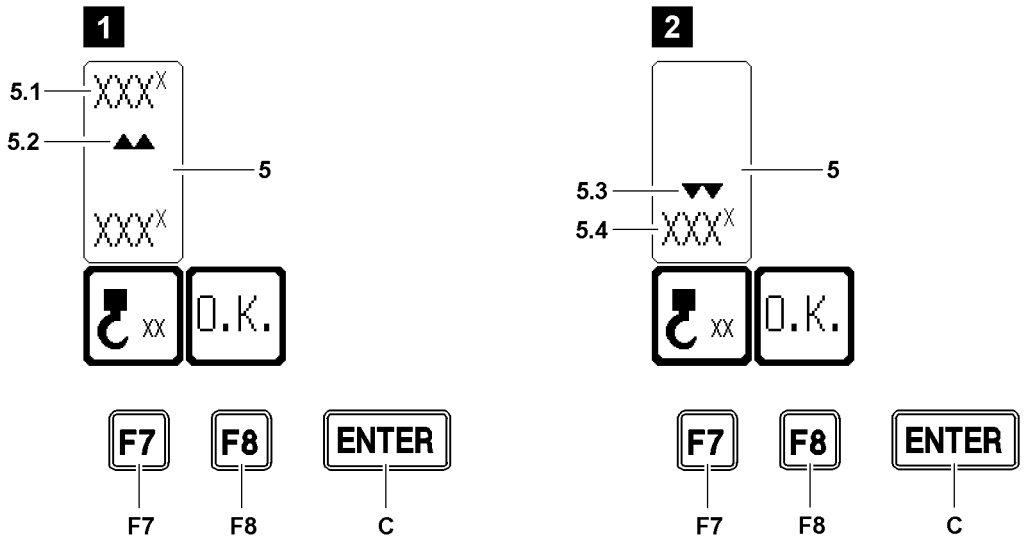

LWE/LR 1600-2-001/18101-07-02/en

Fig.113267

copyright © Liebherr-Werk Ehingen GmbH 2018

6.8 Adapting the input value hook block weight

It may be possible that the crane movement is shut off due to overload when trying to erect / take down the boom.

The reason for the shut off may be a weighing error.

Note
Weighing error!
- ▶ A weighing error is a combination of environmental influences, manufacturing and sensor tolerances!
- ▶ This combination can cause an increased display value in the „Current load“ icon (crane operating screen)!

A weighing error can be compensated for by adapting the input value hook block weight.

WARNING
All-inclusive adaptation of the hook block weight!
If the input value hook block weight is adapted and no weighing error was determined, then the crane can be overloaded and topple over!
Personnel can be severely injured or killed!
- ▶ Before adapting the input value hook block weight, an existing weighing error must have been found!
- ▶ Only the determined weighing error may be added to the permissible hook block weight!

If a weighing error is suspected, then the crane operator must ensure, before carrying out additional steps, that:
- A valid set up configuration has been entered on the LICCON computer system!
- The assembled boom system matches the entered set up configuration of the crane!
- The boom system is assembled according to the rod plans!
- All attachment parts on the boom have been removed!
- No guy rods are on the boom!
- The boom is free of snow and ice!
- The wind influence onto the boom is not too great!
- The weighing error is plausible and comprehensible!

If it is ensured that the above listed prerequisites are adhered to, then the determined weighing error may be added to the permissible hook block weight and entered in the hook block weight icon.

- ▶ Enter the adapted hook block weight, see section „Entering the hook block weight“.

Problem remedy
The adapted value of the hook block weight is **not** taken over into the LICCON computer system, even though the weighing error is plausible and comprehensible?
- ▶ For erection of the boom system, carry the hook block along.

LWE/LR 1600-2-001/18101-07-02/en

copyright © Liebherr-Werk Ehingen GmbH 2018

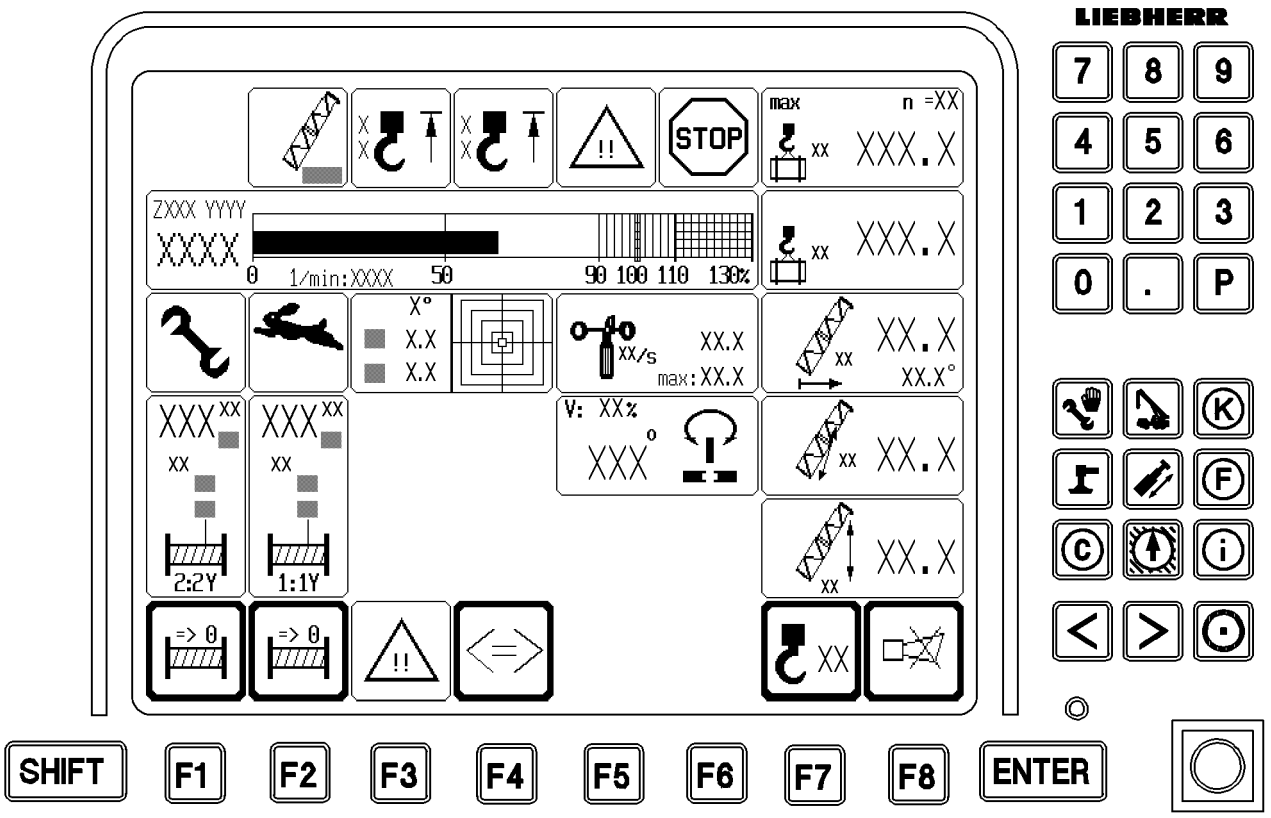

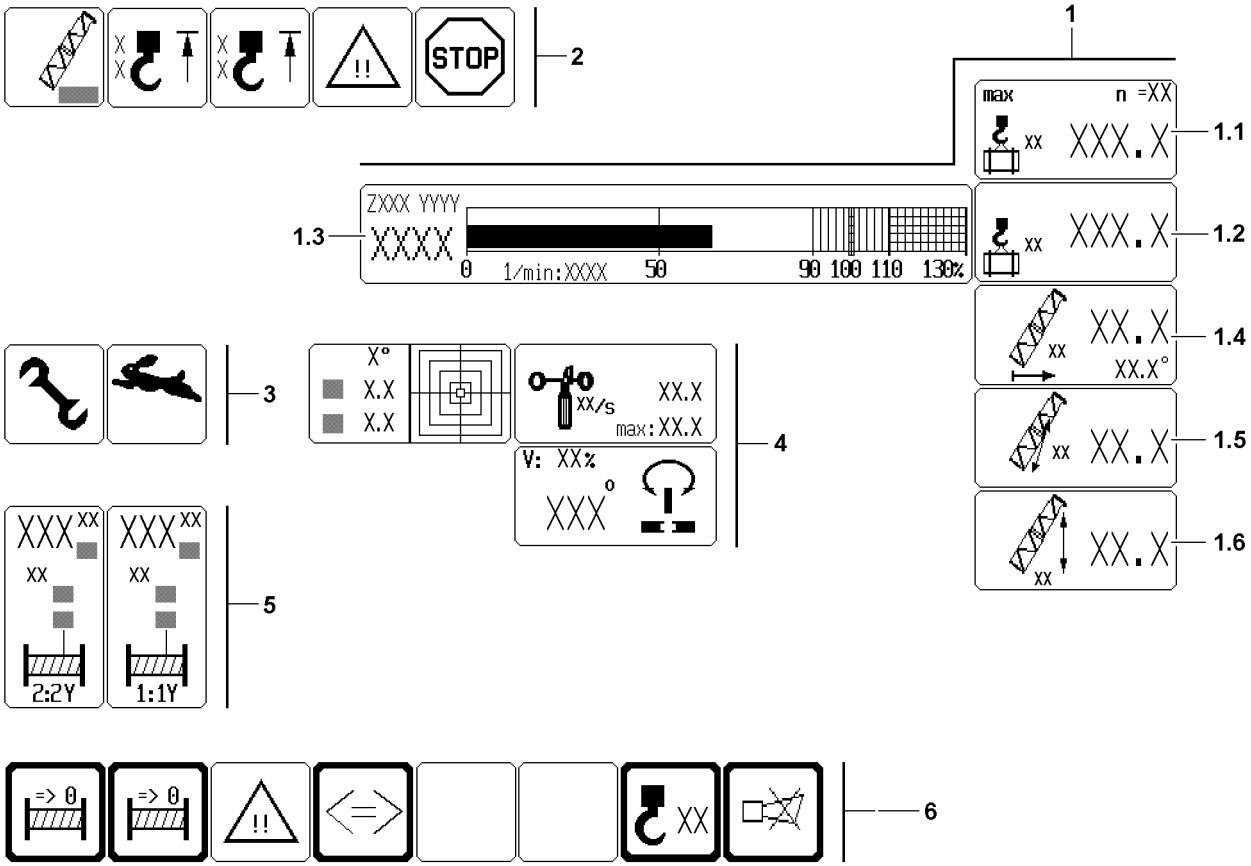

Fig.113450

LWE/LR 1600-2-001/18101-07-02/en

copyright © Liebherr-Werk Ehingen GmbH 2018

7 The Crane operation program on monitor 0

The LICCON program Crane operation assists the crane operator by displaying the data needed for operating the crane clearly on **monitor 0**. An acoustic signal accompanies all critical displays. Depending on the equipment, a range of other icons may also be turned on as additional displays, either as required by the crane operator, or automatically in the event of a problem.

It also alerts the crane operator to imminent overload conditions. In the event of overload and many error conditions, which could be hazardous during crane operation, the system shuts off.

The LICCON monitor is divided into six areas in the Crane operation program:

1 Crane geometry and load information

2 Alarm functions

3 Special functions

4 Monitored auxiliary functions

5 Winch display
- Winch 1 and winch 2

6 Function key line

Note
- ▶ The monitor illustrations in this chapter are only examples!
- ▶ The numerical values in the individual icons and charts do not have to necessarily match the crane exactly!
- ▶ The configuration of the LICCON monitor with icons is only descriptive!
- ▶ An identical icon display will **not** appear during crane operation!

7.1 Crane geometry and load information

Note
- ▶ The crane illustrations in this section are only examples and are generalized!
- ▶ They may differ from the crane type and equipment!

The information regarding crane geometry and load is shown in six icons:

1.1 „Maximum load“ icon

1.2 „Current load“ icon

1.3 „Dynamic utilization bar“ icon

1.4 „Boom radius“ icon

1.5 „Boom length“ icon

1.6 „Pulley head height“ icon

LWE/LR 1600-2-001/18101-07-02/en

copyright © Liebherr-Werk Ehingen GmbH 2018

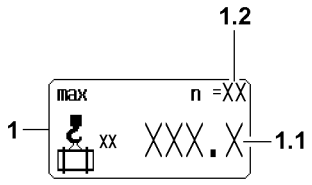

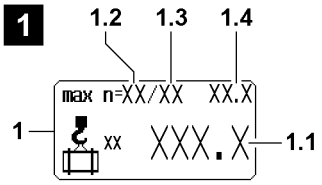

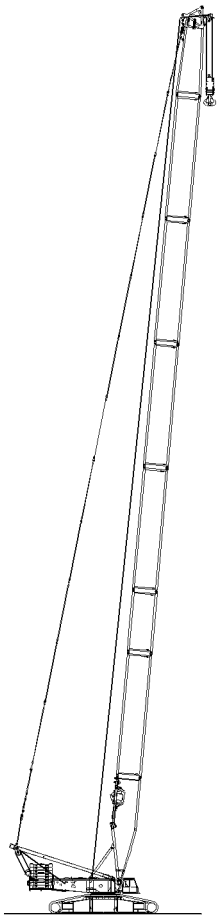

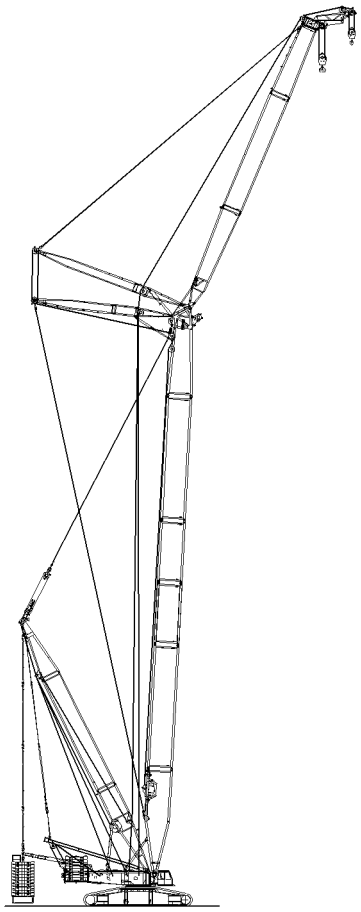

LWE/LR 1600-2-001/18101-07-02/en

Fig.111931

copyright © Liebherr-Werk Ehingen GmbH 2018

7.1.1 Maximum load

According to the set up configuration, the following changes:
- The illustration of the icon.
- The position of values in the icon, see sample illustration **1**!

1 „Maximum load“ icon
- In [t] or [lbs]

1.1 Maximum load on the boom
- In [t] or [lbs]
- The load capacity depends on:
  - The selected operating mode
  - The selected set up configuration (load chart)
  - The boom radius
  - The various boom angles
  - The derrick ballast radius*****
  - The currently pulled derrick ballast*****
  - The reeving of the hoist rope on the boom
- **Note:**
  The maximum load on the boom (also: Maximum load according to the load chart and the reeving on the boom) is the load, which the crane can lift in its current operating condition with the maximum utilized ballast / counterweight!
- **Note:**
  „? ? ? . ?“ is shown when no load chart value can be accessed!
  An error message is issued, see Diagnostics manual!
  - Example:
    The crane is not in the range of the load chart!
    or
    The value cannot be calculated / determined!
- **Note:**
  In assembly operating mode SA, the maximum load capacity is shown in [t] or [lbs], according to the corresponding load chart.

1.2 Reeving number hoist rope on boom
- n = reeving number of hoist rope on the pulley head selected via the load chart. The reeving number has been set first in the set up program.
- **Note:**
  - In the assembly operating mode SA, the reeving number is always 0.

1.3 Reeving number of hoist rope on the boom nose*****
- n = reeving number of hoist rope on the installed boom nose*****. The reeving number has been set first in the set up program.

1.4 Maximum load carrying capacity of the installed boom nose*****
- In [t] or [lbs]
- **Note:**
  The „Maximum load carrying capacity“ of the boom nose***** depends on the set reeving of the boom nose*****!
- **Note:**
  The maximum load carrying capacities on the boom (1.1) and on the boom nose***** (1.4) are monitored simultaneously!
  If the load on one position is exceeded, then an LMB stop is issued!

LWE/LR 1600-2-001/18101-07-02/en

copyright © Liebherr-Werk Ehingen GmbH 2018

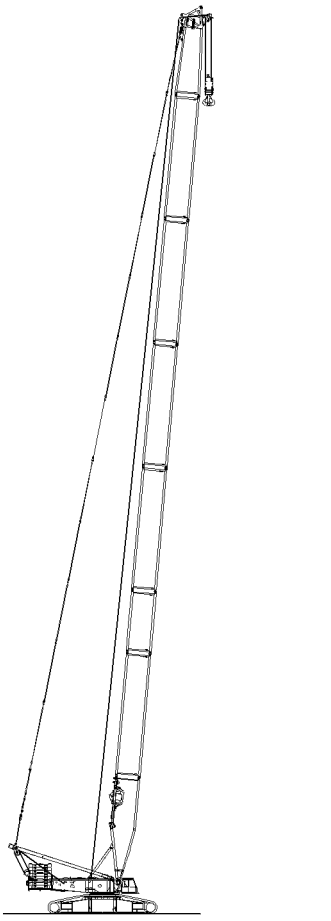

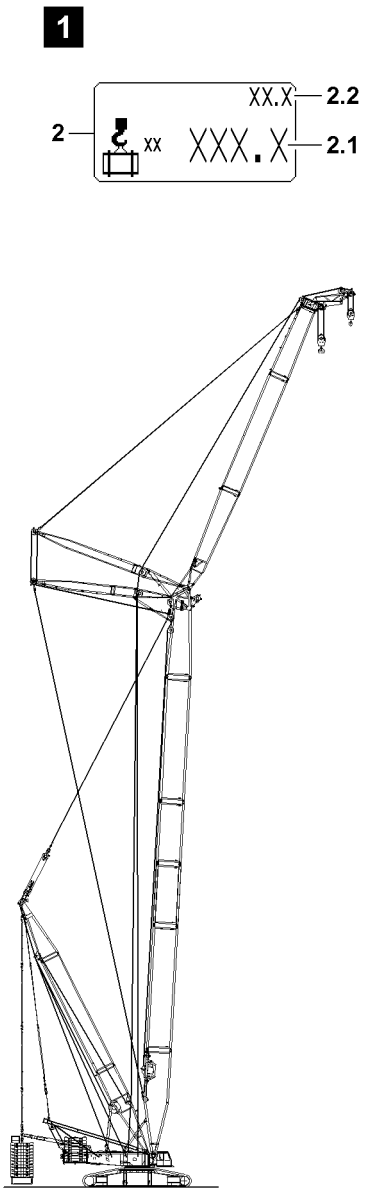

Fig.111932

LWE/LR 1600-2-001/18101-07-02/en

copyright © Liebherr-Werk Ehingen GmbH 2018

7.1.2 Current load

According to the set up configuration, the following changes:
- The illustration of the icon.
- The position of values in the icon, see sample illustration **1**!

2 „Current load“ icon
- In [t] or [lbs]

2.1 Current load on the boom
- Actual load display = current load (in [t] or [lbs])on the selected boom
- Display of the calculated total load including the weights of the carrying equipment, the lifting equipment (hook block) and / or the fastening equipment, but **without** the nominal weight of the hoist rope.
- **Note:**
  „? ? ? . ?“ is shown if the value cannot be calculated / determined!
  An error message is issued, see Diagnostics manual!

Note
Assembly operating mode SA
- ▶ In assembly operating mode SA, the SA-frame is treated as the boom!
- ▶ The current load on the SA-frame is determined via pressure sensors on the assembly cylinder and shown in the „Current load“ icon **2**.

2.2 Current load on the boom nose*
- Actual load display = current load in [t] or [lbs] on the boom nose*.
- Display of the calculated total load on the boom nose*, including the weights of the carrying equipment, the lifting equipment (hook block) and / or the fastening equipment, **including** the hoist rope.
- **Note:**
  „? ? ? . ?“ is shown if the value cannot be calculated / determined!
  An error message is issued, see Diagnostics manual!

WARNING
Tolerances at actual load display!
Due to tolerances, there may be a deviation in the actual load display in the „Current load“ icon **2**!
The current load display in the „Current load“ icon **2** is no calibrated weighing device!
- ▶ Always observe the actual weight of the load in connection with the load charts and the set up configuration!

Note
Net load display in the „Current load“ icon **2**!
- ▶ By using the function „Tare“ (see description of function key **F7** in section „Function key icon line in crane operation program“) the display can be changed over to display the net load! In the icon appears additionally the word „Net“!

copyright © Liebherr-Werk Ehingen GmbH 2018

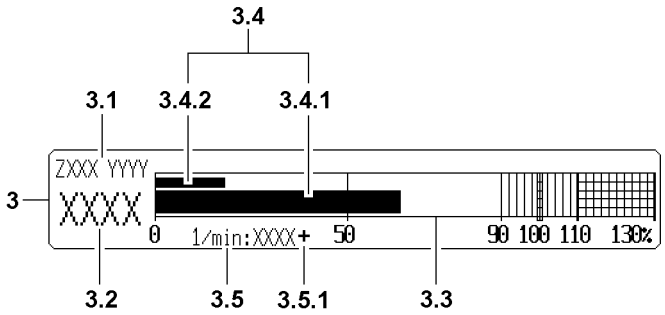

Fig.111933

LWE/LR 1600-2-001/18101-07-02/en

copyright © Liebherr-Werk Ehingen GmbH 2018

7.1.3 Dynamic utilization bar

3 „Dynamic utilization bar“ icon
- In percent [%]

3.1 Organization number
- For internal Liebherr load chart administration

3.2 Short code
- Identifies the selected set up configuration

3.3 Utilization scale
- Marking from a utilization of 90 %: **Advance warning**
- Marking at a utilization of 100 %: **STOP shut off**

3.4 Utilization bar

3.4.1 Utilization bar of crane
- According to load chart and reeving
- **Note:**
  The utilization bar is the measurement for the current utilization of the crane!

Utilization of crane according to load chart and reeving	=	Current load on the boom head / Maximum load according to load chart and reeving

3.4.2 Utilization bar boom nose*
- **Note:**
  Maximum load carrying capacity of the boom nose*: Load which can be lifted by the boom nose* alone!
  Prerequisite: Sufficiently high load capacity on the boom head!

Utilization of the boom nose*	=	Current load carrying capacity of the boom nose* / Maximum load carrying capacity of the boom nose*

3.5 Engine speed
- In [rpm] or [n/min]
- **Note:**
  „????“ is displayed in case of an error in rpm value for approximately 5 seconds!
  Then the nominal rpm for the diesel engine is set for the output regulation of the drives!
  The set nominal rpm is shown blinking!
  An error message is issued!

3.5.1 Engine rpm lock
- The engine rpm can be locked on the master switch. If the engine rpm has been locked, the icon „+“ appears behind the rpm display.

LWE/LR 1600-2-001/18101-07-02/en

copyright © Liebherr-Werk Ehingen GmbH 2018

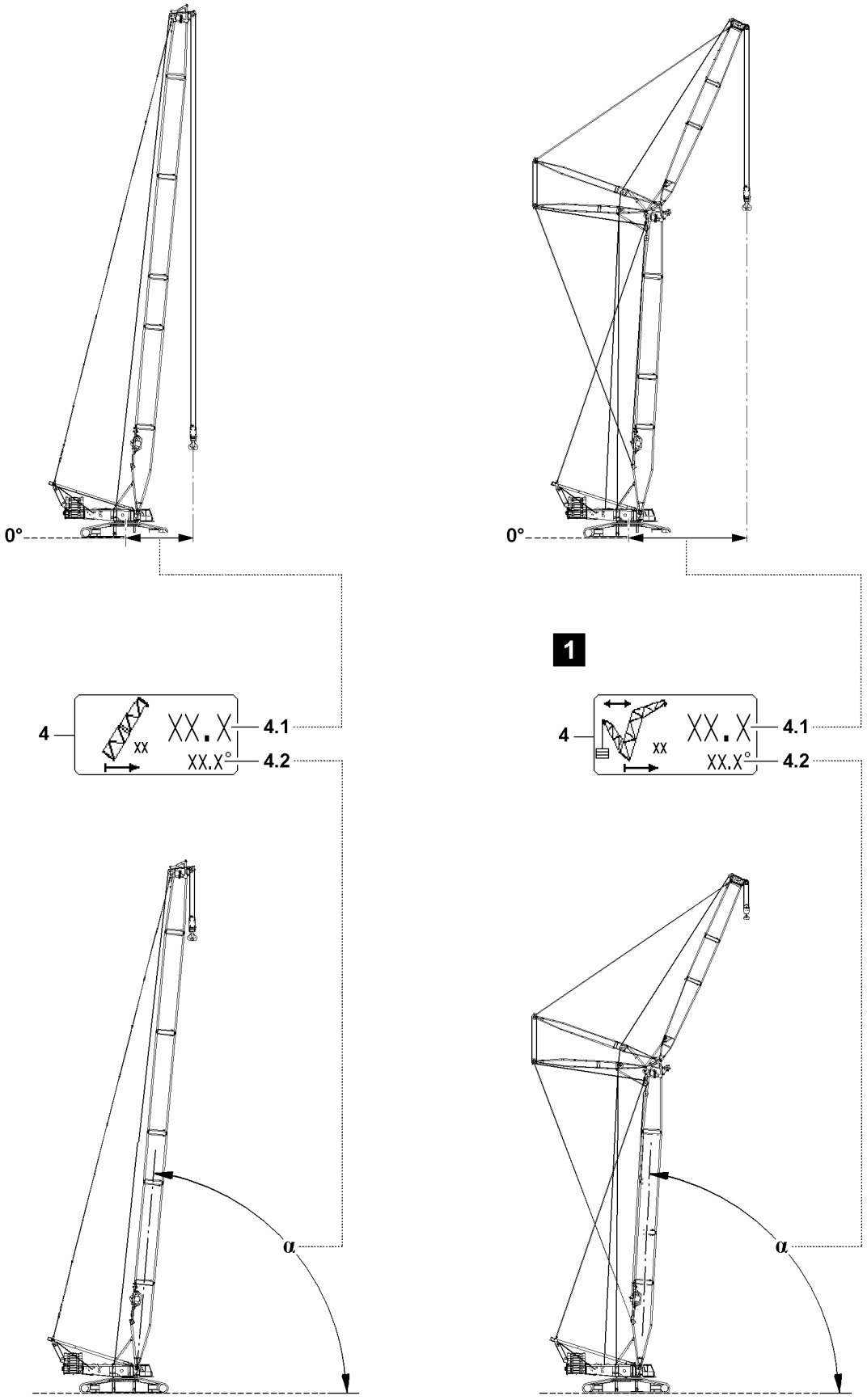

Fig.112633

LWE/LR 1600-2-001/18101-07-02/en

copyright © Liebherr-Werk Ehingen GmbH 2018

7.1.4 Radius

According to the set up configuration, the following changes:
- The illustration of the icon.
- The position of values in the icon, see sample illustration **1**!

4 „Boom radius“ icon

4.1 Radius
- In [m] or [ft]
  Denotes the horizontal distance of the load hook from the center of rotation of the crane superstructure, measured on the ground! This also takes into account the boom flexation due to its own weight and the suspended weight of the load!
- **Note:**
  „? ? ? . ?“ is shown if the value cannot be calculated / determined!
  An error message is issued, see Diagnostics manual!

4.2 Main boom angle
- In [°]
- Displayed is the medium value of the angle sensor in the main boom pivot section and the angle sensor in the main boom pulley head.
- **Note:**
  „? ? ? . ?“ is shown if the value cannot be calculated / determined!
  An error message is issued, see Diagnostics manual!

Note

▶ Main boom angle **4.2** (angle α): The angle of the main boom to the placement surface of the crane!

LWE/LR 1600-2-001/18101-07-02/en

copyright © Liebherr-Werk Ehingen GmbH 2018

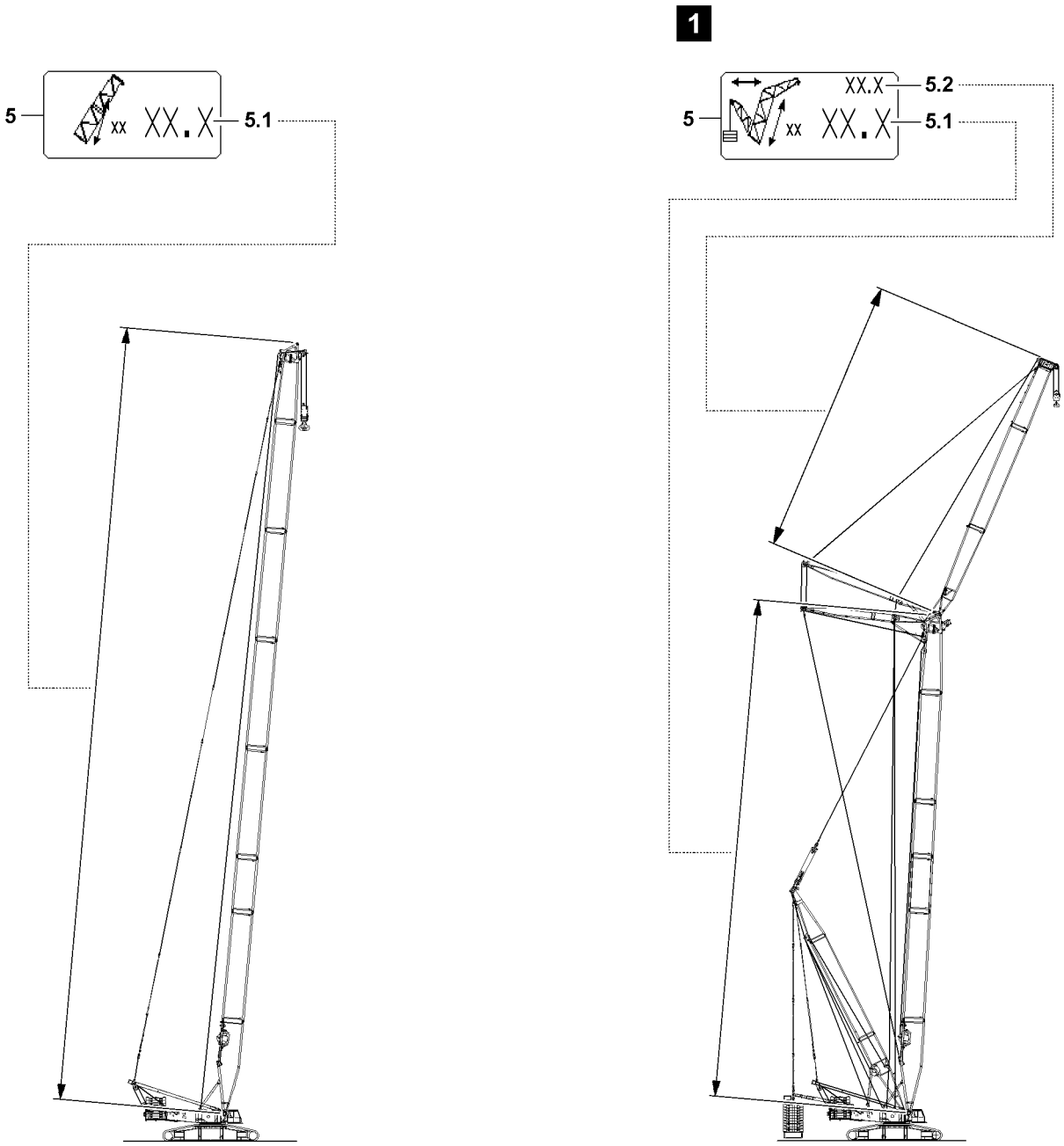

Fig.112638

LWE/LR 1600-2-001/18101-07-02/en

copyright © Liebherr-Werk Ehingen GmbH 2018

7.1.5 Boom length

According to the set up configuration, the following changes:
- The illustration of the icon.
- The position of values in the icon, see sample illustration **1**!

5 „Boom length“ icon

5.1 Length of main boom
- In [m] or [ft]

5.2 Length of auxiliary boom / accessory
- In [m] or [ft]

LWE/LR 1600-2-001/18101-07-02/en

copyright © Liebherr-Werk Ehingen GmbH 2018

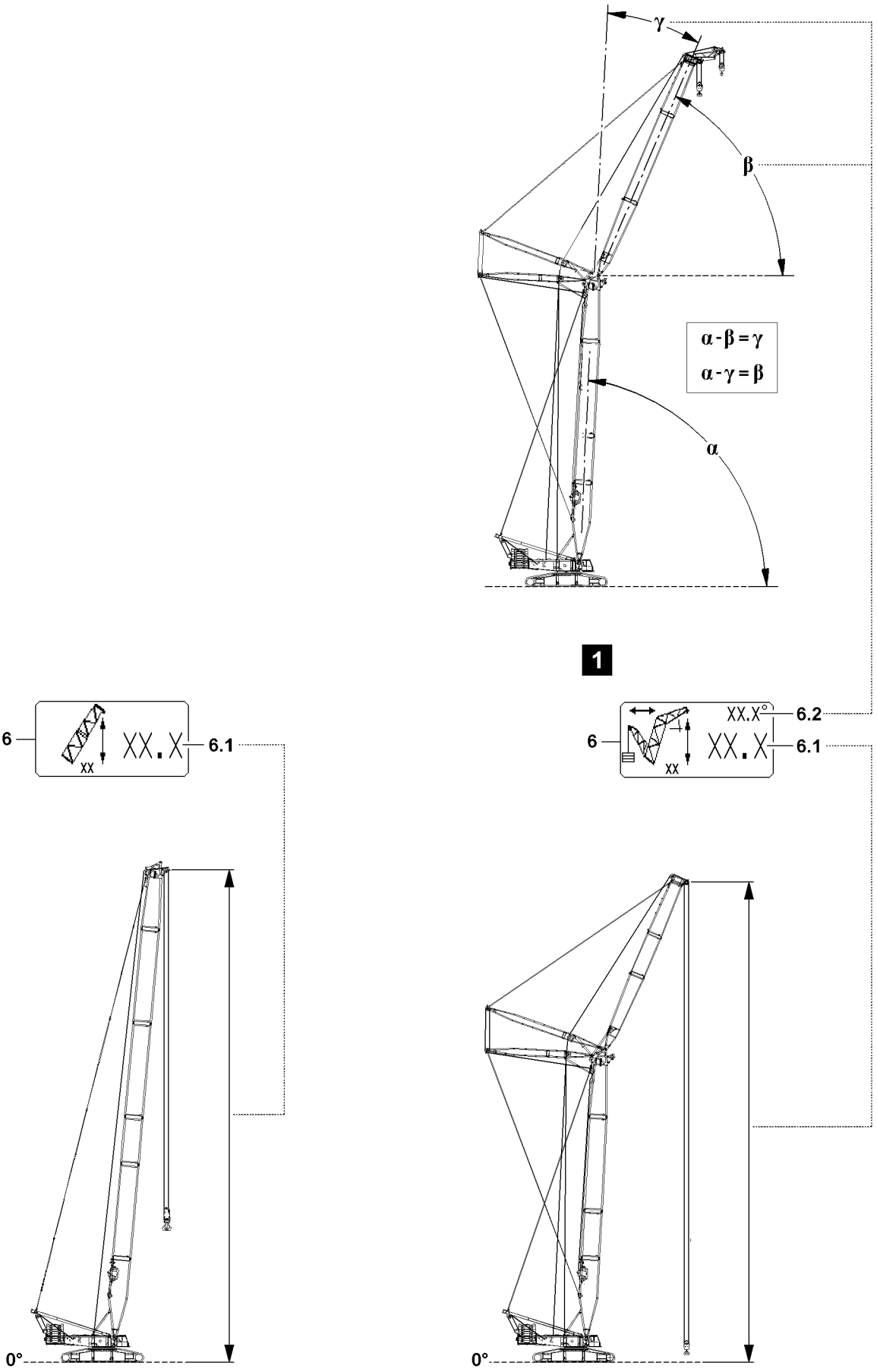

Fig.112639

LWE/LR 1600-2-001/18101-07-02/en

copyright © Liebherr-Werk Ehingen GmbH 2018

7.1.6 Pulley head height

Note

- ▶ Main boom angle **α**: The angle of the main boom to the placement surface of the crane!
- ▶ Angle auxiliary boom / accessory **β**: The angle of the auxiliary boom / accessory to the placement surface of the crane!
- ▶ Relative angle auxiliary boom / accessory **γ**: The angle of the auxiliary boom / accessory is determined relative to the main boom!

According to the set up configuration, the following changes:

- The illustration of the icon.
- The position of values in the icon, see sample illustration **1**!

6 „Pulley head height“ icon

6.1 Pulley head height
- In [m] or [ft]
- Marks the vertical distance from the placement surface of the crane to the selected pulley head axle.
  The displayed maximum load is valid for the selected pulley head axle.
- **Note:**
  „? ? ? . ?“ is shown if the value cannot be calculated / determined!
  An error message is issued, see Diagnostics manual!

6.2 Angle auxiliary boom / accessory
- In [°]
- **Note:**
  „? ? ? . ?“ is shown if the value cannot be calculated / determined!
  An error message is issued, see Diagnostics manual!

Note

- ▶ Depending on the set up configuration and the load chart, a differentiation is made between an absolute angle display or a relative angle display!

β Absolute angle auxiliary boom / accessory
- The angle of the auxiliary boom / accessory to the horizontal (placement surface of the crane) in [°]
- Display absolute angle: For operating modes with load chart for a fixed defined main boom angle!

or

γ Relative angle auxiliary boom / accessory
- Angle between the main boom and the auxiliary boom / accessory in [°]
- Display relative angle: For operating modes with load chart for a fixed defined angle auxiliary boom / accessory!

LWE/LR 1600-2-001/18101-07-02/en

copyright © Liebherr-Werk Ehingen GmbH 2018

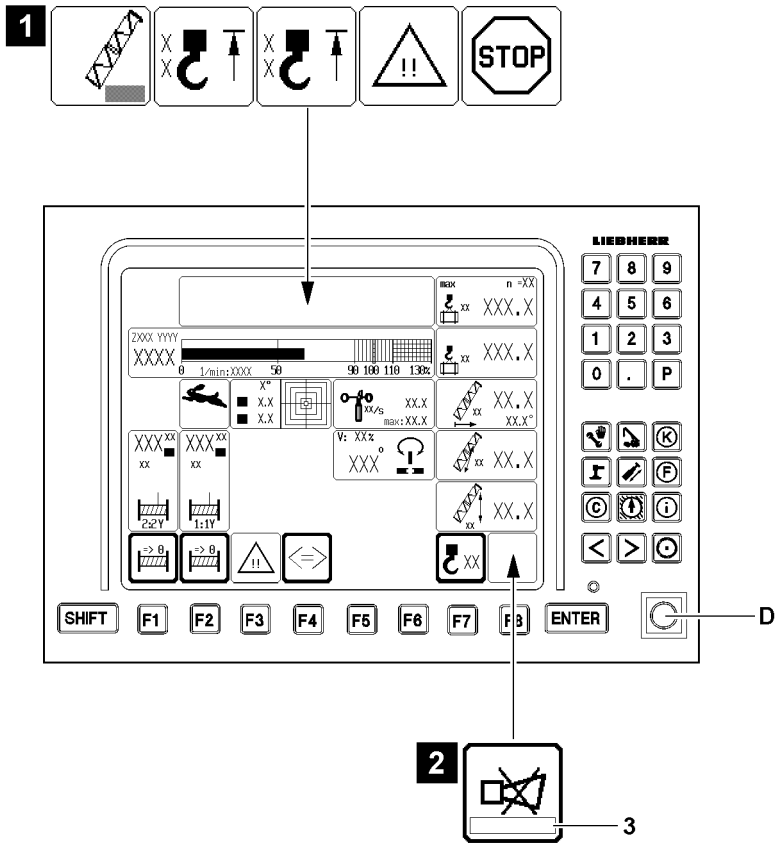

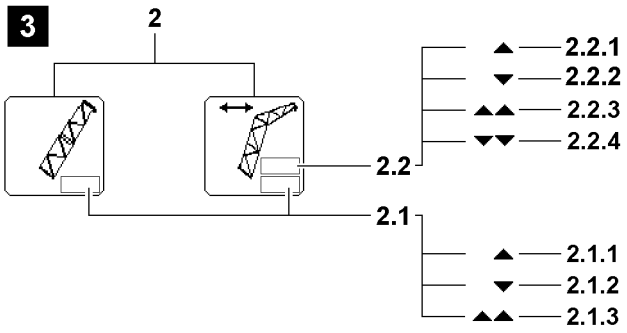

LWE/LR 1600-2-001/18101-07-02/en

Fig.111930

copyright © Liebherr-Werk Ehingen GmbH 2018

7.2 Alarm functions

NOTICE
Triggered alarm function!
If an alarm function is triggered (for example a advance warning occurrence or LMB Stop), the cause must be determined!
- ▶ Always pay attention to triggered alarm functions!
- ▶ Alarm functions can flash over the monitor!

The limit ranges of the crane movements are monitored. When the limit ranges are reached, the crane operator is warned by the alarm functions.

The alarm functions are shown by the LICCON monitor:

- Optically with icons, see illustration **1**.
- Acoustically by a warning sound „Horn“, see illustration **2**.

In case of a failure of the relevant sensors / limit switches, special error messages **3** are added.

7.2.1 Boom limitation

See illustration **3**

Limit signs main boom

Note
- ▶ The icon „Boom limitation“ **2** can change in different operating modes, but it is shown always at the same position in the LICCON monitor!
- ▶ The field **2.1** „on the bottom“ refers to the main boom!
- ▶ The field **2.2** „on the top“ refers to the auxiliary boom / accessory!

LWE/LR 1600-2-001/18101-07-02/en

copyright © Liebherr-Werk Ehingen GmbH 2018

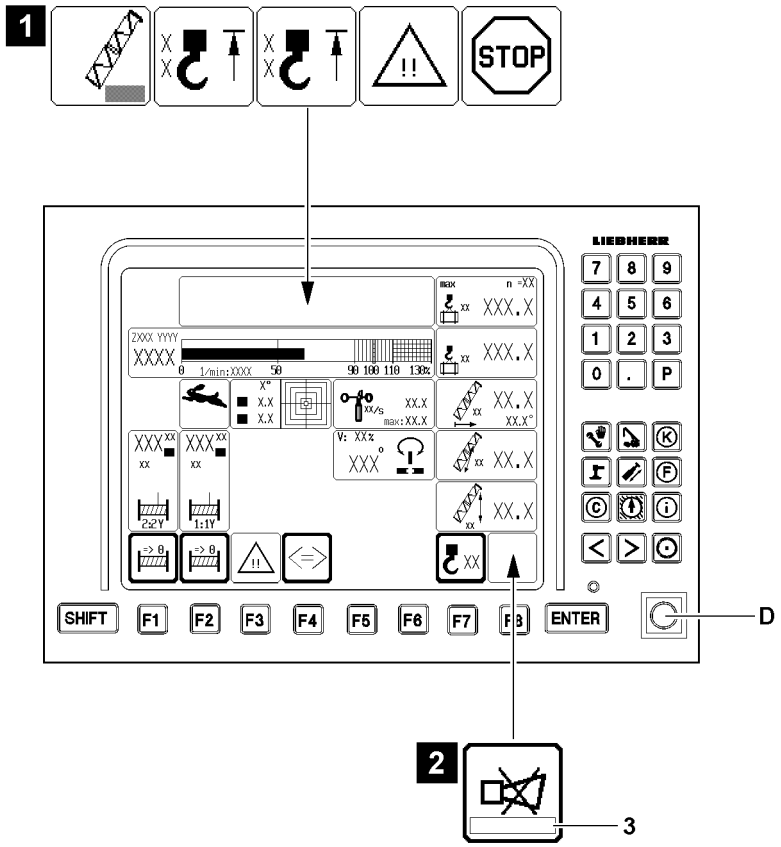

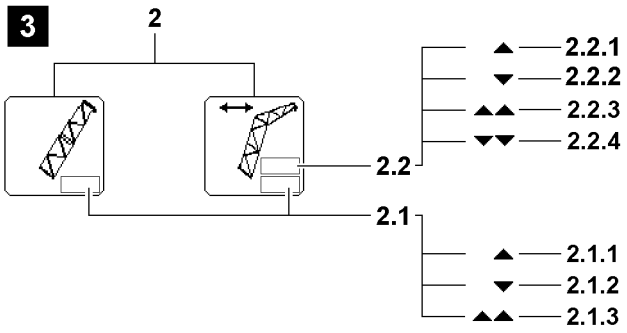

LWE/LR 1600-2-001/18101-07-02/en

Fig.111930

copyright © Liebherr-Werk Ehingen GmbH 2018

2.1 „Boom limitation Main boom“ icon
- The luffing range of the main boom is limited both upwards and downwards
- This icon appears if an end position determined by the load chart is reached when luffing the boom or when luffing the boom is disabled by a proximity switch
- Exclamation marks show when an associated sensor is defective

Position	Icon	Description
2.1.1	▲	The shut off „Luffing up the main boom“ is made by running against the upper load chart limit **or** Utilization larger than **95 %** and falling load carrying capacity when luffing up the main boom. **Note:** Luffing down the main boom is still possible!
2.1.2	▼	The shut off „Luffing down the main boom“ is made by running against the lower load chart limit. **Note:** Luffing up the main boom is still possible!

WARNING
Alarm function deactivated!
The shut off of crane movement by position **2.1.1** and / or position **2.1.2** is bypassed by pressing the bypass key button **D** or the assembly key button (see Crane operating instructions, chapter 4.01)!
▶ The crane operator is obligated to carry out all crane movements with foresight and extreme caution!

Position	Icon	Description
2.1.3	▲▲	The shut off „Luffing up the main boom“ is triggered by running against the block limit switch of the main boom relapse cylinders on the left / right (boom steep) **or** due to an error in one block limit switch of the main boom relapse cylinders. **Note:** Luffing down the main boom is still possible!

LWE/LR 1600-2-001/18101-07-02/en

copyright © Liebherr-Werk Ehingen GmbH 2018

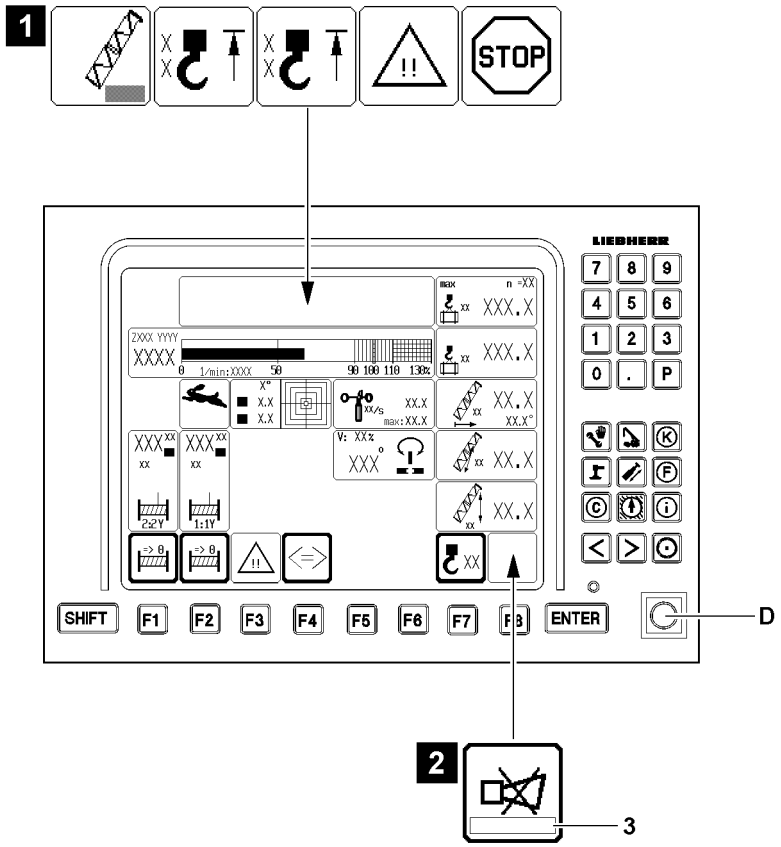

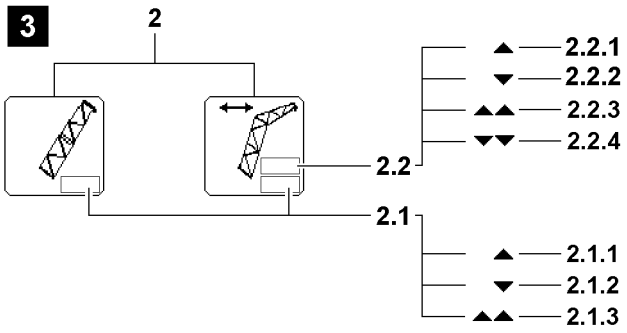

LWE/LR 1600-2-001/18101-07-02/en

Fig.111930

copyright © Liebherr-Werk Ehingen GmbH 2018

Limit sign auxiliary boom / accessory

Note

- ▶ The icon „Boom limitation“ **2** can change in different operating modes, but it is shown always at the same position in the LICCON monitor!
- ▶ The field **2.1** „on the bottom“ refers to the limit sign main boom!
- ▶ The field **2.2** „on the top“ refers to the limit sign auxiliary boom / accessory!

2.2 „Boom limitation auxiliary boom / accessory“ icon

- The luffing range of the auxiliary boom / accessory is limited both upwards and downwards.
- This icon appears if an end position determined by the load chart is reached when luffing the auxiliary boom / accessory or when luffing is disabled by a limit switch.
- Exclamation marks show when an associated sensor is defective.

Position	Icon	Description
2.2.1	▲	The shut off „Luffing up the auxiliary boom / accessory“ is triggered by running against the upper load chart limit. **Note:** Luffing the auxiliary boom / accessory down remains possible!
2.2.2	▼	The shut off „Luffing down the auxiliary boom / accessory“ is triggered by running against the lower load chart limit. **Note:** Luffing the auxiliary boom / accessory up remains possible!

WARNING

Alarm function deactivated!

The shut off of crane movement by position **2.2.1** and / or position **2.2.2** is bypassed by pressing the bypass key button **D** or the assembly key button (see Crane operating instructions, chapter 4.01)!

- ▶ The crane operator is obligated to carry out all crane movements with foresight and extreme caution!

LWE/LR 1600-2-001/18101-07-02/en

copyright © Liebherr-Werk Ehingen GmbH 2018

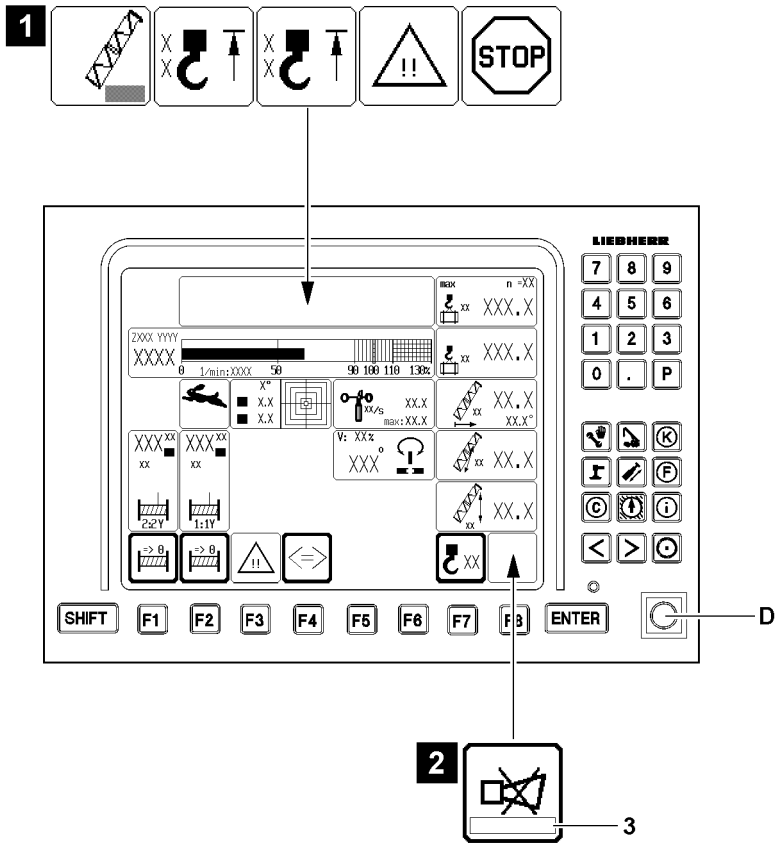

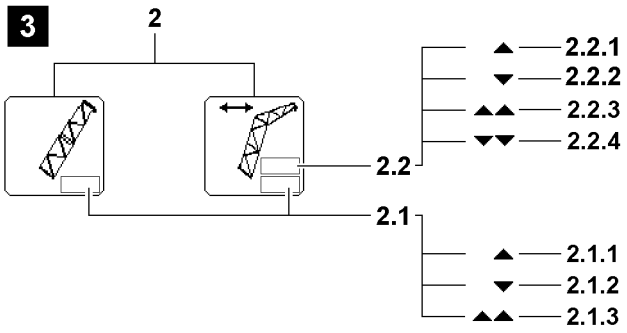

LWE/LR 1600-2-001/18101-07-02/en

Fig.111930

copyright © Liebherr-Werk Ehingen GmbH 2018

Position	Icon	Description
2.2.3		The shut off „Luffing up the auxiliary boom / accessory“ is triggered by running against a block limit switch of the relapse cylinders auxiliary boom / accessory **or** the relapse flap **or** an error on one limit switch occurs. **Note:** Luffing the auxiliary boom / accessory down remains possible!
2.2.4		The shut off „Luffing down the auxiliary boom / accessory“ is triggered by running against a block limit switch („Auxiliary boom / accessory lower left / right“) **or** an error on one of these limit switches occurs. **Note:** Luffing the auxiliary boom / accessory up remains possible!

LWE/LR 1600-2-001/18101-07-02/en

copyright © Liebherr-Werk Ehingen GmbH 2018

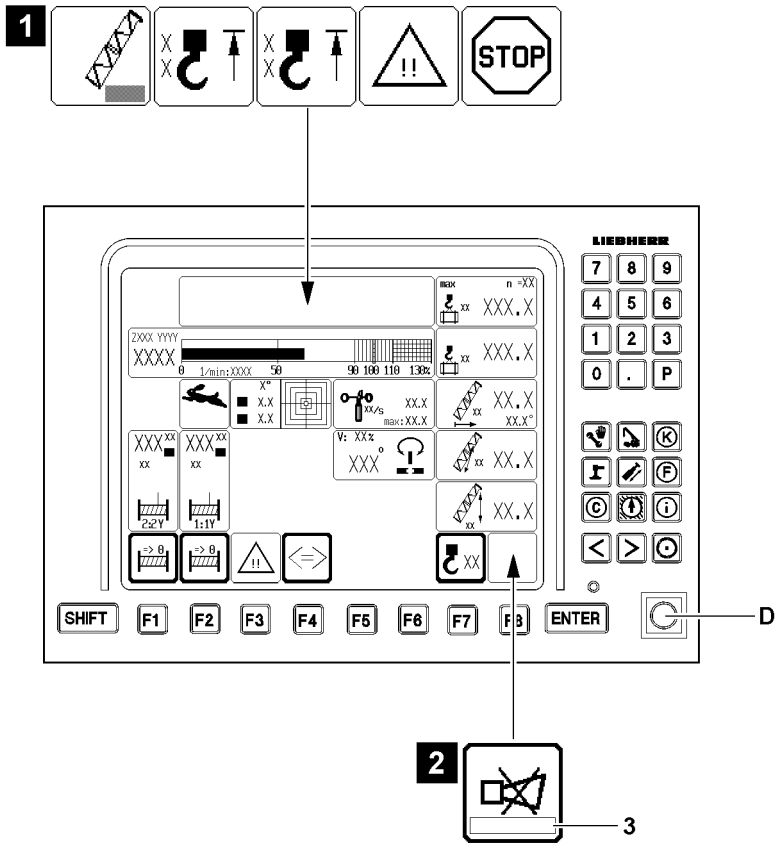

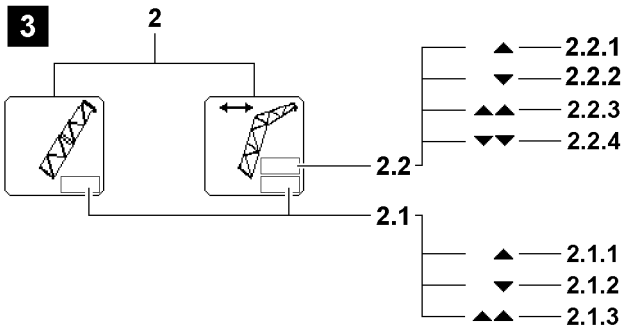

LWE/LR 1600-2-001/18101-07-02/en

Fig.111930

copyright © Liebherr-Werk Ehingen GmbH 2018

7.2.2 Failure of sensor / limit switch

If an error message is issued in the horn icon **3** in case of failure of the sensor / limit switch, see illustration **2**!

The error message shows defective sensors / limit switches, see Diagnostics manual!

WARNING
Crane operation after failure of sensor / limit switch!
If not all necessary display values are shown any longer in the LICCON monitor, then the crane may only be operated for load moment reducing crane movements and to avoid an emergency situation!
In crane operation with missing display values, the crane can be overloaded and topple over or collapse!
Personnel can be killed or seriously injured!

- ▶ The error must be remedied immediately!
- ▶ Crane movements after a failure of a sensor / limit switch must be carried out anticipatorily and with extreme caution! It must be ensured that a valid load chart or an erection / take down chart is available for the crane movement to be carried out!

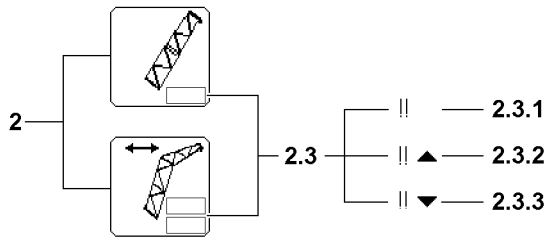

Fig.111928

Position	Icon	Description
2.3.1	!!	On the auxiliary boom / accessory, at least one associated sensor / limit switch is defective / missing. If an alarm function occurs at the same time, then the icon can be shown differently, see position **2.3.1**, position **2.3.2** or position **2.3.3**.
2.3.2	!! ▲	
2.3.3	!! ▼	**Note**: Not every failure of a sensor / limit switch on the boom is shown in the „Boom limitation“ icon **2**. Observe the error message in Horn **3** icon!

Note

- ▶ If only one of the double limit switches or sensor is not ok, then the crane can continue to be operated with "normal function". However, it must be operated with increased caution, since only one of the double limit switches / sensors is functioning!
- ▶ For that reason, the error must be remedied immediately!
- ▶ When deflecting the master switch, an error message is issued in the horn icon **3**! The error message shows defective sensors / limit switches!
- ▶ If the error cannot be remedied by yourself, contact Liebherr Service!

copyright © Liebherr-Werk Ehingen GmbH 2018

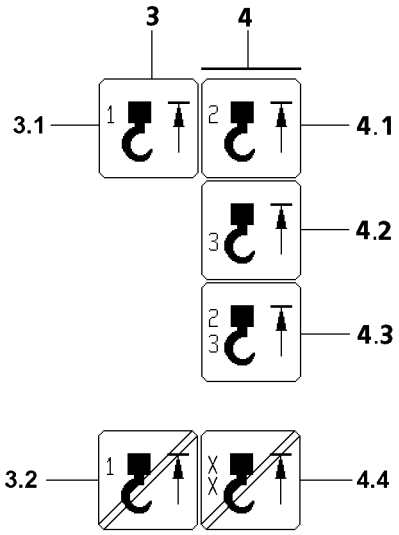

Fig.112365

LWE/LR 1600-2-001/18101-07-02/en

copyright © Liebherr-Werk Ehingen GmbH 2018

7.2.3 Hoist top limit switch HES1

3 „Hoist top on HES1“ icon
- In order to prevent the crane from being operated without hoist limit switches (HES), the minimum hoist limit switch configuration is continuously monitored. If a hoist limit switch required for a particular operating mode is not plugged in, therefore not active on the LSB bus system, a LMB STOP is triggered and an error message is also issued.
- **Note:**
  HES1 (HES1A + HES1B) must be present for all operating modes with main boom!
  HES1 (HES1A + HES1B) turn the same functions off as the remaining hoist limit switches!

3.1 HES1
- Location HES1A:
  Main boom end section: left, bus address: 27
- Location HES1B:
  Main boom end section: right, bus address: 28
- The **„HES1“** icon appears if:
  - The hook block runs against the HES1A.
  - HES1A is not active, although it must be present on the bus.
  - HES1A has an internal error.
  - The hook block runs against the HES1B.
  - HES1B is not active, although it must be present on the bus.
  - HES1B has an internal error.
- **Note:**
  The crane movements spool the hoist winches up, luff the boom down as well as luff the derrick boom down are turned off!

3.2 „Hoist top on boom bypassed“ icon
- The icon appears when the „Hoist top shut off“ is bypassed

LWE/LR 1600-2-001/18101-07-02/en

copyright © Liebherr-Werk Ehingen GmbH 2018

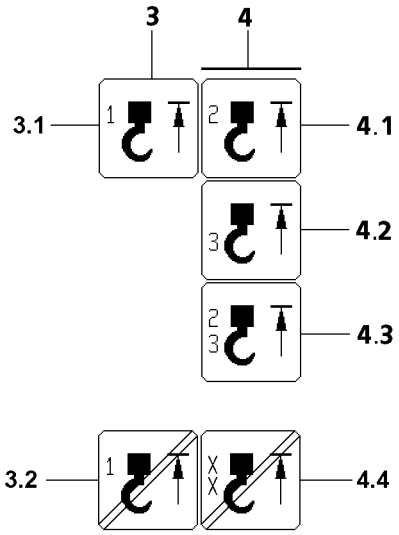

Fig.112365

LWE/LR 1600-2-001/18101-07-02/en

copyright © Liebherr-Werk Ehingen GmbH 2018

7.2.4 Hoist top limit switch HES2 and HES3

4 „Hoist top on HES2 / HES3 “ icon

- In order to prevent the crane from being operated without hoist limit switches (HES), the minimum hoist limit switch configuration is continuously monitored. If a hoist limit switch required for a particular operating mode is not plugged in, therefore not active on the LSB bus system, a LMB STOP is triggered and an error message is also issued.
- **Note:**
  HES2 (HES2A + HES2B) must be present for all operating modes with auxiliary boom / accessory!
  HES1 (HES2A + HES2B) turn the same functions off as the remaining hoist limit switches!
- **Note:**
  HES3 must be present for all operating modes with boom nose*****!
  HES3 turn the same functions off as the remaining hoist limit switches!

4.1 HES2

- Installation location HES2A: Auxiliary boom / accessory*****
  Bus address: 27
- Installation location HES2B: Auxiliary boom / accessory*****
  Bus address: 28
- The **„HES2“** icon appears if:
  - The hook block moves against the HES2A on the auxiliary boom / accessory.
  - HES2A is not active, although it must be present on the bus.
  - HES2A has an internal error.
  - The hook block moves against the HES2B on the auxiliary boom / accessory.
  - HES2B is not active, although it must be present on the bus.
  - HES2B has an internal error.
- **Note:**
  The crane movements spool the hoist winches up, luff the boom down as well as luff the derrick boom down are turned off!

LWE/LR 1600-2-001/18101-07-02/en

copyright © Liebherr-Werk Ehingen GmbH 2018

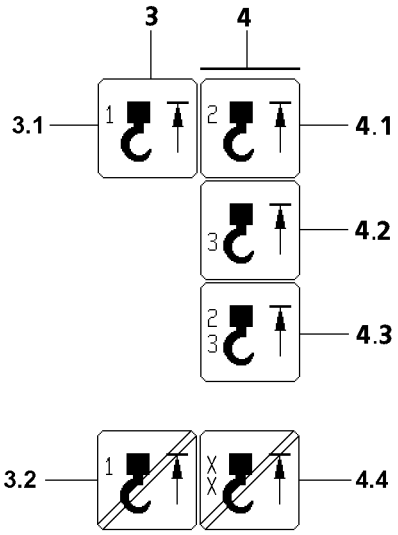

Fig.112365

LWE/LR 1600-2-001/18101-07-02/en

copyright © Liebherr-Werk Ehingen GmbH 2018

4.2 „Hoist top on HES3“ icon

Installation location(s):

- Main boom boom nose 1, bus address: 24*****
- Main boom boom nose 2, bus address: 25*****
- Main boom boom nose 3, bus address: 26*****
- Auxiliary boom / accessory boom nose 1, bus address: 24*****
- Auxiliary boom / accessory boom nose 2, bus address: 25*****
- Auxiliary boom / accessory boom nose 3, bus address: 26*****
- The **„HES3“** icon appears if:
  - The hook block runs against the HES3.
  - HES3 is not active, although it must be present on the bus.
  - HES3 has an internal error.
- **Note:**
  The crane movements spool the hoist winches up, luff the boom down as well as luff the derrick boom down are turned off!

4.3 HES2 and HES3

- The icon appears when icon HES2 and HES3 appear simultaneously

4.4 „Hoist top on boom bypassed“ icon

- The icon appears when the „Hoist top shut off“ is bypassed.

LWE/LR 1600-2-001/18101-07-02/en

copyright © Liebherr-Werk Ehingen GmbH 2018

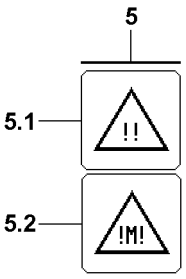

Fig.112366

LWE/LR 1600-2-001/18101-07-02/en

copyright © Liebherr-Werk Ehingen GmbH 2018

7.2.5 Advance warning LMB / advance warning engine monitoring

5 „Advance warning“ icon

5.1 Advance warning LMB
- The current load chart utilization is calculated from the „current load“ and the „maximum load according to the load chart and the reeving“.
- The „Advance warning“ icon appears if:
  - The current load chart utilization of the crane, according to the „Load chart and reeving“ exceeds the programmed limit (**90 percent**) for the advance warning.
    or
  - The current utilization of the boom nose***** exceeds the programmed limit (**90 %**) for the advance warning.

5.2 Advance warning engine monitoring
- If a warning event occurs in the engine monitoring system, the „Engine monitoring advance warning“ icon is displayed on the LICCON monitor.

NOTICE
Shut off engine monitoring!
Outside of the crane operation program, the engine monitoring is turned off!
When the engine monitoring is turned off, problems and warning occurrences are not recognized!
This could result in crane failure!
- ▶ If work is not carried out in the crane operation program, then turn the crane engine off and operate the LICCON computer system in stand-by mode, see section „LICCON computer system in stand-by mode“!
- ▶ If work has to be carried out for a longer period outside of the crane operation program, with the engine running, then switch regularly into the engine monitoring screen!

LWE/LR 1600-2-001/18101-07-02/en

copyright © Liebherr-Werk Ehingen GmbH 2018

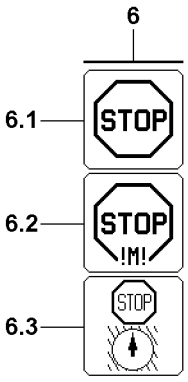

Fig.113264

LWE/LR 1600-2-001/18101-07-02/en

copyright © Liebherr-Werk Ehingen GmbH 2018

7.2.6 LMB STOP / Engine monitoring STOP

6 „STOP“ icon

6.1 LMB STOP
- The „STOP“ icon appears when the load chart utilization exceeds the **100 % mark** (LMB STOP).
- **Note:**
  All crane movements that increase the load momentum are shut off!

or

6.1 Sensor error
- The „STOP“ icon appears when a sensor which is required to monitor the load chart has an error (LMB STOP is actuated).
- **Note:**
  All crane movements that increase the load momentum are shut off!

or

6.1 No load chart
- The „STOP“ icon appears if no load chart is available (LMB STOP is actuated).
- **Note:**
  All crane movements that increase the load momentum are shut off!

6.2 Engine monitoring STOP
- If a STOP event occurs in the engine monitoring system, the system automatically switches over (from the Crane operation program) to the Engine monitoring program.

NOTICE
Shut off engine monitoring!
Outside of the crane operation program, the engine monitoring is turned off!
When the engine monitoring is turned off, problems and warning occurrences are not recognized!
This could result in crane failure!
- ▶ If work is not carried out in the crane operation program, then turn the crane engine off and operate the LICCON computer system in stand-by mode, see section „LICCON computer system in stand-by mode“!
- ▶ If work has to be carried out for a longer period outside of the crane operation program, with the engine running, then switch regularly into the engine monitoring screen!

6.3 Working range limitation*
- If a programmed working range limit* is reached, then this condition is indicated by the STOP icon working range limitation* **6.3** instead of the standard „STOP“ icon **6**.

Note
- ▶ If an LMB STOP occurs simultaneously, the STOP working range limitation* **6.3** icon continues to be displayed!
- ▶ The LMB STOP is identifiable if the utilization bar exceeds 100 % or if a maximum load carrying capacity of 0 t is permitted!

copyright © Liebherr-Werk Ehingen GmbH 2018

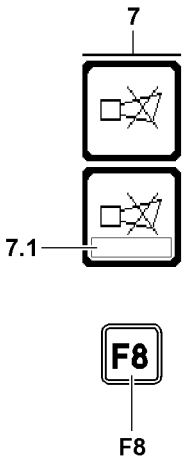

Fig.111270

LWE/LR 1600-2-001/18101-07-02/en

copyright © Liebherr-Werk Ehingen GmbH 2018

7.2.7 Acoustic warning on monitor 0

Acoustic warnings on monitor 0 are indicated by the warning sound „Horn“.

The warning sound „Horn“ is divided into two categories:
- „Horn“ is a beeping sound of a duration of approximately 0.5 seconds, which is repeated in a second cycle.
- „Short horn“ is a beeping sound of a duration of approximately 0.1 seconds, which is repeated in a second cycle.

7 Horn icon
- When the horn icon is shown in the LICCON monitor, any acoustic signals which will occur can be shut off by the LICCON monitor **0** by pressing the function key **F8**.
- If an error message is shown in the horn icon **7** in field **7.1**, then the present error can be determined through it in the diagnostics manual. Pressing the function key **F8** twice, automatically changes to the error determination screen of the test system. The error is displayed there in documentary form.

Acoustic signal „Horn“

1. Sounds in addition to the visual display of an error message in field **7.1** in case of operational errors are found, which lead to a shut off of a crane movement.
   Operational errors are:
   - Overload
   - Boom outside of the angle / radius range of the load chart
2. In case of application errors with error number (LICCON Error Code LEC). For example sensor errors, which occur due to insufficient sensor signals or a defective sensor.
   The following sensors are monitored:
   - Length sensors
   - Angle sensors
   - Pressure sensors
   - Pull test brackets (force test boxes)
   - Inductive sensors
   - Hoist limit switch
   - Wind sensor
   - Battery voltage

Acoustic signal „Short horn“

Sounds in addition to the visual display of error messages without an error number and which do not lead directly to crane movement shut off by the LICCON overload protection.
Monitored error messages are:
- Maximum permissible wind speed exceeded (only for activated wind sensor*****).
- Maximum or minimum support force exceeded (only with active support force monitoring*****).
- Crane utilization value for „Advance warning“ (90 %) reached.

Priority acoustic signal

- The „Horn“ alarm has higher priority than the „Short horn“ alarm, i.e. „Horn“ takes preference over „Short horn“.
- The „Horn“, as well as the „Short horn“ immediately become active again if an error recurs!

LWE/LR 1600-2-001/18101-07-02/en

copyright © Liebherr-Werk Ehingen GmbH 2018

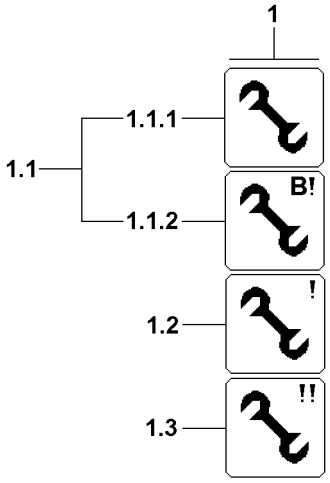

Fig.113465

LWE/LR 1600-2-001/18101-07-02/en

copyright © Liebherr-Werk Ehingen GmbH 2018

7.3 Special functions

Note

▶ The various icons **1** are shown on the same position in the LICCON monitor, depending on the operating mode.

7.3.1 Assembly operation

1 „Assembly“ icon

1.1 Assembly

- The Assembly **1.1.1** or Assembly **1.1.2** icon appears in the LICCON monitor, when the bypass key button or the assembly key button is actuated (see Crane operating instructions, chapter 4.01).
- The LICCON overload protection is bypassed. The „Crane operation“ program is then locked, which means that no other program can be turned on via the program keys.

WARNING

Bypassed LICCON overload protection!

When the LICCON overload protection is bypassed, there is no further protection against overload of the crane!

In case of a deviation from the specifications of the erection and take down charts or the load charts, the crane can be overloaded and topple over or collapse!

Personnel can be severely injured or killed!

▶ Adhere to the specifications of the erection and take down charts or the load charts!

1.2 Emergency operation activated

- The icon appears when the emergency operation is activated.
  Note:
  The emergency operation may only be activated by authorized and especially trained expert personnel!

1.3 Emergency operation activated

- The icon appears when the emergency operation is activated.
  Note:
  The emergency operation may only be activated by authorized and especially trained expert personnel!

LWE/LR 1600-2-001/18101-07-02/en

copyright © Liebherr-Werk Ehingen GmbH 2018

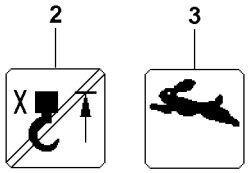

LWE/LR 1600-2-001/18101-07-02/en

Fig.113466

copyright © Liebherr-Werk Ehingen GmbH 2018

7.3.2 Bypass „Hoist top“

2 Bypass „Hoist top“
- The icon appears:
  - When the shut off „Hoist top“ is bypassed via the bypass key button or the assembly key button.
  - **Note**:
    The Crane operation program is locked, meaning, no other program can be turned on via the program keys.

7.3.3 Fast mode (Rapid gear)

3 „Rapid gear“ **3** icon
- The icon appears if rapid gear („Power Plus“) is enabled during a crane movement.
- The speed increase can be added for various crane movements on the master switches MS1, MS2, or MS3.
- **Note:**
  If a crane movement has reached its maximum speed due to the current utilization, then no speed increase is possible by adding the rapid gear.
  If the total power requirement of all actuated crane movements is larger than the available power, then those crane movements are reduced which require the most power. If another crane movement is added or taken back to one or more actuated crane movements then this has an influence on the other movements. For that reason, we recommend in situations in which an interference of the individual crane movements is troublesome, not to add the rapid gear or to turn the rapid gear off.

LWE/LR 1600-2-001/18101-07-02/en

copyright © Liebherr-Werk Ehingen GmbH 2018

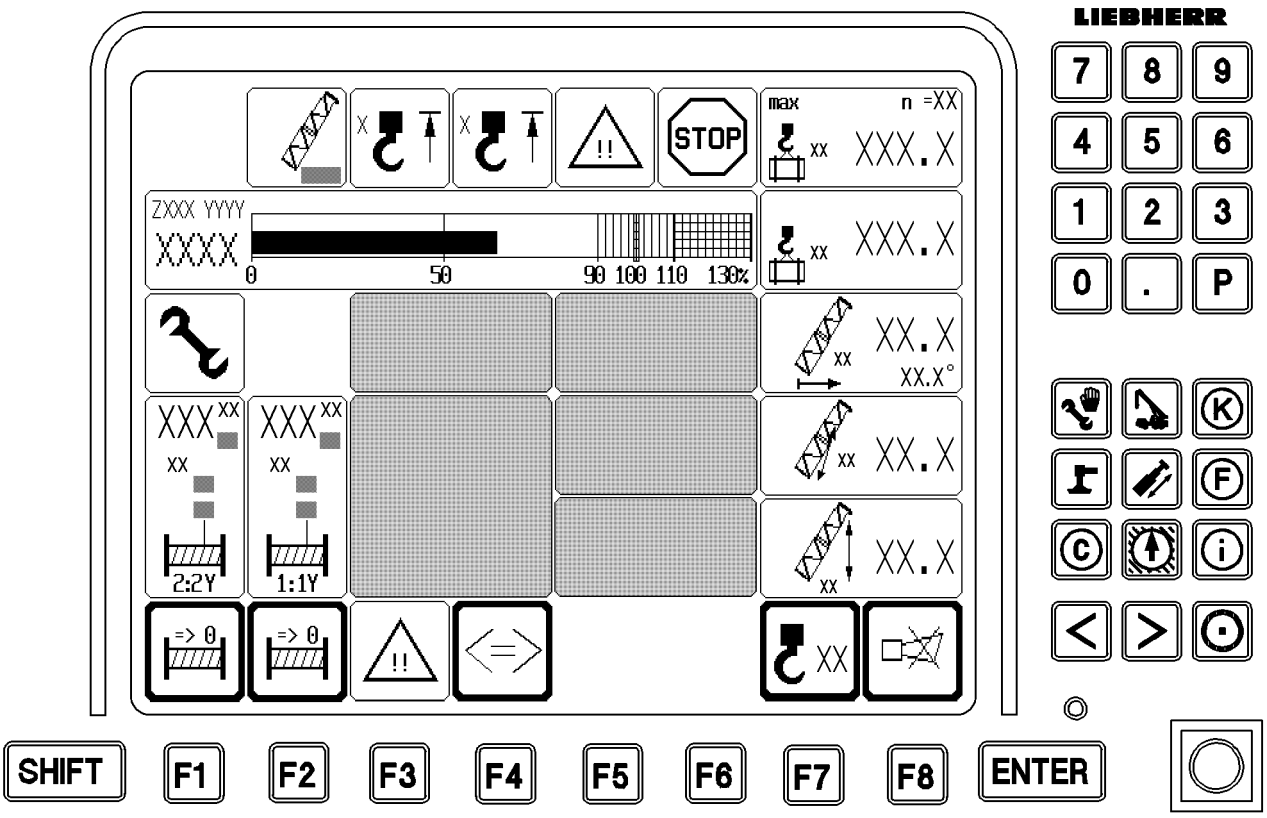

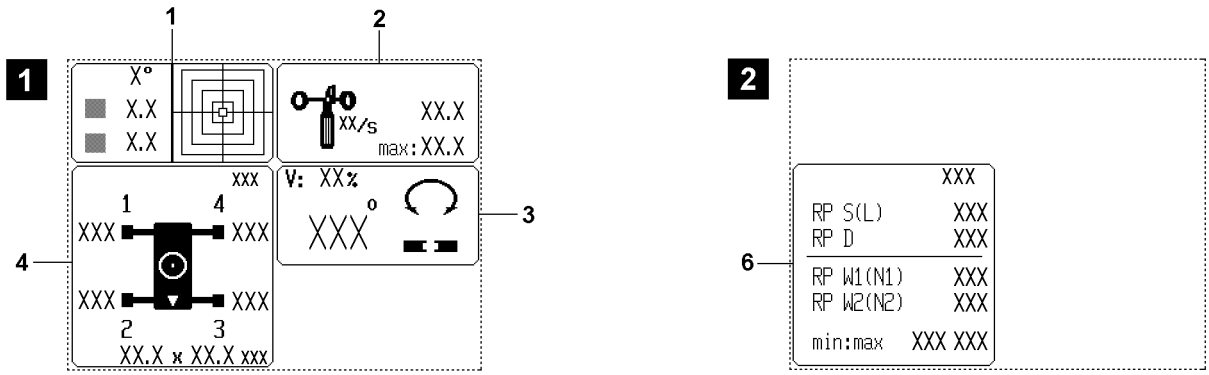

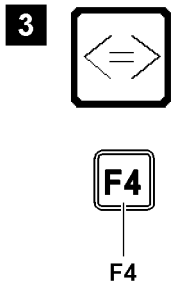

Fig.112998

LWE/LR 1600-2-001/18101-07-02/en

copyright © Liebherr-Werk Ehingen GmbH 2018

7.4 Monitored auxiliary functions for crane operation

There are several monitored auxiliary functions, which can be displayed when needed or automatically.

The monitoring of all auxiliary functions is always active, only the icons can be faded out. The icons of the monitored auxiliary functions have their fixed place on the LICCON monitor.

Note

▶ Using the function key **F3**, you can show the icons for the monitored auxiliary functions. Since not all icons of the auxiliary functions fit on one page (at maximum assignment), they are split over two pages. The icons on page 2 (if available) can be shown with the function key **F4**!

Page 1 (illustration **1):**

1 Crane incline
2 Wind speed
3 Slewing range
4 Support force display

- **Note:**
  only for narrow track crawler track.

Page 2 (illustration **2):**

6 Monitoring of relapse cylinders

Note

▶ Depending if the monitored auxiliary functions are turned off or on, the illustration of the monitored auxiliary functions differs!

▶ The „Change page“ icon can be actuated if it appears / blinks via the function key **F4**, see illustration **3**!

Monitored auxiliary functions turned off:

– No error:
  Icons are not shown.
– Only error in one function on page 1:
  Icon is displayed on page 1.
– Only error in one function on page 2:
  Icon is displayed on page 2.
– Error in one function on page 1 and 2:
  Icon is displayed on page 1 and icon for „Change page“ via function key **F4** blinks (= indicates an error in a function on page 2).

Monitored auxiliary functions turned on:

– No error:
  Optional icons (customer request) are displayed.
  If there are optional icons on page 2, the icon „Change page“ via the function key **F4** is activated (= indication for change option).
– Error in one function on page 2:
  Icon „Change page“ blinks (= indication regarding an error of a function on the other page).
– Error in one function on page 1 and 2:
  Icon is displayed on page 1.
  Icon „Change page“ blinks (= indication regarding an error of a function on the other page).

LWE/LR 1600-2-001/18101-07-02/en

copyright © Liebherr-Werk Ehingen GmbH 2018

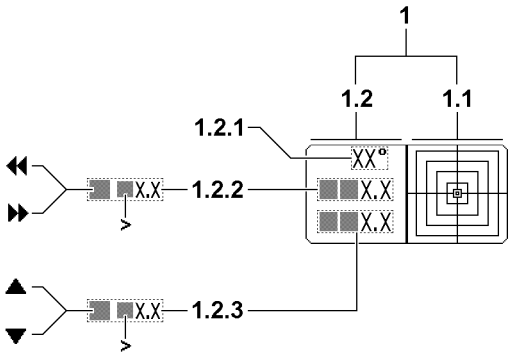

LWE/LR 1600-2-001/18101-07-02/en

Fig.113445

copyright © Liebherr-Werk Ehingen GmbH 2018

7.4.1 General

Note
„?“ instead of display value!
- ▶ The value cannot be determined due to an error!
- ▶ If an error occurs and an error message is issued, see Diagnostics manual!
- ▶ Always pay attention to error messages!
- ▶ Remedy the error always as quick as possible!

7.4.2 Crane incline

WARNING
The crane can topple over!
The „larger than symbol“ shows that the crane is inclined further than can be shown!
The exact incline can then not be read!
- ▶ Do not exceed the permissible incline of the crane!

1 „Incline“ icon
- Display of the incline of the crane to the horizontal in longitudinal and lateral direction. The display is graphic as well as numeric.
- The directional data refers to the direction of the crane superstructure (view from the cab).

1.1 Graphic part
- The graphic display is in the form of a spirit level, with a moving dot representing the air bubble. The center of the dot shows the precise incline value.

1.2 Numeric part

1.2.1 Incline range
- This value describes the resolution of the graphic view. The resolution is matched automatically to the incline.

1.2.2 Lateral direction
- Incline of crane in lateral direction in [°]
- The double arrow shows the direction of the incline
- If the „larger than symbol“ appears, then the crane is inclined further than can be shown!

1.2.3 Longitudinal direction
- Incline of crane in longitudinal direction in [°]
- The arrow shows the direction of the incline
- If the „larger than symbol“ appears, then the crane is inclined further than can be shown!

LWE/LR 1600-2-001/18101-07-02/en

copyright © Liebherr-Werk Ehingen GmbH 2018

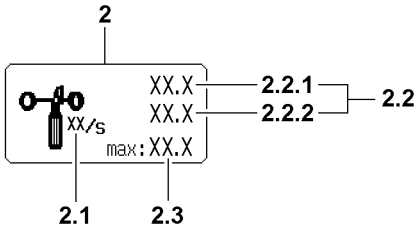

Fig.111265

LWE/LR 1600-2-001/18101-07-02/en

copyright © Liebherr-Werk Ehingen GmbH 2018

7.4.3 Wind speed

2 „Wind speed“ icon
- The wind speeds are displayed in [m/sec.] or [ft/sec.] depending on the units of measurement shown in the load chart

2.1 „Wind speed“ unit
- [m/s] or [ft/s]

2.2 Current wind speed

Note
- ▶ Depending on the set up configuration of the crane, a certain number of wind sensors must be present on the LSB bus!
- ▶ If no value can be determined for a wind sensor which must be present, then current wind speed **2.2** „???“ appears in the display!
- ▶ If a wind sensor does not have to be present and is not plugged in, then there is no display in the „Wind speed“ icon **2**!

2.2.1 Current wind speed
- Wind sensor 2
- Wind sensor 3
- **Note:**
  The priority of wind sensor 2 is larger than that of wind sensor 3, this means: If both wind sensors are present, then the value of wind sensor 2 is shown!

2.2.2 Current wind speed
- Wind sensor 1
- **Note:**
  If several wind sensors are attached on the LSB bus, then the location of the wind sensor determines the corresponding display in the „Wind speed“ icon!
  The priority depends on the installation location of the wind sensor, from „outside“ (for example luffing jib) to „inside“ (for example boom head). The wind speed of the „exterior“ wind sensor is displayed in **2.2.1** and the wind speed of the „interior“ wind sensor is displayed in **2.2.2**.

WARNING
Crane operation without display value of wind speed!
If the current wind speed **2.2** „???“ appears in the display, then a wind sensor which must be present is missing or there is an error in the wind sensor!
- ▶ Remedy the error immediately!
- ▶ If an error cannot be remedied, then it must be ensured that the wind speed is monitored otherwise!

LWE/LR 1600-2-001/18101-07-02/en

copyright © Liebherr-Werk Ehingen GmbH 2018

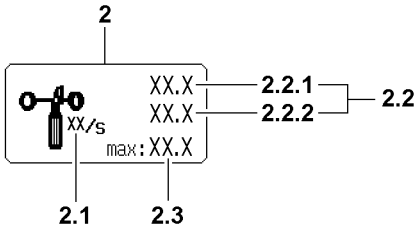

Fig.111265

LWE/LR 1600-2-001/18101-07-02/en

copyright © Liebherr-Werk Ehingen GmbH 2018

2.3 Maximum permissible wind speed
- The value depends on the operating mode and the set up configuration
- **Note:**
  If access to a load chart is not possible, then the maximum value starts to blink and the acoustic alarm „Short horn“ sounds!
  If the current wind speed value exceeds the displayed maximum value, the maximum value starts to blink and the acoustic alarm „Short horn“ sounds!

WARNING
Wind speed too high!
If the maximum permissible wind speed is exceeded with erected boom system, there is a danger of accidents!
Dangerous situations can arise, such as oscillating load or shaking crane!
The crane can topple over, personnel can be severely injured or killed!
- ▶ **The crane movements will not be shut off!**
- ▶ The danger notes, see Crane operating instructions, chapter 2.04 must be strictly observed and adhered to!

LWE/LR 1600-2-001/18101-07-02/en

copyright © Liebherr-Werk Ehingen GmbH 2018

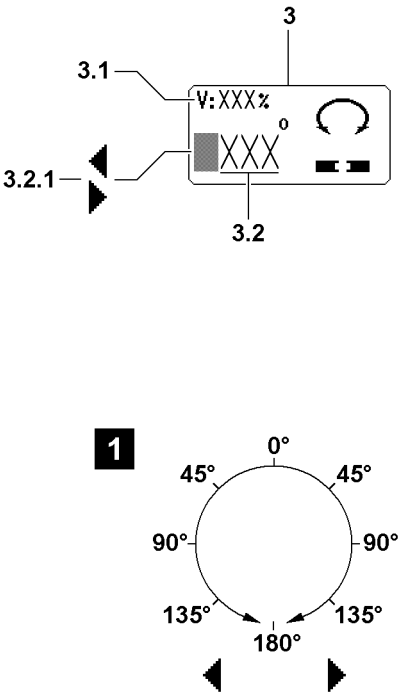

LWE/LR 1600-2-001/18101-07-02/en

Fig.112352

copyright © Liebherr-Werk Ehingen GmbH 2018

7.4.4 Slewing range

DANGER
Danger of accidents in case of excessive slewing speed!
▶ Make the selection of the slewing speed according to the specifications in the load chart manual!

3 „Slewing range“ icon

3.1 Maximum slewing speed
- V: [%]
- Identifies the current (selected) „Maximum slewing speed“ of the slewing gear with a fully deflected master switch, relating to the maximum attainable slewing speed of the slewing gear.
  This value may be selected in fixed percentage stages in the LICCON program Control parameter.

3.2 Current position of the crane superstructure
- In relation to the main working direction (0 [°]).
  Increasing to the maximum value of 180°, see illustration **1**.

3.2.1 Direction of deviation
- The arrow in front of the value indicates the direction of the deviation.
  - Arrow to the right: Crane superstructure is turned to the right.
  - Arrow to the left: Crane superstructure is turned to the left.

LWE/LR 1600-2-001/18101-07-02/en

copyright © Liebherr-Werk Ehingen GmbH 2018

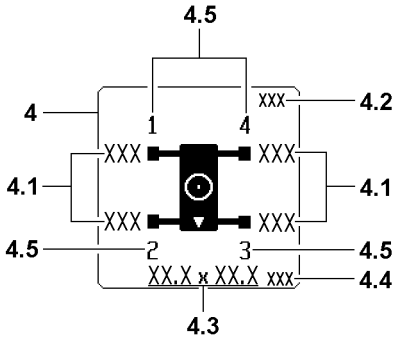

Fig.112999

LWE/LR 1600-2-001/18101-07-02/en

copyright © Liebherr-Werk Ehingen GmbH 2018

7.4.5 Support force display

Note
▶ Only crane with narrow track crawler track.

4 „Support force display“ icon
- **Note:**
  The „support force display“ icon **4** appears only when the crane is supported. For crane operation on crawlers, the „support force display“ icon **4** does not appear.
- The LICCON support force monitoring system continuously records the current hydraulic pressure present in all 4 support cylinders during crane operation using a pressure sensor, and converts this into a support force [t] value for each support.
  The „Support force display“ icon *** 4** may be displayed by program „Operation“, if required, or the icon appears automatically with the alarm signal „short horn“ when a critical situation occurs, when a support has reached or exceeded the maximum force or has reached or fallen below the minimum force. The corresponding value is shown by a blinking display.
  Note:
  The same maximum support force and a common minimum support force is programmed for each support at the factory. These 5 values may be changed in the „Support“ program, depending on the situation. (see section „The support program“)
  Independently of the programmed minimum / maximum values, monitoring is continuous, when the total of the two lowest support forces is less than 15 % of the total support forces. If this limit is fallen below, the two supports with the lowest forces are shown.

WARNING
The crane can topple over!
When reaching the programmed minimum / maximum support forces, **no** automatic shut off of the crane movements occurs!
When the two supports with the lowest force are in the direction of the boom, telescoping in is turned off!
▶ Be especially careful!

LWE/LR 1600-2-001/18101-07-02/en

copyright © Liebherr-Werk Ehingen GmbH 2018

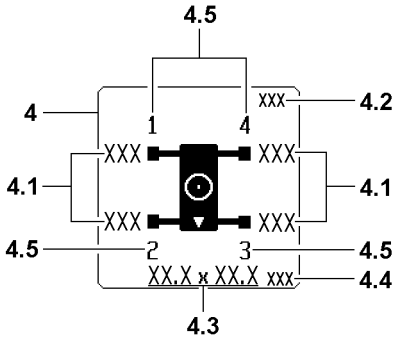

Fig.112999

LWE/LR 1600-2-001/18101-07-02/en

copyright © Liebherr-Werk Ehingen GmbH 2018

4.1 Display of current support force
- Display of support force for each support

WARNING
Danger due to erroneous support force display!
The support force display may in some circumstances be defective or inaccurate!
▶ Be especially careful!
▶ Also refer to hazard warnings in section „The support program“!

4.2 Weight unit of support force
- In [t] or [lbs]

4.3 Display of support base

4.4 Measuring unit support base

4.5 Numbering support beam

WARNING
The crane can topple over!
If the support is not correct, the crane can topple over and cause fatal injuries!
▶ Crane operation with incorrect support is prohibited!
▶ Support the crane correctly!

LWE/LR 1600-2-001/18101-07-02/en

copyright © Liebherr-Werk Ehingen GmbH 2018

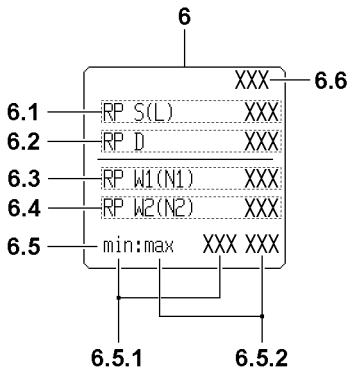

LWE/LR 1600-2-001/18101-07-02/en

Fig.111897

copyright © Liebherr-Werk Ehingen GmbH 2018

7.4.6 Monitoring of relapse cylinders

Note
Display values pressure display!
- ▶ Pressure display = „0“, if these relapse cylinders are not present for the set operating mode!
- ▶ Pressure display = „???“, if the pressure sensor signal is erroneous! There is an error display with error number!

6 „Monitoring relapse cylinder“ icon

6.1 Pressure display RP S(L)
- Relapse cylinder S-, SL- or L-boom

6.2 Pressure display RP D
- Relapse cylinder Derrick boom

6.3 Pressure display RP W1(N1)
- Pressure W1-relapse cylinder (=RP W1) at W-operation
  or
- Pressure N1-relapse cylinder (=RP N1) at N-operation

6.4 Pressure display RP W2(N2)
- Pressure W2-relapse cylinder (=RP W2) at W-operation
  or
- Pressure N2-relapse cylinder (=RP N2) at N-operation

6.5 Pressure limits
- Monitored pressure limits of relapse cylinders (W/N)
  Minimum / maximum pressure for RP W1(N1) and RP W2(N2)

6.5.1 Minimum pressure (W/N)
- If a pressure limit value is being exceeded, then this is shown by a blinking pressure actual value and an additional error message
- This monitored minimum pressure is calculated from the angle of the main boom and the auxiliary boom / accessory. If one of the angles is invalid and is shown in the display with „???“, then no monitoring of the minimum pressure can occur.

6.5.2 Maximum pressure (W/N)
- If a pressure limit value is being exceeded, then this is shown by a blinking pressure actual value and an additional error message

6.6 „Monitoring relapse cylinder“ measuring unit

LWE/LR 1600-2-001/18101-07-02/en

copyright © Liebherr-Werk Ehingen GmbH 2018

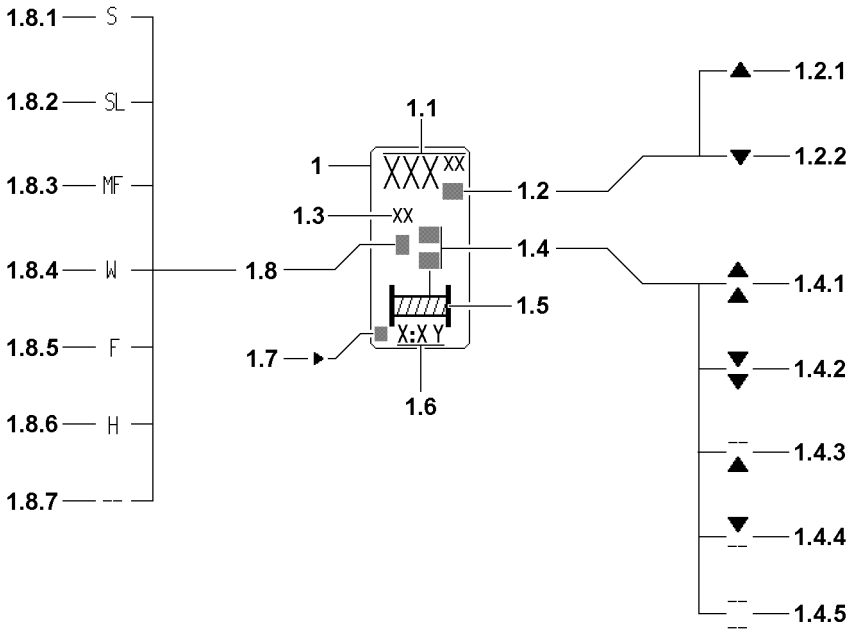

LWE/LR 1600-2-001/18101-07-02/en

Fig.112994

copyright © Liebherr-Werk Ehingen GmbH 2018

7.5 Winch display

1 Winch icon
- The winch 1 and winch 2 icons have the same meaning and are explained on one icon.
- The icon for winch 1 or winch 2 is shown only on monitor 0, when the crane is equipped with the respective winch

1.1 Completed path
- In [m] or [ft]
  From a zero point to be determined
- For single operation with the reeving setting made in the Set up program: Completed hook path
- For parallel operation with the set total reeving made in the set up program: Distance completed by hook block.
- The positions before the decimal point are displayed with a maximum of three large digits. The digits after the decimal point are displayed with small digits. Setting to zero point, see section „The function key line in the crane operation program“.
- A prerequisite for a correct display is that the reeving value entered equals the actual number of rope strands between the boom head and the hook block

Note
Display area winch displays!
- ▶ The „Completed path“ display **1.1** has only three positions before the comma, any positions before that are cut off! The crane operator must evaluate for himself if, for example 200 m rope are spooled up on a winch or 1200 m. **The display in both cases would be identical with 200 m !**
- ▶ The hook path calculation only works accurately if the load is suspended freely and is not luffed during the lifting procedure! Not taken into account are flexation and rope expansion!
- ▶ The length display (hook path display) is only accurate and the layer jump is only taken into account correctly if the winch has been calibrated and no interruptions of the CPU power supply have occurred (cold start)!

LWE/LR 1600-2-001/18101-07-02/en

copyright © Liebherr-Werk Ehingen GmbH 2018

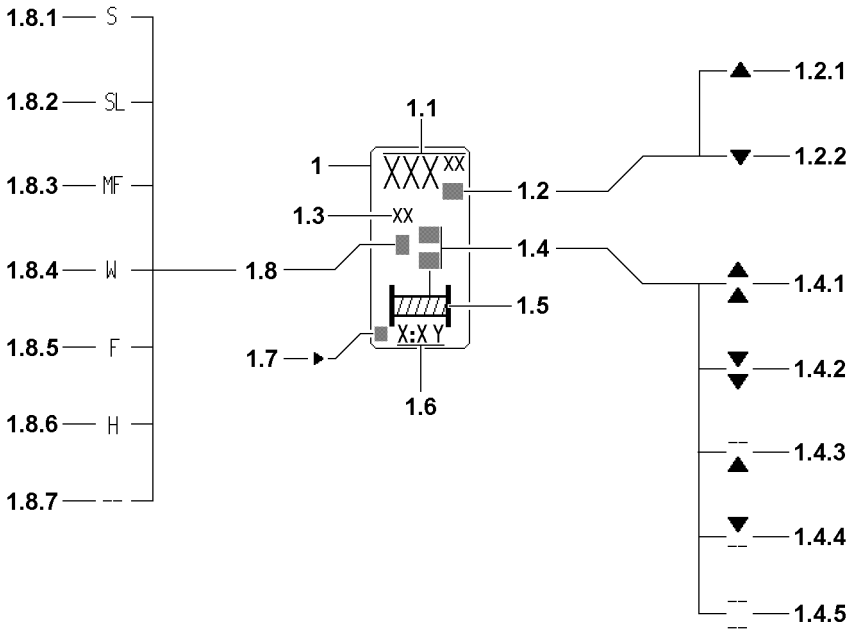

LWE/LR 1600-2-001/18101-07-02/en

Fig.112994

copyright © Liebherr-Werk Ehingen GmbH 2018

1.2 Direction of hook movement

The arrows on the length value show the direction of the hook movement in relation to the zero point:
- Arrow up **1.2.1**: Hook moves upward from the zero point.
- Arrow down **1.2.2**: Hook moves downward from the zero point.

1.3 Measuring unit hook path display

1.4 Winch status display
- There are five winch status icons (all blinking):

1.4.1 Spool out

1.4.2 Spool up

1.4.3 Spooled out
- Spooling out is blocked

1.4.4 Spooled up
- Spooling up is blocked

1.4.5 Winch is deactivated or unplugged
- Spooling up and spooling out are blocked (via Control parameter program).
- **Note:**
  If no winch status icon appears, the activated winch is inactive and is neither spooled up nor out!

1.5 Winch icon
- (With rope end for winch status icon)

1.6 Winch number with master switch number and master switch operating direction
- Example: 1 : 1 Y
  First digit: Winch number
  Second digit: Master switch number
  Letter: Master switch operating direction

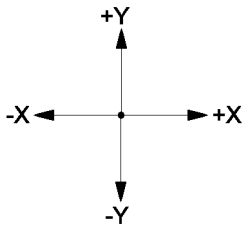

Fig.195422

1.7 Vibration sensor
- If the vibration sensor for a winch is added on the master switch, then an arrow appears in this winch icon for the added vibration sensor.
- **Note:**
  The vibration sensor is added for the first actuated crane function!

LWE/LR 1600-2-001/18101-07-02/en

copyright © Liebherr-Werk Ehingen GmbH 2018

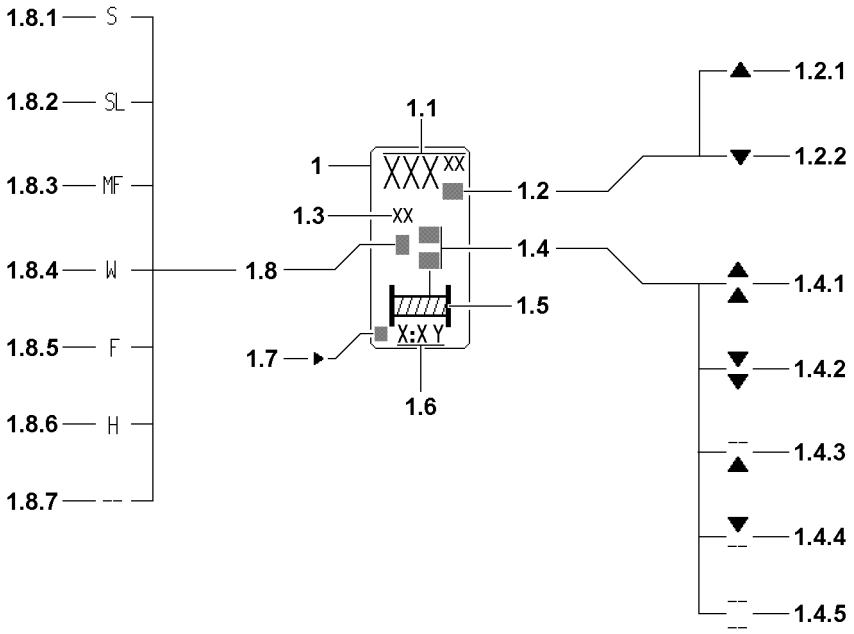

LWE/LR 1600-2-001/18101-07-02/en

Fig.112994

copyright © Liebherr-Werk Ehingen GmbH 2018

1.8 Reeved in boom
- To check the settings for „winch pulley head assignment“ of various hoist winches, the respective boom symbol, on which the winch must be reeved according to the winch pulley head assignment is shown in the symbol element „winch display“
  Note:
  The reeved boom **1.8** icon is shown in the winch icon of winch 1, winch 2 and winch 6.

1.8.1 S
- Winch is reeved on the pulley head of the S-main boom

1.8.2 SL
- Winch is reeved on the pulley head of the SL-main boom

1.8.3 MF
- Winch is reeved on the pulley head of the center pulley of the luffing jib

1.8.4 W
- Winch is reeved on the pulley head of the luffing jib

1.8.5 F
- Winch is reeved on the pulley head of the F-lattice jib

1.8.6 H
- Winch is reeved on the pulley head of the boom nose

1.8.7 – –
- Winch is not reeved on **any** pulley head

LWE/LR 1600-2-001/18101-07-02/en

copyright © Liebherr-Werk Ehingen GmbH 2018

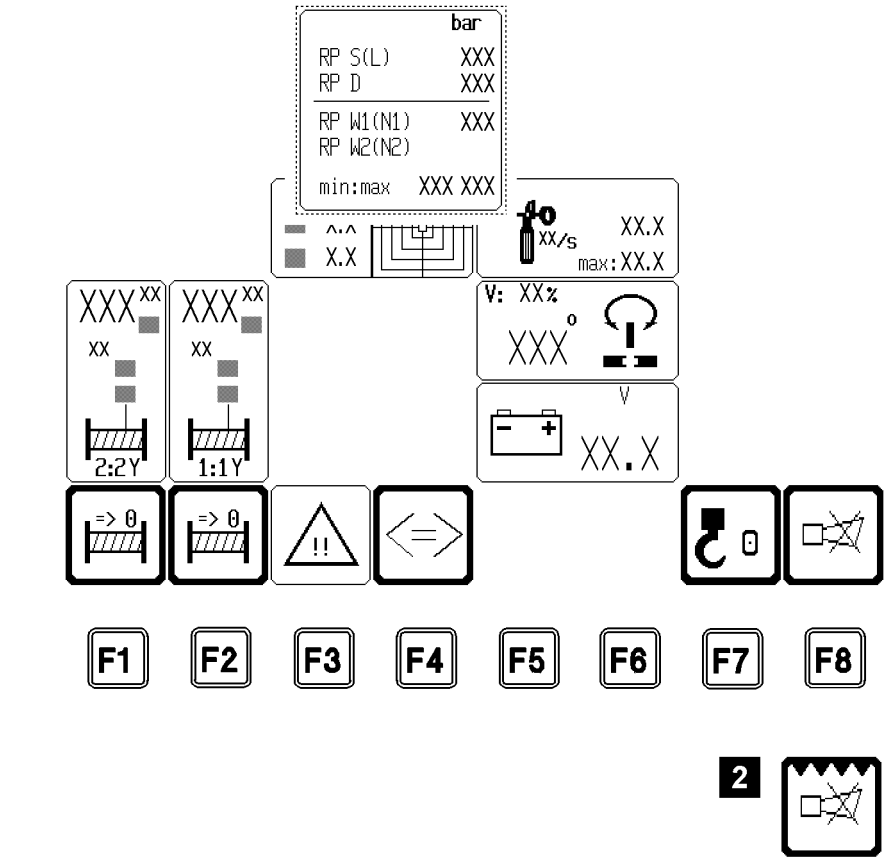

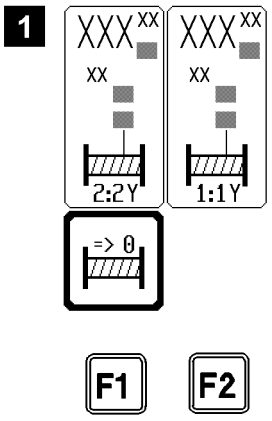

LWE/LR 1600-2-001/18101-07-02/en

Fig.112364

copyright © Liebherr-Werk Ehingen GmbH 2018

7.6 The function key line in the Crane operation program

The function key line consists of function keys **F1** to **F8** and the function key icon bar above it. The function keys correspond to the various function key icons above them.

The function key icons may trigger a function or they change their appearance upon the push of a key (function keys) and thereby their definition.

Not all function keys have icons assigned to them. This depends on the „active“ program selection.

Pressing a function key changes the appearance of the icon above, its meaning, or its textual content.

F1 Function key
- Zero point for hook path display, winch 2
- Pressing the function key **F1** causes the „Set winch display to zero“ icon to appear, i.e. the winch 2 hook path display in the winch icon above is set to „000.00“ when the key is pressed. The path measurement begins here.

F2 Function key
- Zero point for hook path display, winch 1
- Pressing the function key **F2** causes the „Set winch display to zero“ icon to appear, i.e. the winch 1 hook path display in the winch icon above is set to „000.00“ when the key is pressed. The path measurement begins here.
- **Note:**
  When winch 1 and winch 2 work in parallel operation, then the lengths displays of winch 1 and winch 2 can only be set together with the function key **F1** to „000.00“! Then the function key **F2** has no function, see illustration **1**!

F3 Function key
- Turn monitoring icons on / off
- The function key **F3** can be used to turn all the monitored auxiliary functions in the crane on or off.
- The appearance of the icon changes according to the status:
  „Thick border“ = auxiliary function icons turned off
  „Thin border“ = auxiliary function icons turned on
- **Note:**

F4 Function key
- Change monitoring page (if present)
  see also section „Monitored auxiliary functions for crane operation“

Note

▶ The monitoring of all auxiliary functions is always active, even if the monitoring icons are hidden!

▶ When a monitored limit is exceeded, then an acoustic warning (horn) sounds and the respective icon is shown!

LWE/LR 1600-2-001/18101-07-02/en

copyright © Liebherr-Werk Ehingen GmbH 2018

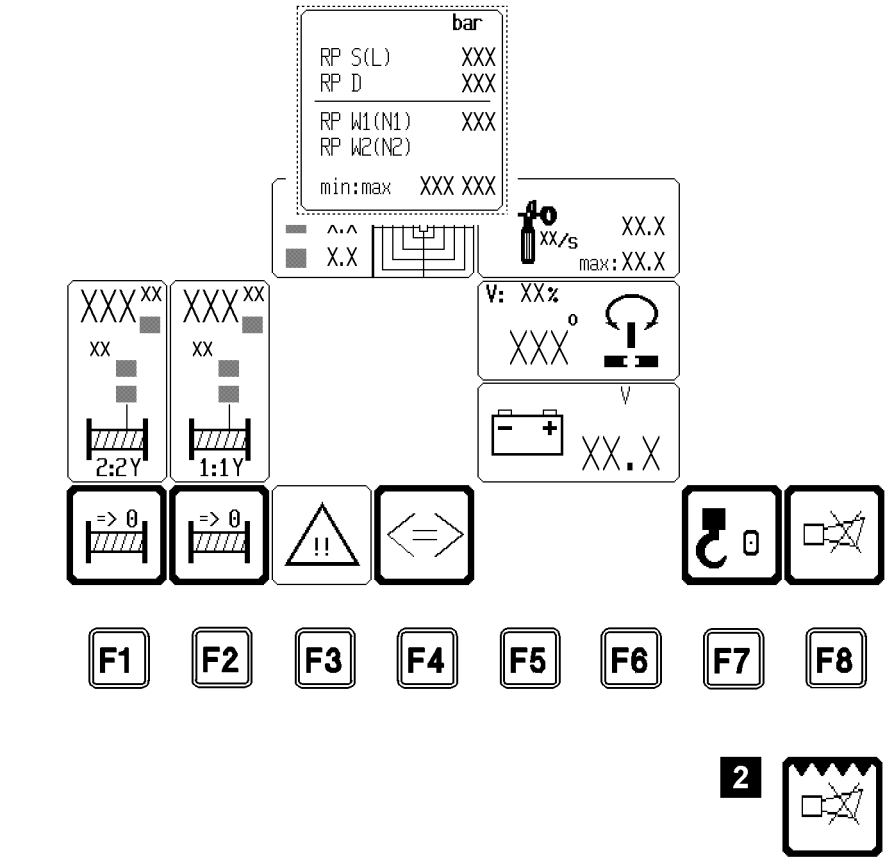

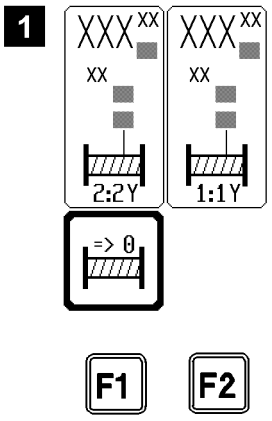

LWE/LR 1600-2-001/18101-07-02/en

Fig.112364

copyright © Liebherr-Werk Ehingen GmbH 2018

F5 Function key
- Not assigned

F6 Function key
- Not assigned

F7 Function key
- Taring
- When the function key **F7** is pressed, the actual load display is set to „zero“. At the same time, the word „net“ appears in the icon of the actual load display. This function, for example, makes it possible to eliminate the weights of the hoist rope, load carriers, lifting and fastening equipment and only display the weight of the load that must be lifted (net load).
  If the taring is cancelled, the word „net“ disappears from the icon „Actual load display“ and the gross load value is displayed.
- Tare is cancelled by one of the following two actions:
  1.Pressing the function key **F7** again.
  2.By luffing by more than ±4°.
- **Note:**
  The function key **F7** acts the same way to the actual load display of the boom nose, if the boom nose is installed!

F8 Function key
- Turn off the acoustic warning
  The „Horn“ and „Short horn“ acoustic warnings can be turned off by pressing the function key **F8**.
- **Note:**
  A new error turns the acoustic warning on again!

WARNING
Malfunctions in the crane control!
A special program is available for LIEBHERR crane acceptance in the LICCON computer system!
This program is blocked after conclusion of the crane acceptance!
If an additional marking is displayed in the „Horn“ icon (talons along the upper margin, see illustration **2**), then the special program is activated!
▶ Contact LIEBHERR Service immediately!
▶ In order to prevent error functions, access to the special program is only permitted for trained LIEBHERR personnel!

LWE/LR 1600-2-001/18101-07-02/en

copyright © Liebherr-Werk Ehingen GmbH 2018

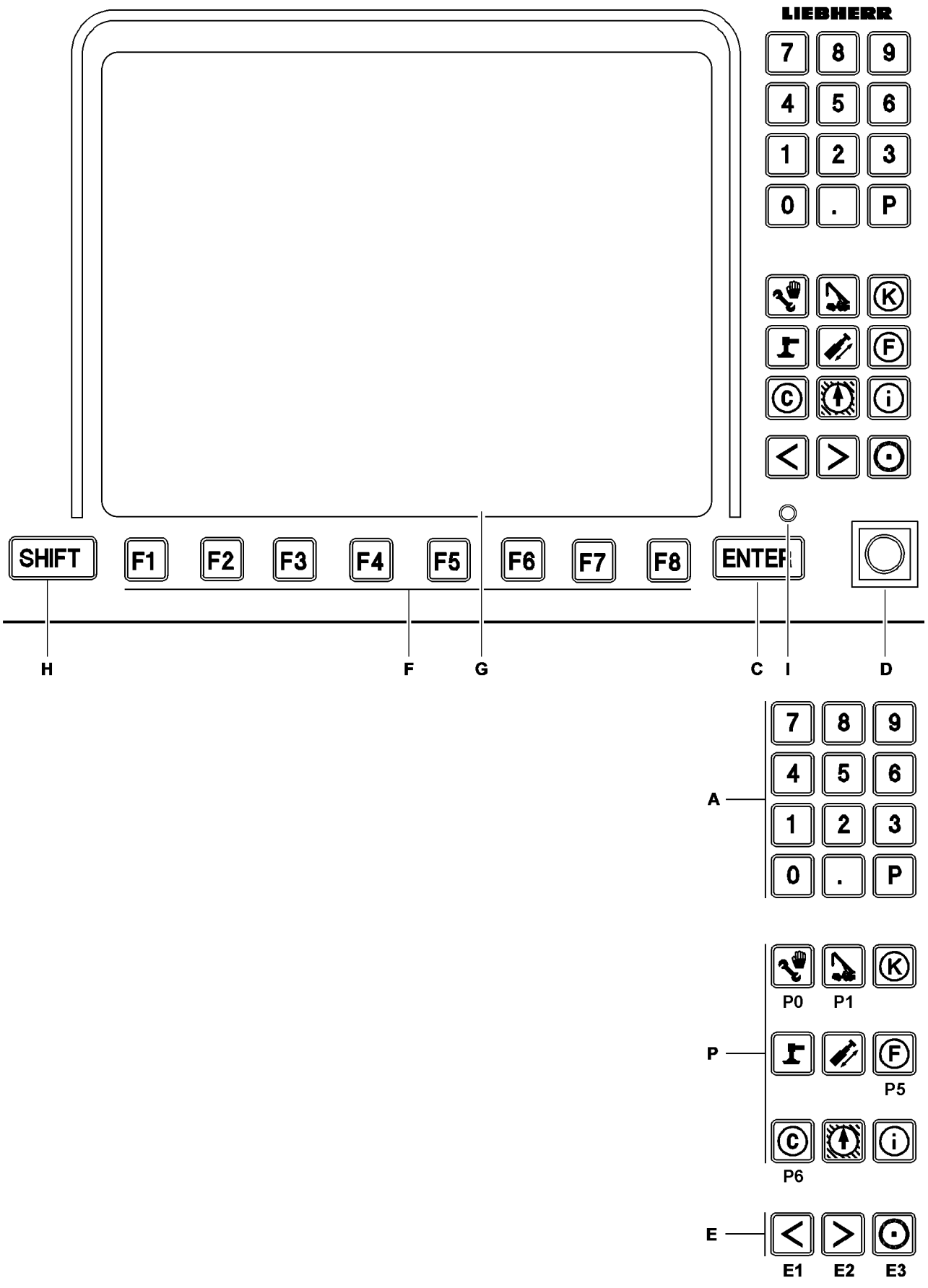

Fig.105208

LWE/LR 1600-2-001/18101-07-02/en

copyright © Liebherr-Werk Ehingen GmbH 2018

7.7 Other operating elements

The following functions are assigned to the other operating elements of the display and operating unit of the LICCON computer system in program „Crane operation“.

A Keypad

Keys „0“ to „9“ and „P“ have no function in the „Crane operation“ program.
„SHIFT“ and „.“ keys
Using key „.“, the so-called test pattern function is turned on and off, meaning that all available symbols appear on the LICCON monitor with an incorrect display value.
Note:
The monitored auxiliary functions, however, must be opened in the desired page if they are to appear in the test screen. The test pattern display may be held by pressing the „SHIFT“ key and „.“, otherwise the normal operating pattern will appear after 10 seconds or after pressing the key „.“ again.

P Program keys

- The program keys are used to select individual programs. However, the appropriate program-specific features (for example, switching from „Set up“ to „Crane operation“ using the „O.K.“) must always be observed.
  Note:
  The program currently running **cannot** be called up again using its program key.
  The programs may only be called up with their program key if the bypass key button or the assembly key button is not in the „Assembly“ position.

C Enter key

- No function in „Crane operation“ program

LWE/LR 1600-2-001/18101-07-02/en

copyright © Liebherr-Werk Ehingen GmbH 2018

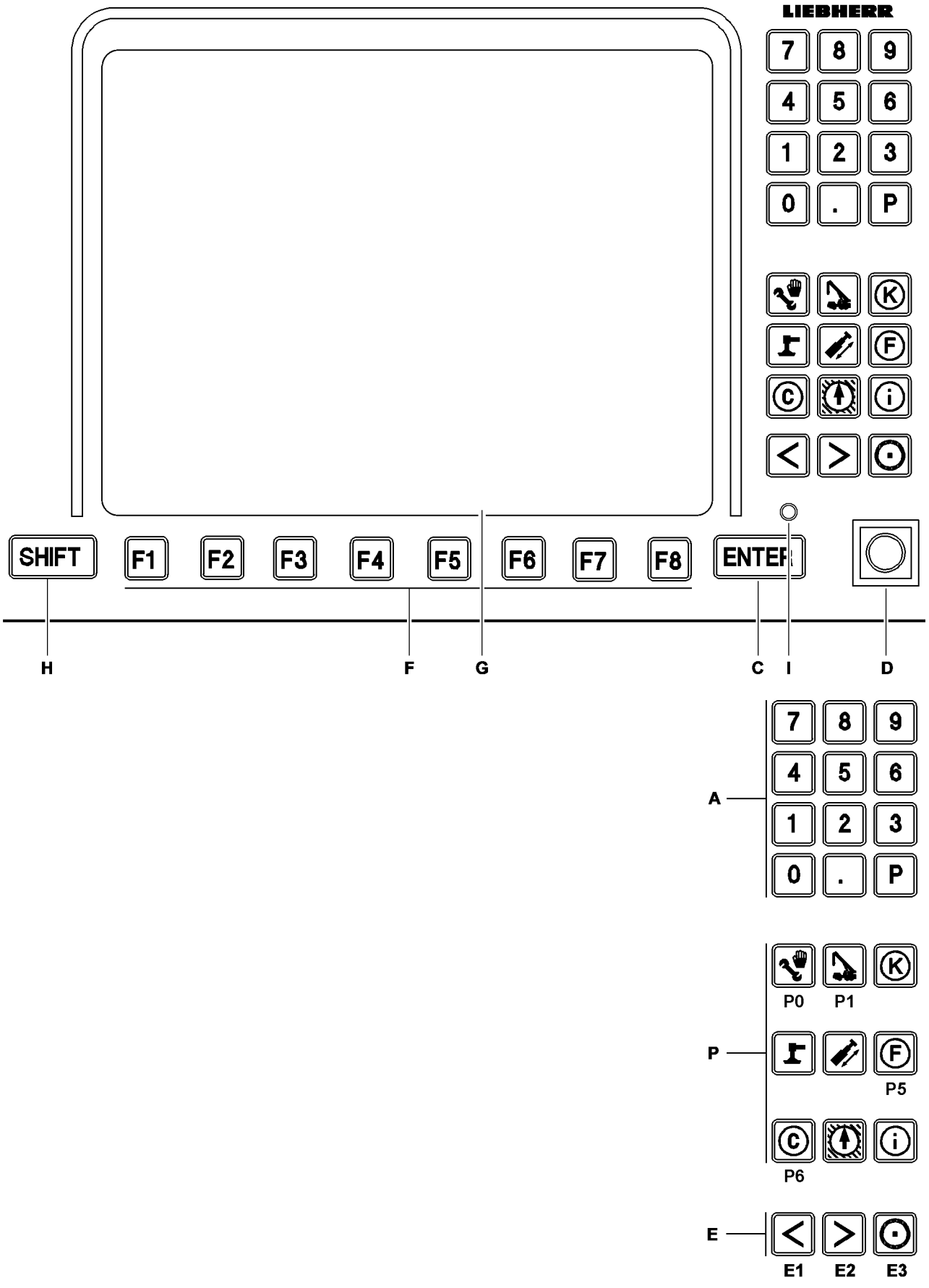

Fig.105208

LWE/LR 1600-2-001/18101-07-02/en

copyright © Liebherr-Werk Ehingen GmbH 2018

D Bypass key button

The bypass key button has two positions:
- Zero position (not actuated):
  Normal operation.
- Touching:
  Hoist limit switch and / or LICCON overload protection bypassed

WARNING
Increased danger of accidents!
With the bypass key button, the LICCON overload protection as well as the hoist limit switches can be bypassed.
In this event, continued protection against overloading the rope or the crane **no longer** exists!
▶ With bypassed LICCON overload protection or bypassed hoist limit switches observe utmost caution!

In position „touching right“, movement limiting shut offs may be bypassed.
- Bypassing the LICCON overload protection:
  If the maximum permissible load momentum is exceeded, the LICCON overload protection turns off all crane movements that increase the load momentum. This shut off can be bypassed by the bypass key button **D** in the „right touching position“.
  Note:
  Bypassing the LICCON overload protection may only be done if the crane supervisor is present and with utmost caution.
- Bypassing the hoist limit switch:
  If the hook block contacts the hoist limit switch weight during its upward movement, the hoist limit switch is triggered. The crane movement „spool up winch“ is turned off. The shut off can be bypassed by the bypass key button **D** or the assembly key button (see Crane operating instructions, chapter 4.01).
  Note:
  Bypassing the hoist limit switch may only be done if the crane supervisor is present, and with the help of a guide. The guide must be in direct contact with the crane operator and must continually monitor the distance between the hook block and the boom head. Carry out all crane movements with utmost care and at the least possible speed.

E Special function keys
- Monitor brightness adjustment (see section „Operating elements of the LICCON computer system on monitor 0“)

H „SHIFT“ key
- Second level key assignment
  „SHIFT“ and „P0“: Program call up for Engine monitoring.

LWE/LR 1600-2-001/18101-07-02/en

copyright © Liebherr-Werk Ehingen GmbH 2018

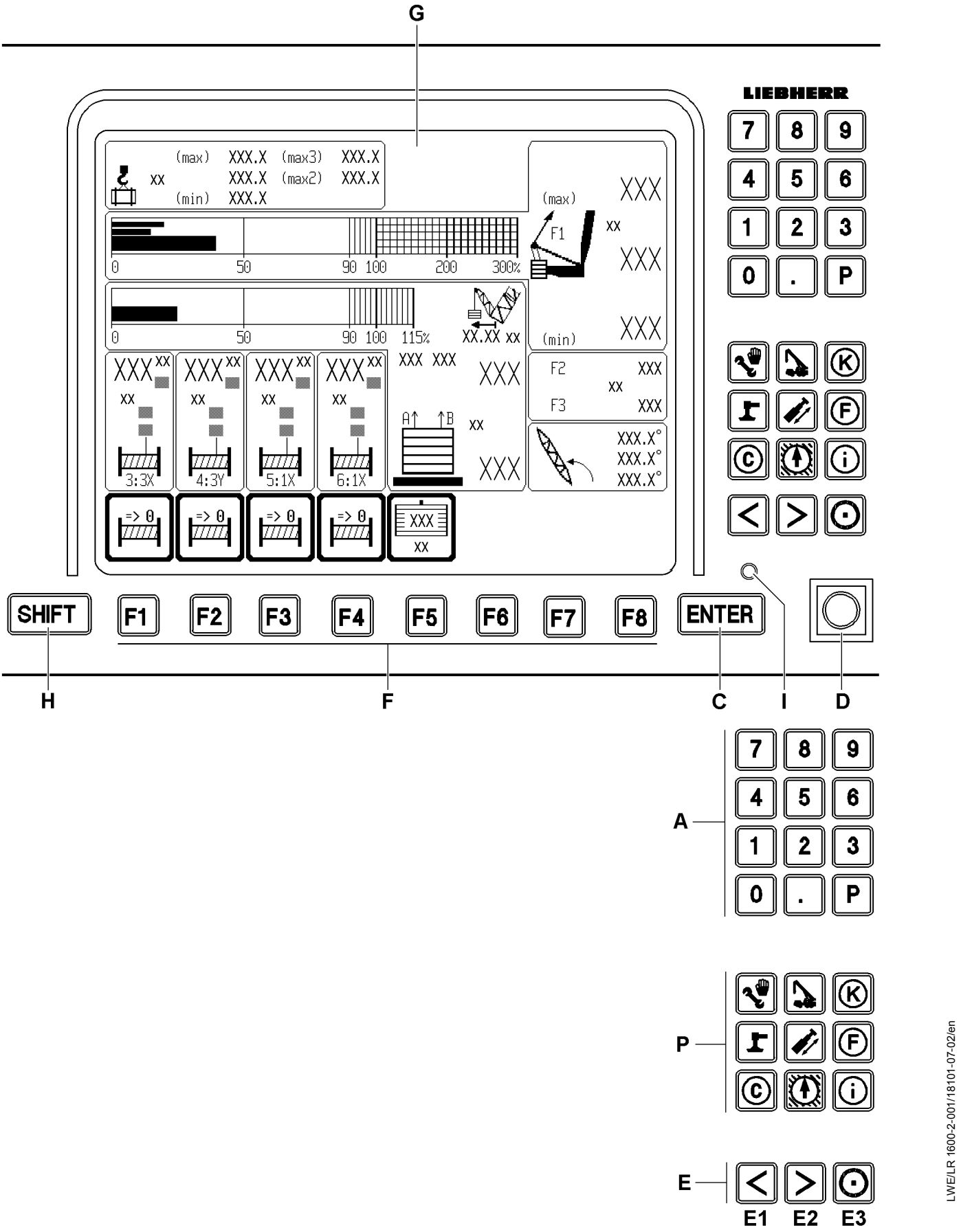

Fig.112941

copyright © Liebherr-Werk Ehingen GmbH 2018

8 Operating elements of the LICCON computer system on monitor 1

A Keypad
- For input of derrick ballast value

P Program keys
- No function

C Input key ENTER
- Confirmation of changes

D Key button
- Acoustic signals which can be shut off of bell / horn turntable can be shut off

E Special function keys
- Monitor brightness adjustment
- Key combination **E3** and **E1**: Turn background illumination on / off.
- Key combination **E3** and **E2**: Brightness adjustment in three stages.

Note

▶ Additional functions of the special function keys **E** are program-dependent and are further explained in the description of the individual LICCON programs!

F Function keys
- The function keys should always be viewed in conjunction with the function key icon line displayed on the monitor

G Display
- In the display appears „normally“ the crane operating screen of monitor 1.

H SHIFT key
- No function

I LED display
- Monitor supply voltage present

LWE/LR 1600-2-001/18101-07-02/en

copyright © Liebherr-Werk Ehingen GmbH 2018

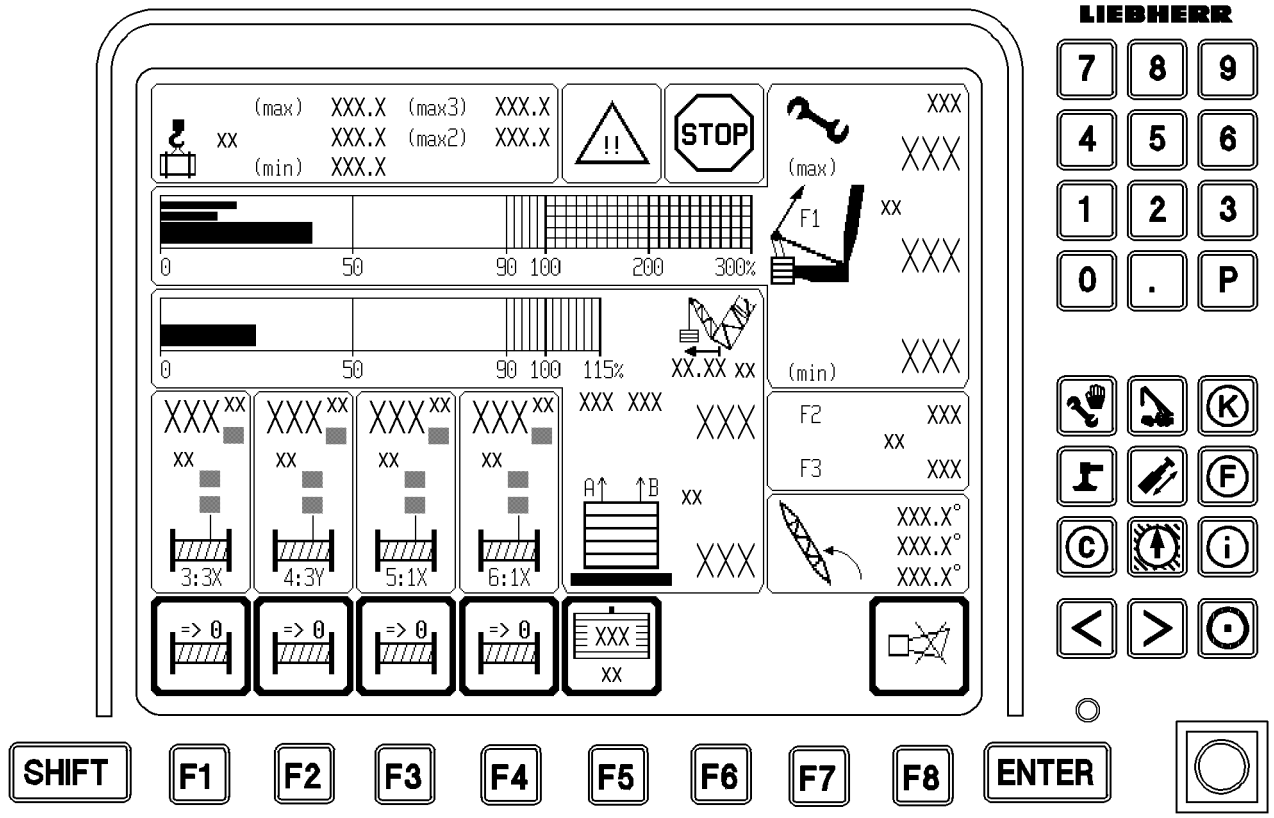

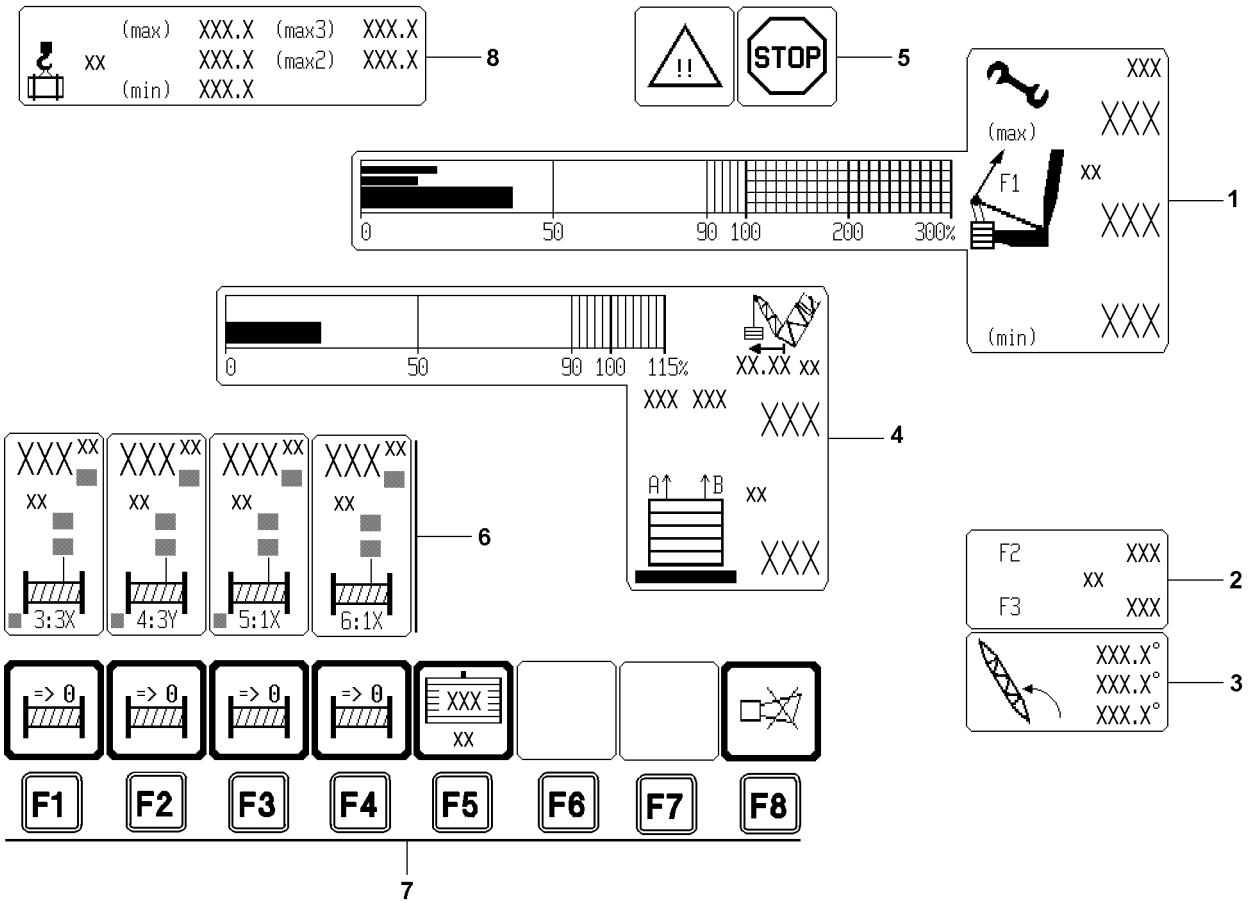

Fig.112942

LWE/LR 1600-2-001/18101-07-02/en

copyright © Liebherr-Werk Ehingen GmbH 2018

9 The Crane operation program on monitor 1

Note

- ▶ The suspended ballast and the ballast trailer* are generally described as **derrick ballast**!
- ▶ The fixed compensation weight which is assembled on the turntable is generally described as the **counterweight**!

In the crane operation program on monitor 1, the monitor is divided into eight areas:

1 Test point 1 = F1
- F1-load display
- Pull test brackets on test points 1A and 1B in the SA-frame guying

2 Test points 2/3 = F2/F3
- Pull test brackets on test points 2A and 2B in the N/W guying
- Pull test brackets on test points 3A and 3B in the S-guying in derrick operation

3 Derrick boom angle

4 Derrick ballast, weight and utilization
- Derrick ballast, placed and pulled
- Derrick ballast radius
- Derrick ballast utilization

5 Alarm functions
- „Advance warning“ and **„STOP“** icons

6 Winch displays
- Winch 3*
- Winch 4
- Winch 5*
- Winch 6*

7 Function key line
- Function keys always refer to the icon shown directly above
- **Note:**
  If no icon is shown in the line directly above the function key, then no function is assigned in the program to the function key!
  See for example function key F6 and function key F7!

8 Load min / max

9.1 Test point 1 = F1

DANGER

Overload of crane in assembly operation!

If the crane is utilized in assembly operation past the assembly limit, then crane components can be overloaded!

The crane can topple over and personnel can be severely injured or killed!

- ▶ In assembly operation, the crane operator must make sure that the crane is not subjected to loads to the assembly limit!
- ▶ The crane may always only be erected / taken down **without load**, according to the data in the operating instructions and the erection and take down charts!

LWE/LR 1600-2-001/18101-07-02/en

copyright © Liebherr-Werk Ehingen GmbH 2018

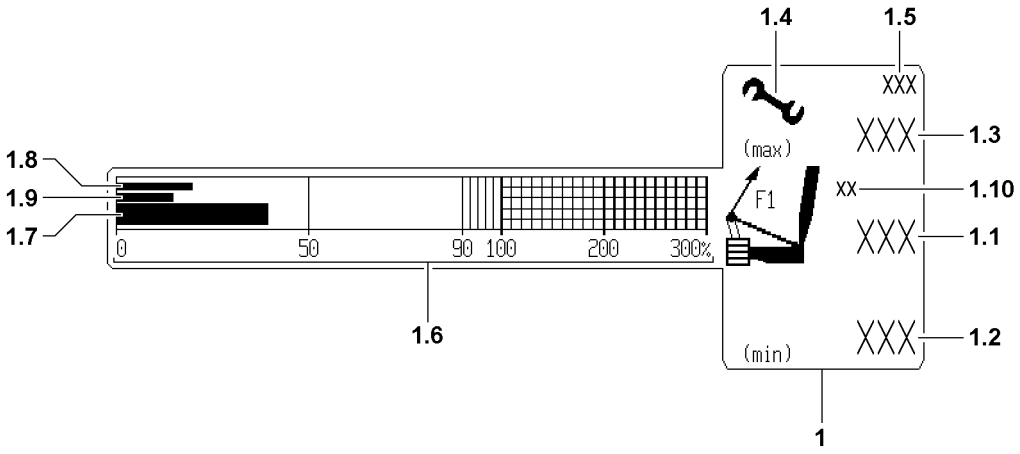

Fig.111912

LWE/LR 1600-2-001/18101-07-02/en

copyright © Liebherr-Werk Ehingen GmbH 2018

9.1.1 F1-assembly maximum force

The F1-assembly-maximum force is abbreviated in the chapter as $F1_{max\text{-}assembly}$.

Note

- ▶ A load chart is available in the operating range of the crane! Outside of the operating range, no load chart is available, the specifications for assembly operation apply!
- ▶ $F1_{max\text{-}assembly}$ **1.5** can be larger within the operating range for static reasons than $F1_{max\text{-}assembly}$ **1.5** outside the operating range!
- ▶ When luffing out of the operating range with load chart, the value $F1_{max\text{-}assembly}$ **1.5** can therefore be significantly reduced!

DANGER

Failure of angle sensor!
If angle sensors on the boom for the LICCON overload protection are defective, then the LICCON overload protection uses the highest permissible $F1_{max\text{-}assembly}$ **1.5** as the non-bypassable maximum value!
This ensures that the boom can always be taken down, even with a defective angle sensor!
If the crane is not taken down after a failure of the angle sensors exactly according to the data in the operating instructions and the erection / take down charts, then it can be overloaded!
The crane can topple over and personnel can be severely injured or killed!

- ▶ Take the crane down if needed exactly according to the data in the operating instructions and the erection / take down charts!

Operating modes without derrick boom

For operating modes without derrick boom, there is a unbypassable F1-limit value:

- **1.5** $F1_{max\text{-}assembly}$
  as upper limit for erection / take down of the boom
  and
  for crane operation with load chart

Operating modes with derrick boom

For operating modes with derrick boom there are two F1-limit values

- $F1_{max\text{-}assembly}$ **1.5** outside the operating range
  For erection and assembly of the crane (non-bypassable)
- **1.3** $F1_{max\text{-}operation}$
  As upper limit for crane operation with load chart (and a few angle degrees next to it)

LWE/LR 1600-2-001/18101-07-02/en

copyright © Liebherr-Werk Ehingen GmbH 2018

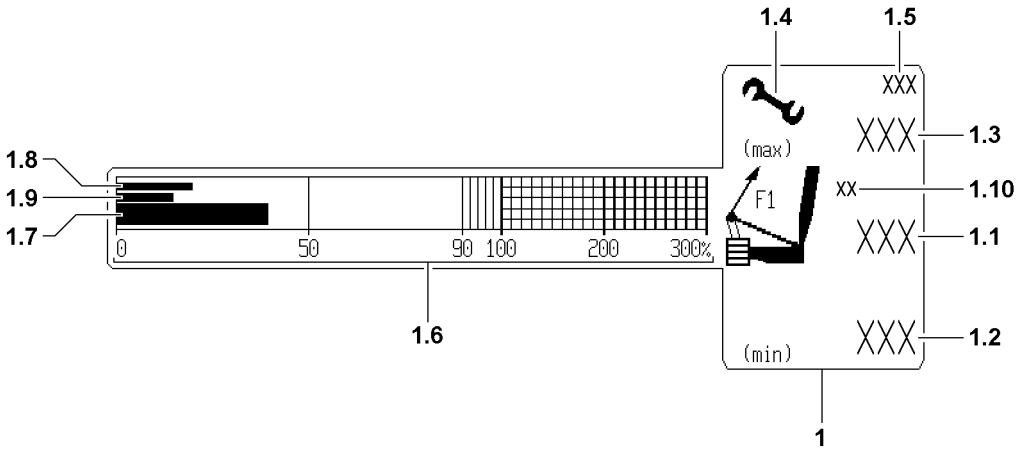

LWE/LR 1600-2-001/18101-07-02/en

Fig.111912

copyright © Liebherr-Werk Ehingen GmbH 2018

9.1.2 Test point 1 = F1 / icon description

Pull test brackets Test point 1A and 1B are in the SA-frame guying

Position	Icons / display values	Type of display	Is shown
1	Icon „Test point 1“	Static	Always
1.1	F1-actual force = $F1_{actual}$ $F1_{actual} = F1A_{actual} + F1B_{actual}$ $F1A_{actual}$ = F1-actual force test point 1A (SA-frame left) $F1B_{actual}$ = F1-actual force test point 1B (SA-frame right)	Static	For valid value
		„???“ blinking	For invalid value
1.2	F1-minimum force = $F1_{min}$	Static	Always when $F1_{min}$ is larger than 0 **Note:** A shut off occurs when falling below $F1_{min}$ If no value is shown $F1_{min}$ = 0!
1.3	F1-operational maximum force = $F1_{max\text{-}operation}$	Static	Only in operating modes with derrick ballast (DB/DBW) **Note:** $F1_{max\text{-}operation}$ is the maximum value which may be reached in crane operation! In crane operation, the shut off occurs at $F1_{actual}$ larger than $F1_{max\text{-}operation}$ + $F1\text{-}_{addition\ for\ shut\ off}$ For cranes with maximum load carrying capacity up to 1000 t applies $F1\text{-}_{addition\ for\ shut\ off}$ = 20 t

Note
Shut off $F1_{min}$

- ▶ If the utilization of the derrick ballast is below 50 %, then there is no immediate shut off when falling below $F1_{min}$ **1.2**!
- ▶ The acoustical and optical warnings remain unaffected by the utilization of the derrick ballast!

LWE/LR 1600-2-001/18101-07-02/en

copyright © Liebherr-Werk Ehingen GmbH 2018

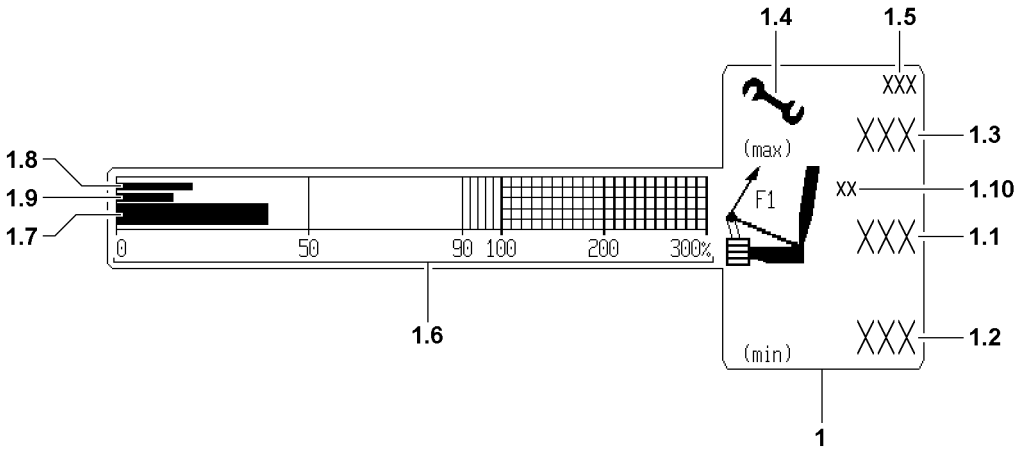

LWE/LR 1600-2-001/18101-07-02/en

Fig.111912

copyright © Liebherr-Werk Ehingen GmbH 2018

Position	Icons / display values	Type of display	Is shown
1.4	Assembly icon	Static / blinking	In „Assembly operation: Boom not in operating range“ **and / or** Advance warning / shut off: Observe F1 limit values!
1.5	F1-assembly maximum force = $F1_{max\text{-}assembly}$	Static / blinking	In „Assembly operation: Boom not in operating range“ **and / or** Advance warning / shut off: Observe F1 limit values!
1.6	F1-utilization scale in percent [%]	Static	Always
1.7	F1-utilization bar = Ratio $F1_{actual}$ to $F1_{max\text{-}operation}$ No display (0 percent) at: $F1_{max\text{-}operation} = 0$ **or** No value **or** $F1_{min}$ = invalid	Dynamic	In operating modes with derrick ballast (DB/DBW)

Note

▶ The F1-assembly maximum force ($F1_{max\text{-}assembly}$) appears at $F1_{is}$ larger than 90% of $F1_{max\text{-}assembly}$

LWE/LR 1600-2-001/18101-07-02/en

copyright © Liebherr-Werk Ehingen GmbH 2018

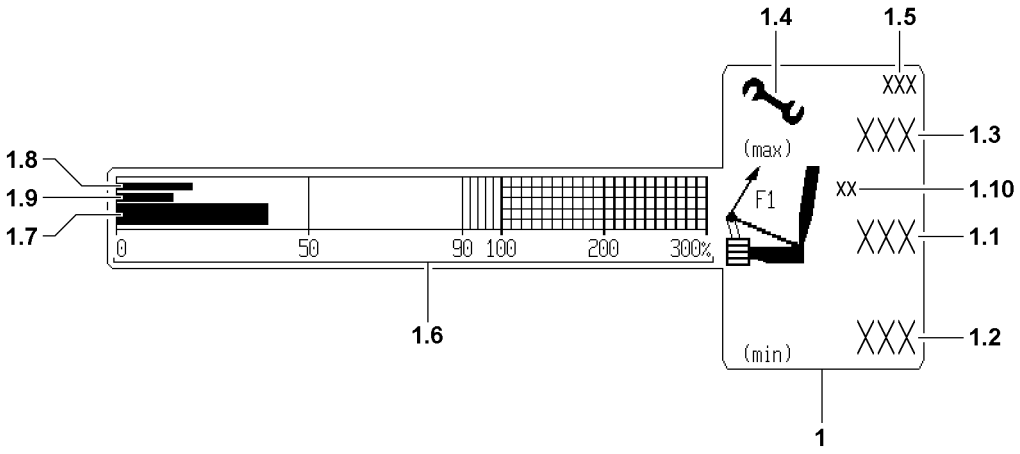

LWE/LR 1600-2-001/18101-07-02/en

Fig.111912

copyright © Liebherr-Werk Ehingen GmbH 2018

Position	Icons / display values	Type of display	Is shown
1.8	F1-Min-warning bar = Ratio $F1_{min\text{-}warning\ value}$ to $F1_{max\text{-}operation}$ ($F1_{min\text{-}warning\ value} = F1_{min} + \Delta_{F1}$) No display (0 percent) at: $F1_{max\text{-}operation} = 0$ **or** No value **or** $F1_{max\text{-}operation}$ = invalid	Dynamic	In operating modes with derrick ballast (DB/DBW) Δ_{F1} = 15 t for cranes with max- load smaller than 1000 t
1.9	F1-Min-Stop bar = Ratio $F1_{min}$ to $F1_{max\text{-}operation}$ 0 percent [%] for: $F1_{max\text{-}operation} = 0$ **or** No value **or** $F1_{max\text{-}operationb}$ = invalid	Dynamic	In operating modes with derrick ballast (DB/DBW)
1.10	Measuring unit icon	Static	Always

copyright © Liebherr-Werk Ehingen GmbH 2018

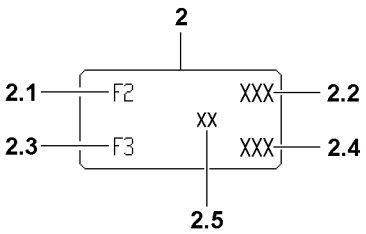

Fig.111913

LWE/LR 1600-2-001/18101-07-02/en

copyright © Liebherr-Werk Ehingen GmbH 2018

9.2 Test point 2 = F2 and test point 3 = F3

Pull test brackets test point 2A and 2B are in the N/W-guying

Pull test brackets test point 3A and 3B are in the guying derrick boom / main boom on the main boom head

Position	Icons / display values	Type of display	Is shown
2	Icon for N/W-guy force and main boom guy force in derrick operation	Static	In operating modes with auxiliary boom / accessory and / or derrick boom
2.1	Icon F2 for N/W-guy force test point 2	Static	In operating modes with auxiliary boom / accessory
2.2	F2-actual force = $F2_{actual}$	Static	In operating modes with auxiliary boom / accessory and valid F2-value
	$F2_{actual} = F2A_{actual} + F2B_{actual}$ Test point 2A = left Test point 2B = right	„???“ blinking	In operating modes with auxiliary boom / accessory and invalid F2-value
2.3	Icon F3 for main boom guy force test point 3	Static	In operating modes with derrick boom
2.4	F3-actual force = $F3_{actual}$	Static	In operating modes with derrick boom and valid F3-value
	$F3_{actual} = F3A_{actual} + F3B_{actual}$ Test point 3A = left Test point 3B = right	„???“ blinking	In operating modes with derrick boom and invalid F3-value
2.5	Measuring unit icon	Static	Always

LWE/LR 1600-2-001/18101-07-02/en

copyright © Liebherr-Werk Ehingen GmbH 2018

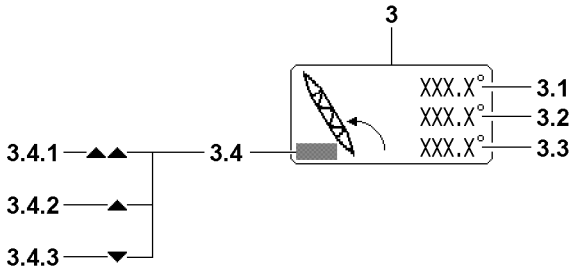

Fig.111914

LWE/LR 1600-2-001/18101-07-02/en

copyright © Liebherr-Werk Ehingen GmbH 2018

9.3 Derrick boom angle

Position	Icons / display values	Type of display	Is shown	
3	Derrick boom angle icon	Static	In operating modes with derrick boom	
3.1	Maximum derrick boom angle in crane operation = angle-D_{max} in [°]	Static	In operating modes with derrick boom and angle-$D_{current}$ smaller or same as angle-D_{max}	
		Blinking	In operating modes with derrick boom and angle-$D_{current}$ larger than angle-D_{max}	
3.2	Current derrick boom angle = angle-$D_{current}$ in [°]	Static	In operating modes with derrick boom and valid value	
		„???“ blinking	In operating modes with derrick boom and invalid value	
3.3	Minimum derrick boom angle during crane operation = angle-D_{min} in [°]	Static	In operating modes with derrick boom and angle-$D_{current}$ larger or same as angle-D_{min}	
		Blinking	In operating modes with derrick boom and angle-$D_{current}$ smaller than angle-D_{min}	
3.4	Alarm functions derrick boom		Limitation / monitoring of relapse cylinders **Note:** As an icon appears, an error message is issued!	
3.4.1	Two arrows pointing up	Static	Relapse cylinder on block (limit switch actuated) or sensor / limit switch defective	
3.4.2	Arrow pointing up	Static	In angle-$D_{current}$ larger than angle-D_{max}	
3.4.3	Arrow pointing down	Static	In angle-$D_{current}$ smaller than angle-D_{min}	

LWE/LR 1600-2-001/18101-07-02/en

copyright © Liebherr-Werk Ehingen GmbH 2018

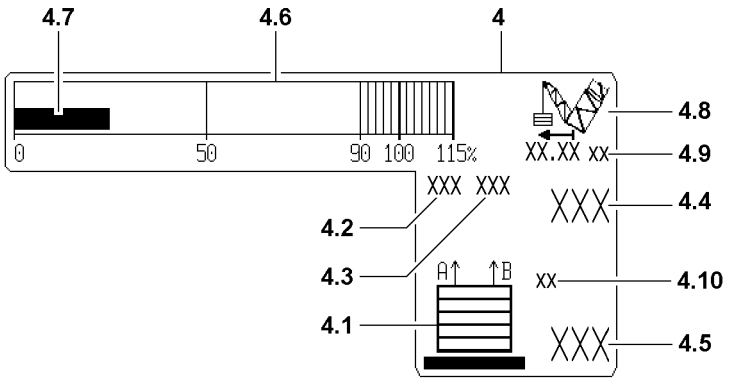

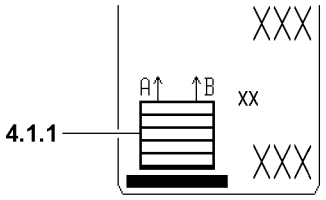

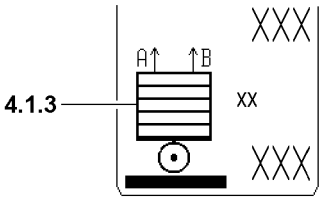

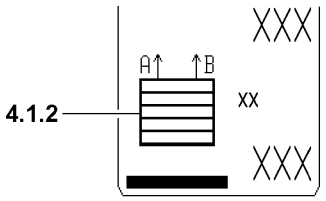

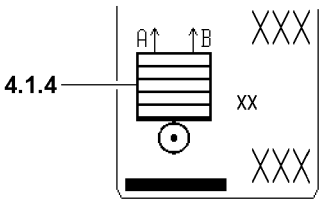

LWE/LR 1600-2-001/18101-07-02/en

Fig.112995

copyright © Liebherr-Werk Ehingen GmbH 2018

9.4 Derrick ballast, weight and utilization

Test points derrick ballast guying A are:
- Test point 4A = pressure sensor ring surface left F4A
- Test point 5A = pressure sensor piston surface left F5A

Test points derrick ballast guying B are:
- Test point 4B = pressure sensor ring surface right F4B
- Test point 5B = pressure sensor piston surface right F5B

Position	Icons / display values	Type of display	Is shown
4	„Derrick ballast, weight and utilization“ icon	Static	In operating modes with derrick ballast
4.1	„Derrick ballast“ icon	Static	In operating modes with derrick ballast, depending on the type and the condition of the derrick ballast (see 4.1.1 - 4.1.4)

Note
- ▶ The view of the „derrick ballast“ **4.1** icon changes depending on if the derrick ballast is set up as a suspended ballast or as a ballast trailer!
- ▶ During crane operation observe the respective chapters for suspended ballast or ballast trailer in the Crane operating instructions!

Position	Icons / display values	Type of display	Is shown
4.1.1	„Suspended ballast on the ground“ icon	Static	Ground contact sensor reports „Suspended ballast **not suspended**“
4.1.2	„Suspended ballast suspended“ icon	Static	Ground contact sensor reports „Suspended ballast **suspended**“
4.1.3	„Ballast trailer on the ground“ icon	Static	Key button ballast trailer in position „Ballast trailer **not suspended**“
4.1.4	„Ballast trailer suspended“ icon	Static	Key button ballast trailer in position „Ballast trailer **suspended**“

LWE/LR 1600-2-001/18101-07-02/en

copyright © Liebherr-Werk Ehingen GmbH 2018

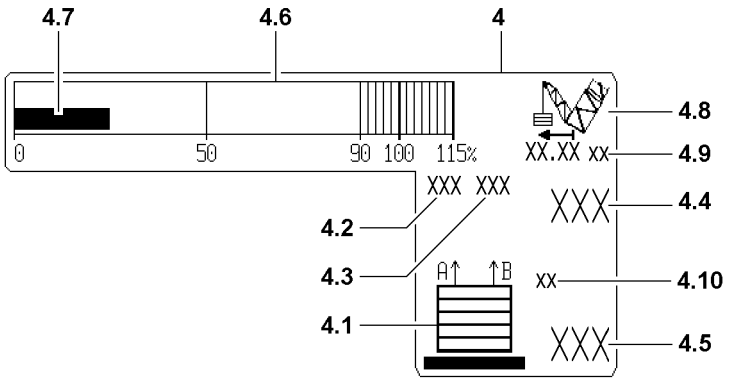

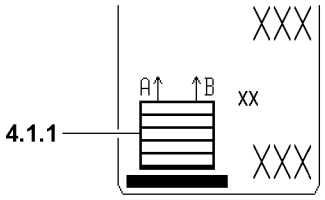

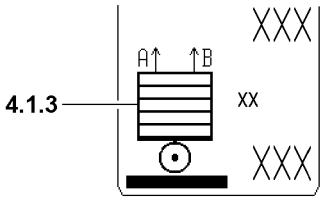

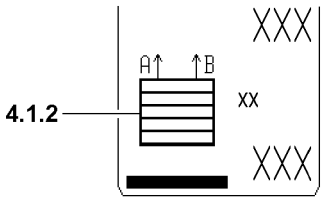

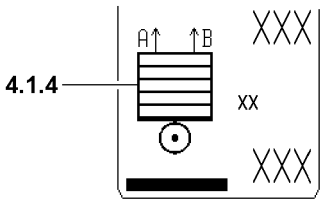

LWE/LR 1600-2-001/18101-07-02/en

Fig.112995

copyright © Liebherr-Werk Ehingen GmbH 2018

Position	Icons / display values	Type of display	Is shown
4.2	Force Derrick ballast guying A (left) Test point 4A Test point 5A	Static	„Values test points“ valid
		Blinking	„Values test points“ valid **and** Difference between guy force A and B is larger than permissible
		„???“ Blinking	At least one „Value test point“ invalid
4.3	Force Derrick ballast guying B (left) Test point 4B Test point 5B	Static	„Values test points“ valid
		Blinking	„Values test points“ valid **and** Difference between guy force A and B is larger than permissible
		„???“ Blinking	At least one „Value test point“ invalid

Note
Failure of pressure sensor!
- ▶ If only one pressure sensor fails, for example F5A (test point 5A) invalid, then the LICCON computer system assumes F5A = F5B in the interim! An error message is issued!
- ▶ The error must be remedied immediately!

LWE/LR 1600-2-001/18101-07-02/en

copyright © Liebherr-Werk Ehingen GmbH 2018

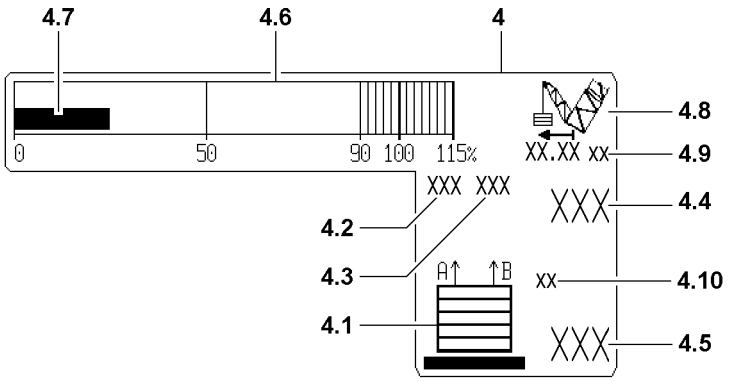

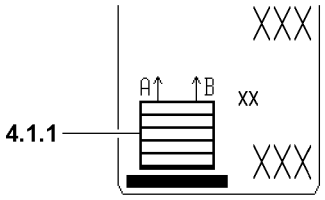

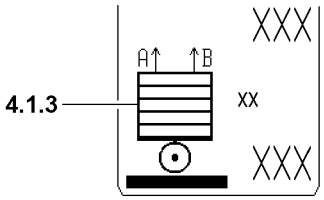

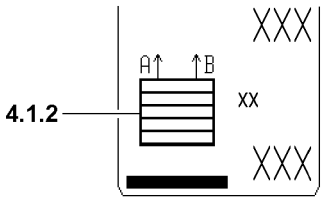

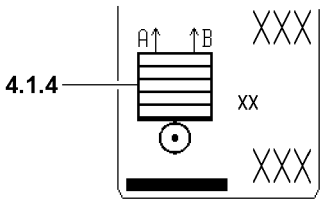

LWE/LR 1600-2-001/18101-07-02/en

Fig.112995

copyright © Liebherr-Werk Ehingen GmbH 2018

Position	Icons / display values	Type of display	Is shown
4.4	Pulled derrick ballast = BA_{pulled} = vertical force components in derrick ballast guying, calculated from test points 4A, 4B, 5A and 5B **Note:** The sum of forces in the derrick ballast guying A and B is larger or the same as the pulled derrick ballast (BA_{pulled})!	Static	If value BA_{pulled} valid
		„???“ Blinking	If value BA_{pulled} invalid **or** Operating mode with BW and derrick ballast radius invalid
4.5	Placed derrick ballast = BA_{placed} **Note:** This value has been entered by hand and confirmed with the **ENTER** key! The value is saved when turning off and is valid again after turning on until it is changed with the function key **„F5“**!	Static	If value BA_{placed} permissible
		Blinking	If value BA_{placed} questionable
		„???“ blinking	If value BA_{placed} invalid

copyright © Liebherr-Werk Ehingen GmbH 2018

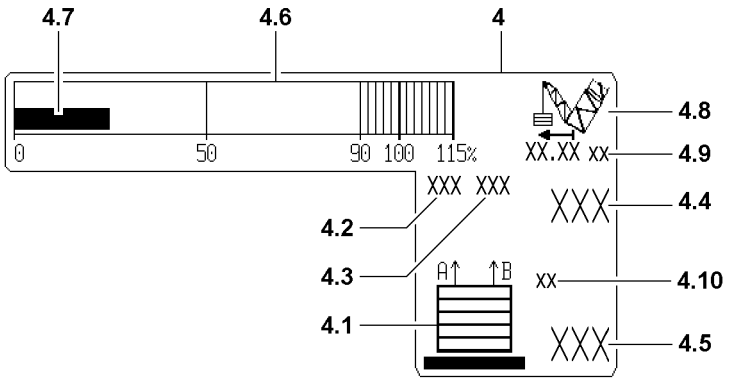

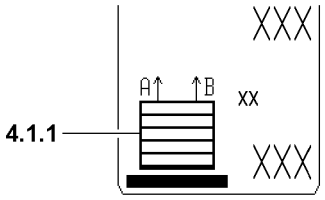

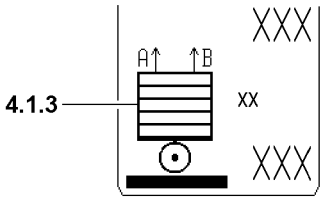

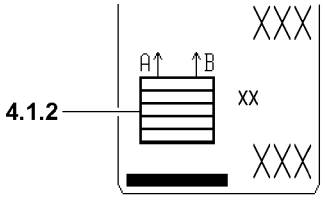

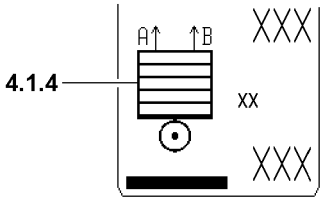

LWE/LR 1600-2-001/18101-07-02/en

Fig.112995

copyright © Liebherr-Werk Ehingen GmbH 2018

Position	Icons / display values	Type of display	Is shown
4.6	Ballast utilization scale	Static	Always
4.7	Derrick ballast utilization bar = Ratio BA_{pulled} to BA_{placed} in percent Derrick ballast utilization bar is 0 at: BA_{placed} smaller than BA_{placed_min} **or** BA_{pulled} = invalid	Dynamic	In operating modes with derrick ballast **Note:** The utilization bar can show max. 115 %!
4.8	„Derrick ballast radius“ icon	Static	In operating modes with derrick ballast
4.9	Display of derrick ballast radius with measuring unit	Static	When value derrick ballast radius valid
		„???“ blinking	When value derrick ballast radius invalid
4.10	Measuring unit Derrick ballast weight	Static	Always

LWE/LR 1600-2-001/18101-07-02/en

copyright © Liebherr-Werk Ehingen GmbH 2018

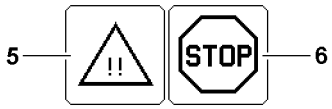

Fig.112317

LWE/LR 1600-2-001/18101-07-02/en

copyright © Liebherr-Werk Ehingen GmbH 2018

9.5 Alarm functions

NOTICE
Triggered alarm function!
If an alarm function is triggered (for example a advance warning occurrence or LMB Stop), the cause must be determined!
- ▶ Always pay attention to triggered alarm functions!
- ▶ Alarm functions can flash over the monitor!

Note
Shut off delay LMB stop!
- ▶ A LMB stop with shut off delay remains for a certain period of time! Possible fluctuating movements of the crane can be thereby minimized!

Position	Icons / display values	Type of display	Is shown
5	„Advance warning“ icon	Blinking	If an advance warning occurs, for example: $F1_{min\text{-}advance\ warning}$: $F1_{actual}$ smaller than $F1_{min\text{-}warning\ value}$
6	„STOP“ icon	Blinking	If an LMB stop occurrence results, for example: At $F1_{min\text{-}stop}$ ($F1_{is}$ smaller than $F1_{min}$) with shut off delay 3 s **or** At $F1_{max\text{-}operation\ stop}$ (F1 larger or same as $F1_{max\text{-}operation\ shut\ off\ value}$) with shut off delay three seconds **or** $F1_{max\text{-}assembly\text{-}stop}$ ($F1_{is}$ larger or same as $F1_{max\text{-}assembly}$) with shut off delay three seconds **Note:** $F1_{max\text{-}operation\ shut\ off\ value} = F1_{max\text{-}operation} + F1_{addition\ for\ shut\ off}$!

copyright © Liebherr-Werk Ehingen GmbH 2018

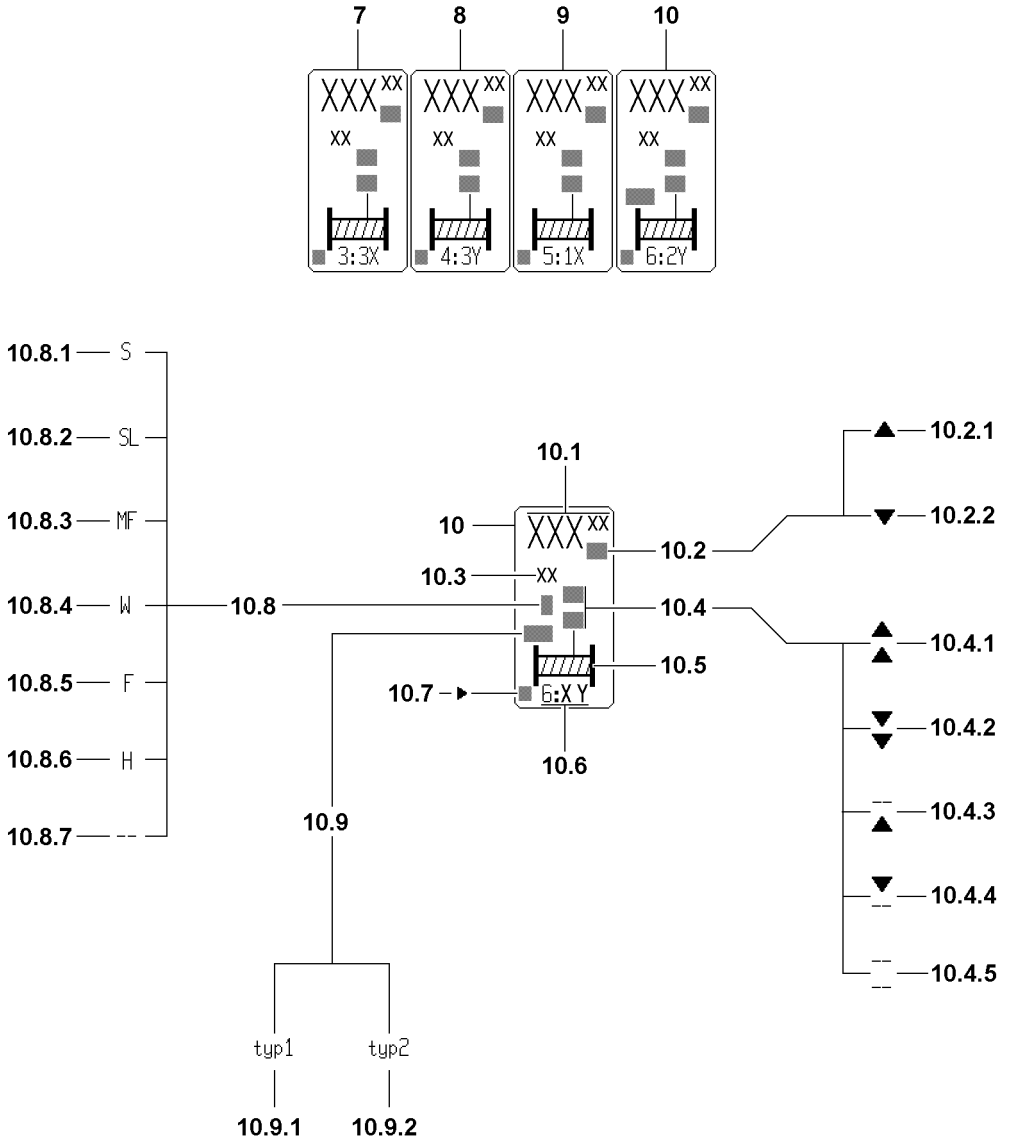

LWE/LR 1600-2-001/18101-07-02/en

Fig.116851

copyright © Liebherr-Werk Ehingen GmbH 2018

9.6 Winch displays

9.6.1 Winches 3 to 6

The icons for winch 3*, winch 4, winch 5* and winch 6* are only shown on monitor 1, if the crane is equipped with these winches and the winches are activated.

The display of winches is the same as the display of winch 1 and 2 on LICCON monitor 0.

Note

- If one of the winches is used as hoist winch according to the set operating mode, then the **completed hook path** is shown in the winch icon. The value, which was tared by the corresponding function key is still shown unchanged, even after turning off and on or after an operating mode change!
- If one of the winches is used as a control winch, then the current **rope length on the winch drum** is shown, not the hook path. Then taring is possible, but after turning on and off again or after an operating mode change, the original value „Rope length on the rope drum“ is shown again!

Position	Icons / display values	Type of display	Is shown
7	Winch display winch 3*	Static	For installed and activated winch 3*
8	Winch display winch 4	Static	For installed and activated winch 4
9	Winch display winch 5*	Static	For installed and activated winch 5*
10	Winch display winch 6*	Static	For installed and activated winch 6*

Note

- „Winch 3*“, „winch 4“ and „winch 5“* are always calculated as control winches!
- „Winch 6*“ is calculated as hoist winch, if the reeving cannot be derived from the „reeving of the boom“ and the „reeving of the boom nose“. In these cases, n = 1 is used as reeving!
- For winch 4 (intake gear), the rope length is valid equally for the left and the right half of the rope drum!

LWE/LR 1600-2-001/18101-07-02/en

copyright © Liebherr-Werk Ehingen GmbH 2018

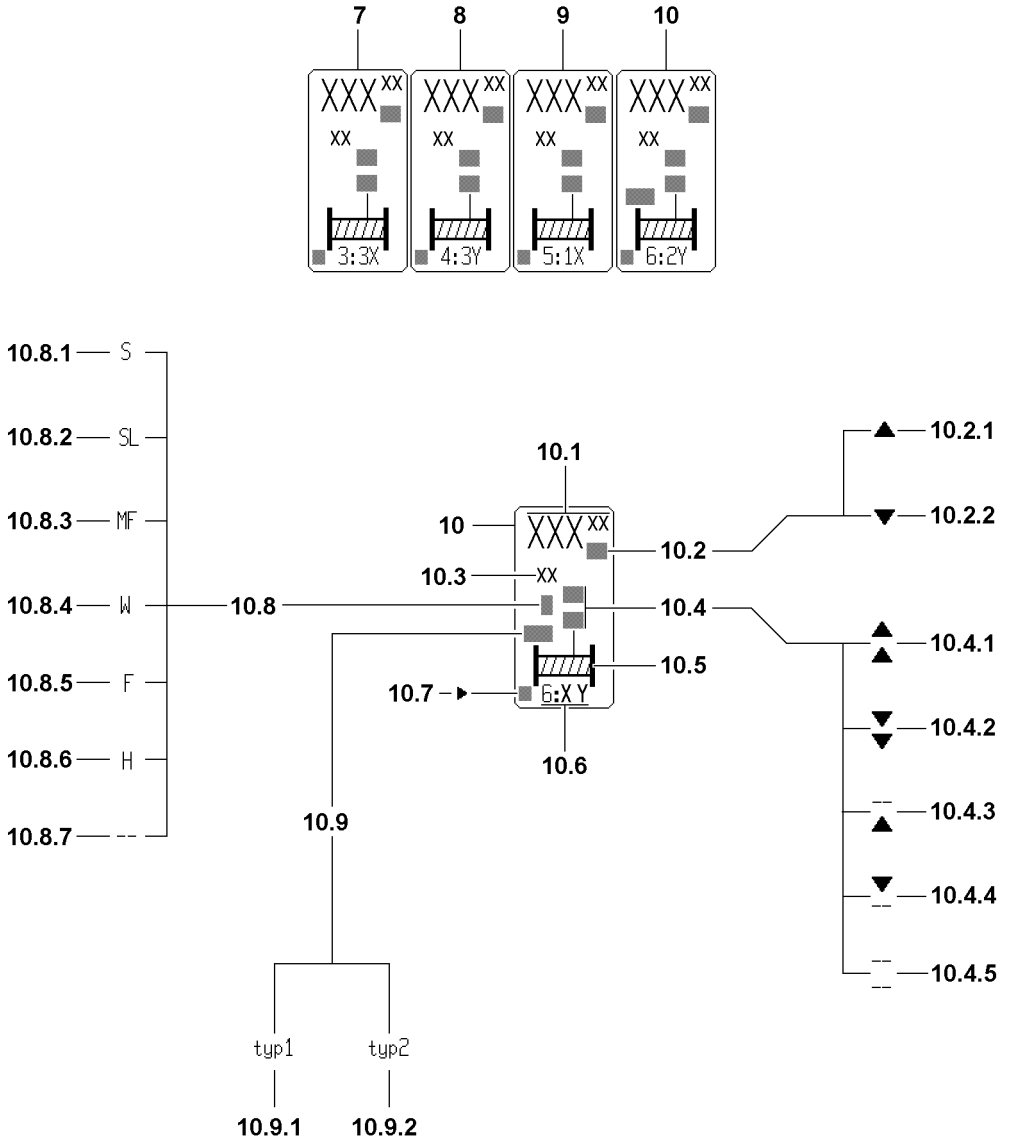

LWE/LR 1600-2-001/18101-07-02/en

Fig.116851

copyright © Liebherr-Werk Ehingen GmbH 2018

9.6.2 Winch display

The winch 3 to 6 icons have the same meaning, which are explained for the „Winch 6“ **10** icon.

Note

- If one of the winches is used as hoist winch according to the set operating mode (for example „winch 3“ at derrick operation), then the **hook path** is shown in the winch icon. The value, which was tared by the corresponding function key is still shown unchanged, even after turning off and on or after an operating mode change!
- If one of the winches is used as a control winch, then **the current rope length on the winch drum** is shown, not the path of the hook block. Then taring is possible, but after turning on and off again or after an operating mode change, the original value „Rope length on the rope drum“ is shown again!

Note

Display area winch displays!

- The „Completed path“ display **1.1** has only three positions before the comma, any positions before that are cut off! The crane operator must evaluate for himself if, for example 200 m rope are spooled up on a winch or 1200 m. **The display in both cases would be identical with 200 m !**
- The hook path calculation only works accurately if the load is suspended freely and is not luffed during the lifting procedure! Not taken into account are flexation and rope expansion!
- The length display (hook path display) is only accurate and the layer jump is only taken into account correctly if the winch has been calibrated and no interruptions of the CPU power supply have occurred (cold start)!

Note

Error in winch path measurement!

- In case of an error in the winch path measurement, blinking „???“ appear as display value **10.1**!
- If an error occurs and an error message is issued, see Diagnostics manual!

10 „Winch 6“ icon

10.1 Completed hook path
- In [m] or [ft]
  From a zero point to be determined
- **Note:**
  Is statically shown when the winch is calculated as **hoist winch** and a manually entered reeving must be assigned to this winch!

or

10.1 Rope length of the winch drum
- In [m] or [ft]
- **Note:**
  Is statically shown when the winch is calculated as **control winch**!

LWE/LR 1600-2-001/18101-07-02/en

copyright © Liebherr-Werk Ehingen GmbH 2018

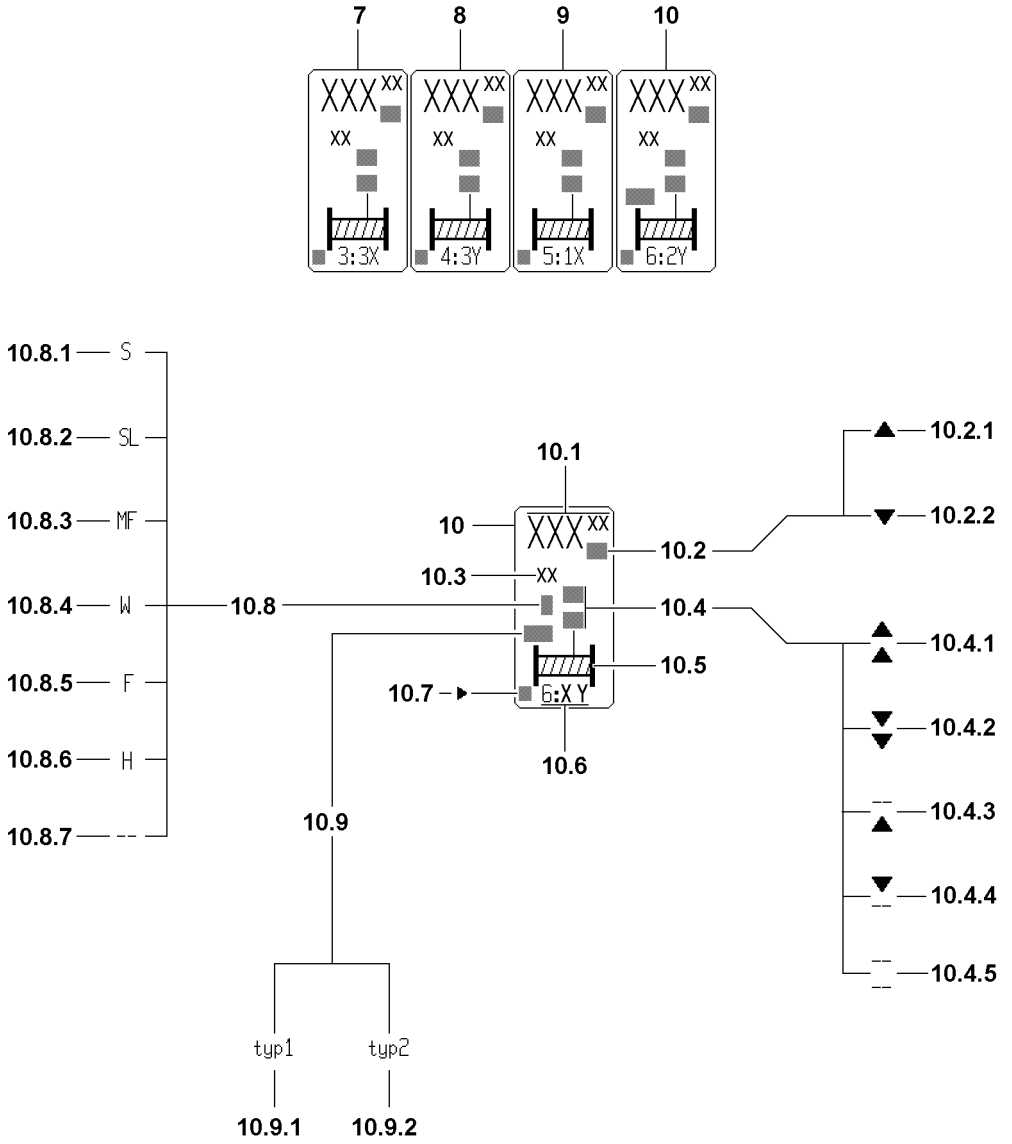

LWE/LR 1600-2-001/18101-07-02/en

Fig.116851

copyright © Liebherr-Werk Ehingen GmbH 2018

10.2 Direction of hook movement

The arrows on the length value show the direction of the hook movement in relation to the zero point:
- Arrow up **10.2.1**: Hook has moved upward from the zero point.
- Arrow up **10.2.2**: Hook has moved down from the zero point.

10.3 Length unit for hook path display
- In [m] or [ft]

10.4 Winch status display
- There are five winch status icons (all blinking):

10.4.1 Spool out

10.4.2 Spool up

10.4.3 Spooled out
- Spooling out is blocked

10.4.4 Spooled up
- Spooling up is blocked

10.4.5 Winch is deactivated
- Spooling up and spooling out are blocked (via Control parameter program).
- **Note:**
  If no winch status icon appears, the activated winch is inactive and is neither spooled up nor out!

10.5 Winch icon
- (With rope end for winch status icon)

10.6 Winch number with master switch number and master switch operating direction
- Example: 6:2Y
  First digit: Winch number
  Second digit: Master switch number
  Letter: Master switch operating direction

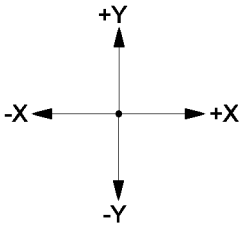

Fig.199930

10.7 Vibration sensor
- If the vibration sensor for a winch is added on the master switch, then an arrow appears in this winch icon for the added vibration sensor.
- **Note:**
  The vibration sensor is added for the first actuated crane function!

copyright © Liebherr-Werk Ehingen GmbH 2018

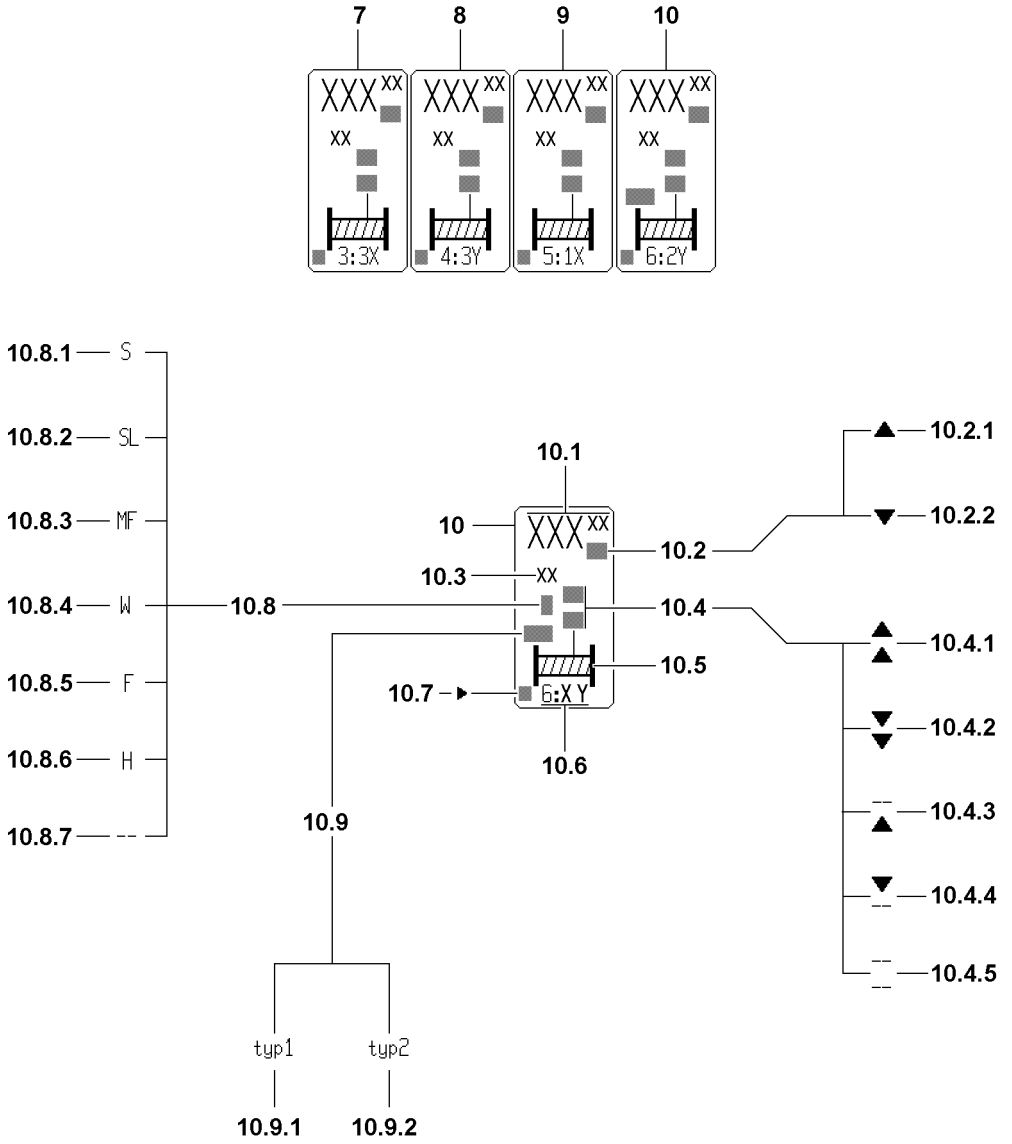

LWE/LR 1600-2-001/18101-07-02/en

Fig.116851

copyright © Liebherr-Werk Ehingen GmbH 2018

10.8 Reeved in boom
- To check the settings for „winch pulley head assignment“ of various hoist winches, the respective boom symbol, on which the winch must be reeved according to the winch pulley head assignment is shown in the symbol element „winch display“
  Note:
  The reeved boom **10.8** icon is shown only in the winch icon of winch 1, winch 2 and winch 6.

10.8.1 S
- Winch is reeved on the pulley head of the S-main boom

10.8.2 SL
- Winch is reeved on the pulley head of the SL-main boom

10.8.3 MF
- Winch is reeved on the pulley head of the center pulley of the luffing jib

10.8.4 W
- Winch is reeved on the pulley head of the luffing jib

10.8.5 F
- Winch is reeved on the pulley head of the F-lattice jib

10.8.6 H
- Winch is reeved on the pulley head of the boom nose

10.8.7 – –
- Winch is not reeved on **any** pulley head

Note
▶ The winch type***** (type1 or type2) is only displayed in the winch icon of winch 6!

10.9 Winch type*****
- The crane control recognizes the respective winch type when winch 6 is installed.

10.9.1 type1
- Winch 6 with rope diameter 28 mm

10.9.2 type2
- Winch 6 with rope diameter 25 mm

LWE/LR 1600-2-001/18101-07-02/en

copyright © Liebherr-Werk Ehingen GmbH 2018

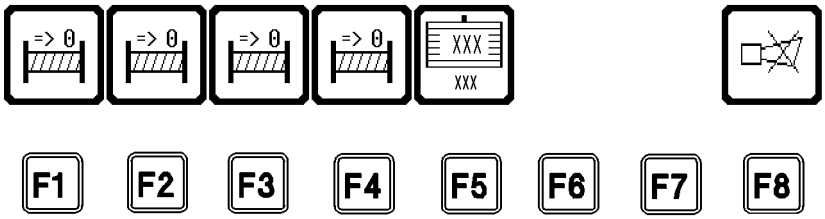

Fig.113270

LWE/LR 1600-2-001/18101-07-02/en

copyright © Liebherr-Werk Ehingen GmbH 2018

9.7 Function key line

Position	Function / function key line	Type of display	Is shown
F1	Tare length display of winch 3***** **Note:** Tare = length display is set to **0**!	Static	If winch display for winch 3***** is shown
F2	Tare the length display of winch 4 **Note:** Tare = length display is set to **0**!	Static	If winch display for winch 4 is shown
F3	Tare length display of winch 5***** **Note:** Tare = length display is set to **0**!	Static	If winch display for winch 5***** is shown
F4	Tare length display of winch 6***** **Note:** Tare = length display is set to **0**!	Static	If winch display for winch 6***** is shown

LWE/LR 1600-2-001/18101-07-02/en

copyright © Liebherr-Werk Ehingen GmbH 2018

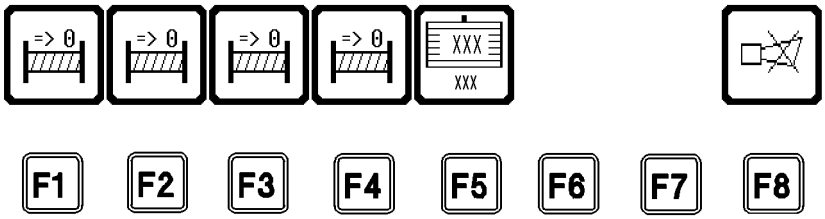

Fig.113270

LWE/LR 1600-2-001/18101-07-02/en

copyright © Liebherr-Werk Ehingen GmbH 2018

Position	Function / function key line	Type of display	Is shown
F5	Ballasting key***** When pressing function key F5, the thick icon frame changes to a thin icon frame. A blinking cursor appears in the ballast input field. The value for the placed ballast can only be entered in the displayed weight unit [t] or [kips] via the keypad on monitor 1. **The ballast input can be ended by:** - Pressing the ENTER key **C** = Take over value The entered value appears now as value for the placed ballast (BA_{placed}) in the ballast icon **or** - Pressing „F5“ key = abort ballast input. The change is discarded. The old value of BA_{placed} remains in the ballast icon.	Static	In operating modes with derrick ballast

Note

▶ When entering the ballast, make sure to observe the respective section regarding the derrick ballast, see Crane operating instructions, chapter 4.03!

LWE/LR 1600-2-001/18101-07-02/en

copyright © Liebherr-Werk Ehingen GmbH 2018

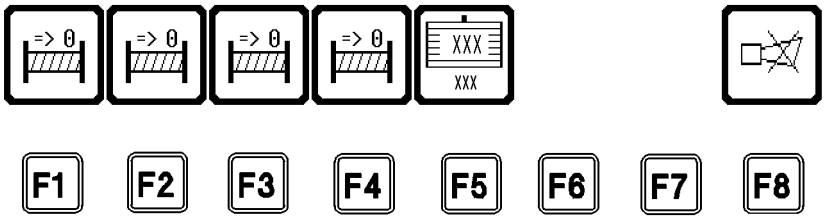

Fig.113270

copyright © Liebherr-Werk Ehingen GmbH 2018

Position	Function / function key line	Type of display	Is shown
F5*	Ballast input value (BA_{edit})* = entered ballast value in function key icon of „F5“	Static	For **valid** ballast input value
		„???“ blinking	For **invalid** ballast input value
F6	Not assigned		
F7	Not assigned		
F8	„Horn“ icon - Turn off the acoustic signal „Horn“ on monitor 1 by pressing the „F8“ key.	Blinking	If the acoustic signal „Horn“ sounds on monitor 1. See paragraph „Acoustic warning on monitor 1“.

LWE/LR 1600-2-001/18101-07-02/en

copyright © Liebherr-Werk Ehingen GmbH 2018

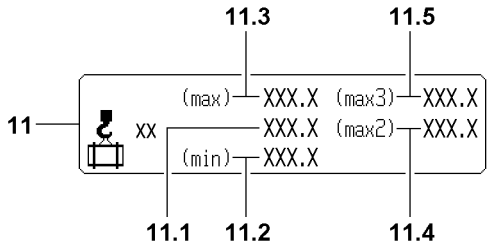

Fig.112946

LWE/LR 1600-2-001/18101-07-02/en

copyright © Liebherr-Werk Ehingen GmbH 2018

9.8 Load min / max

The „load capacity min / max“ **11** icon appears on monitor 1 only if an operating mode with derrick ballast has been selected.

11 Load min / max
- In [t] or [kips])

11.1 Current load on the boom
- Actual load display = **Load**, which currently hangs on the selected boom.
- Display of the calculated total load including the weights of the carrying equipment, the lifting equipment (hook block) and / or the fastening equipment, but **without** the nominal weight of the hoist rope
- **Note:**
  The „current load on the boom“ **11.1 cannot** „be tared“ and set to zero on monitor 1.
  If the „current load on the boom“ **2.1** was not tared („zeroed out“) on monitor 0, then the following applies:
  The „current load on the boom“ **11.1** of monitor 1 and the „current load on the boom“ **2.1** of monitor 0 are identical. The displayed values must match.

11.2 Min-load
- Is the minimum load which the crane must pull in the current operating condition with the currently pulled derrick ballast, so that $F1_{actual}$ is larger than $F1_{min}$ and no $F1_{min}$-shut off occurs as a result.
  If this „min-load“ is **not** reached, then the $F1_{min}$-shut off occurs.
- The „min-load“ is an approximate calculated value, which can still change slightly when lifting / setting down the load.
- When the „min-load“ is larger then the weight of the hook and the tackle, then this means that the load can only be set down if the pulled derrick ballast is also reduced. This means a suspended derrick ballast must be set down on the ground, otherwise the $F1_{min}$-shut off occurs.

LWE/LR 1600-2-001/18101-07-02/en

copyright © Liebherr-Werk Ehingen GmbH 2018

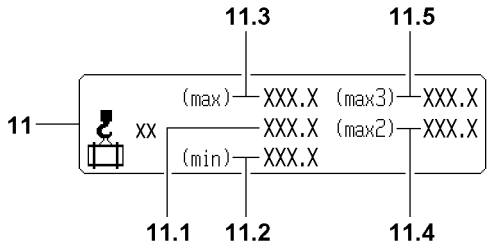

Fig.112946

LWE/LR 1600-2-001/18101-07-02/en

copyright © Liebherr-Werk Ehingen GmbH 2018

11.3 Max-load
- Is the maximum load („maximum load according to load chart and reeving on the boom“ **1.1**), which the crane can lift in the current operating condition with the currently **pulled** derrick ballast
  Note:
  Die „max-load“ on monitor 1 and the „Maximum load“ on monitor 0 are identical. The displayed values must always match.

11.4 Max2-load
- Is the maximum load, which the crane can lift in the current operating condition, when the **placed** derrick ballast is fully **pulled**

11.5 Max3-load
- Is the maximum load, which the crane can lift in the current operating condition, when the **optimum** derrick ballast is placed and fully **pulled**
- **Note:**
  The optimum derrick ballast is reached when a further increase of the derrick ballast results in **no higher maximum load**.

Note
The following display values of the „min / max load“ **11** icon correspond:
- ▶ The „current load on the boom“ **11.1** and the actual force „$F1_{is}$“ **1.1**.
- ▶ The „min-load“ **11.2** and the minimum force „$F1_{min}$“ **1.2**.
- ▶ The „max-load“ **11.3** and the maximum operating force „$F1_{max\text{-}operation}$“ **1.3**.

LWE/LR 1600-2-001/18101-07-02/en

copyright © Liebherr-Werk Ehingen GmbH 2018

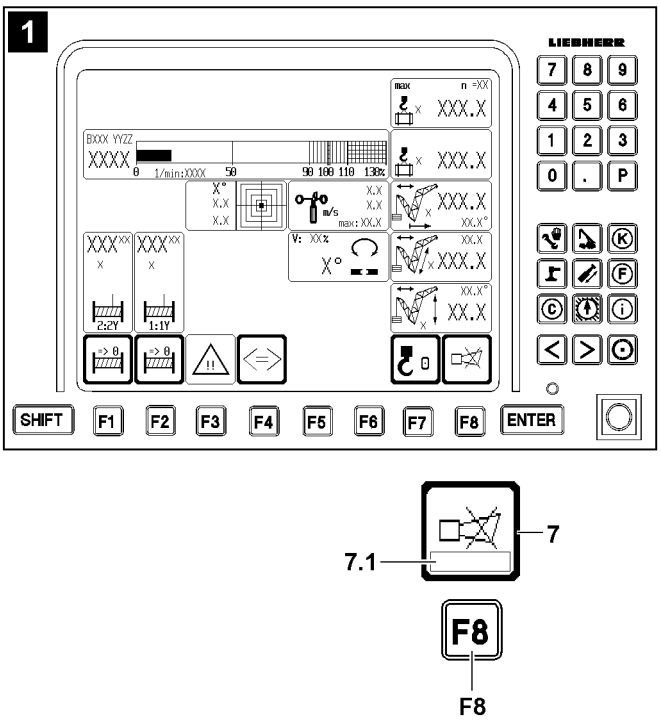

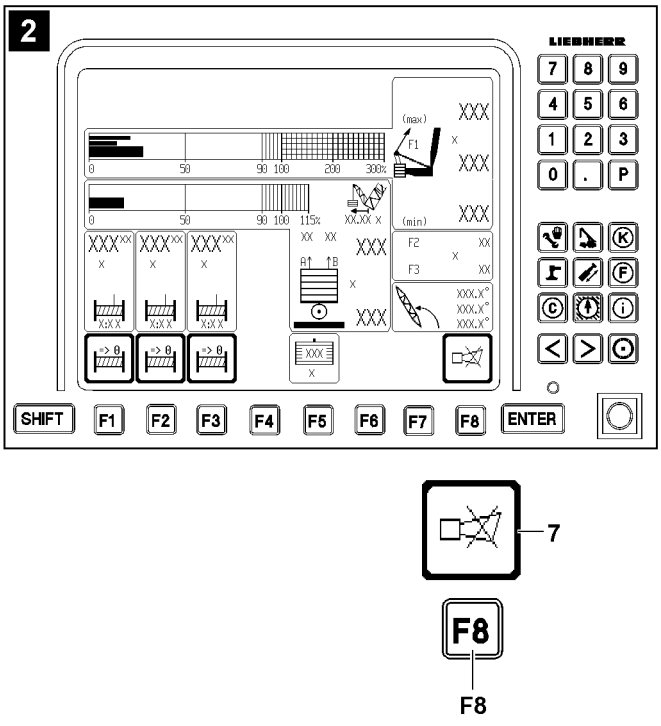

LWE/LR 1600-2-001/18101-07-02/en

Fig.112359

copyright © Liebherr-Werk Ehingen GmbH 2018

9.9 Acoustic warning on monitor 1

Acoustic warnings on monitor **1** (illustration **2**) are indicated by the warning sound „Horn“.

Error messages are only shown in the Horn icon **7** of LICCON monitor **0** (illustration **1**).

The warning sound „Horn“ is divided into two categories:
- „Horn“ is a beeping sound of a duration of approximately 0.5 seconds, which is repeated in a second cycle.
- „Short horn“ is a beeping sound of a duration of approximately 0.1 seconds, which is repeated in a second cycle.

7 Horn icon
- When the Horn icon **7** is shown in the LICCON monitor, any acoustic signals which will occur can be shut off by the LICCON monitor **1** by pressing the function key **F8**.

9.9.1 Acoustic signal „Horn“

For some operational errors found on the CPU 1, which can lead to a shut off of a movement, it is important to check the operating screen on monitor 1 and monitor 0. These errors are reported by the acoustic signal „Horn“ on monitor 1 and additionally as visual display of the error message **7.1** on monitor 0.

Operational errors are:
- Exceeding of test point 1 - Assembly maximum threshold
- Exceeding of test point 1 - Operation -Max- shut off threshold
- Exceeding of test point 1 - Minimum threshold
- Exceeding of maximum derrick boom angle
- Falling below minimum derrick boom angle

Operational errors with error messages (LICCON-Error-Code LEC) are:
- Derrick ballast input error.
- Derrick ballast guy force: Difference between right (A) and left (B) too large.

Note
- ▶ The sensor monitored by CPU1 (pull test brackets, pressure sensors, angle sensors) are shown in case of an error by an error message on LICCON monitor 0!
- ▶ There is **no** acoustic signal „Horn“ on monitor 1!

9.9.2 Acoustic signal „Short horn“

Sounds in addition to the visual display of error messages without an error number and which do not lead directly to crane movement shut off by the LICCON overload protection.
Monitored error messages are:
- Advance warning threshold of test point 1 - minimum force has been reached.

9.9.3 Priority acoustic signal

- The „Horn“ alarm has higher priority than the „Short horn“ alarm, i.e. „Horn“ takes preference over „Short horn“.
- The „Horn“, as well as the „Short horn“ immediately become active again if an error recurs!

LWE/LR 1600-2-001/18101-07-02/en

copyright © Liebherr-Werk Ehingen GmbH 2018

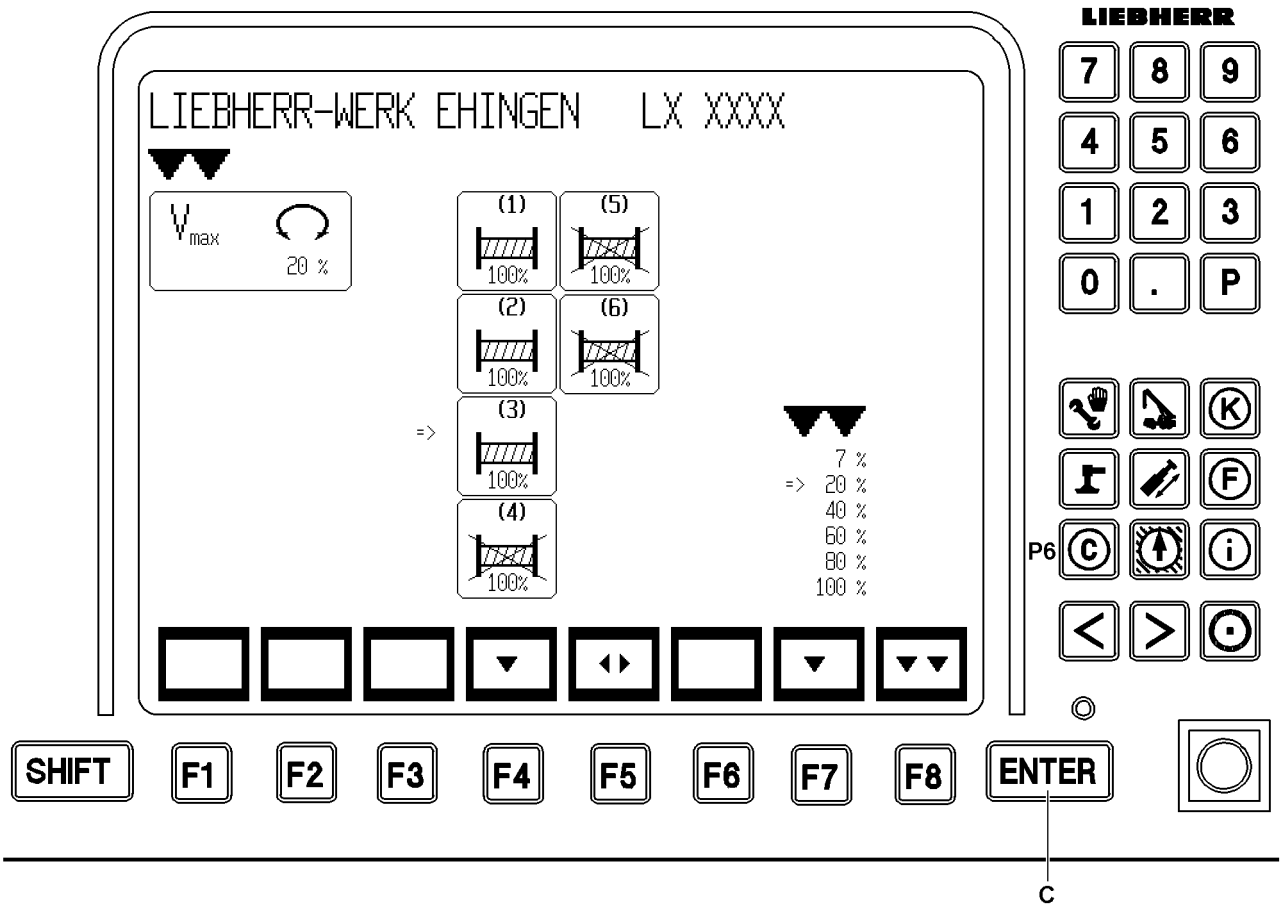

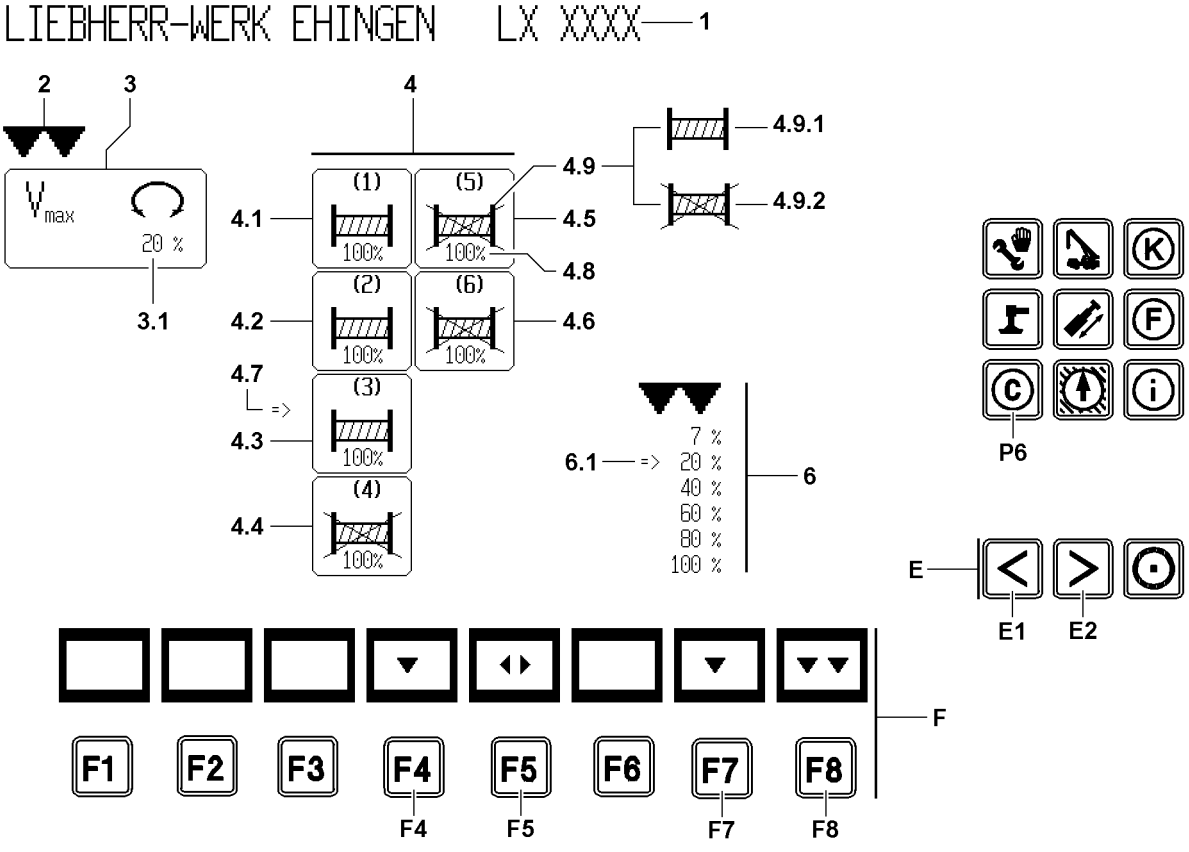

Fig.112947

LWE/LR 1600-2-001/18101-07-02/en

copyright © Liebherr-Werk Ehingen GmbH 2018

10 The Control parameter program

The Control parameter program offers the following possibilities:
- Preselection of maximum slewing speed of slewing gear.
- Preselection of maximum rotation speed of individual winches.
- Activation / deactivation of individual winches.

During the Control parameter program, the exceedance of shut off limits of the LICCON overload protection may not be activated. Otherwise the system switches back immediately into the Crane operation program.

DANGER
Danger of accident!
▶ **Never** change the speeds or the activation / deactivation of the winches while actuating a crane movement!

10.1 Starting the program

▶ Press the program key **P6**.

LWE/LR 1600-2-001/18101-07-02/en

copyright © Liebherr-Werk Ehingen GmbH 2018

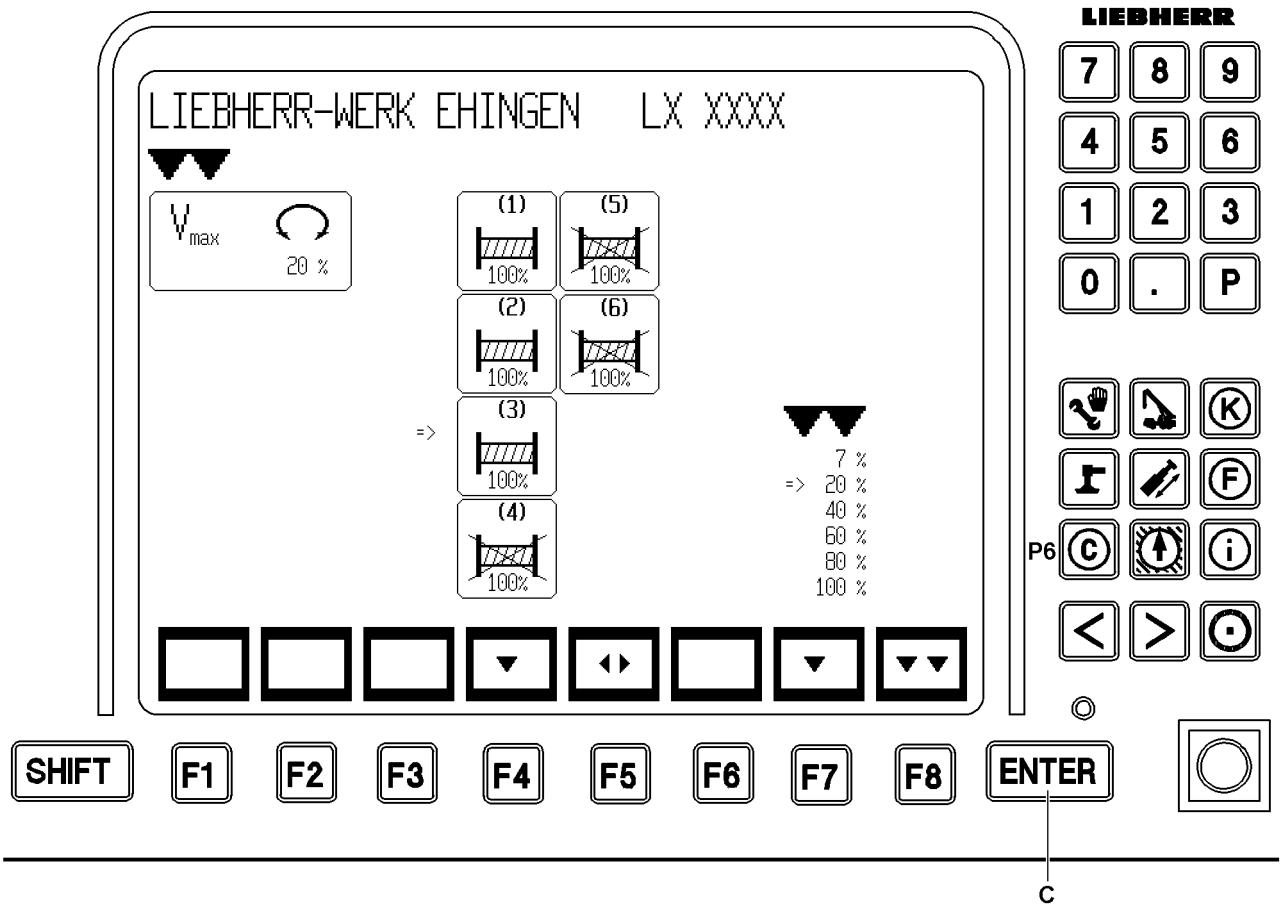

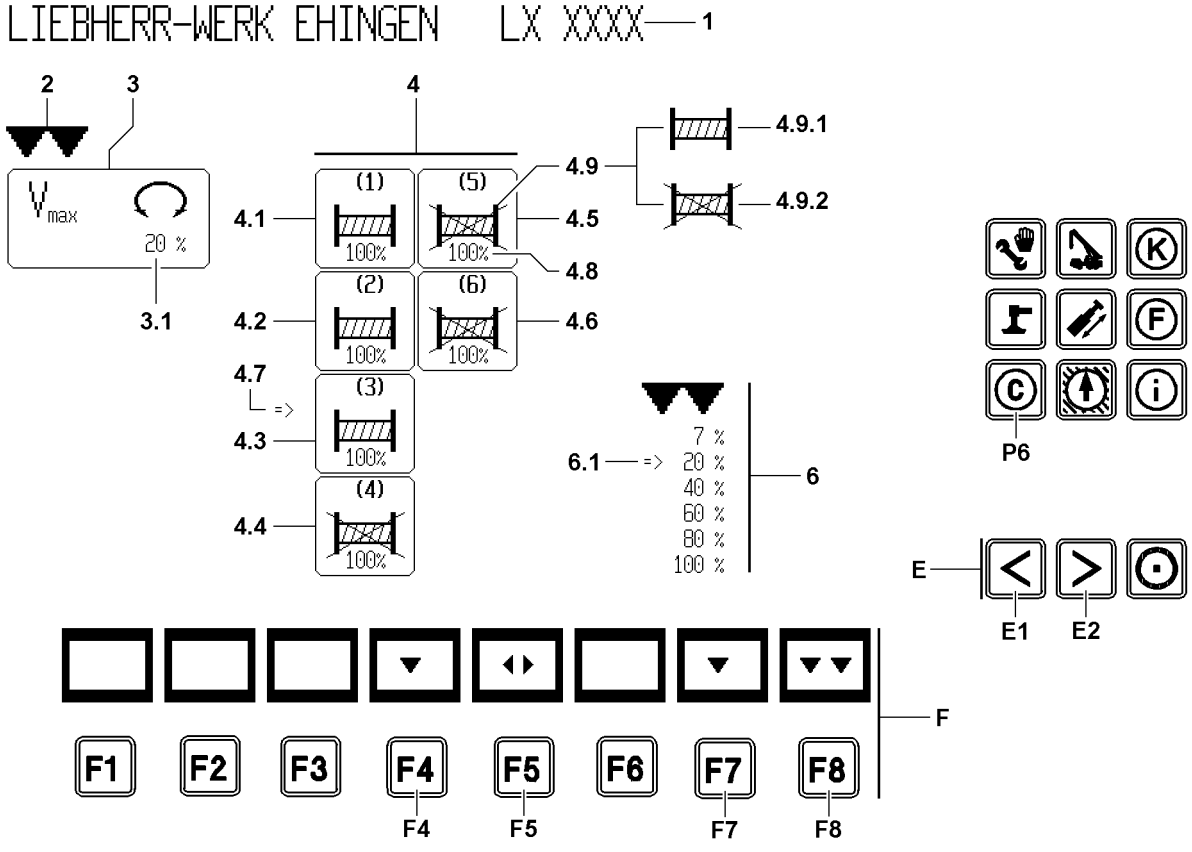

Fig.112947

LWE/LR 1600-2-001/18101-07-02/en

copyright © Liebherr-Werk Ehingen GmbH 2018

10.2 User interface

1 Crane type

2 Selector „Icon selection“
- Shown via double arrow down
- Select icon

3 „Slewing gear“ icon

3.1 „Maximum rotation speed“
- V_{max} in percent [%]

4 „Winches“ icon group

Note

▶ The setting possibilities are the same for all winches and are explained on the Winch 5***** icon **4.5**!

4.1 Winch 1

4.2 Winch 2*****

4.3 Winch 3*****

4.4 Winch 4

4.5 Winch 5*****

4.6 Winch 6*****

4.7 Winch selector
- Shown via arrow to right
- Select the winch, for which the „properties“ are to be changed

4.8 Winch speed
- In percent [%]
- Current for the selected speed for the respective winch

4.9 Winch icon

4.9.1 Winch activated

4.9.2 Winch deactivated

6 Value field with selector
- The percentage values describe the speed with maximum deflection of the manual control lever, always in relation to the maximum achievable speed of the drive, with 100 % preselected speed. Six stages may be preselected.

6.1 Speed selector
- Arrow to the right
- Select percentage value(s) for speed stages

F Function key line

F4 Function key
- Select winch

F5 Function key
- Activate / deactivate selected winch(es)

F7 Function key
- Select percentage value of corresponding speed in value field

F8 Function key
- Return to the crane operation program and take over parameter

C Input key ENTER
- Take over the selected speed setting for the preset functions

E Special function keys

E1 Special function key
- Move the selector **2** for selecting icons to the left

E2 Special function key
- Move the selector **2** for selecting icons to the right

LWE/LR 1600-2-001/18101-07-02/en

copyright © Liebherr-Werk Ehingen GmbH 2018

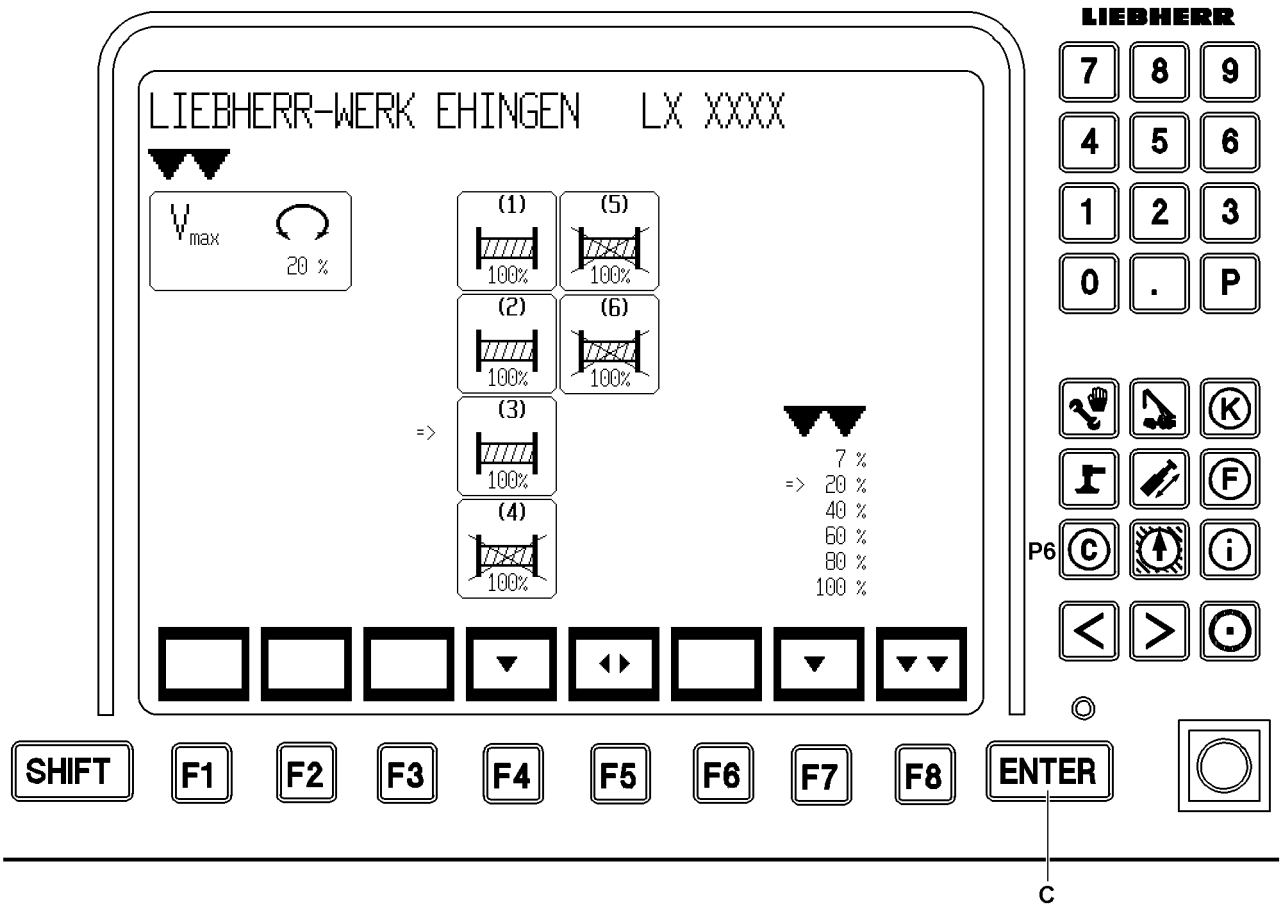

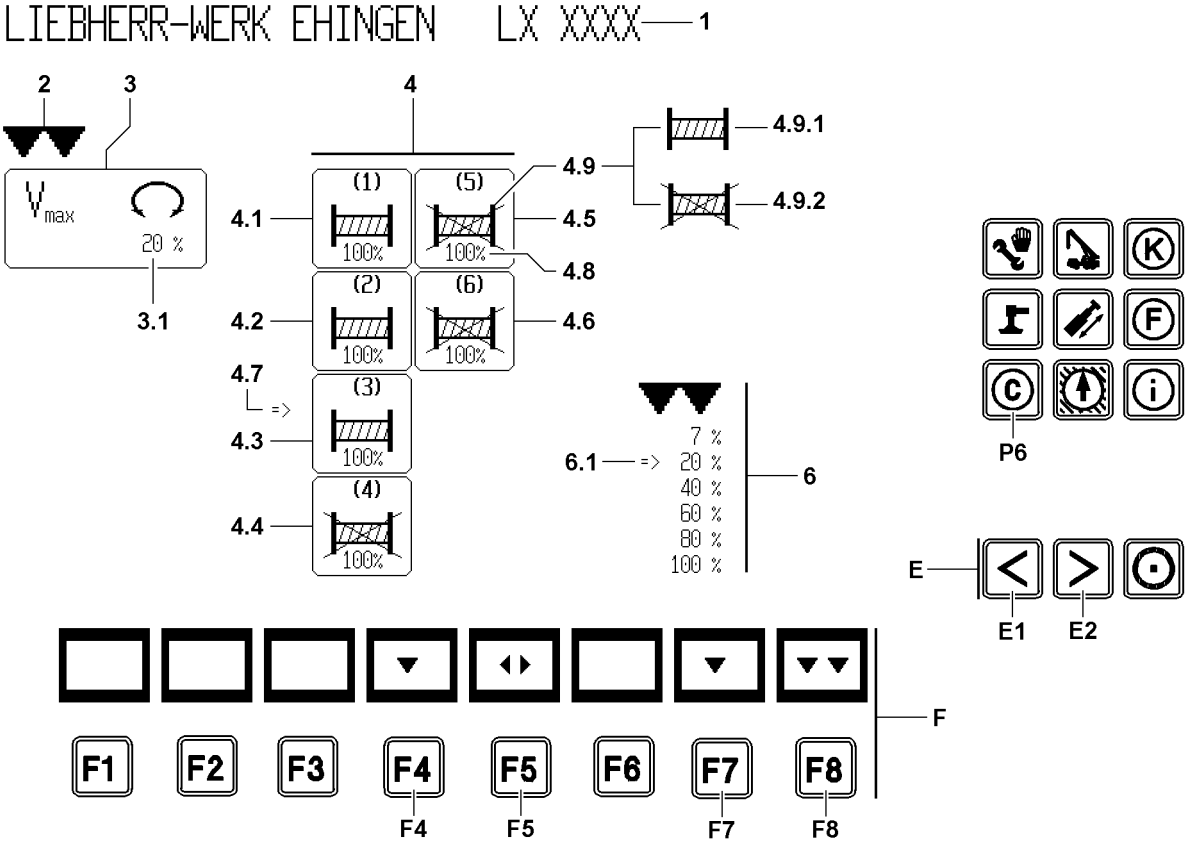

Fig.112947

LWE/LR 1600-2-001/18101-07-02/en

copyright © Liebherr-Werk Ehingen GmbH 2018

10.3 Changing the maximum rotation speed of slewing gear

DANGER
Danger of accident!
- ▶ During crane operation with load, always adhere to the maximum rotation speeds depending on boom length and operating modes (according to load charts)!
- ▶ The longer and heavier the boom is and the greater the load, the smaller the set „Maximum rotation speed“ must be!
- ▶ **Never** deflect the master switch for the slewing gear to the stop at maximum load!

▶ Use the special function key **E1** or special function key **E2** to select the „slewing gear“ icon **3**.

Result:

– Selector (double arrow down) **2** appears above the „slewing gear“ icon **3**.

▶ Select the maximum rotation speed in percent with function key **F7**.

Result:

– Selector (arrow to right) **6.1** shows the selected percentage value.

▶ Use the ENTER key **C** to confirm the selected „Maximum rotation speed“.

Result:

– The value of the „maximum rotation speed“ is shown in the icon and taken over into the control.

10.4 Winches

10.4.1 Changing maximum winch speed

▶ Using the special function key **E1** or special function key **E2**, select the icon group „Winches“ **4**.

Result:

– Selector (double arrow down) **2** appears above the icon group „Winches“.

▶ With the function key **F4**, select the icon for „winch 1“, **or** „winch 2“, **or** „winch 3“*****, **or** „winch 4“, **or** „winch 5“*** or** „winch 6“*****.

Result:

– Selector (arrow to right) **4.7** shows the selected winch.

▶ Select the „maximum winch speed“ in percent with function key **F7**.

Result:

– Selector (arrow to right) **6.1** shows the selected percentage value.

▶ Use the ENTER key **C** to confirm the selected „maximum winch speed“.

Result:

– The value of the „maximum winch speed“ is shown in the selected winch icon and taken over into the control.

LWE/LR 1600-2-001/18101-07-02/en

copyright © Liebherr-Werk Ehingen GmbH 2018

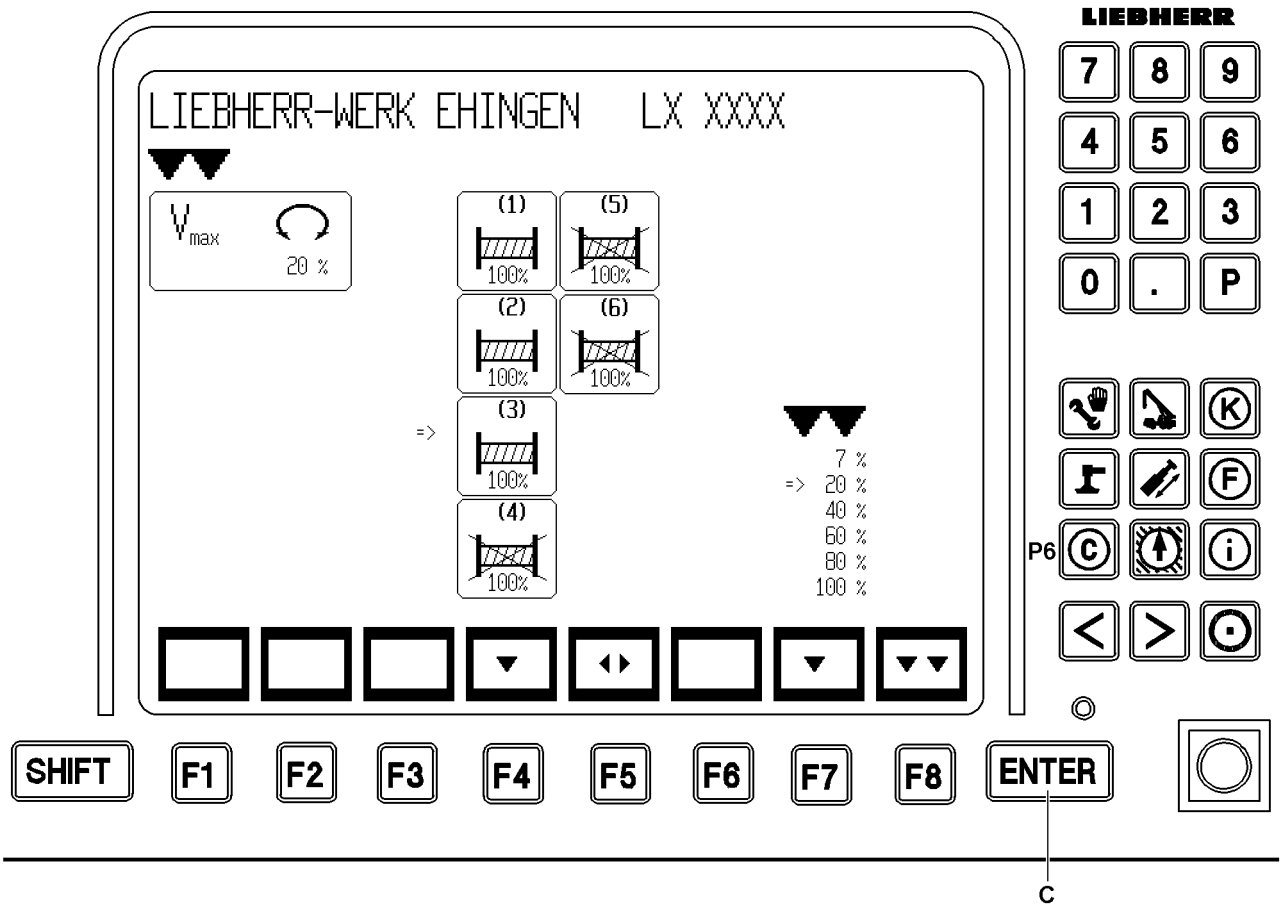

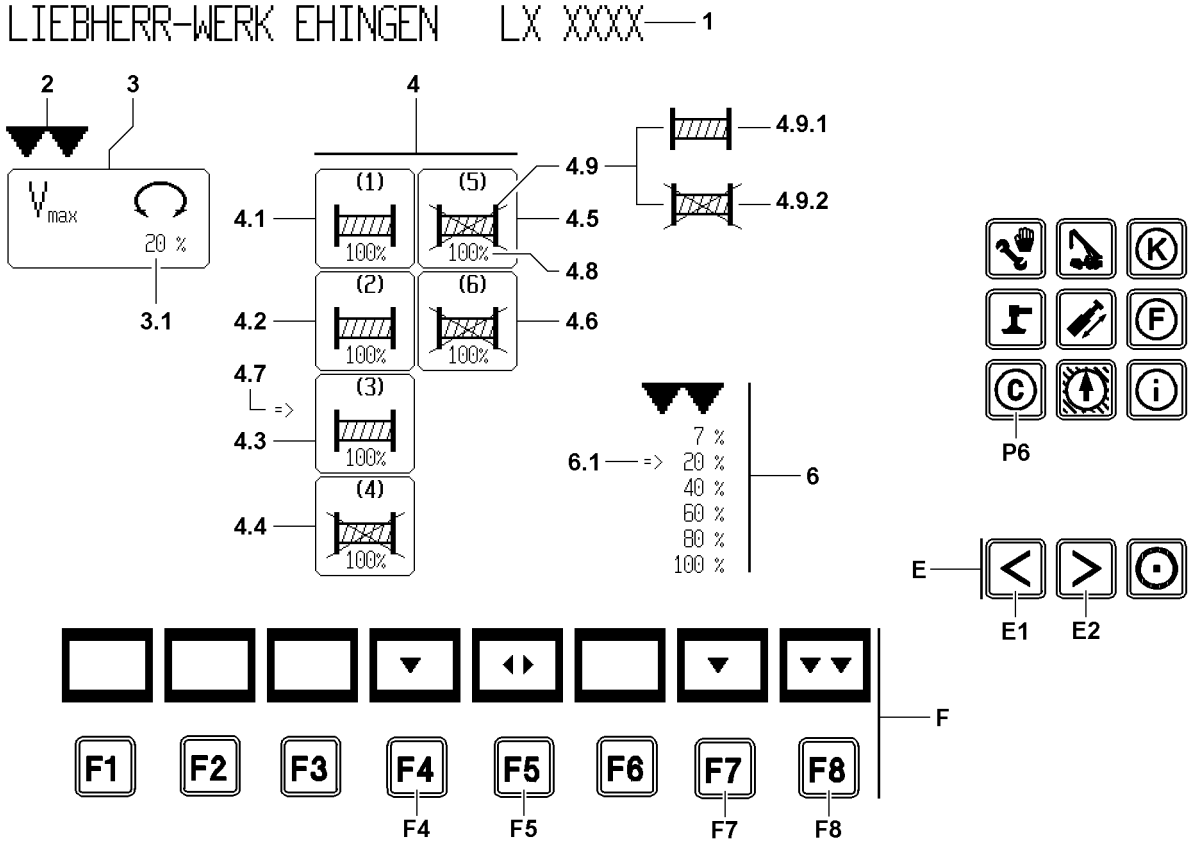

Fig.112947

LWE/LR 1600-2-001/18101-07-02/en

copyright © Liebherr-Werk Ehingen GmbH 2018

10.4.2 Activating / deactivating individual winches

In order to prevent unintentional activation of a winch that is currently not required, deactivate individual winches.

▶ Using the special function key **E1** or special function key **E2**, select the icon group „Winches“ **4**.

Result:

– Selector (double arrow down) **2** appears above the icon group „Winches“ **4**.

▶ With function key **F4**, select the icon for „Winch 1“ **or** „Winch 2“*** or**„Winch 3“*** or** „Winch 4“ **or** „Winch 5“*** or** „Winch 6“*****.

Result:

– Selector (arrow to right) **4.7** shows the selected winch.

▶ Using the function key **F5**, activate or deactivate the selected winch.

Result:

– The winch icon in the icon changes the appearance.

Winch icon not crossed out = winch activated **4.9.1**.
Winch icon crossed out = winch deactivated **4.9.2**.

10.5 Switching back to the crane operation program

▶ Press the function key **F8**.

Result:

– The parameters previously confirmed with the ENTER key **C** will be taken over into the control.

LWE/LR 1600-2-001/18101-07-02/en

copyright © Liebherr-Werk Ehingen GmbH 2018

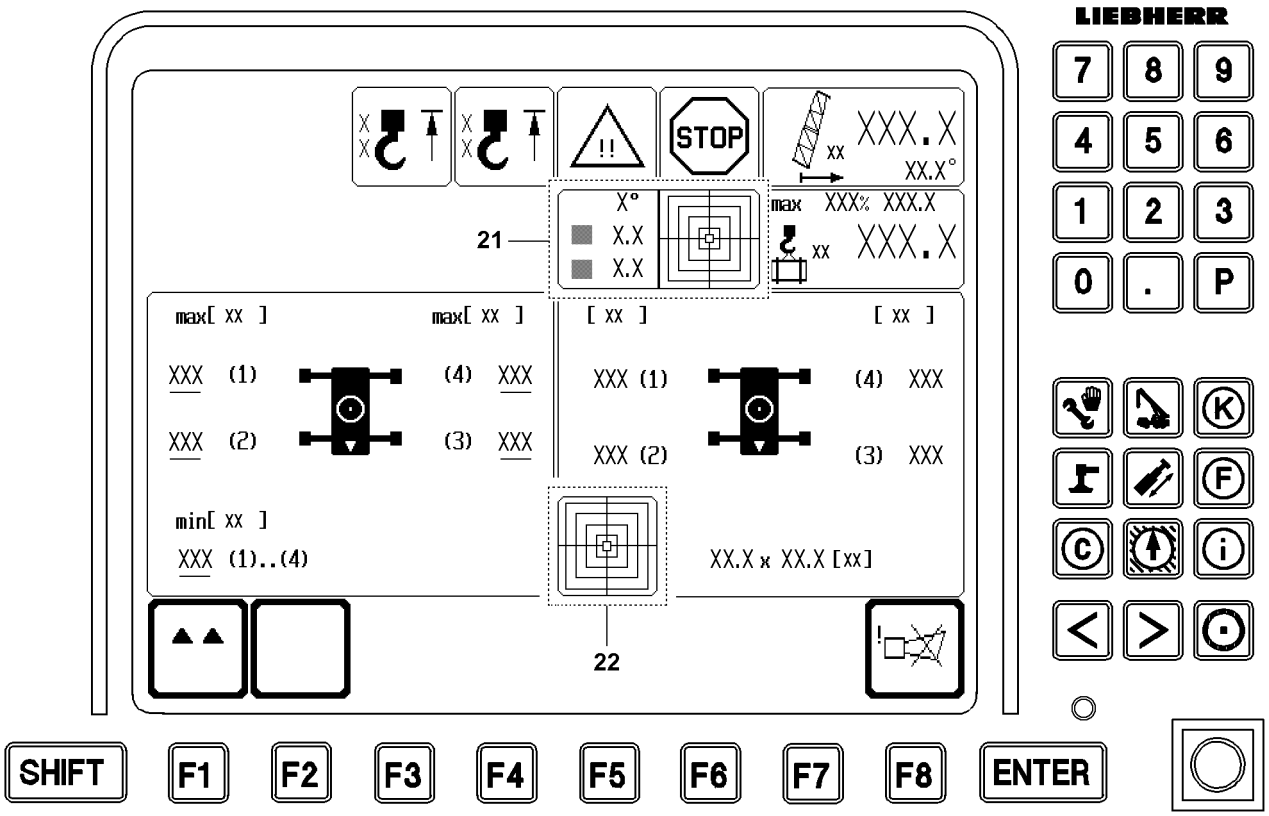

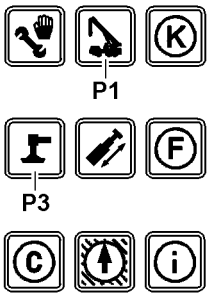

LWE/LR 1600-2-001/18101-07-02/en

Fig.113275

copyright © Liebherr-Werk Ehingen GmbH 2018

11 The Support program

Note
▶ Only crane with narrow track crawler track!

The monitor screen shows the complete configuration of the support program. Depending on the customer request or crane type, the individual parts of the program are inactive and therefore not visible on the LICCON monitor. The numerical values in the icons are only examples and may differ from the crane.

Note

In the support program, the incline of the crane is shown in two different icons:
▶ Incline of the crane in relation to the alignment of the crane superstructure: „Incline crane superstructure“ icon **21**!
▶ Incline of the crane in relation to the alignment of the crane chassis: „Incline crane chassis“ icon **22**!
▶ Example: If the crane superstructure is turned by 90°, then the „Incline crane superstructure“ icon **21** adjusts to the changed position of the crane superstructure, the display in the „Incline crane chassis“ icon **22** keeps its direction!

11.1 Starting / stopping the program

11.1.1 Starting the program

Note
▶ For detailed description of the crane support, see Crane operating instructions Chapter 3.10 (only for crane with narrow track crawler track)!

▶ Press program key **P3**.

Result:

– The support program is started.

11.1.2 Stopping the program

▶ Press program key **P1**.

Result:

– The Support program is terminated.
– System switches back to the crane operation program.

LWE/LR 1600-2-001/18101-07-02/en

copyright © Liebherr-Werk Ehingen GmbH 2018

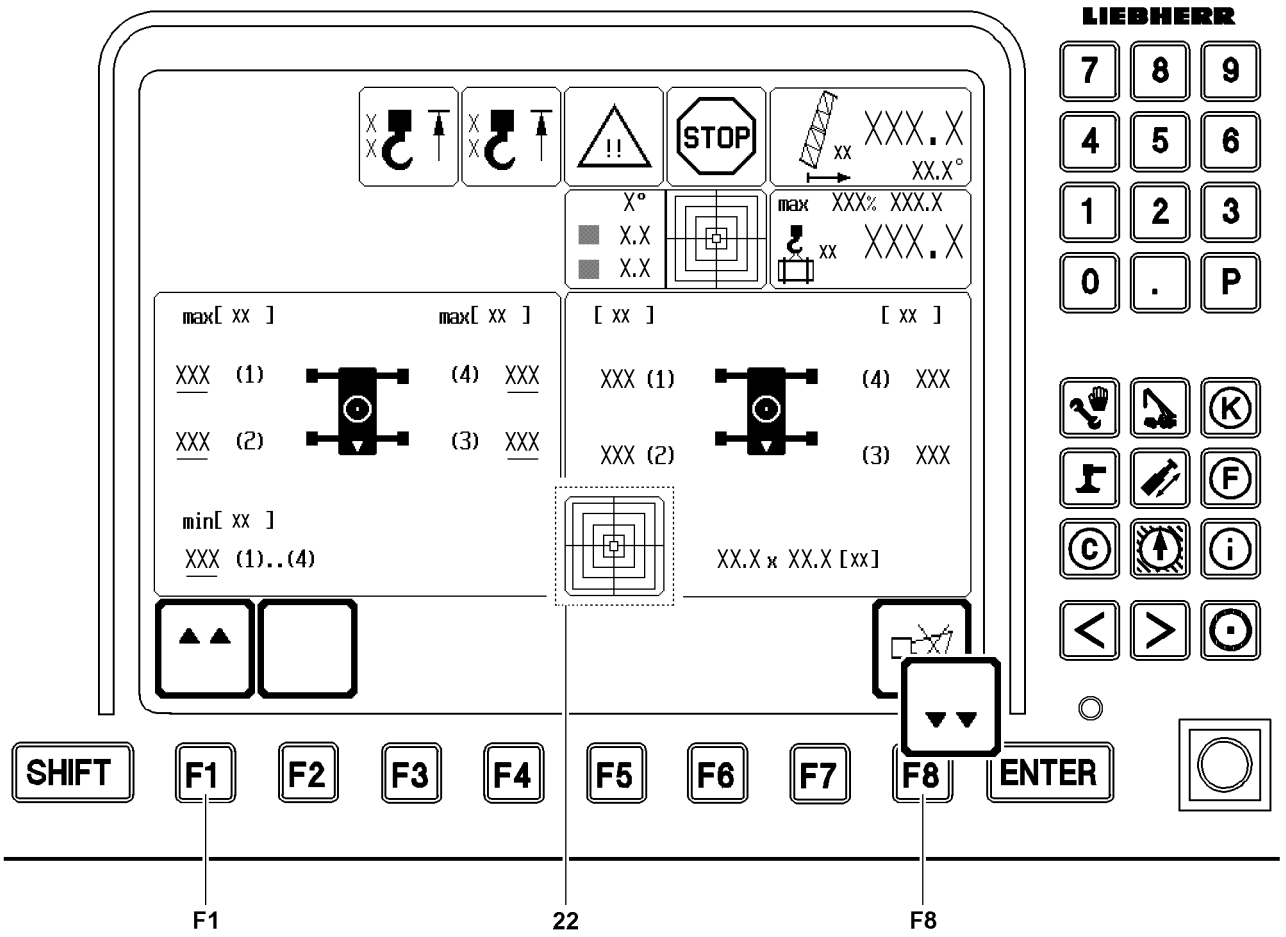

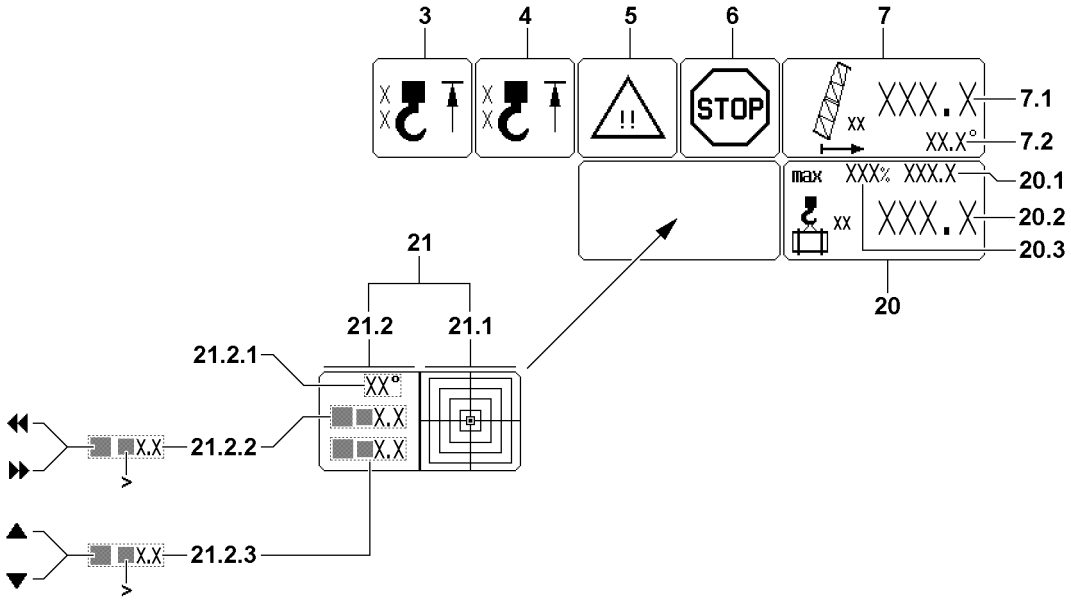

LWE/LR 1600-2-001/18101-07-02/en

Fig.113446

copyright © Liebherr-Werk Ehingen GmbH 2018

11.2 Crane operation in Support program

Note

- ▶ This function is only enabled for the „Support force monitoring“* option.
- ▶ For more detailed description of icons 3 to 6, see section „Alarm functions“ in the „The crane operation program on monitor 0“.

WARNING

Missing display values for wind speed!

No wind speed is shown in the support program during crane operation!

- ▶ If wind conditions are unclear, crane operation in the support program is not permissible!

WARNING

Missing display values for crane operation with boom nose!

The utilization of the boom nose during crane operation in the support program in not shown!

- ▶ Crane operation with boom nose is not permissible in the support program!

3 „Hoist top“ icon
- On HES1

4 „Hoist top“ icon
- On HES2 and / or HES3

5 „Advance warning“ icon

6 „STOP“ icon

7 „Boom radius and main boom angle“ icon
- For detailed description, see section „Information about crane geometry and load“ in „The crane operation program on monitor 0“.

7.1 Radius

7.2 Boom angle

20 „Maximum load“ icon

20.1 Maximum load on the boom
- In [t] or [lbs]

20.2 Current load on the boom
- In [t] or [lbs]

20.3 Utilization of main boom
- In percent [%]

LWE/LR 1600-2-001/18101-07-02/en

copyright © Liebherr-Werk Ehingen GmbH 2018

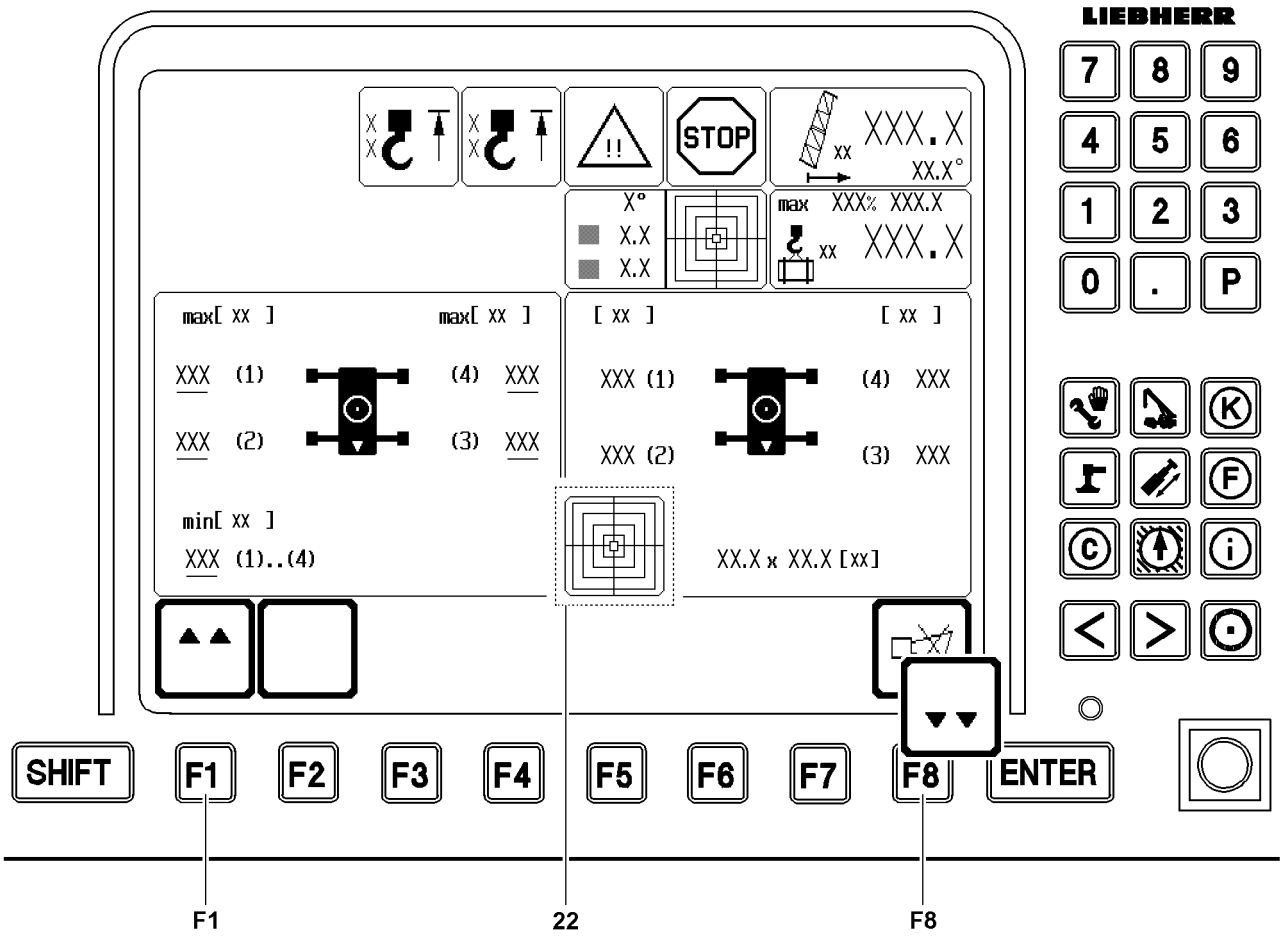

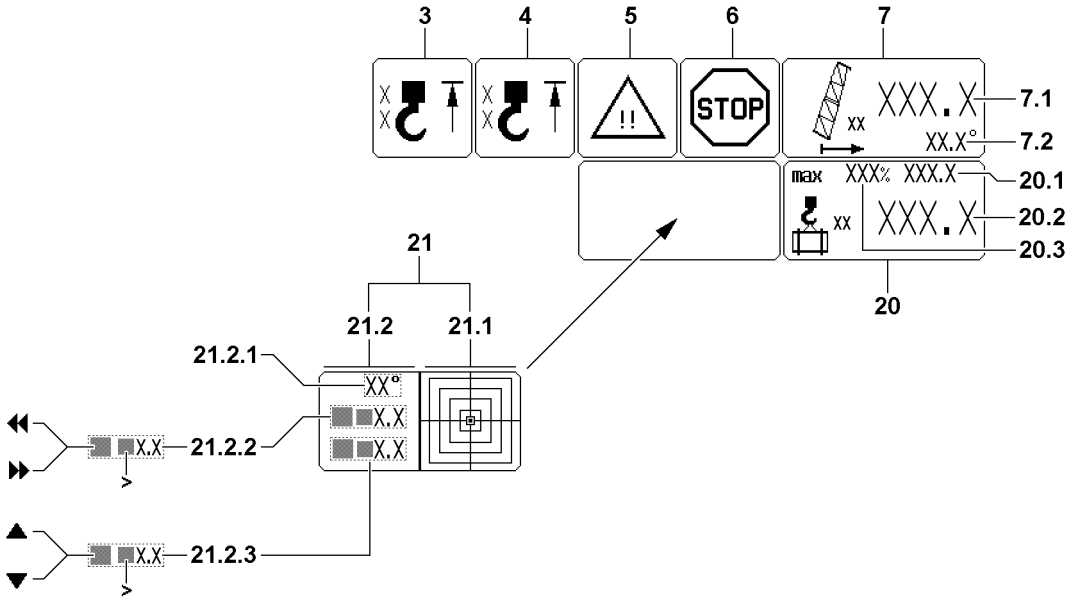

LWE/LR 1600-2-001/18101-07-02/en

Fig.113446

copyright © Liebherr-Werk Ehingen GmbH 2018

21 „Incline crane superstructure“.icon
- Display of the incline of the crane to the horizontal in longitudinal and lateral direction. The display is graphic as well as numeric.
  The directional data refers to the direction of the crane superstructure (view from the cab).

21.1 Graphic part
- The graphic display is in the form of a spirit level, with a moving dot (small square) representing the air bubble. The center of the dot shows the precise incline value.

21.2 Numeric part

21.2.1 Incline range
- This value describes the resolution of the graphic view. The resolution is matched automatically to the incline.

21.2.2 Lateral direction
- Incline of crane in lateral direction in [°]
- The double arrow shows the direction of the incline
- If the „larger than symbol“ appears, then the crane is inclined further than can be shown!

21.2.3 Longitudinal direction
- Incline of crane in longitudinal direction in [°]
- The arrow shows the direction of the incline
- If the „larger than symbol“ appears, then the crane is inclined further than can be shown!

22 „Incline crane chassis“ icon
- Display of the incline of the crane chassis to the horizontal in longitudinal and lateral direction. The display is made graphically.

F1 Function key
- Switch to the setting field for support limit forces
- **Note:**
  At actuation, an LMB STOP is triggered! All hoisting and luffing moments will be stopped and the icons for crane operation disappear!

F8 Function key
- Turn off acoustical signal / error determination screen
  or
- End adjustment mode

LWE/LR 1600-2-001/18101-07-02/en

copyright © Liebherr-Werk Ehingen GmbH 2018

1

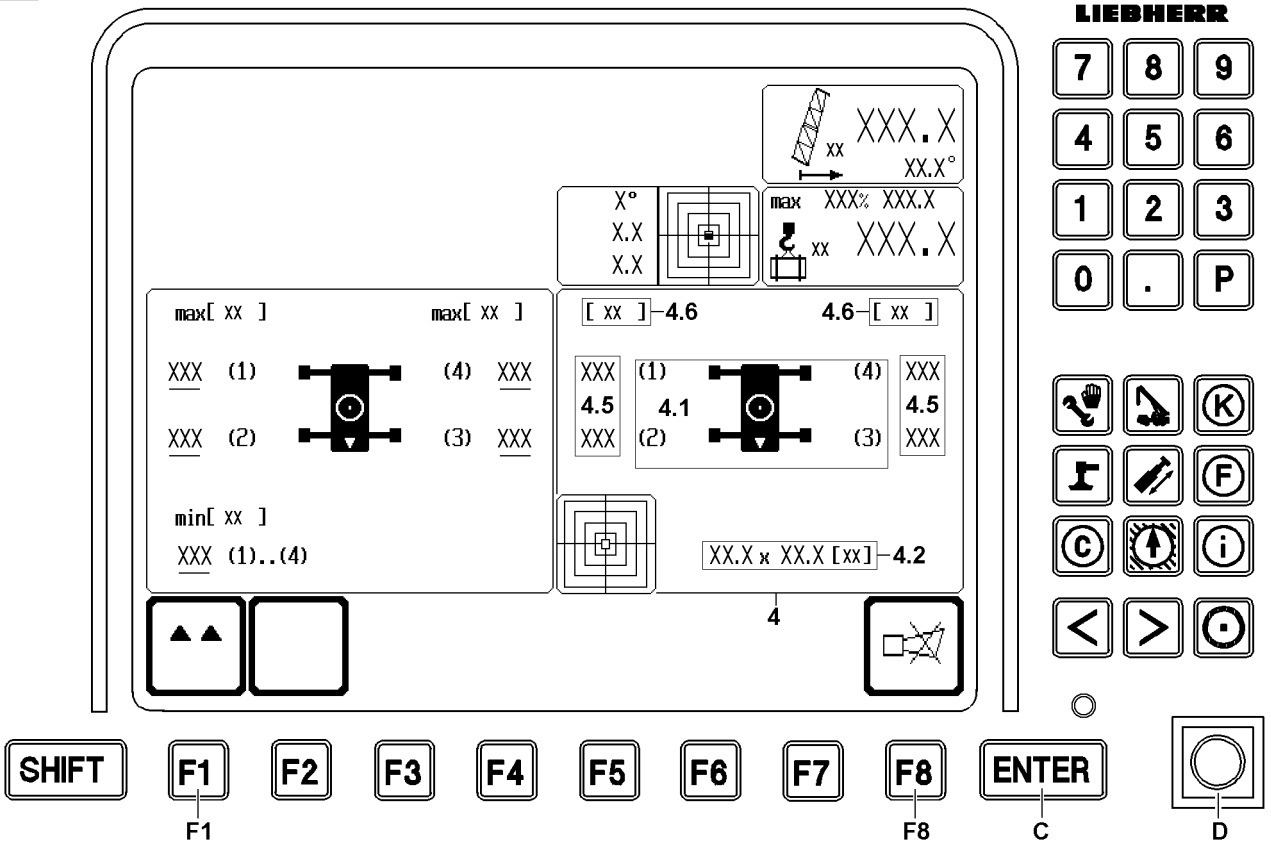

2

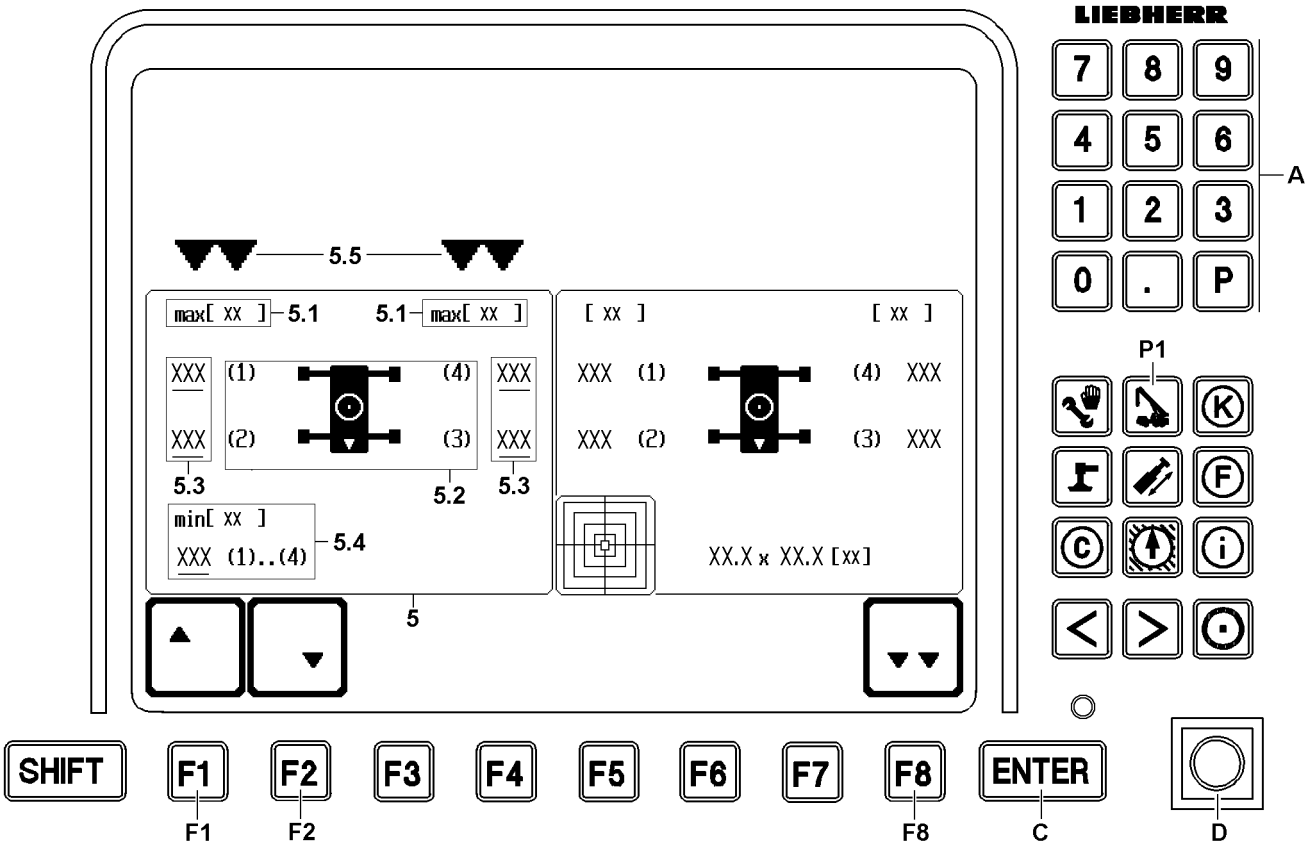

Fig.113265

LWE/LR 1600-2-001/18101-07-02/en

copyright © Liebherr-Werk Ehingen GmbH 2018

11.3 Support force monitoring*

DANGER
Danger of accident!
▶ The LICCON support force monitoring is only an aid. It does **not** prevent a possible crane overload!
▶ Never use the support force monitoring to utilize the crane up to its tipping limit!

The support force monitoring constantly determines the current pressure on all 4 support cylinders during operation. The support force for each support is determined from that.

Due to the possibility to specify limit values, the support force monitoring can be utilized for individual advance warning.

Example: For application under certain placement conditions, the:
– Maximum permissible support force is 100 t.
– Desired advance warning 10 % before
which results in: Maximum support limit force value to be programmed is 90 t.

11.3.1 Monitoring mode / control mode

See illustration **1**

4 Monitoring and control field
4.1 Crane icon with support numbers
4.2 Support base
4.5 Support force values
- For respective support
In [t] or [kibs]

4.6 Unit of displayed support forces
- In [t] or [kibs]

F1 Function key
- Switch to settings field for support limit forces

F8 Function key
- Press once:
Turn the acoustic signal off.
- Press twice:
In the „Horn“ icon, fields are automatically displayed on the error determination screen (see Diagnostics manual).

LWE/LR 1600-2-001/18101-07-02/en

copyright © Liebherr-Werk Ehingen GmbH 2018

1

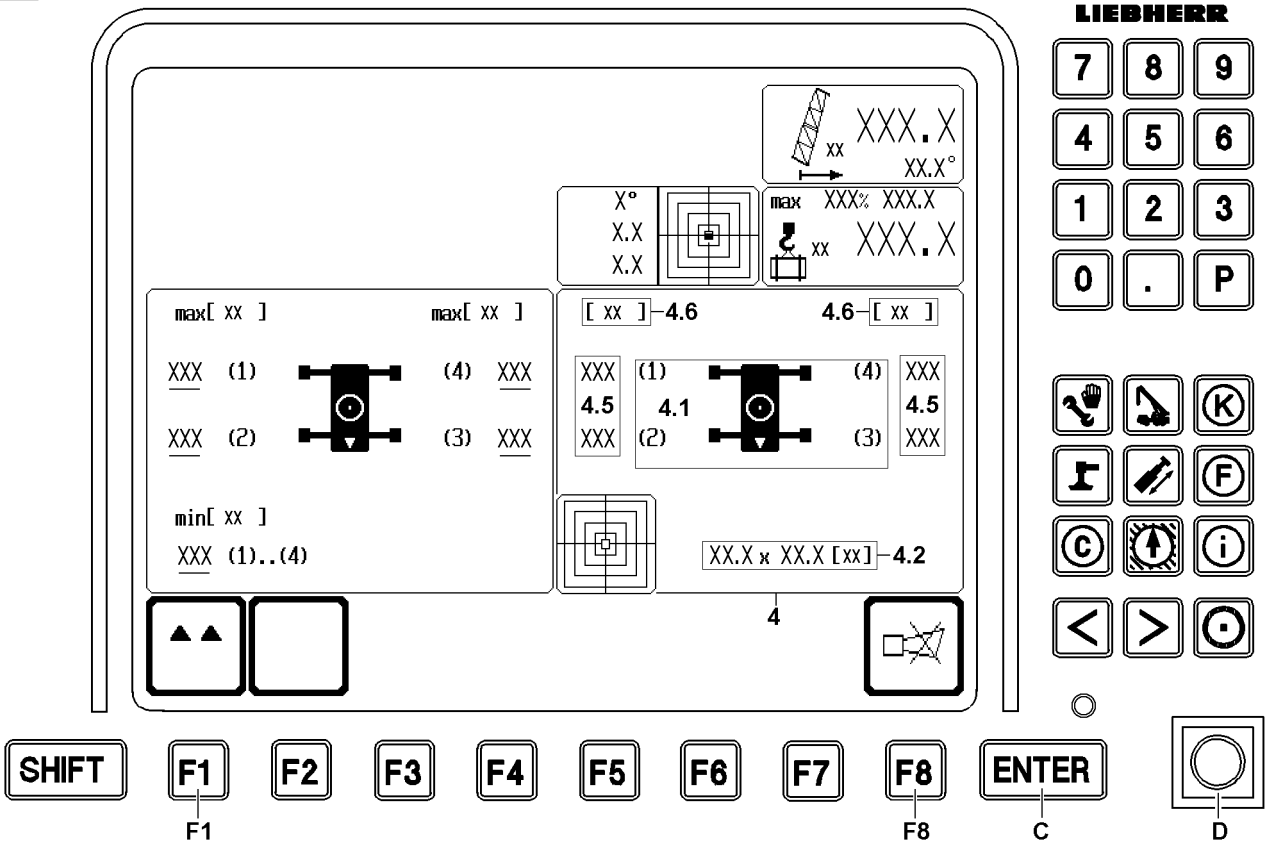

2

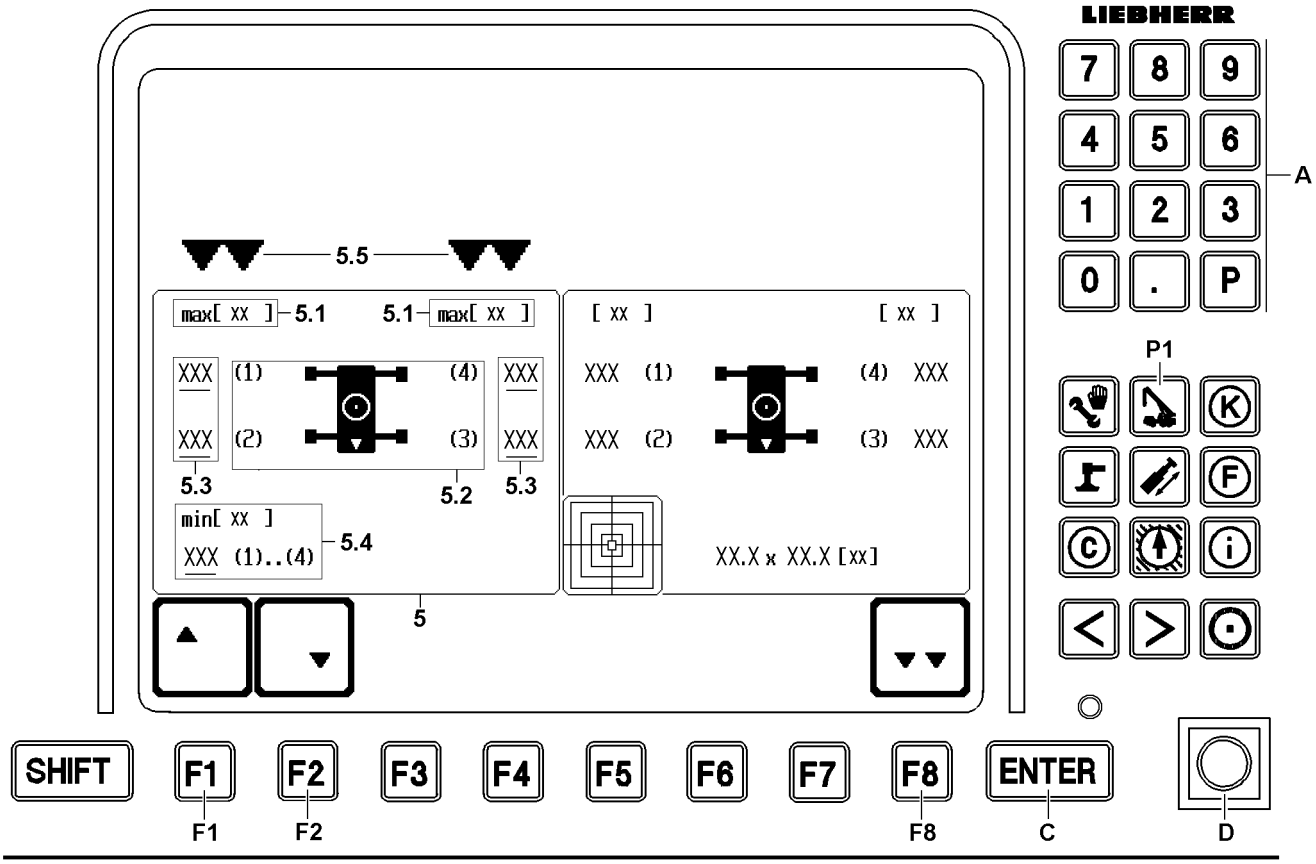

Fig.113265

LWE/LR 1600-2-001/18101-07-02/en

copyright © Liebherr-Werk Ehingen GmbH 2018

11.3.2 Setting mode

See illustration **2**

5 Setting field for support force limits

5.1 Unit of maximum support force limit values
- In [t] or [kibs]

5.2 Crane icon with support numbers

5.3 Maximum support force limit values
- For respective support
  Maximum value in [t] or [kibs]

5.4 Minimum support force limit value
- Minimum value in [t] or [kibs]
  Valid for all four supports

5.5 Selector arrows
- Point to the active settings field

F1 Function key
- Move cursor (input pointer) to next support force limit value

F2 Function key
- Move cursor (input pointer) to previous support force limit value

F8 Function key
- Switch back to Monitoring and control field **4**

LWE/LR 1600-2-001/18101-07-02/en

copyright © Liebherr-Werk Ehingen GmbH 2018

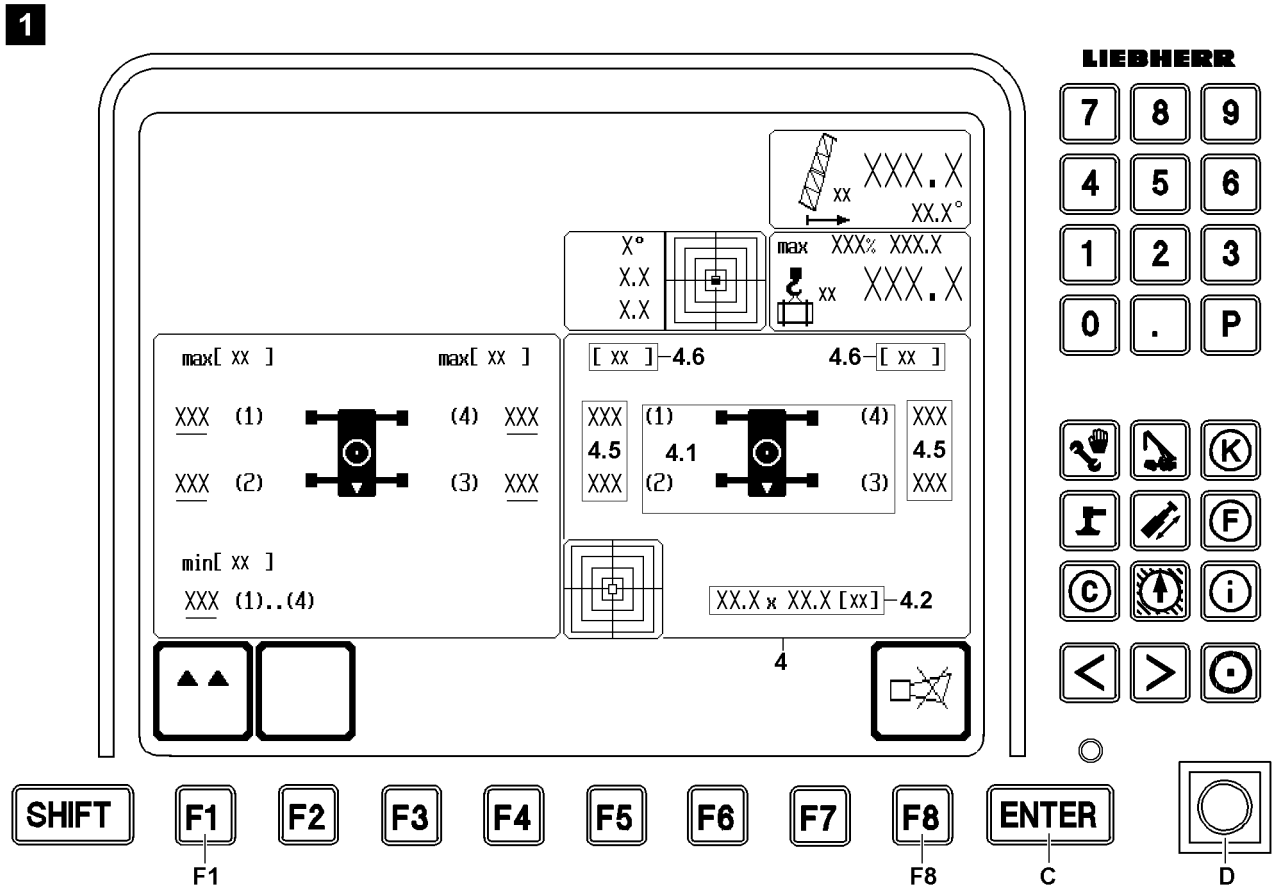

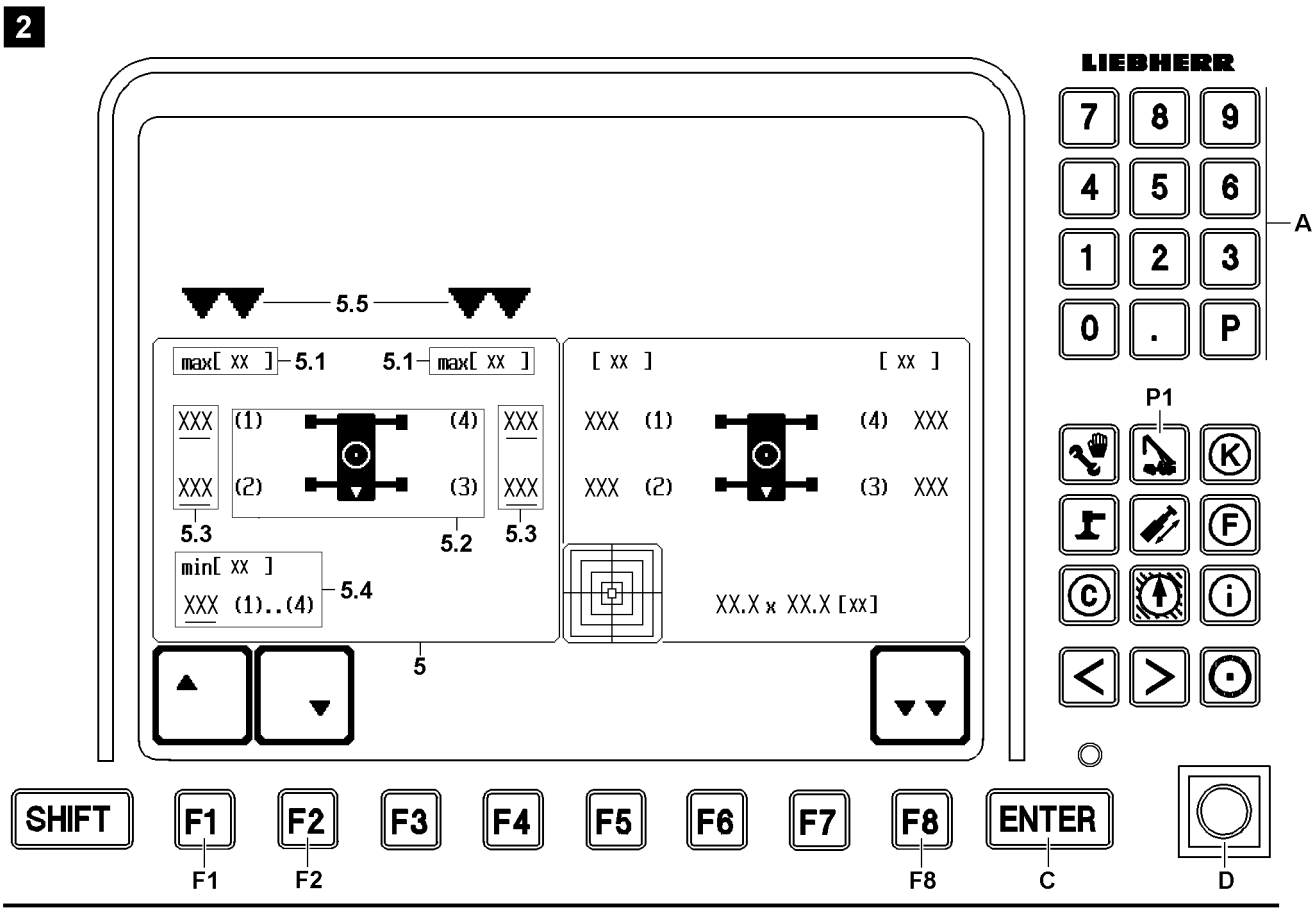

Fig.113265

LWE/LR 1600-2-001/18101-07-02/en

copyright © Liebherr-Werk Ehingen GmbH 2018

11.3.3 Display current support forces

Note

▶ Display current support forces in crane operating screen, see „Monitored auxiliary functions for crane operation“!

The current support force values **4.5** are shown in the monitoring and control field **4**.

11.3.4 Remarks

Because of the option to determine limit values yourself, the LICCON support force monitoring can also be used as an advance warning device:

- Any trends in changes of the support forces during crane operation can be quickly recognized.
- Advance warning limits for the support forces can be individually programmed.

WARNING

Tolerances and erroneous operation of the support force monitoring

For technical reasons, a test deviation of up to ± 2% in relation to the maximum load capacity of the crane is possible!

If the support cylinders are moved on „block bottom“ or „block top“, then the display of the support forces is erroneous!

▶ Make sure that there is no block position on the support cylinders!

▶ Take the tolerances in the display value into account!

▶ Take additional influences onto the tolerance field into account!

The tolerance field expands:

- In case of large support forces.
- In case of far extended support cylinders.
- When extending the support cylinders and up to 15 minutes afterwards.

LWE/LR 1600-2-001/18101-07-02/en

copyright © Liebherr-Werk Ehingen GmbH 2018

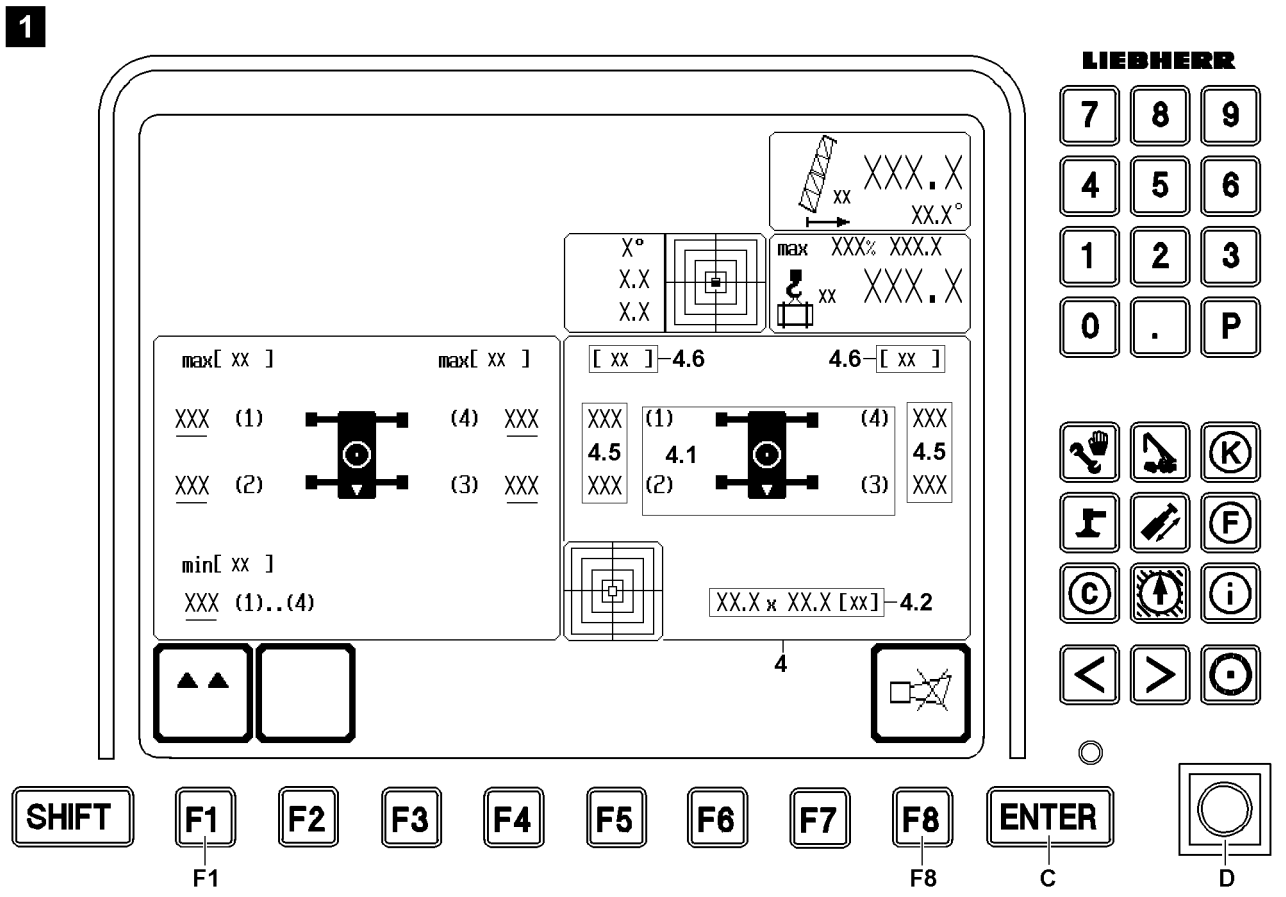

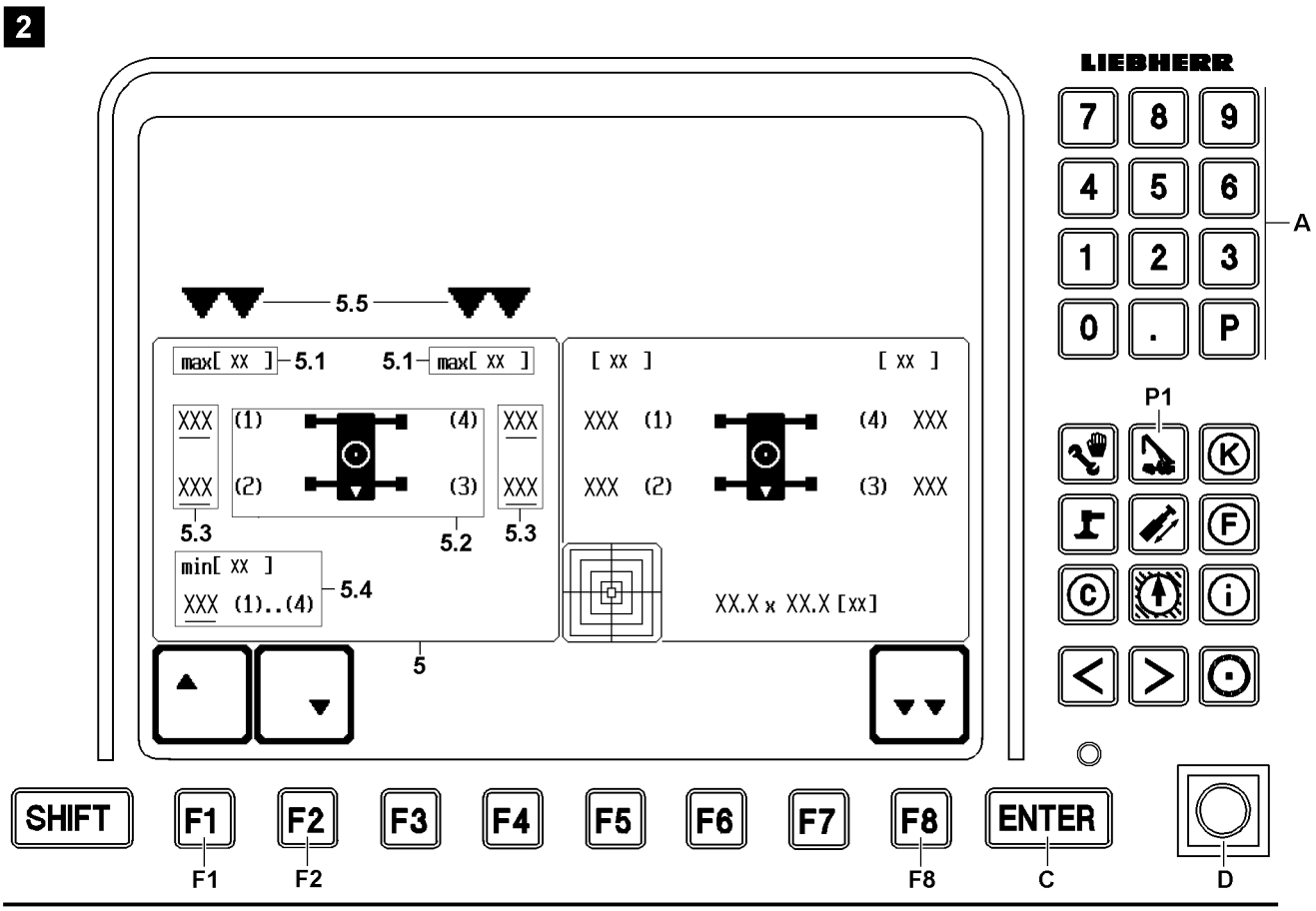

Fig.113265

LWE/LR 1600-2-001/18101-07-02/en

copyright © Liebherr-Werk Ehingen GmbH 2018

11.3.5 Changing minimum and maximum support force limits

As an additional safety precaution, this program monitors the bypass key button **D** or the assembly key button (see Crane operating instructions, chapter 4.01): If the bypass key button **D** or the assembly key button is actuated, then the system switches back to the Crane operation program.

In the Monitoring and control field **4** the current support force values are displayed.

If one or more of the values are below or above the programmed maximum values for the support force limits, then they are displayed blinking.

The programmed maximum / minimum values for the support force limits are displayed in the Setting field **5**.

Make sure that the following prerequisites are met:
- The crane is supported and horizontally aligned.
- The bypass key button **D** or the assembly key button has not been pressed.

The program initially runs in monitoring mode. All icons relevant to crane operation are displayed.

Note
Switching to the setting field for support limit forces.
▶ By pressing the function key **F1**, an LMB STOP / operational error is triggered immediately. All hoist and luffing moments are stopped and the icons for crane operation disappear.

When pressing the function key **F1**, the two double arrows **5.5** point to the settings field **5** for support limit forces. The cursor appears on the maximum value of the support limit force on support 1.

By pressing the function key **F1** or function key **F2** you switch the cursor to the next or previous maximum value for the support limit force or the minimum value for the support limit force (valid for all four support cylinders).

Note
Testing the validity range for the support limit force values.
Every newly entered support limit force value will be tested for its validity range.
▶ If valid, the entered value will be accepted.
▶ If invalid, the value will be rejected as too small or too big with an error message.

With the keypad **A** you can change the support limit force values and then close the input function using the ENTER key **C**.

Use the function key **F8** to switch back to the Monitoring and control field **4**.

Use the program key **P1** to switch back to the crane operation program.

LWE/LR 1600-2-001/18101-07-02/en

copyright © Liebherr-Werk Ehingen GmbH 2018

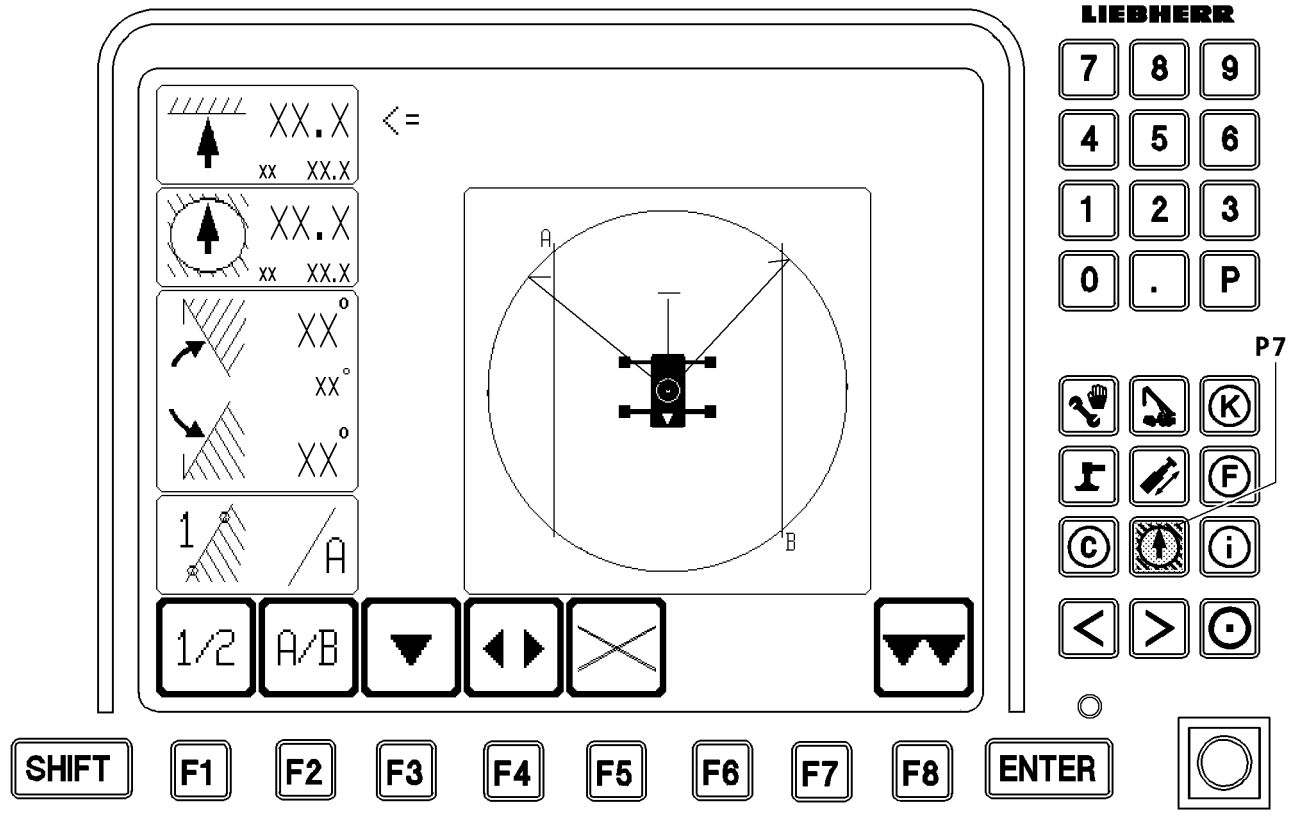

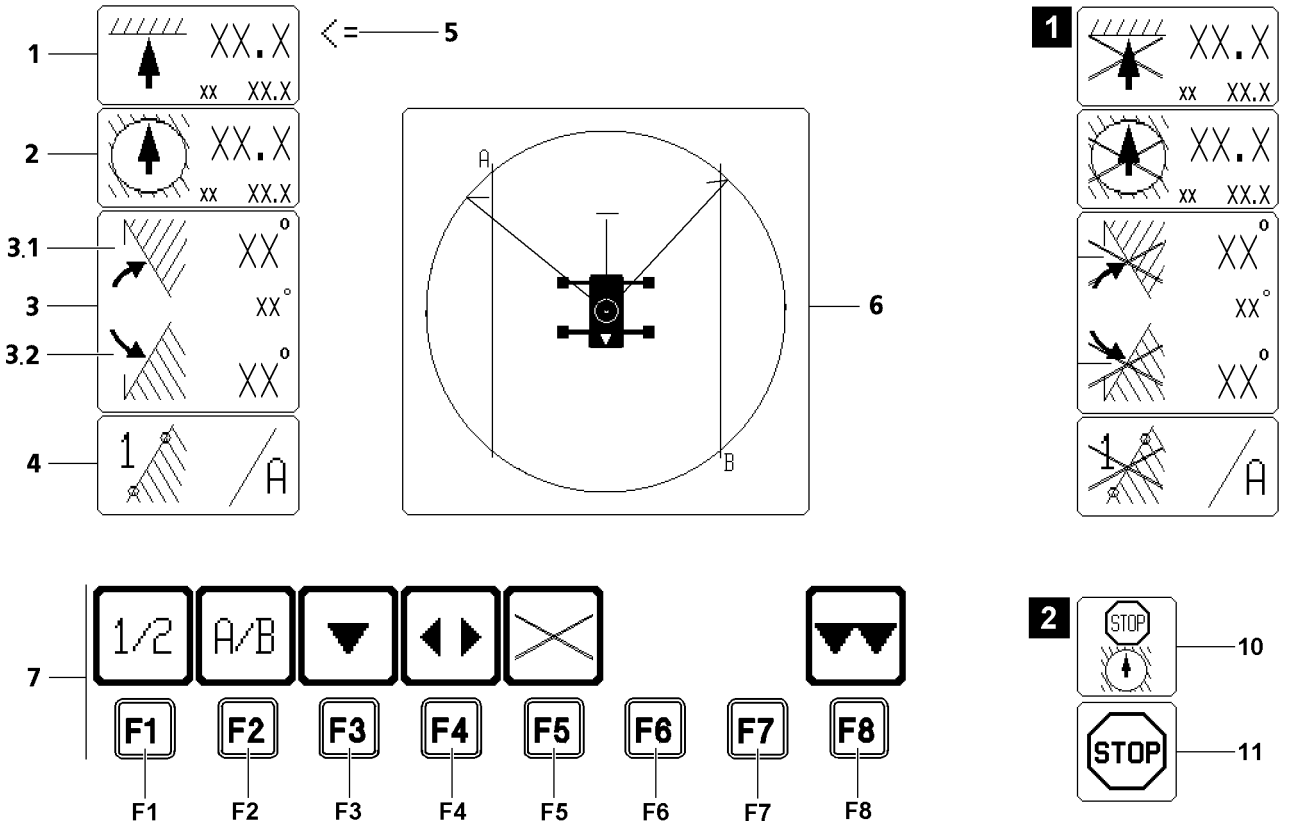

Fig.113273

LWE/LR 1600-2-001/18101-07-02/en

copyright © Liebherr-Werk Ehingen GmbH 2018

12 The Working range limitation program*

Note

▶ For detailed description of the working range limitation, see Operating instructions „Working range limitation“!

12.1 Starting the program

▶ Press program key **P7**.

12.2 User interface

1 „Limitation of pulley head height“ icon

2 „Radius limitation“ icon

3 „Slewing limit stop“ icon

3.1 Right slewing limit stop

3.2 Left slewing limit stop

4 „Edge limit with edge and point selection“ icon

5 Function selector
- For selecting limit functions

6 „Graphic display of programmed limits“ icon
- **Note:**
  Depending on crane type, either the crane icon crane chassis or crawler travel gear are shown!

LWE/LR 1600-2-001/18101-07-02/en

copyright © Liebherr-Werk Ehingen GmbH 2018

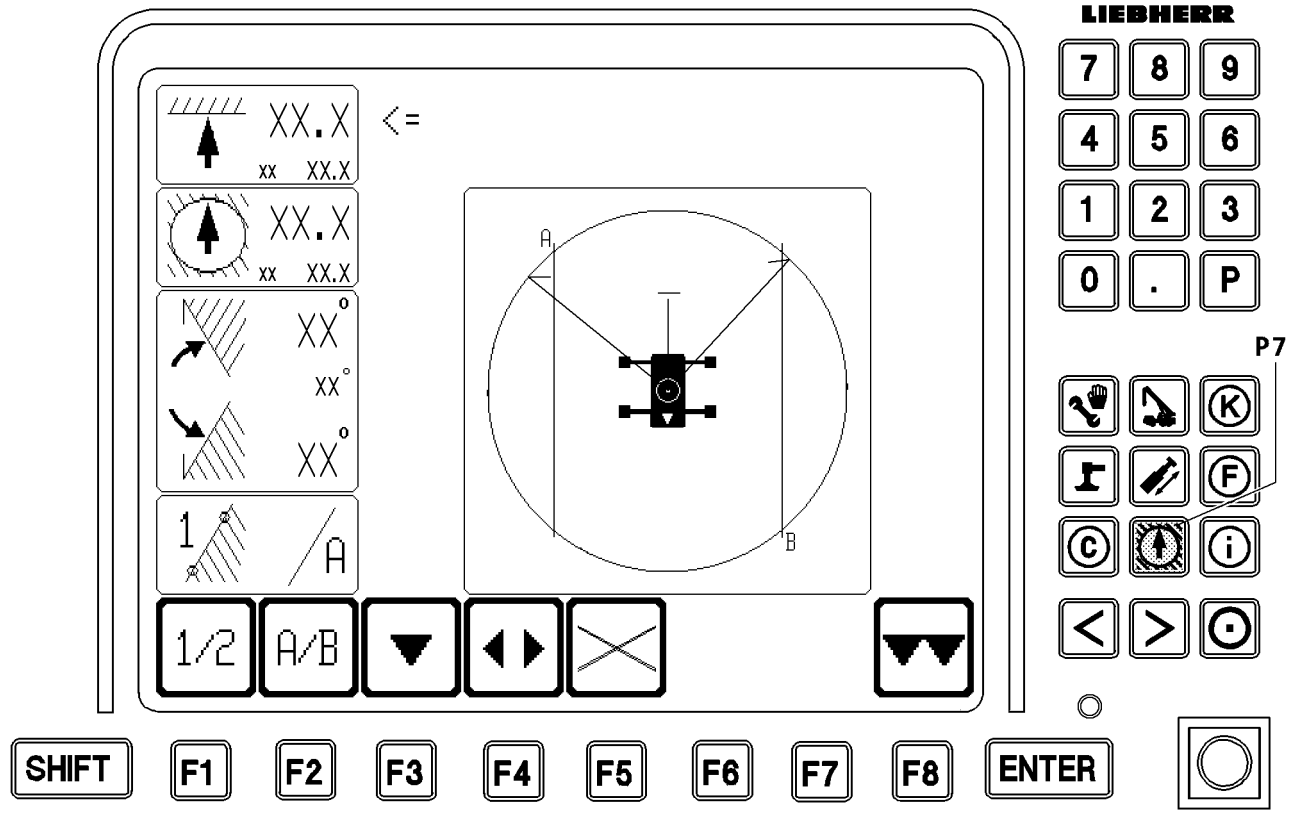

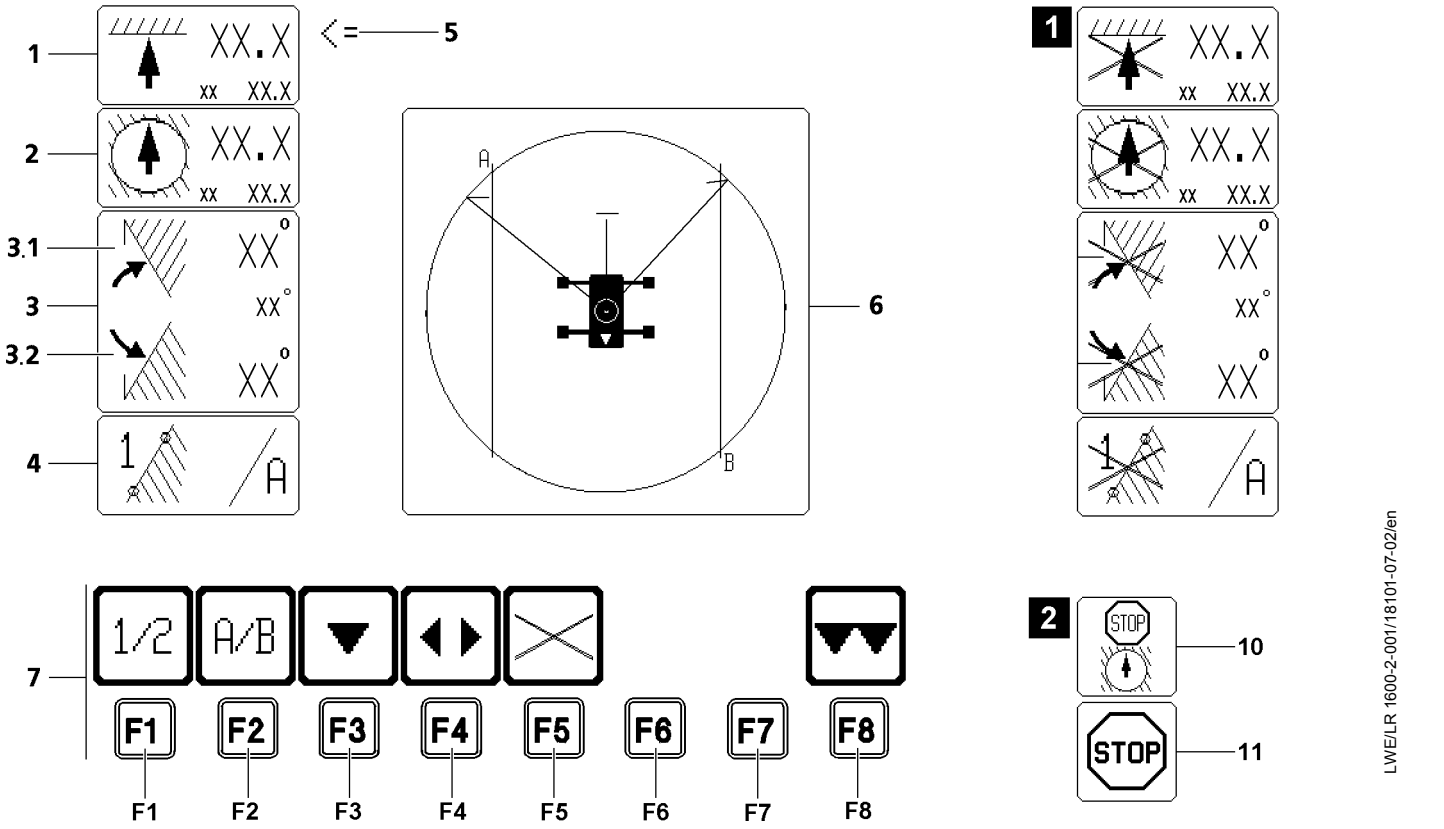

Fig.113273

LWE/LR 1600-2-001/18101-07-02/en

copyright © Liebherr-Werk Ehingen GmbH 2018

12.2.1 Function key line

The function key line **7** is operated via the function key located below.

F1 Function key
- Selection of point 1 or 2 of selected edge A or B

F2 Function key
- Selection of edge A or B that is being programmed

F3 Function key
- The function selector is moved down by one limit function

F4 Function key
- The limit function selected with the function selector changes its status. If previously active, it will now be inactive when the function key **F4** is pressed, and vice versa. An inactive limit function is identified by a crossed out icon. If the function selector shows a turning limit to the left or the right, then both limits will always be switched.
- **Note:**
  For the edge limit, only the preselected edge will be switched! The edge that is not displayed can be active or inactive at the same time!

F5 Function key
- All limit functions become inactive, icons crossed out - see illustration **1**

F6 Function key
- Not assigned in the working range limitation program

F7 Function key
- Not assigned in the working range limitation program

F8 Function key
- Exit the program and return to the crane operation program

12.3 Displays in the crane operation program

If a programmed working range limitation is activated, then this status is indicated in the „Crane operation“ program by an alternative STOP icon **10** on the position of the normal LMB STOP icon **11**, see illustration **2**.

LWE/LR 1600-2-001/18101-07-02/en

copyright © Liebherr-Werk Ehingen GmbH 2018

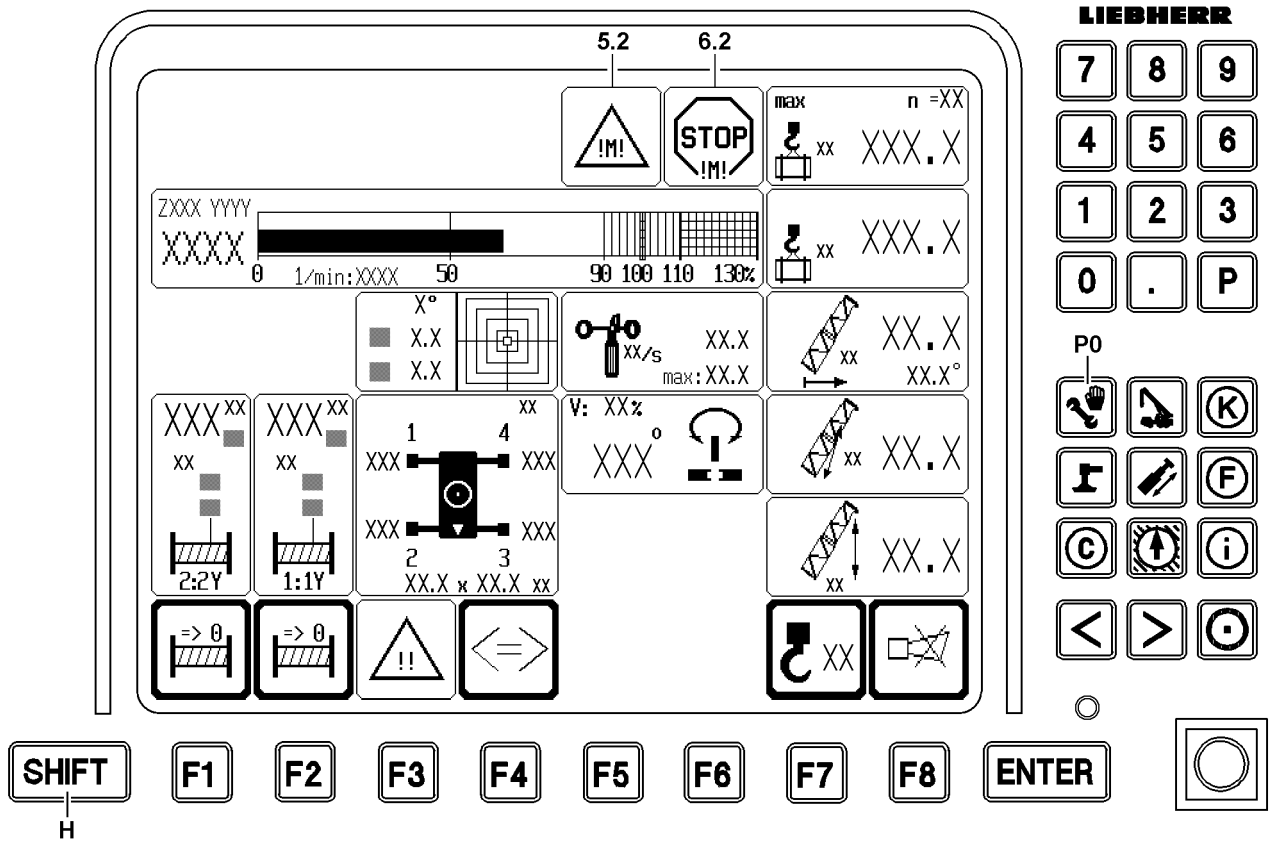

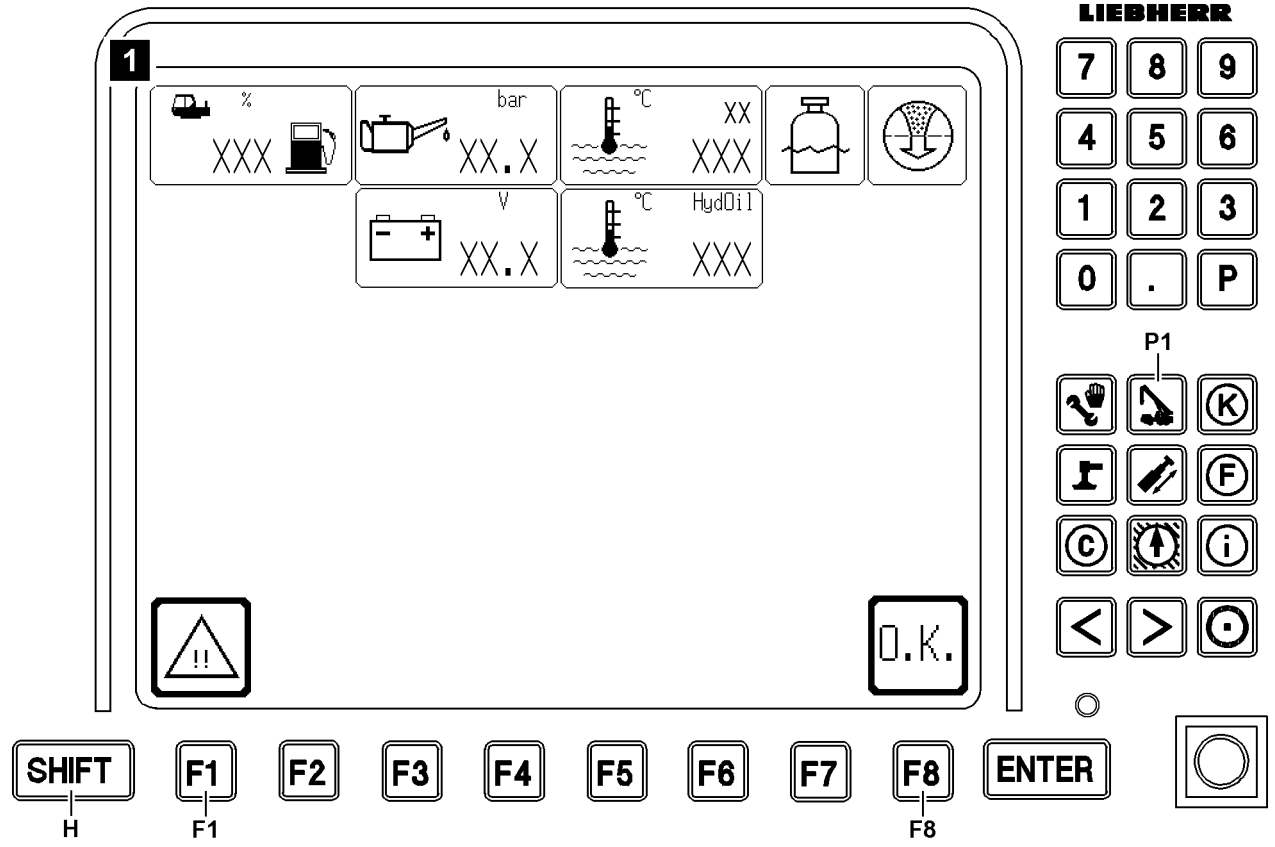

Fig.113274

LWE/LR 1600-2-001/18101-07-02/en

copyright © Liebherr-Werk Ehingen GmbH 2018

13 The Engine monitoring program

All engine-related data is displayed by the engine monitoring program, such as the engine oil pressure, coolant temperature etc. The change from the crane operation into the engine monitoring program is made automatically is case of a problem.

13.1 Starting the program

NOTICE
Danger of severe engine damage!
If the engine monitoring program reports a problem and / or warning occurrence, then you must react immediately and remedy the problem!
- ▶ React to problems and / or warning occurrences immediately and remedy the problem!
- ▶ If necessary, stop crane operation and turn the engine off!

NOTICE
Shut off engine monitoring!
Outside of the crane operation program, the engine monitoring is turned off!
When the engine monitoring is turned off, problems and warning occurrences are not recognized!
This could result in crane failure!
- ▶ If work is not carried out in the crane operation program, then turn the crane engine off and operate the LICCON computer system in stand-by mode, see section „LICCON computer system in stand-by mode“!
- ▶ If work has to be carried out for a longer period outside of the crane operation program, with the engine running, then switch regularly into the engine monitoring screen!

The program starts automatically:

- ▶ Once if a STOP event of the engine monitoring takes place during **crane operation** on the crane operation program (at least one master switch is deflected or activated). The engine monitoring screen is displayed for approx. 5 seconds and then automatically reverts to the crane operating screen.
  or
  At an advance warning, warning or STOP event of the engine monitoring during the boot up of the LICCON computer system.

This is how you start the program at the prompt:

- ▶ Press the key combination SHIFT **H** + program key **P0**.

Result:

- – The engine monitoring field is displayed, see illustration **1**.
- – All **load moment increasing** crane movements are blocked or turned off.

LWE/LR 1600-2-001/18101-07-02/en

copyright © Liebherr-Werk Ehingen GmbH 2018

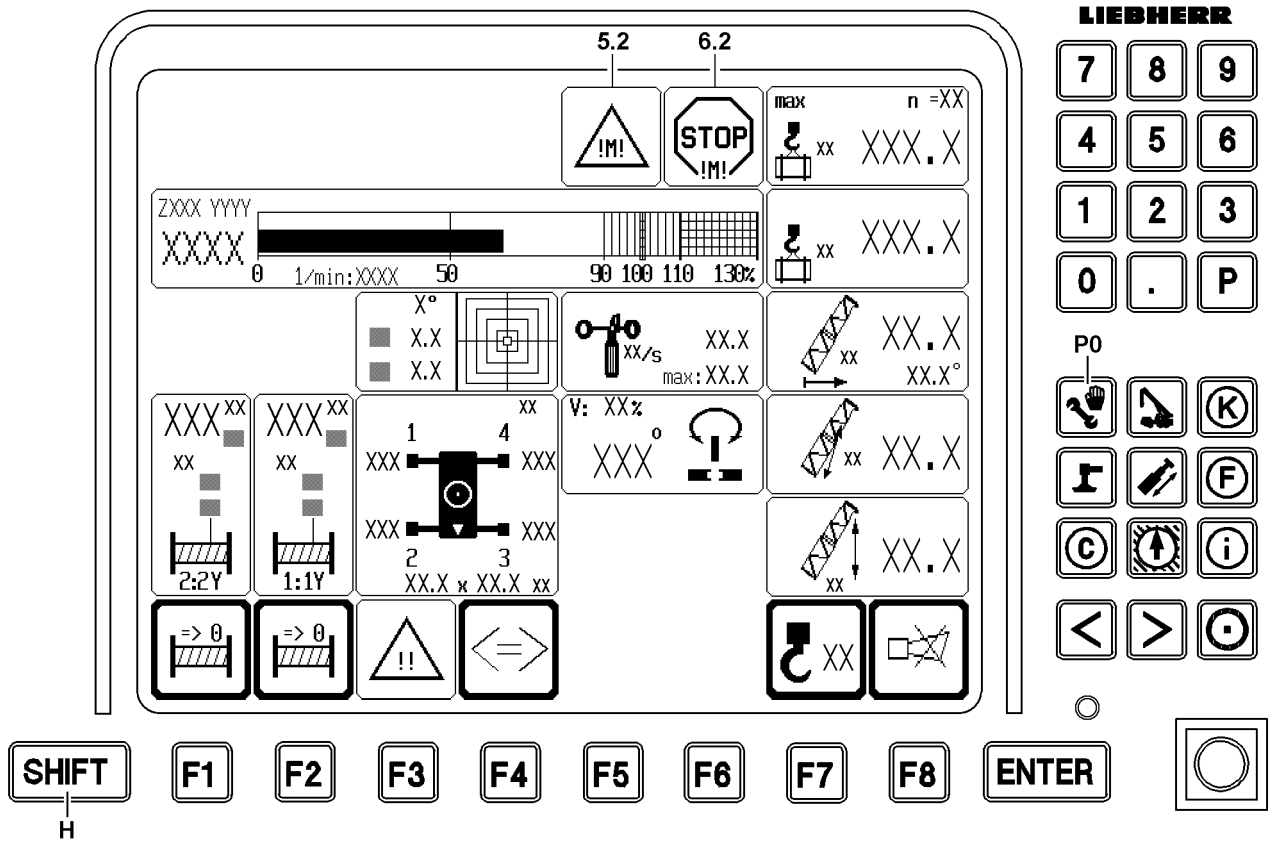

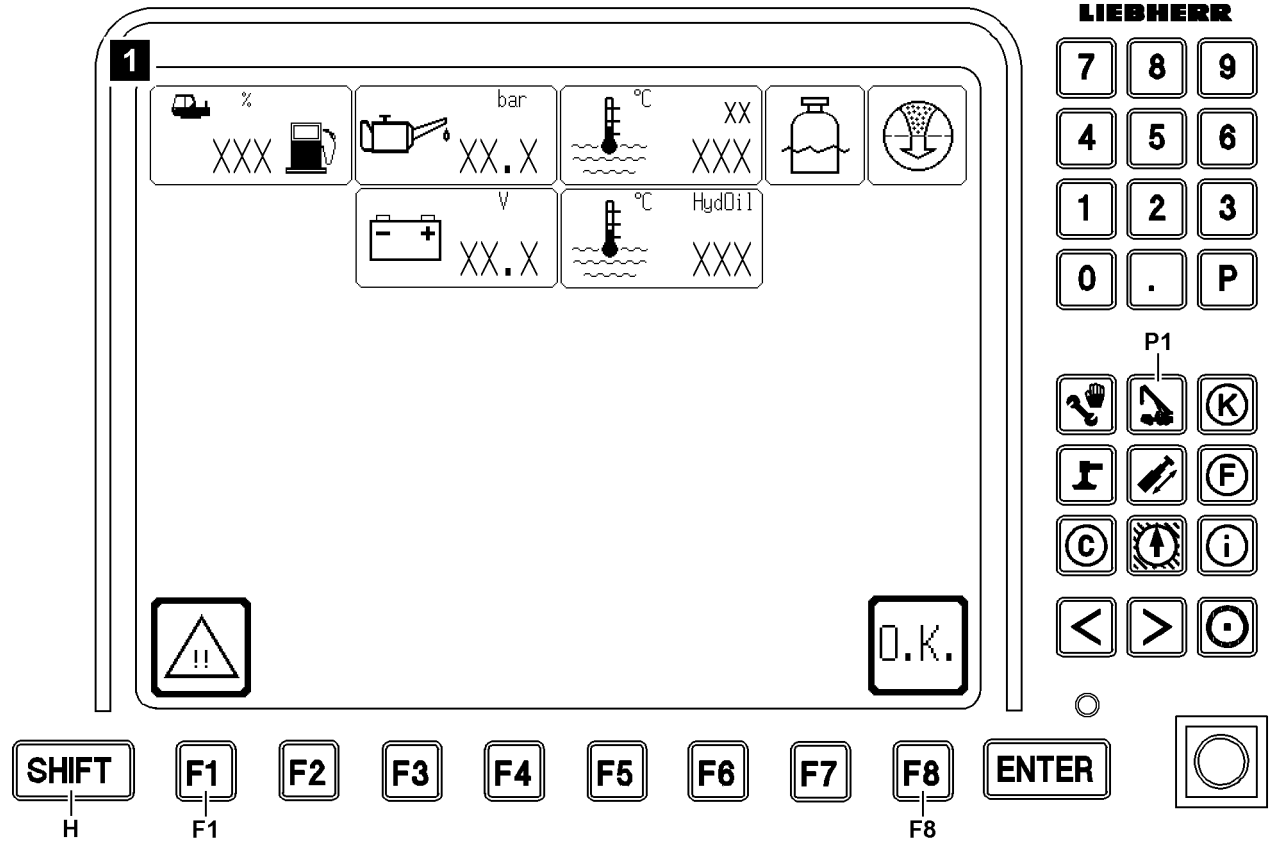

Fig.113274

LWE/LR 1600-2-001/18101-07-02/en

copyright © Liebherr-Werk Ehingen GmbH 2018

13.2 Possible engine monitoring advance warning, warning and STOP events

Events	**Advance warning**	Warning **5.2**	STOP **6.2**
Engine oil pressure (display value) missing		x	
Erroneous engine oil pressure (display value)		x	
Engine oil pressure warning active			x
Coolant / charge air temperature (display value) missing		x	
Erroneous coolant / charge air temperature (display value)		x	
Coolant / charge air temperature warning active			x
Coolant level warning active			x
Hydraulic oil temperature (display value) missing	x		
Erroneous hydraulic oil temperature (display value)	x		
Hydraulic oil temperature (display value) too high		x	
Air filter monitoring		x	
Battery voltage (display value) missing	x		
Erroneous battery voltage (display value)	x		
Battery voltage not between 16 V and 36 V	x		
Fuel reserve (display value) missing	x		
Erroneous fuel reserve (display value)	x		
Fuel reserve (display value) 10 % or less	x		
Fuel reserve (display value) 6 % or less		x	
Fuel reserve (display value) 1 % or less			x

If the system automatically switches to the „Engine monitoring“ program when an engine STOP event occurs, there is an option for retaining the engine monitoring screen within 5 seconds (retaining the engine monitoring screen is achieved by pressing the function key **F1**) (illustration **1**). Switch back to the operating screen using the function key **F8** (OK) or the program key **P1** (crane operation). If the engine monitoring screen is **not** retained, then after 5 seconds the system switches back automatically to the „Crane operation“ program.

LWE/LR 1600-2-001/18101-07-02/en

copyright © Liebherr-Werk Ehingen GmbH 2018

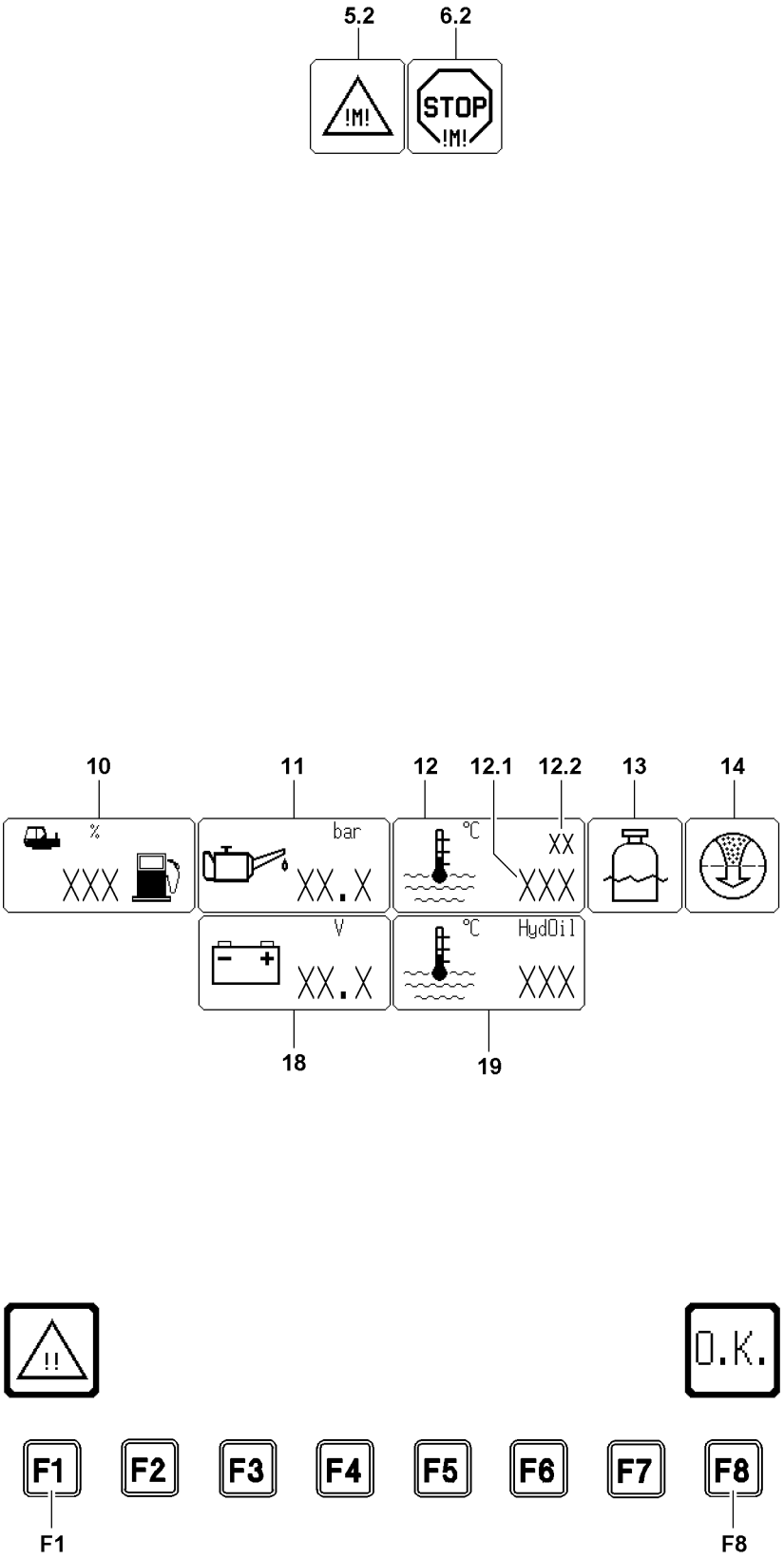

Fig.113277

LWE/LR 1600-2-001/18101-07-02/en

copyright © Liebherr-Werk Ehingen GmbH 2018

13.3 Retaining the engine monitoring screen

The automatic change over into the engine monitoring screen is only made from the „Crane operation“ program.

If you confirm a monitoring event in the engine monitoring screen with the function key **F8**, then there will be **no** automatic change over to the engine monitoring screen for the same event.

On switching back to the „Crane operation“ program, the STOP icon **6.2** or the Advance warning icon **5.2** appears. The system does **not** alert again to other advance warnings in the „Crane operation“, since the advance warning already exists.

WARNING
There is a danger of severe damage to the engine if STOP events are ignored!
If other programs are used for extended periods of time, for example the „Set up“ or „Test system“, it is essential to switch occasionally to the engine monitoring screen in order to ensure that no engine monitoring events have occurred, which could lead to damage or destruction of the engine.
▶ Switch over occasionally to the engine monitoring screen!

The automatic change over in the engine monitoring screen has been made:
▶ Press the function key within 5 seconds **F1**.

Result:

– Retain the engine monitoring screen.
– Icon frames are displayed with a thin border.
– All crane movements that increase the load moment will be turned off or blocked.

Switch back to the „Crane operation“ program:
▶ Press function key **F8**.

Result:

– System switches back to the „Crane operation“ program.
– The block of the load moment increasing crane movements will be lifted.
– The advance warning or STOP icons are faded into the „Crane operation“ program.

LWE/LR 1600-2-001/18101-07-02/en

copyright © Liebherr-Werk Ehingen GmbH 2018

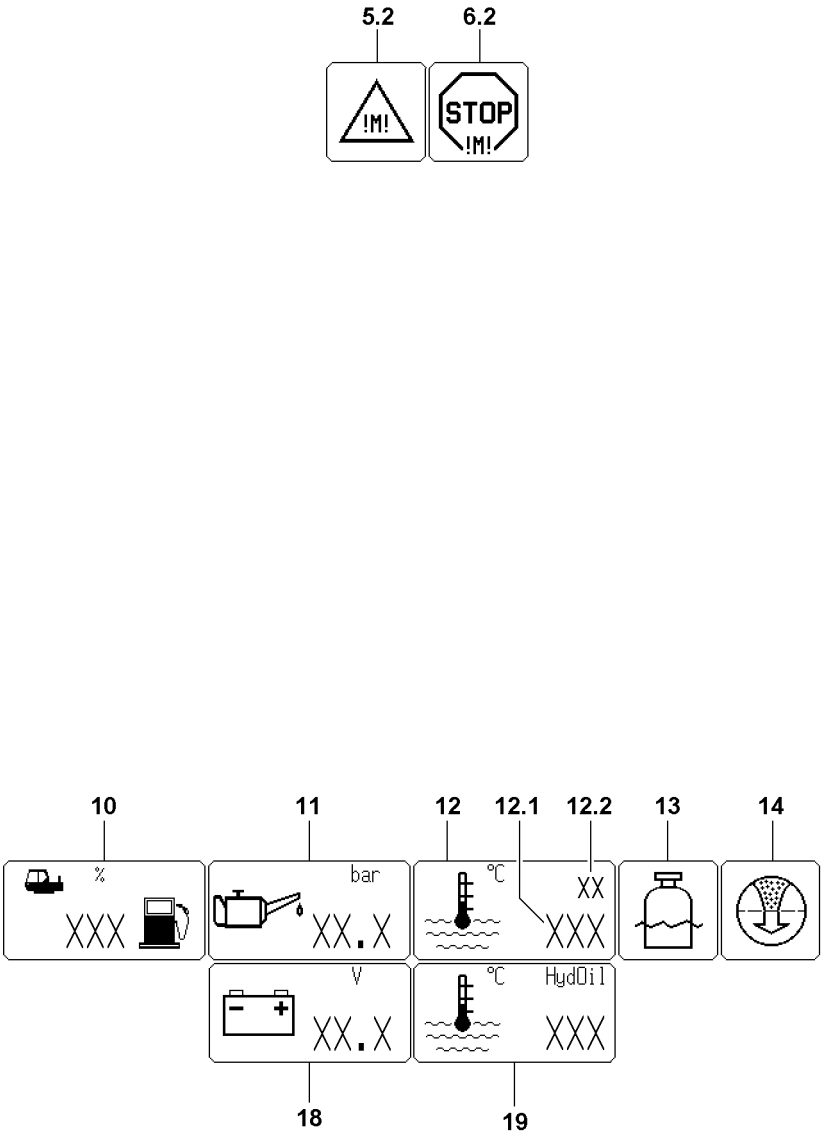

Fig.113277

LWE/LR 1600-2-001/18101-07-02/en

copyright © Liebherr-Werk Ehingen GmbH 2018

13.4 Engine monitoring icons

13.4.1 Crane engine

10 Tank contents
- In percent [%]
  Icon blinks if the fuel reserve is less than 10 %

11 Oil pressure
- In [bar]
  Numeric display in icon blinks if the engine oil pressure is too low.

12 Coolant / charge air temperature
- In [°C]

12.1 Coolant temperature
- Numeric display blinks if the coolant temperature is too high

12.2 Charge air temperature
- Numeric display blinks if the charge air temperature is too high

13 Coolant level too low
- Icon appears if the coolant level is too low

14 Air filter is dirty
- Icon appears if the air filter is dirty

18 Battery voltage
- In [V]
  Numeric display in icon blinks if the operating voltage is less than 16 V or above 36 V

19 Hydraulic oil temperature
- In [°C]
- Numeric display blinks if the hydraulic oil temperature is too high.

13.5 Function key line

F1 Function key
- Retaining the engine monitoring screen

F8 Function key
- Switching back to the crane operation program

Note
▶ The function keys **„F2“** to **„F7“** are **not** used in the engine monitoring program!

LWE/LR 1600-2-001/18101-07-02/en

copyright © Liebherr-Werk Ehingen GmbH 2018

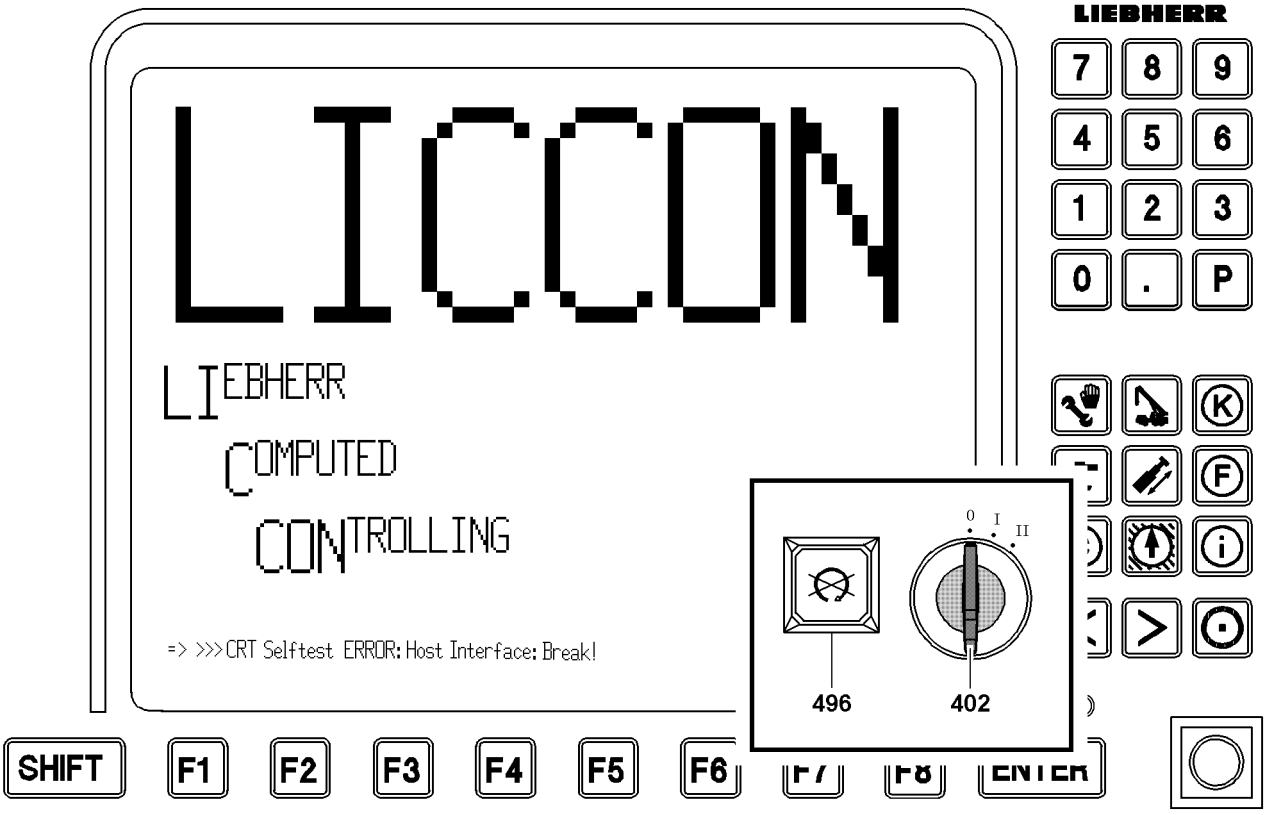

Fig.105190

LWE/LR 1600-2-001/18101-07-02/en

copyright © Liebherr-Werk Ehingen GmbH 2018

14 LICCON computer system in stand-by mode

14.1 Starting LICCON computer system in stand-by mode

There are two ways of achieving stand-by mode with the LICCON computer system.

Starting the LICCON computer system without the engine running:

▶ Turn the ignition switch **402** to position „I“ and leave it there.

Result:

– The LICCON computer system runs and the LICCON monitor shows the set up screen, or alternatively for a stop / warning / advance warning, the engine monitoring screen.

▶ Press function key **F8** (O.K.).

Result:

– System switches to the „Crane operation“ program.

Turning off the running engine with the engine stop key:

▶ Press the button **496**.
▶ Leave the ignition switch **402** in position „I“.

Result:

– The engine is turned off, the LICCON computer system continues to run.

LWE/LR 1600-2-001/18101-07-02/en

copyright © Liebherr-Werk Ehingen GmbH 2018

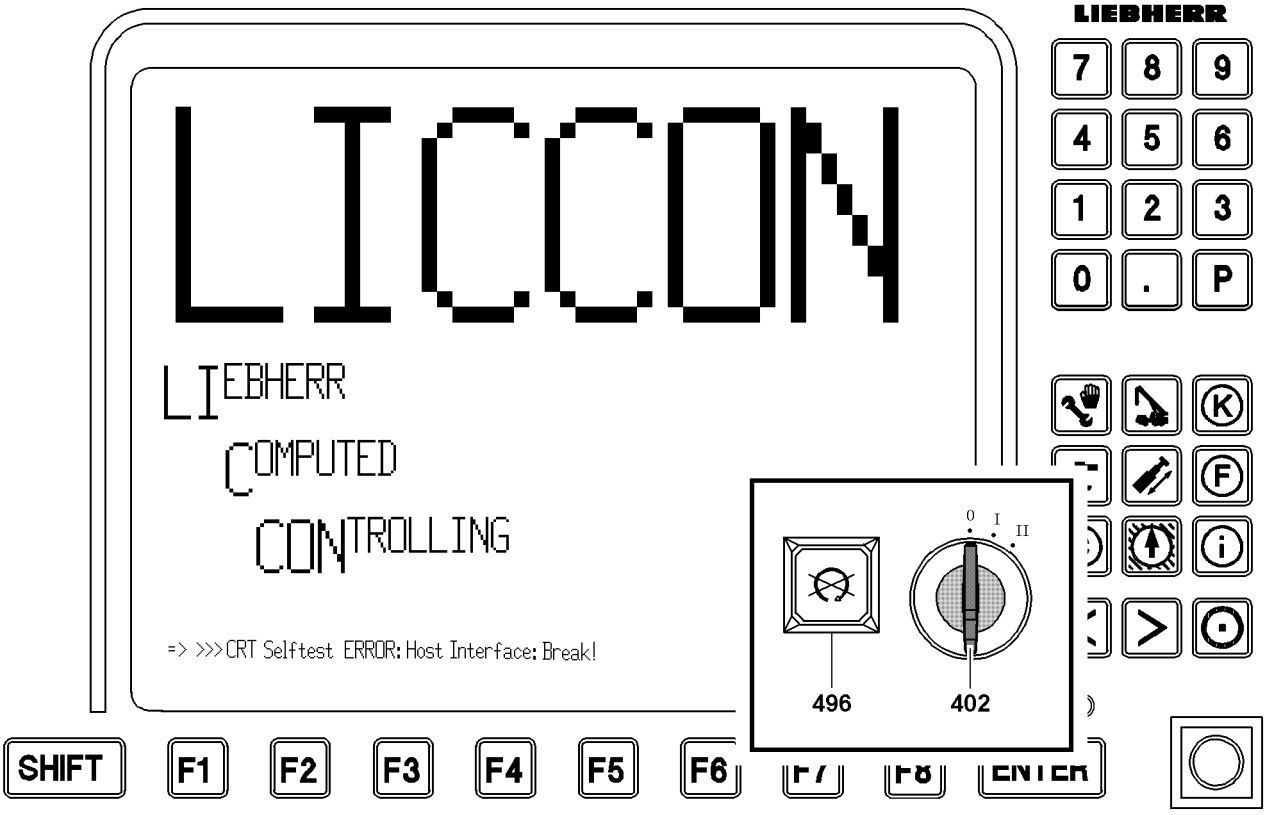

Fig.105190

LWE/LR 1600-2-001/18101-07-02/en

copyright © Liebherr-Werk Ehingen GmbH 2018

14.2 Active stand-by operation / alarm

The operating programs and the monitor displays function exactly the same as in the turn-on procedure for the LICCON computer system with engine start (crane operation).

No crane movements are possible. If a crane movement is selected anyway, a message appears on the LICCON monitor.

Example: **Control turning shut off, the crane engine is not running.**

The duration of the stand-by operation is 15 minutes, of which 3 minutes are the stand-by alarm. Operating the LICCON computer system during stand-by operation automatically extends the stand-by time.

▶ In **Stand-by operation no** keys are pressed on the monitor.

Result:

– The stand-by alarm (horn) is reached after 12 minutes.
– This screen appears on the monitor: **STANDBY** (see illustration).

▶ Now press any key on the LICCON monitor.

Result:

– System switches back to the interrupted program.
– The stand-by time is extended by another 15 minutes.

▶ During the **stand-by alarm** (Duration: 3 minutes) **no** keys on the monitor are pressed.

Result:

– The LICCON computer system shuts completely off. The shut off is announced by acoustical signals 60 seconds in advance (short horn) and 30 seconds in advance (long horn). The power supply of the LICCON computer system turns off.
– This screen appears on the LICCON monitor: **CRT Selftest ERROR: Host Interface: Break!** (see illustration). This is not an error message from the LICCON computer system, the error message appears only on the monitor because the connection between the monitor and the CPU is broken.

14.3 Start prevention

Starting the engine again after complete shut down of the LICCON computer system:

▶ Return the ignition switch **402** first to position „0“.
▶ Turn the ignition switch **402** to position „I“ (note the preheating time).
▶ Turn the ignition switch **402** briefly to position „II“.

Result:

– The engine starts.

LWE/LR 1600-2-001/18101-07-02/en

copyright © Liebherr-Werk Ehingen GmbH 2018

Empty page!

LWE/LR 1600-2-001/18101-07-02/en

copyright © Liebherr-Werk Ehingen GmbH 2018

4.03 Start up and shut down of crane

1	Power supply for the crane*	3
2	Checks before start up	7
3	Work station - Crane operator's cab	15
4	Starting and stopping the engine	25
5	LICCON computer system after engine start	35
6	Load weighing and load display	41

LWE/LR 1600-2-001/18101-07-02/en

copyright © Liebherr-Werk Ehingen GmbH 2018

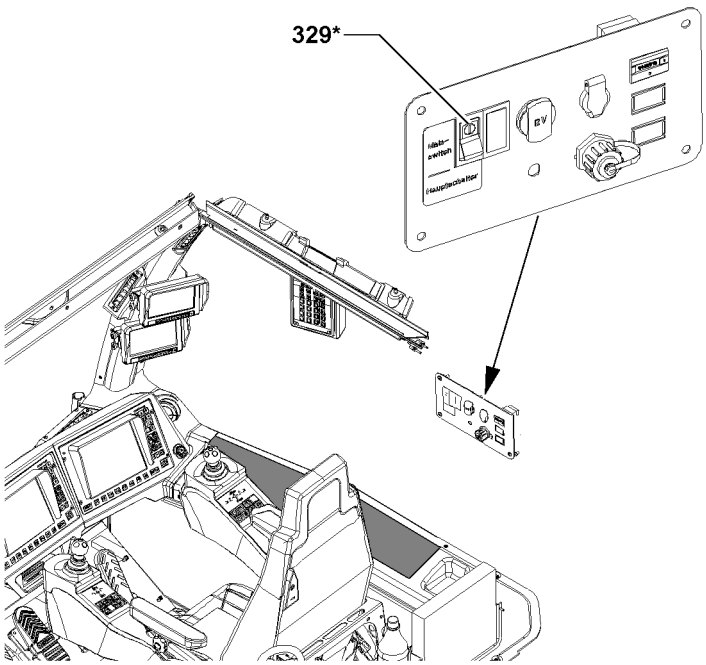

Fig.113581

LWE/LR 1600-2-001/18101-07-02/en

copyright © Liebherr-Werk Ehingen GmbH 2018

1 Power supply for the crane*

Before starting-up the crane, turn the power supply of the main current circuit on.

The **actuation** of the main current circuit releases the power supply for all systems relevant for crane operation.

The **shut-off** of the main current circuit disconnects all systems relevant for crane operation from the power supply of the power circuit.

Note

- ▶ Before the crane can be operated, turn the main current circuit on via the toggle switch* **329**.
- ▶ For the narrow track version of the crane, the main current circuit can be turned on via the toggle switch* **329** in the crane operator's cab or via the toggle switch* **603** in the cabinet on the crane chassis.

1.1 Airplane warning light

DANGER

Endangering air traffic!

If a proper and continuous operation of the airplane warning light(s) is not ensured through electrical external feed, then air traffic can be significantly endangered! This could result in serious accidents! Personnel can be severely injured or killed!

- ▶ After turning the main current circuit off, the airplane warning light can **no longer** be operated on the crane.
- ▶ For operation of the airplane warning light, leave the main current circuit on and ensure the electrical supply of the crane via external power supply.

The electrical supply of the airplane warning light must be ensured via external power supply:

- When turning the crane off after completion of the daily tasks.
- At downtime of the crane, which exceeds the duration of no more than one day.
- When turning the crane off in a work environment which requires the use of the airplane warning light continuously.

Note

- ▶ If the airplane warning light is operated via external power supply, then the main current circuit must be turned on!

- ▶ Actuate the main current circuit.
- ▶ Ensure the power supply of the crane via an external power supply.

LWE/LR 1600-2-001/18101-07-02/en

copyright © Liebherr-Werk Ehingen GmbH 2018

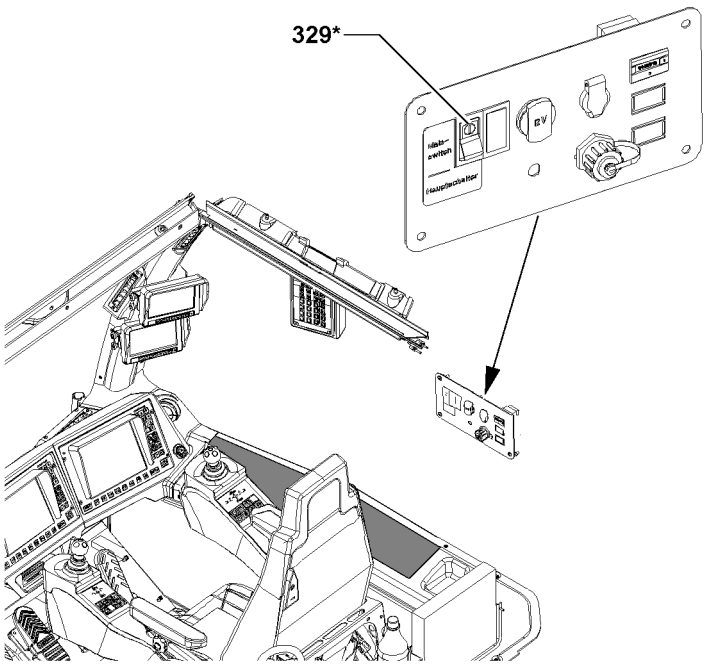

Fig.113581

LWE/LR 1600-2-001/18101-07-02/en

copyright © Liebherr-Werk Ehingen GmbH 2018

1.2 Turning the power supply of the main current circuit on / off

1.2.1 Actuating the main current circuit

If the main current circuit was turned off:

▶ Press the toggle switch* **329**.
or
Press the toggle switch* **603**.

Result:

– The power supply of the main current circuit is actuated.

1.2.2 Turning the main current circuit off

If the local application conditions of the crane permit, we recommend to turn the main current circuit of the crane or the crane off before leaving the jobsite every day.

Due to this measure, the fast discharge of the batteries by electrical users is prevented.

Note

▶ The discharge of the batteries is significantly accelerated due to the influence of cold weather conditions!

NOTICE

Total discharge of batteries!
If the main current circuit of the crane is not turned off daily when leaving the jobsite, then the batteries can be totally discharged which can destroy the batteries!
High replacement costs can result!

▶ Due to the local application conditions of the crane, no airplane warning light is required: Always turn the main current circuit off before leaving the jobsite / crane.

▶ Press the toggle switch* **329**.
or
Press the toggle switch* **603**.

Result:

– The main current circuit is disconnected from the power supply.

LWE/LR 1600-2-001/18101-07-02/en

copyright © Liebherr-Werk Ehingen GmbH 2018

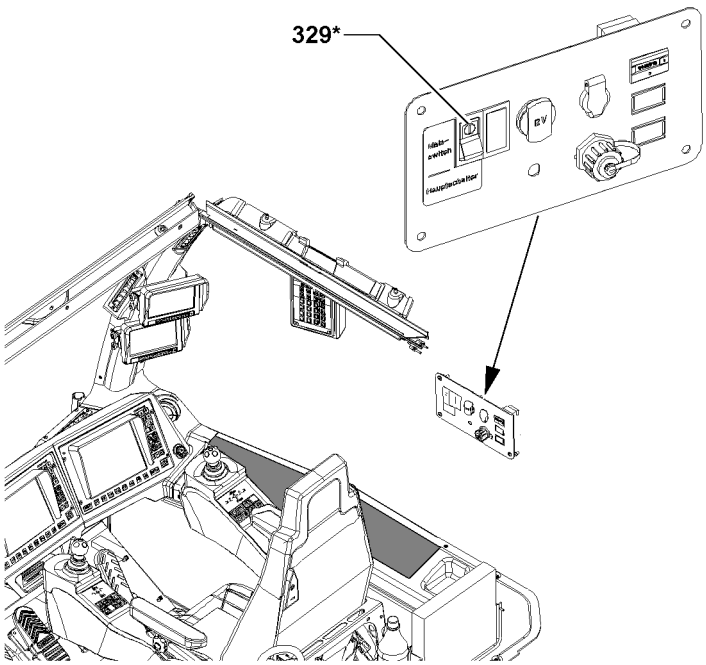

Fig.113581

LWE/LR 1600-2-001/18101-07-02/en

copyright © Liebherr-Werk Ehingen GmbH 2018

2 Checks before start up

WARNING
Emergency devices not operational!
If emergency devices, such as the EMERGENCY OFF switch, ladders etc. are not accessible or operational, then they cannot be used in case of an emergency!
Personnel can be injured or killed because the emergency devices are not operational!
- ▶ Check emergency devices before start up for accessibility or operational readiness!
- ▶ Open or remove anti theft devices, such as locks on the emergency devices!

Note
- ▶ For detailed description of fill quantities, service items and lubricants, see Crane operating instructions, chapter 7.06 and chapter 7.07!

Carry our various checks every time before operating the crane.

If an item is low or lacking during an inspection, then it must be refilled or brought to normal status before operating the crane.

If the inspection shows a very dirty filter, then it must be replaced before operating the crane.

2.1 Visual inspections

Make sure that the following prerequisites are met:
- The ignition switches are in position „I“.
- The engine is off.
- The engine is at ambient temperature.
- The LICCON computer system is in stand-by mode.

2.1.1 Checking the oil levels and filters

- ▶ Check the engine oil level.
- ▶ Check the oil level in the hydraulic tank.
- ▶ Check the filter on the hydraulic tank.

LWE/LR 1600-2-001/18101-07-02/en

copyright © Liebherr-Werk Ehingen GmbH 2018

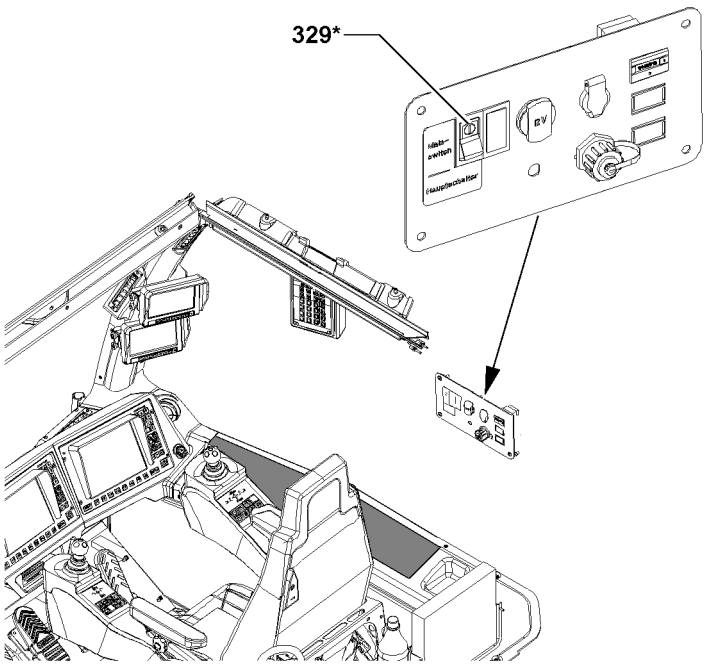

LWE/LR 1600-2-001/18101-07-02/en

Fig.113581

copyright © Liebherr-Werk Ehingen GmbH 2018

2.1.2 Checking the central lubrication system

For detailed description of lubricants and fill quantities, see Crane operating instructions, chapter 7.06 and chapter 7.07!

NOTICE
Property damage due to insufficient lubrication!
▶ Check the fill quantity of the grease containers!

If the fill quantity falls below the marked minimum amount:
▶ Fill the grease container with grease!

2.1.3 Checking the coolant level

For detailed description of lubricants and fill quantities, see Crane operating instructions, chapter 7.06 and chapter 7.07!

WARNING
Danger of burns due to hot coolant!
Coolant at operating temperature is under pressure. If the cooling system is opened, there is the danger of scalding!
▶ Check the coolant level only when the engine is cold!

NOTICE
Property damage due to insufficient cooling!
▶ Check the coolant level!

If the coolant level of the coolant expansion tank falls below the overflow on the filler neck:
▶ Add coolant!

LWE/LR 1600-2-001/18101-07-02/en

copyright © Liebherr-Werk Ehingen GmbH 2018

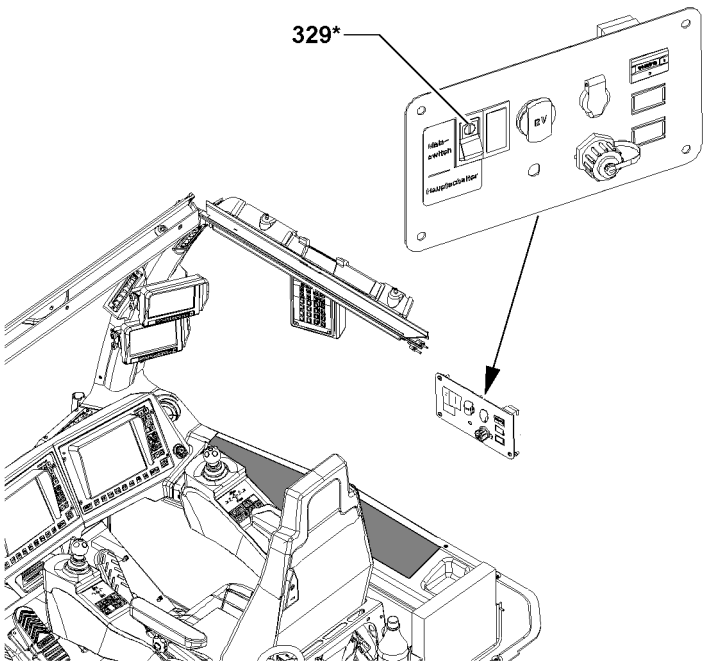

LWE/LR 1600-2-001/18101-07-02/en

Fig.113581

copyright © Liebherr-Werk Ehingen GmbH 2018

2.1.4 Checking the window cleaning fluid

NOTICE
Frozen window cleaning fluid!
If the window cleaning fluid is not frost resistant, then the window washer system can freeze during the cold time of the year!
Failure of the window washer system is the result!
The window washer system can be damaged!
▶ Change the window cleaning fluid in time to a frost resistant type!

Before the start of the cold season:
▶ Empty the container for the window cleaning fluid and refill it with a commercially available, frost resistant window cleaning fluid.

2.1.5 General checks

WARNING
Danger of fatal injury due to falling parts!
If parts fall from the main boom during erection, personnel can be severely injured or killed!
▶ Before erecting the boom: Make sure that there are no loose parts on the boom system, such as pins, spring retainers or ice!
▶ Make sure that the cable / rope drum and the limit switches are free of snow and ice!

▶ Make sure that the crane is horizontally aligned.
▶ Make sure that all safety lights and working floodlights are functioning.
▶ Make sure that the gear ring of the slewing ring connection is clean and greased.
▶ Make sure that the air supply to the oil and water cooler is clear.
▶ Make sure that side covers are closed and locked.
▶ Make sure that no persons or objects are within the danger zone of the crane.

LWE/LR 1600-2-001/18101-07-02/en

copyright © Liebherr-Werk Ehingen GmbH 2018

2

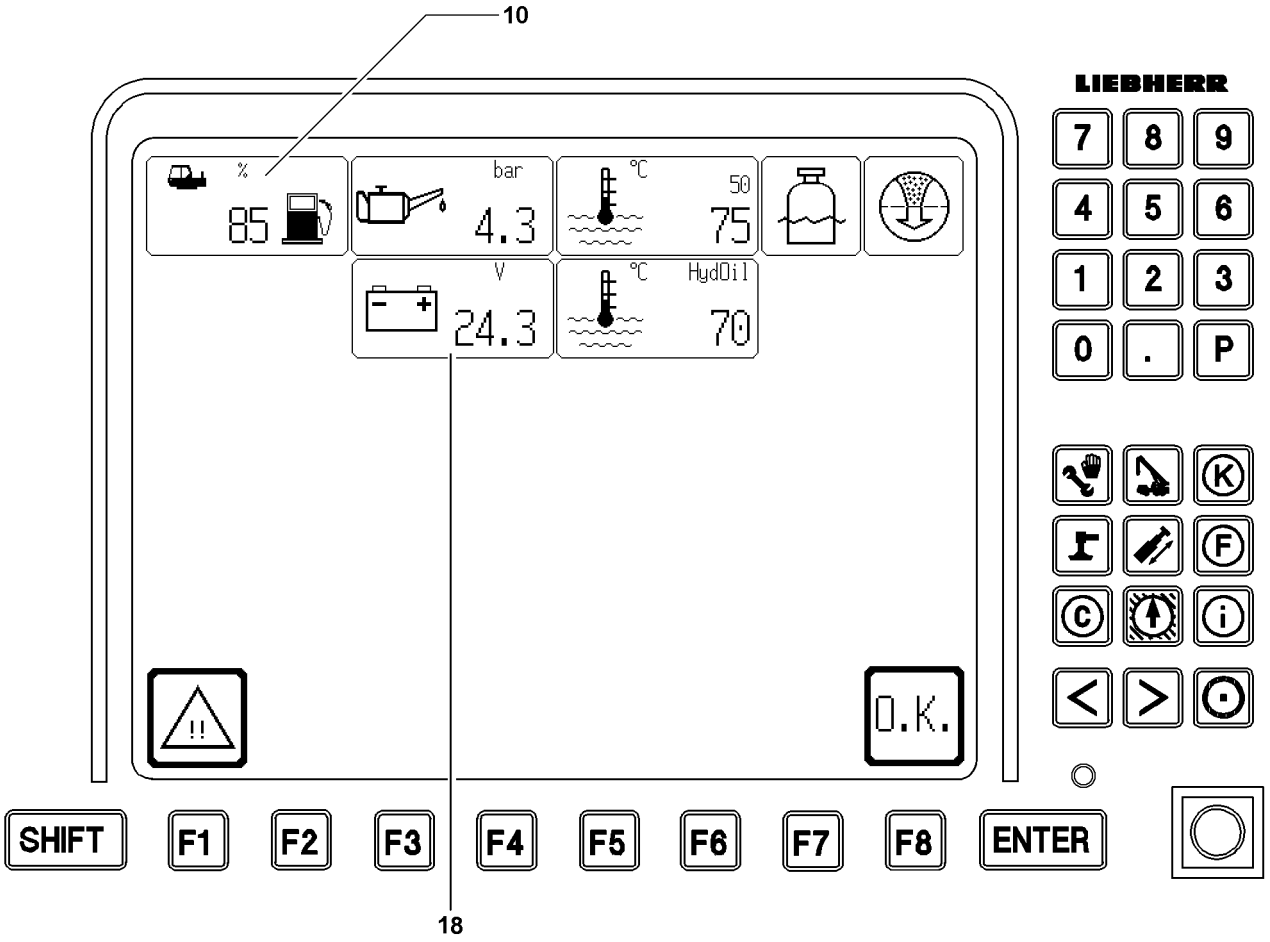

LWE/LR 1600-2-001/18101-07-02/en

Fig.110809

copyright © Liebherr-Werk Ehingen GmbH 2018

2.2 Checks via the LICCON computer system

If a control value has reached the limit value, then the LICCON computer system switches momentarily into the engine monitoring program during boot up and shows the monitored values graphically, see illustration **2**.

Note
▶ For a detailed description of the LICCON computer system, see Crane operating instructions, chapter 4.02!

2.2.1 Checking the fuel level

Note
Fuel tank empty!
If the fuel tank has run dry, then the fuel system must be bled!
▶ Refuel in time!

Note
▶ In the engine monitoring program, the fuel level in the tank **10** is shown in percentages!

▶ Call up the monitor display engine monitoring in the LICCON computer system and check the fuel level.

2.2.2 Checking the battery voltage

Note
The battery voltage must be checked in regular intervals, especially if the crane has been „out of service“ for a longer period of time and users, such as the airplane warning lights - are checked and the battery must be recharged if necessary!
▶ Recharge the battery, see Crane operating instructions, chapter 7.05!

Note
Reduced battery performance requires greater power requirements!
▶ Ensure that batteries are well charged, particularly during the colder months!

▶ Check the battery voltage, see icon **18**.

LWE/LR 1600-2-001/18101-07-02/en

copyright © Liebherr-Werk Ehingen GmbH 2018

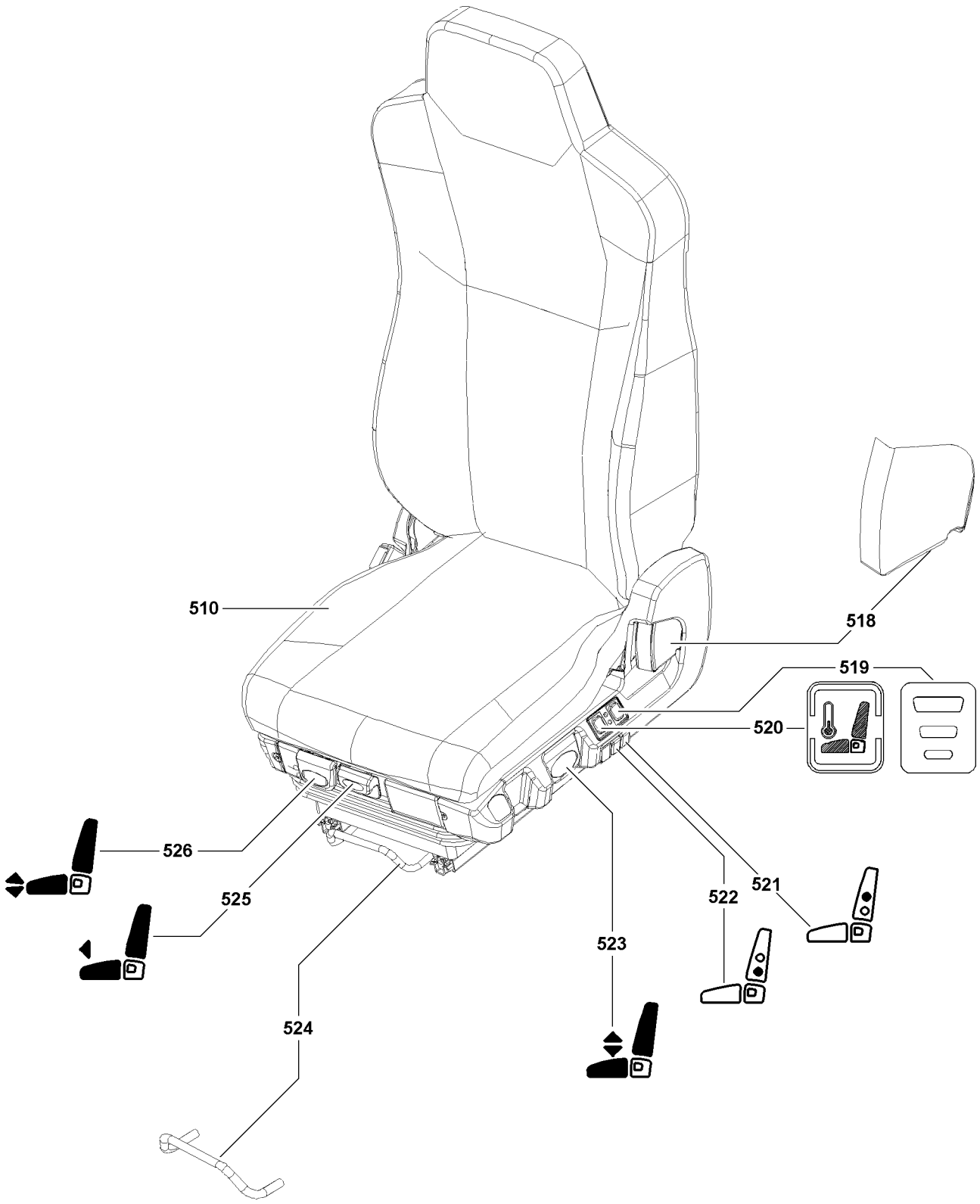

LWE/LR 1600-2-001/18101-07-02/en

Fig.104902

copyright © Liebherr-Werk Ehingen GmbH 2018

3 Work station - Crane operator's cab

3.1 Adjusting the crane operator's seat

The crane operator's seat can be adjusted to suit different body sizes.

Adjust the seat position

- ▶ With the lever **518** adjust the angle of the backrest.
- ▶ With the button **521** adjust the lumbar area support „on top“.
- ▶ With the button **522** adjust the lumbar area support „on the bottom“.
- ▶ With the lever **523** adjust height of seat.
- ▶ Unlock the horizontal seat adjustment with the bracket **524**.
- ▶ With the lever **525** adjust the seat cushion by moving it back or forth.
- ▶ With the lever **526** adjust the seat incline.

Turn the seat heater / climate control on

The seat heater or climate control is turned on and off with the switch **520**.

There are three switch positions:
- Center position: Heater and climate control is turned off.
- Pushed on top: Heater turned on (red light).
- Pushed on the bottom: Climate control turned on (blue light).

- ▶ Turn the seat heater / climate control on with switch **520**.
- ▶ Adjust the fan stage with switch **519**.

3.2 Adjusting the consoles

The control platform, with the consoles on the left and right hand side of the crane operator's seat **510** allows the crane driver to adjust the consoles for „crane operation“ to suit his body size optimally.

Note

- ▶ The left and right consoles are individually adjustable.

Two different console positions are possible:
- „Crane operating position“
- „Entering / exiting“

LWE/LR 1600-2-001/18101-07-02/en

copyright © Liebherr-Werk Ehingen GmbH 2018

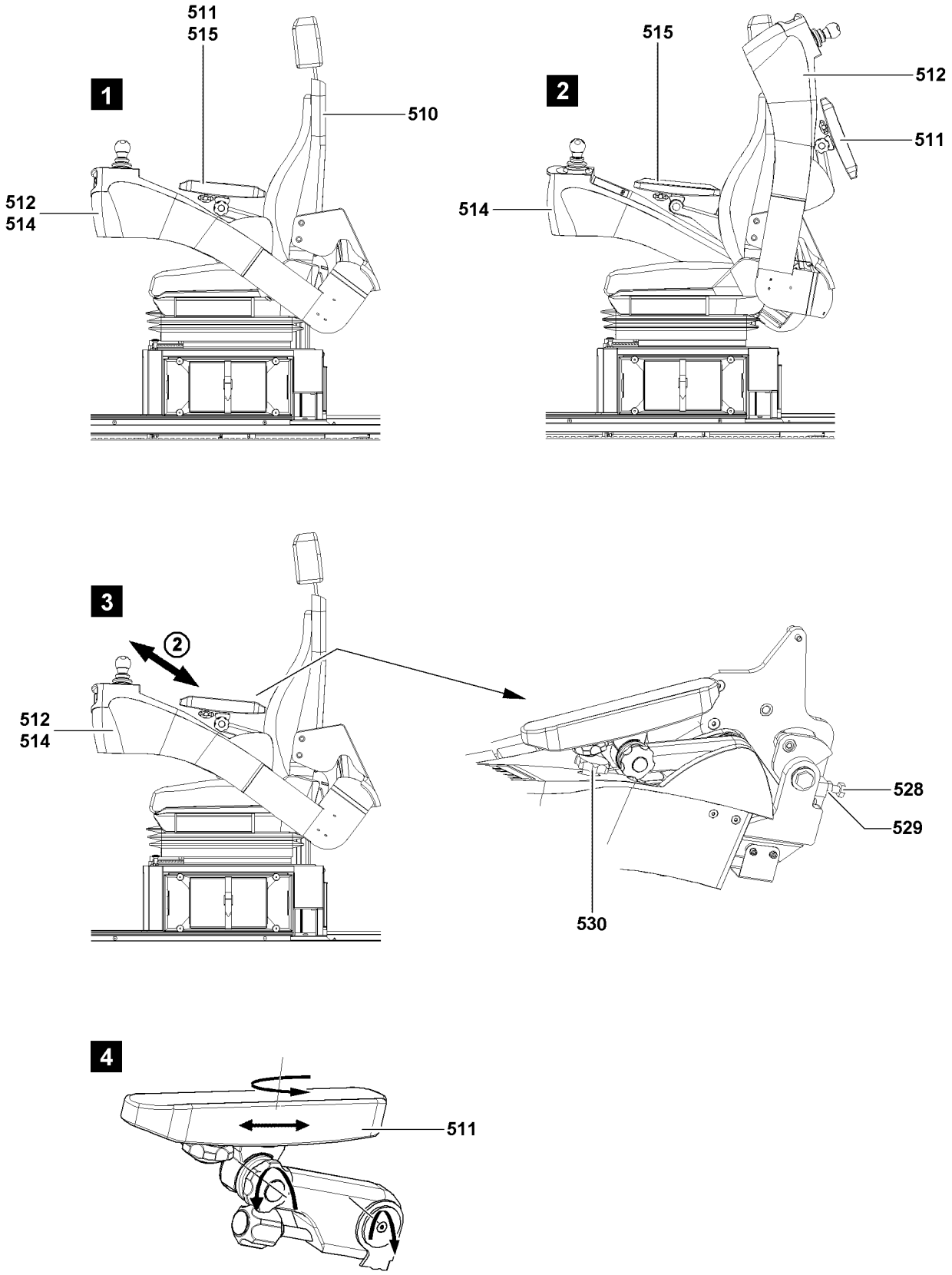

LWE/LR 1600-2-001/18101-07-02/en

Fig.105888

copyright © Liebherr-Werk Ehingen GmbH 2018

WARNING
Danger of accidents due to folded down console!
If the left console **512** is swung up (position „entering / exiting“), see illustration **2**, when driving the crane - specially during severe braking maneuvers - there is an increased danger of accident as well as a danger of property damage due to uncontrolled „down“ or „forward“ swing of the console(s).
- ▶ Driving the crane with upward swung consoles is **prohibited**.
- ▶ Before starting to travel, always bring the consoles into „crane operating position“.

You can move the left console from „crane operating position“ to „entering / exiting“ position by swinging it up.

Note
- ▶ When swinging the console upward, hold on to it until the end position „entering / exiting“ is reached.
- ▶ When the console is swung down, it returns to the previously set „crane operating position“.

The consoles can be adjusted with **one hand**.

3.2.1 Adapting the consoles to the crane driver

Note
- ▶ The consoles can be adjusted to suit the crane driver as described for the left console **512**.

Adjust the incline

- ▶ Adjust the stop screw **528** until the console has reached the desired incline.
- ▶ Secure the stop screw with the nut **529**.

Move the console horizontally

- ▶ Fold the armrest up.
- ▶ Loosen the lock screw **530** until the console can be moved.
- ▶ Adjust the horizontal position of the console by moving it back or forth (point **2**).
- ▶ Tighten the lock screw **530**.
- ▶ Fold the armrest down.

Result:

– The console is adjusted.

3.2.2 Adjusting the arm rests

The left armrest **512** and the right armrest **514** offer a multitude of adjustment possibilities, see illustration **4**.

Note
- ▶ To ensure fatigue free and concentrated work with the crane, the armrests should be adjusted in such a way that you can comfortably reach and operate the master switches.

copyright © Liebherr-Werk Ehingen GmbH 2018

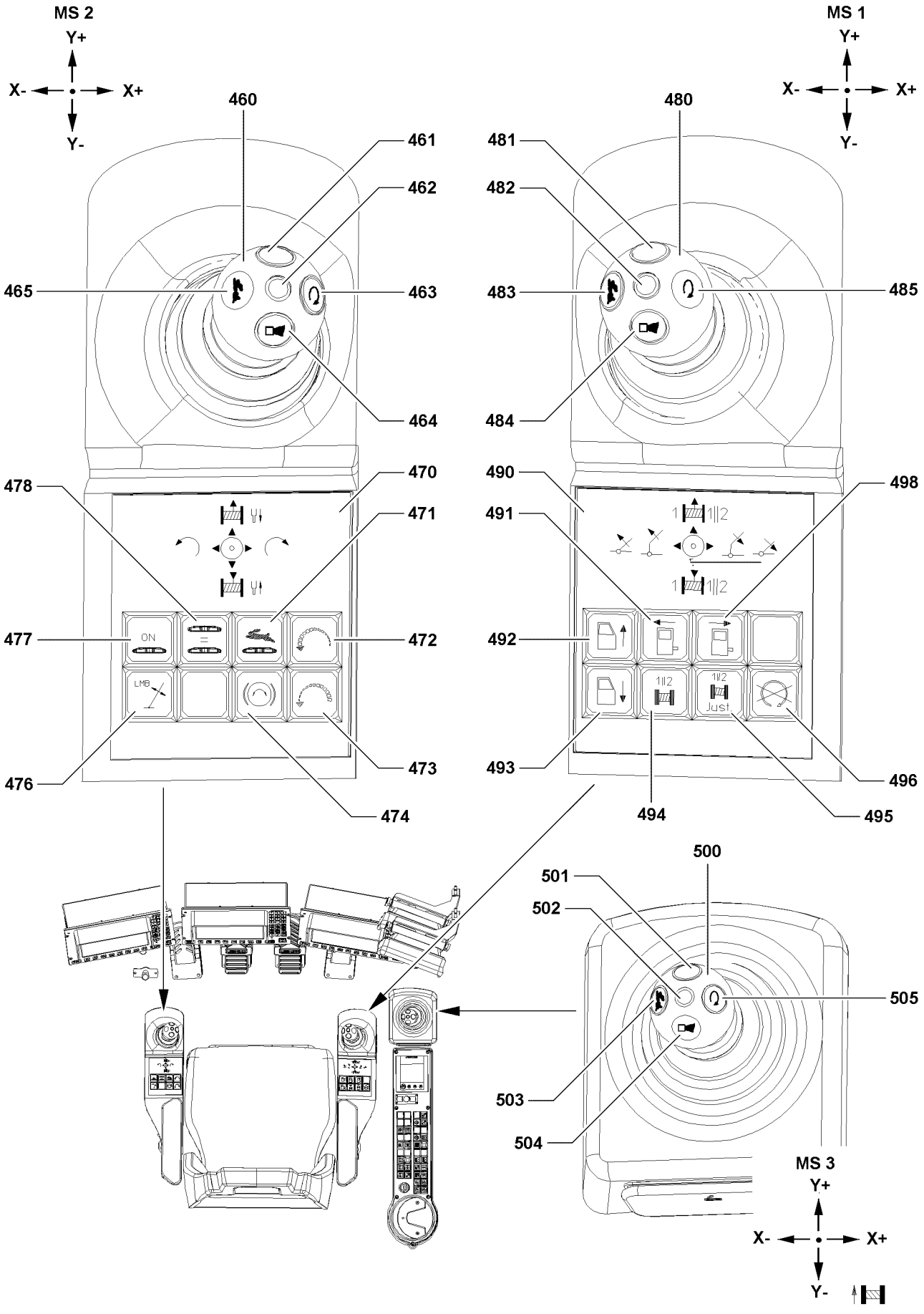

Fig.104894

LWE/LR 1600-2-001/18101-07-02/en

copyright © Liebherr-Werk Ehingen GmbH 2018

3.3 Turning the heater and climate control system on

The crane cab can be heated or ventilated depending on the desired temperature, see Crane operating instructions, chapter 6.01.

3.4 Tilting the crane cab

To give the crane driver a better field of view, the cab can be tilted upward.

Note
▶ After ending crane operation: Move the cab to the horizontal position

3.4.1 Tilting the cab upward

▶ Press the button **492**.

Result:

– The cab swings upward.

3.4.2 Moving the cab to the horizontal position

▶ Press the button **493**.

Result:

– The cab swings downward.

LWE/LR 1600-2-001/18101-07-02/en

copyright © Liebherr-Werk Ehingen GmbH 2018

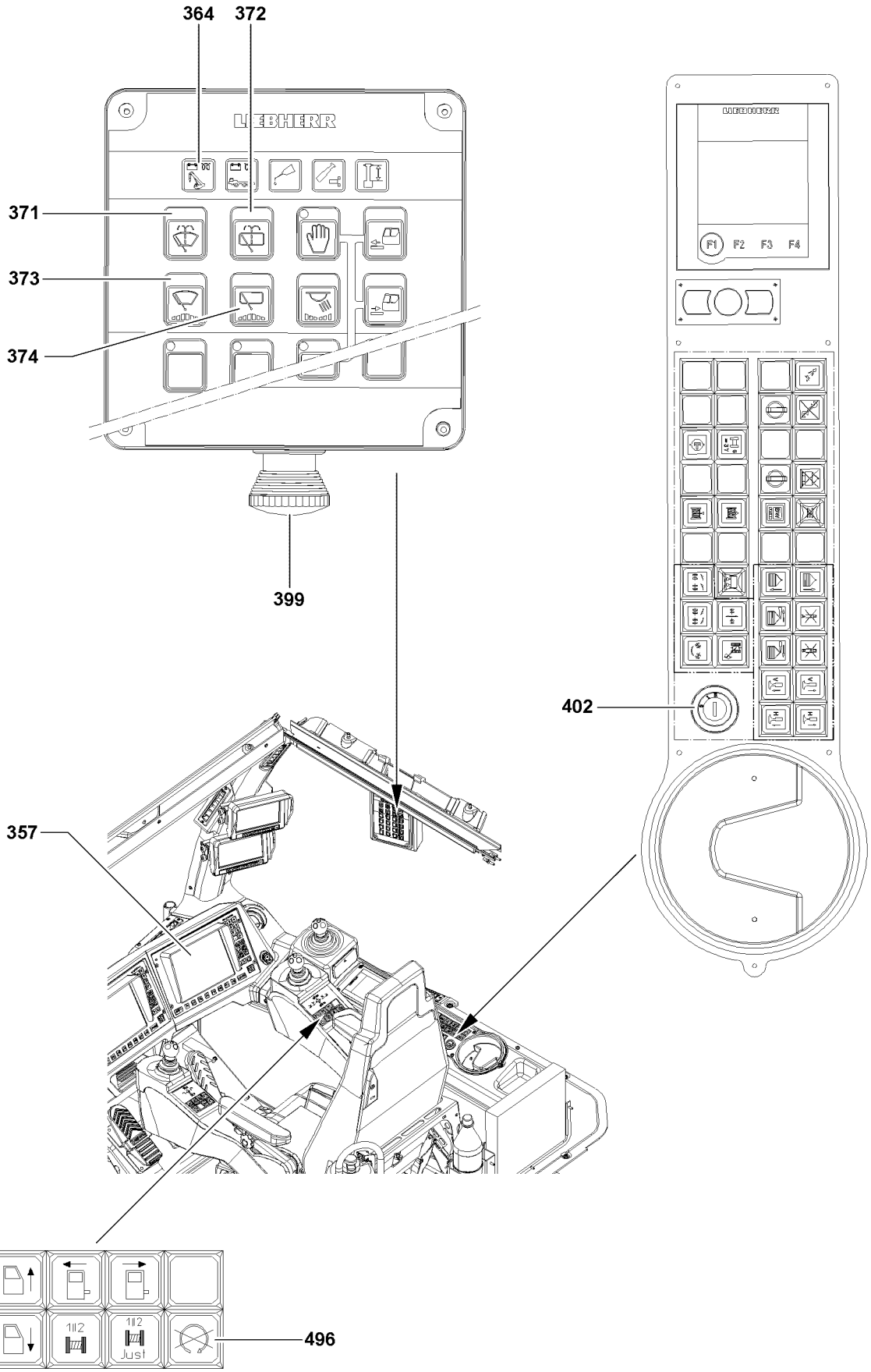

Fig.104898

LWE/LR 1600-2-001/18101-07-02/en

copyright © Liebherr-Werk Ehingen GmbH 2018

3.5 Operating the window wiper / window washer system

3.5.1 Operating the window wipers

The windshield wipers on the front and roof window can be operated via the function buttons on the operating and control unit. Each window has a button assigned to it.

Turning the window wiper on

There are four different wipe stages.

Pressing the button **373** or the button **374** (less than 0.5 s) reduces the wiper speed incrementally:
1. Continuous operation
2. Intermittent 2
3. Intermittent 1
4. Wiper off

A beep sounds in wipe stage „Wiper off“.

To activate the window wiper on the front window:
▶ Press the button **373** until the desired wipe stage is reached.
or

To activate the window wiper on the roof window:
Press the button **374** until the desired wipe stage is reached.

Turn the window wiper off

In continuous operation:
▶ Press the button **373** or the button **374** for at least one second.
or
Press the button **373** or the button **374** (less than 0.5 s) until a „beep“ sounds.
or
Turn the ignition switch **402** off.

3.5.2 Operating the window washer system

The windshield washer system on the front and roof window can be operated via the function buttons on the operating and control unit. Each window has a button assigned to it.

After releasing the button **371** or the button **372**, three additional wipe movements are carried out before the wiper blades return to their original position.

The wiper motor and the water pump run as long as the button **371** or button **372** is pressed down.

To activate the windshield washer system for the front window:
▶ Press the button **371**.
or

To activate the windshield washer system for the roof window:
Press the button **372**.

3.5.3 Filling the windshield washer system

For the location of the reservoir for the window cleaning fluid, see Crane operating instructions, chapter 4.01.

Before the start of the cold season:
▶ Fill the reservoir for the window cleaning fluid with commercially available antifreeze.

LWE/LR 1600-2-001/18101-07-02/en

copyright © Liebherr-Werk Ehingen GmbH 2018

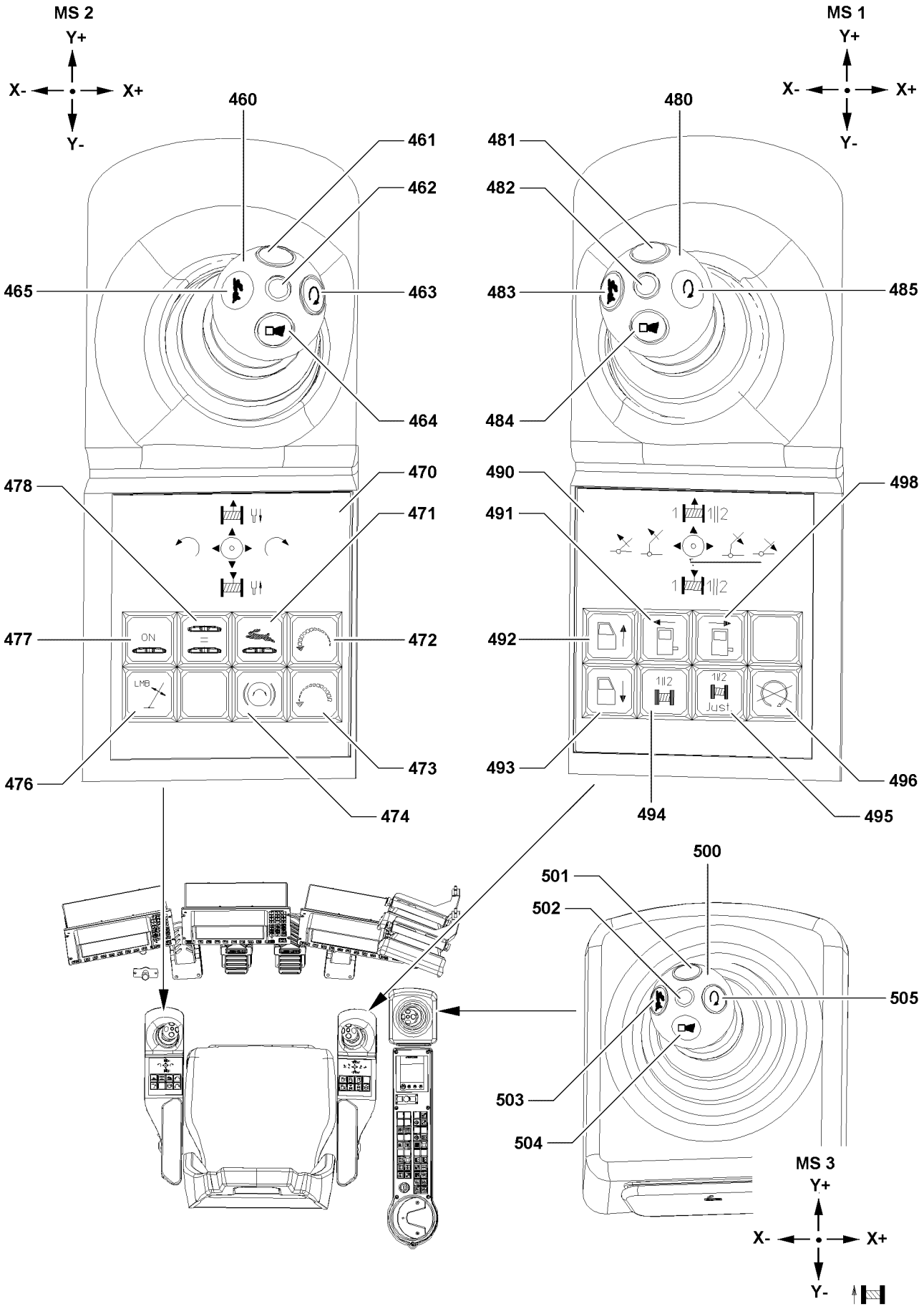

LWE/LR 1600-2-001/18101-07-02/en

Fig.104894

copyright © Liebherr-Werk Ehingen GmbH 2018

3.6 Opening the roof window

CAUTION
Danger of injury if hands get jammed!
▶ Watch your hands when closing the roof window.

A pair of nitrogen gas cylinders support the lifting movement of the roof window.

▶ To open from inside, press on the roof window.
or

If you only want to partly open the window:
Use the attached strap to set the desired opening angle.

3.7 Checking the horn

Note
Use of the horn!
▶ Only use the horn in dangerous situations to maintain its warning effect.

▶ Before starting to work, check that the horn is functioning: Press button **464**, button **484** and button **504**.

LWE/LR 1600-2-001/18101-07-02/en

copyright © Liebherr-Werk Ehingen GmbH 2018

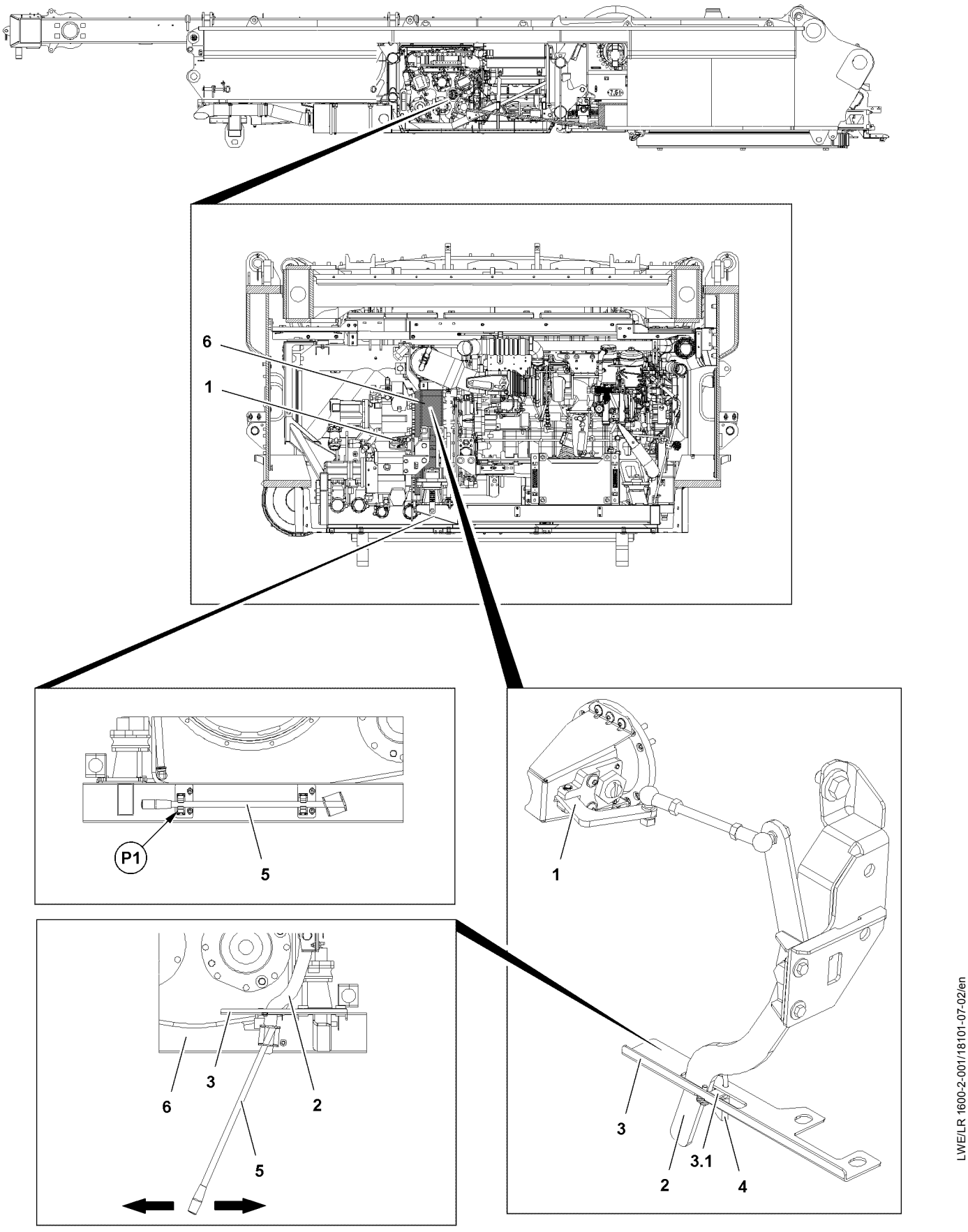

Fig.117893

LWE/LR 1600-2-001/18101-07-02/en

copyright © Liebherr-Werk Ehingen GmbH 2018

4 Starting and stopping the engine

Note
▶ The engine must be operated according to the separately supplied Engine Operating instructions.

4.1 Disengage / engage the coupling control on the pump distributor gear

Note
▶ In high altitude application and at low ambient temperatures it may be necessary to disengage the coupling control **1** of the pump distributor gear **6** before starting the engine.
▶ The cold start behavior of the engine is thereby improved.

NOTICE
Danger of damaging the engine!
When the coupling control **1** is disengaged and the engine temperature is not constantly monitored, the engine can overheat.
This could result in high property damage.
▶ Monitor the engine temperature constantly while the engine is running.
▶ Make sure that the engine does not overheat.
▶ If there is any doubt, turn the engine off.

4.1.1 Disengage the coupling control

Make sure that the following prerequisite is met:
– The engine is turned off.

▶ Remove the padlock **4**.
▶ Remove the lever extension **5** from park position at point **P1**.
▶ Set the lever extension **5** on the linkage **2**.
▶ Actuate the linkage **2** with the lever extension **5** to the stop.

Result:

– The coupling control **1** is disengaged.
– The pumps on the pump distributor gear **6** are **not** driven at engine start.

▶ Remove the lever extension **5** and store it in the park position **P1**.

WARNING
Danger of accident due to rotating parts!
▶ Make sure that there are no persons within the danger zone of the engine.

▶ Start the engine, see section „Starting the engine“.
▶ Let the engine warm up.

LWE/LR 1600-2-001/18101-07-02/en

copyright © Liebherr-Werk Ehingen GmbH 2018

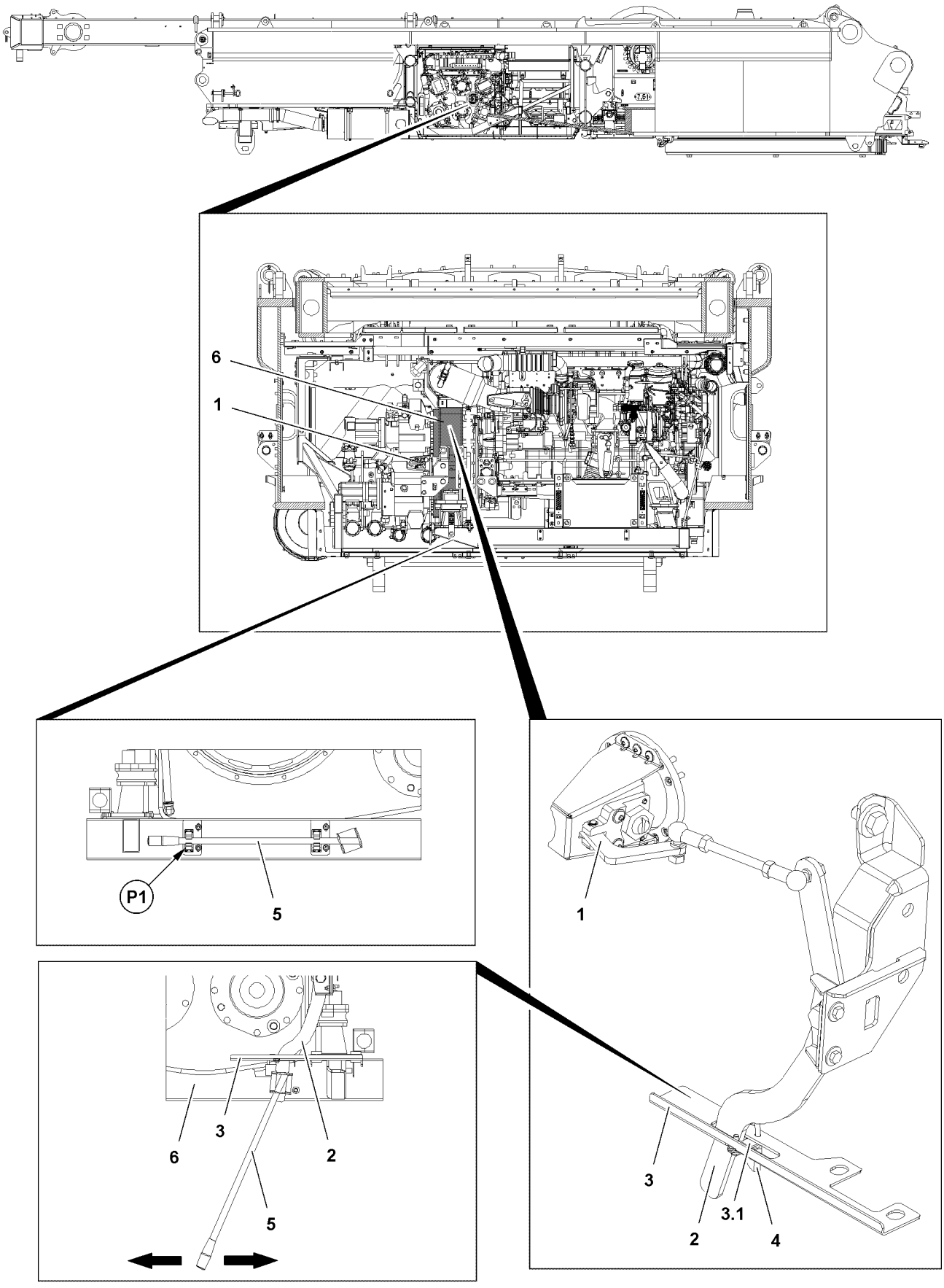

Fig.117893

LWE/LR 1600-2-001/18101-07-02/en

copyright © Liebherr-Werk Ehingen GmbH 2018

4.1.2 Engaging the coupling control

NOTICE
Property damage on the pump distributor gear!
▶ Make sure that the coupling control is engaged when the engine is at a standstill.

When the engine has reached operating temperature:
▶ Turn the engine off.

When the engine has come to a complete standstill:
▶ Engage the coupling control **1** with the lever extension **5**.

Problem remedy
The coupling control **1** cannot be engaged on the pump distributor gear **6**?
▶ Start the engine for a short time and turn it off again until the coupling control **1** can be engaged.

When the coupling control **1** is completely engaged:
▶ Close the securing bracket **3.1** and secure the linkage with a padlock **4** to prevent unauthorized access.
▶ Remove the lever extension **5** and store it in the park position **P1**.

Result:

– At engine start, the hydraulic pumps on the pump distributor gear **6** are driven.

LWE/LR 1600-2-001/18101-07-02/en

copyright © Liebherr-Werk Ehingen GmbH 2018

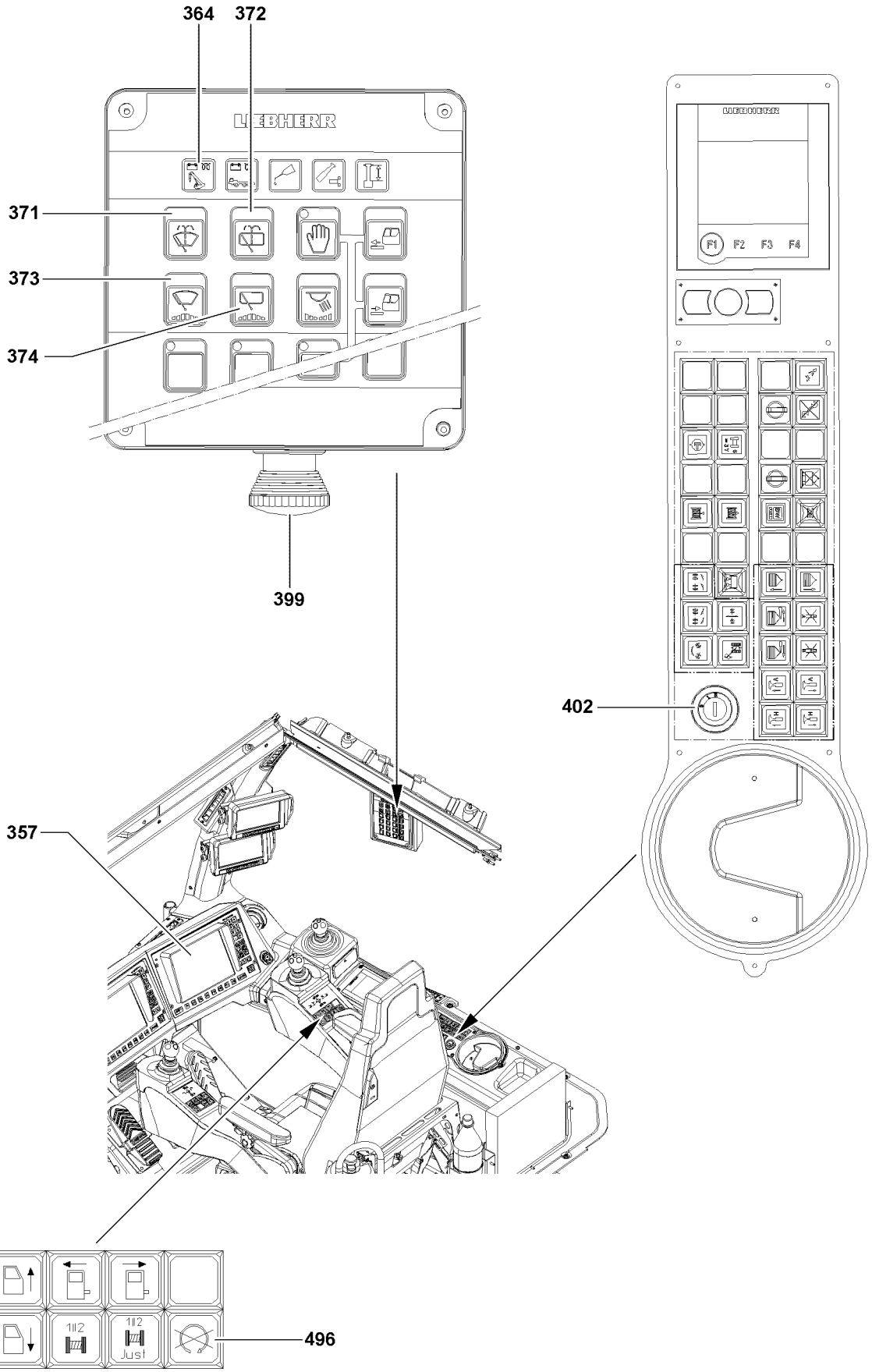

Fig.104898

LWE/LR 1600-2-001/18101-07-02/en

copyright © Liebherr-Werk Ehingen GmbH 2018

4.2 Starting the engine

▶ Turn the ignition switch **402** to position „I“.

Result:

– The indicator light **364** lights up yellow.
– The engine preheating is active.

NOTICE
Property damage due to insufficient engine preheating!
If the engine is not preheated sufficiently, the engine will not start or the engine has a false start.
▶ Start the engine only if the indicator light **364** blinks yellow (1 Hz).

Note
Engine preheated too long!
The indicator light **364** turns off automatically after a certain time.
▶ Turn the ignition switch **402** to position „0“ and wait a little.
▶ Start again.

When the indicator light **364** blinks yellow (1 Hz), the engine is ready to start:
▶ Turn the ignition switch **402** to position „II“.

Result:

– The engine starts.
– The indicator light **364** turns off.

Problem remedy
Indicator light **364** blinks yellow (2 Hz)?
The engine is not preheated sufficiently or there is a problem in the cold start system.
▶ Turn the ignition switch **402** off, wait a little and retry.
▶ or: Check the error message on the LICCON monitor 0 **357**. If possible, remedy the error.
▶ or: Contact the next Liebherr Service location or Liebherr-Werk Ehingen.

Problem remedy
The indicator light **364** lights up red?
The engine is running, the alternator does not charge.
▶ Check the V-belt.
▶ or: Check the error message on the LICCON monitor 0 **357**. If possible, remedy the error.
▶ or: Contact the next Liebherr Service location or Liebherr-Werk Ehingen.

LWE/LR 1600-2-001/18101-07-02/en

copyright © Liebherr-Werk Ehingen GmbH 2018

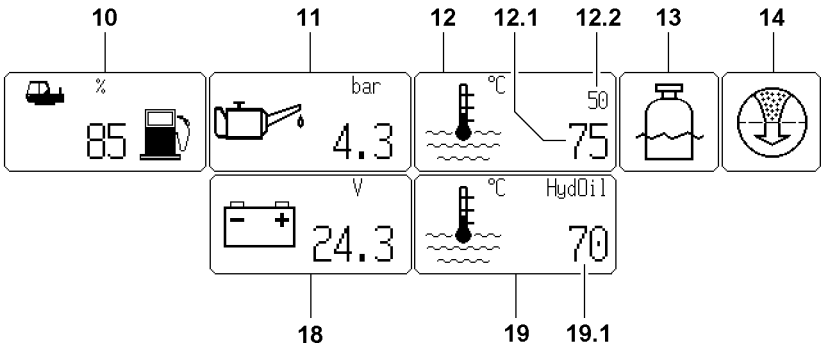

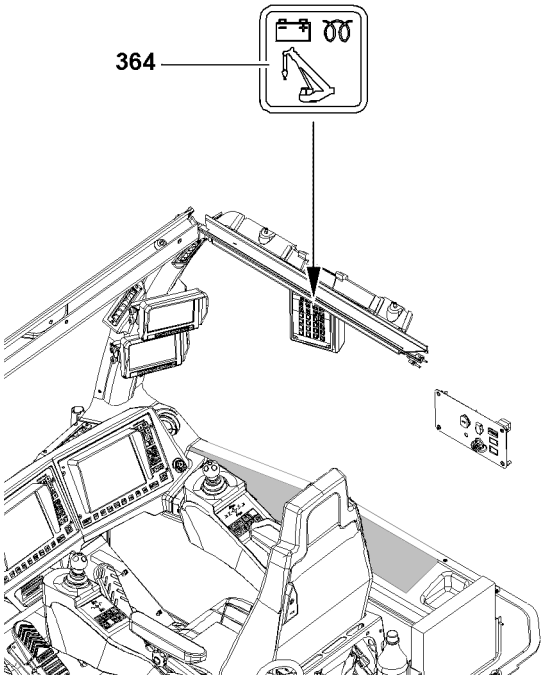

LWE/LR 1600-2-001/18101-07-02/en

Fig.104899

copyright © Liebherr-Werk Ehingen GmbH 2018

4.3 After engine start: Checking the instruments on the LICCON monitor

As soon as a stable voltage is present with the engine running, the electric crane control and the LICCON computer system are turned on automatically. A self-test of the microprocessor system follows and after a few seconds the set up configuration screen appears on the monitor.

The following icons must turn off when the engine is running:

- ▶ Check the indicator light **364**.
- ▶ Check the icon **11** „Engine oil pressure“ on the LICCON monitor.

Problem remedy
Does the numerical display for the engine oil pressure in the icon **11** blink after approximately 10 seconds or does it start to blink during crane operation?
The engine oil pressure is too low. The engine can be damaged as a result of insufficient oil pressure.
- ▶ Turn the engine off immediately and determine the cause.

- ▶ Check the numerical display for the coolant temperature in the icon **12.1**.

Problem remedy
Does the numerical display for the „coolant temperature“ in the icon **12.1** blink during operation?
The coolant temperature is too high. Excessive coolant temperature can lead to engine damage.
- ▶ Turn the engine off immediately.

- ▶ Check the icon **10** for „fuel content“.
- ▶ Check the icon **19** for „hydraulic oil temperature“.
- ▶ Check the icon **12.2** for „charge air temperature“.
- ▶ Check the icon **13** for „coolant level“.
- ▶ Check the icon **14** for „air filter“.
- ▶ Check the icon **18** for „battery voltage“.

4.4 Engine monitoring

For a detailed description of engine monitoring, see Crane operating instructions, chapter 4.02.

LWE/LR 1600-2-001/18101-07-02/en

copyright © Liebherr-Werk Ehingen GmbH 2018

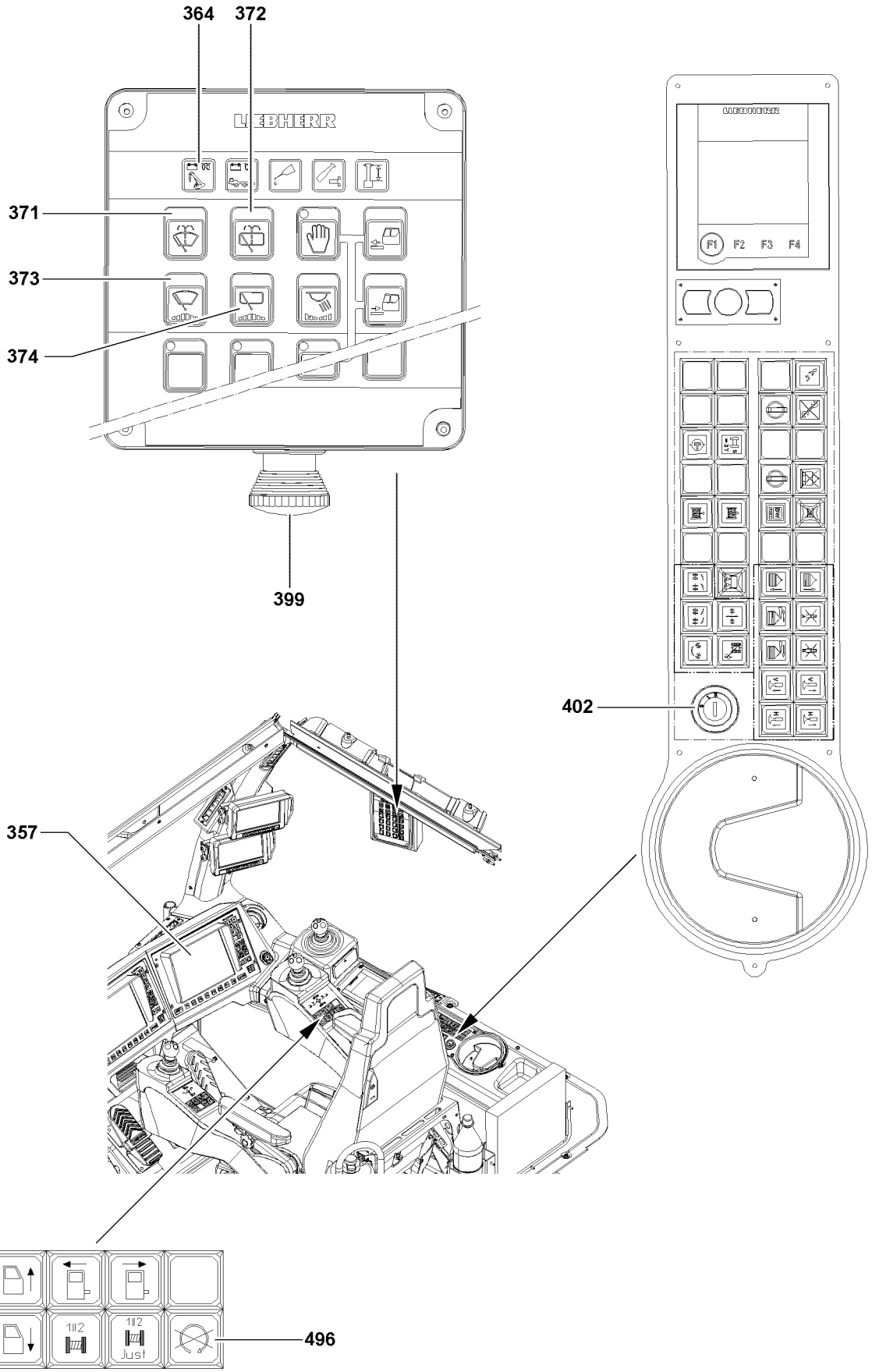

Fig.104898

LWE/LR 1600-2-001/18101-07-02/en

copyright © Liebherr-Werk Ehingen GmbH 2018

4.5 Turning the engine off

4.5.1 Turning the engine off in the event of danger

WARNING
Danger of accident due to falling loads!
If crane movements are stopped via EMERGENCY OFF, loads can start to swing and fall down. Personnel can be severely injured or killed.
▶ Operational use of the EMERGENCY OFF switch **399** is prohibited!
▶ Only use the EMERGENCY OFF switch **399** in clear emergency situations!

▶ Press the EMERGENCY OFF switch **399**.

Result:

– The engine will be turned off immediately.

4.5.2 Turning the engine off

Turning the engine off with the ignition key

After operation with full engine load, let the engine run without a load for 3-5 minutes at idling speed.

▶ Turn the ignition switch **402** back to the stop to zero.

Result:

– The engine is turned off.

▶ Pull the ignition key and store it in a safe place.

Turning the engine off with the engine stop button

If the engine is turned off with the engine stop button, the LICCON computer system switches to „Stand-by“ mode.

For detailed description of „Stand-by“ mode of the LICCON computer system, see Crane operating instructions, chapter 4.02.

▶ Press the button **496**.

Result:

– The engine is turned off.
– The LICCON computer system is in „Stand-by“ mode.

LWE/LR 1600-2-001/18101-07-02/en

copyright © Liebherr-Werk Ehingen GmbH 2018

LWE/LR 1600-2-001/18101-07-02/en

Fig.195219

copyright © Liebherr-Werk Ehingen GmbH 2018

5 LICCON computer system after engine start

5.1 Waiting for the boot up phase

After being turned on, the LICCON computer system boots up and carries out a self-test, see Crane operating instructions, chapter 4.02.

▶ Wait for the boot up phase.

Result:

– The operating mode preselection appears.
– After 3 s: The set up screen appears on the LICCON monitor.

– Normally, the most recently set equipment set up configuration and reeving number will be displayed.

If a master switch is moved away from the zero position during the boot up phase, then the function circuit of the electrical safety chain is interrupted.

In this case:
▶ Turn the engine and ignition off and then restart, so that the crane control can carry out a valid test of the electrical safety chain.

Problem remedy
An error message appears on the LICCON monitor?
▶ Turn the engine and ignition off and start again.
▶ The LICCON computer system automatically displays the error determination screen.

Problem remedy
The LICCON monitor does **not** show the most recently set up configuration state and reeving number?
If there has been a data loss in the memory (cold start), then the first valid set up configuration appears in the set up screen. The reeving number is set to „0“.
▶ Set the set up configuration and reeving number again.

5.2 Taking over the previously selected set up configuration and hoist rope reeving

Check in the set up screen if the correct short code and the correct reeving number have been set, see Crane operating instructions, chapter 4.02.

If the settings on the set up screen are correct:
▶ Press the function key **F8**.

Result:

– The „Set up“ program is terminated and the adjusted parameters are accepted for the newly started „Operation“ program.

LWE/LR 1600-2-001/18101-07-02/en

copyright © Liebherr-Werk Ehingen GmbH 2018

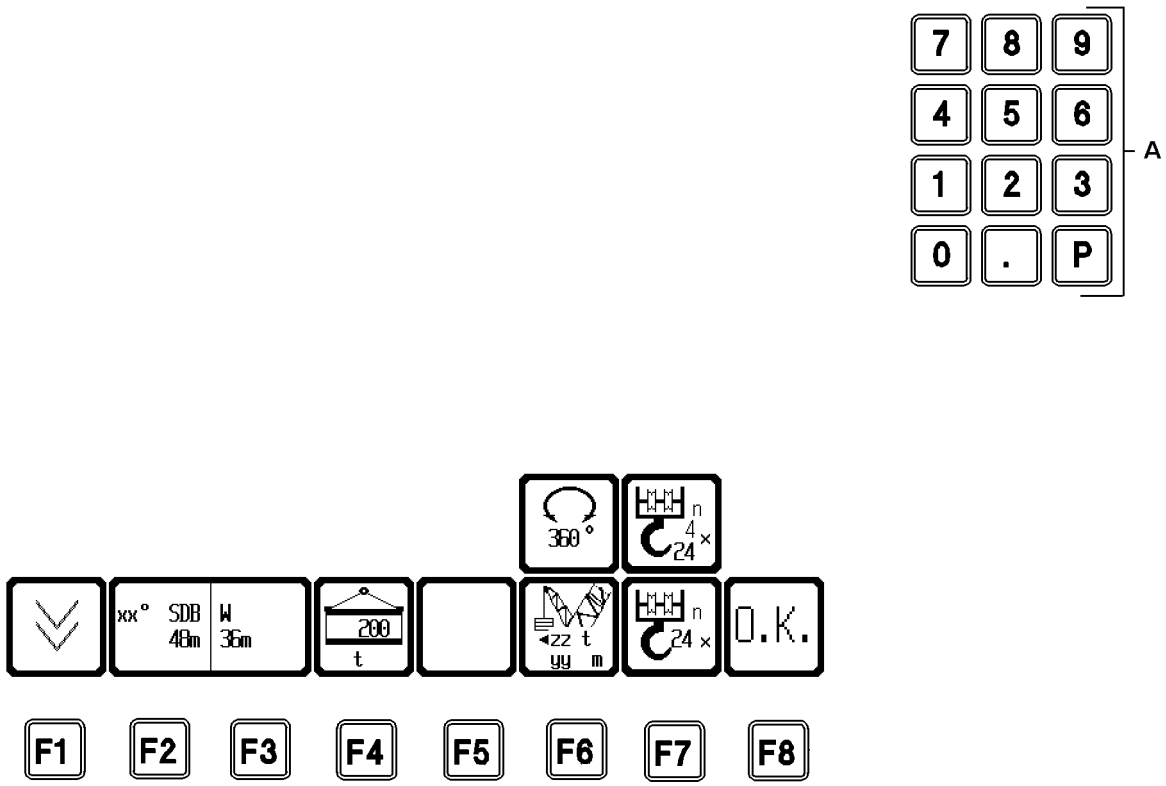

Fig.104900

LWE/LR 1600-2-001/18101-07-02/en

copyright © Liebherr-Werk Ehingen GmbH 2018

5.3 Changing the set up configuration and hoist rope reeving

The selected and displayed set up configuration can be changed with the function keys or by entering the short code.

5.3.1 Setting the set up configuration with the function keys

- ▶ Press the function key **F2** until the desired main geometry status is selected.
- ▶ Press the function key **F3** until the desired accessory status is selected.
- ▶ Press the function key **F4** until the desired counterweight is selected.
- ▶ Press the function key **F5** until the desired central ballast is selected.
- ▶ For crane operation **without** derrick ballast: Press the function key **F6** until the desired turning range is selected.
- ▶ For crane operation **with** derrick ballast: Press the function key **F6** until the desired derrick ballast radius or the derrick ballast weight is selected.
- ▶ Press the **ENTER** key.
- ▶ Check the set load chart.

5.3.2 Selecting the set up configuration with short code

The short code is taken from the load chart manual or from the job planner.

- ▶ Entering the 4-digit short code with the keypad **A**.
- ▶ Confirm with the **ENTER** key.

Result:

– The data of the selected load chart can be viewed.

For a more detailed description of the „Set up“ program, see Crane operating instructions, chapter 4.02.

- ▶ Check the set load chart.

5.3.3 Setting the hoist rope reeving

- ▶ Press the function key **F7** until the desired reeving number is selected.
  or
  Press the function key **SHIFT** and the function key **F7** until the desired reeving numbers are selected.

5.3.4 Checking and accepting the changed set up configuration and hoist rope reeving

If the settings on the set up screen are correct:

- ▶ Press the function key **F8**.

Result:

– The „Set up“ program is terminated and the adjusted parameters are accepted for the newly started „Operation“ program.

- ▶ Check in the operating screen if the correct short code and the correct reeving number have been set, see Crane operating instructions, chapter 4.02.

LWE/LR 1600-2-001/18101-07-02/en

copyright © Liebherr-Werk Ehingen GmbH 2018

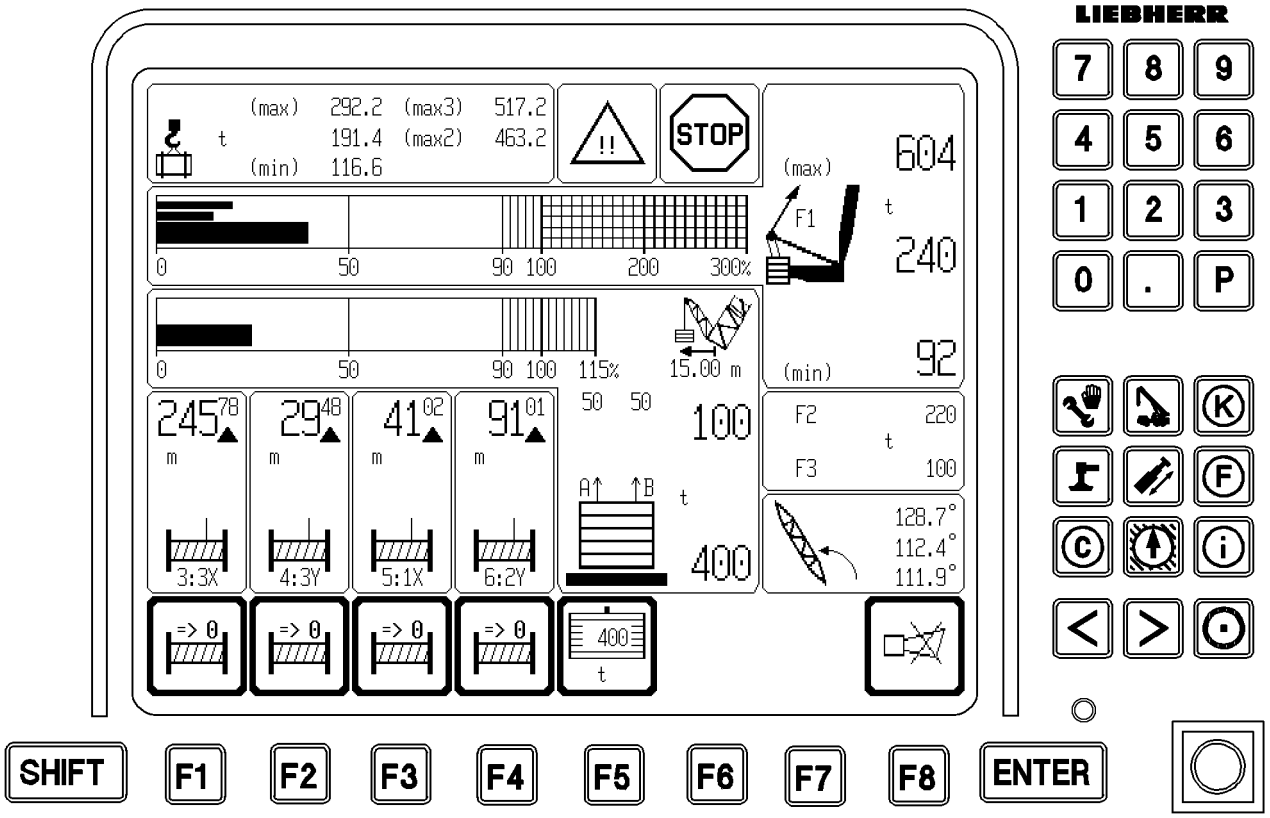

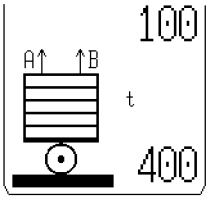

LWE/LR 1600-2-001/18101-07-02/en

Fig.104480

copyright © Liebherr-Werk Ehingen GmbH 2018

5.4 Adjusting the control parameters

Note

▶ For detailed description to adjust the control parameters, see Crane operating instructions, chapter 4.02.

5.5 Adjusting the derrick ballast

For detailed description to adjust the derrick ballast, see Crane operating instructions, chapter 4.02.

The weight of the derrick ballast consists of:
- The weight of the empty ballast pallet or the empty ballast trailer
- The weight of the placed derrick ballast plates

WARNING

Danger of accident due to toppling crane!
If an incorrect derrick ballast value is entered, the safety shut offs from test point 1 ($F1_{min}$) become ineffective. The crane can topple over and personnel can be severely injured or killed.

▶ If a derrick ballast value is set, which is too low, then the displayed derrick ballast utilization is too large.

▶ If a derrick ballast value is set, which is too large, then the displayed derrick ballast utilization is too small.

▶ Make sure that the set derrick ballast value matches the actually installed derrick ballast weight.

Note

During ballast editing, the remaining monitor displays cannot be updated.
The operating screen on the monitor is frozen and can even show incorrect values.

▶ Quickly complete the adjustment of the ballast.

If a master switch is actuated during the adjustment of the ballast, the adjustment procedure is automatically aborted. The old value of the placed ballast (BA_{placed}) remains in the ballast icon.

▶ LICCON monitor 1: Enter the derrick ballast with key **F5**.

LWE/LR 1600-2-001/18101-07-02/en

copyright © Liebherr-Werk Ehingen GmbH 2018

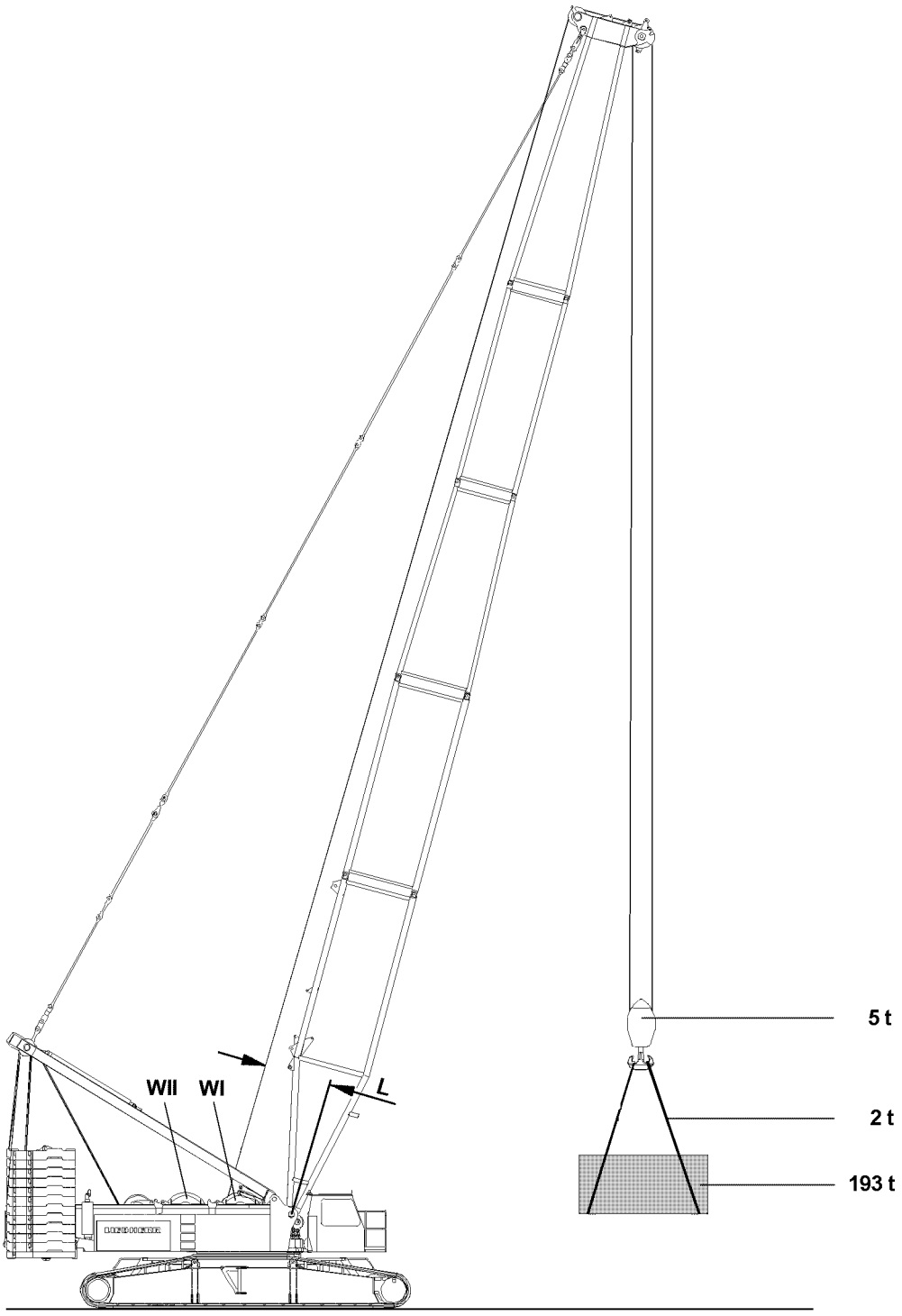

LWE/LR 1600-2-001/18101-07-02/en

Fig.103667

copyright © Liebherr-Werk Ehingen GmbH 2018

6 Load weighing and load display

In the loads stated in the load chart, the weight of the lifting equipment (hoist rope at nominal reeving) has been taken into account.

Note

▶ The weight of the hook block and the weights of the fastening equipment must be subtracted from the load given in the load chart.

Example:		
Maximum permissible load according to chart		200 t
Weight of the hook block	5t	- 5 t
Weight of the fastening rope	2t	- 2 t
Actual load capacity of the crane		= 193 t

In this case, the load to be lifted may not exceed **193 t**.

Note

▶ In the LMB calculation, the lever arm to the winch **2** is not used, but always the lever arm **L** to the winch **1**.

▶ For that reason, to ensure an exact load weighing to lift the load on the main boom and on the fixed accessories (for example the fixed jib), winch 1 must be used.

DANGER

Danger of accidents due to overload!

In case of inaccurate load weighing or load display, a danger exists due to unrecognized overload of the crane!

▶ The crane operator must know the weight, the center of gravity and the dimensions of the load to be lifted before operating the crane.

▶ The crane driver must check, before lifting the load, if he may even lift the load according to the data in the load chart.

LWE/LR 1600-2-001/18101-07-02/en

copyright © Liebherr-Werk Ehingen GmbH 2018

LWE/LR 1600-2-001/18101-07-02/en

Fig.195219

copyright © Liebherr-Werk Ehingen GmbH 2018

6.1 Load weighing

Make sure that the following prerequisites are met:
- The angle sensors are functioning.
- The incline sensors are functioning.
- The turn sensor in the turntable is functioning.
- The pressure sensors are functioning.
- The pull sensors are functioning.

The boom position where the relapse cylinders are actuated must be recognized by the LICCON precisely via the sensors, because otherwise the relapse cylinders have a strong effect on the load - weighing error.

Note
- ▶ If only one of these sensors is not functioning, a LEC error display is issued, then the load display and the load weighing are not exact.
- ▶ The calculation is made anyway, but the result is not exact.

6.1.1 Possible weighing errors

For an exact load weighing, exact signals of the pull test bracket, angle sensor, incline sensors and pressure sensors are required.

Since all sensor values are always within a certain tolerance, a weighing error can occur.

The weighing error is increasingly larger if:
- The hoist winch sits in the turntable instead of in the main boom.
- The reeving is small.
- The hoist winch sits far to the rear in the turntable.
- Several hoist winches are used (parallel operation).
- The boom, on which the load is suspended, is short.
- The boom, on which the load is suspended, is standing steeply.

DANGER
Danger of accidents due to overload!
Overload due to weighing error!
- ▶ When the prerequisites for small weighing errors not given, special caution must be exercised.

6.1.2 Adjustment of reeving

The number of reevings must be correctly set on the LICCON. The reeving should not be higher than the nominal reeving, otherwise the hoist ropes reeved above the nominal reeving count as part of the load.

Note
- ▶ The nominal reeving determines for which maximum reeving the load chart values of a load chart are valid.
- ▶ If the crane is in a position outside of the load chart, the hoist rope is added to the load, because no nominal reeving is recognized outside the load chart.

copyright © Liebherr-Werk Ehingen GmbH 2018

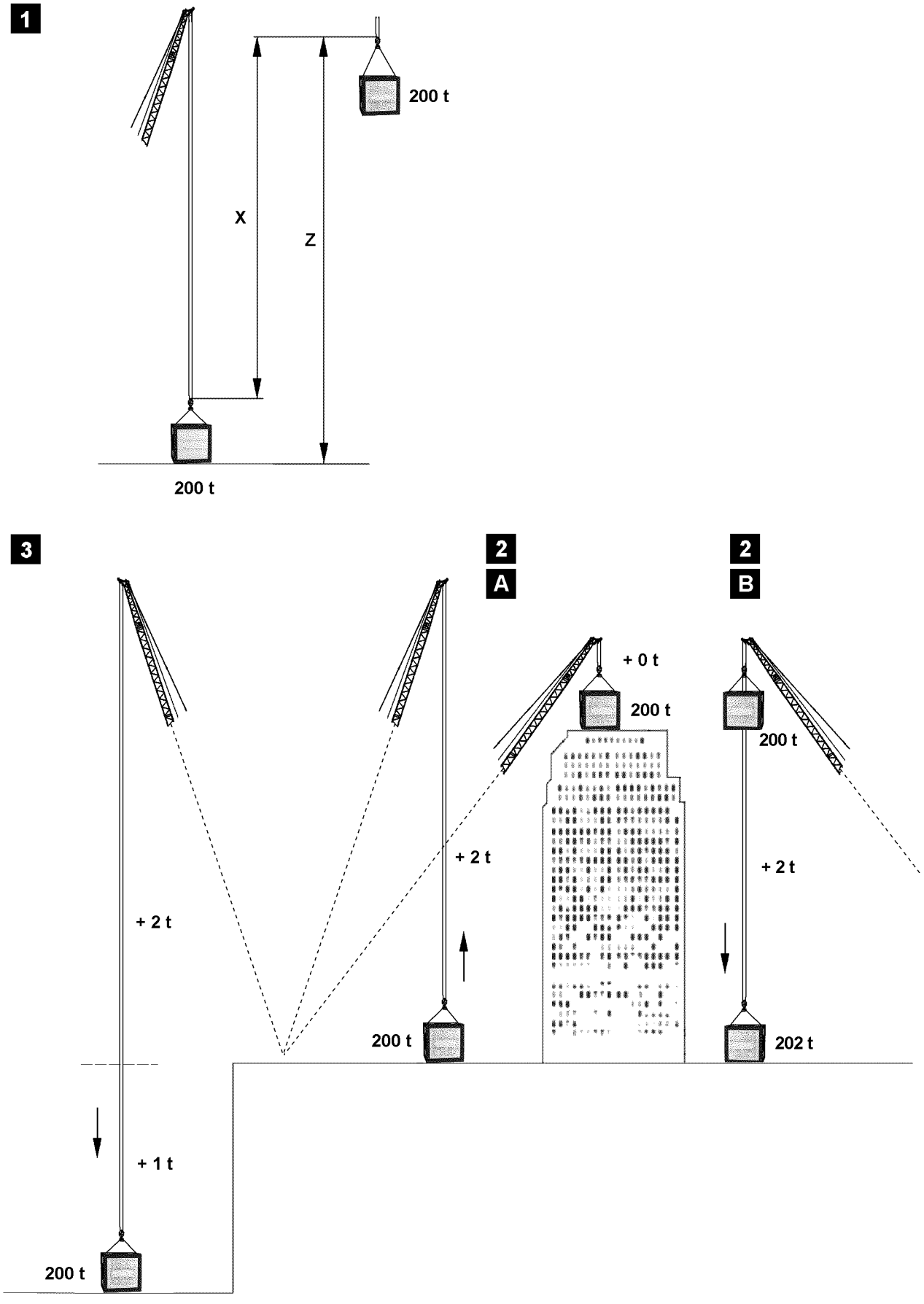

Fig.103643

LWE/LR 1600-2-001/18101-07-02/en

copyright © Liebherr-Werk Ehingen GmbH 2018

6.2 Load display

6.2.1 Lifting, illustration 1

For the calculation of the displayed actual load, the weight of the hoist rope to the ground is deducted from the total load **Z**, which hangs on the pulley head **X**, see illustration **1**.

In that case, the number of the reevings set on the LICCON are taken into account, but no more than the nominal reeving.

Note

▶ If the load is raised far above the ground, see illustration **1**, then the load display is too small by the weight of the hoist rope from the load to the ground.

6.2.2 Lifting above ground level, illustration 2A

When the load is raised above the crane level (high rise), then the hoist rope to the ground is always deducted anyway for the display, therefore the load seems increasing lighter when lifting than it did on the ground.

Therefore a somewhat larger load can be lifted in large heights than on the ground, without triggering the LMB overload shut off at 100 %.

This poses no danger because the load stress for the crane is the same if, for example 200 t if load on the bottom and 2 t rope or 202 t load on top and 0 t rope hang on the pulley head.

6.2.3 Load take up on high rise, illustration 2B

When a load is taken up on the high rise on top (=100 %), for example 200 t, and then lowered to the ground, the weight of the hoist rope below the high rise level is calculated as load and displayed.

6.2.4 Lifting below ground, illustration 3

When a load is lowered below the crane level (excavation), then the hoist rope below the crane level is calculated as load and displayed.

DANGER

Danger of accidents due to overload!

It must be noted that the load display in illustration 2B and illustration 3 is correct, the overload of the crane is also shown in the utilization bar, but no shut off of the lowering movement occurs.

▶ At LMB overload, all crane movements are shut off, which would increase the danger of overload, however, lowering the load at 100 % -LMB shut off remains clear because one normally assumes that the overload was caused by lifting the load.

▶ However, the crane can also be overloaded by lowering the load, especially in case of high reevings with high hoist rope weight on the pulley head. The crane driver must know this, so that he can relieve the crane by careful lifting again in this special case, even though the lifting and not the lowering of the load is automatically shut off.

LWE/LR 1600-2-001/18101-07-02/en

copyright © Liebherr-Werk Ehingen GmbH 2018

Empty page!

LWE/LR 1600-2-001/18101-07-02/en

copyright © Liebherr-Werk Ehingen GmbH 2018

4.04 Safety equipment

1	Prerequisites for crane operation	3
2	Overload protection of LICCON computer system	3
3	Wind warning device	7
4	Hoist limit switch „Hoist top“	7
5	Limit switch „Winch spooled out“	9
6	EMERGENCY OFF switch*	11
7	Control release	11
8	Hydraulic safety valves	11
9	Limit switch	13
10	Angle sensors	15
11	Test brackets (KMD = force test box)	15
12	Acoustical / optical warning	17
13	Bypassing the safety devices	21

LWE/LR 1600-2-001/18101-07-02/en

copyright © Liebherr-Werk Ehingen GmbH 2018

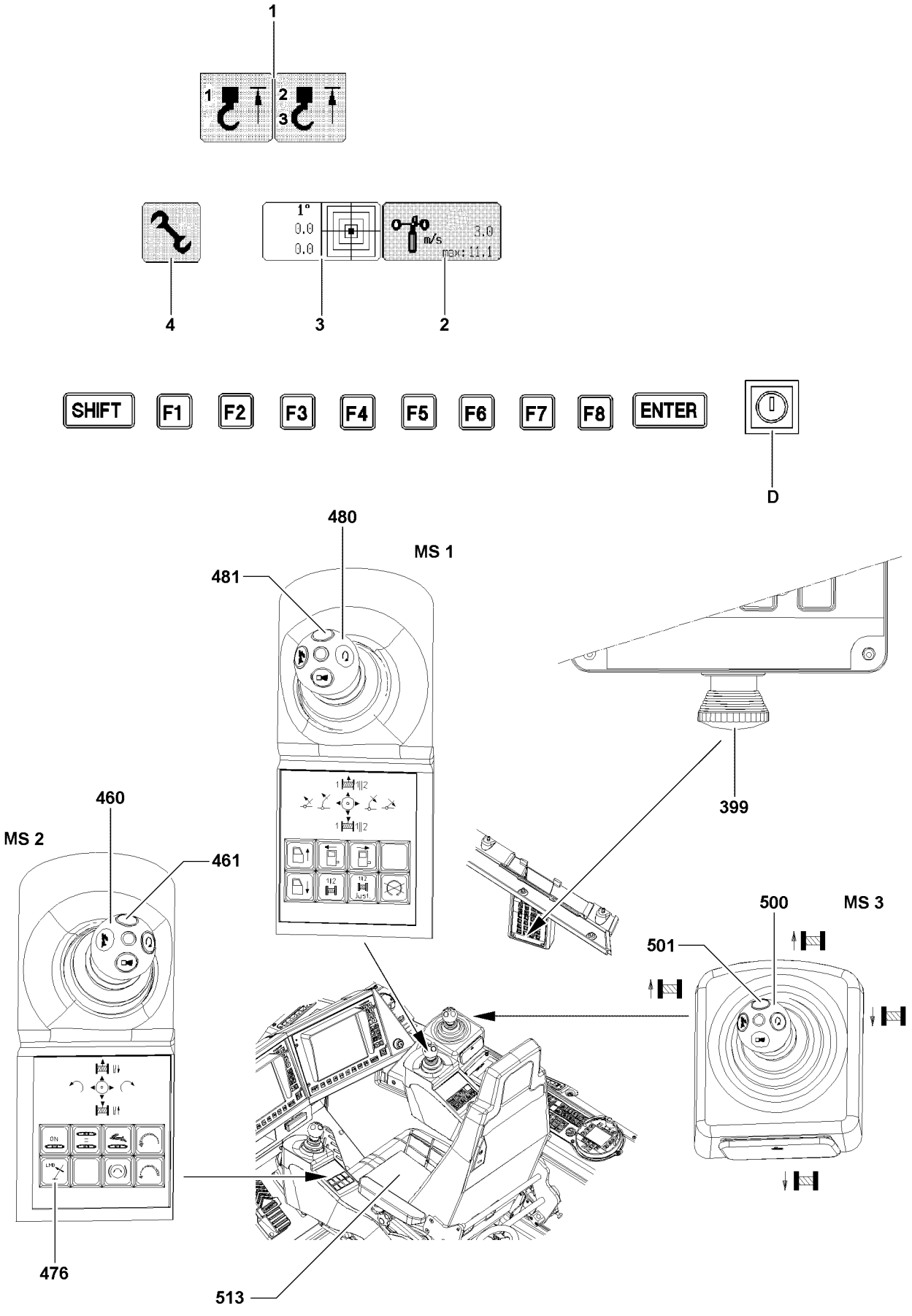

LWE/LR 1600-2-001/18101-07-02/en

Fig.104901

copyright © Liebherr-Werk Ehingen GmbH 2018

1 Prerequisites for crane operation

1.1 Checking the safety devices

The crane operator is obligated before every crane operation to ensure that the safety devices are functioning.

WARNING
Danger of accident due to defective warning and safety systems!
Operating the crane with defective warning and safety systems can lead to life-threatening accidents.
- ▶ Make sure that all warning and safety systems are functioning.
- ▶ Make sure that the overload protection is functioning.

Note
- ▶ The crane operator must know and observe the shut off diagrams in the separately supplied electric wiring diagram.

1.2 Aligning the crane

To ensure the working safety of the crane, the crane must be aligned horizontally on level ground with sufficient load bearing capacity.

WARNING
Risk of accident due to toppling crane!
If the crane is not aligned horizontally, it can tip over. Personnel can be severely injured or killed!
- ▶ Ensure the crane is aligned horizontally.
- ▶ Observe the maximum permissible deviation from the horizontal position of the crane, see load charts.

The horizontal alignment of the crane is displayed in the LICCON computer system, both graphically as well as numerically, see icon **3**.

2 Overload protection of LICCON computer system

The LICCON computer system is a system for control and monitoring of cranes. In addition to the overload protection (Load moment limiter **LMB**) there are a number of application programs that can be used for controlling and monitoring the crane movements, see chapter 4.02.

The relevant sensors for the overload protection are:
- Pull test brackets
- Angle sensors
- Pressure sensors
- Length sensors

The electronic overload protection **turns** all **load moment increasing** crane movements **off** if the permissible load moment is being exceeded. Only load moment decreasing movements can then be carried out.

WARNING
Risk of accident!
The presence of the overload protection does not relieve the crane operator of his obligation for care and attention.
- ▶ Before lifting a load, determine its weight and radius and decide with the help of the load chart if the crane is able to carry out this task.

LWE/LR 1600-2-001/18101-07-02/en

copyright © Liebherr-Werk Ehingen GmbH 2018

The overload protection cannot cover all possible operational conditions.

WARNING
Danger of accident due to incorrect operation of the crane!
Due to incorrect operation of the crane, the overload protection does not become effective or the shut off does not occur quickly enough. In these cases, accidents are possible despite an installed overload protection system!
▶ Be especially alert!

The overload protection registers, but:
– Does not turn off, for example the wind speed.
– Does not monitor, for example the crane incline.
– Does not monitor, for example the turn angle of the turntable.

The overload protection does **not** register:
– The hooking of the load or the load suspension equipment
– Excessive retarding forces
– Loads falling onto the rope
– Angular pulling
– Driving the crane on ground with large slope
– Collapsing ground

DANGER
Risk of accident due to crane toppling over or destruction of the crane!
▶ The overload protection is a device according to EN 13000. It may not be used as an operational shut off device for crane movements of any kind.
▶ The overload protection must be adjusted to the current equipment configuration of the crane before crane operation to match the load chart. Only that way can it fulfill its protective task.
▶ After every equipment configuration change and / or boom configuration, the overload protection device must be reset to the corresponding equipment configuration and / or boom configuration.
▶ The crane operator must meet his duty of caution and attention, despite the overload protection.

2.1 Failure of the overload protection

It is technically possible to operate the crane without the LICCON.

DANGER
Danger of accident due to crane operation without the LICCON computer system!
▶ If the LICCON system is no longer functioning properly because of a error in the LICCON monitor, the CPU or the power supply, then the crane can be operated in emergency mode with utmost caution, if absolutely necessary.
▶ In this case, the crane driver bears full responsibility.
▶ The crane driver may **not** use emergency mode if he is **not** fully aware of the extent of the monitoring tasks and dangers associated with that mode.

2.2 Procedure to follow in case of a problem

Basically, all conditions in the load charts must be strictly adhered to, even those not monitored by the LMB:
– The exact weight of the load, including load suspension equipment, must be known.
– The current crane geometry, such as main boom angle, derrick angle, luffing jib angle as well as the derrick ballast radius and the pulled derrick ballast weight must be known and match the given values in the corresponding load chart.
– Radius, boom angle and derrick ballast radius must be measured manually.

In the event of a LICCON monitor failure:
Replace LICCON monitor with a functioning substitute monitor.

LWE/LR 1600-2-001/18101-07-02/en

copyright © Liebherr-Werk Ehingen GmbH 2018

In the event of a CPU failure:
Replace CPU with a functioning substitute CPU.

In the event of power supply failure:
Replace the power supply unit with a functioning substitute power supply unit.

If one or more sensors fail, it is possible to continue work manually, if the „Missing values“ are monitored manually and agree with the values in the load chart that is used.

2.3 Ending a load lift

WARNING
Risk of accident due to overloading the crane!
▶ Determine the weight of the load with hook and tackle.

If the problem cannot be remedied using these measures, we recommend:
– Before continuing the load lift, contact the nearest Liebherr Service center or the Liebherr-Werk in Ehingen.

If this is not possible, then the load lift can be completed with utmost caution, as follows:
– All values, which are needed for determining the current set up condition and the associated load chart must be measured and / or manually determined.

LWE/LR 1600-2-001/18101-07-02/en

copyright © Liebherr-Werk Ehingen GmbH 2018

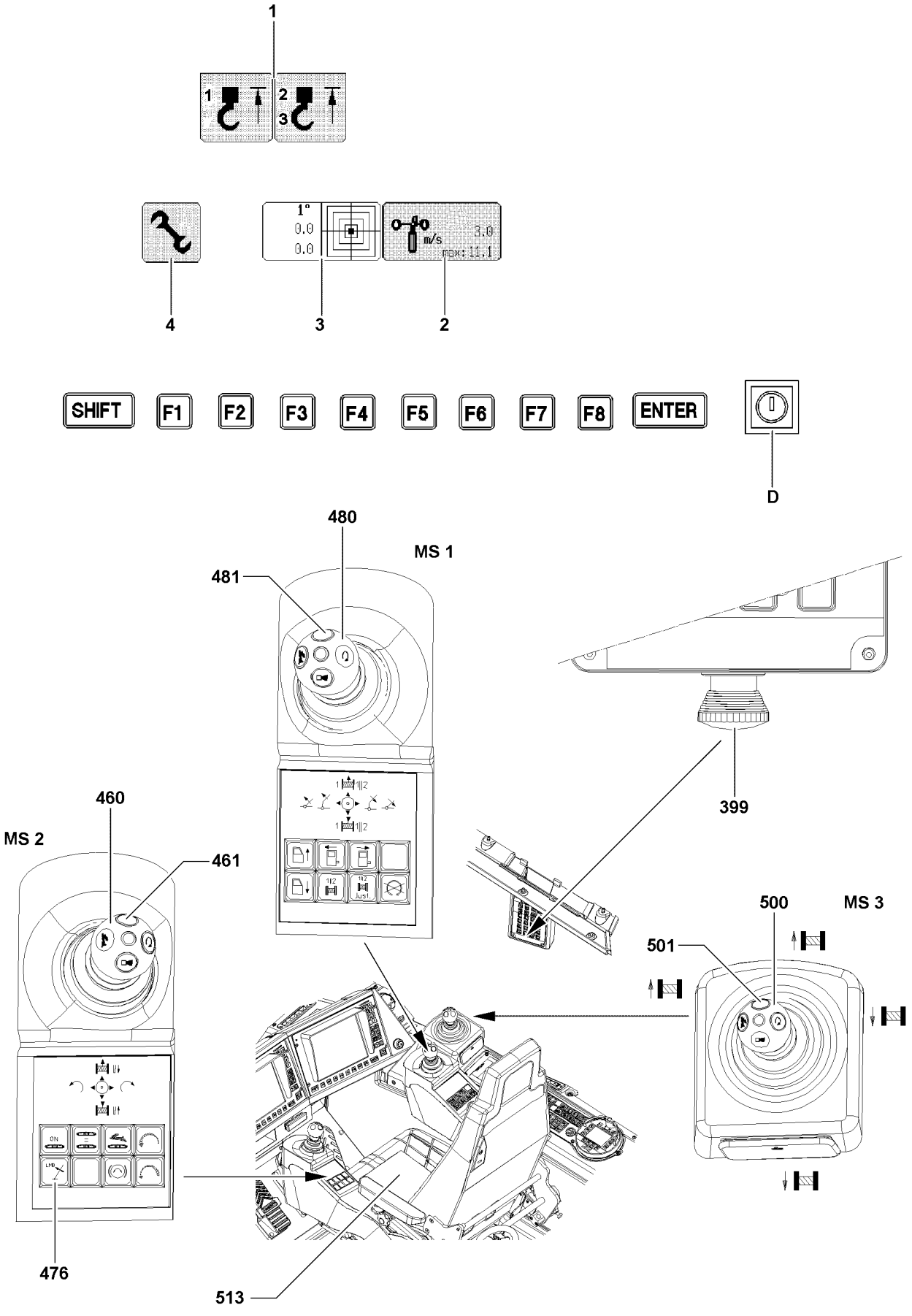

LWE/LR 1600-2-001/18101-07-02/en

Fig.104901

copyright © Liebherr-Werk Ehingen GmbH 2018

3 Wind warning device

The wind warning appears in the operating view of the LICCON computer system.

If the current wind speed exceeds the displayed maximum value, the „Wind warning“ icon **2** starts to blink and the acoustic alarm „Short horn“ sounds. But there is **no shut off** of crane movements.

WARNING
Danger of accidents if the permissible wind speed is exceeded!
There is **no** automatic shut off of crane movements.
▶ Stop crane operation and lower the boom.

4 Hoist limit switch „Hoist top“

The hoist limit switch is intended to prevent the hook block from colliding with the boom head.

Before every crane application, the function of the hoist limit switch must be checked by running against the switch weight with the hook block.

When the hoist limit switch is actuated, the icon **1** appears in the operations screen. The crane movements „Lift and luff down the boom“ are turned off.

WARNING
Risk of accident due to crane toppling over or destruction of the crane!
If the hoist limit switch „Hoist top“ is bypassed, the crane can topple over or be destroyed. Personnel can be severely injured or killed!
▶ Bypass the hoist limit switch during crane operation only with the bypass key button if a guide is present to monitor exactly the distance between the hook block and the boom head. The guide must be in direct contact with the crane operator.
▶ Carry out hoist movement with maximum caution and minimum speed.
▶ In emergency situations, only an authorized person may bypass the hoist limit switch.
▶ Do **not** use the hoist limit switch as an operational shut off function.

LWE/LR 1600-2-001/18101-07-02/en

copyright © Liebherr-Werk Ehingen GmbH 2018

LWE/LR 1600-2-001/18101-07-02/en

Fig.195219

copyright © Liebherr-Werk Ehingen GmbH 2018

5 Limit switch „Winch spooled out“

The winch turn sensor is adjusted in the factory. If used properly, the winch turn sensor will not need readjustment.

Note
Minimum rope coils on the shut off point!
- ▶ For winches 1, 2, 3, 5 and 6, a minimum of 4 rope coils are set on the winch turn sensor.
- ▶ For winch 4, a minimum of 7 rope coils are set on the winch turn sensor.

WARNING
Risk of accident due to falling load!
If the wind speed sensor does not turn off on the minimum rope coil, then the rope mount can be ripped out and the load can fall down. Personnel can be severely injured or killed!
- ▶ Crane operation with an incorrectly or non-adjusted winch is strictly prohibited!
- ▶ Make sure that the winches are correctly adjusted: Check the shut off without a load on the hook.

If it is found during operation or when changing a rope that there is no shut off at the minimum rope coil:
- ▶ Have the winch speed sensor readjusted by **Liebherr Service**.

WARNING
Risk of accident due to falling load!
If the rope is not spooled up or out properly, then the turn sensor can no longer turn off controllably. The load can fall down and personnel can be severely injured or killed.
- ▶ Do **not** pull the end of rope underneath the winch by spooling the rope winch up!
- ▶ Do **not** pull the rope from the „stationary“ winch.

5.1 Checking the shut off of minimum rope coils

Note
If the „spool out“ crane movement does **not** turn off at minimum rope coil: Have the winch speed sensor readjusted by **Liebherr Service**.
- ▶ Slowly spool out winch 1, 2, 3, 4, 5 and 6 and check the shut off point by carefully running to 4 or 7 minimum rope coils.

LWE/LR 1600-2-001/18101-07-02/en

copyright © Liebherr-Werk Ehingen GmbH 2018

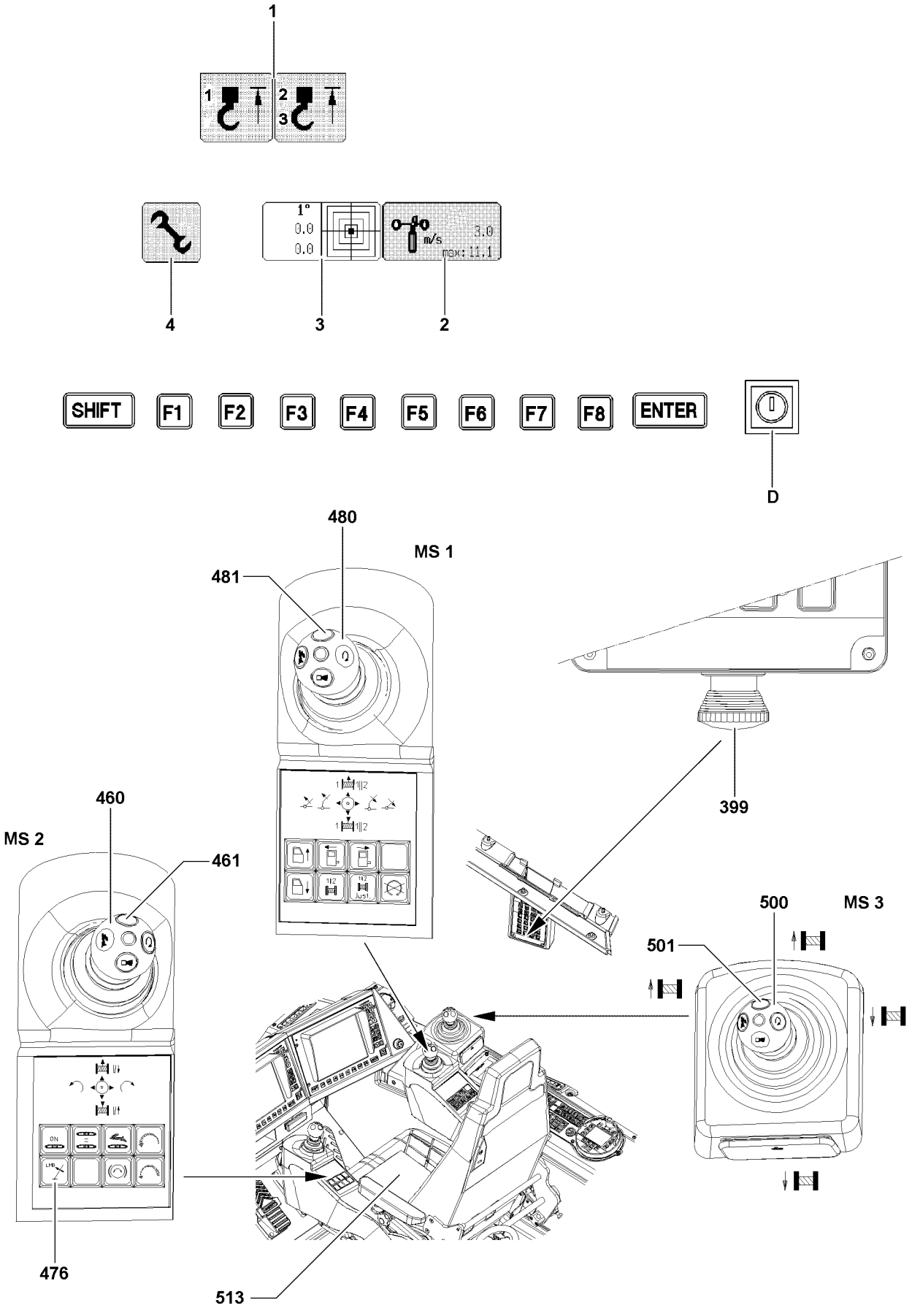

Fig.104901

copyright © Liebherr-Werk Ehingen GmbH 2018

6 EMERGENCY OFF switch*

When pressing the EMERGENCY OFF switch **399**, the engine and the electric crane control are turned off. Every carried out movement can be stopped immediately.

After pressing the EMERGENCY OFF switch **399**, the release can only be made by an authorized person.

WARNING
Risk of accident due to falling load!
If crane movements are stopped by pressing the EMERGENCY OFF switch, loads can start to swing and fall down. Personnel can be severely injured or killed!
- ▶ Operational use of the EMERGENCY OFF switch **399** is prohibited!
- ▶ Do not press the EMERGENCY OFF switch **399** at maximum speed of a crane movement.
- ▶ Only use the EMERGENCY OFF switch **399** in clear emergency situations!

7 Control release

The seat contact switch **513** shuts the crane control down as soon as the crane operator gets up from the seat.

This prevents unintended crane movements by accidentally touching the master switch when getting in or out of the cab.

The button **461**, button **481** and button **501** bypass the seat contact switch **513** if necessary, for example when the operator has to work while standing up.

8 Hydraulic safety valves

A distinction is made between two types:
- Pressure limitation valves against pipe and hose breaks
- Shut off valves in the hydraulic cylinders

8.1 Pressure monitoring in the relapse cylinders

Pressure sensors are installed in the hydraulic cylinders. The pressure measured with the pressure sensor is shown on the LICCON monitor, see chapter 4.02.

WARNING
Risk of accident due to crane toppling over or destruction of the crane!
If the pressure drops, the relapse cylinder can no longer stabilize the boom. The crane can topple over or be destroyed. Personnel can be severely injured or killed!
- ▶ During crane operation: Constantly monitor the pressure in the relapse cylinders.

8.2 Servo oil pressure monitoring in the winches

If no servo oil pressure is present when the master switch is actuated, a corresponding error message appears.

LWE/LR 1600-2-001/18101-07-02/en

copyright © Liebherr-Werk Ehingen GmbH 2018

LWE/LR 1600-2-001/18101-07-02/en

Fig.195219

copyright © Liebherr-Werk Ehingen GmbH 2018

9 Limit switch

WARNING
Risk of accident due to crane toppling over or destruction of the crane!
If the crane movement is stopped by the limit switch, then the load forces cannot be received through the control. The boom system can become unstable and the crane can topple over or be destroyed. Personnel can be severely injured or killed!

▶ Do **not** use the hoist limit switch and limit switch for steepest boom position and luffing jib position as an operational shut off function.

Limit switch	Position
Hoist „top“	On main boom, lattice jib and on boom nose
Boom „top“, steepest position	On boom relapse cylinder
Lattice jib „top“, steepest position	On lattice jib relapse cylinder
Lattice jib „top“, steepest mechanical position	Mechanical flap in lattice jib pivot section
Lattice jib „bottom“, lowest position	On boom head section
Derrick, steepest position 112.8°	On derrick relapse cylinder
SA-bracket 15°, assembly position to the front	On SA-bracket

LWE/LR 1600-2-001/18101-07-02/en

copyright © Liebherr-Werk Ehingen GmbH 2018

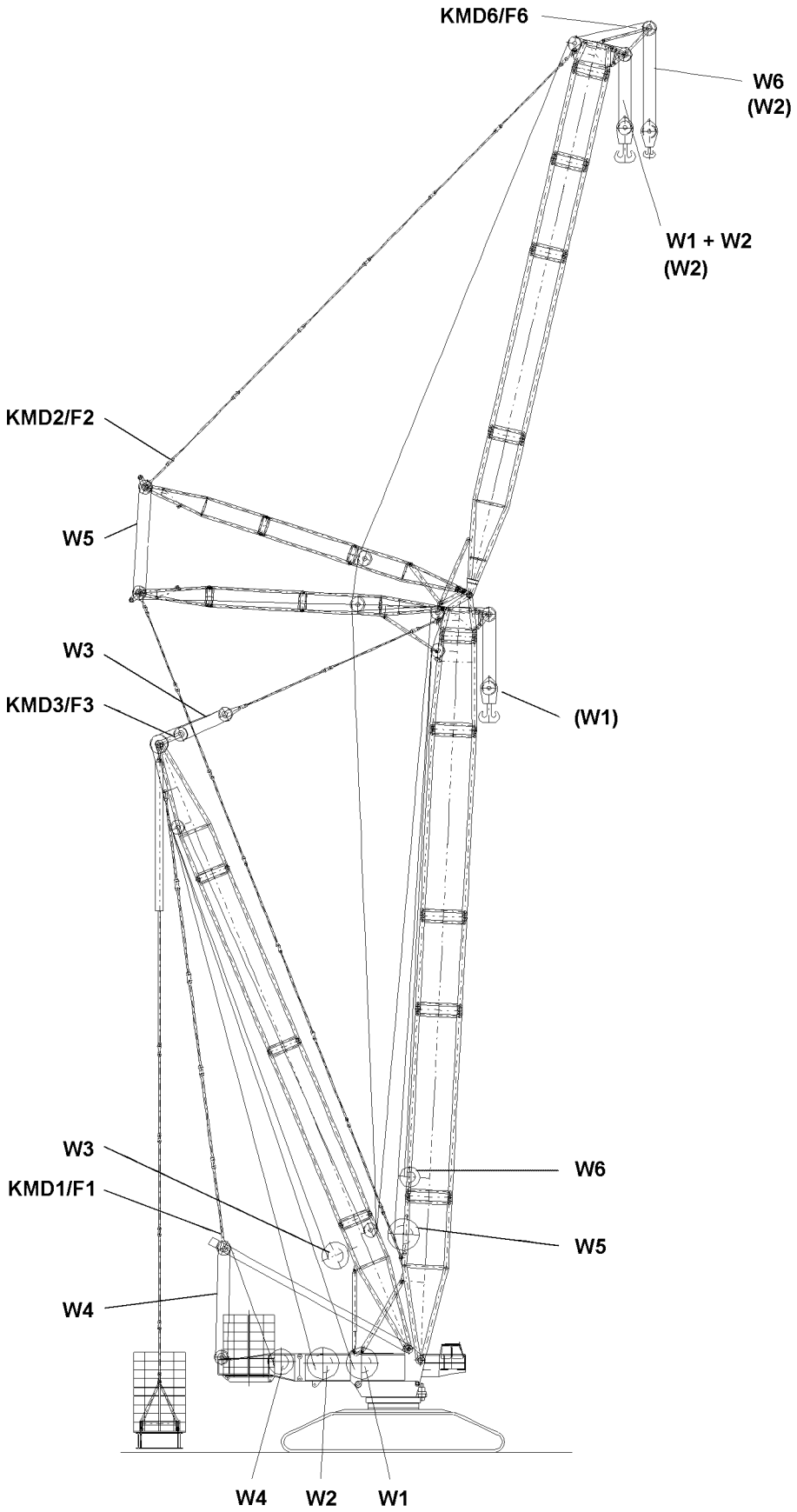

LWE/LR 1600-2-001/18101-07-02/en

Fig.102350

copyright © Liebherr-Werk Ehingen GmbH 2018

10 Angle sensors

Component	Description - Angle sensor (WG)
S-pivot section	Main boom bottom
S/W-end section, if used on boom	Main boom top
S/W-end section, if used on luffing jib	Luffing jib up
W-pivot section	Luffing jib bottom
W-connector head	Main boom top
D-pivot section	Derrick bottom
D-end section	Derrick top
SA-frame	SA-frame

11 Test brackets (KMD = force test box)

The test brackets measure the force in the guying, which results from the load and the boom momentum.

The test brackets are located:
- **KMD 1**, in the boom guying, SA-frame to boom for all operating modes **without** derrick
- **KMD 1**, in the derrick guying, SA-frame to derrick for all operating modes **with** derrick
- **KMD 2**, in the lattice jib guying, WA-frame 1 to lattice jib end section
- **KMD 3**, in the boom guying, derrick to boom for all operating modes **with** derrick
- **KMD 6**, in the boom nose

LWE/LR 1600-2-001/18101-07-02/en

copyright © Liebherr-Werk Ehingen GmbH 2018

LWE/LR 1600-2-001/18101-07-02/en

Fig.195219

copyright © Liebherr-Werk Ehingen GmbH 2018

12 Acoustical / optical warning

Note

▶ The crane operator must know and observe the overview, „acoustical / optical warning“ for the crane operator and for personnel within the danger zone.

12.1 Crane operator

Signal	Crane operator							
	Acoustic warning		Visual warning - LICCON monitor icons					
	Slow	Fast	Advance warning	Shutoff				Shutoff
								F1
Utilization to 90 %								
LMB utilization greater than 90 %	X[3]		X					
LMB utilization greater than 100 %		X[3]	X	X				
Emergency operation with LICCON E1.7						X		
+ E1.5							X	
+ E1.6							X	
LMB / hoist top E1.5 bypass					X			
+ E1.7							X	
Assembly E1.6					X			
+ E1.7							X	
$F1_{max}$ assembly								X
Block position between L and F								
Block position between W and F								
Bypass „without motor“						X		

LWE/LR 1600-2-001/18101-07-02/en

copyright © Liebherr-Werk Ehingen GmbH 2018

X = cannot be turned off

X^1 = can be turned off after 5 seconds on control platform

X^2 = can be turned off immediately on control platform

X^3 = can be turned off immediately on LICCON monitor

	Personnel present in danger zone				
	Acoustic warning	**Visual warning - LICCON monitor icons**			
	Horn	**Warning light rod**			**Warning light rear of turn-table**
Signal	**Intermittent**	**Green**	**Yellow**	**Red**	**Red**
Utilization to 90 %		X			
LMB utilization greater than 90 %			X		
LMB utilization greater than 100 %	X^1			X	X
Emergency operation with LICCON				X	X
LMB / hoist top bypass	X			X	X
Assembly	X^2			X	X
$F1_{max}$ assembly	X				
Block position between L and F	X				
Block position between W and F	X				
Bypass „without motor“					

X = cannot be turned off

X^1 = can be turned off after 5 seconds on control platform

X^2 = can be turned off immediately on control platform

X^3 = can be turned off immediately on LICCON monitor

LWE/LR 1600-2-001/18101-07-02/en

copyright © Liebherr-Werk Ehingen GmbH 2018

Empty page!

LWE/LR 1600-2-001/18101-07-02/en

copyright © Liebherr-Werk Ehingen GmbH 2018

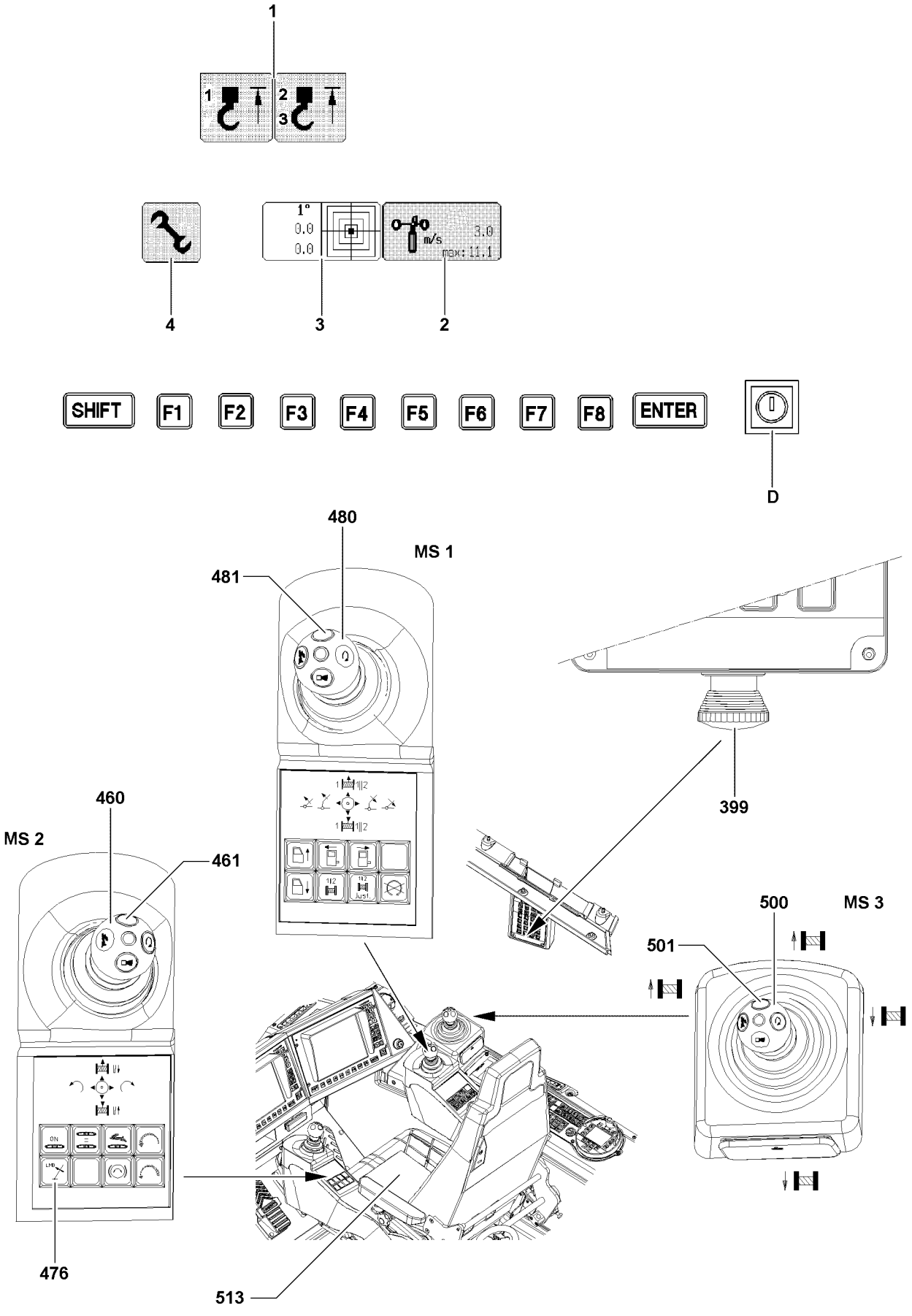

LWE/LR 1600-2-001/18101-07-02/en

Fig.104901

copyright © Liebherr-Werk Ehingen GmbH 2018

13 Bypassing the safety devices

The safety devices are bypassed with the following control elements:
- Control console: Button **476**, luffing up at overload.
- LICCON monitor 0: Bypass key button **D**

The bypass key button **D** on the LICCON monitor has two positions:
- Position center - Operating position (self-retaining): Crane is in normal operation.
- Position to right (touching): The hoist limit switch and the LMB shut off are bypassed.

Note
▶ For shut offs bypassable with the button **D**, see „shut off diagrams“ in electric wiring diagram.

13.1 Bypassing the overload protection

If the maximum permissible load capacity is exceeded, the LICCON overload protection turns off all crane movements that increase the load torque.

DANGER
Danger of accidents when bypassing the overload protection!
If the overload protection is bypassed, there is no additional protection against crane overload!
All LICCON overload protection displays remain functional!
▶ The bypass of the overload protection is only permitted in emergency cases!
▶ The bypass key button **D** may only be actuated by persons who are aware of the effects of their acts regarding the bypass of the overload protection!
▶ Bypassing the overload protection requires the presence of the crane supervisor and must be performed with utmost caution!
▶ **Crane operation** with bypassed overload protection is prohibited!

13.2 Bypassing the „Hoist top“ shut off

If the hook block touches the hoist limit switch weight during the upward movement, the hoist limit switch reacts. The crane movements „Spool up winches“ and „Luff down boom“ are turned off. The shut off can be bypassed by the bypass key button **D** in the „right touching“ position.

DANGER
Danger of accidents due to bypass of **Hoist top** shut off!
When bypassing the „Hoist top“ shut off, there is a risk that the hook block may be pulled against the pulley head when continuing to lift or luffing down the boom. This may damage the pulleys and cause the loads to fall!
▶ The „Hoist top“ shut off may only be bypassed if the crane supervisor is present, and with the help of a „Guide“. The guide must be in direct contact with the crane operator and must continually monitor the distance between the hook block and the boom head.
▶ Carry out all crane movements with maximum care and minimum speed.

LWE/LR 1600-2-001/18101-07-02/en

copyright © Liebherr-Werk Ehingen GmbH 2018

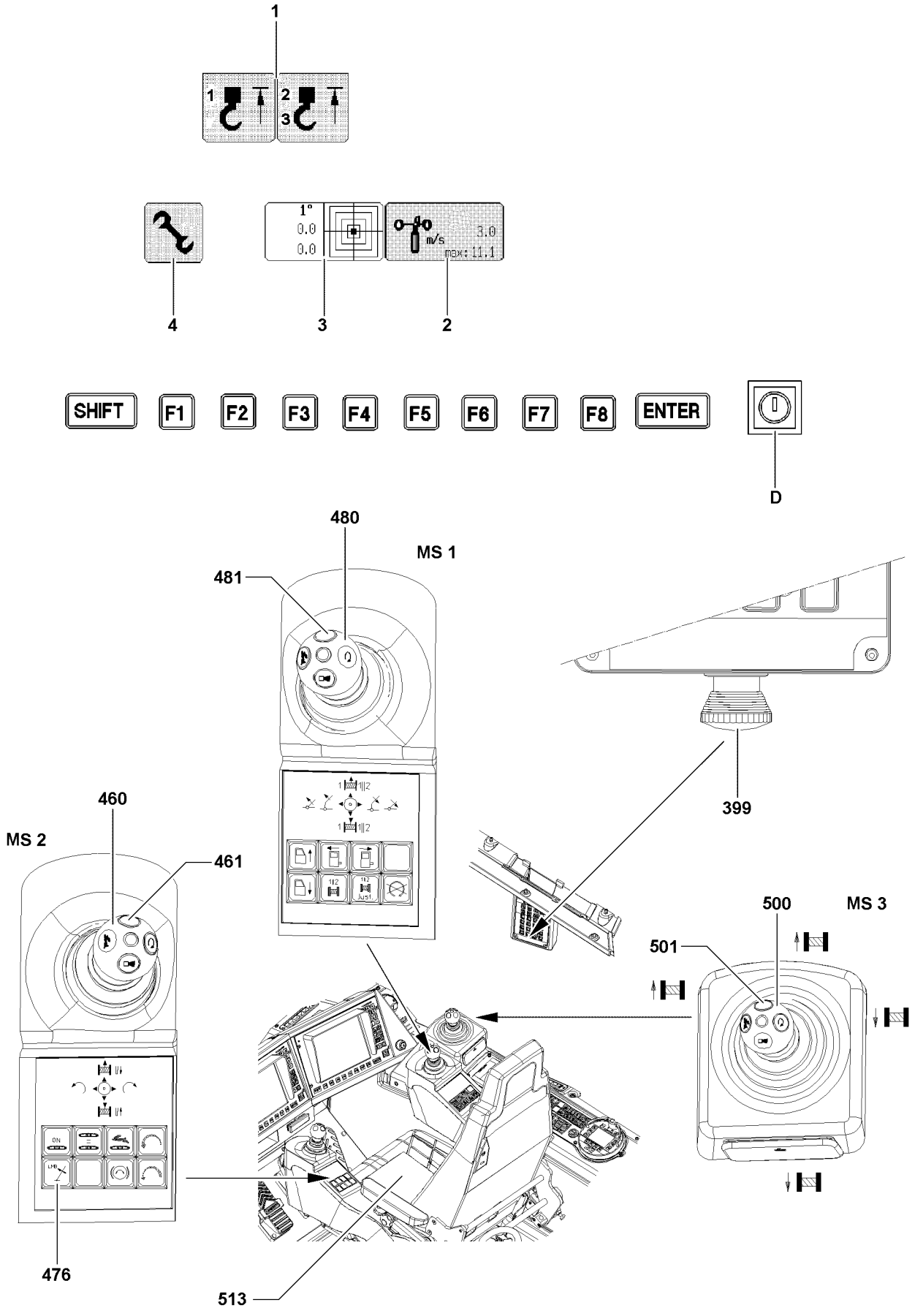

LWE/LR 1600-2-001/18101-07-02/en

Fig.104901

copyright © Liebherr-Werk Ehingen GmbH 2018

▶ Turn the bypass key button **D** to the right and hold.

Result:

– The LICCON overload protection is inactive.
– The assembly icon **4** in the LICCON monitor 0 blinks.
– An acoustic signal sounds.
– The 3 color light on the crane cab and the warning light on the rear of the turntable light up.

▶ Do no longer press the bypass key button **D**.

Result:

– The LICCON overload protection is active.
– The assembly icon **4** on the LICCON monitor 0 turns off.
– The acoustic signal is turned off.
– The 3 color light on the crane cab and the warning light on the rear of the turntable turn off.

LWE/LR 1600-2-001/18101-07-02/en

copyright © Liebherr-Werk Ehingen GmbH 2018

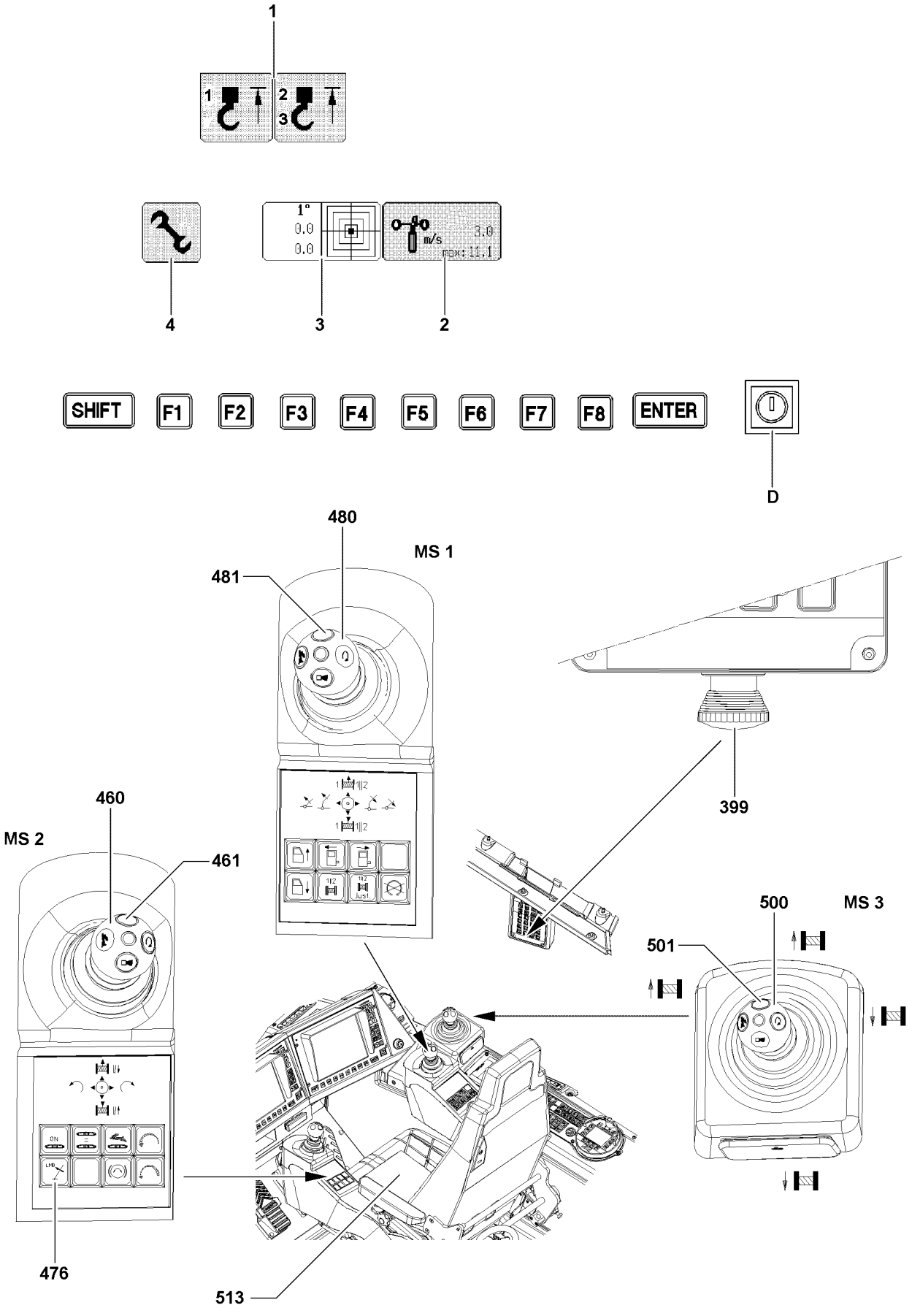

LWE/LR 1600-2-001/18101-07-02/en

Fig.104901

copyright © Liebherr-Werk Ehingen GmbH 2018

13.3 Bypassing „Luffing up at overload“

The „Luff up“ crane movement:
- Depicts a load torque decreasing crane movement.
- At freely suspended load, it almost always leads to an increase of maximum load capacity.

Note
- ▶ At overload, the „luff up“ crane movement is turned off.
- ▶ With the button **476**, „luff up with boom of luffing jib“, the load torque limiter can be bypassed.

DANGER
Risk of accident due to toppling crane!
If the load torque limiter is bypassed, the crane can be overloaded and topple over. Personnel can be severely injured or killed!

It is not permissible to lift the load by luffing up the boom.
- ▶ If the hoist gear has been turned off by the load torque limiter when lifting a load.

Bypassing the load moment limiter with the button **476** is only permitted if:
- ▶ the load is freely suspended and the crane operator is sure at the same time that the load capacity will be increased when luffing up (utilization decreases).
- ▶ the overload occurred before by luffing the boom or the luffing jib down. The crane operator must clearly prove according to the load chart, that the luffing up movement will lead to an increase of the maximum load capacity and the overload will be thereby removed.

In order to still perform the luffing up movement:
- ▶ Press the button **476**, „Bypass of overload“ and deflect the „Master switch 1 **480**“ in direction X-.

LWE/LR 1600-2-001/18101-07-02/en

copyright © Liebherr-Werk Ehingen GmbH 2018

Empty page!

LWE/LR 1600-2-001/18101-07-02/en

copyright © Liebherr-Werk Ehingen GmbH 2018

4.05 Crane operation

1	LICCON computer system	3
2	Winch and master switch assignment to operating modes	3
3	Carrying out crane movements	5

LWE/LR 1600-2-001/18101-07-02/en

copyright © Liebherr-Werk Ehingen GmbH 2018

LWE/LR 1600-2-001/18101-07-02/en

Fig.195219

copyright © Liebherr-Werk Ehingen GmbH 2018

1 LICCON computer system

WARNING
Danger of accidents due to overload!
- ▶ Constantly monitor the displays on the LICCON monitor.
- ▶ Observe changing utilization conditions and forces.

WARNING
Danger of accident!
- ▶ The crane driver must evaluate constantly if the data shown on the operating screen can even be correct. He may not rely blindly on the LICCON system but must think for himself and must recognize a possible error or overload conditions.

For detailed description of the operation of the LICCON computer system, refer to chapter 4.02.

2 Winch and master switch assignment to operating modes

The assignment of the master switches to the winches is different, according to the operating modes.

WARNING
The crane can topple over!
If the master switch assignment in the electric wiring diagram is ignored, the crane can topple over!
Personnel can be severely injured or killed!
Severe damage on the crane can result!
- ▶ The winch use is regulated in the master switch assignment in the Electric wiring diagram. The winches may only be operated according to this master switch assignment specified in the Electric wiring diagram.

LWE/LR 1600-2-001/18101-07-02/en

copyright © Liebherr-Werk Ehingen GmbH 2018

LWE/LR 1600-2-001/18101-07-02/en

Fig.195219

copyright © Liebherr-Werk Ehingen GmbH 2018

3 Carrying out crane movements

Make sure that the following prerequisites are met:
- The crane is horizontally aligned.
- The counterweight is installed and secured according to the data in the load chart.
- The ground is able to carry the weight of the crane, the load and the load handling equipment.
- The hook block is correctly reeved in according to the reeving plan.
- The crawler operation is turned off.
- The crane engine is running.
- All safety equipment has been adjusted according to the data in the load chart.
- the winches are correctly assigned to the respective pulley heads, see chapter 4.02.
- There are no persons or objects in the danger zone.

WARNING
Danger of accident!
- ▶ In order to protect the crane and reduce the danger of accidents, always operate the master switch slowly and sensitively.
- ▶ Ensure that there are no obstacles in the working range of the crane and that there are no persons within the danger zone.
- ▶ Give a warning signal before initiating a crane movement.
- ▶ Observe the danger notes for crane operation in chapter 5.01.

LWE/LR 1600-2-001/18101-07-02/en

copyright © Liebherr-Werk Ehingen GmbH 2018

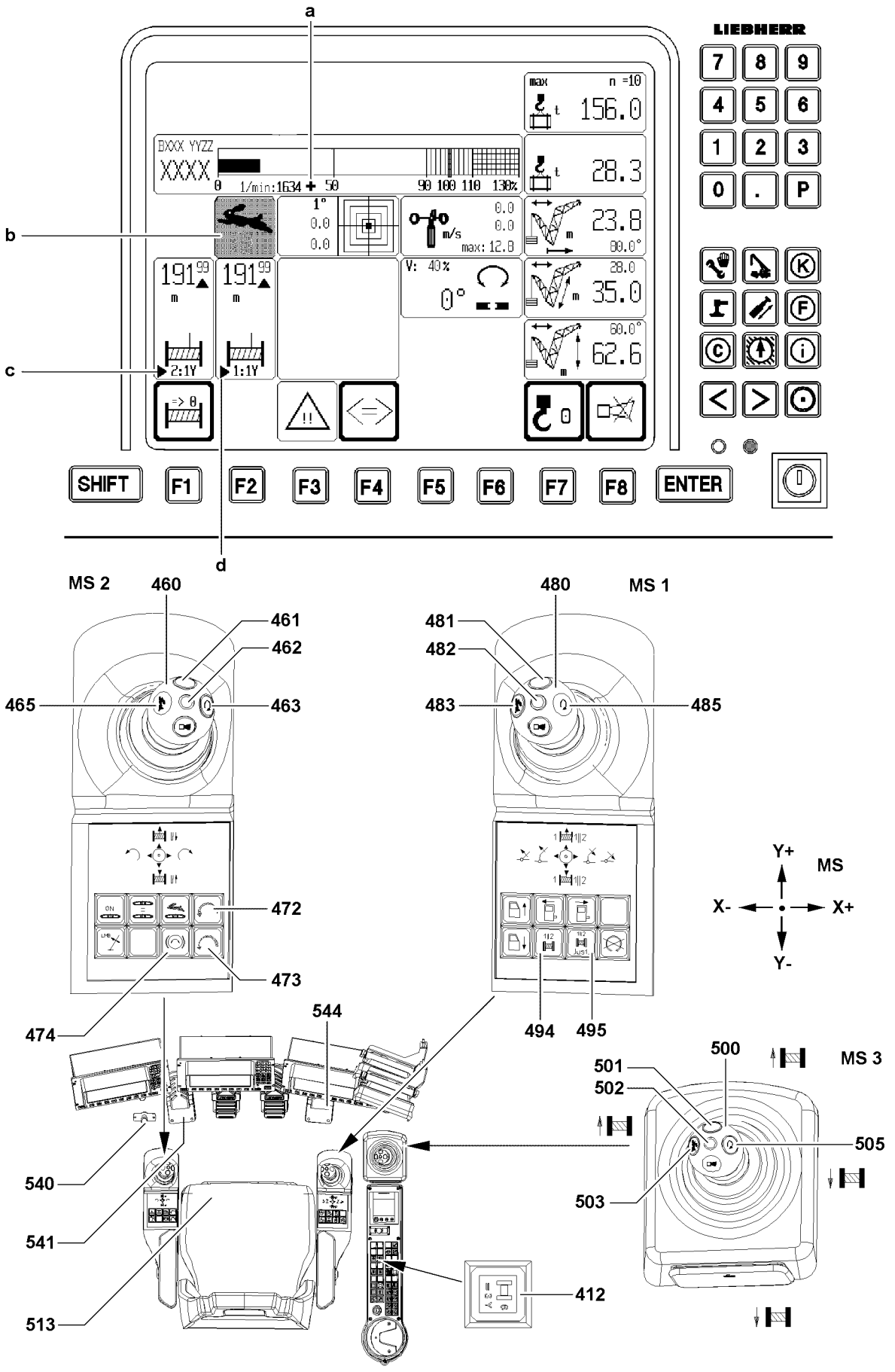

Fig.104897

LWE/LR 1600-2-001/18101-07-02/en

copyright © Liebherr-Werk Ehingen GmbH 2018

3.1 Regulating the engine rpm

3.1.1 Locking the engine rpm

Locking the engine rpm relieves the crane operator if he needs to work for an extended period with constant rpm. The engine rpm can be locked in any position.

▶ Press the pedal **544** down for the engine regulation until the desired rpm is reached.
▶ Press the button **463**.
or
Press button **485** or button **505**.

Result:

– The pedal **544** is locked and the engine rpm is saved.
– The icon **a** appears on the monitor.

3.1.2 Increasing the engine rpm via the pedal

Make sure that the following prerequisite is met:
– The maximum rpm has not yet been reached.

When the engine rpm is locked, the engine rpm can be increased with the pedal.

When the pedal is released, the engine rpm drops to the saved value.

▶ Press the pedal **544** and increase the engine rpm.

When this engine rpm is to be saved:
▶ Press button **463**, button **485** or button **505**.

3.1.3 Increasing and decreasing the engine rpm with the button

If both feet are already used for operation, for example when „driving the crawler“, the engine rpm can be changed with the button **472** or the button **473** on the control panel.

A regulation with the buttons deletes the saved engine rpms.

Increase engine rpm

▶ Press the button **472** and hold it until the desired engine rpm is reached.

Result:

– The engine rpm increases steplessly.
– The engine rpm increases steplessly.

Decrease engine rpm

▶ Press the button **473** and hold it until the desired engine rpm is reached.

Result:

– The engine rpm decreases steplessly.

3.1.4 Releasing the engine rpm lock

If the engine rpm is locked:
▶ Press the button **463**.
or
Press button **485** or button **505**.

Result:

– The lock is released.
– The icon **a** turns off on the monitor.
– The rpm reduces to low idle rpm.

LWE/LR 1600-2-001/18101-07-02/en

copyright © Liebherr-Werk Ehingen GmbH 2018

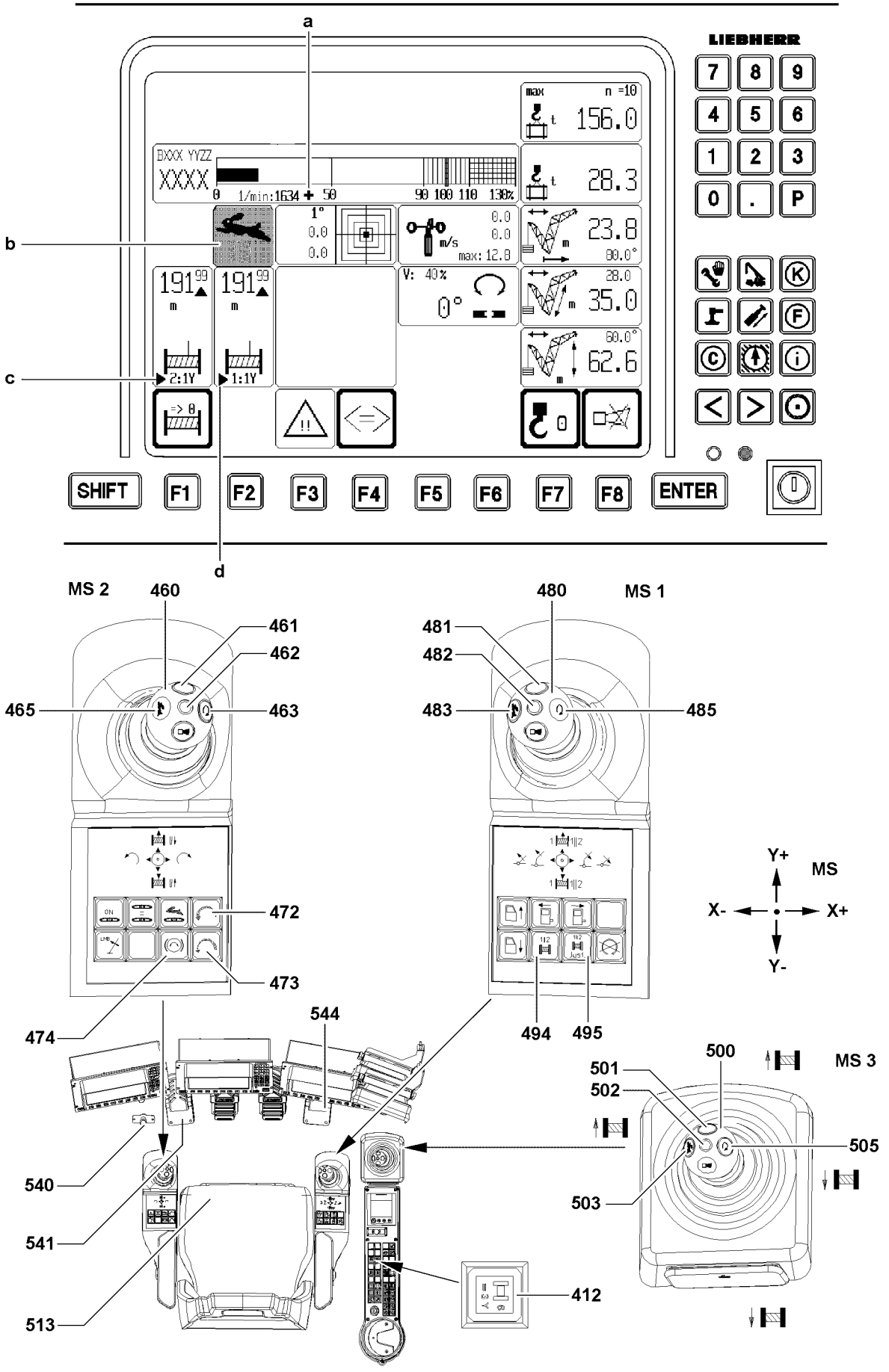

Fig.104897

LWE/LR 1600-2-001/18101-07-02/en

copyright © Liebherr-Werk Ehingen GmbH 2018

3.1.5 „Power Plus“

Note
When „Power Plus“ is turned on, observe the following:
- ▶ If a crane movement has reached its maximum speed due to the current utilization, then no speed increase is possible by adding the „Power Plus“.
- ▶ If the total power requirement of all actuated crane movements is larger than the available power, then those crane movements are reduced which require the most power.
- ▶ If another crane movement is added or taken back to one or more actuated crane movements then this has an influence on the other movements. For that reason we recommend in situations in which an interference of the individual crane movements is troublesome, not to add the „Power Plus“ or to turn the „Power Plus“ off.

Adding „Power Plus“

The speed of the „lift / lower“ crane movement is increased with the button **465**, button **483** or button **503**.

WARNING
Danger of accidents in case of single to triple sheave reeving!
- ▶ Do **not** add „Power Plus“ if the crane is utilized by more than 50 % of its maximum permissible load carrying capacity for the corresponding boom radius.

- ▶ Press the button **465**.
  or
  Press button **483** or button **503**.

Result:

– „Power Plus“ is added.
  The icon **b** appears on the LICCON monitor.

Turning the „Power Plus“ off

If the „Power Plus“ is added:
- ▶ Press the button **465** again.
  or
  Press button **485** or button **503** again.

Result:

– „Power Plus“ is turned off.
  The icon **b** turns off on the LICCON monitor.

copyright © Liebherr-Werk Ehingen GmbH 2018

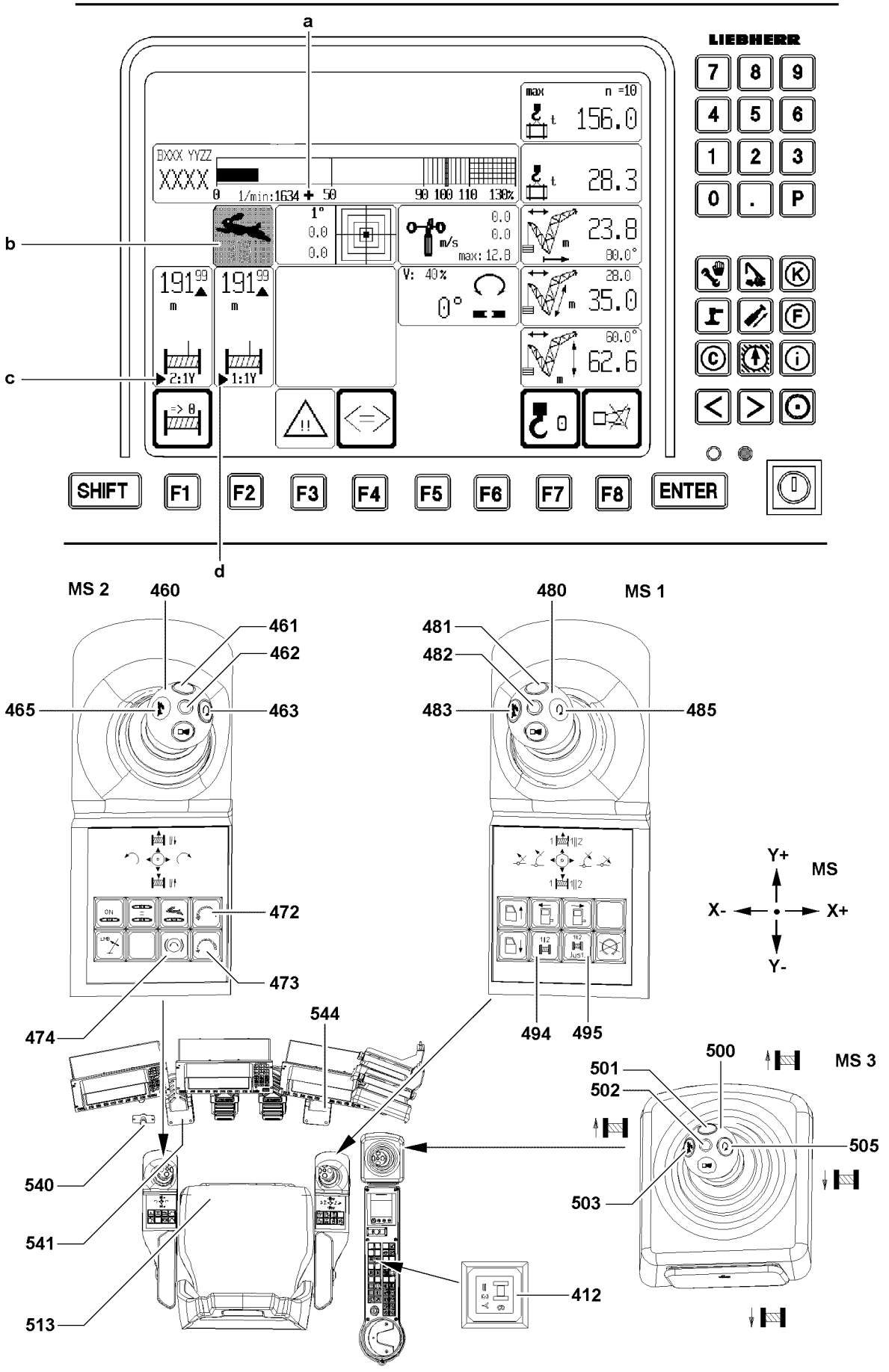

Fig.104897

LWE/LR 1600-2-001/18101-07-02/en

copyright © Liebherr-Werk Ehingen GmbH 2018

3.2 Vibration sensor

By adding the vibration sensor, a crane movements can be detected by vibration of the master switch.

Make sure that the following prerequisite is met:
– The seat contact switch **513** is activated.

3.2.1 Vibration sensor winch 1

Adding the vibration sensor

▶ Press the button **481**.

Result:

– The vibration sensor **482** is turned on.
The icon **d** is turned on.

Turn the vibration sensor off

When the vibration sensor **482** is turned on:
▶ Press the button **481** again.

Result:

– The vibration sensor **482** is turned off.
The icon **d** is turned off.

3.2.2 Vibration sensor winch 2 or slewing gear

If winch 2 and the slewing gear are operated, then the vibration sensor **462** will react to the first deflected movement.

Adding the vibration sensor

▶ Press the button **461**.

Result:

– The vibration sensor **462** is turned on.
The icon **c** is turned on.

Turn the vibration sensor off

When the vibration sensor **462** is turned on:
▶ Press the button **461** again.

Result:

– The vibration sensor **462** is turned off.
The icon **c** is turned off.

LWE/LR 1600-2-001/18101-07-02/en

copyright © Liebherr-Werk Ehingen GmbH 2018

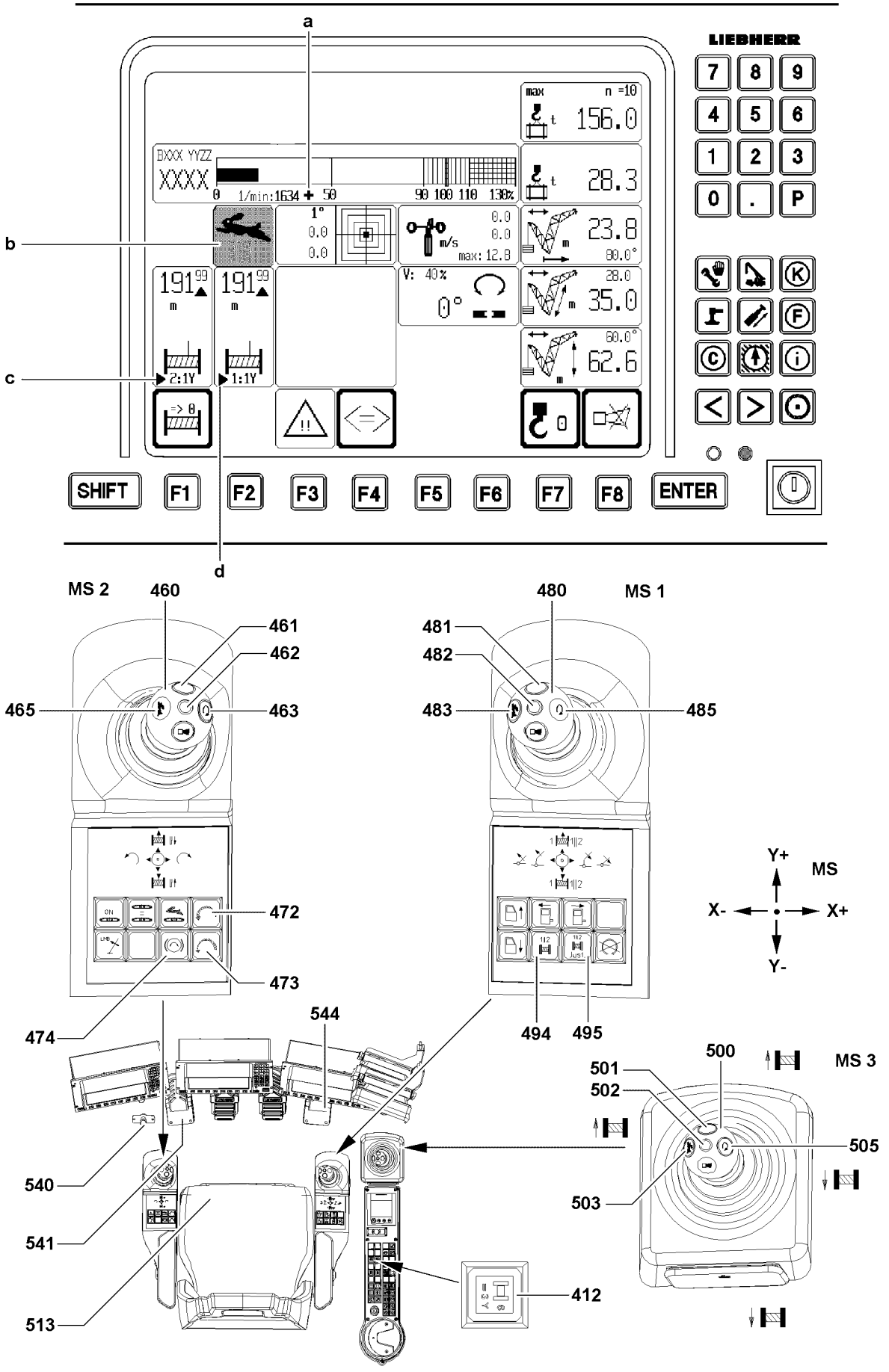

Fig.104897

LWE/LR 1600-2-001/18101-07-02/en

copyright © Liebherr-Werk Ehingen GmbH 2018

3.3 Lifting / lowering a load

NOTICE
Rope damage due to slack rope!
▶ When spooling the winches up or out, check visually to make sure that no slack rope forms.

The speed of crane movement „lifting and lowering“ is controlled via the deflection of the corresponding master switch and via the pedal **544** of the engine regulation.

In the „Control Parameter“ program, it is possible to preselect the maximum winch speed. It is also possible to deactivate or activate the individual winches.

See chapter 4.02, section „Control parameter“.

Make sure that the following prerequisite is met:
– the winches are correctly assigned to the respective pulley heads, see chapter 4.02.

3.3.1 Operating winch 1 - hoist winch

In the winch icon is shown with the arrow icons that the winch is turning, even if no hook movement is visible due to multiple reeving and low speed.

▶ Deflect master switch 1 **480** in direction Y+.

Result:

– Winch 1 spools out and the load is lowered.

▶ Deflect master switch 1 **480** in direction Y-.

Result:

– Winch 1 spools up and the load is lifted.

3.3.2 Operating winch 2 - hoist winch

In the winch icon is shown that the winch is turning, even if no hook movement is visible due to multiple reeving and low speed.

▶ Deflect master switch 2 **460** in direction Y+.

Result:

– Winch 2 spools out and the load is lowered.

▶ Deflect master switch 2 **460** in direction Y-.

Result:

– Winch 2 spools up and the load is lifted.

LWE/LR 1600-2-001/18101-07-02/en

copyright © Liebherr-Werk Ehingen GmbH 2018

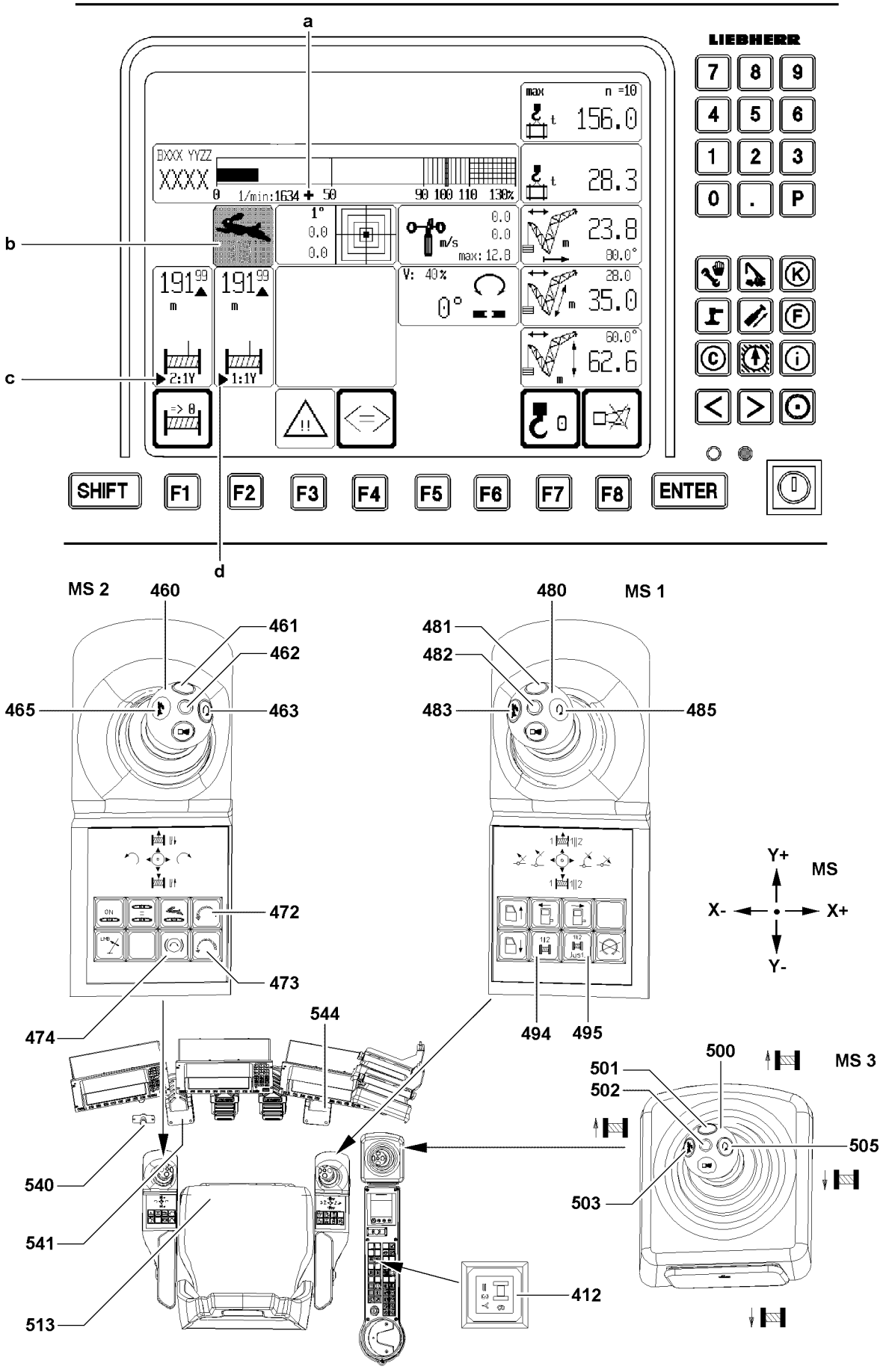

Fig.104897

LWE/LR 1600-2-001/18101-07-02/en

copyright © Liebherr-Werk Ehingen GmbH 2018

3.3.3 Setting up parallel operation

For parallel operation, winch 1 and winch 2 are used.

In parallel operation, actuation of winch 1 and winch 2 is made only together with master switch 1 **480**.

Make sure that the following prerequisites are met:
- The double hook blocks are assembled together, see chapter 4.06.
- The double hook blocks are reeved according to the load charts.
- The double hook blocks are properly reeved according to the reeving plan, see chapter 4.06.
- The total reeving has been entered on the LICCON monitor.
- The reeving number on both winches 1 and 2 must be the same and even.

WARNING
Danger of accident!
- ▶ The total reeving number on both winches 1 and 2 must be the same and even in parallel operation. If the minimum value of the reeving is uneven, then - in parallel operation - the next higher, even reeving must be selected.
- ▶ Remove the transporting pin on the hook blocks prior to the horizontal alignment and prior to the crane operation.
- ▶ Make sure that the danger zone of the hook block is free of any personnel.

Aligning the hook blocks horizontally

Make sure that the following prerequisites are met:
- Individual operation for winch 1 and winch 2 is set.
- The switch **494** is turned off: Parallel control is turned off.
- There is no load on the hook.

Align the hook blocks visually in horizontal direction. To do so, spool the winches manually up or out.

▶ Deflect master switch 1 **480** or master switch 2 **460** in direction Y.

Result:

– Winch 1 or winch 2 spools out or up until the hook blocks are horizontally aligned.

Adjusting the parallel control of winch 1 and winch 2

Make sure that the following prerequisites are met:
- The double hook blocks are horizontally aligned, check visually.
- There is no load on the hook.

▶ Turn on the switch **494** for the parallel operation.
▶ Press the button **495**.

Result:

– The parallel control of winch 1 and winch 2 is adjusted.

LWE/LR 1600-2-001/18101-07-02/en

copyright © Liebherr-Werk Ehingen GmbH 2018

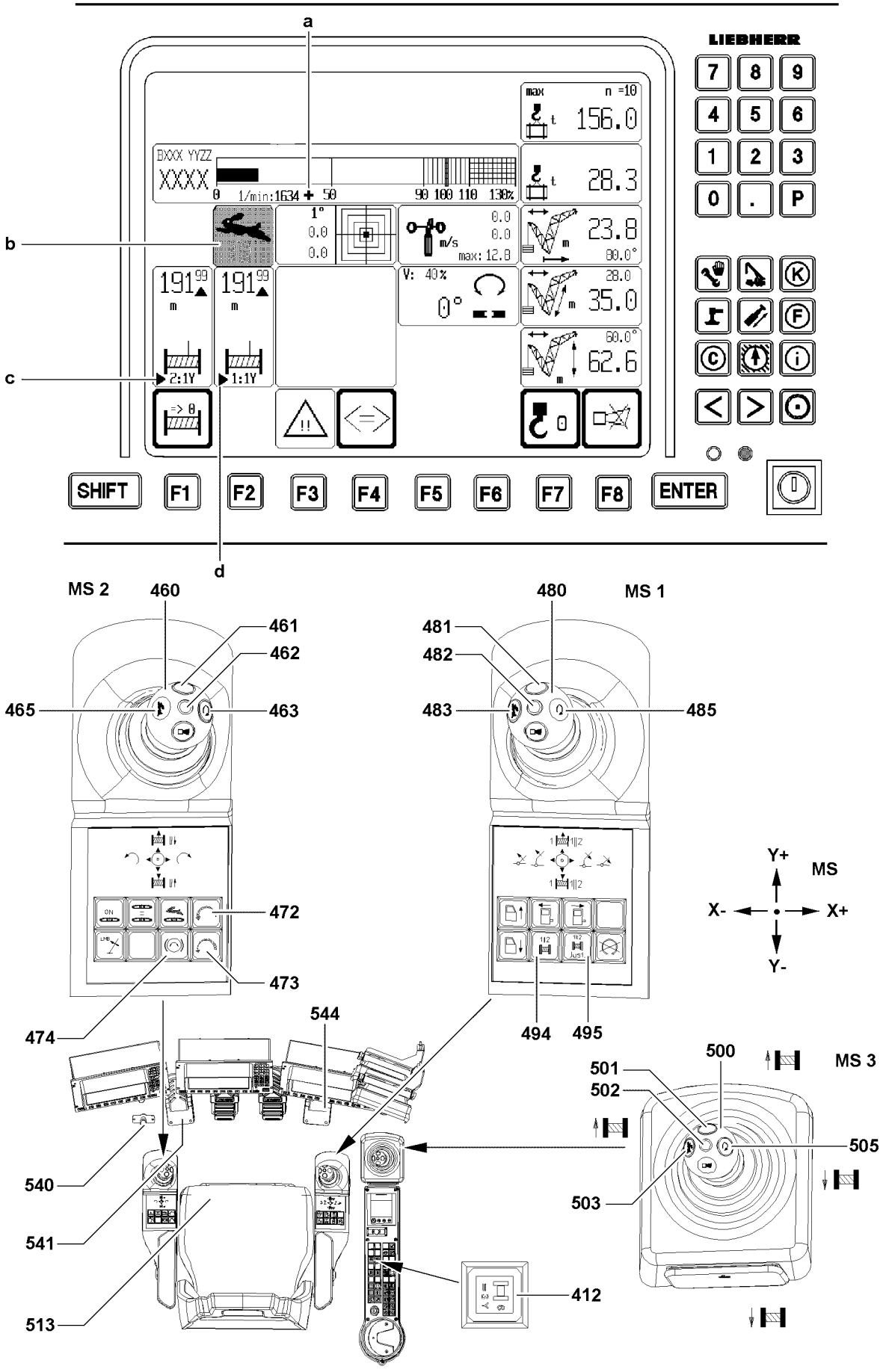

Fig.104897

LWE/LR 1600-2-001/18101-07-02/en

copyright © Liebherr-Werk Ehingen GmbH 2018

3.3.4 Parallel operation: Lifting / lowering a load

WARNING
Danger of accidents due to overload!
If the compensation cross bar is in the incline position, then significant load increases will occur on the individual hook blocks.
If this is not observed, then the hook block, boom or rope can be overloaded, resulting in property damage and personal injury.
▶ Make sure that the compensation cross bar is always aligned horizontally on the double hook blocks.

WARNING
Danger of accidents due to different level of hook blocks!
The electronic parallel control only monitors the same rotational speed of the two winches, however, it does **not** consider the following errors:
- Uneven rope length
- Different rope diameters
- Different winding behavior
- Uneven reeving

▶ The crane driver must ensure and is responsible for that the hook blocks are always on the same level, despite electronic monitoring!

Note
▶ In emergency operation, no parallel control is possible.

Note
▶ The winch movement is shut off if the difference range of the parallel control is being exceeded. In that case, the winches must be again parallel adjusted.

Make sure that the following prerequisites are met:
– The double hook blocks are horizontally aligned, check visually.
– There is no load on the hook.
– Parallel control of winches is adjusted.
– The button **494** for parallel operation is turned on.

▶ Deflect master switch 1 **480** in direction Y+.

Result:

– Winch 1 and winch 2 spool out together: the load lowers.

▶ Deflect master switch 1 **480** in direction Y-.

Result:

– Winch 1 and winch 2 spool out together: the load lifts up.

copyright © Liebherr-Werk Ehingen GmbH 2018

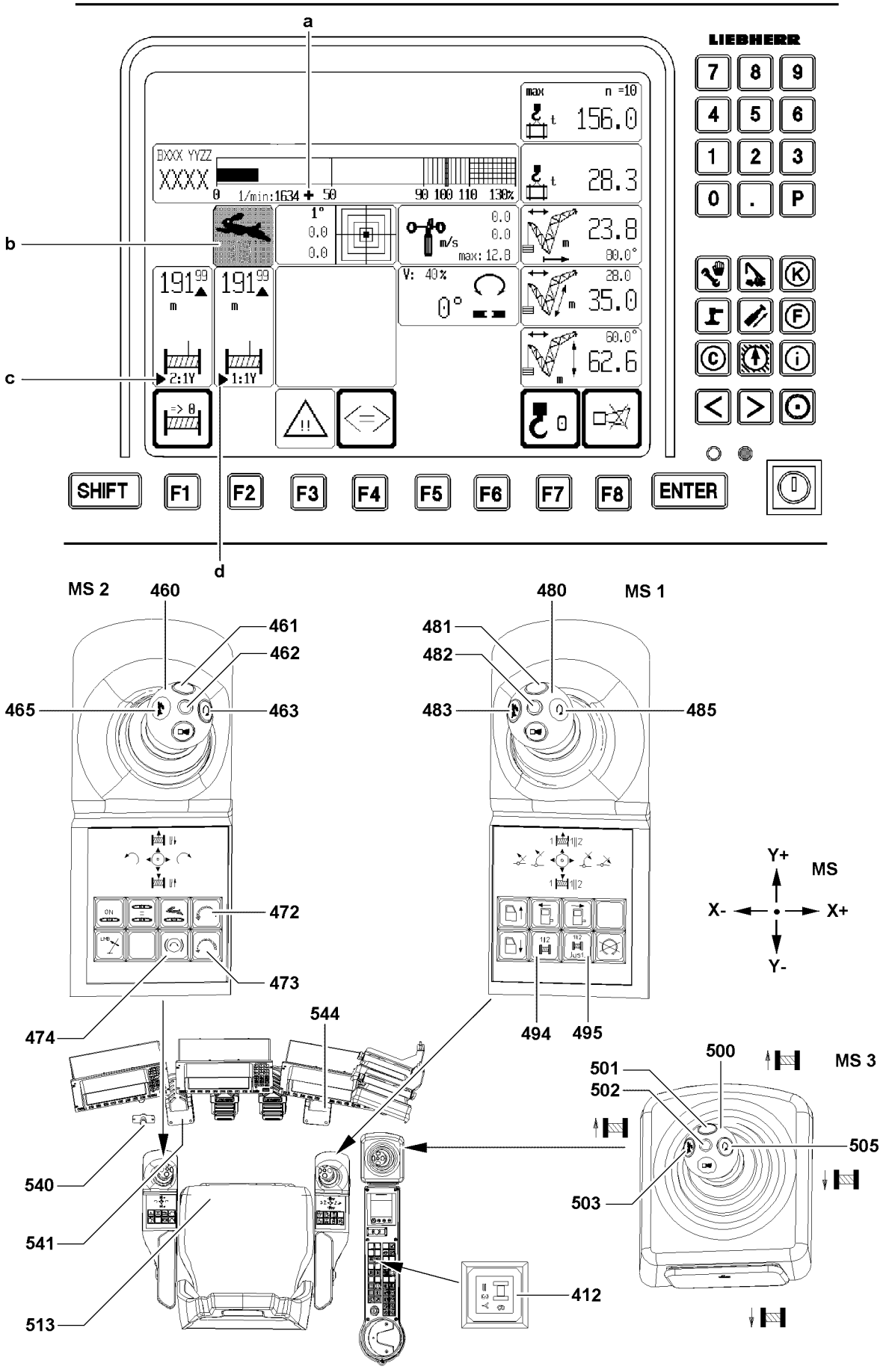

Fig.104897

LWE/LR 1600-2-001/18101-07-02/en

copyright © Liebherr-Werk Ehingen GmbH 2018

3.3.5 Operating winch 6 - hoist winch

In the winch icon is shown that the winch is turning, even if no hook movement is visible due to multiple reeving and low speed.

Note

- ▶ In individual operation of winch 1 and winch 2, no master switch is assigned to winch 6.
- ▶ To be able to drive winch 6 in individual operation, the switch **412** must be turned on, this assigns winch 6 to the master switch 3 **500**.
- ▶ In parallel operation, winch 1 and winch 2 are actuated with the master switch 1 **480**. When the switch **412** is turned off, then the master switch 2 **460** is assigned to winch 6.

Operating winch 6 in parallel operation of winch 1 and winch 2

Make sure that the following prerequisites are met:
- The switch **494** is turned on.
- The switch **412** is turned off.

▶ Deflect master switch 2 **460** in direction Y+.

Result:

– Winch 6 spools out and the load is lowered.

▶ Deflect master switch 2 **460** in direction Y-.

Result:

– Winch 6 spools up and the load is lifted.

Operating winch 6 in individual operation winch 1 + 2

Make sure that the following prerequisites are met:
- The switch **494** is turned off.
- The switch **412** is turned on.

▶ Deflect master switch 3 **500** in direction Y+.

Result:

– Winch 6 spools out and the load is lowered.

▶ Deflect master switch 3 **500** in direction Y-.

Result:

– Winch 6 spools up and the load is lifted.

LWE/LR 1600-2-001/18101-07-02/en

copyright © Liebherr-Werk Ehingen GmbH 2018

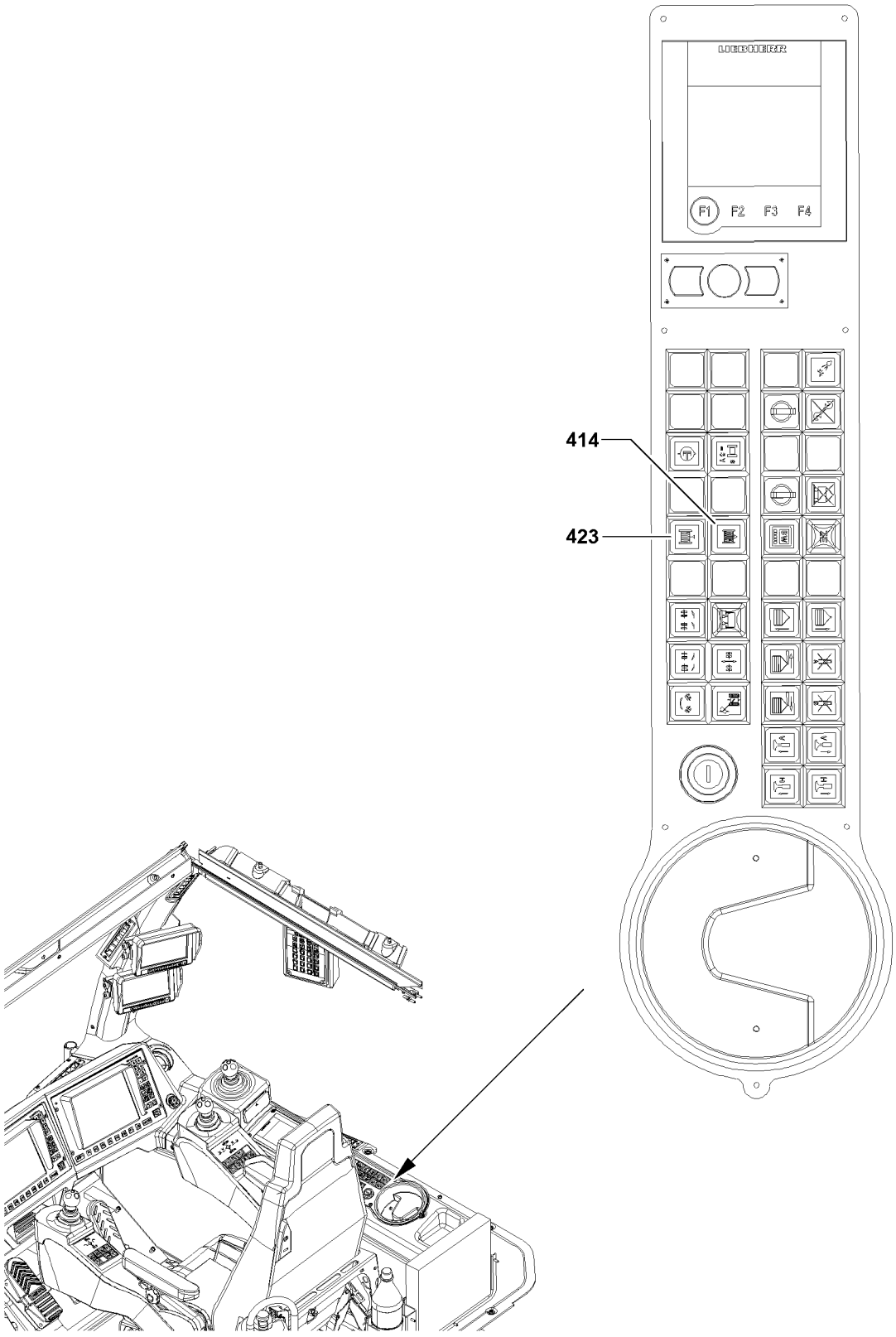

Fig.108979

LWE/LR 1600-2-001/18101-07-02/en

copyright © Liebherr-Werk Ehingen GmbH 2018

3.3.6 Operating the assembly winch

Spool the assembly winch out

If the assembly winch is to be stopped:
▶ Release the button **423**.
▶ Press the button **423** and hold.

Result:

– The assembly winch spools out.

Spooling the assembly winch up

If the assembly winch is to be stopped:
▶ Release the button **414**.
▶ Press the button **414** and hold.

Result:

– The assembly winch spools up.

LWE/LR 1600-2-001/18101-07-02/en

copyright © Liebherr-Werk Ehingen GmbH 2018

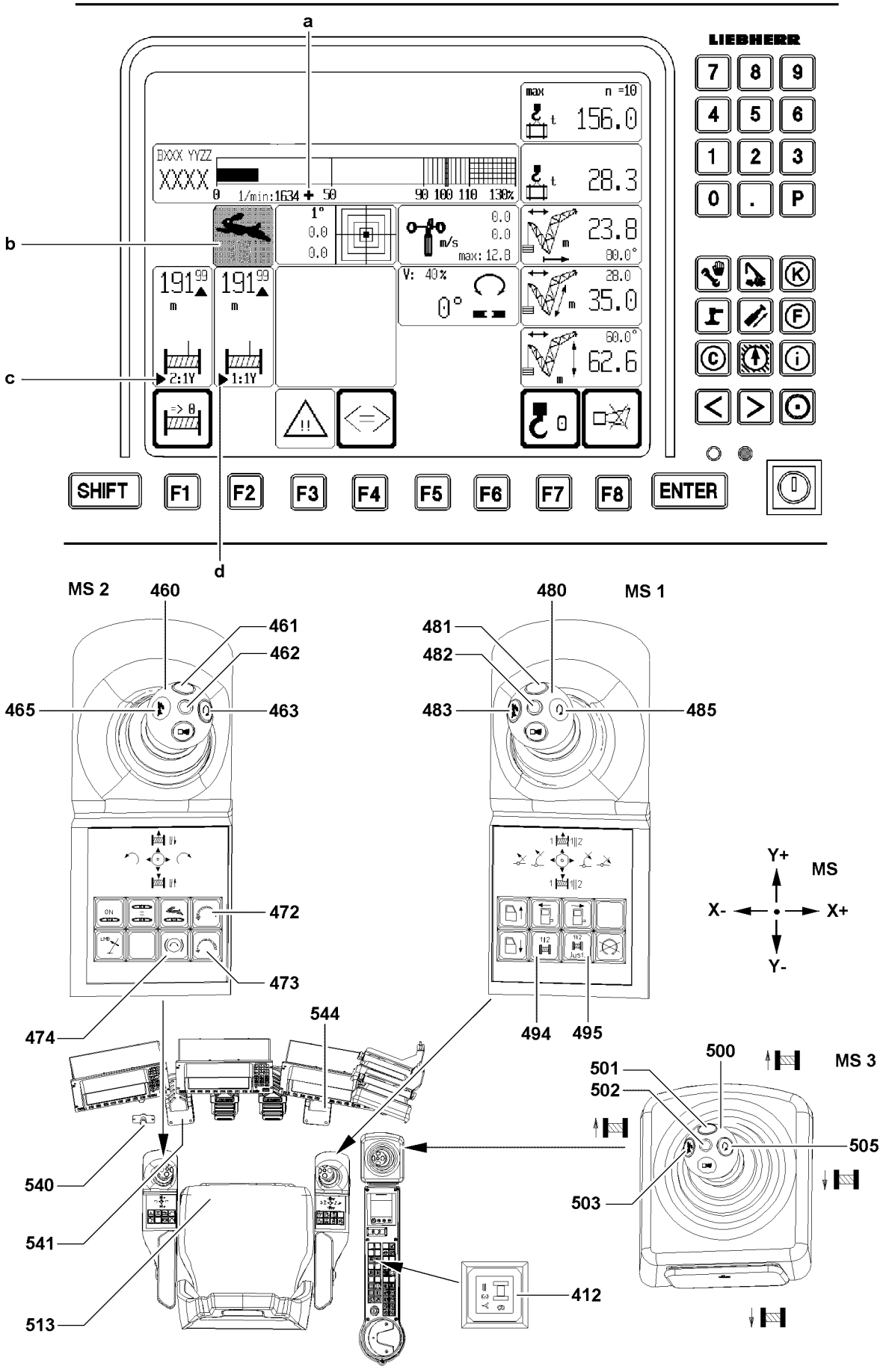

Fig.104897

LWE/LR 1600-2-001/18101-07-02/en

copyright © Liebherr-Werk Ehingen GmbH 2018

3.4 Luffing the boom

DANGER
Danger of accident due to toppling crane!
If the LICCON overload protection turns off while trying to lift the load with the winch, then a subsequent luffing movement can cause the crane to topple over or damage it. Personnel can be severely injured or killed.
▶ Do not lift the load by luffing up the boom, see chapter 4.04.

The speed of crane movement „luffing“ is controlled by the deflection of the corresponding master switch and via the pedal **544** of the engine regulation.

Note
▶ The operating modes are explained in the load chart manual.

3.4.1 Luffing the boom in S/SL/SLF/SL2DB/SDB/SDWV(B/BW) operating mode

▶ Deflect the master switch 1 **480** in direction X-.

Result:

– The boom is luffed up.

▶ Deflect the master switch 1 **480** in direction X+.

Result:

– The boom is luffed down.

3.4.2 Luffing the main boom in operating mode SW

Make sure that the following prerequisites are met:
– The switch **412** is **not** switched to winch 6, master switch 3 **500**.

▶ Deflect master switch 3 **500** in direction Y-.

Result:

– The boom is luffed up.

▶ Deflect master switch 3 **500** in direction Y+.

Result:

– The boom is luffed down.

3.4.3 Luffing the main boom in operating mode SDW (B/BW)

▶ Deflect the master switch 3 **500** in direction X-.

Result:

– The boom is luffed up.

▶ Deflect the master switch 3 **500** in direction X+.

Result:

– The boom is luffed down.

LWE/LR 1600-2-001/18101-07-02/en

copyright © Liebherr-Werk Ehingen GmbH 2018

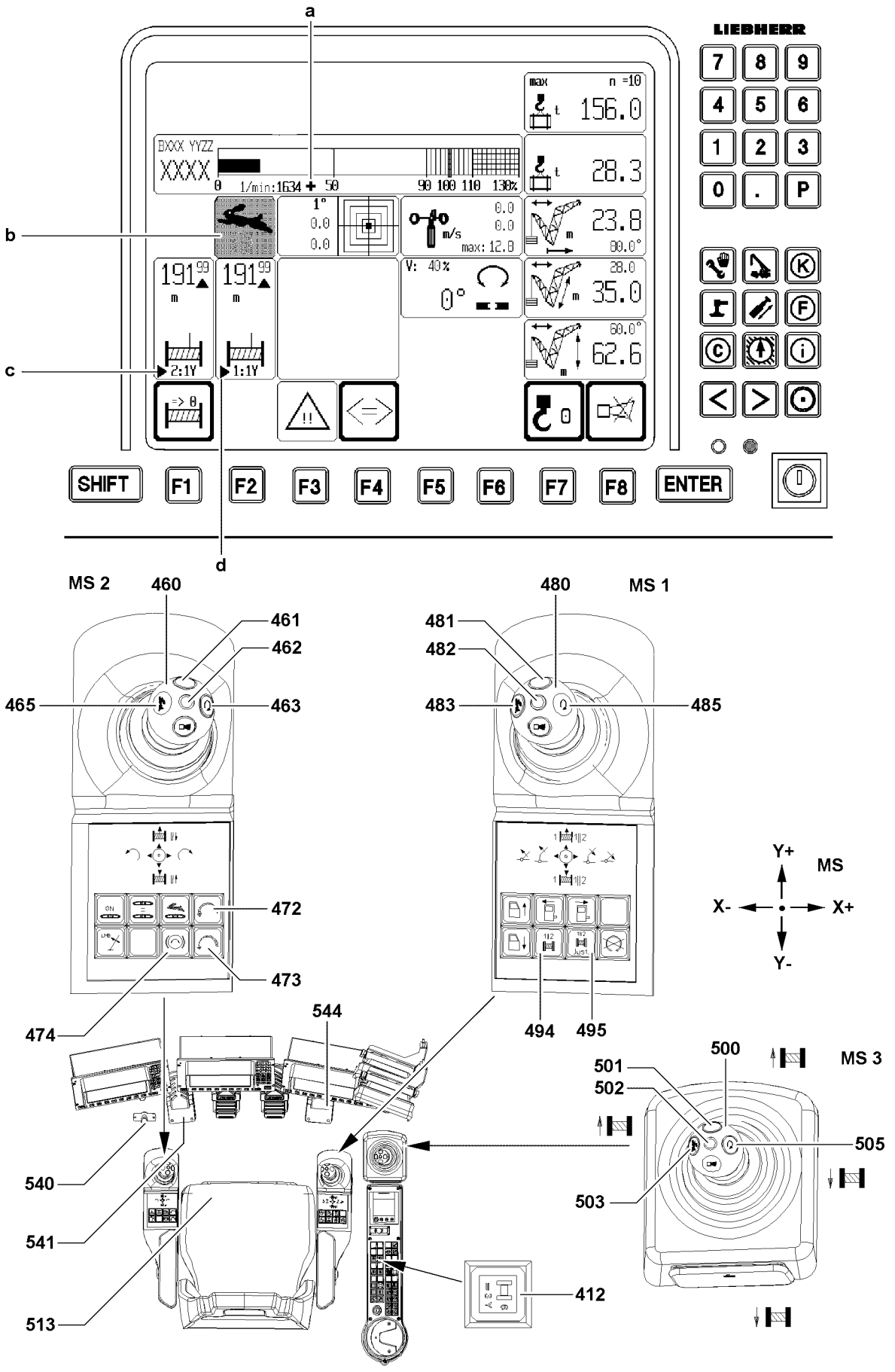

Fig.104897

LWE/LR 1600-2-001/18101-07-02/en

copyright © Liebherr-Werk Ehingen GmbH 2018

3.4.4 Luffing the lattice jib during SW/SDW/(B/BW) operation

▶ Deflect the master switch 1 **480** in direction X-.

Result:

– The lattice jib is luffed up.

▶ Deflect the master switch 1 **480** in direction X+.

Result:

– The lattice jib is luffed down.

3.4.5 Luffing the lattice jib during SDWV(B/BW) operation

▶ Deflect the master switch 3 **500** in direction X-.

Result:

– The lattice jib is luffed up.

▶ Deflect the master switch 3 **500** in direction X+.

Result:

– The lattice jib is luffed down.

3.4.6 Luffing the derrick, for all D-operating modes

Make sure that the following prerequisites are met:
– The switch **412** is **not** switched to winch 6, master switch 3 **500**.

▶ Deflect master switch 3 **500** in direction Y-.

Result:

– The derrick is luffed up.

▶ Deflect master switch 3 **500** in direction Y+.

Result:

– The derrick is luffed down.

LWE/LR 1600-2-001/18101-07-02/en

copyright © Liebherr-Werk Ehingen GmbH 2018

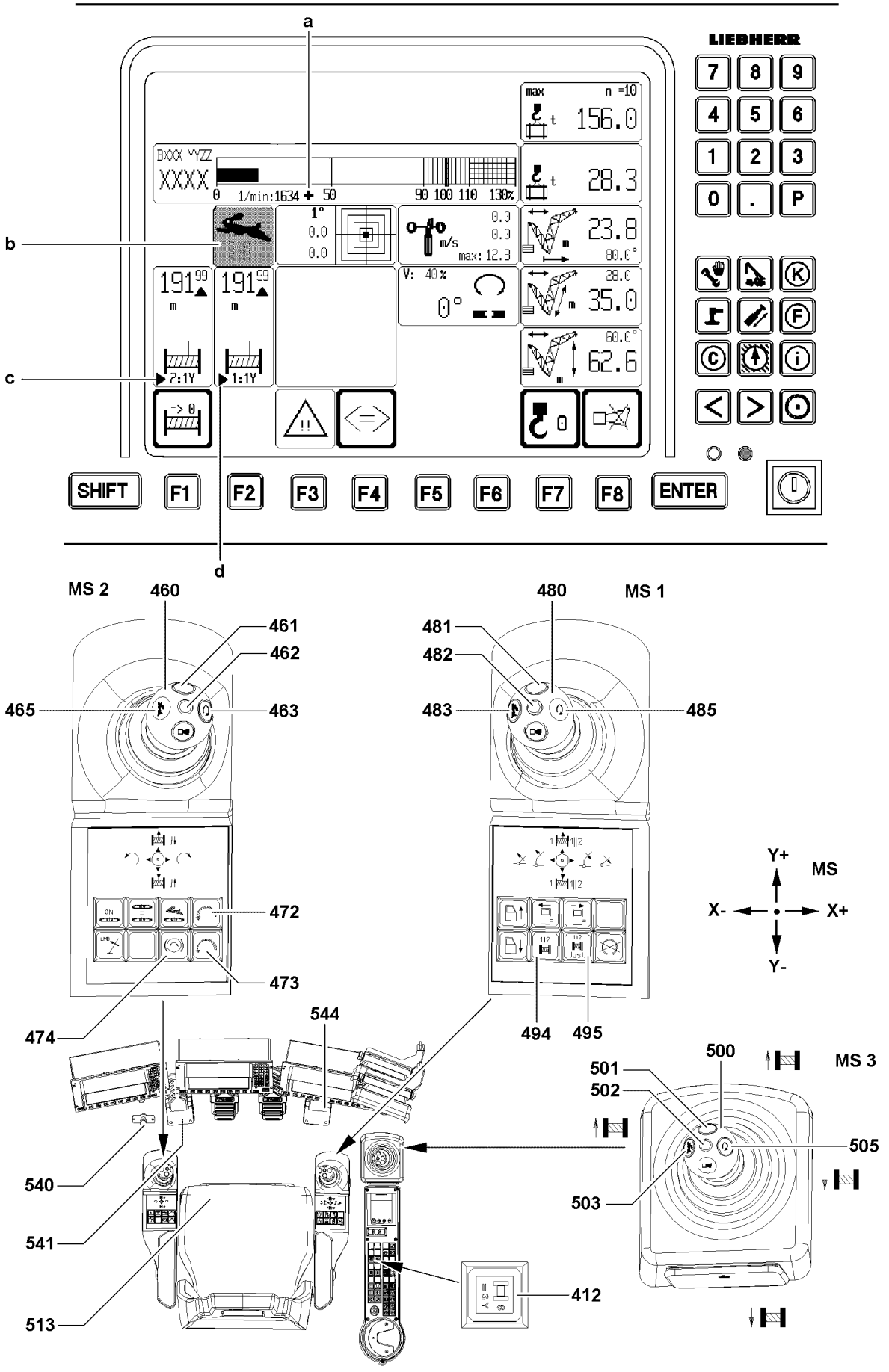

Fig.104897

LWE/LR 1600-2-001/18101-07-02/en

copyright © Liebherr-Werk Ehingen GmbH 2018

3.5 Braking a slewing movement

This crane is equipped with a slewing gear in a closed hydraulic circuit.

Various braking functions are differentiated:
1. Working with automatic slewing gear brake: The hydraulic system brakes the slewing movement, the slewing gear brake is applied after completion of the integration period.
2. Working with manually opened slewing gear brake: The slewing gear brake can be opened and closed manually.
3. Working in strong side wind with additional actuation of the slewing gear brake with the pedal.

3.5.1 Applying and releasing the slewing gear brake manually

Releasing the slewing gear brake manually

DANGER
Danger of accident due to uncontrolled turning crane!
If the slewing gear brake is opened manually and the master switch 2 **460** is **not** deflected, the crane superstructure, as a result of external forces, such as wind, incline position of the crane, etc., can turn slowly due to leakage in the closed hydraulic circuit.

When the slewing gear brake is opened manually and the master switch 2 **460** is **not** deflected:
▶ Make sure that the crane is not turning uncontrolled.

Note
▶ Observe the data in section „Actuating the slewing gear brake with the pedal“!

The slewing gear brake closes automatically if:
– The crane operator gets up from the crane operator's seat.
– The engine is turned off.

The slewing gear brake **cannot** be opened at:
– Slewing gear shut off by the LICCON overload protection.
– Activated working range limitation.

▶ Actuate the switch **474**.

Result:

– The slewing gear brake is released.

– The indicator light **474** lights up.

Applying the slewing gear brake manually

▶ Press the button **474**.

Result:

– The slewing gear brake is applied.

– The indicator light **474** turns off.

copyright © Liebherr-Werk Ehingen GmbH 2018

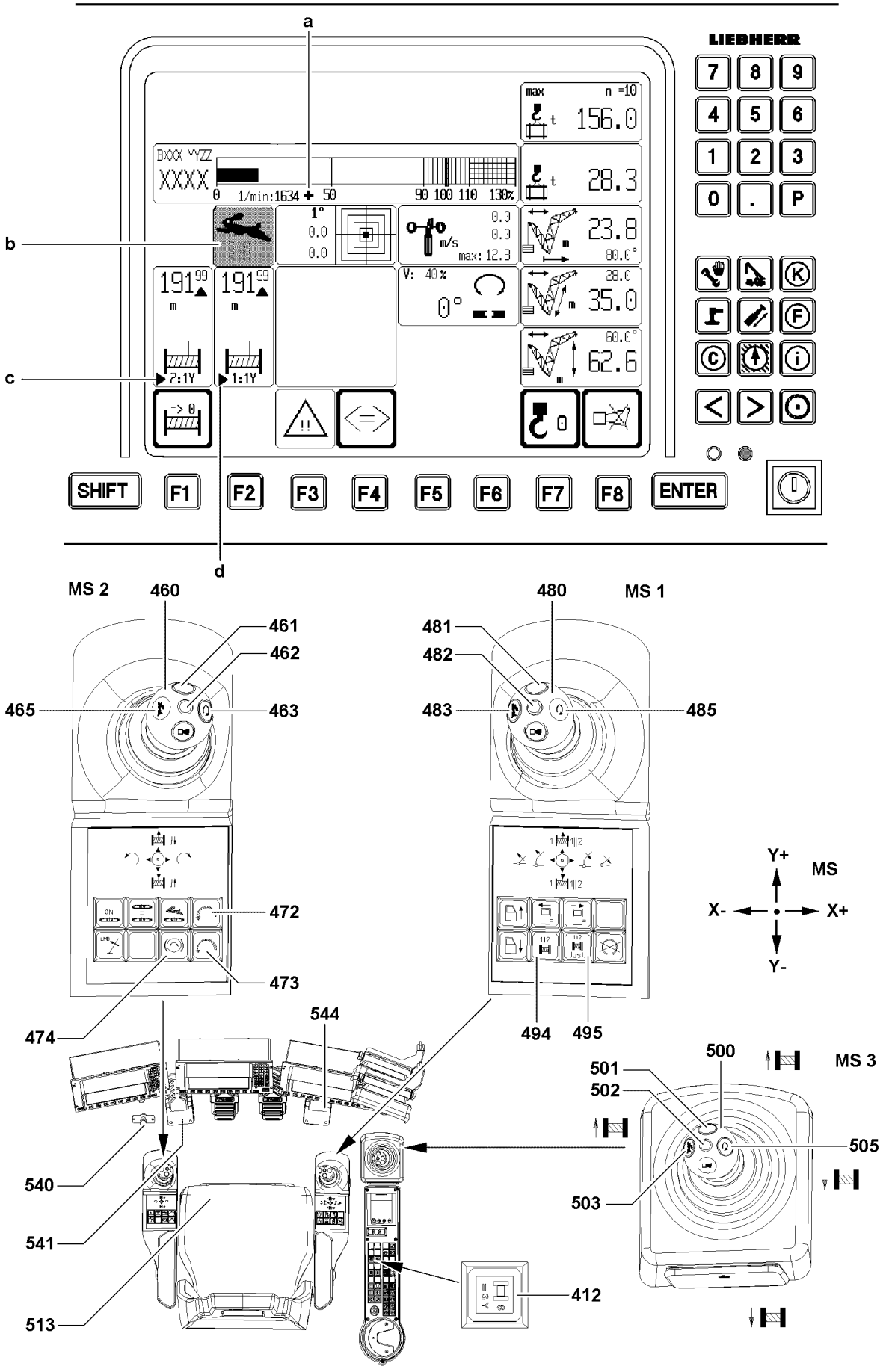

Fig.104897

LWE/LR 1600-2-001/18101-07-02/en

copyright © Liebherr-Werk Ehingen GmbH 2018

3.5.2 Applying the slewing gear brake with the pedal

NOTICE
Danger of property damage on the slewing ring connection!
When actuating the slewing gear brake with the pedal **541**, only part of the braking momentum of the slewing gear brake can be created.

- ▶ Use the pedal **541** to actuate the slewing gear brake only at minimum turning speeds, which means the master switch 2 **460** is almost in zero position.
- ▶ Do not brake the turning movement of the crane by moving the master switch 2 **460** back to the neutral position and / or by abruptly applying the slewing gear brake with the pedal **541**!

Use the pedal **541** to actuate the slewing gear brake only in the following cases:

- Starting out in strong side wind
- Stopping the slewing movement in strong side wind

Starting out in strong side wind

When turning against the wind in strong side wind and with a long boom systems, then the superstructure, due to leakage in the hydraulic motor, will turn into the opposite direction, in relation to the deflection of the master switch.

This can be avoided as follows:

- ▶ Actuate the pedal **541** and deflect the master switch 2 **460** into the desired turning direction.
- ▶ Slowly release the pedal **541** until the superstructure turns in the desired turning direction.

Stopping the slewing movement in strong side wind

- ▶ Slow down the crane with master switch 2 **460** to minimum slewing speed.
- ▶ Apply the pedal **541** carefully, until the crane has come to a standstill at the desired position.

LWE/LR 1600-2-001/18101-07-02/en

copyright © Liebherr-Werk Ehingen GmbH 2018

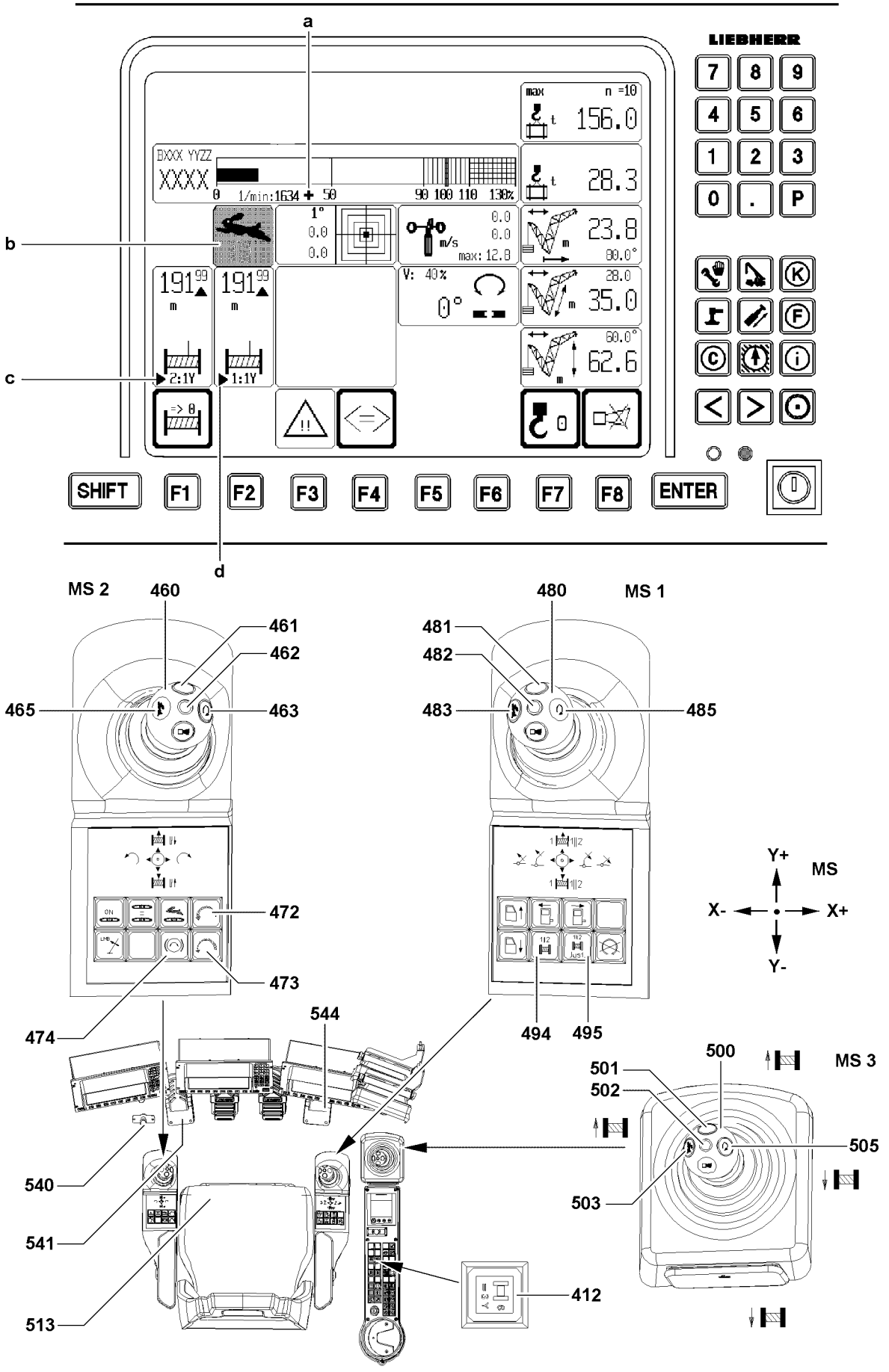

Fig.104897

LWE/LR 1600-2-001/18101-07-02/en

copyright © Liebherr-Werk Ehingen GmbH 2018

3.6 Switching the slewing gear to freewheeling

In order to position the boom over the load more easily, the slewing gear can be switched to freewheeling.

The master switch 2 **460** may not be deflected while doing so.

The slewing gear **cannot** be switched to freewheeling in these situations:
- Slewing gear shut off by the LICCON overload protection.
- Activated working range limitation.

▶ Press the foot button **540**.

Result:

– The slewing gear is switched to freewheeling / coasting.

Problem remedy
With the slewing gear released, the superstructure turns unintentionally (for example due to wind).
▶ Do not release the foot button **540**.
▶ Deflect the master switch 2 **460** in slewing direction and then release the foot button **540**.
▶ Slow down the slewing movement by slowly resetting the master switch 2 **460**.

3.7 Turning the crane superstructure

WARNING
Danger of accident!
▶ Ensure that there are no obstacles in the turning range for the crane and that there are no persons within the danger zone.
▶ Give a short warning signal (horn) before starting a crane movement.

WARNING
Danger of accident due to toppling crane!
If the slewing speed is exceeded, there is the danger that the loads start to swing. The crane can be damaged or topple over. Personnel can be severely injured or killed.
▶ Turning with a load: Initiate and slow down a turning movement extremely sensitively.
▶ Longer boom and larger load: Operate the crane with lower slewing speed.
▶ Observe and adhere to the values in the load chart manual.

The speed of the „turning“ crane movement is controlled via the deflection of master switch 2 **460** and via the pedal **544** of the engine regulation.

In the „Control Parameter“ program, it is possible to preselect the maximum rotational speed.

See chapter 4.02 „LICCON computer system“, section „Control Parameters“.

▶ Deflect the master switch 2 **460** in direction X+.

Result:

– The crane superstructure turns to the right.

▶ Deflect the master switch 2 **460** in direction X-.

Result:

– The crane superstructure turns to the left.

LWE/LR 1600-2-001/18101-07-02/en

copyright © Liebherr-Werk Ehingen GmbH 2018

Empty page!

LWE/LR 1600-2-001/18101-07-02/en

copyright © Liebherr-Werk Ehingen GmbH 2018

4.07 Counterweight

1	Component overview	3
2	Fastening points	4
3	Permissible counterweight assemblies	5
4	Installing the counterweight	6
5	Disassembling the counterweight	15

LWE/LR 1600-2-001/18101-07-02/en

copyright © Liebherr-Werk Ehingen GmbH 2018

LWE/LR 1600-2-001/18101-07-02/en

Fig.195219

copyright © Liebherr-Werk Ehingen GmbH 2018

1 Component overview

The ballast installed on the turntable is generally referred to as the counterweight.

The components are marked with their own weight.

Description of the **turntable extension**, see chapter 4.07.10

Dimensions and weights, see chapter 1.03.

1.1 Counterweight

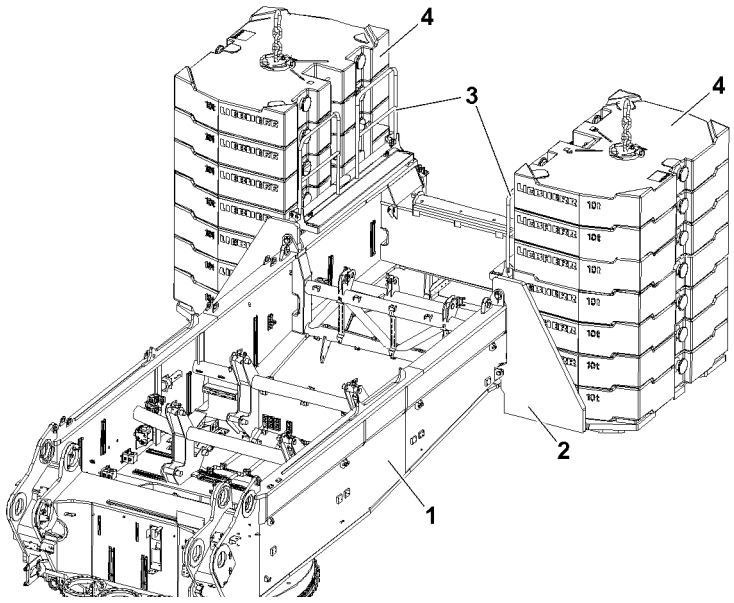

Fig.147048: Component overview counterweight

1 Turntable
2 Counterweight bracket
3 Railings
4 Counterweight plates

1.2 Counterweight plate

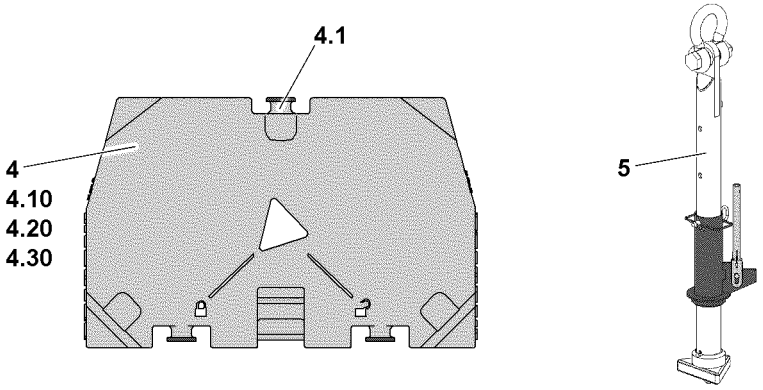

Fig.147026: Counterweight plate component overview

4 Counterweight plate
4.1 Bitt
4.10 10.0 t counterweight plate
4.20 7.5 t counterweight plate
4.30 5.0 t counterweight plate
5 Receptacle stud

LWE/LR 1600-2-001/18101-07-02/en

copyright © Liebherr-Werk Ehingen GmbH 2018

2 Fastening points

WARNING
Danger of falling!
Death, severe bodily injuries, property damage.
- ▶ Make sure that the fastening equipment is properly fastened on the fastening points.
- ▶ Make sure that the fastening equipment has a sufficient length.
- ▶ Make sure that there are no persons or obstacles within the danger zone.
- ▶ Pay attention to the labels of the fastening points.

2.1 Counterweight bracket

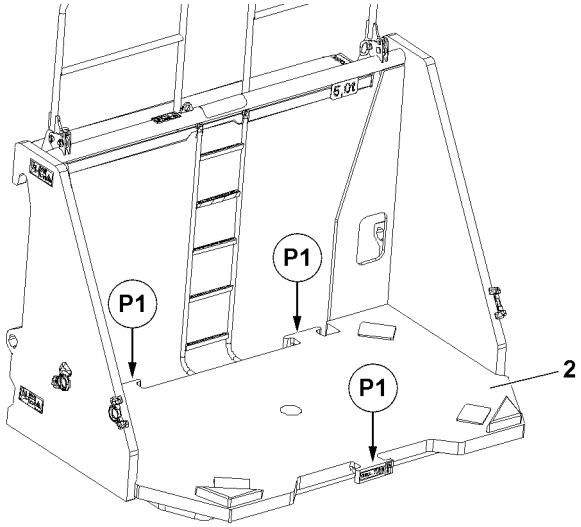

Fig.147044: Fastening points Counterweight bracket

Fastening points	
P1	Counterweight bracket

2.2 Counterweight plate

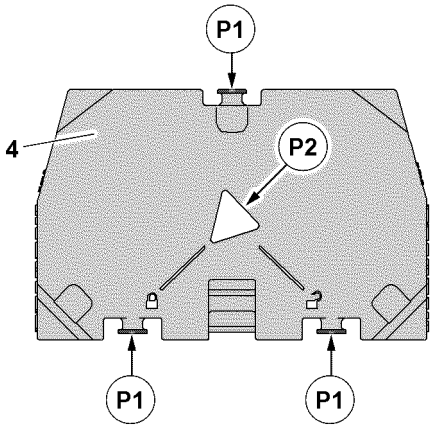

Fig.147027: Fastening points Counterweight plate

LWE/LR 1600-2-001/18101-07-02/en

copyright © Liebherr-Werk Ehingen GmbH 2018

„Bitt“ fastening system	
P1	Counterweight plate

„Twistlock“ fastening system (with help of the receptacle stud)	
P2	Counterweight plate

3 Permissible counterweight assemblies

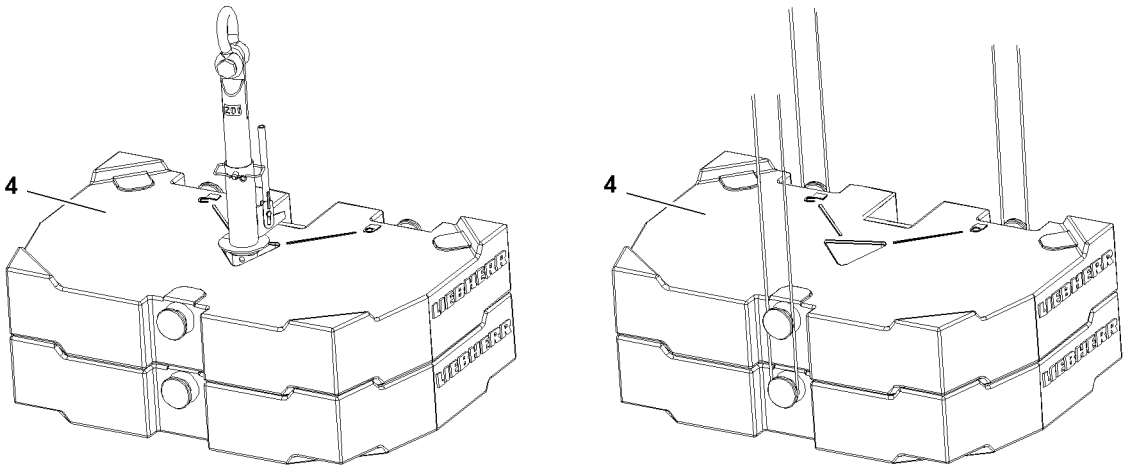

Fig.118980: Counterweight plates: fastened with Twistlock // fastened with bitts

WARNING
Overload of fastening points counterweight plates!
If more than the permissible number of counterweight plates are lifted together, then the bitt or the receptacle stud can be overloaded.
The counterweight plates and components can fall down.
Death, severe bodily injuries, property damage.
▶ Fasten only the maximum permissible number of counterweight plates per lift.

WARNING
Incorrect structure of counterweight assemblies!
When lifting mixed weight counterweight assemblies, and the heavier counterweight plates are placed on top, the fastening points can be overloaded.
The counterweight plates and components can fall down.
Death, severe bodily injuries, property damage.
▶ Always stack the heavier counterweight plate on the bottom in the counterweight assembly.

Individual weight	Maximum number of same counterweight plates per lift over	
Counterweight plate	Twistlock	Bitt
5.0 t	2	1
7.5 t	2	2
10.0 t	2	2

LWE/LR 1600-2-001/18101-07-02/en

copyright © Liebherr-Werk Ehingen GmbH 2018

4 Installing the counterweight

WARNING
Danger of falling!
During assembly / disassembly, inspection and maintenance work, personnel must be secured with appropriate aids to prevent them from falling.
If this is not observed, assembly personnel could fall and be killed or seriously injured.
- ▶ All work at a height, when there is a danger of falling, must be carried out with suitable aids.
- ▶ If aids are not available and work cannot be carried out from the ground, then the assembly personnel must secure themselves with the supplied fall arrest system to prevent falling, see the Crane operating instructions, chapter 2.04.
- ▶ If fall protection equipment is available, then it must be used, see the Crane operating instructions, chapter 2.06.
- ▶ When lifting, lowering, swinging crane parts in and out, no persons may remain in the danger zone.
- ▶ If railings are present on the components, then they must be brought into the corresponding position and secured for assembly / disassembly work.
- ▶ Only step on the aids, ladders and catwalks with clean shoes.
- ▶ Keep aids, ladders and catwalks free of heavy dirt, snow and ice.
- ▶ During all assembly and disassembly work, maintenance work and inspections, travel or crane operation is prohibited.
- ▶ Remaining on a suspended load is prohibited.
- ▶ Stepping or walking on crane components and lattice sections, which have an incline of more than 20° is prohibited.
- ▶ For all assembly work, the crane operator of the main crane must be in voice contact with the crane operator / crane operators of the auxiliary crane / auxiliary cranes.
- ▶ For assembly / disassembly tasks, the crane operator may only initiate crane movements when the responsible guide has explicitly released the movement.

WARNING
Danger of impact / crushing!
When installing / removing crane components with the auxiliary crane, crane components can start to swing back and forth.
When lifting / lowering and positioning crane components, there is an increased danger of impacts / crushing.
Personnel can be caught and thereby injured or killed.
- ▶ Make sure that personnel cannot be caught by components.
- ▶ When working in danger zones: Use aids to protect limbs.
- ▶ Guide components with suitable aids to minimize oscillation.

DANGER
The components can fall down!
If the corresponding components are disengaged from the auxiliary crane before the corresponding component is pinned, the corresponding component can fall down and fatally injure personnel.
- ▶ Do not disengage the auxiliary crane until the respective component is pinned and secured.

WARNING
The crane can topple over!
If the turntable with installed counterweight is turned without the boom installed, then the crane can topple over.
Death, severe bodily injuries, property damage.
- ▶ Always leave the turntable with an installed counterweight and without a boom in travel position.

LWE/LR 1600-2-001/18101-07-02/en

copyright © Liebherr-Werk Ehingen GmbH 2018

Make sure that the following prerequisites for **LR 1600/2** are met:
- The crane is horizontally aligned.
- The turntable is positioned in the „travel direction“ (parallel to the crawler travel gear).
- The central ballast is properly installed.
- The SA-frame is erected to at least 90°.
- The boom is not assembled.
- An auxiliary crane is available.

Make sure that the following prerequisites for **LR 1600/2-W** are met:
- The crane is properly supported.
- The crane is horizontally aligned.
- The turntable is positioned in the „travel direction“ (parallel to the crawler travel gear).
- The central ballast is properly installed.
- The SA-frame is erected to at least 90°.
- The boom is not assembled.
- An auxiliary crane is available.

4.1 Bringing the railings on the counterweight brackets into the operating position

The counterweight brackets are located on the ground or on a substructure with load bearing capacity:
▶ Bring the railing into the operating position, see chapter 2.06.

4.2 Climbing up / climbing down the counterweight bracket

To pin the counterweight brackets **2** on the turntable **1**, assembly personnel must climb down from the upper belt of the turntable using the ladder **2.1** on the counterweight brackets **2**. After pinning the counterweight brackets **2**, they must climb up again using the ladder **2.1** on the upper belt of the turntable.

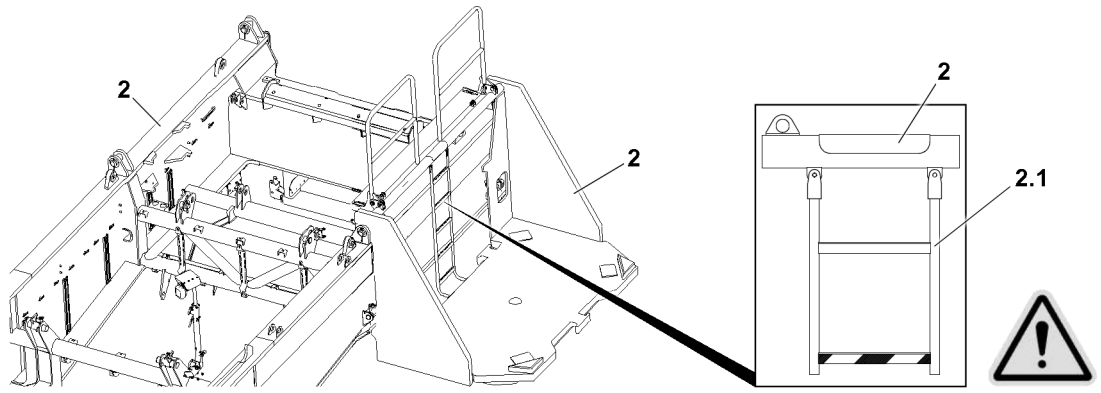

Fig.149272: Climbing up / climbing down the counterweight bracket

WARNING
Danger of slipping due to small step depth!
Death, severe bodily injuries.
▶ Step on the ladders always with utmost caution.
▶ When climbing up the ladder, always use the 3-point support, see chapter 2.04.10.
▶ When climbing down the ladder, always use the 3-point support, see chapter 2.04.10.

WARNING
Danger of falling!
During assembly work on the counterweight bracket, personnel can fall down.
Death, severe bodily injuries.
▶ Use personal protective equipment.

▶ Climb on the ladder **2.1** and counterweight bracket **2** with extreme caution.

copyright © Liebherr-Werk Ehingen GmbH 2018

4.3 Assembling the counterweight brackets on the turntable

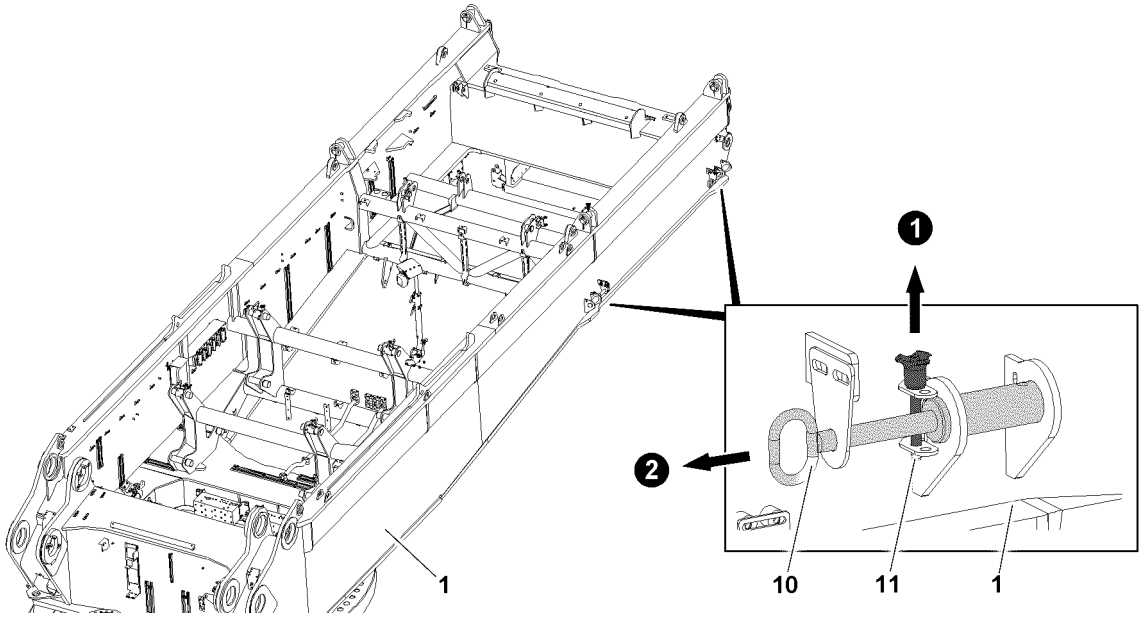

Fig.147038: Preparing the turntable for the assembly of the counterweight brackets

Note

▶ The assembly / disassembly of the counterweight brackets is explained on a counterweight bracket as an example.

Make sure that the following prerequisites are met:

– The retaining elements **11** are removed on all four pin points on the turntable **1**.
– The pins **10** are completely unpinned on both sides on the turntable **1**.

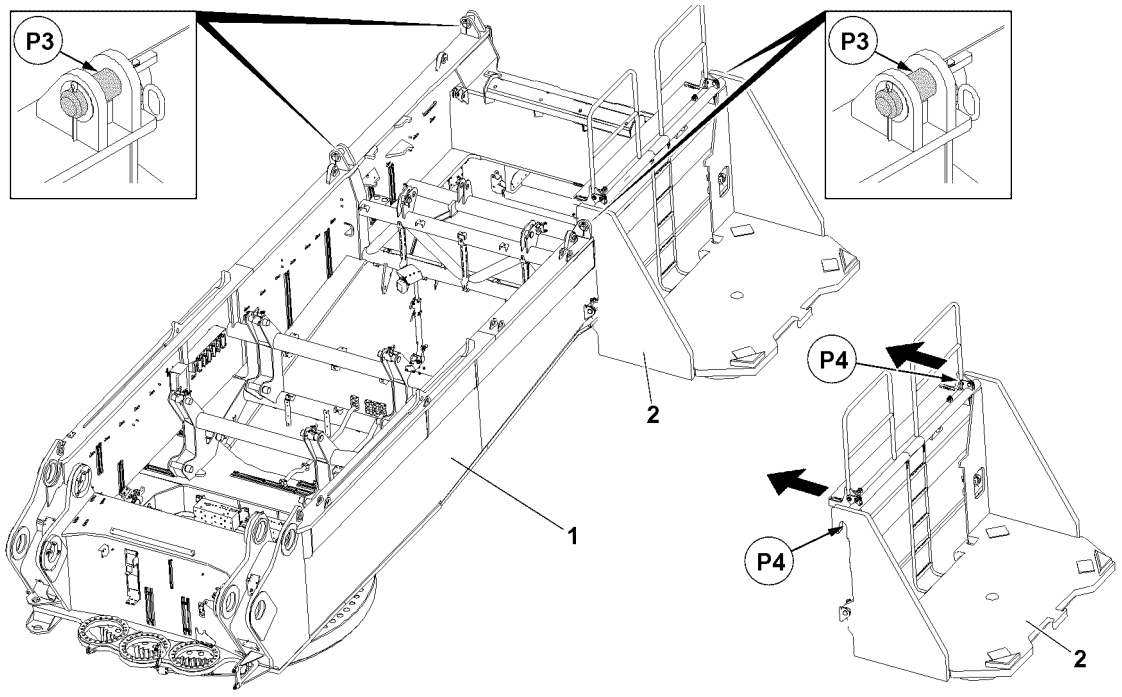

Fig.147039: Assembling the counterweight bracket

▶ Fasten the counterweight bracket **2** properly to the auxiliary crane, see section „Fastening points“.

LWE/LR 1600-2-001/18101-07-02/en

copyright © Liebherr-Werk Ehingen GmbH 2018

- ▶ Swing the counterweight bracket **2** in with the auxiliary crane to the hook pins at the points **P3** on the turntable.
- ▶ Hang the counterweight bracket **2** with the hangers (points **P4**) on the hook pins at the points **P3** on the side on the turntable **1**.
- ▶ Lower the counterweight bracket **2** completely on the hook pins (points **P3**).

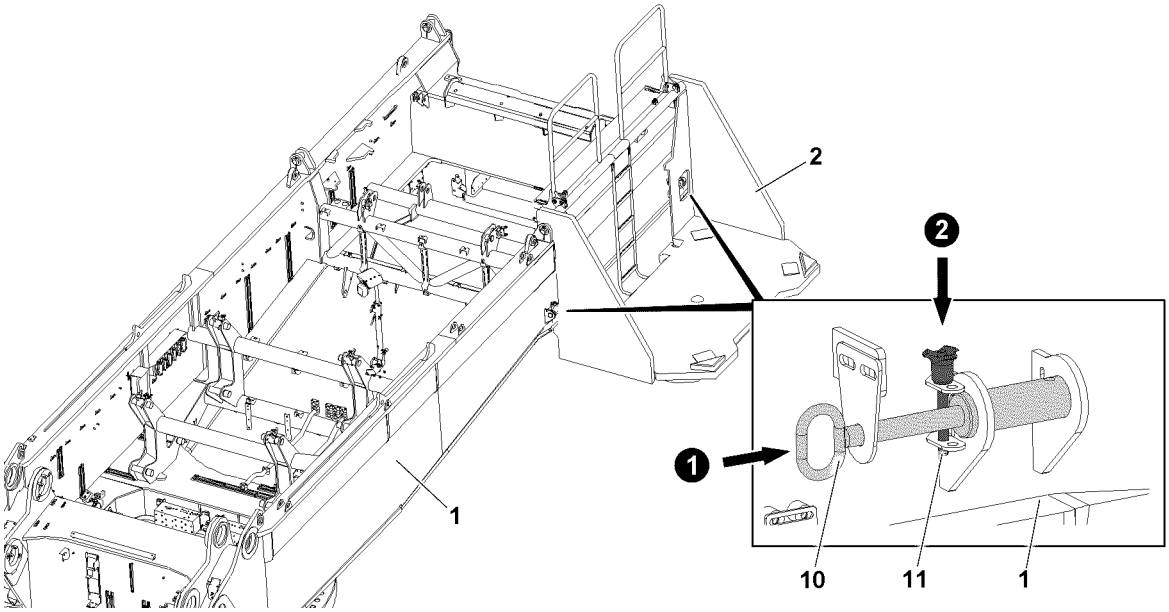

Fig.147040: Securing the counterweight bracket on the turntable

When the counterweight bracket **2** is properly hooked on the hook pins:

- ▶ Insert the pins **10** on both sides and secure with the retaining element **11**.

Result:

– The counterweight bracket **2** is pinned with the turntable **1**.

- ▶ Make sure that the pins **10** are secured with the retaining elements **11**.
- ▶ Release the fastening equipment on the counterweight bracket **2** and remove the auxiliary crane.
- ▶ Properly assemble the second counterweight bracket **2**.

4.4 Placing the counterweight plates

WARNING
Damaged counterweight plates!
Damage on the counterweight plates can cause the fastening equipment to release.
The counterweight plates and components can fall down.
Death, severe bodily injuries, property damage.
- ▶ Do not use damaged counterweight plates and replace them immediately.

WARNING
Counterweight too low / too high!
If the placed counterweight deviates from the specified data in the load charts or the assembly condition, then the crane can be damaged or topple over.
Death, severe bodily injuries, property damage.
- ▶ Place the counterweight according to the data in the load chart.
- ▶ Before placing the counterweight plates, observe the maximum permissible counterweight depending on the assembly conditions, see chapter 3.06.

LWE/LR 1600-2-001/18101-07-02/en

copyright © Liebherr-Werk Ehingen GmbH 2018

WARNING
Asymmetrical counterweight distribution!
If more than 20 t are asymmetrically placed on / removed from the counterweight stacks, the crane can topple over.
Death, severe bodily injuries, property damage.
- ▶ A weight difference between the right and left counterweight stack of more than 20 t is prohibited.
- ▶ Place / remove the counterweight assemblies alternately symmetrically on the left and right on the counterweight stack.

WARNING
Toppling counterweight stack!
Lopsided stacked counterweight plates create instability in the counterweight stack.
The counterweight plates can tip from the counterweight brackets and cause the crane to topple over.
Death, severe bodily injuries, property damage.
- ▶ Make sure that the counterweight plates are placed correctly in the centerings.

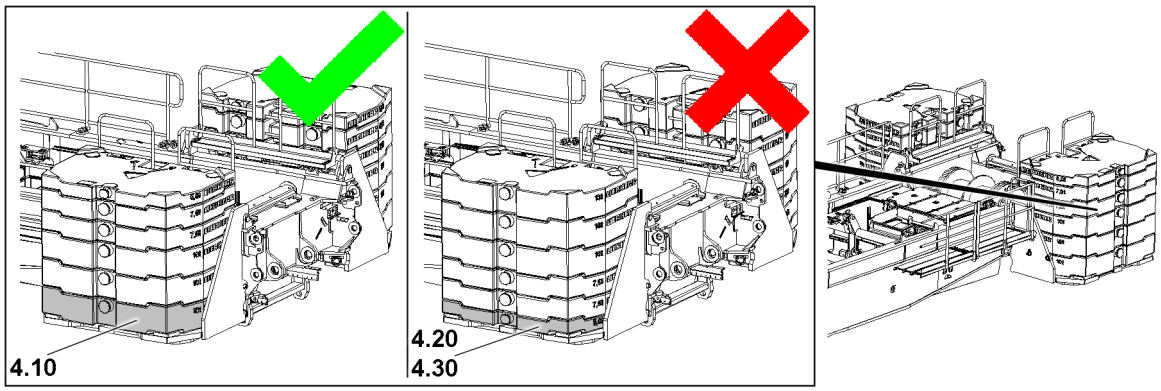

Fig.147041: Ballasting the counterweight stack

WARNING
Falling counterweight plates!
If the ballasting sequence is not adhered to when placing the counterweights on the counterweight brackets, the counterweight plate located at the bottom of the counterweight stack may be damaged.
The counterweight plates can fall down from the counterweight stack.
Death, severe bodily injuries, property damage.
- ▶ Make sure that the counterweight stack is only started with 10 t counterweight plates **2.10**.
- ▶ Make sure that the counterweight stack is never started with 5.0 t counterweight plates **2.20** or 7.5 t counterweight plates **2.30**.
- ▶ Further ballasting from the first 10 t counterweight plates **2.10** in the counterweight stack can be continued with 5.0 t or 7.5 t counterweight plates.

Make sure that the following prerequisite is met:
- – There are no obstacles, objects or personnel in the danger zone.

LWE/LR 1600-2-001/18101-07-02/en

copyright © Liebherr-Werk Ehingen GmbH 2018

4.4.1 Placing the counterweight plates, fastening system: „Twistlock“

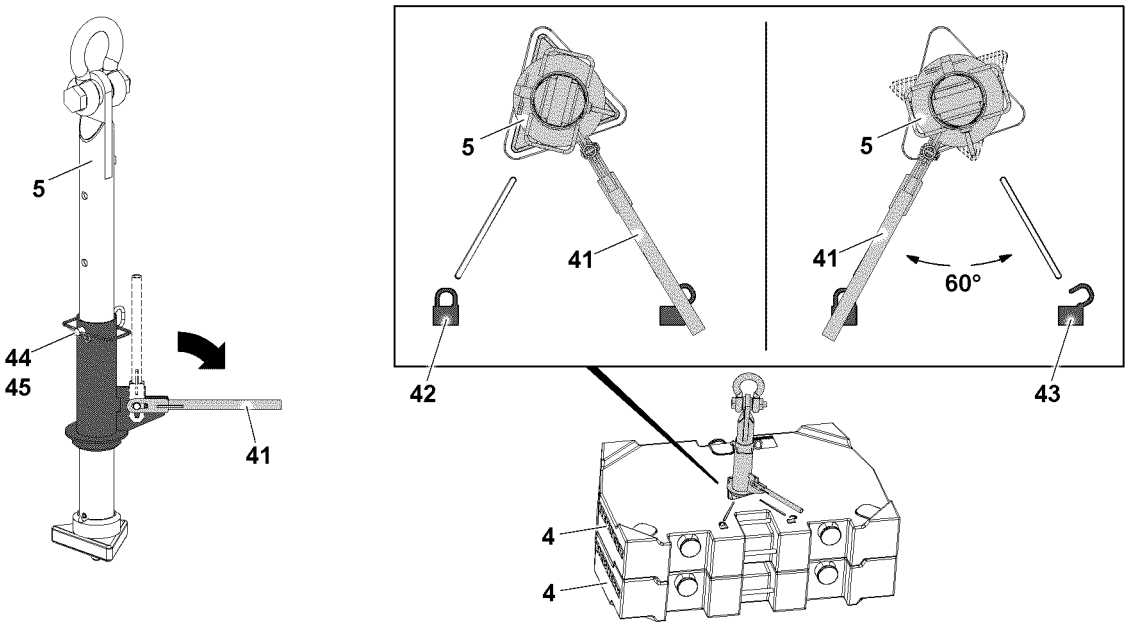

Fig.147033: Counterweight plates, fastening system: „Twistlock“

WARNING
Danger of accident!
If more than the permissible two counterweight plates are lifted with the receptacle stud, the receptacle stud will be overloaded and can be damaged.
Death, severe bodily injuries, property damage.
- ▶ Make sure that the counterweight plates are placed correctly in the centerings.
- ▶ Replace damaged counterweight plates.

WARNING
The Twistlock system opens by itself!
If the receptacle stud is not correctly locked, the Twistlock system can open by itself.
Counterweight plates can fall down.
Death, severe bodily injuries, property damage.
- ▶ Make sure, when initiating a lift, that the lever points directly to the „Locked“ icon.

WARNING
Damage of receptacle stud and counterweight plates!
If two counterweight plates are lifted which do not lay correctly in their centerings, the receptacle stud and the counterweight plates can be damaged!
Damage can cause the counterweight plates to fall down.
Death, severe bodily injuries, property damage.
- ▶ Make sure that the counterweight plates to be lifted are placed correctly in the centerings.

Note
- ▶ During a lift, the locked Twistlock system cannot release by itself due to its gravitational retention.
- ▶ During a lift, the locked Twistlock system cannot be released by hand due to its gravitational retention.

To stack the counterweight plate(s), use the receptacle stud **5**.

Before the receptacle stud **5** is guided into the counterweight plates, it must be ensured that the length of the receptacle stud is set correctly. The length of the receptacle stud **5** can be adjusted with the pin **44**.

copyright © Liebherr-Werk Ehingen GmbH 2018

If the length of the receptacle stud **5** is to be adjusted:

▶ Release and unpin the pin **44**.
▶ Adjust the length of the receptacle stud by moving the receptacle stud **5**.
▶ Insert the pin **44** and secure it with the retaining element **45**.
▶ Fasten the receptacle stud **5** to the auxiliary crane and guide it into the counterweight plate(s) **4**.
▶ Pull the lever **41** up and fold it down.
▶ Turn the lever **41** 60° until the lever **41** points to the icon **42**.

Result:

– The receptacle stud **5** is locked with the counterweight plate(s) **4**.

▶ Lift the counterweight plate(s) **4** with the receptacle stud **5** and take down carefully onto the centerings on the counterweight bracket.

When the counterweight plate(s) are taken down:

▶ Turn the lever **41** 60° until the lever **41** points to the icon **43**.

Result:

– The receptacle stud **5** is unlocked.

▶ Carefully pull the receptacle stud **5** out from the counterweight plate(s) **4**.
▶ Stack the counterweight plate(s) **4** alternately on both sides according to the load chart, observe the danger notes.

4.4.2 Placing the counterweight plates, fastening points: Bitt

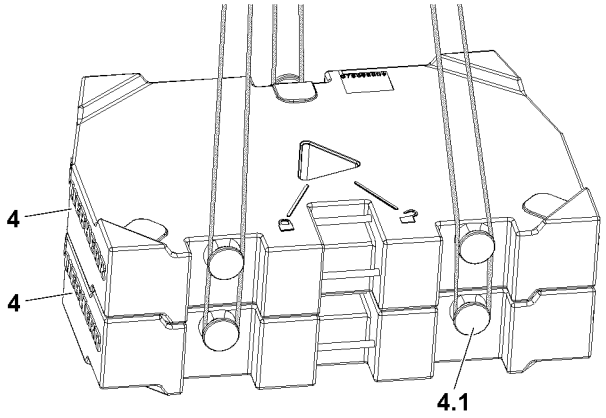

Fig.147034: Counterweight plates, fastening system: „Bitt“

WARNING
Falling counterweight plates!
If more than the permissible loads are lifted, then the bitts **4.1** are overloaded and the counterweight plates can fall down.
Death, severe bodily injuries, property damage.
▶ Place the counterweight plates individually or as a package, maximum 20 t , 3 fastening points.
▶ Replace damaged counterweight plates immediately.

WARNING
Incorrect handling of the fastening equipment!
If fastening equipment cannot be attached correctly and if it is not secured sufficiently to prevent it from loosening up, loads can fall down.
Death, severe bodily injuries, property damage.
▶ Make sure that the fastening equipment is correctly attached on the bitts **4.1** and that it is secured sufficiently to prevent it from loosening up.

LWE/LR 1600-2-001/18101-07-02/en

copyright © Liebherr-Werk Ehingen GmbH 2018

- ▶ Fasten the counterweight plate(s) **4** to the auxiliary crane.
- ▶ Place the counterweight plate **4** individually or in an assembly of maximum two plates with the auxiliary crane on the centerings on the counterweight bracket.
- ▶ Stack the counterweight plate(s) **4** alternately on both sides according to the load chart, observe the danger notes.

4.5 Securing the counterweight

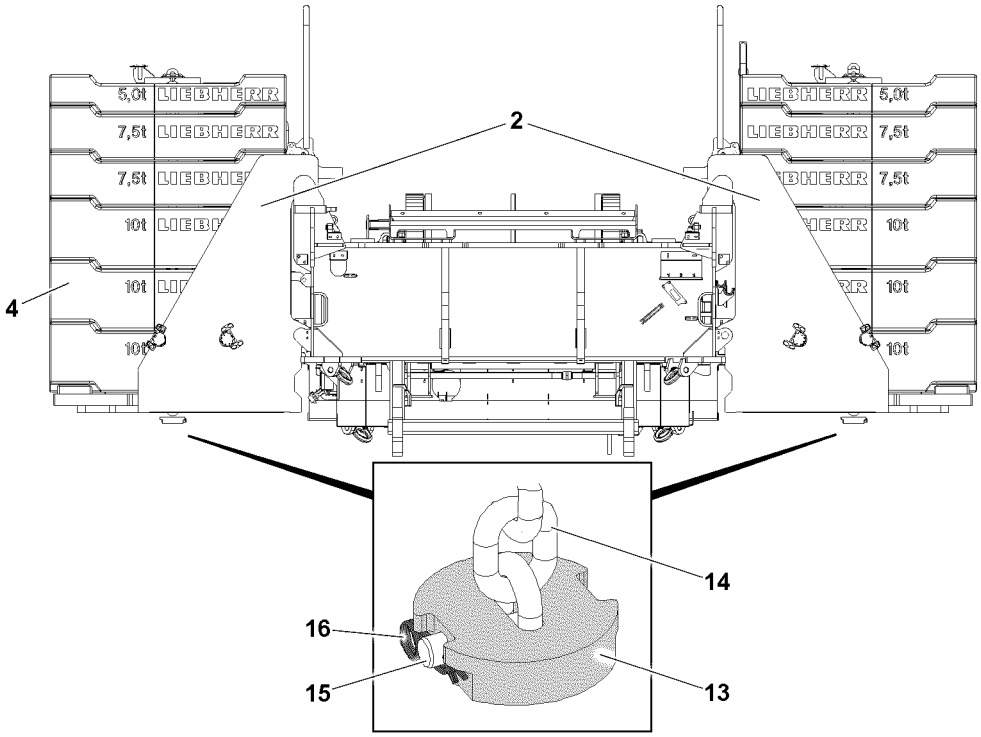

Fig.147042: Securing the counterweight stack

WARNING
Unsecured counterweight plates!
If the counterweight is not or not correctly secured, then it can fall down.
Death, severe bodily injuries, property damage.
- ▶ Before starting crane operation, the complete counterweight must be secured.

Make sure that the following prerequisite is met:
- The counterweight has been stacked according to the load chart and the operating instructions.

- ▶ Guide the retaining chain **14** carefully on the auxiliary crane from top through the counterweight stack.
- ▶ Pin the retaining chain **14** on the bottom with the retaining plate **13**: Insert the pin **15** in the lowest chain link and secure with the retaining element **16**.
- ▶ Carefully tighten the retaining chain **14** with the auxiliary crane vertically.

LWE/LR 1600-2-001/18101-07-02/en

copyright © Liebherr-Werk Ehingen GmbH 2018

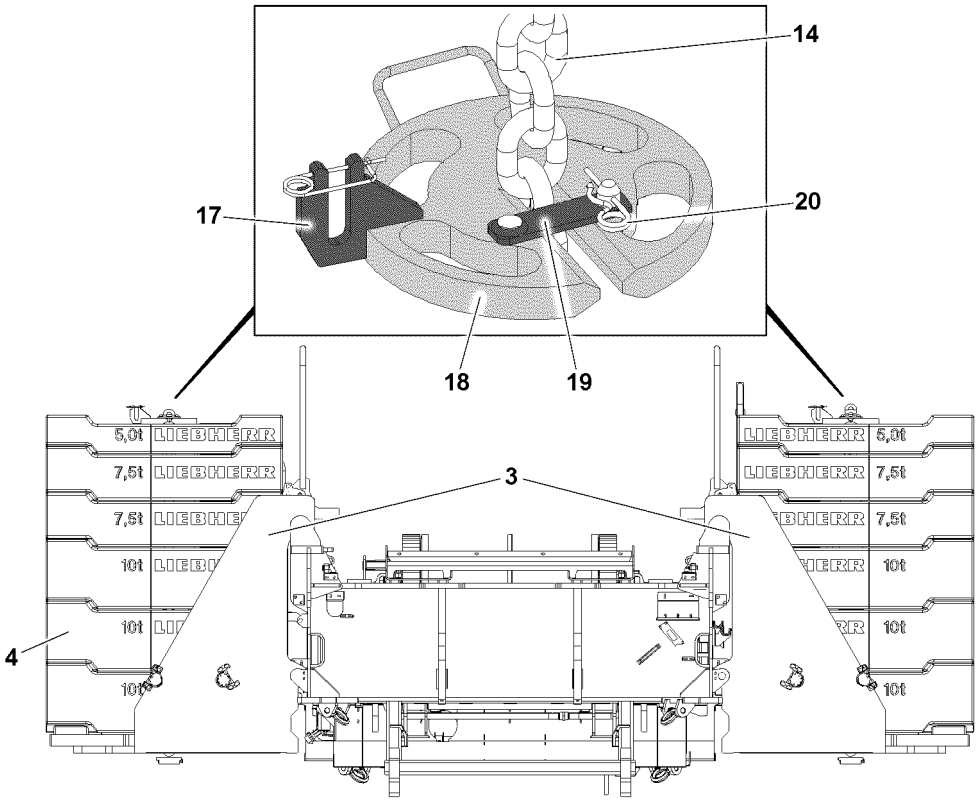

Fig.147043: Securing the counterweight stack

Note

▶ To optimally secure the counterweight stack, keep the retaining chain between the retaining plates as short as possible!

▶ Push the retaining plate **18** on top on the side over the retaining chain **14**.
▶ Insert the retaining plate **19** in the retaining plate **18**.
▶ Secure the retaining plate **19** with the retaining element **20**.

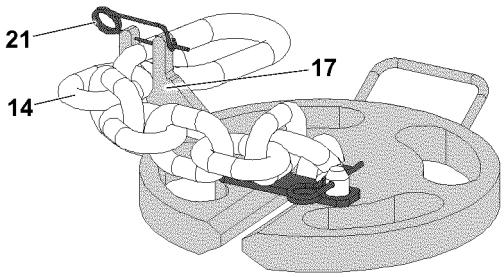

Fig.147037: Securing the chain overhang

WARNING

Danger of accident due to chain overhang!
If the stack height of the counterweight plates is not high enough, the chain overhang of the retaining chain **14** on the side on the counterweight stack can fall down.
Death, severe bodily injuries, property damage.

▶ Secure the chain overhang from falling down.

▶ Hang the chain overhang of the retaining chain **14** into the fork **17** and secure with retaining element **21** to prevent it from falling down.

LWE/LR 1600-2-001/18101-07-02/en

copyright © Liebherr-Werk Ehingen GmbH 2018

5 Disassembling the counterweight

WARNING
Danger of falling!
During assembly / disassembly, inspection and maintenance work, personnel must be secured with appropriate aids to prevent them from falling.
If this is not observed, assembly personnel could fall and be killed or seriously injured.
- ▶ All work at a height, when there is a danger of falling, must be carried out with suitable aids.
- ▶ If aids are not available and work cannot be carried out from the ground, then the assembly personnel must secure themselves with the supplied fall arrest system to prevent falling, see the Crane operating instructions, chapter 2.04.
- ▶ If fall protection equipment is available, then it must be used, see the Crane operating instructions, chapter 2.06.
- ▶ When lifting, lowering, swinging crane parts in and out, no persons may remain in the danger zone.
- ▶ If railings are present on the components, then they must be brought into the corresponding position and secured for assembly / disassembly work.
- ▶ Only step on the aids, ladders and catwalks with clean shoes.
- ▶ Keep aids, ladders and catwalks free of heavy dirt, snow and ice.
- ▶ During all assembly and disassembly work, maintenance work and inspections, travel or crane operation is prohibited.
- ▶ Remaining on a suspended load is prohibited.
- ▶ Stepping or walking on crane components and lattice sections, which have an incline of more than 20° is prohibited.
- ▶ For all assembly work, the crane operator of the main crane must be in voice contact with the crane operator / crane operators of the auxiliary crane / auxiliary cranes.
- ▶ For assembly / disassembly tasks, the crane operator may only initiate crane movements when the responsible guide has explicitly released the movement.

WARNING
Danger of impact / crushing!
When installing / removing crane components with the auxiliary crane, crane components can start to swing back and forth.
When lifting / lowering and positioning crane components, there is an increased danger of impacts / crushing.
Personnel can be caught and thereby injured or killed.
- ▶ Make sure that personnel cannot be caught by components.
- ▶ When working in danger zones: Use aids to protect limbs.
- ▶ Guide components with suitable aids to minimize oscillation.

DANGER
The components can fall down!
If the corresponding components are disengaged from the auxiliary crane before the corresponding component is pinned, the corresponding component can fall down and fatally injure personnel.
- ▶ Do not disengage the auxiliary crane until the respective component is pinned and secured.

WARNING
The crane can topple over!
If the turntable with installed counterweight is turned without the boom installed, then the crane can topple over.
Death, severe bodily injuries, property damage.
- ▶ Always leave the turntable with an installed counterweight and without a boom in travel position.

LWE/LR 1600-2-001/18101-07-02/en

copyright © Liebherr-Werk Ehingen GmbH 2018

Make sure that the following prerequisites for **LR 1600/2** are met:
- The crane is horizontally aligned.
- The turntable is positioned in the „travel direction“ (parallel to the crawler travel gear).
- The central ballast is properly installed.
- The SA-frame is erected to at least 90°.
- The boom is not assembled.
- An auxiliary crane is available.

Make sure that the following prerequisites for **LR 1600/2-W** are met:
- The crane is properly supported.
- The crane is horizontally aligned.
- The turntable is positioned in the „travel direction“ (parallel to the crawler travel gear).
- The central ballast is properly installed.
- The SA-frame is erected to at least 90°.
- The boom is not assembled.
- An auxiliary crane is available.

5.1 Releasing the counterweight

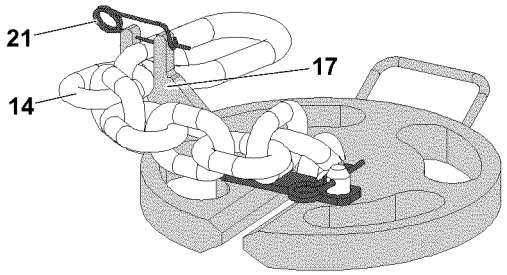

Fig.147037: Releasing the chain overhang

With a secured chain overhang:
▶ Remove the retaining element **21**, unhook the retaining chain **14** from the fork **17**.

LWE/LR 1600-2-001/18101-07-02/en

copyright © Liebherr-Werk Ehingen GmbH 2018

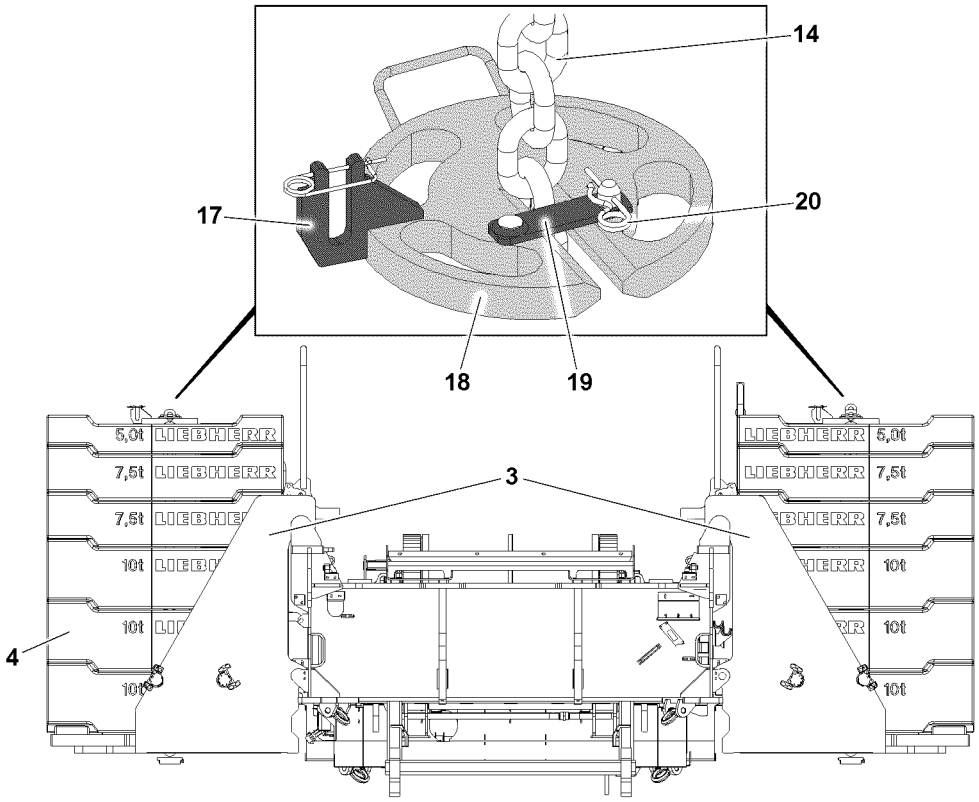

Fig.147043: Releasing the counterweight

- ▶ Fasten the retaining chain **14** to the auxiliary crane and tension it slightly.
- ▶ Release and remove the retaining plate **19**. Remove the retaining element **20**.
- ▶ Remove the retaining plate **18** on the side.

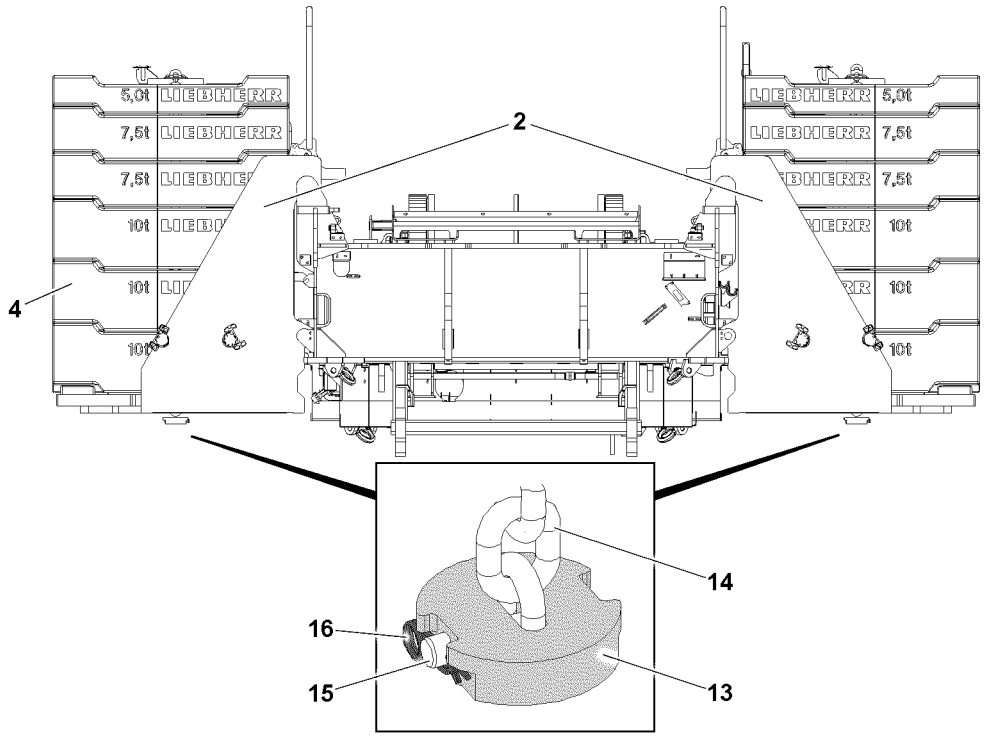

Fig.147042: Releasing the counterweight

- ▶ Lower the retaining chain **14** until the lower retaining plate **13** is freely accessible.
- ▶ Remove the retaining element **16** and unpin the pin **15**.

LWE/LR 1600-2-001/18101-07-02/en

copyright © Liebherr-Werk Ehingen GmbH 2018

▶ Remove the retaining plate **13**.
▶ Carefully pull the retaining chain **14** through upward and remove it.

5.2 Removing the counterweight plates

WARNING
Damaged counterweight plates!
Damage on the counterweight plates can cause the fastening equipment to release.
The counterweight plates and components can fall down.
Death, severe bodily injuries, property damage.
▶ Do not use damaged counterweight plates and replace them immediately.

WARNING
Asymmetrical counterweight distribution!
If more than 20 t are asymmetrically placed on / removed from the counterweight stacks, the crane can topple over.
Death, severe bodily injuries, property damage.
▶ A weight difference between the right and left counterweight stack of more than 20 t is prohibited.
▶ Place / take-down the counterweight assemblies alternately symmetrically on the left and right on the counterweight stack.

Note
▶ The counterweight plates are marked with their own weights!

Make sure that the following prerequisite is met:
– The retaining chains are disassembled.

5.2.1 Removing the counterweight plates, fastening system: „Twistlock“

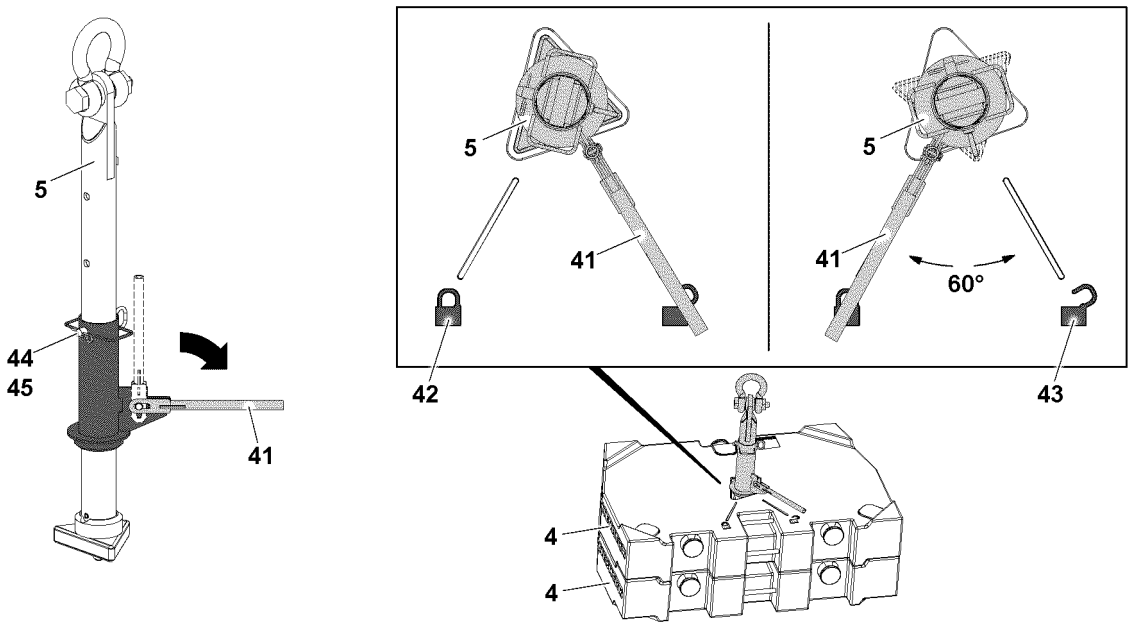

Fig.147033: Counterweight plates, fastening system: „Twistlock“

LWE/LR 1600-2-001/18101-07-02/en

copyright © Liebherr-Werk Ehingen GmbH 2018

WARNING
Danger of accident!
If more than the permissible two counterweight plates are lifted with the receptacle stud, the receptacle stud will be overloaded and can be damaged.
Death, severe bodily injuries, property damage.
▶ Make sure that the counterweight plates are placed correctly in the centerings.
▶ Replace damaged counterweight plates.

WARNING
The Twistlock system opens by itself!
If the receptacle stud is not correctly locked, the Twistlock system can open by itself.
Counterweight plates can fall down.
Death, severe bodily injuries, property damage.
▶ Make sure, when initiating a lift, that the lever points directly to the „Locked“ icon.

WARNING
Damage of receptacle stud and counterweight plates!
If two counterweight plates are lifted which do not lay correctly in their centerings, the receptacle stud and the counterweight plates can be damaged!
Damage can cause the counterweight plates to fall down.
Death, severe bodily injuries, property damage.
▶ Make sure that the counterweight plates to be lifted are placed correctly in the centerings.

Note
▶ During a lift, the locked Twistlock system cannot release by itself due to its gravitational retention.
▶ During a lift, the locked Twistlock system cannot be released by hand due to its gravitational retention.

To remove the counterweight plate(s), use the receptacle stud **5**.

Before the receptacle stud **4** is guided into the counterweight plate(s) **4**, it must be ensured that the length of the receptacle stud is set correctly. The length of the receptacle stud **5** can be adjusted with the pin **44**.

If the length of the receptacle stud **5** is to be adjusted:
▶ Release and unpin the pin **44**.
▶ Adjust the length of the receptacle stud by moving the receptacle stud **5**.
▶ Insert the pin **44** and secure it with the retaining element **45**.
▶ Fasten the receptacle stud **5** to the auxiliary crane and guide it into the counterweight plate(s) **4**.
▶ Pull the lever **41** up and fold it down.
▶ Turn the lever **41** 60° until the lever **41** points to the icon **42**.

Result:

– The receptacle stud **5** is locked with the counterweight plate(s) **4**.

▶ Lift the counterweight plate(s) **4** with the receptacle stud **5** and remove it from the counterweight stack.

When the counterweight plate(s) **4** are taken down:
▶ Turn the lever **41** 60° until the lever **41** points to the icon **43**.

Result:

– The receptacle stud **5** is unlocked from the counterweight plate(s) **4**.

▶ Carefully pull the receptacle stud **5** out from the counterweight plate(s) **4**.
▶ Alternately remove the counterweight plate(s) **4** from both sides.

LWE/LR 1600-2-001/18101-07-02/en

copyright © Liebherr-Werk Ehingen GmbH 2018

5.2.2 Removing the counterweight plates, fastening points: Bitt

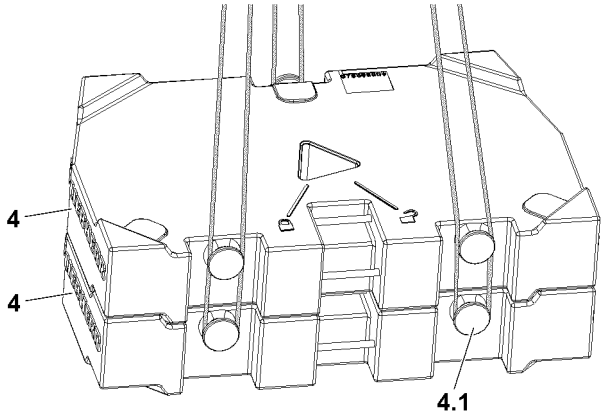

Fig.147034: Counterweight plates, fastening points: Bitt

WARNING
Falling counterweight plates!
If more than the permissible loads are lifted, then the bitts **4.1** are overloaded and the counterweight plates can fall down.
Death, severe bodily injuries, property damage.
- ▶ Place the counterweight plates individually or as a package, maximum 20 t , 3 fastening points.
- ▶ Replace damaged counterweight plates immediately.

WARNING
Incorrect handling of the fastening equipment!
If fastening equipment cannot be attached correctly and if it is not secured sufficiently to prevent it from loosening up, loads can fall down.
Death, severe bodily injuries, property damage.
- ▶ Make sure that the fastening equipment is correctly attached on the bitts **4.1** and that it is secured sufficiently to prevent it from loosening up.

- ▶ Lift the counterweight plate **4** or maximum two plates in an assembly and remove from the counterweight stack.
- ▶ Alternately remove the counterweight plate(s) **4** from both sides.

LWE/LR 1600-2-001/18101-07-02/en

copyright © Liebherr-Werk Ehingen GmbH 2018

5.3 Removing the counterweight brackets on the turntable

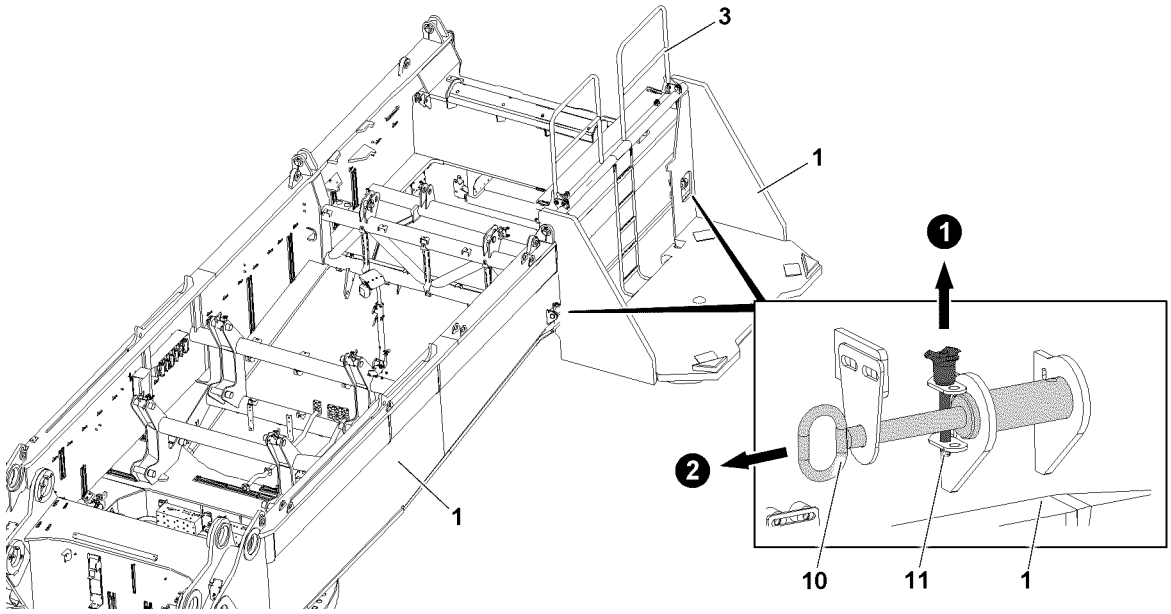

Fig.147045: Releasing the counterweight bracket on the turntable

Note

▶ The assembly / disassembly of the counterweight brackets is explained on a counterweight bracket as an example.

Make sure that the following prerequisites are met:

– The railings **3** on the counterweight brackets **2** are in the operating position.

▶ Fasten the counterweight bracket **2** to the auxiliary crane, see section „Fastening points“.

WARNING

Tipping of counterweight bracket!

Death, severe bodily injuries, property damage.

▶ Make sure that the fastening equipment has a sufficient length.

▶ Make sure that there are no persons within the danger zone when lifting the counterweight bracket **2**.

When the fastening equipment is tensioned properly on the counterweight bracket **2**:

▶ Release the pin **10**: Remove the retaining element **11**.

▶ Unpin the pins **10** on both sides.

LWE/LR 1600-2-001/18101-07-02/en

copyright © Liebherr-Werk Ehingen GmbH 2018

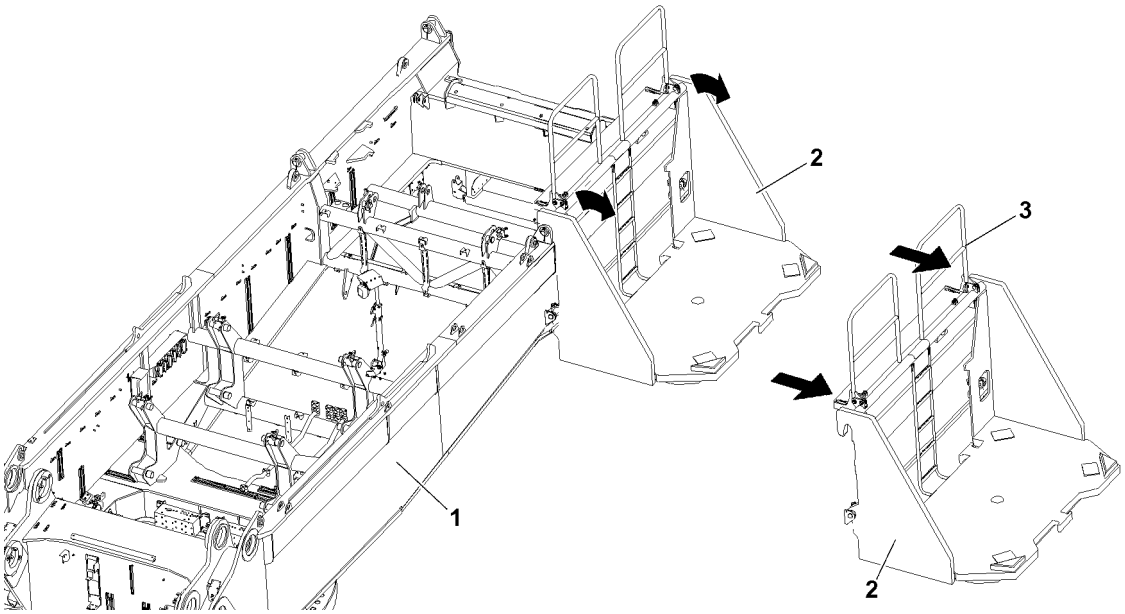

Fig.147046: Lifting the counterweight bracket and swinging it out

When the pins are fully unpinned on both sides:
- ▶ Lift the counterweight bracket **2** with the auxiliary crane and swing out.
- ▶ Set the counterweight bracket **2** on a load bearing substructure or on a flatbed trailer.

When the counterweight bracket **2** is properly set on the substructure or on the flatbed trailer:
- ▶ Remove the fastening equipment and the auxiliary crane.

When the counterweight bracket **2** is properly removed:
- ▶ Insert the pin **10** again and secure with the retaining element **11**.
- ▶ Properly disassemble the second counterweight bracket.

5.4 Bringing the railings on the counterweight brackets into the transport position

Note

The counterweight brackets are located on the ground or on a substructure with load bearing capacity:
- ▶ Bring the railing into the transport position, see chapter 2.06.

LWE/LR 1600-2-001/18101-07-02/en

copyright © Liebherr-Werk Ehingen GmbH 2018

4.08 Working with a load

1	Safety guidelines	3
2	Checks before starting to work with the crane	4
3	Crane movement - Telescoping	5
4	Taking on a load	7
5	Crane operation	13
6	Crane rope pretension	15

LWE/LR 1600-2-001/18101-07-02/en

copyright © Liebherr-Werk Ehingen GmbH 2018

LWE/LR 1600-2-001/18101-07-02/en

Fig.195219

copyright © Liebherr-Werk Ehingen GmbH 2018

1 Safety guidelines

In addition, observe the general technical safety instructions in chapter 2.04.

In steep boom positions for which no loads are specified in the load charts, there is a danger of tipping to the rear to the counterweight side.

The danger of tipping to the rear exists especially in case of:
- Crane operation on tires
- Supported, with retracted sliding beams
- Reduced support base

WARNING
Crane operation in steep boom positions for which no loads are specified in the load charts!
The crane can tip to the rear and fatally injure personnel.
- ▶ Comply with the boom radius specified in the load chart.
- ▶ Crane operation outside the permissible set up configurations, boom radii and slewing ranges according to the load chart is prohibited.

WARNING
Incorrect reeving number set up!
If the reeving number on the pulley head is less than the reeving number set on the LICCON computer system, it can result in an overload of the hoist rope.
The hoist rope can rip. The load can fall down and fatally injure personnel.
- ▶ Comply with the reeving numbers specified in the load chart for maximum loads.
- ▶ Make sure that the reeving on the pulley head and the reeving set on the LICCON computer system match.

The minimum rope coils must remain on the rope winches. The number of minimum rope coils depends on if the rope winch is equipped with a cam limit switch or a winch speed sensor.

WARNING
Minimum rope coils fallen below!
The rope will be ripped out. The load falls down.
Personnel can be killed.
- ▶ Make sure that the minimum rope coils remain on the rope winch.
- ▶ Observe and comply with the number of the minimum rope coils in chapter 5.01.

WARNING
Lift the load by luffing up!
The crane can topple over and fatally injure personnel.
- ▶ Lift the load with the hoist gear.

Always comply with the maximum loads specified in the load chart.

The weight of the hook block according the load chart must be taken into account. Subtract the weight of the hook block from the load chart value. The minimum hook block weight must be determined according to the reeving number and the data in the load charts.

For the lift, use the hook block which is suited best for the existing set up configuration in connection with the load chart.

Initiate all crane movements carefully. Also slow down the crane movements carefully. That way you can avoid a swinging or pendulum motion in the suspended load.

LWE/LR 1600-2-001/18101-07-02/en

copyright © Liebherr-Werk Ehingen GmbH 2018

2 Checks before starting to work with the crane

Before starting work with the crane, the crane operator must carry out a further inspection to satisfy himself about the crane's operational safety:
- Check that the crane is properly supported and level.
- Check that the set up configuration set in the control matches the actual set up configuration.
- Check that all values in the load chart that apply to the current equipment configuration have been entered and met.
- Ensure that there are no people or objects within the danger zone of the crane.

WARNING
Persons in the slewing range!
Crushing danger, death, severe bodily injuries.
▶ Monitor the slewing range.
▶ Make sure that there are **no** persons within the slewing range.
▶ Block off the slewing range if necessary.

WARNING
Obstacle in the slewing range!
Property damage on crane and on obstacle.
▶ Make sure that there are **no** obstacles within the turning range of the crane and the crane components.

2.1 Visual check for damage

WARNING
Danger of accident!
If the crane is operated despite existing defects, personnel can be severely injured or killed.
▶ In the event of deficiencies which threaten operational safety, stop crane operation immediately.

The following deficiencies threaten the crane's operational safety:
- Damage to load-bearing parts of the crane design, such as booms, supports etc.
- Failure of the hoist gear brake and consequent slipping of the load
- Functional failures in the crane control system
- Functional defects in the indicator and warning lights
- Damage to the hoist ropes
- Safety defects in the safety equipment
- Leaks on safety relevant components of the crane hydraulic

Inform the appropriate supervisor about the deficiencies on the crane and also inform your relief when crane operators are changed.

2.2 Telescopic boom distortion because of sunshine on one side

A temperature difference occurs between the side facing the sun and the side facing away from the sun for cranes with telescopic booms. This causes telescopic boom side distortion, which can reduce the load bearing capacity of the telescopic boom.

For example, a temperature difference between the two boom sides of 30 °C and a boom length of 60 m results in a length difference caused by the temperature difference between the two sides of the telescopic boom of approximately 22 mm. With narrow boom parts, this causes the profiles to bend sideways.

If the maximum load is being utilized when a telescopic boom extension such as a fixed lattice jib, luffing lattice jib or folding jib is being used, then it must be ensured through a visual inspection before picking up the load that the boom is not showing signs of side deformation due to one-sided sun exposure.

LWE/LR 1600-2-001/18101-07-02/en

copyright © Liebherr-Werk Ehingen GmbH 2018

WARNING
Danger of accident due to component overload!
If the telescopic boom has become distorted because of one-sided sunlight, this can cause component overload and therefore accidents.
▶ Turn the crane so that both sides of the boom are heated up equally, eliminating side deformation due to temperature difference.

3 Crane movement - Telescoping

If the telescopic boom is telescoped with the jib boom or telescopic boom extension, before the telescoping procedure, ensure that:
– The crane is properly supported and horizontally aligned.
– The telescopic boom is evenly warmed up by solar radiation.
– There is no strong side wind.

WARNING
Damage to the telescopic boom or the hoist rope!
If these 3 factors are not adhered to, damage of the telescopic boom or the hoist rope can occur and lead to accidents.
▶ Support the crane properly and align it horizontally.
▶ Keep both sides of the boom at about the same temperature.
▶ Telescope only to the permissible wind speed according to the load chart.
▶ If the actual wind speed is higher than the permissible wind speed noted on the load chart, telescoping is prohibited.

LWE/LR 1600-2-001/18101-07-02/en

copyright © Liebherr-Werk Ehingen GmbH 2018

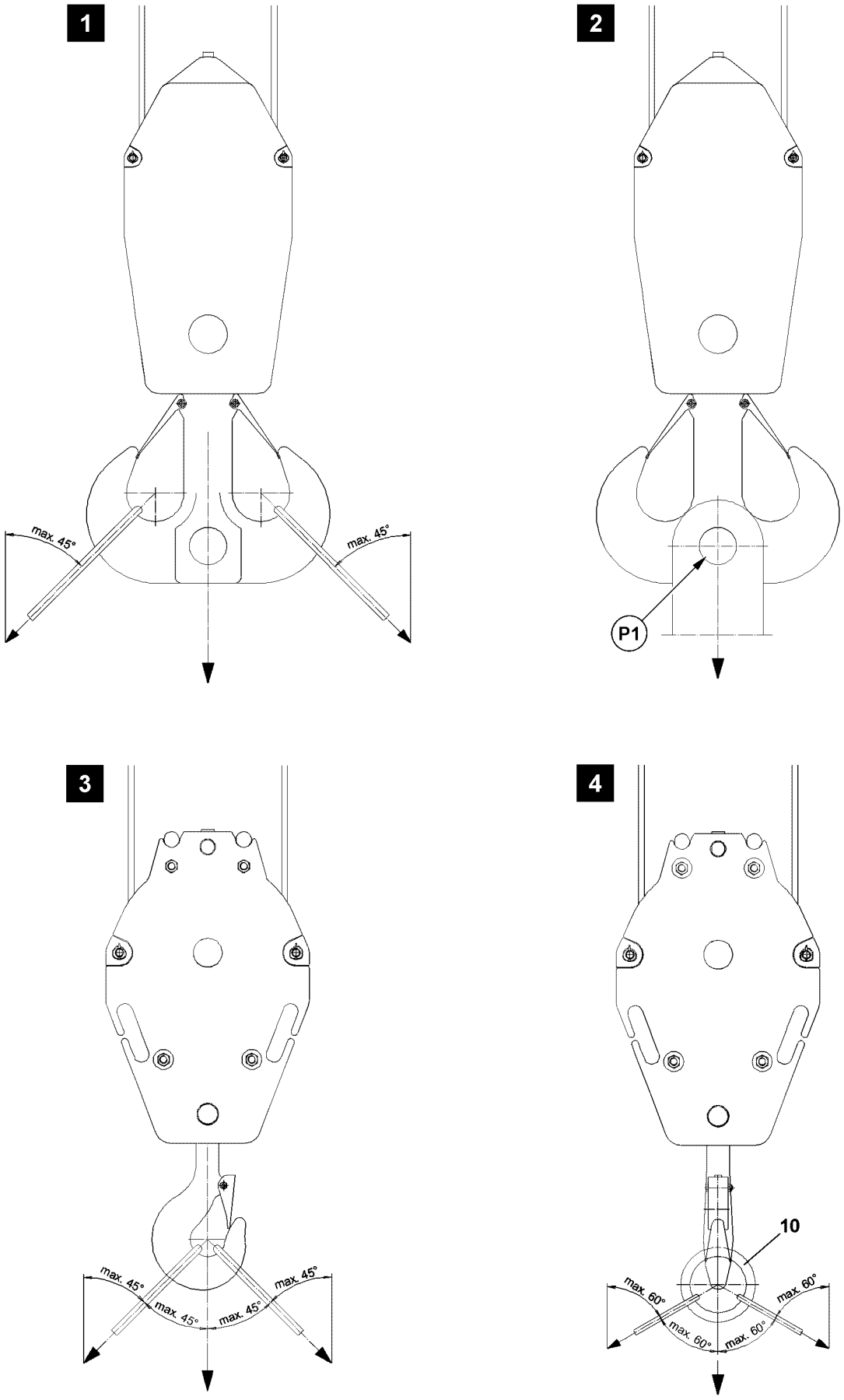

Fig.121650

LWE/LR 1600-2-001/18101-07-02/en

copyright © Liebherr-Werk Ehingen GmbH 2018

4 Taking on a load

The crane must always be operated in such a way that its load-bearing parts are not destroyed or damaged and its stability is ensured.

Make sure that the following prerequisites are met:
- The crane is supported and horizontally aligned.
- The LICCON overload protection has been set according to the load chart and the set up configuration.
- The LICCON overload protection is active.
- In the case of cranes with central ballast: The central ballast is installed according to the load chart.
- The counterweight is installed according to the load chart.
- In the case of cranes with derrick ballast: The derrick ballast is installed according to the load chart.
- The hook block or the load hook is correctly reeved.

4.1 Fastening the load

WARNING
Load can be ripped off!
If impermissible fastening and / or load handling equipment is used when taking on a load on the centric bore on the double hook at point **P1** (illustration **2**), then the double hook as well as the hook block can be damaged.
The load can rip off and fall down.
Personnel can be severely injured or killed.
▶ Lift the load via the centric bore on the double hook (point **P1**): For the technical requirements and the technical design of the fastening and / or load handling equipment contact the hook block manufacturer.

WARNING
The crane can topple over!
If the following conditions are not met, the crane can topple over.
Personnel can be severely injured or killed.
This could result in high property damage.
▶ Pay attention to the own weight of the load handling equipment.
▶ Pay attention to the load bearing capacity of the load handling equipment!
▶ The maximum permissible incline of the strands fastened on the single or double hook in the hook jaws is 45°. See illustration **1** and illustration **3**.

If necessary for the single hook:
▶ Use fastening equipment with a suspension link **10**. The maximum permissible incline in this case is 60°. See illustration **4**.
▶ Load a single and double hook symmetrically. A maximum deviation of ±3° from the direction of the center of gravity is permissible.

If necessary:
▶ Use cross beam or two cranes for taking on the load.

LWE/LR 1600-2-001/18101-07-02/en

copyright © Liebherr-Werk Ehingen GmbH 2018

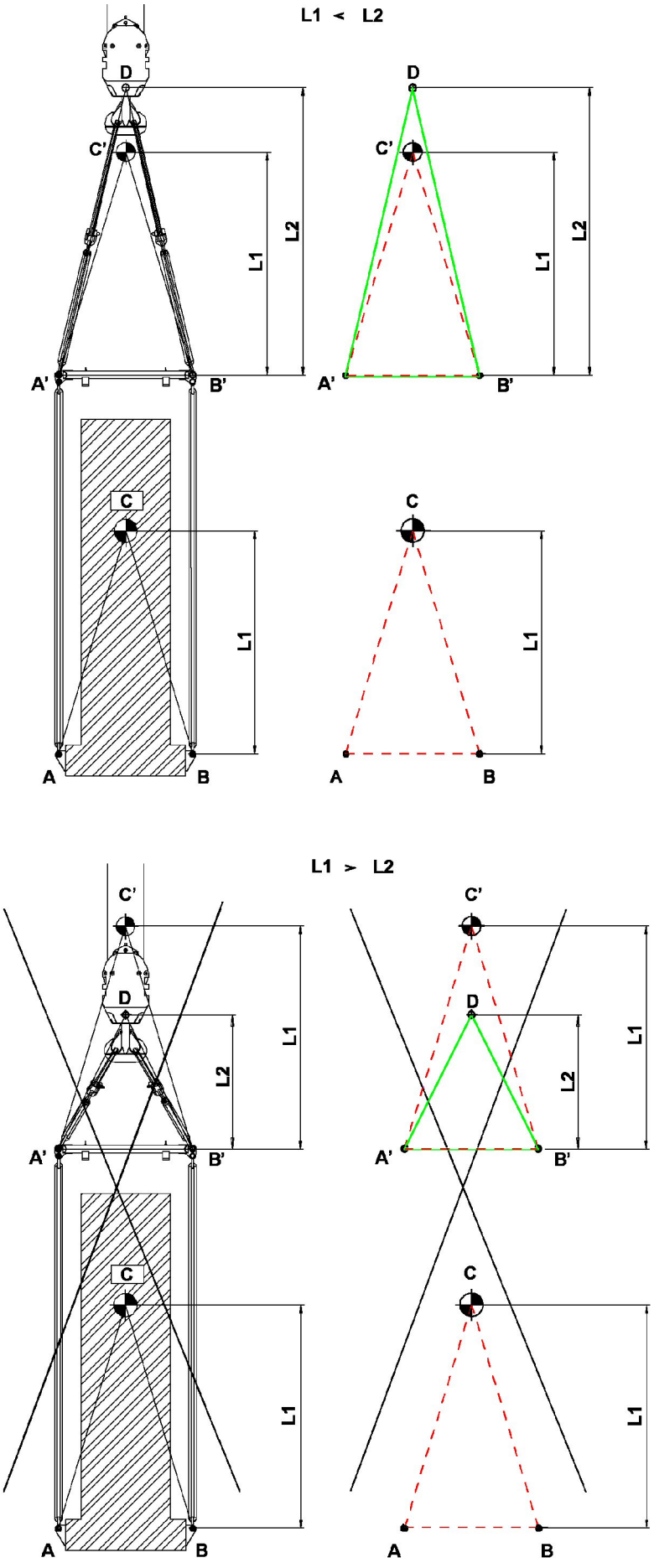

Fig.116274

LWE/LR 1600-2-001/18101-07-02/en

copyright © Liebherr-Werk Ehingen GmbH 2018

4.2 Taking on a load with cross beam

Cross beam are load handling equipment between crane hook and load.

The distance of the center of gravity **L1** is the vertical dimension from the fastening point of the load to the center of gravity of the load.

The cross beam height **L2** is the vertical dimension from the point of rotation of the crane hook to the next lower linkage point of the cross bar.

WARNING
Tipping of load to the side!
If fastening ropes are used which are too short, so that the load center of gravity is above the fastening point, then there is a danger of the load tipping to the side.
Personnel can be severely injured or killed.
- ▶ The load center of gravity must be below the crane hook.
- ▶ The distance of the center of gravity **L1** must be smaller than the cross beam height **L2** (L1 < L2).
- ▶ The triangle **A'B'C'** must be within the triangle **A'B'D**.

4.3 Transporting the hook block

WARNING
Danger of accident!
If a hook block is fastened incorrectly for transport, personnel can be injured.
- ▶ Fasten the hook block for transport on the fixed point in the center.
- ▶ Fastening the complete hook block on the auxiliary weights is prohibited.
- ▶ When setting down, secure the hook block against falling over.
- ▶ Prevent the load hook from rolling away.

LWE/LR 1600-2-001/18101-07-02/en

copyright © Liebherr-Werk Ehingen GmbH 2018

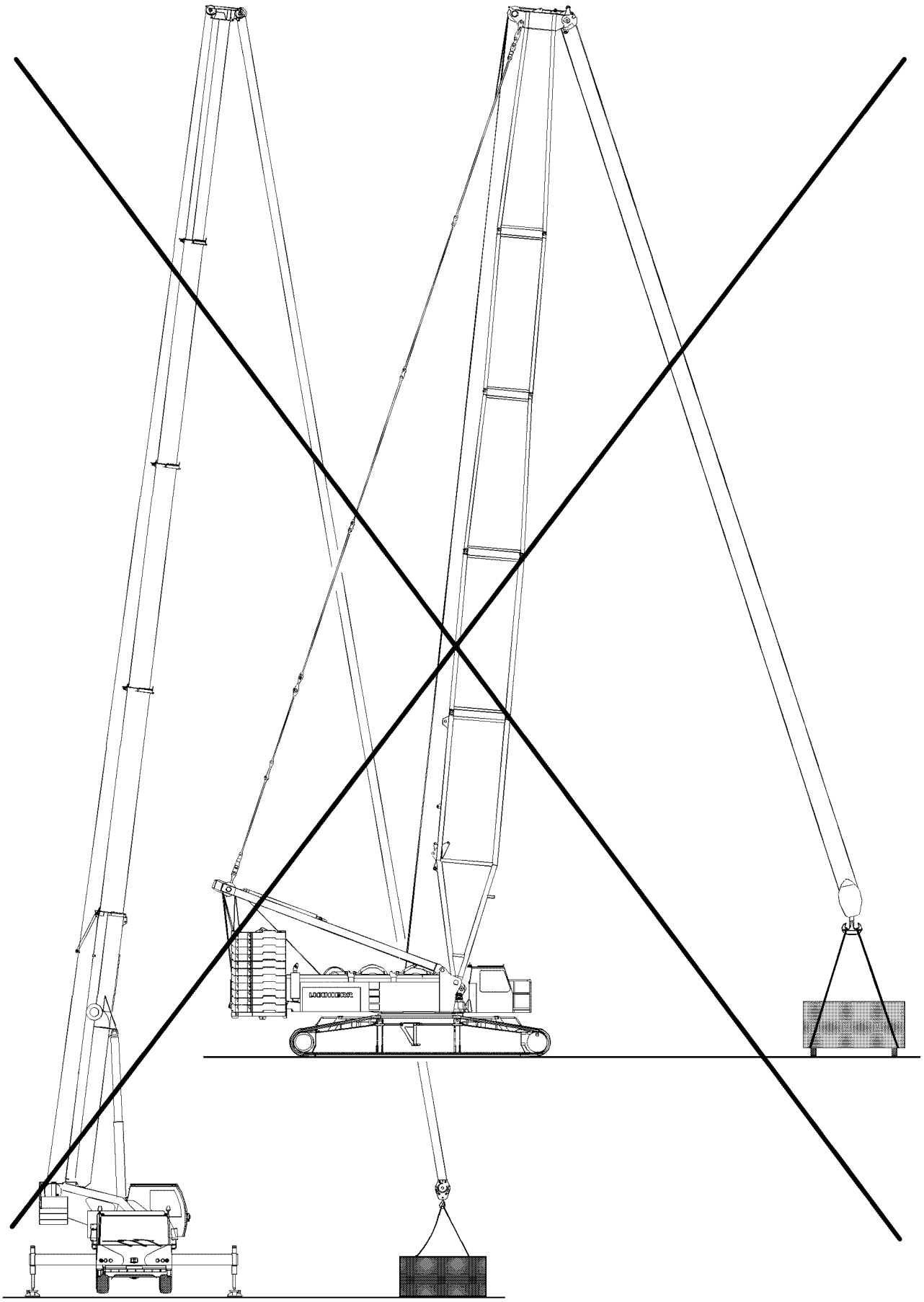

Fig.102716

LWE/LR 1600-2-001/18101-07-02/en

copyright © Liebherr-Werk Ehingen GmbH 2018

4.4 Lifting the load

WARNING
Danger of crushing for people in the load zone!
If personnel is located between the load to be lifted and a possible interfering edge (such as a wall of a building or similar) when the load is lifted, personnel can be severely injured or killed.
- ▶ Before lifting the load it must be ensured that there are no persons within the danger zone.
- ▶ It is prohibited to remain in the danger zone.
- ▶ It is prohibited for anyone to be under the load. Maintain a safe distance.
- ▶ Swinging the load is prohibited.
- ▶ Exercise extreme caution when lifting a load.

WARNING
The crane can topple over!
If an attempt to lift a load over the hoist gear causes the LICCON overload protection to turn off, then the load may not be lifted by luffing up the boom. This causes overload or toppling the crane.
Personnel can be severely injured or killed.
- ▶ Do not lift the load by luffing up the boom off the ground.

Note
When using the assembly winch* observe the following:
- ▶ Use the assembly winch* only for assembly and not for lifting loads.
- ▶ Lifting of loads with the auxiliary winch is prohibited.

If the fastening rope is manually attached by an assistant to the load to be lifted:
- – Make sure that the assistant's hands are not crushed by the tightened ropes between the load and the fastening rope.
- – Make sure that the assistant's body parts (hands, legs etc.) are not crushed by a swaying movement of the load during lifting.

4.5 Angular pulling

WARNING
The crane can topple over!
Angular pulling can destroy the crane or cause it to topple over.
Personnel can be severely injured or killed.
- ▶ Fasten (hang) the hook block always vertically over the center of gravity of the load to be lifted.
- ▶ Do not use the slewing gear to pull and set up loads.
- ▶ When lifting, compensate for boom deflection.
- ▶ Angular pull is prohibited.

The crane is designed only to lift loads vertically. During angular pulling, regardless of whether this is done in the same direction as the boom or laterally, horizontal forces are generated from the load in addition to the vertical forces, for which the boom is not designed.

LWE/LR 1600-2-001/18101-07-02/en

copyright © Liebherr-Werk Ehingen GmbH 2018

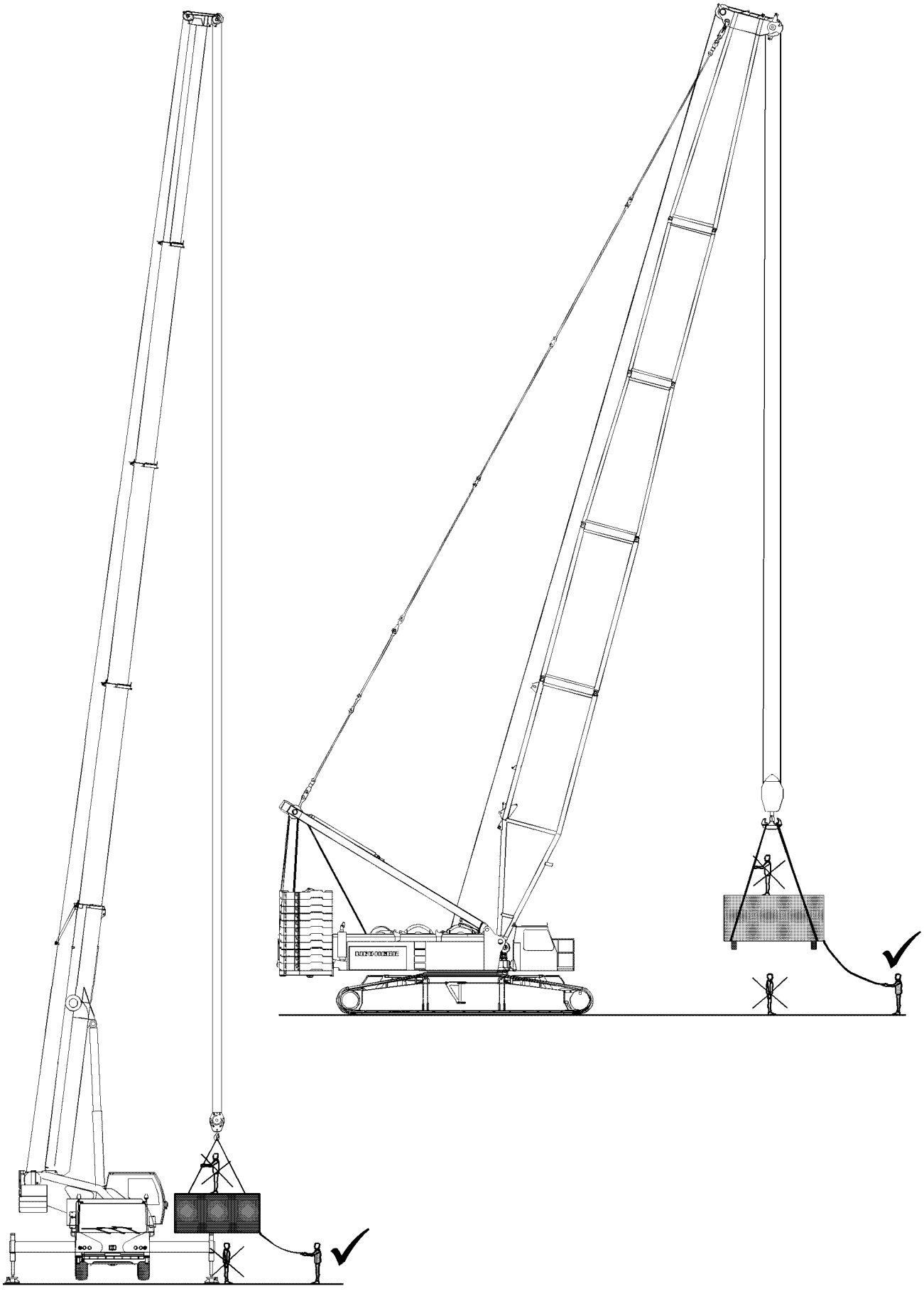

Fig.102717

LWE/LR 1600-2-001/18101-07-02/en

copyright © Liebherr-Werk Ehingen GmbH 2018

4.6 Breaking away fixed loads

WARNING
The crane can topple over!
Ripping stuck loads free can destroy the crane or cause it to topple over.
Personnel can be severely injured or killed.
▶ Ripping stuck loads free is prohibited.

5 Crane operation

The maximum load capacity of the crane is not just limited by the stability, but in many cases a load-bearing component breaks when the crane is overloaded **before** the crane topples over. Components that are susceptible to buckling such as the telescopic boom may fail suddenly **without showing signs of distortion beforehand** if the crane is overloaded.

WARNING
Danger of accidents for cranes with luffing cylinders!
When the luffing cylinder is on block position, the overload protection is not functioning.
▶ Crane operation at block position of luffing cylinders is prohibited.

5.1 General

A suspended load must always be kept under control. A fundamental requirement for this is the safe and delicate control of the crane's functions.

WARNING
Danger of accident due to swaying loads!
A swaying load can damage the crane and cause it to topple.
▶ All crane movements must be executed slowly and delicately.
▶ Initiate all crane movements slowly.
▶ Apply the brakes slowly in all crane movements.
▶ Crane operation with swaying load is prohibited.

NOTICE
Damage of rope pulleys!
▶ Place down hook blocks, booms, folding jibs, jib booms and boom noses in such a way that the rope pulleys do not lie on the ground and are damaged.

5.2 Guiding the load

The use of guide ropes is recommended to help the crane operator manage the load more precisely and to prevent the load from swaying. This will prevent undesirable movements of the load and consequent damage.

LWE/LR 1600-2-001/18101-07-02/en

copyright © Liebherr-Werk Ehingen GmbH 2018

5.3 Danger of crushing

WARNING
Danger of fatal injury!
Extreme care is needed when lowering a load. Danger of fatal injury exists for personnel in the immediate area of the load being lowered.
Personnel can be severely injured or killed.
- ▶ Standing under a suspended loads is strictly prohibited.
- ▶ Observe the danger of tipping when setting down the load. For example, small support surfaces or unsuitable ground.

5.4 Danger of falling

WARNING
Danger of fatal injury!
If persons are on the suspended load, then they can fall down and be severely injured or killed.
- ▶ Remaining on a suspended load is strictly prohibited.
- ▶ Remaining on or within crane components (for example: At assembly of boom sections, lattice sections) which are moved during lifting, lowering, turning or closing procedures is strictly prohibited.

5.5 Working in the vicinity of electricity transmission lines

If there are electricity transmission lines in the immediate vicinity of the building site, then the electrical transmission lines must be turned off by qualified electricians. If this is not possible, the danger area must be covered over or cordoned off.

WARNING
Danger of current transfer!
If electricity transmission lines are not shut off nor covered nor blocked off, then there is an increased danger of accident due to current transfer.
- ▶ For rated voltages to 500 kV AC: Adhere to a safety distance of 8 m.

If the crane becomes electrified despite having taken all necessary precautions, proceed as follows:
- ▶ Remain calm!
- ▶ Do not leave the crane cab.
- ▶ Warn people outside: Stay in place and do not touch the crane.
- ▶ Move the crane away from the danger zone.

5.6 Ram work or pulling sheet piles

Vibration can be transmitted to the supporting steel structure of the crane during ram work or when pulling sheet piles with the crane. This vibration can cause premature fatigue of the material and therefore cracks in the supporting steel structure.

DANGER
Important instructions for „ram work“ or „pulling sheet piles“.
If the crane is used for ram work or pulling sheet piles, then the following instructions must be followed. Failure to follow the instructions can result in damage to the crane.
- ▶ The ramming equipment may not pass on vibrations into the boom.
- ▶ When pulling sheet piles, the maximum pull force of the crane is limited according to the load chart. Restricting the maximum pull force via the crane overload protection **only** is prohibited. The pull force must be additionally checked by measuring.

LWE/LR 1600-2-001/18101-07-02/en

copyright © Liebherr-Werk Ehingen GmbH 2018

6 Crane rope pretension

Damage that can occur with multi layer spooling:
- Friction
- Broken wires and loop formation
- Flattenings, deformations

NOTICE
Crane rope pretension too low!
Loosely coiled rope layers.
Rope damage. Reduced service life of the crane rope.
Cutting of the crane rope into the lower rope layers. The load can not be lowered any further.
▶ To maximize the service life of the crane rope, carry out the measures in the following sections.

Note
▶ Liebherr recommends to shorten crane ropes with damage in the cross over area of the coils, in order to lengthen the service life. Shortening the crane rope, see Crane operating instructions, chapter 7.05.50.

6.1 Working with a high rope pull

If multiple lifts are performed with a high rope pull, loosen the lower rope layers that are rarely or never spooled out.

NOTICE
Loosely spooled out rope layers!
Rope damage.
Upper rope layers with a high rope pull deform the lower rope layers in the cross over area of the crane rope.
Spooling deformed rope sections over rope pulleys reduces the service life of the crane rope.
▶ Place a shorter crane rope.

When the lower rope layers are **not** used during repeat work:
▶ Increase the pretension of the lower rope layers: Spool out the entire rope length and then spool back up with the highest rope pull possible. See section „Increasing the hoist rope pretension“.

6.1.1 Placing a shorter crane rope

Note
▶ Liebherr recommends using the entire rope length.

Unused rope sections cause the loosening of the lower rope layers.

When only a part of the crane rope length is used for a longer period of time:
▶ Place a shorter crane rope.

6.1.2 Reducing rope unwinding

Telescopic boom

When telescoping out less, then the smallest amount of fixed coiled up crane rope is spooled out.

▶ Telescope out as little as possible.

Picking up the fastening equipment

If the fastening equipment with a flat boom system must be picked up, then the smallest possible amount of crane rope is spooled up loose.

LWE/LR 1600-2-001/18101-07-02/en

copyright © Liebherr-Werk Ehingen GmbH 2018

- ▶ Establish a flat boom system: Telescope out or luff up the boom.
- ▶ Pick up the fastening equipment.

6.1.3 Restoring hoist rope pretension

Brief description

If a multi-pulley hook block is reeved, then the entire hoist rope length can be spooled out from the rope drum.

- ▶ Spool the hoist rope out until three safety coils.
- ▶ Create 10 % maximum strand pull: Attach the load.

While the hoist rope is spooled up:
- – Hold the load just off the ground.
- – In the permissible range of the load chart of the relevant set up configuration: Increase the load radius by luffing down.

- ▶ Spool the hoist rope up.

Description using the example LR 1600-2, SL3F

This section explains the procedure with the help of the set up configuration for LR 1600-2 with boom system SL3F.

The crane-specific parameters ensure that rope is spooled out until four rope coils and as many rope coils with pretension as possible can be spooled up.

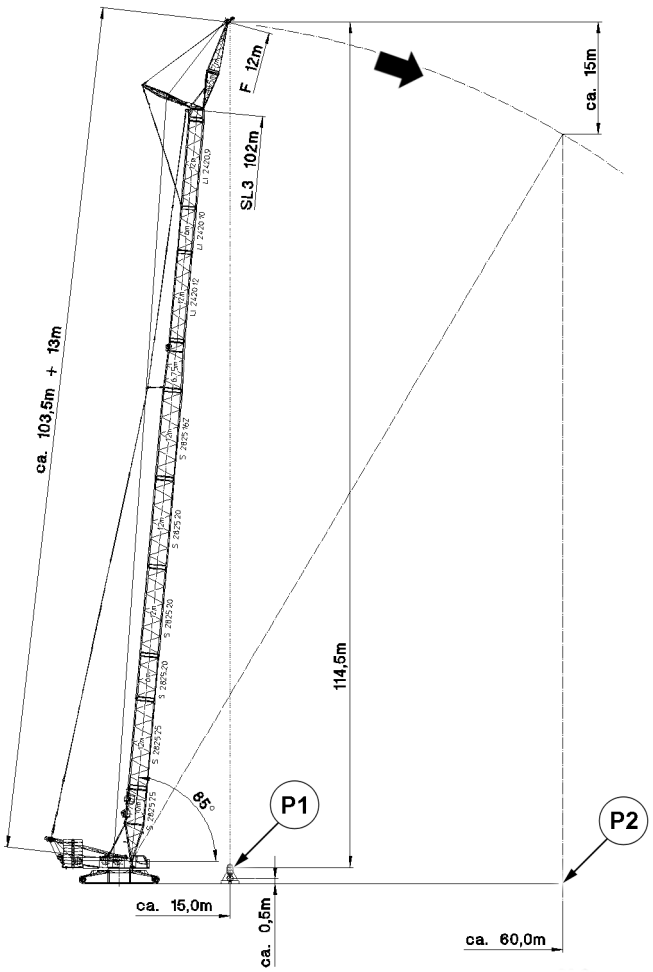

Fig.127131: LR 1600-2, SL3F: Spooling up hoist rope with pretension

LWE/LR 1600-2-001/18101-07-02/en

copyright © Liebherr-Werk Ehingen GmbH 2018

Boom radius	Load	10 % of maximum strand pull
60 m	14.4 t	1.8 t

Load example: LR 1600-2, SL3 102, F12, according to the load charts

Hoist rope for this example:
– Hoist rope with a length of 1050 m

Hook block for this example:
– Hook block 200 DM, 5-pulley, reeved 8 times
– The weight of the hook block with ten auxiliary weights is 7.0 t

To reach sufficient rope pull, another load must be hung in addition to the hook block.

Make sure that the following prerequisites are met when hanging the load:
– Load is hung as short as possible.
– For a boom radius of 15.0 m , the hoist rope can be spooled out on the winch until four coils.
– The load is suspended over the ground.

▶ Pick up the load with 7.4 t.
▶ Set the boom system to boom radius 15.0 m.
▶ Spool the hoist rope out.

Result:
– In position **P1** there are 9 m of hoist rope (four coils) on the hoist winch:

Spooled out rope section	Length
8-way reeving, distance of ground to the F-jib with boom radius 15 m	8 x 114,5 m = 916,0 m
Winch to FA-frame	103.5 m
F-head	13.0 m
Rope pulleys	7.5 m
Total of spooled out hoist rope	1040.0 m

*Rope lengths in position **P1***

While the hoist rope is spooled up:
– Hold the load just off the ground.
– In the permissible range of the load chart of the relevant set up configuration: Increase the load radius by luffing down.

▶ Spool up the hoist rope and luff down the boom at the same time until boom radius 60.0 m is reached.
▶ Set down the load.

Result:

– The pretension of the first and second position of the rope coils is restored.
– In position **P2** there are 130 m of hoist rope (23 coils) on the hoist winch:

Spooled up rope section	Length
Four coils initial situation	9 m
8-way reeving, F-jib height difference with boom radius 60 m	8 x 15 m = 120 m
Total of spooled up hoist rope	130 m

*Rope lengths in position **P2***

▶ Make sure that the hoist rope on the winch remains pretensioned: Reeve out the hook block and reeve in with slower reeving. See Reeving plan.

copyright © Liebherr-Werk Ehingen GmbH 2018

6.2 Picking up and lowering overhead loads

The load is picked up overhead in the following application examples:
- Repowering wind power plants
- Disassembly of slewing tower cranes

NOTICE
Load picked up overhead with loosely coiled rope layers!
The rope pull increases when the load is picked up. The rope coils in the lower rope layers move laterally and are compressed. The hoist rope can cut into the lower rope layers.
▶ Spool up the hoist rope without a load only with rope pretension.

NOTICE
Load lowered with cut in rope layers!
The hoist rope is pulled jerkily from the lower rope layers. Vibrations are introduced into the crane system.
Cut in hoist rope clamped between the lower rope layers. The load can **not** be lowered any further.
▶ To prevent the cutting in of the hoist rope, carry out the measures in the following sections.

6.2.1 Increasing the reeving number

NOTICE
Higher reeving number than indicated on the load chart!
Slack rope formation.
The crane load drops due to additional weight from the rope strands and hook block.
If a higher reeving number is not considered in the set up configuration, the load display on the LICCON monitor no longer corresponds.
▶ Redetermine the hook block weight according to the load chart manual and adjust if necessary.
▶ Check if the crane load is sufficient for higher reeving.
▶ After telescoping out, check if the hook block can still reach the desired position for putting down the load.

A higher reeving number reduces the rope pull. A lower rope pull prevents the cutting in of the hoist rope in the lower rope layers.

▶ Select the highest reeving number possible for the hoist rope.

6.2.2 Increasing the hook block weight

NOTICE
Lift the hook block without a load!
The hoist rope is spooled up with a low rope pull. The rope layers are spooled up loose on the rope pulley.
▶ Increase the rope pull: Increase the hook block weight.

A higher hook block weight increases the rope pull.

▶ Increase the hook block weight.

If the crane load is sufficient:
▶ Attach an auxiliary weight between the load and hook block.

6.2.3 Pretensioning the hoist rope with pretensioning ballast with two hook operation

The pretensioning ballast is **not** included in the Liebherr scope of delivery.

LWE/LR 1600-2-001/18101-07-02/en

copyright © Liebherr-Werk Ehingen GmbH 2018

NOTICE
Lift the hook block without a load!
The hoist rope is spooled up with a low rope pull. The rope layers are spooled up loose on the rope drum.
▶ Pretension the hoist rope with pretensioning ballast with two hook operation.

Make sure that the following prerequisites are met:
– The crane is equipped for two hook operation.
– The pretensioning ballast is present.

Properties of the pretensioning ballast:
– Developed by Liebherr.
– The weight is 4 t.
– Special tow coupling

▶ Fasten the pretensioning ballast on the main hook and on the auxiliary hook.

The pretensioning ballast is lifted with the main hook, the auxiliary hook is carried along without a load.

▶ Lift the pretensioning ballast.

When the main hook has reached the required height:
▶ Stop the main hook.

After the load is completely transferred to the auxiliary hook, the main hook fastening ropes release automatically.

▶ Lift the auxiliary hook until the pretensioning ballast hangs completely on the auxiliary hook.

When the main hook fastening ropes have released:
▶ Lower the pretensioning ballast with the auxiliary hook and place it on the ground.

Result:

– The full load is present on the main hook.

LWE/LR 1600-2-001/18101-07-02/en

copyright © Liebherr-Werk Ehingen GmbH 2018

Empty page!

LWE/LR 1600-2-001/18101-07-02/en

copyright © Liebherr-Werk Ehingen GmbH 2018

4.10 Driving from the crane cab

1	Prerequisites for driving / moving crawler cranes (crawler operation)	3
2	Driving with a load and / or Derrick ballast	8
3	Driving without a load and without derrick ballast	9
4	Driving uphill / downhill	11
5	Driving the crawler crane	21

LWE/LR 1600-2-001/18101-07-02/en

copyright © Liebherr-Werk Ehingen GmbH 2018

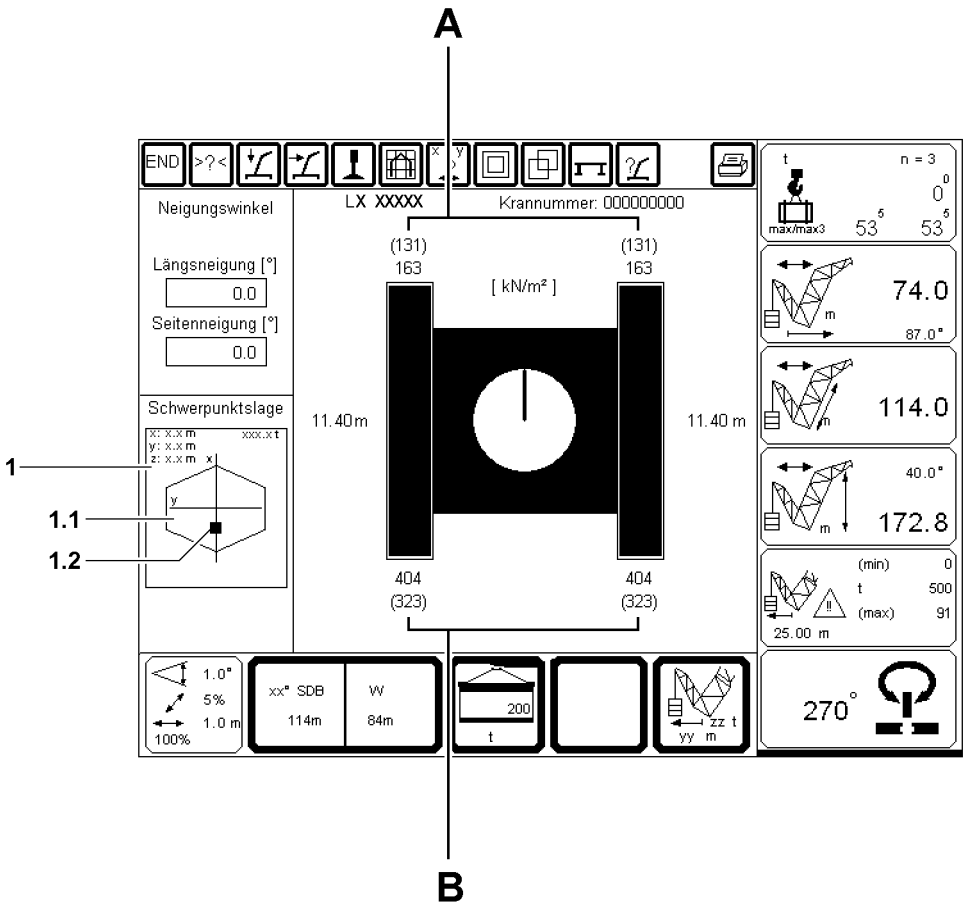

Fig.109839

LWE/LR 1600-2-001/18101-07-02/en

copyright © Liebherr-Werk Ehingen GmbH 2018

1 Prerequisites for driving / moving crawler cranes (crawler operation)

WARNING
The crane can topple over!
If the following instructions are not observed, the crane can topple over.
Personnel can be severely injured or killed.
- ▶ Before moving the crane with the attachment, the optimum boom position must be determined with the aid of the job planner, to obtain as even a surface pressure on the crawler track as possible.
- ▶ The maximum permissible wind speed from the load chart is not exceeded.

WARNING
Crane with narrow crawler track!
- ▶ When moving cranes with narrow crawler track (example: LR1600/2-W) and respective equipment, in addition to the „prerequisites for driving the crane“, the special travel charts and danger notes must be observed and adhered to, see „Moving the crane with equipment in place“.

WARNING
The crane can topple over!
If the turntable is not parallel to the crawler track when driving the crane, the crawler crane can topple over.
- ▶ For downhill gradients of more than 0.3° ,make sure that the turntable is aligned parallel to the crawler track in 0° or 180° position before moving the crawler crane!

WARNING
The crane can topple over!
If the following specifications, instructions and prerequisites are not observed, then the crane can topple over or be overloaded.
Personnel can be severely injured or killed.
- ▶ The crane operator is responsible for adhering to all specifications, instructions and prerequisites in the crane documentation.
- ▶ The crane operator may not drive the crane if not all specifications, instructions and prerequisites in the crane documentation can be adhered to.
- ▶ The crane operator is responsible for the correct and complete data entry into the LICCON computer system and into the LICCON job planner, if applicable.
- ▶ All acceleration and delay maneuvers must be initiated with extreme caution and at the least possible speed.
- ▶ Depending on the situation, additional observers, who are acoustically or visually connected with the crane operator (for example by radio or sight), may have to support the crane operator with shared responsibility.

WARNING
Combined crane movements at crawler operation!
- ▶ In crawler operation, do not carry out any additional crane movements.
- ▶ Carry out additional crane movements while the crane is at a standstill, if possible.

Make sure that the following prerequisites are met:
- No personnel or objects are within the danger zone.
- The crane is in operational condition.
- The crane is in a set up configuration permitted for travel operation.
- Installed ballast (central ballast, counterweight and derrick ballast) is locked and secured.
- There are no loose objects on the crane.

LWE/LR 1600-2-001/18101-07-02/en

copyright © Liebherr-Werk Ehingen GmbH 2018

1.1 Travel route

WARNING
The crane can topple over!
If the following specifications, instructions and prerequisites are not observed, then the crane can topple over or be overloaded.
Personnel can be severely injured or killed.
- ▶ The transfer from the horizontal into an uphill slope and from the uphill slope into the horizontal must be made evenly, i.e.: There may be no edges which can cause the crane to topple over. Any incline changes must be made continuously.
- ▶ If the travel route cannot safely take on the surface pressure, then measures must be taken to be able to safely induce the forces into the ground.
- ▶ If measures were taken to induce the forces into the ground, then they must be checked by an expert before starting to drive for proper execution and sufficient supportability.
- ▶ An insufficient ground condition can cause accidents, for example the crane can slide away to the side and as a result get into an impermissible incline position.

Make sure that the following prerequisites are met:
- Before starting to drive, the travel route was determined.
- Before starting to drive, the condition of the ground has been checked.
- The entire travel route can safely absorb the surface pressure.
- All inclines occurring on the travel route can be driven safely by the crane.
- The entire travel route is free of obstacles.
- The friction coefficient between crawler track and ground is sufficiently large to absorb the occurring drive forces or to eliminate the crane from slipping away in an incline position.
- Possible environmental influences while driving the crane (among others precipitation and wind) were taken into account for the travel route.
- The travel route was selected and prepared in such a way that the boom system can be taken down at any time.
- Select the travel route in such a way that no steering movements are required, if possible.
- With load on the hook: Setting down the load is possible at any time.
- The entire travel route is secured as a danger zone.
- The travel route has been selected in such a way that a sufficient distance to local facilities (among others power lines) can be retained.

For falling terrain gradients outside the range of a valid load chart, the following applies additionally:
- Before starting to drive, the travel route was checked in connection with the actual set up configuration of the crane on the LICCON job planner.
- Before starting to drive, the optimum positions for the boom system were determined to obtain as even a surface pressure as possible - the LICCON job planner can be used for this purpose.

Note
- ▶ For a detailed description of the LICCON job planner on the crane , see the operating instructions LICCON job planner.
- ▶ For a detailed description of the computer program LICCON job planner, see separate description.

LWE/LR 1600-2-001/18101-07-02/en

copyright © Liebherr-Werk Ehingen GmbH 2018

1.1.1 Optimizing measures for travel route

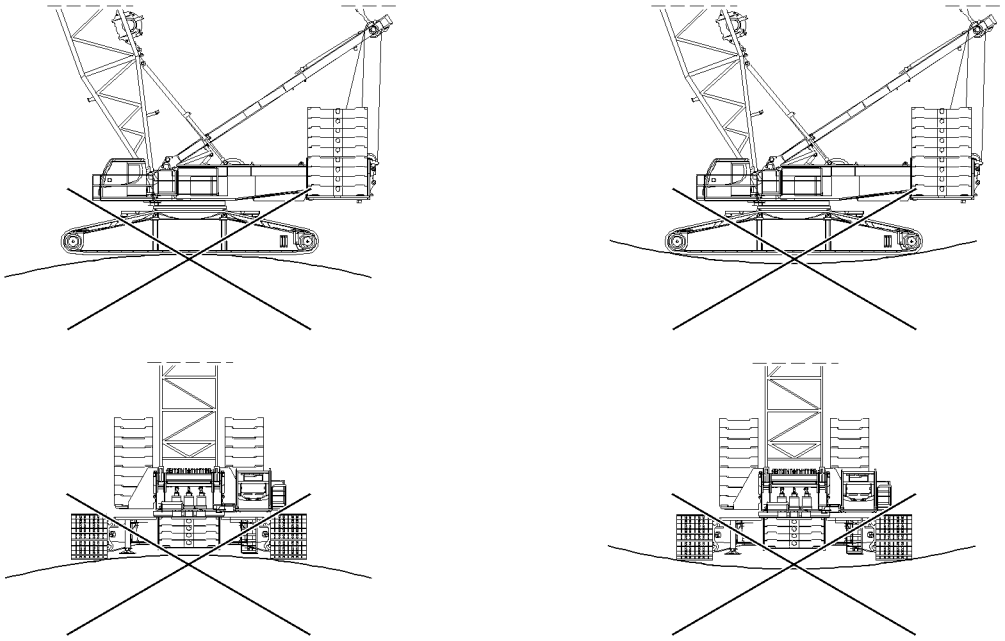

Fig.119598: Depressions, crests, track grooves and other uneven areas of the travel route cause punctiform strain to the track.

NOTICE
Damage to the track!
Continuous punctiform strain to the track causes increased wear.
Continuous increased wear can cause damage to the track.
- ▶ Set up the travel routes in such a way that the track is not subjected to continuous punctiform strain.
- ▶ For extended travel operation shorten the maintenance intervals.

Through the following configuration features of the travel route, wear on the track can be minimized:
- – Shapings of the travel route (such as depressions, crests, track grooves) have been eliminated via suitable measures.
- – Lay out the travel route in such a way that no steering movements are required, if possible.

1.2 Travel gears / hydraulic motors / track rollers

NOTICE
Damage to the travel gear, hydraulic motors and track rollers!
On longer travel routes and / or when driving uphill / downhill, the travel gears, hydraulic motors and / or track rollers can be overheated and damaged.
- ▶ Make sure that the travel gears - before driving the crane - are on maximum fill level.
- ▶ With suitable measuring devices make sure that the maximum permissible temperature of the travel gears, hydraulic motors and / or track rollers in travel operation over longer distances is below 90 °C. For a short time (**maximum** 10 minutes), the temperature may increase to a value between 90 °C and 100 °C.
- ▶ As soon as the maximum permissible temperature on one position is exceeded, take a break for cooling off.
- ▶ The crane operator is responsible for any damage on travel gears, hydraulic motors and / or track rollers.

LWE/LR 1600-2-001/18101-07-02/en

copyright © Liebherr-Werk Ehingen GmbH 2018

When the maximum permissible temperature range on a travel gear and / or hydraulic motor is reached:

▶ Take a break until the temperature on travel gear(s), hydraulic motor(s) and / or track rollers had dropped considerably.

Maximum permissible temperature range on travel gear(s) / hydraulic motor(s)		
	To 90 °C	**between 90 °C and 100 °C**
Duration of exposure	continuous	not longer than 10 minutes

When the temperature has dropped on all travel gears / hydraulic motors under 90 °C:

▶ Travel operation is permissible again.

1.3 Center of gravity display

WARNING
Shifting of center of gravity!
The calculation of the values for the display of the center of gravity in the job planner are based on ideal assumptions.

▶ Side deformations of the boom system due to wind, inclined position and elastic resilience of the steel structure are not taken into account but they can lead to a shifting of the center of gravity.

Position	Description
1	Center of gravity display
1.1	Core surface
1.2	Center of gravity

WARNING
Center of gravity of the crane is outside the core area!
If the center of gravity **1.2** of the crane is outside the core area **1.1**, then the crane can topple over. Personnel can be severely injured or killed.

▶ To drive the crane, the center of gravity **1.2** must always be within the core area **1.1**.

▶ If the center of gravity is outside of the core area, then it is prohibited to drive the crane.

Note

▶ If the center of gravity **1.2** of the crane is within the core area **1.1**, then the center of gravity **1.2** is shown in green.

▶ If the center of gravity **1.2** of the crane is outside the core area **1.1**, then the center of gravity **1.2** is shown in red.

The following specifications and instructions must be observed:

– By luffing the boom system up and down, the position of the center of gravity **1.2** must be corrected in such a way that the overall center of gravity remains within the core area **1.1**.

1.4 Distribution of surface pressure

WARNING
Increased surface pressure!
The calculation of the values for the display of the surface pressure in the job planner are based on ideal assumptions.

▶ Side deformations of the boom system due to wind, inclined position and elastic resilience of the steel structure are not taken into account but they can lead to an increase of the surface pressure.

LWE/LR 1600-2-001/18101-07-02/en

copyright © Liebherr-Werk Ehingen GmbH 2018

Note
- ▶ The boom must be luffed down before driving until the load is even distributed on the tracks.
- ▶ If the counterweight on the turntable is large, then it is required to position the boom in such a way that a suitable distribution of surface pressure for driving is obtained.

1.5 Suitable distribution of surface pressure

If the distribution of the surface pressure is even (surface pressure front and surface pressure rear approx. the same value), then steering is difficult or not possible at all.

For the suitable distribution of surface pressure, the following applies:
- A = Surface pressure on the side of the two tracks which has the lower load
- B = Surface pressure on the side of the two tracks which has the higher load
- The center of gravity must however always be within the core area **1.1**.

Distribution of surface pressure A to B				
A	/	**B**	=	Should be greater than 0.3

In case of unfavorable distribution of surface pressure it is required to position the boom system in such a way that a suitable distribution of the surface pressure is reached for driving.

- ▶ The turntable should be turned while at a standstill: The boom system should be luffed in such a way that the crawlers are subjected to a load as evenly as possible.
- ▶ Driving uphill: The boom system should be luffed in such a way that the side of the crawler track which has less of a load is on the rear.
- ▶ Driving downhill: The boom system should be luffed in such a way that the side of the crawler track which has less of a load is on the front.

1.6 Steering ability

Note
High load on the crane!
When driving the crane, steering movements cause a high load on the crane travel gear.
- ▶ If possible, forego steering movements with load on the hook and / or derrick ballast.
- ▶ Select the travel route in such a way that no steering movements are required, if possible.
- ▶ If not otherwise possible, before initiating a steering movement, set down the load and / or derrick ballast.

The steering ability of the crane depends on the following factors:
- Friction conditions under the chains
- Evenness of the ground:
  - Steering is not possible if the crawler travel gear is only making contact with the ground at the front and rear.
- Load bearing capacity of the ground:
  - If the crawler travel gear sinks into the ground, then the steering ability is significantly restricted.
- Position of the overall center of gravity:
  - If the overall center of gravity - under consideration of the suspended load - is at the center of the crane, then steering is hard or not possible at all.

The steering ability can be improved by:
- Placing metal sheeting, sand, gravel, water underneath
- By taking the load bearing capacity of the ground and the position of the center of gravity into account: Changing the center of gravity.

LWE/LR 1600-2-001/18101-07-02/en

copyright © Liebherr-Werk Ehingen GmbH 2018

2 Driving with a load and / or Derrick ballast

WARNING
The crane can topple over!
If the following prerequisites are not observed for crawler operation, the crane can topple over.
Personnel can be severely injured or killed.
- ▶ Make sure that the prerequisites for crawler operation are read and have been understood - before „driving with a load and / or Derrick ballast“.

2.1 Prerequisites for driving with a load and / or derrick ballast

WARNING
The crane can topple over!
If load charts with lateral inclines of more than 0.3° are available, then the crane may be driven with a load within these load charts.
If the following points are not observed, the crane can topple over.
Personnel can be severely injured or killed.
- ▶ The following prerequisites for driving with a load must be adhered to.
- ▶ Driving the crane with lateral and longitudinal inclines of more than ± 0.3° - with installed derrick ballast - is prohibited.

Note
- ▶ The permissible inclines from the load charts apply for driving with a load.
- ▶ Take the maximum permissible wind speed from the load charts.

Permissible inclines for driving with a load	
Overall incline	± 0.3°

LWE/LR 1600-2-001/18101-07-02/en

copyright © Liebherr-Werk Ehingen GmbH 2018

WARNING
The crane can topple over!
If the following conditions are not observed, the crane can topple over.
Personnel can be severely injured or killed.
- ▶ The ground must be level (± 0.3°) and have adequate load bearing capacity.
- ▶ The ground must be able to safely take on the maximum occurring surface pressures.

WARNING
The crane can topple over!
If the crane is driven in lateral and longitudinal inclines of more than ± 0.3° with a load or derrick ballast, then crane structures can fail and the crane can topple over.
Personnel can be severely injured or killed.
- ▶ Driving uphill / downhill with a load and / or derrick ballast is prohibited.

WARNING
The crane can topple over!
The crane can be driven with the given loads from the load charts, if the following prerequisites are met.
If the following prerequisites are not observed, the crane can topple over.
Personnel can be severely injured or killed.
- ▶ The maximum permissible travel speed of the crawler with load and / or derrick ballast may **not** exceed 0.05 m/s **or** 3 m/min **or** 0.18 km/h.
- ▶ Steering the crawler with suspended load and / or installed derrick ballast is difficult and often not possible at all. Make sure that the slewing gear free wheeling is actuated for steering.
- ▶ Avoid jerky driving movements.
- ▶ Secure the suspended load to avoid oscillation.
- ▶ Lift the suspended ballast no more than maximum 250 mm off the ground.
- ▶ Luff the main boom up or down until a medium utilization is obtained on test point 1 **MS1**.

3 Driving without a load and without derrick ballast

WARNING
The crane can topple over!
If the following prerequisites are not observed for crawler operation, the crane can topple over.
Personnel can be severely injured or killed.
- ▶ Make sure that the prerequisites for crawler operation are read and have been understood - before „driving without a load and without Derrick ballast“.

LWE/LR 1600-2-001/18101-07-02/en

copyright © Liebherr-Werk Ehingen GmbH 2018

3.1 Prerequisites for driving without a load and without derrick ballast

Make sure that the following prerequisites are met:
- The maximum permissible oil fill quantity in the diesel motor is present.
- The oil level in the hydraulic oil tank must be lowered by extending the cylinders so that an overflow is not possible.
- The contents of the fuel tank must be reduced so that an overflow is not possible.
- The maximum permissible wind speed of 9 m/s is not being exceeded.
- the travel speed may not exceed 0.4 m/s **or** 24 m/min **or** 1.44 km/h
- The turntable is aligned parallel to the crawler track, 0° or 180° position.

WARNING
The crane can topple over!
When driving in lateral inclines, the crane can slip off or topple over.
Personnel can be severely injured or killed.
- ▶ Make sure that the overall center of gravity of the crane is in the center of rotation when driving in lateral inclines.
- ▶ The overall center of gravity for driving without a load must be constantly checked with the LICCON job planner.
- ▶ Make sure that the permissible lateral and longitudinal inclines are not exceeded.

Note
- ▶ By luffing the boom up and down, the position of the center of gravity **1.2** must be corrected in such a way that the overall center of gravity remains within the core area **1.1**.
- ▶ When driving the crane in terrain with a longitudinal and lateral incline, then the required boom position must be determined with the aid of the LICCON job planner via the position of the overall center of gravity, see section „Display of center of gravity“.

WARNING
The crane can topple over!
When driving in lateral inclines with boom lengths of more than 150 m the crane can topple over.
Personnel can be severely injured or killed.
- ▶ Driving in lateral inclines with boom lengths of more than 150 m is **exclusively** permitted after a written release is obtained from **Liebherr-Werk Ehingen GmbH**.

WARNING
Crane with narrow crawler track!
- ▶ When driving cranes with narrow tracks and corresponding equipment, the special travel charts and danger notes must be observed and adhered to.

Permissible lateral inclines for driving without a load / derrick ballast	
Overall length of boom	**Maximum permissible lateral incline**
Shorter / equal to 96 m	± 3°
97 m to 150 m	± 2°

Permissible longitudinal inclines for driving without a load / derrick ballast	
Overall length of boom	**Maximum permissible longitudinal incline**
To 150 m	± 10°

LWE/LR 1600-2-001/18101-07-02/en

copyright © Liebherr-Werk Ehingen GmbH 2018

WARNING
The crane can topple over!
If the following conditions are not met when driving the crawler crane uphill / downhill, then the crane can topple over.
Personnel can be severely injured or killed.

- The ground must be able to take on the occurring surface pressures.
- The friction coefficient between the roadway and the ground must be large enough to take on the occurring drive forces.
- Slippery ground, especially ice, frost and snow can cause the crane to slide off sideways in longitudinal and lateral inclines and therefore cause the crane to topple over.
- The turntable must be parallel to the crawler carriers and secured to prevent it from turning.
- All acceleration and delay maneuvers must be initiated with extreme caution and at the least possible speed.
- The transfer from the horizontal into an uphill / downhill slope and from the uphill / downhill slope into the horizontal must be made evenly.
- Edges, over which the crane tilts are impermissible.
- Any incline changes must be made continuously.
- The surface pressures which will occur should be determined with the job planner before travel.
- The ground must be sufficiently load bearing and have sufficient traction to prevent the crane from slipping.
- The counterweight on the turntable must be secured with a chain, see chapter 4.07 of the Crane operating instructions.
- The center of gravity of the crane must lie within the core area **1.1** of the crane.
- The appropriate and permissible boom position for the respective equipment configuration must be determined with the job planner.

4 Driving uphill / downhill

The maximum climbing ability of the crawler crane is limited by the following criteria:

- The location of the center of gravity for the complete crawler crane
- The friction coefficient between roadway and track pads
- The transit between the horizontal and the uphill / downhill slope
- The maximum permissible longitudinal incline of ±10° up to a boom length of 150 m
- The oil level in the diesel engine
- The oil level in the travel gears

4.1 Calculation of required length of transfers in uphill / downhill slopes

The required length **L** for transfers results from the existing uphill angle **α** and the length of the tracks **LC**.

LWE/LR 1600-2-001/18101-07-02/en

copyright © Liebherr-Werk Ehingen GmbH 2018

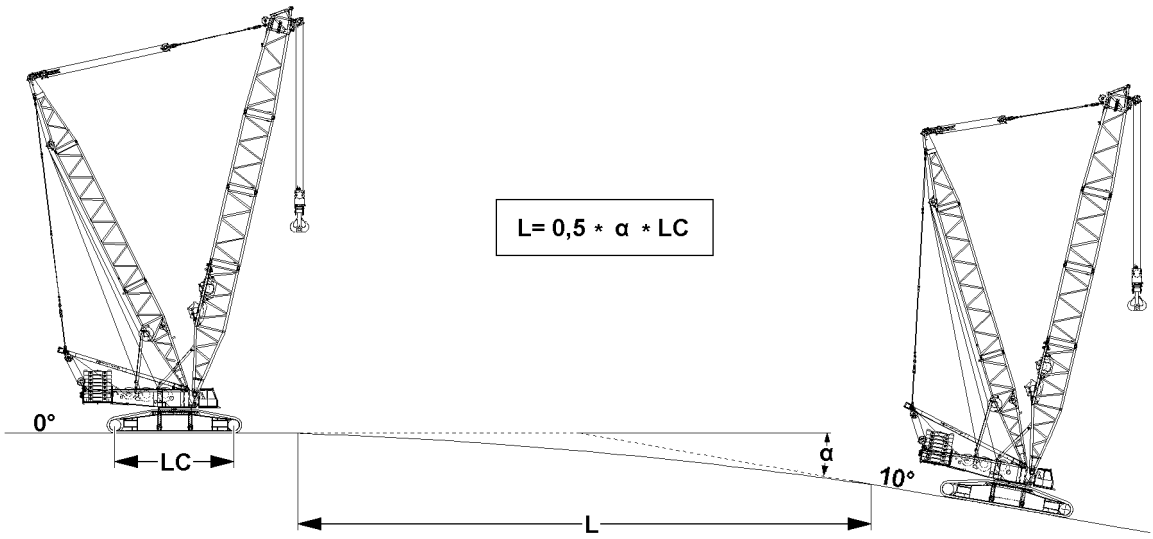

Fig.119612

Abbreviation	Description
L	Required length of transfers
α	Angle Rising / falling inclines in degrees
LC	Length of crawlers between drive wheels / steering wheels

4.1.1 Calculation example

Given:

α = 10°

LC = 17.3 m (use only the actual value of the crane!)

Wanted:

L = ?

Calculation formula						
L	=	0,5	*	**α**	*	**LC**
L	=	0,5	*	10	*	17.3 m
L	=	86.5 m				

4.2 Prerequisites for driving under observation of the boom position

Note

- ▶ The illustrations in this section are only examples and may not match to your crane.
- ▶ The determining factor for driving uphill / downhill is the exact knowledge of the existing operational conditions on the jobsite and the surface pressures, permissible boom angles and inclines as well as the overall center of gravity which were determined from them with the job planner.

WARNING

The crane can topple over!
If the following note is not observed, the crane can topple over.
Personnel can be severely injured or killed.

- ▶ Driving uphill / downhill must always be anticipatory, with utmost caution and at the slowest speed.

LWE/LR 1600-2-001/18101-07-02/en

copyright © Liebherr-Werk Ehingen GmbH 2018

There are two different possibilities to drive crawler cranes uphill / downhill:
- with boom angle adjustment
- without boom angle adjustment

copyright © Liebherr-Werk Ehingen GmbH 2018

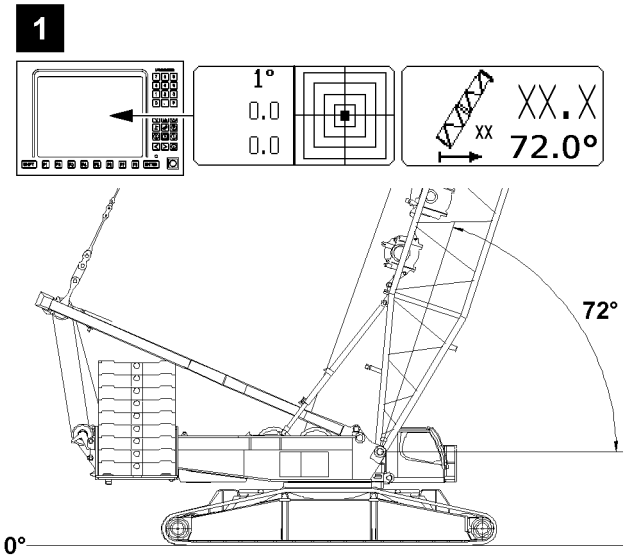

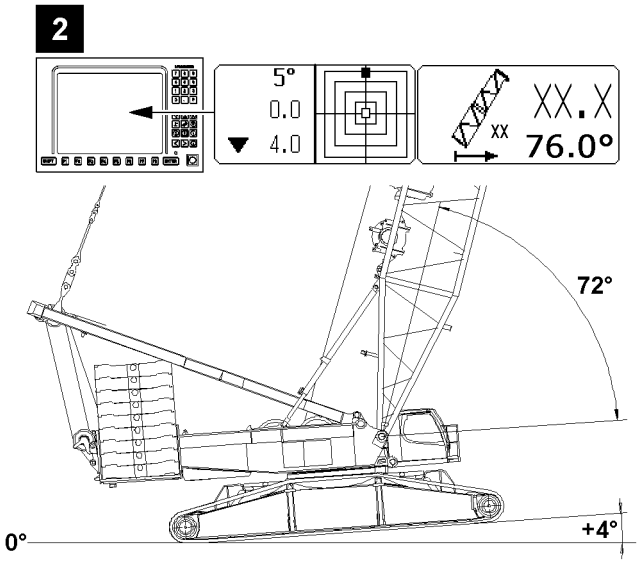

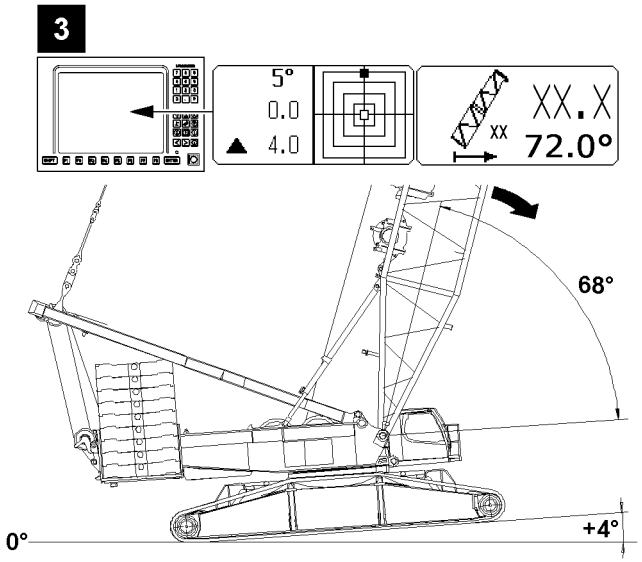

Fig.117601

LWE/LR 1600-2-001/18101-07-02/en

copyright © Liebherr-Werk Ehingen GmbH 2018

4.2.1 Prerequisites for driving on uphill / downhill slopes with boom angle adjustment

Note

- ▶ When driving into an uphill / downhill slope, during the transition between the horizontal into the uphill / downhill incline, the original boom angle must be changed continuously in such a way that the original boom angle always remains between the boom and the horizontal. This angle must be retained in the uphill / downhill incline.
- ▶ When driving out of an uphill / downhill slope, during the transition between the uphill / downhill incline into the horizontal, the original boom angle must be changed continuously in such a way that the original boom angle always remains between the boom and the horizontal.
- ▶ In addition, the overall center of gravity of the crane must be observed.

WARNING

The crane can topple over!
When driving in uphill / downhill inclines with a load or derrick ballast, structural parts can break, the carrying crane structures can be damaged or the crane can topple over.
If the boom angle is not matched to the uphill / downhill incline when driving the crane in uphill / downhill slopes, then the crane can topple over.
Personnel can be severely injured or killed.

- ▶ Driving uphill / downhill with a load and / or derrick ballast is prohibited.
- ▶ Match the boom angle to the uphill / downhill incline.

Positive longitudinal incline (illustration 1 to 3)

Note

- ▶ When driving in positive longitudinal inclines (uphill slopes), the boom / the luffing jib must be luffed down continuously - maximum by the **uphill incline angle α**.
- ▶ The uphill incline angle **α** is 4° in the displayed example, see opposite graphic.
- ▶ View of incline and boom angle (as seen from the crane operator's cab in the direction of travel).

– Illustration **1**:
  - Crane is horizontally aligned

– Illustration **2**:
  - Crane at 4° uphill incline (positive longitudinal incline), no lateral incline
  - **Note:**
    The boom angle is always shown to the horizontal.
    Example Display boom angle = 76° (72° + 4°)
    Correct the boom angle.

– Illustration **3**:
  - Crane at 4° uphill incline (positive longitudinal incline), no lateral incline
  - **Note:**
    The boom angle is always shown to the horizontal.
    Luff the boom down by the uphill angle (4°) so that the display boom angle = 72° (68° plus 4°)

LWE/LR 1600-2-001/18101-07-02/en

copyright © Liebherr-Werk Ehingen GmbH 2018

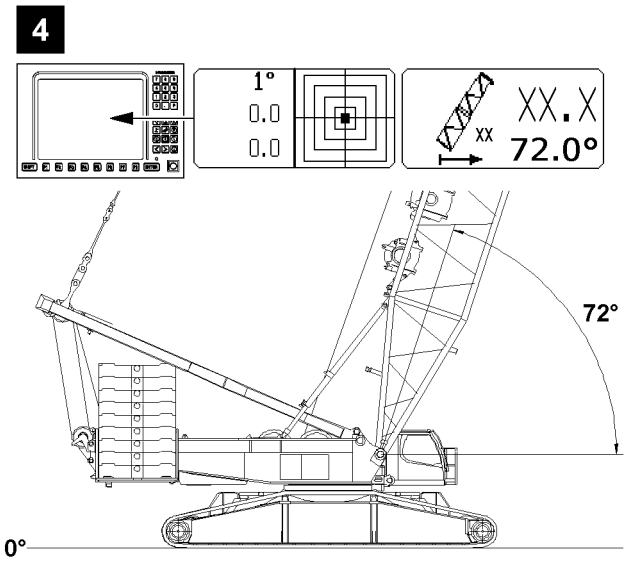

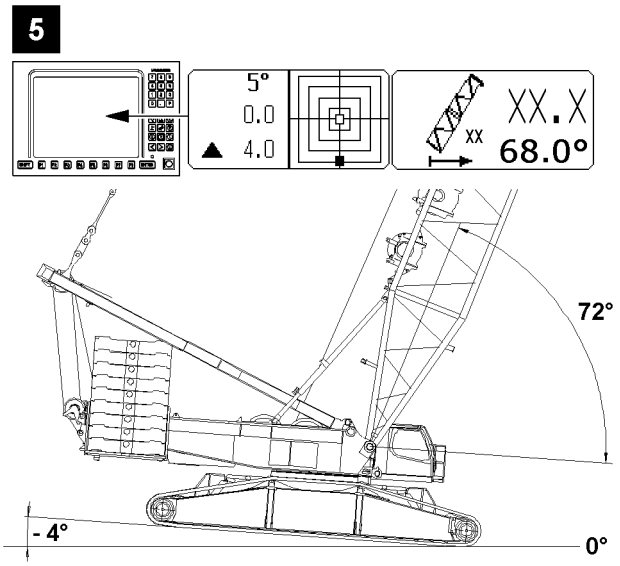

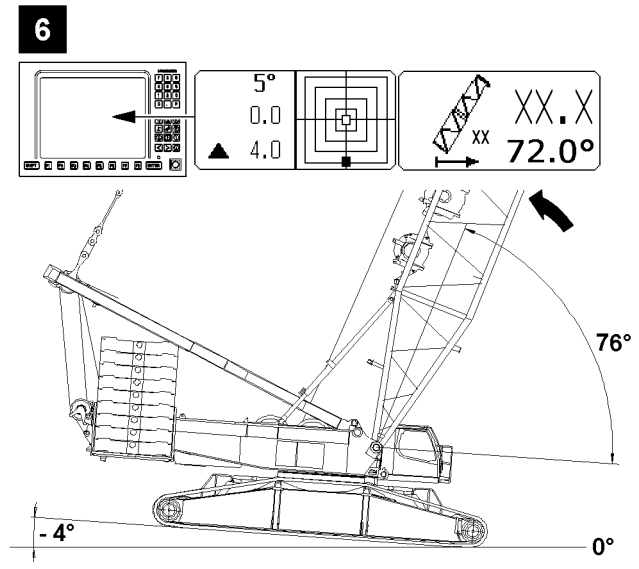

Fig.117607

LWE/LR 1600-2-001/18101-07-02/en

copyright © Liebherr-Werk Ehingen GmbH 2018

Negative longitudinal incline (illustration 4 to 6)

Note

- ▶ When driving in negative longitudinal inclines (downhill slopes), the boom / the luffing jib must be luffed up continuously - maximum by the **uphill incline angle α**.
- ▶ The uphill incline angle **α** is 4° in the displayed example, see opposite graphic.
- ▶ View of incline and boom angle (as seen from the crane operator's cab in the direction of travel).

– Illustration **1**:

  • Crane is horizontally aligned

– Illustration **2**:

  • Crane at 4° downhill slope (negative longitudinal incline), no lateral incline
  • **Note:**
    The boom angle is always shown to the horizontal.
    Example Display boom angle = 68° (72° minus 4°)
    Correct the boom angle.

– Illustration **3**:

  • Crane at 4° downhill slope (positive longitudinal incline), no lateral incline
  • **Note:**
    The boom angle is always shown to the horizontal.
    Luff the boom up by the uphill angle (4°) so that the display boom angle = 72° (76° minus 4°)

LWE/LR 1600-2-001/18101-07-02/en

copyright © Liebherr-Werk Ehingen GmbH 2018

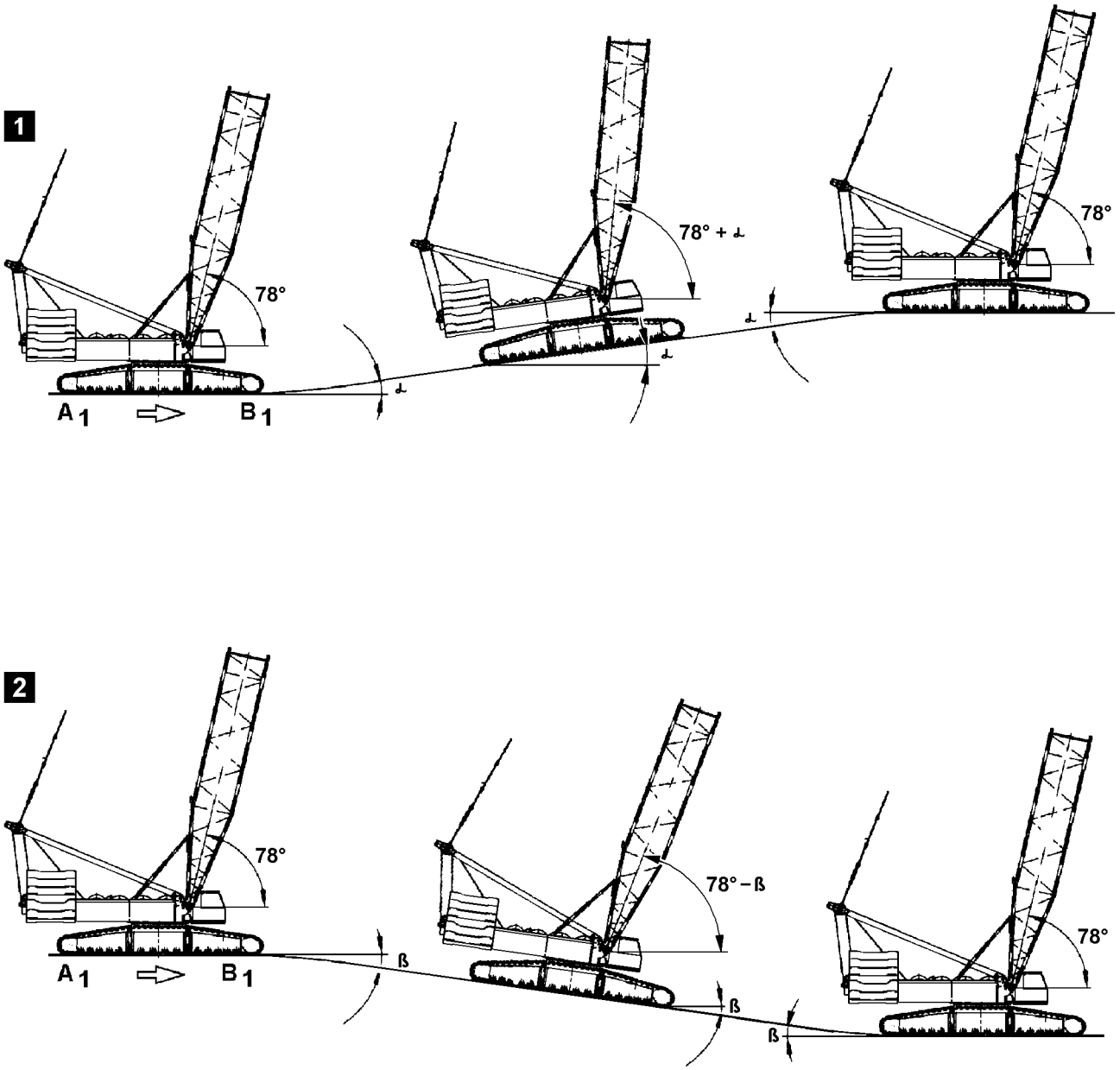

LWE/LR 1600-2-001/18101-07-02/en

Fig.109866

copyright © Liebherr-Werk Ehingen GmbH 2018

4.2.2 Prerequisites for driving on uphill / downhill slopes without boom angle adjustment

WARNING
The crane can topple over!
If the overall center of gravity of the crane is outside the core area when driving on uphill / downhill inclines without boom angle adjustment, then the crane can topple over.
Personnel can be severely injured or killed.

- ▶ Before driving into uphill / downhill slopes, check the change of the center of gravity with the job planner.
- ▶ To be able to approximately determine the changes of the center of gravity in uphill / downhill slopes with the job planner, the boom angle must be increased by the incline angle **α** when driving in uphill / downhill inclines, illustration **1**.
- ▶ To be able to approximately determine the changes of the center of gravity in downhill slopes with the job planner, the boom angle must be decreased by the incline angle **ß** when driving in downhill slopes, illustration **2**.
- ▶ Before driving the crane, determine exactly with the job planner if the crane may drive on the intended route without changing the boom angle.
- ▶ If the intended uphill / downhill incline cannot be driven without changing the boom angle according to the job planner, then the boom angle must be changed to be able to drive on the uphill / downhill incline.

LWE/LR 1600-2-001/18101-07-02/en

copyright © Liebherr-Werk Ehingen GmbH 2018

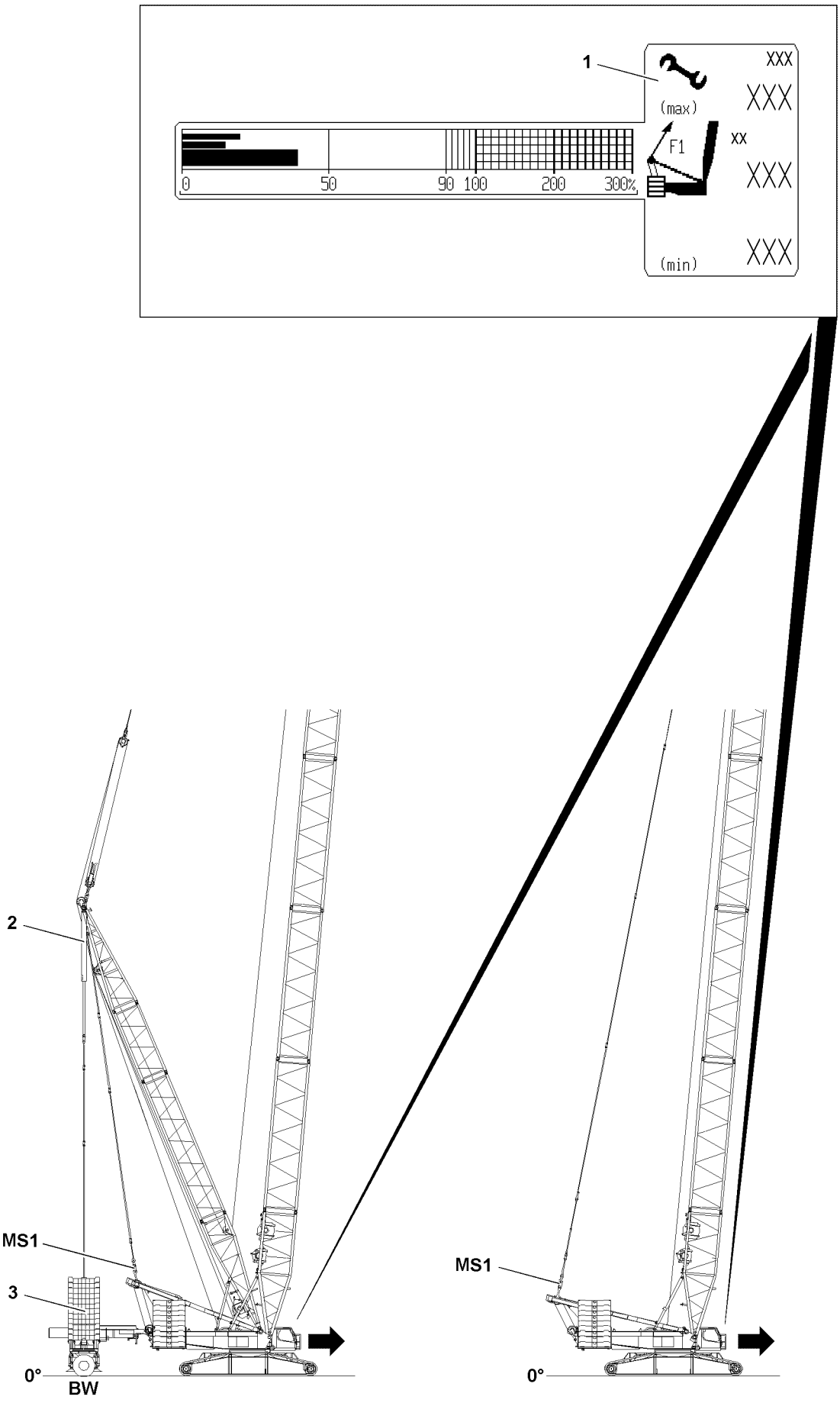

Fig.117598

LWE/LR 1600-2-001/18101-07-02/en

copyright © Liebherr-Werk Ehingen GmbH 2018

5 Driving the crawler crane

Note

▶ Test point 1 **MS1** = F1 in icon **1**.

▶ For description of test point 1, see Crane operating instructions, chapter 4.02.

WARNING

The crane can topple over!

When driving the crane - this also applies for „circular travel“ - the ballast trailer **3** is raised due to ground unevenness, the force on test point 1 **MS1** increases very quickly and the crane will be overloaded.

If the ballast trailer **3** sinks while driving due ground unevenness, the force on test point 1 **MS1** drops and the ballast trailer **3** lifts off the ground, or the entire boom system is pulled backward.

There is no LMB shut off.

The crane can topple over and personnel can be severely injured or killed.

▶ The crane operator must constantly observe the displays on the LICCON monitor while driving the crawler crane.

▶ The crane operator must correct the force changes on test point 1 **MS1** to a permissible operating range already when an advance warning occurrence on the LICCON monitor is issued, by actuating the pull cylinder in the derrick ballast guying.

WARNING

The crane can topple over!

If the following instructions are not observed, the crane can topple over.

Personnel can be severely injured or killed.

▶ Before driving the crane with the attachment, the optimum boom position must be determined with the aid of the job planner, to obtain as even a surface pressure as possible.

▶ When driving crawler cranes, it must be ensured that the ground can take on the surface pressures safely, which have been calculated with the job planner, over the entire intended travel route. If this is not the case, appropriate measures must be taken to be able to discharge the forces into the ground.

▶ An additional monitor, who is connected by radio contact with the crane operator must ensure that there are no persons or obstacles within the danger zone of the crane.

Make sure that the following prerequisite is met:

– The crane engine is running.

LWE/LR 1600-2-001/18101-07-02/en

copyright © Liebherr-Werk Ehingen GmbH 2018

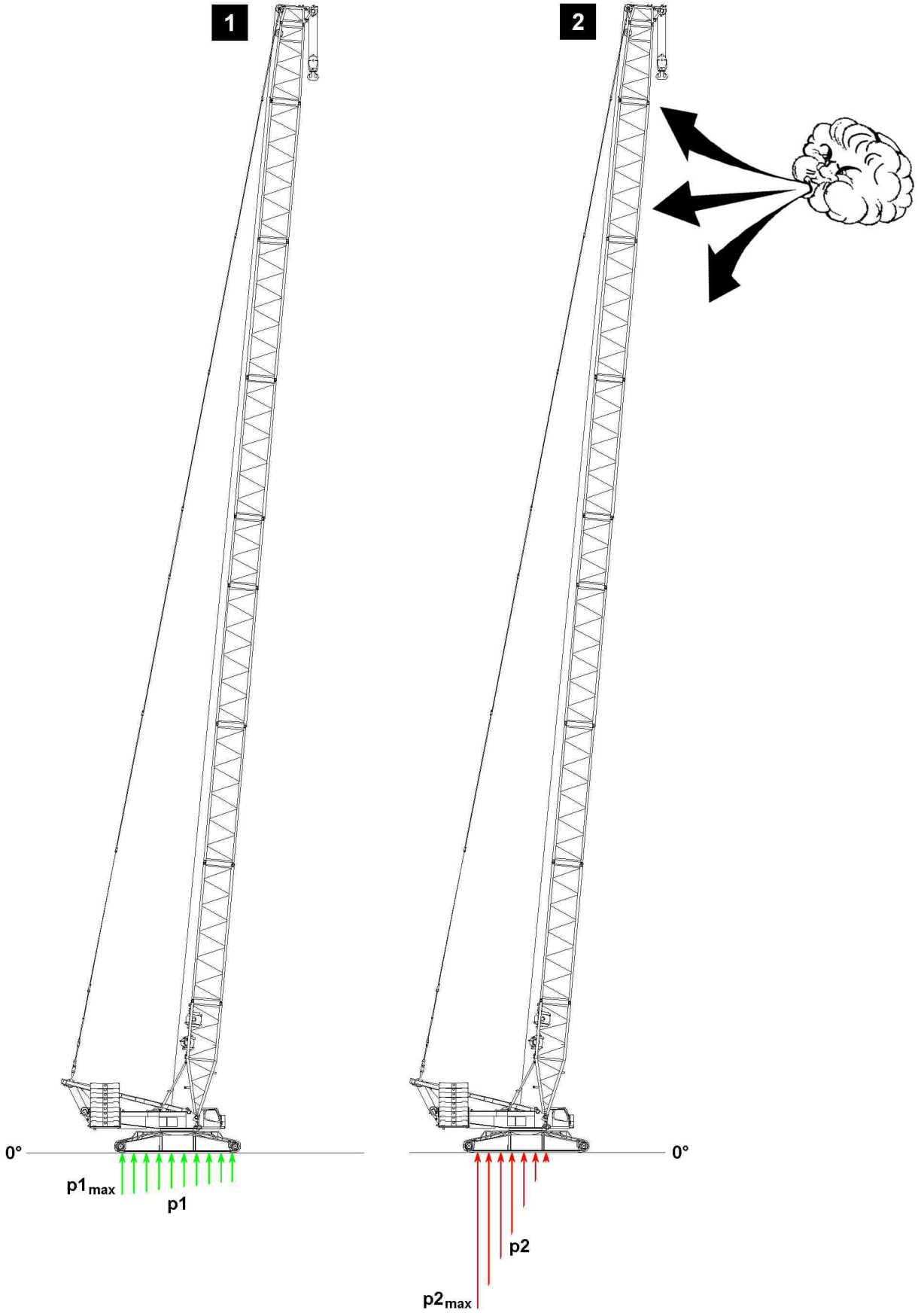

Fig.117599: $p2_{max}$ larger than $p1_{max}$

LWE/LR 1600-2-001/18101-07-02/en

copyright © Liebherr-Werk Ehingen GmbH 2018

5.1 Surface pressures and force distribution when driving the crane

WARNING
The crane can topple over!
When driving crawler cranes, surface pressures can significantly increase or change due to different factors.
This can cause the crane to topple over.
Personnel can be severely injured or killed.
- ▶ Make sure that the ground has sufficient load bearing capacity in the entire working range and / or over the entire travel route, to be able to safely take on even increased surfaces pressures of the crane.
- ▶ Make sure that the center of gravity is always within the core surface, see section „Prerequisites for crawler operation“ and LICCON job planner.

5.1.1 Surface pressures in case of wind load on boom

WARNING
The crane can topple over!
When driving the crane with long boom lengths and / or when driving with large sized loads and / or at high wind speeds, the surface pressures can increase significantly.
This can cause the crane to topple over.
Personnel can be severely injured or killed.
- ▶ Make sure that the entire travel route of the crane is sufficiently load bearing to be able to take on even increase surface pressures - for example if „wind is coming front the front on the boom“.
- ▶ Change of surface pressures on crawler track under wind load, see opposite graphic.

Illustration 1:
- Surface pressures **p1** on crawler track without wind load

Illustration 2:
- Surface pressures **p2** on crawler track in case of wind load from the front

LWE/LR 1600-2-001/18101-07-02/en

copyright © Liebherr-Werk Ehingen GmbH 2018

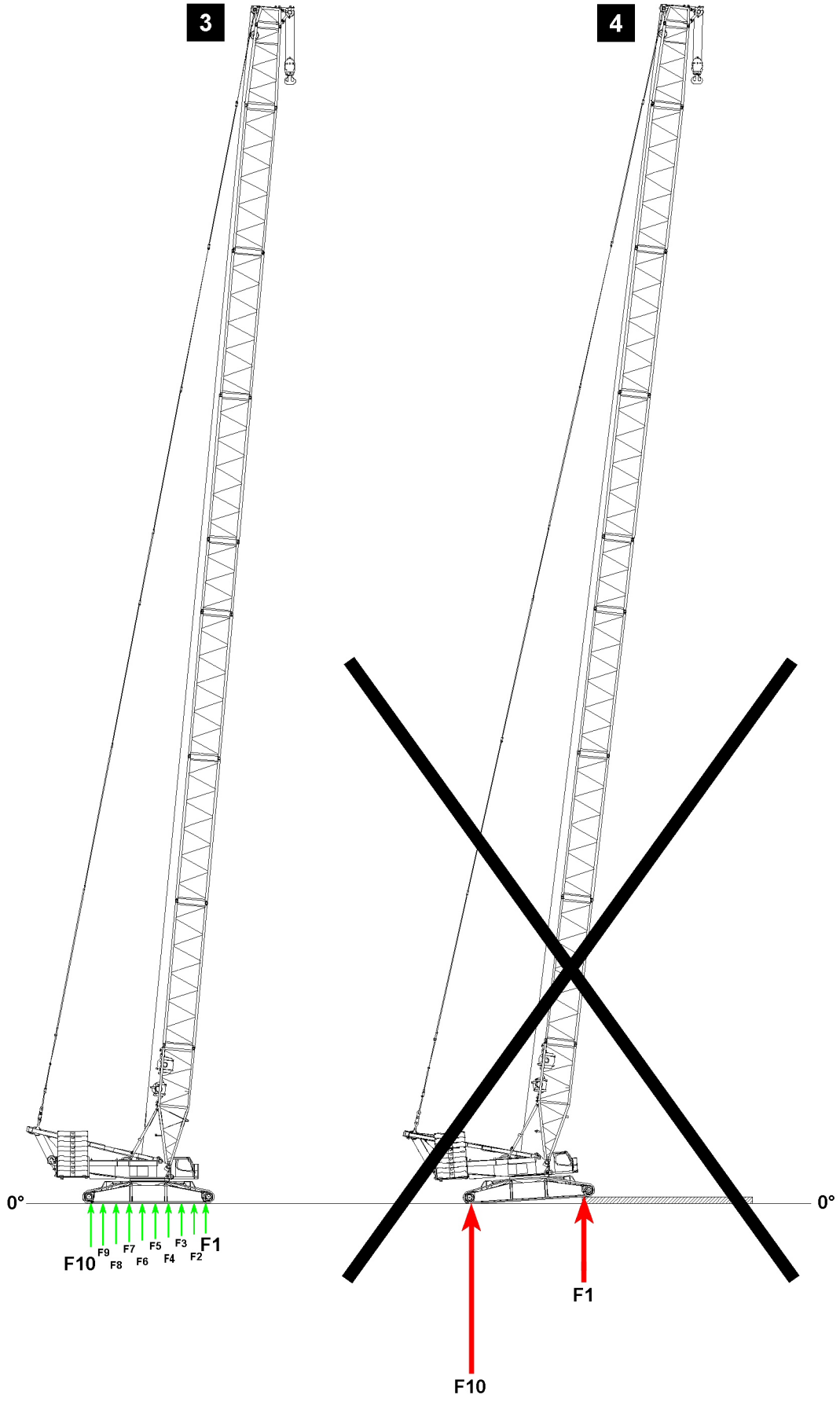

Fig.117600: Force distribution in normal operation // driving on pressure distributor plates

LWE/LR 1600-2-001/18101-07-02/en

copyright © Liebherr-Werk Ehingen GmbH 2018

5.1.2 Force distribution when driving on pressure distributor plates

WARNING
The crane can topple over!
When driving the crane on pressure distributor plates, a movement of forces occurs due to the reduction of the ground contact surfaces on the crawler track. The forces concentrate at force **F1** and force **F10**, see illustration **4**.
This can cause the crane to topple over.
Personnel can be severely injured or killed.

- ▶ Make sure, before driving the crane on pressure distributor plates, that a load bearing transfer (height equalization) was established, see section „Calculation of required length of transfers“.
- ▶ Driving the crane on pressure distributor plates without transfer (height equalization) is prohibited.

Illustration 3:
– Force distribution on crawler track of crane (normal operation)
  • Without wind influence

Illustration 4:
– Not permissible

LWE/LR 1600-2-001/18101-07-02/en

copyright © Liebherr-Werk Ehingen GmbH 2018

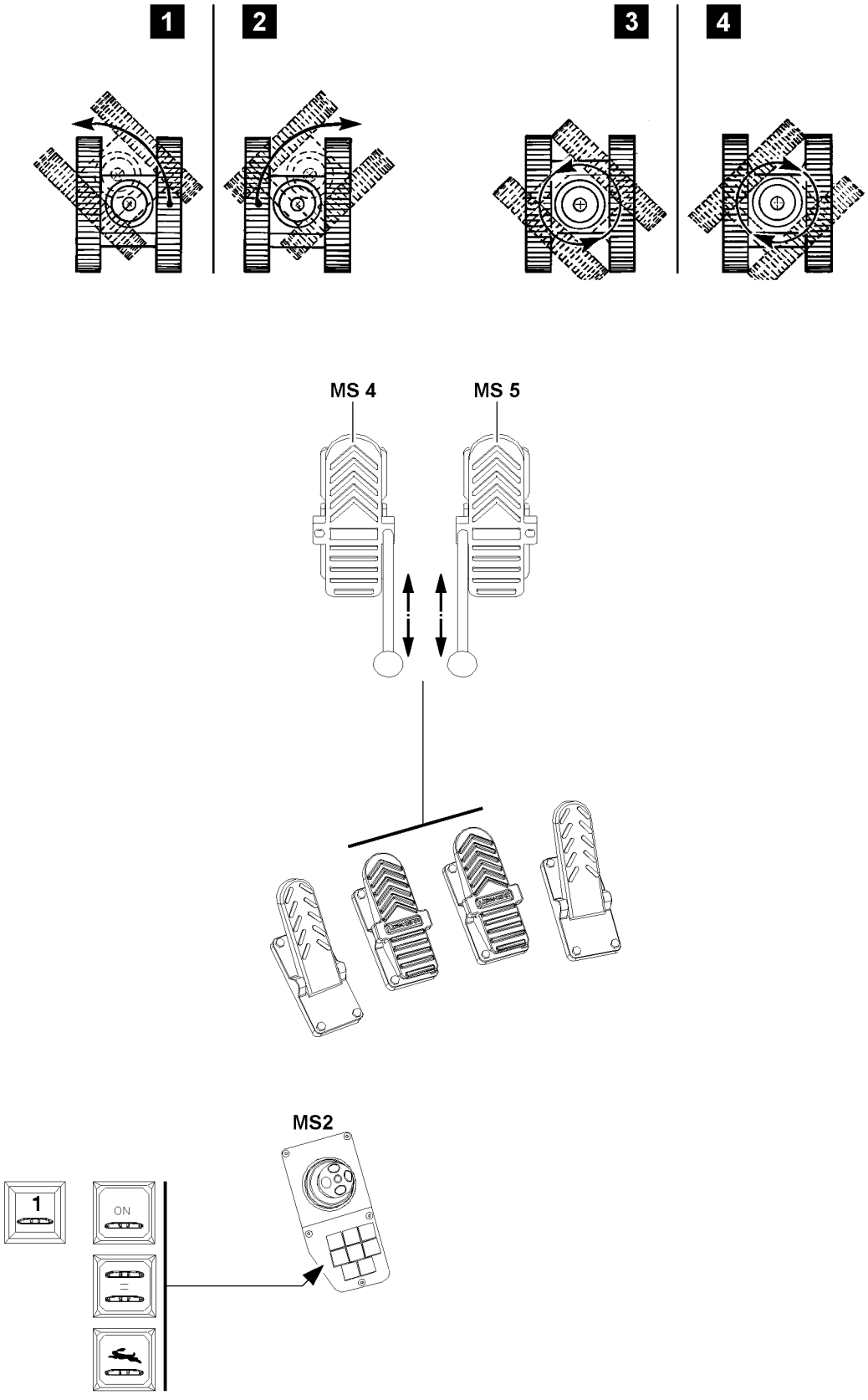

LWE/LR 1600-2-001/18101-07-02/en

Fig.107964

copyright © Liebherr-Werk Ehingen GmbH 2018

5.2 Operating elements for the crawler operation

5.2.1 Pedal carrier

	Pedal carrier (Pedal assignment, see opposite illustration)			
	Pedal	*Foot rocker **MS4***	*Foot rocker **MS5***	*Pedal*
Function:	Slewing gear brake	Crawler travel „left“	Crawler travel „right“	Engine regulation:
	Note: See also Crane operating instructions, chapter 4.01 and chapter 4.05			

5.2.2 Switch for crawler operation

	Control panel MS2		
	Switch „Crawler operation“ **or:** *Switch „Crawler operation“*	*Switch „Crawler parallel travel“*	*Switch „Rapid gear“*
Function:	On / Off	On / Off	On / Off
	Note: See Crane operating instructions, chapter 4.01.		

LWE/LR 1600-2-001/18101-07-02/en

copyright © Liebherr-Werk Ehingen GmbH 2018

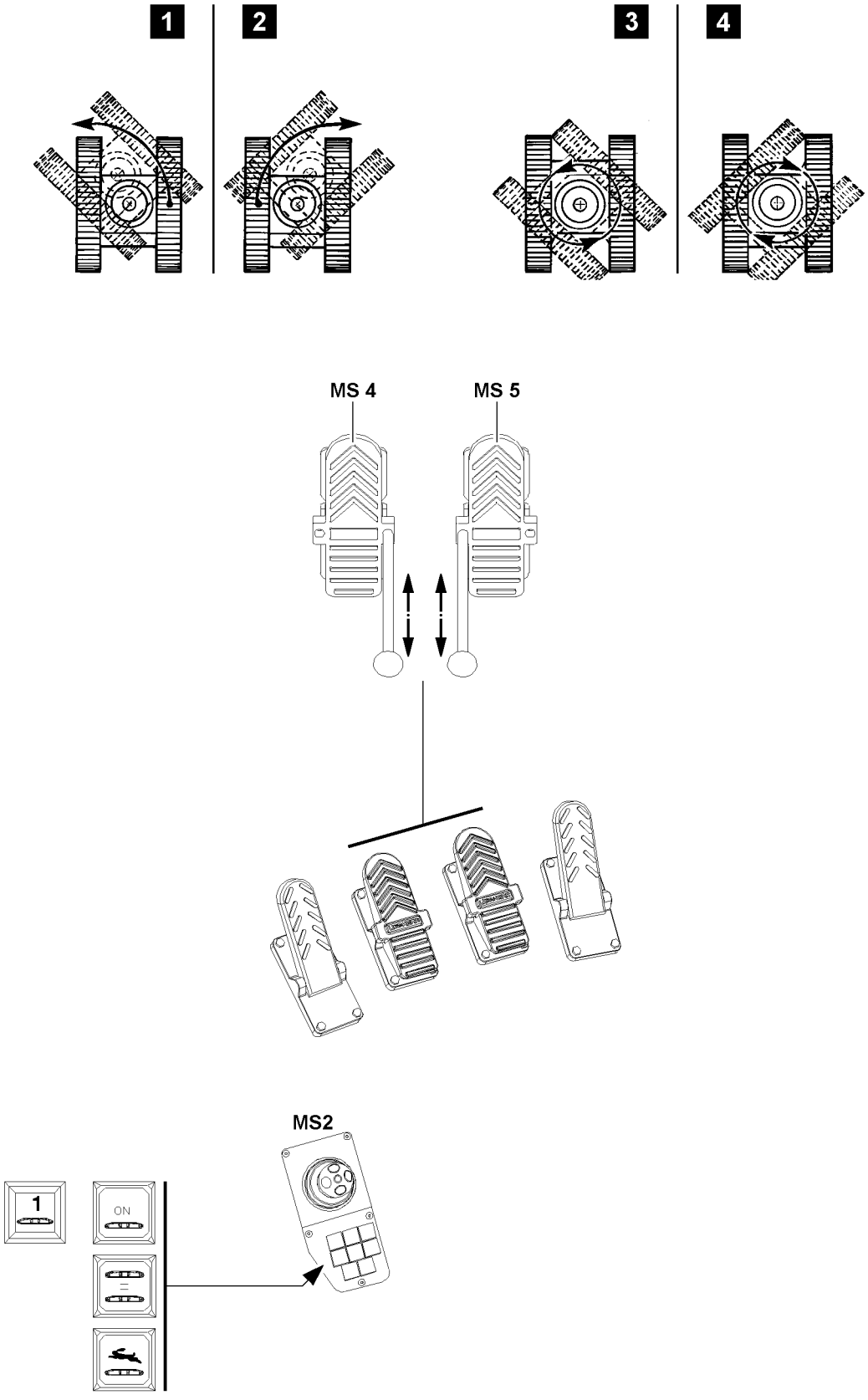

LWE/LR 1600-2-001/18101-07-02/en

Fig.107964

copyright © Liebherr-Werk Ehingen GmbH 2018

5.3 Activating crawler operation

Note
▶ The engine rpm is increased or decreased via the pedal „engine regulation“.
▶ The switch „crawler operation“ can differ somewhat, depending on the crane type.

▶ Actuate the switch „Crawler operation“.

Result:

– Crawler operation is activated.
– The indicator light in the switch „crawler operation“ lights up.

To deactivate crawler operation:
▶ Actuate the switch „Crawler operation“.

Result:

– Crawler operation is deactivated.
– The indicator light in the switch „crawler operation“ turns off.

5.4 Selecting the travel speed

This crawler crane has 2 possible speeds:
1. Speed stage 1:
   Creeper gear
2. Speed stage 2:
   Fast mode (Rapid gear)

5.4.1 Activating the creeper gear

Make sure that the following prerequisites are met:
– The switch „Rapid gear“ is not actuated.
– The indicator light in the switch „Rapid gear“ is off.

▶ Actuate the switch „Crawler operation“.

Result:

– The creeper gear is active.

5.4.2 Turning the rapid gear on

WARNING
The crane can topple over!
If the crane is driven in rapid gear with a load or derrick ballast, then the crane can topple over.
Personnel can be severely injured or killed.
▶ Driving with a load or derrick ballast in rapid gear is prohibited.

Make sure that the following prerequisites are met:
– The switch „Parallel travel crawler“ is not actuated.
– The indicator light in switch „Parallel travel crawler“ is off.
– Inching gear is active

To select speed stage 2:
▶ Actuate the switch „Rapid gear“.

Result:

– The rapid gear is activated.
– The indicator light in the switch „Rapid gear“ lights up.

LWE/LR 1600-2-001/18101-07-02/en

copyright © Liebherr-Werk Ehingen GmbH 2018

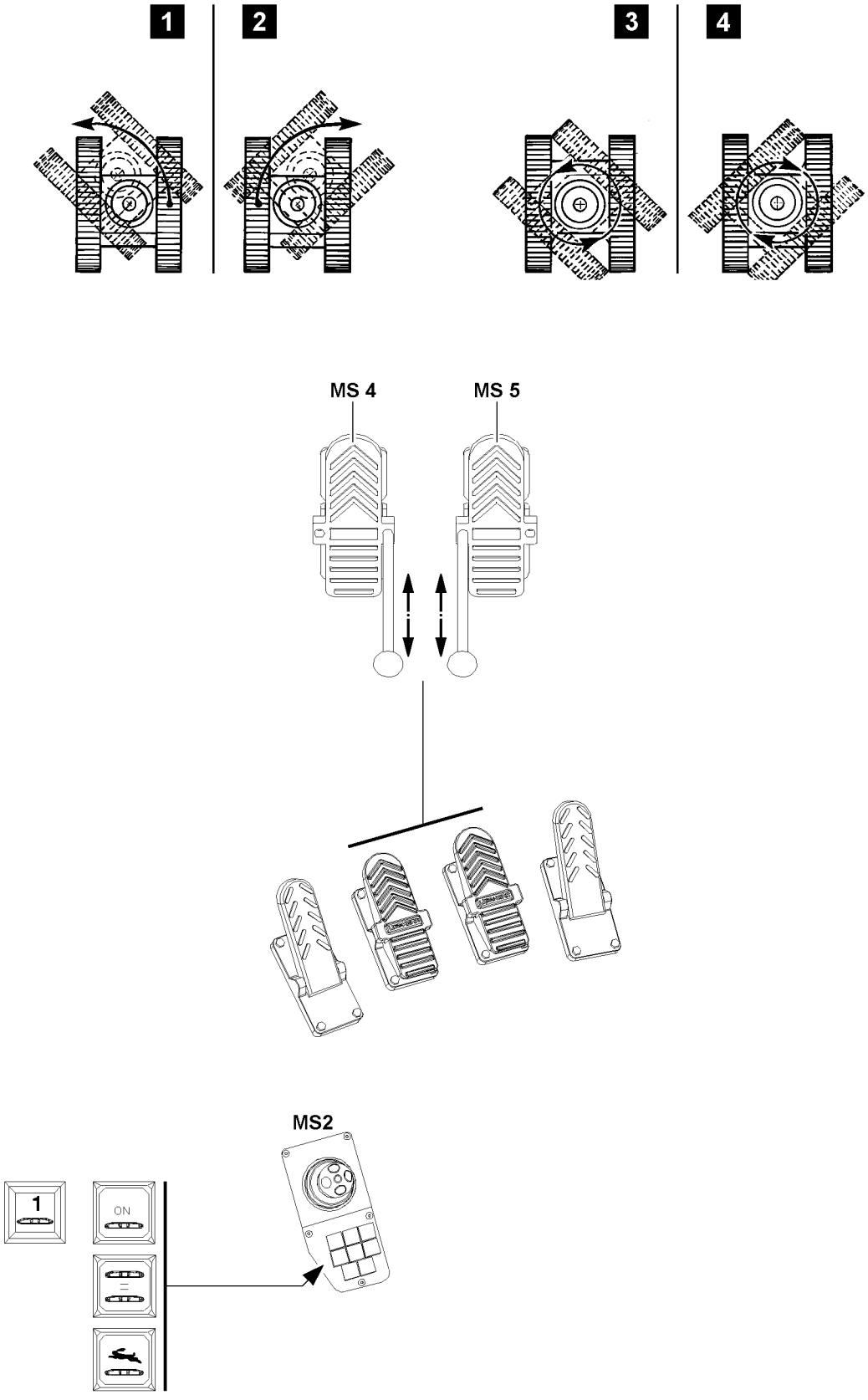

LWE/LR 1600-2-001/18101-07-02/en

Fig.107964

copyright © Liebherr-Werk Ehingen GmbH 2018

5.5 Driving the crawler

WARNING
The crane can topple over!
If a crane is driven with a load and / or derrick ballast in rapid gear, then the load and / or the boom can start to swing, structural components can be damaged and the crane can topple over.
Personnel can be severely injured or killed.
- ▶ Driving with a load and / or derrick ballast in rapid gear is prohibited.
- ▶ The maximum permissible travel speed of the crawler with load and / or derrick ballast may not exceed 0.05 m/s or 3 m/min or 0.18 km/h.
- ▶ Steering the crawler with suspended load and / or installed derrick ballast is prohibited.

WARNING
Personnel present in danger zone.
Personnel within the danger zone of the crane can be severely injured or killed.
- ▶ An additional monitor, who is connected by radio contact with the crane operator must ensure that there are no persons or obstacles within the danger zone of the crane.
- ▶ The observer may not remain in the danger zone of the crane.

Note
- ▶ Take the hand level from the transport retainer in the crane operator's cab.
- ▶ The technical design of the hand levers is completely identical. The differentiation of the two hand levers is only in their assignment to the corresponding foot rockers in assembled (pushed on) condition.

Make sure that the following prerequisite is met:
- – The switch „crawler operation" is actuated.

LWE/LR 1600-2-001/18101-07-02/en

copyright © Liebherr-Werk Ehingen GmbH 2018

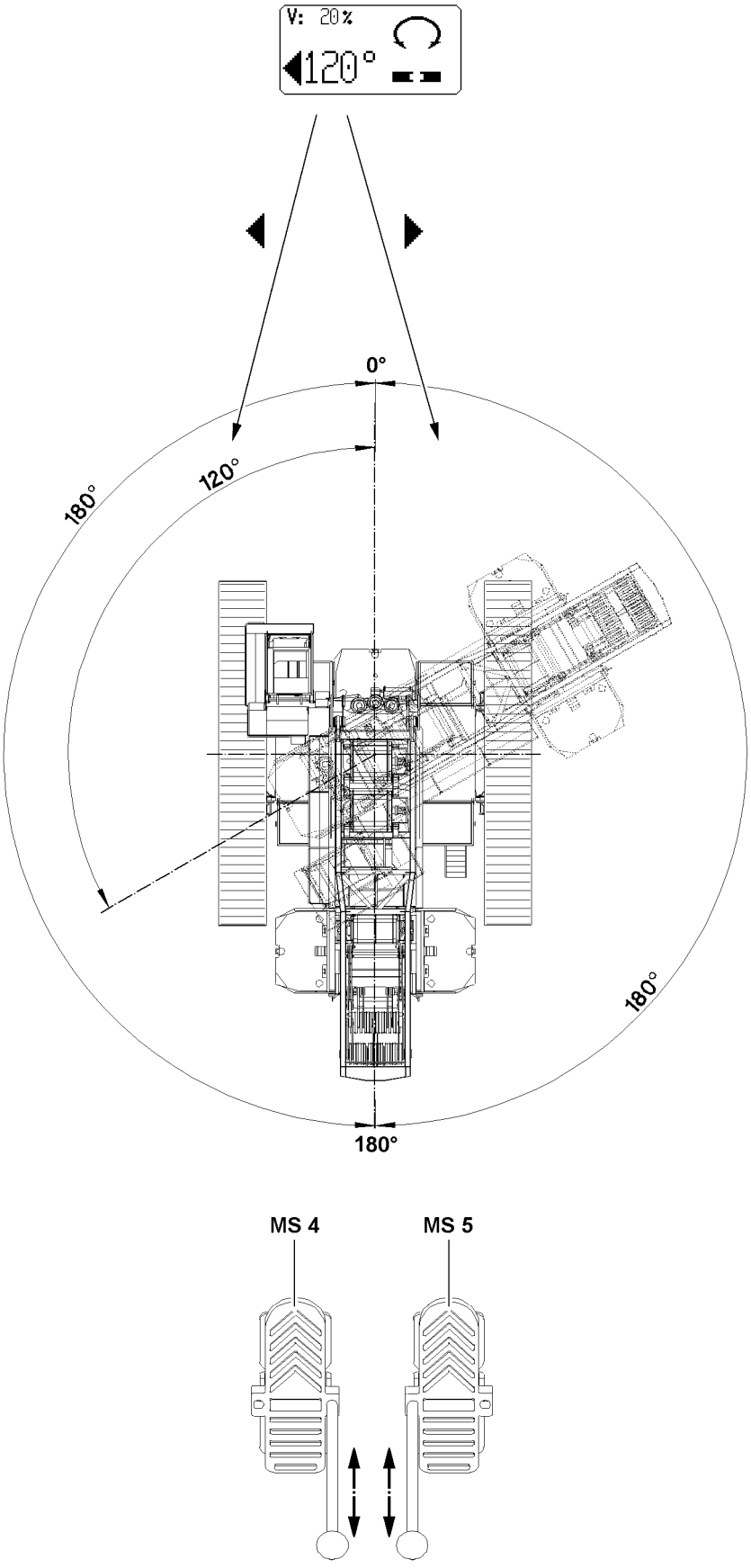

LWE/LR 1600-2-001/18101-07-02/en

Fig.107974

copyright © Liebherr-Werk Ehingen GmbH 2018

5.5.1 Changing the travel direction

Note

- ▶ At 0°, the crane superstructure is exactly in position „to the front“.
- ▶ At 180°, the crane superstructure is exactly in position „to the rear“.

The travel direction relates to the position of the crane superstructure:

- If the crane superstructure is turned past 90°, then the „forward / reverse“ travel direction changes.
- If the crane superstructure with actuated foot rocker **MS 4** or foot rocker **MS 5** is turned past 90°, then the travel direction remains until the corresponding foot rocker / manual control lever is „returned“ to neutral position.
  This means the new travel direction becomes active only if the corresponding foot rocker / manual control lever is no longer actuated.

LWE/LR 1600-2-001/18101-07-02/en

copyright © Liebherr-Werk Ehingen GmbH 2018

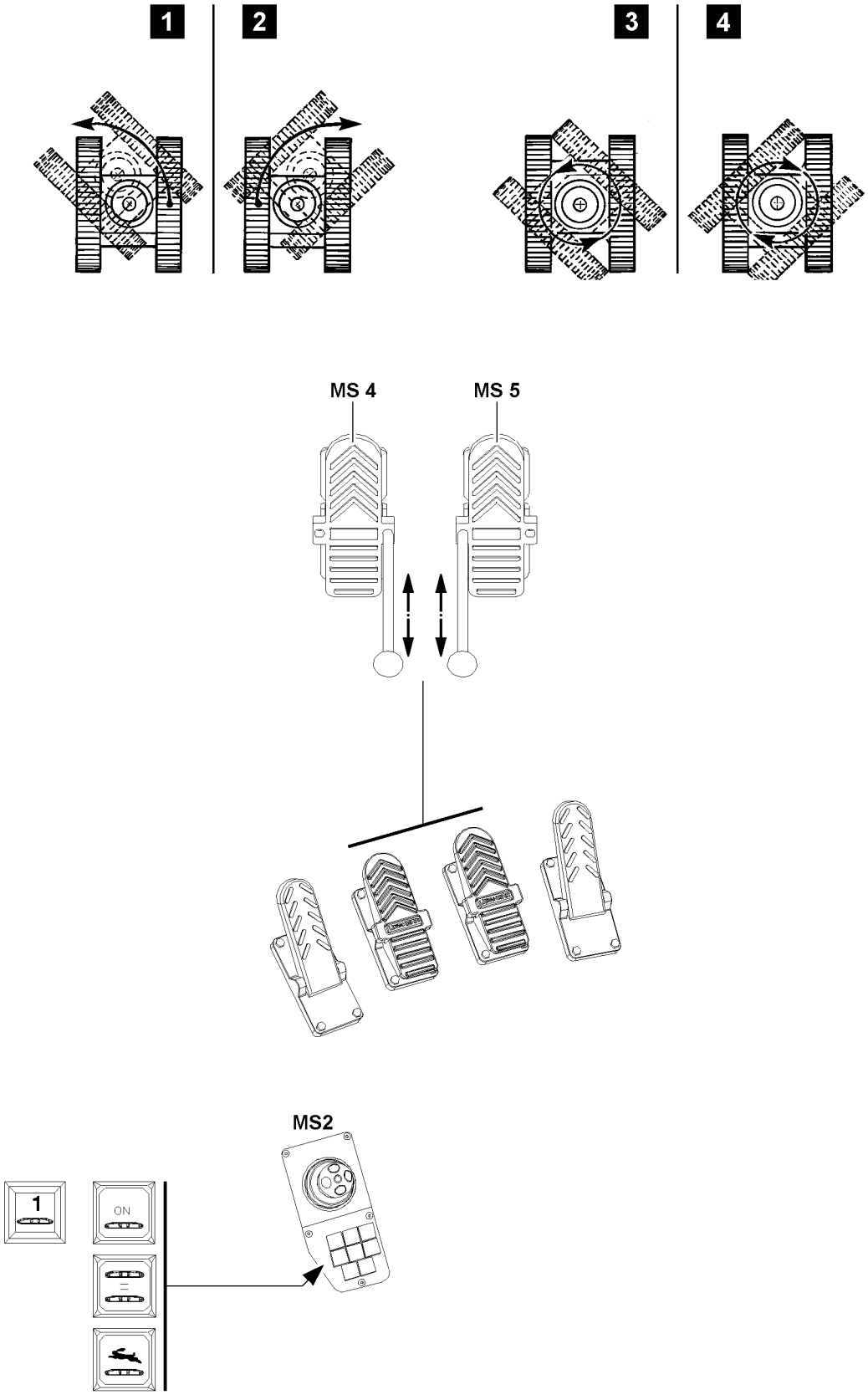

LWE/LR 1600-2-001/18101-07-02/en

Fig.107964

copyright © Liebherr-Werk Ehingen GmbH 2018

5.5.2 Driving the crawler forward and backward

The tracks can be operated with the foot rockers:
- Crawler track left: Foot rocker **MS4**
- Crawler track right: Foot rocker **MS5**

Alternatively, a manual lever can be installed (inserted) on the foot rocker **MS4** and the foot rocker **MS5** in order to control the travel movements of the crawler precisely.

Driving the crawler forward

▶ Push the right foot rocker **MS5** forward.
or
Move the manual lever on the foot rocker **MS5** forward.

Result:

– The right track moves forward.

▶ Push the left foot rocker **MS4** forward.
or
Move the manual lever on the foot rocker **MS4** forward.

Result:

– The left track moves forward.

Move the crawler backward.

▶ Push the right foot rocker **MS5** back.
or
Move the manual lever on the foot rocker **MS5** backward.

Result:

– The right track moves backward.

▶ Push the left foot rocker **MS4** back.
or
Move the manual lever on the foot rocker **MS4** backward.

Result:

– The left track moves backward.

LWE/LR 1600-2-001/18101-07-02/en

copyright © Liebherr-Werk Ehingen GmbH 2018

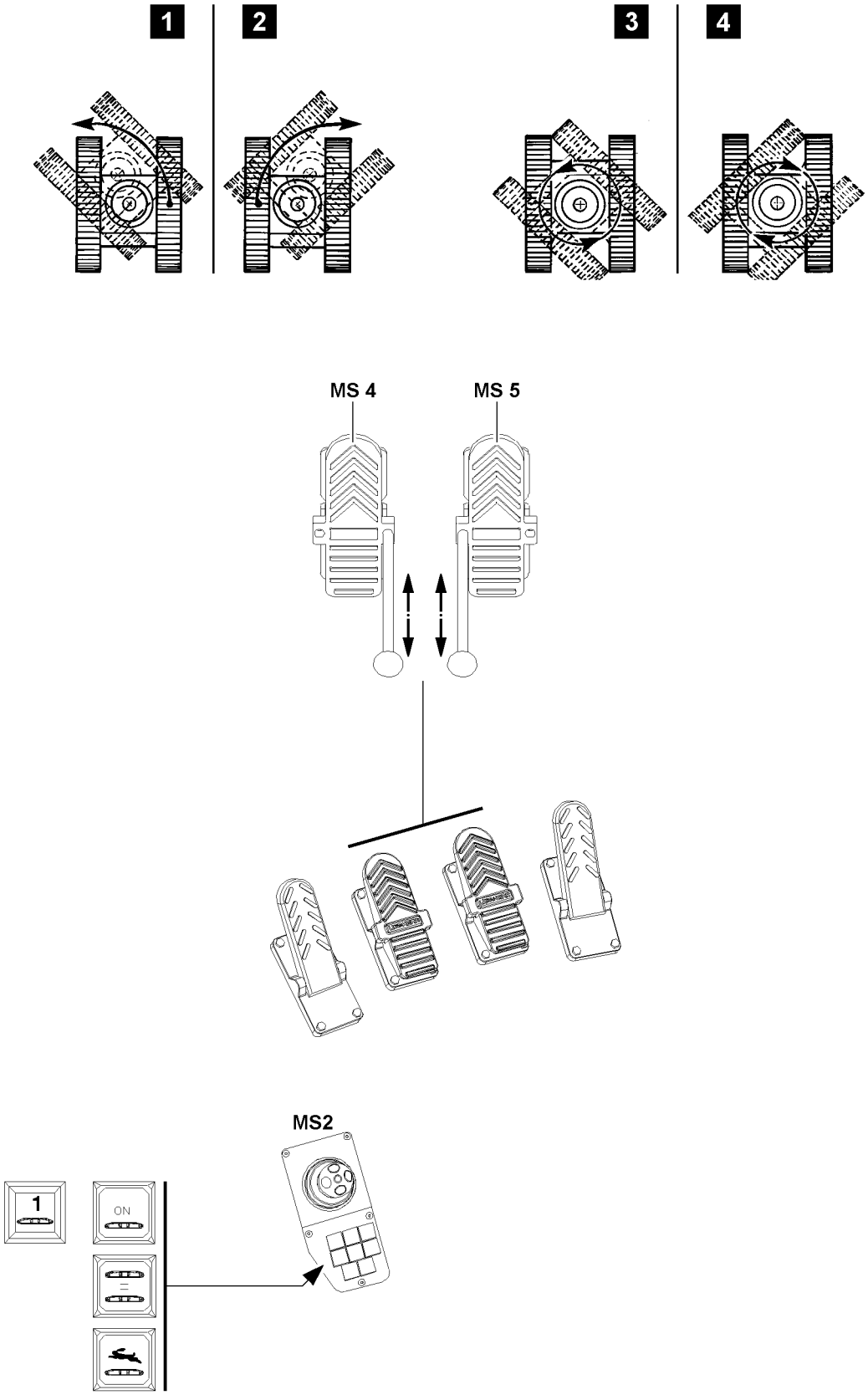

LWE/LR 1600-2-001/18101-07-02/en

Fig.107964

copyright © Liebherr-Werk Ehingen GmbH 2018

5.5.3 Activating „parallel travel“

If „parallel travel crawler“ is added, both tracks are simultaneously controlled by pressing down on foot rocker **MS4** or foot rocker **MS5**. The foot rocker, which is actuated first serves as the control for both crawler tracks. This makes is possible to drive the tracks exactly straight forward on suitable ground.

Note

- ▶ If, with the „rapid gear“ turned on, the function „parallel travel crawler“ is added, then the function „rapid gear“ is deactivated: The indicator light in the switch „rapid gear“ turns off. However, the switch remains actuated.
- ▶ If the function „parallel travel crawler“ is turned off again, the rapid gear activates automatically: The indicator light in the switch „Rapid gear“ lights up.

Make sure that the following prerequisite is met:

– Rapid gear is deactivated: The indicator lights in switch „rapid gear“ is off.

▶ Actuate the switch „parallel travel crawler“.

Result:

– „Parallel travel crawler“ is activated.
– The indicator light in the switch „parallel travel crawler“ lights up.

LWE/LR 1600-2-001/18101-07-02/en

copyright © Liebherr-Werk Ehingen GmbH 2018

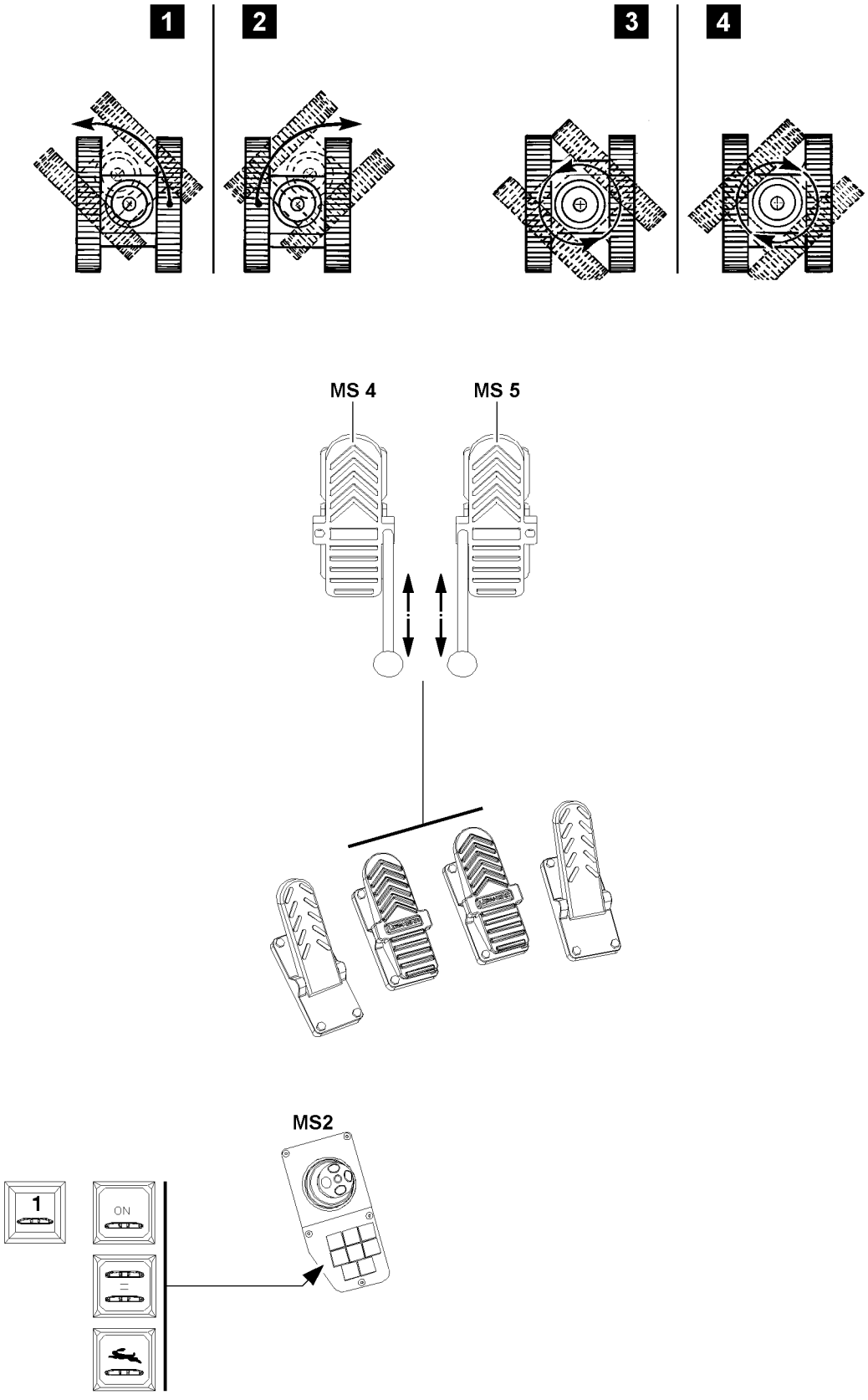

LWE/LR 1600-2-001/18101-07-02/en

Fig.107964

copyright © Liebherr-Werk Ehingen GmbH 2018

5.5.4 Steering the crane

WARNING
The crane can topple over!
If the crane is steered with applied slewing gear brake, then the boom system can be damaged due to high side acceleration.
Personnel can be severely injured or killed.
▶ When steering the crawler, always activate the slewing gear freewheeling.

WARNING
The crane can topple over!
If the crawler is steered with a sagging chain, then the centering cams of the track pads can no longer be centered and guided in the drive wheels and the track rollers.
The centering cams are damaged and / or the chain can jump from the drive wheels and damage them.
Personnel can be severely injured or killed.
▶ Stop steering movements immediately.
▶ Drive straight forward until all centering cams are centered again in the track rollers.
▶ If possible, retension the track chain, see Crane operating instructions, chapter 7.04.

WARNING
The crane can topple over!
When steering in small radii or when steering in counterrotation, the crawler tracks can „dig“ into the ground and cause the crane to topple over.
Personnel can be severely injured or killed.
▶ Steer the tracks in as large a radius as possible.
▶ Avoid counterrotation.

Steering the tracks to the left

See illustration **1**.

▶ Push the right foot rocker **MS5** forward.
or
Move the manual lever on the foot rocker **MS5** forward.

Steering the tracks to the right

See illustration **2**.

▶ Push the left foot rocker **MS4** forward.
or
Move the manual lever on the foot rocker **MS4** forward.

Counter-rotating the tracks to the left

See illustration **3**.

▶ Push the right foot rocker **MS5** forward and the left foot rocker **MS4** backward.
or
Move the manual lever on the foot rocker **MS5** forward and move the foot rocker **MS4** backward.

Counter-rotating the tracks to the right

See illustration **4**.

▶ Push the left foot rocker **MS4** forward and the right foot rocker **MS5** backward.
or
Move the manual lever on the foot rocker **MS4** forward and move the foot rocker **MS5** backward.

LWE/LR 1600-2-001/18101-07-02/en

copyright © Liebherr-Werk Ehingen GmbH 2018

Empty page!

LWE/LR 1600-2-001/18101-07-02/en

copyright © Liebherr-Werk Ehingen GmbH 2018

5 Equipment

LWE/LR 1600-2-001/18101-07-02/en

copyright © Liebherr-Werk Ehingen GmbH 2018

LWE/LR 1600-2-001/18101-07-02/en

copyright © Liebherr-Werk Ehingen GmbH 2018

5.01 Technical safety instructions for assembly and disassembly

1	Equipment	2
2	Rope pulleys	2
3	Ropes	2
4	Control measures	3
5	Relapse cylinders	6
6	Pneumatic springs	6
7	Manual rope winches	6
8	Weights	7
9	Guy rods	7
10	Auxiliary guying	7
11	Bypassing the overload protection	8
12	Bypassing the hoist top shut-off	10
13	Pin connections	10
14	Retaining elements	13
15	Assembling / disassembling	21
16	Erecting / taking down	65

LWE/LR 1600-2-001/18101-07-02/en

copyright © Liebherr-Werk Ehingen GmbH 2018

1 Equipment

1.1 Checking the steel structures

All components part of the crane scope of delivery must be checked regularly together with the crane.

If equipment or components are assembled that are part of the delivery scope of another crane: Prior to first time use, check load bearing crane structures, especially steel structures, see chapter 8.01.

1.2 Checking the labeling

WARNING
Labeling **not** legible or **not** present!
Components, especially guy rods, can be mixed up.
Death, severe bodily injuries, property damage.
▶ Do **not** continue to use the components, especially the guy rods.

2 Rope pulleys

WARNING
Danger of crushing due to rotating rope pulleys!
Arms and legs can be caught and crushed or severed between the rope pulley and the rope due to rotating rope pulleys.
▶ It is prohibited to touch the ropes or rope pulleys during operation.
▶ Adhere to the safety distance to ropes and rotating rope pulleys.

3 Ropes

WARNING
Danger of accident!
▶ The ropes must be checked by an expert before assembly and checks must be performed at regular intervals in order to detect possible damage or wear and tear at an early stage. See Crane operating instructions, chapter 8.04.

The ropes must be removed immediately if any of the following damage is detected:
– Breakage of a strand
– Wire breaks
– Broken wire nests
– Reduction in the rope diameter by 10 % or more of the nominal size
– Rope deformations

3.1 Placing the hoist rope or the control rope

In order to guarantee safety and operating characteristics, only original Liebherr replacement parts or parts approved by Liebherr may be used.

NOTICE
Damage to the hoist rope or the control rope!
If a hoist rope or control rope is placed with worn rope pulleys, damage can occur.
▶ Before placing a rope, check the rope pulleys. See the Operating instructions, chapter 8.01.
▶ Replace worn or damaged rope pulleys.

LWE/LR 1600-2-001/18101-07-02/en

copyright © Liebherr-Werk Ehingen GmbH 2018

3.2 Minimum rope coils

NOTICE
If the following notes are not observed, the cam limit switch / winch speed sensor must be readjusted!
- ▶ When the hoist rope is spooled up, the end of the hoist rope must remain in front of the winch and may not be pulled over the winch.
- ▶ Pull the hoist rope end never under the winch by spooling the winch up.
- ▶ Pull the hoist rope never off from the „stationary“ winch.
- ▶ The winch speed sensor must also be readjusted, if it is determined during operation or when changing the hoist rope that the winch does not shut off when the minimum rope coils are reached.

3.2.1 Cranes with cam limit switch

The cam limit switch is adjusted at the factory that it turns off before the minimum rope coils are reached (three hoist rope coils on the winch).

WARNING
Danger of accident due to falling load!
If the following instructions are not observed, the hoist rope end attachment may be torn out, causing the load to topple.
- ▶ If a new hoist rope is used, the cam limit switch must be reset.
- ▶ The cam limit switch must be adjusted so that it turns off when only 3 hoist rope coils remain on the winch.

3.2.2 Cranes with winch speed sensor

The winch speed sensor is adjusted at the factory that it turns off before the minimum rope coils are reached (four hoist rope coils on the winch). If used properly, the winch turn sensor will not need readjustment.

WARNING
Danger of accident due to falling load!
If the following instructions are not observed, the hoist rope end attachment may be torn out, causing the load to topple.
- ▶ If a new hoist rope is placed, the winch speed sensor must be checked.
- ▶ The winch speed sensor must be set to turn off when only 4 hoist rope coils remain on the winch.

4 Control measures

WARNING
The crane can topple over!
If the control measures are not carried out before crane operation, then accidents can occur. The crane can topple over, be overloaded or damaged.
Personnel can be killed or injured.
- ▶ Crane operation with safety equipment which are **not** functioning correctly is strictly prohibited.
- ▶ Start crane operation only after all safety equipment have been checked and are functioning correctly.
- ▶ Start crane operation only if the overload protection has been set according to the data in the load chart.
- ▶ Start crane operation only if the crane is properly supported and horizontally aligned.

LWE/LR 1600-2-001/18101-07-02/en

copyright © Liebherr-Werk Ehingen GmbH 2018

WARNING
Interruption of crane operation!
If the following specifications for interruption of crane operation are not observed, accidents can occur.
- ▶ If the crane operator leaves the crane cab even if for just a short time, the crane must be secured to prevent unauthorized access.
- ▶ Before starting to work again with the crane, the crane operator is obligated to check the operating mode settings and to reset them, if necessary.

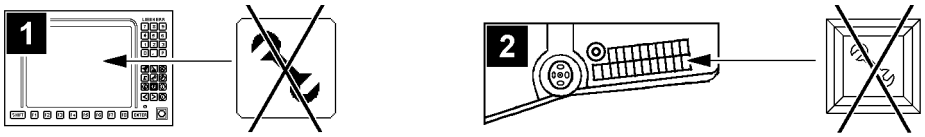

Fig.113437: Control displays

Make sure that the following prerequisites are met:
- The overload protection is not bypassed.
- No assembly operation is activated.

4.1 General controls before crane operation

- Make sure that no visible damage is present on the crane.
- Make sure that there are no loose parts on the boom, crane chassis and crane superstructure.
- Make sure that exposed rope pulleys are free of snow, frost and ice.
- Make sure that the cable / rope drums as well as the limit switches are free of snow and ice.
- Make sure that the gear ring of the slewing ring connection is clean and greased.
- Make sure that the air supply to the oil and water cooler is clear.
- Make sure that steps, ladders and platforms are in the correct position for crane operation.
- Make sure that all tool boxes, compartments, coverings, covers and cabinet doors are closed.
- Make sure that no persons or objects are within the danger zone of the crane.
- Make sure that the crane is standing on level, load bearing ground.
- Make sure that the crane is sufficiently supported depending on the load case and the ground conditions.
- Make sure that there is a sufficient safety distance to excavations and slopes.
- Make sure that no obstacles are within the working range of the crane, which obstruct the required crane movements.
- Make sure that the crane has sufficient distance to live power lines.
- Make sure that the LICCON overload protection is set according to the data in the load chart.
- Make sure that the overload protection is set according to the actual set up configuration of the crane.
- Make sure that the electrical connections, the connector plug, the pull release, the cables and the protective insulation function. Replace missing or defective parts.
- Make sure that the cable routings on the electrical connections are seated tightly. If necessary, tighten loose screw connections.
- Make sure that the existing safety equipment is functioning.
- Make sure that the overload protection is functioning.
- Make sure that the hoist limit switches are functioning.
- Make sure that the limit switch boom „steepest position“ is functioning.
- Make sure that the wind speed sensor easily moves and is functioning.

4.2 Additional controls for cranes with crane support

- Make sure that the folding / sliding beams are secured with pins to prevent them from sliding.
- Make sure that the support plates are secured in the operating position.
- Make sure that the crane is properly supported.
- Make sure that the crane is horizontally aligned.
- Make sure that the axle suspension is blocked (mobile crane).
- Make sure that the tires have no contact to the ground (mobile crane).
- Make sure that the track chains are secured to prevent them from sagging (crawler crane).

LWE/LR 1600-2-001/18101-07-02/en

copyright © Liebherr-Werk Ehingen GmbH 2018

4.3 Additional controls for cranes on tires on the front and supported on the rear

- Make sure that the rear folding / sliding beams are secured with pins to prevent them from sliding.
- Make sure that the rear support plates are secured in the operating position.
- Make sure that the crane is properly supported on the rear.
- Make sure that the axle pressure compensation is correctly switched.
- Make sure that the axle suspension is blocked.
- Make sure that the tires of the rear axle group have no contact with the ground.
- Make sure that a sufficient tire pressure is present in the tires.
- Make sure that the ground for the front axle group is sufficiently level and has a sufficient load bearing capacity.

4.4 Additional controls for cranes supported on the front and on tires on the rear

- Make sure that the front folding / sliding beams are secured with pins to prevent them from sliding.
- Make sure that the front support plates are secured in the operating position.
- Make sure that the crane is properly supported on the front.
- Make sure that the axle pressure compensation is correctly switched.
- Make sure that the axle suspension is blocked.
- Make sure that the tires of the front axle group have no contact with the ground.
- Make sure that a sufficient tire pressure is present in the tires.
- Make sure that the ground for the rear axle group is sufficiently level and has a sufficient load bearing capacity.

4.5 Additional controls for freestanding crane operation (on tires)

- Make sure that all prerequisites for freestanding crane operation are met.
- Make sure that sufficient tire pressure is in all tires for crane operation on tires.
- Make sure that the ground is sufficiently level for crane operation on tires and has a sufficient load bearing capacity.

4.6 Additional controls for cranes with a derrick boom

- Make sure that the shut-off via the limit switch - derrick is functioning.
- Make sure that the entire slewing range of the suspended ballast / ballast trailer is free of personnel and obstacles.

4.7 Additional controls for cranes with luffing auxiliary boom / accessories

- Make sure that the shut-off via the limit switch luffing auxiliary boom / accessories „steepest position“ is functioning.
- Make sure that the shut-off via the limit switch luffing auxiliary boom / accessories „lowest position“ is functioning.
- Make sure that the shut-off via the limit switch flap in „steepest position“ position is functioning.
- Make sure that the pendulum of the mechanical relapse retainer moves easily over the entire slewing range and is functioning.

4.8 Additional controls for certain crawler cranes

For existing crawler assembly key button:

- Make sure that the crawler assembly key button is turned off.

LWE/LR 1600-2-001/18101-07-02/en

copyright © Liebherr-Werk Ehingen GmbH 2018

5 Relapse cylinders

5.1 Block position of the relapse cylinders when setting down the load

NOTICE
Damage to the boom or the relapse cylinders!
If the block position of the relapse cylinders is triggered by the boom or the derrick with attached, freely suspended load, then there is a danger of damaging the boom or the relapse cylinders when setting the load on the ground. By setting down the load, the crane is relieved, and this movement causes the boom system to move to the rear.
There is no shut-off of the hoist gear lowering function.
- ▶ Actuate the opposite direction of movement which caused the block position and eliminate the block position.

6 Pneumatic springs

Pneumatic springs are installed on various crane components to simplify the assembly of these components.

WARNING
Danger of crushing!
Defective pneumatic springs no longer provide the supporting properties on the movable components.
Due to falling components, personnel can be killed or severely injured.
High danger of accident.
- ▶ Always check pneumatic springs for damage before actuating the corresponding components.
- ▶ Do not use components with defective pneumatic springs. Replace defective pneumatic springs immediately.
- ▶ Make sure that no persons or objects are in the movement range of the moving components which is supported by the pneumatic spring.
- ▶ It is strictly prohibited to remain or place any objects in the movement or other danger zone of the moving crane components which are supported by the pneumatic spring.

7 Manual rope winches

Manual rope winches are installed on various components to simplify the assembly or disassembly of these components.

WARNING
Danger of crushing!
Defective manual rope winches no longer provide the supporting action on the movable components.
Due to falling components, personnel can be killed or severely injured.
High danger of accident.
- ▶ Always check manual rope winches for external and functional damage before actuating the respective components.
- ▶ Check the rope of the manual rope winch for damage.
- ▶ At least two rope coils must always remain on the rope drum.
- ▶ Do not use components with defective manual rope winches. Replace defective manual rope winches.
- ▶ It is strictly prohibited for personnel or objects to remain within the movement range of the components, which are supported by the manual rope winch.
- ▶ It is prohibited for personnel or objects to remain within the danger zone of the moveable components.

LWE/LR 1600-2-001/18101-07-02/en

copyright © Liebherr-Werk Ehingen GmbH 2018

8 Weights

Note

- The weight of each component is specified in the chapter 1.03 or the respective chapter in the Crane operating instructions or is stated on the tag attached to the corresponding component.
- If components are pushed into one another (for example the boom intermediate sections) or folded together (for example the folding jib), then the total weight is given by the sum of the individual components.

NOTICE

False estimation of weights

- Contact the Service department at **Liebherr-Werk Ehingen GmbH** if the weight of the respective component is not stated on the tag or in the Crane operating instructions.
- Use an auxiliary crane with sufficient load carrying capacity including judicious reserve.

9 Guy rods

WARNING

Boom can break off!

The arrangement of the guy rods for the boom or boom systems is stipulated in the rod plan. If the arrangement of the guy rods according to the rod plan is not observed, the crane can collapse, the boom can break off or the crane can topple over.

Personnel can be severely injured or killed.

- Always carry out the arrangement of the guy rods according to the rod plan.
- If an auxiliary guying is required for a certain boom length, then it must always be installed according to the rod plan on the position defined in the rod plan.

WARNING

Unutilized guy rods on boom!

If guy rods are on the lattice sections which are not used for operation, then there is a danger of accident.

Unused guy rods can loosen up and fall down.

Personnel can be severely injured or killed.

The load chart is invalid.

The load display of the LICCON computer system shows an incorrect value.

The weight of the boom is too heavy for erection.

- Disassemble and remove the guy rods that are not needed on the transport retainers before erecting the boom.

Note

- Inspection and maintenance of guy rods, see Crane operating instructions, chapter 8.15.
- In reference to the guy rods, observe section „Erection / take-down“.

10 Auxiliary guying

The auxiliary guying is of significant importance for safe crane operation.

The auxiliary guying is a deciding factor in relieving the boom, or the boom system during erection and take-down as well as during crane operation.

LWE/LR 1600-2-001/18101-07-02/en

copyright © Liebherr-Werk Ehingen GmbH 2018

WARNING
The crane can topple over!
If the auxiliary guying is not installed or not installed on the position specified in the rod plan, then the crane can collapse, the boom can break off or the crane can topple over.
- ▶ If an auxiliary guying is specified in the rod plan for the required boom length, then it must be installed on the respective position.
- ▶ Make sure that the auxiliary guying is always completely installed and that all pins are properly pinned and secured.

11 Bypassing the overload protection

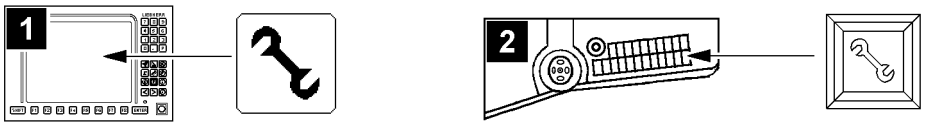

Fig.113438: Bypassing the overload protection

- Illustration **1**: LICCON monitor (only certain crane types).
- Illustration **2**: Indicator light „Assembly“ in instrument panel crane cab (only certain crane types).

The overload protection is considered bypassed for:
- All types of assembly operations.
- All types of exceeded shut off limits of the overload protection.
- All types of emergency operation.
- All types of crane operation with deactivated or defective sensors and limit switches.
- All types of deviation from specified set up configuration of the crane.

DANGER
Increased danger of accident due to bypass of the overload protection!
Proper and destined use of the crane is ensured due to the construction of the overload protection system and observance of the information in the Crane operating instructions. All **sensibly foreseeable erroneous operations** of the crane have been taken into consideration.
Impermissible crane operation with bypassed overload protection – with the aim of increasing the maximum load bearing capacity of the crane above the rated value in the load chart or of extending the designated working range of the crane – does not constitute a **reasonably foreseeable erroneous operation**, rather **deliberate improper use with high danger of accident**.
The possible risks and consequences of such improper use are detailed in the Crane operating instructions.
Such deliberate improper use can neither be prevented by means of the structural design nor by means of information in the Crane operating instructions.
- ▶ Bypass the overload protection only according to the Crane operating instructions.
- ▶ Exceed the shut off limits of the overload protection only according to the Crane operating instructions.
- ▶ Any other use of the crane with bypassed overload protection than that described in the Crane operating instructions is prohibited.

If the maximum permissible load moment is exceeded, the overload protection turns all load moment increasing crane movements off.

This shut-off can be bypassed or exceeded various ways, for example:
- Exceeding the shut off limits (utilization more than 100 % or leaving the load chart).
- Activating an assembly operation.
- Activating an emergency operation.

The displays of the LICCON overload protection remain functioning when all associated sensors and limit switches are active and a load chart is available.

LWE/LR 1600-2-001/18101-07-02/en

copyright © Liebherr-Werk Ehingen GmbH 2018

WARNING
Increased danger of accident due to bypass of the overload protection!
If the overload protection is bypassed, there is no longer any protection against crane overload.
In the event of improper use, the crane could collapse, the boom can break off or the crane can topple over.
Personnel can be killed.
This could result in significant property damage.
- ▶ It is only permitted to bypass the overload protection for assembly or in emergencies.
- ▶ The bypass of the overload protection may only be carried out by persons who are aware of the effects of their acts.
- ▶ Bypassing the overload protection requires the presence of a person authorized by the crane operator and must be performed with utmost caution.
- ▶ Crane operation is strictly prohibited when the overload protection is bypassed.

11.1 Bypassing the LICCON overload protection

Note
- ▶ Applies only for cranes with LICCON overload protection.

Depending on the crane version, one or more operating elements are available to bypass the overload protection:
- Button in the control panel.
- Key button on the LICCON monitor.
- Key button in the instrument panel.
- Key button in the control cabinet.
- Sensor for transponder on the crane cab.

The functions of the operating elements are described in chapter 4.20.

▶ Actuate the respective operating element.

Result:

- The LICCON overload protection is bypassed / inactive.
- The „Assembly“ icon appears on the LICCON monitor.
- Depending on the circumstances, acoustic and / or optical warning signals (blinkers, flashing lights, bells and horns) sound.

If the LICCON overload protection is to be reactivated:
▶ No longer actuate the respective operating element or reset.

Result:

- The LICCON overload protection is active.
- The „Assembly“ icon no longer appears on the LICCON monitor.
- The acoustic and / or optical warning signals which were triggered by the bypass are turned off again.

11.2 Bypassing the PAT overload protection

Note
- ▶ Applies only for cranes with PAT overload protection.

▶ Actuate the bypass key button and turn the PAT overload protection off.

Result:

- The PAT overload protection is bypassed / inactive.

▶ Actuate the bypass key button and turn the PAT overload protection on.

LWE/LR 1600-2-001/18101-07-02/en

copyright © Liebherr-Werk Ehingen GmbH 2018

Result:

– The PAT overload protection is active.

12 Bypassing the hoist top shut-off

Note

▶ Applies only for cranes with hoist limit switch.

If the hook block touches the hoist limit switch weight during the upward movement, the hoist limit switch is activated. The crane movements „Spool up winches“, „Luff boom down“ and „Telescope telescopic boom out“ are turned off. The shut-off can be bypassed.

WARNING

Danger of accident due to bypass of hoist top shut-off!

When bypassing the hoist top shut-off, there is a danger that the hook block may be pulled against the pulley head when continuing to lift or luffing down the boom. This may damage the pulleys and cause the loads to fall.

▶ The bypass of the hoist top shut-off in crane operation with a load may only be carried out by a person authorized by the crane operator with the aid of a „Guide“. The guide must be in direct contact with the crane operator and must continually monitor the distance between the hook block and the boom head.

▶ Carry out all crane movements with maximum caution and minimum speed.

13 Pin connections

WARNING

Pin connections **not** lubricated!

If pins or pin connections are not properly greased or lubricated before assembly, then they can corrode.

The pins can be stuck in the pin bores and be damaged.

During the unpinning procedure, the pins can suddenly release.

Death, severe bodily injuries, property damage.

▶ Make sure that all pins, which are not supplied with grease via the central lubrication system are sufficiently greased before assembly.

▶ Make sure that all lube points, which are equipped with a grease fitting, are properly greased at assembly and according to the respective interval specification.

▶ Never insert or unpin pins by force.

WARNING

Pin **not** secured to prevent it from loosening up by itself!

The pin connection could loosen up suddenly.

Death, severe bodily injuries, property damage.

▶ Secure all pins with retaining elements against loosening up by itself.

LWE/LR 1600-2-001/18101-07-02/en

copyright © Liebherr-Werk Ehingen GmbH 2018

WARNING
Distorted pin!
Angular pull or excessive or low hoisting force of the auxiliary crane may result in distortion of the pins.
Distorted parts can suddenly fly off when the pins are unpinned.
Death, severe bodily injuries, property damage.
- ▶ When the pins are unpinned, the lifting force of the auxiliary crane must be adapted to the weight of the components being lifted.
- ▶ Do **not** unpin difficult to remove pins by force.
- ▶ Remedy the cause of the distortion.

13.1 Pinning the collar pin

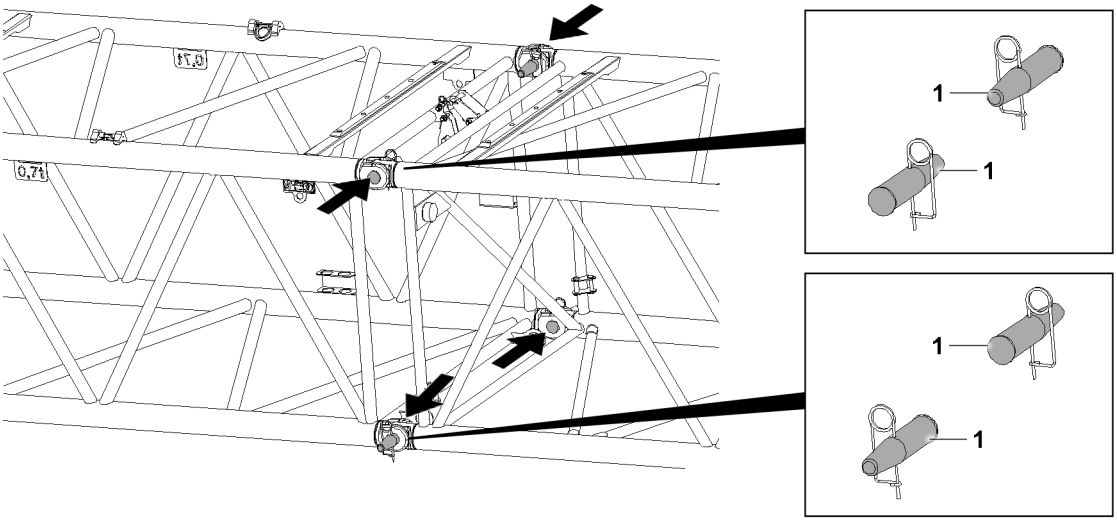

Fig.143114: Pinning the collar pin

WARNING
The collar pin is incorrectly pinned!
Death, severe bodily injuries, property damage.
- ▶ Insert or unpin both pins at the same horizontal level, i.e. **left and right**.
- ▶ **Pin** the upper collar pin **1** from the **outside to the inside** and **unpin** from the **inside to the outside**.
- ▶ **Pin** the lower collar pin **1** from the **inside to the outside** and **unpin** from the **outside to inside**.

copyright © Liebherr-Werk Ehingen GmbH 2018

13.2 Assembling the double cone pins horizontally

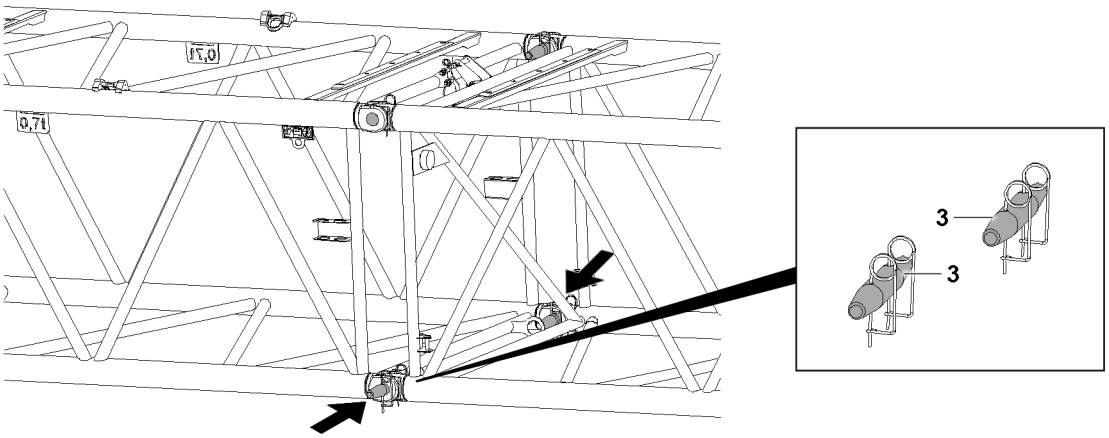

Fig.143115: Pinning the double cone pins horizontally

WARNING
Double cone pins incorrectly pinned!
Death, severe bodily injuries, property damage.
- ▶ Insert or unpin both pins at the same horizontal level, i.e. **left and right**.
- ▶ Pin and unpin the horizontally installable double cone pins **3** from the **outside to the inside**.

13.3 Assembling the double cone pins vertically

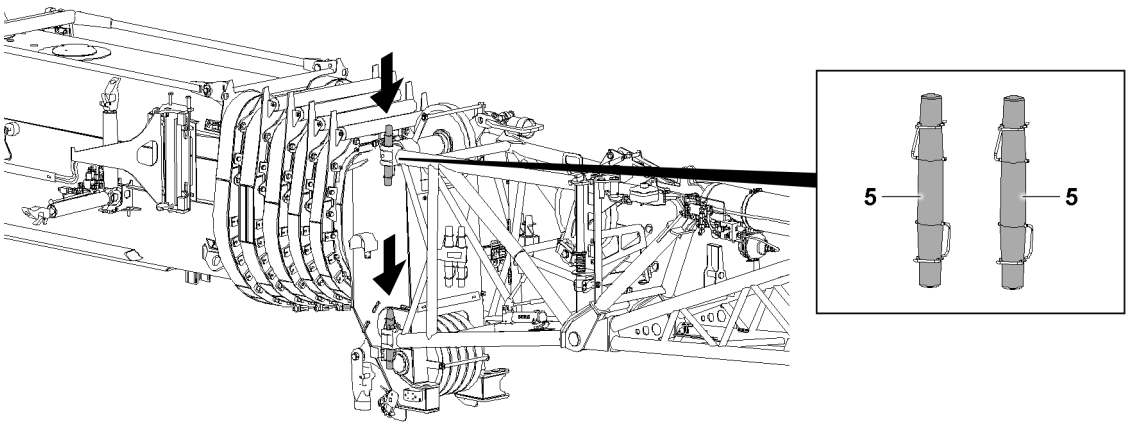

Fig.143116: Assembling the double cone pins vertically

WARNING
Double cone pins incorrectly pinned!
Death, severe bodily injuries, property damage.
- ▶ Pin and unpin the vertically installable double cone pins **5** from the **top to the bottom**.

LWE/LR 1600-2-001/18101-07-02/en

copyright © Liebherr-Werk Ehingen GmbH 2018

13.4 Impact protection

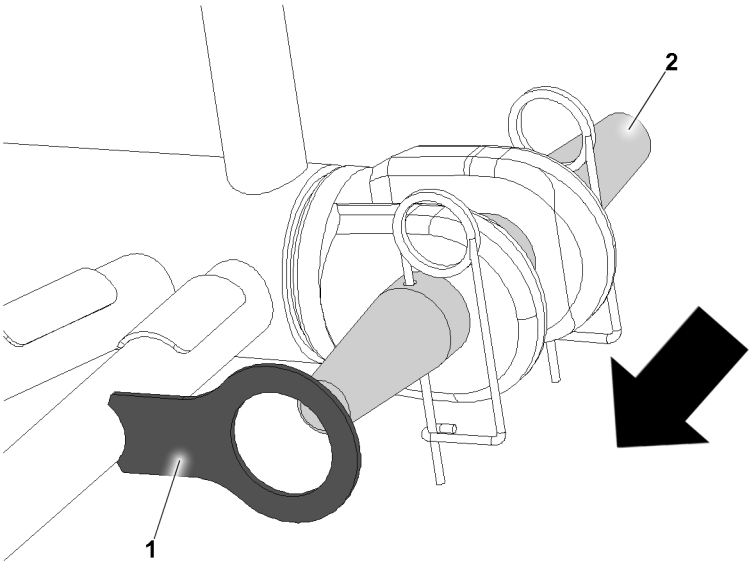

Fig.148194: Lattice section impact protection

Impact protection **1** is installed on certain lattice sections. The impact protection **1** should prevent the pins from being unpinned from the **inside to the outside**.

If impact protection **1** is installed:
- ▶ Only use double cone pins **2**.
- ▶ Only **pin and unpin** the double cone pins **2** from the **outside to the inside**.

14 Retaining elements

14.1 Checking the retaining elements

Retaining elements are used to secure the pins. Due to mechanical damage / distortion, the function of the retaining elements can be compromised. In addition, the spring force of the retaining elements can be reduced significantly. Do **not** re-use retaining elements if there is insufficient spring force. The pin retainer must be secured with a correctly **functioning** retaining element.

WARNING
Mechanical damage or deformation of the retaining element!
The retaining elements can fail.
The pin can unpin by itself.
Death, severe bodily injury, property damage.
- ▶ Use exclusively functioning retaining elements in a proper condition.
- ▶ Replace defective retaining elements.

copyright © Liebherr-Werk Ehingen GmbH 2018

14.2 Overview of the retaining elements

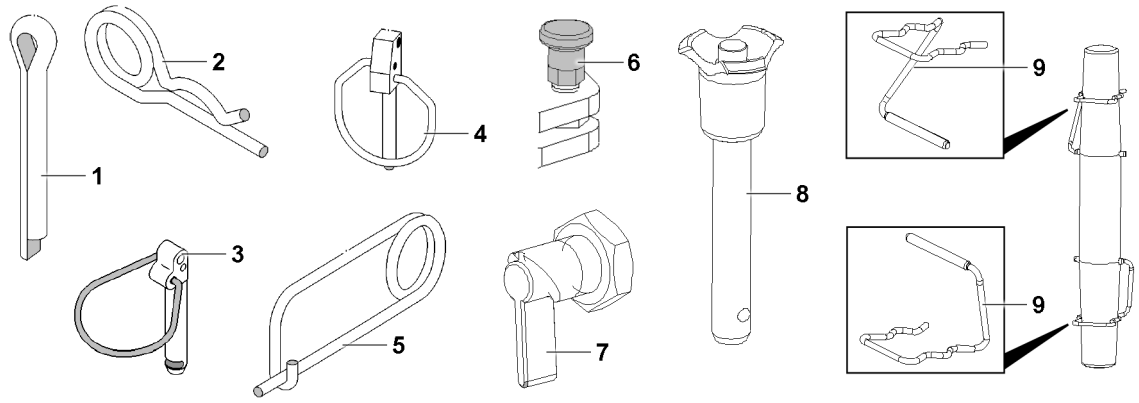

Fig.143102: Retaining elements

1 Split pin
2 Cotter pin
3 Safety locking pin
4 Linch pin
5 Spring retainer
6 Detent pin
7 Latch
8 Ball locking pin
9 Retaining clip

14.3 Split pin

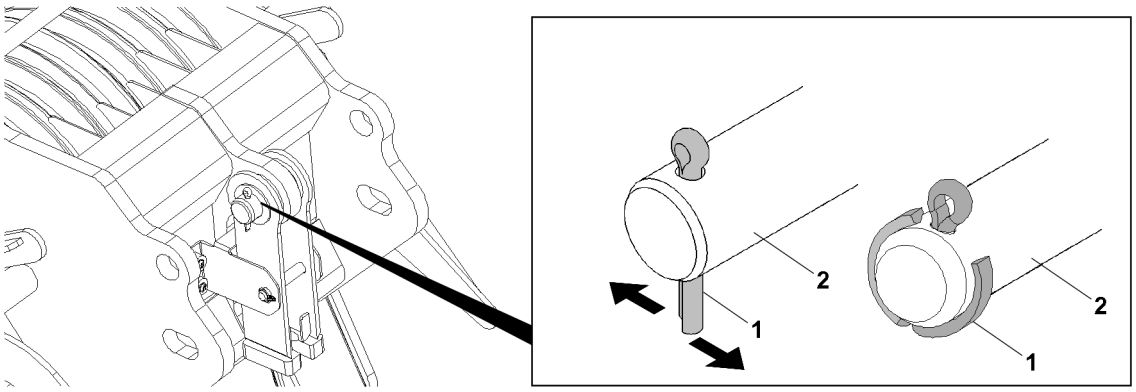

Fig.143105: Split pin

1 Split pin
2 Pin

WARNING
Multiple use of a split pin **1**!
The split pin **1** can break.
▶ Assemble the split pin **1** only once.
▶ Use a correctly sized split pin **1**.

▶ Secure the pin **2**: Insert the split pin **1**.
▶ Bend the end of the split pin **1** toward the outside.

Problem remedy
Split pin **1** defective!
▶ Replace the split pin **1**.

LWE/LR 1600-2-001/18101-07-02/en

copyright © Liebherr-Werk Ehingen GmbH 2018

14.4 Cotter pin

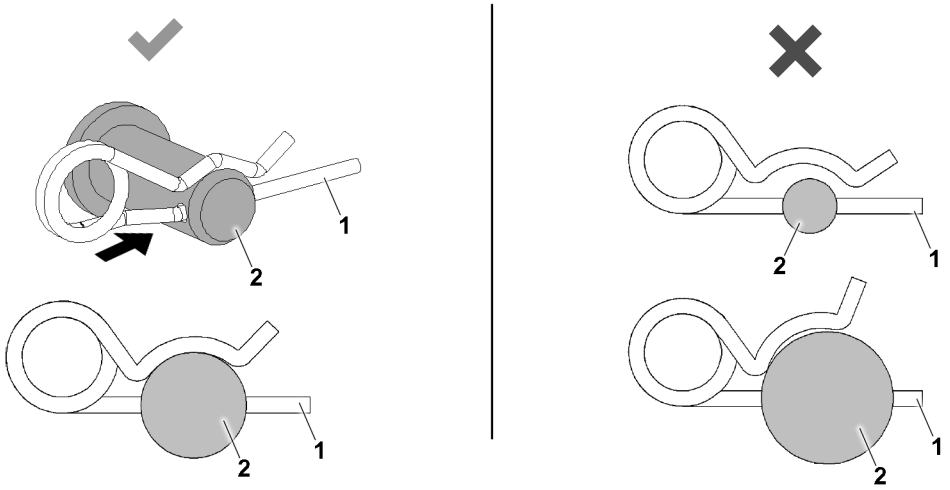

Fig.143106: Cotter pin, correct and incorrect dimensions

1 Cotter pin **2** Pin

WARNING
Improper dimensions of the cotter pin **1**!
The cotter pin **1** can loosen up by itself.
▶ Use a correctly sized cotter pin **1**.

▶ Secure the pin **2**: Insert the cotter pin **1**.

Problem remedy
Spring tension is too low?
The cotter pin **1** is defective.
▶ Replace the cotter pin **1**.

14.5 Safety locking pin

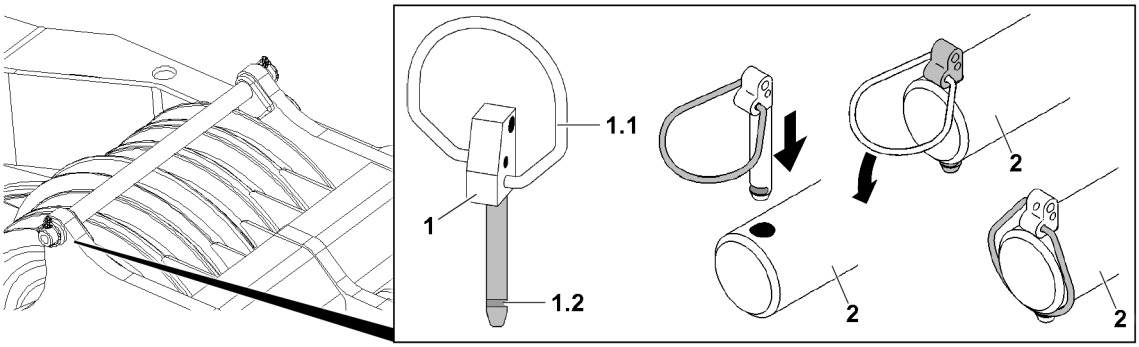

Fig.143103: Safety locking pin

1 Safety locking pin **1.2** Groove
1.1 Spring clip **2** Pin

Increased effort is necessary for opening the safety locking pin **1**.

WARNING
Spring clip **1.1 not** engaged!
The safety locking pin **1** can loosen up by itself.
▶ Engage the spring clip **1.1** completely in the groove **1.2**.

copyright © Liebherr-Werk Ehingen GmbH 2018

▶ Secure the pin **2**: Insert the safety locking pin **1**.
▶ Close the spring clip **1.1** and engage it completely in the groove **1.2**.

Problem remedy
The spring clip **1.1** does **not** engage completely?
Tension of the spring clip **1.1** is too low.
▶ Replace the safety locking pin **1**.

14.6 Linch pin

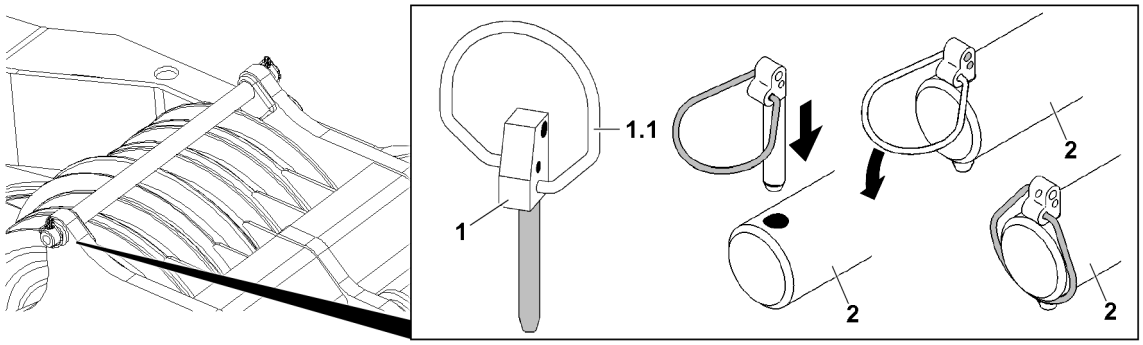

Fig.143104: Linch pin

1 Safety locking pin
1.1 Spring clip
2 Pin

WARNING
The linch pin **1** is **not** completely closed!
The locking pin **1** can loosen up by itself.
▶ Close the spring clip **1.1** completely.

▶ Secure the pin **2**: Insert the locking pin **1**.
▶ Close the spring clip **1.1** completely.

Problem remedy
The spring clip **1.1** does not close completely?
Tension of the spring clip **1.1** is too low.
▶ Replace the locking pin **1**.

LWE/LR 1600-2-001/18101-07-02/en

copyright © Liebherr-Werk Ehingen GmbH 2018

14.7 Spring retainer

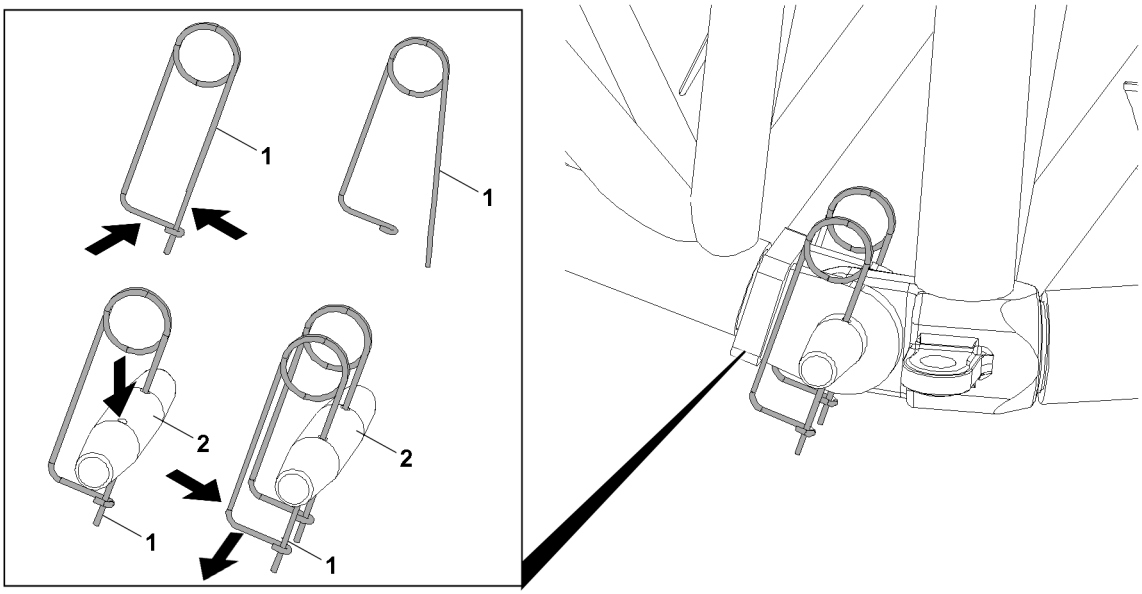

Fig.143108: Spring retainer

1 Spring retainer

WARNING
The spring retainer **1** is **not** closed!
The spring retainer **1** can loosen up by itself.
▶ Close the spring retainer **1**.

▶ Secure the pin **2**: Insert the spring retainer **1**.
▶ Close the spring retainer **1**.

Problem remedy
Spring tension is too low?
The spring retainer **1** is defective.
▶ Replace the spring retainer **1**.

14.8 Detent pin

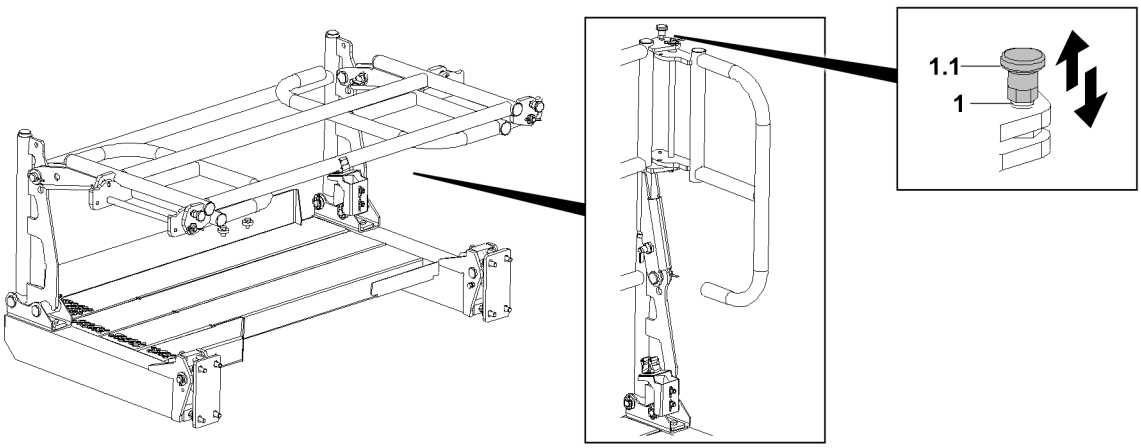

Fig.143110: Detent pin

1 Detent pin

1.1 Handle

LWE/LR 1600-2-001/18101-07-02/en

copyright © Liebherr-Werk Ehingen GmbH 2018

WARNING
The handle **1.1** is **not** locked!
The detent pin **1** can loosen up by itself.
▶ Lock the detent pin **1**.

▶ Pull the handle **1.1**.

Result:
– The detent pin **1** is unlocked.

▶ Insert the detent pin **1**: Release the handle **1.1**.

Result:
– The detent pin **1** is pinned.

Problem remedy
The handle **1.1** cannot be pulled.
The detent pin **1** is defective.
▶ Replace the detent pin **1**.

14.9 Latch

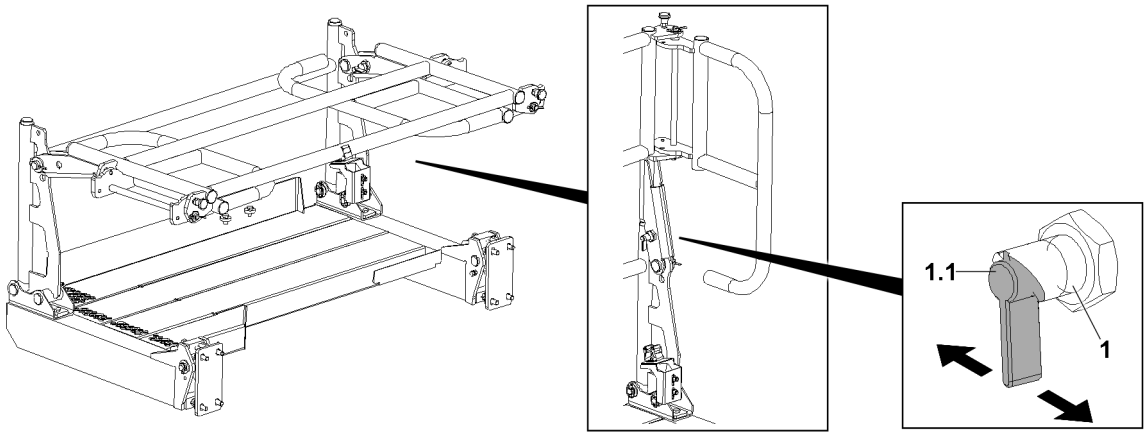

Fig.143111: Latch

1 Latch **1.1** Lever

WARNING
The latch **1** is **not** locked!
The latch **1** can loosen up by itself.
▶ Lock the latch **1**.

▶ Operate the lever **1.1**.

Result:
– The latch **1** is unlocked.

▶ Pin the latch **1**: Release the lever **1.1** and swing the railing until the latch is pinned.

Problem remedy
The lever **1.1** cannot be actuated?
The latch **1** is defective.
▶ Replace the latch **1**.

LWE/LR 1600-2-001/18101-07-02/en

copyright © Liebherr-Werk Ehingen GmbH 2018

14.10 Ball locking pin

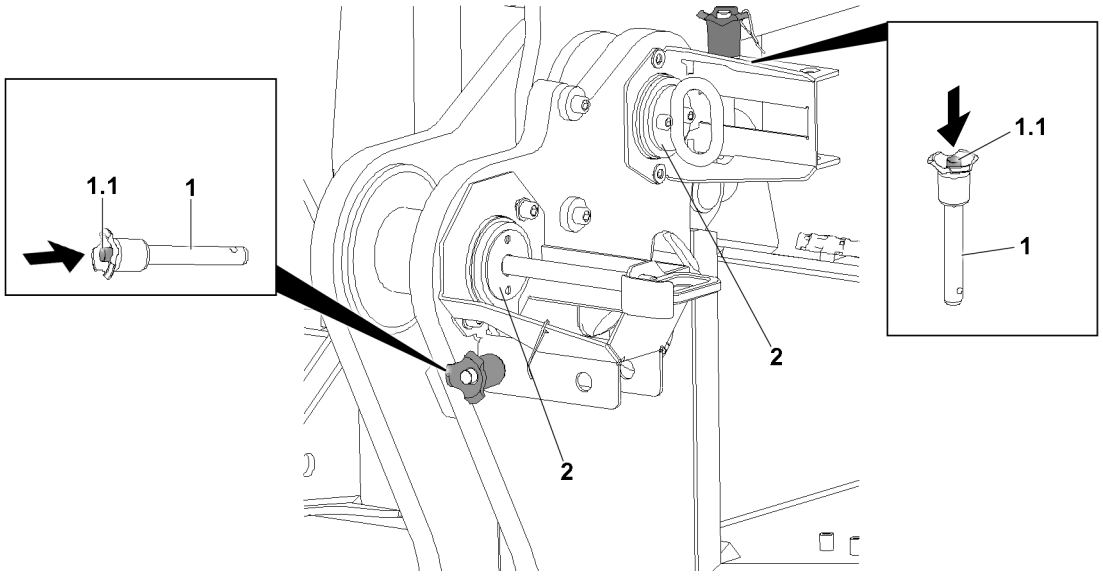

Fig.143109: Ball locking pin

1 Ball locking pin
1.1 Press button
2 Pin

WARNING
The ball locking pin **1** is **not** locked!
The ball locking pin **1** can loosen up by itself.
▶ Lock the ball locking pin **1**.

▶ Secure the pin **2**: Actuate the press button **1.1**.

Result:
– The ball locking pin **1** is unlocked.

▶ Pin the ball locking pin **1** and release the press button **1.1**.

Result:
– The ball locking pin **1** is pinned and secured.

Problem remedy
The press button **1.1** cannot be actuated?
The ball locking pin **1** is defective.
▶ Replace the ball locking pin **1**.

copyright © Liebherr-Werk Ehingen GmbH 2018

14.11 Retaining clips

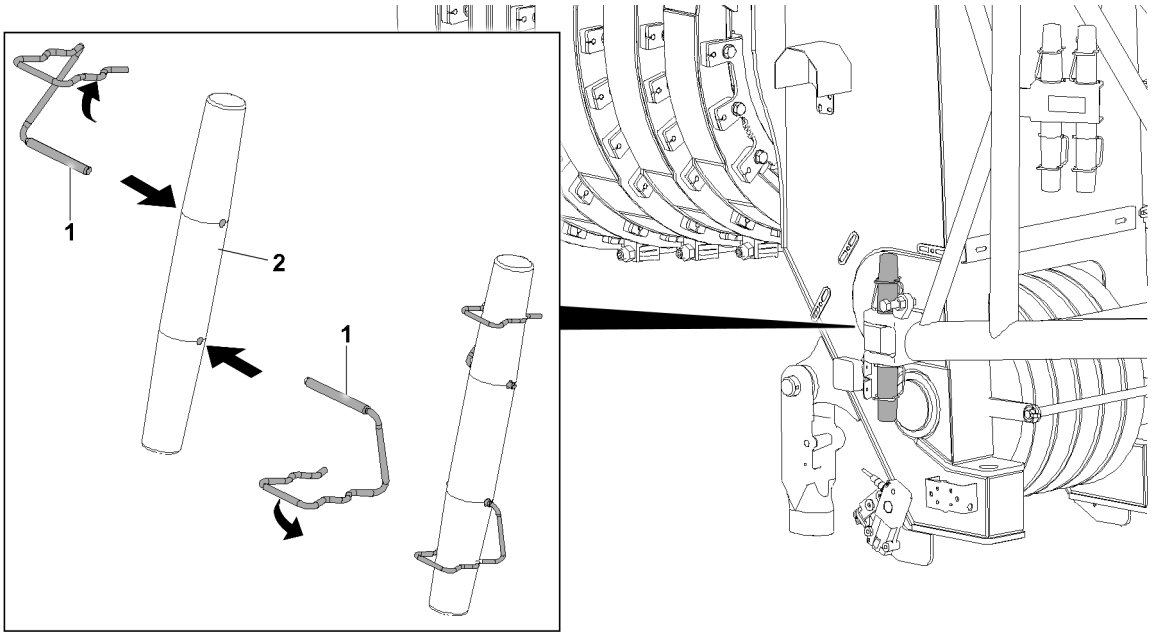

*Fig.143107: Retaining clips **1***

1 Retaining clip **2** Pin

WARNING
Incorrect retaining element!
Shearing off of the retaining element.
- ▶ To secure the folding jib pinning: Use retaining clips **1**.
- ▶ The use of other retaining elements is **prohibited**.

WARNING
Retaining clip **not** engaged!
The retaining clip **1** can loosen up by itself.
- ▶ Engage the retaining clip **1**.

- ▶ Secure the pin **2**: Insert the retaining clip **1**.
- ▶ Engage the retaining clip **1**.

Problem remedy
Retaining clip **1** defective?
The spring force of the retaining clip **1** is too low.
- ▶ Replace the retaining clip **1**.

LWE/LR 1600-2-001/18101-07-02/en

copyright © Liebherr-Werk Ehingen GmbH 2018

15 Assembling / disassembling

WARNING
Danger of fatal injury due to incorrect assembly or disassembly!
The assembly / disassembly of lattice sections and / or components may never be performed by untrained personnel.
An erroneous assembly / disassembly of lattice sections and / or components can cause damage on load carrying crane structures.
Crane components can fail due to improper assembly / disassembly.
Death, severe bodily injuries, property damage.

- ▶ Make sure that the assembly / disassembly of lattice sections and / or components is carried out only by authorized and trained expert personnel.
- ▶ Make sure that the fastening equipment on lattice sections and / or components is always fastened properly.
- ▶ Make sure that lattice sections and / or components are always properly pinned and secured at assembly.
- ▶ For assembly / disassembly of individual components, also observe the chapters relating to those components.
- ▶ The boom combinations must be assembled according to the separately supplied rod plans.
- ▶ All components which must be transported separately must be transported with suitable auxiliary cranes and fastening equipment near ground level.

WARNING
Failure of auxiliary winch!

- ▶ Only use the auxiliary winch (assembly or reeving winch) for assembly and not to lift loads.
- ▶ Lifting of loads with the auxiliary winch is prohibited.

WARNING
Danger of impact / crushing!
When installing / removing crane components with the auxiliary crane, crane components can start to swing back and forth.
When lifting / lowering and positioning crane components, there is an increased danger of impacts / crushing.
Death, severe bodily injuries, property damage.

- ▶ Make sure that personnel cannot be caught by components.
- ▶ Make sure that the crane is horizontally aligned.
- ▶ When working in danger zones: Use aids to protect limbs.
- ▶ Guide components with suitable aids to minimize oscillation.
- ▶ During assembly / disassembly no one may be in the dangerous area around or underneath the suspended components before the load has been secured.

Part of the category „Aids for working at a height“ are, for example:

- Lifting platforms
- Scaffolding
- Auxiliary cranes
- Ladders

LWE/LR 1600-2-001/18101-07-02/en

copyright © Liebherr-Werk Ehingen GmbH 2018

WARNING
Danger of falling!
During assembly / disassembly, inspection and maintenance work, assembly personnel must be secured with appropriate aids to prevent them from falling.
Death, severe bodily injuries, property damage.
- ▶ All work at a height, when there is a danger of falling, must be carried out with suitable aids.
- ▶ If aids are not available and work cannot be carried out from the ground, then assembly personnel must secure themselves with the supplied fall arrest system to prevent falling, see the Crane operating instructions, chapter 2.04.
- ▶ If fall protection equipment is available, then it must be used, see the Crane operating instructions, chapter 2.06.
- ▶ When lifting, lowering, swinging crane parts in and out, no persons may remain in the danger zone.
- ▶ When closing or opening boom systems during boom assembly or boom disassembly, no persons may remain on the boom system or in the danger zone.
- ▶ If railings are present on the components, then they must be brought into the corresponding position and secured for assembly / disassembly work.
- ▶ Only step on the aids, ladders and catwalks with clean shoes.
- ▶ Keep aids, ladders and catwalks free of heavy dirt, snow, frost and ice.
- ▶ During all assembly and disassembly work, maintenance work and inspections, travel or crane operation is prohibited.
- ▶ Remaining on a suspended load is prohibited.
- ▶ Stepping and walking on crane components and lattice sections, which have an incline of more than 20° is prohibited.
- ▶ For all assembly work, the crane driver of the main crane must be in voice contact with the crane driver / crane drivers of the auxiliary crane / auxiliary cranes.
- ▶ For all assembly work, the crane driver of the main crane must be in voice contact with the assembly personnel.
- ▶ For assembly tasks, the crane driver may only initiate crane movements when the responsible guide has explicitly released the movement.

DANGER
The components can fall down!
If the corresponding component is disengaged from the auxiliary crane before the corresponding component is pinned, then the corresponding component can fall down.
Death, severe bodily injuries, property damage.
- ▶ Do not disengage the auxiliary crane and the fastening equipment until the respective component is pinned and secured.

WARNING
The components can fall down!
If the corresponding component is unpinned without being secured by an auxiliary crane, the corresponding component can fall down.
Death, severe bodily injuries, property damage.
- ▶ Do not unpin the components until they are secured by an auxiliary crane.

WARNING
Falling components and tools!
Whenever working at a height, for example on the crane or on an aerial platform, components or tools can fall down.
Death, severe bodily injuries, property damage.
- ▶ Make sure that the danger zone under the work area is blocked off and marked and that no personnel is located within it.

LWE/LR 1600-2-001/18101-07-02/en

copyright © Liebherr-Werk Ehingen GmbH 2018

15.1 Assembly drawings

WARNING
Use of assembly drawings!
Due to sole use of assembly drawings, dangerous situations can arise up to toppling of the crane.
Death, severe bodily injuries, property damage.
- ▶ Assembly drawings should only be considered to be **additional** and **supplementary** information.
- ▶ The respective chapters in the crane operating instructions are decisive for the assembly and disassembly of crane structures, lattice sections or crane components.
- ▶ The detailed information and danger notes in the respective chapters must be observed.

15.2 Guiding crane structures, lattice sections or crane components

WARNING
Danger due to oscillating load!
During the assembly of crane structures, lattice sections or crane components with the auxiliary crane, they can start to swing back and forth.
Death, severe bodily injuries, property damage.
- ▶ To guide and position crane structures, lattice sections or crane components always use a guide rope.
- ▶ Make sure that there are no persons or obstacles within the danger zone.
- ▶ Make sure that the guide rope is long enough.

15.3 Assembling / disassembling of electrical lines

WARNING
The crane can topple over!
If mechanical crane components, which have electrical connections are not immediately electrically connected after assembly then the limit switches and / or electrical sensors are not functioning.
Safety relevant shut offs are not recognized by the LICCON computer system.
Any errors or safety relevant messages which might occur are not shown on the LICCON computer system.
Death, severe bodily injuries, property damage.
- ▶ Make sure that the electrical connections are made immediately after installation of the respective crane components on the crane.
- ▶ Make sure that the procedure to make the electrical connections to the boom end sections in the respective assembly and set up chapters are observed.

NOTICE
Danger of damage to the electrical connections!
If the following measures are not adhered to, the electrical connections can be damaged.
- ▶ Do not plug in the plug connection or unplug them under tension.
- ▶ Do not pinch or crush electrical connections.

When pulling the cable out:
- ▶ Hold the plug and not the cable. Do not pull on the cable to release the plug connection.
- ▶ Relieve the electrical connections in operating condition.
- ▶ In case of defective or faulty electrical lines, contact Customer Service at Liebherr-Werk Ehingen GmbH.

LWE/LR 1600-2-001/18101-07-02/en

copyright © Liebherr-Werk Ehingen GmbH 2018

WARNING
Malfunction if dummy plugs are not installed!
If the dummy plugs on the non-required electrical connections are not installed, then malfunctions or functional limitations can occur on the crane.
- ▶ Make sure that all non-required electrical connections, which have a dummy plug, are closed off with dummy plugs.
- ▶ Pay attention to the Electrical wiring diagram.

NOTICE
Property damage due to dirt and / or corrosion!
The plug connections are only protected when plugged in. If the plug connections are not plugged in, then the contact surfaces can corrode.
This could result in malfunctions.
- ▶ Always plug or screw the plug connections together properly.
- ▶ Keep plug connections clean and dry. Clean contact surfaces provide the best signal transfer.
- ▶ Close off the plug connections that are not used with dust caps.

- ▶ Establish the electrical connections to the installed crane components properly.
- ▶ As a rule, close off on-required electrical connections (for example for accessories which are not installed) with the respective dummy plugs.
- ▶ Properly close off electrical connections, which have no dummy plugs, with the corresponding protective dust or cover caps.

If a pull release for the cable drum is present:
- ▶ Hang the pull release in on the fixed point and relieve the plug connections from the pull strain.

After installing the plug connections:
- ▶ Check all plug connections for proper connection.

If a plug connection is not properly connected:
- ▶ Plug or screw the plug connection together properly.

After removing the plug connections:
- ▶ Protect the electrical connections with protective dust or cover caps or place them in intended storage retainers.
- ▶ After unplugging the electrical plug connections, install the dummy plugs, see Electrical wiring diagram.

If locking brackets are present:
- ▶ Close the locking bracket.

15.4 Assembling / disassembling of hydraulic lines

When connecting and releasing hydraulic lines with quick couplings, make sure that the coupling procedure is carried out correctly.

WARNING
Danger of accident due to loss of pressure or leakage!
Incorrectly coupled or self-loosening quick couplings (particularly return lines) can result in serious accidents due to component failure.
Death, severe bodily injuries, property damage.
- ▶ Check the quick couplings after assembly for correct connection.
- ▶ Make sure that the sleeve and plug after fastened after assembly with the knurled nut.

LWE/LR 1600-2-001/18101-07-02/en

copyright © Liebherr-Werk Ehingen GmbH 2018

WARNING
Pressure in the hydraulic lines!
If the pressure supply is not interrupted before releasing the hydraulic lines, the hydraulic oil can escape with high pressure.
Death, severe bodily injuries, property damage.
▶ Release the pressure in the hydraulic system before releasing. Interrupt the pressure supply and wait for a short time.

▶ Release the pressure in the hydraulic system before connecting or disconnecting: Turn the engine off and wait for a short time.
▶ Connect the coupling components (sleeve and connector) and screw together with the knurled nut.
▶ Tighten the hydraulic coupling by hand. Turn the knurled nut until it reaches a tangible, fixed stop position.

15.5 Bypassing at crawler assembly / disassembly

Note
▶ Applies only for cranes with crawler assembly key button.

WARNING
High danger of accident in case of actuated crawler assembly key button!
If the crawler assembly key button is actuated, the overload protection is bypassed. No shut-off at overload will occur in assembly operation nor in crane operation.
In the event of misuse, the crane can topple over.
Death, severe bodily injuries, property damage.
▶ The crawler assembly key button may only be actuated for assembly tasks.
▶ All other usage of the crawler assembly key button other than as described in the operating instructions is prohibited.
▶ Crane operation with the crawler assembly key button enabled is strictly prohibited.

15.5.1 Activating the bypass at crawler assembly and crawler disassembly

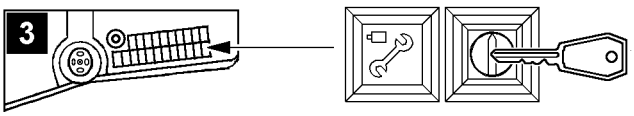

Fig.113441: Activating the bypass

– Illustration **3**: Crawler assembly key button and indicator light *Crawler assembly* with touch function *Crawler assembly off*

▶ Actuate the crawler assembly key button.

Result:

– The LICCON overload protection is inactive.
– The indicator light *Crawler assembly* lights up.

15.5.2 Deactivating the bypass at crawler assembly and crawler disassembly

Make sure that the following prerequisites are met:
– The LICCON overload protection is bypassed / inactive and the „Bypass at assembly and disassembly“ is activated.
– The *crawler assembly* indicator light illuminates.

LWE/LR 1600-2-001/18101-07-02/en

copyright © Liebherr-Werk Ehingen GmbH 2018

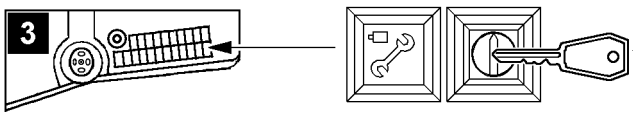

Fig.113441: Deactivating the bypass

If the bypass at crawler assembly is to be turned off:

▶ Turn the crawler assembly off by pressing the off button *Crawler assembly off*.

Result:

– The indicator light in the button *Crawler assembly* turns off.

15.6 Bypassing at assembly / disassembly

Depending on the crane version, the „Bypass at assembly and disassembly“ is activated by:

– The set up button (key button) on the LICCON monitor.
– The assembly key button in the instrument panel.

Note

▶ Applies only for cranes with LICCON overload protection.
▶ Indicator light *Assembly* is only present in the instrument panel for certain crane types.

WARNING

High danger of accident at crane operation with activated „Bypass at assembly and disassembly“!
At activated „Bypass at assembly and disassembly“ the overload protection and possibly bypassed hoist limit switches.
In the event of improper use, the crane could collapse, the boom can break off or the crane can topple over.
Personnel can be killed.
This could result in significant property damage.

▶ The activation of the „Bypass at assembly and disassembly“ is only permissible for assembly and disassembly purposes.
▶ All other usage of the „Bypass at assembly and disassembly“ other than as described in the operating instructions is prohibited.
▶ The „Bypass at assembly and disassembly“ may only be activated by persons who are aware of the consequences of a bypass.
▶ Crane operation with activated „Bypass at assembly and disassembly“ is strictly prohibited.
▶ The „Bypass at assembly and disassembly“ must be deactivated immediately after assembly and disassembly work.
▶ The crane operator or a person authorized by him must make sure that no misuse of the bypass device is possible (remove the key and store it safely, if necessary).

15.6.1 Activating the bypass at assembly and disassembly

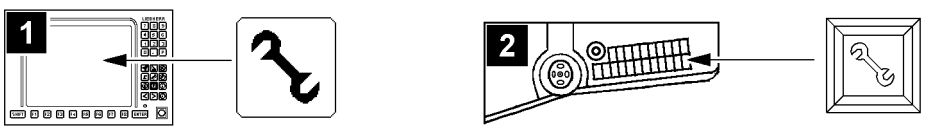

Fig.113438: Activating the bypass at assembly and disassembly

– Illustration **1**: LICCON monitor (only certain crane types).
– Illustration **2**: Indicator light „Assembly“ in instrument panel crane cab (only certain crane types).

▶ Actuate the respective operating element.

LWE/LR 1600-2-001/18101-07-02/en

copyright © Liebherr-Werk Ehingen GmbH 2018

Result:

– The LICCON overload protection is bypassed / inactive and the „Bypass at assembly and disassembly“ is activated.
– The „Assembly“ icon appears in the LICCON monitor and / or the indicator light „Assembly“ in the instrument panel lights up.
– Depending on the circumstances, acoustic and / or optical warning signals (blinkers, flashing lights, bells and horns) sound.

15.6.2 Bypassing at assembly and disassembly

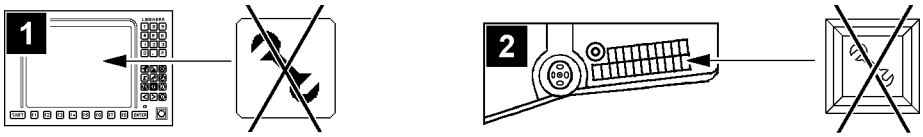

Fig.113437: Bypassing at assembly and disassembly

▶ No longer actuate the respective operating element or reset.

Result:

– The LICCON overload protection is active and the „Bypass at assembly and disassembly“ is deactivated.
– The „Assembly“ icon turns off in the LICCON monitor and / or the indicator light „Assembly“ in the instrument panel no longer lights up.
– The acoustic and / or optical warning signals which were triggered by the bypass are turned off again.

15.7 Actuation of winch and / or crane movements during assembly / disassembly

Note

▶ The winches and / or crane movements can be controlled from the crane cab or, depending on the crane set up configuration, with the Bluetooth™ Terminal (BTT) or the radio remote control*.
▶ Observe the Crane operating instructions, chapter 4.05, chapter 5.31 and chapter 6.08.

WARNING

Uncoordinated procedure for assembly tasks!
Death, severe bodily injuries, property damage.

▶ Before starting the assembly tasks, define the course of action and agree on all steps with all involved personnel.
▶ Monitor all steps and continuously check the course of action.
▶ In the case of unforeseen events, stop the course of action and agree on the new situation with all involved personnel.
▶ Make sure that winches and / or crane movements are only controlled by people who are aware of the effects on the crane and / or boom system as well as the connected dangers.
▶ Make sure that no persons, objects or obstacles are within the danger zone of the crane.
▶ Prewarn persons within the surrounding area of the crane, for example via a horn signal.
▶ Perform all winch and / or crane movements anticipatorily and at a low speed.

copyright © Liebherr-Werk Ehingen GmbH 2018

15.8 Assembling / disassembling of booms

WARNING
The crane can topple over!
Angular pull can overload the crane.
Overload can cause destruction of the crane or cause it to topple over.
Death, severe bodily injuries, property damage.
- ▶ The hook block must always be attached (hooked) vertically over the center of gravity of the load to be lifted.
- ▶ Angular pull is prohibited.

Fig.113444: Danger of accident during assembly / disassembly

WARNING
Danger of accident at assembly / disassembly of booms!
When you disassemble unsecured or unsupported booms, they can fall down.
Death, severe bodily injuries, property damage.
- ▶ Never unpin the pins under unsecured or unsupported booms.
- ▶ Never unpin the connector pins on unsecured or unsupported booms.
- ▶ Do not stand under the booms or within the complete danger zone during the pinning and unpinning procedure of the booms.
- ▶ Secure the pins in the storage locations and in the receptacles.
- ▶ The railing at assembly and disassembly of booms must be horizontal.
- ▶ Do not lean the ladder against the component being disassembled.

Make sure that the following prerequisites are met for the closing assembly:
- – If parts of the equipment (for example lattice sections) are not in contact with the ground during assembly / disassembly, then they must be supported with suitable, stable materials.
- – Take down the parts of the equipment with rope pulleys in such a way that the rope pulleys are not damaged.
- – During disassembly make sure that the auxiliary crane can lift the load vertically.
- – Have an auxiliary crane with sufficient load bearing capacity available to be able to hold the load at the corresponding radius.

LWE/LR 1600-2-001/18101-07-02/en

copyright © Liebherr-Werk Ehingen GmbH 2018

15.9 Fastening positions for assembly / disassembly of the lattice jib

WARNING
Danger of fatal accidents due falling components!
The maximum permissible tensile load on the fastening eye is engraved on the fastening eye.
The maximum permissible fastening load of the respective components can differ to the maximum permissible tensile load of the fastening eye.
Components can be damaged at overload and fall down during lifting.
- ▶ Observe the maximum permissible fastening load according to the operating instructions and the tags on the components.
- ▶ Fasten the lattice jib only according to the following descriptions.
- ▶ Do not overload the components.

15.9.1 Closing the end section

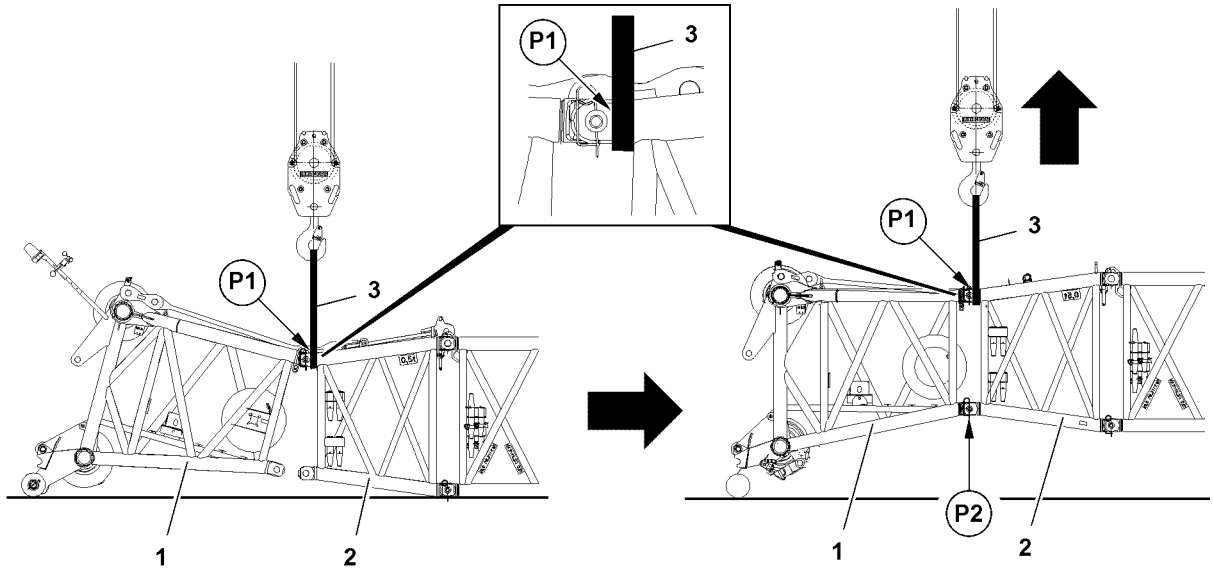

Fig.117840: Closing the end section

For closing the end section, observe the following:
- Use textile type fastening equipment **3**.
- Loop the textile type fastening equipment **3** on the left and right around on the pin points.

Before fastening:
- ▶ Check the position of the spring retainers and correct, if necessary.
- ▶ Fasten the textile type fastening equipment **3** on the upper pin points **P1** between the end section **1** and the pinned components **2**.
- ▶ Lift the lattice jib until the lower pin points **P2** align between the end section **1** and components **2**.
- ▶ Pin the end section **1** and components **2** on the lower pin points **P2** on the left and right.

After pinning:
- ▶ Remove the textile type fastening equipment **3**.

15.9.2 Taking the lattice jib down into the roller cart

Note
- ▶ The following illustrations are examples and may not match your crane exactly.

copyright © Liebherr-Werk Ehingen GmbH 2018

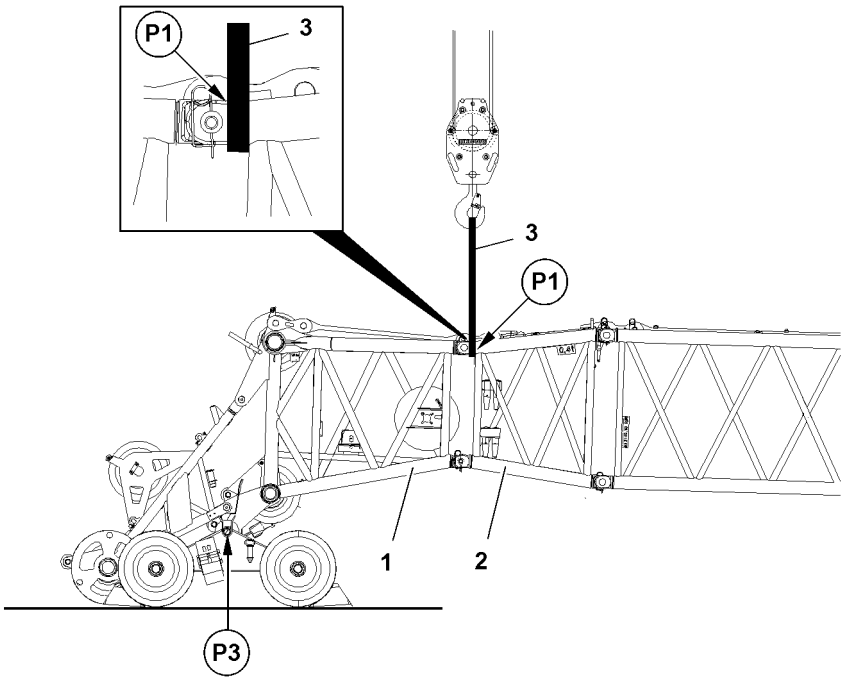

Fig.117842: Taking the lattice jib down into the roller cart (telescopic crane with lattice jib)

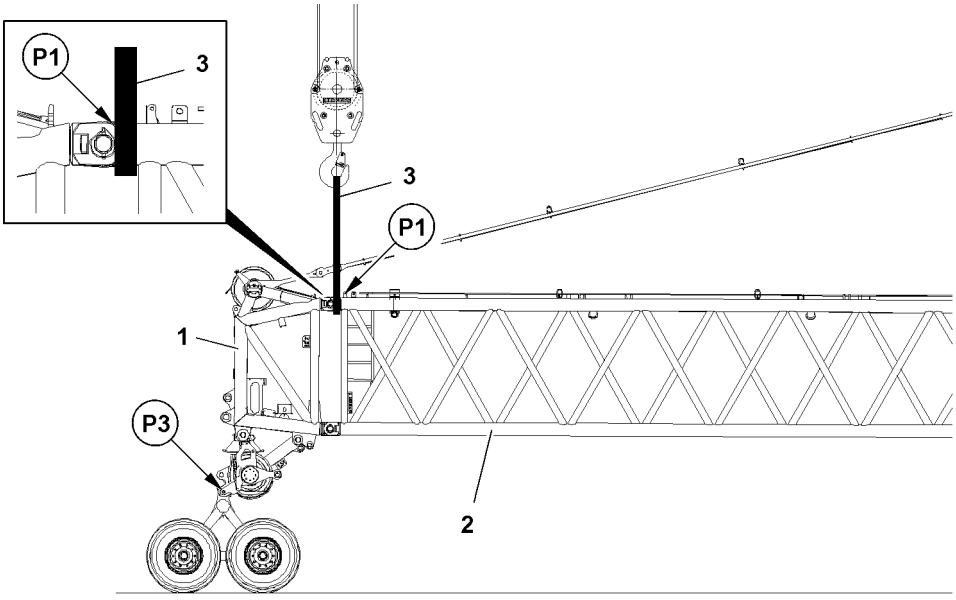

Fig.121550: Taking the lattice jib down into the roller cart (crane with lattice mast)

When taking it down into the roller cart, observe the following:
- The end section **1** is completely assembled.
- Use textile type fastening equipment **3**.
- Loop the textile type fastening equipment **3** on the left and right around on the pin points.

Before fastening:
- ▶ Check the position of the spring retainers and correct, if necessary.
- ▶ Fasten the textile type fastening equipment **3** on the upper pin points **P1** between the end section **1** and the pinned components **2**.
- ▶ Lift the lattice jib and take it down in the roller cart **4**.
- ▶ Pin the end section **1** with the roller cart **4** on the pin points **P3** on the left and right.
- ▶ Remove the textile type fastening equipment **3**.

LWE/LR 1600-2-001/18101-07-02/en

copyright © Liebherr-Werk Ehingen GmbH 2018

Note

▶ The disassembly and removal of the pulley cart **4** is handled accordingly.

15.9.3 Opening the end section

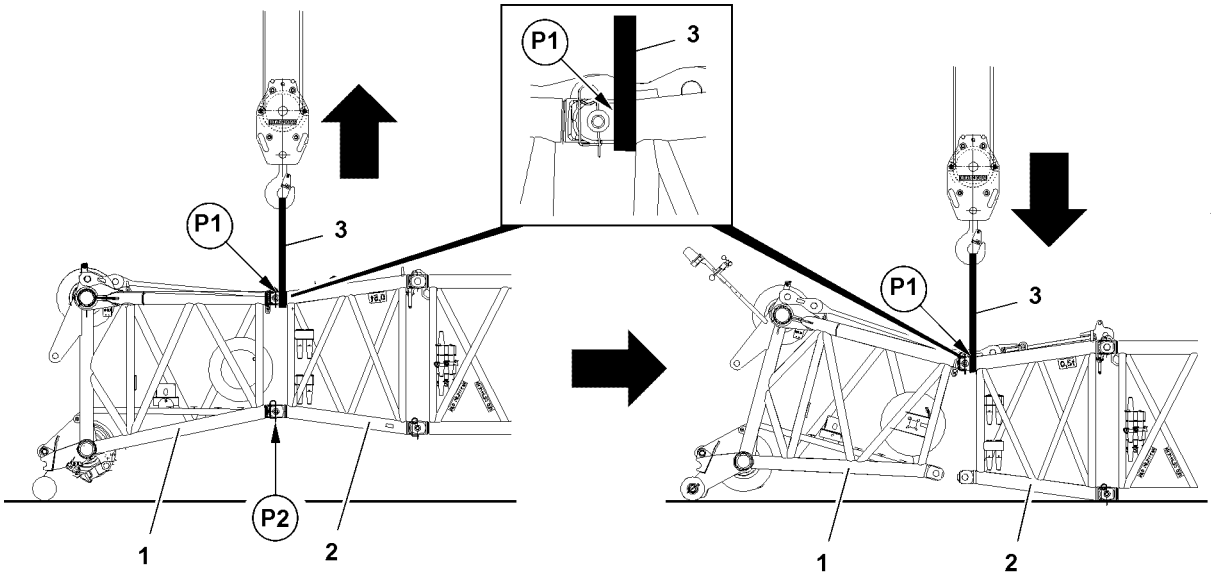

Fig.117841: Opening the end section

For opening the end section, observe the following:

- The roller cart is disassembled and removed.
- Use textile type fastening equipment **3**.
- Loop the textile type fastening equipment **3** on the left and right around on the pin points.

Before fastening:

▶ Check the position of the spring retainers and correct, if necessary.
▶ Fasten the textile type fastening equipment **3** on the upper pin points **P1** between the end section **1** and the pinned components **2**.
▶ Lift the lattice jib and relieve the pins on the lower pin points **P2**.
▶ Unpin the end section **1** and components **2** on the lower pin points **P2** on the left and right.
▶ Take down the lattice jib on the ground.
▶ Remove the textile type fastening equipment **3**.

LWE/LR 1600-2-001/18101-07-02/en

copyright © Liebherr-Werk Ehingen GmbH 2018

15.9.4 Holding the luffing lattice jib

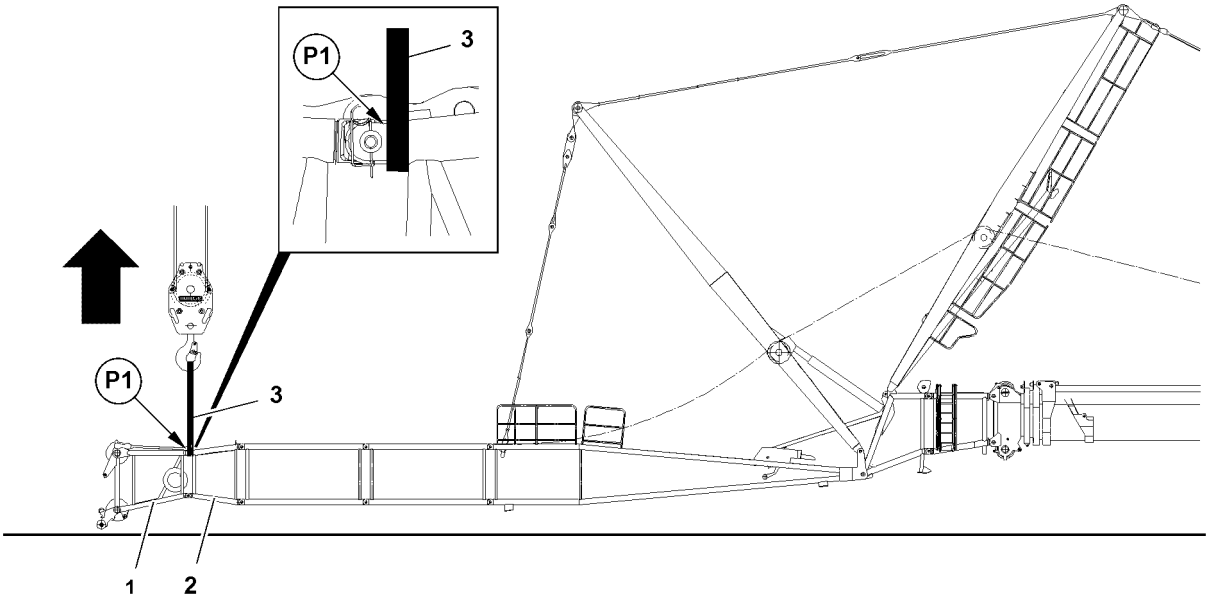

Fig.117843: Holding the luffing lattice jib

To be able to install or remove the guy rods and "flying assembly", the luffing lattice jib must be held on the upper pin points **P1**.

When holding the luffing lattice jib, observe the following:
- The lattice jib has been completely assembled.
- Use textile type fastening equipment **3**.
- Loop the textile type fastening equipment **3** on the left and right around on the pin points.

Before fastening:
- ▶ Check the position of the spring retainers and correct, if necessary.
- ▶ Fasten the textile type fastening equipment **3** on the upper pin points **P1** between the end section **1** and the pinned components **2**.
- ▶ Lift the lattice jib and install the guy rods.

When the guy rods are installed:
- ▶ Remove the textile type fastening equipment **3**.

Note
- ▶ The removal of the guy rods is handled accordingly.

15.9.5 Assembling the fixed lattice jib on the TF-adapter

WARNING
Mortal danger if the lattice jib tilts over!
Due to unfavorable center of gravity, only certain lattice jib lengths can be installed / removed as an assembled lattice jib.
If a lattice jib length cannot be installed / removed as an assembled lattice jib, then they must be installed / removed individually in flying mode.
- ▶ Check if the respective lattice jib length can be installed / removed as an assembled lattice jib. See charts in the Crane operating instructions, chapter 5.01.10.

LWE/LR 1600-2-001/18101-07-02/en

copyright © Liebherr-Werk Ehingen GmbH 2018

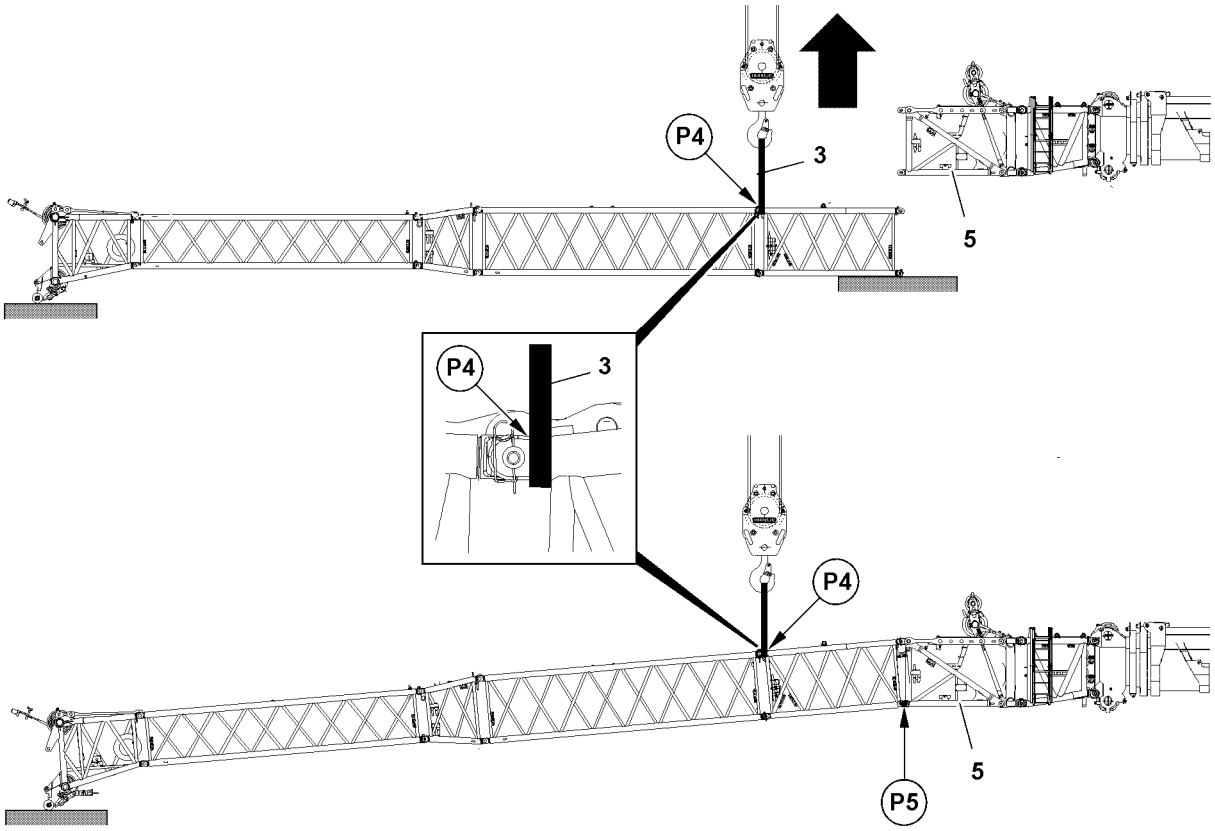

Fig.117844: Assembling the lattice jib on the TF-adapter

For installation on the TF-adapter, observe the following:
- The lattice jib has been assembled.
- The TF-adapter **5** is assembled.
- Use textile type fastening equipment **3**.
- Loop the textile type fastening equipment **3** on the left and right around on the pin points.

Before fastening:
▶ Check the position of the spring retainers and correct, if necessary.

Fasten between the lattice sections, which are installed directly on the TF-adapter.

▶ Fasten the textile type fastening equipment **3** on the upper pin points **P4**.
▶ Lift the lattice jib and affix on the lower pin point **P5** on the TF-adapter **5**.
▶ Pin the lattice jib on the lower pin point **P5** with the TF-adapter **5**.

After pinning:
▶ Remove the textile type fastening equipment **3**.

WARNING
Mortal danger if the lattice jib tilts over!
▶ Make sure to always observe the permissible lattice jib length at disassembly.

▶ Disassemble accordingly.

LWE/LR 1600-2-001/18101-07-02/en

copyright © Liebherr-Werk Ehingen GmbH 2018

15.9.6 Closing the fixed lattice jib

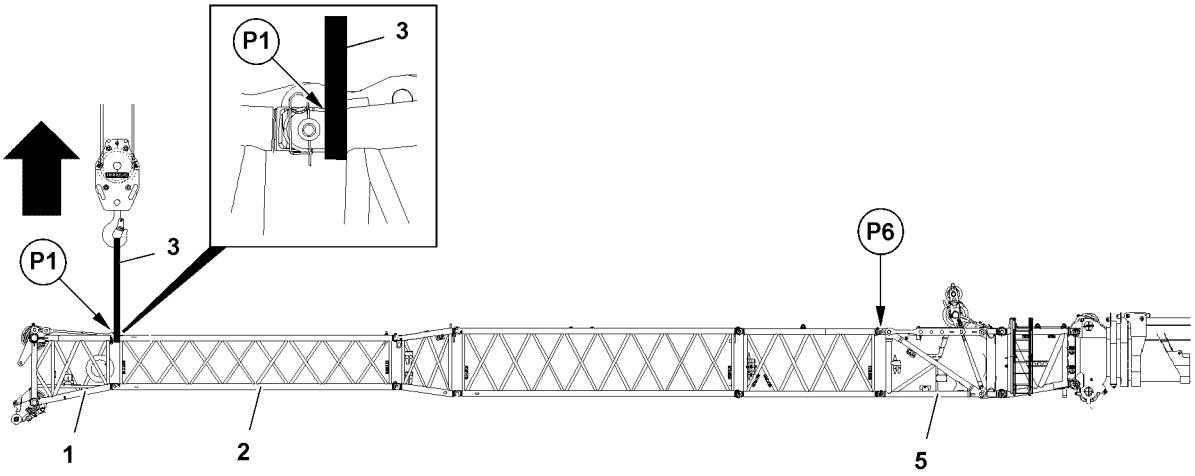

Fig.117850: Closing the lattice jib

For installation on the TF-adapter, observe the following:
- The lattice jib is pinned on the lower pin points of the TF-adapter **5**.
- Use textile type fastening equipment **3**.
- Loop the textile type fastening equipment **3** on the left and right around on the pin points.

Before fastening:
- ▶ Check the position of the spring retainers and correct, if necessary.
- ▶ Fasten the textile type fastening equipment **3** on the upper pin points **P1** between the end section **1** and the pinned components **2**.
- ▶ Lift the lattice jib and affix on the upper pin point **P6** on the TF-adapter **5**.
- ▶ Pin the lattice jib on the upper pin point **P6** with the TF-adapter **5**.

After pinning:
- ▶ Remove the textile type fastening equipment **3**.

Note
- ▶ Disassemble accordingly.

LWE/LR 1600-2-001/18101-07-02/en

copyright © Liebherr-Werk Ehingen GmbH 2018

15.9.7 Angle adjustment on the fixed lattice jib with mechanical adjustment

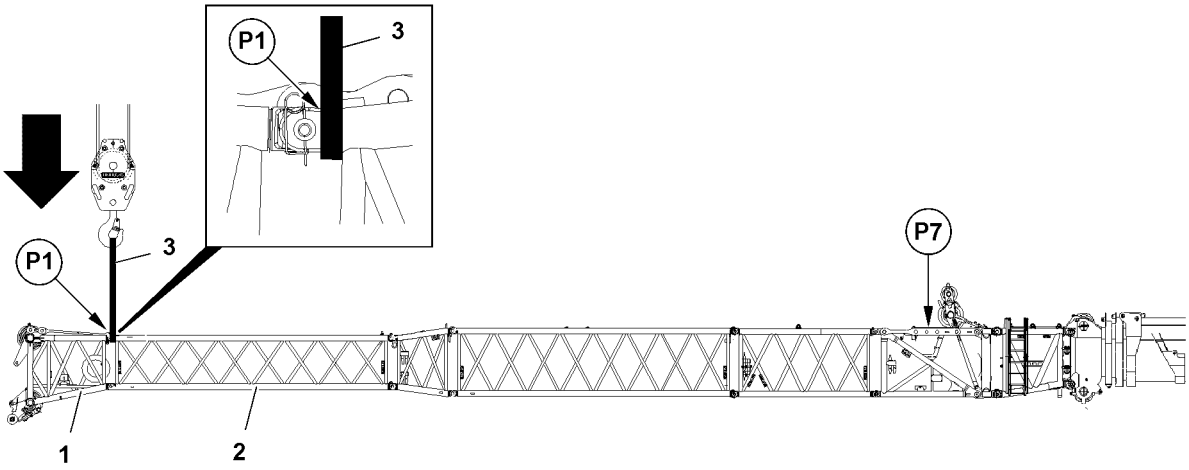

Fig.117851: Angle adjustment on the fixed lattice jib

For the angle adjustment on the fixed lattice jib, observe the following:
- The lattice jib has been completely assembled.
- Use textile type fastening equipment **3**.
- Loop the textile type fastening equipment **3** on the left and right around on the pin points.

Before fastening:
- ▶ Check the position of the spring retainers and correct, if necessary.
- ▶ Fasten the textile type fastening equipment **3** on the upper pin points **P1** between the end section **1** and the pinned components **2**.
- ▶ Lift the lattice jib and relieve the pins on the angle adjustment **P7**.
- ▶ Unpin the angle adjustment **P7**, see Crane operating instructions, chapter 5.03.
- ▶ Set and pin a New angle on the angle adjustment **P7**, see Crane operating instructions, chapter 5.03.
- ▶ Lower the lattice jib.

After lowering:
- ▶ Remove the textile type fastening equipment **3**.

15.9.8 Loading the preassembled lattice jib

For loading the lattice jib, observe the following:
- The lattice jib has been preassembled.
- Use textile type fastening equipment.
- Loop the textile type fastening equipment on the left and right around on the pin points.

Before fastening:
- ▶ Check the position of the spring retainers and correct, if necessary.
- ▶ Fasten the preassembled lattice jib according to the fastening points in the Crane operating instructions, chapter 5.03.

LWE/LR 1600-2-001/18101-07-02/en

copyright © Liebherr-Werk Ehingen GmbH 2018

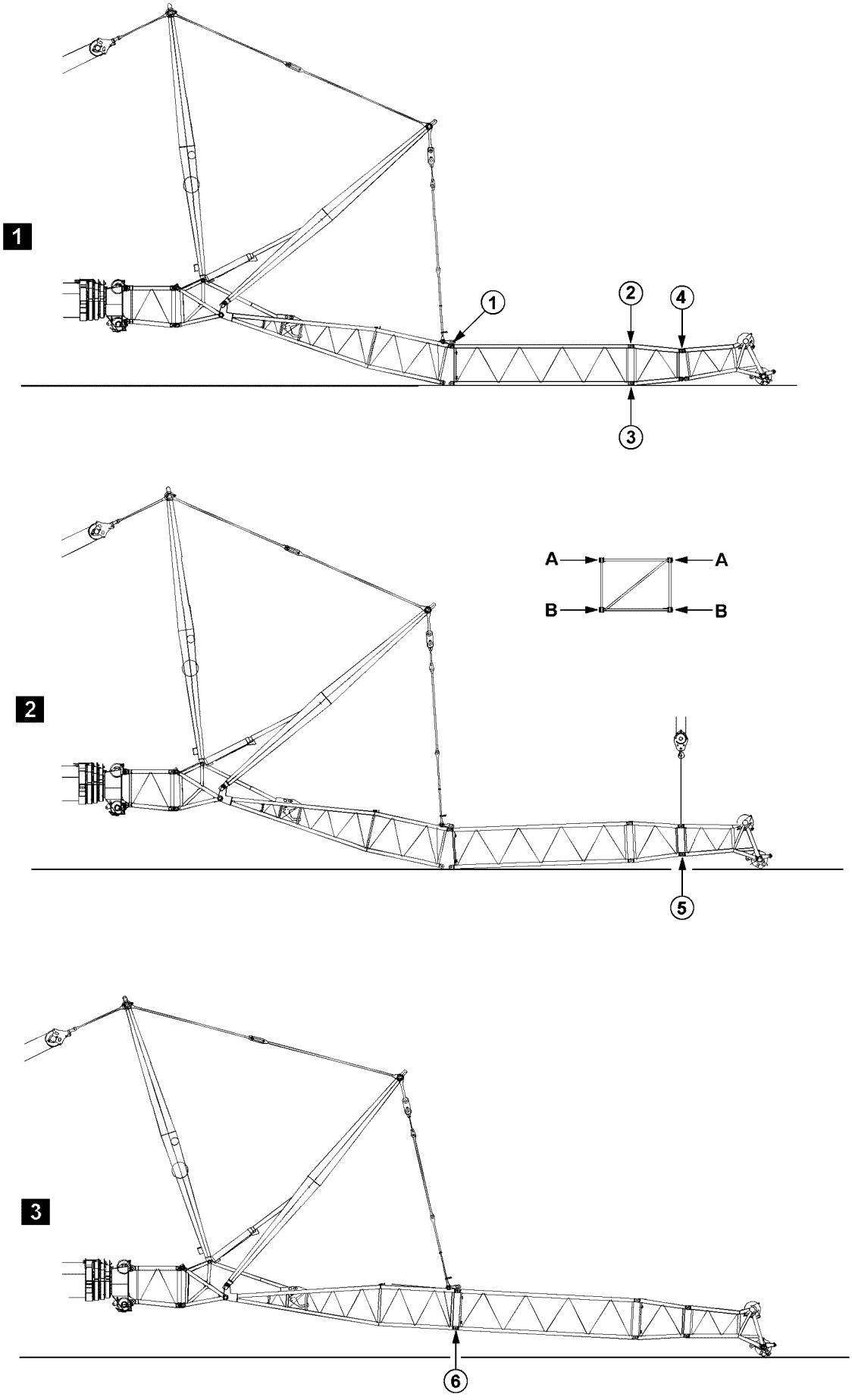

Fig.197718: Example for cranes with telescopic boom

LWE/LR 1600-2-001/18101-07-02/en

copyright © Liebherr-Werk Ehingen GmbH 2018

15.10 Assembling / disassembling the lattice sections on telescopic cranes with a luffing lattice jib

15.10.1 Assembling the lattice sections on a luffing lattice jib

The illustrations serve as examples. The illustrations may differ depending on the crane.

WARNING
Danger of fatal injury when assembling auxiliary booms!
If the pins are not pinned in the given sequence, then lattice sections may suddenly fold down or fall down.
Death, severe bodily injuries, property damage.
▶ Pins must be pinned in the order specified.

▶ Pin and secure pins at both sides (level **A**) at point **1**, illustration **1**.
▶ Pin and secure pins at both sides (level **A**) at point **2**, illustration **1**.
▶ Pin and secure pins at both sides (level **B**) at point **3**, illustration **1**.
▶ Pin and secure pins at both sides (level **A**) at point **4**, illustration **1**.
▶ Close the end section with the auxiliary crane, illustration **2**.
▶ Pin and secure pins at both sides (level **B**) at point **5**, illustration **2**.
▶ Lift the lattice sections, illustration **3**.
▶ Pin and secure pins at both sides (level **B**) at point **6**, illustration **3**.

LWE/LR 1600-2-001/18101-07-02/en

copyright © Liebherr-Werk Ehingen GmbH 2018

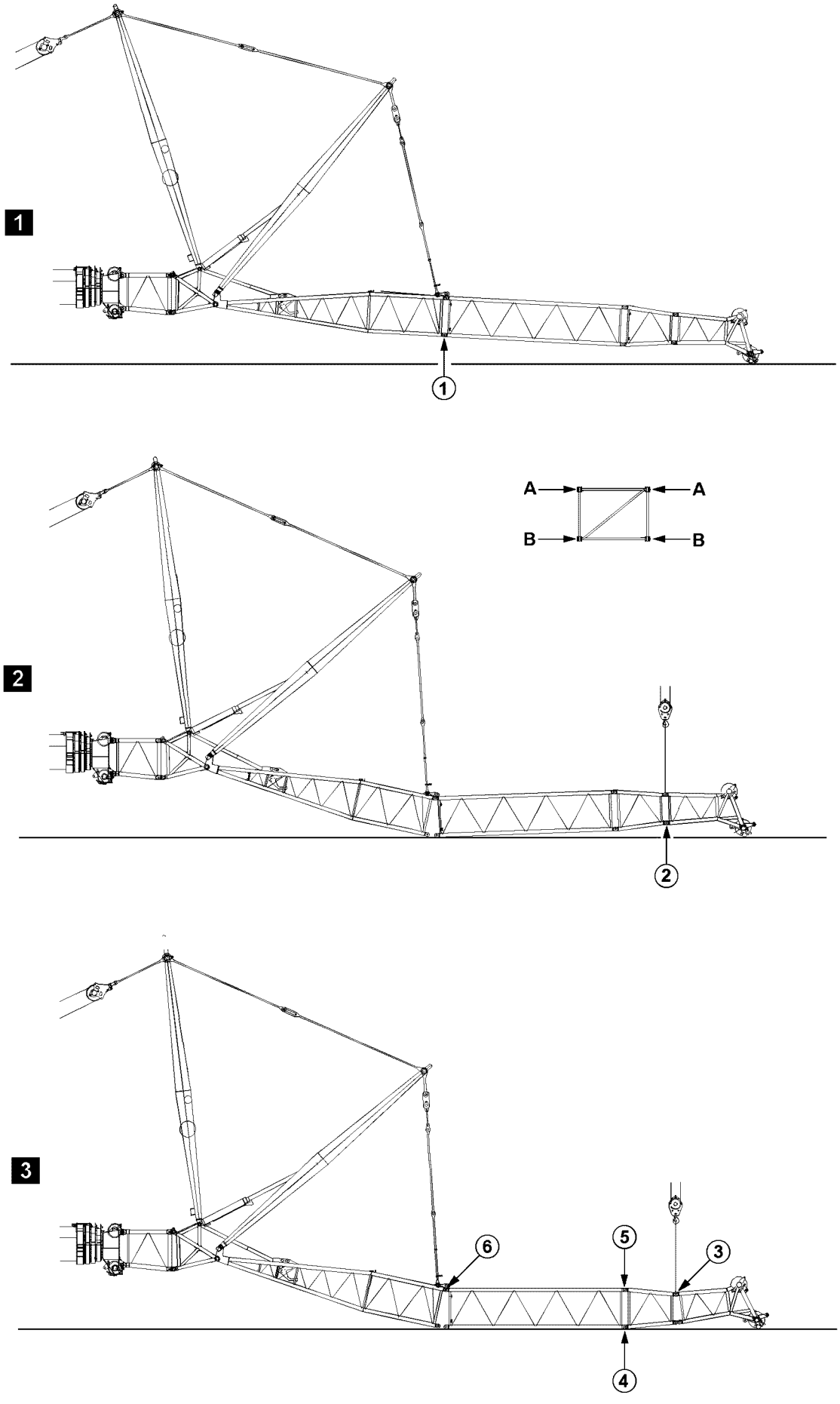

Fig.197719: Example for cranes with telescopic boom

LWE/LR 1600-2-001/18101-07-02/en

copyright © Liebherr-Werk Ehingen GmbH 2018

15.10.2 Disassembling the lattice sections on a luffing lattice jib

The illustrations serve as examples. The illustrations may differ depending on the crane.

WARNING
Danger of fatal injury when disassembling auxiliary booms!
If the pins are not unpinned in the given sequence, then lattice sections may suddenly fold down or fall down.
Death, severe bodily injuries, property damage.
▶ Pins must be unpinned in the order specified.

▶ Luff the boom down until the end section touches the ground slightly, illustration **1**.
▶ Guy the boom with NA-frame I, illustration **1**.
▶ Release and unpin the pins on both sides (level **B**) at point **1**, illustration **1**.
▶ Open the boom with the NA-frame I and completely take down the boom, illustration **2**.
▶ Lift the end section with the auxiliary crane, illustration **2**.
▶ Release and unpin the pins on both sides (level **B**) at point **2**, illustration **2**.
▶ Release and unpin the pins on both sides (level **A**) at point **3**, illustration **3**.
▶ Release and unpin the pins on both sides (level **B**) at point **4**, illustration **3**.
▶ Release and unpin the pins on both sides (level **A**) at point **5**, illustration **3**.
▶ Release and unpin the pins on both sides (level **A**) at point **6**, illustration **3**.

LWE/LR 1600-2-001/18101-07-02/en

copyright © Liebherr-Werk Ehingen GmbH 2018

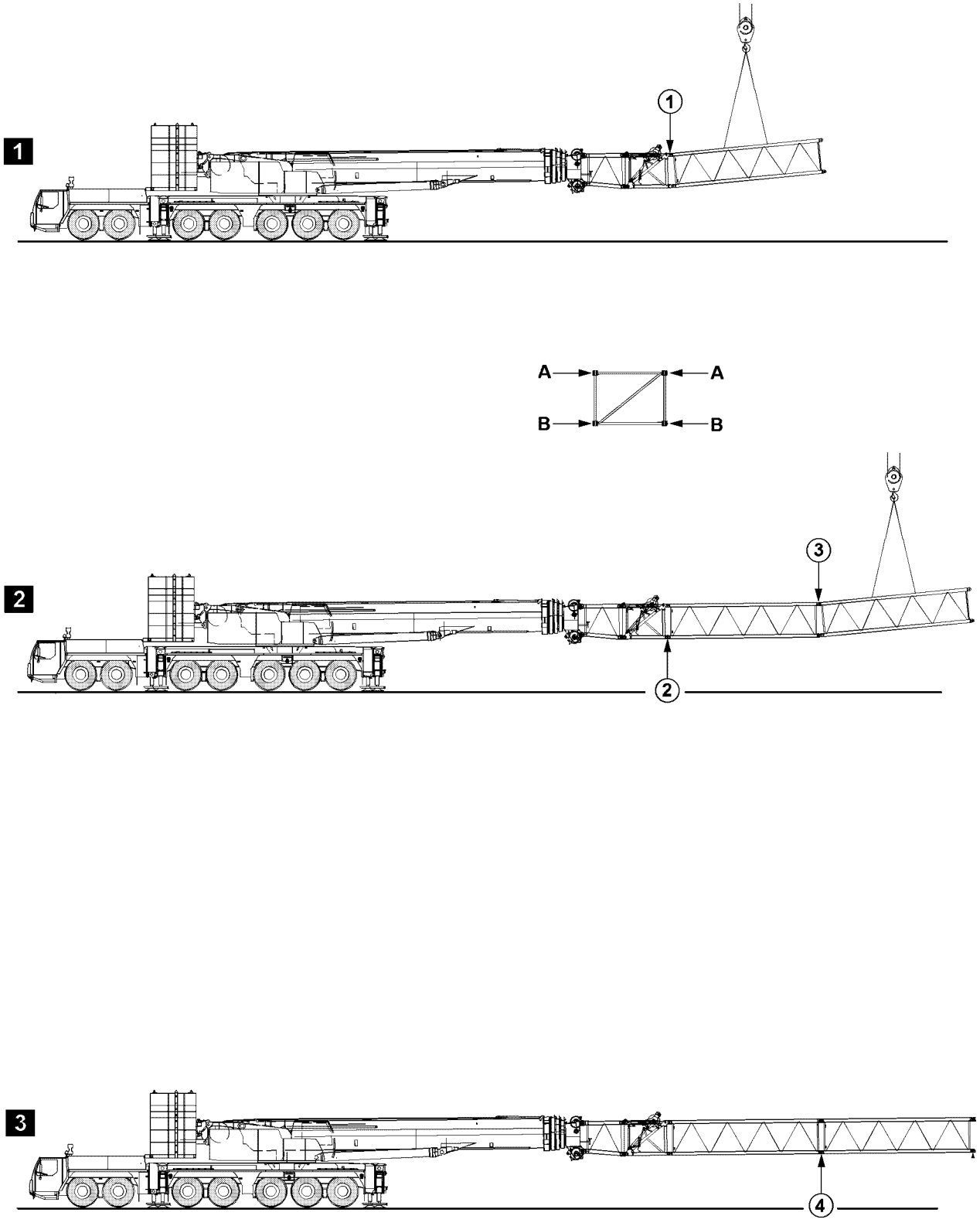

LWE/LR 1600-2-001/18101-07-02/en

Fig.197705: Example for cranes with telescopic boom

copyright © Liebherr-Werk Ehingen GmbH 2018

15.11 Assembling / disassembling the lattice sections on telescopic cranes with an auxiliary boom, with an auxiliary crane

15.11.1 Assembling the lattice sections on an auxiliary boom with an auxiliary crane

The illustrations serve as examples. The illustrations may differ depending on the crane.

WARNING
Danger of fatal injury when assembling auxiliary booms!
If the pins are not pinned in the given sequence, then lattice sections may suddenly fold down or fall down.
Death, severe bodily injuries, property damage.
▶ Pins must be pinned in the order specified.

▶ Pin and secure pins at both sides (level **A**) at point **1**, illustration **1**.
▶ Pin and secure pins at both sides (level **B**) at point **2**, illustration **2**.
▶ Pin and secure pins at both sides (level **A**) at point **3**, illustration **2**.
▶ Pin and secure pins at both sides (level **B**) at point **4**, illustration **3**.

LWE/LR 1600-2-001/18101-07-02/en

copyright © Liebherr-Werk Ehingen GmbH 2018

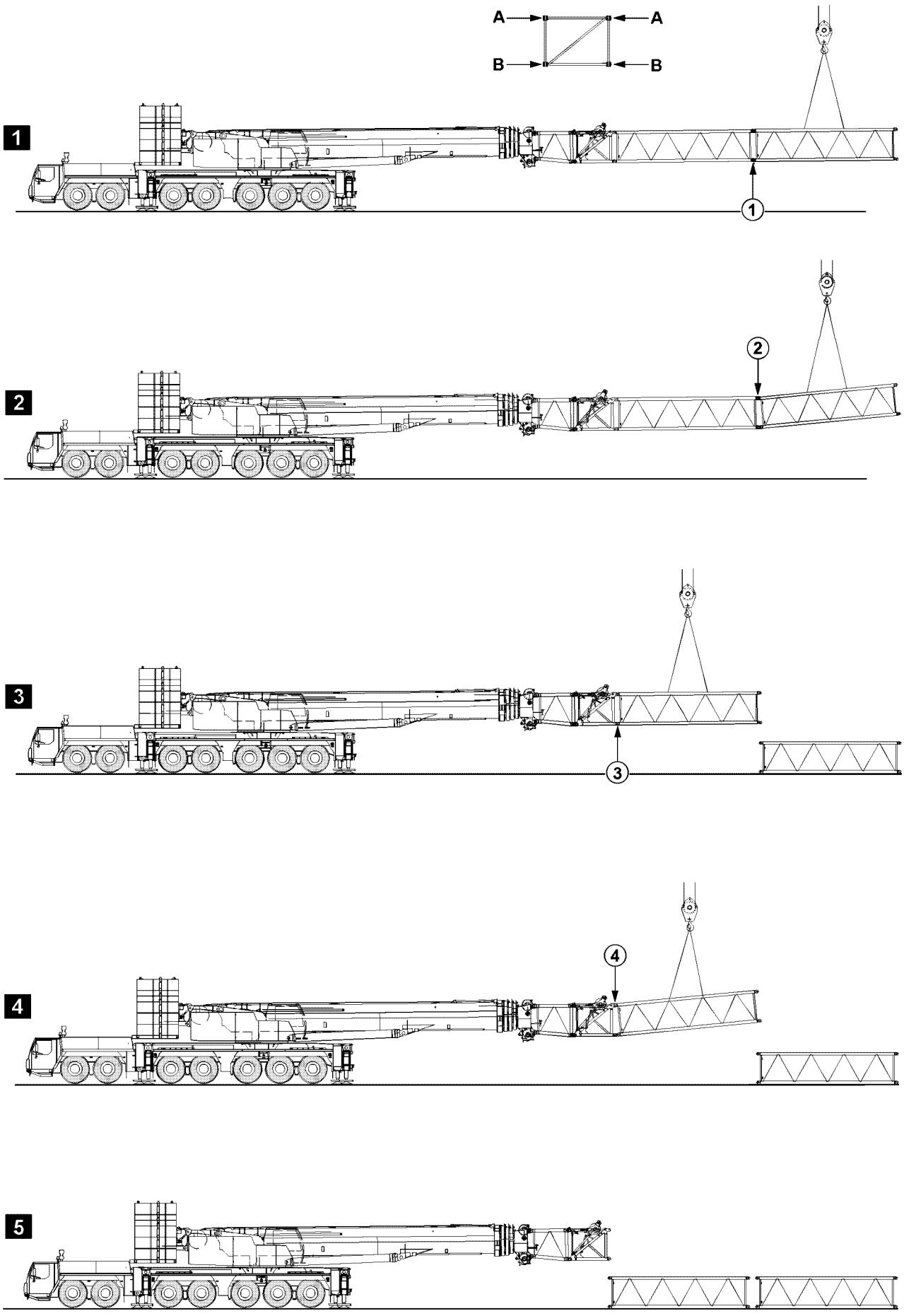

Fig.105510: Example for cranes with telescopic boom

LWE/LR 1600-2-001/18101-07-02/en

copyright © Liebherr-Werk Ehingen GmbH 2018

15.11.2 Disassembling the lattice sections on an auxiliary boom with an auxiliary crane

The illustrations serve as examples. The illustrations may differ depending on the crane.

WARNING
Danger of fatal injury when disassembling auxiliary booms!
If the pins are not unpinned in the given sequence, then lattice sections may suddenly fold down or fall down.
Death, severe bodily injuries, property damage.
▶ Pins must be unpinned in the order specified.

▶ Release and unpin the pins on both sides (level **B**) at point **1**, illustration **1**.
▶ Release and unpin the pins on both sides (level **A**) at point **2**, illustration **2**.
▶ Release and unpin the pins on both sides (level **B**) at point **3**, illustration **3**.
▶ Release and unpin the pins on both sides (level **A**) at point **4**, illustration **4**.

LWE/LR 1600-2-001/18101-07-02/en

copyright © Liebherr-Werk Ehingen GmbH 2018

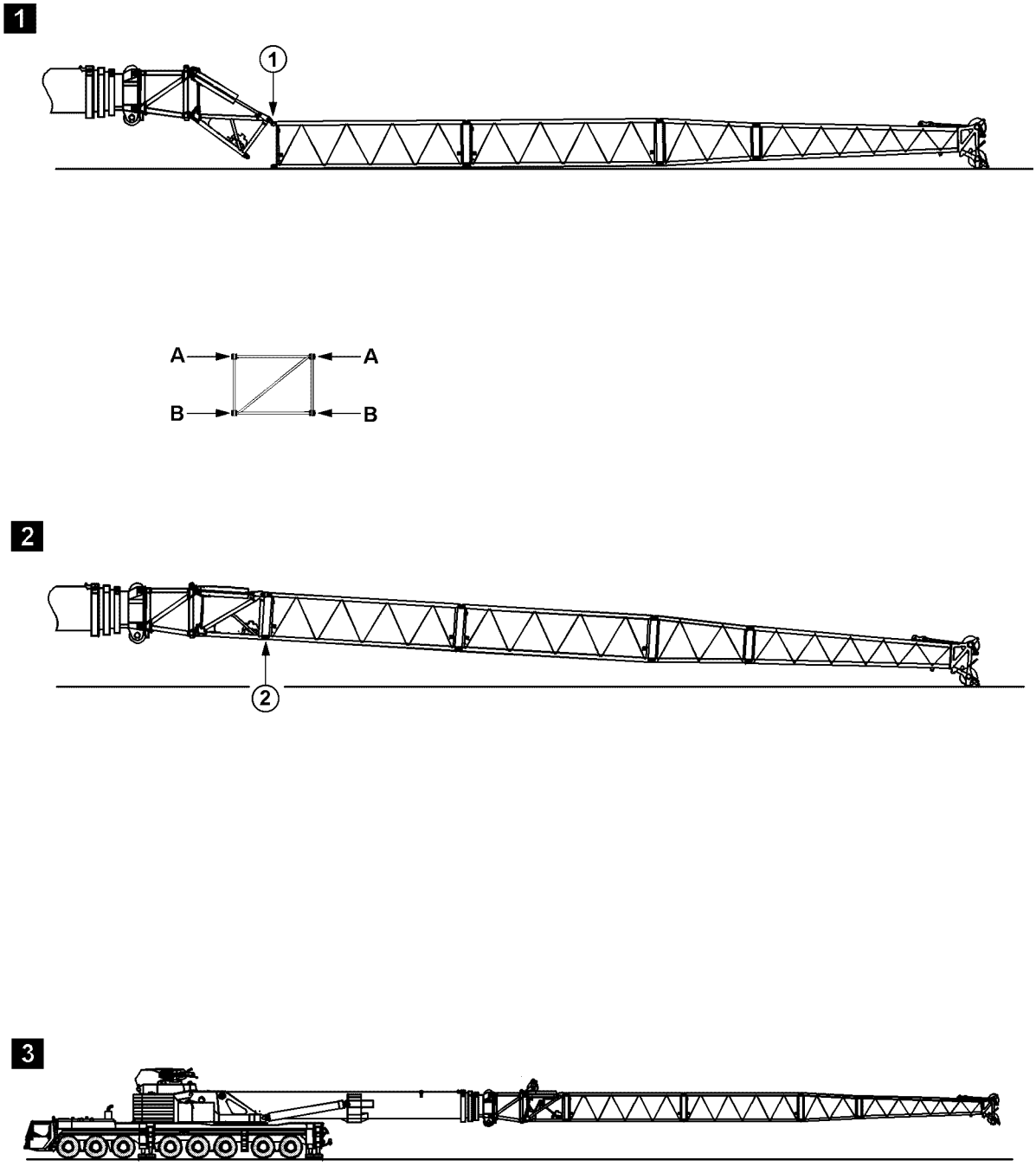

LWE/LR 1600-2-001/18101-07-02/en

Fig.197712: Example for cranes with telescopic boom

copyright © Liebherr-Werk Ehingen GmbH 2018

15.12 Assembling / disassembling the lattice sections on telescopic cranes with an auxiliary boom, without an auxiliary crane

15.12.1 Assembling the lattice sections on an auxiliary boom without an auxiliary crane

The illustrations serve as examples. The illustrations may differ depending on the crane.

WARNING
Danger of fatal injury when assembling auxiliary booms!
If the pins are not pinned in the given sequence, then lattice sections may suddenly fold down or fall down.
Death, severe bodily injuries, property damage.
▶ Pins must be pinned in the order specified.

For cranes with hydraulic angle adjustment and self-supporting auxiliary boom, the assembly / disassembly of additional lattice sections may be performed using the crane itself.

In order to do so, proceed as follows.

▶ Assemble the lattice sections to the required length.
▶ Pin and secure pins at both sides (level **A**) at point **1**, illustration **1**.
▶ Close the auxiliary boom until the pins can be pinned at point **2**, illustration **2**.
▶ Pin and secure pins at both sides (level **B**) at point **2**, illustration **2**.

LWE/LR 1600-2-001/18101-07-02/en

copyright © Liebherr-Werk Ehingen GmbH 2018

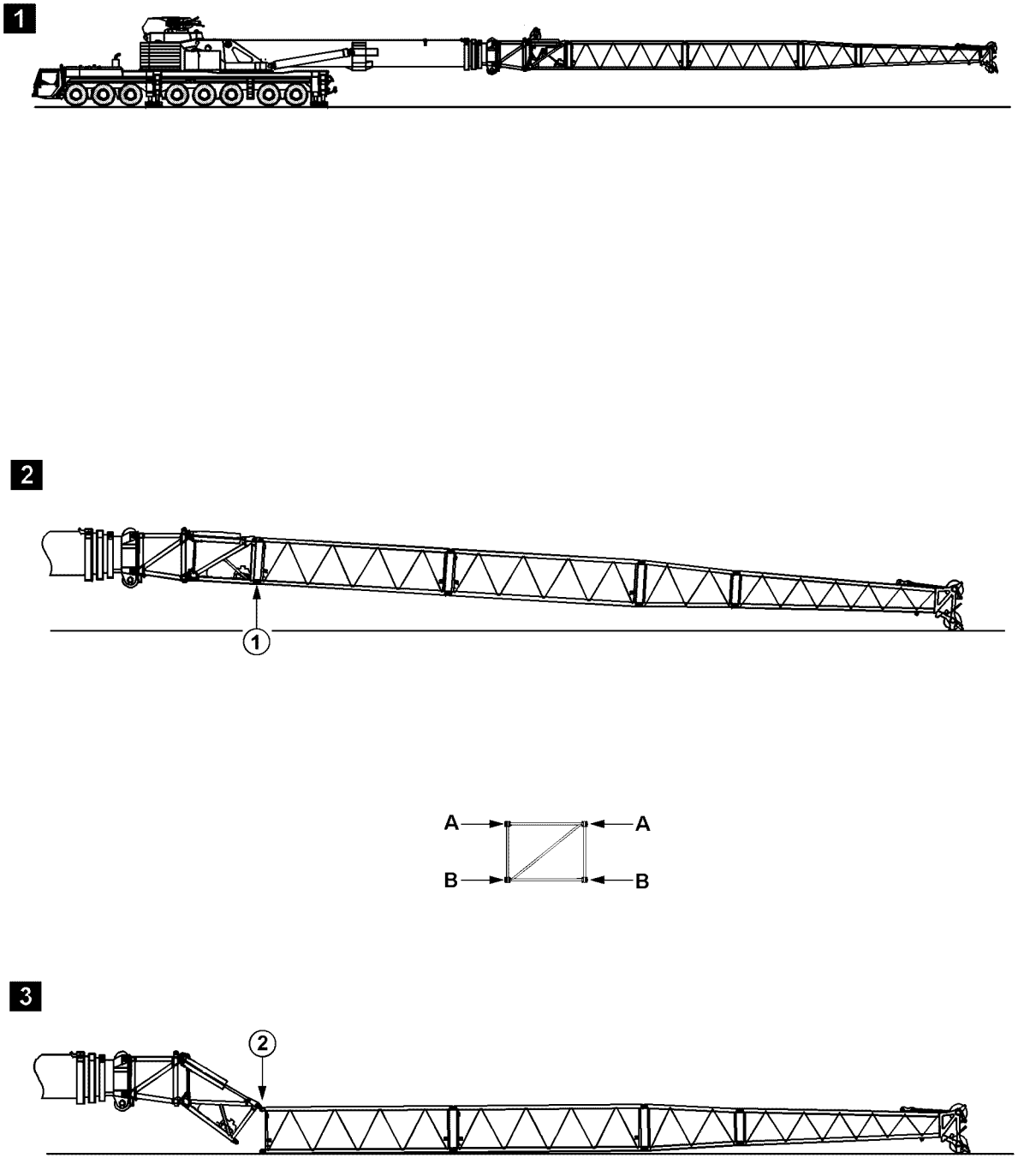

LWE/LR 1600-2-001/18101-07-02/en

Fig.197713: Example for cranes with telescopic boom

copyright © Liebherr-Werk Ehingen GmbH 2018

15.12.2 Disassembling the lattice sections on an auxiliary boom without an auxiliary crane

The illustrations serve as examples. The illustrations may differ depending on the crane.

WARNING
Danger of fatal injury when disassembling auxiliary booms!
If the pins are not unpinned in the given sequence, then lattice sections may suddenly fold down or fall down.
Death, severe bodily injuries, property damage.
▶ Pins must be unpinned in the order specified.

For cranes with hydraulic angle adjustment and self-supporting auxiliary boom, the assembly / disassembly of additional lattice sections may be performed using the crane itself.

In order to do so, proceed as follows.

NOTICE
Damage of hydraulic cylinders on the TF-adapter!
▶ As soon as the lattice jib is placed, stop the luff down movement.
▶ It is prohibited to set down the fixed lattice jib „hard“.

▶ Luff the main boom down until the end section touches the ground slightly, illustration **2**.

If it is not possible to luff down that far:
▶ Adjust the TF-adapter until the end section touches the ground slightly, illustration **2**.
▶ Release and unpin the pins on both sides (level **B**) at point **1**, illustration **2**.

NOTICE
Damage of hydraulic cylinders on the TF-adapter.
▶ As soon as the lattice jib is placed, stop the opening movement.

▶ Open the auxiliary boom until the lattice sections to be removed are laying completely on the ground, illustration **3**.
▶ Release and unpin the pins on both sides (level **A**) at point **2**, illustration **3**.
▶ Completely remove the auxiliary boom.

LWE/LR 1600-2-001/18101-07-02/en

copyright © Liebherr-Werk Ehingen GmbH 2018

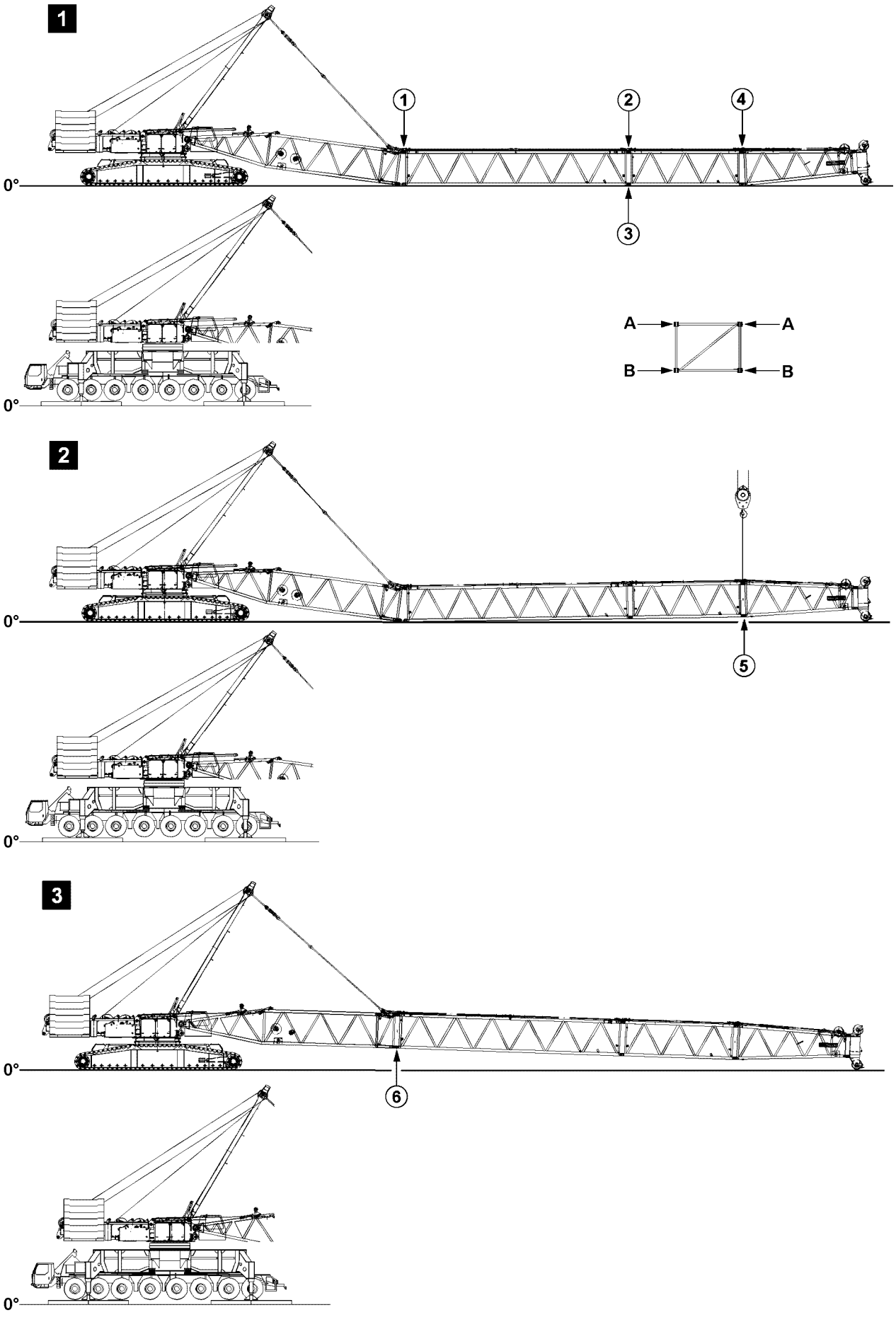

Fig.121633: Example for cranes with lattice mast booms

LWE/LR 1600-2-001/18101-07-02/en

copyright © Liebherr-Werk Ehingen GmbH 2018

15.13 Assembling / disassembling of lattice sections for lattice mast cranes

15.13.1 Assembling of lattice sections

The illustrations serve as examples. The illustrations may differ depending on the crane.

WARNING
Danger of fatal injury when assembling booms!
If the pins are not pinned in the given sequence, then lattice sections may suddenly fold down or fall down.
Personnel can be killed or seriously injured.
▶ Pins must be pinned in the order specified.

▶ Pin and secure pins at both sides (level **A**) at point **1**, illustration **1**.
▶ Pin and secure pins at both sides (level **A**) at point **2**, illustration **1**.
▶ Pin and secure pins at both sides (level **B**) at point **3**, illustration **1**.
▶ Pin and secure pins at both sides (level **A**) at point **4**, illustration **1**.
▶ Lift the end section with the auxiliary crane, illustration **2**.
▶ Pin and secure pins at both sides (level **B**) at point **5**, illustration **2**.
▶ Close the boom system with the SA-frame, illustration **3**.
▶ Pin and secure pins at both sides (level **B**) at point **6**, illustration **3**.

LWE/LR 1600-2-001/18101-07-02/en

copyright © Liebherr-Werk Ehingen GmbH 2018

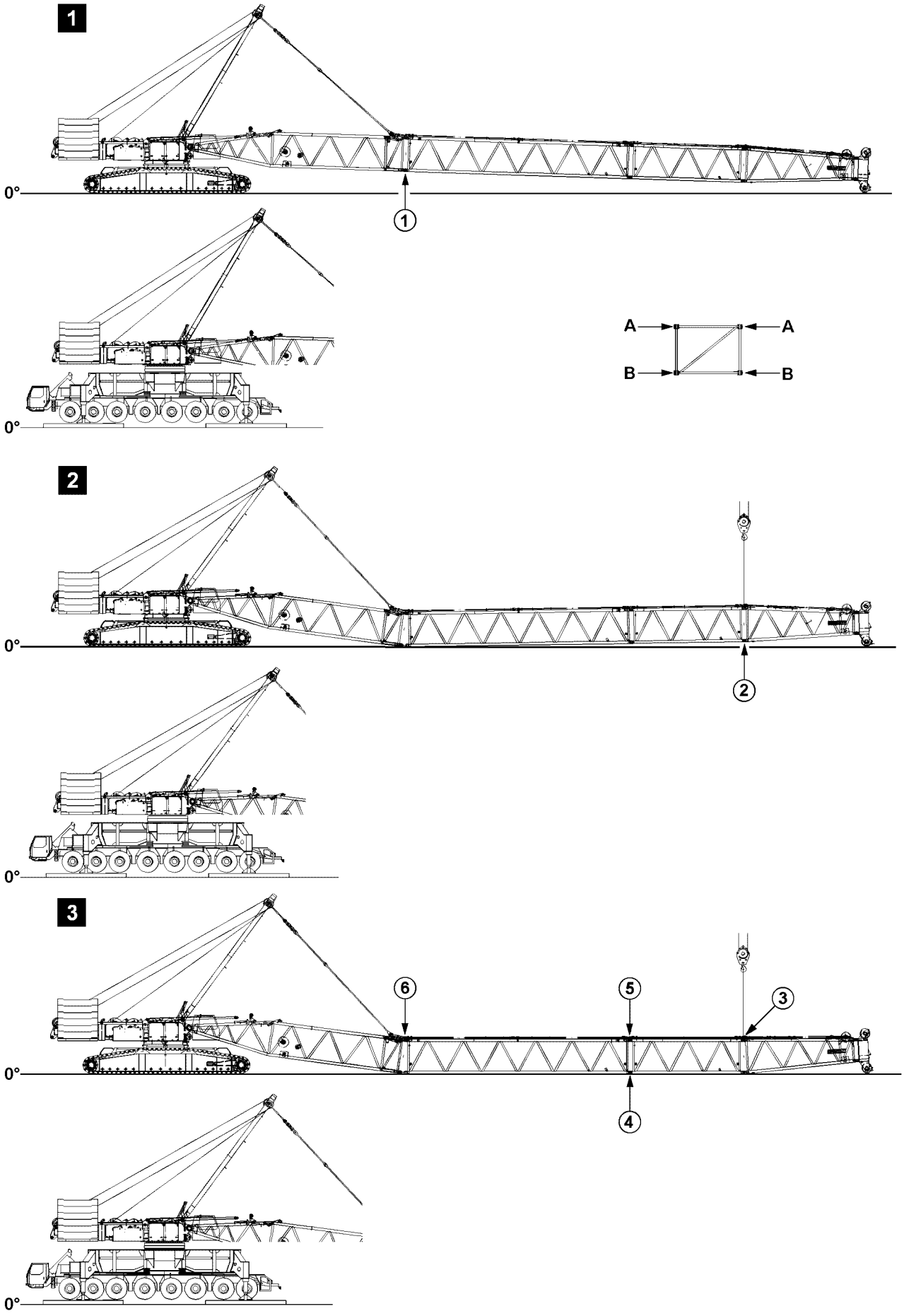

Fig.121634: Example for cranes with lattice mast booms

LWE/LR 1600-2-001/18101-07-02/en

copyright © Liebherr-Werk Ehingen GmbH 2018

15.13.2 Disassembling of lattice sections

The illustrations serve as examples. The illustrations may differ depending on the crane.

WARNING
Danger of fatal injury when disassembling booms!
If the pins are not unpinned in the given sequence, then lattice sections may suddenly fold down or fall down.
Personnel can be killed or seriously injured.
- ▶ Make sure that the SA-frame guying is tensioned before the pins are unpinned at point **1**, see illustration **1**.
- ▶ Pins must be unpinned in the order specified.

- ▶ Luff the boom down until the end section touches the ground slightly, illustration **1**.
- ▶ Guy the boom with SA-frame, illustration **1**.
- ▶ Release and unpin the pins on both sides (level **B**) at point **1**, illustration **1**.
- ▶ Open the boom system with the SA-frame, illustration **2**.
- ▶ Take the lattice sections down completely, illustration **2**.
- ▶ Lift the end section with the auxiliary crane, illustration **2**.
- ▶ Release and unpin the pins on both sides (level **B**) at point **2**, illustration **2**.
- ▶ Release and unpin the pins on both sides (level **A**) at point **3**, illustration **3**.
- ▶ Release and unpin the pins on both sides (level **B**) at point **4**, illustration **3**.
- ▶ Release and unpin the pins on both sides (level **A**) at point **5**, illustration **3**.
- ▶ Release and unpin the pins on both sides (level **A**) at point **6**, illustration **3**.

LWE/LR 1600-2-001/18101-07-02/en

copyright © Liebherr-Werk Ehingen GmbH 2018

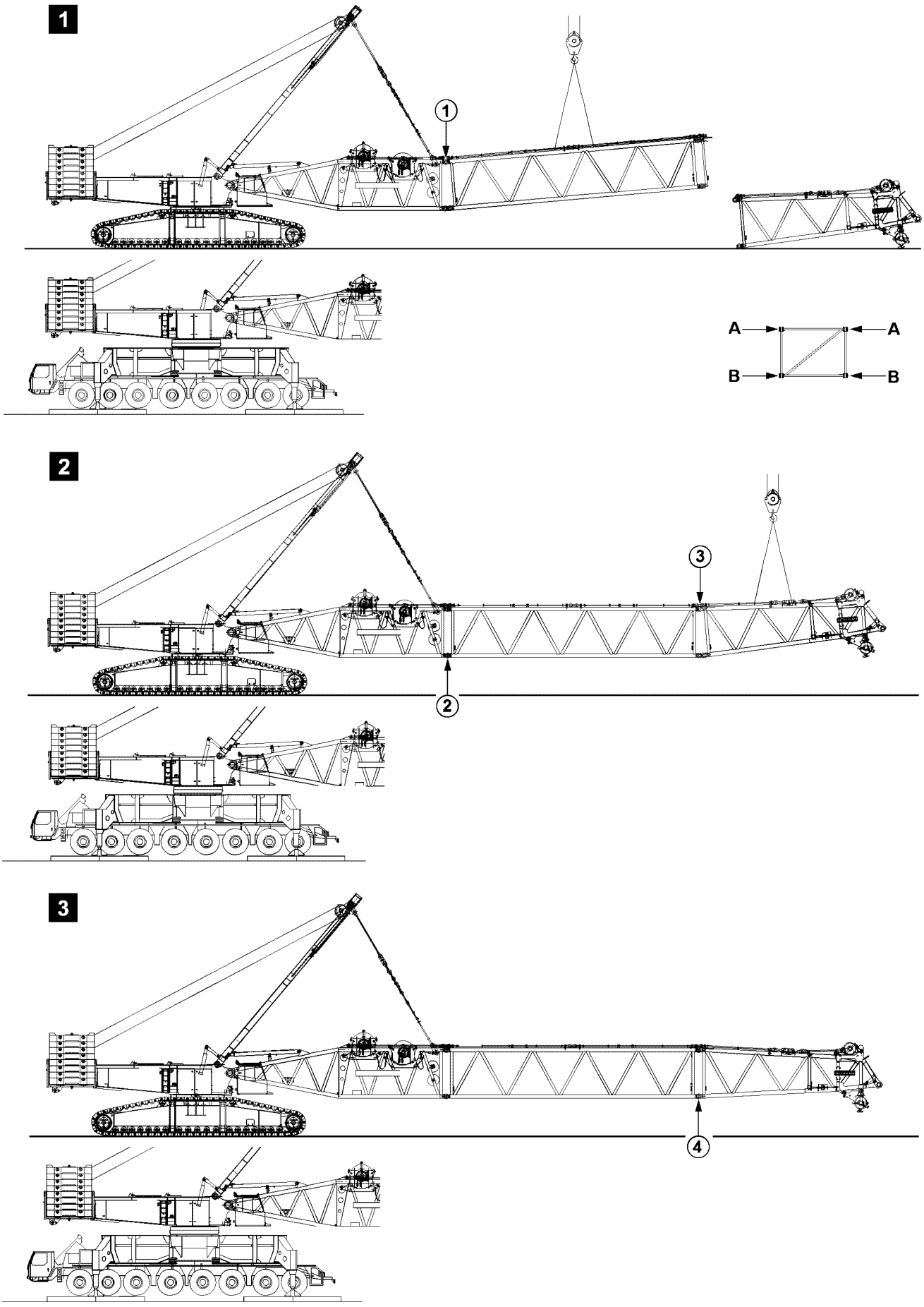

Fig.198182: Example for cranes with lattice mast booms

LWE/LR 1600-2-001/18101-07-02/en

copyright © Liebherr-Werk Ehingen GmbH 2018

15.14 Flying assembling / disassembling of lattice sections

15.14.1 Flying assembling of lattice sections

The illustrations serve as examples. The illustrations may differ depending on the crane.

WARNING
Danger of fatal injury when assembling booms!
If the pins are not pinned in the given sequence, then lattice sections may suddenly fold down or fall down.
Personnel can be killed or seriously injured.
▶ Pins must be pinned in the order specified.

▶ Pin and secure pins at both sides (level **A**) at point **1**, illustration **1**.
▶ Pin and secure pins at both sides (level **B**) at point **2**, illustration **2**.
▶ Pin and secure pins at both sides (level **A**) at point **3**, illustration **2**.
▶ Pin and secure pins at both sides (level **B**) at point **4**, illustration **3**.

LWE/LR 1600-2-001/18101-07-02/en

copyright © Liebherr-Werk Ehingen GmbH 2018

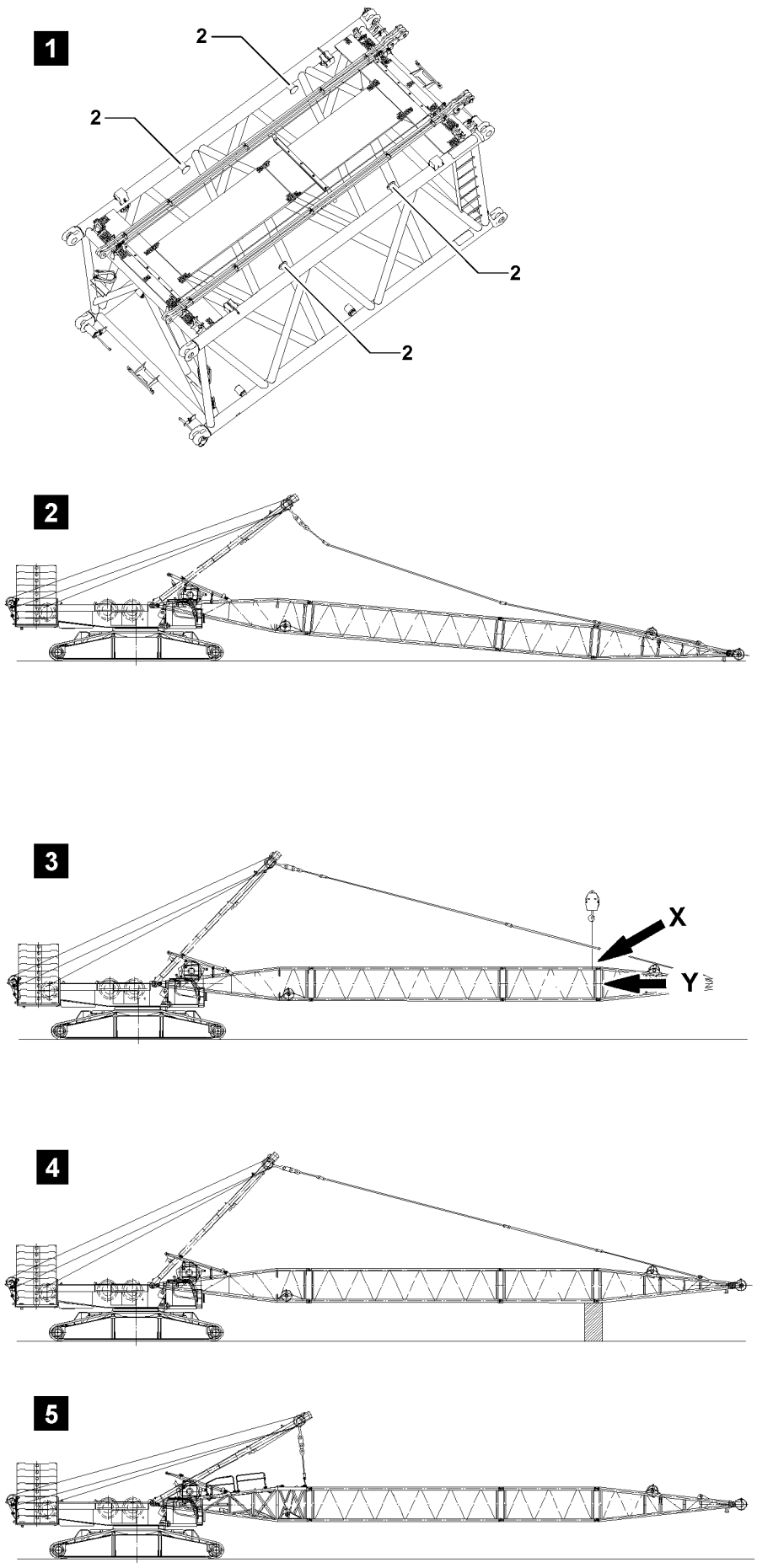

Fig.111448: Guying the pivot section with the SA-frame

LWE/LR 1600-2-001/18101-07-02/en

copyright © Liebherr-Werk Ehingen GmbH 2018

15.14.2 Flying disassembling of lattice sections

The illustrations serve as examples. The illustrations may differ depending on the crane.

The flying disassembly of lattice sections can be used on:
– Derrick boom
– Main boom

Make sure that the following prerequisite is met:
– Before guying the pivot section, secure the boom properly to prevent it from falling down.

Guying the pivot section in flying mode with the SA-frame

There are three ways to change the guying point for flying disassembly:
– Take down the boom on the ground.
– Secure the boom with the auxiliary crane.
– Support the boom.

▶ Take down the boom on the ground, see illustration **2**.
or

WARNING
Lattice section incorrectly attached!
If the fastening equipment is attached on the bitts **2** when securing the boom, then the bitts will be overloaded. The lattice section will be damaged.
The boom can fall down.
Personnel can be severely injured or killed.

If an auxiliary crane is used to secure the boom for flying disassembly:
▶ Do **not** fasten the lattice section on the bitts **2**, see illustration **1**.
▶ Attach the fastening equipment in the area of point **P1** on both sides on the lattice section, see detail **X**.
▶ Make sure that the long fastening equipment is used, so that the angle between the cross section of the lattice section and guyed fastening equipment is at least 60°, see detail **Y**.

Secure the boom with the auxiliary crane, see illustration **3**.
or

WARNING
Falling boom!
If the boom is not properly and securely supported from below, then the boom can fall down.
▶ Support the boom properly and safely with suitable material.

Support the boom, see illustration **4**.

Result:

– The guy rods can be disassembled.

▶ Take down, secure and disassemble the guy rods.
▶ Pin and secure the guy rods SA-frame on the pivot section.
▶ Tighten the guy rods SA-frame until the boom is in horizontal position.

Result:

– Pivot section is guyed in flying mode with the SA-frame, see illustration **5**.
– The lattice sections can be disassembled in flying mode.

copyright © Liebherr-Werk Ehingen GmbH 2018

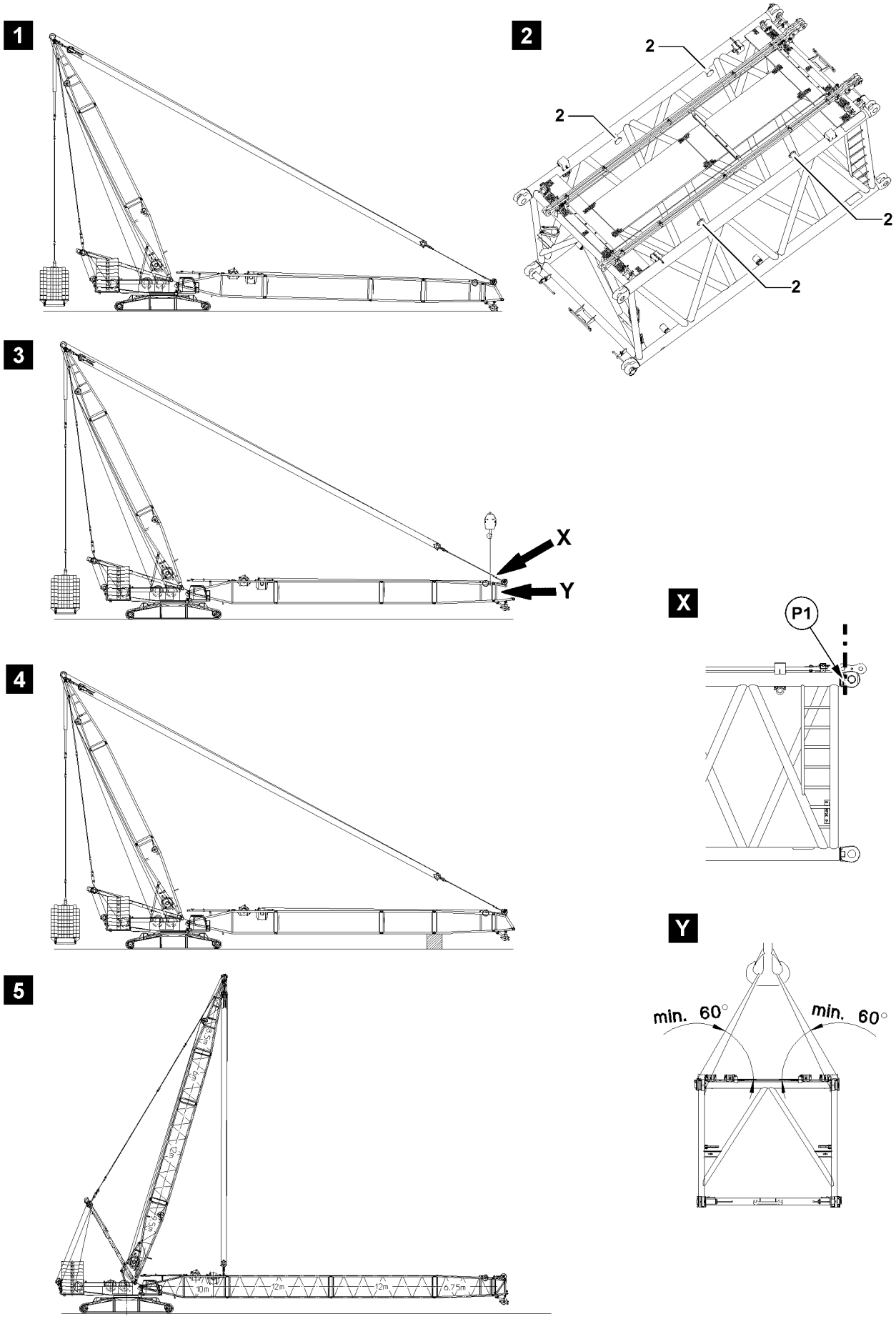

Fig.111449: Guying the pivot section with the derrick boom

LWE/LR 1600-2-001/18101-07-02/en

copyright © Liebherr-Werk Ehingen GmbH 2018

Guying the pivot section in flying mode with the derrick boom

There are three ways to change the guying point for flying disassembly:
- Take down the boom on the ground.
- Secure the boom with the auxiliary crane.
- Support the boom.

▶ Take down the boom on the ground, see illustration **1**.
or

WARNING
Lattice section incorrectly attached!
If the fastening equipment is attached on the bitts **2** when securing the boom, then the bitts will be overloaded. The lattice section will be damaged.
The boom can fall down.
Personnel can be severely injured or killed.

If the auxiliary crane is used to secure the boom for flying disassembly:
▶ Do **not** fasten the lattice section on the bitts **2**, see illustration **2**.
▶ Attach the fastening equipment in the area of point **P1** on both sides on the lattice section, see detail **X**.
▶ Make sure that the long fastening equipment is used, so that the angle between the cross section of the lattice section and guyed fastening equipment is at least 60°, see detail **Y**.

Secure the boom with the auxiliary crane, see illustration **3**.
or

WARNING
Falling boom!
If the boom is not properly supported from below, then the boom can fall down.
▶ Support the boom properly and safely with suitable material.

Support the boom, see illustration **4**.

Result:

- The guy rods can be disassembled.

▶ Take down, secure and disassemble the guy rods.
▶ Pin and secure the luffing pulley block on the pivot section.
▶ Tighten the control rope until the boom is in horizontal position.

Result:

- Pivot section is guyed in flying mode with the derrick boom, see illustration **5**.
- The lattice sections can be disassembled in flying mode.

copyright © Liebherr-Werk Ehingen GmbH 2018

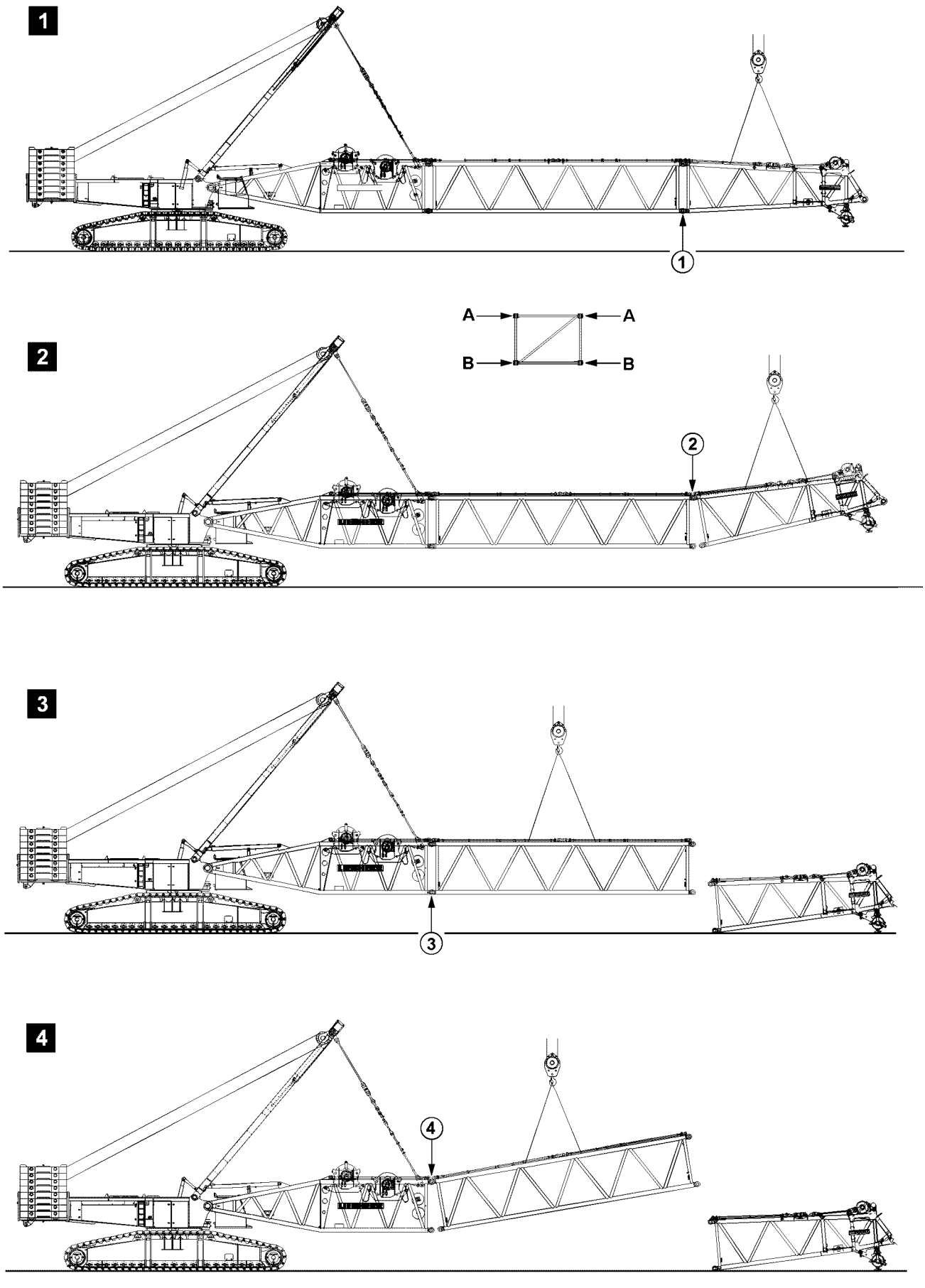

Fig.105511: Example for cranes with lattice mast booms

LWE/LR 1600-2-001/18101-07-02/en

copyright © Liebherr-Werk Ehingen GmbH 2018

Unpinning the lattice components

WARNING
Danger of fatal injury when disassembling booms!
If the pins are not unpinned in the given sequence, then lattice sections may suddenly fold down or fall down.
Personnel can be killed or seriously injured.
▶ Pins must be unpinned in the order specified.

▶ Release and unpin the pins on both sides (level **B**) at point **1**, illustration **1**.
▶ Release and unpin the pins on both sides (level **A**) at point **2**, illustration **2**.
▶ Release and unpin the pins on both sides (level **B**) at point **3**, illustration **3**.
▶ Release and unpin the pins on both sides (level **A**) at point **4**, illustration **4**.

15.15 Assembling / disassembling of boom systems for supporting on ascending terrain (assembly / disassembly schematic)

Note
▶ The following assembly steps are simplified and are examples and may not match your crane exactly.

WARNING
Danger of fatal injury when assembling / disassembling booms!
If the pins are not pinned / unpinned in the specified sequence, then lattice sections may suddenly fold down or fall down.
Personnel can be killed or seriously injured.
▶ Pin / unpin pins in the specified sequence, see section „Assembly of lattice sections“.
▶ Observe all safety technical notes in section „Assembly / disassembly“.
▶ Make sure that there are no persons in the danger zone.

WARNING
Horizontal movement of the boom!
▶ Make sure that there are no persons in the danger zone.

15.15.1 Assembling the of boom systems on ascending terrain

Make sure that the following prerequisites are met:
– An auxiliary crane with sufficient load bearing capacity is available.

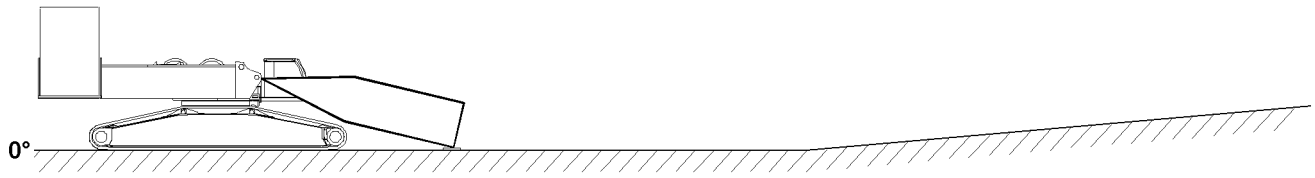

Fig.121635: Boom - pivot section installed on turntable and placed on the ground

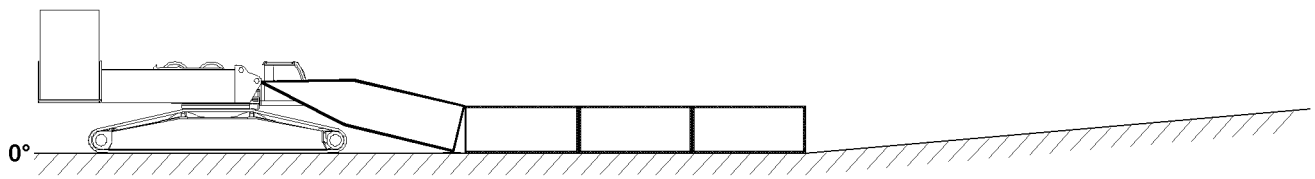

Fig.121636: Boom - intermediate sections installed on boom - pivot section and placed on the ground

copyright © Liebherr-Werk Ehingen GmbH 2018

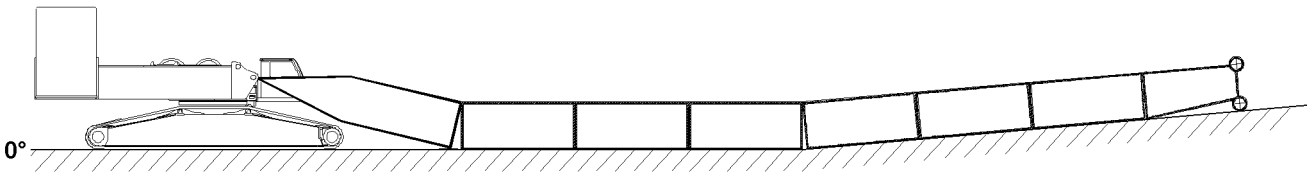

Fig.121637: Boom - intermediate sections installed and placed in ascending terrain

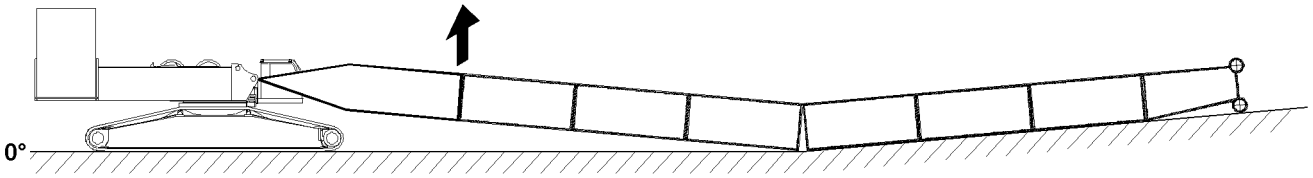

Fig.121638: Lifting and close the boom system in the area of the boom - pivot section

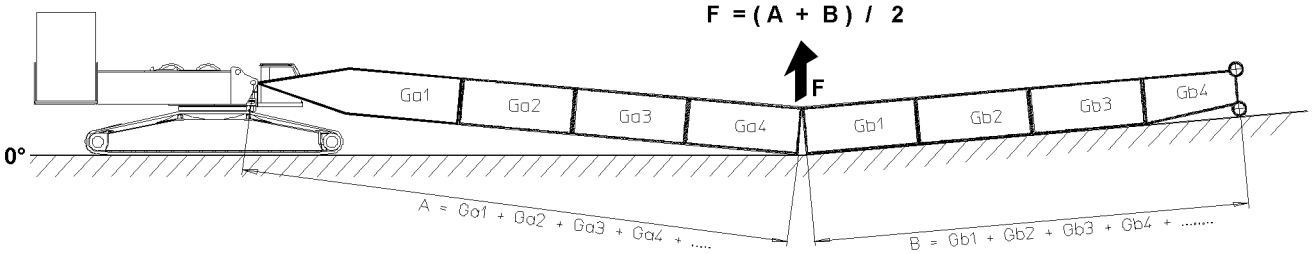

Fig.145512: Calculation of force for the closing procedure of the boom system

Note

- ▶ The abbreviations Ga1, Ga2, ... and Gb1, Gb2, ... are for the weights of the individual lattice sections.
- ▶ The weights of the lattice sections are noted on the welded on weight tags on the lattice sections.

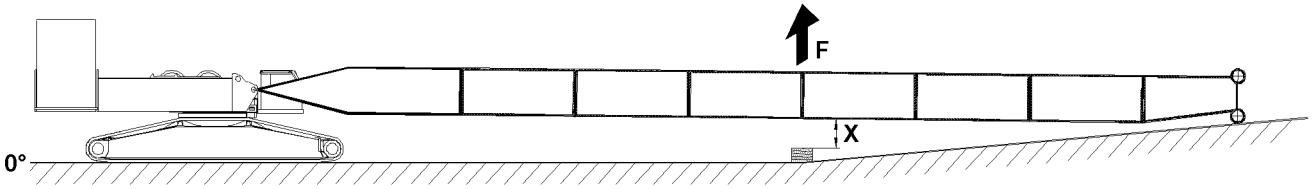

Fig.121639: Lifting and close the boom system // Support the boom system

Note

- ▶ The height of the substructure or dimension **X** is noted on the respective boom assembly chapter, see Crane operating instructions, chapter 5.38 or chapter 5.39.
- ▶ If the dimension **X** is not available in chapter 5.38 or chapter 5.39, see the separately supplied drawing „Support assembly drawing“.

- ▶ Support the boom system properly after the closing procedure.

15.15.2 Disassembling of boom systems on ascending terrain

Make sure that the following prerequisites are met:

– An auxiliary crane with sufficient load bearing capacity is available.

LWE/LR 1600-2-001/18101-07-02/en

copyright © Liebherr-Werk Ehingen GmbH 2018

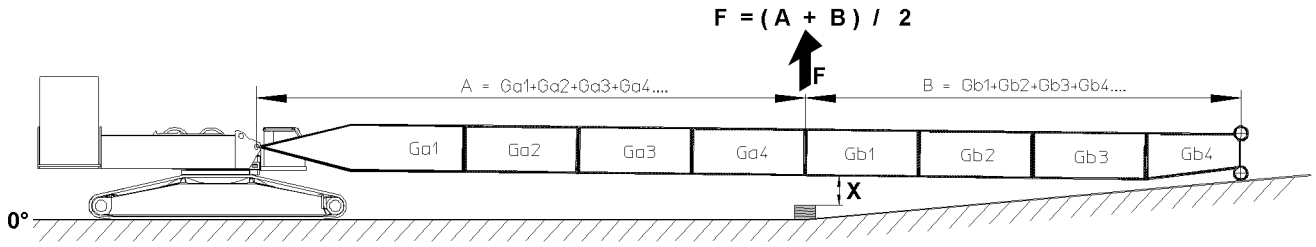

Fig.145513: Calculation of force for opening the boom system // Lift the boom system // Remove the substructure // Open the boom system

Note

- The abbreviations Ga1, Ga2, ... and Gb1, Gb2, ... are for the weights of the individual lattice sections.
- The weights of the lattice sections are noted on the welded on weight tags on the lattice sections.

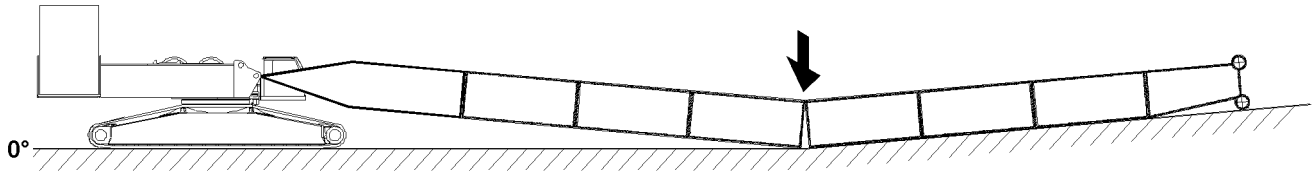

Fig.121657: Taking the boom system down

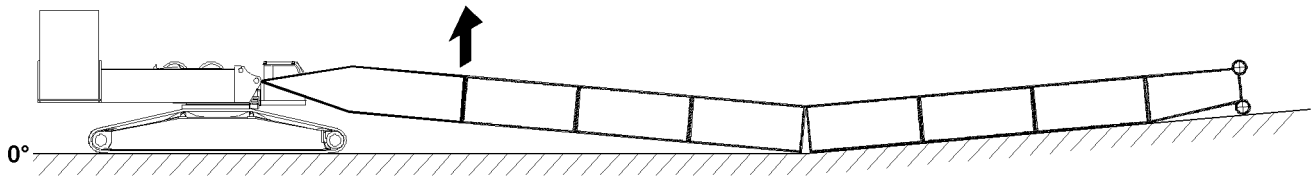

Fig.121652: Lifting and opening the boom system

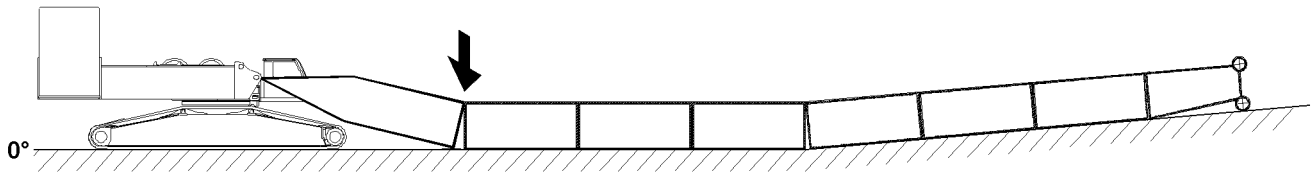

Fig.121653: Taking the boom system down

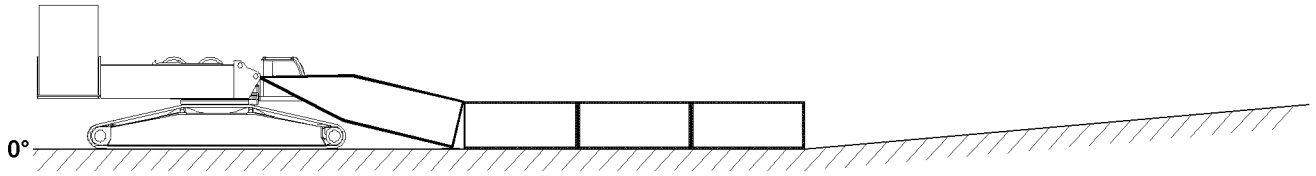

Fig.121636: Disassembling and removing the boom - intermediate sections with the end section

copyright © Liebherr-Werk Ehingen GmbH 2018

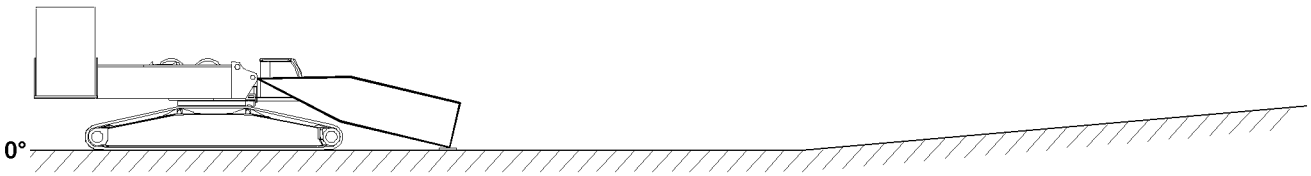

Fig.121635: Disassembling and removing the boom - intermediate sections to the boom - pivot section

▶ Disassemble and remove the boom - pivot section.

15.16 Assembling / disassembling of boom systems for supporting on descending terrain (assembly / disassembly schematic)

Note

▶ The following assembly steps are simplified and are examples and may not match your crane exactly.

WARNING

Danger of fatal injury when assembling / disassembling booms!
If the pins are not pinned / unpinned in the specified sequence, then lattice sections may suddenly fold down or fall down.
Personnel can be killed or seriously injured.

▶ Pin / unpin pins in the specified sequence, see section „Assembly of lattice sections“.
▶ Observe all safety technical notes in section „Assembly / disassembly“.
▶ Make sure that there are no persons in the danger zone.

15.16.1 Assembling the boom systems on descending terrain

Make sure that the following prerequisites are met:
– The lattice sections are properly assembled.
– An auxiliary crane with sufficient load bearing capacity is available.

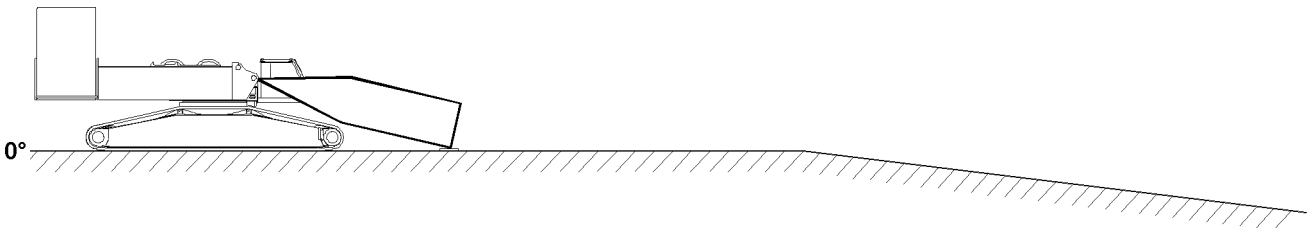

Fig.121640: Boom - pivot section installed on turntable and placed on the ground

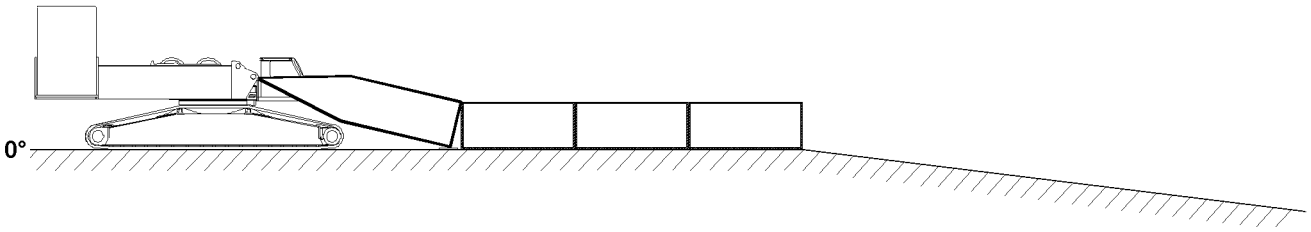

Fig.121641: Boom - intermediate sections installed on boom - pivot section and placed on the ground

LWE/LR 1600-2-001/18101-07-02/en

copyright © Liebherr-Werk Ehingen GmbH 2018

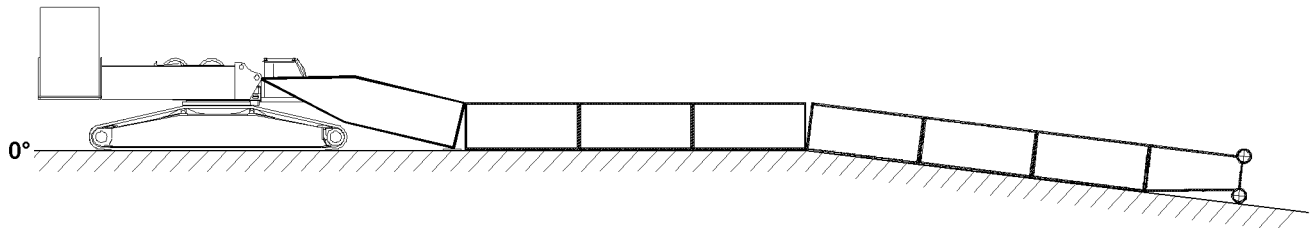

Fig.121642: Boom - intermediate sections installed and placed in descending terrain

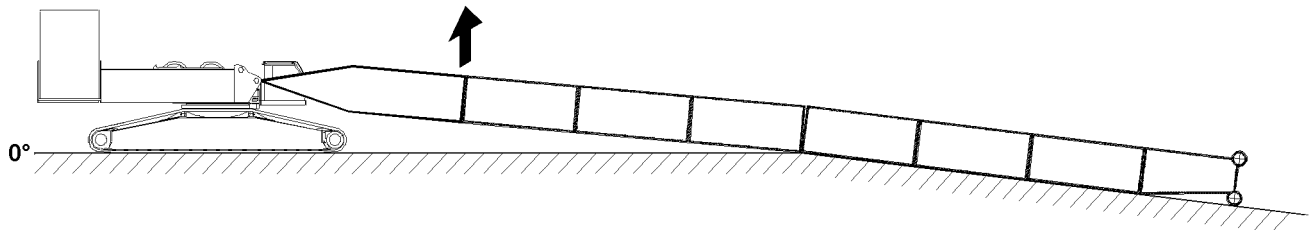

Fig.121643: Lifting and close the boom system in the area of the boom - pivot section

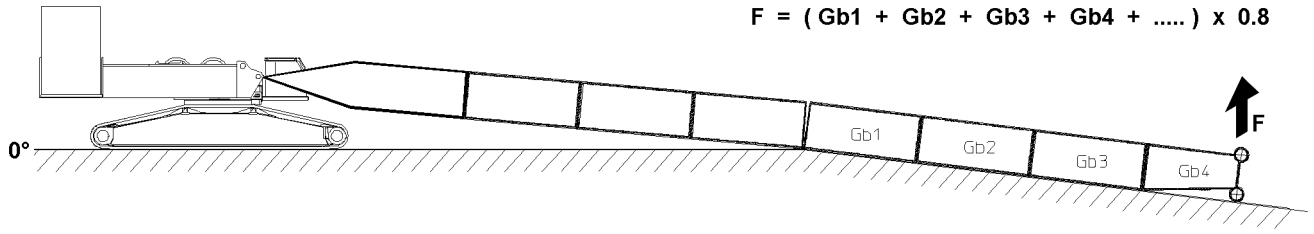

Fig.145514: Calculation of force for the closing procedure of the boom system

Note
- ▶ The abbreviations Gb1, Gb2, ... are for the weights of the individual lattice sections.
- ▶ The weights of the lattice sections are noted on the welded on weight tags on the lattice sections.

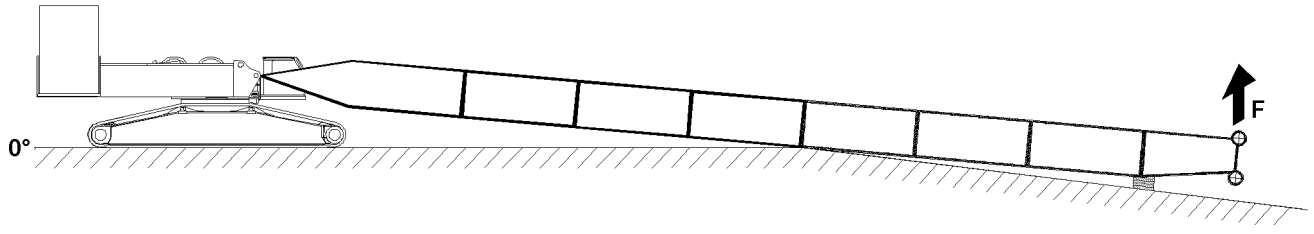

Fig.121644: Lifting and close the boom system // Support the boom system

Note
- ▶ The height of the substructure depends on the lay of the terrain and the resulting incline of the boom system.

- ▶ Support the boom system properly after the closing procedure.

15.16.2 Disassembling of boom systems on descending terrain

Make sure that the following prerequisite is met:
- An auxiliary crane with sufficient load bearing capacity is available.

copyright © Liebherr-Werk Ehingen GmbH 2018

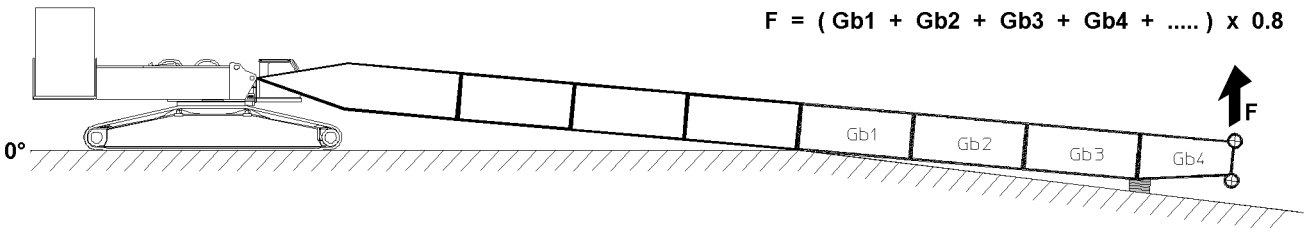

Fig.145515: Calculation of force for opening the boom system // Lift the boom system // Remove the substructure // Open the boom system

Note

- The abbreviations Gb1, Gb2, ... are for the weights of the individual lattice sections.
- The weights of the lattice sections are noted on the welded on weight tags on the lattice sections.

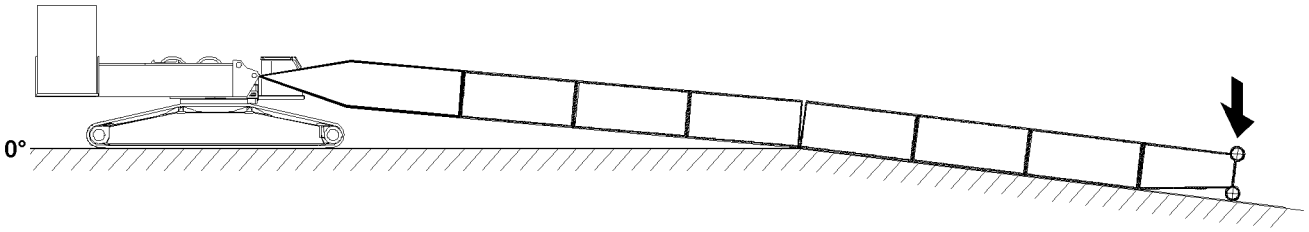

Fig.121658: Taking the boom system down

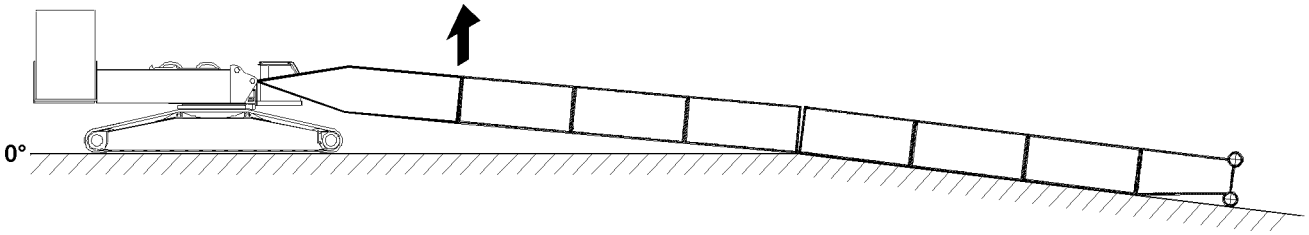

Fig.121655: Lifting and opening the boom system

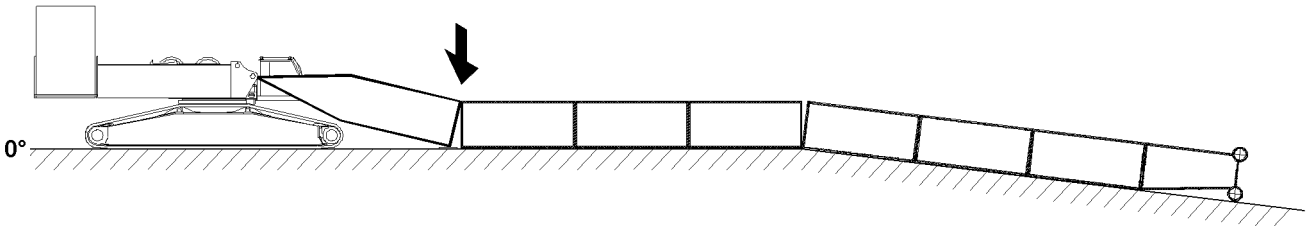

Fig.121656: Taking the boom system down

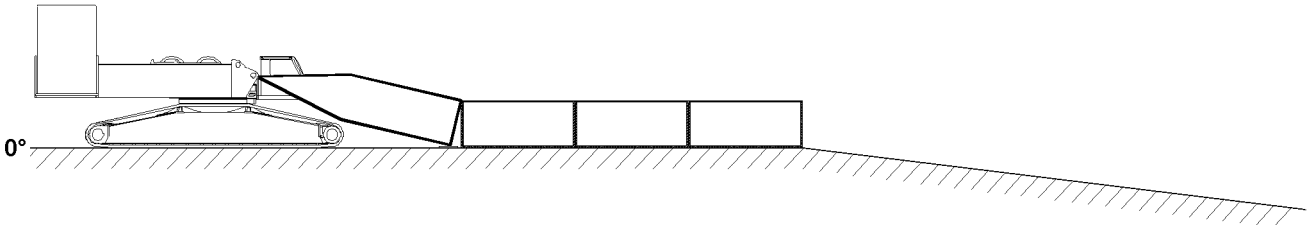

Fig.121641: Disassembling and removing the boom - intermediate sections with the end section

LWE/LR 1600-2-001/18101-07-02/en

copyright © Liebherr-Werk Ehingen GmbH 2018

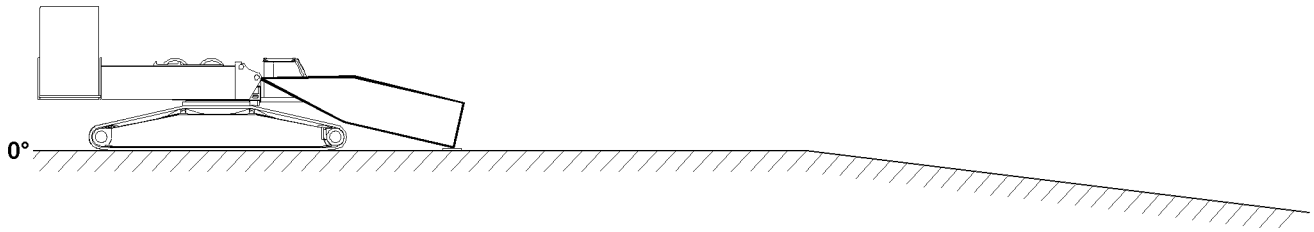

Fig.121640: Disassembling and removing the boom - intermediate sections to the boom - pivot section

▶ Disassemble and remove the boom - pivot section.

16 Erecting / taking down

WARNING
The crane can topple over!
Due to an unforeseen occurrence, for example: Sudden strong wind or storm can lead to dangerous operating situations, up to toppling the crane.
Personnel can be severely injured or killed.
▶ The boom must be able to be placed down at any time with its current equipment, observe the erection and take down charts. Observe the job planner.
▶ The counterweights and / or ballasts required for this must always be in direct vicinity of the crane.
▶ The crane operator must ensure that the required counterweight and / or the required ballast is carried along when driving the crane with the equipment in place and that the boom can be placed down at any time.

WARNING
Danger of fatal injury!
▶ Incorrectly installed or non-functioning limit switches as well as falling parts (pins, cotter pins, ice etc.) can cause accidents.

16.1 Erecting / taking down for mobile cranes

Make sure that the following prerequisites are met:
– The crane is properly supported.
– The crane is horizontally aligned.
– The counterweight has been installed on the turntable according to the load chart or the erection / take down charts.
– In the case of cranes with derrick ballast: The derrick ballast (suspended ballast or ballast trailer ballast) is installed according to the load chart or the erection / take down charts.
– For cranes with a telescopic boom: The telescopic boom is telescoped in all the way.
– The boom has been installed according to the load chart and the Crane operating instructions.
– The hoist rope has been correctly placed in the rope pulleys and prevented from jumping out with the rope retaining pins.
– All limit switches have been correctly assembled and are fully operational.
– All pin connections are secured.
– No persons in the danger zone.
– No loose parts on the boom or the auxiliary boom.
– The exposed rope pulleys are free of snow and ice.
– The boom and its components (limit switches, cable drums, airplane warning light, wind speed sensor etc.) must be kept free of ice and snow.

▶ Check if all prerequisites have been met.

LWE/LR 1600-2-001/18101-07-02/en

copyright © Liebherr-Werk Ehingen GmbH 2018

16.2 Erecting / taking down for crawler cranes

Make sure that the following prerequisites are met:
- Comply with the maximum permissible incline of the crane specified in the load chart manual.
- For cranes with a support: The crane is properly supported.
- For cranes with a support: The crane is horizontally aligned.
- The counterweight has been installed on the turntable according to the load chart.
- The central ballast is installed according to the load chart.
- The counterweight is installed according to the load chart or the erection / take down charts.
- In the case of cranes with derrick ballast: The derrick ballast (suspended ballast or ballast trailer ballast) is installed according to the load chart or the erection / take down charts.
- For cranes with a telescopic boom: The telescopic boom is telescoped in all the way.
- The boom has been installed according to the load chart and the Crane operating instructions.
- The hoist rope has been correctly placed in the rope pulleys and prevented from jumping out with the rope retaining pins.
- All limit switches have been correctly assembled and are fully operational.
- All pin connections are secured.
- No persons in the danger zone.
- No loose parts on the boom or the auxiliary boom.
- The exposed rope pulleys are free of snow and ice.
- The boom and its components (limit switches, cable drums, airplane warning light, wind speed sensor etc.) must be kept free of ice and snow.

▶ Check if all prerequisites have been met.

16.3 Rigging the guy rods on lattice booms on placed down boom system

WARNING
Danger of fatal injury due to damaged guy rods!
If the boom system is placed on the ground or a load bearing substructure in strong wind or longer downtime, the guy rods can be damaged due to wind influence on the boom guying. This wind influenced oscillations can lead to fatigue on the guy rods.
As a result, the guy rods could break or rip off under load - for example when erecting the boom system or in crane operation. The boom system can therefore fall uncontrolled forward onto the ground. Personnel can be severely injured or killed.
- ▶ Make sure that the guy rods are placed completely on the lattice sections and relieved when the boom systems are placed on the ground.
- ▶ Make sure that freely suspended guy rods are rigged on the lattice boom.
- ▶ Make sure that the upper pulley block is rigged on the lattice boom in Derrick operating modes.
- ▶ Make sure, that the guying on the luffing lattice jib is removed on lattice mast cranes.
- ▶ Make sure that the guy rods are inspected before resuming crane operation and that no damage or cracks are present.
- ▶ Make sure that the maintenance intervals of the guy rods are adhered to.

Note
- ▶ In case of strong wind or longer downtimes of the crane, the boom system must be placed on the ground or on a load bearing substructure.
- ▶ The guying must be relieved and the guy rods must be placed on the transport receptacles.
- ▶ The following illustrations are examples and may not match your crane exactly.

LWE/LR 1600-2-001/18101-07-02/en

copyright © Liebherr-Werk Ehingen GmbH 2018

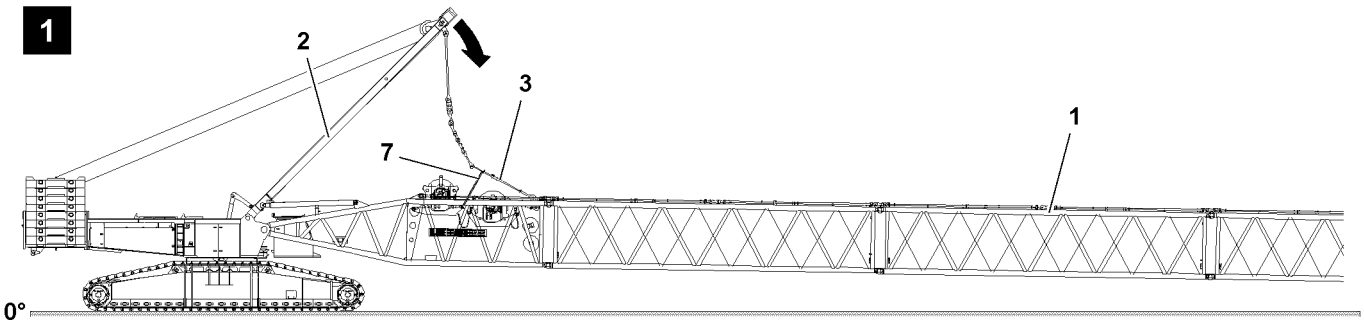

Fig.120722: Guying placed in transport receptacle and SA-frame guying relieved

- ▶ Take the guy rods down on the lattice sections **1**: Luff the SA-frame **2** to the front until the guying is placed completely in the transport receptacles on the lattice sections and the SA-frame guying **3** is relieved, see illustration **1**.
- ▶ To minimize side oscillation of the SA-frame guying **3** due to wind influence: Rig the SA-frame guying **3** with suitable rigging straps / ropes **7** against the boom, see illustration **1**.

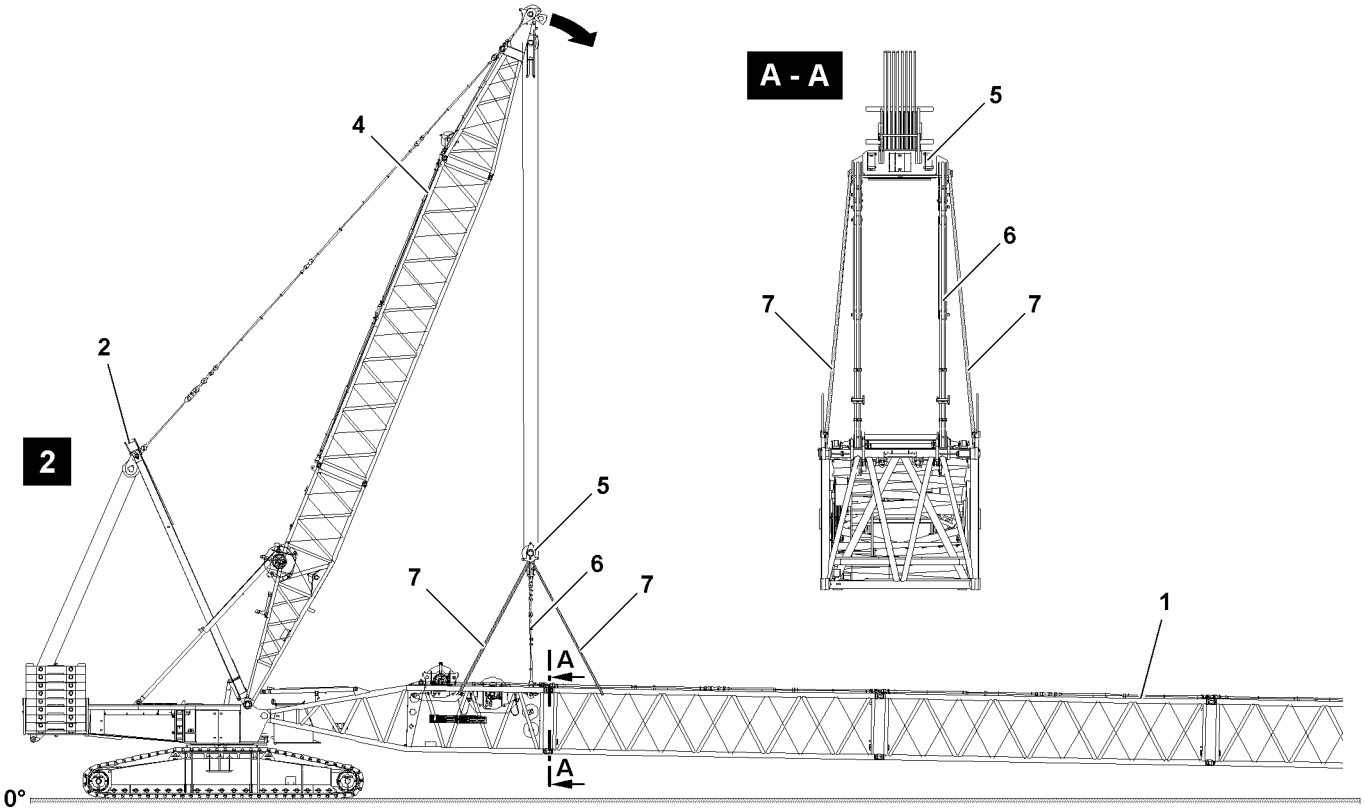

Fig.120771: Guying placed in transport receptacle and upper pulley block rigged against the boom

- ▶ Take the boom system down and - if present - release the derrick guying to the derrick ballast.
- ▶ Take the guy rods down on the lattice sections **1**: Luff the D-boom **4** down to the front until the main boom guying is placed completely in the transport receptacles on the lattice sections and the upper pulley block **5** is positioned over the S-pivot section, see illustration **2**.
- ▶ To minimize side oscillation of the upper pulley block **5** due to wind influence: Rig the upper pulley block **5** with suitable rigging straps / ropes **7** against the boom, see illustration **2**.

For lattice mast cranes with luffing lattice jib the following applies:

LWE/LR 1600-2-001/18101-07-02/en

copyright © Liebherr-Werk Ehingen GmbH 2018

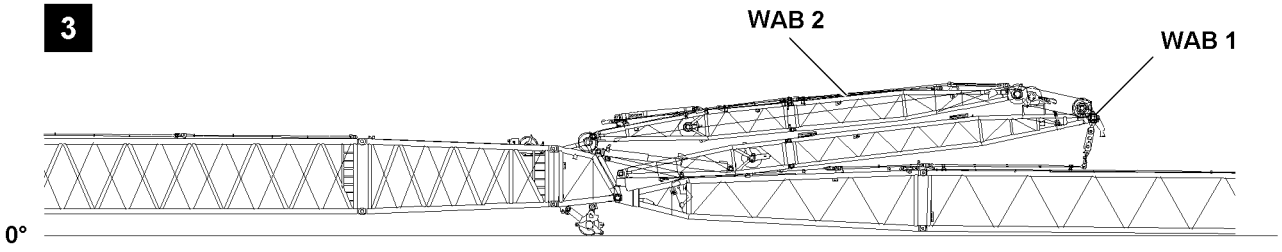

Fig.120821: Guying in transport receptacle(s) and WA-frames placed down to the front (example crane with lattice mast)

WARNING
Danger of accident when removing the W-guying!
When taking down and removing the guying dangerous situations can arise.
▶ Make sure that the danger notes in the respective chapter of the Crane operating instructions are observed.

▶ Remove the guy rods on the luffing lattice jib and take them down into the transport receptacles.
▶ Take the WA-frames (WA-frame 1 **WAB 1** and WA-frame 2 **WAB 2**) down to the front.

For telescopic cranes with luffing lattice jib the following applies:

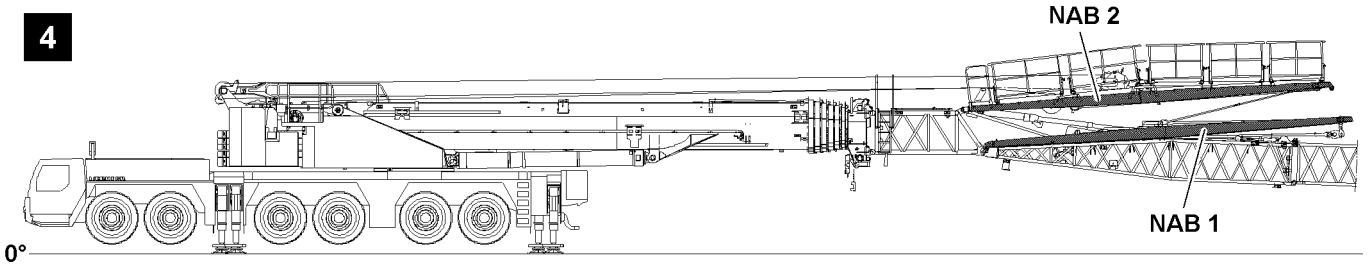

Fig.121261: Guying in transport receptacle(s) and NA-frames placed down to the front (example telescopic crane)

WARNING
Danger of accident when taking the NA-frames down!
When taking the guy rods as well as the NA-frames down dangerous situations can arise.
▶ Make sure that the danger notes in the respective chapter of the Crane operating instructions are observed.

▶ Spool the jib control winch out and take the NA-frames down to the front so that the guy rods are relieved.

LWE/LR 1600-2-001/18101-07-02/en

copyright © Liebherr-Werk Ehingen GmbH 2018

5.02 SA-frame

1 SA-frame 3

LWE/LR 1600-2-001/18101-07-02/en

copyright © Liebherr-Werk Ehingen GmbH 2018

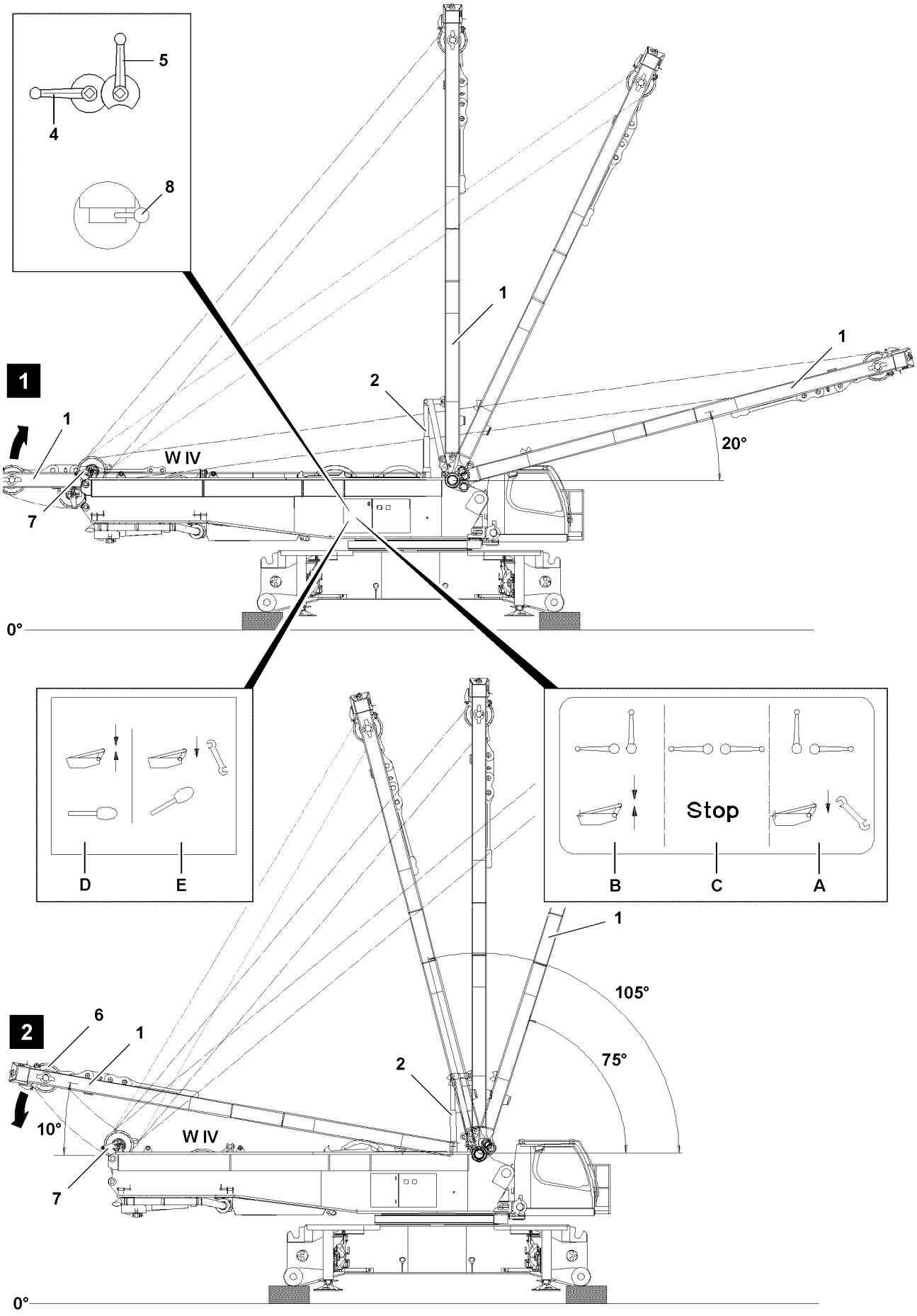

Fig.120171

LWE/LR 1600-2-001/18101-07-02/en

copyright © Liebherr-Werk Ehingen GmbH 2018

1 SA-frame

Note

- The SA-frame is used in assembly operation to install the crawler travel gear, see Crane operating instructions, chapter 3.01!
- In addition, the SA-frame is used in assembly operation for closing boom systems and for guying the boom in flying assembly of lattice sections, see Crane operating instructions, chapter 5.38.

Switch positions of ball valves (ball valve **4 /** ball valve **5)**		
Switch position	Function	Use
A	Lower the SA-frame	Lower the SA-frame into transport position
C	SA-frame stop, cylinder stop	Block erection cylinder
B	Erect the SA-frame	Assembly and crane operation

Switch position Hand lever **8**		
Switch position	Function	Use
D [1)]	Erect the SA-frame	Assembly, crane operation
E[2)]	Lower the SA-frame	Lower the SA-frame into transport position

1) = Hand lever **8** is in zero / basic position (not actuated)
2) = Ball valves **4** and **5** are in switch position **A**

LWE/LR 1600-2-001/18101-07-02/en

copyright © Liebherr-Werk Ehingen GmbH 2018

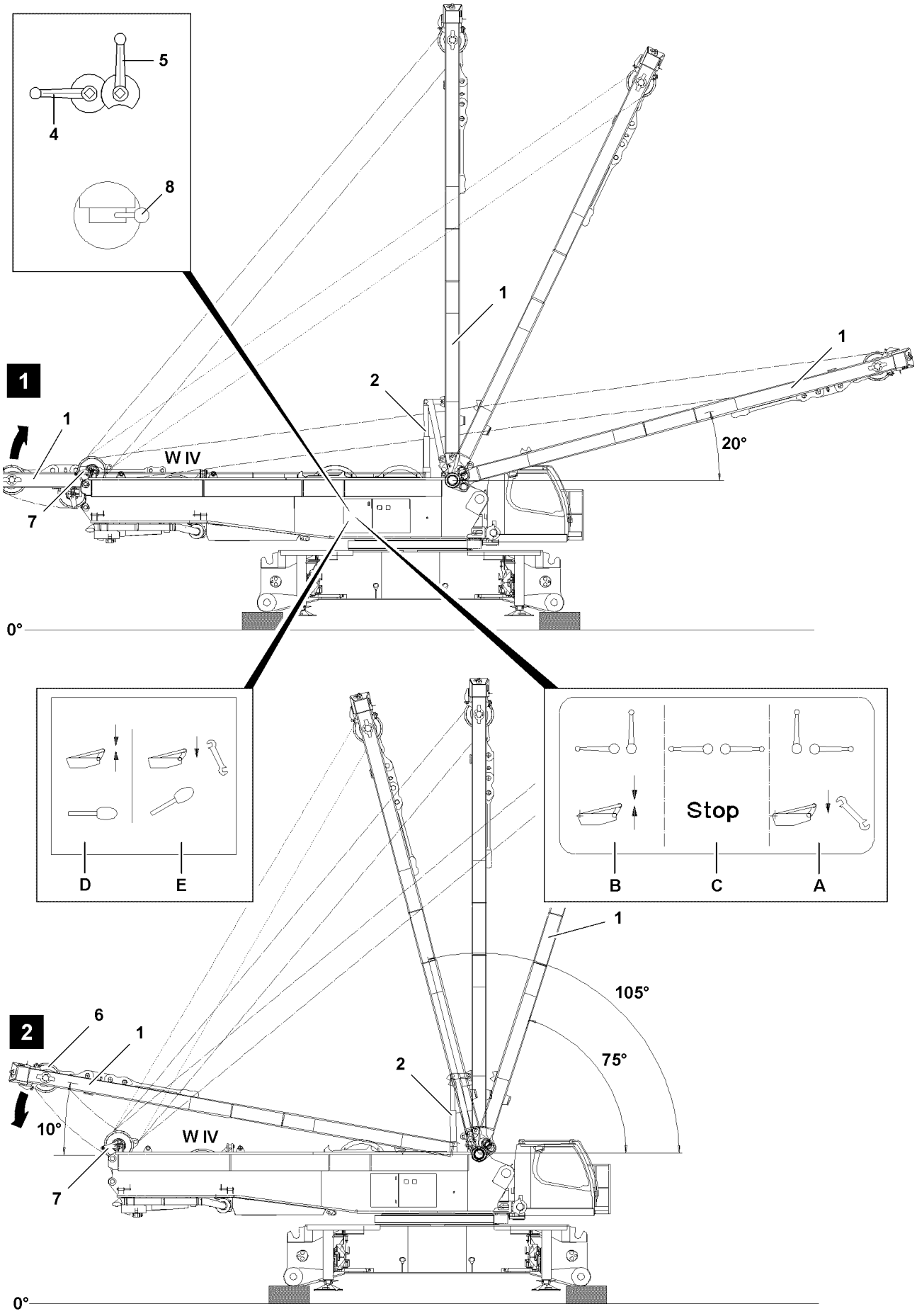

Fig.120171

LWE/LR 1600-2-001/18101-07-02/en

copyright © Liebherr-Werk Ehingen GmbH 2018

1.1 Erecting the SA-frame

1.1.1 Erection procedure

WARNING
The crane can topple over!
If the crawler center section is supported via the assembly support, then the crane can topple over when erecting the SA-frame.
- ▶ Make sure that the ground has sufficient load bearing capacity and that the support is sufficiently sized.
- ▶ Make sure that the crawler center section is safely laying on the support when erecting the SA-frame.
- ▶ Do not erect the SA-frame when the crawler center section is supported via the assembly support.

Make sure that the following prerequisites are met:
- The crawler center section is properly supported.
- The turntable is installed on the supported crawler center section.
- The SA-frame is in transport position.
- Winch 1 and winch 2 are installed in the turntable.
- There is no counterweight on the turntable.
- Winch 4 **W IV** is reeved on the pulley set **6** of the SA-frame **1**.
- The engine is running.
- The shut off limits of the LICCON overload protection are bypassed / exceeded, see Crane operating instructions, chapter 4.02.
- The SA-operating mode has been set and confirmed on the LICCON computer system.

WARNING
Danger of accident when bypassing / exceeding the LICCON overload protection!
If the shut off limits of the LICCON overload protection are bypassed / exceeded, there is no additional protection against overload.
Due to erroneous operation or deliberate misuse, the crane could collapse, the boom can break off or the crane can topple over.
Personnel can be severely injured or killed.
This could result in high property damage.
- ▶ The function „Exceedance of shut off limits of the LICCON overload protection“ may only be activated or used in emergencies and for assembly purposes.
- ▶ The function „Exceedance of shut off limits of the LICCON overload protection“ may only be activated or used by an authorized person who knows the effects of the bypass exactly.
- ▶ The „Exceedance of the shut off limits of the LICCON overload protection“ may only be carried out „anticipatorily“ and with utmost caution!
- ▶ The „Exceedance of shut off limits of the LICCON overload protection“ is only permissible if the set up configuration of the crane has been entered correctly into the LICCON computer system and has been confirmed.

NOTICE
Danger of slack rope formation!
If winch 4 **W IV** is spooled out too quickly during the erection procedure of the SA-frame, slack rope can form.
- ▶ The intake rope of winch 4 must be tensioned during the entire erection procedure.
- ▶ The spool out speed of winch 4 must be matched to the erection speed of the erection cylinders / the SA-frame.

LWE/LR 1600-2-001/18101-07-02/en

copyright © Liebherr-Werk Ehingen GmbH 2018

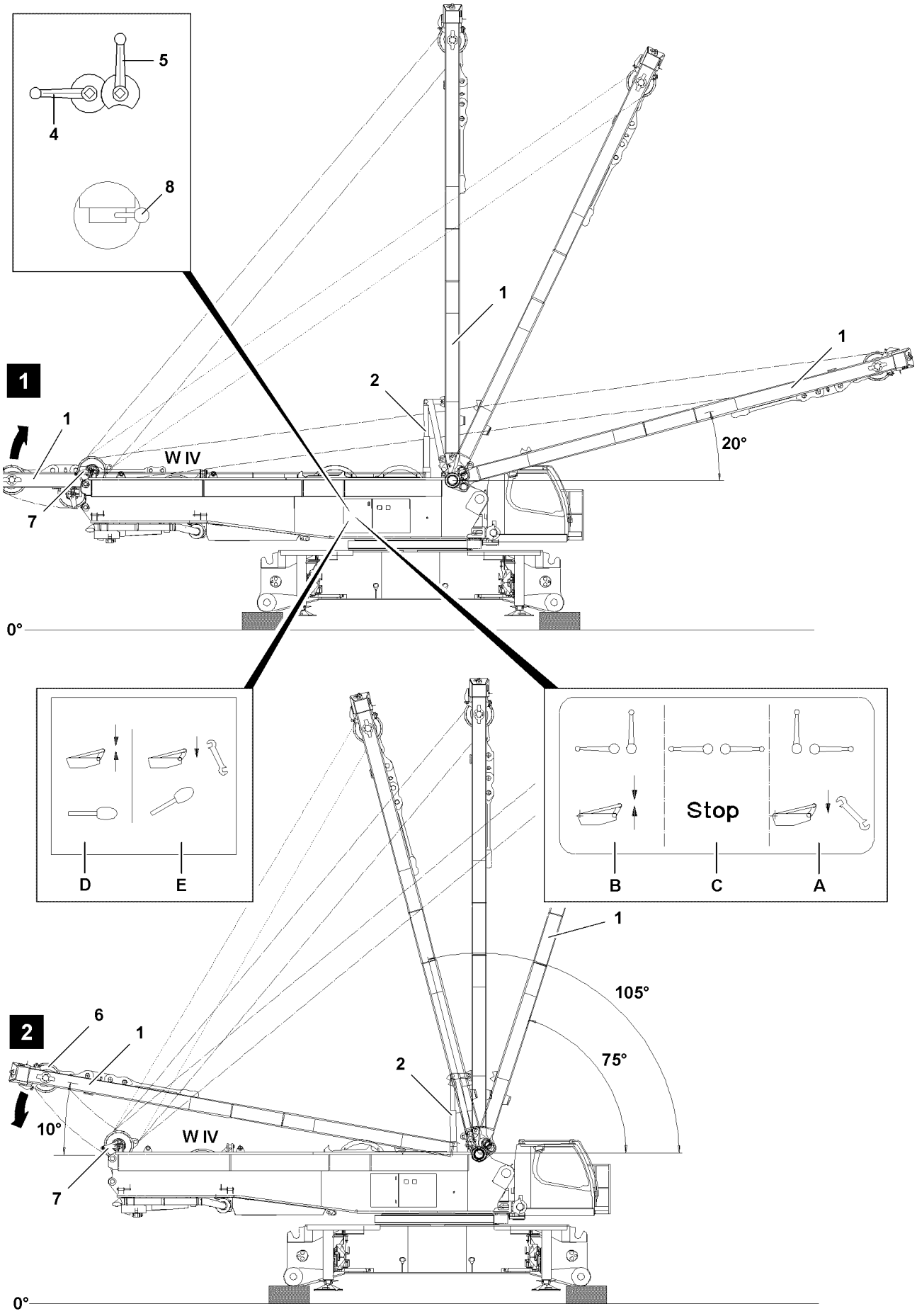

Fig.120171

LWE/LR 1600-2-001/18101-07-02/en

copyright © Liebherr-Werk Ehingen GmbH 2018

WARNING
Independent lowering of the SA-frame!
Due to incorrect ball valve positions during the erection procedure, the SA-frame can lower backward by itself.
Personnel can be severely injured or killed.
It can result in slack rope formation.
- ▶ The ball valves - ball valve **4** and ball valve **5** must be in position **B** during assembly and crane operation.
- ▶ Ball valve position **A** „lower“ and ball valve position **C** „stop“ are only permissible when lowering the SA-frame onto the turntable (transport position).

▶ Set the ball valve **4** and ball valve **5** in position **B**.

Result:

– The SA-frame is pushed upward by the erection cylinders **2** until the ropes are tensioned between therope pulleys **6** and the rope pulleys **7**.

NOTICE
Damage to ropes!
- ▶ Inspect the rope pulleys visually.
- ▶ The ropes must be laying correctly in the corresponding rope pulleys.

▶ Deflect the master switch MS1 in direction X.

Result:

– Winch 4 **W IV** spools out and the SA-frame **1** is erected forward through the erection cylinders **2**, see illustration **1**.
– The „???“ turn off and the SA-operating mode is shown.

▶ Deflect the master switch MS1 in direction X.

Result:

– The SA-frame is lowered to the front and is now in the operating range of operating mode-SA (20° to 105°).

WARNING
The crane can topple over!
If the shut off limits of the LICCON overload protection are bypassed / exceeded, there is no additional protection against overload.
Due to erroneous operation or deliberate misuse, the crane could collapse, the boom can break off or the crane can topple over.
Personnel can be severely injured or killed.
This could result in high property damage.
- ▶ When the operating range-SA is reached, turn off / deactivate the function „Exceedance of shut off limits of the LICCON overload protection“ immediately.

▶ Turn off / deactivate the function „Exceedance of shut off limits of the LICCON overload protection“ immediately.

Result:

– The LICCON overload protection is active.

LWE/LR 1600-2-001/18101-07-02/en

copyright © Liebherr-Werk Ehingen GmbH 2018

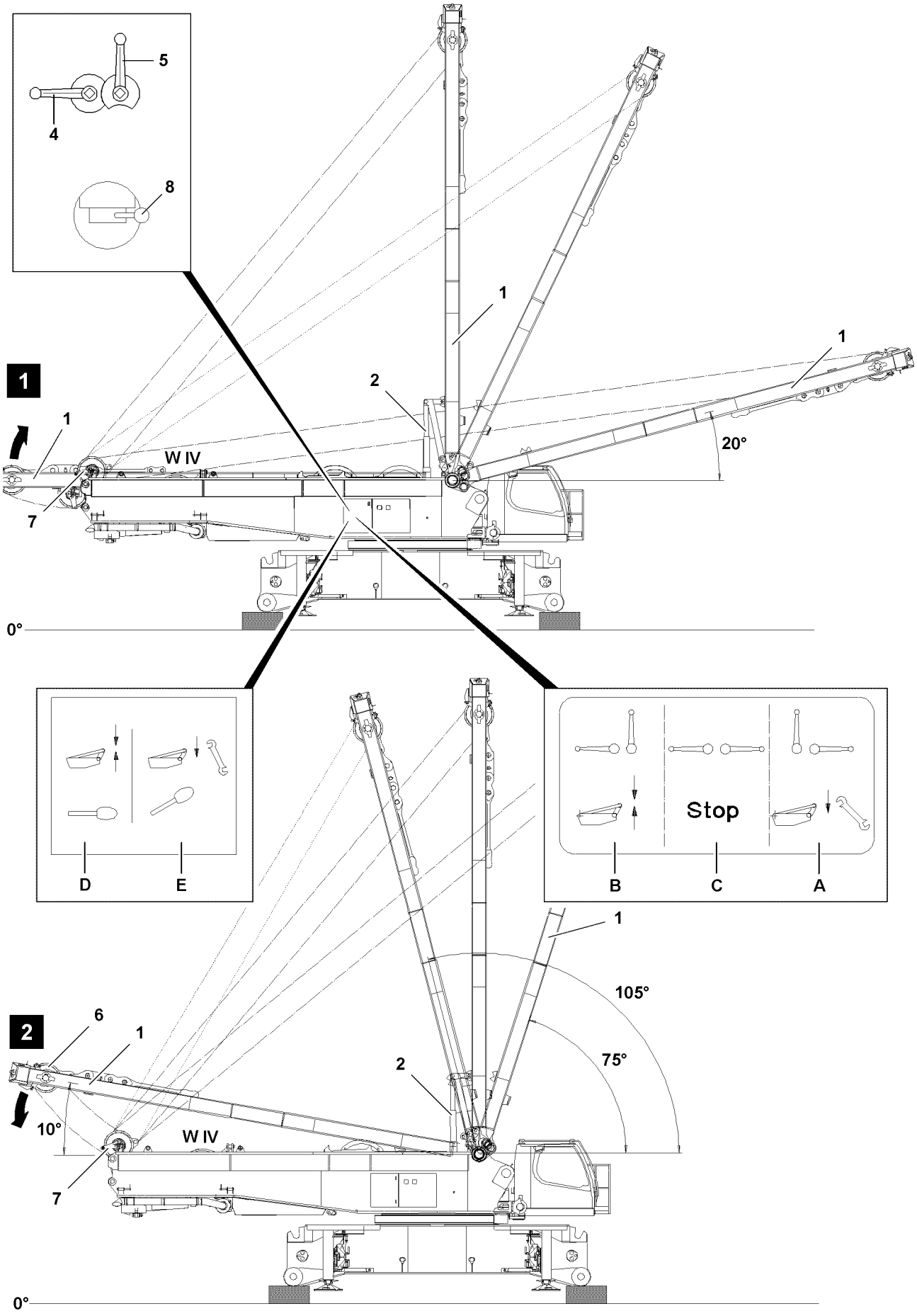

Fig.120171

LWE/LR 1600-2-001/18101-07-02/en

copyright © Liebherr-Werk Ehingen GmbH 2018

Note

- ▶ Due to the own weight of the SA-frame and by spooling out winch 4 simultaneously, the SA-frame is lowered to the front.
- ▶ After reaching the SA-frame position 20°, an error message appears on the LICCON monitor and LMB - Stop is initiated.
- ▶ Spooling out winch 4 is turned off.
- ▶ Luffing down the SA-frame is blocked.
- ▶ Luffing up the SA-frame is only possible when the shut off limits of the LICCON overload protection are bypassed / exceeded.
- ▶ If the minimum or maximum pressure is reached in the erection cylinders, winch 4 **W IV** turns off. An error is shown.

WARNING

Danger of accident!

Ball valve **4** and ball valve **5** must be in position **B** during assembly and crane operation.

Ball valve position **A** and ball valve position **C** are only permissible when lowering the SA-frame onto the turntable (transport position).

- ▶ Secure the ball valves immediately after assembly with a lock to prevent unauthorized access.

- ▶ Secure the ball valves.

LWE/LR 1600-2-001/18101-07-02/en

copyright © Liebherr-Werk Ehingen GmbH 2018

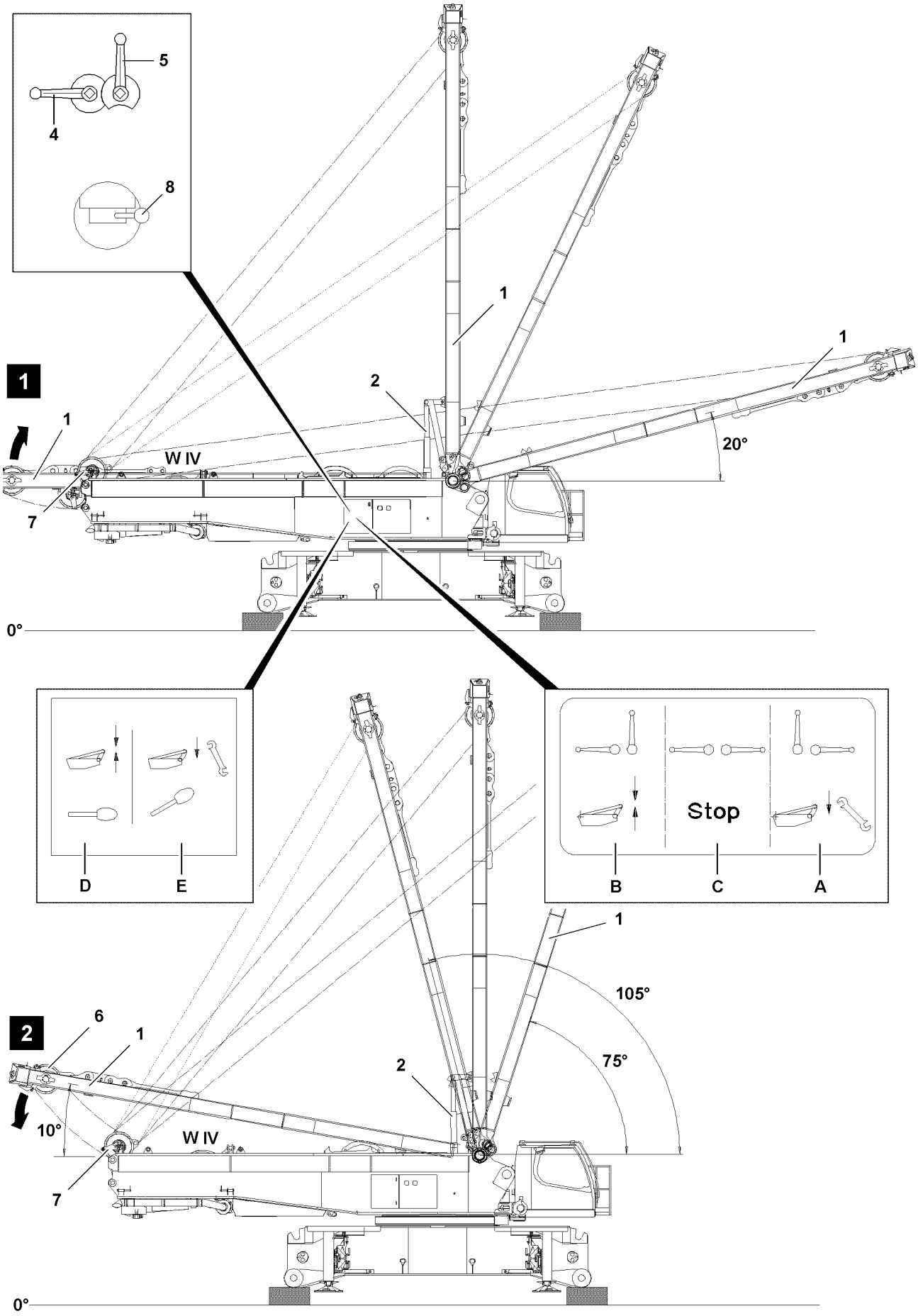

Fig.120171

LWE/LR 1600-2-001/18101-07-02/en

copyright © Liebherr-Werk Ehingen GmbH 2018

1.2 Placing the SA-frame onto the turntable

1.2.1 Take down procedure

WARNING
The crane can topple over!
If the crawler center section is supported via the assembly support, then the crane can topple over when taking down the SA-frame.
- ▶ Make sure that the ground has sufficient load bearing capacity and that the support is sufficiently sized.
- ▶ Make sure that the crawler center section is safely laying on the support when taking down the SA-frame.
- ▶ Do not take the SA-frame down when the crawler center section is supported via the assembly support.

Make sure that the following prerequisites are met:
- The crawler center section is properly supported.
- The SA-operating mode has been set and confirmed on the LICCON computer system.
- Ball valve **4** and ball valve **5** are in position **B**.
- The SA-frame is in operating range between 20° and 105°.

▶ Deflect the master switch MS1 in direction X.

Result:

- Winch 4 spools up.
- The SA-frame is pulled back against the pressure in the erection cylinders.

Note
- ▶ When the SA-frame reaches the position 105° during luffing up, an **error message** and **LMB-STOP** is shown on the LICCON monitor.
- ▶ Spooling up of winch 4 is turned off.

WARNING
Danger of accident when bypassing / exceeding the LICCON overload protection!
If the shut off limits of the LICCON overload protection are bypassed / exceeded, there is no additional protection against overload.
Due to erroneous operation or deliberate misuse, the crane could collapse, the boom can break off or the crane can topple over.
Personnel can be severely injured or killed.
This could result in high property damage.
- ▶ The function „Exceedance of shut off limits of the LICCON overload protection“ may only be activated or used in emergencies and for assembly purposes.
- ▶ The function „Exceedance of shut off limits of the LICCON overload protection“ may only be activated or used by an authorized person who knows the effects of the bypass exactly.
- ▶ The „Exceedance of the shut off limits of the LICCON overload protection“ may only be carried out „anticipatorily“ and with utmost caution!
- ▶ The „Exceedance of shut off limits of the LICCON overload protection“ is only permissible if the set up configuration of the crane has been entered correctly into the LICCON computer system and has been confirmed.

▶ Bypassing / exceeding the LICCON overload protection, see Crane operating instructions, chapter 4.02.

Result:

- No further protection against overload of the crane is present.
- The assembly icon appears on the LICCON monitor, see Crane operating instructions, chapter 4.02.

LWE/LR 1600-2-001/18101-07-02/en

copyright © Liebherr-Werk Ehingen GmbH 2018

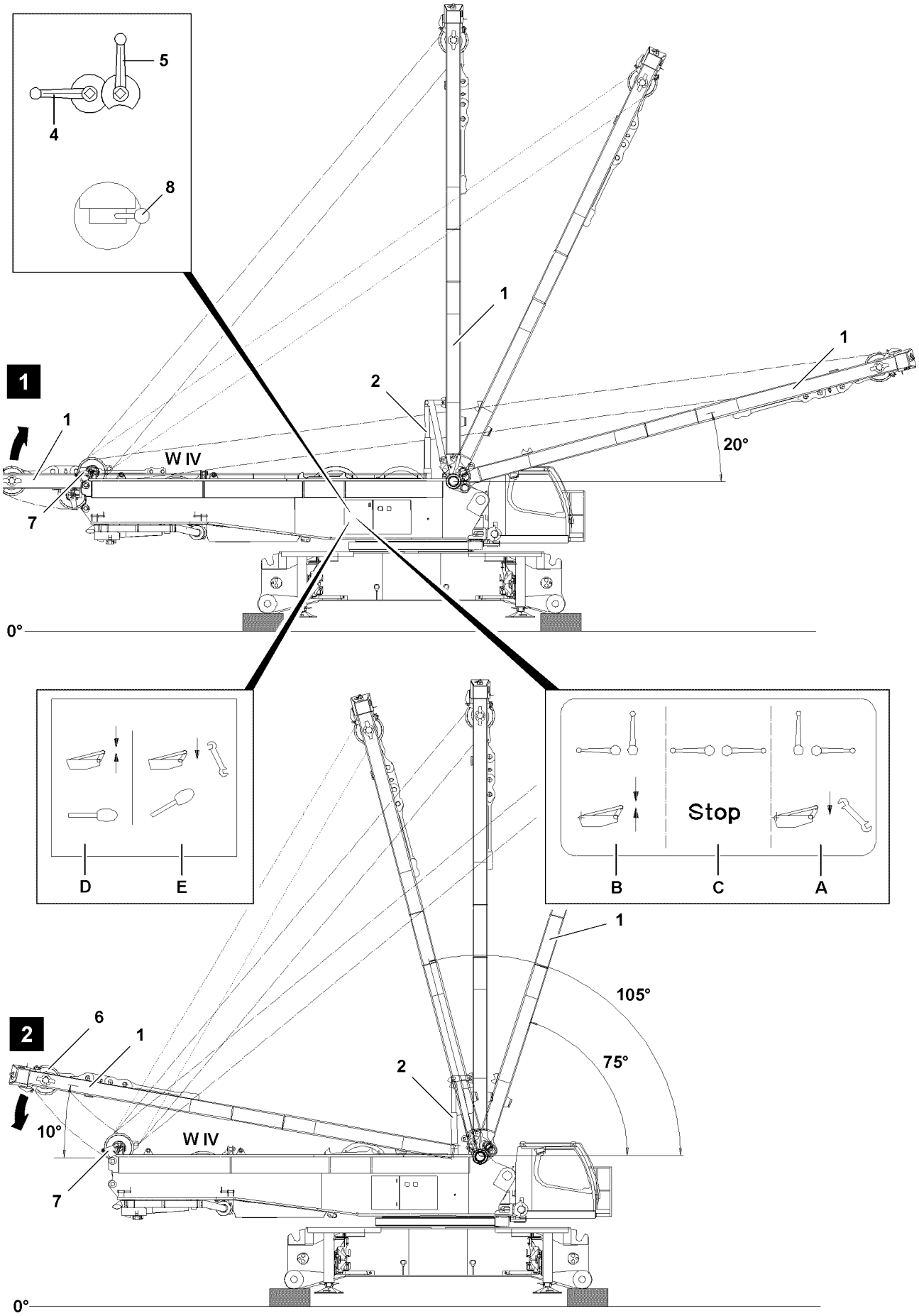

Fig.120171

LWE/LR 1600-2-001/18101-07-02/en

copyright © Liebherr-Werk Ehingen GmbH 2018

WARNING
Danger of fatal injury from SA-frame!
During the take down of the SA-frame, personnel can be severely injured or killed.
▶ Make sure that no persons or objects are within the danger zone.

WARNING
Independent lowering of the SA-frame!
Due to an incorrect ball valve position, the SA-frame can lower backward by itself.
Personnel can be severely injured or killed.
It can result in slack rope formation and to destruction of crane components.
▶ Ball valve **4** and ball valve **5** must be in position **B** during assembly and crane operation.
▶ The ball valve position **A** and ball valve position **C** are only permissible when lowering the SA-frame onto the turntable (transport position).

When the LICCON overload protection is exceeded:
▶ Deflect the master switch MS1 in X-direction, see Crane operating instructions, chapter 4.02.

Result:

– Due to the own weight of the SA-frame **1** and by spooling up winch 4 **W IV** simultaneously, the SA-frame is lowered to the rear against the pressure in the erection cylinders **2**.

NOTICE
Damage to crane!
The ball valve position **C** and the ball valve position **A** are only permissible when lowering the SA-frame from 10° onto the turntable (transport position).
▶ If this is not observed, parts of the crane will be destroyed.

If the SA-frame is on approx.10°:
▶ Do not actuate winch 4 any longer.
▶ Turn off / deactivate the function „Exceedance of shut off limits of the LICCON overload protection“.

Result:

– The LICCON overload protection is active.

▶ Lower the SA-frame **1** onto the turntable: Move the hand lever **8** to position **E**.

Result:

– The erection cylinders move in.
– The SA-frame **1** lowers.

When the SA-frame **1** is lowered completely on the turntable:
▶ Return the hand lever **8** to zero position **D** and set the ball valves, ball valve **4** and ball valve **5** to position **C** and secure.

LWE/LR 1600-2-001/18101-07-02/en

copyright © Liebherr-Werk Ehingen GmbH 2018

Empty page!

LWE/LR 1600-2-001/18101-07-02/en

copyright © Liebherr-Werk Ehingen GmbH 2018

5.03 Boom systems

1	Boom components	2
2	Arrangement of intermediate sections and guy rods on the booms / boom systems	2
3	Auxiliary guying	5

LWE/LR 1600-2-001/18101-07-02/en

copyright © Liebherr-Werk Ehingen GmbH 2018

1 Boom components

Note

- For boom components including associated system dimensions, lengths and component weights refer to the Crane operating instructions, chapter 1.03.

2 Arrangement of intermediate sections and guy rods on the booms / boom systems

Note

- The following description is an example and may not exactly match to your crane.
- Lengths, weights and system dimensions of the intermediate sections are examples and my differ from the data on your crane.
- For exact crane data, and for the arrangement of intermediate sections and guy rods, refer to the respective rod plan.
- For dimensions and weights of crane components, see Crane operating instructions, chapter 1.03 as well as the weight signs on the corresponding components.

WARNING

The boom can break off!

The arrangement of the intermediate sections on booms or boom systems are based on extensive static calculations.

If the arrangement of the intermediate sections according to the rod plan is not observed, the crane can collapse, the boom can break off or the crane can topple over.

If the arrangement of the guy rods according to the rod plan is not observed, the crane can collapse, the boom can break off or the crane can topple over.

Death, severe bodily injuries, property damage.

- Only arrange the intermediate sections according to the rod plan.
- Only arrange the guy rods according to the rod plan.

If an auxiliary guying is required for a certain boom length:

- Only assemble the auxiliary guying according to the rod plan in the position defined in the rod plan.

General specifications for the configuration of booms or boom systems:

- With the same system dimension, two short intermediate sections with a length of 3.5 m are heavier than one single intermediate section with a length of 7.0 m.
- With the same system dimension, two short intermediate sections with a length of 7.0 m are heavier than one single intermediate section with a length of 14.0 m.
- With the same system dimension, two short intermediate sections with a length of 3.5 m can be replaced by one single intermediate section with a length of 7.0 m.
- With the same system dimension, two short intermediate sections with a length of 7.0 m can be replaced by one single intermediate section with a length of 14.0 m.
- For intermediate sections with the same system dimension but different lengths, always install the short intermediate sections on the bottom in the boom, due to their weight, in direction of the slewing ring connection, see also illustration **1** and illustration **2**.
- The heavier one intermediate section is, the higher is the value of the last two digits on the system dimension plate.
- Pay attention to the last two letters following the letter combinations (YY) **5** on the last two letters on the system dimension plate and observe them.

LWE/LR 1600-2-001/18101-07-02/en

copyright © Liebherr-Werk Ehingen GmbH 2018

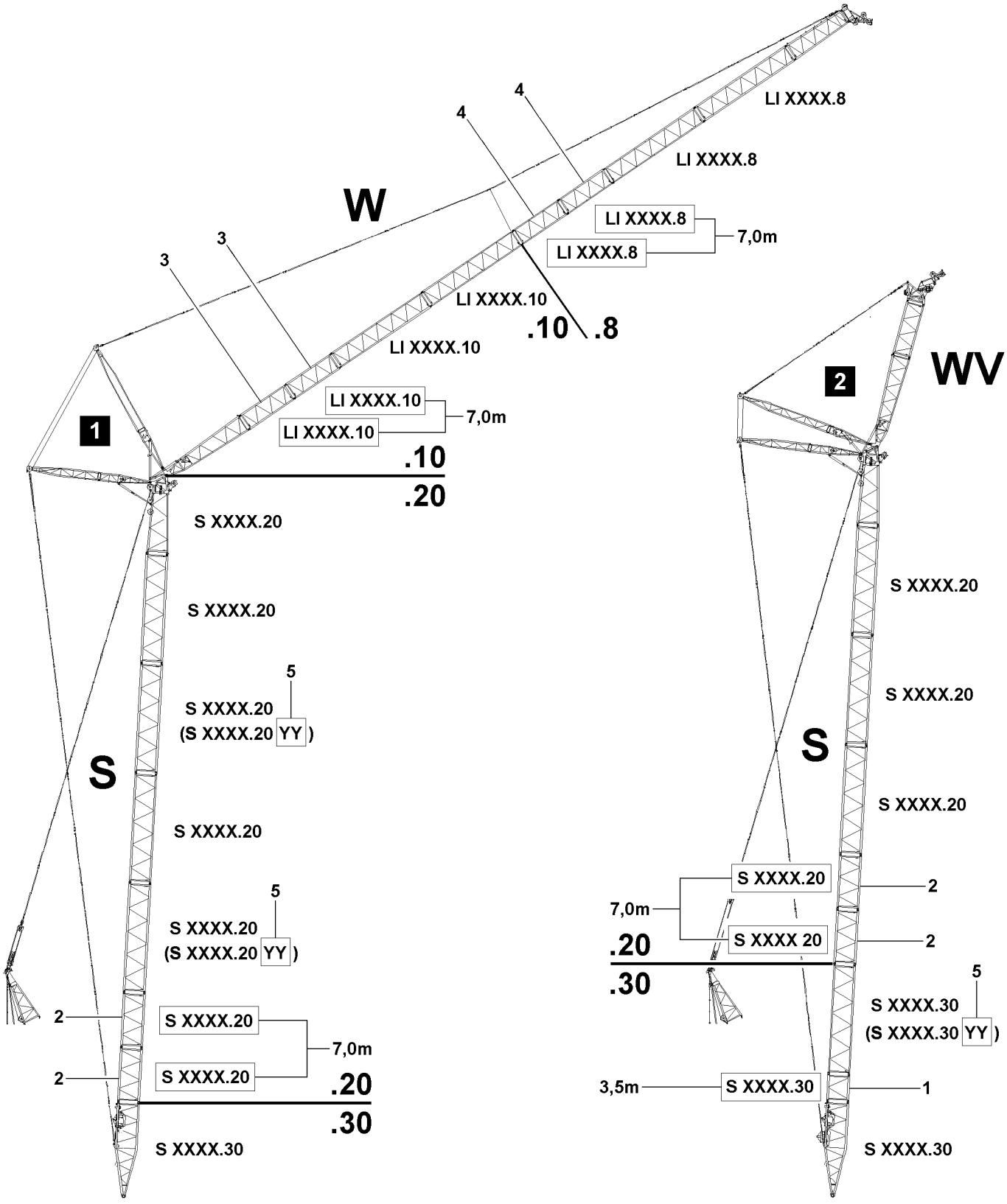

Fig.151885: Arrangement of intermediate sections and the guy rods

LWE/LR 1600-2-001/18101-07-02/en

copyright © Liebherr-Werk Ehingen GmbH 2018

System dimensions and assignment			
Position	System	Heavy	Light
1	S XXXX **.30**	X	
2	S XXXX **.20**		X
3	LI XXXX **.10**	X	
4	LI XXXX **.8**		X
5	S XXXX **.40** YY	X	

2.1 Arrangement of the intermediate sections

WARNING
Danger of accidents due to incorrectly assembled intermediate sections!
Death, severe bodily injuries, property damage.
- ▶ Any other arrangement of the intermediate sections than specified in the operating instructions or the rod plans is prohibited.
- ▶ There is the danger that intermediate sections are mixed up, they are differently sized and do **not** differ externally.
- ▶ The intermediate sections differ externally only by the welded on plates (.8, .10, .12, .16, .20, .25, .30, .40 **YY**).
- ▶ When assembling the boom, it must be ensured that the intermediate sections are only arranged and installed according to their description as indicated on the rod plan.
- ▶ Observe and adhere to the additional letter combinations (YY) **5** on the system dimension plate of the intermediate sections at assembly of the intermediate sections.

WARNING
Arrangement of the intermediate sections!
If the arrangement of the intermediate sections is not carried out according to the rod plan, then the boom can be overloaded, bend down and break off.
Death, severe bodily injuries, property damage.
- ▶ For intermediate sections with the same system dimension but different length the shorter intermediate sections must always be installed on the bottom in the boom, in direction of the slewing ring connection, except if another installation position is specified in the rod plan.
- ▶ Adhere to the specifications in the rod plan in any case.

2.2 Arrangement of the guy rods

WARNING
Danger of accidents due to incorrectly assembled guy rods!
Death, severe bodily injuries, property damage.
- ▶ Any other arrangement of the guy rods than specified in the operating instructions or the rod plans is prohibited.
- ▶ When assembly the boom / boom system, only arrange and install the guy rods according to their description in the rod plan.

WARNING
Arrangement of the guy rods!
If the arrangement of the guy rods is not carried out according to the rod plan, then the boom can be overloaded, bend down and break off.
Death, severe bodily injuries, property damage.
- ▶ Adhere to the specifications in the rod plan in any case.

LWE/LR 1600-2-001/18101-07-02/en

copyright © Liebherr-Werk Ehingen GmbH 2018

3 Auxiliary guying

Note
- ▶ The following description is an example and may not exactly match to your crane.
- ▶ For exact crane data refer to the respective rod plan.

3.1 Assembling the auxiliary guying

The auxiliary guying, in regards to safe crane operation - especially for long boom systems - is of vital importance.

The auxiliary guying is a deciding factor in relieving the boom, or the boom system during erection and take-down as well as during crane operation.

WARNING
The crane can topple over!
If the auxiliary guying is not installed or not installed on the position specified in the rod plan, then the crane can collapse, the boom can break off or the crane can topple over.
Death, severe bodily injuries, property damage.
- ▶ Only assemble the auxiliary guying in the position specified in the rod plan.
- ▶ Make sure that the auxiliary guying is always completely installed and that all pins are properly pinned and secured.

Note
- ▶ The boom lengths, for which an auxiliary guying is required, can be seen in the rod plan.
- ▶ Depending on the crane type: to assemble the auxiliary guying, remove the standard lugs and install the „Lugs for the auxiliary guying“.

Components of auxiliary guying, illustration **A**	
Position	**Name**
1	Pin
2	Spring retainer
3	Lug
4	Chain
5	Rope
6	Pin
7	Spring retainer

LWE/LR 1600-2-001/18101-07-02/en

copyright © Liebherr-Werk Ehingen GmbH 2018

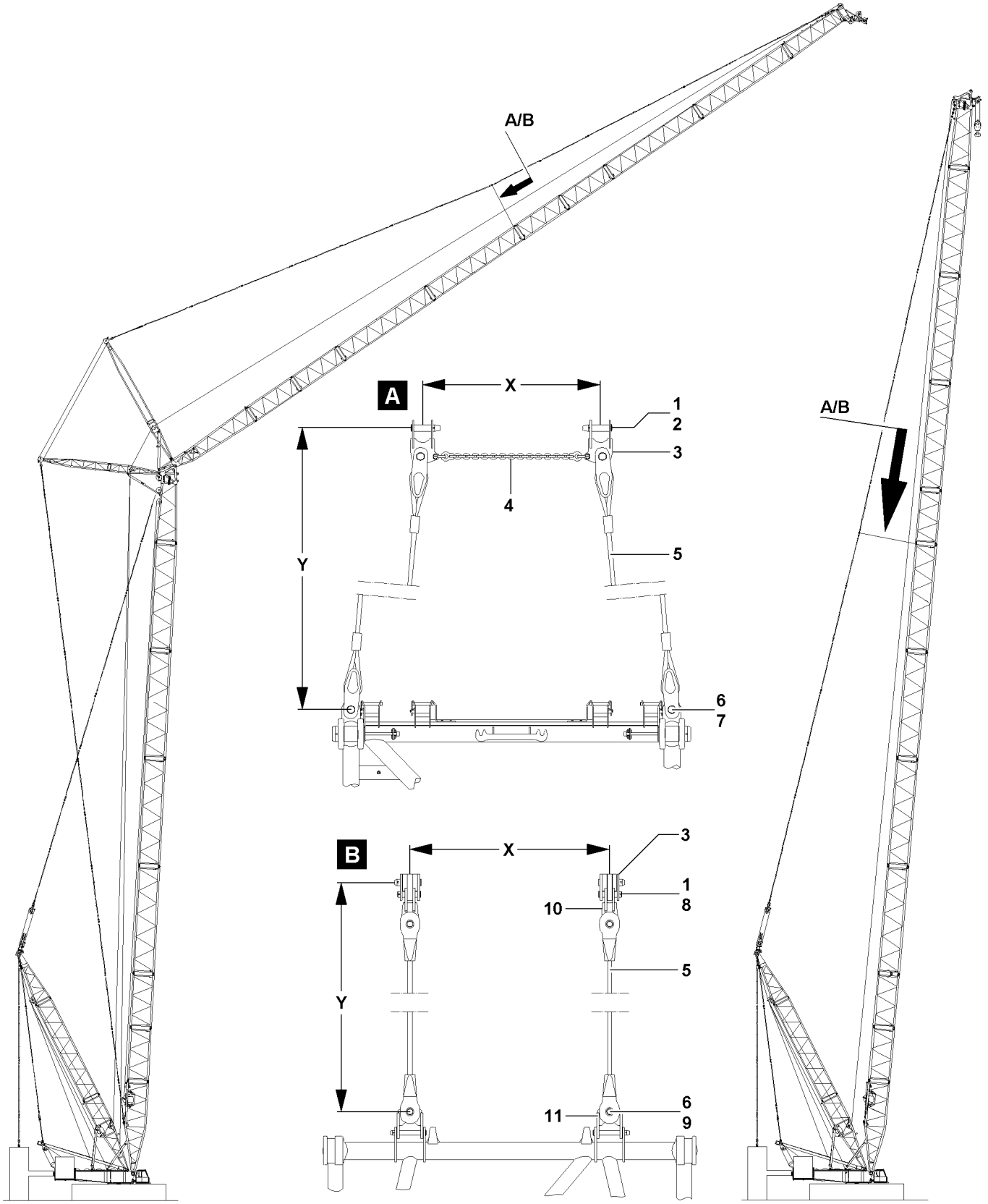

Fig.112270: Auxiliary guying(s)

LWE/LR 1600-2-001/18101-07-02/en

copyright © Liebherr-Werk Ehingen GmbH 2018

Components of auxiliary guying, illustration **B**	
Position	**Name**
1	Pin
3	Lug
5	Rope
6	Pin
8	Linch pin
9	Linch pin
10	Cross brackets
11	Cross brackets

The lugs **3** must be installed in the guying instead of the standard lugs. The auxiliary guying is installed on the lugs **3**.

The guy ropes **5** are pinned on top on the lugs **3** of the guying or on the cross brackets **10**. The guy ropes **5** are pinned on the bottom on the lugs / connector points on the boom, see illustration **A** or on the cross brackets **11**, see illustration **B**.

▶ Install the guy ropes: Pin the guy ropes on top on the guying with pin **1** and secure with the spring retainer **2**, see illustration **A**.
or
Install the guy ropes: Pin the guy ropes on top on the guying with pin **1** and secure with the locking pin **8**, see illustration **B**.

When the guy ropes **5** are pinned and secured on the lugs **3** of the guying or on the cross brackets **10**:
▶ Pin the guy ropes **5** on the lugs / connection points on the boom, see illustration **A** with pin **6** and secure with the spring retainer **7**.
or
Pin the guy ropes **5** on the cross brackets **11** on the boom, see illustration **B** with pin **6** and secure with the locking pin **9**.

WARNING
The crane can topple over!
If the chain **4** is not installed in connection with the auxiliary guying, then the guying can be damaged, the boom can break off and the crane can topple over.
Death, severe bodily injuries, property damage.
▶ Only assemble the auxiliary guying in the position specified in the rod plan.
▶ If a chain **4** is specified in the rod plan, then it must always be installed in connection with the auxiliary guying, otherwise the guy rods will be pulled apart.

▶ Recheck the proper and complete assembly of the auxiliary guying before erecting the boom / boom system.

LWE/LR 1600-2-001/18101-07-02/en

copyright © Liebherr-Werk Ehingen GmbH 2018

Empty page!

LWE/LR 1600-2-001/18101-07-02/en

copyright © Liebherr-Werk Ehingen GmbH 2018

5.05 D-boom

1	Components and attachment points	3
2	Assembly D-boom	5
3	Disassembly	33

LWE/LR 1600-2-001/18101-07-02/en

copyright © Liebherr-Werk Ehingen GmbH 2018

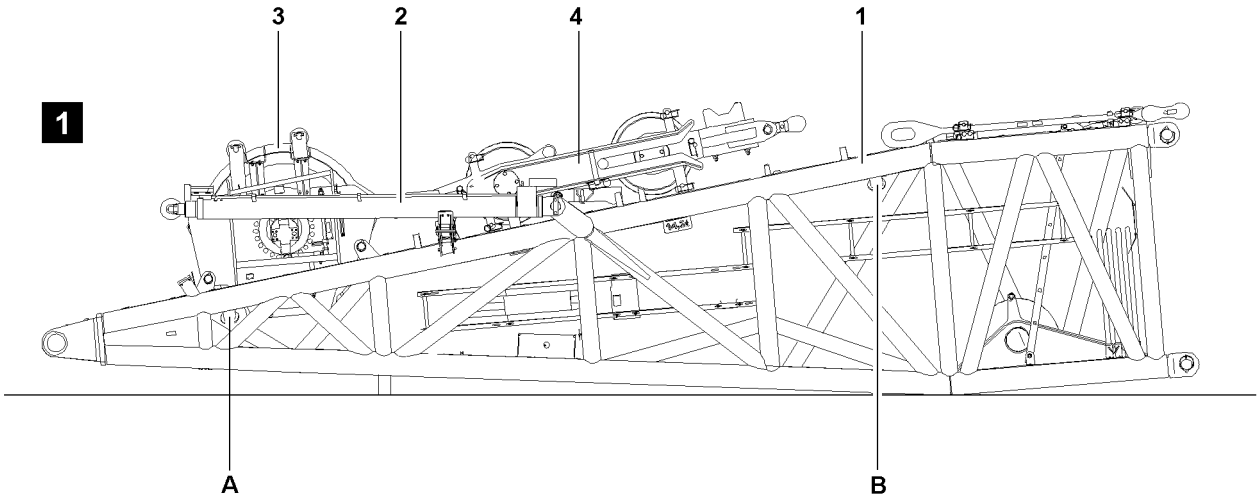

LWE/LR 1600-2-001/18101-07-02/en

Fig.106551

copyright © Liebherr-Werk Ehingen GmbH 2018

1 Components and attachment points

1.1 Component overview D-pivot section

The D-pivot section consists of:

D-pivot section incl. winch 3, pulley block and rope		
Position	**Component**	**Weight[1)]**
1	D-pivot section	8.90 t
2	D-relapse cylinder	1.65 t
3	Winch 3 with rope	8.55 t
4	D-pulley blocks	3.65 t
	Total weight:	**22.75 t**

1) The stated weights are approximate

1.2 Attachment points D-pivot section

Attachment points on D-pivot section	
A + B	Attachment points for D-pivot section with assembled winch 3

LWE/LR 1600-2-001/18101-07-02/en

copyright © Liebherr-Werk Ehingen GmbH 2018

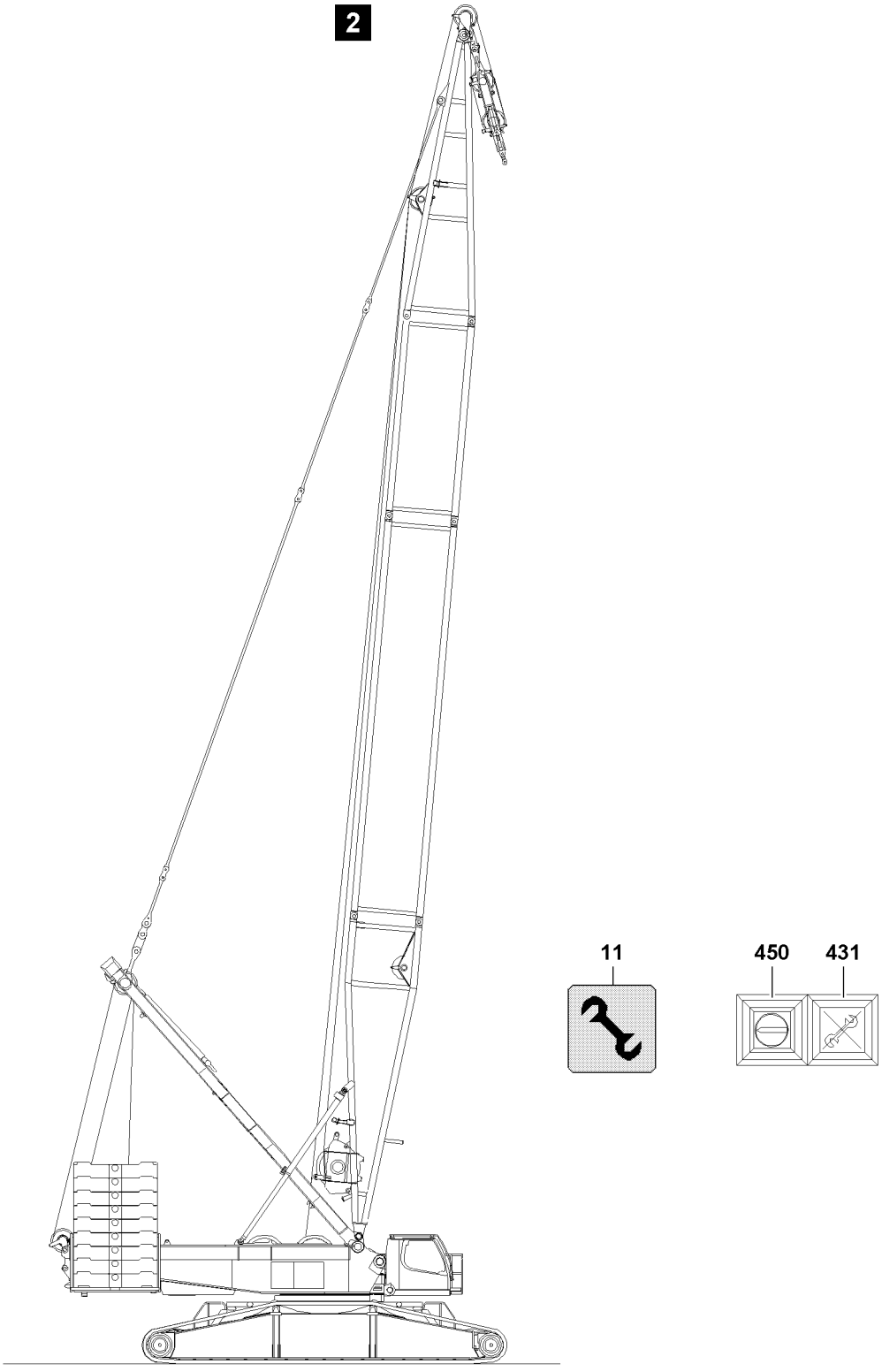

LWE/LR 1600-2-001/18101-07-02/en

Fig.106552

copyright © Liebherr-Werk Ehingen GmbH 2018

2 Assembly D-boom

WARNING
Risk of falling!
During assembly and disassembly, personnel must be secured with appropriate aids to prevent them from falling. If this is not observed, assembly personnel could fall and suffer life-threatening or fatal injuries!

- ▶ Any work, where there is a danger of falling must be carried out with suitable aids (for example: lifting platforms, scaffoldings, ladders, auxiliary crane)!
- ▶ If the work cannot be carried out with such aids nor from the ground, then the assembly personnel must secure themselves with approved catch systems to avoid falling, see crane operating instructions, chapter 2.04 of the crane operating instructions!
- ▶ If railings are present on the components, then they must be brought into the corresponding position and secured for assembly / disassembly work.
- ▶ Only step on aids and antifall guards with clean shoes!
- ▶ Keep aids and antifall guards clean and free from snow and ice!
- ▶ During all assembly and disassembly work, maintenance work and inspections, travel or crane operation is prohibited!

WARNING
The lattice sections can fall down!
If the lattice sections are not pinned and secured correctly, then they can fall down and fatally injure personnel!

- ▶ Unpin or pin both pins at the same horizontal level, i.e. **left and right**!
- ▶ Do not stand under the lattice sections or within the complete danger zone during the pinning and unpinning procedure of the boom!
- ▶ Safely secure the pins in the bearing points as well as receptacles!
- ▶ It is prohibited to lean the ladder against the component being disassembled!

WARNING
Danger of crushing!
When assembling crane components, limbs can be crushed or even severed due to oscillation of components!

- ▶ Make sure that the component do not swinging back and forth during assembly!

LWE/LR 1600-2-001/18101-07-02/en

copyright © Liebherr-Werk Ehingen GmbH 2018

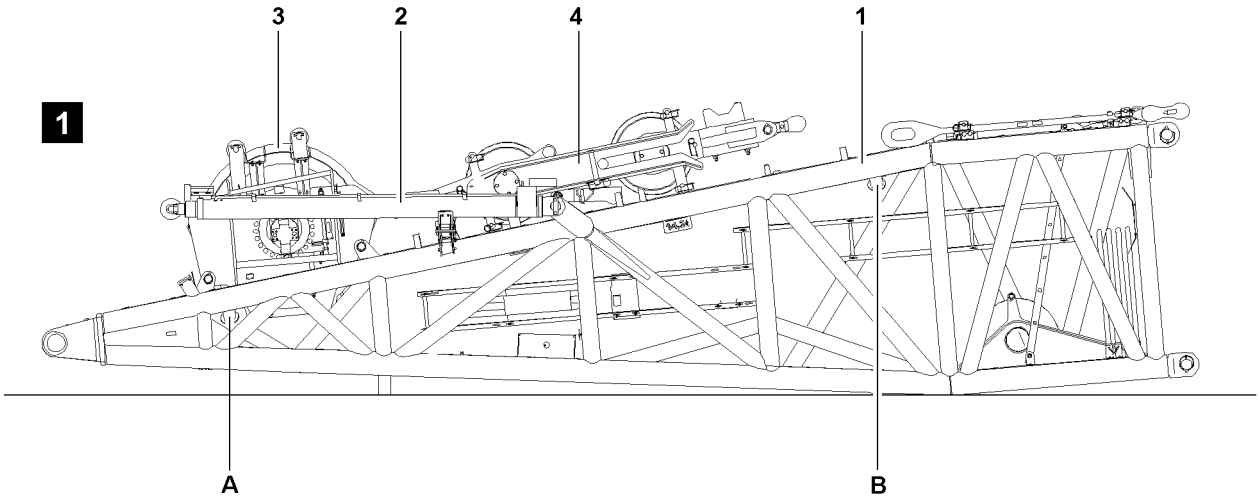

LWE/LR 1600-2-001/18101-07-02/en

Fig.106551

copyright © Liebherr-Werk Ehingen GmbH 2018

DANGER
The components can fall down!
If the corresponding components are disengaged from the auxiliary crane before the corresponding component is pinned, then the corresponding component can fall down!
Personnel can be severely injured or killed!
▶ Do not disengage the auxiliary crane until the corresponding component is pinned and secured!

NOTICE
Damage of derrick boom and SA-frame!
If the SA-frame is pulled by winch 4 (intake gear) to the rear in direction of the turntable, then the derrick boom and the SA-frame can be severely damaged!
Expensive and extensive repairs can result!
▶ As long as the guying between the SA-frame and the assembled D-pivot section or between the SA-frame and the assembled D-boom is **not** assembled and guyed, do not pull the SA-frame to the rear in direction of the turntable!

Make sure that the following prerequisites are met:
– the crane is properly supported and horizontally aligned,
– an auxiliary crane is available,
– an assembly scaffolding / work platform is available,
– the counterweight has been installed to the turntable according to the load chart,
– the LICCON overload protection has been set according to the data in the load chart,
– the assembly icon on the LICCON monitor blinks,
– no main boom is assembled on the turntable.

LWE/LR 1600-2-001/18101-07-02/en

copyright © Liebherr-Werk Ehingen GmbH 2018

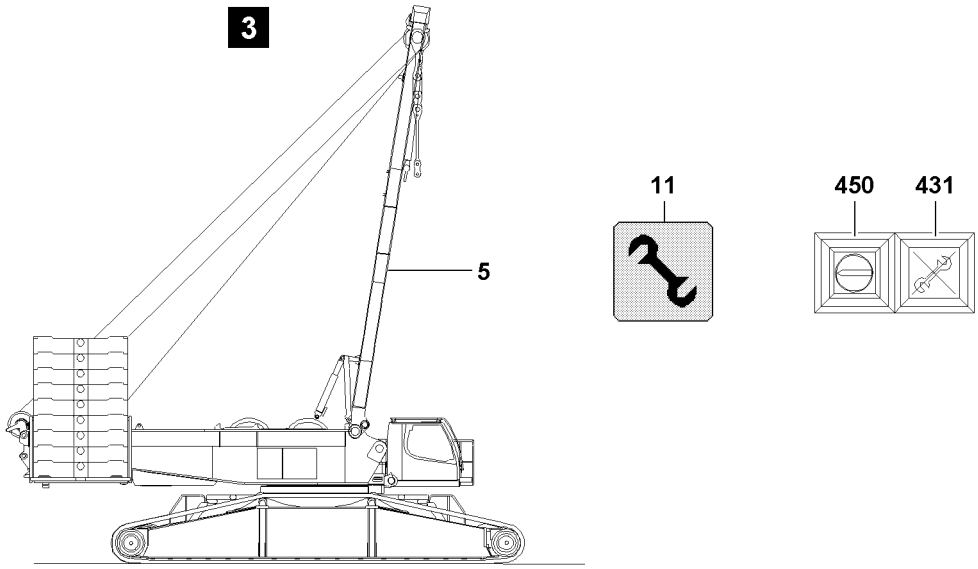

LWE/LR 1600-2-001/18101-07-02/en

Fig.106553

copyright © Liebherr-Werk Ehingen GmbH 2018

2.1 Assembling the D-boom

2.1.1 Turning the turntable into assembly position

DANGER
The crane can topple over!
If the following conditions are not met before turning the turntable - **without** installed D-boom, the crane can topple over!
Personnel can be severely injured or killed!
- ▶ Observe the data in the erection and take down charts!
- ▶ For D-boom assembly, a central ballast of 65 t (including the consoles) is required!
- ▶ If no D-boom is assembled on the turntable, no more than max. 150 t counterweight may be installed on the turntable!

▶ Turn the turntable in longitudinal direction of the crawler travel gear or to the side.

2.1.2 Turning the assembly key button on

DANGER
Risk of fatal injury at crane operation with turned on assembly key button!
If the assembly key button is turned on, the hoist limit switch and the LICCON overload protection is bypassed!
In the event of deliberate improper use, the crane could collapse, the boom can break off or the crane can topple over!
Personnel can be killed!
This could result in high property damage!
- ▶ The actuation of the assembly key button **450** is only permitted for assembly tasks!
- ▶ The assembly key button may only be operated by persons who are aware of the consequences of a bypass!
- ▶ If the assembly key button **450** is turned on, the hoist limit switch and the LICCON overload protection is bypassed!
- ▶ Crane operation with the assembly key button **450** turned on is strictly prohibited!
- ▶ The assembly key button **450** must be removed immediately after carrying out the assembly work and handed to an authorized person!

▶ Actuate the assembly key button **450**.

Result:

– The LICCON overload protection is bypassed.
– The indicator light **431** in the button lights up.
– The assembly icon **11** on the LICCON monitor blinks.
– An acoustical signal sounds.
– The three color light lights up red.
– The warning lights on the rear of the turntable light up.

LWE/LR 1600-2-001/18101-07-02/en

copyright © Liebherr-Werk Ehingen GmbH 2018

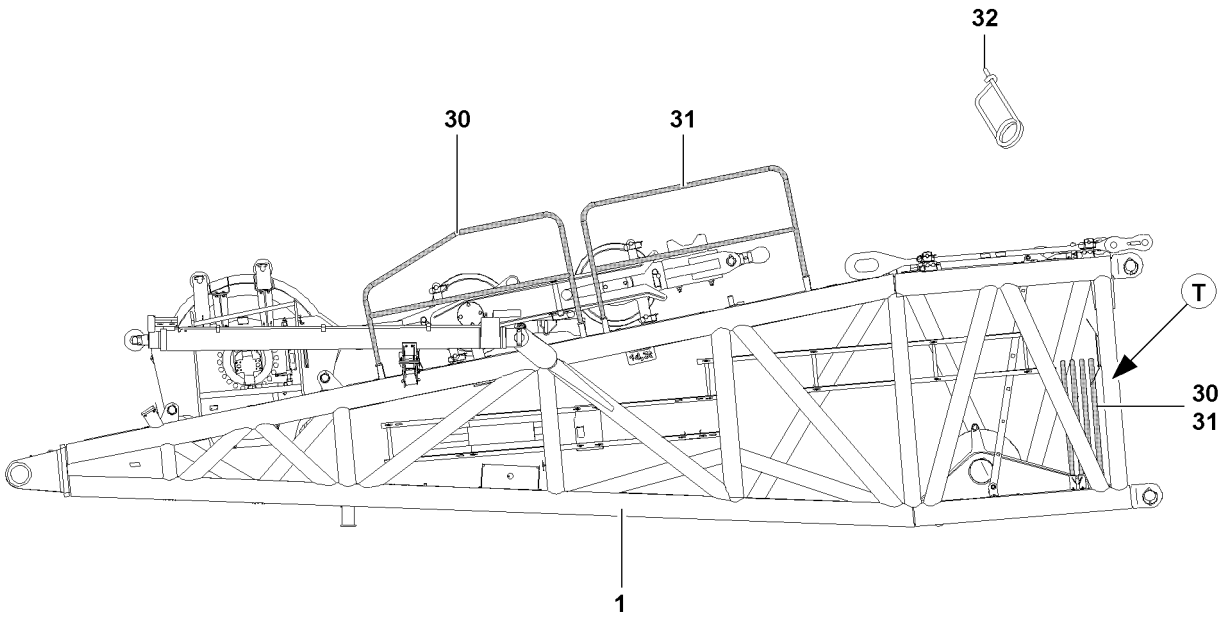

LWE/LR 1600-2-001/18101-07-02/en

Fig.106738

copyright © Liebherr-Werk Ehingen GmbH 2018

2.2 Assembling the railing on the D-pivot section

WARNING
Risk of falling!
During assembly and disassembly, the assembly personnel must be secured with appropriate aids to prevent them from falling!
Even for assembly of protective devices there is a danger of falling!
Assembly personnel can fall and be killed or severely injured!

- ▶ For assembly and disassembly work, maintenance and inspection work on the D-pivot section, all railing must be assembled and secured!
- ▶ Step on the D-pivot section **1** only with „clean shoes“.

- ▶ Release the railing in the transport retainer (point **T**) on the D-pivot section **1**: Remove spring retainers **32**.
- ▶ Remove the railing from the transport retainer (point **T**) and insert into the intended fastening points on the D-pivot section **1**.
- ▶ Secure the railing **30** in the fastening points with spring retainers **32**.
- ▶ Secure the railing **31** in the fastening points with spring retainers **32**.

LWE/LR 1600-2-001/18101-07-02/en

copyright © Liebherr-Werk Ehingen GmbH 2018

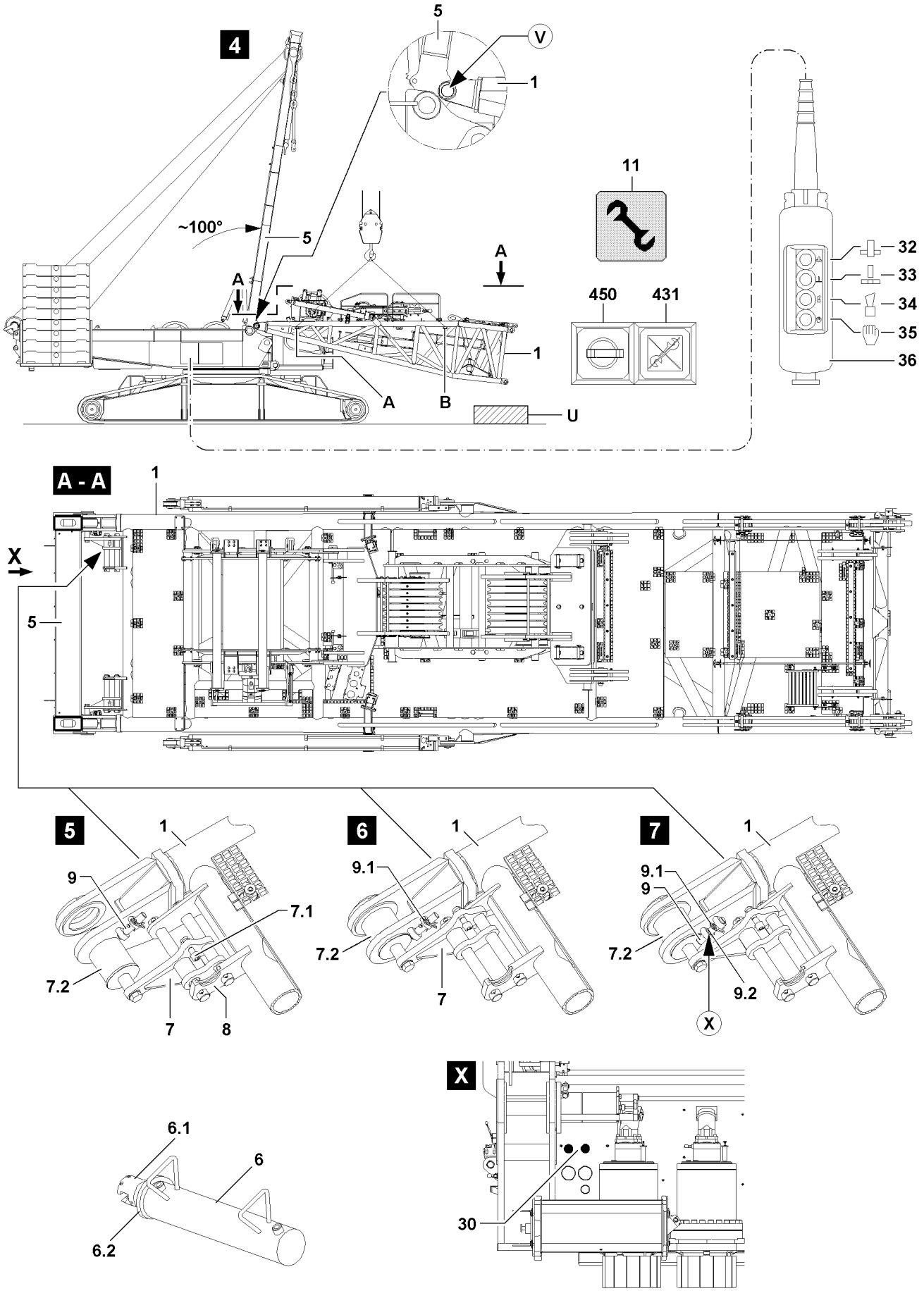

Fig.108722

LWE/LR 1600-2-001/18101-07-02/en

copyright © Liebherr-Werk Ehingen GmbH 2018

2.3 Pinning the D-pivot section on the SA-frame

DANGER
Danger of fatal accidents due falling components!
If the pin connections are not visually inspected, the pins can loosen up by themselves and cause components to fall down!
Personnel can be killed or severely injured!
- ▶ All pins must be secured after assembly with the intended safety elements! Check visually!
- ▶ The guy rods must be inspected regularly, see chapter 8.15 in the crane operating instructions!

Ensure that the following prerequisite is met:
- the SA-frame is erected to approx. 100°,
- the connector pins **7.2** on the D-pivot section **1** are unpinned, see illustration **5**.

▶ Attach the D-pivot section **1** on the attachment points **A** and the attachment points **B** on the auxiliary crane and swing in to the pin points **V** on the SA-frame, see illustration **4**.

Establish the hydraulic connection to the pin pulling device via two quick couplers **30**.

Note
- ▶ When hooking the pin pulling cylinder **6**, make sure that the collar **6.2** on the cylinder mount **8** and the catch **6.1** on the screw **7.1** are properly hooked!

- ▶ Hook the pin pulling cylinders **6**.
- ▶ Connect the pin pulling cylinders **6** on the quick couplers **30**, Hydraulic turntable.

WARNING
Falling D-pivot section!
Due to non-secured or insufficiently secured connector pins, the D-pivot section can fall down!
Personnel can be severely injured or killed!
- ▶ The connector pins **7.2** must be secured after the pinning procedure on the SA-frame **5** with the retaining pins **9**!

- ▶ Insert the connector pins **7.2** on both sides with the hydraulic pin pulling cylinder **6**: Press the button **35** on the control panel **36** and „hold it down“, then press the button **32** until the connector pin **7.2** is fully pinned.

When the connector pins **7.2** are fully pinned on both sides:
- ▶ Secure the connector pins **7.2** with retaining pins **9**.
- ▶ Remove the spring retainer **9.1**, see illustration **6**.
- ▶ Push the retaining pin **9** down until the cotter pin **9.2** is seated on the lower pin guide (point **X**), see illustration **7**.
- ▶ Secure the retaining pin **9** with spring retainers **9.1**, see illustration **7**.

NOTICE
Damage to the D-pivot section!
Property damage can occur on the D-pivot section by placing the assembled pivot section on the ground!
- ▶ The D-pivot section may not be placed directly on the ground!
- ▶ When placing the D-pivot section down, always use a sufficiently load bearing and large enough base support!

- ▶ Place the D-pivot section carefully with the auxiliary crane on the support **U**!
- ▶ Remove the auxiliary crane!

LWE/LR 1600-2-001/18101-07-02/en

copyright © Liebherr-Werk Ehingen GmbH 2018

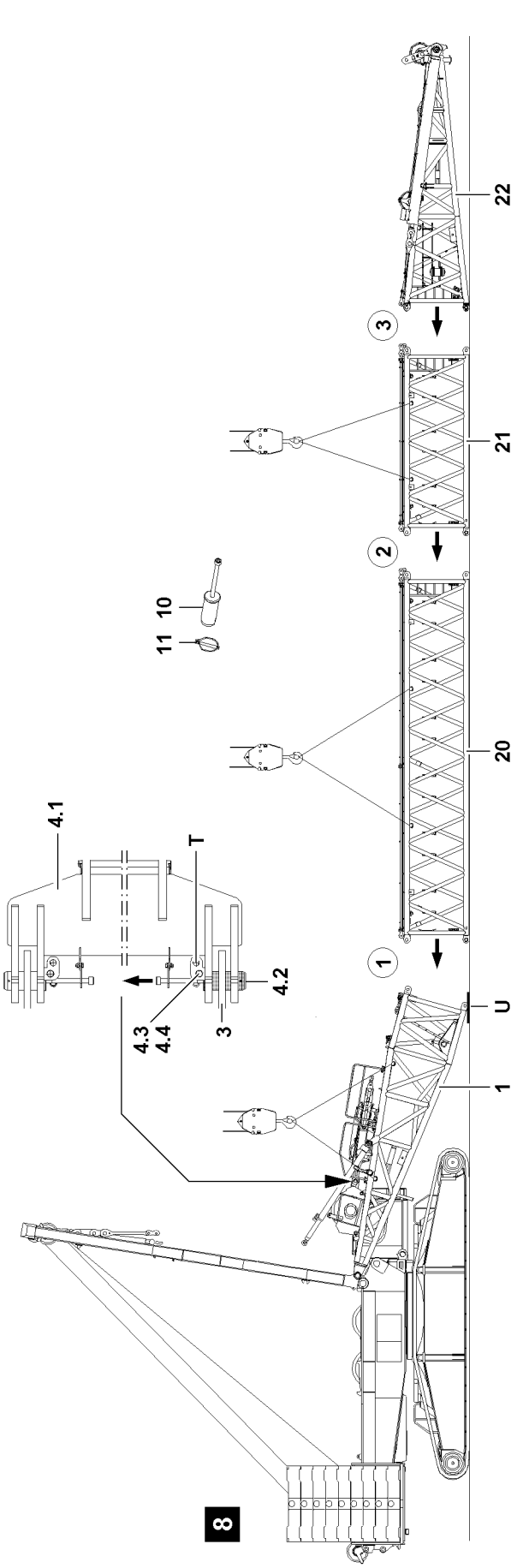

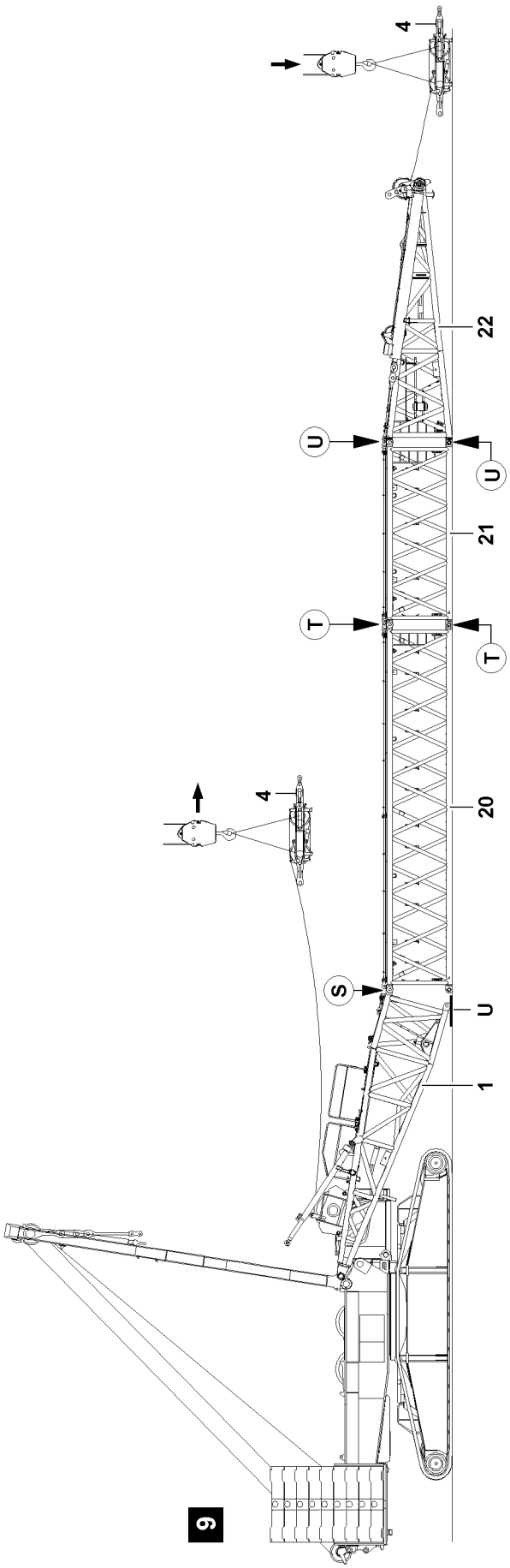

Fig.106555

LWE/LR 1600-2-001/18101-07-02/en

copyright © Liebherr-Werk Ehingen GmbH 2018

2.4 Installing the D-lattice sections on the D-pivot section

Make sure that the following prerequisites are met:
- the D-pivot section is pinned and secured on the SA-frame,
- the D-pivot section is placed on the support **U** (approx. 20 cm high) .

Note
- ▶ Always support the D-lattice sections sufficiently for easier installation!
- ▶ To pin and unpin the D-lattice sections with the pin pulling device, see also chapter 5.30 in the crane operating instructions!

Pin the D-intermediate section **20** on the D-pivot section **1** on top, (point **S**).

▶ Attach the D-intermediate section **20** on the auxiliary crane and align on the D-pivot section **1**.

When the pin bores on the D-pivot section **1** and on the D-intermediate section **20** (point **S**) align:
- ▶ Insert the pin **10** and secure with linch pin **11**.
- ▶ Attach the D-intermediate section **21** on the auxiliary crane and align on the D-intermediate section **20**.

When the pin bores on the D-intermediate section **21** and on the D-intermediate section **20** (point **T**) align:
- ▶ Pin and secure pins **10** on top and bottom with linch pins **11**.
- ▶ Attach the D-end section **22** on the auxiliary crane and align on the D-intermediate section **21**.

When the pin bores on the D-intermediate section **21** and on the D-end section **22** (point **U**) align:
- ▶ Pin and secure pins **10** on top and bottom with linch pins **11**.

2.5 Pulling the pulley block to the D-end section and placing it down

WARNING
Slipping pulley block!
By unpinning the pulley block on winch 3, the pulley block can start to slip and severely injure personnel!
- ▶ The pulley block must be secured by an auxiliary crane before unpinning it on winch 3!

▶ Attach the pulley block onto the auxiliary crane.

Before assembly of the pulley block on the D-end section, the pulley block must be unpinned on the D-pivot section.

- ▶ Unpin the pulley block **4** on winch 3: Release the retaining pin **4.3** and unpin from the pin bore.
- ▶ Pin in the retaining pin **4.3** in the transport retainer **T** and secure with spring retainer **4.4**, see ! **8**.
- ▶ Unpin the pin **4.2** on both sides, see illustration **8**.

NOTICE
Rope damage!
- ▶ When spooling winch 3 out, make sure that no slack rope forms!

▶ While spooling out winch 3, pull the pulley block **4** with the auxiliary crane to the D-end section **22** and place it on the ground on a support in sufficient distance to the D-end section, see illustration **9**.

LWE/LR 1600-2-001/18101-07-02/en

copyright © Liebherr-Werk Ehingen GmbH 2018

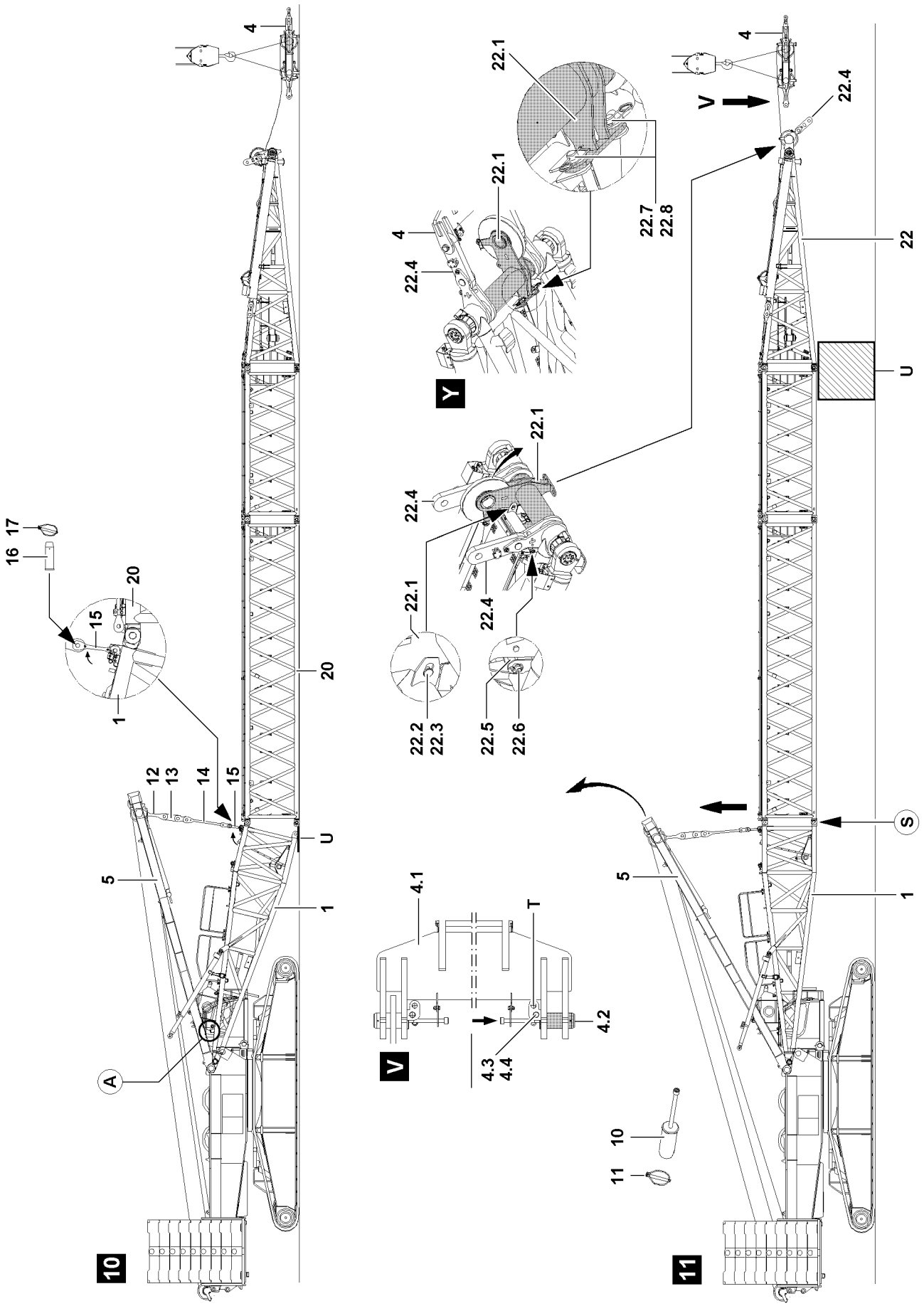

Fig.106556

LWE/LR 1600-2-001/18101-07-02/en

copyright © Liebherr-Werk Ehingen GmbH 2018

2.6 „Closing“ the D-boom

Make sure that the following prerequisites are met:
- the transport retainers for the guy rods on the SA-frame are released,
- the D-lattice sections are pinned and secured,
- the pulley block has been placed on the ground in sufficient distance to the D-end section.

▶ Lower the SA-frame to the front, see chapter 5.02 of the crane operating instructions.

Lower the SA-frame carefully to the placement **A** on the D-pivot section until the guy rods **14** can be pinned with the brackets **15** of the D-pivot section **1**.

▶ Pin the guy rods **14** with the lugs **15**: Pin in the pin **16** and secure with linch pin **17**.

Erect the SA-frame **5** until the pin bores on the D-pivot section **1** and on the D-intermediate section **21** „on the bottom“ (point **S**):
▶ Pin in the pins **10** on both sides at point **S** and secure with linch pin **11**, illustration **11**.

NOTICE
Damage of control rope and the pulley block!
When lifting the D-boom, the control rope or the pulley block can be damaged!
▶ When lifting the D-boom, carefully spool out the winch 3 so that the pulley block remains on the ground!
▶ Check the rope run on the D-end section, carry out a visual inspection!

When the pins are properly pinned and secured on all D-lattice sections:
▶ Luff up the SA-frame until the D-end section lifts off the ground.
▶ Support the D-boom from below.
▶ Lower the D-boom on the support **U**.

2.7 Bringing the pull test brackets into operating position

WARNING
The pull test brackets can pose a mortal danger!
If the pull test brackets are not secure with an auxiliary crane during the swing procedure, they can swing forward with a large momentum due to their weight!
Personnel can be severely injured or killed!
▶ Swing the pull test brackets into operating position only with the aid of an auxiliary crane!
▶ Swinging the pull test brackets without an auxiliary crane is **prohibited**!

▶ Attach the pull test brackets onto the auxiliary crane.

When the pull test brackets **22.4** are secured with the auxiliary crane:
▶ Tension the tackle carefully.
▶ Remove the linch pin **22.6** on the transport retainer and unpin the retaining pin **22.5**.
▶ Swing the pull test bracket **22.4** forward with the auxiliary crane.

When the pull test brackets **22.4** are swung forward completely:
▶ Remove the auxiliary crane.
▶ Pin in the pin **22.5** in transport position and secure with linch pin **22.6**.

LWE/LR 1600-2-001/18101-07-02/en

copyright © Liebherr-Werk Ehingen GmbH 2018

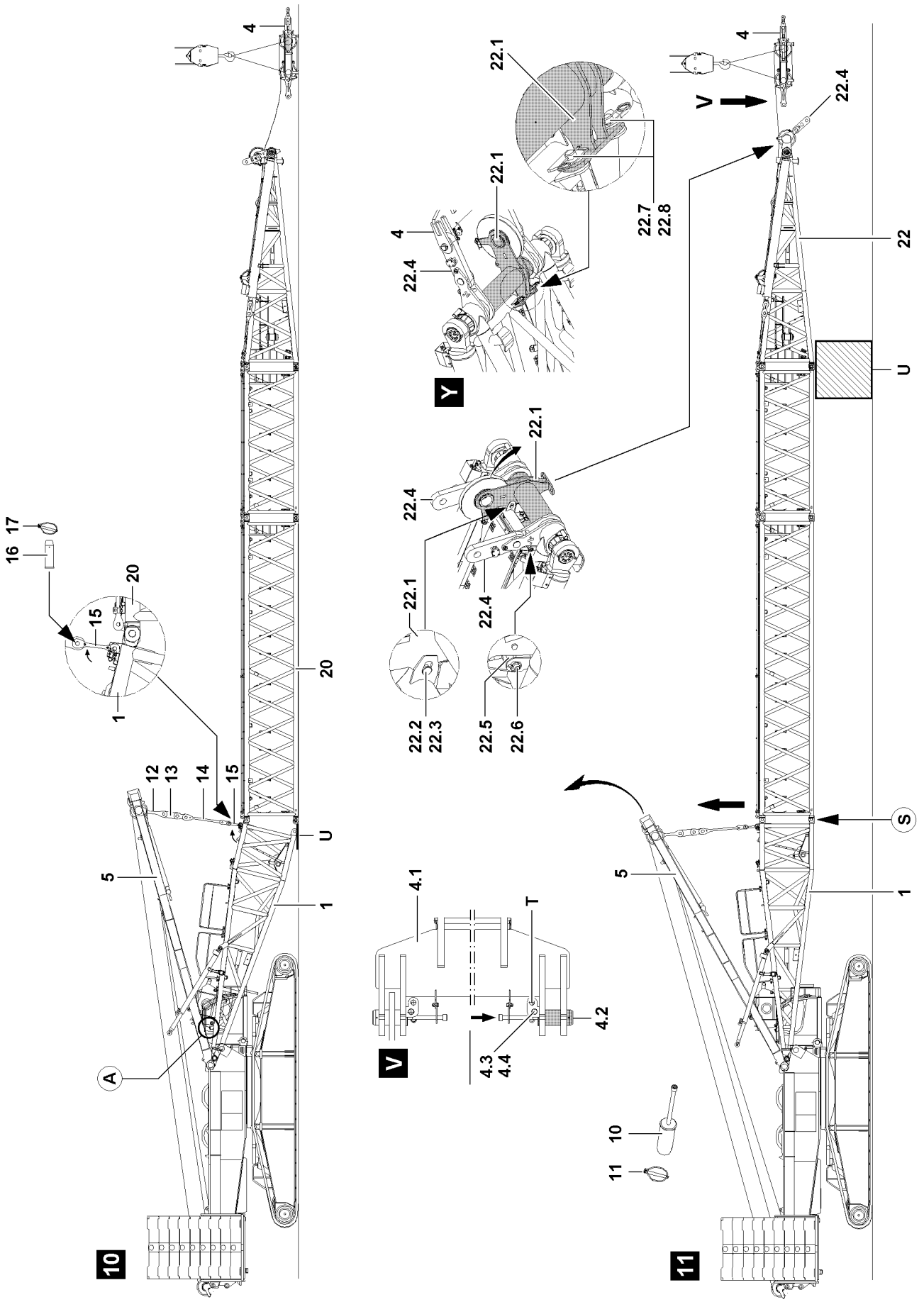

Fig.106556

LWE/LR 1600-2-001/18101-07-02/en

copyright © Liebherr-Werk Ehingen GmbH 2018

2.8 Bringing the pulley retainers into operating position

WARNING
Mortal danger due to pulley retainer!
If the pulley retainer is not secure with an auxiliary crane during the swing procedure, it can swing forward with a large momentum due to its weight!
Personnel can be severely injured or killed!
- ▶ Swing the pulley retainer into operating position only with the aid of an auxiliary crane!
- ▶ Swinging the pulley retainer without an auxiliary crane is **prohibited**!

▶ Attach the pulley retainer on the auxiliary crane.

When the pulley retainer **22.1** is secured with the auxiliary crane:
- ▶ Tension the tackle carefully.
- ▶ Remove the spring retainer **22.3** on the transport retainer and unpin the retaining pin **22.2**.
- ▶ Remove the spring retainer **22.8** and unpin the pin **22.7**, see illustration **Y**.
- ▶ Swing the pulley retainer **22.1** forward with the auxiliary crane.

When the pulley retainer **22.1** is in operating position:
- ▶ Remove the auxiliary crane.
- ▶ Pin in the pins **22.7** in operating position of the pulley retainer **22.1** and secure with spring retainer **22.8**.
- ▶ Pin in the retaining pin **22.2** in transport position and secure with spring retainer **22.3**.

2.9 Pinning the pulley block on the pull test brackets

Pin the pulley block **4** on the D-end section **22** with the pull test brackets **22.4**.

▶ Attach the pulley block **4** on the auxiliary crane and lift it off the ground.

Pin the pulley block **4** on the pull test brackets on the D-end section.

NOTICE
Danger of slack rope formation!
When swinging the pulley block on the D-end section in, slack rope can form on winch 3!
- ▶ When swinging the pulley block in to the D-end section, slowly and carefully spool up winch 3!

When the pulley block **4** is on the D-end section **22** positioned and aligned on the pull test brackets **22.4**:
- ▶ Pin in the pin **4.2** on both sides, see illustration **11** and illustration **V**.
- ▶ Secure the pin **4.2**: Pin in the retaining pin **4.3** and secure with spring retainer **4.4**.
- ▶ Carefully lower the pulley block **4** with the auxiliary crane.

When the pulley block is laying on the ground or on the support:
- ▶ Remove the auxiliary crane.

LWE/LR 1600-2-001/18101-07-02/en

copyright © Liebherr-Werk Ehingen GmbH 2018

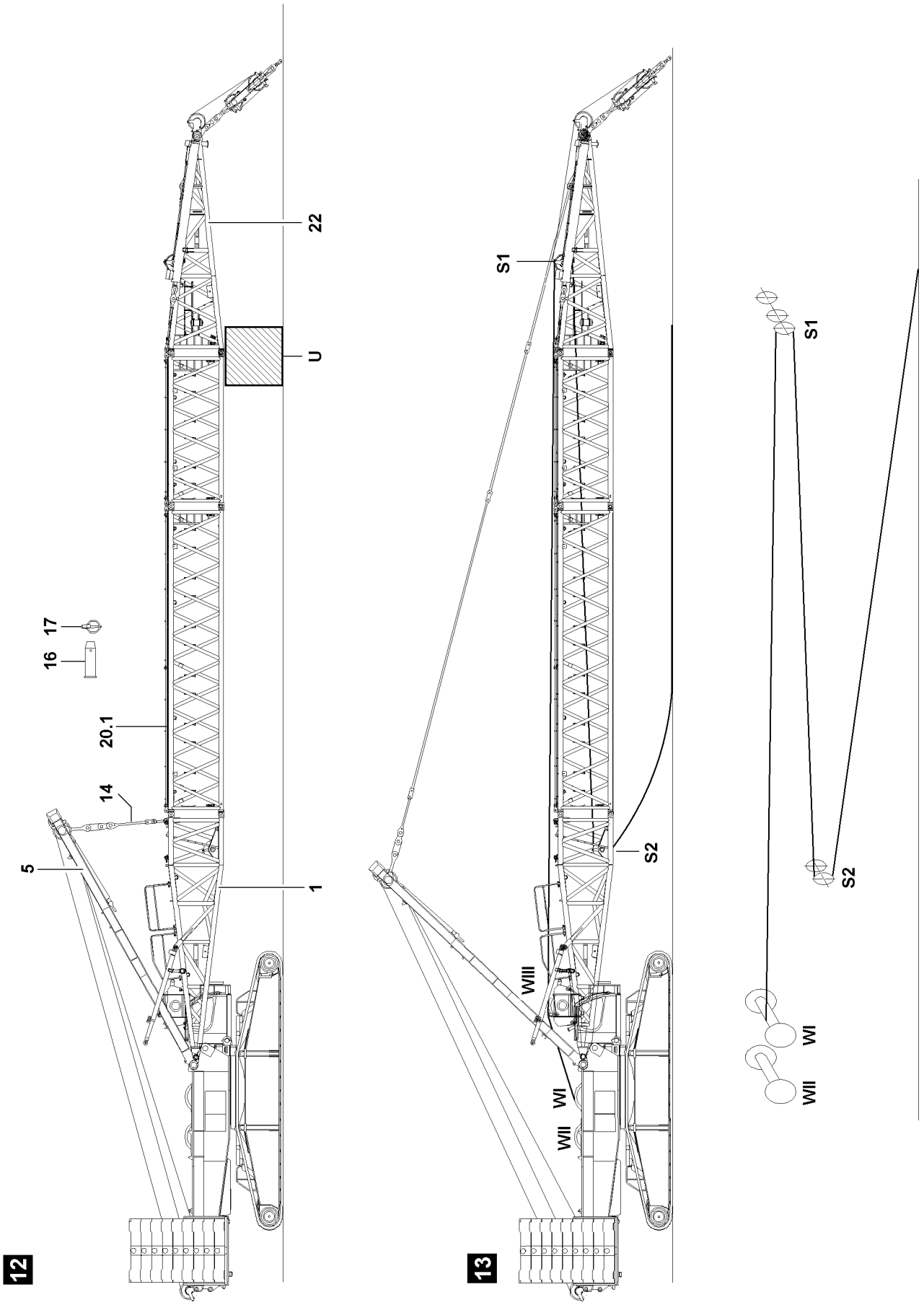

LWE/LR 1600-2-001/18101-07-02/en

Fig.106557

copyright © Liebherr-Werk Ehingen GmbH 2018

2.10 Assembling the D-guy rods

WARNING
Inspection and maintenance on guy rods not carried out!
If the regular inspection and maintenance of the guy rods is not carried out or only in irregular intervals, then severe accidents can occur due to existing and not recognized damage on the guy rods!
Personnel can be severely injured or killed!
▶ The guy rods must be checked before every assembly, see also chapter 8.15 in the crane operating instructions!

Note
▶ The D-guy rods must be assembled and secured according to the separately supplied assembly drawings. The numbering on the assembly drawings must be identical to the numbering on the guy rods!

The D-guy rods are placed and secured for transport on the D-lattice components. Before assembly, the transport retainers must be released.

▶ Release the transport retainers on the guy rods.
▶ Lower the SA-frame to the front.

DANGER
Risk of accident!
▶ The pins **16** of the Derrick guy rods may only be pinned from the „inside“ to the „outside“!

Pin the guy rods **14** of the SA-frame with the guy rods **20.1** on the D-pivot section.

▶ Pin in the pin **16** and secure with spring retainer **17**.

Pin the guy rods of the D-intermediate sections with each other.

▶ Pin in the pin **16** and secure with spring retainer **17**.

Pin the guy rods of the D-intermediate sections with the guy rods on the D-end section.

▶ Pin in the pin **16** and secure with spring retainer **17**.

When the guy rods are pinned and secured to each other:
▶ Actuate winch IV until the guy rods are tensioned between the SA-frame and the D-end section.

DANGER
General danger notes!
If the following conditions are not met before erecting the D-boom, the hoist rope can fall down due to its own weight!
Personnel can be severely injured or killed!
▶ Enough hoist rope must be guided over the rope pulleys so that the hoist rope is **not** pulled back and falls down when erecting the D-boom!

Note
▶ The hoist rope reeving is shown in chapter 4.06 of the crane operating instructions!

▶ Pull the hoist rope over the rope pulley **S1** in the D-end section and over the rope pulley **S2** in the D-pivot section, see illustration **13**.
▶ Luff the D-boom up until the D-boom hangs horizontally above the ground.
▶ Remove the support **U**.

LWE/LR 1600-2-001/18101-07-02/en

copyright © Liebherr-Werk Ehingen GmbH 2018

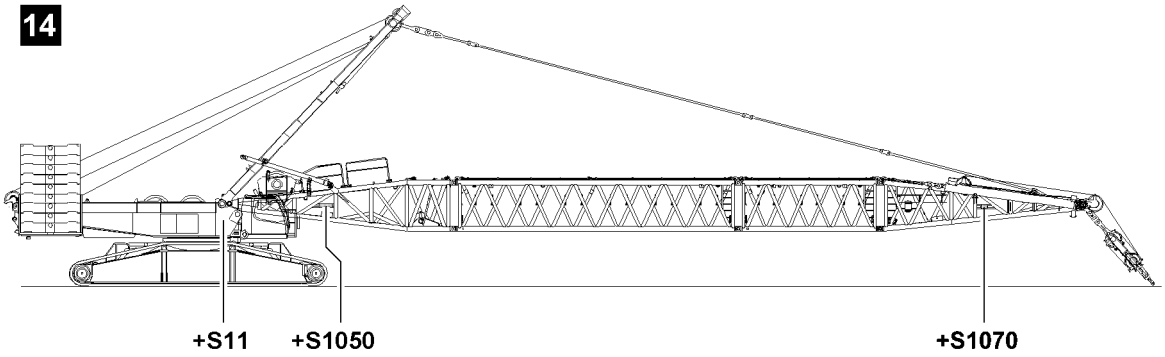

LWE/LR 1600-2-001/18101-07-02/en

Fig.106558

copyright © Liebherr-Werk Ehingen GmbH 2018

2.11 Establishing the electrical connections

Note
▶ To establish the electrical connections on the D-boom, use the separate electrical wiring diagram!

Ensure that the following prerequisite is met:
– the D-boom is completely assembled.

▶ Establish the electrical connections.
▶ Make sure that all electrical connections on the boom are established.

2.12 Checking the function of the safety devices

WARNING
Non-functioning safety devices!
If the function of the safety devices is defective, personnel can be severely injured or killed!
▶ Crane operation with non-functioning safety devices is **prohibited**!

Note
▶ The function of the individual limit switches must be checked before erection!
▶ The function of the limit switch initiators must be checked in the test system, see separate „Diagnostics manual“!

Note
▶ If a function check on the limit switches or on the safety devices does not lead to the desired shut offs, then the plug connections on the connector boxes or the components itself must be checked! If no visible connection errors or component defects can be found, contact **LIEBHERR** Service!

Make sure that the following prerequisites are met:
– all electrical connections have been made,
– the crane engine is running,
– the corresponding operating mode is set on the LICCON monitor.

2.12.1 Limit switch D-boom, relapse cylinder

Note
▶ The limit switch functions have to be checked individually before erection!

▶ Cover the limit switch initiators individually with a metal plate, see chapter 8.12 in the crane operating instructions.

Result:

– The spool up function of winch IV (control winch) turns off in upward movement.
– The icon „Derrick boom angle“ appears on the LICCON monitor 1, see chapter 4.02 of the crane operating instructions.

LWE/LR 1600-2-001/18101-07-02/en

copyright © Liebherr-Werk Ehingen GmbH 2018

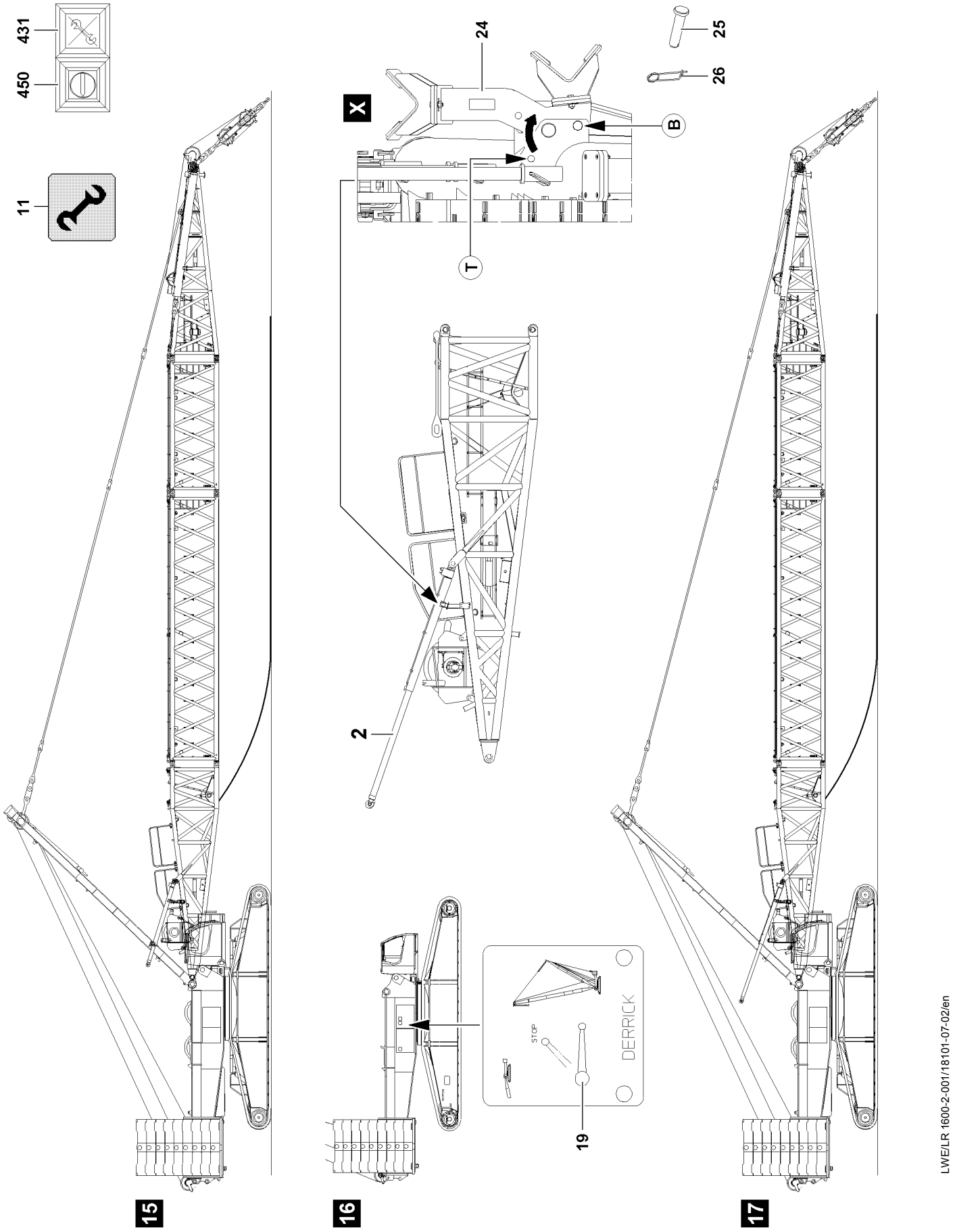

LWE/LR 1600-2-001/18101-07-02/en

Fig.106737

copyright © Liebherr-Werk Ehingen GmbH 2018

2.13 Swinging the folding brackets into operating position

Before extending the D-relapse cylinder **2**, bring the folding brackets **24** into operating position.

- ▶ Remove the spring retainer **26** and unpin the pin **25** from the transport position **T**, see illustration **X**.
- ▶ Attach the auxiliary crane first to the D-relapse cylinder **2**.
- ▶ Lift the D-relapse cylinder **2** with the auxiliary crane from the folding bracket **24**.
- ▶ Swing the folding brackets **24** into operating position, see illustration **X**.
- ▶ Insert the pins **25** in operating position **B** and secure with spring retainer **26**.

2.14 Installing the adapter for the ballast trailer on the turntable

If the ballast trailer is required for the intended crane application, then the adapter for the ballast trailer must be assembled on the turntable **before the D-boom is erected**. Otherwise access to the turntable is significantly limited by the SA-frame.

Note

- ▶ Install the adapter on the turntable before erecting the D-boom, see chapter 5.35 in the crane operating instructions!

When the adapter is pinned on the turntable and secured:

- ▶ Erect the D-boom!

LWE/LR 1600-2-001/18101-07-02/en

copyright © Liebherr-Werk Ehingen GmbH 2018

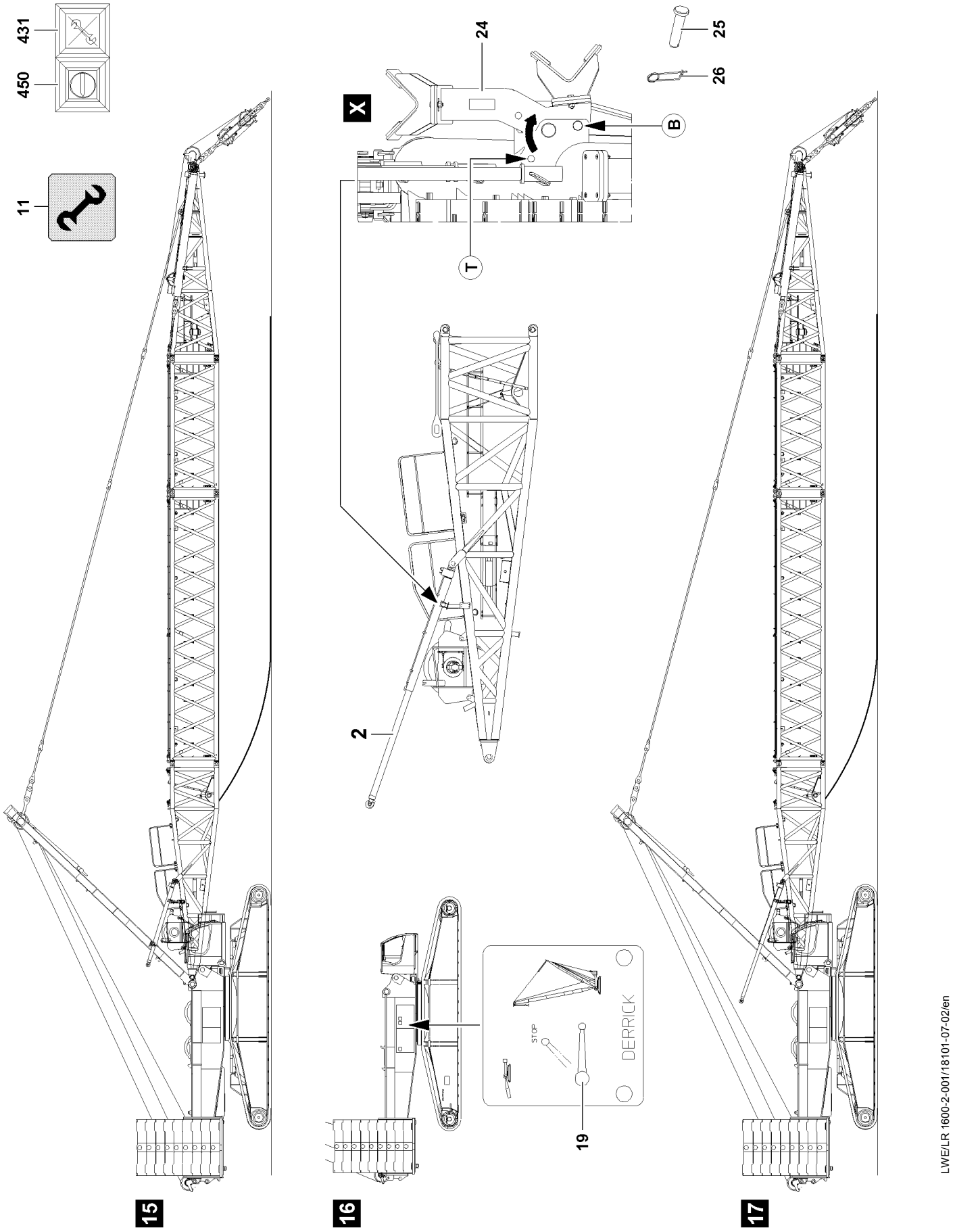

Fig.106737

copyright © Liebherr-Werk Ehingen GmbH 2018

2.15 Erecting the D-boom

DANGER
The crane can topple over!
- ▶ It is not permitted to turn the crane during erection!
- ▶ Observe the data in the erection and take down charts!

WARNING
The crane can topple over!
If the following conditions are not met before erecting the D-boom, the crane can topple over!
Personnel can be severely injured or killed!
- ▶ Observe the Safety technical notes, see chapter 5.01 in the crane operating instructions!
- ▶ Extend the D-relapse cylinder **2** before erection!
- ▶ Do not allow slack cable to build up on the control winch (winch 3)!
- ▶ The ball cock cabinet must be locked! Always pull the key and hand it to an authorized person!

WARNING
Falling hoist rope!
If the hoist rope is not reeved with the respective length over the D-boom before the erection procedure, then it can fall backward due to its own weight!
Personnel can be severely injured or killed!
- ▶ Reeve the hoist rope before the erection procedure with sufficient length on the D-boom!
- ▶ The hoist rope must be constantly monitored during erection!
- ▶ Do not step into the danger zone!

Make sure that the following prerequisites are met:
- the crane is aligned in horizontal direction,
- all electrical connections have been made,
- all limit switches are functioning,
- the counterweight has been installed to the turntable according to the load chart,
- all pin connections have been secured,
- the folding brackets of the D-relapse cylinders are in operating position, see illustration **17**,
- the D-relapse cylinders on the D-pivot section are extended,
- the hoist rope has been correctly placed in the rope pulleys and is prevented from jumping out with the rope retaining pins,
- the LICCON overload protection has been adjusted according to the data in the load chart,
- the LICCON overload protection settings have been compared with the actual crane configuration,
- the assembly key button **450** is actuated,
- the indicator light **431** „Assembly“ lights up,
- the assembly icon **11** on the LICCON monitor 0 lights up.

LWE/LR 1600-2-001/18101-07-02/en

copyright © Liebherr-Werk Ehingen GmbH 2018

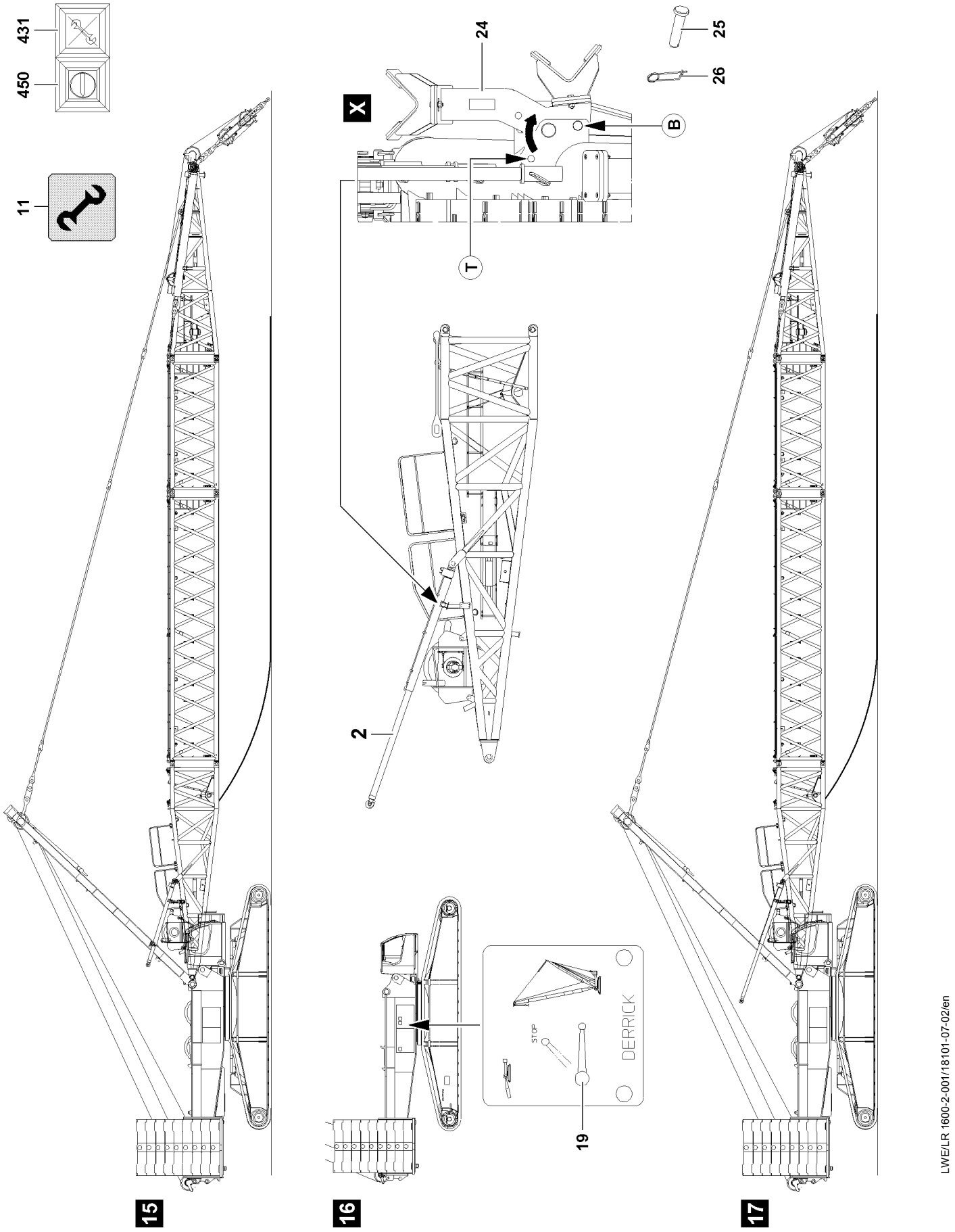

LWE/LR 1600-2-001/18101-07-02/en

Fig.106737

copyright © Liebherr-Werk Ehingen GmbH 2018

2.15.1 Extending the D-relapse cylinder

WARNING
Mortal danger due to the D-boom!
If the D-relapse cylinders are not extended before erecting the D-boom, then the D-boom can fall backward!
Personnel can be severely injured or killed!
▶ The D-relapse cylinders must be extended before erection of the D-boom!
▶ The ball cock must be secured during crane operation to prevent unintended actuation!

The piston rod on the D-relapse cylinder must be extended by actuating the ball cock **19**.

Ball cock positions	
Horizontal	Crane operation, extend the piston rod
Vertical	Assembly, retract the piston rod
45°	STOP (The piston rod cannot be retracted / extended)

Ensure that the following prerequisite is met:
– all hydraulic connections have been made.

▶ Move the ball cock **19** into horizontal position.

Result:

– The piston rods of the D-relapse cylinders **2** extend.

Note
▶ The ball cock is secured by closing the cabinet door and removing the key!

▶ Close the cabinet door and pull the key.
▶ Hand the key to an authorized person.

copyright © Liebherr-Werk Ehingen GmbH 2018

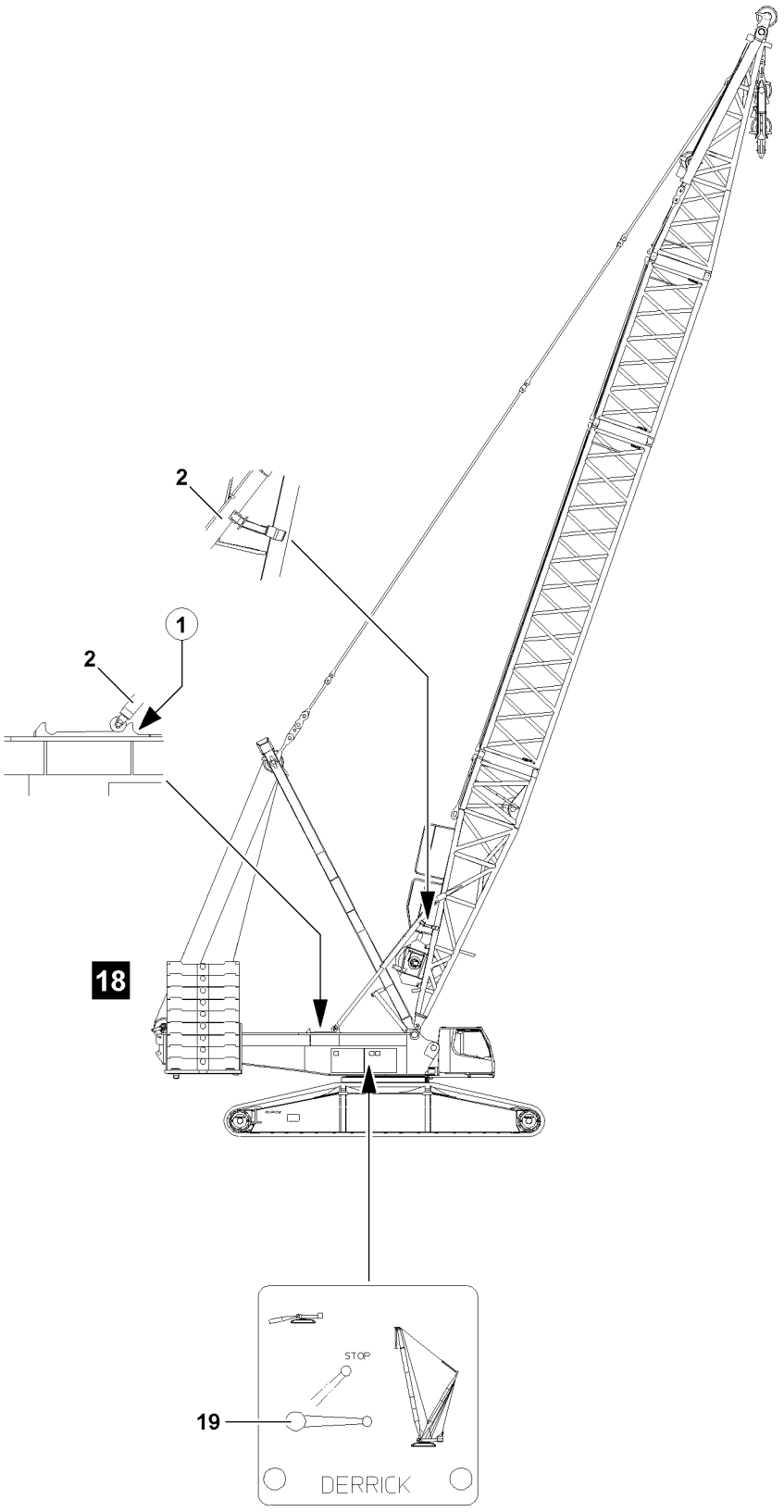

LWE/LR 1600-2-001/18101-07-02/en

Fig.106735

copyright © Liebherr-Werk Ehingen GmbH 2018

2.15.2 Erection procedure

Make sure that the following prerequisites are met:
- the D-relapse cylinders **2** are fully extended before erection,
- the control rope of winch 3 is properly reeved on the pulley block and properly secured on the rope fixed point,
- the connector pins between the upper pulley block and the lower pulley block are unpinned.

Note

▶ During the erection procedure it must be ensured that the D-relapse cylinders **2** engage past the first stop (point **1**) into the second rail on the D-relapse retainer!

DANGER

The crane can topple over!

▶ It is not permitted to turn the crane superstructure during erection procedure!

▶ Do not allow slack cable to build up on the control winch (winch 3)!

▶ Do not erect the D-boom further than maximum 80° to the horizontal!

▶ Actuate winch IV and erect the D-boom to an angle range of 75° to 80°.

LWE/LR 1600-2-001/18101-07-02/en

copyright © Liebherr-Werk Ehingen GmbH 2018

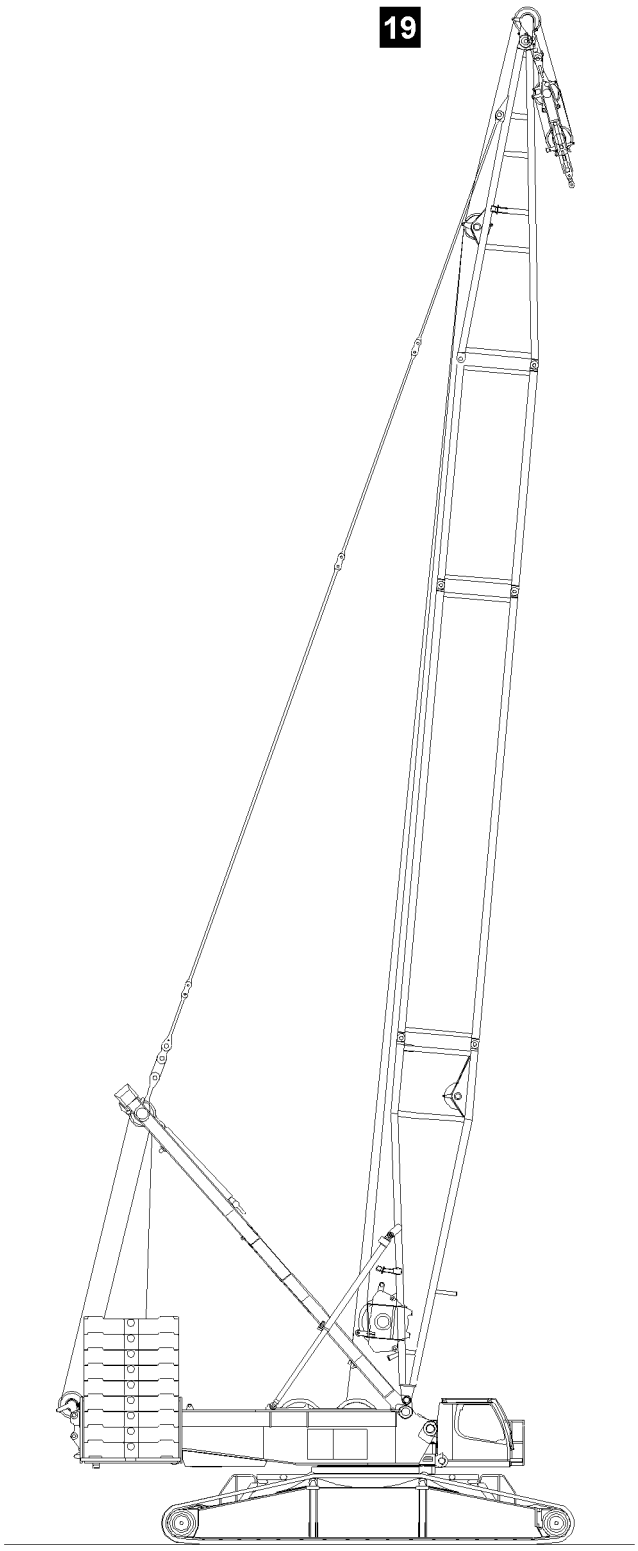

LWE/LR 1600-2-001/18101-07-02/en

Fig.106739

copyright © Liebherr-Werk Ehingen GmbH 2018

3 Disassembly

WARNING
Risk of falling!
During assembly and disassembly, the assembly personnel must be secured with appropriate aids to prevent them from falling! If this is not observed, assembly personnel could fall and suffer life-threatening or fatal injuries!

- ▶ Any work, where there is a danger of falling must be carried out with suitable aids (for example: lifting platforms, scaffoldings, ladders, auxiliary crane)!
- ▶ If the work cannot be carried out with such aids nor from the ground, then the assembly personnel must secure themselves with approved catch systems to avoid falling, see crane operating instructions, chapter 2.04 of the crane operating instructions!
- ▶ If railings are present on the components, then they must be brought into the corresponding position and secured for assembly / disassembly work!
- ▶ Only step on aids and antifall guards with clean shoes!
- ▶ Keep aids and antifall guards clean and free from snow and ice!
- ▶ During all assembly and disassembly work, maintenance work and inspections, travel or crane operation is prohibited!

WARNING
The lattice sections can fall down!
If the lattice sections are not pinned and secured correctly, then they can fall down and fatally injure personnel!

- ▶ Unpin or pin both pins at the same horizontal level, i.e. **left and right**!
- ▶ Do not stand under the lattice sections or within the complete danger zone during the pinning and unpinning procedure of the boom!
- ▶ Safely secure the pins in the bearing points as well as receptacles!
- ▶ It is prohibited to lean the ladder against the component being disassembled!

WARNING
Danger of crushing!
When assembling crane components, limbs can be crushed or even severed due to oscillation of components!

- ▶ Make sure that the component do not swinging back and forth during assembly!

DANGER
The components can fall down!
If the corresponding components are disengaged from the auxiliary crane before the corresponding component is pinned, the corresponding component can fall down and fatally injure personnel!

- ▶ Do not disengage the auxiliary crane until the corresponding component is pinned and secured!

LWE/LR 1600-2-001/18101-07-02/en

copyright © Liebherr-Werk Ehingen GmbH 2018

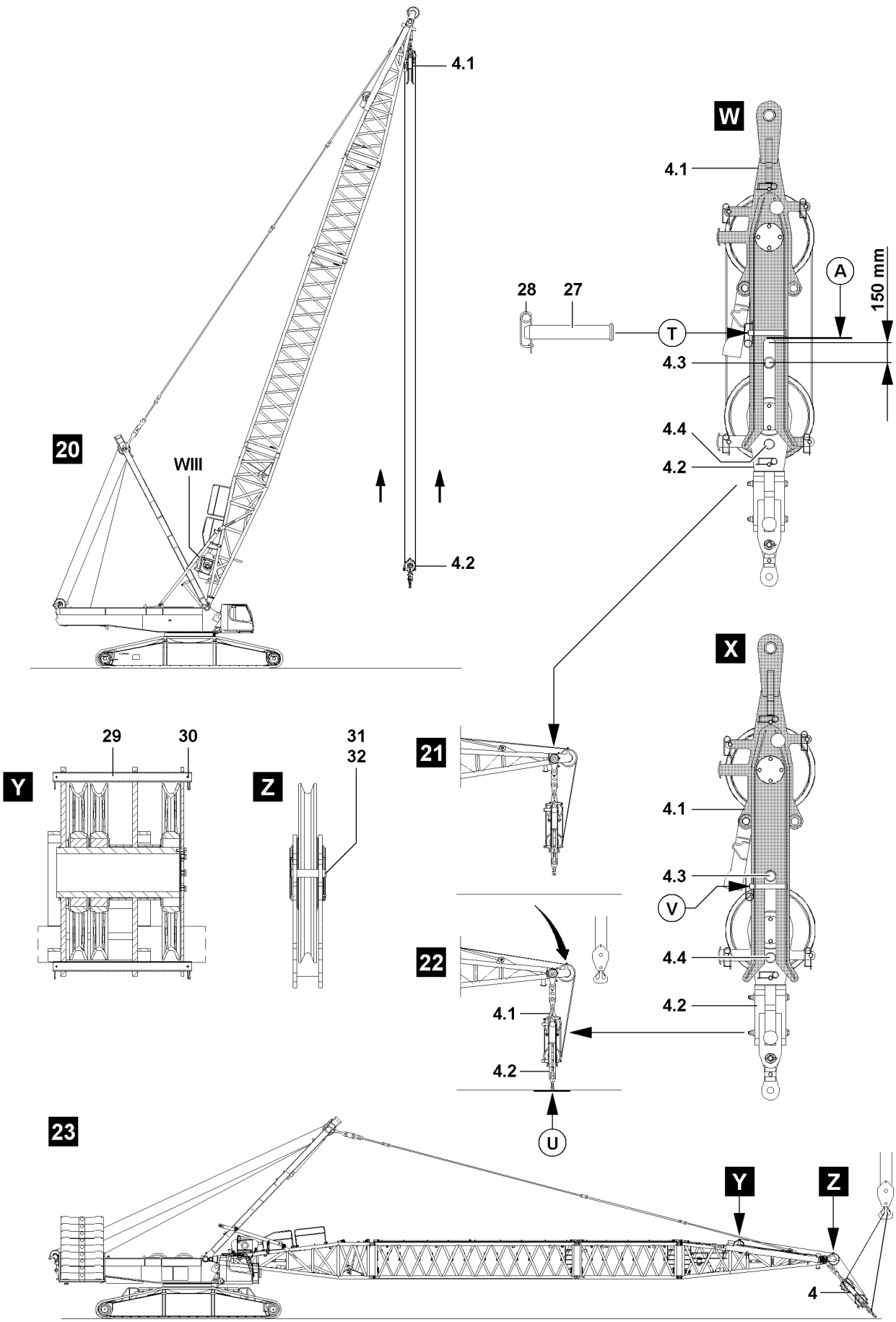

Fig.106736

LWE/LR 1600-2-001/18101-07-02/en

copyright © Liebherr-Werk Ehingen GmbH 2018

3.1 Disassembling the D-boom

WARNING
Falling boom!
If the D-boom is not properly supported before disassembly or held with an auxiliary crane, then the D-boom can fall down when it is unpinned!
Personnel can be severely injured or killed!
▶ Before supporting the D-boom, the ground condition must be checked regarding load bearing capability and level.

If the ground condition is not classified as sufficient:
▶ Support the D-boom properly and safely with suitable material!

3.1.1 Luffing the D-boom down

NOTICE
Damage to the pulley block!
If the D-boom is lowered too quickly „to the front“, significant damage can occur on the pulley block and on the D-end section!
▶ Lower the D-boom carefully to the front!

▶ Lower the D-boom to the front until the pulley block is just above the ground.

LWE/LR 1600-2-001/18101-07-02/en

copyright © Liebherr-Werk Ehingen GmbH 2018

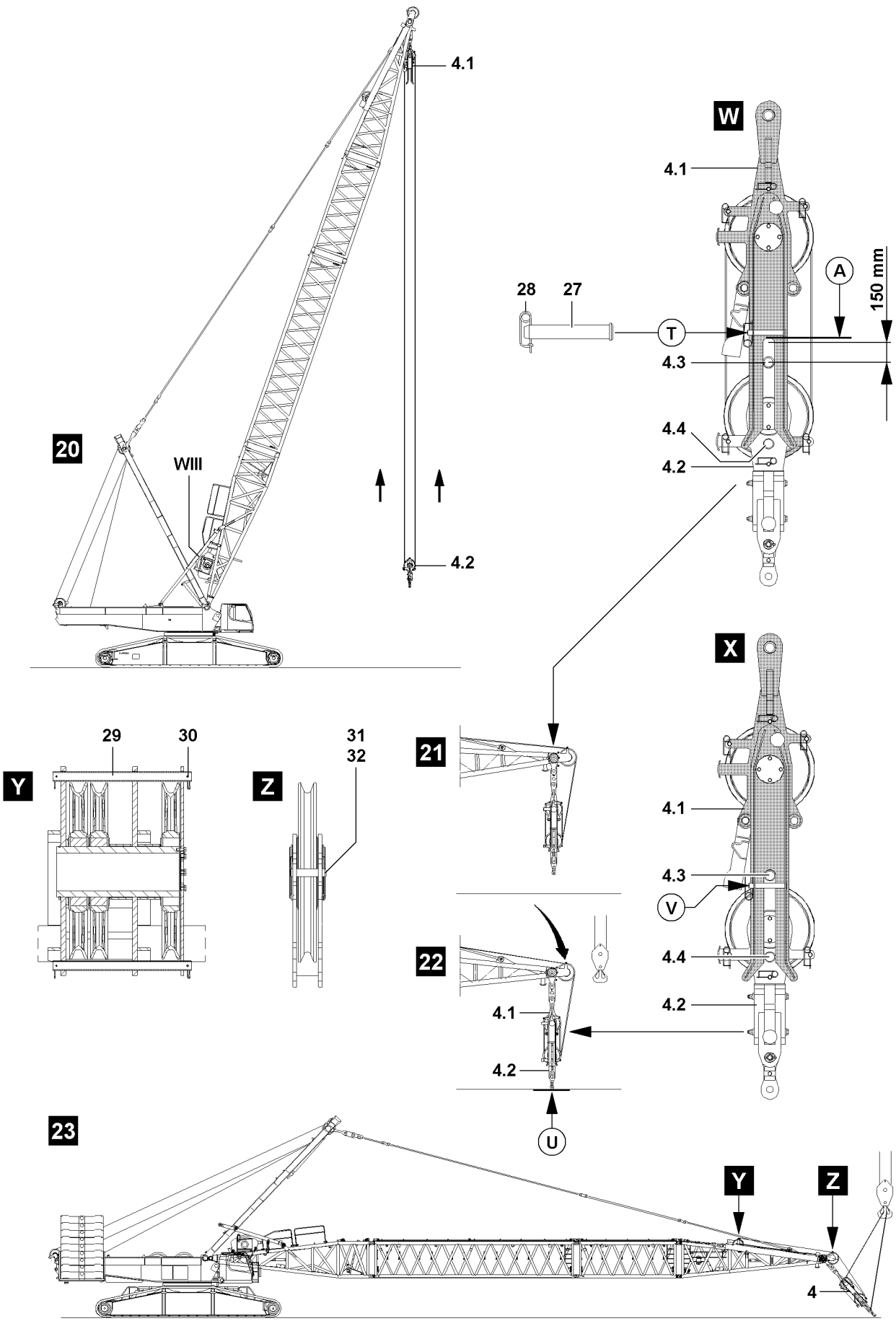

Fig.106736

LWE/LR 1600-2-001/18101-07-02/en

copyright © Liebherr-Werk Ehingen GmbH 2018

3.1.2 Pinning the upper pulley block with the lower pulley block

Make sure that the following prerequisites are met:
- the main boom is completely disassembled,
- the upper pulley block **4.2** hangs in reeved condition above the ground level, see illustration **20**,
- the retaining pin **27** on the bracket of the lower pulley block **4.1** is unpinned on point **V**, see illustration **W**.

The upper pulley block **4.2** must be pinned with the lower pulley block **4.1** before the complete pulley block **4** can be placed in the transport receptacle on the D-pivot section.

▶ Slowly luff the D-boom down and spool up winch 3 at the same time until the upper pulley block **4.2** is connected with the guide pin **4.3** in the bracket to approx. 150 mm on the stop, point **A** of the lower pulley block **4.1**, see illustration **21** and illustration **W**.

When the upper pulley block is approx. 150 mm before the stop of the lower pulley block **4.1**, point **A**:
▶ Slowly and carefully luff the D-boom down until the upper pulley block **4.2** is in contact with the ground (point **U**), see illustration **22**.

NOTICE
Danger of property damage on the pulley block!
If the D-boom is luffed down too quickly, then significant property damage can occur on the upper as well as the lower pulley block!
▶ Always use a guide when connecting the upper and lower pulley block!
▶ Carry out all crane movements slowly and with utmost caution!
▶ When the guide pin **4.3** reaches the stop at point **A**, stop the luff down movement of the D-boom immediately!

When the upper pulley block **4.2** is in contact with the ground at point **U**, illustration **22**:
▶ Luff the D-boom down slowly and carefully until the guide pin **4.3** is entered to the stop at point **A**.

When the guide pin **4.3** touches on stop point **A** of the lower pulley block **4.1**, illustration **X**:
▶ Stop the luff down movement immediately.
▶ Pin in the retaining pins **27** on both sides on the bracket of the lower pulley block **4.1** at point **V** and secure with spring retainer **28**.

Result:

– The upper pulley block **4.2** is connected with the lower pulley block **4.1** and now forms the „transport unit“ pulley block **4**, illustration **23**.

Before the pulley block **4** can be placed in the transport receptacle on the D-pivot section, the rope retaining pin **29**, see illustration **Y** and the rope retaining pin **31**, see illustration **Z** must be removed, illustration **23**.

▶ Remove the spring retainer **30** on the rope retaining pin **29**.
▶ Unpin the rope retaining pin **29**, illustration **Y**.
▶ Remove the spring retainer **32** on the rope retaining pin **31**.
▶ Unpin the rope retaining pin **31**, illustration **Z**.

LWE/LR 1600-2-001/18101-07-02/en

copyright © Liebherr-Werk Ehingen GmbH 2018

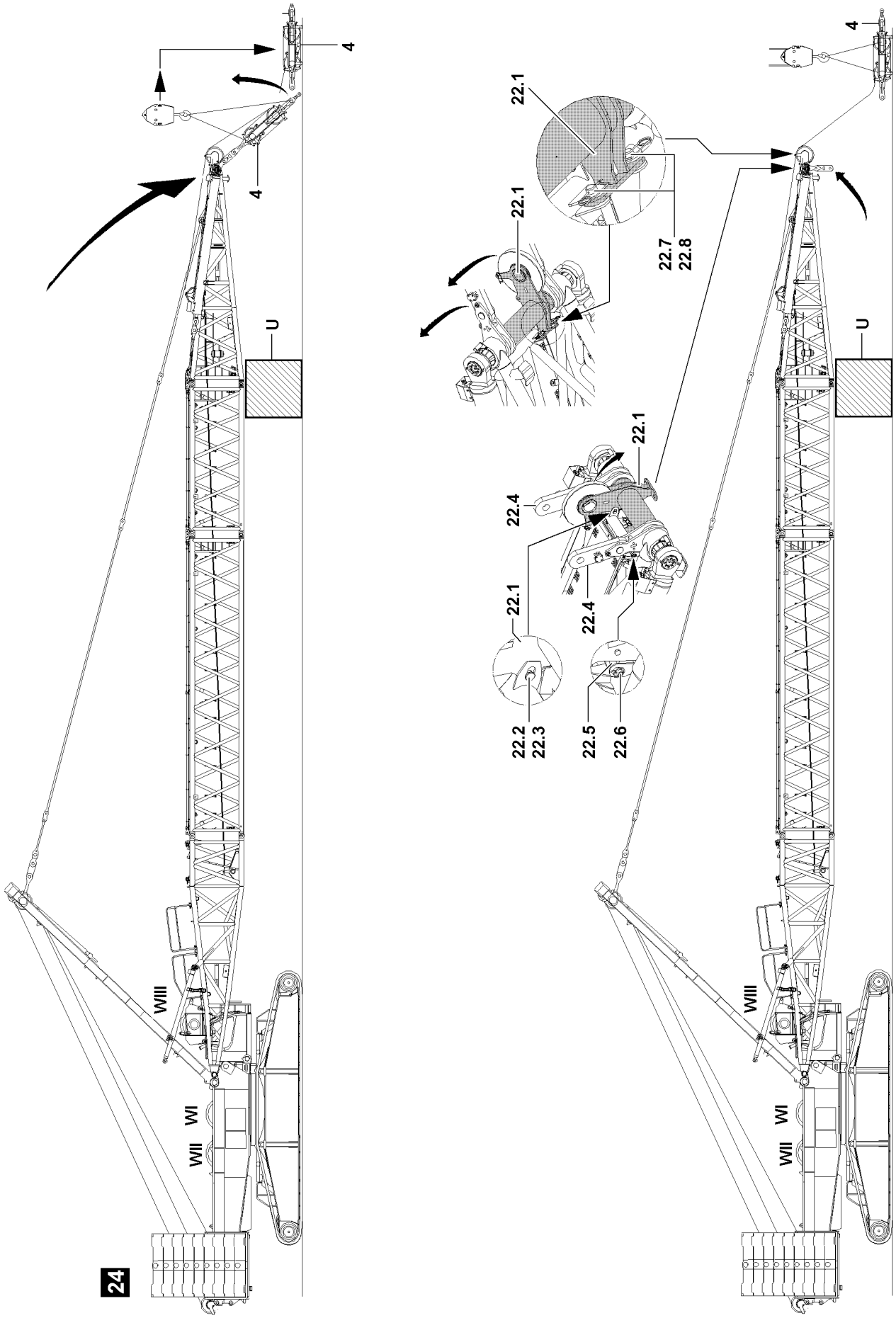

Fig.106753

LWE/LR 1600-2-001/18101-07-02/en

copyright © Liebherr-Werk Ehingen GmbH 2018

3.1.3 Place the pulley block on the ground

NOTICE
Damage to the pulley block!
If the D-boom is placed on the support **U**, the pulley block can be damaged!
▶ Before placing the D-boom on the support **U**, lift the pulley block with the auxiliary crane off the ground!

▶ Attach the pulley block **4** on the auxiliary crane and lift it off the ground, see illustration **24**.
▶ Luff the D-boom down carefully to the support **U**.

Disassemble the pulley block on the pull test brackets and place it on the ground in sufficient distance.

▶ Unpin the pulley block **4** on the pull test brackets **22.4**.
▶ Swing the pulley block **4** out with the auxiliary crane and spool winch 3 out at the same time.
▶ Place the pulley block **4** on the ground with the auxiliary crane.
▶ Remove the auxiliary crane.

3.1.4 Bring the pulley retainer into transport position

Make sure that the following prerequisites are met:
– the pulley block is disassembled on the D-end section and placed on the ground.

WARNING
Mortal danger due to pulley retainer!
If the pulley retainer is not secured with an auxiliary crane during the swing procedure, it can swing forward with a large momentum due to its weight!
Personnel can be severely injured or killed!
▶ Swing the pulley retainer into transport position only with the aid of an auxiliary crane!
▶ Swinging the pulley retainer without an auxiliary crane is **prohibited**!

▶ Unpin the pulley retainer **22.1** in operating position: Remove the spring retainer **22.8** and unpin the pin **22.7**, see illustration **Y**.
▶ Unpin the retaining pin **22.2** in transport position of the pulley retainer: Remove the spring retainer **22.3** and unpin the retaining pin **22.2**, see illustration **28**.
▶ Attach the pulley retainer **22.1** on the auxiliary crane.
▶ Swing the pulley retainer **22.1** upward with the auxiliary crane into transport position.

When the pulley retainer **22.1** is in transport position:
▶ Pin in the retaining pin **22.2** and secure with spring retainer **22.3**, see illustration **28**.

When the pulley retainer **22.1** is pinned and secured in transport position:
▶ Remove the auxiliary crane.

LWE/LR 1600-2-001/18101-07-02/en

copyright © Liebherr-Werk Ehingen GmbH 2018

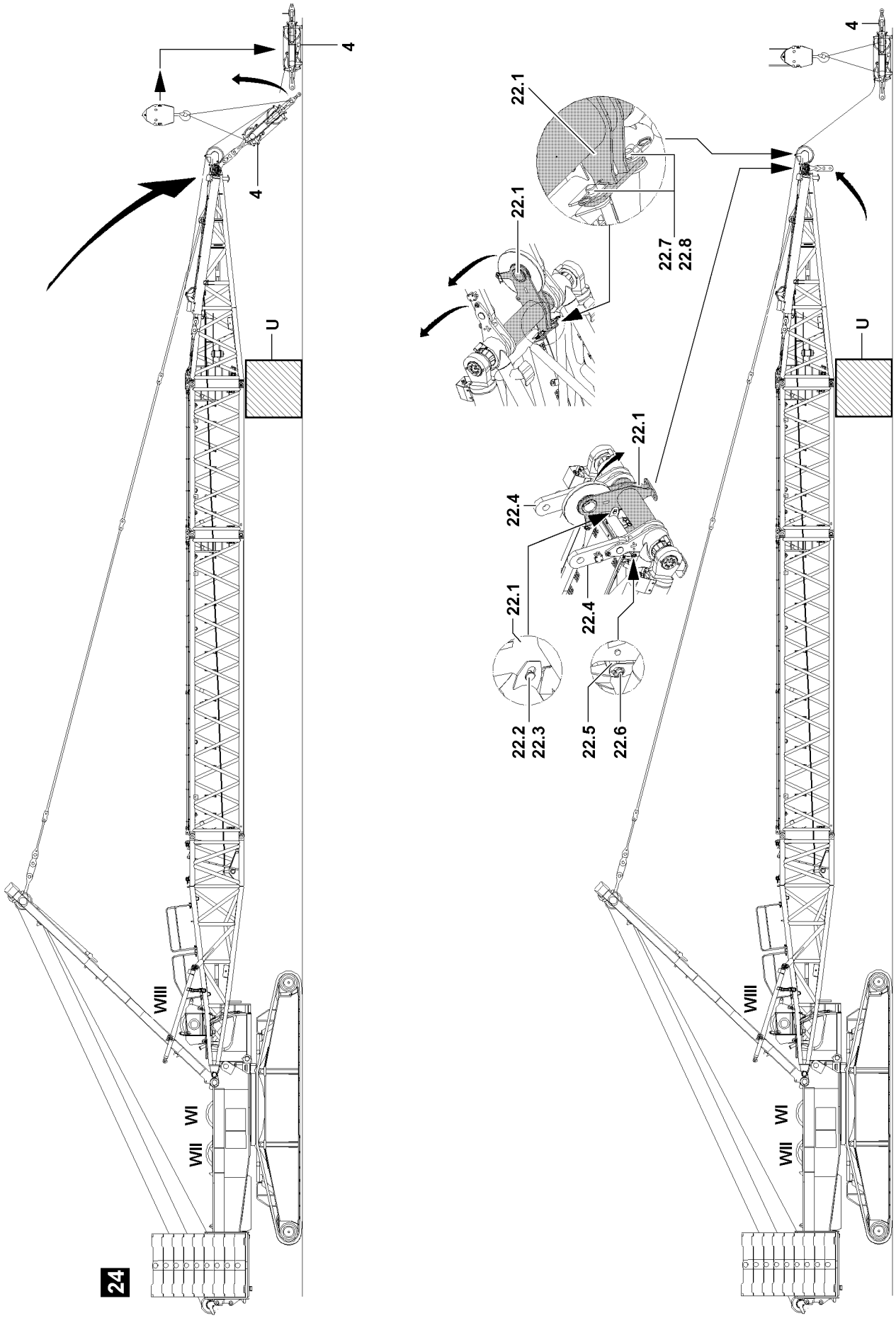

Fig.106753

LWE/LR 1600-2-001/18101-07-02/en

copyright © Liebherr-Werk Ehingen GmbH 2018

3.1.5 Bring the pull test brackets into transport position

WARNING
Danger of crushing!
If the pull test brackets are not secured with an auxiliary crane during the swing procedure, they can swing forward with a large momentum due to their weight and severely injure personnel!
Serious crushing injuries may be the result!
- ▶ Swing the pull test brackets into operating position only with the aid of an auxiliary crane!
- ▶ Swinging the pull test brackets without an auxiliary crane is prohibited!
- ▶ Bring the pull test brackets individually into transport position!

▶ Attach the pull test bracket onto the auxiliary crane.

When the pull test bracket **22.4** is attached on the auxiliary crane:
- ▶ Tension the tackle carefully.
- ▶ Remove the linch pin **22.6** on the transport retainer and unpin the retaining pin **22.5**, see illustration **28**.
- ▶ Swing thepull test bracket **22.4** upward with the auxiliary crane into transport position.

When the pull test bracket **22.4** is in transport position:
- ▶ Pin in the pin **22.5** in transport position and secure with linch pin **22.6**.

When the pull test bracket **22.4** is pinned and secured in transport position:
- ▶ Remove the auxiliary crane.

LWE/LR 1600-2-001/18101-07-02/en

copyright © Liebherr-Werk Ehingen GmbH 2018

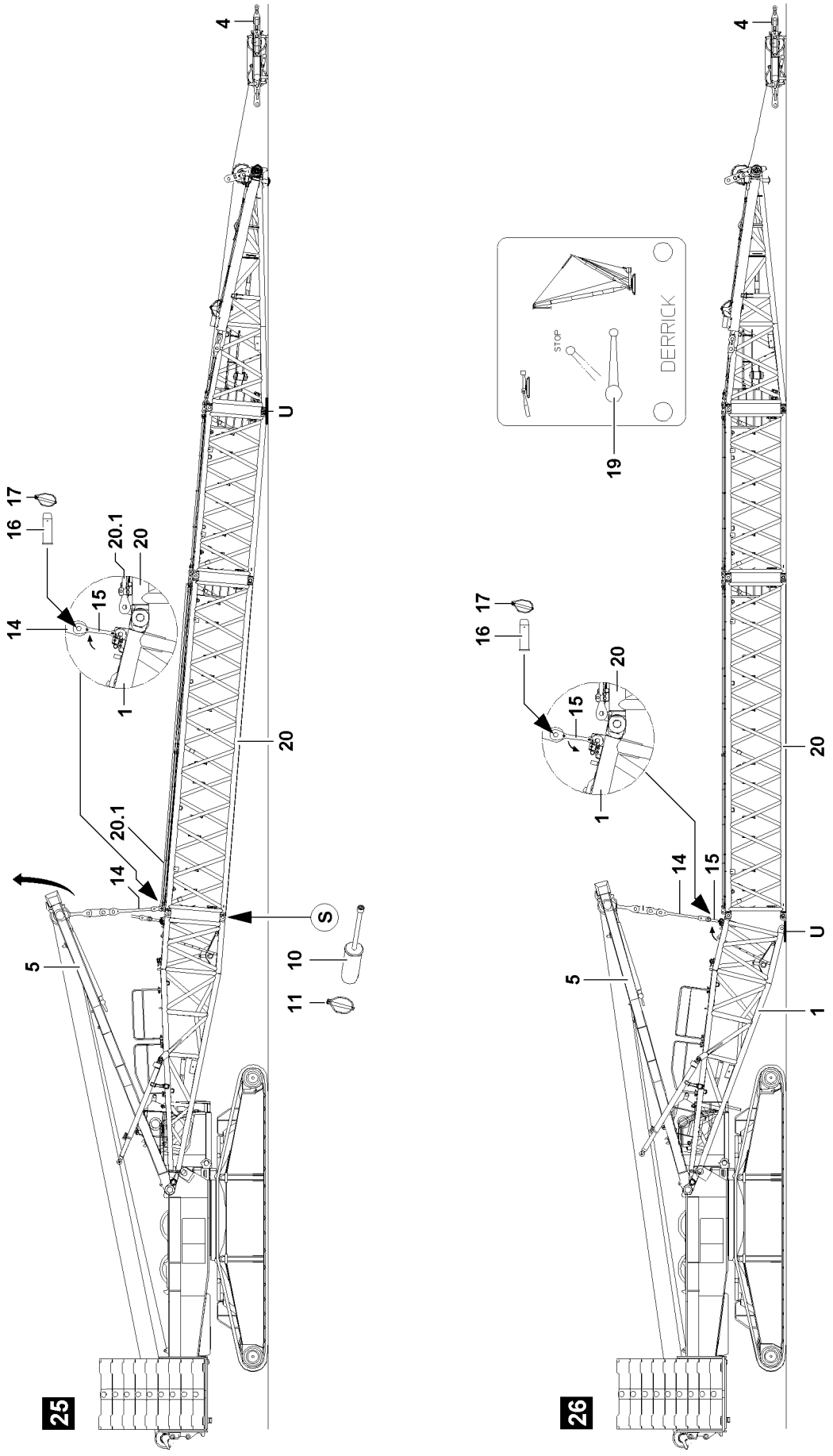

Fig.106740

LWE/LR 1600-2-001/18101-07-02/en

copyright © Liebherr-Werk Ehingen GmbH 2018

3.1.6 Disassembling the D-guy rods

- ▶ Place the guy rods into the transport retainers of the D-intermediate sections: Lower the SA-frame to the front.
- ▶ Pin and secure the guy rods in the transport retainers.
- ▶ Unpin the guy rods **14** of the SA-frame and the guy rods **20.1** of the D-intermediate section: Remove the linch pin **17** and unpin the pin **16**.

3.1.7 „Open“ the D-boom and place it down

Note

- ▶ For disassembly of the D-boom, the guying of the SA-frame **5** must be pinned with the lug **15** on the D-pivot section so that the D-boom can be lowered over the SA-frame on the support **U** and removed!

When the boom guying between the guy rods **14** of the SA-frame and the guy rods **20.1** of the D-intermediate section **20** is unpinned:

- ▶ Pin the guy rods **14** of the SA-frame **5** and guy rods **15** of the D-pivot section **1**, pin in the pin **16** and secure with linch pin **17**, see illustration **25**.
- ▶ Luff the SA-frame **5** up until the guying between the SA-frame and the D-pivot section **20** is tensioned.

WARNING
Falling D-boom!
When unpinning the D-boom on the D-pivot section, the D-boom can fall down!
Personnel can be killed or severely injured!

- ▶ It is prohibited for anyone to remain under the D-boom during the unpinning procedure!
- ▶ Make sure that the D-boom is safely held by the guying!

- ▶ Unpin the D-pivot section **1** on the D-intermediate section **20**: Release pins **10** on both sides at point **S** and unpin.

When the pins **10** are unpinned on both sides at point **S**:

- ▶ Luff the SA-frame down and place the D-boom on the ground, see illustration **26**.
- ▶ Luff the SA-frame down until the guying is relieved.
- ▶ Unpin the guying: Release and unpin the pin **16**.
- ▶ Luff the SA-frame up to approx. 75 to 80°.

3.1.8 Retract the D-relapse cylinder

The piston rod on the D-relapse cylinder must be retracted by actuating the ball cock **19**.

- ▶ Move the ball cock **19** into vertical position.

Result:

– The piston rod of the D-relapse cylinder retracts.

copyright © Liebherr-Werk Ehingen GmbH 2018

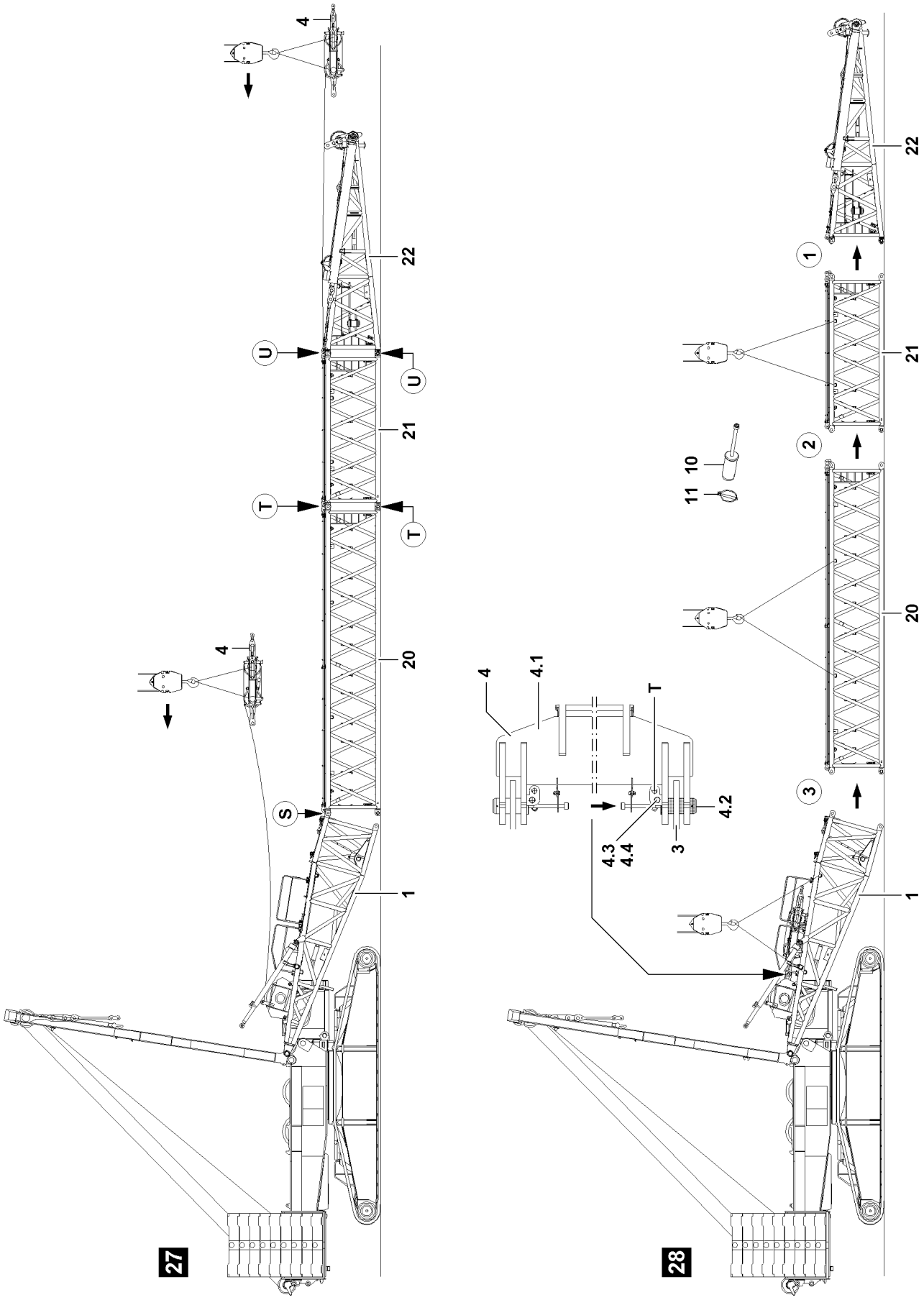

Fig.106744

LWE/LR 1600-2-001/18101-07-02/en

copyright © Liebherr-Werk Ehingen GmbH 2018

3.1.9 Place the pulley block into the transport retainer on the D-pivot section

Make sure that the following prerequisites are met:
- the lower and the upper pulley block are pinned together as a „transport unit“ pulley block **4**,
- the rope retaining pins on the D-end section are released and unpinned,
- the guy rods are placed in the transport retainers and secured,
- the SA-frame is luffed up to approx. 75 to 80°,
- the D-boom is laying fully on the ground (on the support).

▶ Attach the pulley block **4** onto the auxiliary crane.
▶ Tension the tackle between the pulley block and the hook block of the auxiliary crane.

NOTICE
Ropes may become slack!
▶ Hold the control rope of winch 3 always slightly tensioned!

▶ Pull the pulley block **4** with the auxiliary crane to the D-pivot section while spooling out winch 3 at the same time.
▶ Place the pulley block **4** into the transport retainer on the D-pivot section.
▶ Pin and secure the pulley block **4** in the transport retainer on the D-pivot section with winch **3**: Pin in the pin **4.2** and secure with retaining pin **4.3** and spring retainer **4.4**.

3.1.10 Disassembling the D-lattice components

WARNING
Tipping lattice sections!
When the lattice sections are unpinned, they can tip over, depending on the ground or the support!
Personnel can be severely injured or killed!
▶ The lattice sections must be safely held by the auxiliary crane before unpinning them!
▶ The tackle must be tensioned before unpinning!

Release and unpin the pin **11** „at the bottom“ at point **U**.

▶ Remove the linch pin **11** „on the bottom“ at point **U** on pin **10**.
▶ Unpin the pin **10** „at the bottom“ at point **U**.
▶ Hang the D-end section on the auxiliary crane.

When the D-end section is being held by the auxiliary crane:
▶ Release and unpin the pin **10** „on top“ at point **U**.
▶ Remove the D-end section with the auxiliary crane.
▶ Attach the D-intermediate section **21** on the auxiliary crane.
▶ Release and unpin the D-intermediate section **21** on the „bottom“ at point **T**.
▶ Release and unpin the D-intermediate section **21** on the „top“ at point **T**.
▶ Remove the D-intermediate section **21** with the auxiliary crane.
▶ Attach the D-intermediate section **20** on the auxiliary crane.
▶ Release and unpin the D-intermediate section **20** on the „top“ at point **S**.
▶ Remove the D-intermediate section **20** with the auxiliary crane.

LWE/LR 1600-2-001/18101-07-02/en

copyright © Liebherr-Werk Ehingen GmbH 2018

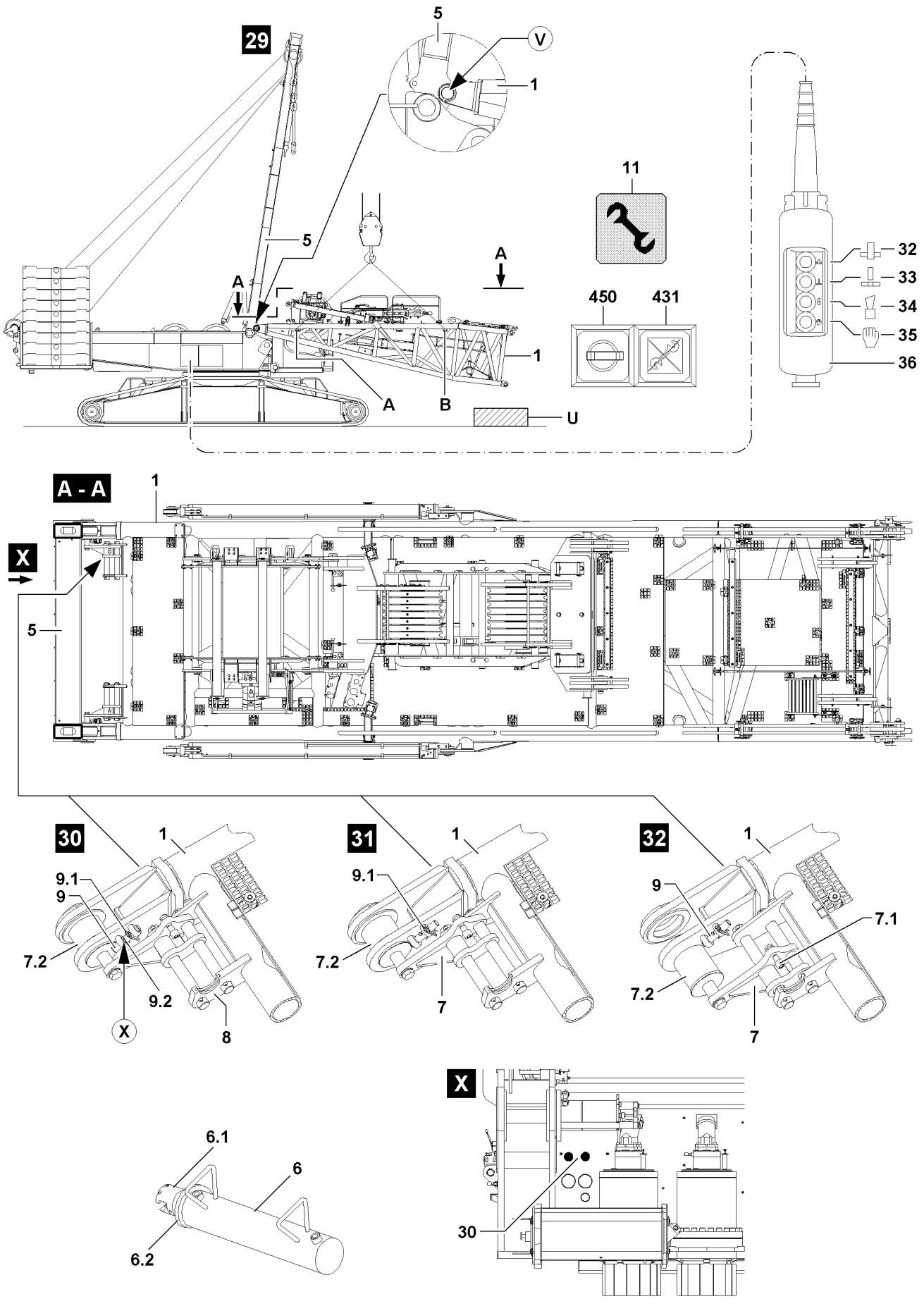

Fig.106745

LWE/LR 1600-2-001/18101-07-02/en

copyright © Liebherr-Werk Ehingen GmbH 2018

- ▶ Attach the D-pivot section **1** on the attachment points **A** and attachment points **B** on the auxiliary crane.
- ▶ Lift the D-pivot section **1** with the auxiliary crane off the ground.
- ▶ Hang the pin pulling cylinder **6** in the cylinder mount **8**, see illustration **30**.
- ▶ Release the connector pin **7.2**: Remove the spring retainer **9.1** and push retaining pin **9** „up“.
- ▶ Secure the retaining pin **9** in the „up“ position: Use the spring retainer **9.1**, see illustration **31**.

Establish the hydraulic connection to the pin pulling device via two quick couplers **30**, see illustration **X**.

Unpin the D-pivot section on the turntable.

- ▶ Unpin the connector pins **7.2** with the hydraulic pin pulling device.
- ▶ Unpin the connector pins **7.2** on both sides with the hydraulic pin pulling cylinder **6**: Press the button **35** on the control panel **36** and „hold it down“, then press the button **33** until the connector pin **7.2** is fully unpinned.

When the connector pins **7.2** are fully unpinned on both sides:

- ▶ Release the electrical and hydraulic connections from the turntable to the D-pivot section.
- ▶ Remove the pin pulling cylinder **6** on the D-pivot section **1**.
- ▶ Remove the D-pivot section with the auxiliary crane.

3.1.11 Disassembling the railing on the D-pivot section

Note

- ▶ To retain the transport dimensions on the D-pivot section, remove the railings!

The railings must be removed after disassembly of the D-pivot section and stored in the transport retainer.

- ▶ Insert the railings in the intended transport retainers on the D-pivot section and secure with spring retainers.

LWE/LR 1600-2-001/18101-07-02/en

copyright © Liebherr-Werk Ehingen GmbH 2018

Empty page!

LWE/LR 1600-2-001/18101-07-02/en

copyright © Liebherr-Werk Ehingen GmbH 2018

5.07 SW/SDW boom combination

1	Component overview W-boom system	3
2	Fastening points W-transport units	3
3	Assembling the W-boom system	5
4	Operating the crane	35
5	Disassembling the W-boom system	37

LWE/LR 1600-2-001/18101-07-02/en

copyright © Liebherr-Werk Ehingen GmbH 2018

T1

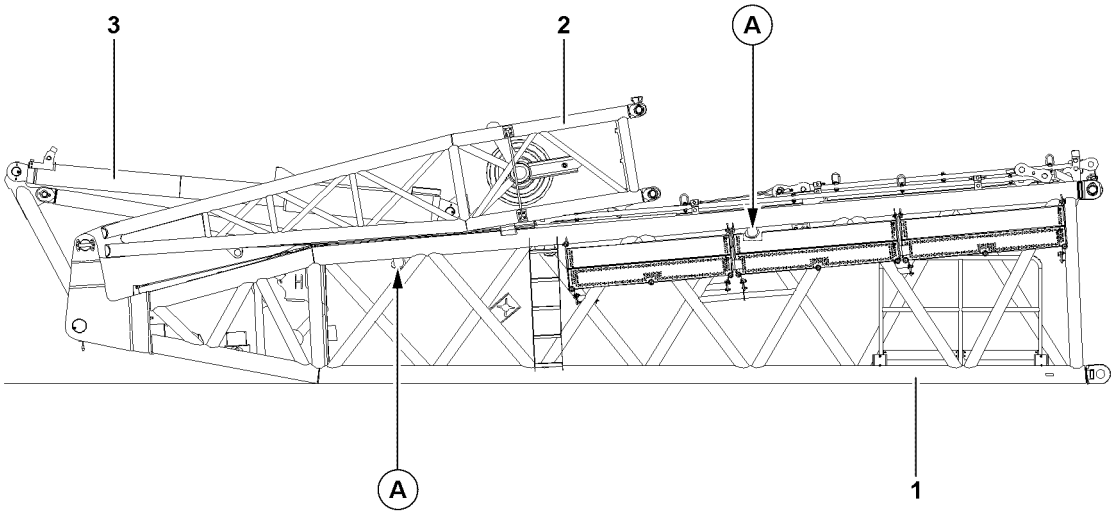

T2

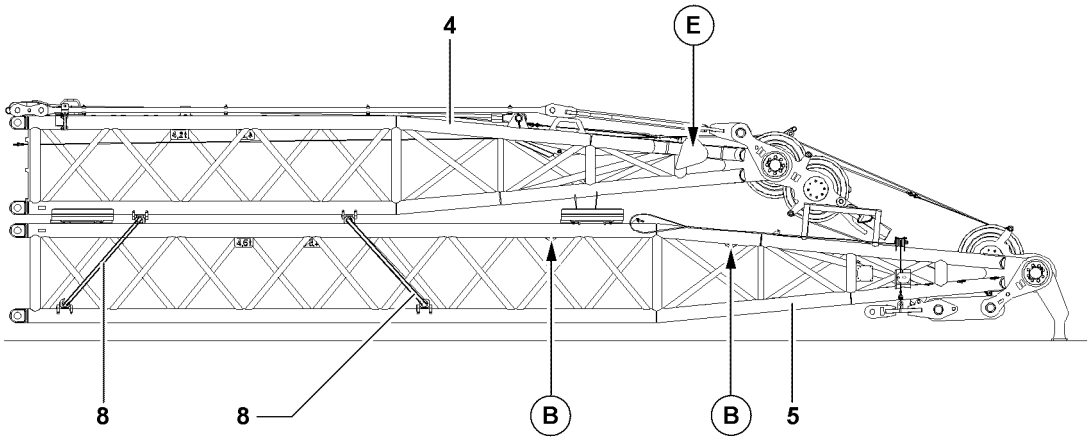

T3

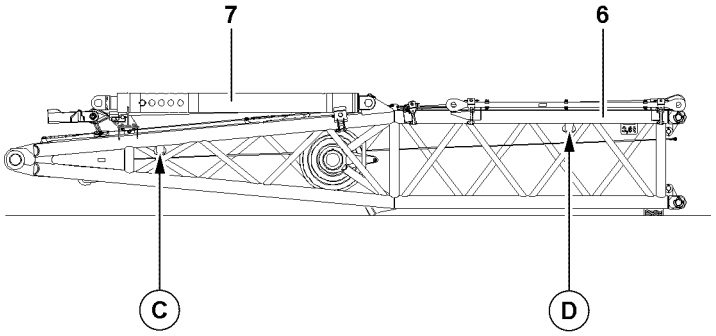

LWE/LR 1600-2-001/18101-07-02/en

Fig.107230

copyright © Liebherr-Werk Ehingen GmbH 2018

1 Component overview W-boom system

The transport unit **T1** consists of:
- **1** W-pivot section
- **2** WA-frame 1, pivot section
- **3** W-relapse retainer

The transport unit **T2** consists of:
- **4** WA-frame 2, end section
- **5** WA-frame 1, end section
- **8** Lashing belts

The transport unit **T3** consists of:
- **6** WA-frame 2, pivot section
- **7** Relapse support

Position	Component	Weight
T1	Transport unit 1	12 t
T2	Transport unit 2	8.7 t
T3	Transport unit 3	3.6 t

2 Fastening points W-transport units

Fastening points	
A	For transport unit 1
B	For transport unit 2
C/D	For transport unit 3
E	For WA-frame 2

LWE/LR 1600-2-001/18101-07-02/en

copyright © Liebherr-Werk Ehingen GmbH 2018

LWE/LR 1600-2-001/18101-07-02/en

Fig.195219

copyright © Liebherr-Werk Ehingen GmbH 2018

3 Assembling the W-boom system

WARNING
Danger of falling!
During assembly / disassembly work, personnel must be secured with appropriate aids to prevent them from falling. If this is not observed, assembly personnel could fall and suffer life-threatening or fatal injuries.

- ▶ All assembly work must be carried out using suitable aids (ladder, lifting platform, scaffolding, auxiliary crane, etc.)!
- ▶ If work cannot be carried out on the ground or using such aids, then assembly personnel must secure themselves with the personal fall arrest system (see chapter 2.04) to protect against falling! The personal fall arrest system must be attached in the corresponding fastening points on the crane (see chapter 2.06).
- ▶ If railings are present on the components, then they must be brought into the corresponding position and secured for assembly / disassembly work.
- ▶ Step on aids and fall protection equipment only with clean shoes!
- ▶ Keep aids and fall protection equipment clean and free from snow and ice!

WARNING
Falling components!
If unsecured or non-supported components are assembled or disassembled, they can fall down. Personnel can be killed or seriously injured.

- ▶ During pinning and unpinning of the lattice sections, it is prohibited for anyone to remain **under** or **on** the components as well as within the entire danger zone!
- ▶ Support the boom and components before pinning / unpinning!
- ▶ Pin or unpin both pins laying in a horizontal, i.e. **left** and **right**!
- ▶ Secure the pins in the bearing points and in the receptacles!
- ▶ Do not disengage the auxiliary crane until each component is pinned on and secured!
- ▶ It is prohibited to lean a ladder against the component being disassembled!

WARNING
Danger of crushing!
Components can swing during assembling. Hands can be crushed or severed.

- ▶ Make sure that the components do not swing back and forth during assembly!

WARNING
Neglected inspection and maintenance on guy rods!
If the regular inspection and maintenance of the guy rods is not carried out or is carried out only in irregular intervals, then severe accidents can occur due to existing and unrecognized damage to the guy rods!
Personnel can be severely injured or killed!

- ▶ Check the guy rods before every assembly, see chapter 8.15.

LWE/LR 1600-2-001/18101-07-02/en

copyright © Liebherr-Werk Ehingen GmbH 2018

1

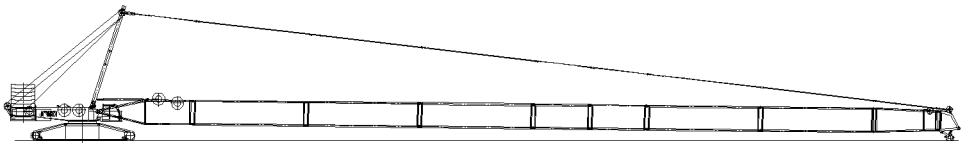

2

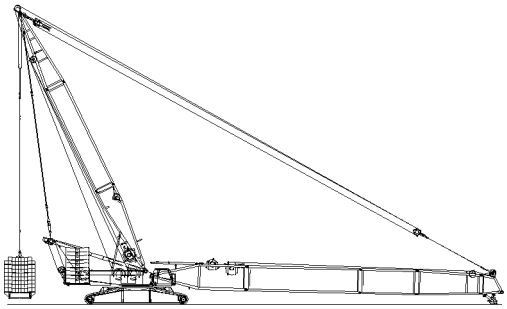

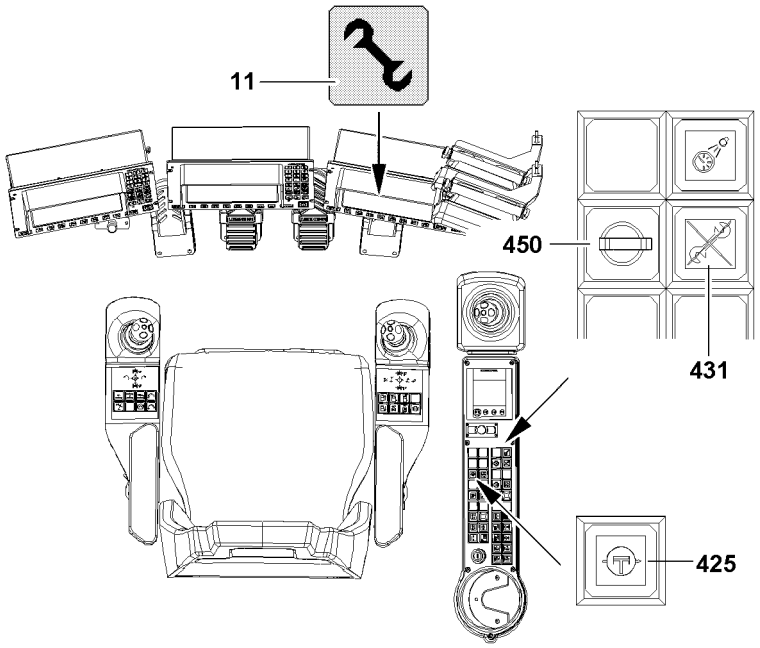

LWE/LR 1600-2-001/18101-07-02/en

Fig.106726

copyright © Liebherr-Werk Ehingen GmbH 2018

Note
▶ By supporting the components during assembly / disassembly, ground unevenness is compensated for and the material is protected.

Note
▶ The W-intermediate sections are pinned and unpinned with the aid of the pin pulling device, see chapter 5.30.

NOTICE
Property damage!
▶ Always insert the pins of the guy rods from the „inside“ to the „outside“.

Note
▶ The S-guy rods must be assembled and secured according to the separately supplied assembly drawings. The numbering on the assembly drawings must be identical to the numbering on the guy rods.

Note
▶ The boom combinations must be assembled according to the separately supplied rod and assembly plans!

The W-boom system can be assembled on the following basic configurations:
– S-operation, see illustration **1**.
– SDB-operation, see illustration **2**.

DANGER
Danger of fatal injury in crane operation with enabled assembly key button.
▶ The actuation of the assembly key button **450** is only permitted for assembly tasks!
▶ The assembly key button may only be operated by persons who are aware of the consequences of a bypass!
▶ If the assembly key button **450** is turned on, the hoist limit switch and the LICCON overload protection is bypassed!
▶ Crane operation with the assembly key button **450** turned on is strictly prohibited!
▶ The assembly key **450** must be removed immediately after carrying out the assembly work and handed to an authorized person!

Make sure that the following prerequisites are met:
– The crane is horizontally aligned.
– The S-boom is assembled.
– In SDWB operation: The derrick boom and derrick ballast are assembled.
– The W-connector head is assembled on the S-boom.
– The counterweight is installed on the turntable and placed on the derrick ballast according to the load chart.
– The LICCON overload protection has been set according to the data in the load chart.
– The assembly key button **450** is pressed and the indicator light **431** lights up.
– The assembly icon **11** on the LICCON monitor blinks.
– An auxiliary crane is available.

LWE/LR 1600-2-001/18101-07-02/en

copyright © Liebherr-Werk Ehingen GmbH 2018

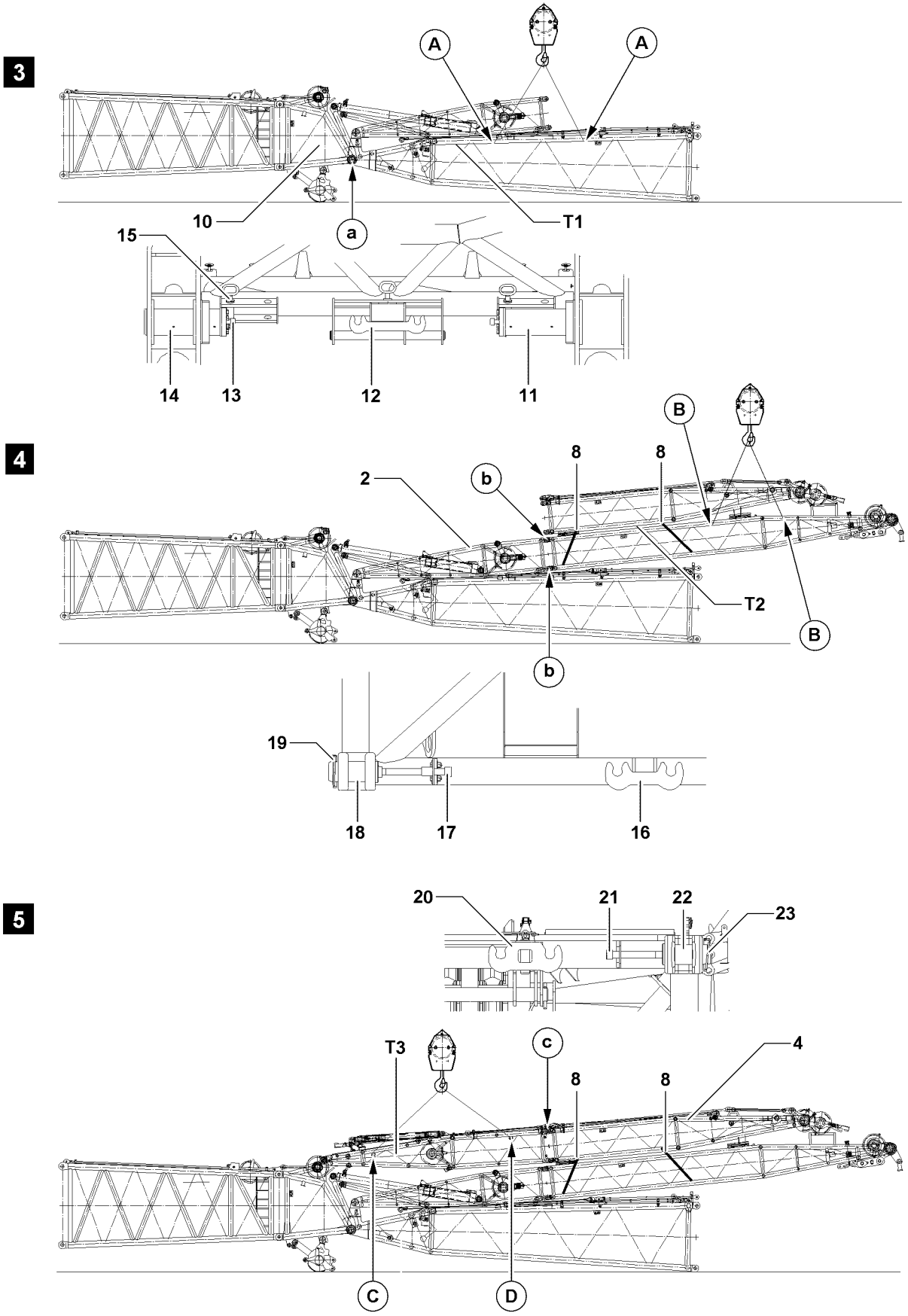

LWE/LR 1600-2-001/18101-07-02/en

Fig.107237

copyright © Liebherr-Werk Ehingen GmbH 2018

3.1 Assembling the W-transport units

3.1.1 Assembling the W-transport unit 1

See illustration **3**

- ▶ Fasten the auxiliary crane on the fastening points **A** on the transport unit **T1**.
- ▶ Hang the pin pulling cylinder on the retainer **12** and on the screw **13**.
- ▶ Make sure that the connecting pin **15** is removed.

Result:

– Pin **14** is released and can be pinned in.

- ▶ Pin transport unit **T1** on the point **a** both sides on the W-connector head **10** with pin **14** and secure with connecting pin **15**.

3.1.2 Assembling the W-transport unit 2

See illustration **4**

Make sure that the following prerequisite is met:
– The lashing belts are tightly rigged on transport unit 2.

WARNING
Slipping component!
If the lashing belts are not present or insufficiently secured while lifting the transport unit 2, the end section of the WA-frame 2 can slide down. Personnel can be severely injured or killed.
- ▶ Make sure that the lashing belts **8** on the transport unit **T2** are tightly secured.

- ▶ Fasten the auxiliary crane on the fastening points **B** on the transport unit **T2**.
- ▶ Hang the pin pulling cylinder on the retainer **16** and on the screw **17**.
- ▶ Pin the transport unit **T2** on the WA-frame 1 pivot section **2** on both sides at the points **b** with pins **18** and secure with linch pins **19**.

3.1.3 Assembling the W-transport unit 3

See illustration **5**

- ▶ Fasten the auxiliary crane on the fastening points **C** on the transport unit **T3**.
- ▶ Hang the pin pulling cylinder on the retainer **20** and on the screw **21**.
- ▶ Pin the transport unit **T3** on the WA-frame 2 end section **4** on both sides on point **c** with pins **22** and secure with linch pins **23**.
- ▶ Remove lashing belts **8** on the transport unit **T2**.

LWE/LR 1600-2-001/18101-07-02/en

copyright © Liebherr-Werk Ehingen GmbH 2018

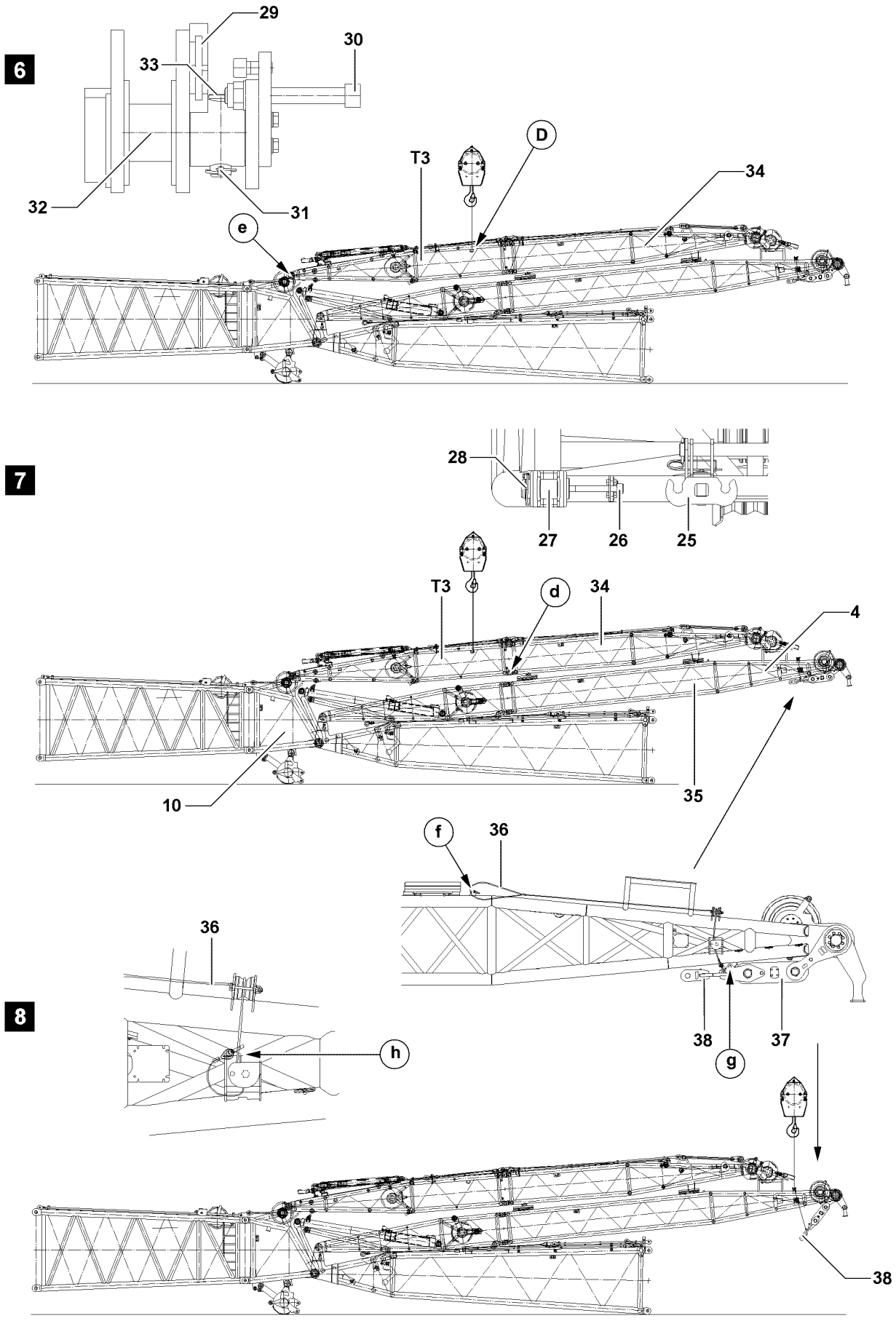

Fig.107238

LWE/LR 1600-2-001/18101-07-02/en

copyright © Liebherr-Werk Ehingen GmbH 2018

3.1.4 Pinning the W-transport units together

See illustration **6**

▶ Fasten the auxiliary crane on the fastening point **D** on the transport unit **T3**.

The pinning position between the transport unit and the W-connector head is established through:
– Luff the S-boom up or down.
– Position the WA-frame 2 **15** with the auxiliary crane.

▶ Position the WA-frame 2 **34** until the pin points **e** align.
▶ Make sure that the pin **33** is removed.
▶ Hang the pin pulling cylinder on the retainer **29** and on the screw **30**.
▶ Pin the transport unit **T3** and the W-connector head **10** on both sides on point **e** with pins **32** and secure pins **33** and linch pins **31**.

See illustration **7**

▶ Lift the transport unit **T3** with auxiliary crane until the pin points **d** align.
▶ Hang the pin pulling cylinder on the retainer **25** and on the screw **26**.
▶ Pin the transport unit **T3** on the WA-frame 2 end section **5** on both sides on point **d** with pins **27** and secure with linch pins **28**.
▶ Release both sides of the ropes **36** on point **f** and hang on the auxiliary crane.

WARNING
Components folding downward!
If the unsecured cross beam is unpinned, it will fold down. Personnel can be severely injured or killed.
▶ Secure the cross beam **38** with the auxiliary crane.

Note
▶ The cross beam **38** may more easily be unpinned, if it is raised with the auxiliary crane.

▶ Unpin the cross beam **38** on point **g**.

See illustration **8**

▶ Release the cross beam **38** and lower it with auxiliary crane.
▶ Release the ropes **36** on the cross beam **38**.
▶ Secure the ropes **36** on both sides in park position on point **f** and secure on point **h**.

LWE/LR 1600-2-001/18101-07-02/en

copyright © Liebherr-Werk Ehingen GmbH 2018

9

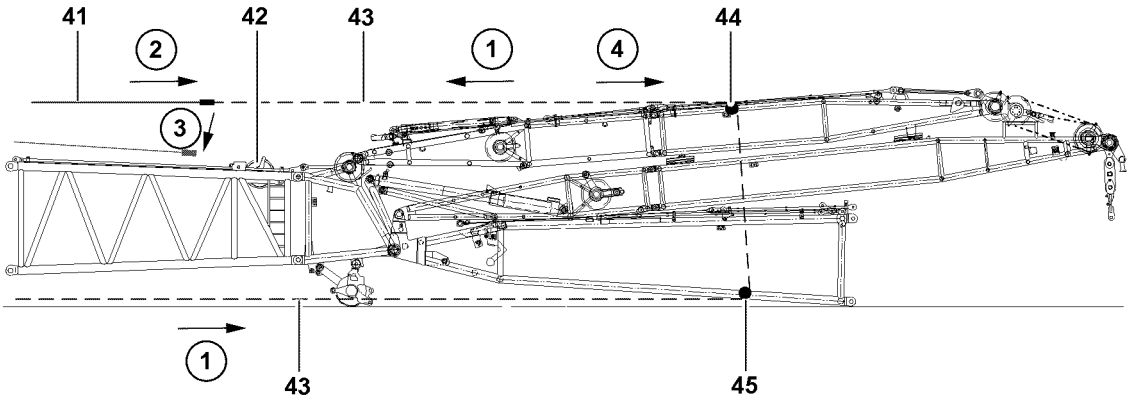

10

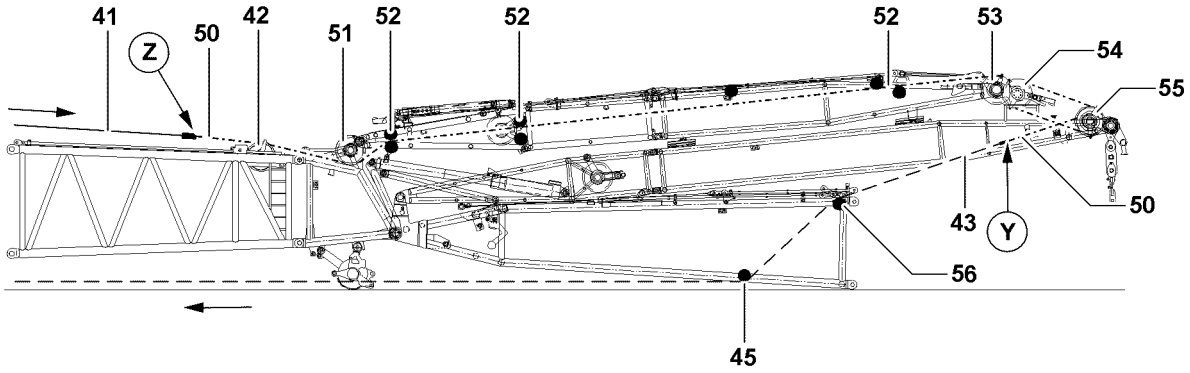

11

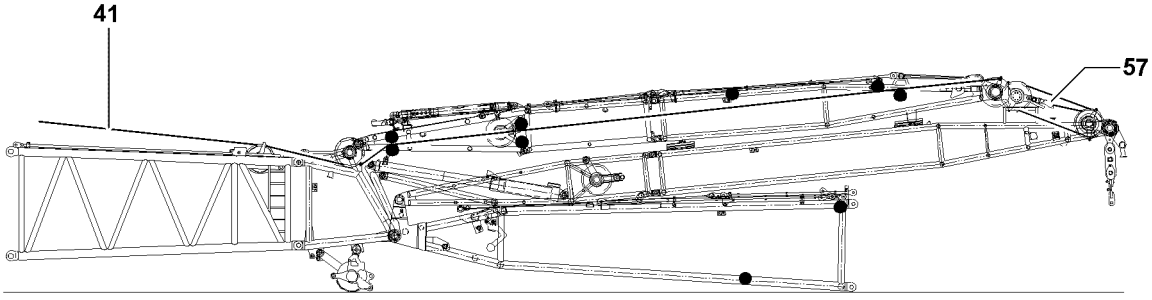

Fig.106729

LWE/LR 1600-2-001/18101-07-02/en

copyright © Liebherr-Werk Ehingen GmbH 2018

3.2 Reeving the W-control rope in

NOTICE
Slack rope formation!
The control rope can become damaged due to slack rope formation.
▶ Do not allow slack rope formation when spooling the W-control rope out!
▶ Keep the W-control rope tight when spooling out!

Note
▶ Take the reeving plan from the separately supplied drawings!

Make sure that the following prerequisite is met:
– The rope pulley **42** is pinned and secured in operating position.

3.2.1 Getting the control rope with assembly rope

Rope run for the assembly rope **43**, see illustration **9**.

▶ Pull assembly rope **43** for the assembly winch over the roller **45** and the roller **44** up to winch V, action step **1**.
▶ Connect the assembly rope **43** with the W-control rope **41** from winch V.
▶ Pull the W-control rope **41** up to the rope pulley **42** on the S-boom: Spool up assembly winch and simultaneously spool winch V out, action step **2**.
▶ Separate the W-control rope **41** from the assembly rope **43** and take it down in front of the rope pulley **42**, action step **3**.
▶ Pull the assembly rope **43** back up to the roller **45** and take it down on the ground, action step **4**.

3.2.2 Reeving the W-control rope in

Make sure that the following prerequisites are met:
– The intake ropes are interconnected on the WA-frame 2.
– The intake rope is reeved in on the W-roller sets.

Note
▶ Before reeving in the W-control rope, the rope retaining pins of rope pulley **42**, rope pulley **51**, rope pulley **53**, roller set **54** and roller set **55** must be released and unpinned.

Note
▶ For easier reeving, the W-roller sets are raised with an auxiliary crane.

Rope run for the intake rope **50** and the assembly rope **43**, see illustration **10**.

▶ Connect the W-control rope **41** and the intake rope **50** on point **Z**.
▶ Ensure that the intake rope **50** runs between the pulleys **52**.
▶ Lay the intake rope **50** on the rope pulley **42** and the rope pulley **51**.
▶ Pull the assembly rope **43** over the roller **56** to the point **Y**.
▶ Connect the assembly rope **43** and the intake rope **50** on point **Y**.

See illustration **11**

▶ Pull the W-control rope **41** in and hook it on the rope fixed point **57**.
▶ Spool the assembly rope **43** on the assembly winch.

LWE/LR 1600-2-001/18101-07-02/en

copyright © Liebherr-Werk Ehingen GmbH 2018

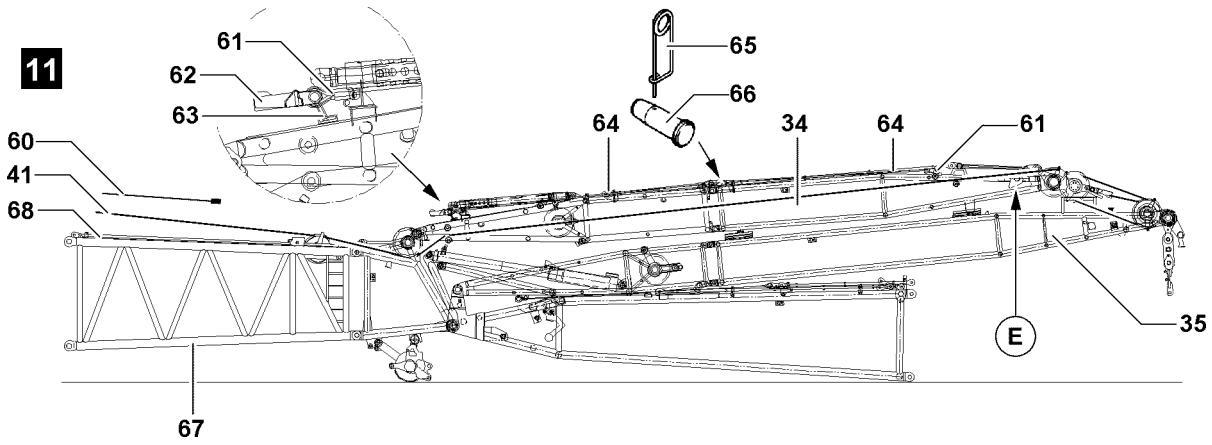

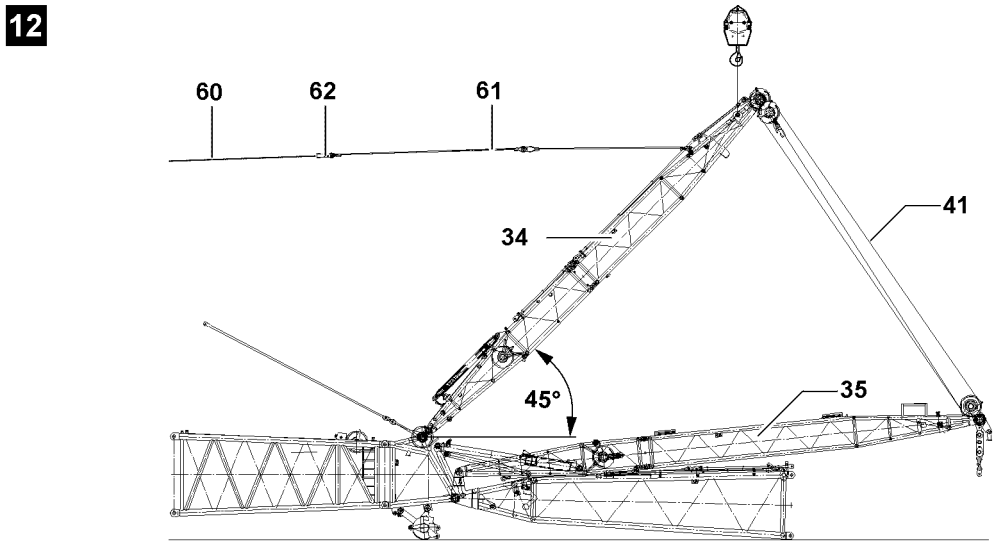

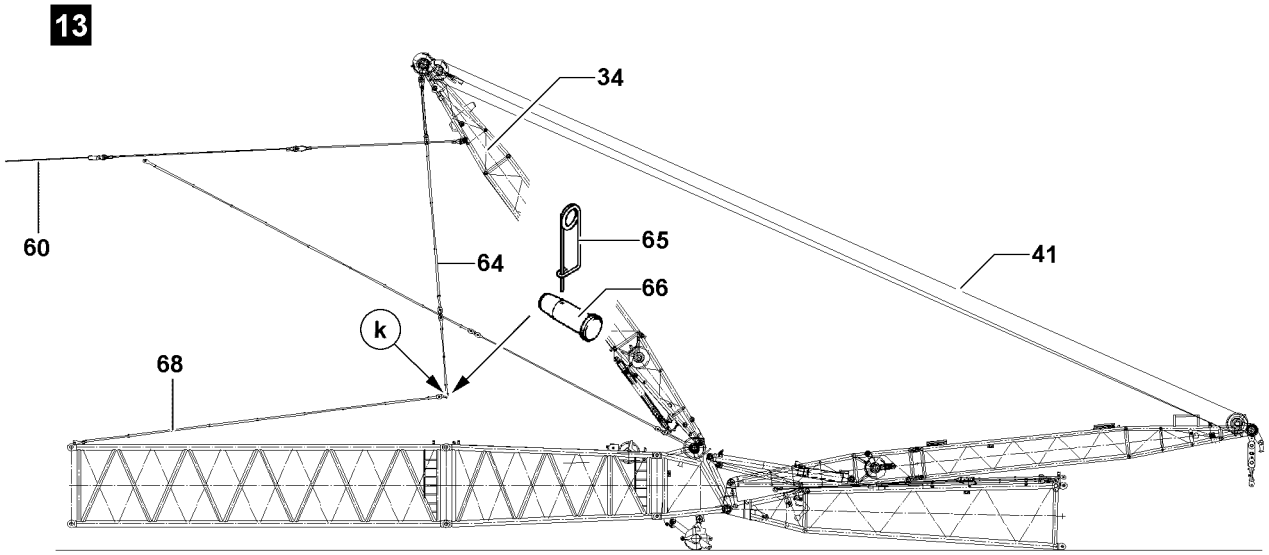

LWE/LR 1600-2-001/18101-07-02/en

Fig.107264

copyright © Liebherr-Werk Ehingen GmbH 2018

3.3 Assembling the guy rods WA-frame 2

NOTICE
Property damage!
▶ Always insert the pins of the guy rods from the „inside“ to the „outside“.

Make sure that the following prerequisite is met:
– The WA-frame 2 **34** is laying on the WA-frame 1 **35**

See illustration **11**

▶ Release and unpin transport restraints of the W-guy rods **68** on the S-lattice sections **67**.
▶ Release and unpin the transport retainers for the W-guy rods **64** on the WA-frame 2 **34** on both sides.
▶ Pin W-guy rods **64** on the WA-frame 2 **34** on both sides from the „inside“ to the „outside“ with pins **66** and secure with spring retainers **65**.
▶ Loosen fixing **63** for the assembly rope **61** on WA-frame 2 **34**.
▶ Hang hoist rope **60** in the hook block **62** on the assembly rope **61**.
▶ Attach auxiliary crane to fastening points **E**.

See illustration **12**

Note
▶ While spooling out the W-control rope, lift the WA-frame 1 **35** slightly to prevent slack rope formation.

▶ Spool the W-control rope **41** out and simultaneously lift the WA-frame 2 **34** with the auxiliary crane approximately 45°.
▶ Tension the hoist rope **60** until the WA-frame 2 **34** is held by the hoist rope.
▶ Remove the auxiliary crane.

See illustration **13**

▶ Spool the W-control rope **41** out and simultaneously pull the WA-frame 2 **34** backward with the hoist rope **60**.
▶ Pin the W-guy rods **64** on both sides in point **k** from the „inside“ to the „outside“ with pins **66** and secure with spring retainers **65**.

LWE/LR 1600-2-001/18101-07-02/en

copyright © Liebherr-Werk Ehingen GmbH 2018

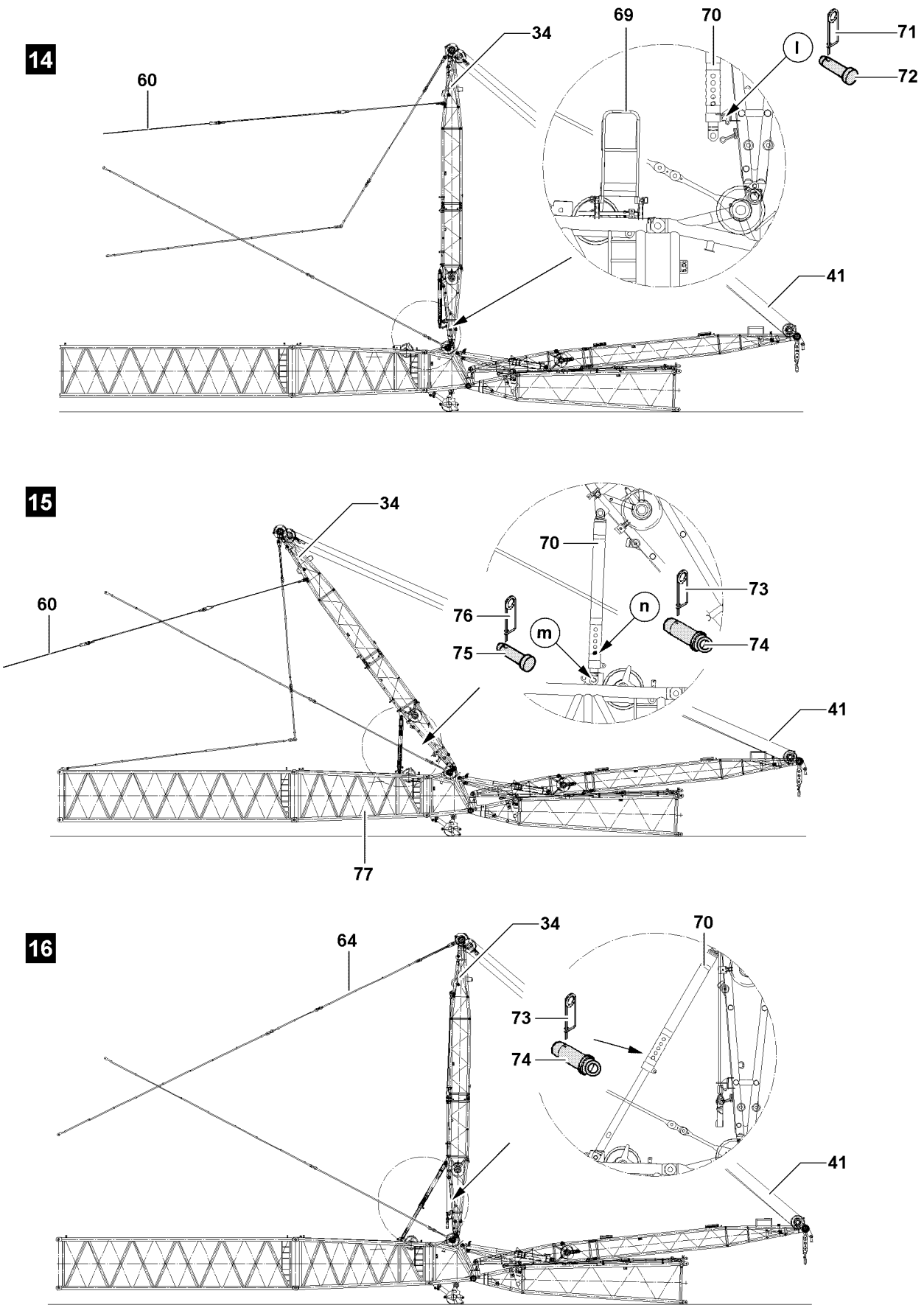

Fig.106730

LWE/LR 1600-2-001/18101-07-02/en

copyright © Liebherr-Werk Ehingen GmbH 2018

3.4 Pinning the relapse supports

See illustration **14**

▶ Erect the WA-frame 2 **34** vertically: Spool the W-control rope **41** up and simultaneously spool out the hoist rope **60**.

WARNING
Danger of falling!
If the folding platforms **69** on the SL-reducer section is not used, personnel can fall down and be severely injured or killed.
▶ Pinning of the relapse supports by the folding platforms is carried out on the SL-reducer section.

WARNING
Uncontrolled swinging of the relapse supports!
If the relapse supports are unpinned without the WA-frame 2 standing vertically, the relapse supports can swing without control. Personnel can be severely injured or killed.
▶ Unpin relapse supports **70** after the WA-frame 2 **34** is erected vertically.

▶ Unpin the relapse supports **70** on point **l**: Remove the spring retainer **71** and unpin the connecting pins **72**.

See illustration **15**

▶ Spool the W-control rope **41** out and simultaneously pull back the WA-frame 2 **34** with the hoist rope **60** until the relapse supports **70** on point **m** on the SL-reducer section **77** can be pinned.
▶ Pin the relapse supports **70** on point **m**: Insert the pins **75** on both sides and secure with spring retainers **76**.

NOTICE
Damage of WA-frame 2!
If the connecting pin is not unpinned before erection of WA-frame 2, the WA-frame 2 can be damaged.
▶ Unpin the connecting pin **74** before erection of WA-frame 2 **34**.

▶ Remove the spring retainer **73** and unpin the connector pins **74** on the point **n**.

See illustration **16**

▶ Erect the WA-frame 2 **34** until the guy rods **64** tension: Spool the W-control rope **41** up.
▶ Luff up WA-frame 1 **35** until the limit switch switches off the movement.

Result:

– Relapse supports are completely tensioned.

▶ Insert relapse supports **70** in maximum possible length with connecting pins **74** and secure with spring retainers **73**.

copyright © Liebherr-Werk Ehingen GmbH 2018

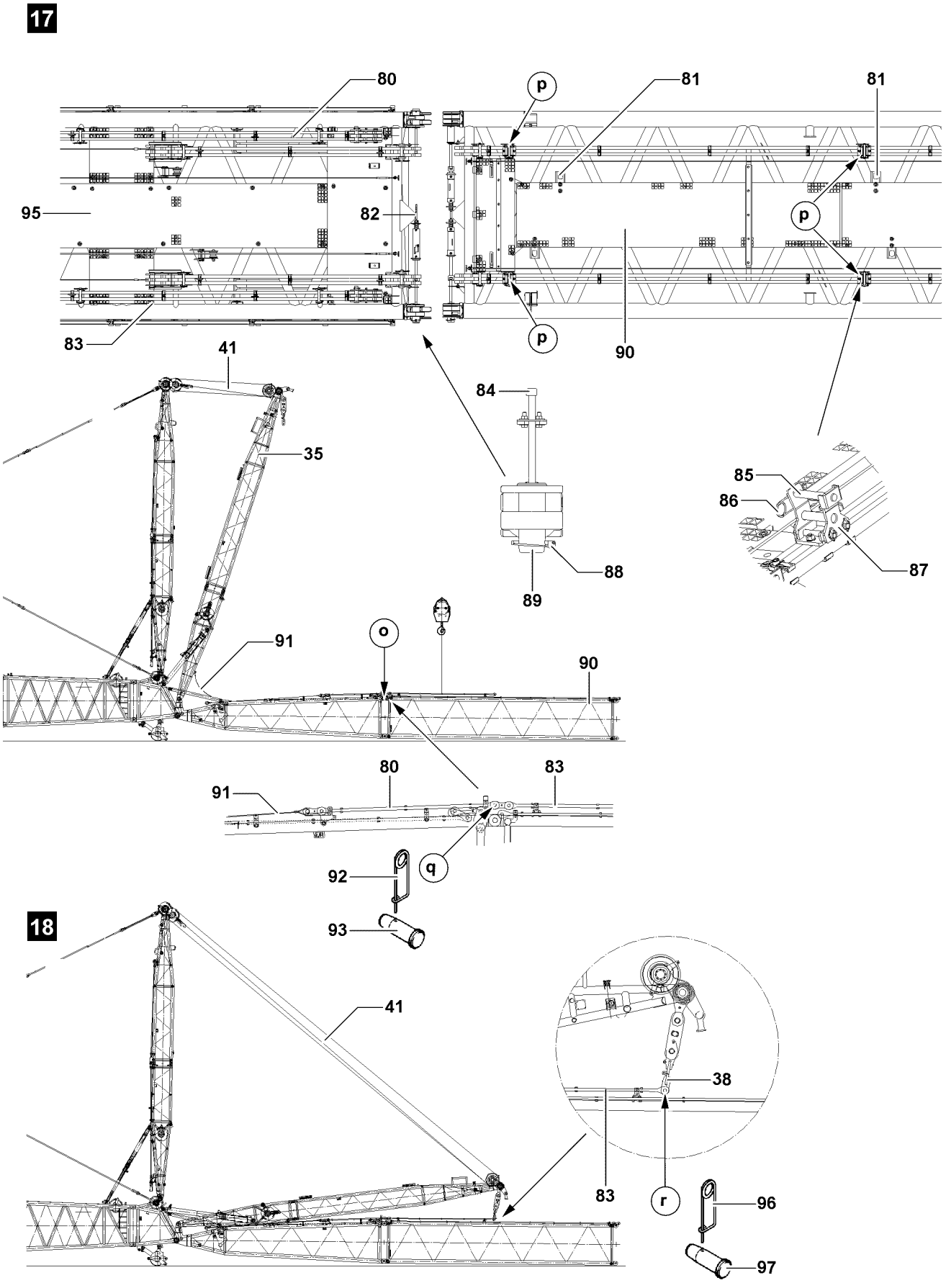

Fig.107239

LWE/LR 1600-2-001/18101-07-02/en

copyright © Liebherr-Werk Ehingen GmbH 2018

3.5 Assembling the W-lattice jib

Note
▶ Adhere to the pin sequence described in chapter 5.01 during the assembly of the W-lattice jib!

3.5.1 Assembling the W-lattice sections

See illustration **17**

▶ Erect the WA-frame 1 **35**: Spool the W-control rope **41** up.
▶ Hang the pin pulling cylinder on the retainer **82** and on the screw **84**.
▶ Pin LI-intermediate section **90** both sides on the point **o** with pins **89** and secure with linch pins **88**.
▶ Remove transport retainers from guy rods **80** and guy rods **83**.
▶ Remove the receptacle **87** from the parking position **81** and assemble points **p**.
▶ Remove the spring retainer **86** and pins **85**.

Result:

– Guy rods **83** can be placed on the LI-intermediate section **90**.

▶ Lay the guy rods **83** both sides with the auxiliary crane receptacle **87** on the LI-intermediate section **90**.
▶ Pin the guy rods **80** and guy rods **83** both sides on the point **q** from „the inside“ to the „outside“ with pins **93** and secure spring retainers **92**.
▶ Ensure that WA-frame 1 **35** and the guy rods **80** are bound with the assembly ropes **91**.

See illustration **18**

▶ Take down WA-frame 1 **35** until the cross beam **38** can be pinned with guy rods: Spool the W-control rope **41** out.
▶ Pin the cross beam **38** and the guy rods **83** both sides on point **r** from the „inside“ to the „outside“ with pins **97** and secure spring retainers **96**.

LWE/LR 1600-2-001/18101-07-02/en

copyright © Liebherr-Werk Ehingen GmbH 2018

19

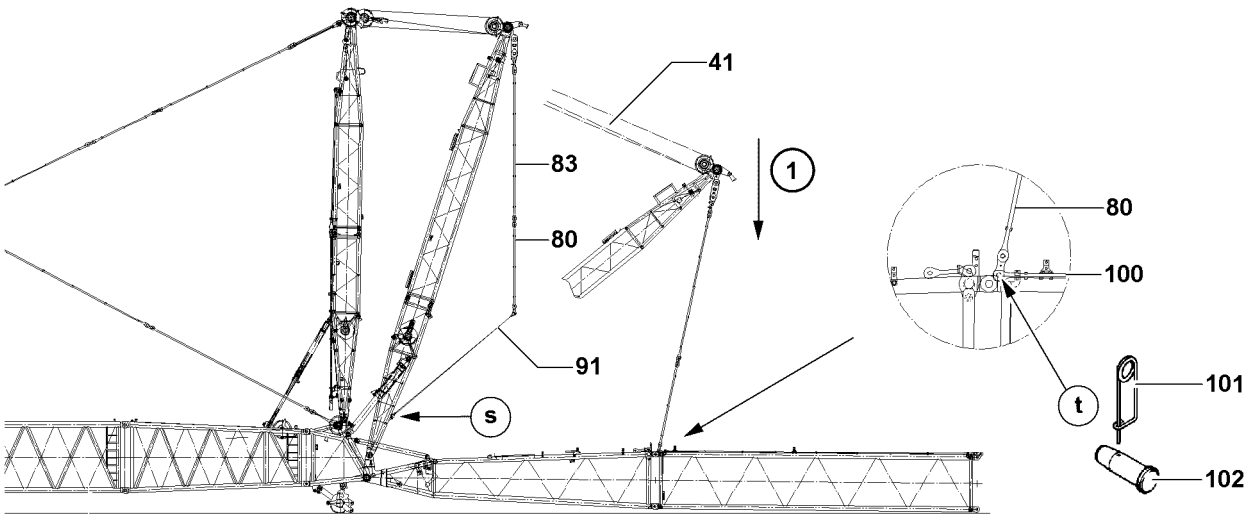

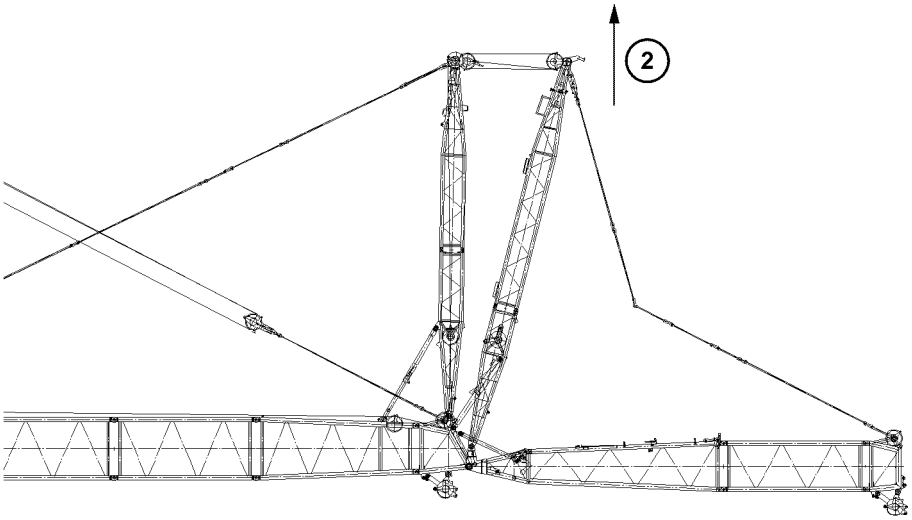

LWE/LR 1600-2-001/18101-07-02/en

Fig.106840

copyright © Liebherr-Werk Ehingen GmbH 2018

See illustration **19**

- ▶ Erect the WA-frame 1 **35** until the assembly rope **91** on the point **s** can be unhooked: Spool the W-control rope **41** up.
- ▶ Unhook the assembly rope **91** on point **s**.
- ▶ Lower the WA-frame 1 **35** and unhook the assembly rope **91** on point **t**.

Make sure that the following prerequisite is met:
– The SW-end section has been placed in the roller cart at assembly of the W-lattice jib, see chapter 5.15.

Note
- ▶ The air pressure in the tires of the roller cart must be 9 bar.

WARNING
Falling components!
If the intermediate sections are incompletely pinned, then components can fall down. Personnel can be severely injured or killed.
- ▶ Make sure that all components of the boom are completely pinned and secured.

- ▶ Assemble the W-lattice jib to the required length.
- ▶ Spool the hoist rope out and pull to the W-end section.

3.5.2 Assembling the W-guy rods

The W-guy rods are placed and secured for transport on the W-lattice sections. Before assembly of the W-guy rods, the transport retainers must be released.

See illustration **19**

- ▶ Release and unpin the transport retainers of the W-guy rods.

Note
- ▶ The guy rods for the LI-intermediate sections are pinned to each other starting from the fixed point on the end section of the boom.

NOTICE
Property damage!
- ▶ Always insert the pins of the guy rods from the „inside“ to the „outside“.

- ▶ Pin and secure the guy rods for all LI-intermediate sections.

When all boom system guy rods are pinned with one another:
- ▶ Take down WA-frame 1 **35** until the guy rods **80** can be pinned with the guy rods **100** in the point **t**: Spool the W-control rope **41** out.
- ▶ Pin the guy rods **80** and the guy rods **100** on both sides on the point **t** with pins **102** and secure with spring retainers **107**.
- ▶ Tension the W-guy rods: Spool the W-control rope **41** up.

LWE/LR 1600-2-001/18101-07-02/en

copyright © Liebherr-Werk Ehingen GmbH 2018

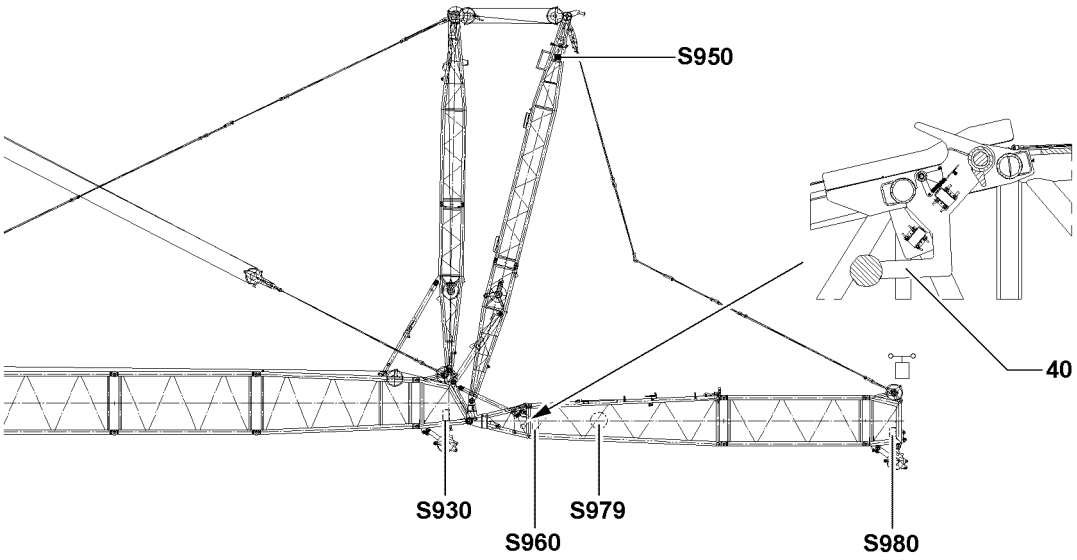

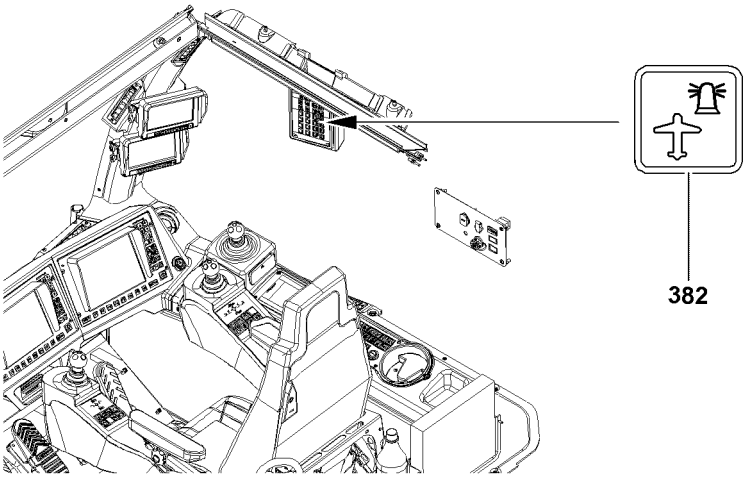

LWE/LR 1600-2-001/18101-07-02/en

Fig.106733

copyright © Liebherr-Werk Ehingen GmbH 2018

3.6 Establishing the electrical connections

Make sure that the following prerequisite is met:
- The W-boom is completely assembled.
- The airplane warning light and the wind speed sensor are installed.

CAUTION
Damage to the electrical connection on the cable drum!
If the electrical connection from the cable drum to the terminal box on the W-pivot section is established first before the connection to the terminal box on the SW-end section, the electrical connection is damaged when spooling out the cable drum.
▶ Make the electrical connection from the cable drum in the W-pivot section to the terminal box on the SW-end section and then effect the electrical connection from the terminal box in the W-connector head to the cable drum!

Note
▶ For production of the electrical connections on the W-boom, the separate electrical diagram is to be employed.

▶ Establish the electrical connections.
▶ Make sure that all electrical connections on the boom are established.

3.7 Checking the function of the safety equipment

WARNING
Non-functioning safety equipment!
If the function of the safety equipment is defective, personnel can be severely injured or killed.
▶ Crane operation with non-functioning safety equipment is **prohibited**!

Note
▶ The function of the individual limit switches must be checked before erection!
▶ The function of the limit switch initiators must be checked in the test system, see separate „Diagnostics“ manual.

Note
▶ If a function check on the limit switches or on the safety equipment does not lead to the desired shut offs, then the plug connections on the connector boxes or the components itself must be checked. If no visible connection errors or component defects can be found, contact **LIEBHERR** Service.

Make sure that the following prerequisites are met:
- All electrical connections have been made.
- The crane engine is running.
- The corresponding operating mode is set on the LICCON monitor.

3.7.1 Checking the wind speed sensor

▶ Check the movement and the function of the wind speed sensor.

3.7.2 Checking the airplane warning light

▶ Turn on the airplane warning light on with the button **382**.
▶ Check the function visually.

LWE/LR 1600-2-001/18101-07-02/en

copyright © Liebherr-Werk Ehingen GmbH 2018

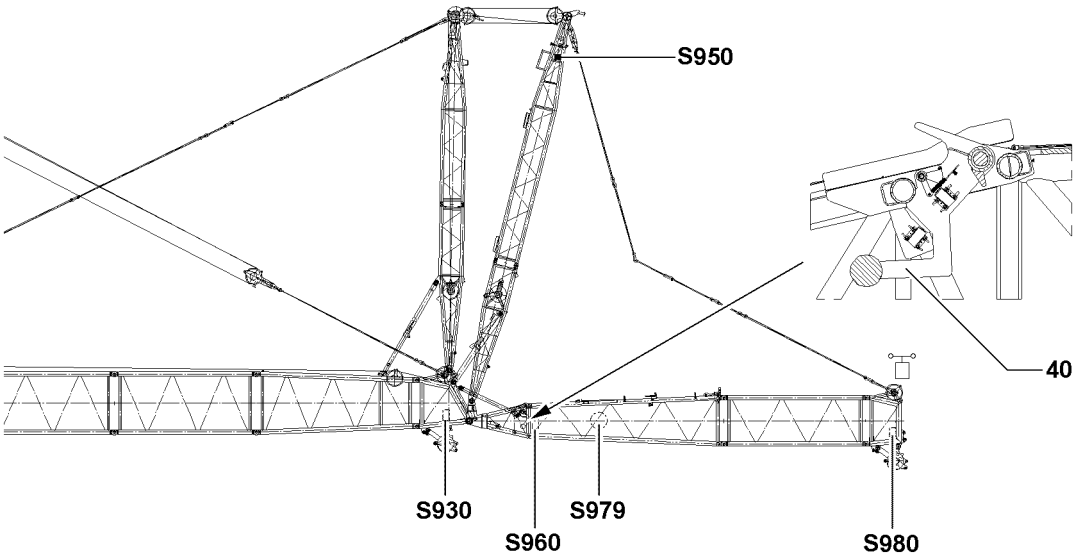

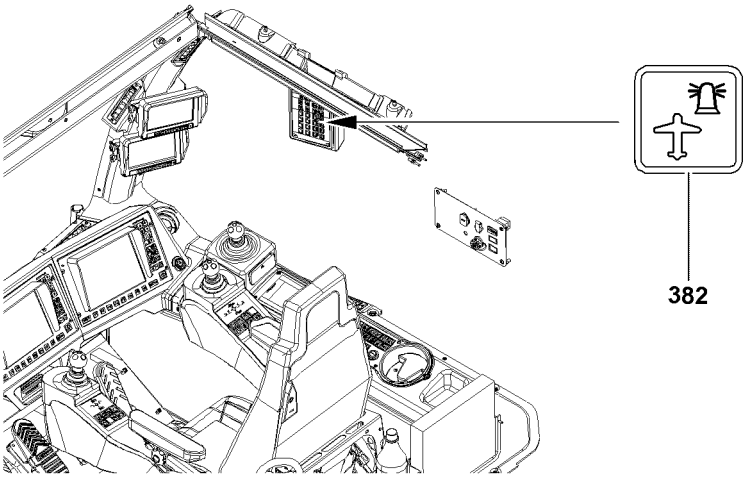

LWE/LR 1600-2-001/18101-07-02/en

Fig.106733

copyright © Liebherr-Werk Ehingen GmbH 2018

3.7.3 Checking the oscillation guard

DANGER
Danger of tipping over if the oscillation guard is hard to move!
The mechanical relapse retainer no longer functions if the oscillation guard moves with difficulty. The W-lattice jib can tip backwards uncontrolled and cause the crane to topple over!
▶ Crane operation with hard to move oscillation guard is prohibited!

▶ Check the oscillation guard **40** for easy movement.

3.7.4 Checking the hoist limit switch on the pulley head

Note
▶ When replacing or changing a hoist limit switch (HES), the corresponding hoist limit switch must have the correct bus address and the correct software version in order to be detected again by the bus system (LSB).

▶ Actuate the hoist limit switch manually on the pulley head.

Result:

– The spool up function of the hoist winch turns off.
– The „Hoist top“ icon appears on the LICCON monitor 0.
– The limit switch is functioning.

3.7.5 Checking the limit switch

Note
▶ The limit switch functions have to be checked individually before erection!

Checking the limit switch W-lattice jib „Steepest position“, relapse cylinder

▶ Cover the limit switch initiators individually with a metal plate, see chapter 8.12.

Result:

– The icon „Boom limitation“ appears on the LICCON monitor 0.
– The spool up function of winch V switches off.

Checking the limit switch W-lattice jib „Lowest position“, relapse cylinder

▶ Cover the limit switch initiators individually with a metal plate, see chapter 8.12.

Result:

– The icon „Boom limitation“ appears on the LICCON monitor 0.
– The spool up function of winch V switches off.

Checking the limit switch flap W-lattice jib „Steepest position“, relapse cylinder

▶ Cover the limit switch initiators individually with a metal plate, see chapter 8.12.

Result:

– The icon „Boom limitation“ appears on the LICCON monitor 0.
– The spool up function of winch V switches off.

LWE/LR 1600-2-001/18101-07-02/en

copyright © Liebherr-Werk Ehingen GmbH 2018

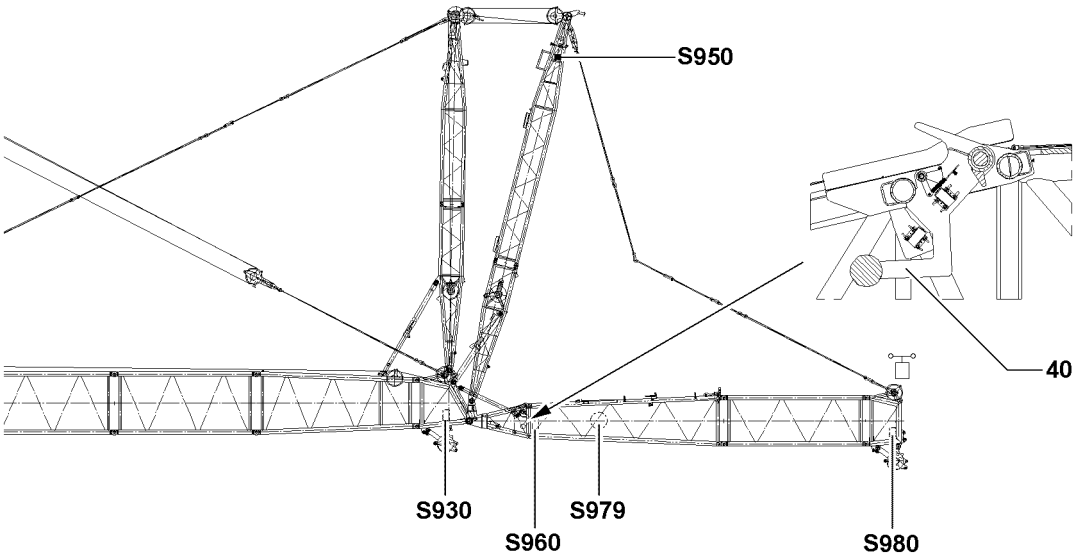

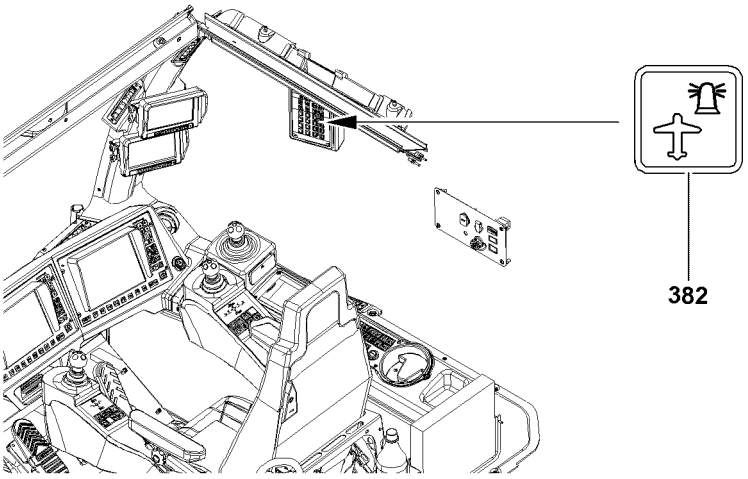

LWE/LR 1600-2-001/18101-07-02/en

Fig.106733

copyright © Liebherr-Werk Ehingen GmbH 2018

3.7.6 Checking the limit switch S-boom „steepest position“

▶ Cover the limit switch initiators on the S-relapse cylinders individually with a metal plate.

Result:

– The limit switch is actuated manually.
– The spool up function of winch IV (control winch) turns off.
– The icon „Boom limitation“ appears on the LICCON monitor 0.
– The limit switch is functioning.

LWE/LR 1600-2-001/18101-07-02/en

copyright © Liebherr-Werk Ehingen GmbH 2018

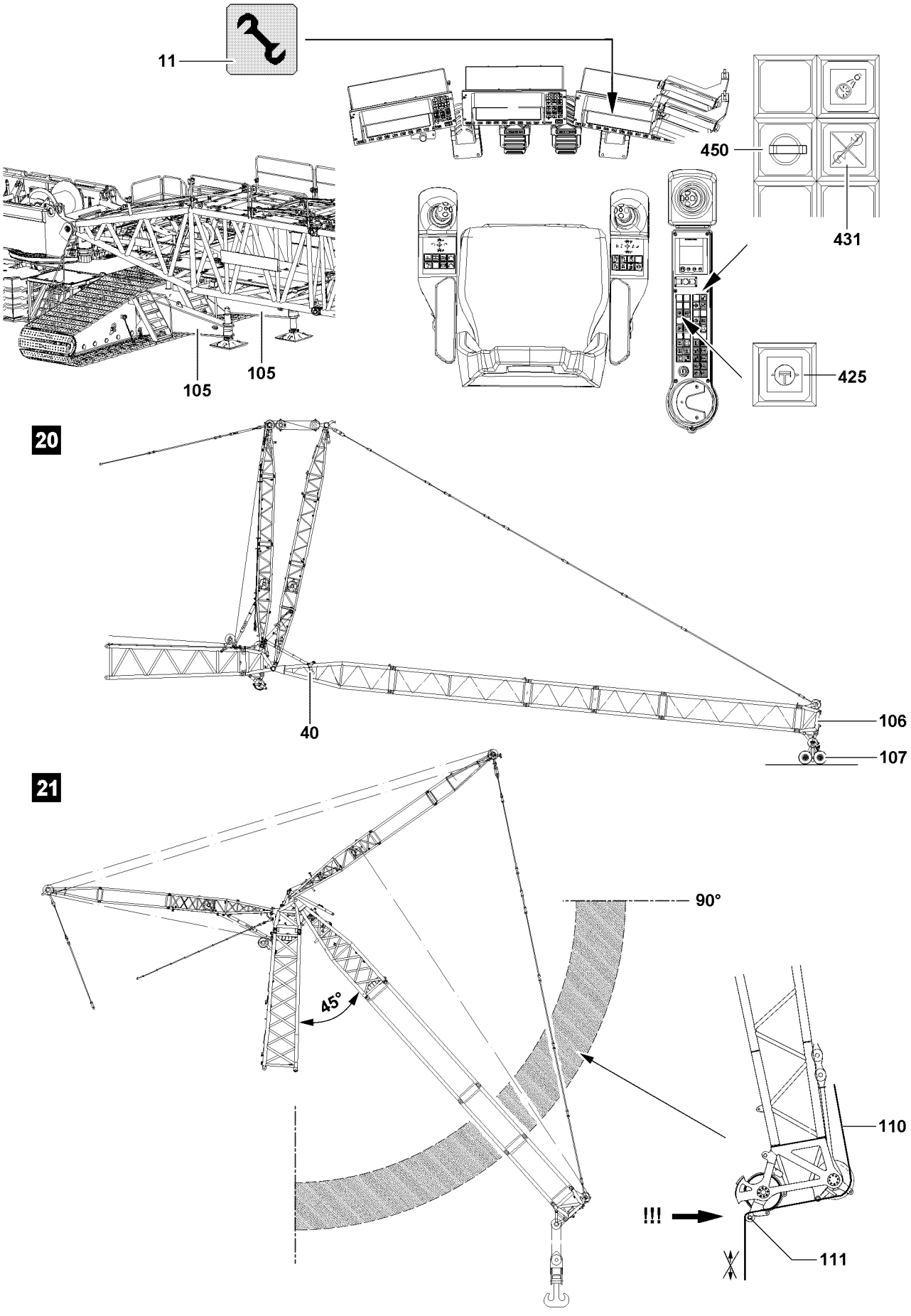

Fig.107265

LWE/LR 1600-2-001/18101-07-02/en

copyright © Liebherr-Werk Ehingen GmbH 2018

3.8 Erecting the boom

DANGER
The crane can topple over!
- ▶ It is not permitted to turn the crane during erection!
- ▶ Observe the data in the erection and take-down charts!
- ▶ Observe the technical safety instructions in chapter 5.01.

DANGER
The crane can topple over!
For certain boom lengths, the mechanical auxiliary supports must be assembled, see Erection and take-down charts!
- ▶ The boom must be erected or taken down „to the side“ „in direction“ of the mechanical auxiliary supports **105**.
- ▶ Always erect or take down according to the data in the **Erection and take-down charts**!

DANGER
Tipping lattice jib!
If the easy movement on the pendulum of the mechanical relapse support is not checked before erection or not reestablished, if necessary, then the mechanical relapse support will not engage in the steep lattice jib position. As a result, the lattice jib can tip to the rear.
Personnel can be severely injured or killed!
- ▶ Check the easy movement on the pendulum **40** of the mechanical relapse support before erection.
- ▶ If the pendulum does not move easily: Make the pendulum **40** easy to move!

WARNING
The crane can topple over!
If the following conditions are not met before erecting the boom, the crane can topple over. Personnel can be severely injured or killed.
- ▶ The lattice jib must roll on the ground with its entire weight!
- ▶ Spool the lattice jib control out so that the guy rods sag slightly!
- ▶ Do not allow slack rope to form on the control winch!
- ▶ Extend the relapse cylinder before erection.

LWE/LR 1600-2-001/18101-07-02/en

copyright © Liebherr-Werk Ehingen GmbH 2018

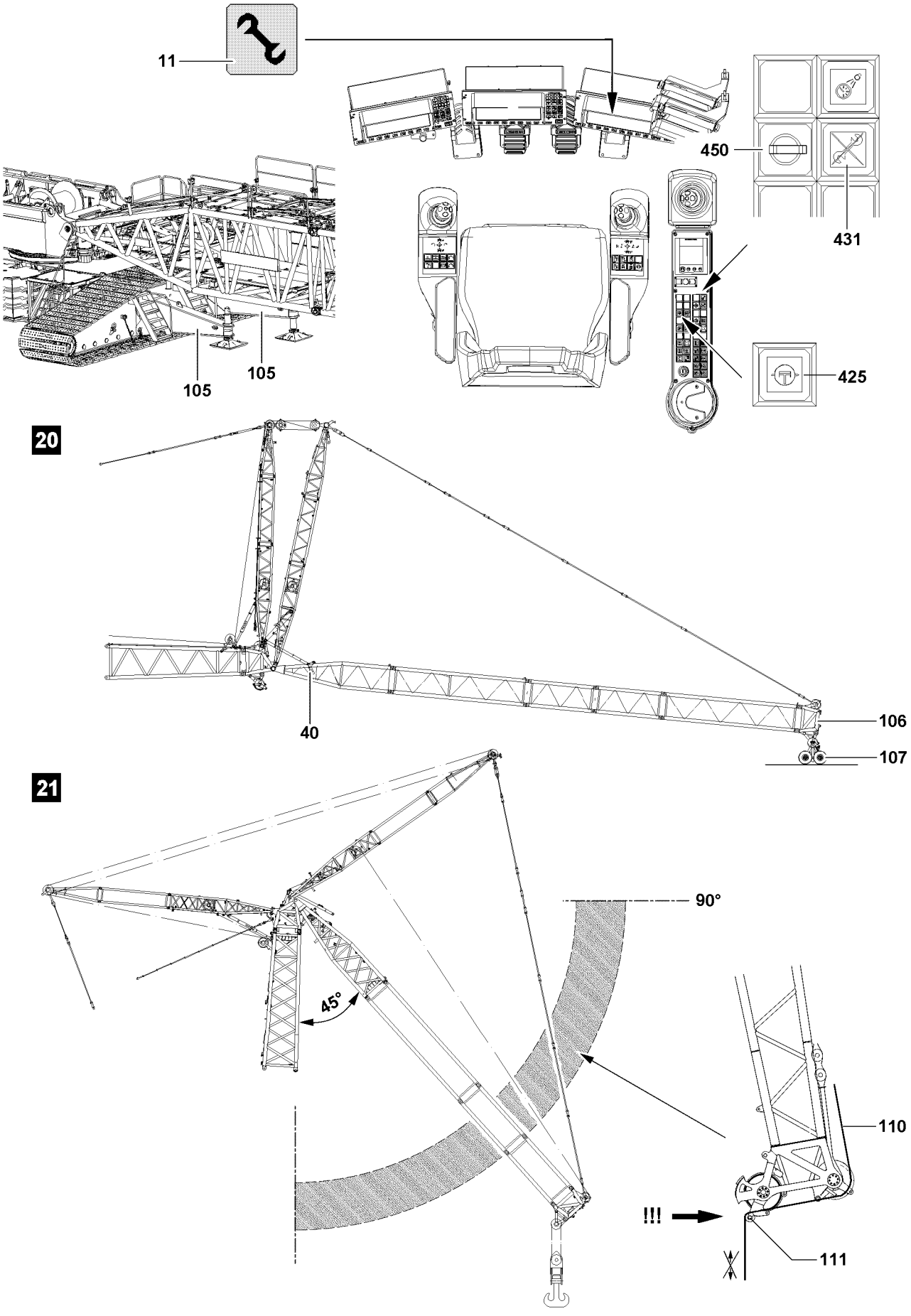

Fig.107265

LWE/LR 1600-2-001/18101-07-02/en

copyright © Liebherr-Werk Ehingen GmbH 2018

Make sure that the following prerequisites are met:
- The W-lattice jib is fully assembled.
- The roller cart **107** is assembled on the SW-end section **106**, illustration **20**.
- No personnel is within the danger zone.
- The crane is horizontally aligned.
- All electrical connections have been established.
- All limit switches are functioning.
- The counterweight has been installed on the turntable and on the derrick, according to the load chart.
- All pin connections have been secured.
- The hoist rope has been correctly placed in the rope pulleys and is prevented from jumping out with the rope retaining pins.
- There are no loose parts on the boom or the lattice jib.
- The boom, lattice jib and safety equipment are free from snow and ice.
- The LICCON overload protection has been adjusted according to the data in the load chart.
- The LICCON overload protection settings have been compared with the actual set up configuration.
- The assembly key button **450** is actuated.
- The indicator light **431** „assembly“ lights up.
- The assembly icon **11** on the LICCON monitor 0 lights up.

WARNING
Falling hoist rope!
If the hoist rope before the erection procedure is not properly secured onto the corresponding length on the W-lattice jib, it can fall down backward on the basis of its own weight. Personnel can be severely injured or killed!
- ▶ Reeve in the hoist rope with sufficient length on the W-lattice jib before the erection process!
- ▶ The hoist rope must be constantly monitored during erection!
- ▶ Do not step into the danger zone!

NOTICE
Damage to the hoist rope!
If the hoist rope **110** is reeved on the hook block and redirected over the small guard rollers **111**, the hoist gear may no longer be driven. During spooling up or spooling out, the hoist rope can become damaged.
- ▶ Do not spool up or spool out hoist rope **110**, if the angle between S-boom and W-lattice jib amounts to less than 90°, see illustration **21**.

The erection process is carried out until:
- The S-boom and W-lattice jib form an angle of approximately 45° (switch position „W-lattice jib below“), see illustration **21**,
- **or** the W-end section lifts off from the ground.

- ▶ Luff the S-boom up and simultaneously spool the W-control rope out so that the SW-end section remains on the ground with the roller cart.
- ▶ Release the roller cart from the SW-end section: Remove the roller cart, see chapter 5.15.
- ▶ Luff the S-boom up until the SW-end section lifts off the roller cart.
- ▶ Reeve in the hook block properly and secure the hoist rope on the rope fixed point, for reeving, see separate reeving plans.
- ▶ Attach the hoist limit switch weight.

LWE/LR 1600-2-001/18101-07-02/en

copyright © Liebherr-Werk Ehingen GmbH 2018

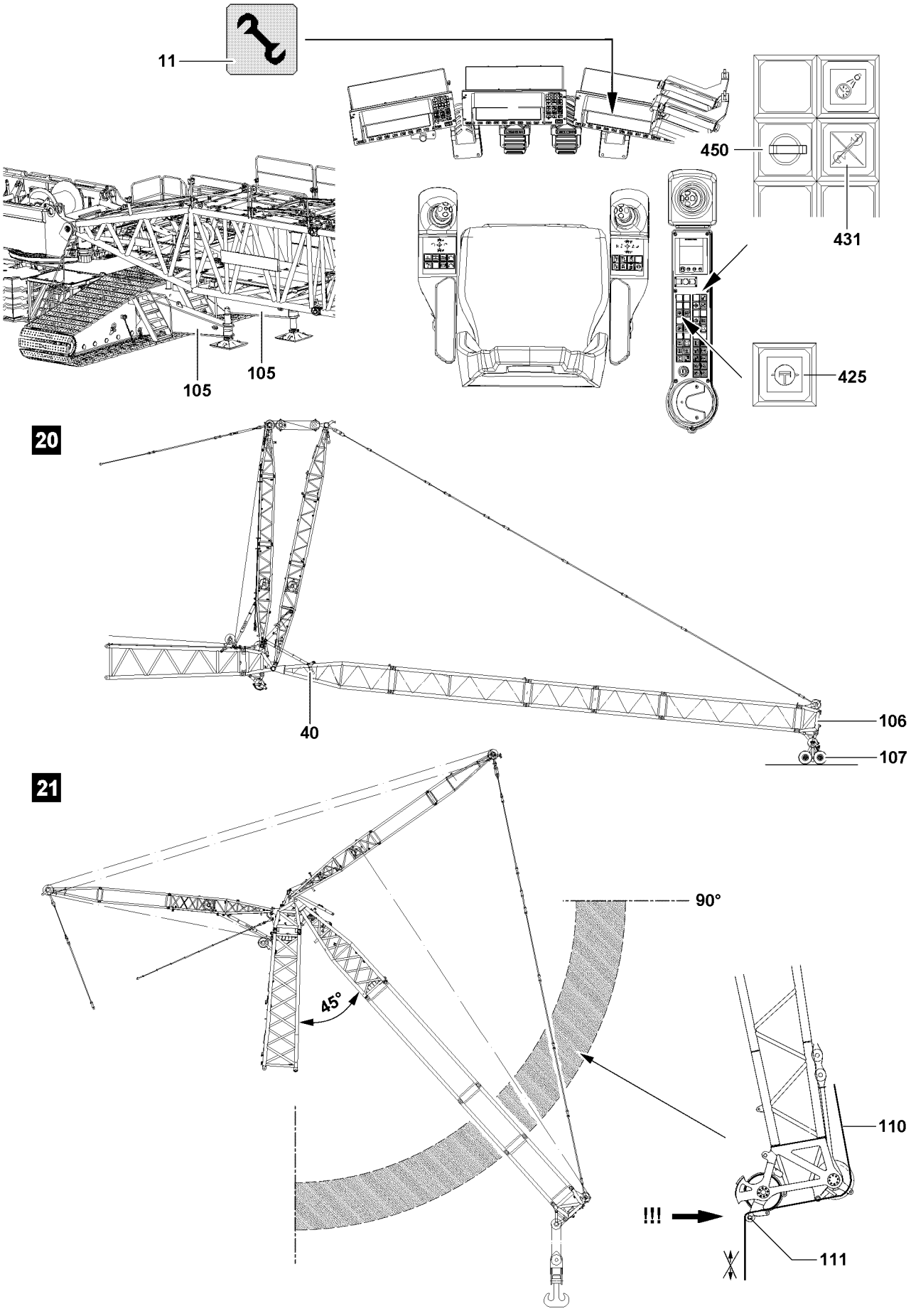

Fig.107265

LWE/LR 1600-2-001/18101-07-02/en

copyright © Liebherr-Werk Ehingen GmbH 2018

DANGER
The crane can topple over!
In crane operation with bypassed safety devices, the crane can topple over. Personnel can be severely injured or killed.
- ▶ When the lowest operating position of the W-lattice jib is reached, immediately turn off the assembly key button **450**.
- ▶ The radii listed in the load chart may not be exceeded or fallen below, even if there is no load on the hook!

Note
- ▶ When the lowest operating position of the W-lattice jib is reached, the displays turn off.
- ▶ In the icon „Maximum load“, a load number in „t“ appears instead of the display „???“!

- ▶ Luff the S-boom up to the lowest operating position.
- ▶ Luff the W-lattice jib up to the lowest operating position.

When the W-lattice jib has reached the lowest operating position:
- ▶ Turn the assembly key button **450** off.

Result:

- – The LICCON overload protection is active.
- – The indicator light **431** turns off.
- – The assembly icon **11** on the LICCON monitor turns off.
- – The acoustic signal turns off.
- – The three color light lights up green and the warning light on the rear of the turntable lights up.

copyright © Liebherr-Werk Ehingen GmbH 2018

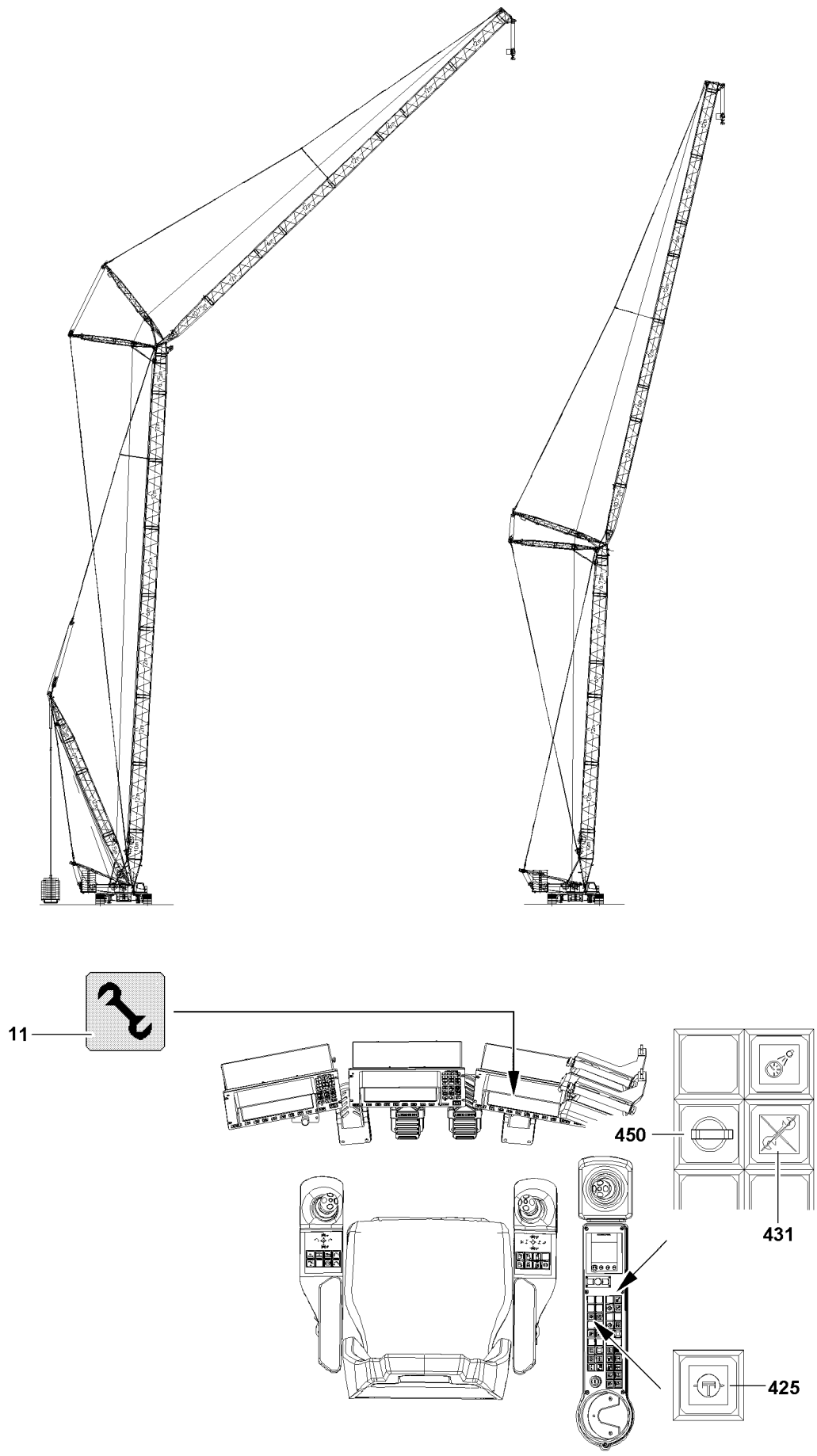

Fig.106821

LWE/LR 1600-2-001/18101-07-02/en

copyright © Liebherr-Werk Ehingen GmbH 2018

4 Operating the crane

4.1 Preparing for crane operation

Note

▶ Observe the notes in chapters 4.05, 4.08 and 5.01.

Make sure that the following prerequisites are met:

– The LICCON overload protection has been set according to the data in the load chart.
– The assembly key button **450** is turned off.

WARNING

The crane can topple over!

▶ Check the horizontal position of the crane before and during crane operation!
▶ If the crane operator leaves the cab, even for a short time, the operating mode setting must be checked and reset if necessary before resuming crane operation!

4.2 Checking the settings

▶ Check the function of the overload protection by running against the operating positions „on top“ and „bottom“.
▶ Check the hoist limit switch by running against the hoist limit switch weight.
▶ Check the function of the limit switches on the jib stop cylinders.

LWE/LR 1600-2-001/18101-07-02/en

copyright © Liebherr-Werk Ehingen GmbH 2018

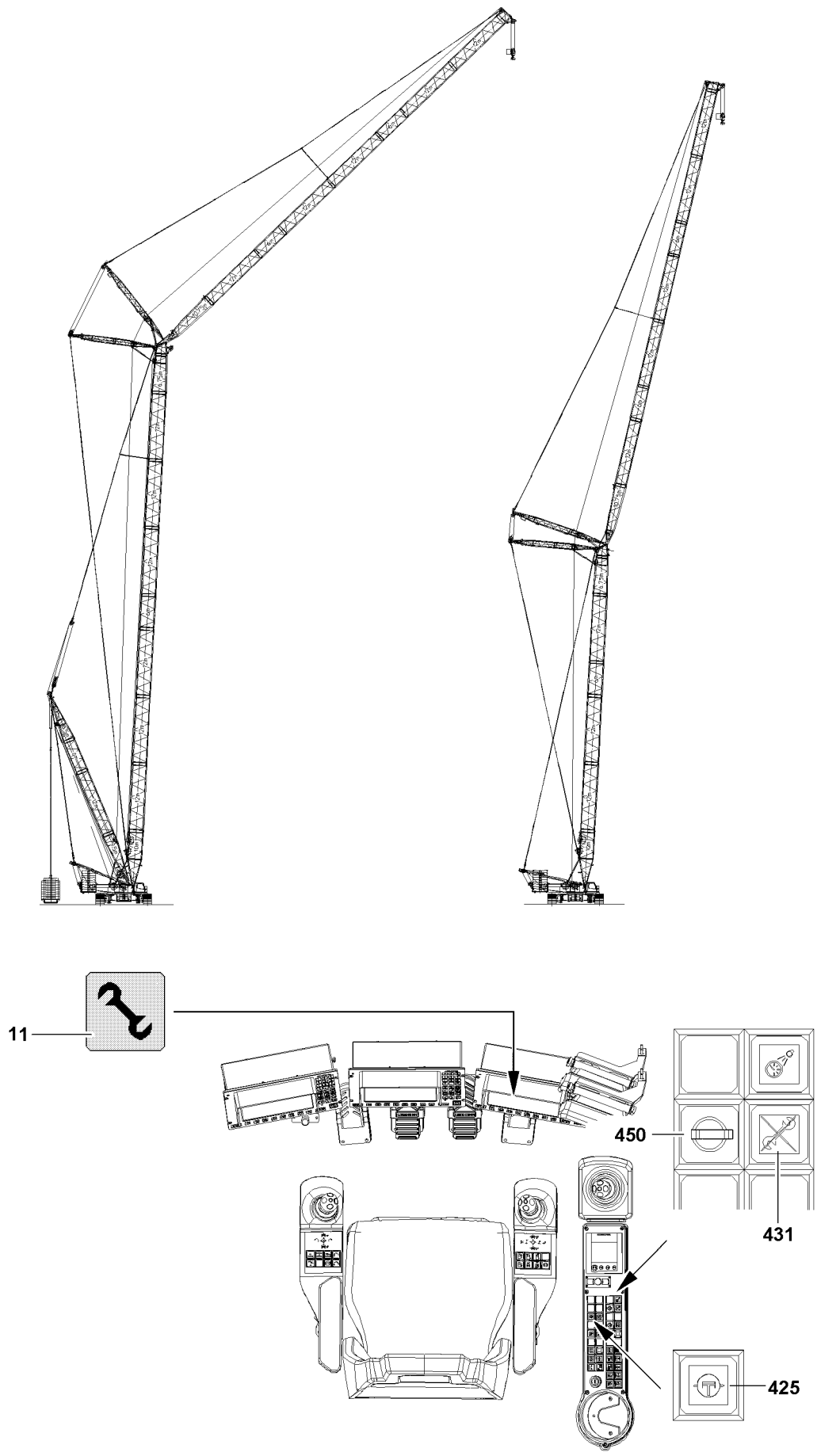

Fig.106821

LWE/LR 1600-2-001/18101-07-02/en

copyright © Liebherr-Werk Ehingen GmbH 2018

5 Disassembling the W-boom system

WARNING
Danger of falling!
During assembly / disassembly work, personnel must be secured with appropriate aids to prevent them from falling. If this is not observed, assembly personnel could fall and suffer life-threatening or fatal injuries.

- ▶ All assembly work must be carried out using suitable aids (ladder, lifting platform, scaffolding, auxiliary crane, etc.)!
- ▶ If work cannot be carried out on the ground or using such aids, then assembly personnel must secure themselves with the personal fall arrest system (see chapter 2.04) to protect against falling! The personal fall arrest system must be attached in the corresponding fastening points on the crane (see chapter 2.06).
- ▶ If railings are present on the components, then they must be brought into the corresponding position and secured for assembly / disassembly work.
- ▶ Step on aids and fall protection equipment only with clean shoes!
- ▶ Keep aids and fall protection equipment clean and free from snow and ice!

WARNING
Falling components!
If unsecured or non-supported components are assembled or disassembled, they can fall down. Personnel can be killed or seriously injured.

- ▶ During pinning and unpinning of the lattice sections, it is prohibited for anyone to remain **under** or **on** the components as well as within the entire danger zone!
- ▶ Support the boom and components before pinning / unpinning!
- ▶ Pin or unpin both pins laying in a horizontal, i.e. **left** and **right**!
- ▶ Secure the pins in the bearing points and in the receptacles!
- ▶ Do not disengage the auxiliary crane until each component is pinned on and secured!
- ▶ It is prohibited to lean a ladder against the component being disassembled!

WARNING
Danger of crushing!
Components can swing during assembling. Hands can be crushed or severed.

- ▶ Make sure that the components do not swing back and forth during assembly!

LWE/LR 1600-2-001/18101-07-02/en

copyright © Liebherr-Werk Ehingen GmbH 2018

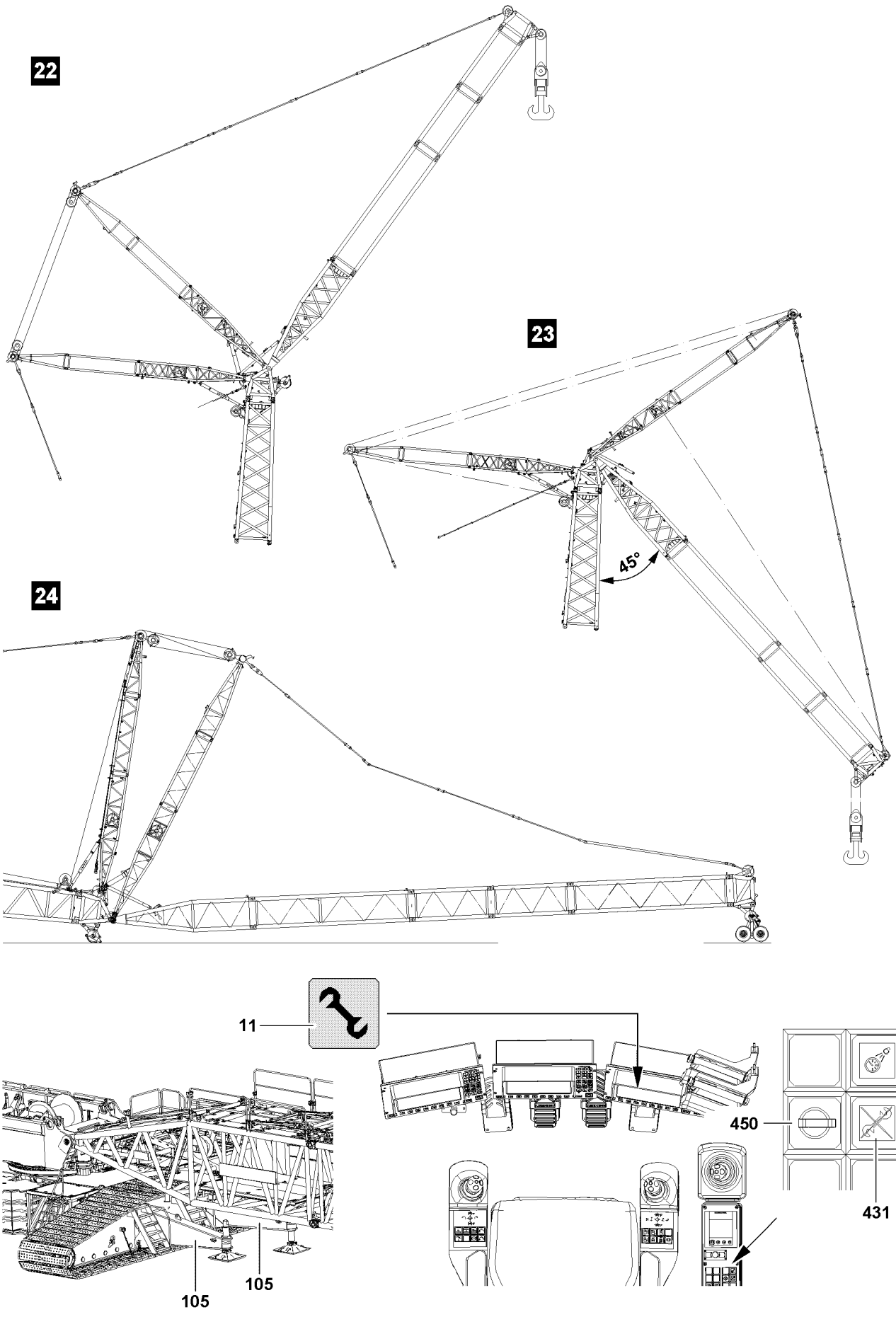

Fig.106822

LWE/LR 1600-2-001/18101-07-02/en

copyright © Liebherr-Werk Ehingen GmbH 2018

Note

▶ By supporting the components during assembly / disassembly, ground unevenness is compensated for and the material is protected.

Note

▶ The W-intermediate sections are pinned and unpinned with the aid of the pin pulling device, see chapter 5.30.

WARNING

Danger of accident!
Personnel can be severely injured or killed.

▶ While pinning and unpinning with the pin pulling device, observe and follow warning display in chapter 5.30!

Make sure that the following prerequisites are met:

– The LICCON overload protection has been set according to the data in the load chart.
– The assembly key button **450** is pressed and the indicator light **431** lights up.
– The assembly icon on the LICCON display blinks.
– An auxiliary crane is available.

5.1 Taking down the W-lattice jib

DANGER

The crane can topple over!
For certain boom lengths, the mechanical auxiliary supports must be assembled, see Erection and take-down charts!

▶ The boom must be erected or taken down „to the side“ „in direction“ of the mechanical auxiliary supports **105**.
▶ Always erect or take down according to the data in the **Erection and take-down charts**!

WARNING

The crane can topple over!
If the following conditions are not met before taking down the boom, the crane can topple over and fatally injure personnel!

▶ Observe the technical safety instructions in chapter 5.01!
▶ Observe the data in the erection and take-down charts!

NOTICE

Damage of boom components!
Taking down the boom system can lead to a collision between the hook block and the pulley head.
Boom components can be severely damaged.

▶ Luff the boom system down at the same time and spool the hoist winch out.

Make sure that the following prerequisite is met:

– The S-boom is in operating position, see illustration **22**.
– The hook block is approx. 5 m below the pulley head of the lattice jib.
– The roller cart is available.

LWE/LR 1600-2-001/18101-07-02/en

copyright © Liebherr-Werk Ehingen GmbH 2018

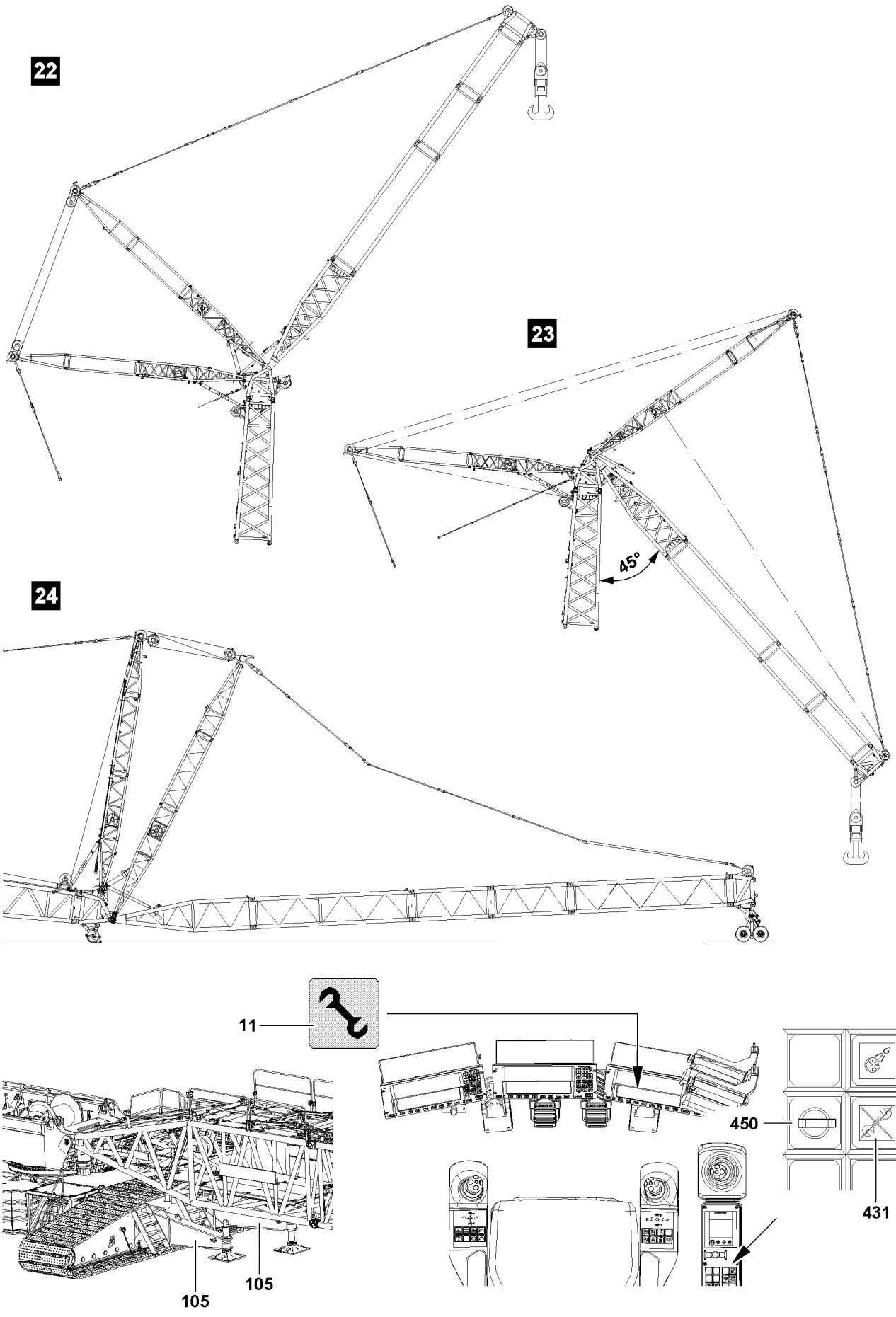

Fig.106822

LWE/LR 1600-2-001/18101-07-02/en

copyright © Liebherr-Werk Ehingen GmbH 2018

5.1.1 Luffing the W-lattice jib down

Note

- ▶ The luff down movement is turned off as soon as the lowest operating position is reached.
- ▶ When the lowest operating position of the W-lattice jib is reached, the load display in the „Maximum load“ icon turns off and instead of the load display, the display „???“ appears.
- ▶ In the crane operating screen appear alarm functions.

▶ Luff the W-lattice jib down to the „lowest“ operating position.

Result:

The following alarm functions become active:
– „STOP“
– „Horn“ and acoustical signal

DANGER
Crane operation with added assembly key button!

- ▶ The actuation of the assembly key button **450** is only permitted for assembly tasks!
- ▶ The assembly key button **450** may only be operated by persons who are aware of the consequences of a bypass!
- ▶ If the assembly key button **450** is turned on, the hoist limit switch and the LICCON overload protection is bypassed!
- ▶ Crane operation with the assembly key button **450** turned on is strictly prohibited!
- ▶ The assembly key button **450** must be removed immediately after carrying out the assembly work and handed to an authorized person!

When the W-lattice jib has reached the „lowest“ operating position:
▶ Turn the assembly key button **450** on.

Result:

– The LICCON overload protection is deactivated.
– The indicator light **431** lights up.
– The assembly icon **11** on the LICCON monitor blinks.
– The „STOP“ icon on the LICCON monitor blinks.
– An acoustical signal sounds.
– The three color light lights up red and the warning light on the rear of the turntable lights up.

See illustration **23**

The luff down procedure is carried out until:
– The S-boom and W-lattice jib form an angle of approximately 45° (switch position „W-lattice jib bottom“)
– **or** the hook block can be reeved out.

▶

copyright © Liebherr-Werk Ehingen GmbH 2018

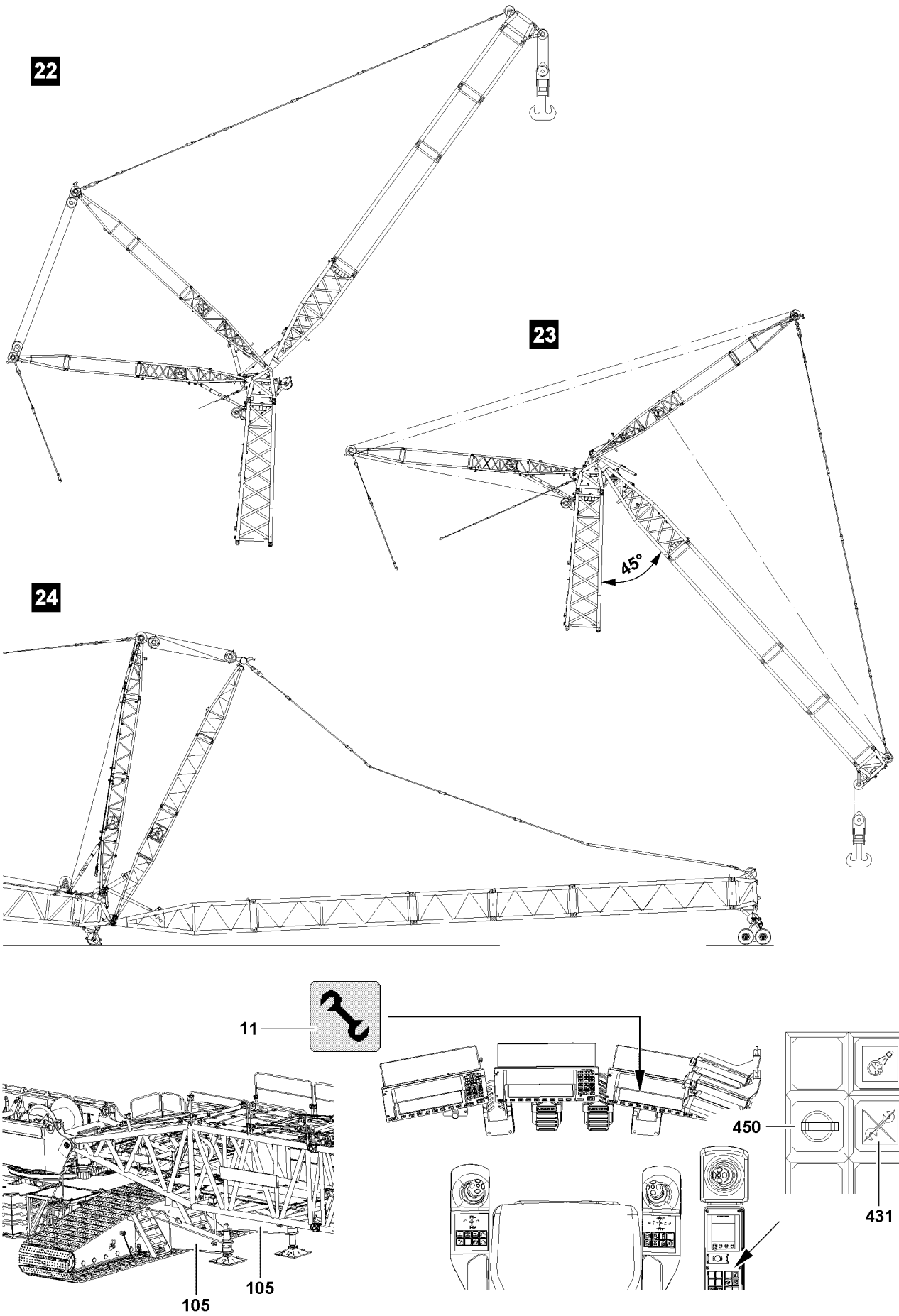

Fig.106822

LWE/LR 1600-2-001/18101-07-02/en

copyright © Liebherr-Werk Ehingen GmbH 2018

5.1.2 Taking down the W-lattice jib

If the hook block has not yet touched the ground:

- ▶ At the same time, spool the hoist winch out and luff the S-boom down until the hook block touches the ground.
- ▶ Remove the hoist limit switch weight.
- ▶ Reeve out the hook block.
- ▶ Luff the S-boom down until the SW-end section lies on the roller cart.
- ▶ Assemble the SW-end section on the roller cart, see chapter 5.15.

WARNING
The crane can topple over!
If the following conditions are not met before taking down the boom, the crane can topple over. Personnel can be severely injured or killed.

- ▶ Spool the lattice jib control out so that the guy rods sag slightly!
- ▶ The lattice jib must roll on the ground with its entire weight!
- ▶ Do not allow slack rope to form on the control winch!
- ▶ Do not pull the hook block along on the ground!

- ▶ Continue to luff down the S-boom and simultaneously spool the W-lattice jib control out so that the guy rods sag slightly.

See illustration **24**

- ▶ Luff the S-boom down until the S-boom head is laying on the substructure on the ground.

WARNING
Danger of accident!

- ▶ No one may be present in the danger zone.
- ▶ Secure the hoist rope with the assembly rope and pull it back slowly over the rope pulleys in the WA-frames and lower it toward the W-connector head.

- ▶ Take the hoist rope down.

5.2 Disconnecting the electrical connections

Make sure that the following prerequisite is met:

- The S-boom has been placed down.

NOTICE
Damage to cable drum or cable!
If the electrical connection between the W-end section and W-pivot section is not separated before spooling up the cable drum, the electrical connection is damaged!
If the cable drum cable is not properly spooled up on the cable drum after disconnection on the SW-end section, the cable drum or the cable can be significantly damaged!

- ▶ Make the electrical connection from the cable drum in the W-pivot section to the terminal box on the W-connector head and then separate the electrical connection from the terminal box on the SW-end section to the cable drum!
- ▶ After unplugging, spool the cable onto the cable drum.

- ▶ Disconnect the electrical connections.
- ▶ After unplugging, spool the cable onto the cable drum and secure it to prevent it from spooling out inadvertently.
- ▶ Secure the cable: Reestablish the electrical connection between the W-connector head and the cable drum.

LWE/LR 1600-2-001/18101-07-02/en

copyright © Liebherr-Werk Ehingen GmbH 2018

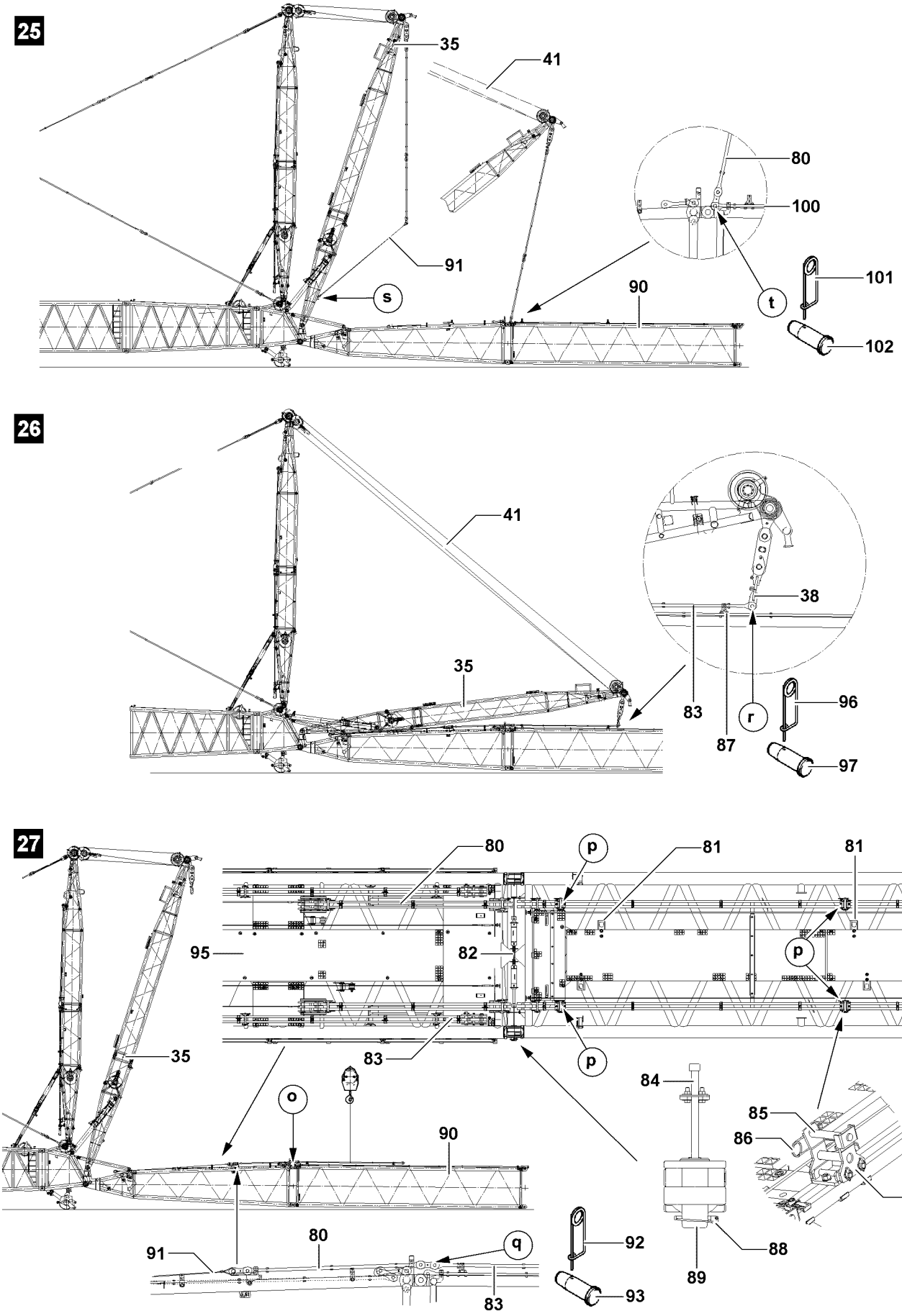

Fig.106824

LWE/LR 1600-2-001/18101-07-02/en

copyright © Liebherr-Werk Ehingen GmbH 2018

5.3 Disassembling the W-lattice jib

WARNING
Falling components!
If unsecured or non-supported components are assembled or disassembled, they can fall down. Personnel can be killed or seriously injured.
- ▶ During pinning and unpinning of the lattice sections, it is prohibited for anyone to remain **under** or **on** the components as well as within the entire danger zone!
- ▶ Pin or unpin both pins laying in a horizontal, i.e. **left** and **right**!
- ▶ Secure the pins in the bearing points and in the receptacles!
- ▶ Do not disengage the auxiliary crane until each component is pinned on and secured!
- ▶ It is prohibited to lean a ladder against the component being disassembled!

Note
- ▶ Adhere to the pin sequence during the disassembly of the W-lattice jib, see chapter 5.01!

5.3.1 Disassembling the W-guy rods

The W-guy rods are placed and secured for transport on the LI-lattice sections. Before disassembly of the W-guy rods, the transport retainers must be assembled.

See illustration **25**

- ▶ Take down WA-frame 1 **35** until the guy rods **80** and guy rods **100** in the point **t** can be unpinned: Spool the W-control rope **41** out.
- ▶ Separate the guy rods **80** and the guy rods **100** on both sides on point **t**: Remove the spring retainer **101** and unpin the pin **102**.
- ▶ Hook the assembly rope **91** on point **t**.
- ▶ Erect the WA-frame 1 **35** until the assembly rope **91** can be hooked on point **s**: Spool the W-control rope **41** up.
- ▶ Hook the assembly rope **91** on point **s**.
- ▶ Release and unpin guy rods of all LI intermediate sections.
- ▶ Secure the W-guy rods with the transport retainers.

5.3.2 Disassembling the W-lattice section

See illustration **26**

- ▶ Take down WA-frame 1 **35** until guy rods **80** on the W-pivot section **95** and guy rods **83** lie in the receptacles **87**: Spool the W-control rope **41** out.
- ▶ Separate the cross beam **38** and guy rods **83** both sides on the point **r**: Remove the spring retainer **96** and unpin the pin **97**.
- ▶ Erect the WA-frame 1 **35**: Spool the W-control rope **41** up.

See illustration **27**

- ▶ Separate the guy rods **80** and the guy rods **83** on both sides on point **q**: Remove the spring retainer **92** and unpin the pin **93**.
- ▶ Take down the guy rods **83** with the auxiliary crane on the W-pivot section **95** and secure with transport retainers.
- ▶ Secure guy rods **83** with transport retainers.
- ▶ Hang the pin pulling cylinder on the retainer **82** and on the screw **84**.
- ▶ Disassemble SW-end section and LI-intermediate section: Remove the linch pins **88** and unpin the pins **89** with the pin pulling cylinder.
- ▶ Disassemble receptacles **87** on the points **p** and secure in the parking position **81**.

LWE/LR 1600-2-001/18101-07-02/en

copyright © Liebherr-Werk Ehingen GmbH 2018

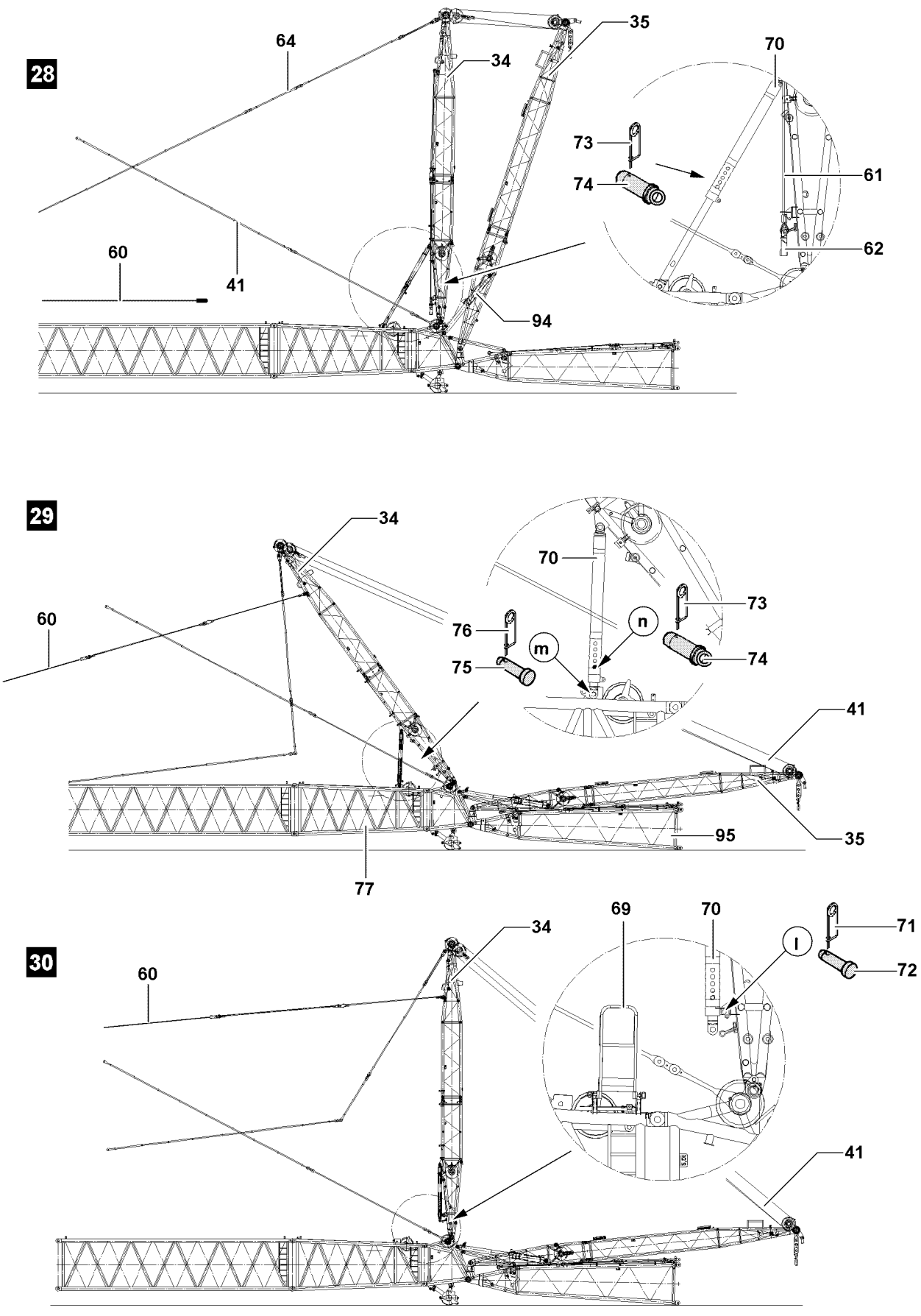

Fig.106823

LWE/LR 1600-2-001/18101-07-02/en

copyright © Liebherr-Werk Ehingen GmbH 2018

5.4 Unpinning the relapse supports

See illustration **28**

▶ Erect the WA-frame 1 **35** until the relapse cylinder **94** is completely retracted.

Result:

– The relapse supports **70** are relieved: Connecting pin **74** can be unpinned.

WARNING
Danger of falling!
If the folding platforms **69** on the SL-reducer section is not used, personnel can fall down and be severely injured or killed.
▶ Pinning of the relapse supports by the folding platforms is carried out on the SL-reducer section.

NOTICE
Damage of WA-frame 2!
If the connection pin on the relapse supports is pinned when the WA-frame 2 is not drawn backward, WA-frame 2 can be damaged!
▶ Unpin connecting pins **74** on both sides before WA-frame 2 **34** is drawn backward.

▶ Remove the spring retainer **73** on both sides and unpin the connecting pins **74**.
▶ Release the assembly rope **61** on the WA-frame 2 **34**.
▶ Hang hoist rope **60** in the hook block **62** on the assembly rope **61**.

See illustration **29**

Note
▶ When the W-control rope is spooled out, the WA-frame 1 **35** may not be lifted!

▶ Take down the WA-frame 1 **35** onto the W-pivot section **95**: Spool the W-control rope **41** out.
▶ Pull the WA-frame 2 **34** backward: Spool the W-control rope **41** out and spool the hoist rope **60** up until the relapse supports **70** are pushed in.
▶ Pin the connector pin **74** on point **n** and secure with spring retainer **73**.
▶ Unpin the relapse supports **70** on both sides on the point **m**: Remove the spring retainer **76** and unpin the pin **75**.

See illustration **30**

▶ Erect the WA-frame 2 **34** vertically: Spool the W-control rope **41** up and simultaneously spool out the hoist rope **60**.
▶ Pin the relapse supports **70** on both sides on the point **l**: Insert the pin **72** and secure with the spring retainer **71**.

LWE/LR 1600-2-001/18101-07-02/en

copyright © Liebherr-Werk Ehingen GmbH 2018

31

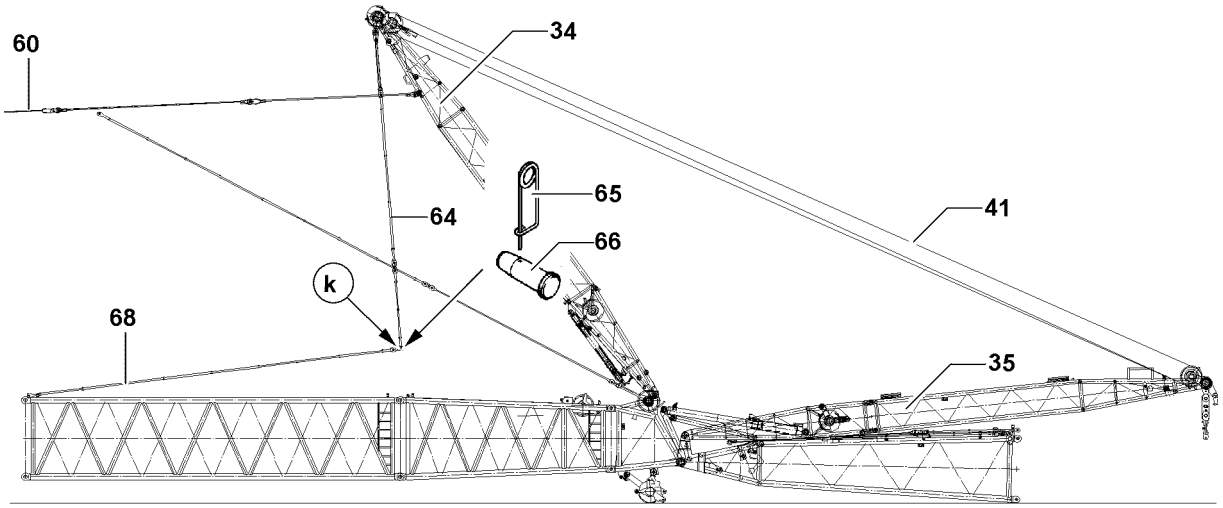

32

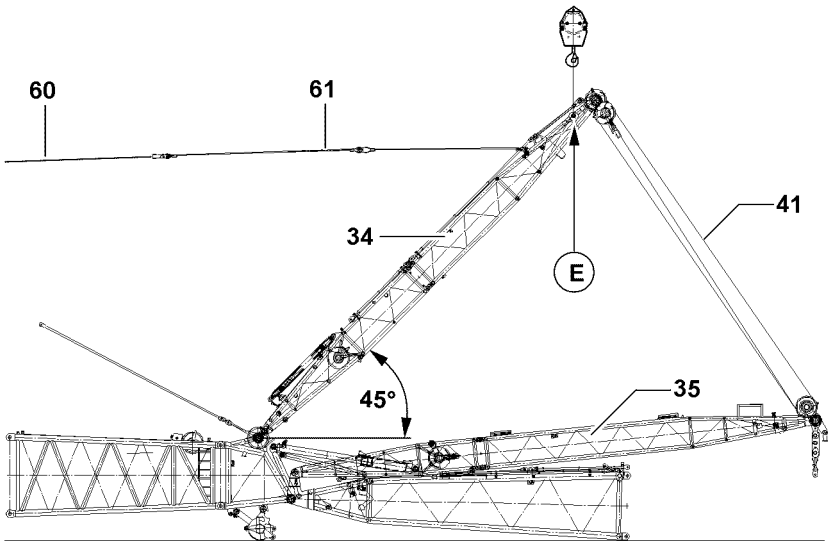

33

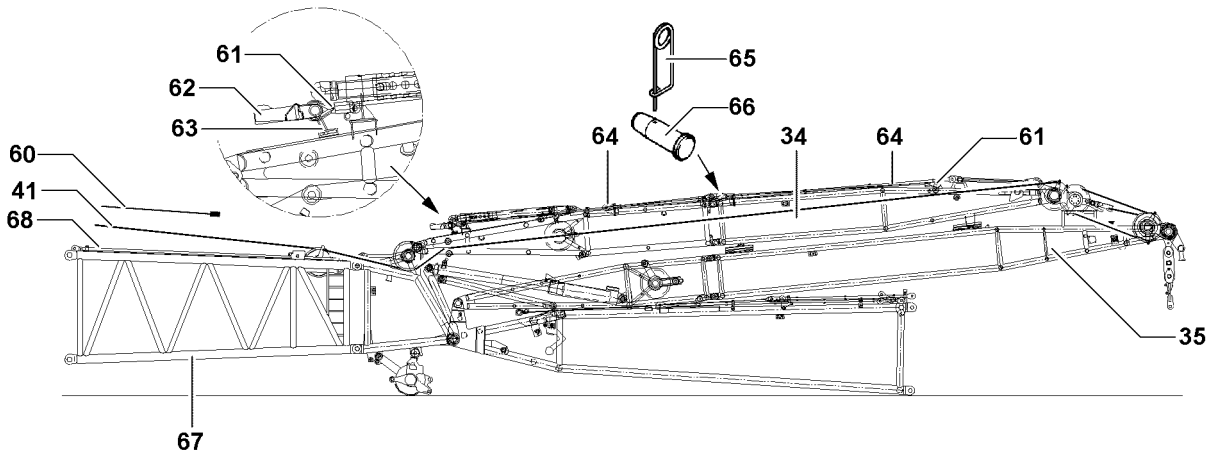

Fig.107266

LWE/LR 1600-2-001/18101-07-02/en

copyright © Liebherr-Werk Ehingen GmbH 2018

5.5 Disassembling the WA-frame 2 guy rods

Note

▶ While spooling out the W-control rope, lift the WA-frame 1 **35** slightly to prevent slack rope formation.

See illustration **31**

▶ Pull the WA-frame 2 **34** back until the W-guy rods **64** hang down vertically: Spool the W-control rope **41** out and simultaneously spool the hoist rope **60** up.
▶ Take down the W-guy rods **68** on the S/SL-boom.
▶ Separate the W-guy rods **64** both sides on the point **k** from the W-guy rods **68**: Remove the spring retainer **65** and unpin the pin **66**.
▶ Secure the W-guy rods **68** with the transport retainers.

See illustration **32**

WARNING

WA-frame 2 folding downward!
If the WA-frame 2 is not held with the auxiliary crane at 45° while taking it down, it can fold downward.
Personnel can be severely injured or killed.

▶ Fasten WA-frame 2 **34** with auxiliary crane and slowly lower.

▶ Erect the WA-frame 2 **34** and tilt it forward by 45°: Spool the W-control rope **41** up and simultaneously spool out the hoist rope **60**.
▶ Secure the WA-frame 2 **34**: Hang it on the fastening point **E** on the auxiliary crane.
▶ Spool the hoist rope **60** out until the assembly rope **61** is released.

See illustration **33**

▶ Take down the WA-frame 2 **34** with the auxiliary crane on the WA-frame 1 **35**, spool the W-control rope **41** up and simultaneously spool the hoist rope **60** out.
▶ Secure the assembly rope **61** on the WA-frame 2 **34** and separate the hoist rope **60**.
▶ Spool the hoist rope **60** up.
▶ Separate the W-guy rods **64** on the WA-frame 2 **34**: Remove the spring retainer **65** and unpin the pin **66**.
▶ Secure the W-guy rods **64** with the transport retainers.

LWE/LR 1600-2-001/18101-07-02/en

copyright © Liebherr-Werk Ehingen GmbH 2018

34

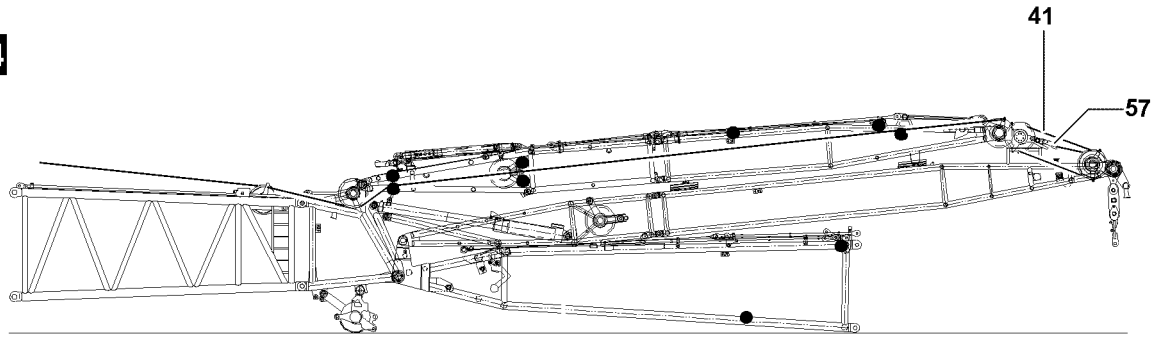

35

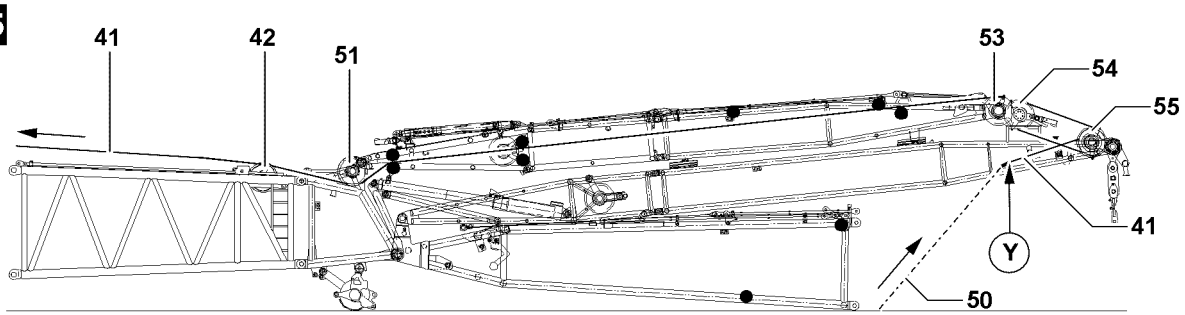

36

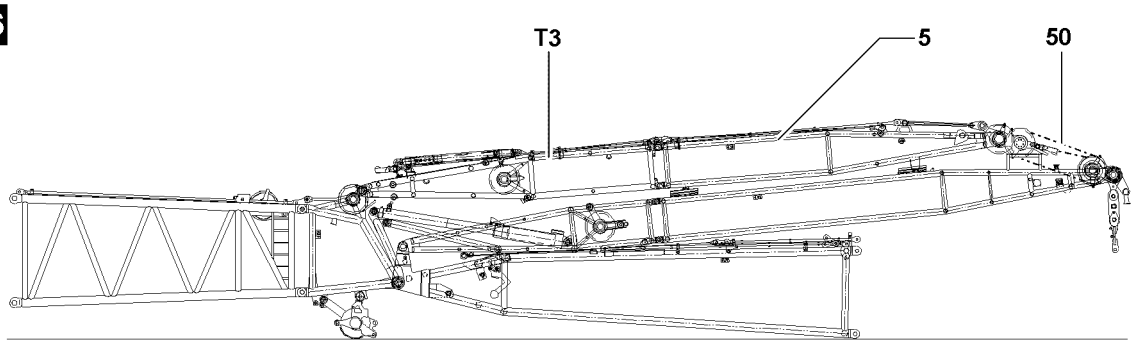

LWE/LR 1600-2-001/18101-07-02/en

Fig.106826

copyright © Liebherr-Werk Ehingen GmbH 2018

5.6 Reeving out the W-control rope

NOTICE
Slack rope formation!
The control rope can become damaged due to slack rope formation.
- ▶ Do not allow slack rope formation while spooling the W-control rope up!
- ▶ When spooling the W-control rope up, keep the rope tight!

Note
- ▶ Before reeving out the W-adjusting rope, the rope retaining pins of rope pulley **42**, rope pulley **51**, rope pulley **53**, roller set **54** and roller set **55** must be released and unpinned, see illustration **35**.

5.6.1 Reeving out the W-control rope on the roller sets

Make sure that the following prerequisite is met:
– The intake rope for the roller sets is available.

See illustration **34**

- ▶ Unhook the W-control rope **41** on the rope lock **57**.

See illustration **35**

- ▶ Pull the intake rope **50** to point **Y**.
- ▶ Connect the intake rope **50** and the W-control rope **41** on point **Y**.
- ▶ Spool the W-control rope **41** out and pull the intake rope in on the roller set **54** and on the roller set **55** and hook on the rope lock **57**.
- ▶ Separate the W-control rope **41** on the rope pulley **53** from the intake rope **50**.
- ▶ Install the rope retaining pins on the roller sets and the rope pulleys.

5.6.2 Reeving out the W-control rope on the WA-frame 2

Make sure that the following prerequisite is met:
– The intake ropes for the WA-frame 2 are available.

See illustration **35**

- ▶ Pull the W-control rope **41** from the WA-frame 2 **34** and spool onto winch V.

See illustration **36**

- ▶ Secure the intake rope **53** on the transport unit **T3** and on the end section WA-frame 2 **5**.
- ▶ Install the rope retaining pins on the rope pulleys.

LWE/LR 1600-2-001/18101-07-02/en

copyright © Liebherr-Werk Ehingen GmbH 2018

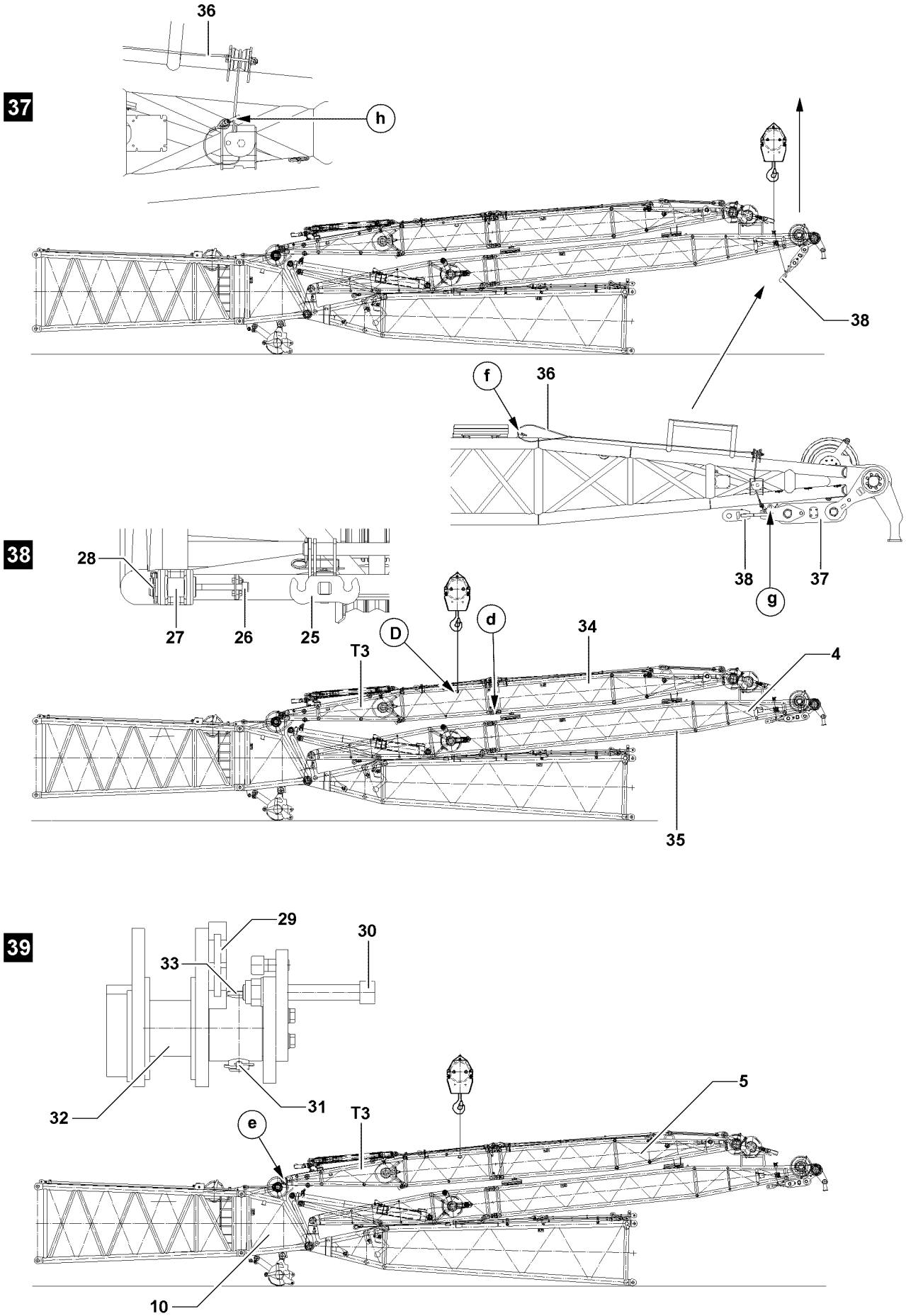

Fig.107267

LWE/LR 1600-2-001/18101-07-02/en

copyright © Liebherr-Werk Ehingen GmbH 2018

5.7 Disassembling the W-transport units

5.7.1 Separating the WA-frame 2

See illustration **37**

- ▶ Release the ropes **36** on both sides in park position on point **f** and secure point **h**.
- ▶ Fasten the cross beam **38** with ropes **36** on the auxiliary crane.
- ▶ Lift the cross beam **38** with the auxiliary crane and pin and secure on point **g**.
- ▶ Separate the ropes **36** from the auxiliary crane and secure on point **f**.

See illustration **38**

- ▶ Secure and slightly lift the WA-frame 2 **34** with the auxiliary crane on the fastening point **D** until it can be unpinned on point **d**.
- ▶ Hang the pin pulling cylinder on the retainer **25** and on the screw **26**.
- ▶ Separate the transport unit **T3** and the WA-frame 2 end section **5** both sides on point **d**: Remove the linch pins **28** and unpin the pins **27**.

See illustration **39**

- ▶ Hang the pin pulling cylinder on the retainer **29** and on the screw **30**.
- ▶ Separate the transport unit **T3** and the W-connector head **10** on both sides on point **e**: Remove the linch pins **31** and unpin the pins **33**.
- ▶ Hang the pin pulling cylinder on the retainer **29** and on the screw **30**.
- ▶ Unpin the pin **32** with the pin pulling cylinder.
- ▶ Lower the transport unit **T3** and remove the auxiliary crane.

LWE/LR 1600-2-001/18101-07-02/en

copyright © Liebherr-Werk Ehingen GmbH 2018

40

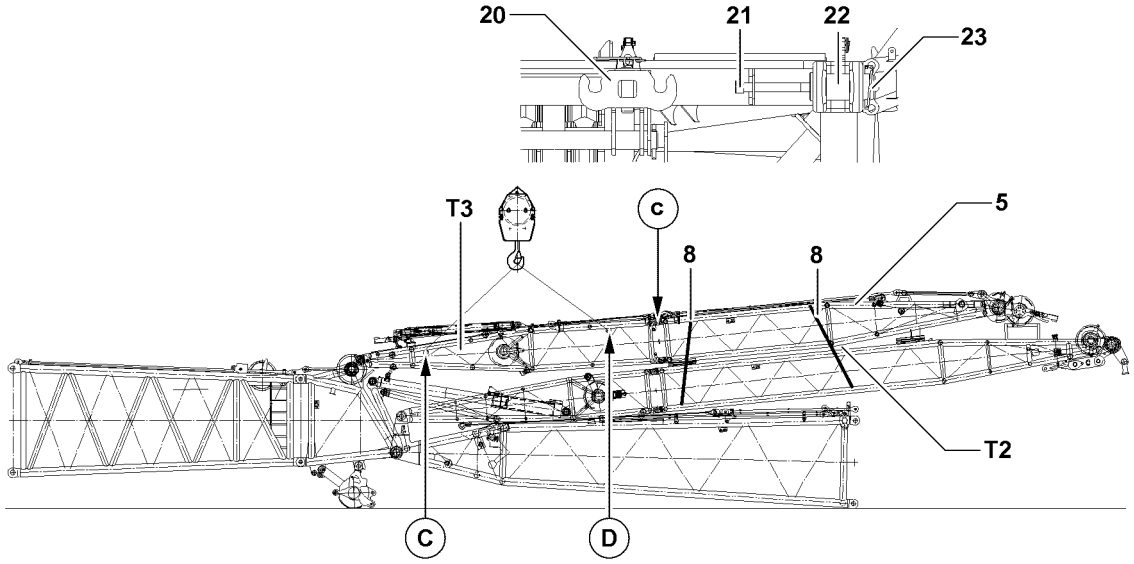

41

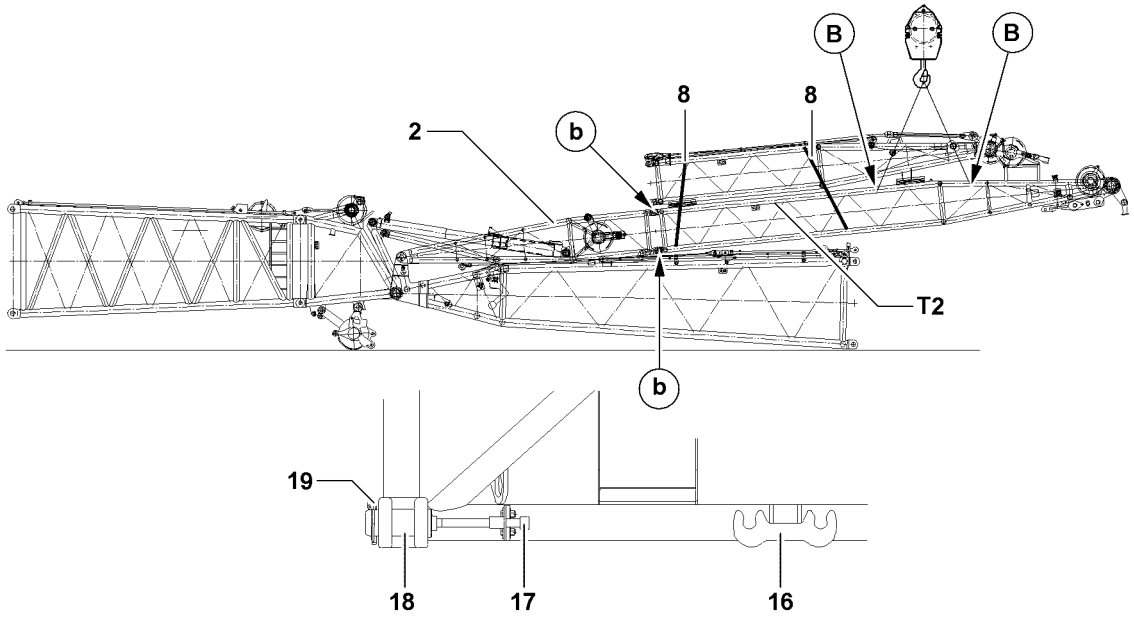

42

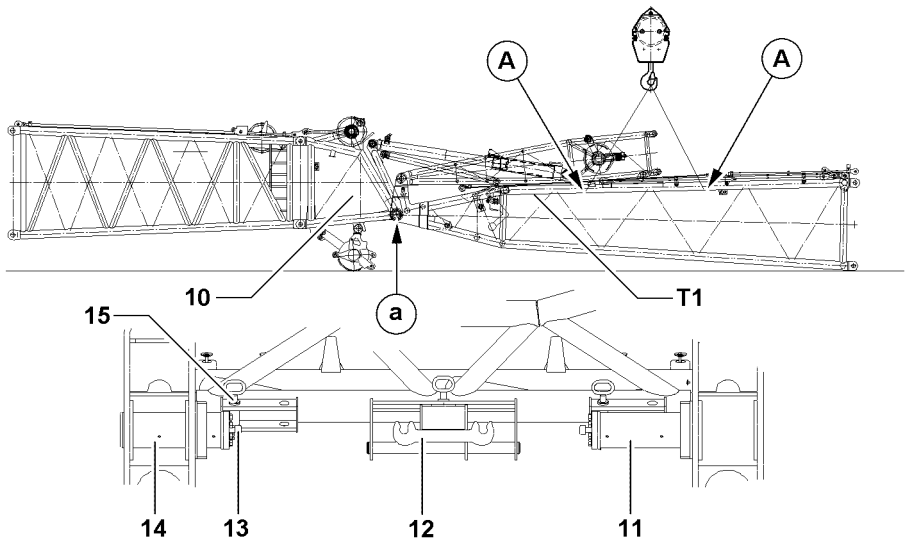

Fig.106838

LWE/LR 1600-2-001/18101-07-02/en

copyright © Liebherr-Werk Ehingen GmbH 2018

5.7.2 Disassembling W-transport unit 3

See illustration **40**

- ▶ Secure the transport unit **T2** with the lashing belts **8**.
- ▶ Fasten and secure the auxiliary crane on fastening point **C** and fastening point **D** on the transport unit **T3**.
- ▶ Hang the pin pulling cylinder on the retainer **20** and on the screw **21**.
- ▶ Separate the transport unit **T3** and the WA-frame 2 end section **5** both sides on point **c**: Remove the linch pins **23** and pin the pins **22**.
- ▶ Remove the transport unit **T3** with the auxiliary crane.

5.7.3 Disassembling W-transport unit 2

See illustration **41**

Make sure that the following prerequisite is met:
– The lashing belts are tightly rigged on transport unit 2.

WARNING
Slipping component!
If the lashing belts are not present or insufficiently secured while lifting the transport unit 2, the end section of the WA-frame 2 can slide down. Personnel can be severely injured or killed.
- ▶ Make sure that the lashing belts **8** are tightly secured on transport unit 2.

- ▶ Disconnect the electrical connection for the pull test bracket between the transport unit **T2** and the transport unit **T1**.
- ▶ Fasten and secure the auxiliary crane on the fastening points **B** on the transport unit **T2**.
- ▶ Hang the pin pulling cylinder on the retainer **16** and on the screw **17**.
- ▶ Separate the transport unit **T2** and the WA-frame 1 pivot section **2** both sides on the points **b**: Remove the linch pins **19** and unpin the pins **18**.
- ▶ Remove the transport unit **T2** with the auxiliary crane.

5.7.4 Disassembling W-transport unit 1

See illustration **42**

- ▶ Fasten and secure the auxiliary crane on the fastening points **A** on the transport unit **T1**.
- ▶ Hang the pin pulling cylinder on the retainer **12** and on the screw **13**.
- ▶ Separate the transport unit **T1** and the W-connector head **10** on both sides on point **a**: Remove the connector pins **15** and unpin the pins **14**.
- ▶ Remove the transport unit **T1** with the auxiliary crane.

LWE/LR 1600-2-001/18101-07-02/en

copyright © Liebherr-Werk Ehingen GmbH 2018

Empty page!

LWE/LR 1600-2-001/18101-07-02/en

copyright © Liebherr-Werk Ehingen GmbH 2018

5.08 WV-lattice jib

1	Overview WV-lattice jib	3
2	Assembling the WV-boom system	5
3	Operating the crane	17
4	Disassembling the WV-boom system	19

LWE/LR 1600-2-001/18101-07-02/en

copyright © Liebherr-Werk Ehingen GmbH 2018

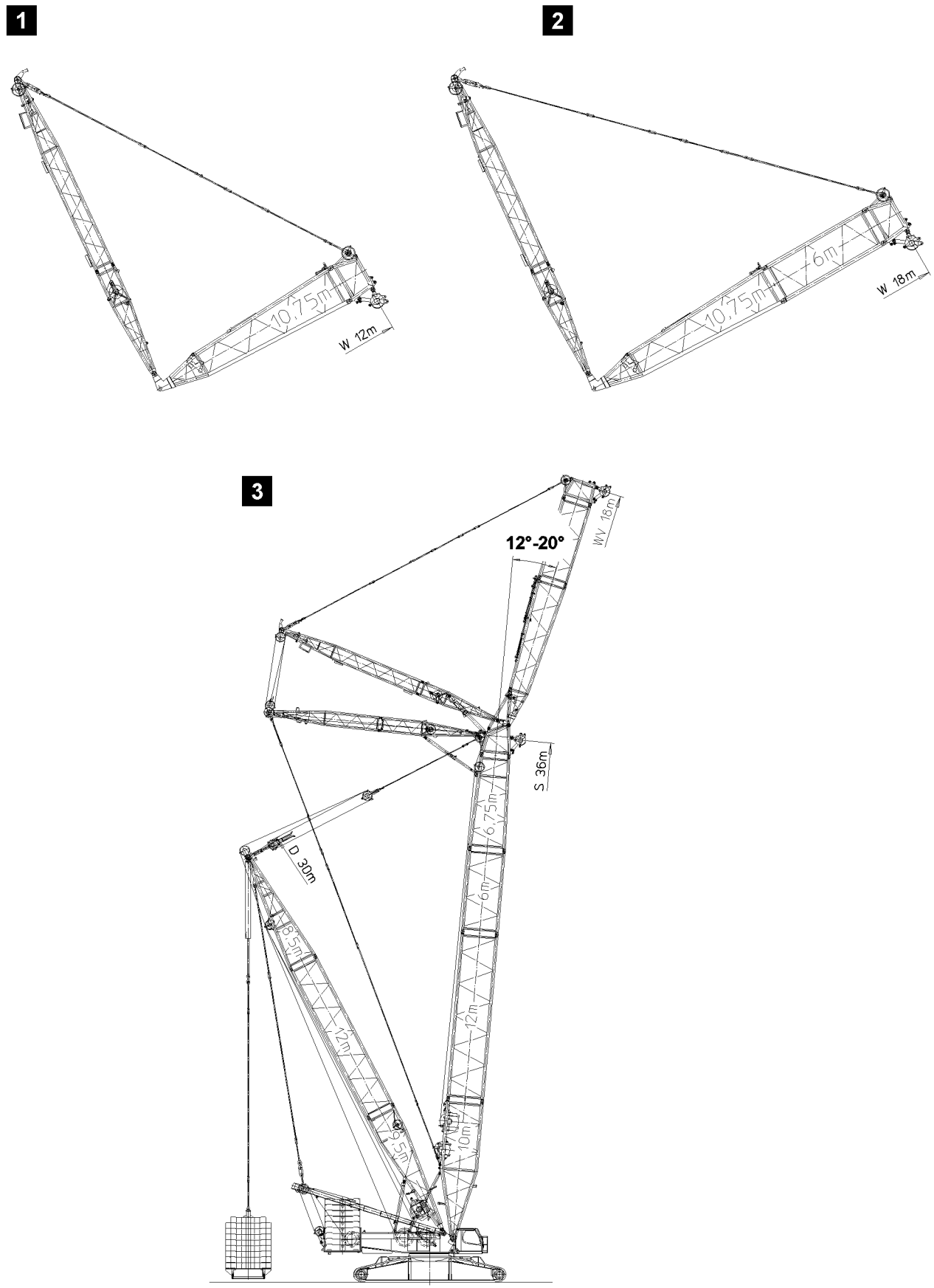

Fig.113571

LWE/LR 1600-2-001/18101-07-02/en

copyright © Liebherr-Werk Ehingen GmbH 2018

1 Overview WV-lattice jib

This chapter refers to the SDW-boom systems with the following WV-lattice jib lengths:
- 12 m , see illustration **1**.
- 18 m , see illustration **2**.

The operating range of the WV-lattice sections to the S-boom includes an angle range between 12° and 20°.

The adjustment of the WV-lattice jib is made by winch 5.

The adjustment of the S-boom, together with the WV-lattice jib is made by winch 3.

Note
- ▶ The WV-lattice jib on this crane type is expandable up to a length of maximum 96 m.
- ▶ The WV-lattice jib is structurally the same as the W-lattice jib.
- ▶ The difference between the SDW-boom configuration and the SDWV-configuration is that the change of radius in the SD**W**-operating mode is made via the luffing jib and in the SD**WV**-operating mode via the main boom.
- ▶ Since the maximum load capacities for these two operating mode differ due to static factors in various load ranges, it must first be checked with the Job planner which of the two operating modes - with a precise upcoming load case - offers the better load capacity values.

LWE/LR 1600-2-001/18101-07-02/en

copyright © Liebherr-Werk Ehingen GmbH 2018

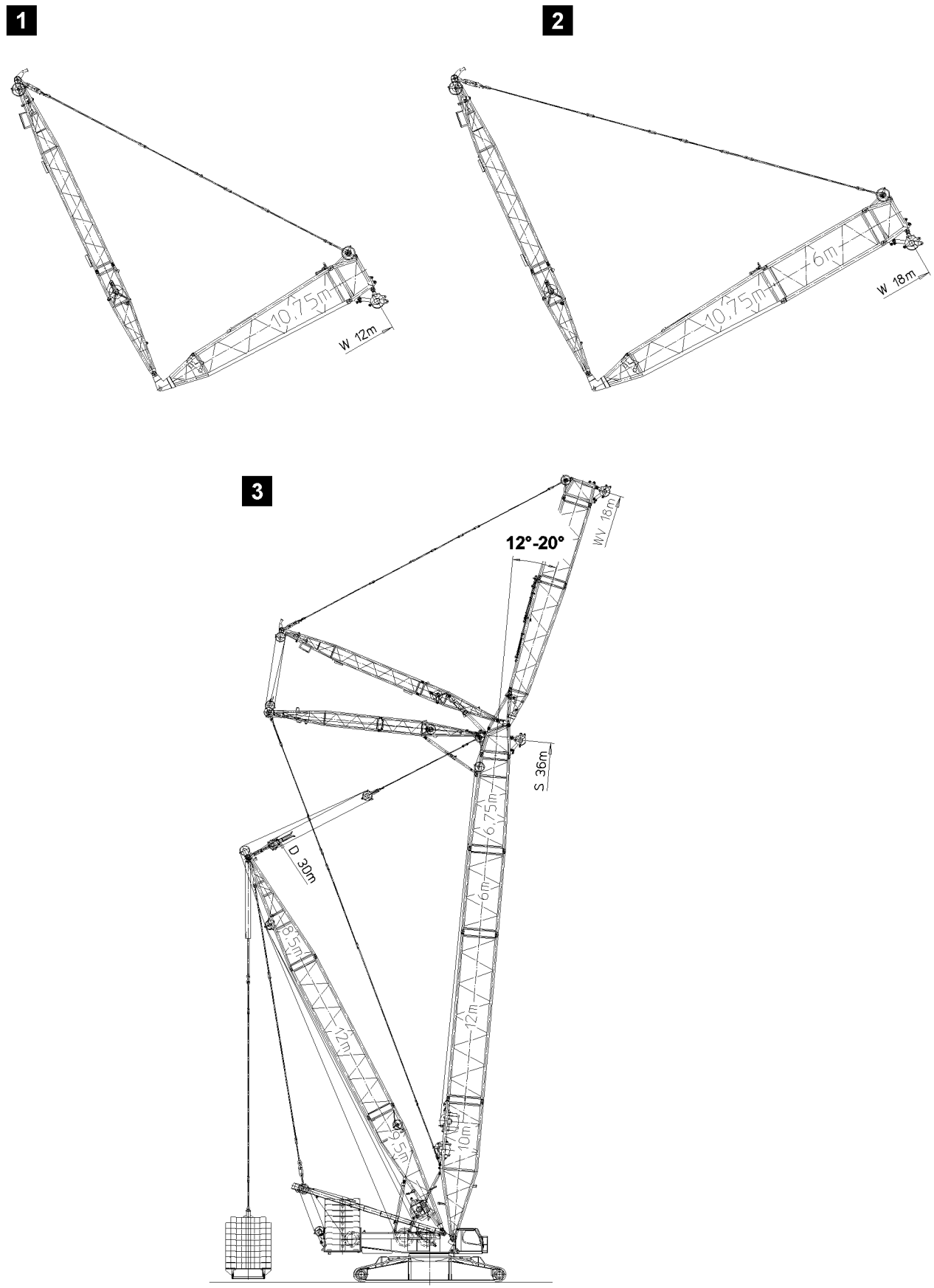

Fig.113571

LWE/LR 1600-2-001/18101-07-02/en

copyright © Liebherr-Werk Ehingen GmbH 2018

2 Assembling the WV-boom system

WARNING
Risk of falling!
During assembly / disassembly work, personnel must be secured with appropriate aids to prevent them from falling. If this is not observed, assembly personnel could fall and suffer life-threatening or fatal injuries.

- ▶ All assembly work must be carried out using suitable aids (lifting platforms, scaffolding, ladder, auxiliary crane, etc.)!
- ▶ If work cannot be carried out on the ground or using such aids, the assembly personnel must be secured with suitable personal fall protection systems (see chapter 2.04) to protect against falling! The personal fall arrest system must be attached in the corresponding fastening points on the crane (see chapter 2.06).
- ▶ If railings are present on the components, then they must be brought into the corresponding position and secured for assembly / disassembly.
- ▶ Step on aids and fall protection equipment only with clean shoes!
- ▶ Keep aids and fall protection equipment clean and free from snow and ice!

WARNING
Falling components!
If unsecured or non-supported components are assembled or disassembled, they can fall down. Personnel can be killed or seriously injured.

- ▶ During pinning and unpinning of the lattice sections, it is prohibited for anyone to remain **under** or **on** the components as well as within the entire danger zone!
- ▶ Support the boom and components before pinning / unpinning!
- ▶ Pin or unpin both pins laying in a horizontal, i.e. **left** and **right**!
- ▶ Secure the pins in the bearing points and in the receptacles!
- ▶ Do not disengage the auxiliary crane until each component is pinned and secured!
- ▶ It is prohibited to lean a ladder against the component being disassembled!

WARNING
Danger of crushing!
Components can swing during assembling. Hands can be crushed or severed.

- ▶ Make sure that the components do not swing back and forth during assembly!

WARNING
Neglected inspection and maintenance on guy rods!
If the regular inspection and maintenance of the guy rods is not carried out or is carried out only in irregular intervals, then severe accidents can occur due to existing and unrecognized damage to the guy rods!
Personnel can be severely injured or killed!

- ▶ Inspect the guy rods before every assembly, see chapter 8.15.

LWE/LR 1600-2-001/18101-07-02/en

copyright © Liebherr-Werk Ehingen GmbH 2018

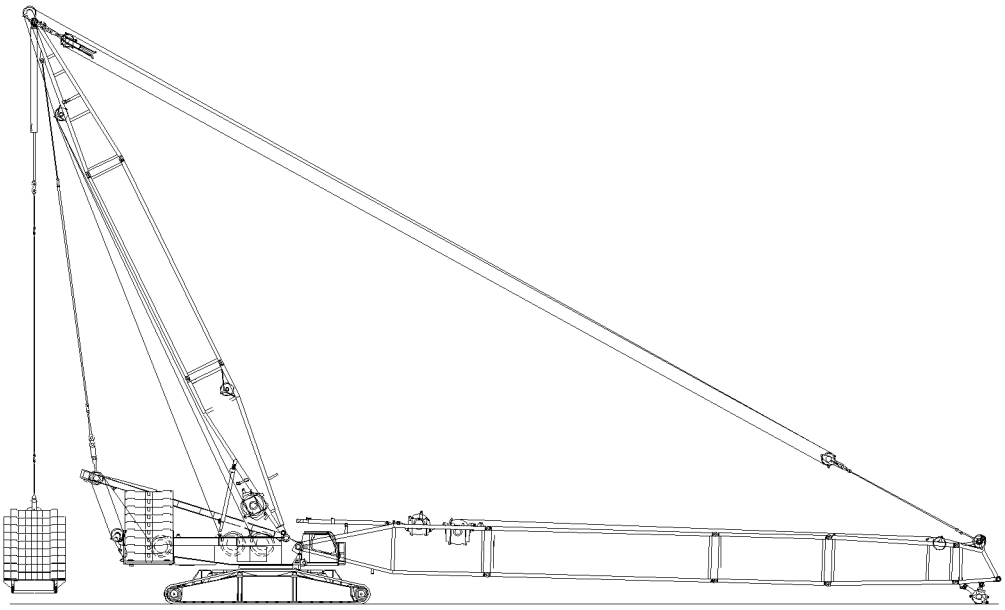

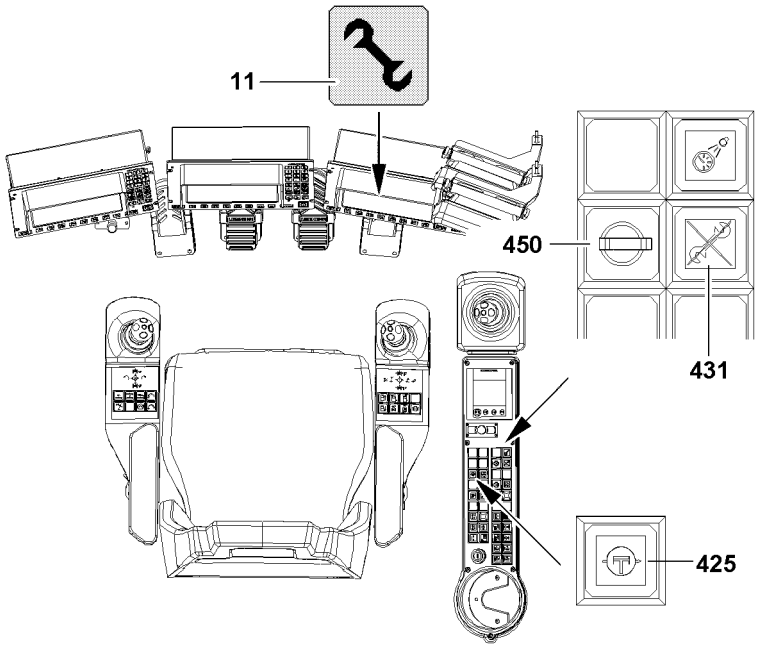

LWE/LR 1600-2-001/18101-07-02/en

Fig.107222

copyright © Liebherr-Werk Ehingen GmbH 2018

Note

▶ By supporting the components during assembly / disassembly, ground unevenness is compensated for and the material is protected.

Note

▶ The intermediate sections are pinned and unpinned with the aid of the pin pulling device, see chapter 5.30.

NOTICE

Property damage!

▶ Always pin in the pins of the guy rods from the „inside“ to the „outside“.

Note

▶ The S-guy rods must be assembled and secured according to the separately supplied assembly drawings. The numbering on the assembly drawings must be identical to the numbering on the guy rods.

Note

▶ The boom combinations must be assembled according to the separately supplied rod and assembly plans!

Make sure that the following prerequisites are met:

- The crane is aligned in horizontal direction.
- The SD-boom combination is assembled, see chapter 5.04 and 5.05.
- The counterweight has been installed on the turntable according to the load chart.
- The derrick ballast is placed on the suspended ballast or the ballast trailer according to the load chart.
- The LICCON overload protection has been set according to the data in the load chart.
- The assembly key button **450** is pressed and the indicator light **431** lights up.
- The assembly icon **11** on the LICCON monitor blinks.
- An auxiliary crane is available.

LWE/LR 1600-2-001/18101-07-02/en

copyright © Liebherr-Werk Ehingen GmbH 2018

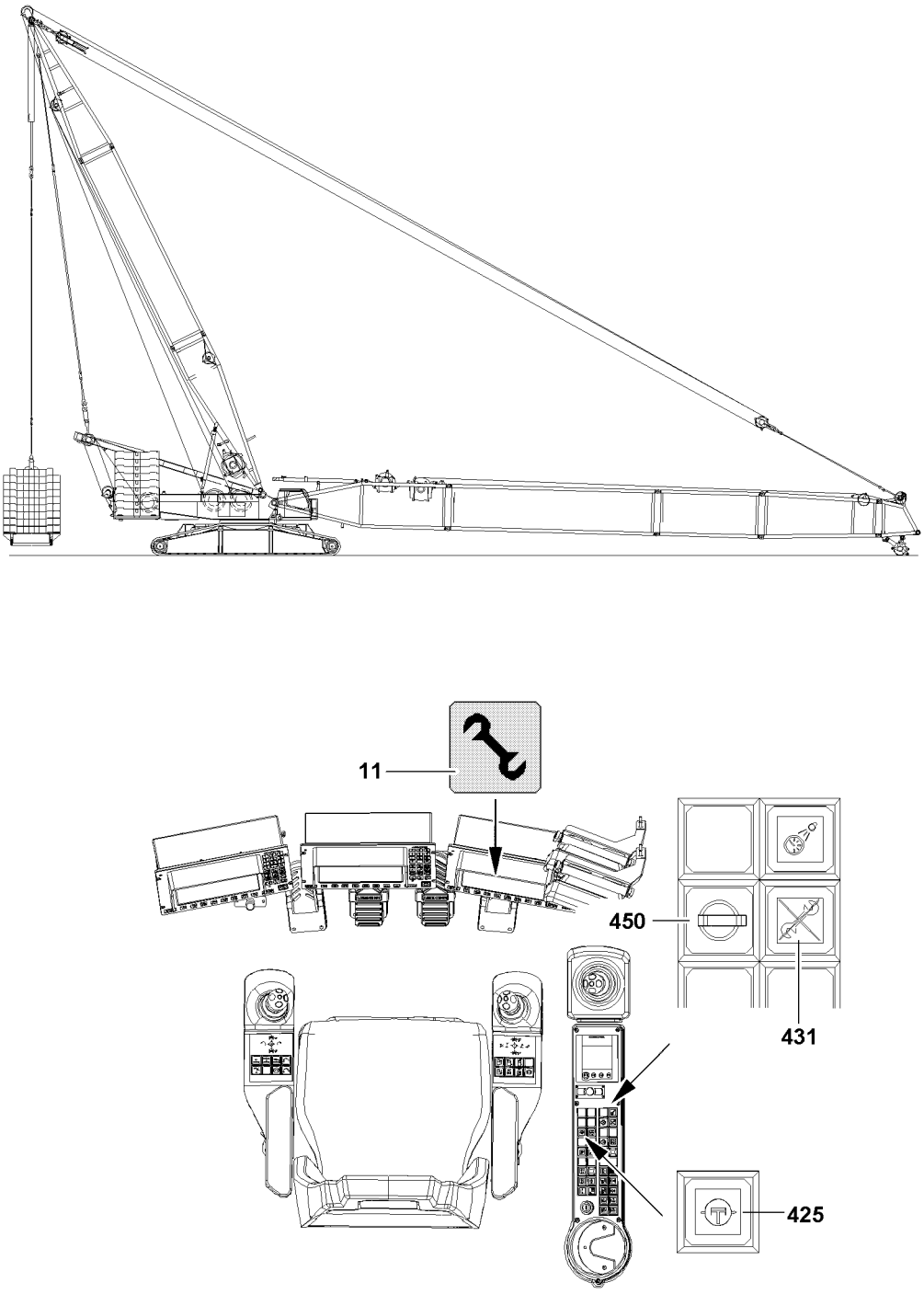

LWE/LR 1600-2-001/18101-07-02/en

Fig.107222

copyright © Liebherr-Werk Ehingen GmbH 2018

2.1 Assembling the W-transport units

Note
▶ Observe and follow the instructions in chapter 5.07!

2.2 Reeving the W-control rope in

Note
▶ Observe and follow the instructions in chapter 5.07!

2.3 Assembling the guy rods WA-frame 2

Note
▶ Observe and follow the instructions in chapter 5.07!

2.4 Pinning the relapse supports

Note
▶ Observe and follow the instructions in chapter 5.07!

2.5 Assembling the WV-lattice jib

Note
▶ Observe and follow the instructions in chapter 5.07!

2.6 Establishing the electrical connections

Note
▶ Observe and follow the instructions in chapter 5.07!

2.7 Checking the function of the safety devices

Note
▶ Observe and follow the instructions in chapter 5.07!

LWE/LR 1600-2-001/18101-07-02/en

copyright © Liebherr-Werk Ehingen GmbH 2018

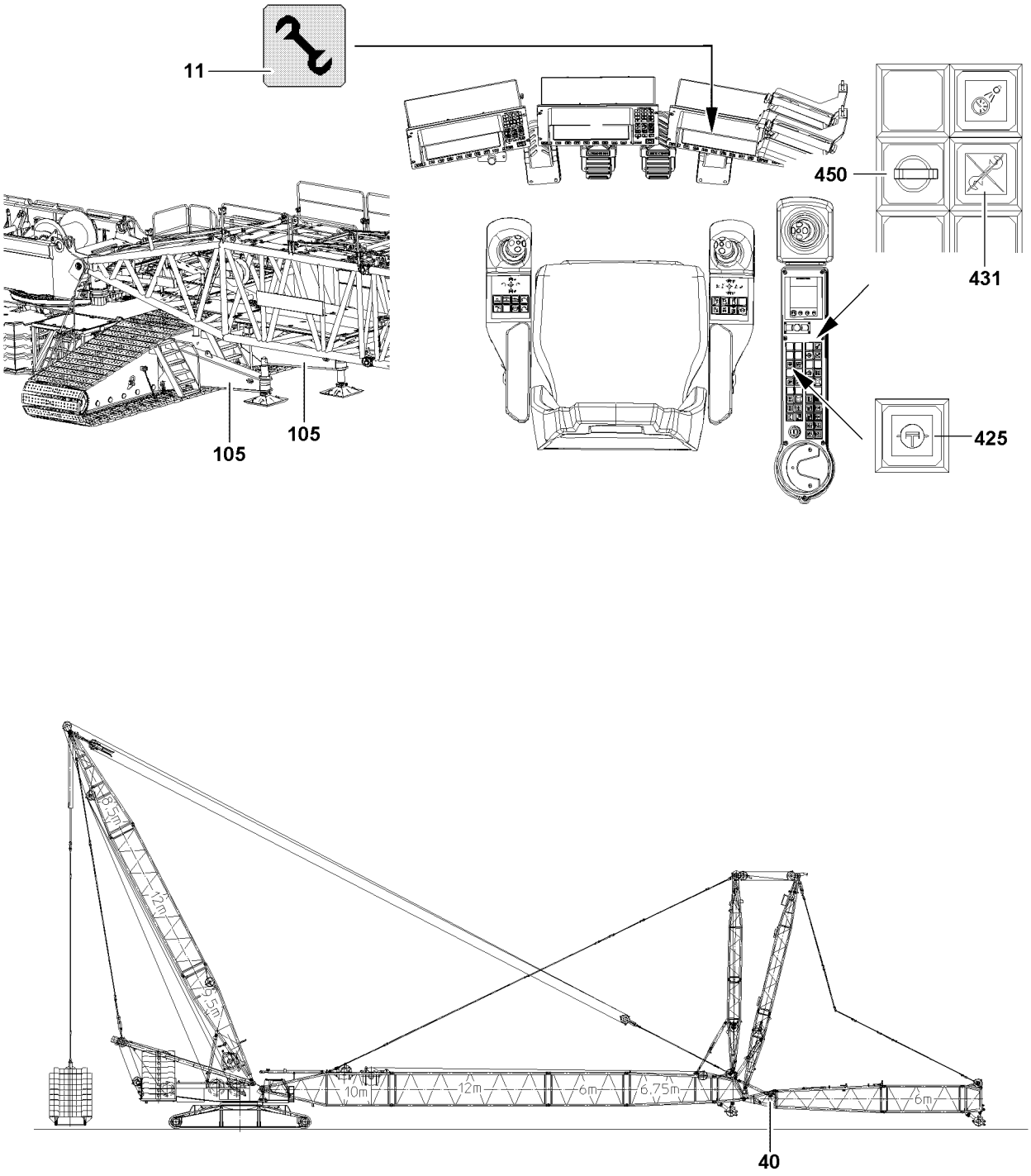

LWE/LR 1600-2-001/18101-07-02/en

Fig.107225

copyright © Liebherr-Werk Ehingen GmbH 2018

2.8 Erecting the boom

Note

▶ The erection procedure in this chapter regards the WV-lattice jibs W12 and W18. Assembly procedure for longer lattice jibs, see chapter 5.07.

DANGER

The crane can topple over!

▶ It is not permitted to turn the crane during erection!
▶ Observe the data in the erection and take down charts!
▶ Observe the Safety technical guidelines in chapter 5.01.

DANGER

The crane can topple over!

For certain boom lengths, the mechanical auxiliary supports must be assembled, see Erection and take down charts!

▶ The boom must be erected or taken down „to the side“ „in direction“ of the mechanical auxiliary supports **105**.
▶ Always erect or take down according to the data in the **Erection and take down charts**!

DANGER

Tipping lattice jib!

If the easy movement on the pendulum of the mechanical relapse support is not checked before erection or not reestablished, if necessary, then the mechanical relapse support will not engage in steep lattice jib position. As a result, the lattice jib can tip to the rear.

Personnel can be severely injured or killed!

▶ Check the easy movement on the pendulum **40** of the mechanical relapse support before erection.
▶ If the pendulum does not move easily: Make the pendulum **40** easy to move!

WARNING

The crane can topple over!

If the following conditions are not met before erecting the boom, the crane can topple over. Personnel can be severely injured or killed!

▶ Spool the lattice jib control out so that the guy rods sag slightly!
▶ Do not allow slack rope to form on the control winch!
▶ Move the relapse cylinder out before erection!

LWE/LR 1600-2-001/18101-07-02/en

copyright © Liebherr-Werk Ehingen GmbH 2018

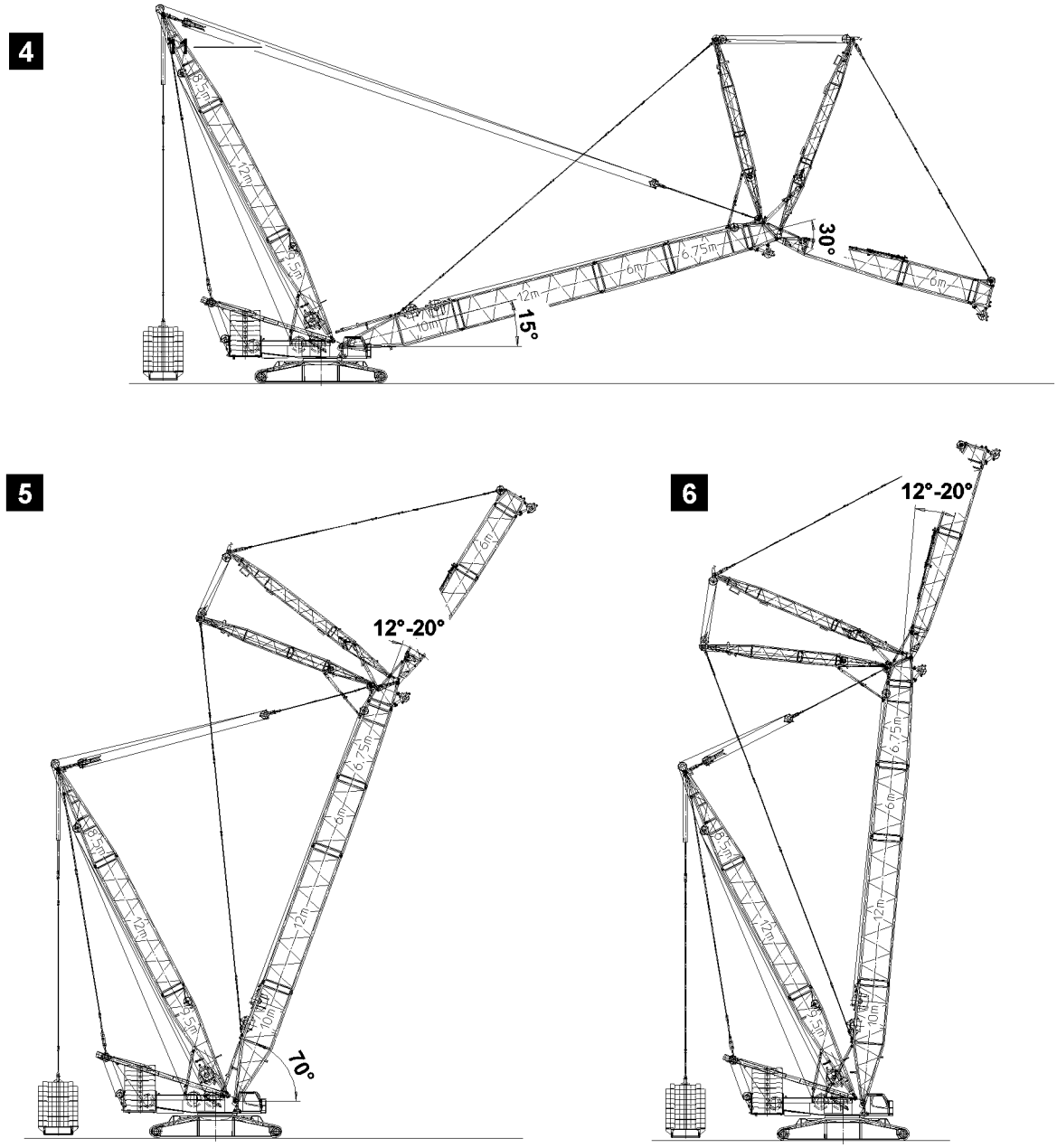

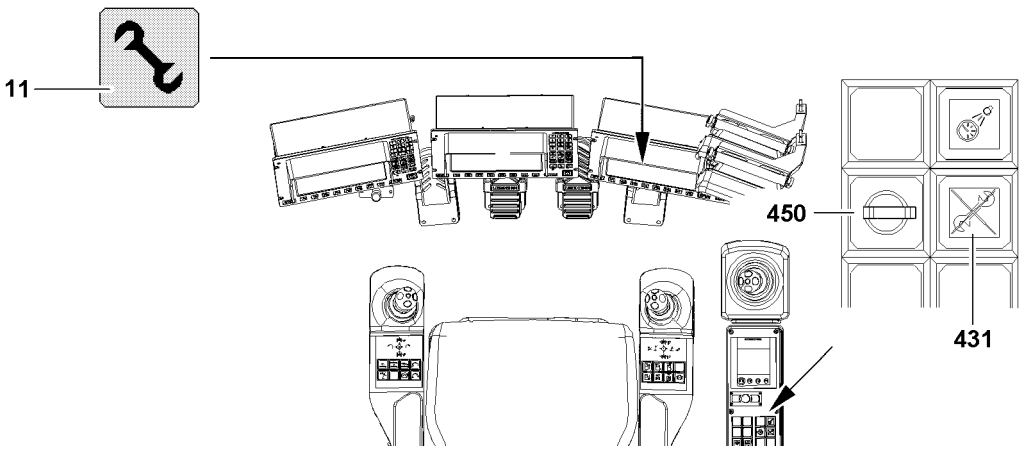

LWE/LR 1600-2-001/18101-07-02/en

Fig.113572

copyright © Liebherr-Werk Ehingen GmbH 2018

Make sure that the following prerequisites are met:
- The WV-lattice jib is fully assembled.
- No personnel is within the danger zone.
- The crane is aligned in horizontal direction.
- All electrical connections have been established.
- All limit switches are functioning.
- The counterweight has been installed on the turntable and on the derrick, according to the load chart.
- All pin connections have been secured.
- The hoist rope has been correctly placed in the rope pulleys and is prevented from jumping out with the rope retaining pins.
- There are no loose parts on the boom or the lattice jib.
- The boom, lattice jib and safety devices are free from snow and ice.
- The LICCON overload protection has been set according to the data in the load chart.
- The LICCON overload protection settings have been compared with the actual crane configuration.
- The assembly key button **450** is actuated.
- The indicator light **431** „assembly“ lights up.
- The assembly icon **11** on the LICCON monitor 0 lights up.

WARNING
Falling hoist rope!
If the hoist rope before the erection procedure is not properly secured onto the corresponding length on the WV-lattice jib, it can fall down backward on the basis of its own weight. Personnel can be severely injured or killed!
- ▶ Reeve in the hoist rope with sufficient length on the WV-lattice jib before the erection procedure!
- ▶ The hoist rope must be constantly monitored during erection!
- ▶ Do not step into the danger zone!

- ▶ Luff the S-boom down until the hook block can be reeved.
- ▶ Reeve in the hook block properly and secure the hoist rope on the rope fixed point, for reeving, see separate reeving plans.
- ▶ Attach the hoist limit switch weight.

See illustration **4**.

- ▶ Luff the S-boom up to 15°.

WARNING
The crane can topple over!
If the angle between the boom and the lattice jib is smaller than or equal to 30°, the mechanical relapse support will collide with the flap on the oscillating guard. The crane can topple over! Personnel can be severely injured or killed!
- ▶ The angle between the S-boom and the WV-lattice jib must be more than 30° during the complete erection procedure!
- ▶ The angle between the S-boom and the WV-lattice jib may not exceed 30° during the complete erection procedure!
- ▶ Perform a visual inspection during erection.

- ▶ Lower the WV-boom to -15° (angle between the S-boom and the WV-lattice jib amounts to 30°).

LWE/LR 1600-2-001/18101-07-02/en

copyright © Liebherr-Werk Ehingen GmbH 2018

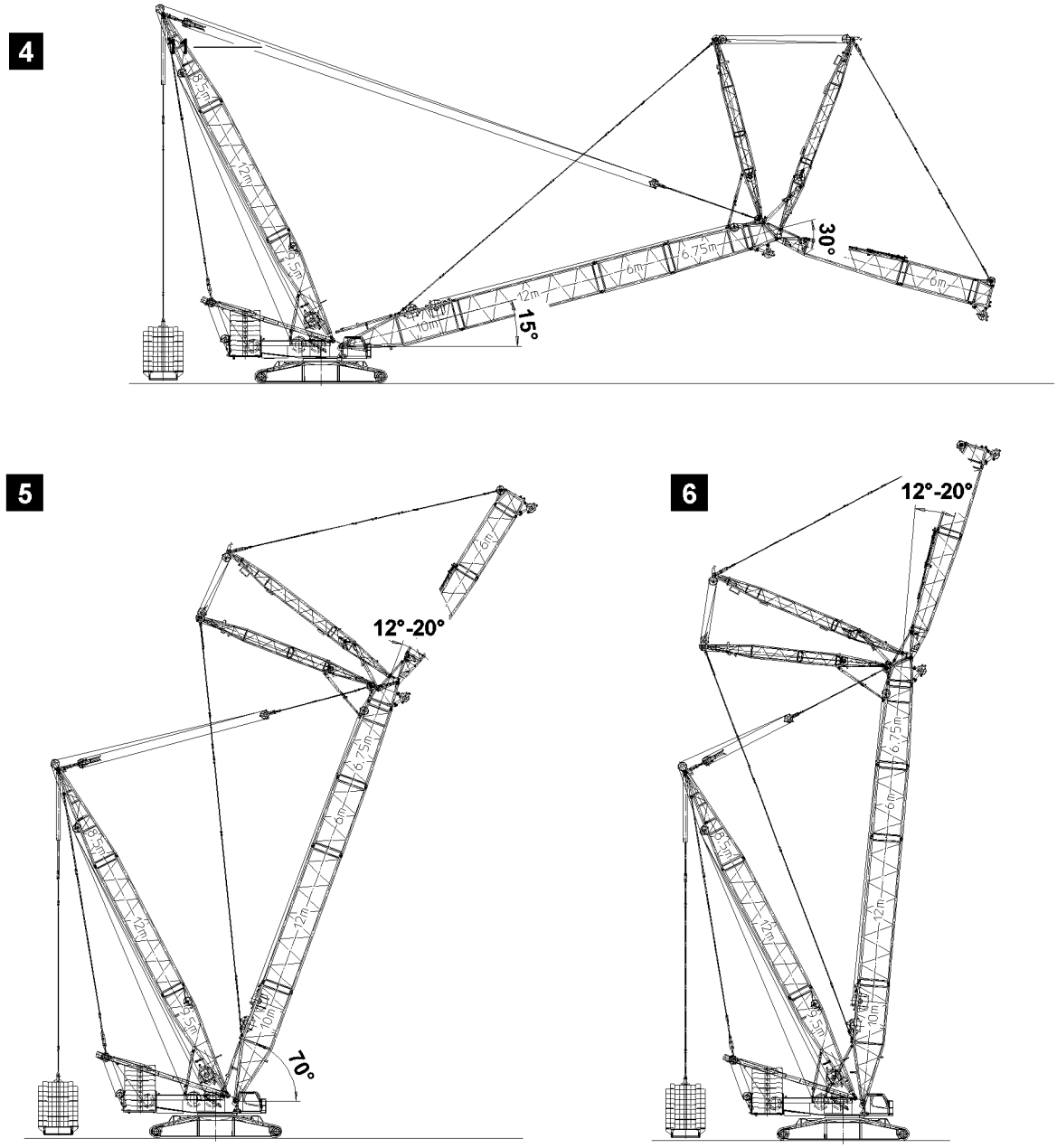

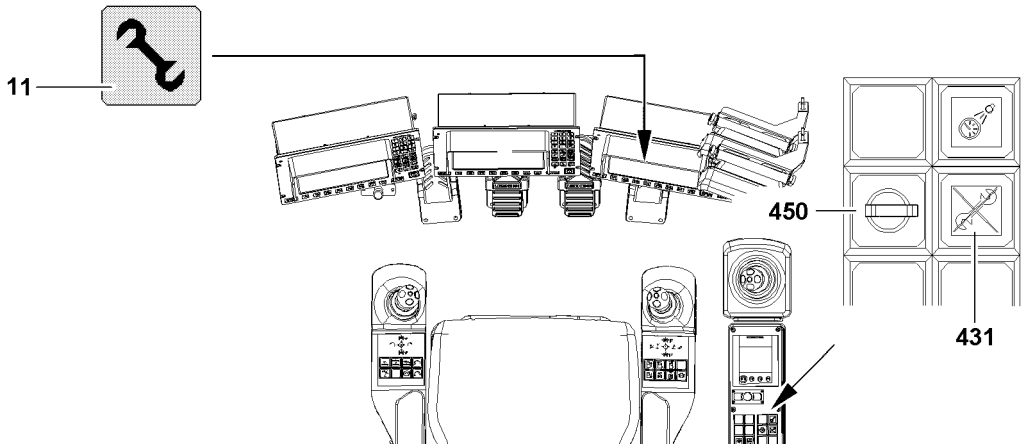

LWE/LR 1600-2-001/18101-07-02/en

Fig.113572

copyright © Liebherr-Werk Ehingen GmbH 2018

See illustration **5**.

DANGER
The crane can topple over!
In crane operation with bypassed safety devices, the crane can topple over. Personnel can be severely injured or killed!
- ▶ When the lowest operating position of the WV-lattice jib is reached, immediately turn off the assembly key button **450**.
- ▶ The radii listed in the load chart may not be exceeded or fallen below, even if there is no load on the hook!

Note
- ▶ When the lowest operating position of the WV-lattice jib is reached, the displays turn off.
- ▶ In the icon „Maximum load“, a load number in „t“ appears instead of the display „???“!

▶ Luff the S-boom up to the lowest operating position.

When the S-boom has reached the lowest operating position:
▶ Switch the assembly key switch **450**off.

Result:

– The LICCON overload protection is active.
– The indicator light **431** turns off.
– The assembly icon **11** on the LICCON monitor turns off.
– The acoustic signal turns off.
– The three color light lights up red and the warning light on the rear of the turntable lights up.

▶ Luff the S-boom up to 70°.
▶ Luff the WV-lattice jib in operating position. The angle range to do so is between 12° and 20°.

See illustration **6**.

▶ Luff the S-boom up into operating position.

copyright © Liebherr-Werk Ehingen GmbH 2018

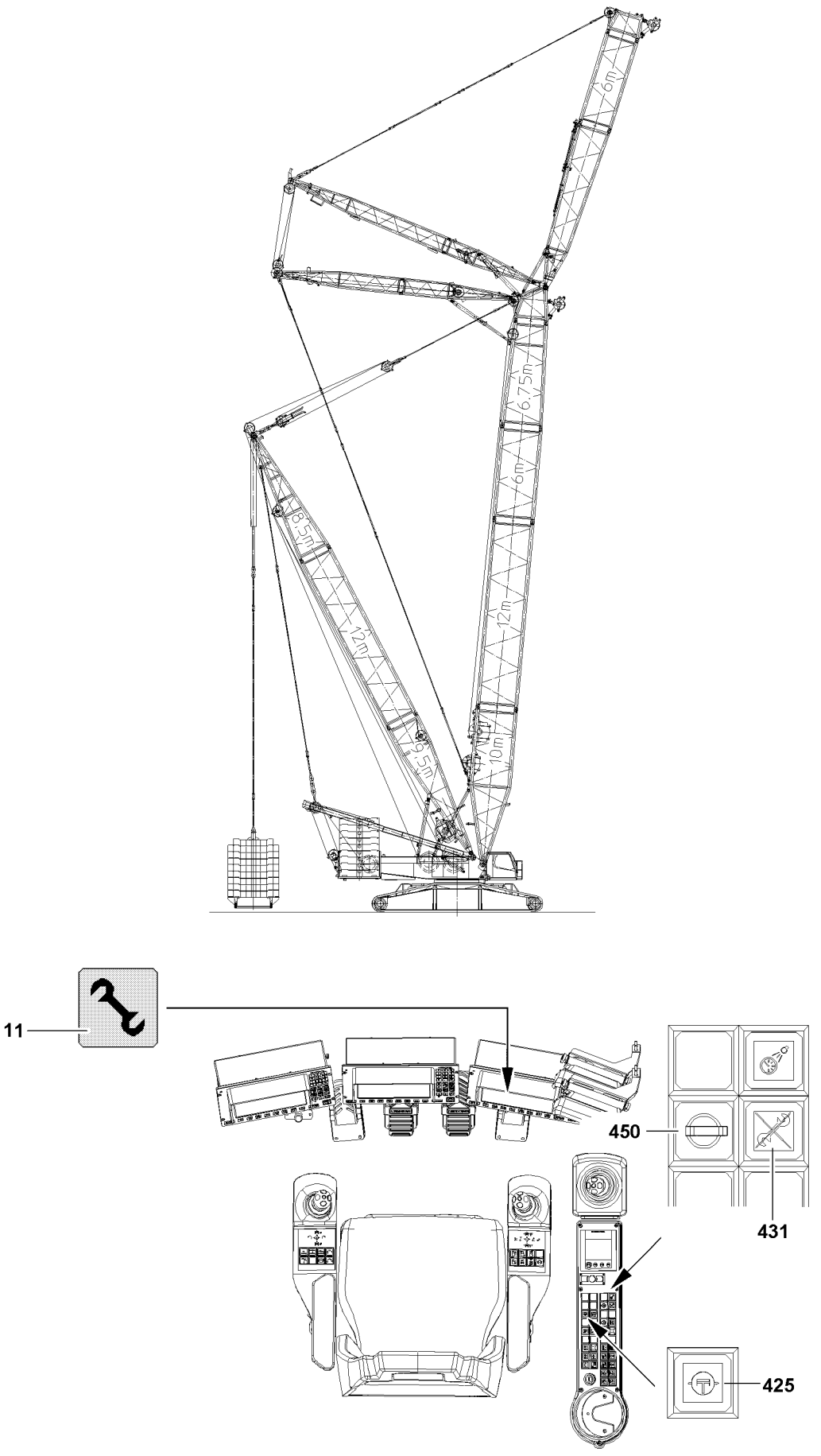

LWE/LR 1600-2-001/18101-07-02/en

Fig.107223

copyright © Liebherr-Werk Ehingen GmbH 2018

3 Operating the crane

3.1 Preparing for crane operation

Note

▶ Observe the notes in chapters 4.05, 4.08 and 5.01.

Make sure that the following prerequisites are met:

– The LICCON overload protection has been set according to the data in the load chart.
– The assembly key button **450** is turned off.

WARNING

The crane can topple over!

▶ Check the horizontal position of the crane before and during operation!
▶ If the crane operator leaves the cab, even for a short time, the operating mode setting must be checked and reset if necessary before resuming crane operation!

3.2 Checking the settings

▶ Check the function of the overload protection by running against the operating positions „on top“ and „bottom“.
▶ Check the hoist limit switch by running against the hoist limit switch weight.
▶ Check the function of the limit switches on the relapse cylinders.

LWE/LR 1600-2-001/18101-07-02/en

copyright © Liebherr-Werk Ehingen GmbH 2018

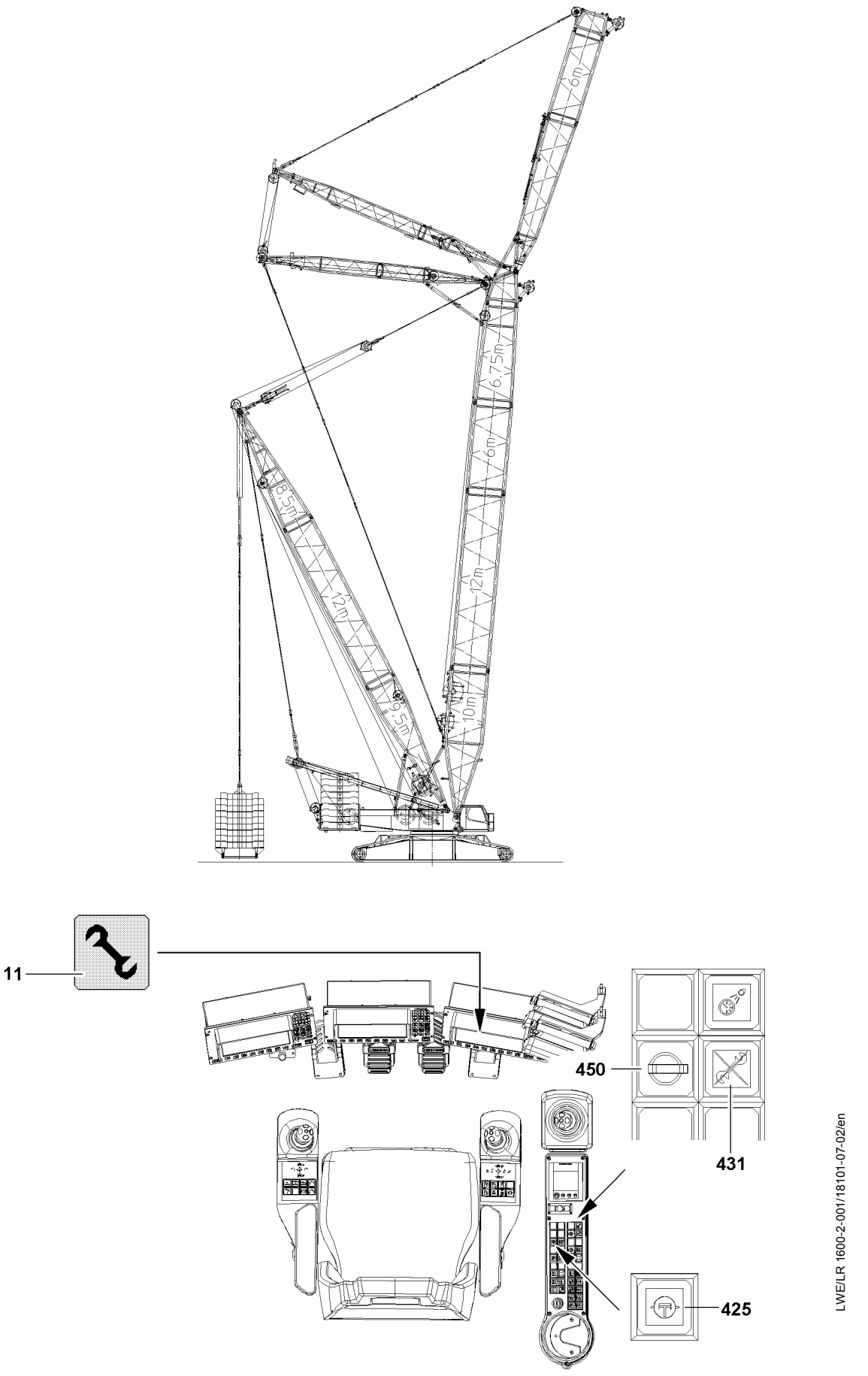

Fig.107223

LWE/LR 1600-2-001/18101-07-02/en

copyright © Liebherr-Werk Ehingen GmbH 2018

4 Disassembling the WV-boom system

WARNING
Risk of falling!
During assembly / disassembly work, personnel must be secured with appropriate aids to prevent them from falling. If this is not observed, assembly personnel could fall and suffer life-threatening or fatal injuries.

- ▶ All assembly work must be carried out using suitable aids (lifting platforms, scaffolding, ladder, auxiliary crane, etc.)!
- ▶ If work cannot be carried out on the ground or using such aids, the assembly personnel must be secured with suitable personal fall protection systems (see chapter 2.04) to protect against falling! The personal fall arrest system must be attached in the corresponding fastening points on the crane (see chapter 2.06).
- ▶ If railings are present on the components, then they must be brought into the corresponding position and secured for assembly / disassembly.
- ▶ Step on aids and fall protection equipment only with clean shoes!
- ▶ Keep aids and fall protection equipment clean and free from snow and ice!

WARNING
Falling components!
If unsecured or non-supported components are assembled or disassembled, they can fall down. Personnel can be killed or seriously injured.

- ▶ During pinning and unpinning of the lattice sections, it is prohibited for anyone to remain **under** or **on** the components as well as within the entire danger zone!
- ▶ Support the boom and components before pinning / unpinning!
- ▶ Pin or unpin both pins laying in a horizontal, i.e. **left** and **right**!
- ▶ Secure the pins in the bearing points and in the receptacles!
- ▶ Do not disengage the auxiliary crane until each component is pinned and secured!
- ▶ It is prohibited to lean a ladder against the component being disassembled!

WARNING
Danger of crushing!
Components can swing during assembling. Hands can be crushed or severed.

- ▶ Make sure that the components do not swing back and forth during assembly!

LWE/LR 1600-2-001/18101-07-02/en

copyright © Liebherr-Werk Ehingen GmbH 2018

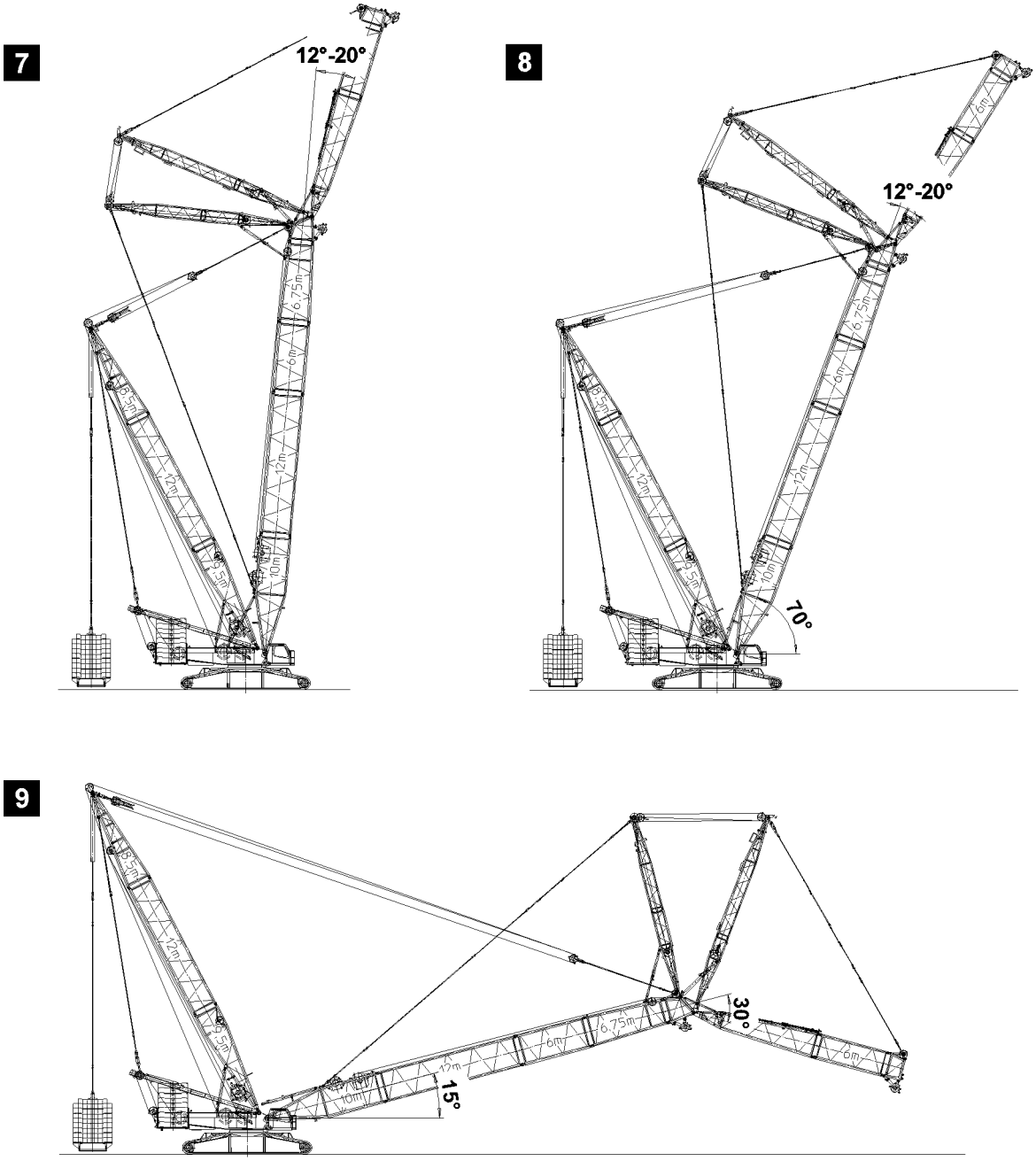

LWE/LR 1600-2-001/18101-07-02/en

Fig.113573

copyright © Liebherr-Werk Ehingen GmbH 2018

Note

▶ By supporting the components during assembly / disassembly, ground unevenness is compensated for and the material is protected.

Note

▶ The intermediate sections are pinned and unpinned with the aid of the pin pulling device, see chapter 5.30.

WARNING

Risk of accident!

Personnel can be severely injured or killed!

▶ While pinning and unpinning with the pin pulling device, observe and follow warning guidelines in chapter 5.30!

Make sure that the following prerequisites are met:

– The LICCON overload protection has been set according to the data in the load chart.
– The assembly key button **450** is pressed and the indicator light **431** lights up.
– The assembly icon on the LICCON display blinks.
– An auxiliary crane is available.

4.1 Placing the WV-lattice jib down

DANGER

The crane can topple over!

For certain boom lengths, the mechanical auxiliary supports must be assembled, see Erection and take down charts!

▶ The boom must be erected or taken down „to the side“ „in direction“ of the mechanical auxiliary supports **105**.
▶ Always erect or take down according to the data in the **Erection and take down charts**!

WARNING

The crane can topple over!

If the following conditions are not met before taking down the boom, the crane can topple over and fatally injure personnel!

▶ Observe the safety technical guidelines in chapter 5.01!
▶ Observe the data in the erection and take down charts!

NOTICE

Damage of boom components!

Taking down the boom system can lead to a collision between the hook block and the pulley head. Boom components can be severely damaged.

▶ Luff the boom system down at the same time and spool the hoist winch out.

Make sure that the following prerequisite is met:

– The S-boom is in operating position, see illustration **7**.
– The hook block is approx. 5 m below the pulley head of the lattice jib.

LWE/LR 1600-2-001/18101-07-02/en

copyright © Liebherr-Werk Ehingen GmbH 2018

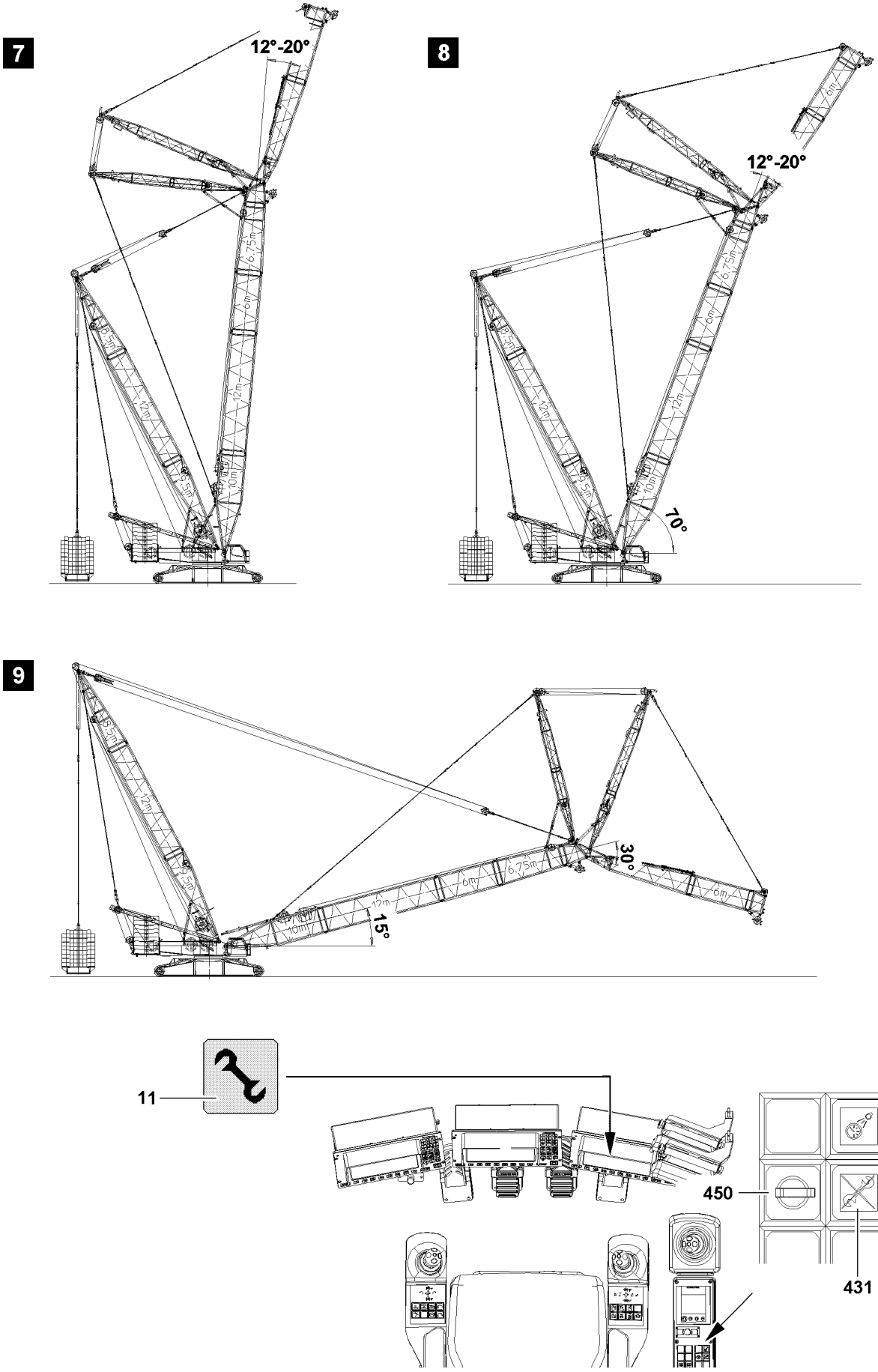

LWE/LR 1600-2-001/18101-07-02/en

Fig.113573

copyright © Liebherr-Werk Ehingen GmbH 2018

4.1.1 Luffing the WV-lattice jib down

▶ Luff the S-boom down to 70°, see illustration **8**.

WARNING
The crane can topple over!
If the angle between the boom and the lattice jib is smaller than or equal to 30°, the mechanical relapse support will collide with the flap on the oscillating guard. The crane can topple over! Personnel can be severely injured or killed!
▶ Make sure that the angle between the S-boom and the WV-lattice jib is more than 30° during the complete erection procedure.
▶ The angle between the S-boom and the WV-lattice jib may not exceed 30° during the complete take-down procedure!
▶ Perform a visual inspection during erection.

▶ Luff the WV-lattice jib down to approx. 30° to the S-boom, see illustration **9**.

Note
▶ The luff down movement is turned off as soon as the lowest operating position is reached.
▶ When the lowest operating position of the WV-lattice jib is reached, the load display in the „Maximum load“ icon turns off and instead of the load display, the display „???“ appears.
▶ In the crane operating screen appear alarm functions.

▶ Luff the WV-lattice jib down to the „lowest“ operating position.

Result:

The following alarm functions become active:
– „STOP“
– „Horn“ and acoustical signal

DANGER
Crane operation with added assembly key button!
▶ The actuation of the assembly key button **450** is only permitted for assembly tasks!
▶ The assembly key button **450** may only be operated by persons who are aware of the consequences of a bypass!
▶ If the assembly key button **450** is turned on, the hoist limit switch and the LICCON overload protection is bypassed!
▶ Crane operation with the assembly key button **450** turned on is strictly prohibited!
▶ The assembly key button **450** must be removed immediately after carrying out the assembly work and handed to an authorized person!

When the WV-lattice jib has reached the „lowest“ operating position:
▶ Turn the assembly key button **450** on.

Result:

– The LICCON overload protection is deactivated.
– The indicator light **431** lights up.
– The assembly icon **11** on the LICCON monitor blinks.
– The „STOP“ icon on the LICCON monitor blinks.
– An acoustical signal sounds.
– The three color light lights up red and the warning light on the rear of the turntable lights up.

LWE/LR 1600-2-001/18101-07-02/en

copyright © Liebherr-Werk Ehingen GmbH 2018

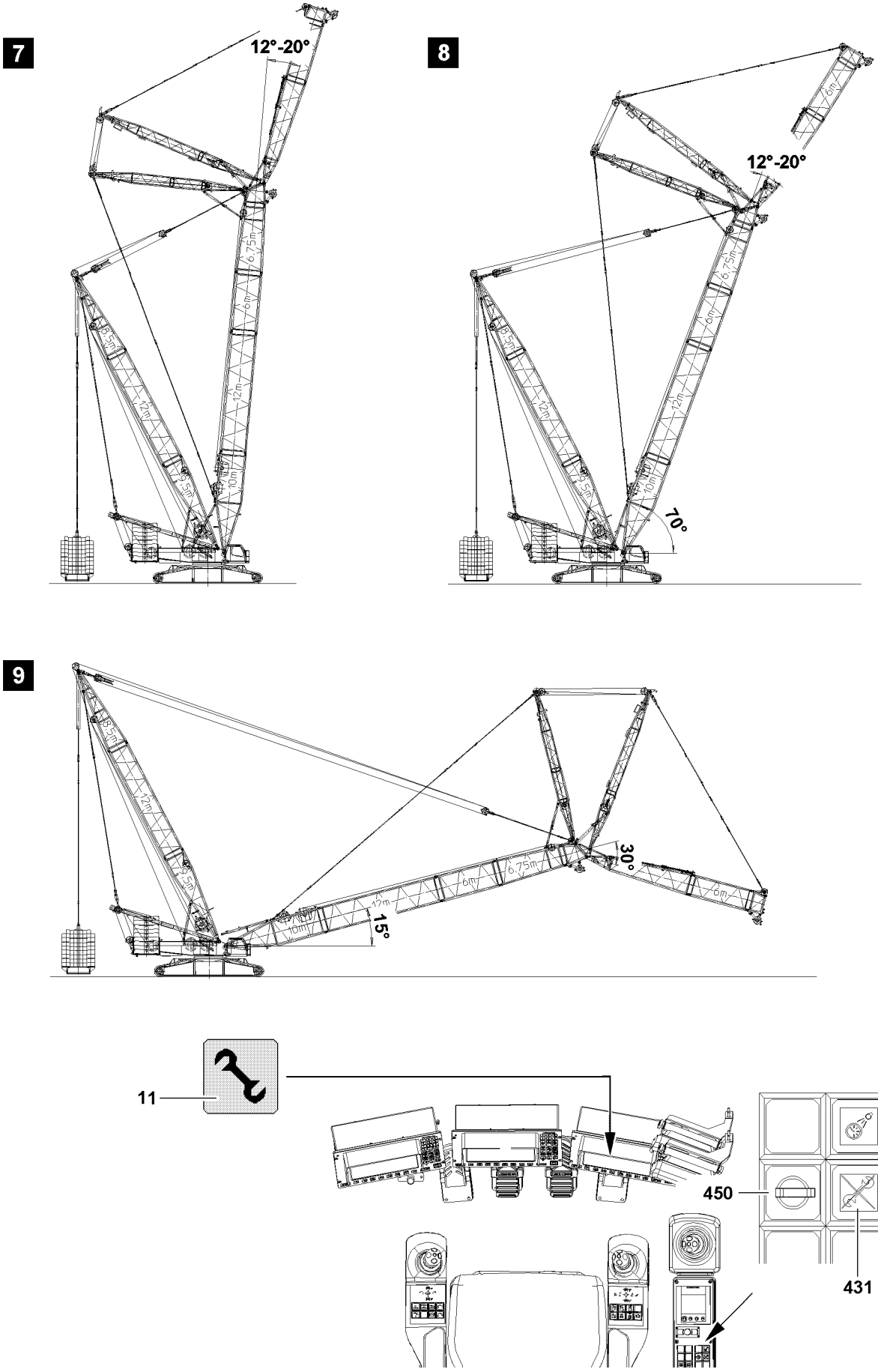

Fig.113573

copyright © Liebherr-Werk Ehingen GmbH 2018

4.1.2 Placing the WV-lattice jib down

If the hook block has not yet touched the ground:

- ▶ At the same time, spool the hoist winch out and luff the S-boom down until the hook block touches the ground.
- ▶ Remove the hoist limit switch weight.
- ▶ Unreeve the hook block.
- ▶ Luff down S-boom until SW-end section lies on the floor.

WARNING

The crane can topple over!

If the following conditions are not met before taking down the boom, the crane can topple over. Personnel can be severely injured or killed!

- ▶ Spool the lattice jib control out so that the guy rods sag slightly!
- ▶ Do not allow slack rope to form on the control winch!
- ▶ Do not pull the hook block along on the ground!

- ▶ Continue to luff down the S-boom and simultaneously spool the WV-lattice jib control out so that the guy rods sag slightly.
- ▶ Luff the S-boom down until the S-boom head is laying on the support on the ground.

WARNING

Risk of accident!

- ▶ Make sure that no personnel is within the danger zone.
- ▶ Secure the hoist rope with the assembly rope and pull it back slowly over the rope pulleys in the WA-frames and lower it toward the W-connector head.

- ▶ Lay the hoist rope down.

LWE/LR 1600-2-001/18101-07-02/en

copyright © Liebherr-Werk Ehingen GmbH 2018

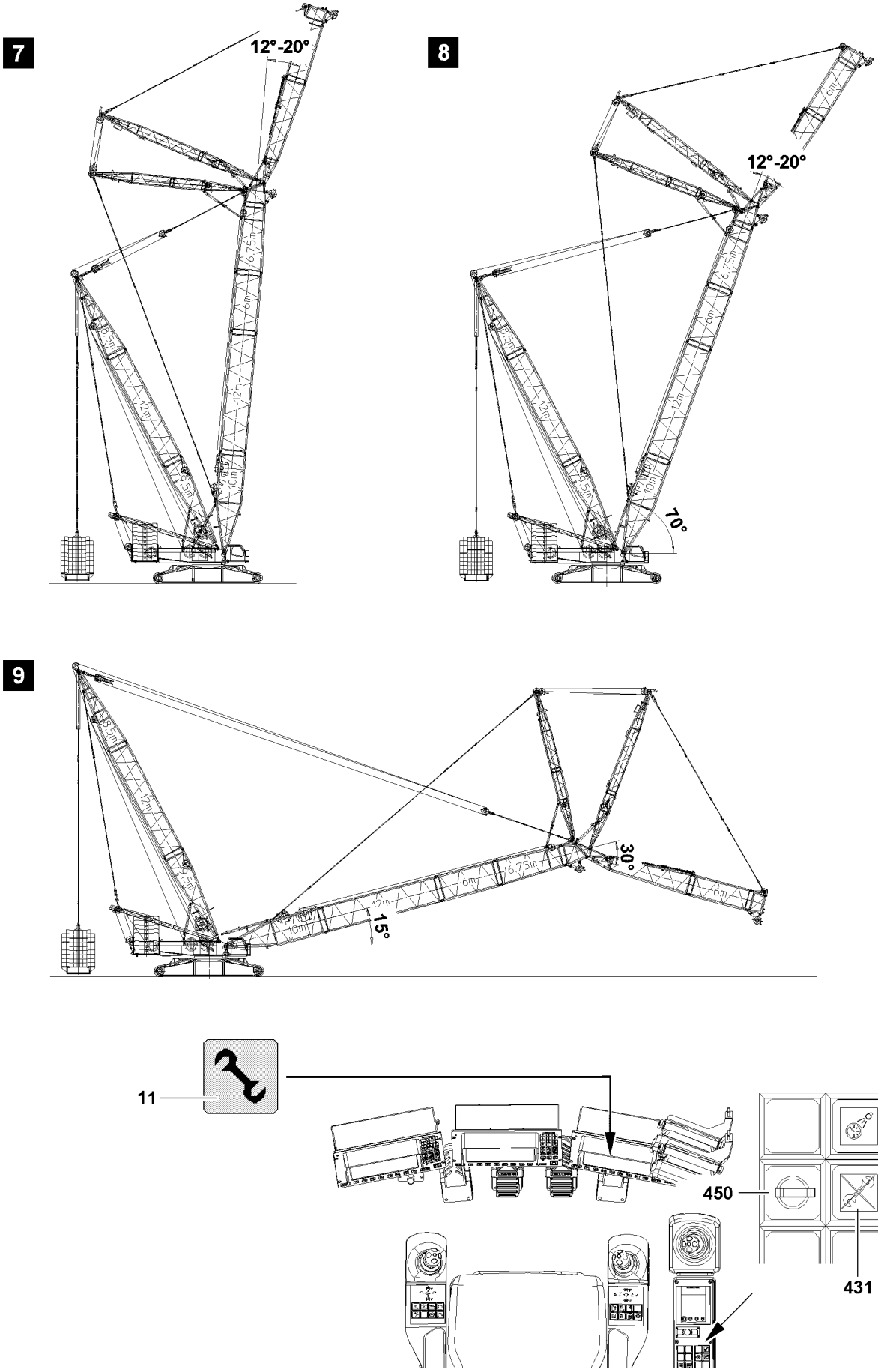

LWE/LR 1600-2-001/18101-07-02/en

Fig.113573

copyright © Liebherr-Werk Ehingen GmbH 2018

4.2 Disconnecting the electrical connections

Note
▶ Observe and follow the instructions in chapter 5.07!

4.3 Disassembling the WV-lattice jib

Note
▶ Observe and follow the instructions in chapter 5.07!

4.4 Unpinning the relapse supports

Note
▶ Observe and follow the instructions in chapter 5.07!

4.5 Disassembling the WA-frame 2 guy rods

Note
▶ Observe and follow the instructions in chapter 5.07!

4.6 Unreeving the W-control ropes

Note
▶ Observe and follow the instructions in chapter 5.07!

4.7 Disassembling the W-transport units

Note
▶ Observe and follow the instructions in chapter 5.07!

LWE/LR 1600-2-001/18101-07-02/en

copyright © Liebherr-Werk Ehingen GmbH 2018

Empty page!

LWE/LR 1600-2-001/18101-07-02/en

copyright © Liebherr-Werk Ehingen GmbH 2018

5.10 Boom nose

1	Overview of boom nose components	3
2	Assembling the 36 t boom nose on the SW-end section	5
3	Erecting / taking down the boom	11
4	Crane operation	13
5	Disassembling the 36 t boom nose	15

LWE/LR 1600-2-001/18101-07-02/en

copyright © Liebherr-Werk Ehingen GmbH 2018

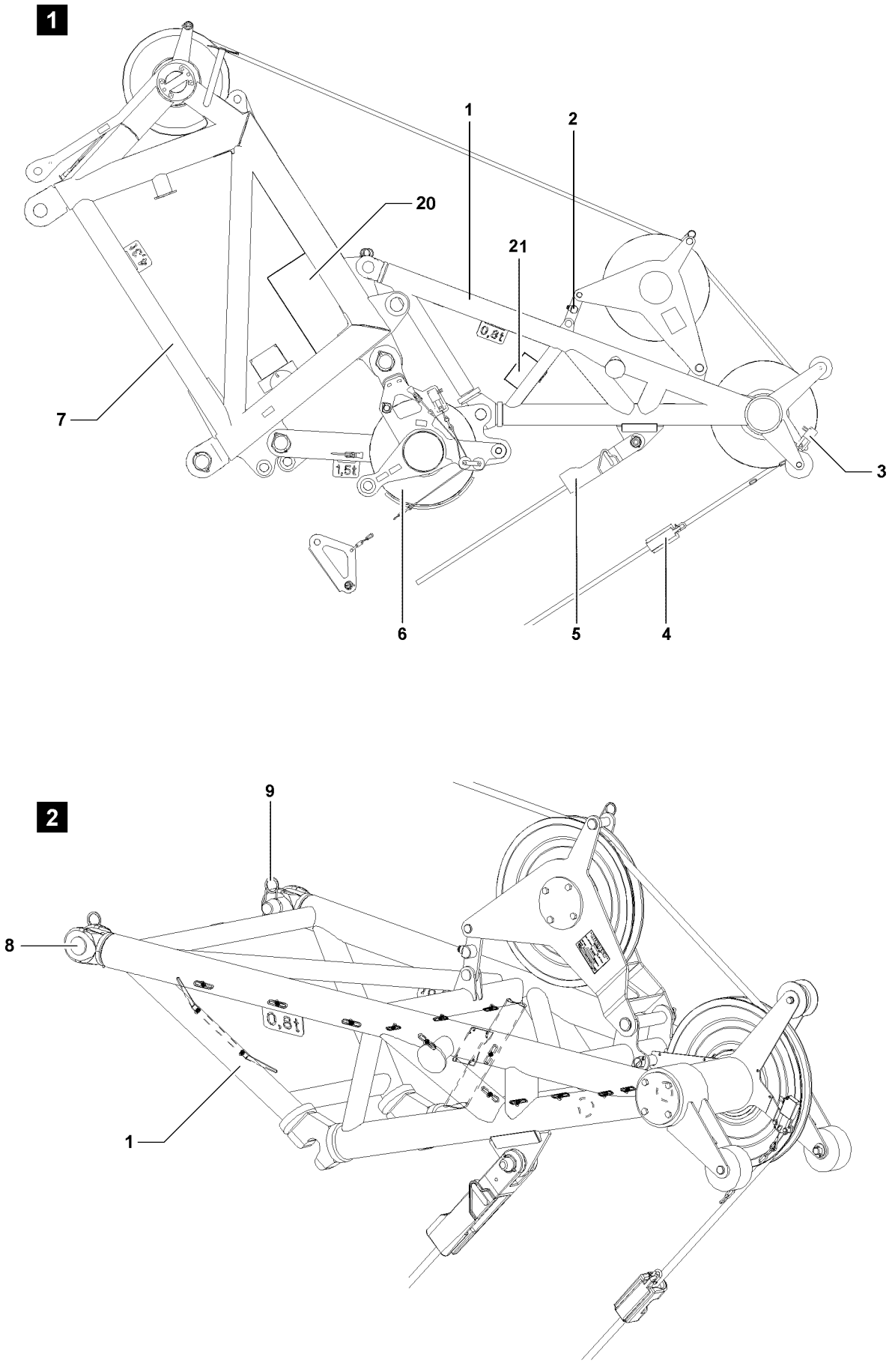

LWE/LR 1600-2-001/18101-07-02/en

Fig.105237

copyright © Liebherr-Werk Ehingen GmbH 2018

1 Overview of boom nose components

The 36 t boom nose **1** is assembled on the SW-end section **7** and placed on the pulley set arrangement **6**, see illustration **1**.

Position	Description
1	Boom nose 36 t
2	Pressure test bracket
3	Hoist limit switch
4	Hoist limit switch weight
5	Rope fixed point (rope lock)
6	Roller set
7	SW-end section
8	Pin
9	Spring retainer
20	Terminal box SW-end section +S930
21	Terminal box boom nose +S1030

LWE/LR 1600-2-001/18101-07-02/en

copyright © Liebherr-Werk Ehingen GmbH 2018

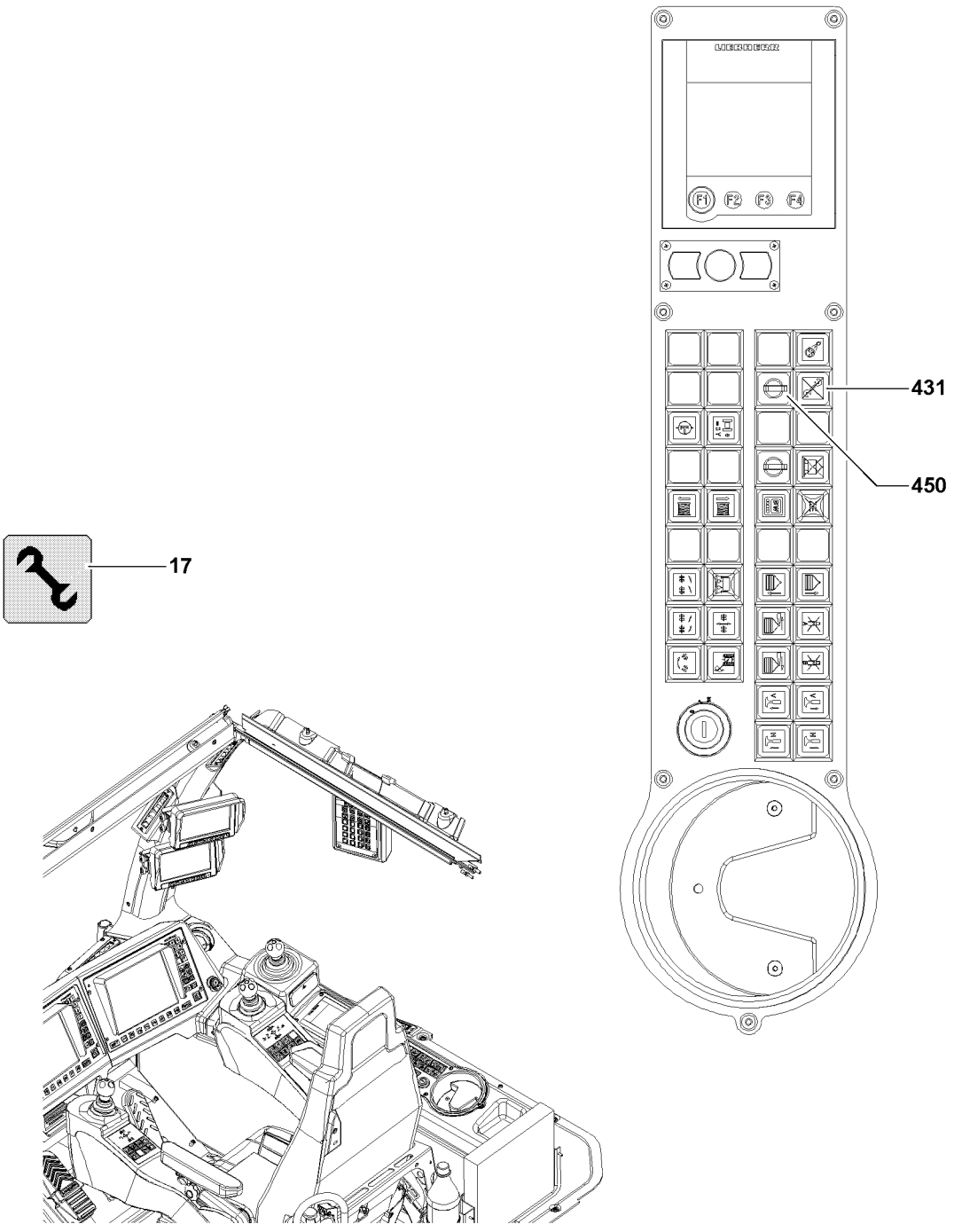

LWE/LR 1600-2-001/18101-07-02/en

Fig.108924

copyright © Liebherr-Werk Ehingen GmbH 2018

2 Assembling the 36 t boom nose on the SW-end section

DANGER
Crane operation with turned on assembly key button!
If the LICCON overload protection is bypassed during crane operation with the assembly key button **450**, personnel can be severely injured or killed.
- ▶ Crane operation with turned on assembly key button **450** is strictly prohibited!
- ▶ The actuation of the assembly key button **450** is only permitted for assembly tasks!
- ▶ The assembly key button may only be operated by persons, who are aware of the consequences of a bypass!
- ▶ After assembly work is completed, the assembly key button **450** must be pulled immediately and turned over to an authorized person!

WARNING
Falling booms at assembly / disassembly!
If unsecured or non-supported booms are removed, the booms can fall. Personnel can be severely injured or killed!
- ▶ Never unpin the pins under unsecured or unsupported booms!
- ▶ Never unpin the connecting pins under unsecured or unsupported booms!
- ▶ Do not stand under the booms or within the complete danger zone during the pinning and unpinning procedure of the booms!
- ▶ Safely secure the pins in the bearing points as well as receptacles!
- ▶ Do not lean the ladder against the component being disassembled!

WARNING
Incorrect or missing fall guard!
Using inappropriate aids to secure the assembly personnel at assembly can result in a fall. Personnel can be severely injured or killed!
- ▶ Secure yourself and others during all assembly work with suitable aids (lifting platforms, scaffolding, ladders, auxiliary crane etc.), basically from a height of 2 m on.
- ▶ Observe national regulations: The height from which aids must be used can differ from country to country.

When work with aids cannot be carried out from the ground:
- ▶ Secure yourself and others during all assembly work with personal protective equipment (for example safety belts) to prevent a fall.

Observe the safety guidelines for assembly in chapter 5.01.

LWE/LR 1600-2-001/18101-07-02/en

copyright © Liebherr-Werk Ehingen GmbH 2018

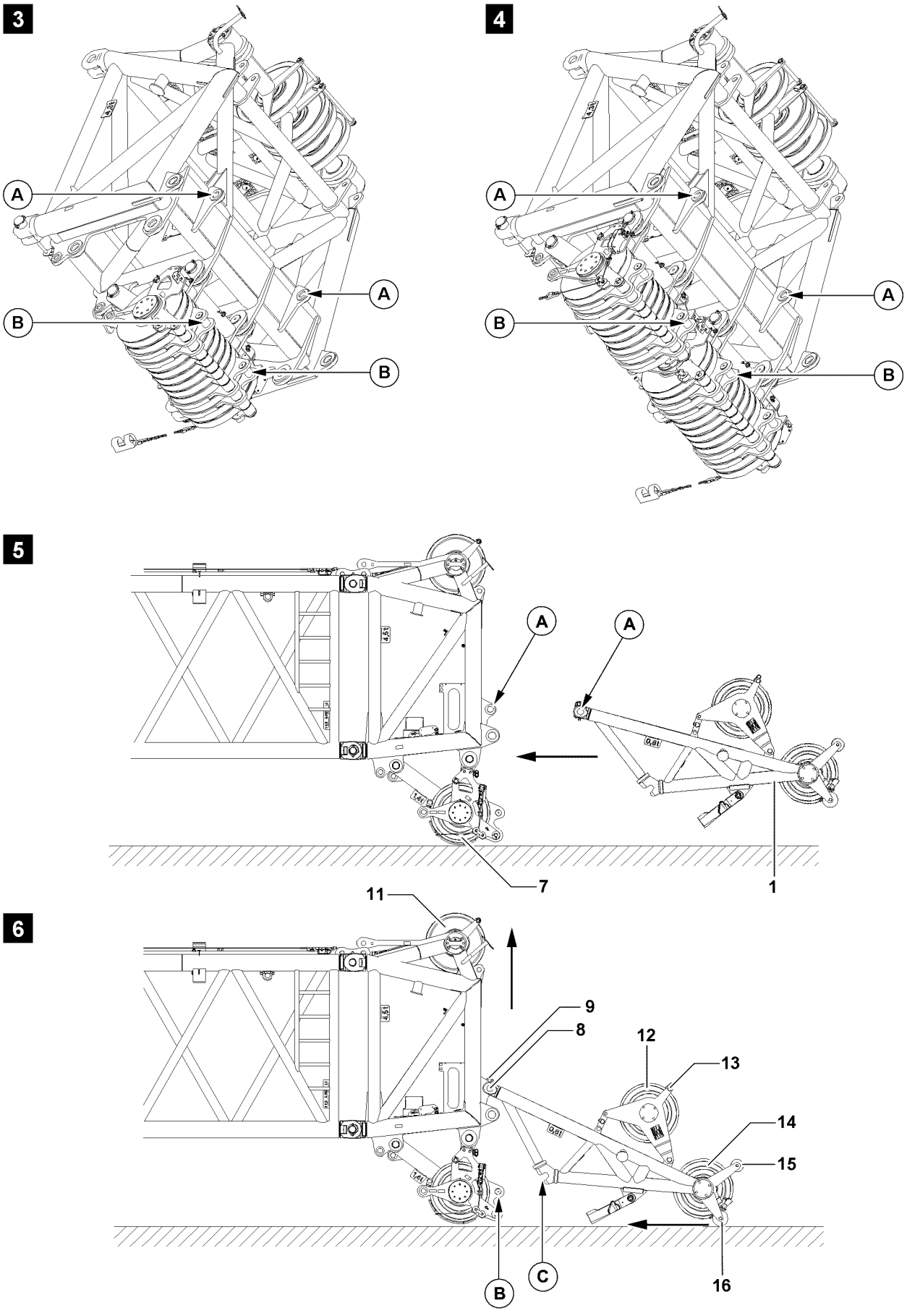

Fig.105238

LWE/LR 1600-2-001/18101-07-02/en

copyright © Liebherr-Werk Ehingen GmbH 2018

2.1 Assembling the boom nose

Make sure that the following prerequisites are met:
- the crane is aligned in horizontal direction,
- the counterweight has been installed to the turntable according to the load chart,
- the derrick ballast is placed on the suspended ballast or the ballast trailer, according to the load chart,
- the LICCON overload protection has been set according to the data in the load chart,
- the mechanical auxiliary support is installed on the crane,
- an auxiliary crane is available,
- the boom is laying with the pulley set on the ground, see illustration **5**.

Note

▶ The weight of the 36 t boom nose is 0.45 t.

The SW-end section can be equipped with one or with two pulley sets:
- The pin points **A** and the attachment pins **B** for the assembly of the boom nose are shown in illustration **3** and illustration **4**.

▶ Hang the boom nose **1** onto the auxiliary crane.
▶ Position the boom nose **1** with the auxiliary crane on the SW-end section in such a way that the pin bores align in point **A**, see illustration **5**.

When the pin bores align:
▶ Pin in the pin **8** on the end section in point **A** and secure with spring retainer **9**.
▶ Lower the boom nose **1** to the ground with the auxiliary crane.
▶ Remove the auxiliary crane.
▶ Release and unpin the rope retaining pin **13**.
▶ Pull the hoist rope over the rope pulley **11** on the end section and the rope pulley **12** on the boom nose.
▶ Pin in and secure the rope retaining pin **13**.
▶ Guide the hoist rope between the rope pulley **14** and the rope retaining pulley **15**.

NOTICE

Automatic fold out of fork connection at luff down or place down!
If the boom is luffed down or placed down at excessive speed, the boom nose can be damaged.
▶ Luff the boom down or place it down very carefully.

▶ Luff the boom up slowly.

Result:

- The boom nose moves on the pulleys **16** in direction of the boom head, see illustration **6**.

▶ Luff the boom up until the boom nose lays on the pulley set.
▶ Make sure that the fork head **C** of the boom nose lays on the stop pin **B** of the pulley set.

LWE/LR 1600-2-001/18101-07-02/en

copyright © Liebherr-Werk Ehingen GmbH 2018

7

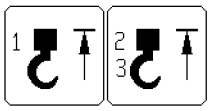

8

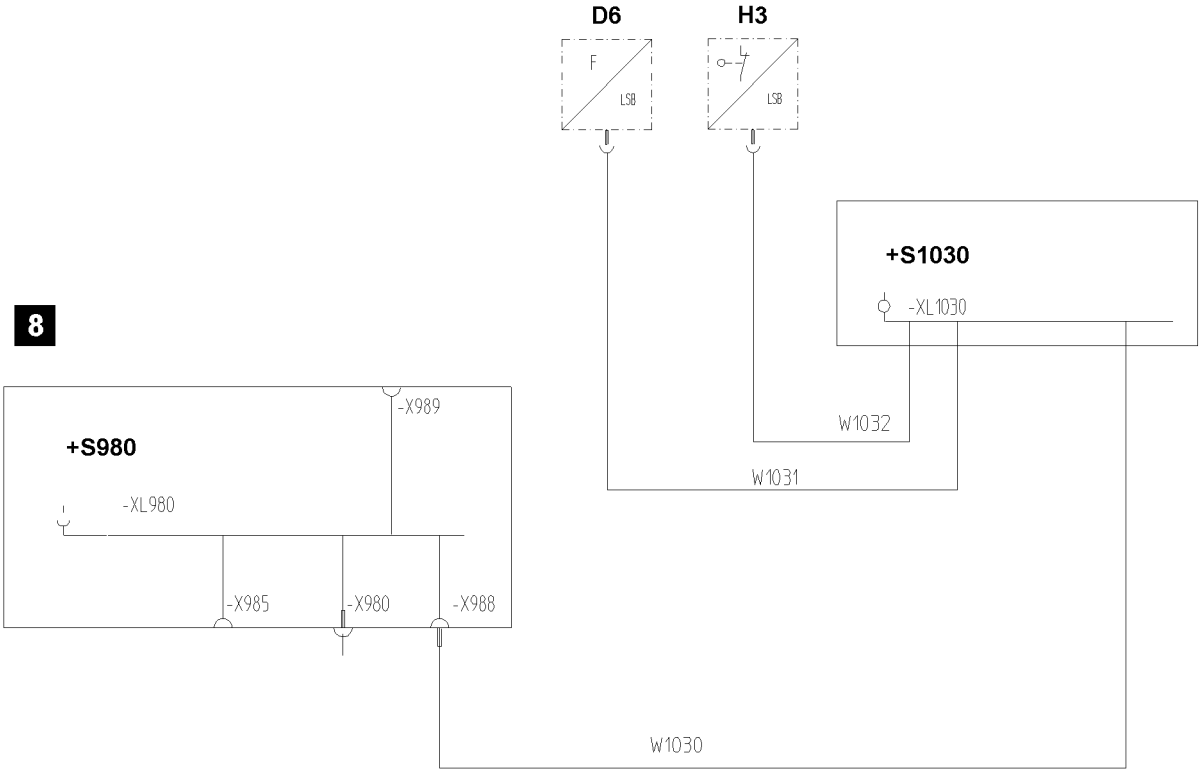

9

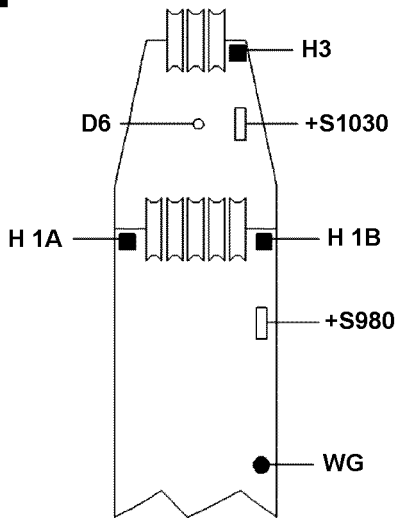

10

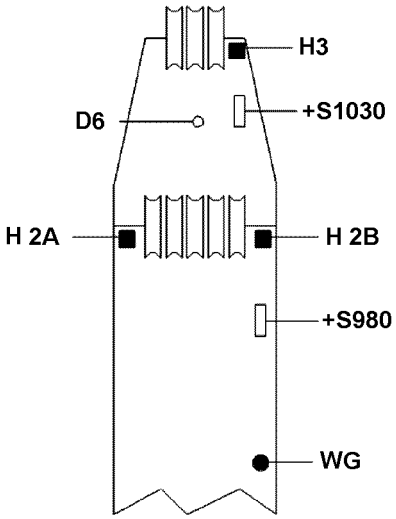

LWE/LR 1600-2-001/18101-07-02/en

Fig.105239

copyright © Liebherr-Werk Ehingen GmbH 2018

2.2 Establishing the electrical connections

Ensure that the following prerequisite is met:
- the boom nose is completely assembled.

For wiring diagram „Operation with boom nose“, see illustration **8**.

2.2.1 Establishing the electrical connection to the hoist limit switch

▶ Plug the cable **W1032** from the terminal box **+S1030** into the hoist limit switch **H3**.

2.2.2 Establishing the electrical connection to the pressure test bracket

▶ Plug the cable **W1031** from the terminal box **+S1030** into the pressure test bracket **D6**.

2.2.3 Establishing the electrical connection between the boom nose and the SW-end section

▶ Plug the cable **W1030** from the terminal box **+S1030** into the terminal box **+S980**.

LWE/LR 1600-2-001/18101-07-02/en

copyright © Liebherr-Werk Ehingen GmbH 2018

7

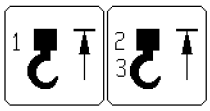

8

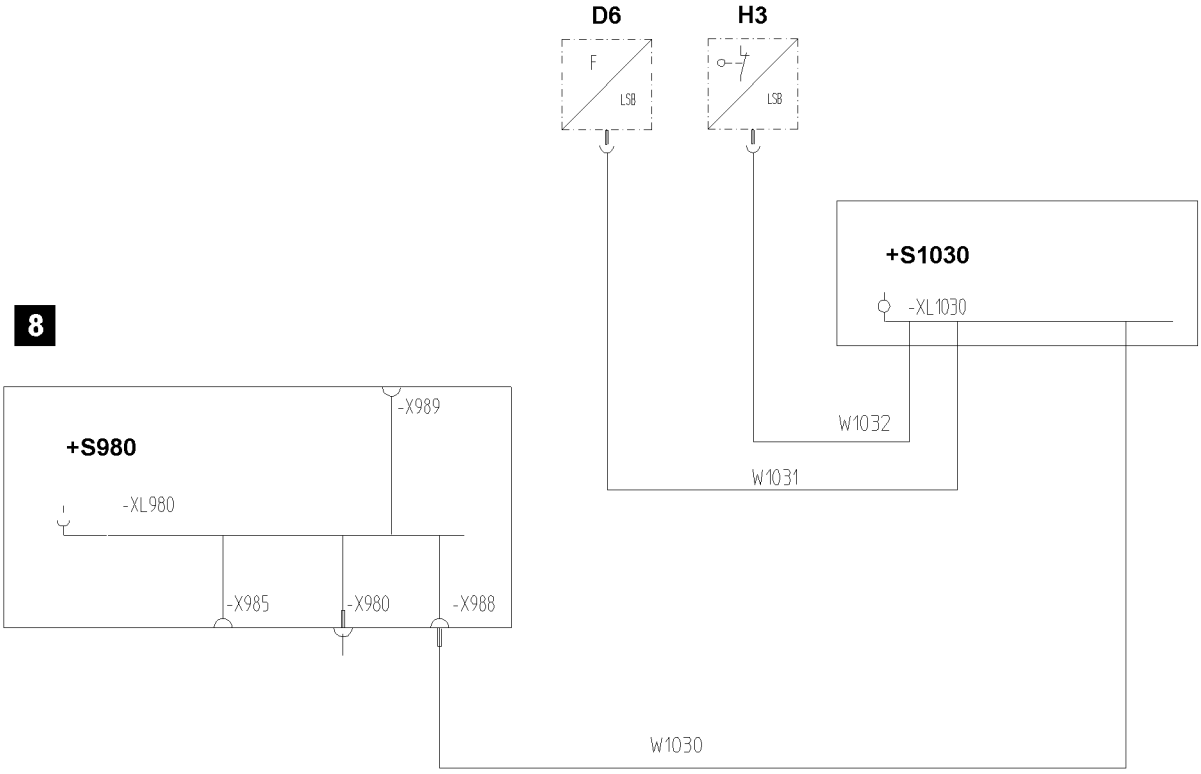

9

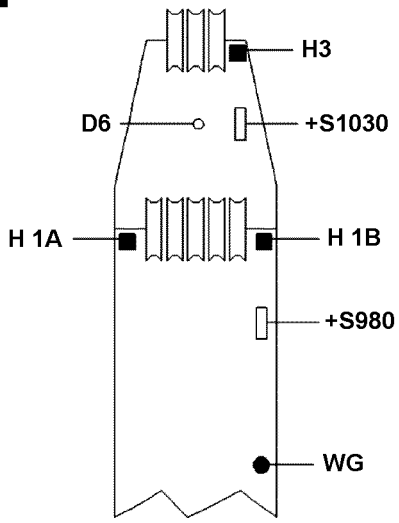

10

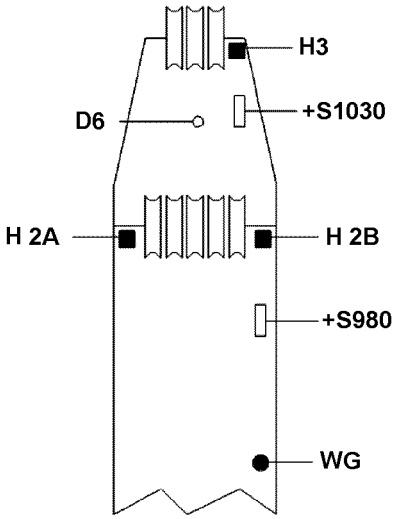

LWE/LR 1600-2-001/18101-07-02/en

Fig.105239

copyright © Liebherr-Werk Ehingen GmbH 2018

2.3 Checking the function of the hoist limit switch

Note
- ▶ The function of the individual limit switches must be checked before erection!
- ▶ The function of the limit switch initiators must be checked in the test system, see separate „Diagnostics“ manual.

Make sure that the following prerequisites are met:
- all electrical connections have been established,
- the crane engine is running,
- the corresponding operating mode is set on the LICCON monitor.

Assignment of limit switches to operating modes:
- S-operation, see illustration **9**.
- W-operation, see illustration **10**.

▶ Cover the hoist limit switch initiators individually with a metal plate.

Result:

- The hoist limit switch is actuated manually.
- The corresponding symbol element „Hoist top“ appears on the LICCON monitor.
- The hoist winch turns spool up off.
- Hoist limit switch is functioning.

Note
- ▶ When replacing or changing the hoist limit switch (HES), the corresponding hoist limit switch must have the correct bus address and the correct software version in order to be detected again by the bus system (LSB).

3 Erecting / taking down the boom

WARNING
The crane can topple over!
- ▶ Always erect or take down according to the data in the **Erection and take down charts**.
- ▶ Observe chapter 5.04.

LWE/LR 1600-2-001/18101-07-02/en

copyright © Liebherr-Werk Ehingen GmbH 2018

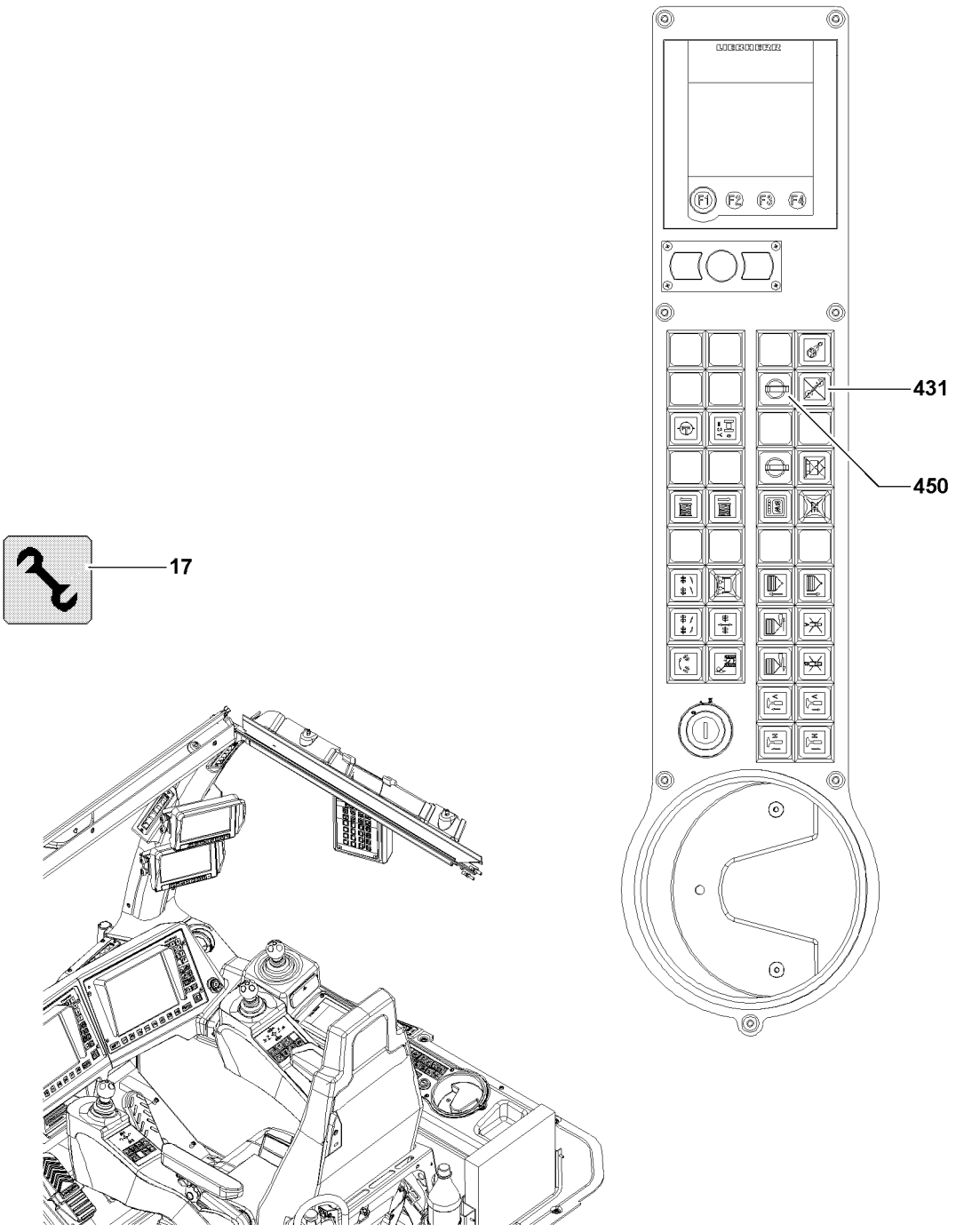

Fig.108924

LWE/LR 1600-2-001/18101-07-02/en

copyright © Liebherr-Werk Ehingen GmbH 2018

4 Crane operation

The operation with boom nose is designed for quick lifts:
- With winch II or winch VI
- In operating modes S, SL and W

The hook block can remain reeved on the boom head.

Note
▶ Observe the notes in chapter 4.05, 4.08 and 5.01.

Make sure that the following prerequisites are met:
- the LICCON overload protection has been set according to the data in the load chart,
- the assembly key button **450** has been turned off by pressing the button **431**,
- the assembly icon **17** on the LICCON monitor is off.

WARNING
The crane can topple over!
▶ Check the horizontal position of the crane before and during operation.
▶ If the crane operator leaves the cab, even for a short time, then he is obligated to check the operating mode setting before resuming crane operation and reset it, if necessary.

4.1 Checking the settings

▶ Check the function of the LICCON overload protection by running against the operating positions on top and bottom.
▶ Check the hoist limit switch by running against the hoist limit switch weight.
▶ Check the function of the limit switches on the relapse cylinders.

LWE/LR 1600-2-001/18101-07-02/en

copyright © Liebherr-Werk Ehingen GmbH 2018

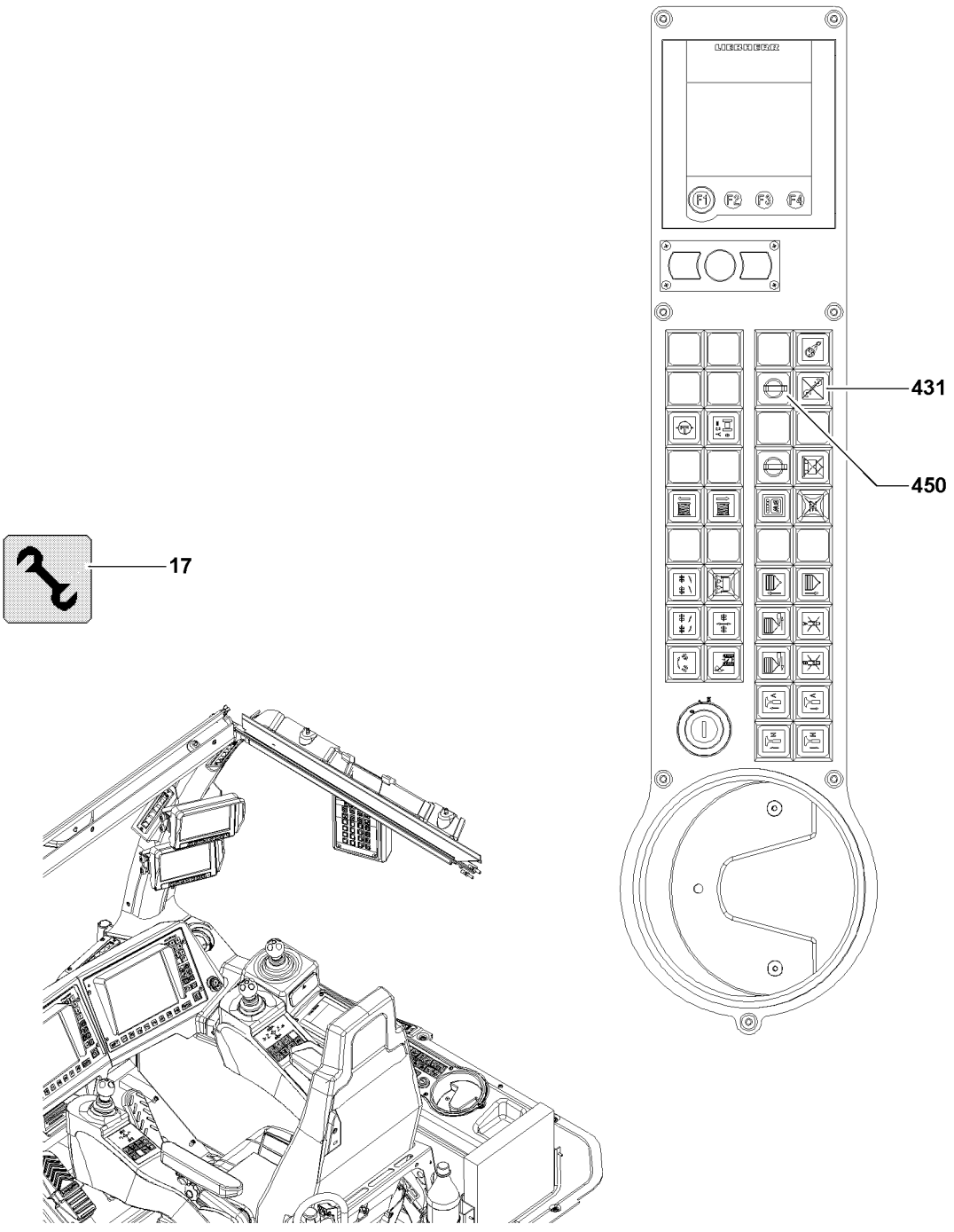

Fig.108924

LWE/LR 1600-2-001/18101-07-02/en

copyright © Liebherr-Werk Ehingen GmbH 2018

5 Disassembling the 36 t boom nose

Note
▶ Observe the safety guidelines for disassembly in chapter 5.01.

5.1 Luffing the boom down

WARNING
The crane can topple over!
If the following conditions are not met before taking down the boom, the crane can topple over. Personnel can be severely injured or killed!
▶ Observe the Safety technical guidelines in chapter 5.01!
▶ Observe the data in the erection and take down charts!

NOTICE
Hoist winch not spooled out!
If the hoist winch is not spooled out sufficiently when the boom is luffed down, then the hook block will collide with the boom nose.

When the boom is luffed down:
▶ Spool the hoist winch up simultaneously.

▶ Luff the boom down to the **lowest** operating position.

When the lowest operating position is reached the luff down movement is shut off.

The load value in the „maximum load“ icon disappears and question marks appear (????).

The following alarm functions become active:

– „STOP“
– „Horn“ and acoustical signal

▶ Actuate the assembly key button **450**.

Result:

– The LICCON overload protection is inactive.
– The assembly icon **17** on the LICCON monitor blinks.
– An acoustical signal sounds.
– The red beacon on the crane cab blinks.

LWE/LR 1600-2-001/18101-07-02/en

copyright © Liebherr-Werk Ehingen GmbH 2018

11

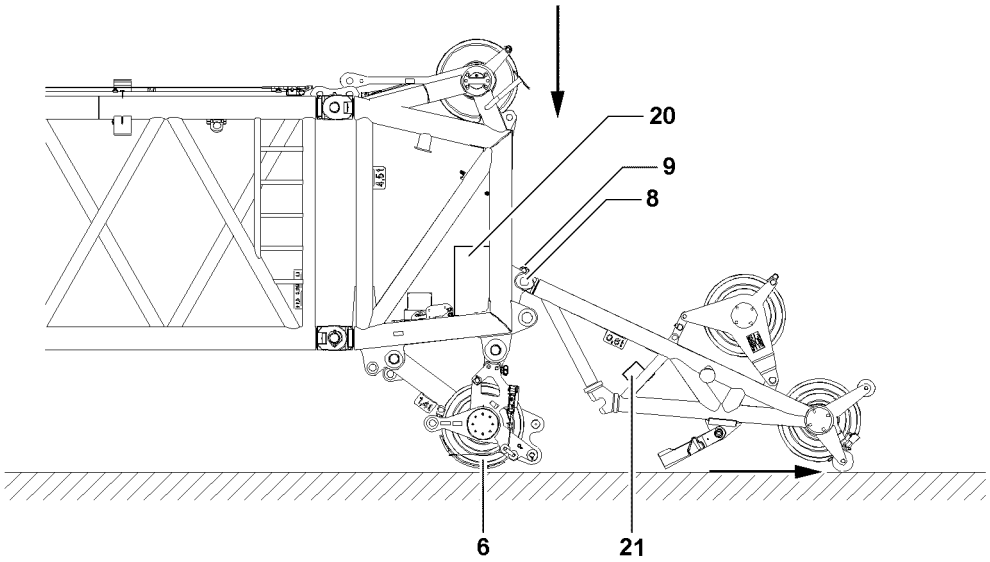

12

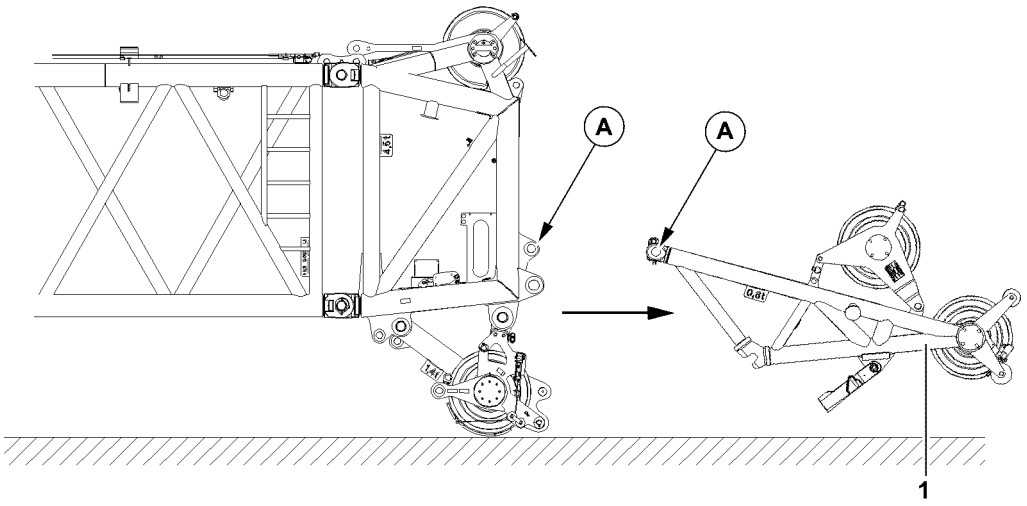

LWE/LR 1600-2-001/18101-07-02/en

Fig.105344

copyright © Liebherr-Werk Ehingen GmbH 2018

▶ Luff the boom down until hook block touches the ground.

Note

▶ Observe the description for disassembly of the hoist limit switch weight and the hook block in chapter 4.06.

▶ Remove the hoist limit switch weight and unreeve the hook block.

NOTICE

Automatic fold out of fork connection at luff down or place down!
If the boom is luffed down or placed down at excessive speed, the boom nose can be damaged.

▶ Luff the boom down or place it down very carefully.

▶ Luff the boom down until the pulley set **6** touches the ground, see illustration **11**.
▶ Remove the hoist rope.

5.2 Removing the 36 t boom nose on the SW-end section

Ensure that the following prerequisite is met:
– the boom is laying with the pulley set **6** on the ground, see illustration **11**.

▶ Hang the boom nose **1** onto the auxiliary crane.
▶ Unplug the cable **W1030** on the terminal box +980 **20**.
▶ Release the pin **8** on the end section in point **A** and unpin.
▶ Lift the boom nose **1** with the auxiliary crane.
▶ Remove the boom nose with the auxiliary crane and place it down outside the working range.
▶ Remove the auxiliary crane from the boom nose.

LWE/LR 1600-2-001/18101-07-02/en

copyright © Liebherr-Werk Ehingen GmbH 2018

Empty page!

LWE/LR 1600-2-001/18101-07-02/en

copyright © Liebherr-Werk Ehingen GmbH 2018

5.13 SLF-boom combination

1	Component overview	3
2	Fastening points	3
3	Assembling the auxiliary jib	4
4	Operating the crane	31
5	Disassembling the auxiliary jib	33

LWE/LR 1600-2-001/18101-07-02/en

copyright © Liebherr-Werk Ehingen GmbH 2018

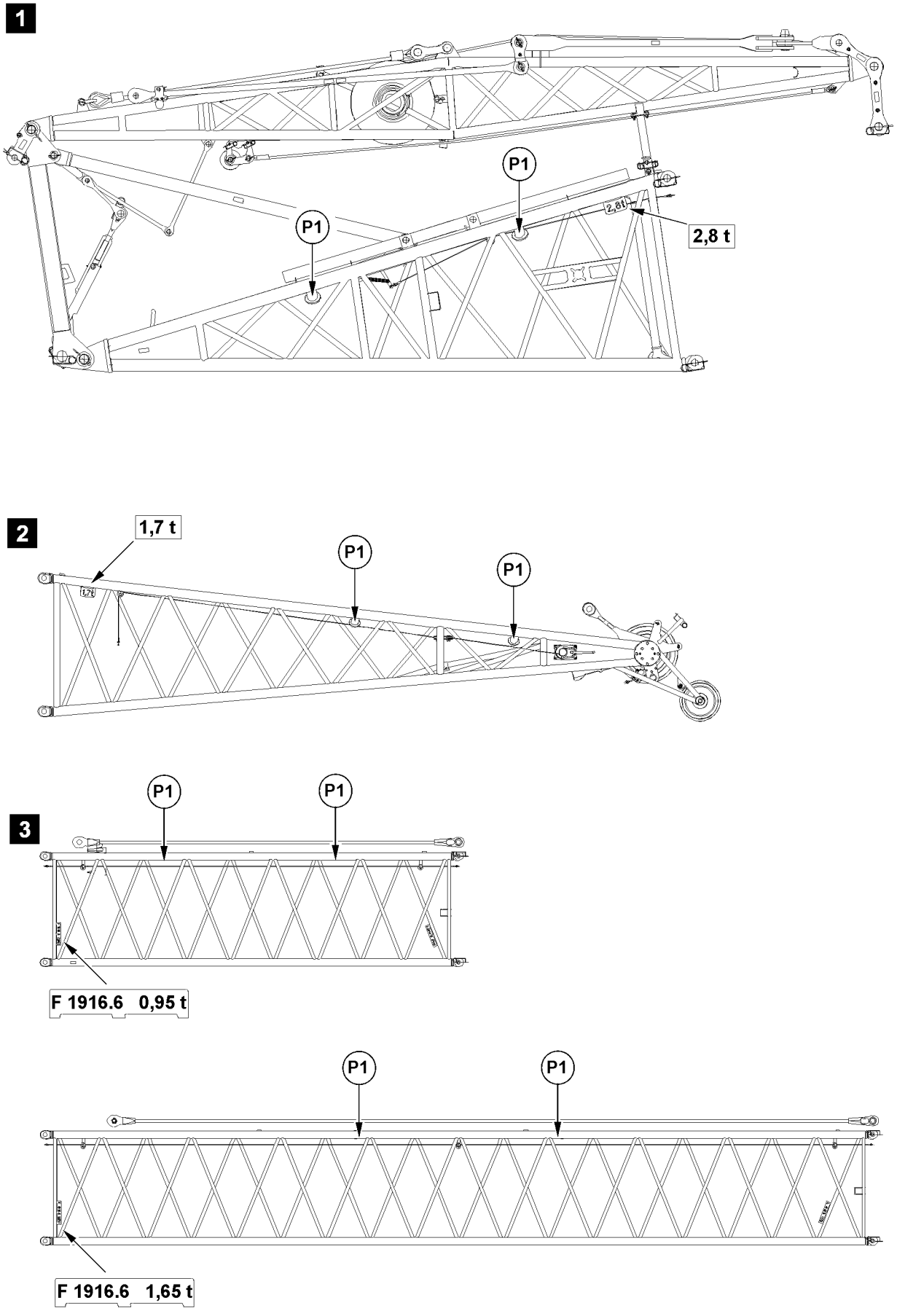

Fig.119835

LWE/LR 1600-2-001/18101-07-02/en

copyright © Liebherr-Werk Ehingen GmbH 2018

1 Component overview

Note
- ▶ The F-jib can be equipped optionally with a test device*.
- ▶ If your crane is equipped with a test device* for the fixed jib, then the respective rod plan must be observed at assembly.

Note
- ▶ For dimensions and weights of the components see Crane operating instructions, chapter 1.03.

2 Fastening points

WARNING
Danger of accident due to incorrect attachment!
Life-threatening situations can arise due to improper or incorrect attachment of the corresponding components.
- ▶ The corresponding components must be attached on the intended points **P1**.

Note
- ▶ For assembly or disassembly, load handling equipment with a strand length of at least **4 m** must be used.

2.1 F-assembly unit, see illustration 1

Description	Abbreviation	Weight
F-assembly unit	—	2.8 t

2.2 F-end section, see illustration 2

Description	Abbreviation	Weight
F-end section	—	1.7 t

2.3 F-intermediate sections 6 m and 12 m , see illustration 3

Description	Abbreviation	Weight
F-intermediate section (6 m) with guy ropes	F 1916.6	0.95 t

Description	Abbreviation	Weight
F-intermediate section (12 m) with guy ropes	F 1916.6	1.65 t

LWE/LR 1600-2-001/18101-07-02/en

copyright © Liebherr-Werk Ehingen GmbH 2018

3 Assembling the auxiliary jib

DANGER
The crane can topple over!
If the lattice sections are not installed according to the Rod plan, then the boom system can be overloaded.
The crane can topple over.
Personnel can be severely injured or killed.
▶ Observe the Rod plan and the Crane operating instructions, chapter 5.03.

WARNING
Danger of falling!
During assembly / disassembly, inspection and maintenance work, assembly personnel must be secured with appropriate aids to prevent them from falling. If this is not observed, assembly personnel could fall and suffer life-threatening or fatal injuries.
▶ All work aloft, where there is a danger of falling must be carried out with suitable aids.
▶ If fall arrest equipment is available, then it must be used, see Crane operating instructions, chapter 2.06.
▶ If aids are not available and work cannot be carried out from the ground, then the assembly personnel must secure themselves with the specified fall arrest system to prevent falling, see Crane operating instructions, chapter 2.04.
▶ The fall arrest system must be fastened on the fastening and hook points as well as on the safety ropes. For safety points, see Crane operating instructions, chapter 2.06.
▶ Only step on the aids, ladders and catwalks with clean shoes.
▶ Keep aids, ladders and catwalks free of heavy dirt, snow and ice.
▶ Remaining on as well as under a suspended load is prohibited.
▶ Remaining on or within crane components (for example: At assembly of boom sections, lattice sections) which are moved during lifting, lowering, turning or closing procedures is strictly prohibited.
▶ During all assembly and disassembly work, maintenance work and inspections, travel or crane operation is prohibited.
▶ It is prohibited to step on the boom system or an auxiliary boom without suitable protective devices.
▶ Stepping and walking on crane components and lattice sections, which have an incline of more than 20° is prohibited.

DANGER
Danger of accident at assembly / disassembly of booms!
When you disassemble unsecured or unsupported booms, then the booms can fall down and kill or severely injure personnel.
▶ Never unpin the pins under unsecured or unsupported booms.
▶ Never unpin the connecting pins on unsecured or unsupported booms.
▶ Do not stand under the booms or within the complete danger zone during the pinning and unpinning procedure of the booms.
▶ Secure the pins in the bearing points as well as in the receptacles.
▶ Do not lean the ladder against the component being disassembled.

WARNING
Danger of impact and crushing!
There is a risk of impact and crushing when standing in the vicinity of suspended loads moving sideways.
▶ During assembly / disassembly no one may be in the dangerous area around or underneath the suspended load before the load has been secured.

LWE/LR 1600-2-001/18101-07-02/en

copyright © Liebherr-Werk Ehingen GmbH 2018

WARNING
Components not pinned and secured!
If a component is released from the auxiliary crane before having been pinned and secured, the component will fall down. Personnel can be severely injured or killed.
▶ Do not disengage the auxiliary crane until the respective component is pinned and secured.

WARNING
The components can fall down!
If the respective component is unpinned without being secured by an auxiliary crane, the respective component can fall down and fatally injure personnel.
▶ Do not unpin the components until they are secured by an auxiliary crane.

LWE/LR 1600-2-001/18101-07-02/en

copyright © Liebherr-Werk Ehingen GmbH 2018

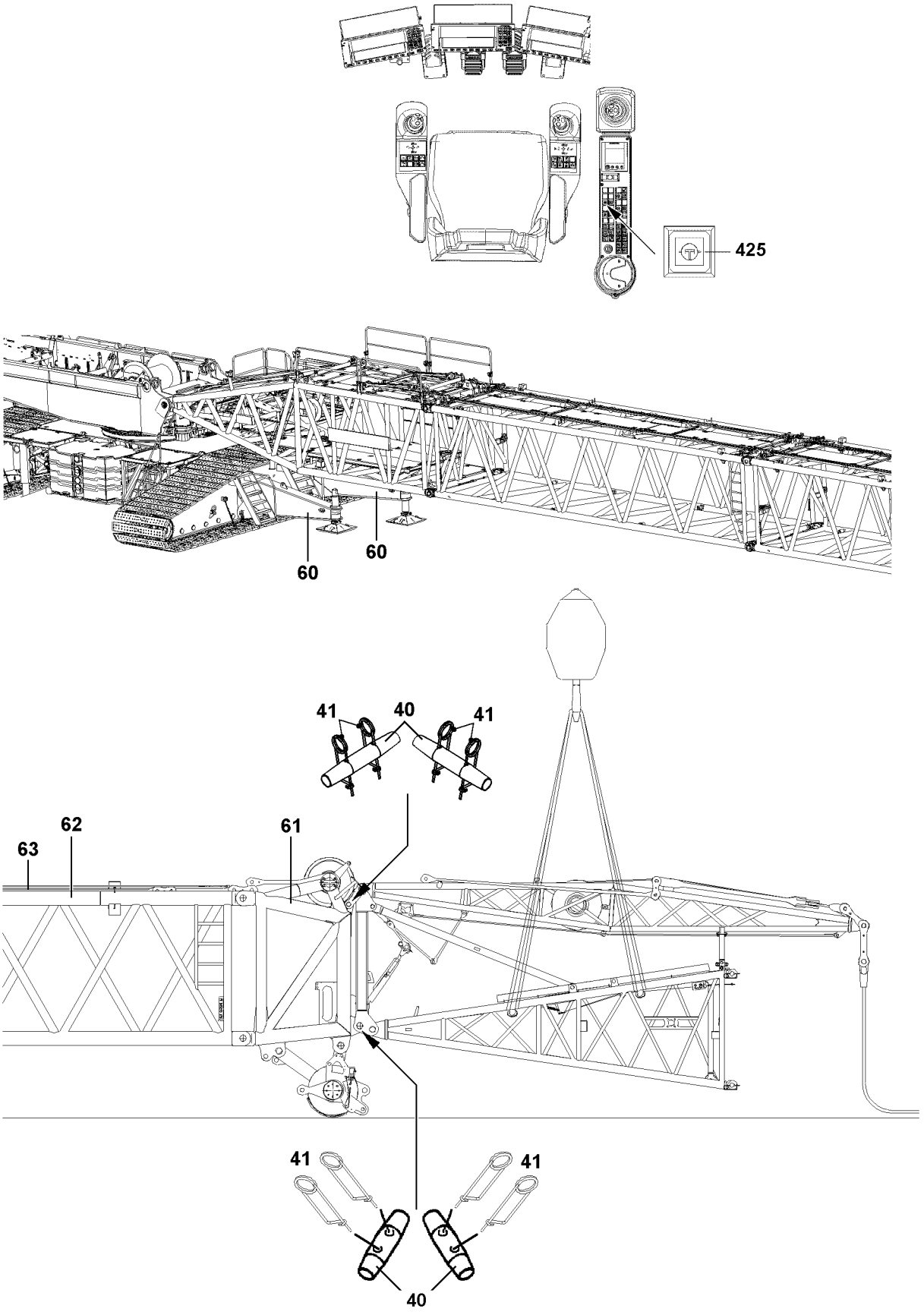

Fig.119958

LWE/LR 1600-2-001/18101-07-02/en

copyright © Liebherr-Werk Ehingen GmbH 2018

This crane can be equipped with an auxiliary jib. The auxiliary jib can be assembled at an angle of 10 ° , 15 ° or 30 ° to the SL-boom. Lengths of 12 m to 36 m are possible.

Note

▶ The auxiliary jib is **not** adjustable in crane operation.

Make sure that the following prerequisites are met:

- The „mechanical auxiliary supports **60**“ are properly assembled on the crane, see also **Erection and take down charts**.
- The SL-boom is assembled and luffed down „to the side“ over the „mechanical auxiliary supports **60**“.
- The LI-intermediate section **62** is pinned and secured on the SL-boom with the „guy brackets for the F-guying“.
- The guy rods **63** are placed on the LI-intermediate section **62** and are pinned and secured with the guy brackets.
- The corresponding SW-end section **61** is pinned and secured on the LI-intermediate section **62**.
- The F-assembly unit is properly hung and secured on the auxiliary crane.
- The F-assembly unit is pinned on the SW-end section **61** with the double cone pins **40** on top and bottom and is secured with the spring retainers **41**.
- The LICCON overload protection has been set according to the data in the load chart.
- The LICCON overload protection settings have been compared with the actual set up configuration.
- The LICCON overload protection is exceeded.
- The assembly icon is visible on the LICCON monitor.

LWE/LR 1600-2-001/18101-07-02/en

copyright © Liebherr-Werk Ehingen GmbH 2018

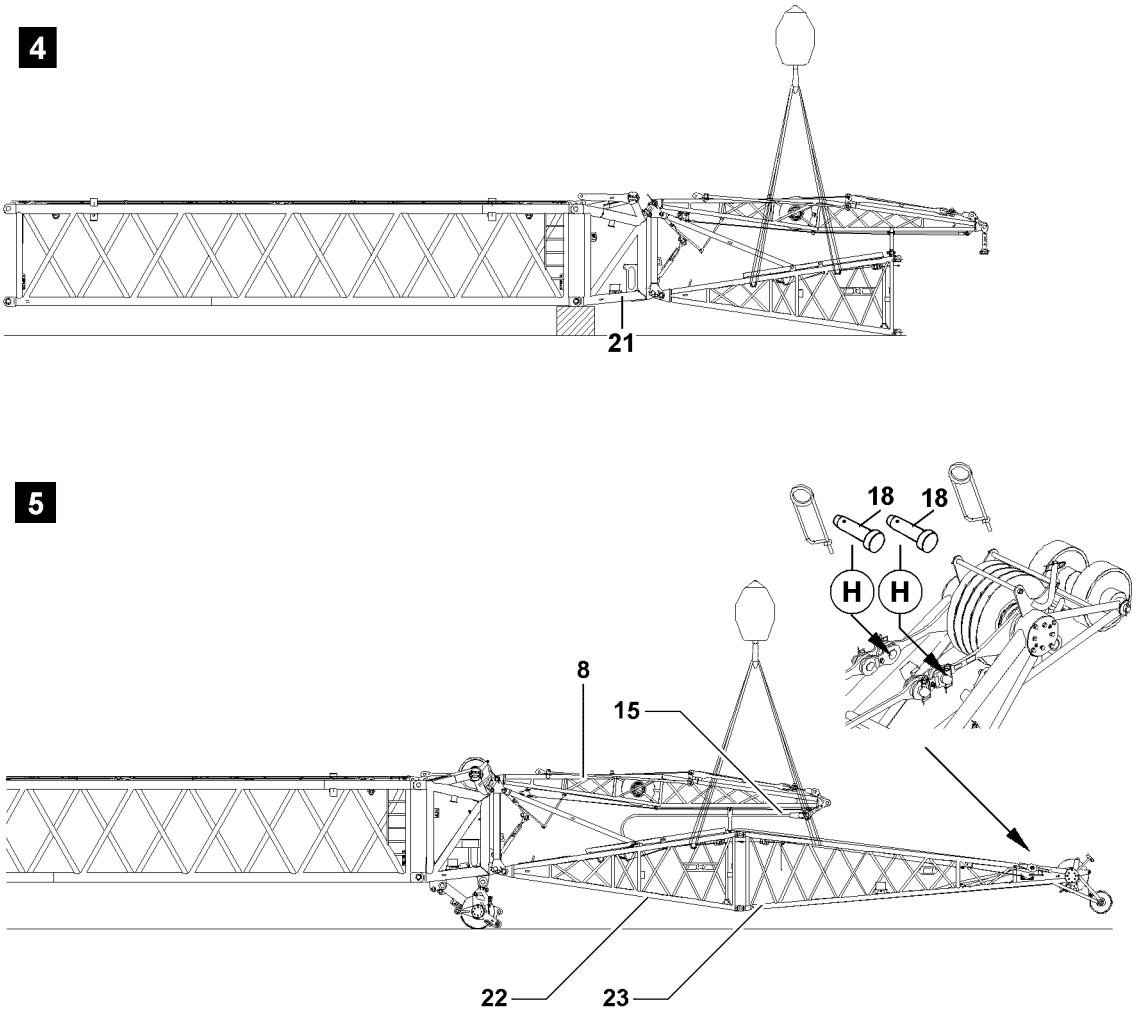

LWE/LR 1600-2-001/18101-07-02/en

Fig.106172

copyright © Liebherr-Werk Ehingen GmbH 2018

3.1 SLF-assembly conditions

3.1.1 F-connector head on the boom end

The F-boom can be assembled on the following end sections:
- **55** SW-end section
- **21** F-connector head

Note

▶ If the F-connector head **21** is assembled on the boom end, then it must be supported for the F-assembly, see illustration **4**.

▶ Support the F-connector head for the F-assembly, see illustration **4**.

3.1.2 Special case - F-end section is pinned with F-pivot section (12 m F-jib)

Note

▶ If the F-end section **23** is already pinned with the F-pivot section **22**, then - before lifting the FA-frame **8** - the pins **18** between the F-guy ropes **15** and brackets on the F-end section **23** must be released on the points **H**, see illustration **5**.

▶ Carry out the remainder of the assembly as described in section „Assembling the F-assembly unit“.

LWE/LR 1600-2-001/18101-07-02/en

copyright © Liebherr-Werk Ehingen GmbH 2018

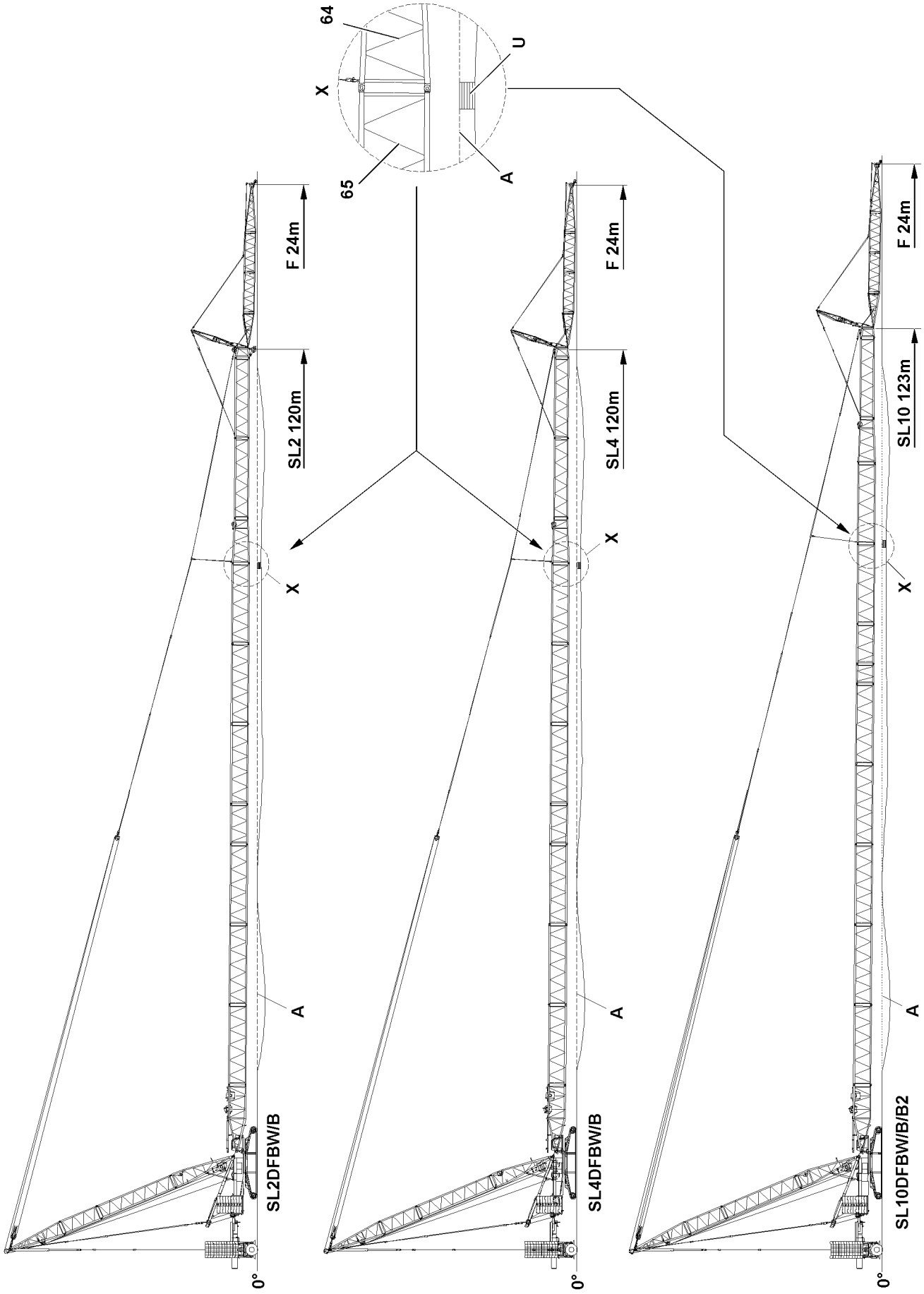

Fig.119957

LWE/LR 1600-2-001/18101-07-02/en

copyright © Liebherr-Werk Ehingen GmbH 2018

3.1.3 Assembling the SL2DF/SL4DF-/SL10DF-boom combination with supporting base

NOTICE
Overload of boom!
If the respective boom system is not supported before the erection procedure, then the boom will be overloaded.
The crane will be damaged.
- ▶ For boom lengths SL2DF/SL4DF from 120 m , a supporting base must be used.
- ▶ For boom lengths SL10DF, from 123 m on, a supporting base must be used.
- ▶ Support the boom with suitable material of sufficient load bearing capacity.

Note
- ▶ The supporting base is independent of the length of the F-auxiliary jib.
- ▶ The alignment level **A** is the placement level of the crane.

The required boom combination - consisting of a S-pivot section and the SL-intermediate sections - must be preassembled at a suitable location. The pre-assembled SL-boom combination must be swung in to the turntable with an auxiliary crane and pinned and secured in position at that location.

- ▶ Preassemble the SL-boom combination.
- ▶ Swing the preassembled SL-boom combination with the auxiliary crane in to the turntable.
- ▶ Pin and secure the SL-boom combination to the S-pivot section on the turntable.

Note
- ▶ The boom combination must be supported from below on the last intermediate section **65** before the reducer section **64** to the height of the alignment level **A**, see illustration.
- ▶ Make sure that the upper edge of the base support **U** is at the height of the alignment level **A**.

- ▶ Place the SL-boom combination on the supporting base.
- ▶ The electrical connections to the F-connector head or to the SW-end section have been properly established.
- ▶ Erect the SL-boom combination to the horizontal.
- ▶ Assemble the F-auxiliary jib, see section „Assembling the F-auxiliary jib“.

LWE/LR 1600-2-001/18101-07-02/en

copyright © Liebherr-Werk Ehingen GmbH 2018

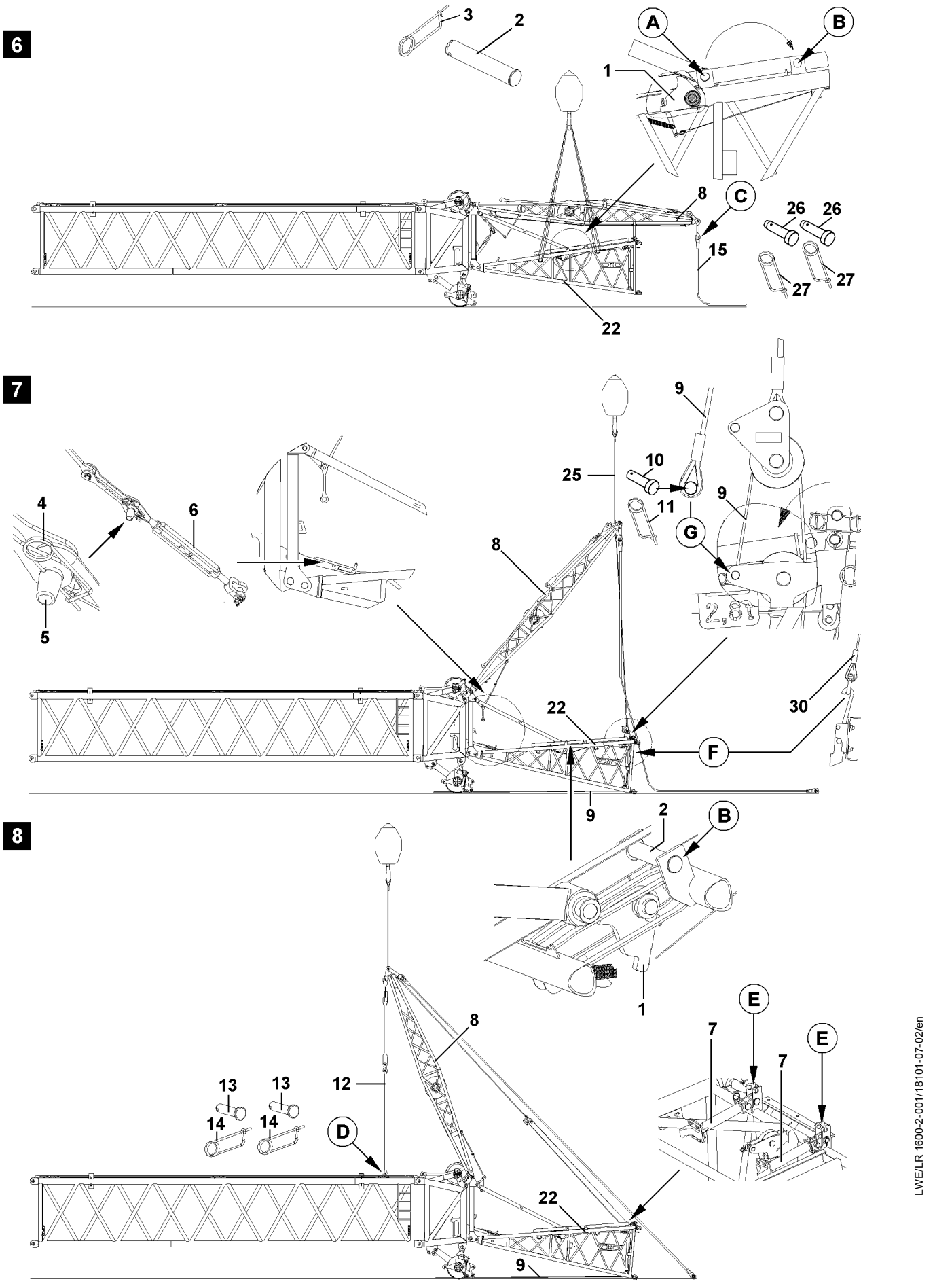

LWE/LR 1600-2-001/18101-07-02/en

Fig.106173

copyright © Liebherr-Werk Ehingen GmbH 2018

3.2 Assembling the F-auxiliary jib

- ▶ Release and unpin the pin **2** from the F-pivot section and the F-relapse retainer on point **A** „Transport position“, see illustration **6**.
- ▶ Pin in the pin **2** in „stop position“ at point **B** and secure with spring retainer **3**, see illustration **6**.
- ▶ Slowly lower the F-pivot section **22** with the auxiliary crane.
- ▶ Secure the F-guy ropes **15** with the brackets of the FA-frame **8** on point **C** with pins **26** and secure with spring retainers **27**, see illustration **6**.
- ▶ Release and unpin the pin **5** on the FA-frame relapse retainer, place the turnbuckle **6** on the F-pivot section **22**, see illustration **7**.
- ▶ Pull the flap **1** on the F-pivot section **22** down and affix the rope **30** on the hook lock at point **F**, see illustration **7**.
- ▶ Hang in the FA-frame **8** with the attachment rope **25** on the auxiliary crane and lift, see illustration **7**.
- ▶ Reeve in the assembly winch rope **9** from the turntable into the rope pulleys on the F-pivot section **22** and pin on point **G** with pin **10** and secure with spring retainer **11**, see illustration **7**.

NOTICE
Danger of damage!
Before crane operation or before erecting or taking down the boom, both support frames **7** must be folded down.

- ▶ Unpin the support frames **7** on points **E** and fold them down, see illustration **8**.

- ▶ Carefully fold the FA-frame **8** with the auxiliary crane „in direction of the main boom“ and „spool the assembly winch rope **9** out at the same time“ until it can be pinned on point **D**, see illustration **8**.
- ▶ Pin the F-guy rods **12** on point **D** with pins **13** and secure with spring retainers **14**, see illustration **8**.

LWE/LR 1600-2-001/18101-07-02/en

copyright © Liebherr-Werk Ehingen GmbH 2018

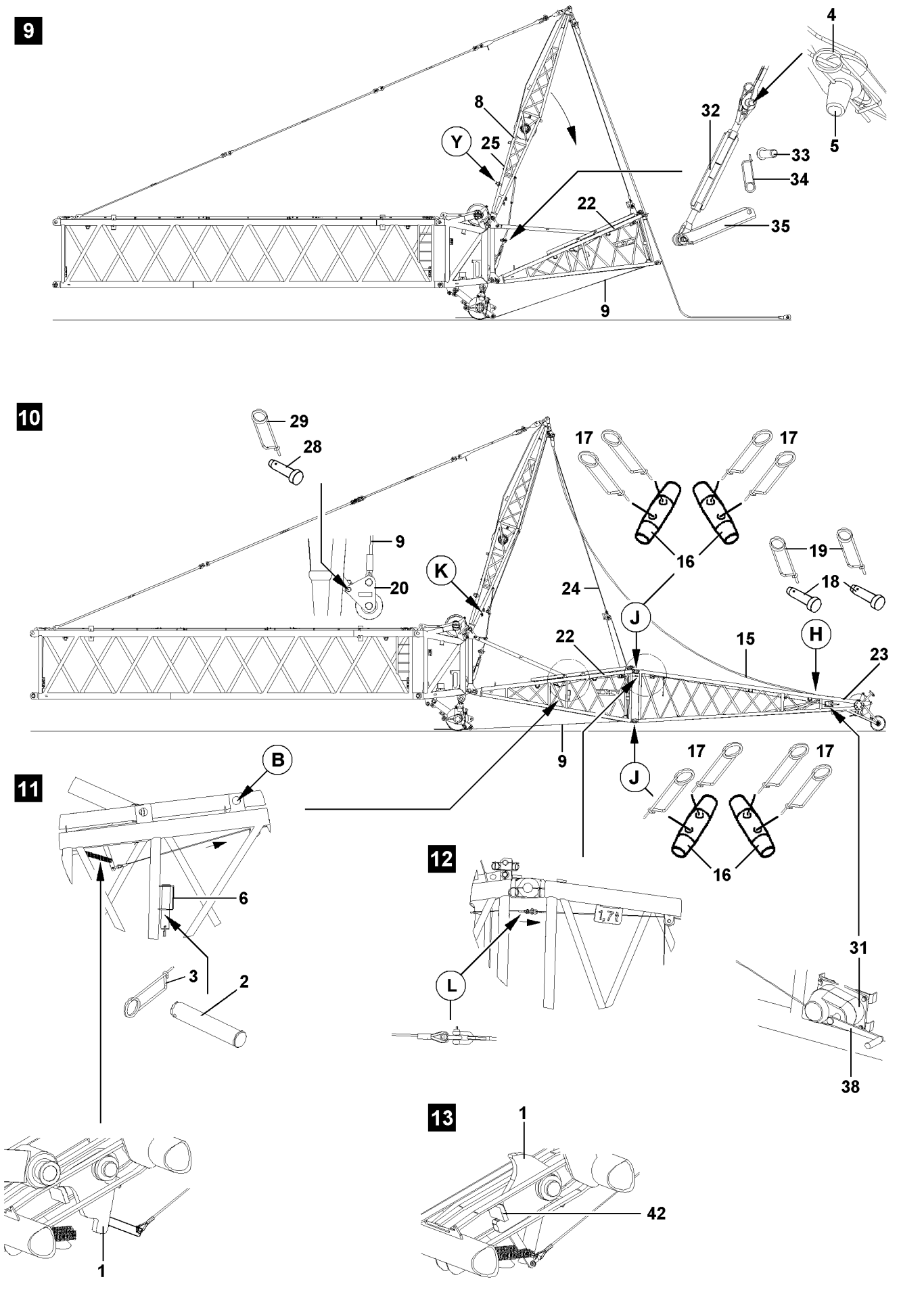

Fig.106174

LWE/LR 1600-2-001/18101-07-02/en

copyright © Liebherr-Werk Ehingen GmbH 2018

▶ Pull the FA-frame **8** with the assembly winch rope **9** in direction of the F-pivot section **22**, see illustration **9**.

Note
▶ Extend the turnbuckle **32**, if necessary so that the pin **5** can be pinned, see illustration **9**.
▶ Then tighten the turnbuckle **32** and close the retaining plate **35**.
▶ Secure the retaining plate **35** with pin **33** and spring retainer **34**.

▶ Connect the FA-frame relapse retainer again by pinning the pin **5** and securing it with the spring retainer **4**, see illustration **9**.

Note
▶ Pin and secure the attachment rope **25** for the auxiliary crane on the FA-frame **8** at point **Y** with a shackle, see illustration **9**.

▶ Lower the F-pivot section **22**, see illustration **10**.
▶ Properly install the F-end section **23** and the F-intermediate sections (if applicable) on the auxiliary crane and on the F-pivot section **22** and pin.
▶ Insert the double cone pins **16** on points **J** from the „outside to the inside“ and secure with spring retainers **17**, see illustration **10**.
▶ Pin the F-guy ropes **15** on the F-end section on point **H** with pins **18** and secure with spring retainers **19**, see illustration **10**.

Note
▶ If the F-intermediate sections are installed, then the additional guy ropes for the F-intermediate sections must be assembled, pinned and secured.

▶ Unreeve the assembly winch rope **9** after the F-jib is completely assembled.
▶ Pin the attachment rope **24** with the pulley block **20** on the FA-frame **8** at point **K** with pin **28** and secure with spring retainer **29**, see illustration **10**.

Note
▶ Unpin the pin **2** before erecting the boom on point **B** and insert it into the retainer **6** „park position“, see illustration **11**.

▶ Insert the pin **2** into the retainer **6** „park position“ and secure with spring retainer **3**, see illustration **11**.
▶ Connect the rope strand from flap **1** to manual rope winch **31** on the F-end section **23** at point **L**, see illustration **12**.

LWE/LR 1600-2-001/18101-07-02/en

copyright © Liebherr-Werk Ehingen GmbH 2018

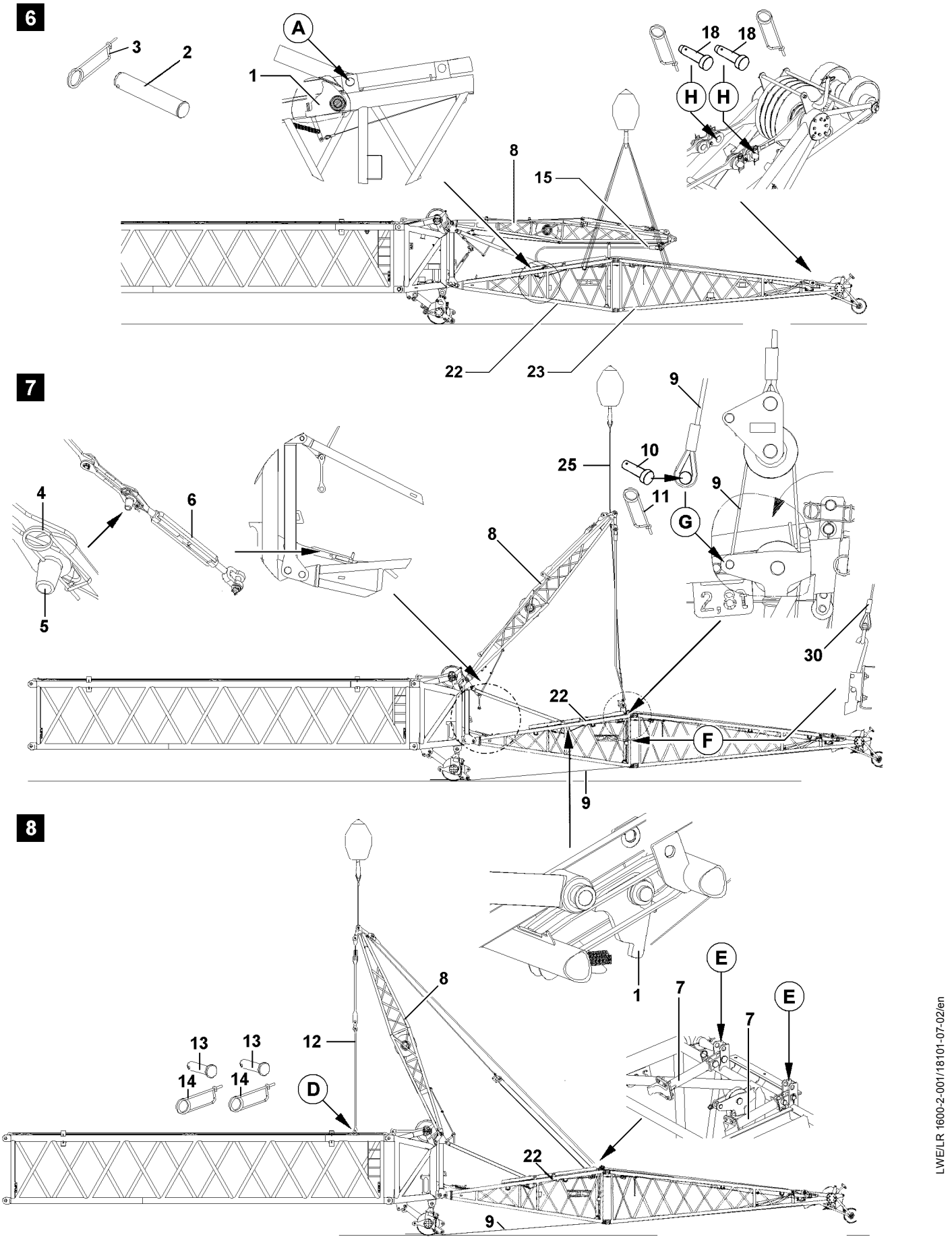

Fig.106639

LWE/LR 1600-2-001/18101-07-02/en

copyright © Liebherr-Werk Ehingen GmbH 2018

3.3 Flying assembly of F-auxiliary jib (12 m)

Make sure that the following prerequisite is met:
– The pin **2** of the F-pivot section and the F-relapse retainer is on point **A** „transport position“.

WARNING
Folding down of F-lattice jib!
If the pin **2** is unpinned during assembly, then the F-lattice jib folds down.
Personnel can be severely injured or killed.
▶ The pin **2** of the F-pivot section and the F-relapse retainer must remain pinned during assembly on point **A** „Transport position“.

NOTICE
Damage of F-auxiliary jib!
▶ F-jibs, which are longer than 12 m may not be assembled in flying mode.

▶ Release and unpin the pin **5** on the FA-frame relapse retainer, place the turnbuckle **6** on the F-pivot section **22**, see illustration **7**.
▶ Pull the flap **1** on the F-pivot section **22** down and affix the rope **30** on the hook lock at point **F**, see illustration **7**.

Note
▶ Before lifting the FA-frame **8**, the pins **18** between the F-guy ropes **15** and the brackets on the F-end section **23** must be released on points **H**, see illustration **6**.

▶ Hang in the FA-frame **8** with the attachment rope **25** on the auxiliary crane and lift, see illustration **7**.
▶ Reeve in the assembly winch rope **9** from the turntable into the rope pulleys on the F-pivot section **22** and pin on point **G** with pin **10** and secure with spring retainer **11**, see illustration **7**.

NOTICE
Danger of property damage!
Before crane operation or before erecting or taking down the boom, both support frames **7** must be folded down.
▶ Unpin the support frames **7** on points **E** and fold them down, see illustration **8**.

▶ Carefully fold the FA-frame **8** with the auxiliary crane „in direction of the main boom“ and „spool the assembly winch rope **9** out at the same time“ until it can be pinned on point **D**, see illustration **8**.
▶ Pin the F-guy rods **12** on point **D** with pins **13** and secure with spring retainers **14**, see illustration **8**.

LWE/LR 1600-2-001/18101-07-02/en

copyright © Liebherr-Werk Ehingen GmbH 2018

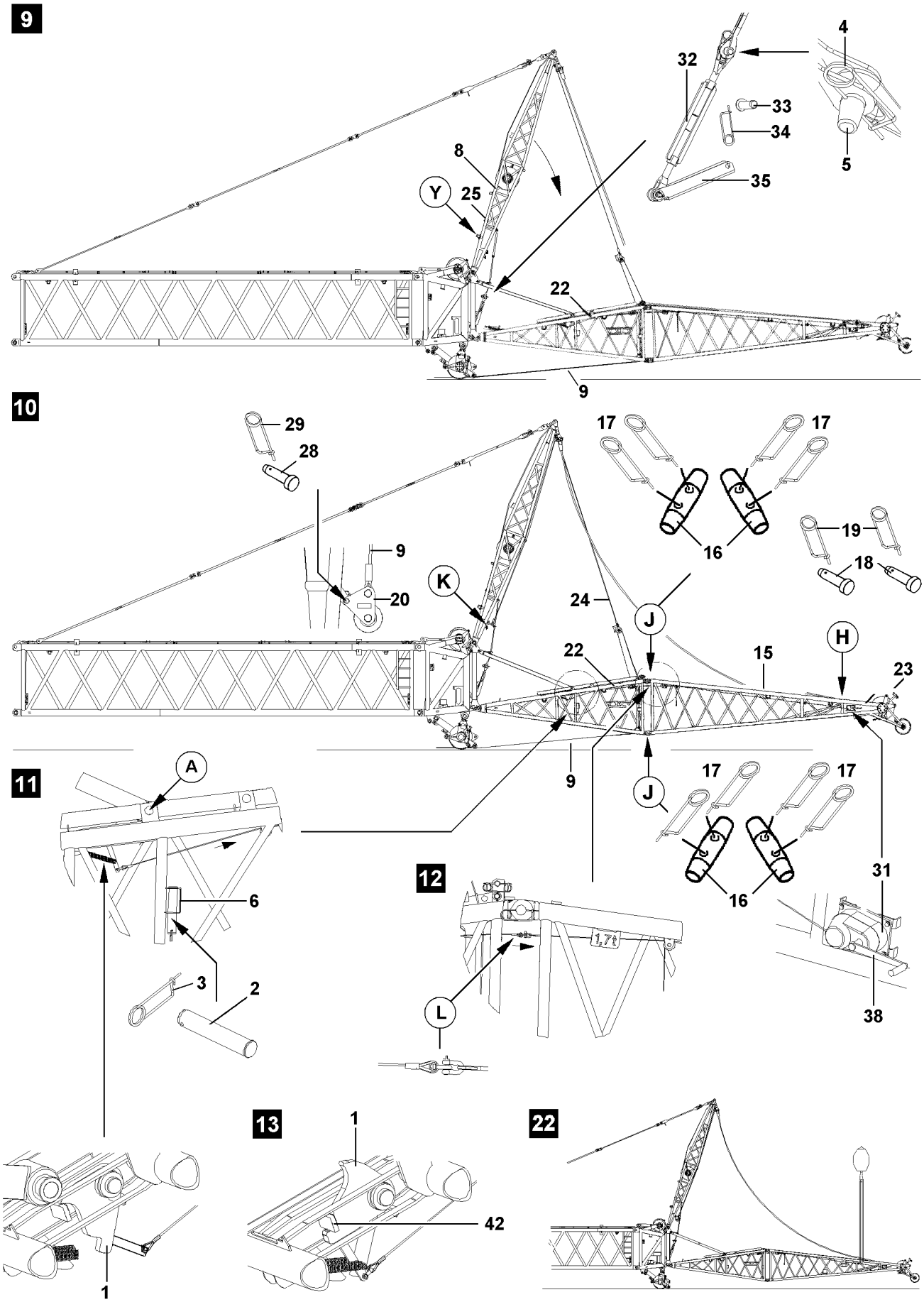

Fig.106640

LWE/LR 1600-2-001/18101-07-02/en

copyright © Liebherr-Werk Ehingen GmbH 2018

▶ Pull the FA-frame **8** with the assembly winch rope **9** in direction of the F-pivot section **22**, see illustration **9**.

Note

▶ Extend the turnbuckle **32**, if necessary so that the pin **5** can be pinned, see illustration **9**.
▶ Then tighten the turnbuckle **32** and close the retaining plate **35**.
▶ Secure the retaining plate **35** with pin **33** and spring retainer **34**.

▶ Connect the FA-frame relapse retainer again by pinning the pin **5** and securing it with the spring retainer **4**, see illustration **9**.

Note

▶ Pin and secure the attachment rope **25** for the auxiliary crane on the FA-frame **8** at point **Y** with a shackle, see illustration **9**.

▶ Lower the F-pivot section **22**, see illustration **10**.
▶ Pin the F-guy ropes **15** on the F-end section on point **H** with pins **18** and secure with spring retainers **19**, see illustration **10**.
▶ Unreeve the assembly winch rope **9** after the guy ropes are completely assembled.
▶ Pin the attachment rope **24** with the pulley block **20** on the FA-frame **8** at point **K** with pin **28** and secure with spring retainer **29**, see illustration **10**.

Note

▶ Lift the F-jib with the auxiliary crane until the pin **2** can be pulled on point **A**, see illustration **22**.

▶ Unpin the pin **2** before erecting the boom on point **A** and insert it into the retainer **6** „park position“ and secure with spring retainer **3**, see illustration **11**.
▶ Connect the rope strand from flap **1** to manual rope winch **31** on the F-end section **23** at point **L**, see illustration **12**.

NOTICE

Danger of property damage on the relapse support!
When taking the boom down, the flap **1** must be set in „down“ position as soon as the F-end section **23** touches the ground or as soon as the manual rope winch **31** can be reached.
If this is not observed, components on the F-assembly unit can be damaged.

▶ Set the flap **1** with the manual rope winch **31** in „down“ position so that the plunger **50** can „slide“ in the guide over the flap **1**, see illustration **11**.

▶ Set the flap **1** on the F-pivot section **22** with the manual rope winch **31** into „down“ position, see illustration **11**.

copyright © Liebherr-Werk Ehingen GmbH 2018

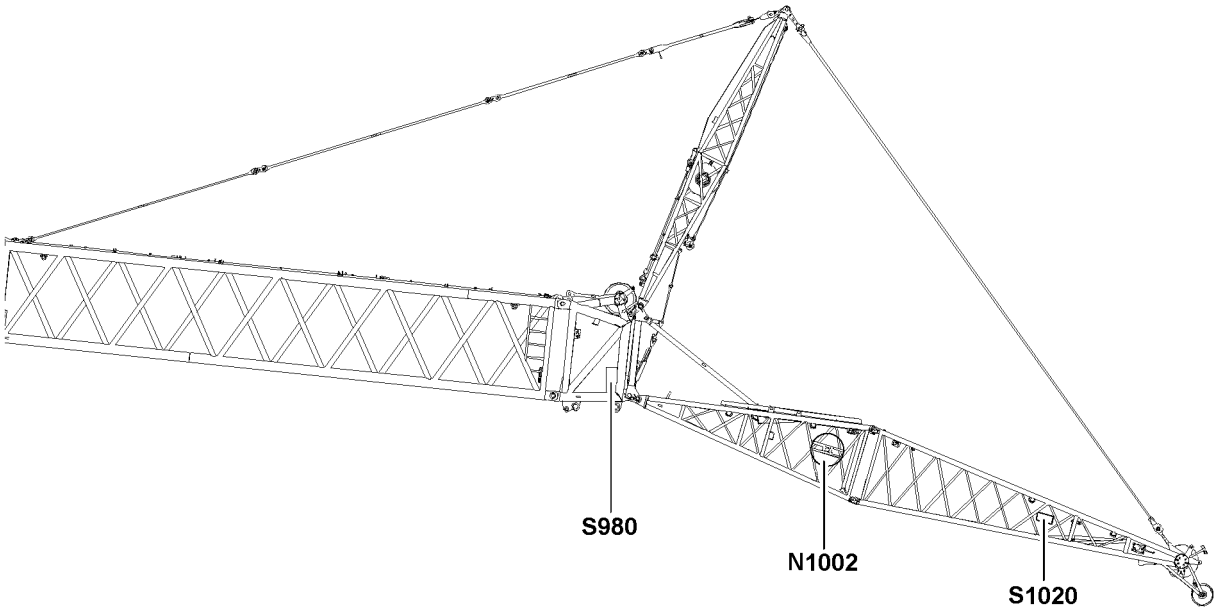

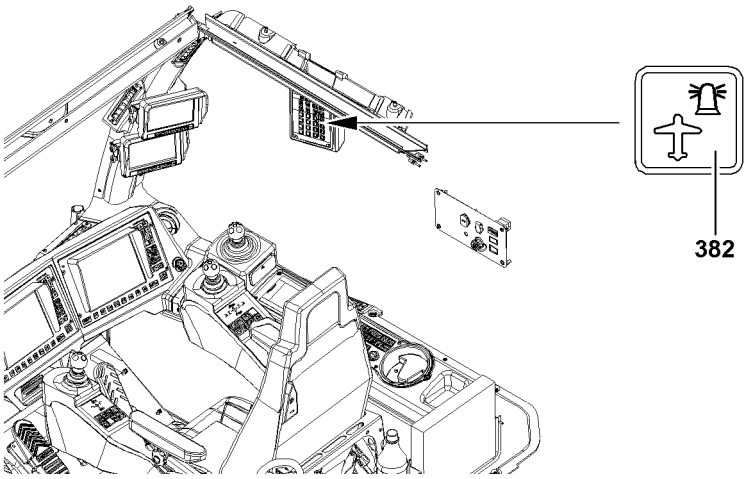

LWE/LR 1600-2-001/18101-07-02/en

Fig.108792

copyright © Liebherr-Werk Ehingen GmbH 2018

3.4 Establishing the electrical connections

Make sure that the following prerequisites are met:
- The boom system is completely assembled.
- The airplane warning light and the wind speed sensor are installed.

NOTICE
Damage to the electrical connection on the cable drum!
If the electrical connection from the cable drum on the F-pivot section to the terminal box on the F-connector head or to the SW-end section is established first before the connection to the terminal box on the F-end section, then the electrical connection can be damaged when spooling out the cable drum.
▶ Establish the electrical connection from the cable drum on the F-pivot section to the terminal box on the F-end section first and then the electrical connection from the terminal box on the F-connector head or the SW-end section to the cable drum.

Note
▶ To establish the electrical connections on the F-auxiliary jib, use the separate electrical wiring diagram.

▶ Establish the electrical connections.
▶ Make sure that all electrical connections on the boom are established.

3.5 Checking the function of the safety equipment

WARNING
Non-functioning safety equipment!
If the function of the safety equipment is defective, personnel can be severely injured or killed.
▶ Crane operation with non-functioning safety equipment is **prohibited**.

Note
▶ The function of the individual limit switches must be checked before erection.
▶ The function of the limit switch initiators must be checked in the test system, see „Diagnostics manual“.

Note
▶ If a function check on the limit switches or on the safety devices does not lead to the desired shut offs, then the plug connections on the connector boxes or the components itself must be checked. If no visible connection errors or component defects can be found, contact **Liebherr** Service.

LWE/LR 1600-2-001/18101-07-02/en

copyright © Liebherr-Werk Ehingen GmbH 2018

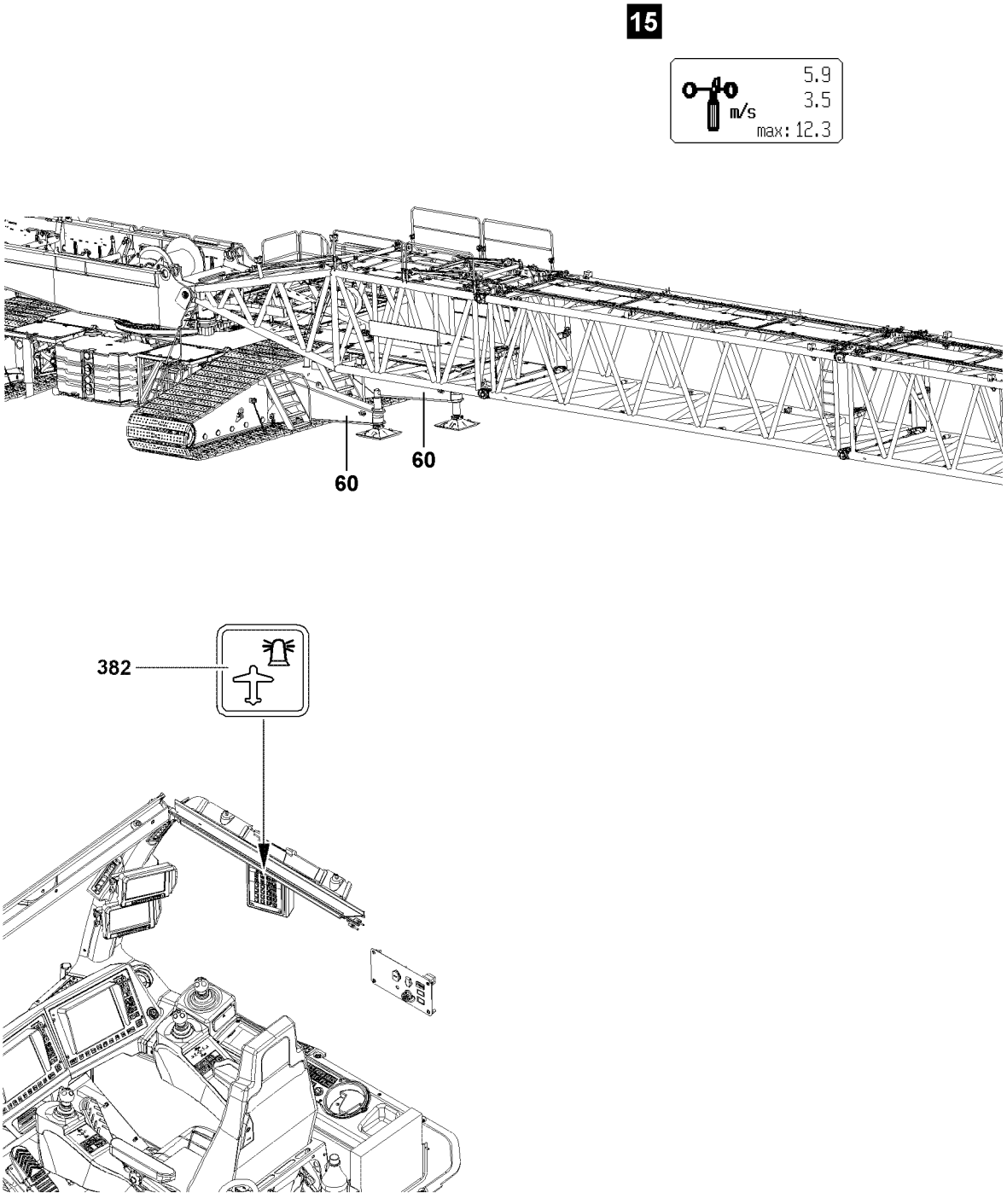

LWE/LR 1600-2-001/18101-07-02/en

Fig.119959

copyright © Liebherr-Werk Ehingen GmbH 2018

Make sure that the following prerequisites are met:
- All electrical connections have been made.
- The crane engine is running.
- The corresponding operating mode is set on the LICCON monitor.

3.5.1 Checking the wind speed sensor

▶ Check the movement and the function of the wind speed sensor.

Result:

– The icon „Wind speed“, see illustration **15**, appears on the LICCON monitor.

3.5.2 Checking the airplane warning light

▶ Turn on the airplane warning light on with the button **382**.
▶ Check the function visually.

3.5.3 Checking the hoist limit switch on the pulley head

Note
▶ When replacing or changing a hoist limit switch (HES), the corresponding hoist limit switch must have the correct bus address and the correct software version in order to be detected again by the bus system (LSB).

▶ Actuate the hoist limit switch manually on the pulley head.

Result:

– The spool up function of the hoist winch turns off.
– The icon „Hoist top“ appears on the LICCON monitor 0, see illustration **14**.
– The limit switch is functioning.

3.5.4 Checking the limit switch S-boom „steepest position“

Note
▶ The limit switch functions have to be checked individually before erection.

▶ Cover the limit switch initiators on the S-relapse cylinders individually with a metal plate.

Result:

– The limit switch is actuated manually.
– The spool up function of winch 4 (control winch) turns off.
– The icon „Boom limitation“ appears on the LICCON monitor 0.
– The limit switch is functioning.

LWE/LR 1600-2-001/18101-07-02/en

copyright © Liebherr-Werk Ehingen GmbH 2018

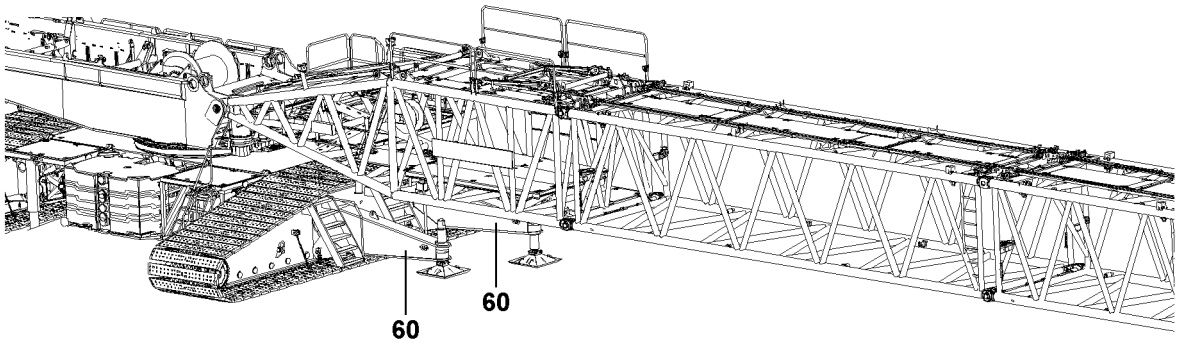

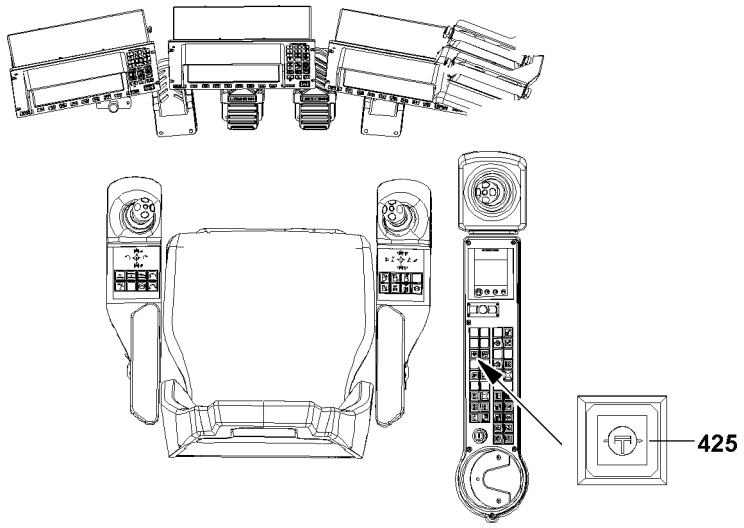

LWE/LR 1600-2-001/18101-07-02/en

Fig.119960

copyright © Liebherr-Werk Ehingen GmbH 2018

3.6 Erecting the SLF-boom

DANGER
The crane can topple over!
- ▶ It is not permitted to turn the crane during the erection procedure.
- ▶ Observe the specifications in the erection and take down charts.

DANGER
The crane can topple over!
For certain boom lengths, the mechanical auxiliary supports must be assembled, see Erection and take down charts.
- ▶ The boom must be erected or taken down „to the side“ „in direction“ of the mechanical auxiliary supports **60**.
- ▶ Always erect or take down according to the data in the **Erection and take down charts**.

WARNING
The crane can topple over!
If the following conditions are not met before erecting the boom, the crane can topple over. Personnel can be severely injured or killed.
- ▶ Observe the technical safety notes, see Crane operating instructions, chapter 5.01.
- ▶ Extend the relapse cylinder before erection.
- ▶ Do not allow slack rope formation on the control winch.

WARNING
Falling hoist rope!
If the hoist rope before the erection procedure is not properly secured onto the end section, it can fall down backward on the basis of its own weight.
Personnel can be severely injured or killed.
- ▶ Secure the hoist rope properly on the head piece before the erection procedure.

Make sure that the following prerequisites are met:
- – The crane is aligned in horizontal direction.
- – All electrical connections have been established.
- – All limit switches are functioning.
- – The counterweight has been installed to the turntable according to the load chart.
- – All pin connections have been secured.
- – The hoist rope has been correctly placed in the rope pulleys and is prevented from jumping out with the rope retaining pins.
- – There are no loose parts on the boom.
- – The LICCON overload protection has been set according to the data in the load chart.
- – The LICCON overload protection settings have been compared with the actual set up configuration.
- – The LICCON overload protection is exceeded.
- – The assembly icon is visible on the LICCON monitor.

LWE/LR 1600-2-001/18101-07-02/en

copyright © Liebherr-Werk Ehingen GmbH 2018

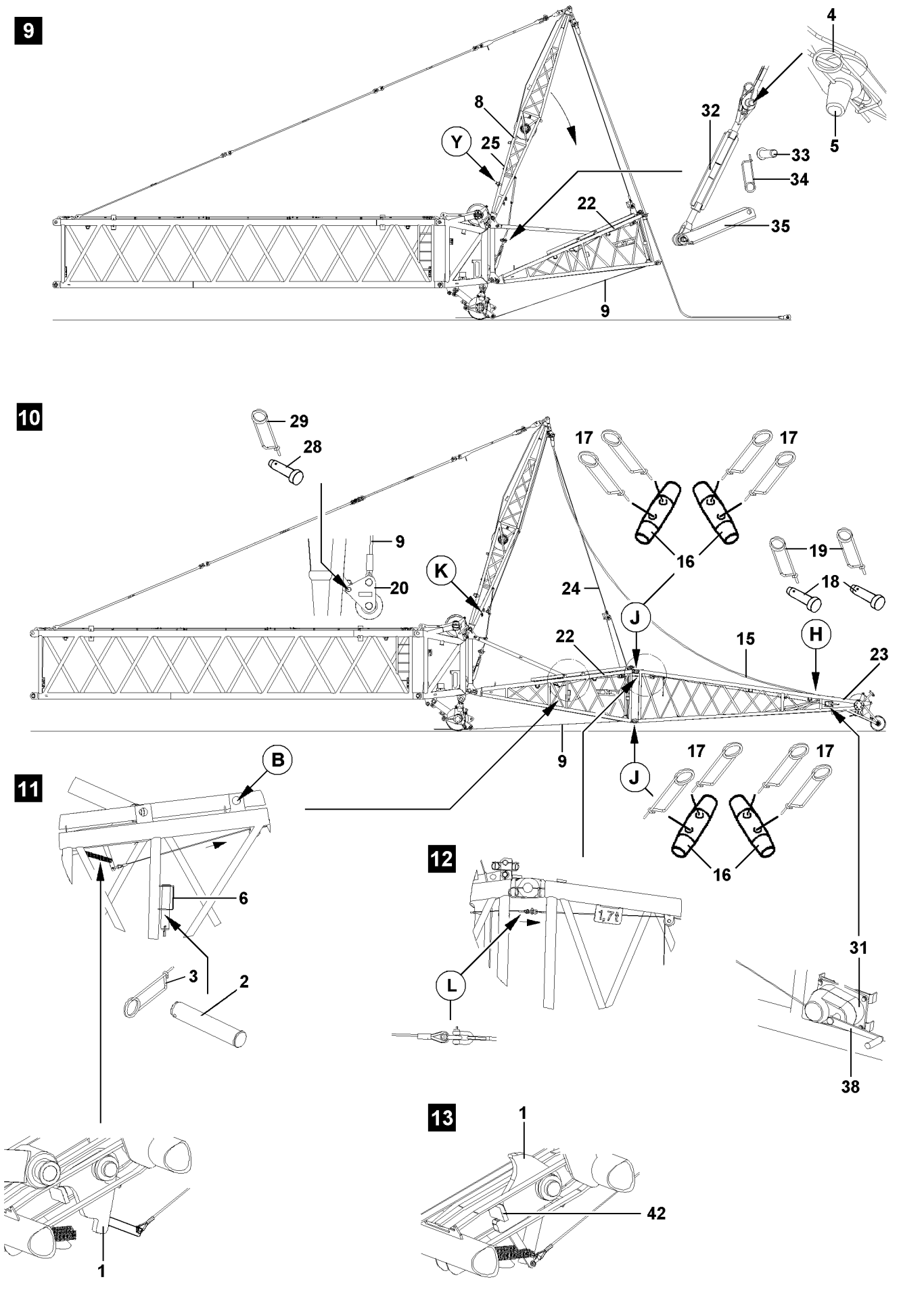

Fig.106174

LWE/LR 1600-2-001/18101-07-02/en

copyright © Liebherr-Werk Ehingen GmbH 2018

3.6.1 Setting the relapse retainer

WARNING
Danger of accident!
During crane operation, the flap **1** must be in „up“ position, see illustration **13**.

- ▶ Set the flap **1 immediately before lift off** of the F-end section **23** or when erecting the boom into the relapse retainer position in the „up“ position.
- ▶ Then remove the manual lever **38** from the manual rope winch **31** and store it in the tool box.

- ▶ Set the flap **1** with the manual rope winch **31** in relapse retainer position („up“ position), until the flap **1** touches on the stop **42**, see illustration **13**.
- ▶ Remove the manual lever **38** from the manual rope winch **31**.

LWE/LR 1600-2-001/18101-07-02/en

copyright © Liebherr-Werk Ehingen GmbH 2018

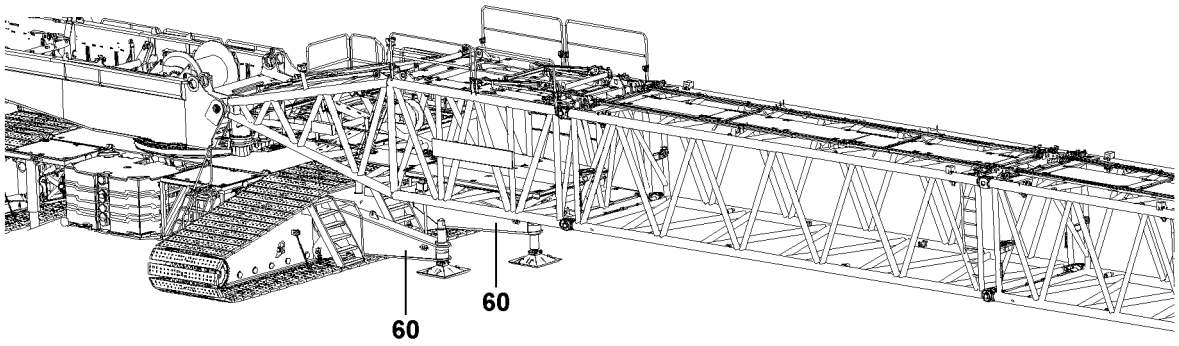

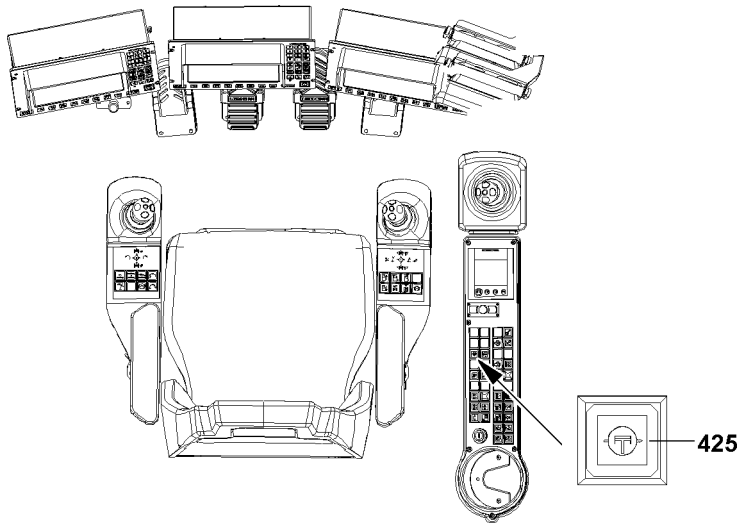

LWE/LR 1600-2-001/18101-07-02/en

Fig.119960

copyright © Liebherr-Werk Ehingen GmbH 2018

3.6.2 Erection procedure

DANGER
The crane can topple over!
- ▶ It is prohibited to turn the crane superstructure while erecting the boom.
- ▶ Observe the data in the Erection and take down charts.

Reeving in the hook block

- ▶ Luff up the boom until the auxiliary jib lifts off the ground.
- ▶ Reeve in the hook block properly and secure the hoist rope on the rope fixed point, for reeving, see separate reeving plans.
- ▶ Attach the hoist limit switch weight.

Erecting the boom

DANGER
The crane can topple over!
In crane operation with exceeded LICCON overload protection, the crane can topple over.
- ▶ Personnel can be severely injured or killed.
- ▶ The radii listed in the load chart may not be exceeded or fallen below, even if there is no load on the hook.

Note
- ▶ When the lowest operating position of the boom is reached, the LICCON overload protection is activated.
- ▶ In the maximum load icon appears a load number in „t“ instead of the display „???“.

- ▶ Luff the boom up to the lowest operating position.

When the boom has reached the lowest operating position:
- ▶ Make sure that the assembly icon **3** on the LICCON monitor turns off.

Result:

– The LICCON overload protection is active.

copyright © Liebherr-Werk Ehingen GmbH 2018

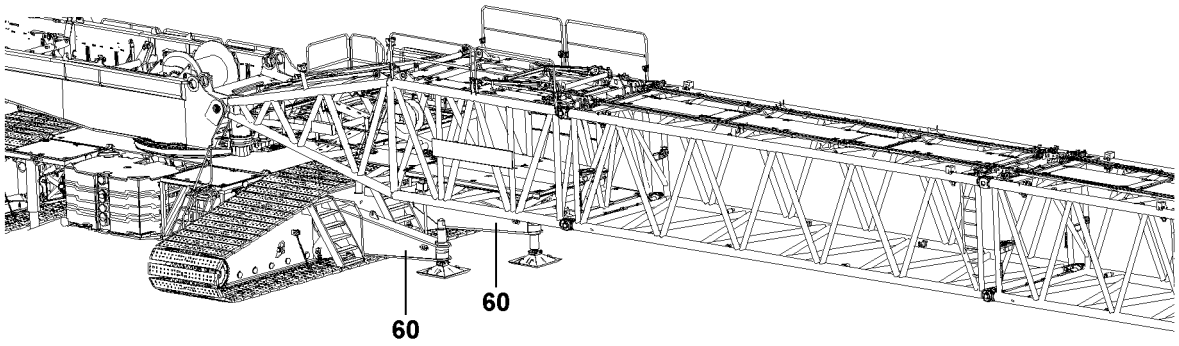

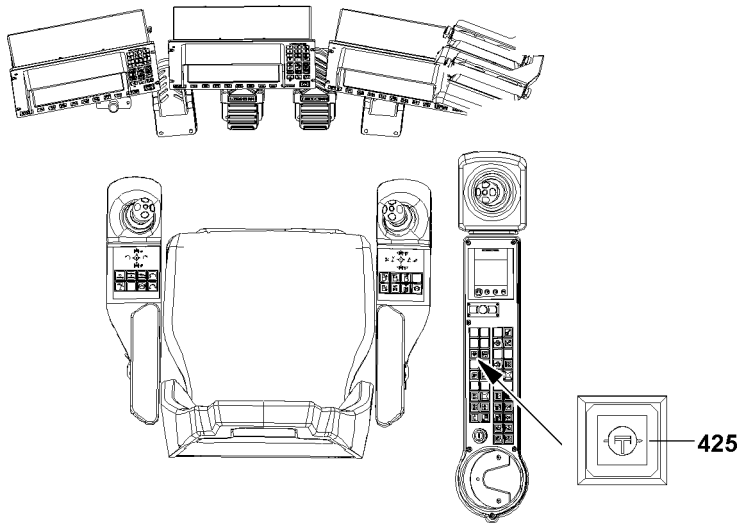

LWE/LR 1600-2-001/18101-07-02/en

Fig.119960

copyright © Liebherr-Werk Ehingen GmbH 2018

4 Operating the crane

4.1 Preparing for crane operation

Note

▶ Observe the notes, see Crane operating instructions, chapter 4.05, chapter 4.08 and chapter 5.01.

Make sure that the following prerequisites are met:
- The LICCON overload protection is active.
- The LICCON overload protection has been set according to the data in the load chart.

WARNING

The crane can topple over!

▶ Check the horizontal position of the crane before and during operation.

▶ If the crane operator leaves the cab, even for a short time, he is obligated to check the operating mode setting and reset them if necessary before resuming crane operation.

4.2 Checking the settings

▶ Check the function of the overload protection by running against the operating positions „on top“ and „bottom“.

▶ Check the hoist limit switch by running against the hoist limit switch weight.

▶ Check the function of the limit switches on the relapse cylinders.

LWE/LR 1600-2-001/18101-07-02/en

copyright © Liebherr-Werk Ehingen GmbH 2018

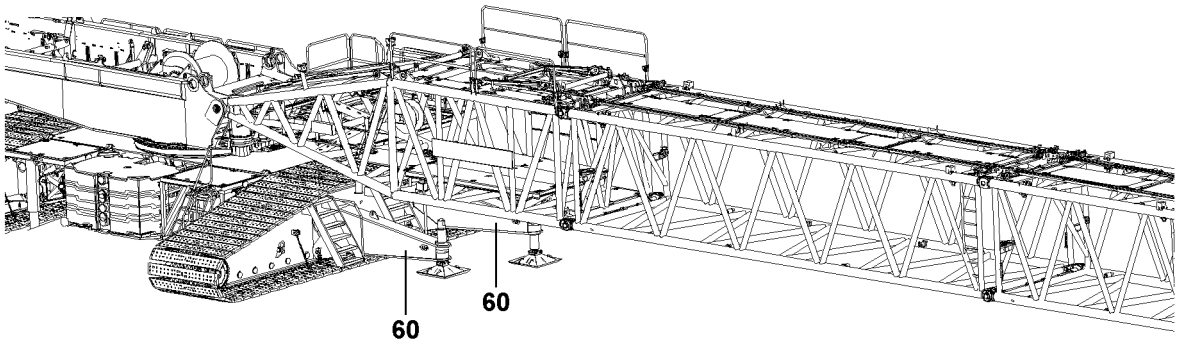

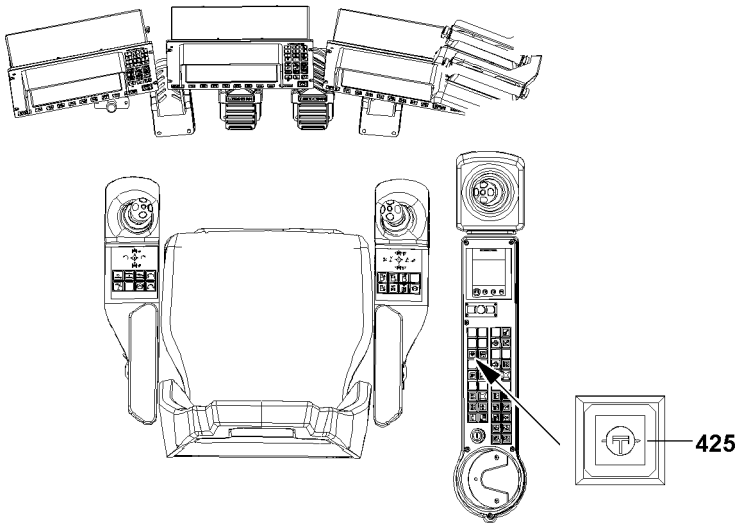

LWE/LR 1600-2-001/18101-07-02/en

Fig.119960

copyright © Liebherr-Werk Ehingen GmbH 2018

5 Disassembling the auxiliary jib

WARNING
Danger of falling!
During assembly / disassembly, inspection and maintenance work, assembly personnel must be secured with appropriate aids to prevent them from falling. If this is not observed, assembly personnel could fall and suffer life-threatening or fatal injuries.

- ▶ All work aloft, where there is a danger of falling must be carried out with suitable aids.
- ▶ If fall arrest equipment is available, then it must be used, see Crane operating instructions, chapter 2.06.
- ▶ If aids are not available and work cannot be carried out from the ground, then the assembly personnel must secure themselves with the specified fall arrest system to prevent falling, see Crane operating instructions, chapter 2.04.
- ▶ The fall arrest system must be fastened on the fastening and hook points as well as on the safety ropes. For safety points, see Crane operating instructions, chapter 2.06.
- ▶ Only step on the aids, ladders and catwalks with clean shoes.
- ▶ Keep aids, ladders and catwalks free of heavy dirt, snow and ice.
- ▶ Remaining on as well as under a suspended load is prohibited.
- ▶ Remaining on or within crane components (for example: At assembly of boom sections, lattice sections) which are moved during lifting, lowering, turning or closing procedures is strictly prohibited.
- ▶ During all assembly and disassembly work, maintenance work and inspections, travel or crane operation is prohibited.
- ▶ It is prohibited to step on the boom system or an auxiliary boom without suitable protective devices.
- ▶ Stepping and walking on crane components and lattice sections, which have an incline of more than 20° is prohibited.

DANGER
Danger of accident at assembly / disassembly of booms!
When you disassemble unsecured or unsupported booms, then the booms can fall down and kill or severely injure personnel.

- ▶ Never unpin the pins under unsecured or unsupported booms.
- ▶ Never unpin the connecting pins on unsecured or unsupported booms.
- ▶ Do not stand under the booms or within the complete danger zone during the pinning and unpinning procedure of the booms.
- ▶ Secure the pins in the bearing points as well as in the receptacles.
- ▶ Do not lean the ladder against the component being disassembled.

WARNING
Danger of impact and crushing!
There is a risk of impact and crushing when standing in the vicinity of suspended loads moving sideways.

- ▶ During assembly / disassembly no one may be in the dangerous area around or underneath the suspended load before the load has been secured.

WARNING
Components not pinned and secured!
If a component is released from the auxiliary crane before having been pinned and secured, the component will fall down. Personnel can be severely injured or killed.

- ▶ Do not disengage the auxiliary crane until the respective component is pinned and secured.

WARNING
The components can fall down!
If the respective component is unpinned without being secured by an auxiliary crane, the respective component can fall down and fatally injure personnel.

- ▶ Do not unpin the components until they are secured by an auxiliary crane.

copyright © Liebherr-Werk Ehingen GmbH 2018

Make sure that the following prerequisites are met:
- The „mechanical auxiliary supports **60**“ are properly assembled on the crane, see also **Erection and take down charts**.
- The SL-boom is luffed down „to the side“ over the „mechanical auxiliary supports **60**“ and is luffed down to the „lowest“ operating position.
- The LICCON overload protection has been set according to the data in the load chart.
- The LICCON overload protection is exceeded.
- The assembly icon is visible on the LICCON monitor.
- The auxiliary crane is available.

LWE/LR 1600-2-001/18101-07-02/en

copyright © Liebherr-Werk Ehingen GmbH 2018

Empty page!

LWE/LR 1600-2-001/18101-07-02/en

copyright © Liebherr-Werk Ehingen GmbH 2018

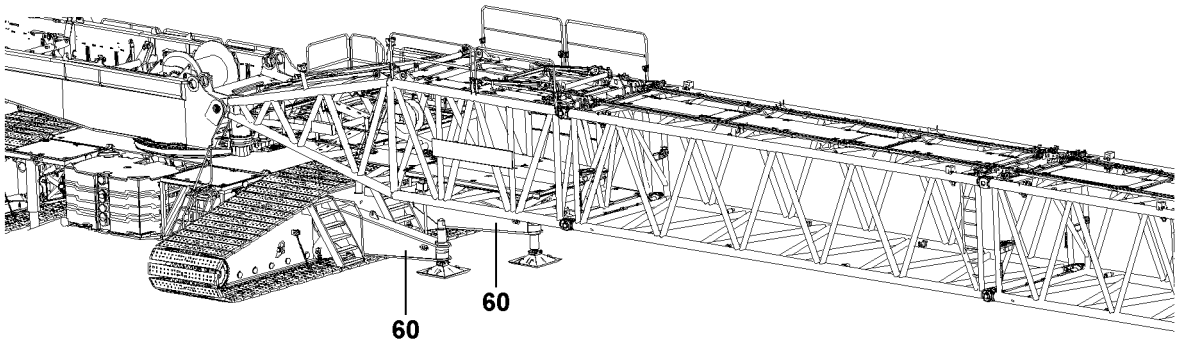

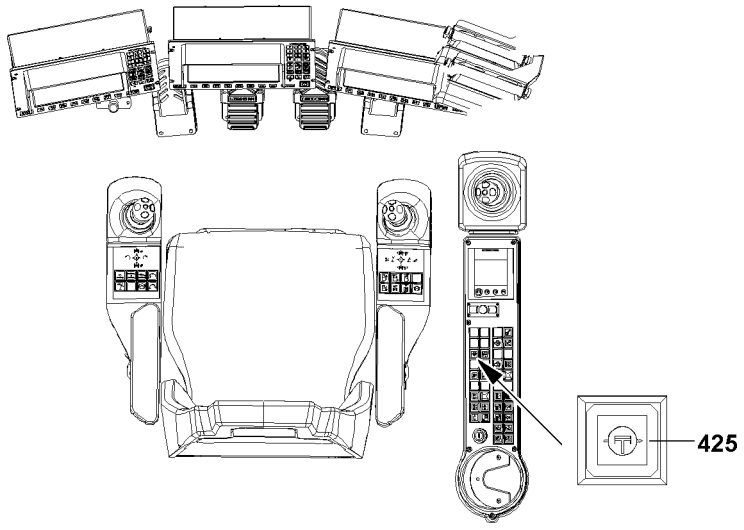

LWE/LR 1600-2-001/18101-07-02/en

Fig.119960

copyright © Liebherr-Werk Ehingen GmbH 2018

5.1 Taking the SLF-boom down

WARNING
The crane can topple over!
If the following conditions are not met before taking down the boom, the crane can topple over and fatally injure personnel.
- ▶ Observe the technical safety notes, see Crane operating instructions, chapter 5.01.
- ▶ Observe the specifications in the erection and take down charts.

NOTICE
Damage of boom components!
Taking down the boom system can lead to a collision between the hook block and the pulley head. Boom components can be severely damaged.
- ▶ Luff the boom system down at the same time and spool the hoist winch out.

5.1.1 Luffing the SLF-boom down

Note
- ▶ The luff down movement is turned off as soon as the lowest operating position is reached.
- ▶ When the lowest operating position of the S-boom is reached, the load display in the maximum load icon turns off and instead of the load display appears the display „???“.
- ▶ In the crane operating screen appear alarm functions.

▶ Luff the S-boom down to the „lowest“ operating position.

Result:

– The luff down movement is turned off.
– The „STOP“ icon appears on the LICCON monitor.
– The horn icon appears on the LICCON monitor.

WARNING
Danger of accident due to function „Exceedance of shut off limits of the LICCON overload protection“!
If the shut off limits of the LICCON overload protection are exceeded, there is no additional protection against crane overload.
Due to erroneous operation or deliberate misuse, the crane could collapse, the boom can break off or the crane can topple over.
Personnel can be severely injured or killed.
- ▶ The function „Exceeding the shut off limits of the LICCON overload protection“ is only permissible in emergencies and for assembly purposes.
- ▶ The function „Exceeding the shut off limits of the LICCON overload protection“ may only be actuated by persons who know the effects of their actions regarding the function „Exceeding the shut off limits of the LICCON overload protection“.
- ▶ The function „Exceeding the shut off limits of the LICCON overload protection“ requires the presence of an authorized person and must be performed with utmost caution.
- ▶ Crane operation with activated function „Exceeding the shut off limits of the LICCON overload protection“ is prohibited.

When the boom has reached the „lowest“ operating position:
▶ Exceeding the shut off limits of the LICCON overload protection: Engage assembly operation.

Result:

– The shut off limits of the LICCON overload protection are exceeded.
– The assembly icon appears on the LICCON monitor.

Note
- ▶ See Crane operating instructions, chapter 4.02.

LWE/LR 1600-2-001/18101-07-02/en

copyright © Liebherr-Werk Ehingen GmbH 2018

▶ At the same time, spool the hoist winch out and luff the S-boom down until the hook block touches the ground.

LWE/LR 1600-2-001/18101-07-02/en

copyright © Liebherr-Werk Ehingen GmbH 2018

Empty page!

LWE/LR 1600-2-001/18101-07-02/en

copyright © Liebherr-Werk Ehingen GmbH 2018

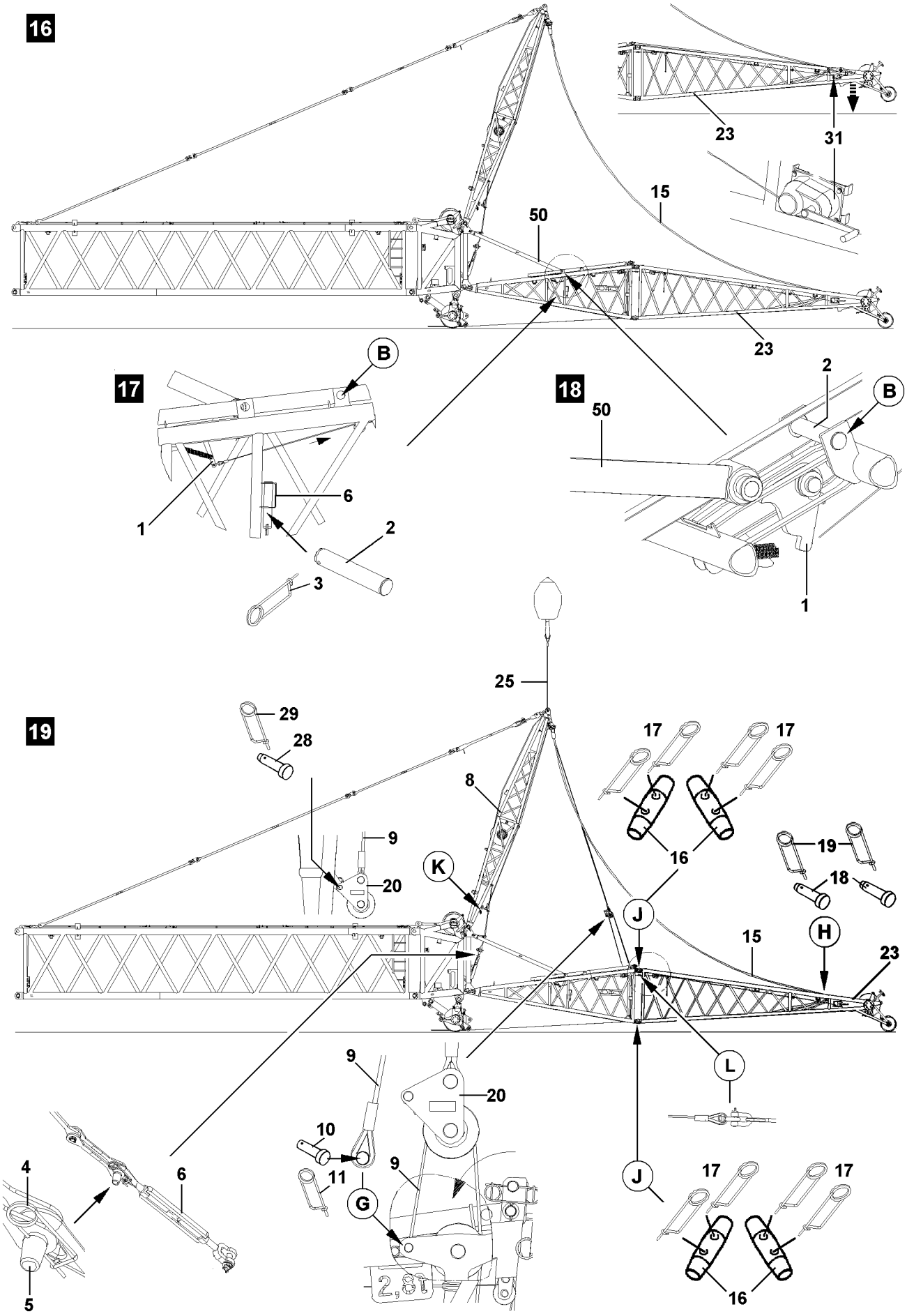

Fig.106176

copyright © Liebherr-Werk Ehingen GmbH 2018

LWE/LR 1600-2-001/18101-07-02/en

5.1.2 Taking the SLF-boom down

- ▶ Actuate the master switch and luff the S-boom down until the hook block touches the ground.
- ▶ Remove the hoist limit switch weight.
- ▶ Unreeve the hook block.
- ▶ Spool up the hoist rope to the winch.
- ▶ Luff down the boom until the pulley head from the F-end section is just above the ground, see illustration **16**.
- ▶ Remove the pin **2** from the retainer **6** (park position) and insert at point **B** (attachment position) and secure with spring retainer **3**, see illustration **17**.

NOTICE
Danger of damage on the relapse support!
When taking the boom down, the flap **1** must be set in „down“ position as soon as the F-end section **23** touches the ground or as soon as the manual rope winch **31** can be reached.
If this is not observed, components on the F-assembly unit can be damaged.

- ▶ Set the flap **1** with the manual rope winch **31** in „down“ position so that the plunger **50** can „slide“ in the guide over the flap **1**, see illustration **16**.

- ▶ Set the flap **1** on the F-pivot section **22** with the manual rope winch **31** into „down“ position, see illustration **16**.
- ▶ Place the boom all the way on the ground.

LWE/LR 1600-2-001/18101-07-02/en

copyright © Liebherr-Werk Ehingen GmbH 2018

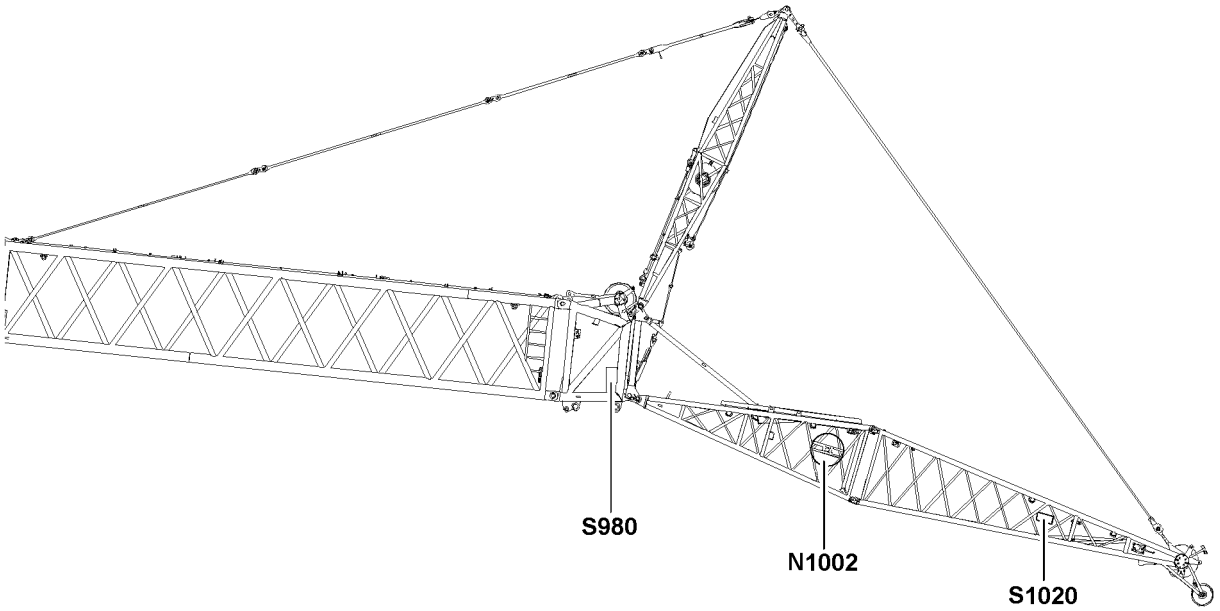

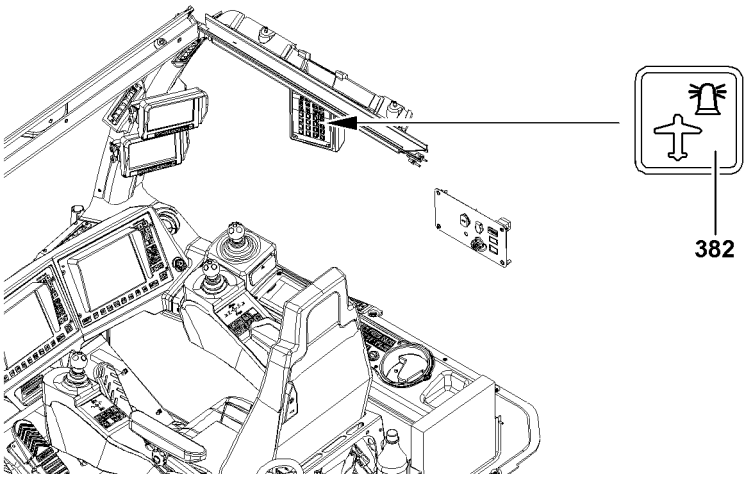

LWE/LR 1600-2-001/18101-07-02/en

Fig.108792

copyright © Liebherr-Werk Ehingen GmbH 2018

5.2 Disconnecting the electrical connections

Make sure that the following prerequisite is met:
– The boom system is placed down.

NOTICE
Damage to the electrical connection on the cable drum!
If the electrical connection between the SW-end section and the F-pivot section is not separated before spooling up the cable drum, the electrical connection will be damaged.
If the cable of the cable drum is not properly spooled up on the cable drum after unplugging the F-end section, then the cable drum or the cable can be significantly damaged.
▶ Disconnect the electrical connection from the cable drum on the F-pivot section to the terminal box on the SW-end section first and then the electrical connection from the terminal box on the F-end section to the cable drum.
▶ After unplugging, spool the cable onto the cable drum.

▶ Disconnect the electrical connections.
▶ After unplugging, spool the cable onto the cable drum and secure it to prevent it from spooling out inadvertently.
▶ Secure the cable: Reestablish the electrical connection between the W-connector head and the cable drum.

LWE/LR 1600-2-001/18101-07-02/en

copyright © Liebherr-Werk Ehingen GmbH 2018

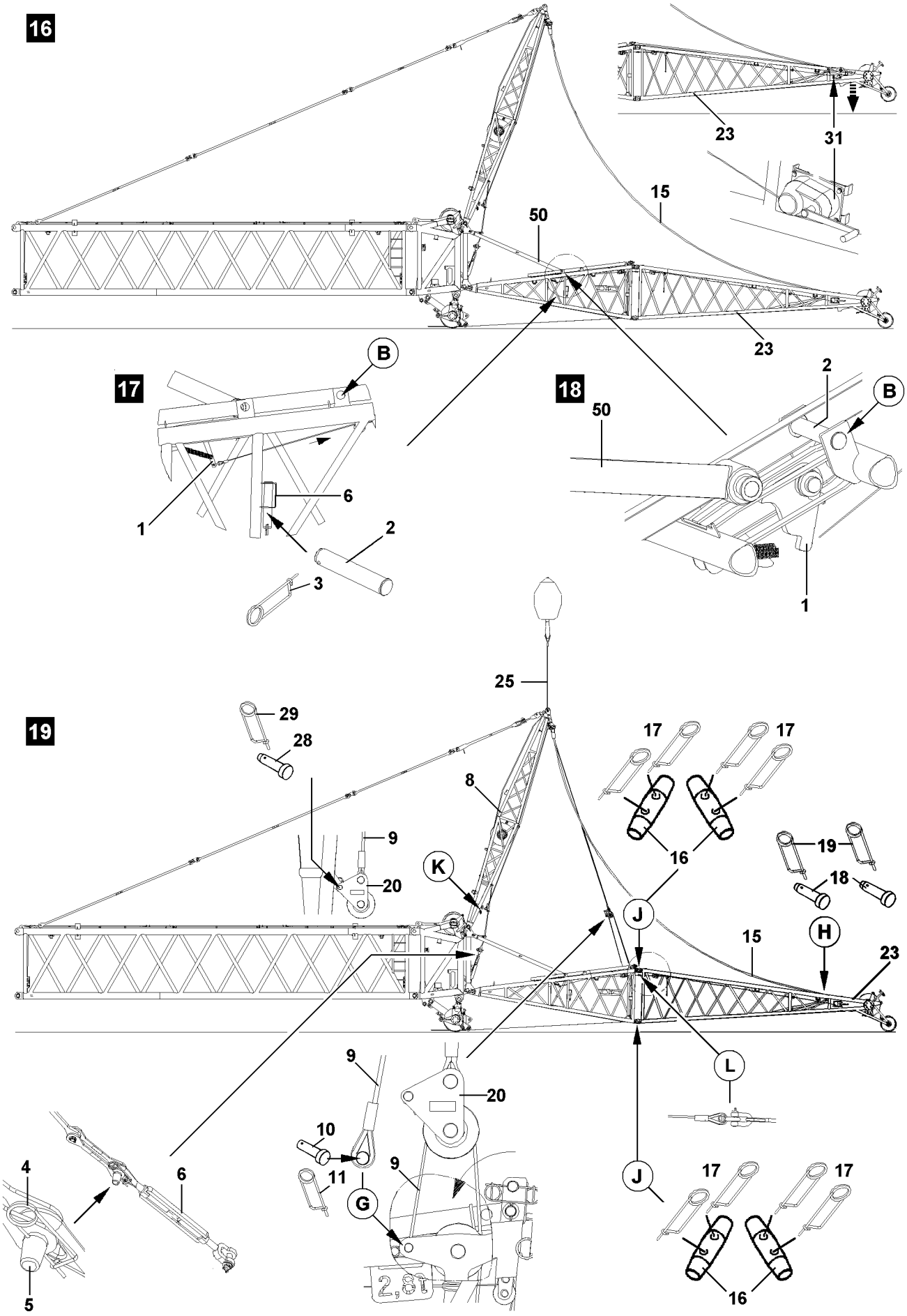

Fig.106176

copyright © Liebherr-Werk Ehingen GmbH 2018

LWE/LR 1600-2-001/18101-07-02/en

5.3 Disassembling the F-assembly unit

- ▶ Remove the F-guy ropes **15** on the F-end section, see illustration **19**.
- ▶ Release the pins **18** on point **H** and unpin, see illustration **19**.
- ▶ Hang in the F-end section or the F-intermediate sections properly on the auxiliary crane.
- ▶ Release the rope strand to the manual rope winch **31** on the F-end section **23** at point **L**, see illustration **19**.
- ▶ Unpin the double cone pins **16** on the points **J** from the „outside to the inside“ and remove the F-end section or the F-intermediate sections.

WARNING
The FA-frame **8** can fold back uncontrolled!
Before the FA-frame relapse retainer is released, the FA-frame **8** must be secured to prevent it from folding back uncontrolled.

- ▶ Properly hang the FA-frame **8** with the attachment rope **25** on the auxiliary crane, see illustration **19**.
- ▶ Reeve in the assembly winch rope **9** into the rope pulley block **20** and pin, see illustration **19**.

- ▶ Release and unpin the rope pulley **20** on the FA-frame **8** at point **K** and unpin, see illustration **19**.
- ▶ Reeve in the assembly winch rope **9** from the turntable into the rope pulleys and pin on point **G** with pin **10** and secure with spring retainer **11**, see illustration **17**.
- ▶ Release the FA-frame relapse retainer by releasing the spring retainer **4** and unpinning the pin **5**, see illustration **19**.
- ▶ Place the turnbuckle **6** on the F-pivot section **22** and secure.

LWE/LR 1600-2-001/18101-07-02/en

copyright © Liebherr-Werk Ehingen GmbH 2018

20

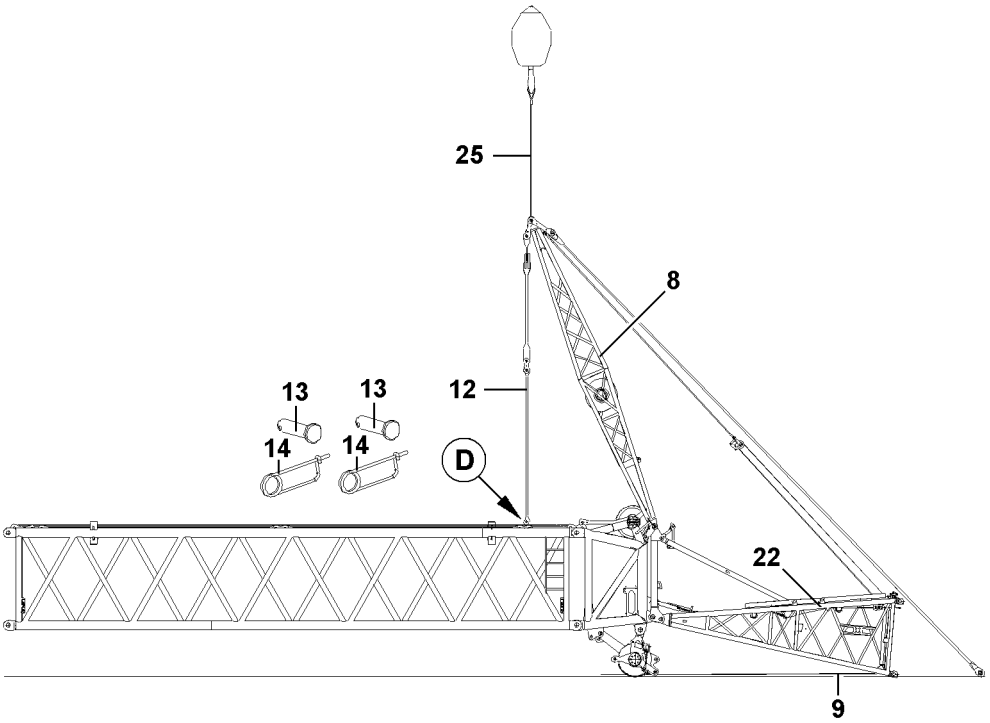

21

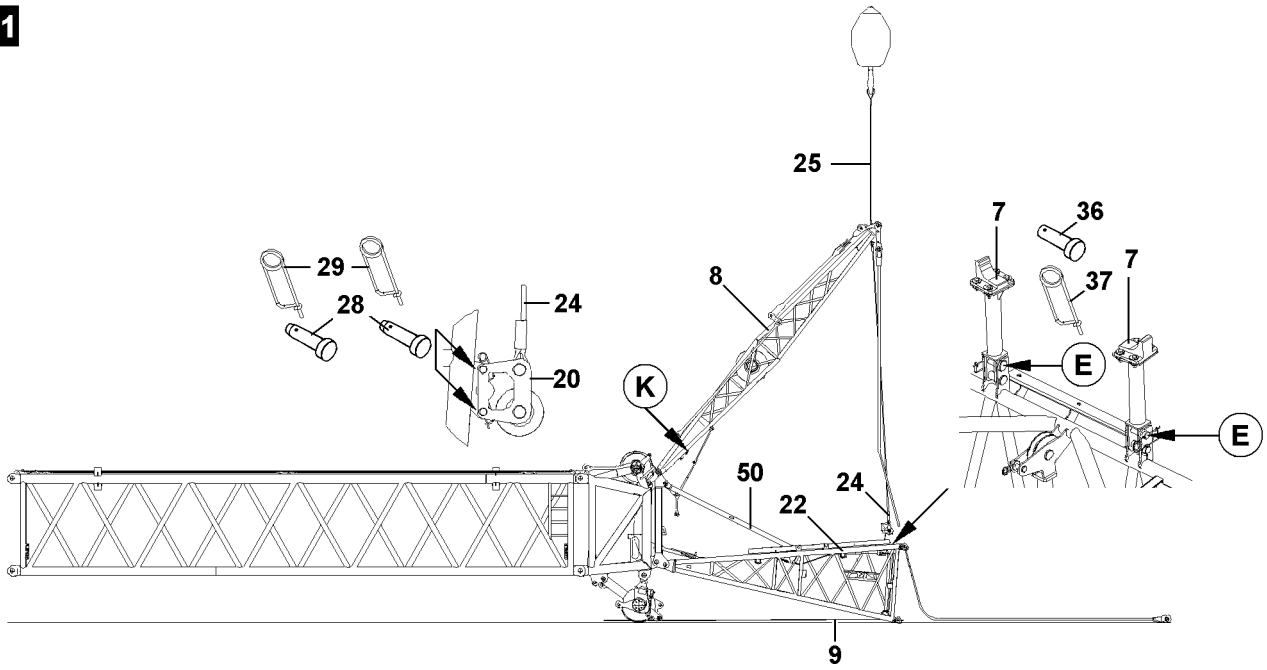

LWE/LR 1600-2-001/18101-07-02/en

Fig.106177

copyright © Liebherr-Werk Ehingen GmbH 2018

- ▶ Swing the FA-frame **8** with the auxiliary crane „carefully to the rear in direction of the main boom“ and „at the same time, spool out the assembly winch rope **9**“, see illustration **20**.
- ▶ Unpin the F-guy rods **12** on point **D**, see illustration **20**.
- ▶ Release and unpin the pins **13**, see illustration **20**.
- ▶ Swing the FA-frame **8** with the auxiliary crane forward, see illustration **21**.
- ▶ Pin the attachment rope **24** with the pulley block **20** on the FA-frame **8** at point **K** with pin **28** and secure with spring retainer **29**, see illustration **21**.
- ▶ Fold the support brackets **7** up and pin on points **E** with pins **36** and secure with spring retainers **37**, see illustration **21**.

LWE/LR 1600-2-001/18101-07-02/en

copyright © Liebherr-Werk Ehingen GmbH 2018

22

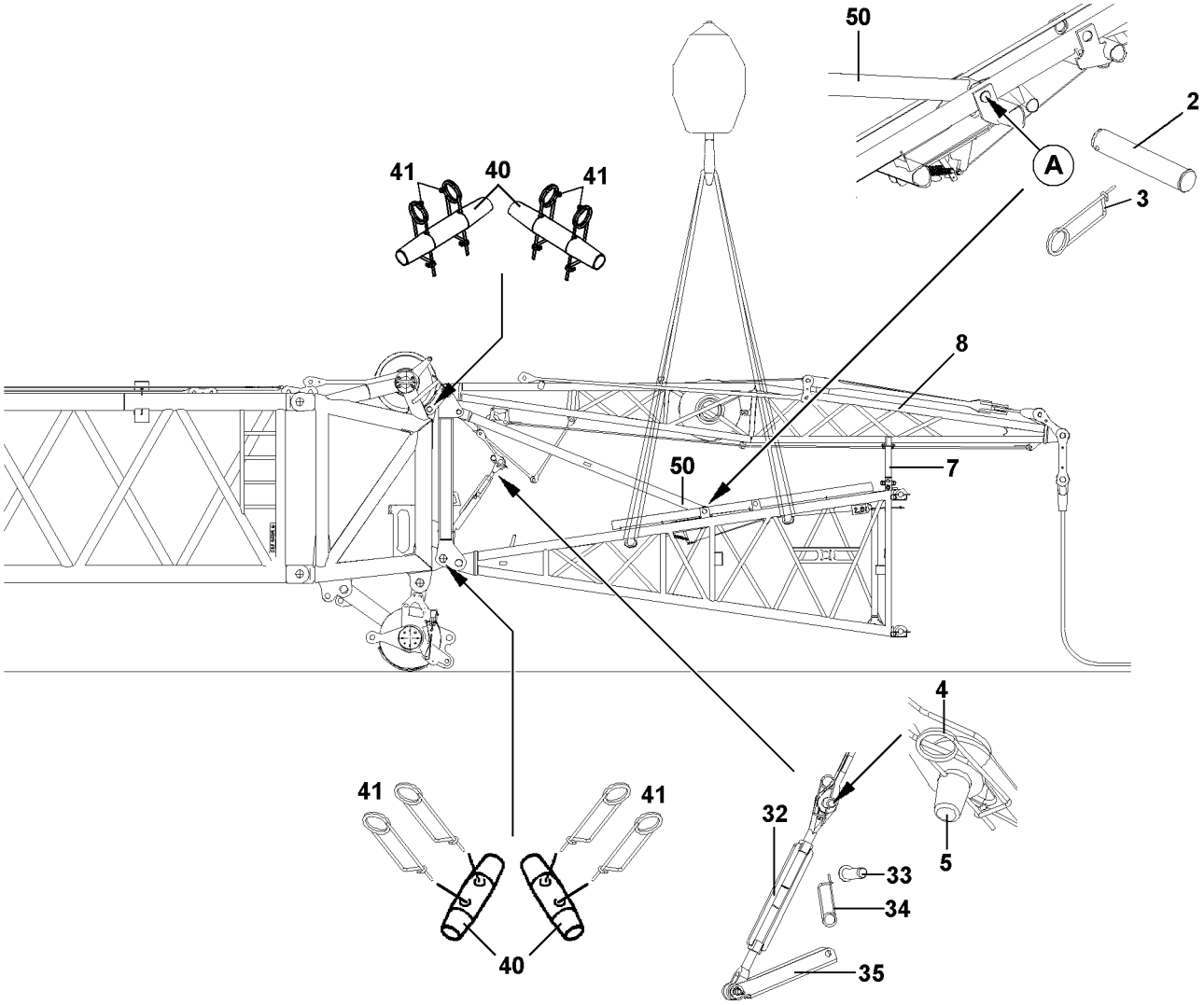

LWE/LR 1600-2-001/18101-07-02/en

Fig.106179

copyright © Liebherr-Werk Ehingen GmbH 2018

- ▶ Place the FA-frame **8** with the auxiliary crane onto the support frames **7**.
- ▶ Connect the FA-frame relapse retainer by pinning the pin **5** and securing it with the spring retainer **4**, see illustration **22**.
- ▶ Tighten the turnbuckle **32** and close the retaining plate **35**, see illustration **22**.
- ▶ Secure the retaining plate **35** with pin **33** and spring retainer **34**, see illustration **22**.
- ▶ Properly hang the F-assembly unit on the auxiliary crane, see illustration **22**.

WARNING
Danger of accident!
The plunger **50** must be pinned on point **A** in „transport position“ with pin **2**, see illustration **22**.
- ▶ Insert the pin **2** on point **A** and secure with spring retainer **3**.

- ▶ Unpin the double cone pins **40** on top and bottom from the „outside to the inside“ and remove the F-assembly unit.

copyright © Liebherr-Werk Ehingen GmbH 2018

Empty page!

LWE/LR 1600-2-001/18101-07-02/en

copyright © Liebherr-Werk Ehingen GmbH 2018

5.14 Roller set

1	W-connector head components	3
2	SW-end section and roller set components	3
3	Combinations of boom heads / end sections with roller sets	4
4	Assembling / disassembling the roller set	5

LWE/LR 1600-2-001/18101-07-02/en

copyright © Liebherr-Werk Ehingen GmbH 2018

LWE/LR 1600-2-001/18101-07-02/en

Fig.195219

copyright © Liebherr-Werk Ehingen GmbH 2018

1 W-connector head components

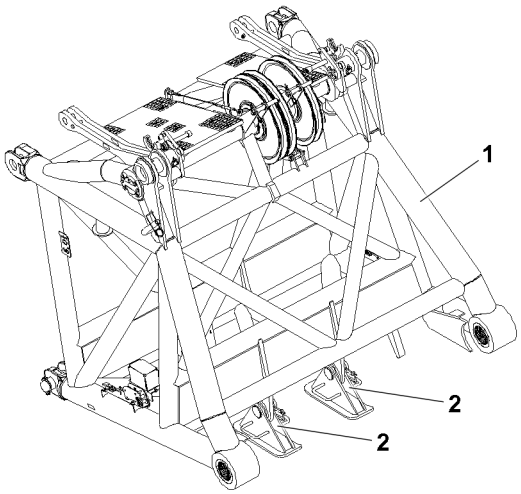

Fig.149302: W-connector head components

1 W-connector head
2 Foot

2 SW-end section and roller set components

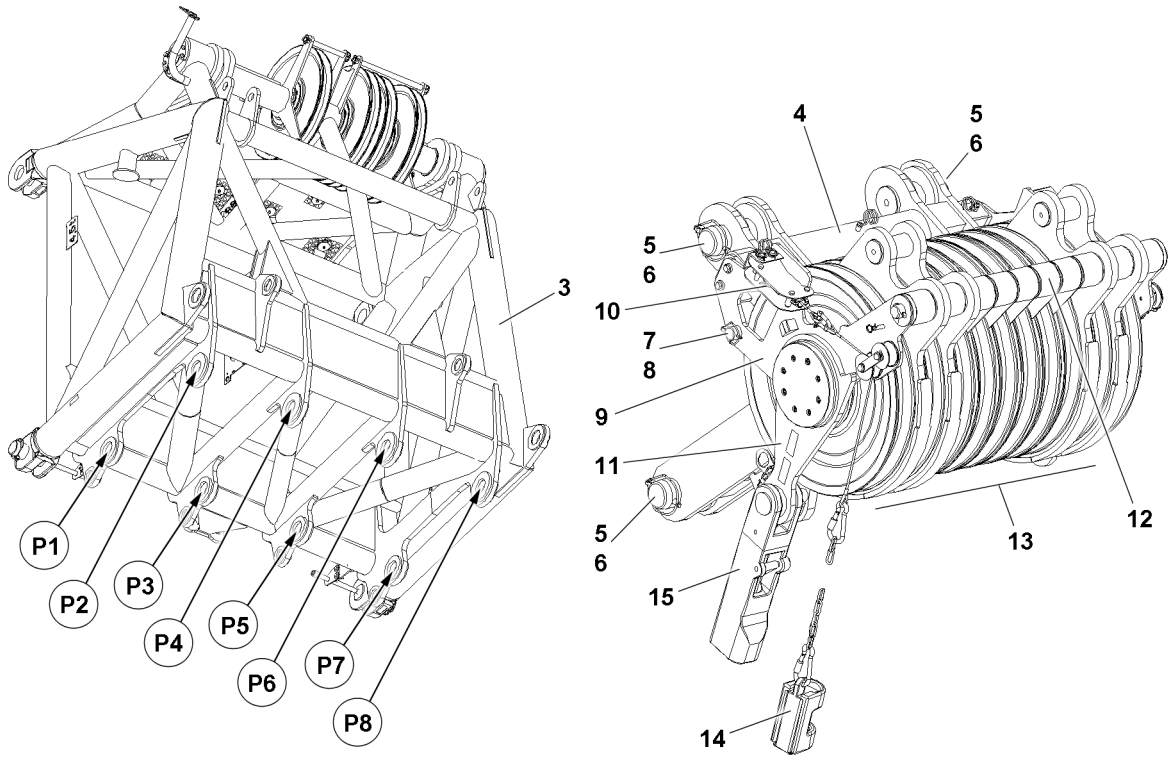

Fig.149303: SW-end section with pin points and roller set components

3 SW-end section
4 Roller set
5 Pin
6 Retaining element
7 Rope retaining pin
10 Hoist limit switch
11 Rope fixed point
12 Rope guard pulleys
13 Rope pulleys
14 Hoist limit switch weight

For continuation of legend for illustrations, see next page

LWE/LR 1600-2-001/18101-07-02/en

copyright © Liebherr-Werk Ehingen GmbH 2018

8 Retaining element
9 Retainer
15 Lock

3 Combinations of boom heads / end sections with roller sets

Note
▶ The use of roller sets on the corresponding boom heads / end sections is described in the load chart in section „Boom configurations for the calculation of load charts“, see the load chart manual.

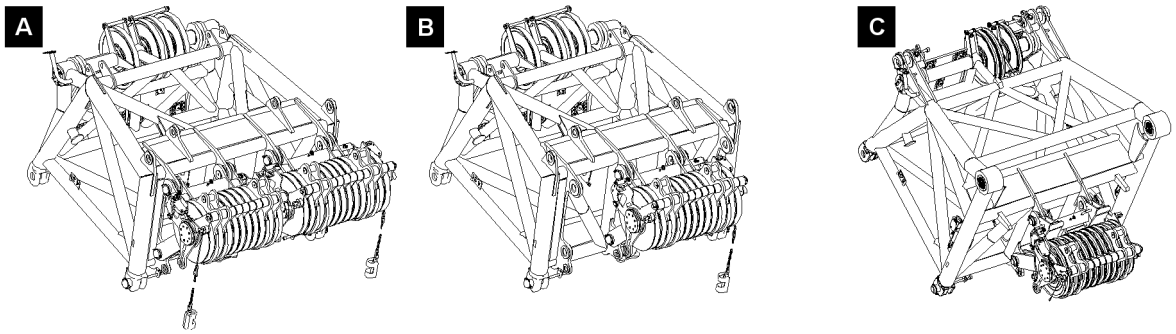

Fig.149300: Roller sets on the SW-end section and on the W-connector head

A SW-end section with roller sets 320 t and 300 t
B SW-end section with roller set 320 t
C W-connector head with roller set 300 t

WARNING
The crane can topple over!
If the roller sets are improperly assembled, the crane can topple over.
Death, severe bodily injuries, property damage.
▶ Select roller sets according to the operating modes, as specified in the load charts.
▶ Observe the instructions in the erection and take-down charts.

The following applies for the SW-end section:
– The roller set 320 t can be assembled individually (illustration **B**) or in combination with the roller set 300 t (illustration **A**) on the SW-end section.

WARNING
Collision of the W-pivot section with the roller set 300 t !
When luffing down the W-lattice jib, the W-pivot section can collide with the roller set 300 t.
The W-pivot section and the roller set will be damaged.
Death, severe bodily injuries, property damage.
▶ The luffing down procedure must be monitored by a guide.

LWE/LR 1600-2-001/18101-07-02/en

copyright © Liebherr-Werk Ehingen GmbH 2018

4 Assembling / disassembling the roller set

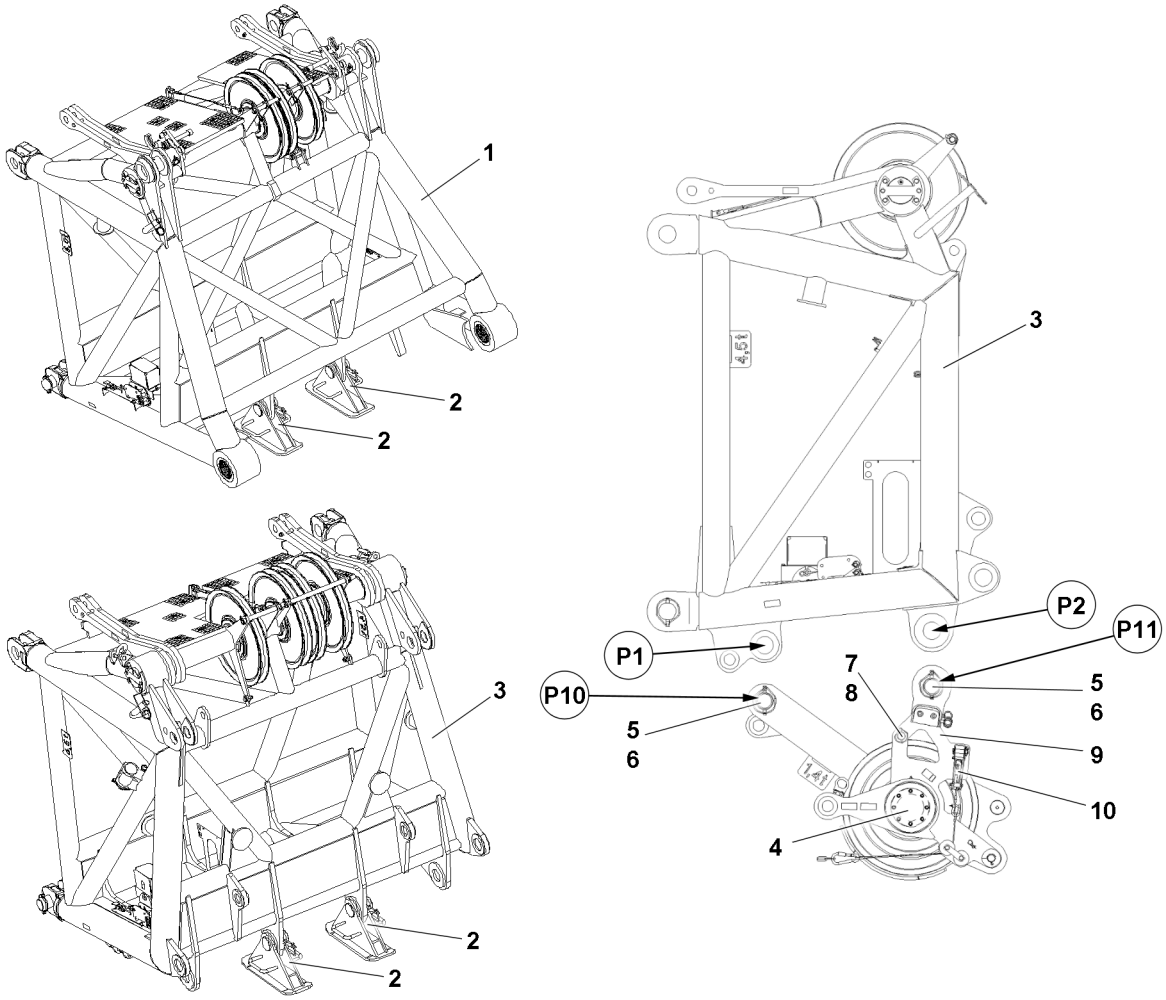

Fig.149304: Assembling the roller set on the SW-end section

1 W-connector head **3** SW-end section

Make sure that the following prerequisites are met:
- The pins **5** are released and unpinned on the roller set **4**.
- The roller sets **4** and feet **2** on the SW-end section **3** or the W-connector head **1** are disassembled.

4.1 Assembling the roller set

Note
▶ The weight of the roller set 320 t is 1.5 t.
▶ The weight of the roller set 300 t is 1.4 t.

Note
▶ The assembly of the roller set is described based on the sample of the SW-end section.

WARNING
The crane can topple over!
If the roller sets are improperly assembled, the crane can topple over.
Death, severe bodily injuries, property damage.
▶ Select the roller sets according to the operating modes, as specified in the load charts.
▶ Observe the instructions in the erection and take-down charts.

LWE/LR 1600-2-001/18101-07-02/en

copyright © Liebherr-Werk Ehingen GmbH 2018

WARNING
Overload of the boom system!
If only one roller set is used and the roller set is assembled off centre of the end section, then the boom system can be overloaded.
Death, severe bodily injuries, property damage.

If only one roller set is used:
▶ Assemble the roller set in the center of the end section on the respective pin points (point **3**, point **4**, point **5**, point **6**).

Note
Assembly of two roller sets on the SW-end section!
▶ One roller set is assembled on the pin points (point **1**, point **2**, point **3**, point **4**).
▶ The other roller set is assembled on pin points (point **5**, point **6**, point **7**, point **8**).

▶ Position the roller set **4** on the SW-end section **3** or the W-connector head **1** in such a way that the pin bores align.

When the pin bores align:
▶ Insert the pins **5** in the pin points from the outside to the inside and secure with the retaining element **6**.
▶ Pin and secure the lock **15** on the rope fixed point **11**.

Note
▶ Reeve the hoist rope in according to the separately supplied reeving plans.

▶ Reeve the hoist rope in correctly.

Note
▶ Establish the electrical connections on the SW-end section and / or the W-connector head according to the electrical wiring diagram.

▶ Establish the electrical connections.
▶ Attach the hoist limit switch weight **14**.

Result:

– The roller set **4** is assembled.

LWE/LR 1600-2-001/18101-07-02/en

copyright © Liebherr-Werk Ehingen GmbH 2018

4.2 Disassembling the roller set

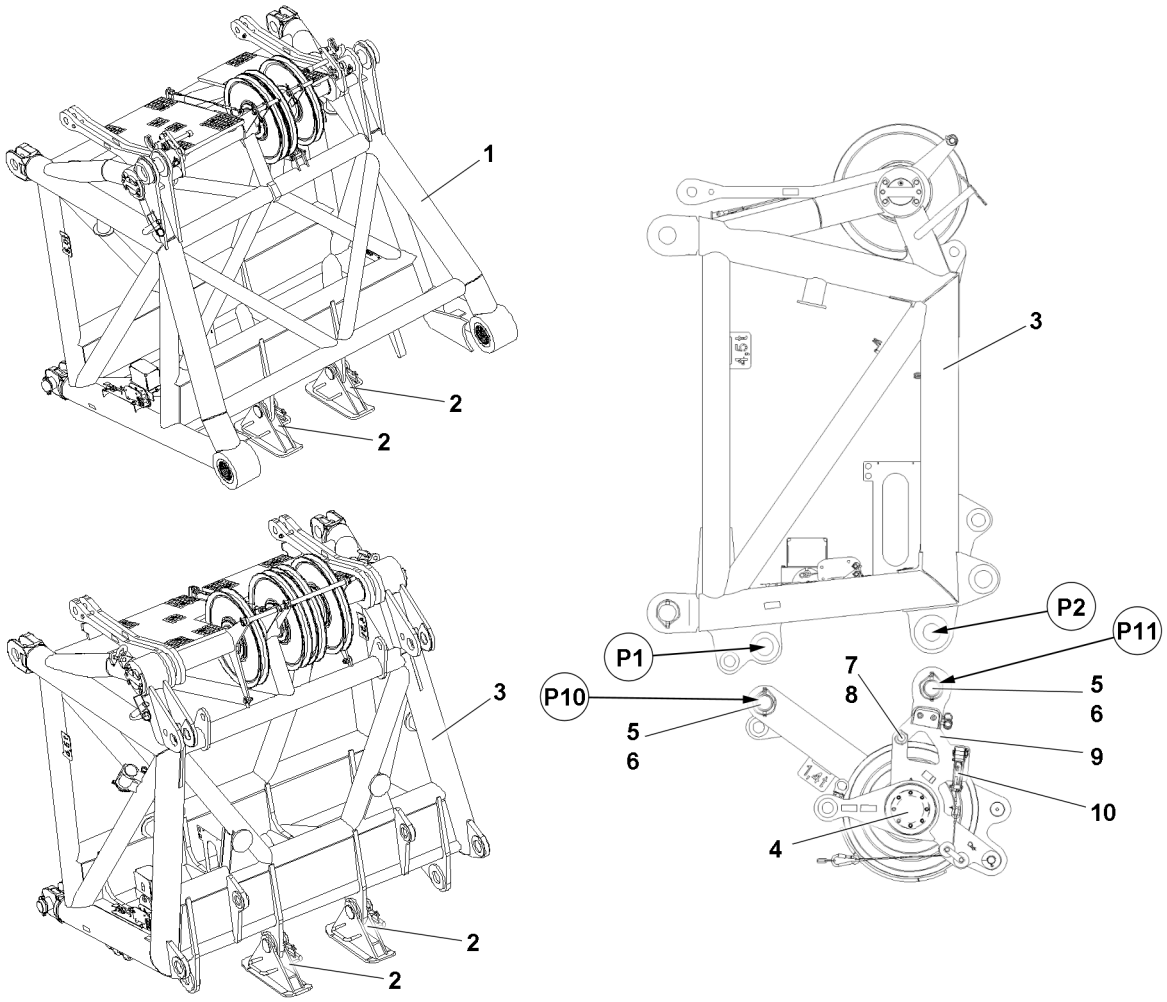

Fig.149304: Disassembling the roller set

Note

- ▶ The weight of the roller set 320 t is 1.5 t.
- ▶ The weight of the roller set 300 t is 1.4 t.

WARNING

Danger of crushing!
When luffing the boom system down, personnel can be caught and crushed.
Death, severe bodily injuries, property damage.

- ▶ Make sure that no personnel is within the danger zone when luffing the boom system down.
- ▶ Luff the boom system down with utmost caution.

When the boom head with the roller set is located just above the ground:

- ▶ Reeve the hoist rope out.

When the hoist rope is properly reeved out:

- ▶ Luff the boom down until the roller set is laying on the ground.
- ▶ Fasten the roller set to the auxiliary crane and secure it.

Note

- ▶ Disconnect the electrical connections on the SW-end section and / or the W-end section.

- ▶ Disconnect the electrical connections.

LWE/LR 1600-2-001/18101-07-02/en

copyright © Liebherr-Werk Ehingen GmbH 2018

▶ Remove the retaining element **6** and unpin the pin **5**.
▶ Luff the boom up.

Result:

– The roller set **4** is removed.

▶ Remove the auxiliary crane.

LWE/LR 1600-2-001/18101-07-02/en

copyright © Liebherr-Werk Ehingen GmbH 2018

5.17 SWF-boom combination

1	Component overview	3
2	Assembling SWF-boom	5
3	Operating the crane	21
4	Disassembling the SWF-booms	23

LWE/LR 1600-2-001/18101-07-02/en

copyright © Liebherr-Werk Ehingen GmbH 2018

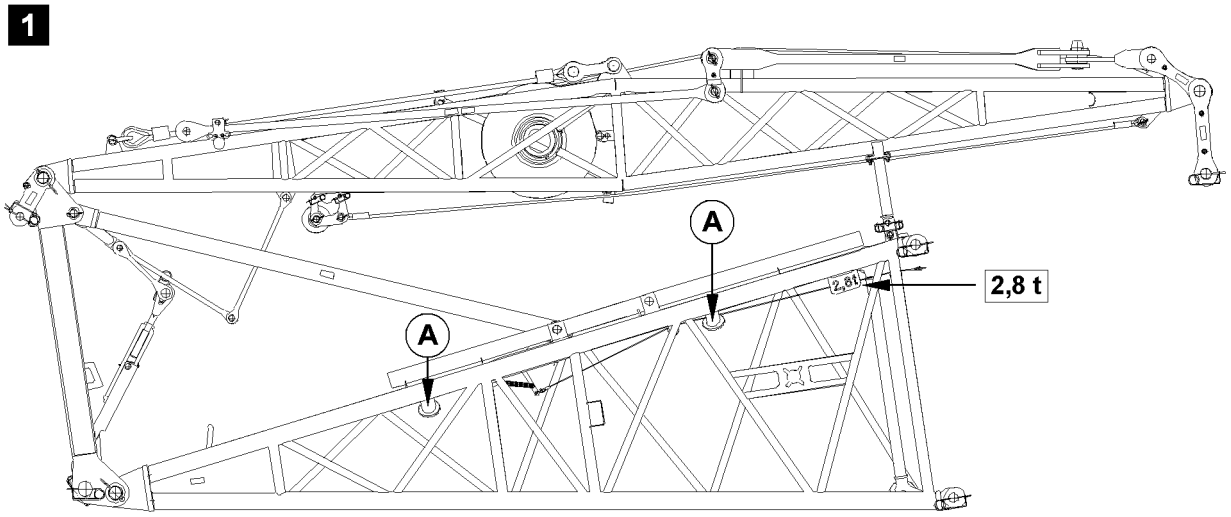

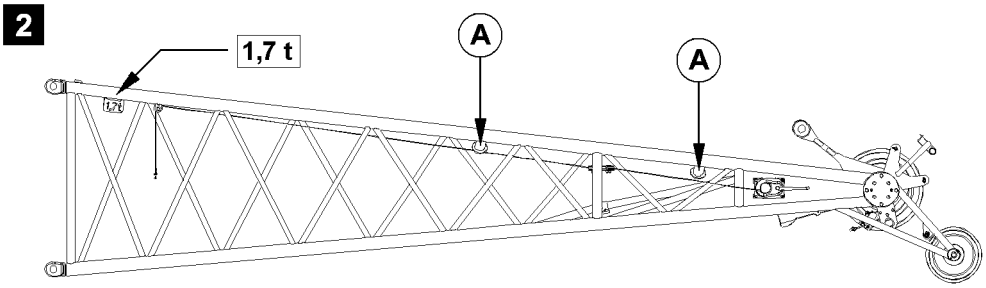

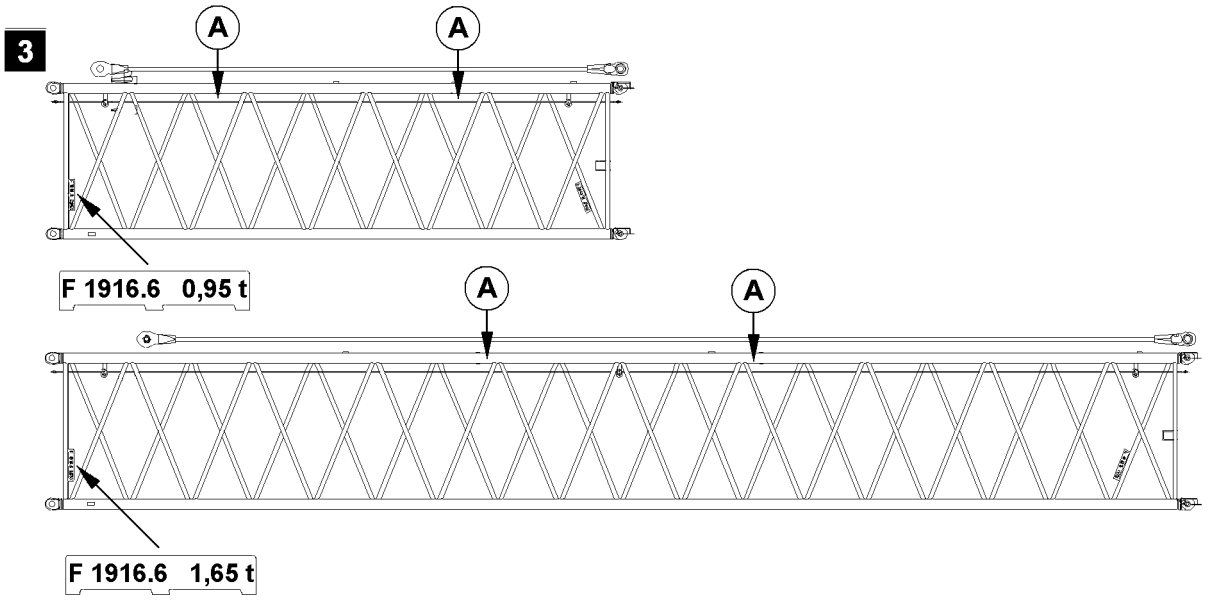

Fig.105063

LWE/LR 1600-2-001/18101-07-02/en

copyright © Liebherr-Werk Ehingen GmbH 2018

1 Component overview

1.1 Attachment points

WARNING
Danger of accident due to incorrect attachment!
Life-threatening situations can arise due to improper or incorrect attachment of the corresponding components!
▶ The corresponding components must be attached on the intended points **A**!

Note
▶ For assembly or disassembly, tackle with a strand length of at least **4 m** must be used.

1.2 F-assembly unit, see illustration 1

Description	Abbreviation	Weight
F-assembly unit	—	2.8 t

1.3 F-end section, see illustration 2

Description	Abbreviation	Weight
F-end section	—	1.7 t

1.4 F-intermediate sections 6 m and 12 m , see illustration 3

Description	Abbreviation	Weight
F-intermediate section (6 m) with guy ropes	F 1916.6	0.95 t

Description	Abbreviation	Weight
F-intermediate section (12 m) with guy ropes	F 1916.6	1.66 t

LWE/LR 1600-2-001/18101-07-02/en

copyright © Liebherr-Werk Ehingen GmbH 2018

LWE/LR 1600-2-001/18101-07-02/en

Fig.195219

copyright © Liebherr-Werk Ehingen GmbH 2018

2 Assembling SWF-boom

DANGER
The crane can topple over!
The boom combinations must be assembled according to the „separately supplied set up drawings“! Any other arrangement of the lattice sections and the guy rods than specified in the set up drawings is prohibited!
At assembly of the intermediate sections, it must be observed that they are assembled according to their identification!

- ▶ The boom combinations must be assembled according to the separately supplied rod and assembly plans!

WARNING
Risk of falling!
During assembly and disassembly work, personnel must be secured with appropriate antifall guards to prevent them from falling. If this is not observed, assembly personnel could fall and suffer life-threatening or fatal injuries.

- ▶ All assembly work must be carried out using suitable aids (ladders, lifting platforms, scaffolding, auxiliary crane, etc.)!
- ▶ If work cannot be carried out on the ground or using such aids, then assembly personnel must be secured with suitable personal protective equipment (see chapter 2.04) to protect against falling! The personal protective equipment must be attached in the corresponding attachment points on the crane (see chapter 2.06).
- ▶ If railings are present for the crane, then they must be brought into the corresponding position and secured for assembly / disassembly, inspection and maintenance work.
- ▶ Only step on aids and antifall guards with clean shoes!
- ▶ Keep aids and antifall guards clean and free of snow and ice!

WARNING
Falling components!
If unsecured or non-supported components are assembled or disassembled, they can fall down. Personnel can be killed or seriously injured.

- ▶ During pinning and unpinning of the lattice sections, it is prohibited for anyone to remain **under** or **on** the components as well as within the entire danger zone!
- ▶ Support the boom and components before pinning / unpinning!
- ▶ Both pins that lie in at a horizontal level, i.e. **left** and **right**, pin or unpin!
- ▶ Secure the pins in the bearing points and in the receptacles!
- ▶ Do not disengage the auxiliary crane until each component is pinned on and secured!
- ▶ It is prohibited to lean a ladder against the component being disassembled!

WARNING
Danger of crushing!
Components can swing during assembling. Hands can be crushed or severed.

- ▶ Make sure that the components do not swing back and forth during assembly!

LWE/LR 1600-2-001/18101-07-02/en

copyright © Liebherr-Werk Ehingen GmbH 2018

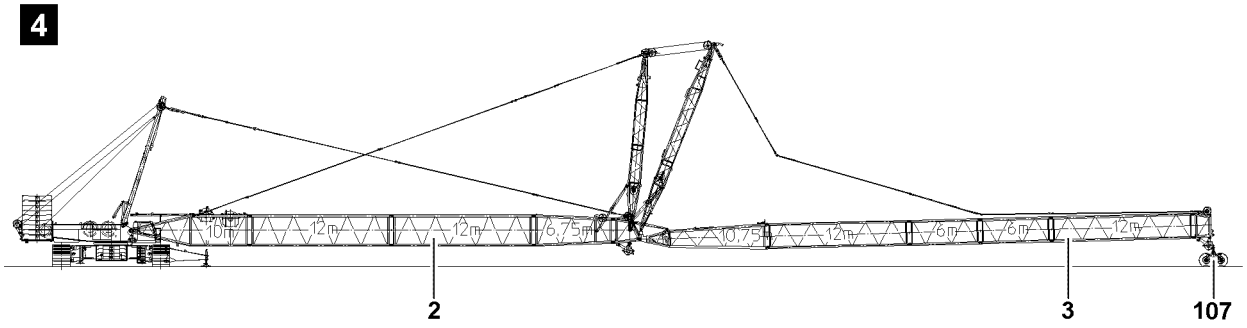

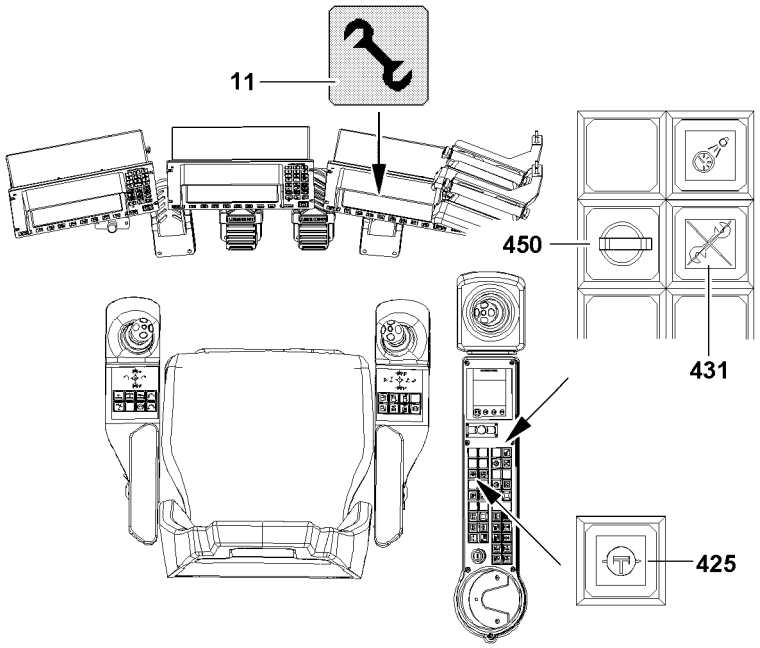

LWE/LR 1600-2-001/18101-07-02/en

Fig.106856

copyright © Liebherr-Werk Ehingen GmbH 2018

WARNING
Neglectful inspection and maintenance on guy rods!
If the regular inspection and maintenance of the guy rods is not carried out or is carried out only in irregular intervals, then severe accidents can occur due to existing and unrecognized damage to the guy rods!
Personnel can be severely injured or killed!
▶ Check the guy rods before every assembly, see chapter 8.15.

Note
▶ By supporting the components during assembly / disassembly, ground unevenness is compensated for and the material is protected.

WARNING
Risk of accident!
Personnel can be severely injured or killed!
▶ While pinning and unpinning with the pin pulling device, observe and follow warning guidelines in chapter 5.30!

NOTICE
Property damage!
▶ Always pin the guy rods from the „inside“ to the „outside“.

Note
▶ The S-guy rods must be assembled and secured according to the separately supplied assembly drawings. The numbering on the assembly drawings must be identical to the numbering on the guy rods.

See illustration **4**.

Make sure that the following prerequisites are met:
– the crane is aligned in horizontal direction,
– the S-boom **2** is assembled,
– the W-lattice jib **3** lies assembled on the pulley cart **107** on the ground,
– the counterweight has been attached to the turntable according to the load chart,
– the LICCON overload protection has been set according to the data in the load chart,
– the assembly key button **450** is pressed and the indicator light **431** lights up,
– the assembly icon **11** on the LICCON monitor blinks,
– an auxiliary crane is available.

LWE/LR 1600-2-001/18101-07-02/en

copyright © Liebherr-Werk Ehingen GmbH 2018

LWE/LR 1600-2-001/18101-07-02/en

Fig.195219

copyright © Liebherr-Werk Ehingen GmbH 2018

2.1 F-assembly conditions

Note
▶ Observe and follow the instructions in chapter 5.13!

2.2 Assembling the F-assembly unit

Note
▶ Observe and follow the instructions in chapter 5.13!

2.3 Flying assembly of F-auxiliary jib (12 m)

Note
▶ Observe and follow the instructions in chapter 5.13!

2.4 Establishing the electrical connections

Note
▶ Observe and follow the instructions in chapter 5.13!

LWE/LR 1600-2-001/18101-07-02/en

copyright © Liebherr-Werk Ehingen GmbH 2018

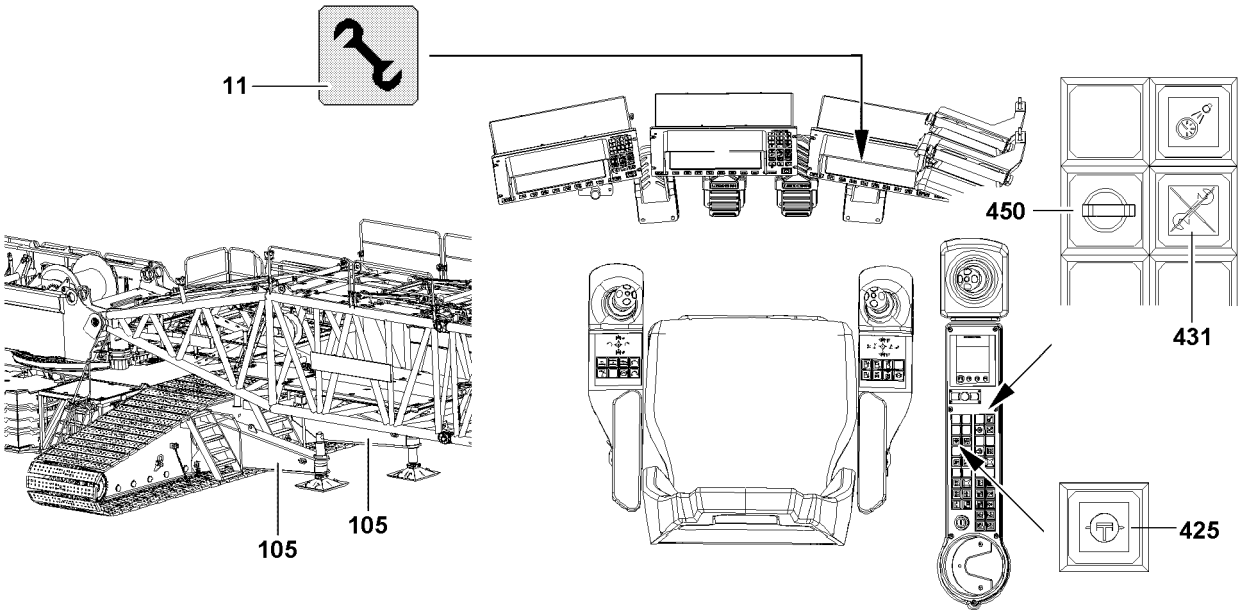

5

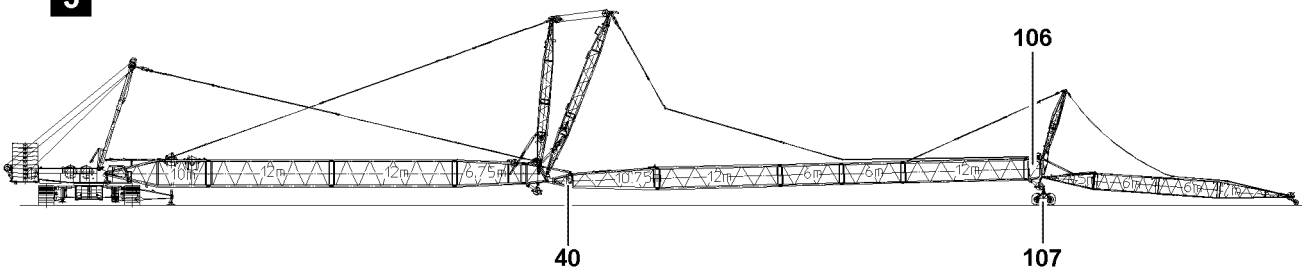

6

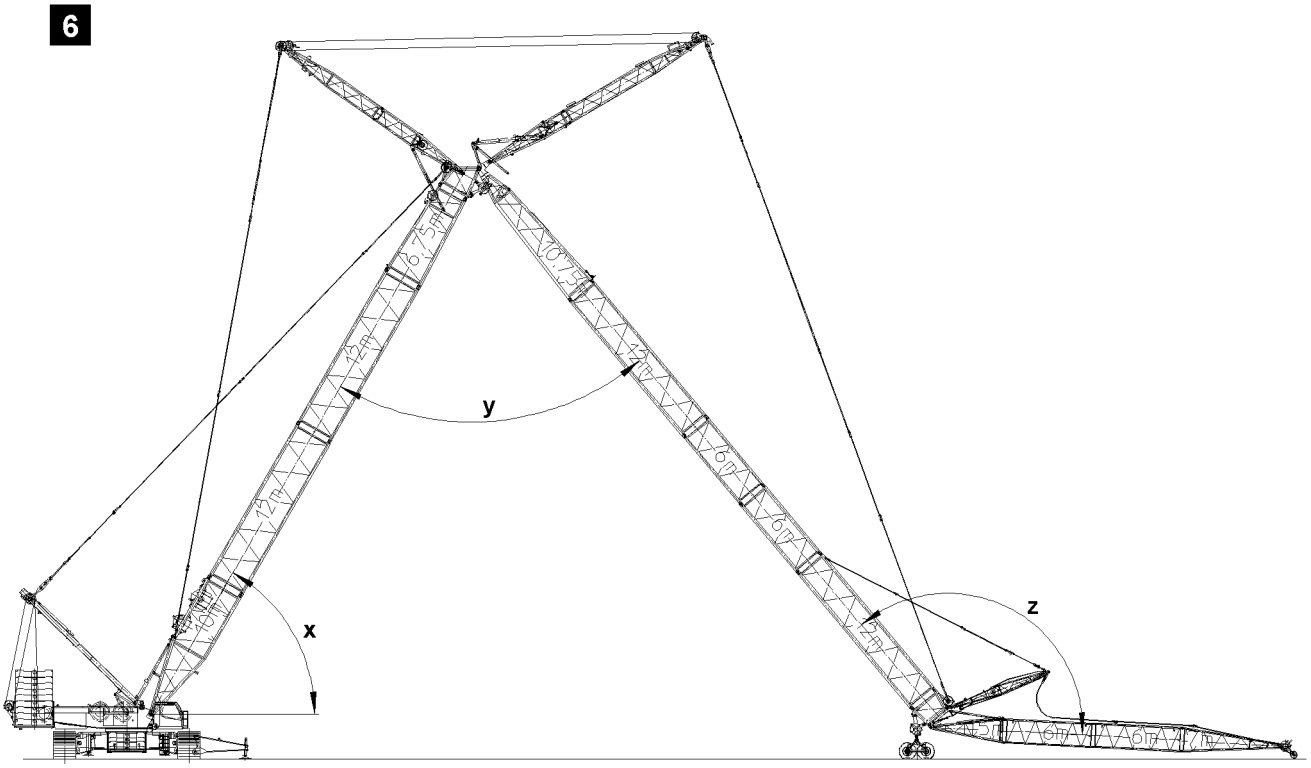

Fig.106854

LWE/LR 1600-2-001/18101-07-02/en

copyright © Liebherr-Werk Ehingen GmbH 2018

2.5 Erecting the SWF-booms

Note
▶ SWF boom systems in stretched condition may not be completely erected.

DANGER
The crane can topple over!
▶ It is not permitted to turn the crane during erection!
▶ Observe the data in the erection and take down charts.
▶ Observe the safety technical guidelines in chapter 5.01.

DANGER
The crane can topple over!
For certain boom lengths, the mechanical auxiliary supports must be assembled, see Erection and take down charts!
▶ The boom must be erected or taken down „to the side“ „in direction“ of the mechanical auxiliary supports **105**.
▶ Always erect or take down according to the data in the **Erection and take down charts**!

DANGER
Tipping lattice jib!
If the easy movement on the pendulum of the mechanical relapse support is not checked before erection or not reestablished, if necessary, then the mechanical relapse support will not engage in steep lattice jib position. As a result, the lattice jib can tip to the rear.
Personnel can be severely injured or killed!
▶ Check the easy movement on the pendulum **40** of the mechanical relapse support before erection.
▶ If the pendulum does not move easily: Make the pendulum **40** easy to move!

WARNING
The crane can topple over!
If the following conditions are not met before erecting the boom, the crane can topple over. Personnel can be severely injured or killed!
▶ The lattice jib must roll on the ground with its entire weight!
▶ Spool the lattice jib control out so that the guy rods sag slightly!
▶ Do not allow slack cable to build up on the control winch!
▶ Extend the relapse cylinder before erection.

LWE/LR 1600-2-001/18101-07-02/en

copyright © Liebherr-Werk Ehingen GmbH 2018

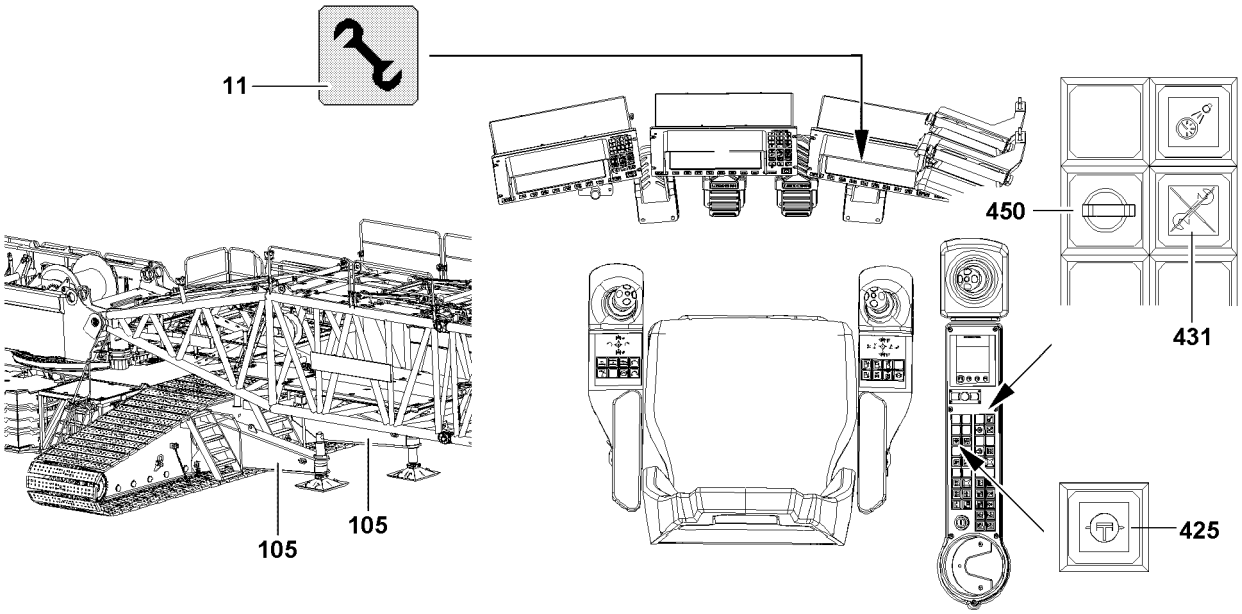

5

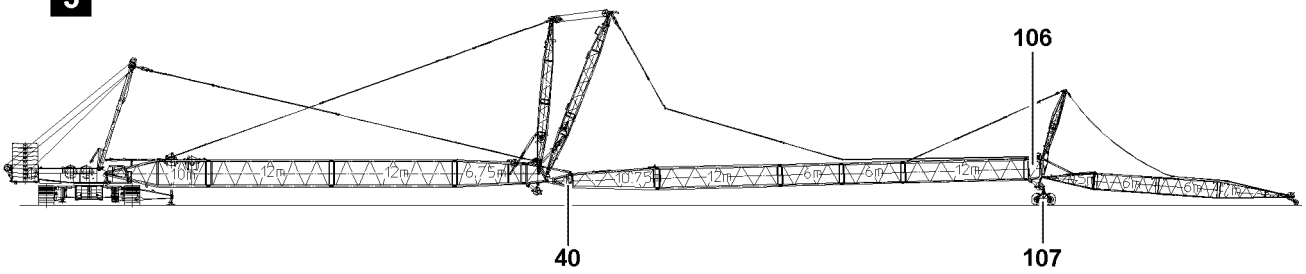

6

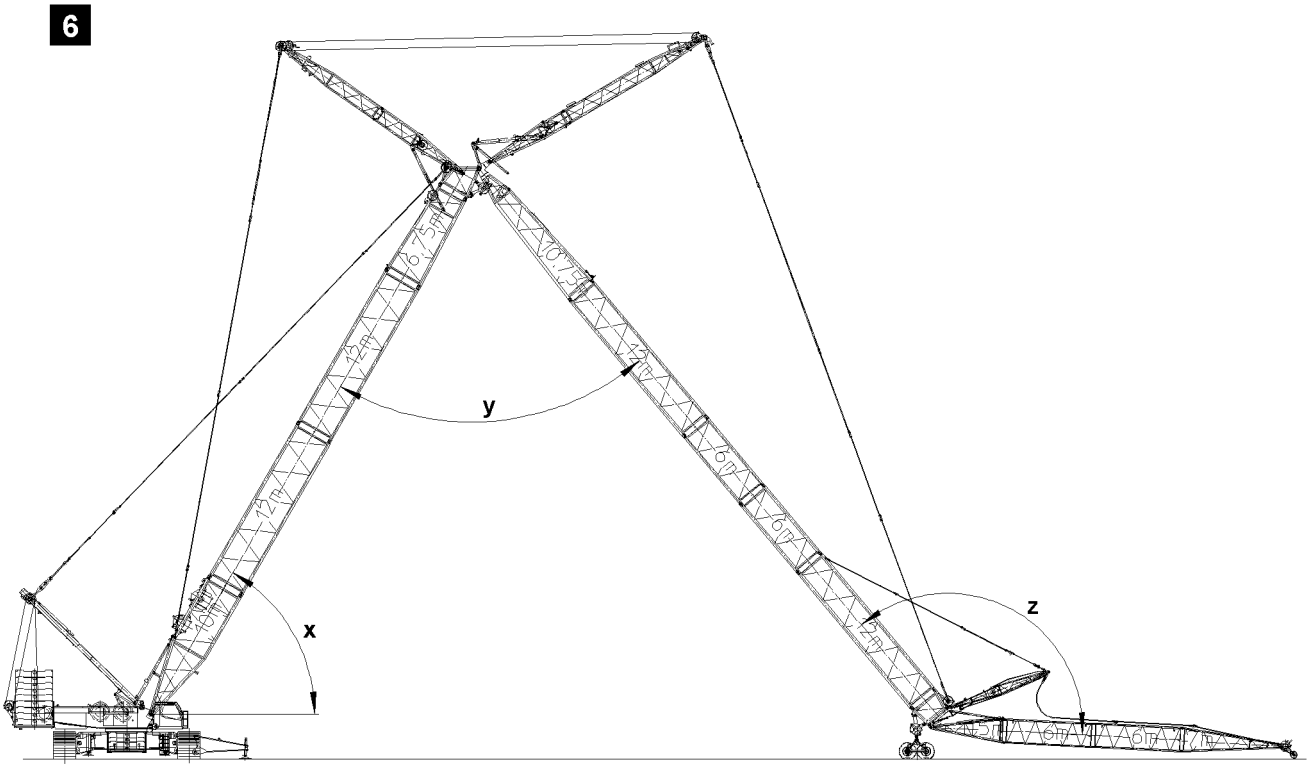

Fig.106854

LWE/LR 1600-2-001/18101-07-02/en

copyright © Liebherr-Werk Ehingen GmbH 2018

Make sure that the following prerequisites are met:
- the SWF-boom is fully assembled,
- the pulley cart **107** is assembled on the SW-end section **106**, illustration **5**,
- no personnel are within the danger zone,
- the crane is aligned in horizontal direction,
- all electrical connections have been established,
- all limit switches are functional,
- the counterweight has been attached to the turntable according to the load chart,
- all pin connections have been secured,
- the hoist rope has been correctly placed in the rope pulleys and is prevented from jumping out with the rope retaining pins,
- there are no loose parts on the boom or the lattice jib,
- boom, lattice jib and safety devices are free from snow and ice,
- the LICCON overload protection has been adjusted according to the data in the load chart,
- the LICCON overload protection settings have been compared with the actual crane configuration,
- the assembly key button **450** is actuated,
- the indicator light **431** „assembly“ lights up,
- the assembly icon **11** on the LICCON monitor 0 lights up.

WARNING
Falling hoist rope!
If the hoist rope before the erection procedure is not properly secured onto the corresponding length on the F-auxiliary jib, it can fall down backward on the basis of its own weight. Personnel can be severely injured or killed!
- ▶ Reeve in the hoist rope with sufficient length on the F-auxiliary jib before the erection process!
- ▶ The hoist rope must be constantly monitored during erection!
- ▶ Do not step into the danger zone!

WARNING
Damage to the boom parts!
If the luffing up movement is not switched off when a warning signal sounds, boom parts can collide. Personnel can be severely injured or killed!

If acoustic warning signal sounds:
- ▶ Switch off the luffing up movement.

Note
- ▶ If a warning signal sounds, an error report appears on the LICCON monitor: "Block position W/F achieved – caution: no switch off accident danger".

See illustration **6**.

The S-boom is luffed up until the warning signal sounds:
- Angle **z** between F-auxiliary jib and W- lattice jib amounts to 115°,
- **or** angle **y** between W-lattice jib and S-boom amounts to 45°,
- **or** angle **x** of the S-boom amounts to 87°.

LWE/LR 1600-2-001/18101-07-02/en

copyright © Liebherr-Werk Ehingen GmbH 2018

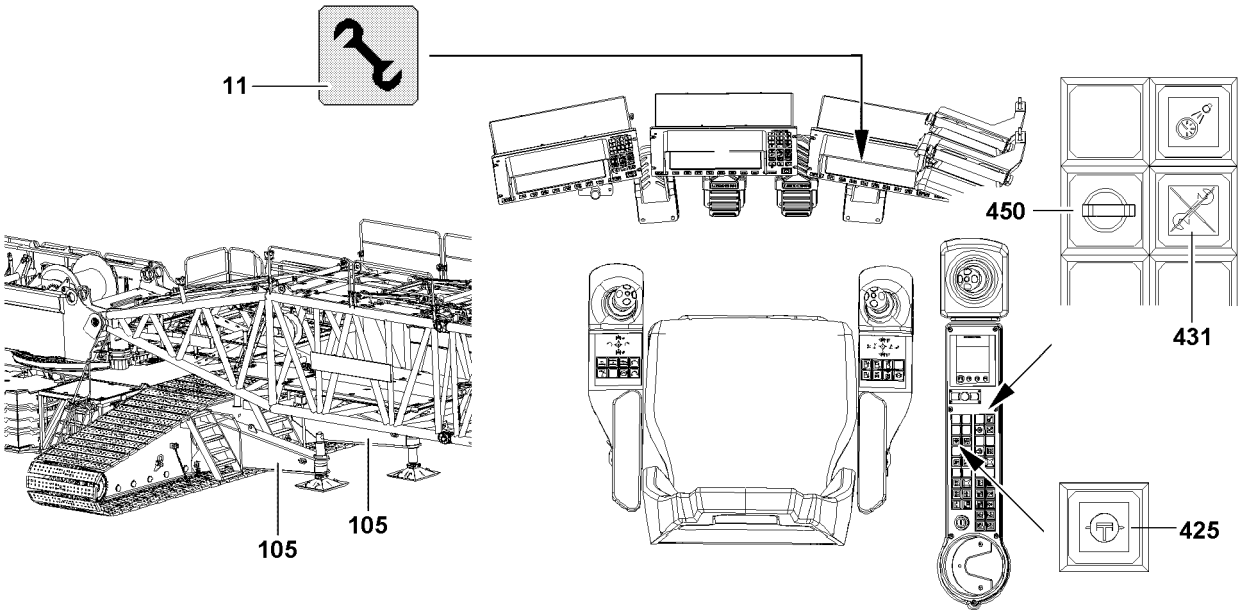

5

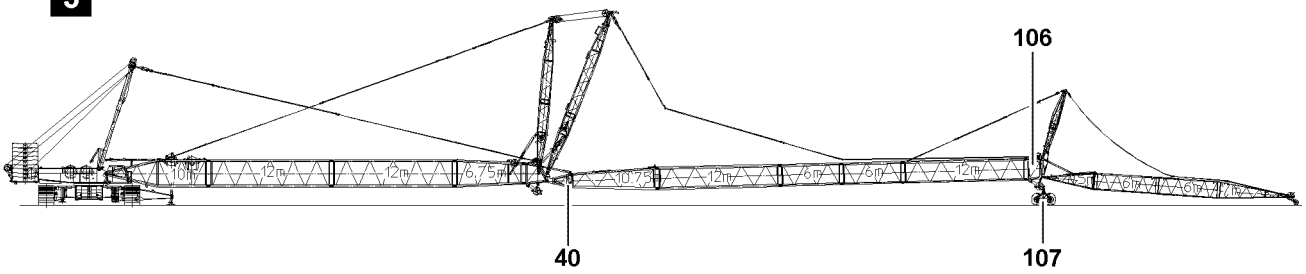

6

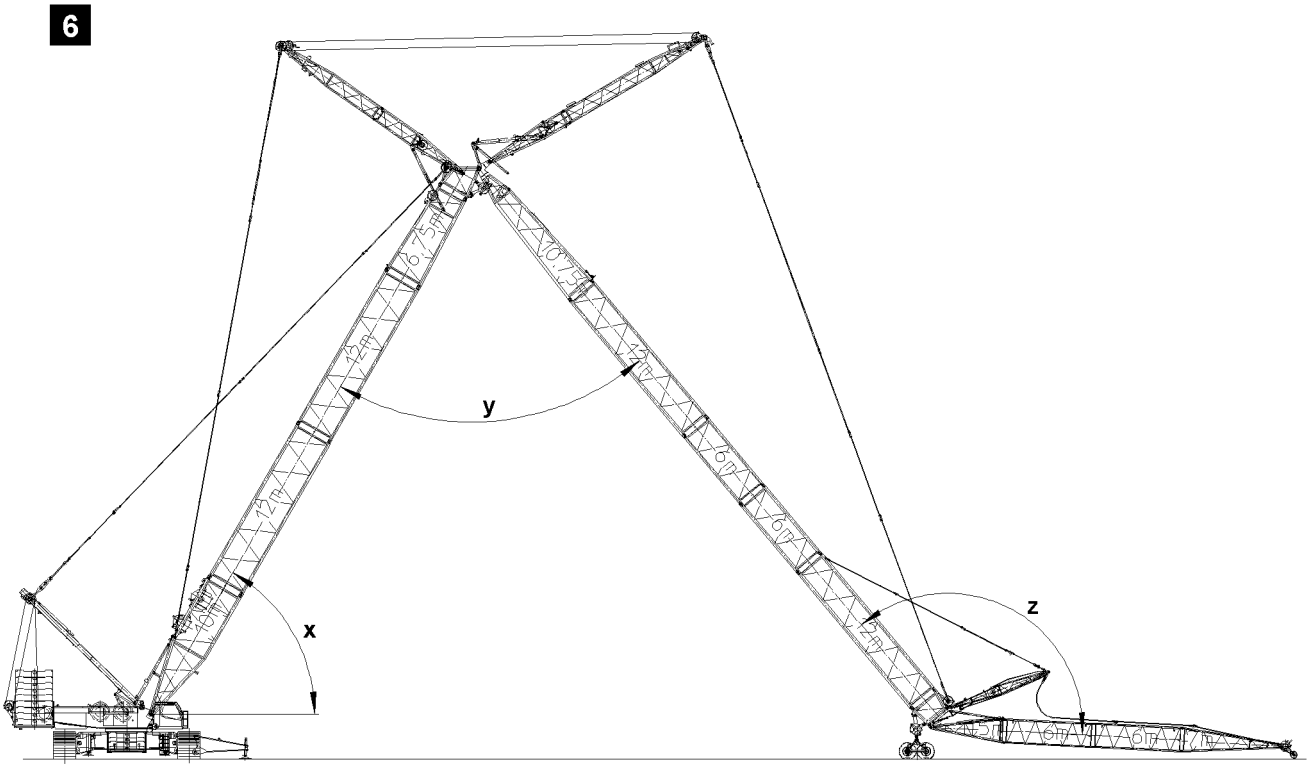

Fig.106854

LWE/LR 1600-2-001/18101-07-02/en

copyright © Liebherr-Werk Ehingen GmbH 2018

Note

▶ While the S-boom is luffed up, the W-guy rods must remain released so that the F-auxiliary jib remains on the ground.

▶ The S-boom is luffed up and simultaneously W-adjusting rope spools out until warning signal sounds.

WARNING

Damage to the boom parts!

If the W-guy rods during lifting are not tensioned, the SW-end section can move in the direction of the crane. W-connector head and W-pivot section can collide.

Personnel can be severely injured or killed!

▶ Ensure that the W-guy rods are tensioned before lifting.

If acoustic warning signal sounds:

▶ Tension the W-guying: Spool up the W-adjusting rope.

WARNING

Damage to the boom parts!

If the following conditions are not met, the boom parts can collide or be damaged.

▶ Ensure that the F-guy ropes do not remain hanging on the F-auxiliary jib during erection.

▶ Control distances between F-auxiliary jib and SW-end section by an additional observer.

LWE/LR 1600-2-001/18101-07-02/en

copyright © Liebherr-Werk Ehingen GmbH 2018

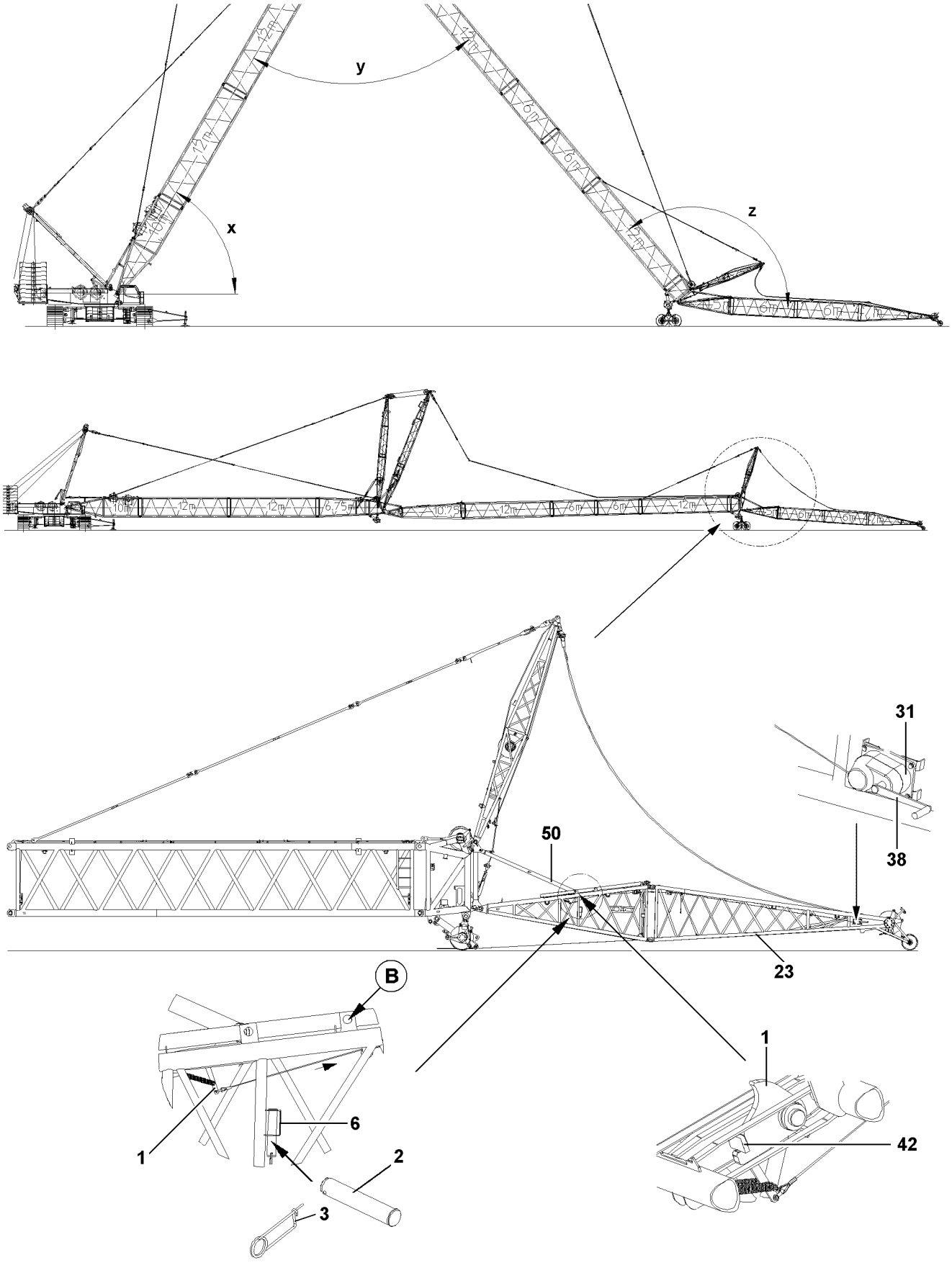

Fig.107211

LWE/LR 1600-2-001/18101-07-02/en

copyright © Liebherr-Werk Ehingen GmbH 2018

WARNING
Risk of accident!
During crane operation, the flap **1** must be „above“ position!

- ▶ Set the flap **1 immediately before lift off** of the F-end section **23** or when erecting the boom into the relapse retainer position in „up“ position!
- ▶ Then remove the manual lever **38** from the manual rope winch **31** and store it in the tool box.

- ▶ Set the flap **1** with the manual rope winch **31** in relapse retainer position („up“ position), until the flap **1** touches on the stop **42**, see illustration **13**.
- ▶ Remove the manual lever **38** from the manual rope winch **31**.

LWE/LR 1600-2-001/18101-07-02/en

copyright © Liebherr-Werk Ehingen GmbH 2018

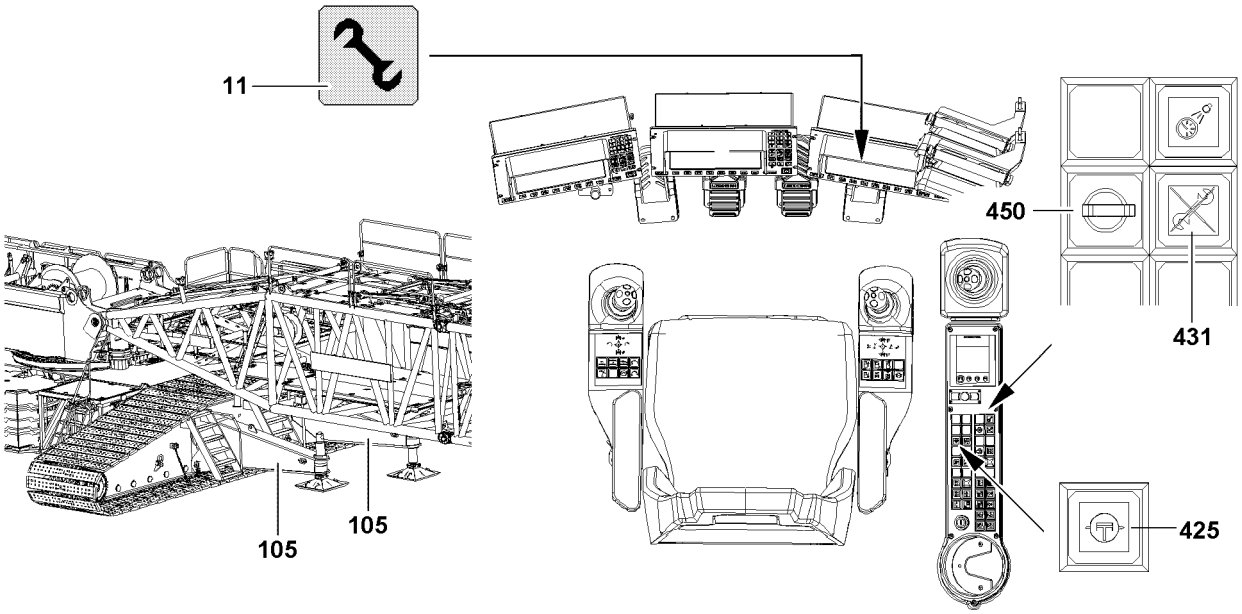

5

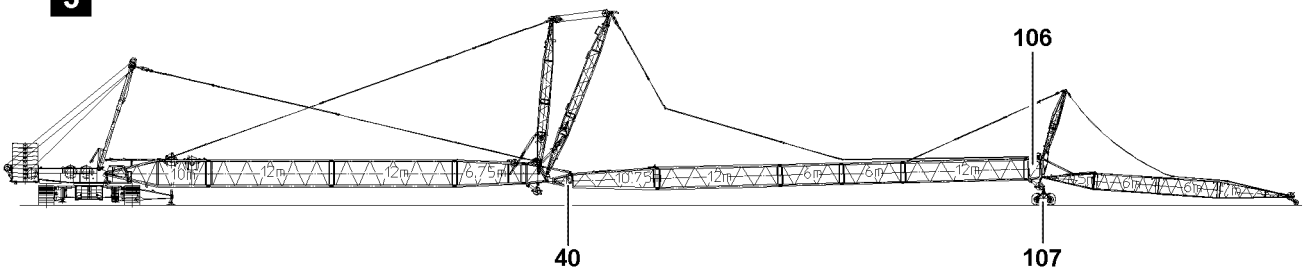

6

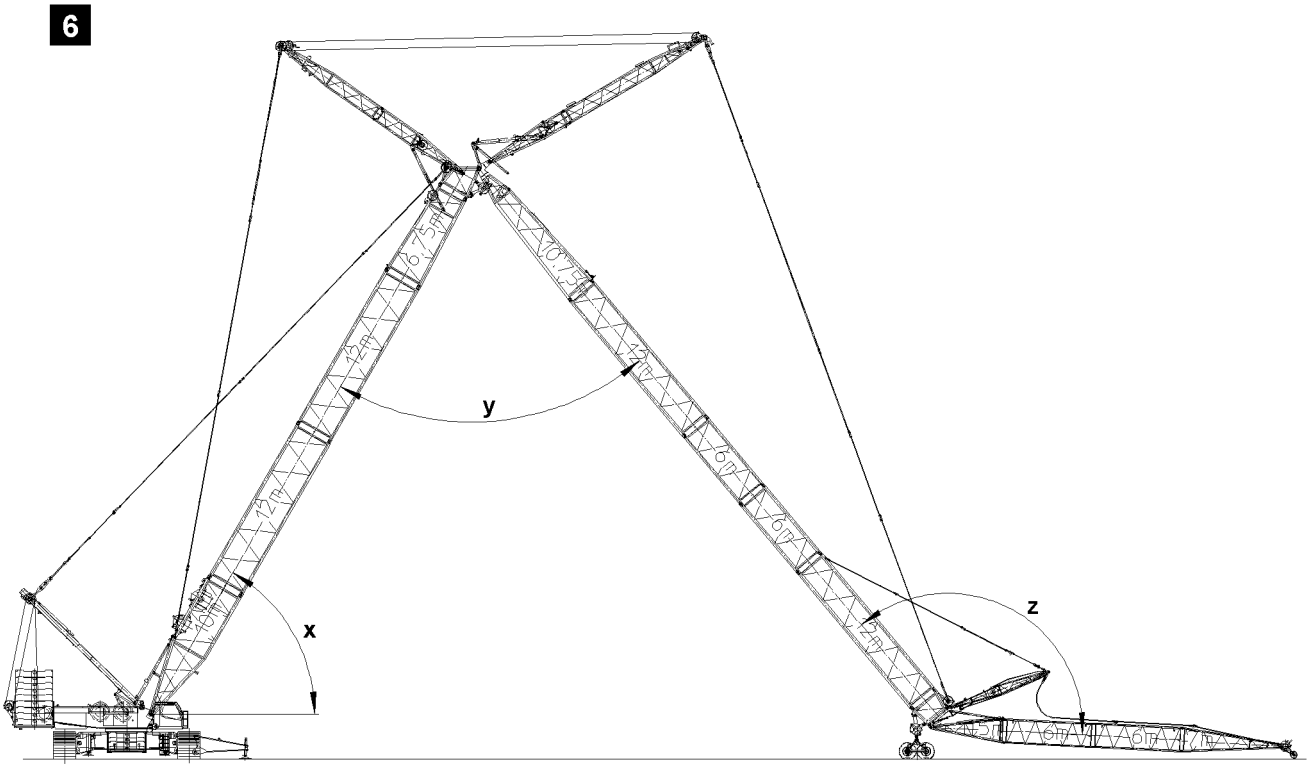

Fig.106854

LWE/LR 1600-2-001/18101-07-02/en

copyright © Liebherr-Werk Ehingen GmbH 2018

See illustration **5**.

- ▶ Loosen pulley cart **107** from SW-end section **106**: Uninstall the pulley cart, see chapter 5.15.
- ▶ Luff up boom until the hook block may reeve on the F-auxiliary jib.
- ▶ Reeve in the hook block properly and secure the hoist rope on the rope fixed point, for reeving, see separate reeving plans.
- ▶ Attach the hoist limit switch weight.

The S-boom is not yet in operating position, (angle **x** amounts to 87°):

- ▶ Luff up the S-boom to the operating position.

DANGER

The crane can topple over!

In crane operation with bypassed safety devices, the crane can topple over. Personnel can be severely injured or killed!

- ▶ When the lowest operating position of the W-lattice jib is reached, immediately turn off the assembly key button **450**.
- ▶ The radii listed in the load chart may not be exceeded or fallen below, even if there is no load on the hook!

Note

- ▶ When the lowest operating position of the W-lattice jib is reached, the displays turn off.
- ▶ In the icon „Maximum load“, a load number in „t“ appears instead of the display „???“!

- ▶ Luff up the F-auxiliary jib to the lowest operating position.

When the W-lattice jib has reached the lowest operating position:

- ▶ Switch the assembly key switch **450** off.

Result:

- – The LICCON overload protection is active.
- – The indicator light **431** turns off.
- – The assembly symbol **11** on the LICCON monitor turns off.
- – The acoustical signal turns off.
- – The three color light lights up red and the warning light on the rear of the turntable lights up.

LWE/LR 1600-2-001/18101-07-02/en

copyright © Liebherr-Werk Ehingen GmbH 2018

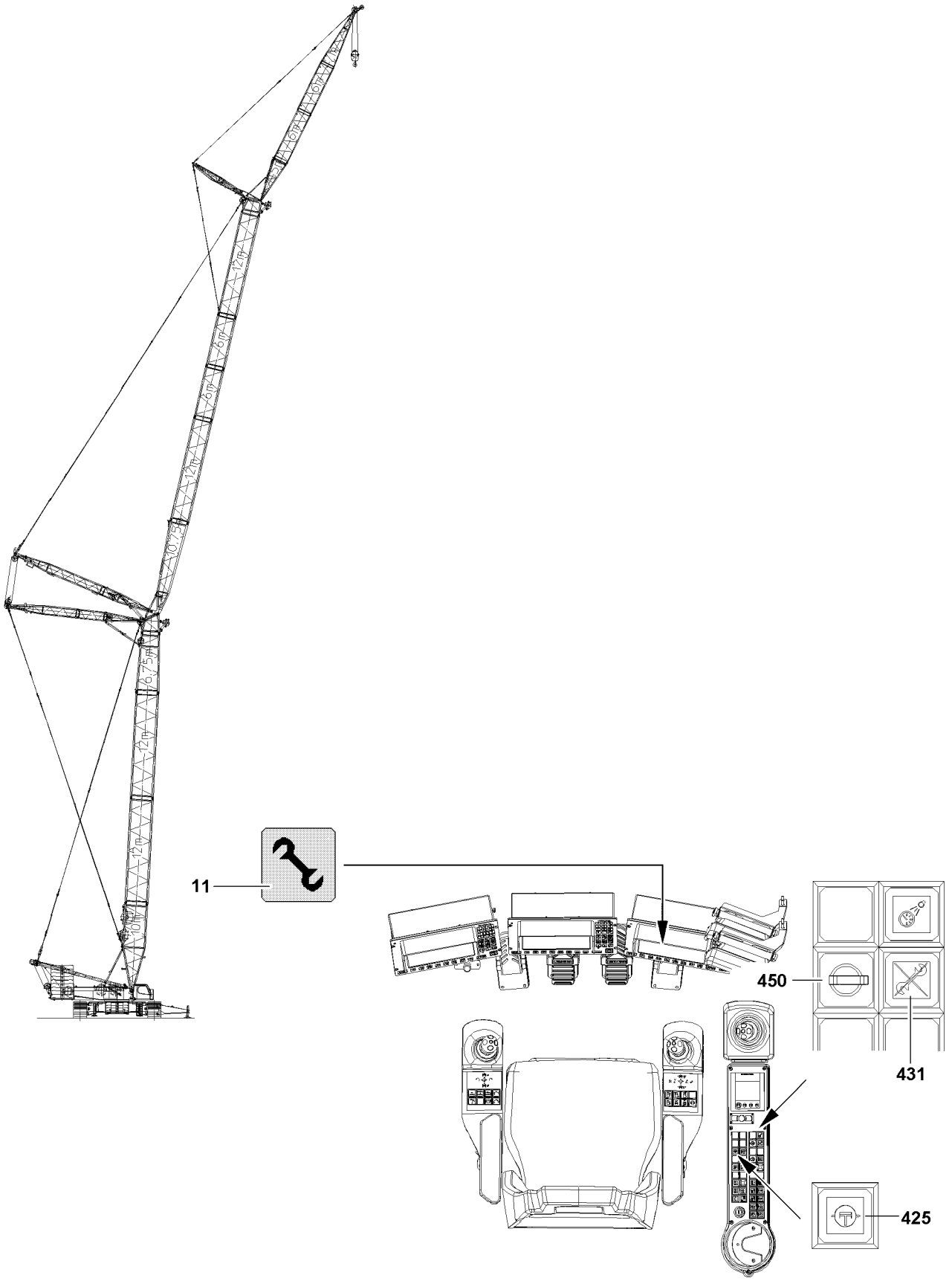

Fig.106855

LWE/LR 1600-2-001/18101-07-02/en

copyright © Liebherr-Werk Ehingen GmbH 2018

3 Operating the crane

3.1 Preparing for crane operation

Note

▶ Observe the notes in chapters 4.05, 4.08 and 5.01.

Make sure that the following prerequisites are met:

– the LICCON overload protection has been set according to the data in the load chart,
– the assembly key button **450** is turned off.

WARNING

The crane can topple over!

▶ Check the horizontal position of the crane before and during operation!
▶ If the crane operator leaves the cab, even for a short time, the operating mode setting must be checked and reset if necessary before resuming crane operation!

3.2 Checking the settings.

▶ Check the function of the overload protection by running against the operating positions „on top“ and „bottom“.
▶ Check the hoist limit switch by running against the hoist limit switch weight.
▶ Check the function of the limit switches on the relapse cylinders.

LWE/LR 1600-2-001/18101-07-02/en

copyright © Liebherr-Werk Ehingen GmbH 2018

LWE/LR 1600-2-001/18101-07-02/en

Fig.195219

copyright © Liebherr-Werk Ehingen GmbH 2018

4 Disassembling the SWF-booms

WARNING
Risk of falling!
During assembly and disassembly work, personnel must be secured with appropriate antifall guards to prevent them from falling. If this is not observed, assembly personnel could fall and suffer life-threatening or fatal injuries.

- ▶ All assembly work must be carried out using suitable aids (ladders, lifting platforms, scaffolding, auxiliary crane, etc.)!
- ▶ If work cannot be carried out on the ground or using such aids, then assembly personnel must be secured with suitable personal protective equipment (see chapter 2.04) to protect against falling! The personal protective equipment must be attached in the corresponding attachment points on the crane (see chapter 2.06).
- ▶ If railings are present for the crane, then they must be brought into the corresponding position and secured for assembly / disassembly, inspection and maintenance work.
- ▶ Only step on aids and antifall guards with clean shoes!
- ▶ Keep aids and antifall guards clean and free of snow and ice!

WARNING
Falling components!
If unsecured or non-supported components are assembled or disassembled, they can fall down. Personnel can be killed or seriously injured.

- ▶ During pinning and unpinning of the lattice sections, it is prohibited for anyone to remain **under** or **on** the components as well as within the entire danger zone!
- ▶ Support the boom and components before pinning / unpinning!
- ▶ Both pins that lie in at a horizontal level, i.e. **left** and **right**, pin or unpin!
- ▶ Secure the pins in the bearing points and in the receptacles!
- ▶ Do not disengage the auxiliary crane until each component is pinned on and secured!
- ▶ It is prohibited to lean a ladder against the component being disassembled!

WARNING
Danger of crushing!
Components can swing during disassembly. Hands can be crushed or severed.

- ▶ Make sure that the components do not swing back and forth during assembly!

WARNING
Risk of accident!
Personnel can be severely injured or killed!

- ▶ While pinning and unpinning with the pin pulling device, observe and follow warning guidelines in chapter 5.30!

Note

- ▶ By supporting the components during assembly / disassembly, ground unevenness is compensated for and the material is protected.

Note

- ▶ The intermediate sections of the auxiliary jib are pinned and unpinned with the aid of the pin pulling device, see chapter 5.30.

LWE/LR 1600-2-001/18101-07-02/en

copyright © Liebherr-Werk Ehingen GmbH 2018

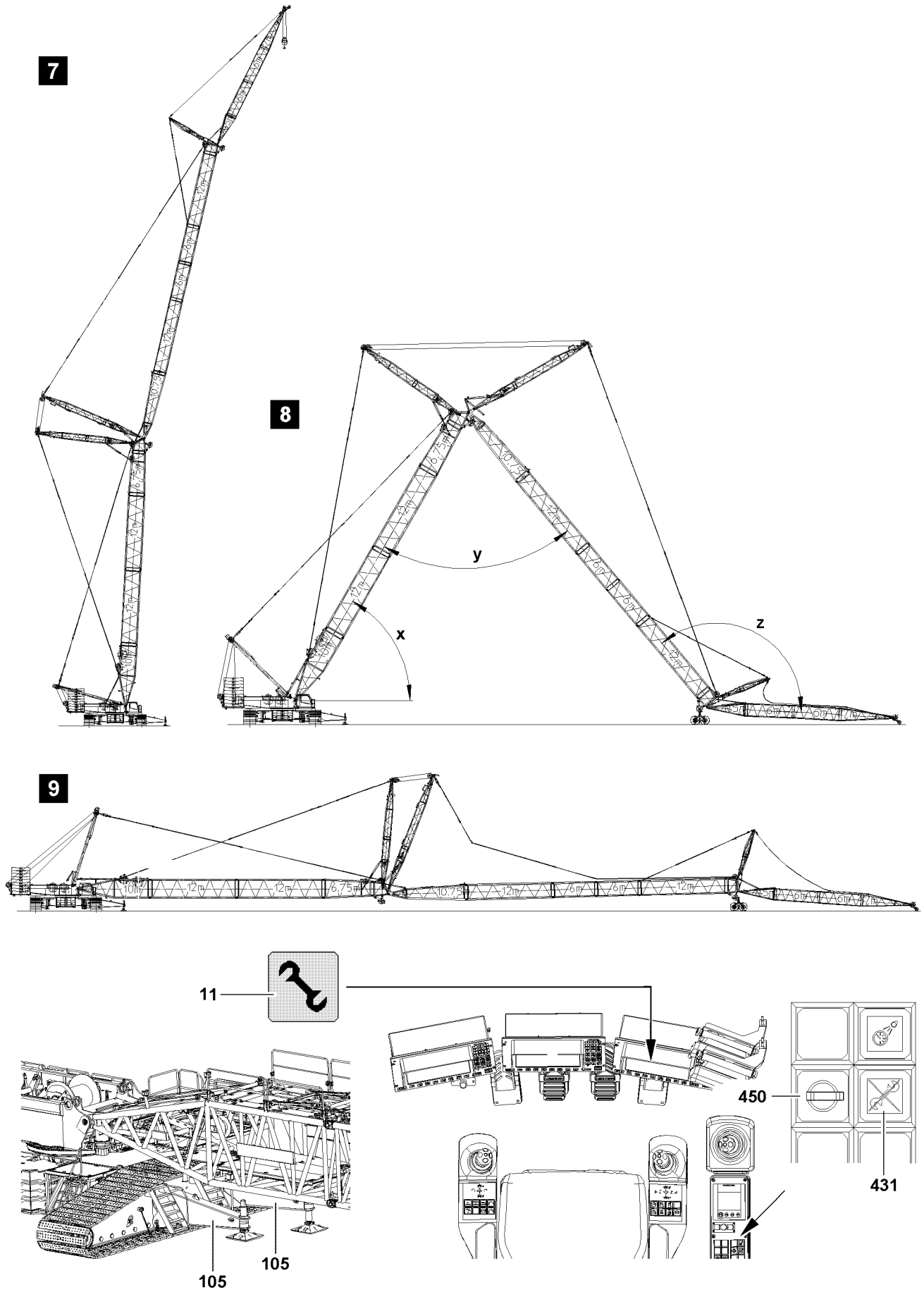

Fig.106857

copyright © Liebherr-Werk Ehingen GmbH 2018

4.1 Taking the SWF-booms down

Note
▶ SWF boom systems may not be placed in stretched condition on the ground.

DANGER
The crane can topple over!
For certain boom lengths, the mechanical auxiliary supports must be assembled, see Erection and take down charts!
▶ The boom must be erected or taken down „to the side“ „in direction“ of the mechanical auxiliary supports **105**.
▶ Always erect or take down according to the data in the **Erection and take down charts**!

WARNING
The crane can topple over!
If the following conditions are not met before taking down the boom, the crane can topple over and fatally injure personnel!
▶ Observe the safety technical guidelines in chapter 5.01!
▶ Observe the data in the erection and take down charts!

WARNING
The crane can topple over!
If the following conditions are not met before placing the boom, the crane can topple over. Personnel can be severely injured or killed!
▶ Spool the lattice jib control out so that the guy rods sag slightly!
▶ The lattice jib must roll on the ground with its entire weight!
▶ Do not allow slack cable to build up on the control winch!
▶ Do not pull the hook block along on the ground!

WARNING
Damage to the boom parts!
If the luffing down movement is not switched off when a warning signal sounds, boom parts can collide. Personnel can be severely injured or killed!

If acoustic warning signal sounds:
▶ Switch off the luffing down movement.

NOTICE
Damage of boom components!
Taking down the boom system can lead to a collision between the hook block and the pulley head. Boom components can be severely damaged.
▶ Luff the boom system down at the same time and spool the hoist winch out.

Ensure that the following prerequisite is met:
– the S-boom is found in the steepest position, angle **x**, amounts to 87°, see illustration **7**,
– the hook block is approx. 5 m below the pulley head of the F-end section,
– the pulley cart is available.

LWE/LR 1600-2-001/18101-07-02/en

copyright © Liebherr-Werk Ehingen GmbH 2018

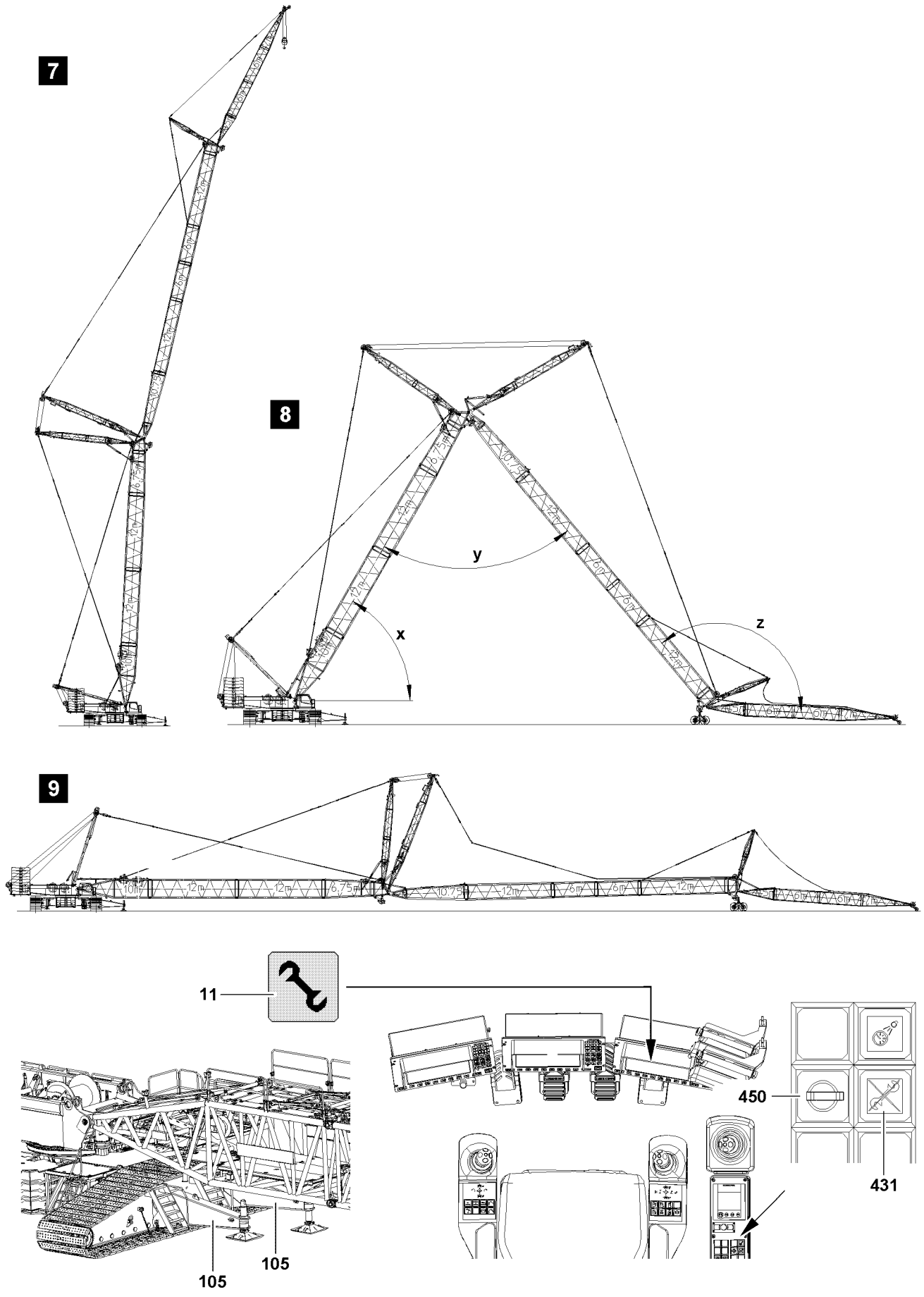

Fig.106857

copyright © Liebherr-Werk Ehingen GmbH 2018

4.1.1 Luff down W-lattice jib

Note

- ▶ Luffing down of the W-lattice jib is turned off as soon as the lowest operating position is reached.
- ▶ When the lowest operating position of the boom is reached, the load display in the „Maximum load“ icon turns off and instead of the load display, the display „???“ appears.
- ▶ In the crane operating screen appear alarm functions.

▶ Luff the W-lattice jib down to the „lowest“ operating position.

Result:

The following alarm functions become active:
– „STOP“
– „Horn“ and acoustical signal

DANGER

Crane operation with added assembly key button!

- ▶ The actuation of the assembly key button **450** is only permitted for assembly tasks!
- ▶ The assembly key button **450** may only be operated by persons who are aware of the consequences of a bypass!
- ▶ If the assembly key button **450** is turned on, the hoist limit switch and the LICCON overload protection is bypassed!
- ▶ Crane operation with the assembly key button **450** turned on is strictly prohibited!
- ▶ The assembly key button **450** must be removed immediately after carrying out the assembly work and handed to an authorized person!

When the W-lattice jib has reached the „lowest“ operating position:
▶ Turn the assembly key button **450** on.

Result:

– The LICCON overload protection is deactivated.
– The indicator light **431** lights up.
– The assembly icon **11** on the LICCON monitor blinks.
– The „STOP“ icon on the LICCON monitor blinks.
– An acoustical signal sounds.
– The three colour light lights up red and the warning light on the rear of the turntable lights up.

The W-lattice jib is luffed down until:
– Warning signal sounds: Angle **y** between W-lattice jib and S-boom amounts to 45°,
– **or** the hook block touches the ground.

▶ Luff down W-lattice jib further.

LWE/LR 1600-2-001/18101-07-02/en

copyright © Liebherr-Werk Ehingen GmbH 2018

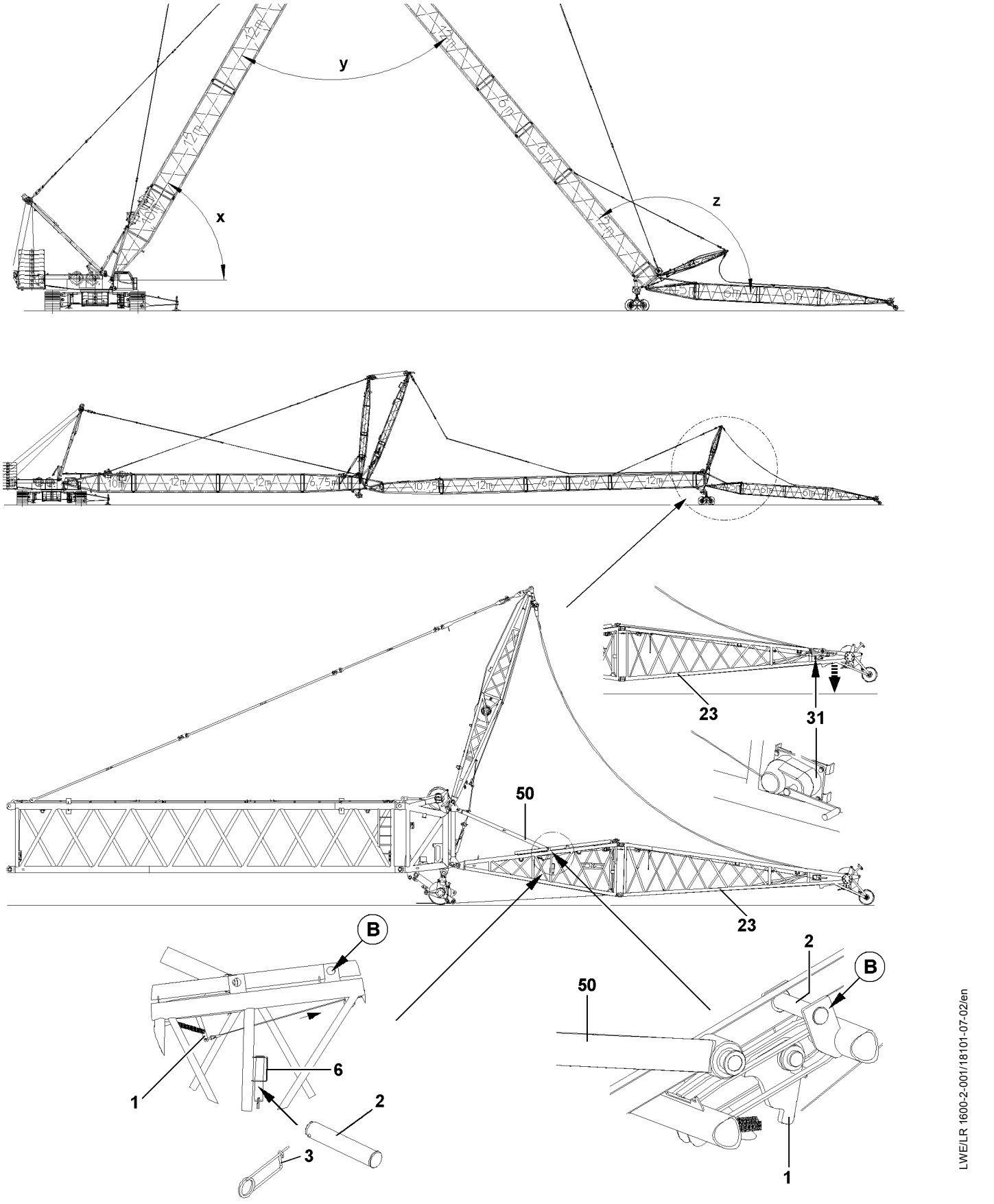

Fig.106853

LWE/LR 1600-2-001/18101-07-02/en

copyright © Liebherr-Werk Ehingen GmbH 2018

4.1.2 Taking the SWF-booms down

If the W-lattice jib is luffed down as far as possible with the F-auxiliary jib:

▶ Luff the S-boom down until the warning signal sounds.

Note

▶ If a warning signal sounds, an error report appears on the LICCON monitor: "Block position W/F achieved – caution: no switch off accident danger".

If the hook block has not yet touched the ground:

▶ Continue to luff the S-boom down until the hook block touches the ground.
▶ Remove the hoist limit switch weight.
▶ Unreeve the hook block.
▶ Remove the pin **2** from the retainer **6** (park position) and insert at point **B** pin (attachment position) and secure with spring retainer **3**.

CAUTION

Danger of damage on the relapse support!
When taking the boom down, the flap **1** must be set in „down“ position as soon as the F-end section **23** touches the ground or as soon as the manual rope winch **31** can be reached!
If this is not observed, components on the F-assembly unit can be damaged!

▶ Set the flap **1** with manual rope winch **31** in a position „downward“ so that the plunger **50** guide over the flap **1** „can slide“.

▶ Set the flap **1** on the F-pivot section **22** with manual rope winch **31** into „down“ position.

NOTICE

Damage to the boom parts!
If the F-auxiliary jib can not reel off forward without disturbance, the boom parts can be damaged.

▶ Ensure that the F-auxiliary jib can not reel off forward without disturbance.

Note

▶ The S-boom is luffed up until the warning signal sounds: Angle **z** between W-lattice jib and F-auxiliary jib amounts to 115°.

NOTICE

Colliding boom parts!
If the S-boom luffs down, the F-auxiliary jib and SW-end section can collide.

▶ Hold the angle **z** continually constant: Luff down S-boom further and simultaneously W-lattice jib.
▶ Control distances between F-auxiliary jib and SW-end section by an additional observer.

▶ Luff the S-boom down.

If angle between F-auxiliary jib and W- lattice jib permits:

▶ Set down the SW-end section in the roller cart.
▶ Release W-guying.
▶ Luff the S-boom down until the boom system is lying completely on the ground.

LWE/LR 1600-2-001/18101-07-02/en

copyright © Liebherr-Werk Ehingen GmbH 2018

LWE/LR 1600-2-001/18101-07-02/en

Fig.195219

copyright © Liebherr-Werk Ehingen GmbH 2018

4.2 Disconnect the electrical connections

Note
▶ Observe and follow the instructions in chapter 5.13!

Ensure that the following prerequisite is met:
– the SWF-boom has been placed down.

4.3 Disassembling the F-assembly unit

Note
▶ Observe and follow the instructions in chapter 5.13!

Make sure that the following prerequisites are met:
– an auxiliary crane is available.

LWE/LR 1600-2-001/18101-07-02/en

copyright © Liebherr-Werk Ehingen GmbH 2018

Empty page!

LWE/LR 1600-2-001/18101-07-02/en

copyright © Liebherr-Werk Ehingen GmbH 2018

5.19 Hook blocks

1	Procedure in case of slack rope	3
2	Hook block overview	5
3	Installing a double hook block for single operation	7
4	Installing a double hook block for parallel operation	17
5	Single hook blocks	29

LWE/LR 1600-2-001/18101-07-02/en

copyright © Liebherr-Werk Ehingen GmbH 2018

LWE/LR 1600-2-001/18101-07-02/en

Fig.195219

copyright © Liebherr-Werk Ehingen GmbH 2018

1 Procedure in case of slack rope

1.1 Lowering the hook block if slack rope forms

If the hook block can no longer be lowered due to slack rope formation, then the following steps must be carried out.

1.1.1 Spooling op loose hoist rope

▶ Spool up loose hoist rope between the boom head and the wind carefully onto the winch.

Note

▶ A slight rope slack must remain between the boom head and the winch!

1.1.2 Luffing the boom down

NOTICE

Danger of collision!

When luffing the boom down, the hoist rope length can shorten and pull the hook block against the boom head.

▶ Monitor the distance of the hook block to the boom head!

▶ Luff the boom down carefully.

Result:

– The hoist rope between the boom head and the winch is tensioned.

1.1.3 Lowering the hook block

▶ Lower the hook block carefully with the hoist gear.

LWE/LR 1600-2-001/18101-07-02/en

copyright © Liebherr-Werk Ehingen GmbH 2018

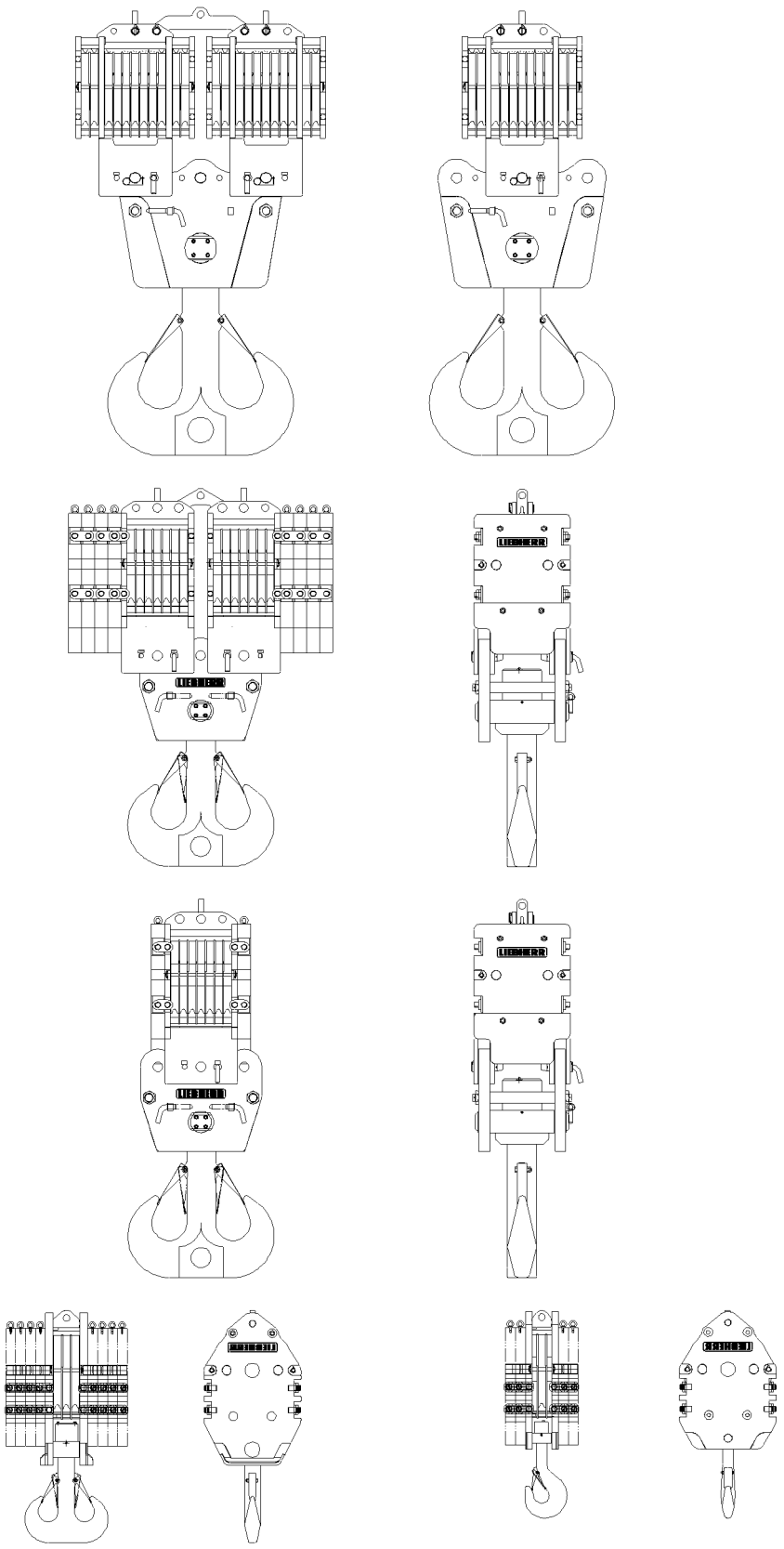

Fig.108122

LWE/LR 1600-2-001/18101-07-02/en

copyright © Liebherr-Werk Ehingen GmbH 2018

2 Hook block overview

2.1 Handling of hook blocks

Note

- ▶ For the load hooks and hook blocks approved for this crane type refer to the separate load chart manual!
- ▶ The hook blocks shown in this chapter are only examples and can differ from your hook block in type and number of rope pulleys. The different assembly and disassembly procedures are therefore only an example of the description for a number of different hook blocks!

DANGER

Hook block weights!

If the data in the erection and take down charts as well as the load charts are not observed, dangerous situations up to toppling of the crane can occur!

Personnel can be severely injured or killed, in addition, high property damage can result!

- ▶ Observe the data in the erection and take down charts!
- ▶ The specifications in the load charts must be adhered to!
- ▶ The crane operator bears the sole and full responsibility for the adherence to the data in the erection and take down charts as well as the load charts!

Differently sized hook blocks can be used for various loads.

NOTICE

Rope damage due to insufficient hook block weight!

If the hook block weight is too low to tighten the hoist rope sufficiently, spooling problems may occur on the winches when lowering and lifting the hook block due to slack rope formation!

The hoist rope can be damaged!

- ▶ In order to prevent spooling problems on the winches, the hook block weight may be increased with auxiliary weights, if necessary!
- ▶ If problems develop in the assembly and set up conditions due to the weight increase of the hook block, auxiliary weights must be removed again!

LWE/LR 1600-2-001/18101-07-02/en

copyright © Liebherr-Werk Ehingen GmbH 2018

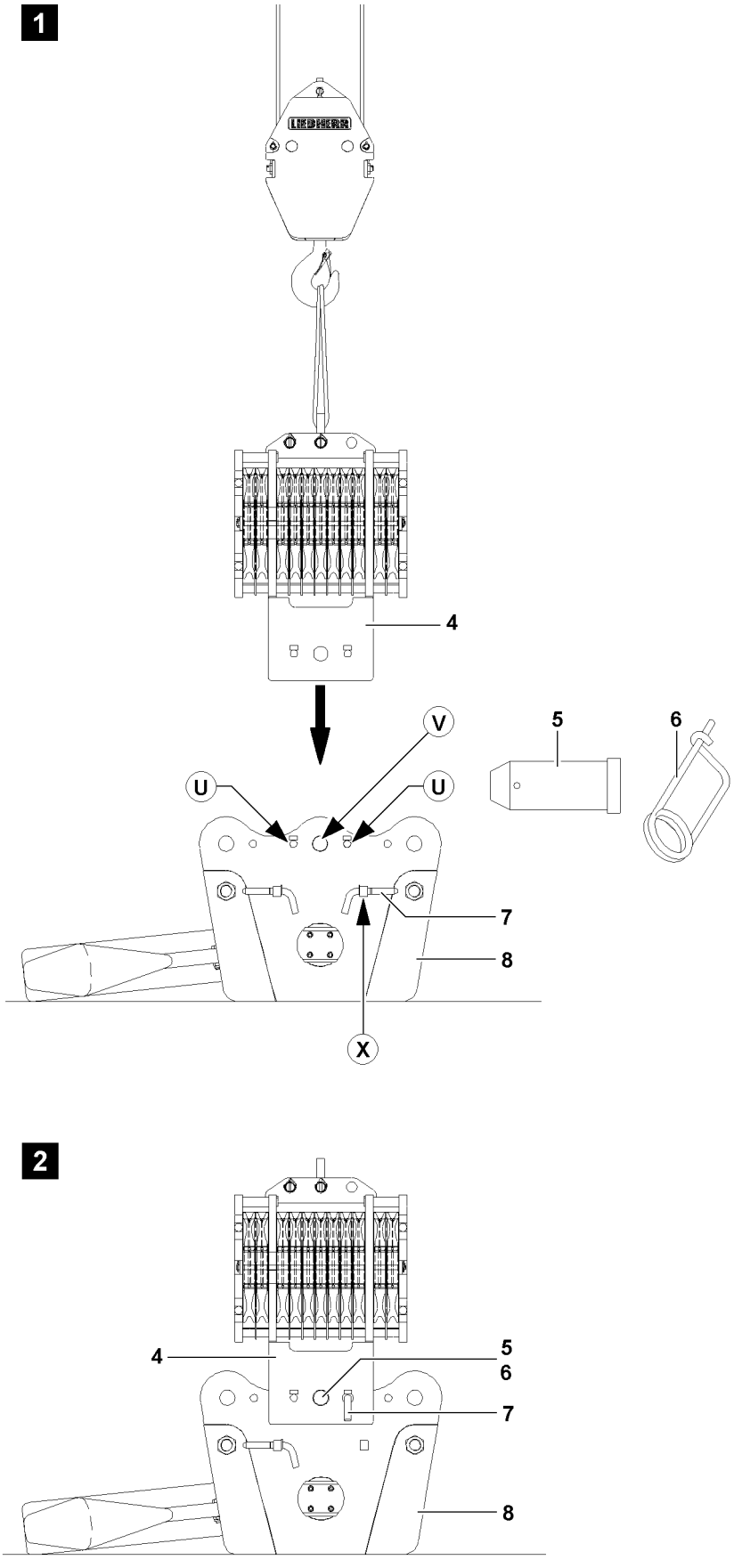

Fig.108123

LWE/LR 1600-2-001/18101-07-02/en

copyright © Liebherr-Werk Ehingen GmbH 2018

3 Installing a double hook block for single operation

3.1 Installing the hook block

If the hook blocks are to be used in single operation, then the pulley block **4** must be installed centered on the cross brace **8**.

3.1.1 Installing the pulley block on cross brace

Make sure that the following prerequisites are met:
- The ground is sufficiently load bearing to take on the weight of the hook block safely.
- The ground is level and horizontal.
- The cross brace **8** is placed on the ground, see illustration **1**.

DANGER
Risk of tipping the pulley block!
If the retaining pins **7**, during assembly of the pulley block **4** are not pinned on the cross brace, then the pulley block tips to the side when the auxiliary crane is removed!
Personnel remaining in the danger zone can be severely injured or killed!
- ▶ Insert the retaining pins **7** into the bores **U** on the hook block!
- ▶ Make sure before removing the auxiliary crane that the pulley block is properly pinned and secured!

- ▶ Attach the pulley block **4** onto the auxiliary crane, illustration **1**.
- ▶ Position pulley block **4** on the cross brace **8** and align the pin bore **V**.
- ▶ Insert the pin **5** on point **V** and secure with spring retainer **6**.
- ▶ Unpin the retaining pin **7** from the transport receptacle (point **X**).
- ▶ Insert the retaining pins **7** into one of the bores (point **U**) on the cross brace **8**, illustration **1**.

When the pulley block **4** is secured by the retaining pins **7** at point **U**:
- ▶ Remove the auxiliary crane.

LWE/LR 1600-2-001/18101-07-02/en

copyright © Liebherr-Werk Ehingen GmbH 2018

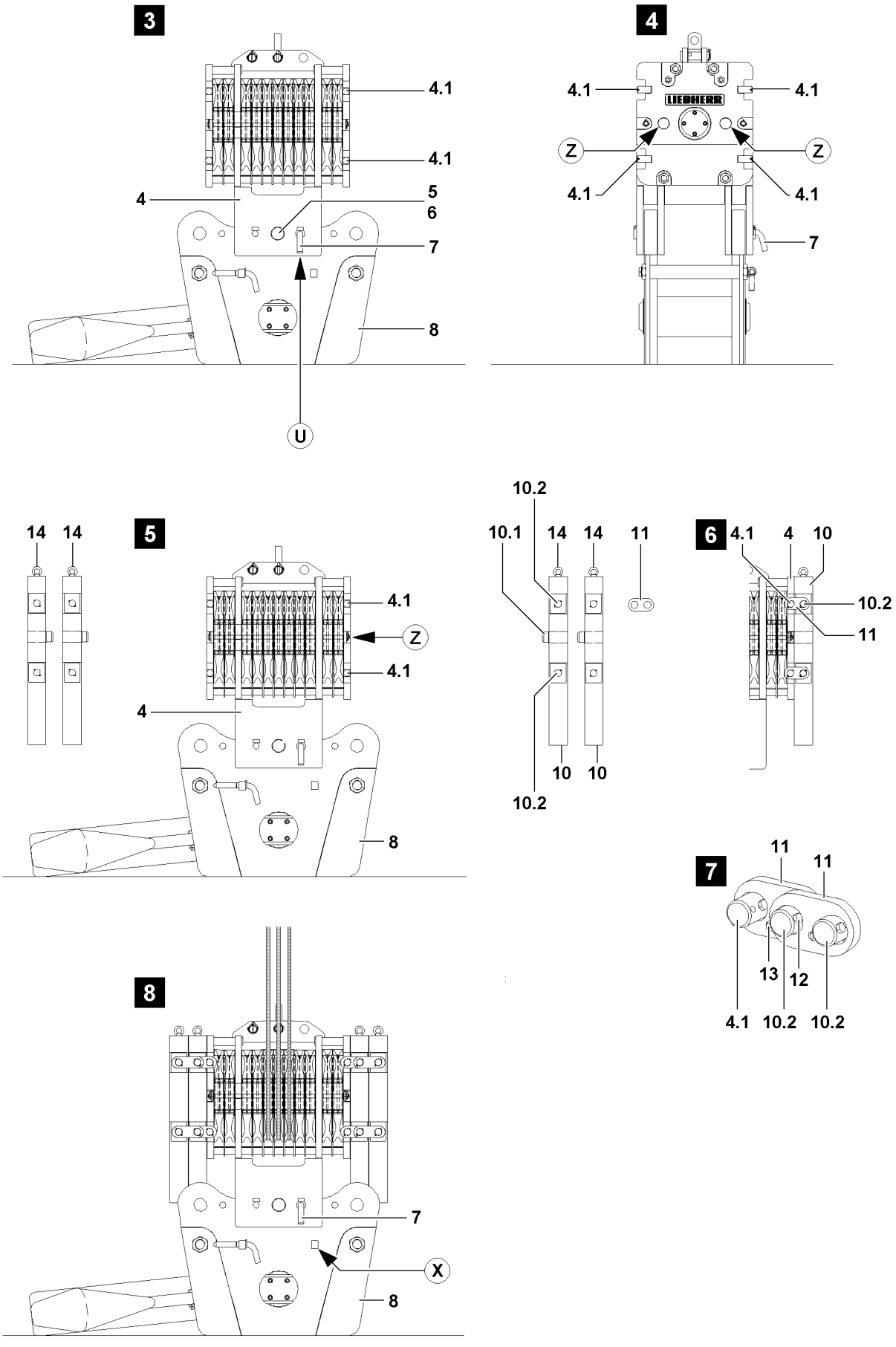

Fig.108141

LWE/LR 1600-2-001/18101-07-02/en

copyright © Liebherr-Werk Ehingen GmbH 2018

3.1.2 Installing the auxiliary weights

Note

▶ The own weight for each auxiliary weight is marked on the auxiliary weight!

WARNING

Toppling of hook block!
If the auxiliary weights are installed one-sided, the hook block can topple over!
Personnel can be severely injured or killed!

▶ The auxiliary weights may only be installed **individually** and alternating left and right on the pulley block!
▶ When the required auxiliary weight is installed on the pulley block, the difference between the left and right side may never be more than one auxiliary weight!
▶ Asymmetrical installation of auxiliary weights is prohibited!
▶ Do not exceed the maximum permissible own weight of the hook block! The maximum permissible own weight is engraved on ballastable hook blocks. See „Engraving WT max.“.

Make sure that the following prerequisites are met:

– The hook block is placed on the ground.
– The pulley block **4** is properly installed and secured.
– The retaining pin **7** is pinned and secured at point **U**.

WARNING

Falling auxiliary weights!
If the auxiliary weights are not properly installed on the pulley block, then they can fall down during installation or in crane operation!
Personnel can be severely injured or killed!

▶ Standing under a suspended auxiliary weight is prohibited!
▶ Make sure that the auxiliary weights are properly installed and secured!
▶ Crane operation with insufficiently secured auxiliary weights is prohibited!

▶ Attach the auxiliary weight **10** on the ring screw **14** on the auxiliary crane, illustration **5**.

WARNING

Danger of crushing!
When swinging the auxiliary weights to the pulley block, personnel can be severely injured or killed!
Fingers, hands and arms can be crushed or severed!

▶ It is prohibited for anyone to remain between the pulley block and the auxiliary weight!
▶ Swing auxiliary weights in to the pulley block with utmost caution and at the least possible speed!

LWE/LR 1600-2-001/18101-07-02/en

copyright © Liebherr-Werk Ehingen GmbH 2018

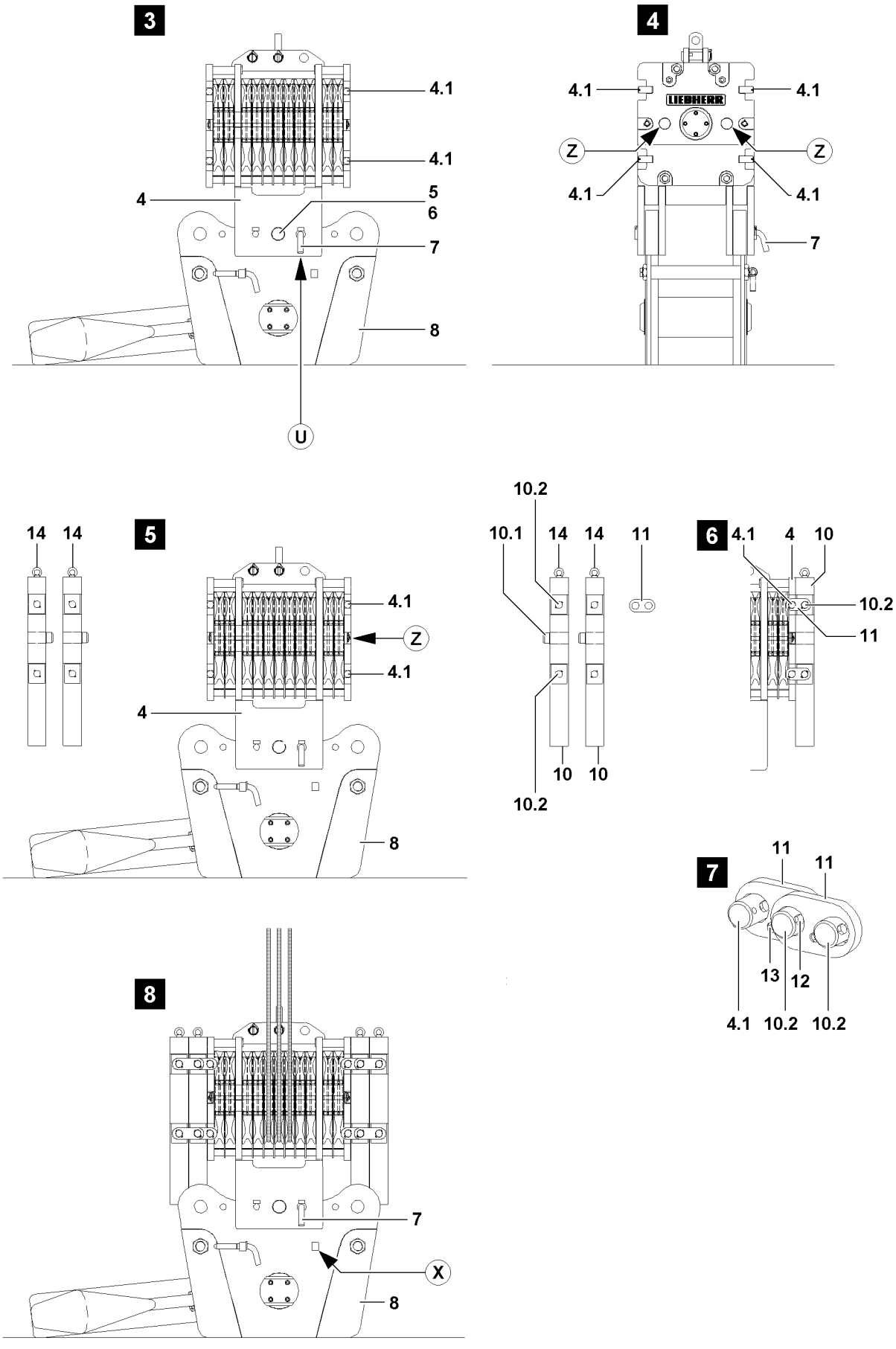

Fig.108141

LWE/LR 1600-2-001/18101-07-02/en

copyright © Liebherr-Werk Ehingen GmbH 2018

- ▶ Align the auxiliary weight **10** on the pulley block **4**.
- ▶ Move the centering pin **10.1** of the auxiliary weight into the centering bores **Z** on the pulley block **4**, illustration **6**.

WARNING
Falling auxiliary weights!
If all mounting brackets **11** are removed simultaneously on an unsecured auxiliary weight, then the auxiliary weight can fall down!
Personnel can be severely injured or killed!
- ▶ Never remove all mounting brackets **11** of an unsecured auxiliary weight at the same time!
- ▶ Always install or remove the mounting brackets **11** alternately!

- ▶ Install the mounting brackets **11** on the side and connect the pulley block **4** with the auxiliary weight **10**, illustration **7**.
- ▶ Secure the mounting brackets **11** with screws **12** and lock nuts **13**, illustration **7**.

Note
- ▶ Additional auxiliary weights must be connected with the mounting brackets **11**!

WARNING
Falling auxiliary weights!
The auxiliary weights can fall down by removing the auxiliary crane!
Personnel can be severely injured or killed!
- ▶ Remove the auxiliary crane only when it is ensured that the auxiliary weight **10** is properly secured with the mounting brackets **11**!

When the respective auxiliary weight is properly installed and secured:
- ▶ Remove the auxiliary crane.

3.1.3 Preparing the hook block for crane operation

Note
- ▶ The reeving of the hook blocks is described in chapter 4.06 of the Crane operating instructions!
- ▶ Observe the „permissible hook block weights“ in the erection and take down charts!

- ▶ Reeve the hoist rope according to the instructions in chapter 4.06 of the Crane operating instructions and the reeving plans!

NOTICE
Retaining pins **7** pinned when lifting the load!
If the retaining pin **7** is not unpinned before crane operation, then the retaining pin **7** may be shorn off when lifting the load!
- ▶ Unpin the retaining pin **7** from the hook block before crane operation!

When the hook block is properly reeved and has been lifted off the ground:
- ▶ Unpin the retaining pin **7** and pin and secure into the transport receptacle (point **X**), illustration **8**.

LWE/LR 1600-2-001/18101-07-02/en

copyright © Liebherr-Werk Ehingen GmbH 2018

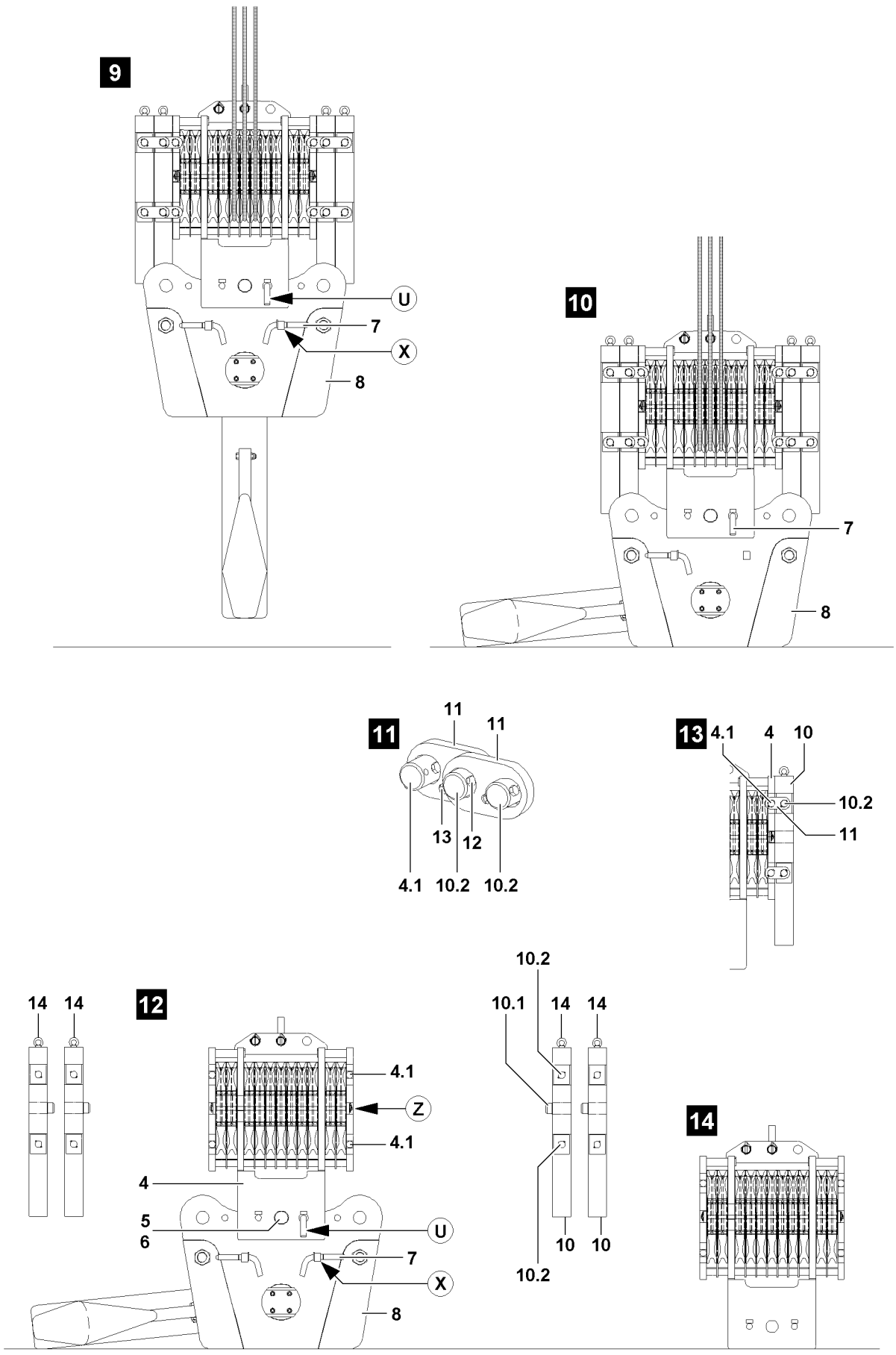

Fig.108142

LWE/LR 1600-2-001/18101-07-02/en

copyright © Liebherr-Werk Ehingen GmbH 2018

3.2 Removing the hook block

3.2.1 Preparing the hook block for removal

Note
- ▶ The unreeving of the hook blocks is described in chapter 4.06 of the Crane operating instructions!
- ▶ Observe the „permissible hook block weights“ in the erection and take down charts!

NOTICE
Retaining pin **7** unpinned when setting down the hook block!
If the retaining pin **7** - before setting the hook block on the ground - is not pinned, then the pulley block tips away to the side when it is set down!
Personnel can be severely injured or killed!
- ▶ Insert and secure the retaining pin **7**, before setting the hook block on the ground, at point **U**!

Make sure that the following prerequisites are met:
- – The ground is sufficiently load bearing to take on the weight of the hook block and the auxiliary weights safely.
- – The ground is level and horizontal.

- ▶ Lower the hook block completely to the ground.

When the hook block was placed down on the ground properly:
- ▶ Unreeve the hoist rope according to chapter 4.06 of the Crane operating instructions!

3.2.2 Removing the auxiliary weights

Note
- ▶ The own weight for each auxiliary weight is marked on the auxiliary weight!

WARNING
Toppling of hook block!
If the auxiliary weights are removed one-sided, the hook block can topple over!
Personnel can be severely injured or killed!
- ▶ The auxiliary weights may only be removed **individually** and alternating left and right on the pulley block!
- ▶ The difference between the left and the right side at removal of the auxiliary weights may never be more than one auxiliary weight!
- ▶ Asymmetrical removal of auxiliary weights is prohibited!

Make sure that the following prerequisite is met:
- – The retaining pin **7** is pinned and secured at point **U**.

WARNING
Falling auxiliary weights!
If the auxiliary weights on the pulley block are not properly removed, then they can fall down at removal!
Personnel can be severely injured or killed!
- ▶ Standing under a suspended auxiliary weight is prohibited!

- ▶ Attach the auxiliary weight **10** on the ring screw **14** on the auxiliary crane.
- ▶ Tension the fastening equipment carefully.

LWE/LR 1600-2-001/18101-07-02/en

copyright © Liebherr-Werk Ehingen GmbH 2018

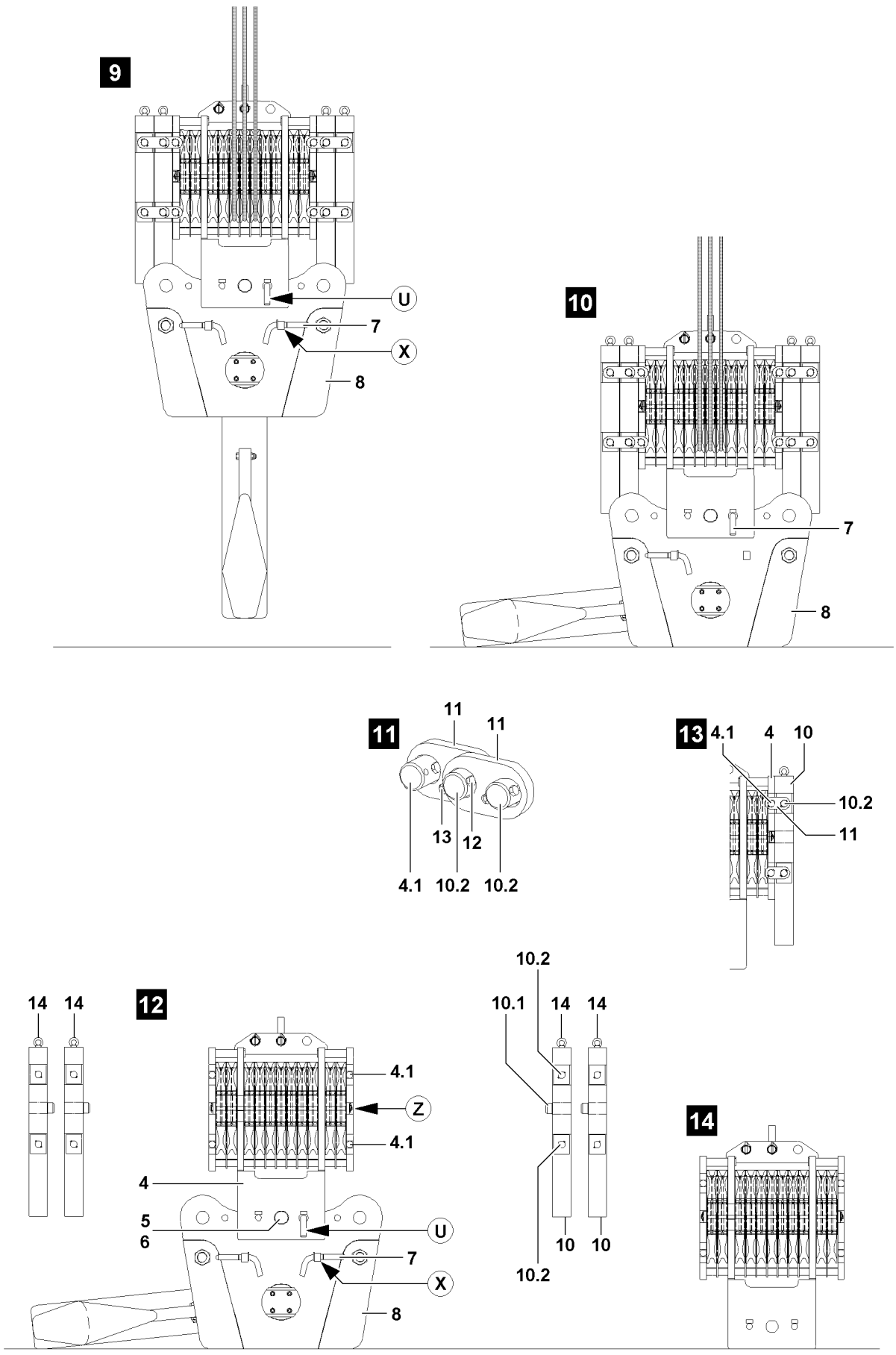

Fig.108142

LWE/LR 1600-2-001/18101-07-02/en

copyright © Liebherr-Werk Ehingen GmbH 2018

WARNING
Oscillating auxiliary weights!
During the removal of the auxiliary weights, the auxiliary weights can start to swing back and forth!
Personnel can be severely injured or killed!
- ▶ It is prohibited for anyone to remain in the danger zone!
- ▶ Make sure that the auxiliary weight which is being removed is properly attached on the auxiliary crane before releasing the mounting brackets!
- ▶ Angular pull is prohibited!

When the fastening equipment is tensioned on the auxiliary weight:
- ▶ Release the screw connection on the mounting brackets of the outermost auxiliary weight and remove the screws.

WARNING
Falling auxiliary weights!
If all mounting brackets **11** are removed simultaneously on an unsecured auxiliary weight, then the auxiliary weight can fall down!
Personnel can be severely injured or killed!
- ▶ Never remove all mounting brackets **11** of an unsecured auxiliary weight at the same time!
- ▶ Always install or remove the mounting brackets **11** alternately!

- ▶ Pull the mounting brackets **11** off to the side.

WARNING
Falling auxiliary weights!
If additional auxiliary weights which are being removed are released, then these auxiliary weights can fall down!
Personnel can be severely injured or killed!
- ▶ Make sure, before removing the outermost auxiliary weight, that the other auxiliary weights are secured with the mounting brackets!

If additional mounting brackets must be removed to release the outermost auxiliary weight:
- ▶ Reinstall the mounting brackets again immediately, so that only the auxiliary weight which is being removed is released.
- ▶ Lift the auxiliary weight with the auxiliary crane from the pulley block.
- ▶ Place the auxiliary weight onto the ground.
- ▶ Remove the auxiliary crane.
- ▶ Remove additional auxiliary weights as described above.

3.2.3 Removing the pulley block on cross brace

Make sure that the following prerequisite is met:
- – The auxiliary weights have been removed.

- ▶ Attach the pulley block **4** on the auxiliary crane.
- ▶ Tension the fastening equipment carefully.
- ▶ Unpin the retaining pin **7** at point **U** and pin into the transport receptacle on the cross brace, point **X**, illustration **12**.
- ▶ Release and unpin the pin **5**.
- ▶ Swing the pulley block **4** out with auxiliary crane.
- ▶ Place the pulley block **4** on the ground, illustration **14**.
- ▶ Remove the auxiliary crane.

LWE/LR 1600-2-001/18101-07-02/en

copyright © Liebherr-Werk Ehingen GmbH 2018

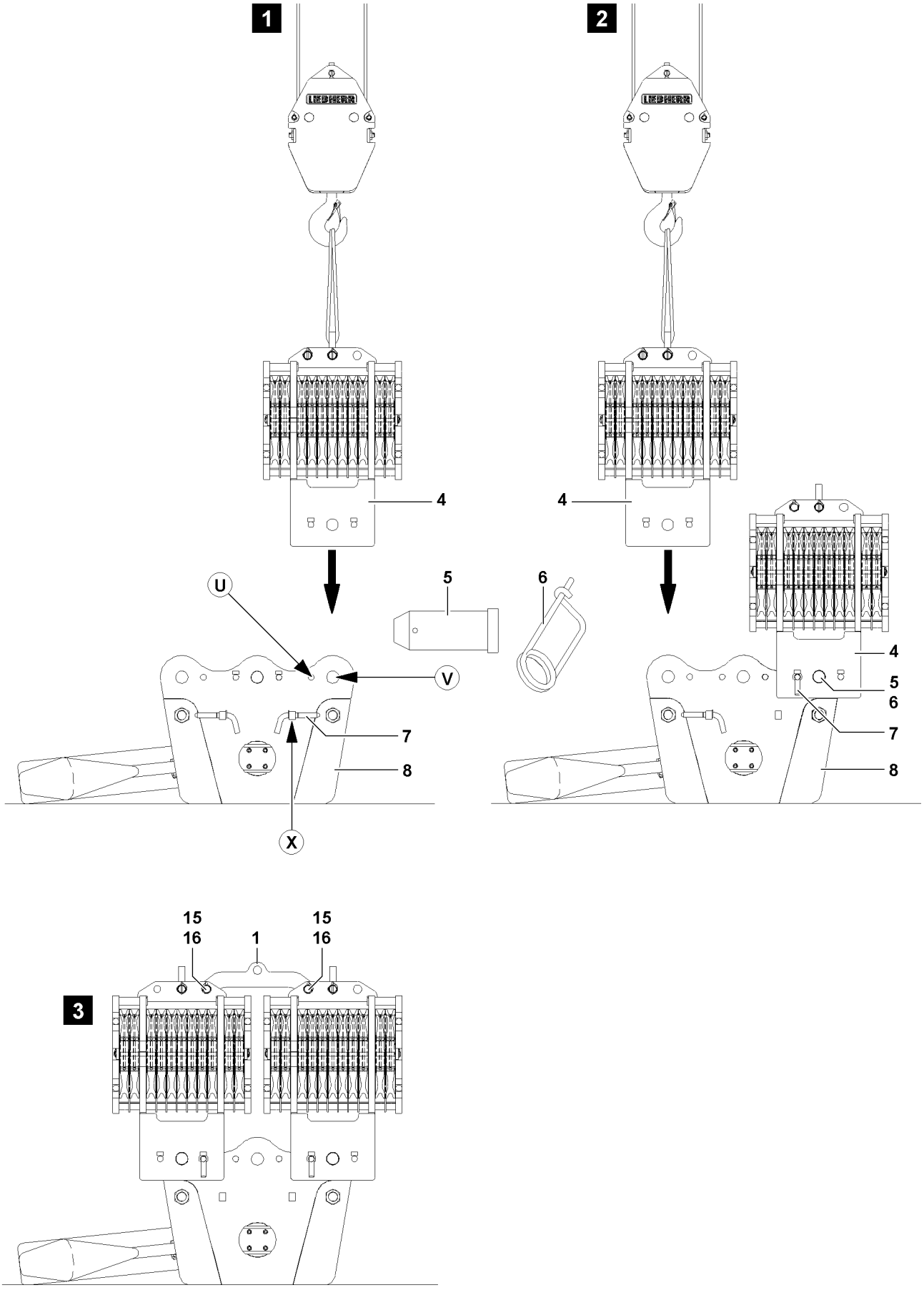

Fig.108121

LWE/LR 1600-2-001/18101-07-02/en

copyright © Liebherr-Werk Ehingen GmbH 2018

4 Installing a double hook block for parallel operation

4.1 Installing the hook block

If the hook blocks are to be used in parallel operation, then the pulley blocks **4** must be installed on the left and right on the cross brace **8**.

4.1.1 Installing the pulley blocks on the cross brace

Make sure that the following prerequisites are met:
- The ground is sufficiently load bearing to take on the weight of the hook block safely.
- The ground is level and horizontal.
- The cross brace **8** is placed on the ground, see illustration **1**.

DANGER
Risk of tipping the pulley blocks!
If the retaining pins **7**, during assembly of the pulley blocks **4** are not pinned on the cross brace, then the pulley blocks tip to the side when the auxiliary crane is removed!
Personnel remaining in the danger zone can be severely injured or killed!
- ▶ Insert the retaining pins **7** into the bores **U** on the hook block!
- ▶ Make sure before removing the auxiliary crane that the pulley blocks are properly pinned and secured!

Note
- ▶ The installation of two pulley blocks **4** is identical and is described on the example of one pulley block!

- ▶ Attach the pulley block **4** onto the auxiliary crane, illustration **1**.
- ▶ Position pulley block **4** on the cross brace **8** and align the pin bore **V**.
- ▶ Insert the pin **5** on point **V** and secure with spring retainer **6**.
- ▶ Unpin the retaining pin **7** from the transport receptacle (point **X**).
- ▶ Insert the retaining pins **7** into the bores (point **U**) on the cross brace **8**, illustration **1**.

When the pulley block **4** is secured by the retaining pins **7** at point **U**:
- ▶ Remove the auxiliary crane, illustration **2**.
- ▶ Install the second pulley block.

4.1.2 Installing the block connector

Make sure that the following prerequisite is met:
- The two pulley blocks **4** are installed and secured on the cross brace **8**.

Both pulley blocks **4** are pinned with the block connector **1**.

- ▶ Attach the block connector **1** on the auxiliary crane.
- ▶ Position the block connector **1** with auxiliary crane in pin position, illustration **3**.
- ▶ Insert the pins **15** on both sides on the pulley blocks **4** and secure with linch pin **16**, illustration **3**.

When the block connector **1** is pinned and secured properly:
- ▶ Remove the auxiliary crane.

LWE/LR 1600-2-001/18101-07-02/en

copyright © Liebherr-Werk Ehingen GmbH 2018

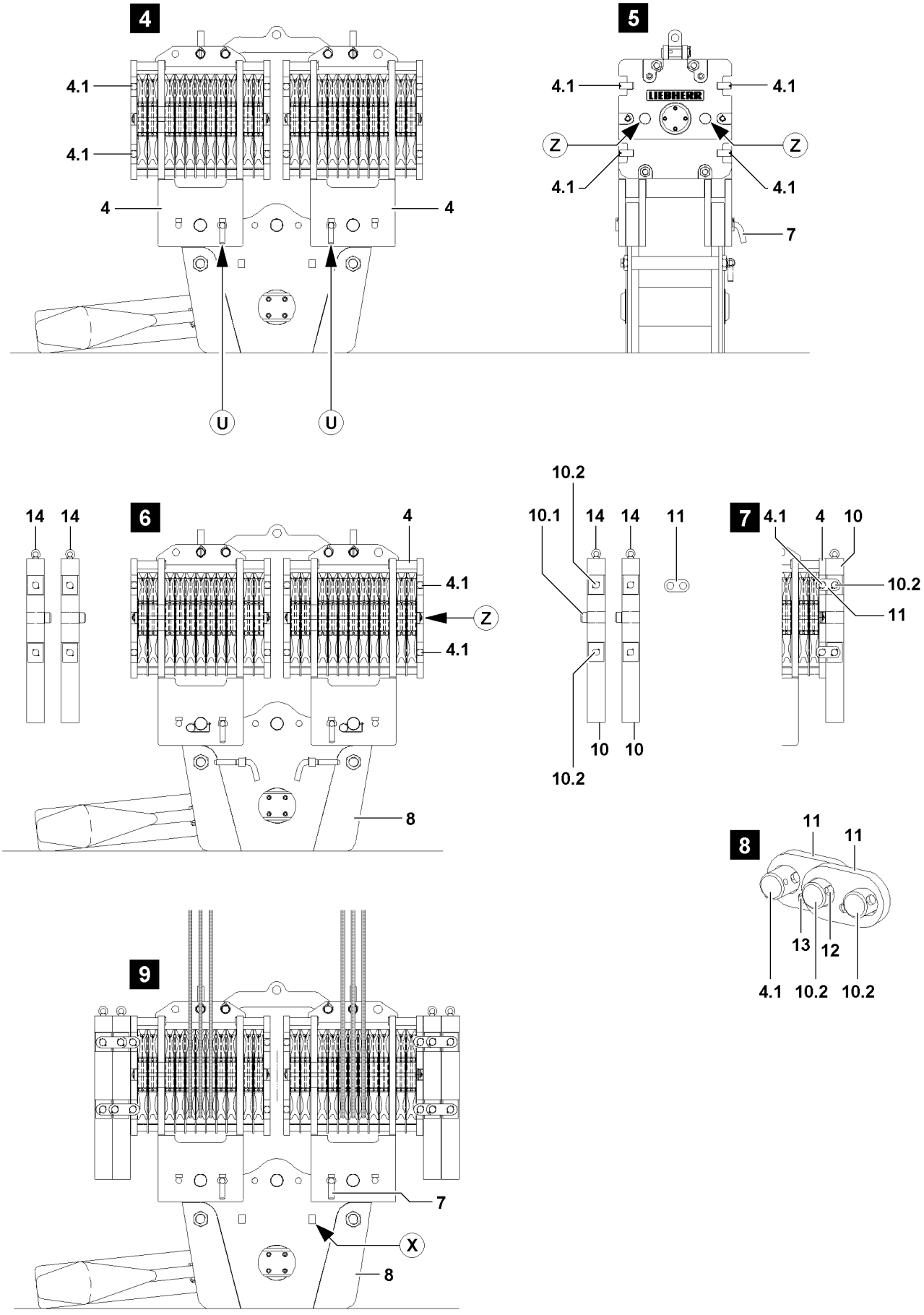

Fig.108120

LWE/LR 1600-2-001/18101-07-02/en

copyright © Liebherr-Werk Ehingen GmbH 2018

4.1.3 Installing the auxiliary weights

Note

▶ The own weight for each auxiliary weight is marked on the auxiliary weight!

WARNING

Toppling of hook block!
If the auxiliary weights are installed one-sided, the hook block can topple over!
Personnel can be severely injured or killed!

▶ The auxiliary weights may only be placed **individually** and alternating left and right on the pulley blocks of the hook block!
▶ When the required auxiliary weight is installed on the pulley blocks, the difference between the left and right side may never be more than one auxiliary weight!
▶ Asymmetrical installation of auxiliary weights is prohibited!
▶ Do not exceed the maximum permissible own weight of the hook block! The maximum permissible own weight is engraved on ballastable hook blocks. See „Engraving WT max.“.

Make sure that the following prerequisites are met:

– The hook block is placed on the ground.
– The pulley blocks **4**are properly installed and secured.
– The retaining pins **7** are pinned in and secured at point **U**.
– The block connector **1** is properly installed and secured.

WARNING

Falling auxiliary weights!
If the auxiliary weights on the pulley blocks are not properly installed, then they can fall down during installation or during crane operation!
Personnel can be severely injured or killed!

▶ Standing under a suspended auxiliary weight is prohibited!
▶ Make sure that the auxiliary weights are properly installed and secured!
▶ Crane operation with insufficiently secured auxiliary weights is prohibited!

▶ Attach the auxiliary weight **10** on the ring screw **14** on the auxiliary crane.

WARNING

Danger of crushing!
When swinging the auxiliary weights to the pulley block, personnel can be severely injured or killed!
Fingers, hands and arms can be crushed or severed!

▶ It is prohibited for anyone to remain between the pulley blocks and the auxiliary weight!
▶ Swing auxiliary weights in to the pulley block with utmost caution and at the least possible speed!

LWE/LR 1600-2-001/18101-07-02/en

copyright © Liebherr-Werk Ehingen GmbH 2018

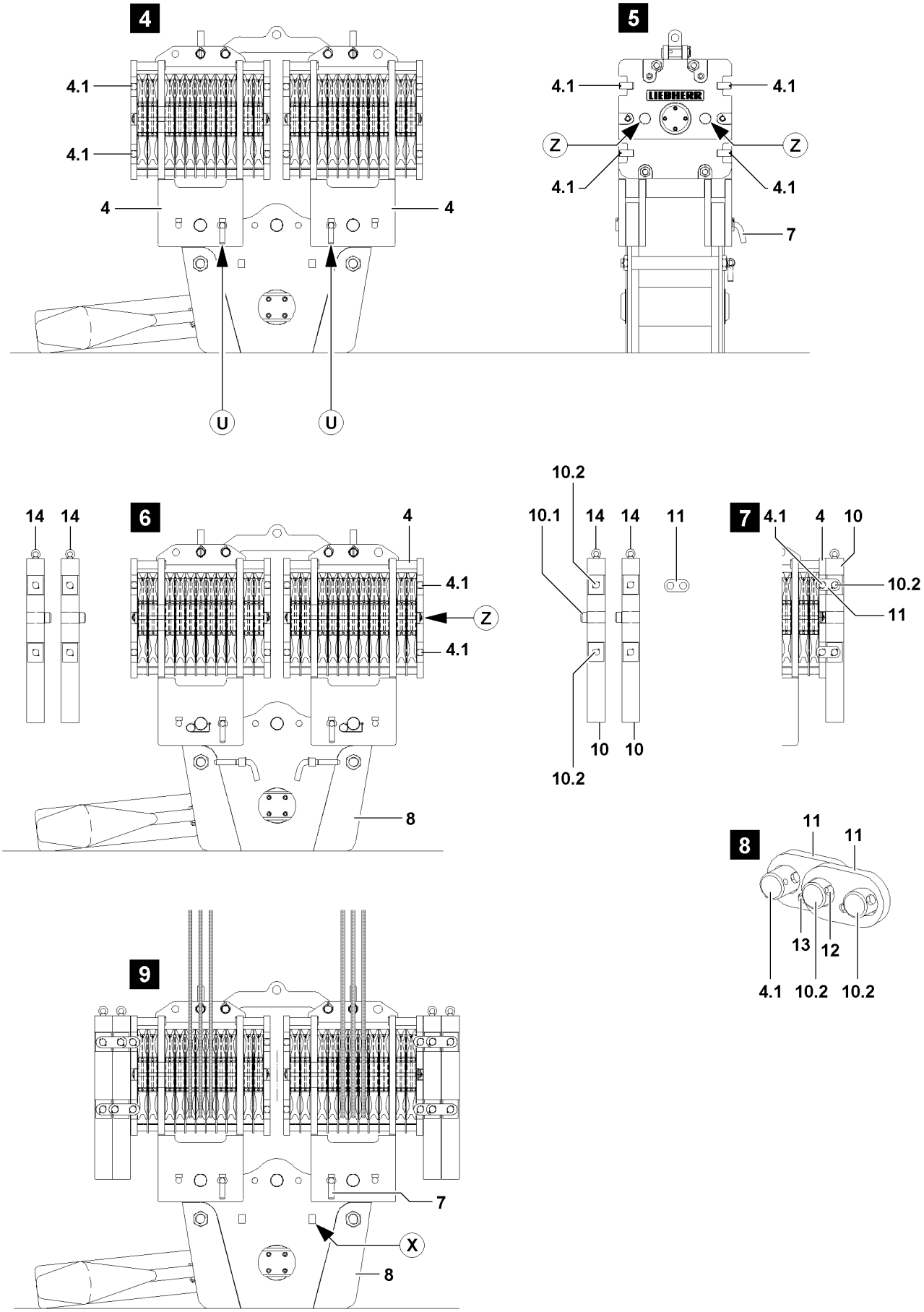

Fig.108120

LWE/LR 1600-2-001/18101-07-02/en

copyright © Liebherr-Werk Ehingen GmbH 2018

- ▶ Align the auxiliary weight **10** on the pulley block **4**.
- ▶ Move the centering pin **10.1** of the auxiliary weight into the centering bores **Z** on the pulley block **4**, illustration **7**.

WARNING
Falling auxiliary weights!
If all mounting brackets **11** are removed simultaneously on an unsecured auxiliary weight, then the auxiliary weight can fall down!
Personnel can be severely injured or killed!
- ▶ Never remove all mounting brackets **11** of an unsecured auxiliary weight at the same time!
- ▶ Always install or remove the mounting brackets **11** alternately!

- ▶ Install the mounting brackets **11** on the side and connect the pulley block **4** with the auxiliary weight **10**, illustration **8**.
- ▶ Secure the mounting brackets **11** with screws **12** and lock nuts **13**, illustration **8**.

Note
- ▶ Additional auxiliary weights must be connected with the mounting brackets **11**!

WARNING
Falling auxiliary weights!
The auxiliary weights can fall down to the side when the auxiliary crane is removed!
Personnel can be severely injured or killed!
- ▶ Remove the auxiliary crane only when it is ensured that the auxiliary weight **10** is properly secured with the mounting brackets **11**!

When the respective auxiliary weight is properly installed and secured:
- ▶ Remove the auxiliary crane.

4.1.4 Preparing the hook block for crane operation

Note
- ▶ The reeving of the hook blocks is described in chapter 4.06 of the Crane operating instructions!
- ▶ Observe the „permissible hook block weights“ in the erection and take down charts!

- ▶ Reeve the hoist rope according to the instructions in chapter 4.06 of the Crane operating instructions and the reeving plans!

NOTICE
Retaining pins **7** pinned when lifting the load!
If the retaining pins **7** are not unpinned before the crane operation, then the retaining pins **7** may be shorn off when lifting the load!
- ▶ Unpin the retaining pin **7** from the hook block before crane operation!

When the hook block is properly reeved and has been lifted off the ground:
- ▶ Unpin the retaining pin **7** and pin and secure into the transport receptacle (point **X**), illustration **9**.

LWE/LR 1600-2-001/18101-07-02/en

copyright © Liebherr-Werk Ehingen GmbH 2018

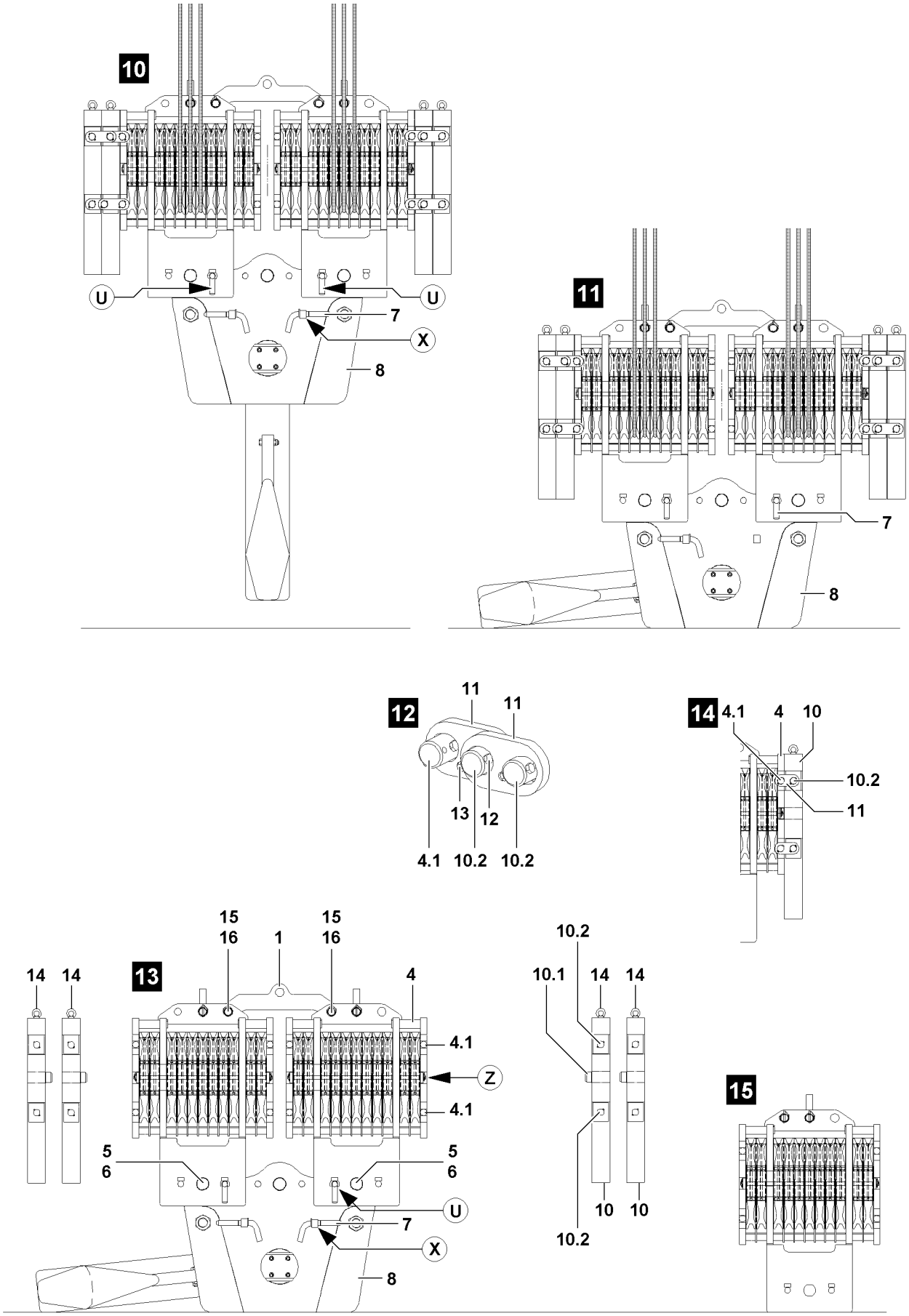

LWE/LR 1600-2-001/18101-07-02/en

Fig.108143

copyright © Liebherr-Werk Ehingen GmbH 2018

4.2 Removing the hook block

4.2.1 Preparing the hook block for removal

Note

▶ The unreeving of the hook blocks is described in chapter 4.06 of the Crane operating instructions!

▶ Observe the „permissible hook block weights“ in the erection and take down charts!

NOTICE

Retaining pin **7** unpinned when setting down the hook block!
If the retaining pin **7** - before setting the hook block on the ground - is not pinned, then the pulley blocks tip away to the side when the hoist rope is unreeved!
Personnel can be severely injured or killed!

▶ Before setting the hook block on the ground, insert and secure the retaining pins **7** on both pulley blocks at point **U**!

Make sure that the following prerequisites are met:

– The ground is sufficiently load bearing to take on the weight of the hook block and the auxiliary weights safely.
– The ground is level and horizontal.

▶ Lower the hook block completely to the ground.

When the hook block was placed down on the ground properly:

▶ Unreeve the hoist rope(s) according to chapter 4.06 of the Crane operating instructions!

4.2.2 Removing the auxiliary weights

Note

▶ The own weight for each auxiliary weight is marked on the auxiliary weight!

WARNING

Toppling of hook block!
If the auxiliary weights are removed one-sided, the hook block can topple over!
Personnel can be severely injured or killed!

▶ The auxiliary weights may only be removed **individually** and alternating left and right on the pulley blocks of the hook block!

▶ The difference between the left and the right side at removal of the auxiliary weights may never be more than one auxiliary weight!

▶ Asymmetrical removal of auxiliary weights is prohibited!

Make sure that the following prerequisites are met:

– The retaining pins **7** are pinned and secured on both sides at point **U**.
– The block connector **1** has been removed.

LWE/LR 1600-2-001/18101-07-02/en

copyright © Liebherr-Werk Ehingen GmbH 2018

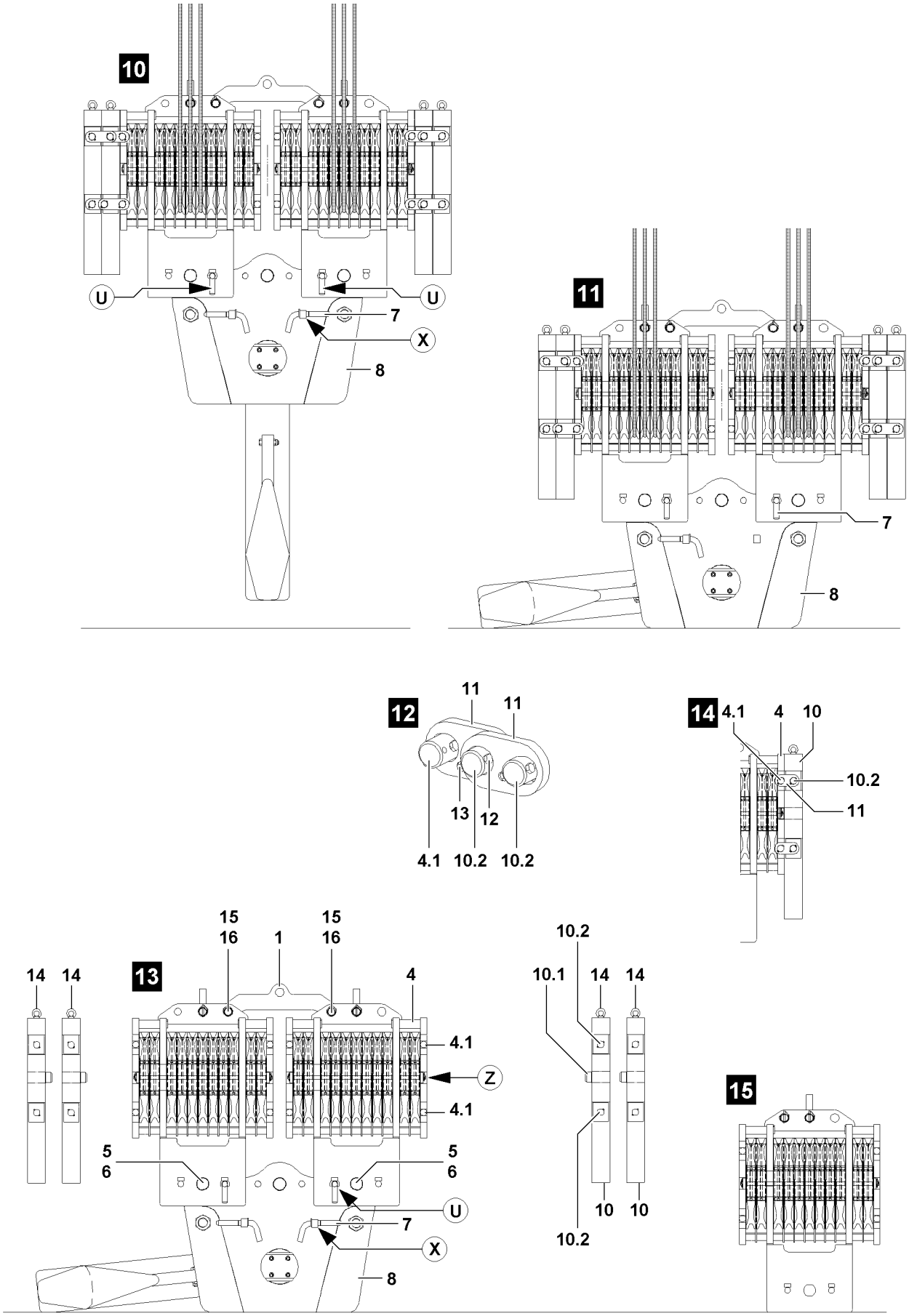

LWE/LR 1600-2-001/18101-07-02/en

Fig.108143

copyright © Liebherr-Werk Ehingen GmbH 2018

WARNING
Falling auxiliary weights!
If the auxiliary weights on the pulley blocks are not properly removed, then they can fall down at removal!
Personnel can be severely injured or killed!
▶ Standing under a suspended auxiliary weight is prohibited!

▶ Attach the auxiliary weight **10** on the ring screw **14** on the auxiliary crane.
▶ Tension the fastening equipment carefully.

WARNING
Oscillating auxiliary weights!
During the removal of the auxiliary weights, the auxiliary weights can start to swing back and forth!
Personnel can be severely injured or killed!
▶ It is prohibited for anyone to remain in the danger zone!
▶ Make sure that the auxiliary weight which is being removed is properly attached on the auxiliary crane before releasing the mounting brackets!
▶ Angular pull is prohibited!

When the fastening equipment is tensioned on the auxiliary weight:
▶ Release the screw connection on the mounting brackets of the outermost auxiliary weight and remove the screws.

WARNING
Falling auxiliary weights!
If all mounting brackets **11** are removed simultaneously on an unsecured auxiliary weight, then the auxiliary weight can fall down!
Personnel can be severely injured or killed!
▶ Never remove all mounting brackets **11** of an unsecured auxiliary weight at the same time!
▶ Always install or remove the mounting brackets **11** alternately!

▶ Pull the mounting brackets **11** off to the side.

WARNING
Falling auxiliary weights!
If additional auxiliary weights which are being removed are released, then these auxiliary weights can fall down!
Personnel can be severely injured or killed!
▶ Make sure, before removing the outermost auxiliary weight, that the other auxiliary weights are secured with the mounting brackets **11**!

If additional mounting brackets **11** must be removed to release the outermost auxiliary weight:
▶ Reinstall the mounting brackets again immediately, so that only the auxiliary weight which is being removed is released.
▶ Lift the auxiliary weight with the auxiliary crane from the pulley block.
▶ Place the auxiliary weight onto the ground.
▶ Remove the auxiliary crane.
▶ Remove additional auxiliary weights as described above.

LWE/LR 1600-2-001/18101-07-02/en

copyright © Liebherr-Werk Ehingen GmbH 2018

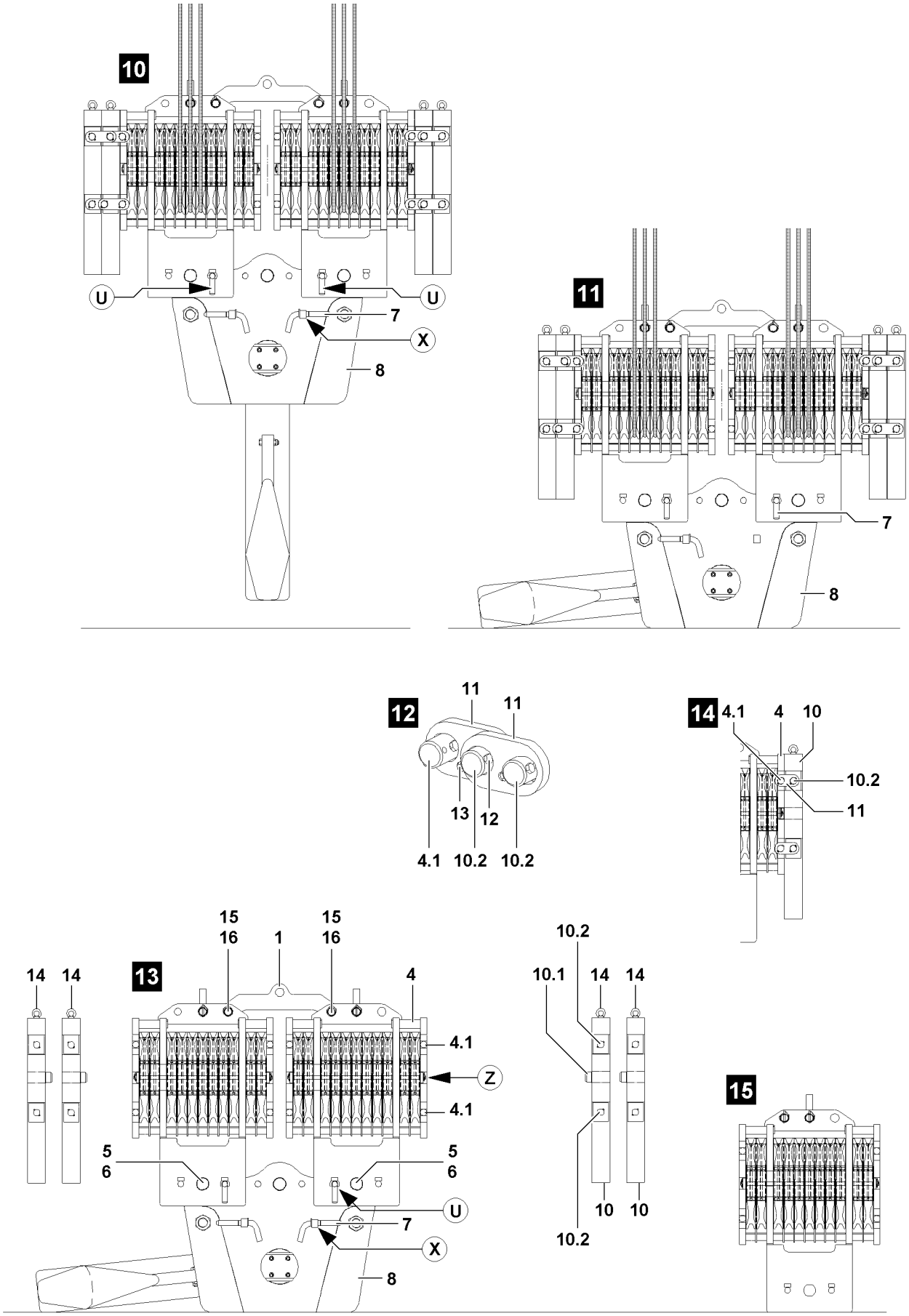

LWE/LR 1600-2-001/18101-07-02/en

Fig.108143

copyright © Liebherr-Werk Ehingen GmbH 2018

4.2.3 Removing the block connector

▶ Attach the block connector **1** on the auxiliary crane.

DANGER
Risk of tipping the pulley blocks!
If the retaining pins **7**, during removal of the block connector **1** are not pinned on the pulley blocks, then the pulley blocks tip to the side when the block connector is removed!
Personnel remaining in the danger zone can be severely injured or killed!
▶ Insert the retaining pins **7** into the bores **U** on the hook block!
▶ Make sure before removing the block connector that the pulley blocks are properly pinned and secured!

▶ Release and unpin the pins **15** on both sides on the pulley blocks **4**.
▶ Remove the block connector **1** on the auxiliary crane.
▶ Place the block connector **1** onto the ground.
▶ Remove the auxiliary crane.

4.2.4 Removing the pulley blocks on the cross brace

Note
▶ The removal of two pulley blocks is identical and is described on the example of one pulley block!

Make sure that the following prerequisites are met:
– The auxiliary weights have been removed.
– The block connector has been removed.

▶ Attach the pulley block **4** on the auxiliary crane.
▶ Tension the fastening equipment carefully.
▶ Unpin the retaining pin **7** at point **U** and pin into the transport receptacle on the cross brace, point **X**, illustration **13**.
▶ Release and unpin the pin **5**.
▶ Swing the pulley block **4** out with auxiliary crane.
▶ Place the pulley block **4** on the ground.
▶ Remove the auxiliary crane.
▶ Remove the second pulley block.

LWE/LR 1600-2-001/18101-07-02/en

copyright © Liebherr-Werk Ehingen GmbH 2018

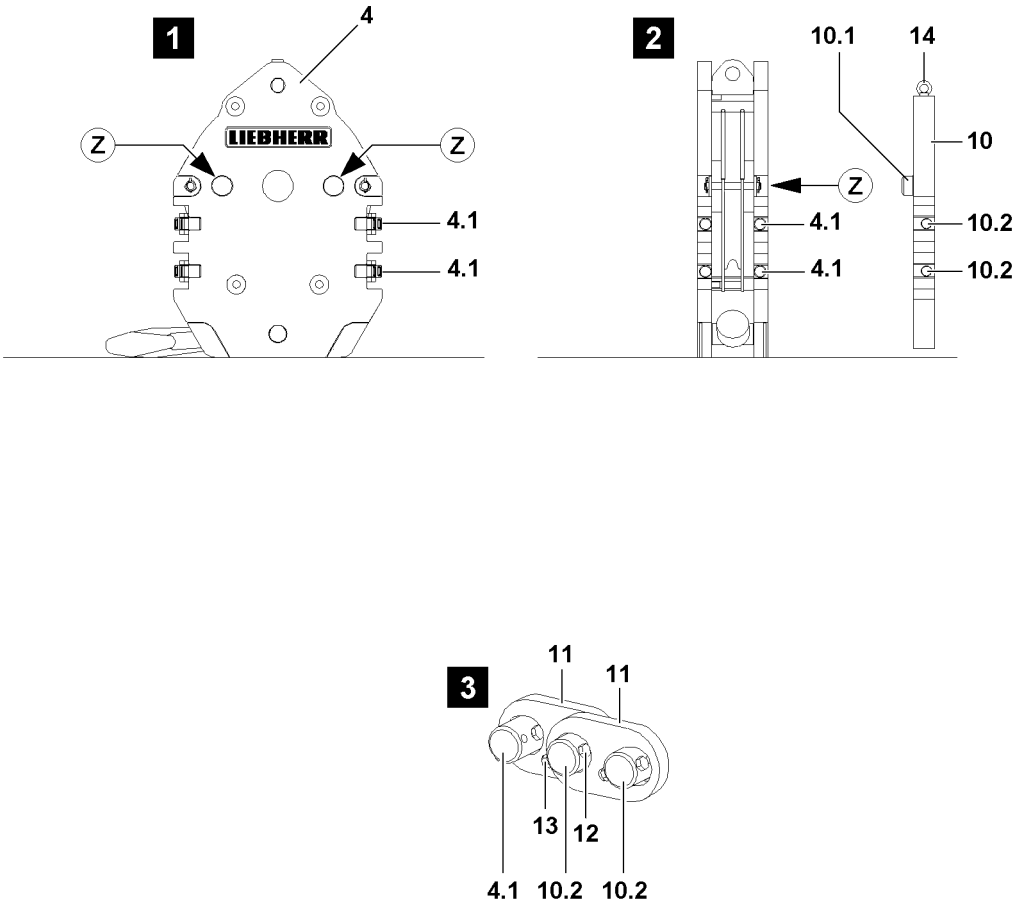

LWE/LR 1600-2-001/18101-07-02/en

Fig.108146

copyright © Liebherr-Werk Ehingen GmbH 2018

5 Single hook blocks

5.1 Installing the single blocks

5.1.1 Installing the auxiliary weights

Note

▶ The own weight for each auxiliary weight is marked on the auxiliary weight!

WARNING

Toppling of hook block!

If the auxiliary weights are installed one-sided, the hook block can topple over!

Personnel can be severely injured or killed!

▶ The auxiliary weights may only be installed **individually** and alternately on the left and right on the hook block!

▶ When the required auxiliary weight is installed on the hook block, the difference between the left and right side may never be more than one auxiliary weight!

▶ Asymmetrical installation of auxiliary weights is prohibited!

▶ Do not exceed the maximum permissible own weight of the hook block! The maximum permissible own weight is engraved on ballastable hook blocks. See „Engraving WT max.“.

Make sure that the following prerequisite is met:

– The hook block is placed on the ground.

WARNING

Falling auxiliary weights!

If the auxiliary weights are not properly installed on the hook block, then they can fall down during installation or in crane operation!

Personnel can be severely injured or killed!

▶ Standing under a suspended auxiliary weight is prohibited!

▶ Make sure that the auxiliary weights are properly installed and secured!

▶ Crane operation with insufficiently secured auxiliary weights is prohibited!

▶ Attach the auxiliary weight **10** on the ring screw **14** on the auxiliary crane.

WARNING

Danger of crushing!

When swinging the auxiliary weights to the hook block, personnel can be severely injured or killed!

Fingers, hands and arms can be crushed or severed!

▶ It is prohibited for anyone to remain between the hook block and the auxiliary weight!

▶ Swing auxiliary weights in to the hook block with utmost caution and at the least possible speed!

LWE/LR 1600-2-001/18101-07-02/en

copyright © Liebherr-Werk Ehingen GmbH 2018

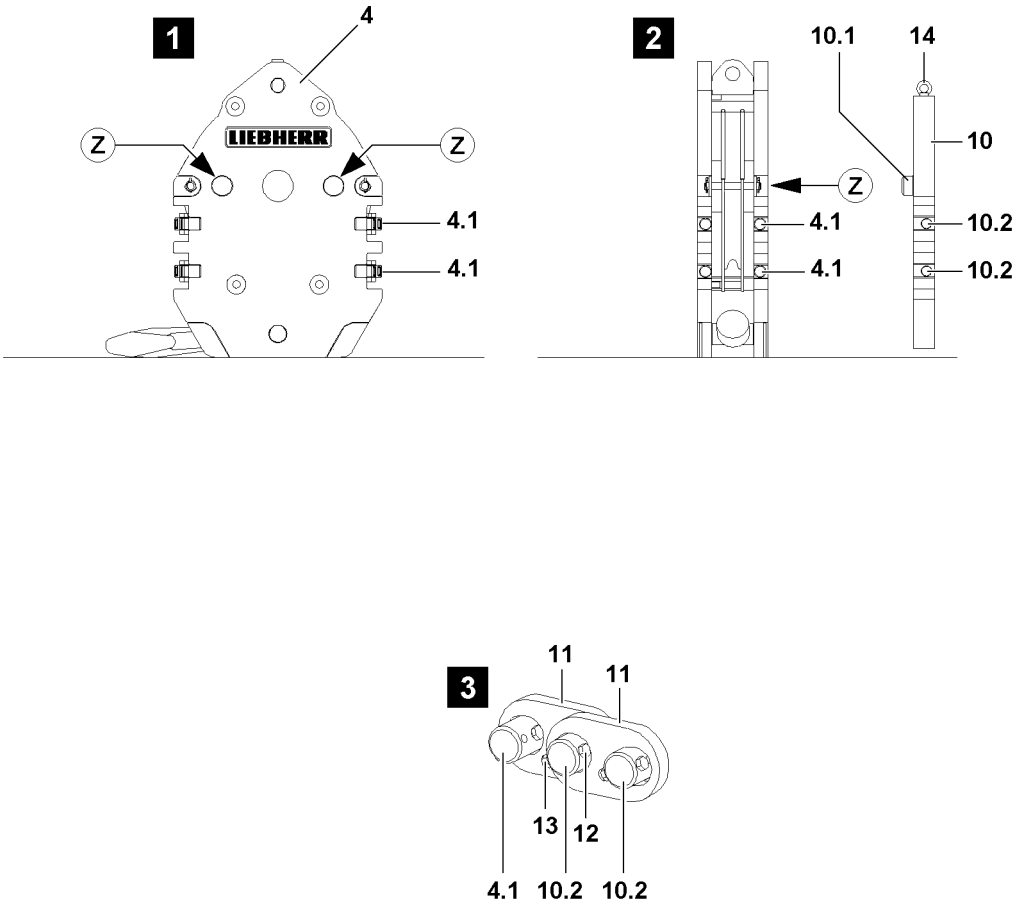

LWE/LR 1600-2-001/18101-07-02/en

Fig.108146

copyright © Liebherr-Werk Ehingen GmbH 2018

- ▶ Align the auxiliary weight **10** on the hook block.
- ▶ Move the centering pin **10.1** of the auxiliary weight into the centering bores **Z** on the hook block.

WARNING
Falling auxiliary weights!
If all mounting brackets **11** are removed simultaneously on an unsecured auxiliary weight, then the auxiliary weight can fall down!
Personnel can be severely injured or killed!
- ▶ Never remove all mounting brackets **11** of an unsecured auxiliary weight at the same time!
- ▶ Always install or remove the mounting brackets **11** alternately!

- ▶ Install the mounting brackets **11** on the side and connect the hook block with the auxiliary weight **10**, illustration **3**.
- ▶ Secure the mounting brackets **11** with screws **12** and lock nuts **13**, illustration **3**.

Note
- ▶ Additional auxiliary weights must be connected with the mounting brackets **11**!

WARNING
Falling auxiliary weights!
The auxiliary weights can fall down by removing the auxiliary crane!
Personnel can be severely injured or killed!
- ▶ Remove the auxiliary crane only when it is ensured that the auxiliary weight **10** is properly secured with the mounting brackets **11**!

When the respective auxiliary weight is properly installed and secured:
- ▶ Remove the auxiliary crane.

5.1.2 Preparing the hook block for crane operation

Note
- ▶ The reeving of the hook blocks is described in chapter 4.06 of the Crane operating instructions!
- ▶ Observe the „permissible hook block weights“ in the erection and take down charts!

- ▶ Reeve the hoist rope according to the instructions in chapter 4.06 of the Crane operating instructions and the reeving plans!

LWE/LR 1600-2-001/18101-07-02/en

copyright © Liebherr-Werk Ehingen GmbH 2018

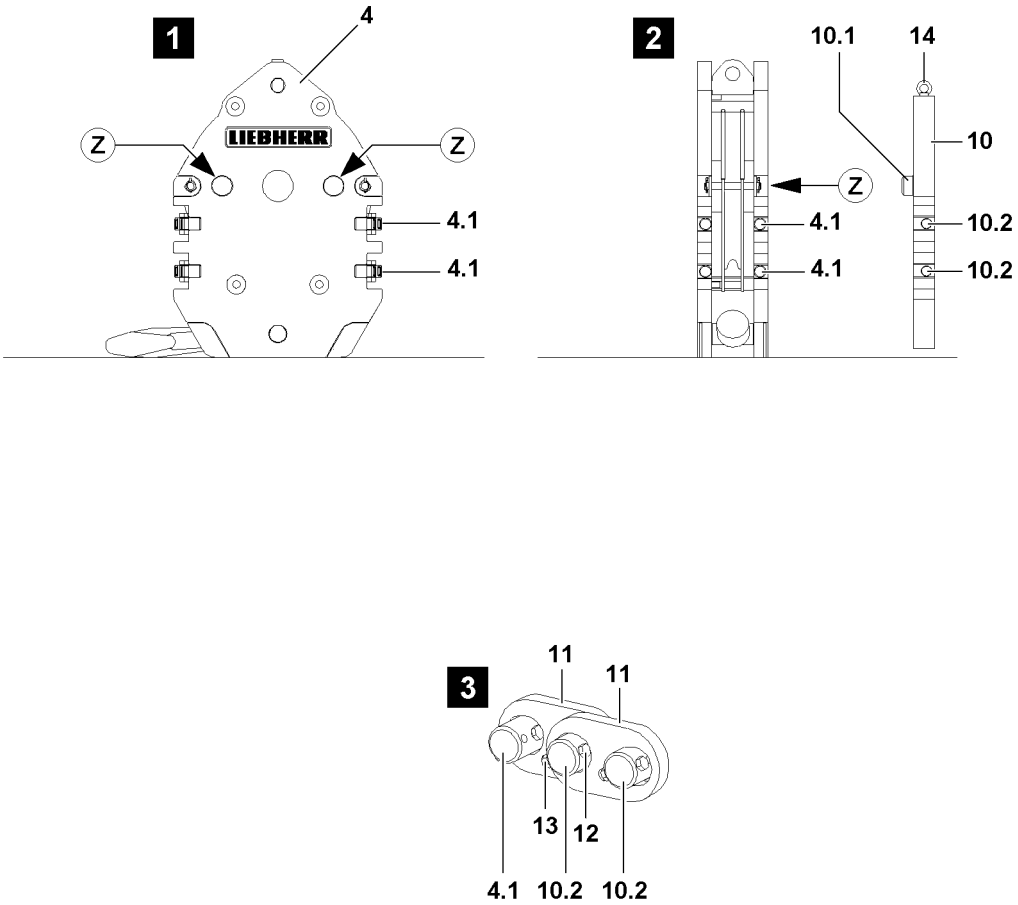

LWE/LR 1600-2-001/18101-07-02/en

Fig.108146

copyright © Liebherr-Werk Ehingen GmbH 2018

5.2 Removing the single blocks

5.2.1 Preparing the hook block for removal

Note
- ▶ The unreeving of the hook blocks is described in chapter 4.06 of the Crane operating instructions!
- ▶ Observe the „permissible hook block weights“ in the erection and take down charts!

Make sure that the following prerequisites are met:
- The ground is sufficiently load bearing to take on the weight of the hook block and the auxiliary weights safely.
- The ground is level and horizontal.

▶ Lower the hook block completely to the ground.

When the hook block was placed down on the ground properly:
▶ Unreeve the hoist rope according to chapter 4.06 of the Crane operating instructions!

5.2.2 Removing the auxiliary weights

Note
- ▶ The own weight for each auxiliary weight is marked on the auxiliary weight!

WARNING
Toppling of hook block!
If the auxiliary weights are removed one-sided, the hook block can topple over!
Personnel can be severely injured or killed!
- ▶ The auxiliary weights may only be removed **individually** and alternately on the left and right on the hook block!
- ▶ The difference between the left and the right side at removal of the auxiliary weights may never be more than one auxiliary weight!
- ▶ Asymmetrical removal of auxiliary weights is prohibited!

WARNING
Falling auxiliary weights!
If the auxiliary weights on the pulley block are not properly removed, then they can fall down at removal!
Personnel can be severely injured or killed!
- ▶ Standing under a suspended auxiliary weight is prohibited!

- ▶ Attach the auxiliary weight **10** on the ring screw **14** on the auxiliary crane.
- ▶ Tension the fastening equipment carefully.

LWE/LR 1600-2-001/18101-07-02/en

copyright © Liebherr-Werk Ehingen GmbH 2018

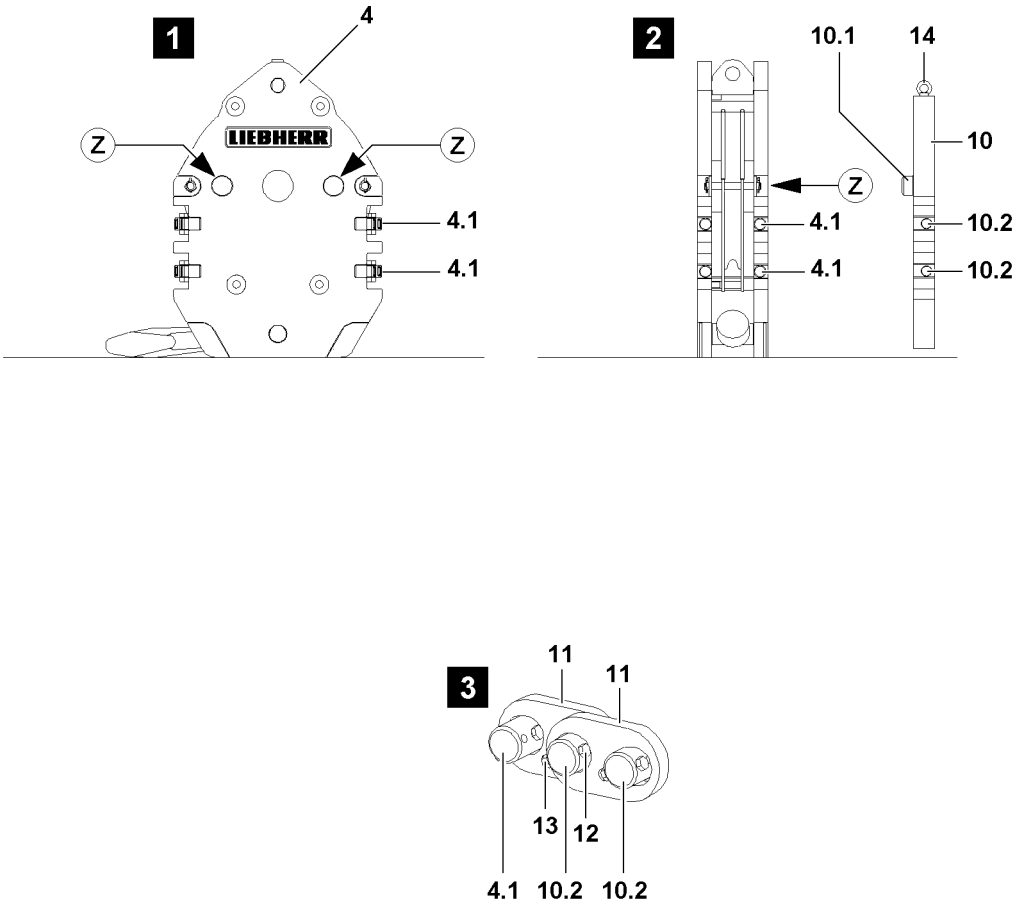

LWE/LR 1600-2-001/18101-07-02/en

Fig.108146

copyright © Liebherr-Werk Ehingen GmbH 2018

WARNING
Oscillating auxiliary weights!
During the removal of the auxiliary weights, the auxiliary weights can start to swing back and forth!
Personnel can be severely injured or killed!
- ▶ It is prohibited for anyone to remain in the danger zone!
- ▶ Make sure that the auxiliary weight which is being removed is properly attached on the auxiliary crane before releasing the mounting brackets!
- ▶ Angular pull is prohibited!

When the fastening equipment is tensioned on the auxiliary weight:
- ▶ Release the screw connection on the mounting brackets of the outermost auxiliary weight and remove the screws.

WARNING
Falling auxiliary weights!
If all mounting brackets **11** are removed simultaneously on an unsecured auxiliary weight, then the auxiliary weight can fall down!
Personnel can be severely injured or killed!
- ▶ Never remove all mounting brackets **11** of an unsecured auxiliary weight at the same time!
- ▶ Always install or remove the mounting brackets **11** alternately!

- ▶ Pull the mounting brackets **11** off to the side.

WARNING
Falling auxiliary weights!
If additional auxiliary weights which are being removed are released, then these auxiliary weights can fall down!
Personnel can be severely injured or killed!
- ▶ Make sure, before removing the outermost auxiliary weight, that the other auxiliary weights are secured with the mounting brackets!

If additional mounting brackets must be removed to release the outermost auxiliary weight:
- ▶ Reinstall the mounting brackets **11** again immediately, so that only the auxiliary weight which is being removed is released.
- ▶ Lift the auxiliary weight with the auxiliary crane from the hook block.
- ▶ Place the auxiliary weight onto the ground.
- ▶ Remove the auxiliary crane.
- ▶ Remove additional auxiliary weights as described above.

LWE/LR 1600-2-001/18101-07-02/en

copyright © Liebherr-Werk Ehingen GmbH 2018

Empty page!

LWE/LR 1600-2-001/18101-07-02/en

copyright © Liebherr-Werk Ehingen GmbH 2018

5.30 Pin pulling device

1	Pin pulling device	3
2	Hydraulic oil level	3
3	Pin pulling device	4
4	Pinning and unpinning the pin with pin pulling cylinder 2	6
5	Pinning and unpinning the pin with pin pulling cylinder 3	7

LWE/LR 1600-2-001/18101-07-02/en

copyright © Liebherr-Werk Ehingen GmbH 2018

LWE/LR 1600-2-001/18101-07-02/en

Fig.195219

copyright © Liebherr-Werk Ehingen GmbH 2018

1 Pin pulling device

The pin pulling device consists of the hydraulic aggregate and the pin pulling cylinders. The connector pins on the crawler crane and on the lattice sections are pinned and unpinned with these pin pulling cylinders.

Note
▶ The pin pulling cylinder **2** is used for pinning and unpinning on the chassis.

Note
▶ The pin pulling cylinder **3** is used for pinning and unpinning on the lattice sections.

DANGER
Danger of accident!
When you disassemble unsecured or unsupported crane parts, they can fall down.
Death, severe bodily injuries, property damage.
▶ Never stand **under** unsecured or unsupported crane parts and unpin the pins.
▶ Never unpin the connector pins on unsecured or unsupported booms.
▶ It is prohibited for anyone to remain under the crane components or within the complete danger zone during the pinning and unpinning procedure.
▶ Do not lean the ladder against the crane part being disassembled.

WARNING
Pressure in the hydraulic lines!
If the pressure supply is not interrupted before connecting / releasing the hydraulic lines, the hydraulic oil can escape with high pressure.
Death, severe bodily injuries, property damage.
▶ Release the pressure in the hydraulic system before connecting / disconnecting: Interrupt the pressure supply and wait for a short time.

WARNING
Loss of pressure or leakage!
Incorrectly coupled or self-loosening quick couplings (particularly return lines) can result in serious accidents due to component failure.
Death, severe bodily injuries, property damage.
▶ Check that the quick couplings have been properly connected before using the crane.
▶ Connect the coupling components (sleeve and connector) and screw together with the knurled nut.
▶ Tighten the hydraulic coupling by hand. Turn the knurled nut until it reaches a tangible, fixed stop position.

2 Hydraulic oil level

Note
▶ The hydraulic oil tank is filled when starting the hydraulic aggregate.
▶ Check the hydraulic oil level, see Operating and maintenance instructions for the Hydraulic aggregate.

LWE/LR 1600-2-001/18101-07-02/en

copyright © Liebherr-Werk Ehingen GmbH 2018

NOTICE
Emerging hydraulic oil!
When the hydraulic aggregate is changed and / or the operational crane hydraulic is connected, then there is a danger that the hydraulic oil is supplied during the working process into the hydraulic tank circuit and thus forwarded into the hydraulic tank of the hydraulic aggregate.
The forwarded hydraulic oil quantity exceeds the tank volume of the hydraulic aggregate. Hydraulic oil runs over and contaminates the environment.

- ▶ Make sure that the hydraulic aggregate is separated from the hydraulic circuit of the crane before hydraulic components are actuated via the crane hydraulic.
- ▶ Make sure, before the hydraulic aggregate is separated from the crane, that the working process is ended with the same hydraulic aggregate.
- ▶ Make sure that the identical amount of hydraulic oil is in the hydraulic oil tank of the hydraulic aggregate after application than before.

3 Pin pulling device

Depending on the delivery condition of the cane, the crane can have the following hydraulic aggregates.

Note

- ▶ Operate the pin pulling device, see the Operating and maintenance instructions for the Hydraulic aggregate.

3.1 Hydraulic aggregate on wheels

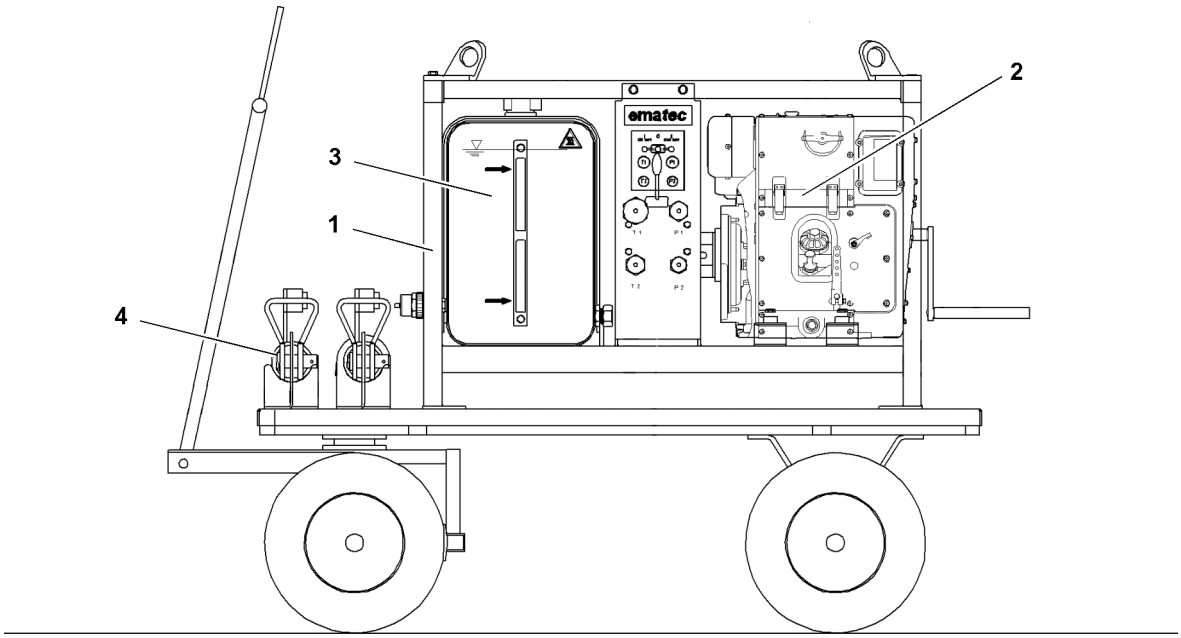

Fig.146739: Hydraulic aggregate on wheels

1	Pin pulling device	**3**	Hydraulic oil tank
2	Hydraulic aggregate	**4**	Pin pulling cylinder

LWE/LR 1600-2-001/18101-07-02/en

copyright © Liebherr-Werk Ehingen GmbH 2018

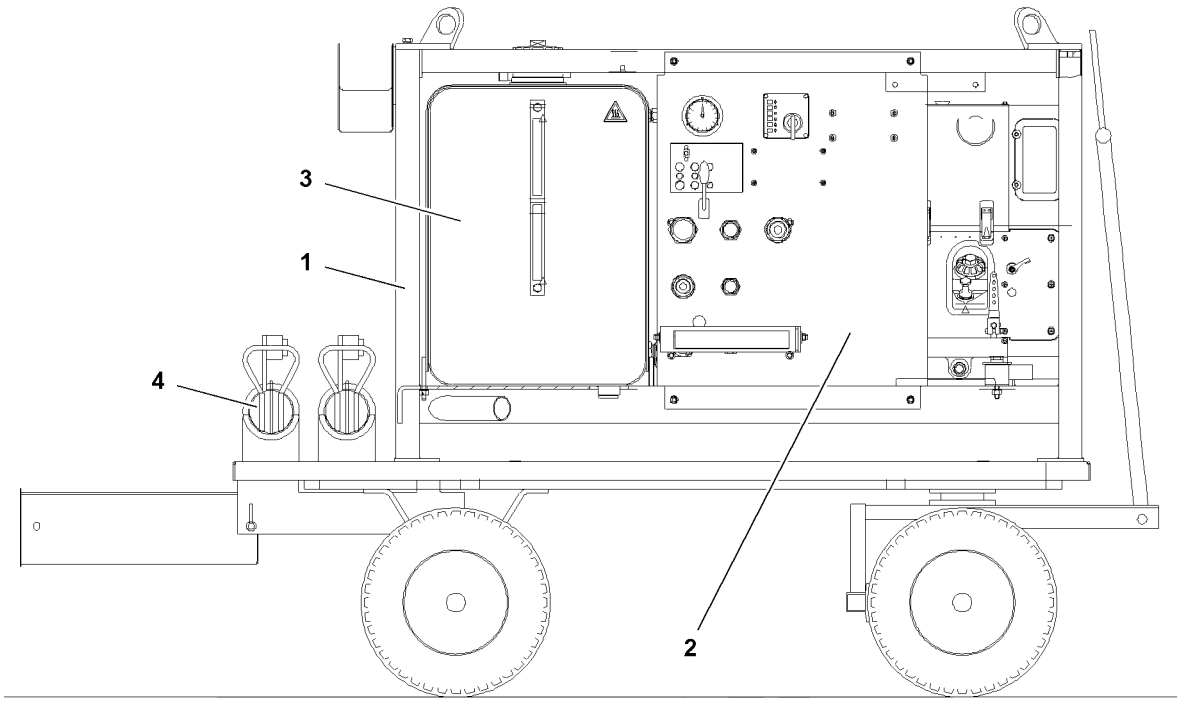

Fig.146741: Hydraulic aggregate on wheels

1 Pin pulling device
2 Hydraulic aggregate
3 Hydraulic oil tank
4 Pin pulling cylinder

3.2 Hydraulic aggregate on the crawler

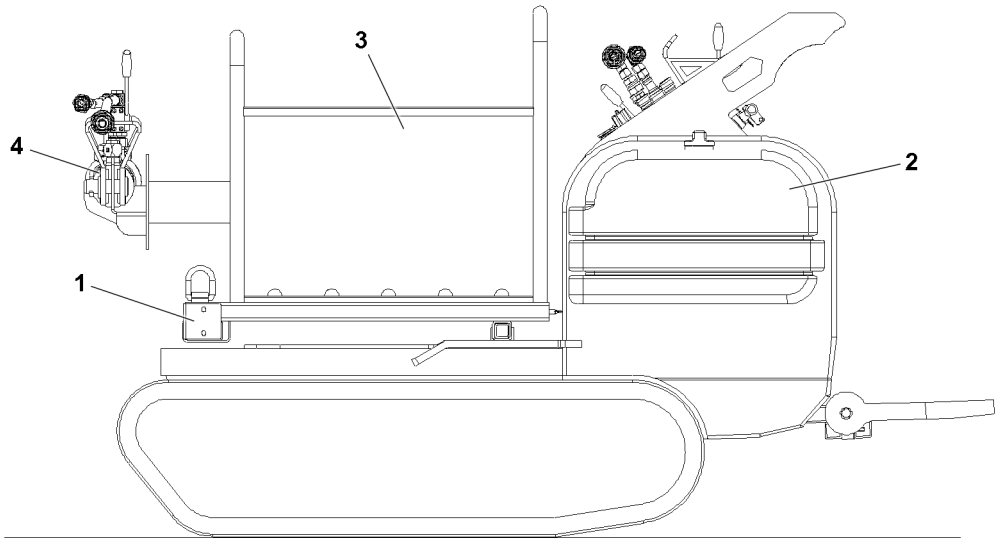

Fig.146738: Hydraulic aggregate on the crawler

1 Pin pulling device on the crawler tractor
2 Hydraulic aggregate
3 Hydraulic oil tank
4 Pin pulling cylinder

LWE/LR 1600-2-001/18101-07-02/en

copyright © Liebherr-Werk Ehingen GmbH 2018

4 Pinning and unpinning the pin with pin pulling cylinder 2

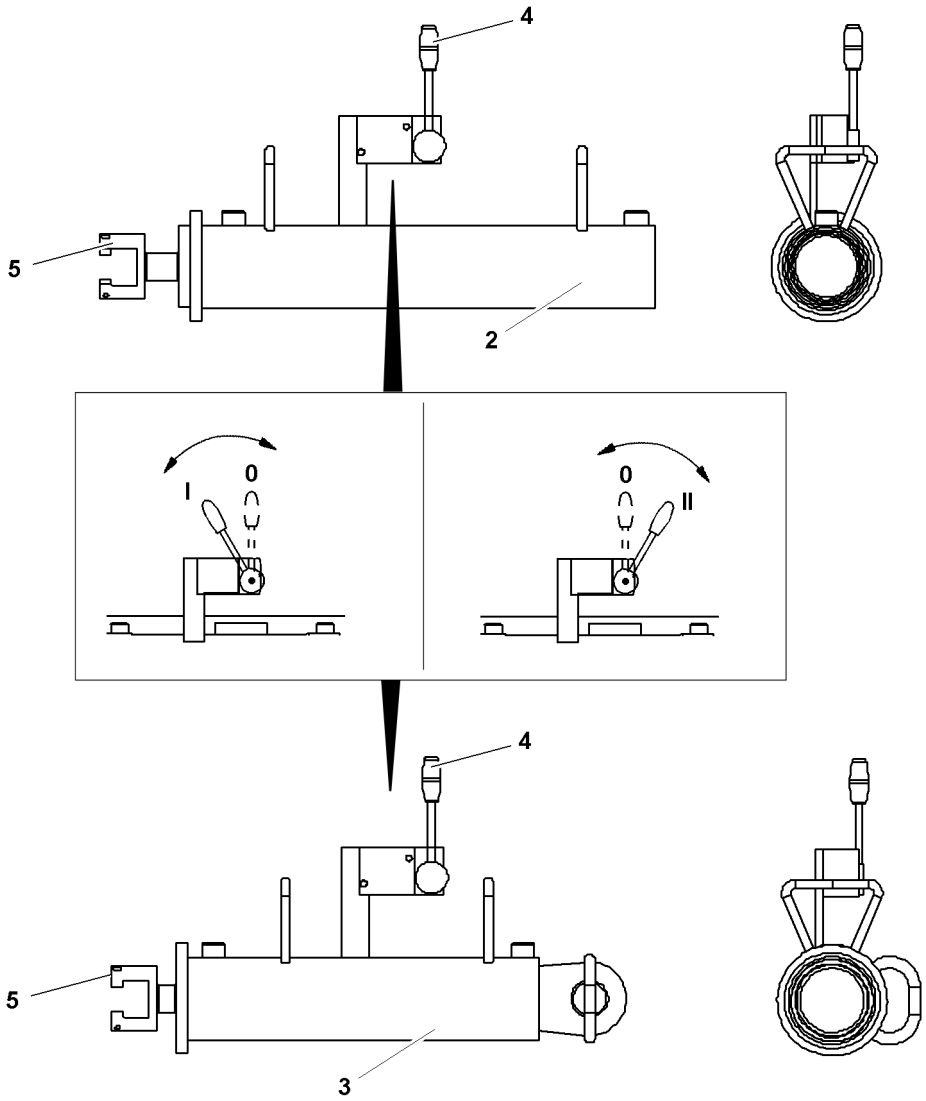

Fig.146740: Pin pulling cylinder with actuation

4.1 Preparatory work

Make sure that the following prerequisites are met:
- The hydraulic aggregate is not yet started.
- The lever **4** is in **0-position**.

▶ Connect the hydraulic hoses of the required pin pulling cylinder to the hydraulic aggregate.
▶ Hang or pin the pin pulling cylinder in the retainer on the component.
▶ Connect the piston rod head **5** with the screw on the pin.

4.2 Pinning or unpinning pins

Note
▶ Operate the hydraulic aggregate, see the Operating and maintenance instructions for the Hydraulic aggregate.

▶ Start the hydraulic aggregate.

LWE/LR 1600-2-001/18101-07-02/en

copyright © Liebherr-Werk Ehingen GmbH 2018

▶ Set the engine rpm on the hydraulic aggregate.
▶ Operate the lever **4** on the pin pulling cylinder **2**.

Note
▶ **I-position**, insert pin.
▶ **II-position**, unpin pin.

▶ Pin or unpin the pin.

5 Pinning and unpinning the pin with pin pulling cylinder 3

5.1 Preparatory work

Make sure that the following prerequisites are met:
– The hydraulic aggregate is not yet started.
– The lever **4** is in **0-position**.

▶ Connect the hydraulic hoses of the required pin pulling cylinder to the hydraulic aggregate.
▶ Hang or pin the pin pulling cylinder in the retainer on the component.
▶ Connect the piston rod head **5** with the screw on the pin.

5.2 Pinning or unpinning pins

Note
▶ The pin pulling cylinder **3** is actuated for safety reasons on the hydraulic aggregate.
▶ Before pinning and unpinning the lattice sections, engage the lever **4** in **position I** or **position II**.

▶ Engage the lever **4** on the pin pulling cylinder **3** in **position I** or **position II**.

Note
▶ **Position I**, insert the pin.
▶ **Position II**, unpin the pin.

Note
▶ Operate the hydraulic aggregate, see the Operating and maintenance instructions for the Hydraulic aggregate.

▶ Start the hydraulic aggregate **1**.
▶ Set the engine rpm on the hydraulic aggregate **1**.
▶ Operate the change over lever on the hydraulic aggregate **1**.

Result:

– The piston rod of the pin pulling cylinder **3** moves in or out.

LWE/LR 1600-2-001/18101-07-02/en

copyright © Liebherr-Werk Ehingen GmbH 2018

Empty page!

LWE/LR 1600-2-001/18101-07-02/en

copyright © Liebherr-Werk Ehingen GmbH 2018

5.35 Derrick ballast - ballast trailer

1	Component description and general notes	3
2	Assembling the ballast trailer	9
3	Setting the ballast trailer radii	33
4	Steering programs	35
5	Driving with the ballast trailer	55
6	Crane operation with derrick ballast	67
7	Removing the ballast trailer	87
8	Emergency operation with a defective CPU	103
9	Maintenance intervals for the ballast trailer	111
10	Maintenance	113
11	Lubrication and fill quantities	115

LWE/LR 1600-2-001/18101-07-02/en

copyright © Liebherr-Werk Ehingen GmbH 2018

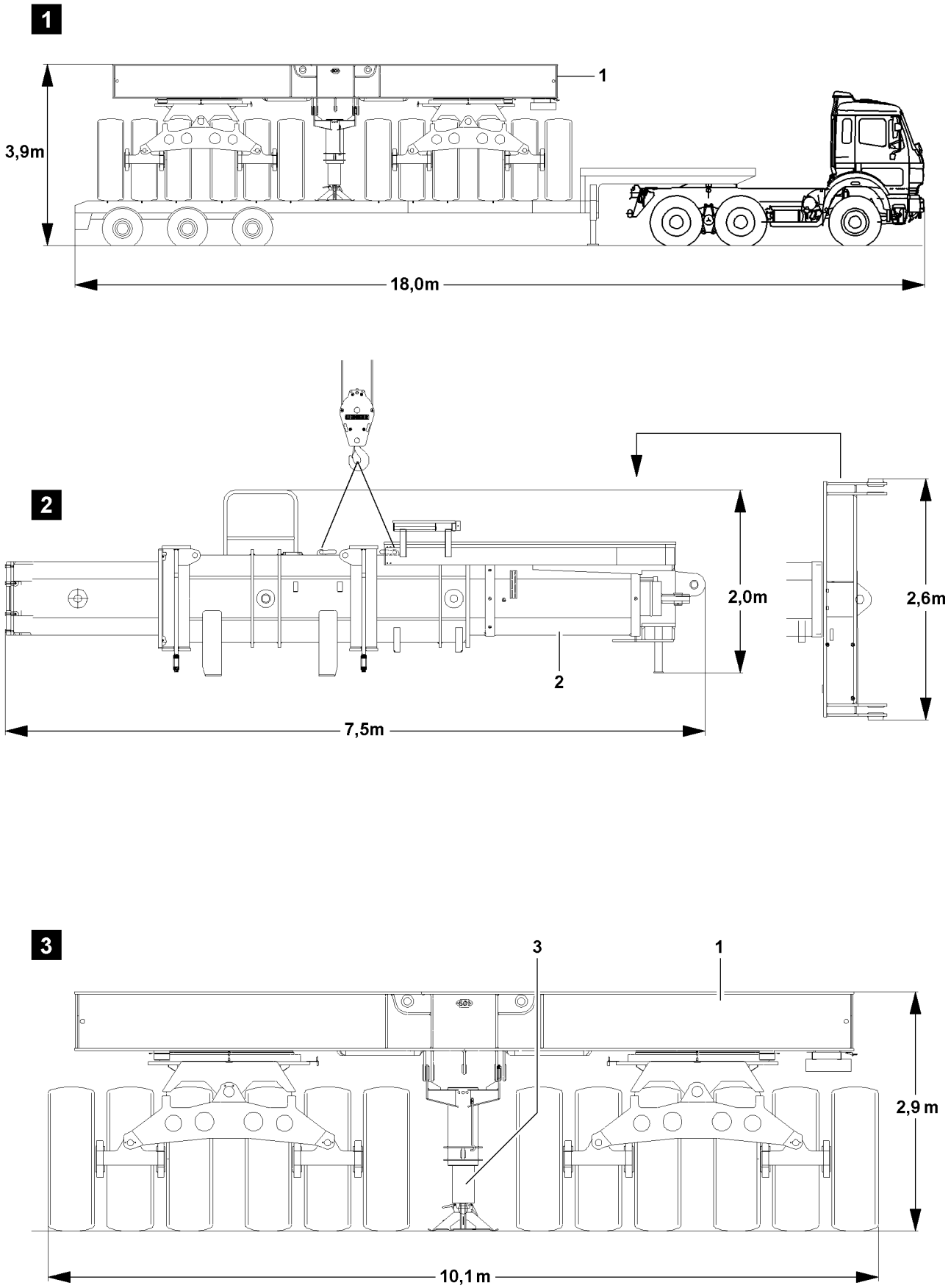

Fig.106861

LWE/LR 1600-2-001/18101-07-02/en

copyright © Liebherr-Werk Ehingen GmbH 2018

1 Component description and general notes

Ballast trailer, complete, consisting of:

- 2 axle lines with 2 each oscillating wheel sets
- **1** Ballast trailer
- **2** Ballast trailer guide
- **3** Support cylinder

Hydraulic telescopeable ballast trailer guide for ballast trailer radii of R 13 m - R 18 m.

The pull cylinders for the ballast trailer are assembled on the D-end section and can be actuated under load.

Hydraulic, mechanical steering is electronically adjustable for:

- Towing
- Circular travel
- Parallel travel
- Manual steering adjustment

1.1 Components, weights

See illustration **2** and illustration **3**.

Position	Components	Weight
1	Ballast trailer including support cylinder **3**	49.6 t
2	Ballast trailer guide	17.2 t

1.2 Dimensions

See illustration **1**, illustration **2** and illustration **3**.

LWE/LR 1600-2-001/18101-07-02/en

copyright © Liebherr-Werk Ehingen GmbH 2018

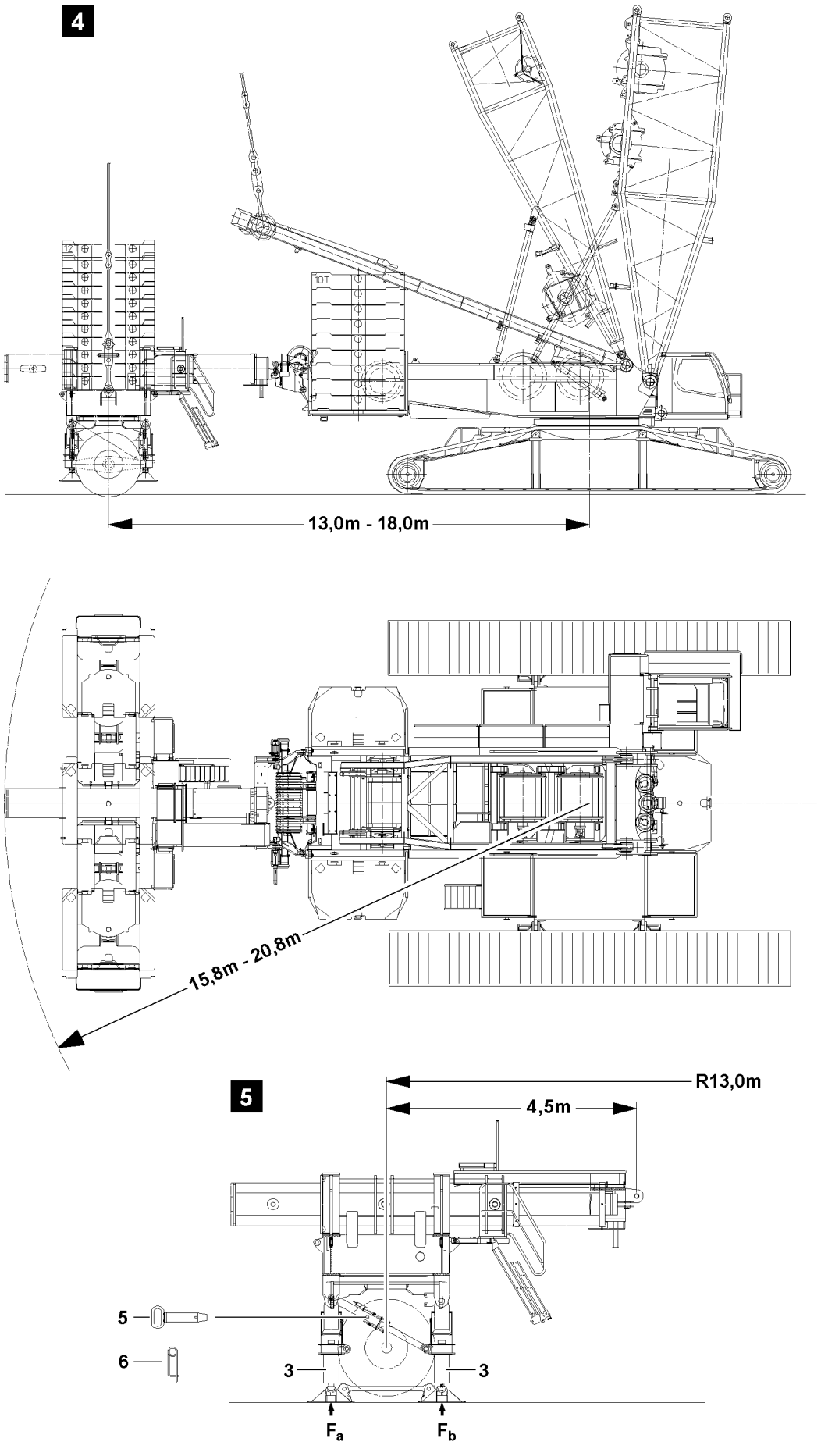

Fig.106862

LWE/LR 1600-2-001/18101-07-02/en

copyright © Liebherr-Werk Ehingen GmbH 2018

1.3 Radii

Derrick boom radius	Ballast trailer radius
13.0 m	13.0 m
13.0 m	15.0 m
13.0 m	18.0 m

1.4 Stability and tipping safety for ballast trailer not assembled on the turntable

Make sure that the following prerequisites are met:
- The ballast trailer guide is hydraulically fully retracted.
- The ballast trailer is supported and aligned in horizontal direction.

WARNING
Danger of tipping the ballast trailer!
If the ballast trailer is not installed on the turntable and the ballast trailer guide is not fully moved in, then the ballast trailer can tip over.
Personnel can be severely injured or killed.
- ▶ Before removal of the ballast trailer on the turntable, the locking pin **5** must be pinned on the strut of the ballast trailer and secured with the spring retainer **6**.
- ▶ The ballast trailer guide must be fully moved in before removal of the ballast trailer on the turntable.
- ▶ The support cylinders **3** are moved out to the point where the tires are relieved.

Illustration	Ballast trailer radius	Ballast	Maximum support pressure F_b
5	R = 13.0 m	0 t	43.6 t

LWE/LR 1600-2-001/18101-07-02/en

copyright © Liebherr-Werk Ehingen GmbH 2018

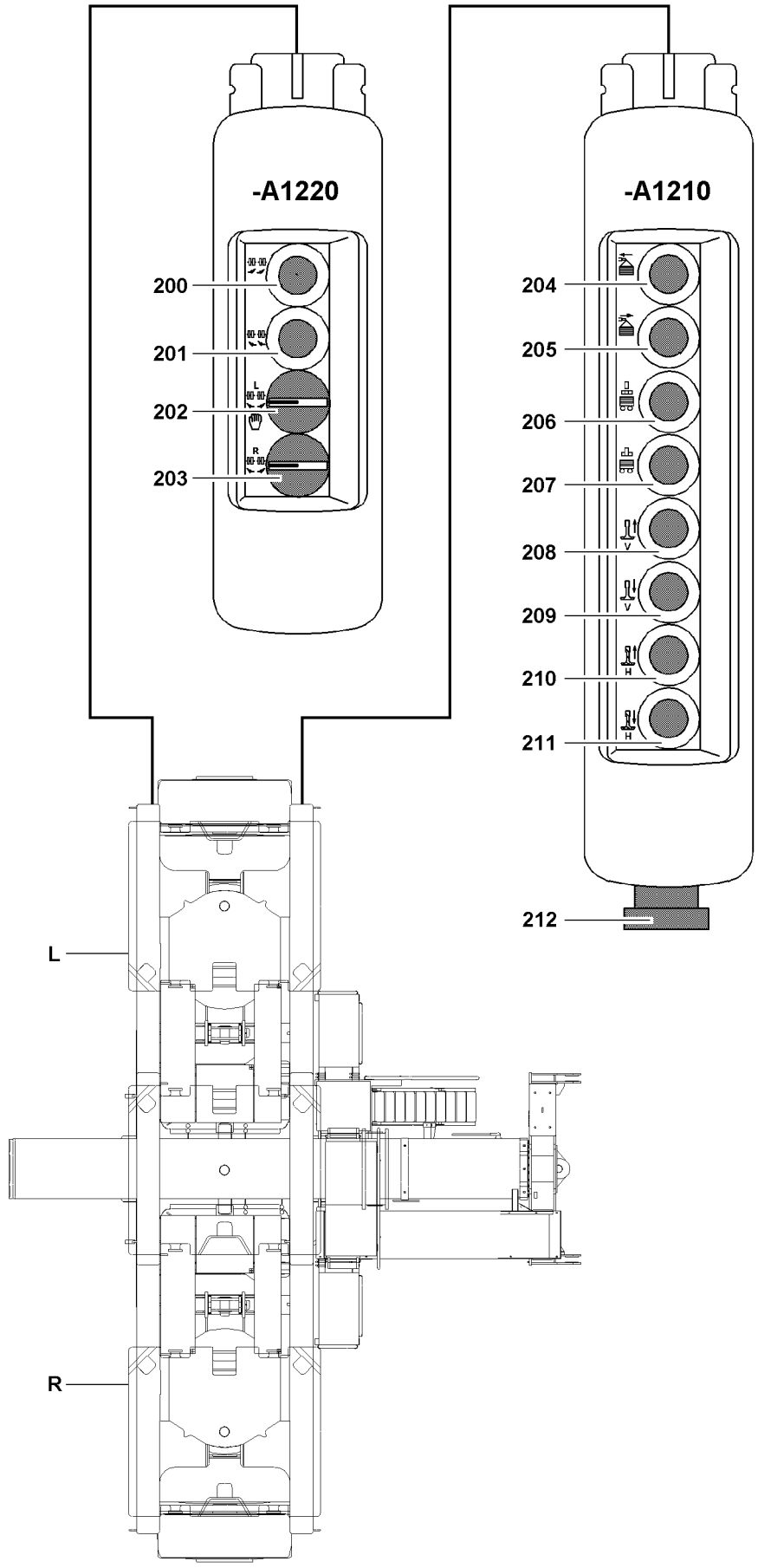

Fig.106863

LWE/LR 1600-2-001/18101-07-02/en

copyright © Liebherr-Werk Ehingen GmbH 2018

1.5 Operating elements on the control panels

Control panel - A1220		
200	Button	• Corrective steering, turn wheel sets to left
201	Button	• Corrective steering, turn wheel sets to right
202	Rotary switch	• Turn the wheel set on the left side **L** to the right or left
		• Manual operation for assembly or emergency operation
203	Rotary switch	• Turn the wheel set on the right side **R** to the right or left
		• Manual operation for assembly or emergency operation

Control panel - A1210		
204	Button	• Ballast trailer, move the guide cylinder in
205	Button	• Ballast trailer, move the guide cylinder out
206	Button	• Ballast trailer on turntable - unpin
207	Button	• Ballast trailer on turntable - pin
208	Button	• Move the front support cylinder in
209	Button	• Move the front support cylinder out
210	Button	• Move the rear support cylinder in
211	Button	• Move the rear support cylinder out
212	Switch	• **EMERGENCY OFF**

LWE/LR 1600-2-001/18101-07-02/en

copyright © Liebherr-Werk Ehingen GmbH 2018

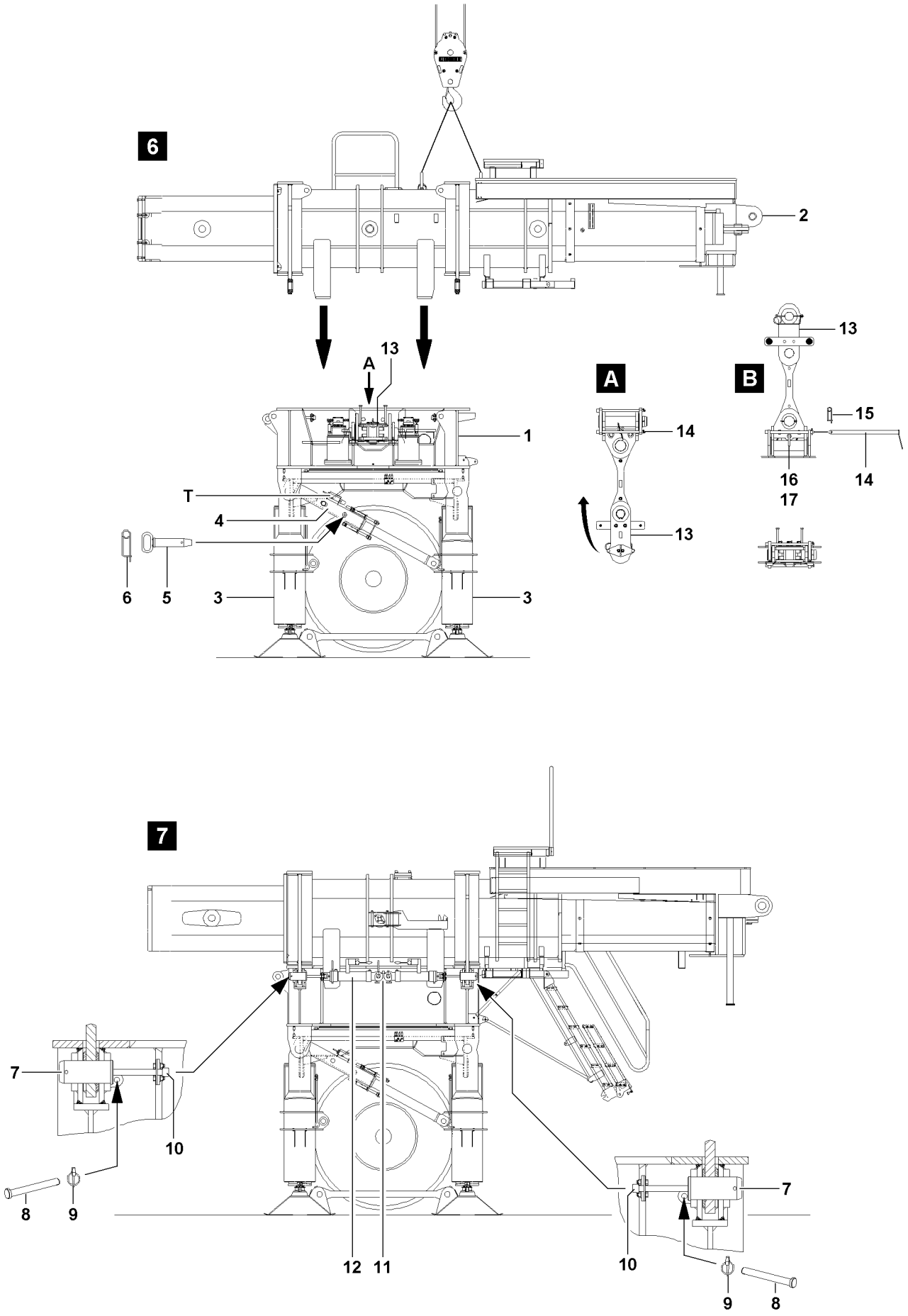

Fig.106864

LWE/LR 1600-2-001/18101-07-02/en

copyright © Liebherr-Werk Ehingen GmbH 2018

2 Assembling the ballast trailer

WARNING
Danger of falling!
During assembly and disassembly, assembly personnel must be secured with appropriate aids to prevent them from falling. If this is not observed, assembly personnel could fall and suffer life-threatening or fatal injuries.

- ▶ Any work, where there is a danger of falling, must be carried out with suitable aids (for example: lifting platforms, scaffoldings, ladders, auxiliary crane).
- ▶ If the work cannot be carried out with such aids nor from the ground, then the assembly personnel must secure themselves with approved fall arrest systems to avoid falling, see Crane operating instructions chapter 2.04.
- ▶ If railings are present on the components, then they must be brought into the corresponding position and secured for assembly / disassembly work.
- ▶ Step on aids and fall protection equipment only with clean shoes.
- ▶ Keep aids and fall protection equipment clean and free from snow and ice.
- ▶ During all assembly and disassembly work, maintenance work and inspections, travel or crane operation is prohibited.

WARNING
Danger of tipping the ballast trailer!
Due to improperly carried out assembly or improper assembly conditions, the ballast trailer can tip over.
Personnel can be severely injured or killed.

- ▶ The assembly of the ballast trailer may only be carried out by authorized personnel.
- ▶ Carry out the assembly of the ballast trailer only on level ground of sufficient load bearing capacity.
- ▶ The ballast trailer has **no** brake system. The ballast trailer must be supported with the support cylinders if it is **not** pinned on the turntable.

Make sure that the following prerequisites are met:

- – The ground must be level and have adequate load bearing capacity.
- – An auxiliary crane is available.

LWE/LR 1600-2-001/18101-07-02/en

copyright © Liebherr-Werk Ehingen GmbH 2018

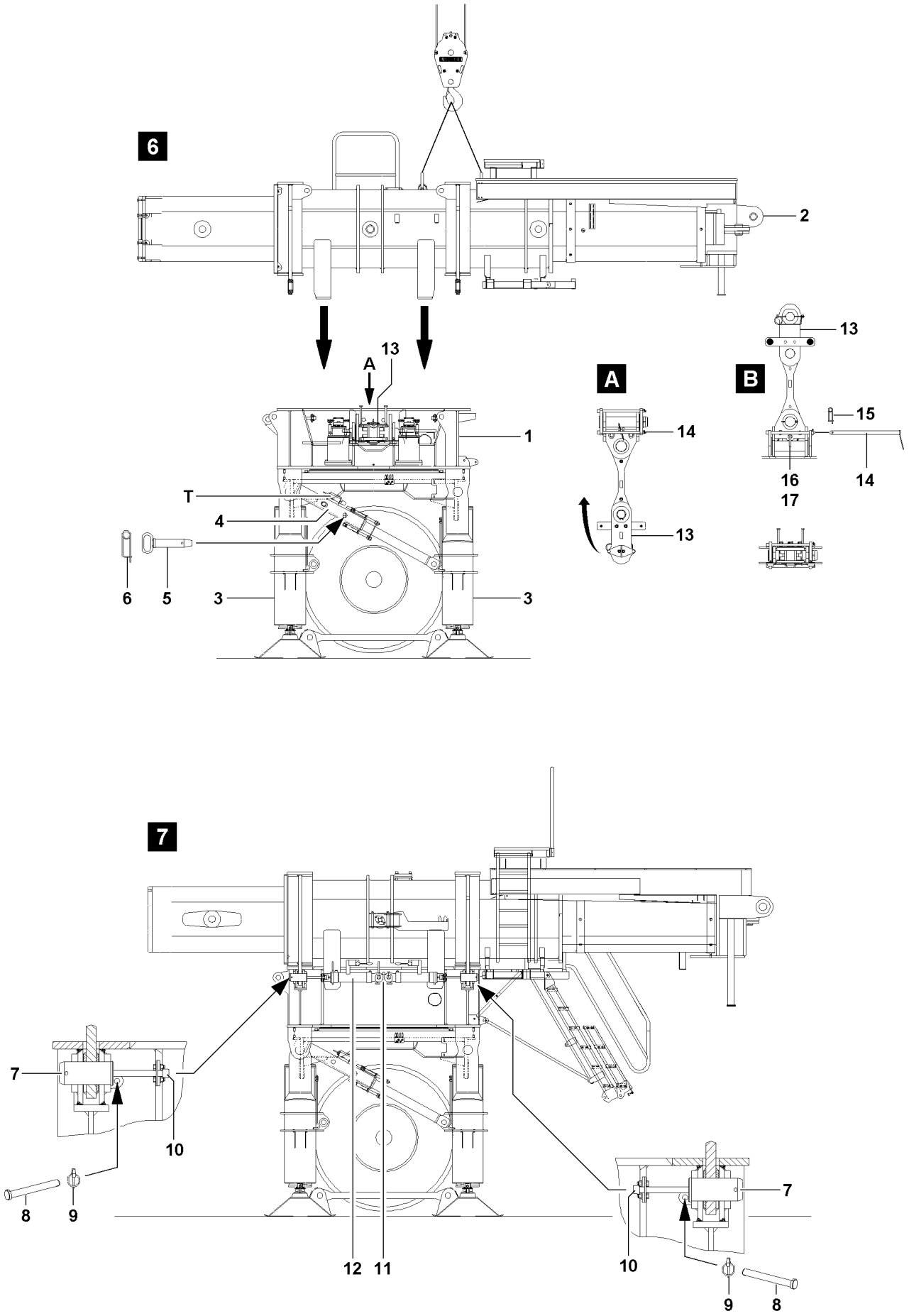

Fig.106864

LWE/LR 1600-2-001/18101-07-02/en

copyright © Liebherr-Werk Ehingen GmbH 2018

2.1 Pre-assembling the ballast trailer

Note

▶ Park the ballast trailer for assembly of the ballast trailer guide on level ground with sufficient load bearing capacity in the vicinity of the crane.

Make sure that the following prerequisites are met:
- The locking pin **5** is pinned in and secured in the strut **4**.
- The ballast trailer is supported with the support cylinders **3** and aligned in horizontal direction.

DANGER

Danger of tipping over!
If the safety guidelines for the stability and tipping safety are not observed and the strut **4** is not pinned with the locking pin **5**, there is a danger of tipping over.

▶ Observe the specified stability and tipping safety for ballast trailer not assembled on the turntable.
▶ The strut **4** must be pinned and secured with the locking pin **5**.

2.1.1 Assembling the ballast trailer guide

Make sure that the following prerequisites are met:
- The ballast trailer guide **2** is fully retracted.
- The retaining pins **8** are released and unpinned (4x).
- The retaining pins **7** are unpinned (4x).

WARNING

Danger of fatal injury due to tipping ballast trailer!
Due to unsecured or insufficiently secured connector pins, the ballast trailer guide can loosen up from the ballast frame and the ballast trailer can tip over.
Personnel can be severely injured or killed.
Significant property damage can occur on the crane and on the ballast trailer.

▶ Make sure before starting any crane work with the ballast trailer, that all **four** connector pins **7** are properly pinned and secured.

▶ Attach the ballast trailer guide **2** on the auxiliary crane and swing it in and lower it to the pin points on the ballast frame **1**, see illustration **6**.
▶ Attach the pin pulling cylinder **12** to the retainer **11** and hook into the screw head **10**.
▶ Establish the hydraulic connection of the pin pulling cylinder **12** to the hydraulic aggregate, see crane operating instructions, chapter 5.30.

When the ballast trailer guide **2** is lying completely on the ballast frame **1** and the pin bores align:
▶ Actuate the lever on the pin pulling cylinder **12** and insert the connector pin **7**.
▶ Secure the connector pin **7**: Insert the retaining pin **8** and secure with locking pin **9**.

When all four connector pins **7** are pinned in and secured:
▶ Remove the auxiliary crane.
▶ Fold the access to the ballast trailer down into operating position.

LWE/LR 1600-2-001/18101-07-02/en

copyright © Liebherr-Werk Ehingen GmbH 2018

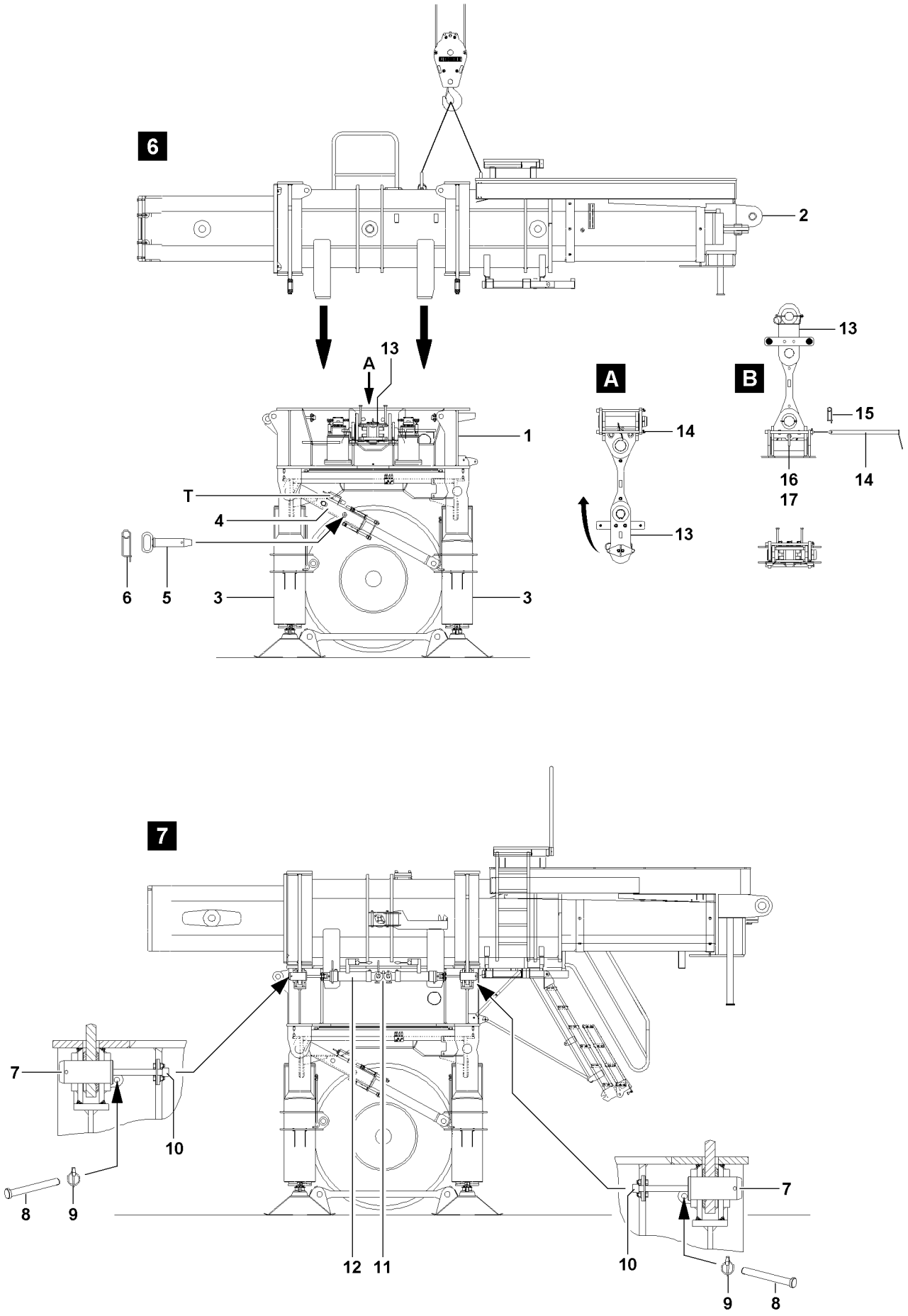

Fig.106864

LWE/LR 1600-2-001/18101-07-02/en

copyright © Liebherr-Werk Ehingen GmbH 2018

2.1.2 Bringing the guy rods on the ballast trailer into operating position

The guy rods **13** are folded down and secured in transport position on the side on the ballast frame, see illustration **6** and illustration **A**.

Make sure that the following prerequisites are met:
- The ballast trailer guide **2** is assembled and secured on the ballast frame **1**.
- The access to the ballast trailer is in operating position.
- The stability and tipping safety of the ballast trailer is ensured.

Positioning one guy rods into operating position

WARNING
Danger of falling!
If the following notes are not observed, the assembly personnel can fall off the ballast trailer and be severely injured or killed.
- ▶ Use only the access on the ballast trailer.
- ▶ Step on the access with utmost caution.

- ▶ Release and unpin the retaining pins **14**, see illustration **A**.
- ▶ Attach the guy rod **13** on the auxiliary crane.
- ▶ Erect the guy rod **13** with the auxiliary crane to the vertical position.

DANGER
Retaining pins **not** inserted!
When removing the auxiliary crane, the erected guy rod **13** drops sideways.
Death, severe injury, property damage.
- ▶ Make sure, before removing the auxiliary crane on the guy rod **13**, that both retaining pins **14** are always pinned and secured. Perform a visual inspection.
- ▶ Make sure, before removing the auxiliary crane on the guy rod **13**, that the retaining pin **16** is pinned and secured. Perform a visual inspection.

When the guy rods is erected vertically:
- ▶ Insert both retaining pins **14** and secure with spring retainers **15**, see illustration **B**.
- ▶ Insert the retaining pin **16** and secure with the spring retainer **17**.

When both retaining pin **14** and the retaining pin **16** are pinned and secured:
- ▶ Remove the auxiliary crane.
- ▶ Bring the second guy rod into operating position.

copyright © Liebherr-Werk Ehingen GmbH 2018

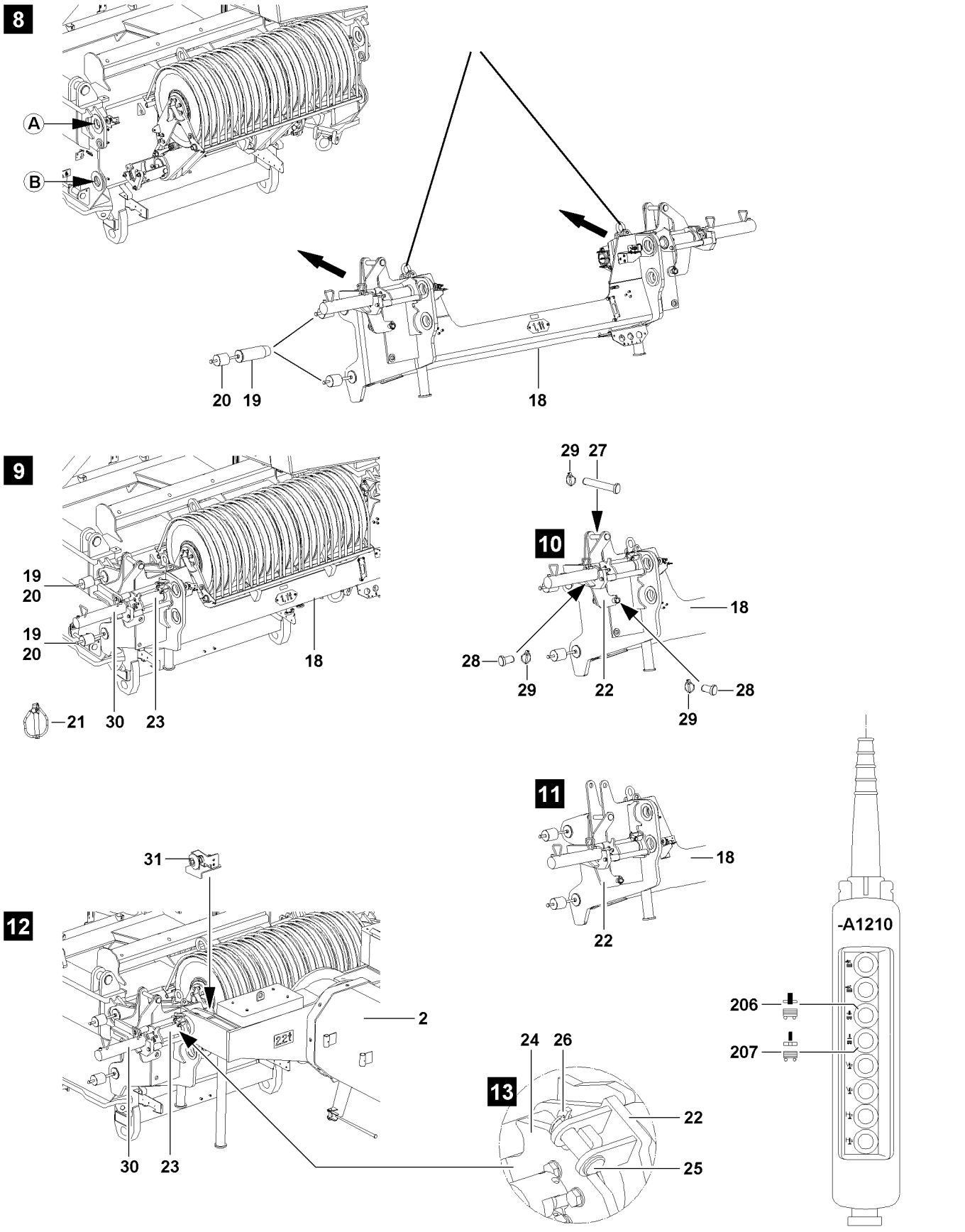

Fig.106865

copyright © Liebherr-Werk Ehingen GmbH 2018

2.2 Installing the adapter on the turntable

Note

- ▶ The attachment of the adapter onto the turntable should take place as much as possible with regard to the assembly of the derrick boom, or **before** erection of the derrick boom on the turntable.
- ▶ The adapter can also be attached to the turntable at a later time; however, access to the turntable can be limited by the SA-frame.

2.2.1 Assembling the adapter

- ▶ Fasten the adapter **18** onto the lashing lugs on the auxiliary crane.
- ▶ Lift the adapter **18** with the auxiliary crane and swing it on the turntable, see illustration **8**.
- ▶ Erect the adapter **18** on the turntable.

When the pin bores align between the adapter **18** and the turntable on both sides at point **A** and point **B**:

- ▶ Insert the connector pins **19** in all the way with the striker **20**.

If the connector pins are completely pinned:

- ▶ Secure the connector pins **19** with linch pins **21**.
- ▶ Remove the auxiliary crane.

2.2.2 Establishing the hydraulic connection from the adapter to the turntable

When connecting and releasing hydraulic lines with quick couplings, make sure that the coupling procedure is carried out correctly.

DANGER

Danger of accident due to loss of pressure or leakage.
Incorrectly coupled or self-loosening quick couplings (particularly return lines) can result in serious accidents due to component failure.

- ▶ Check that the quick couplings have been properly connected before using the crane.

- ▶ Release the pressure in the hydraulic system before connecting or disconnecting. Turn the engine off and wait for short time.
- ▶ Connect the coupling components (sleeve and connector) and screw together with the knurled nut.
- ▶ Tighten the hydraulic coupling by hand. Rotate the knurled nut until it reaches a tangible, fixed stop position.

2.2.3 Establishing the electrical connection from the adapter to the turntable

Make sure that the following prerequisite is met:

– The adapter is assembled completely to the turntable, pinned and secured.

Note

- ▶ To establish the electrical connections, use the separate electrical wiring diagram.

- ▶ Unplug inductive sensor plug - „ballast trailer mounted to the right“ and „ballast trailer mounted to the left“ - on the turntable.
- ▶ Unplug inductive sensor plug - „ballast trailer LR1750 assembled to the right“ and „ballast trailer LR1750 assembled to the left“ - on the turntable.

LWE/LR 1600-2-001/18101-07-02/en

copyright © Liebherr-Werk Ehingen GmbH 2018

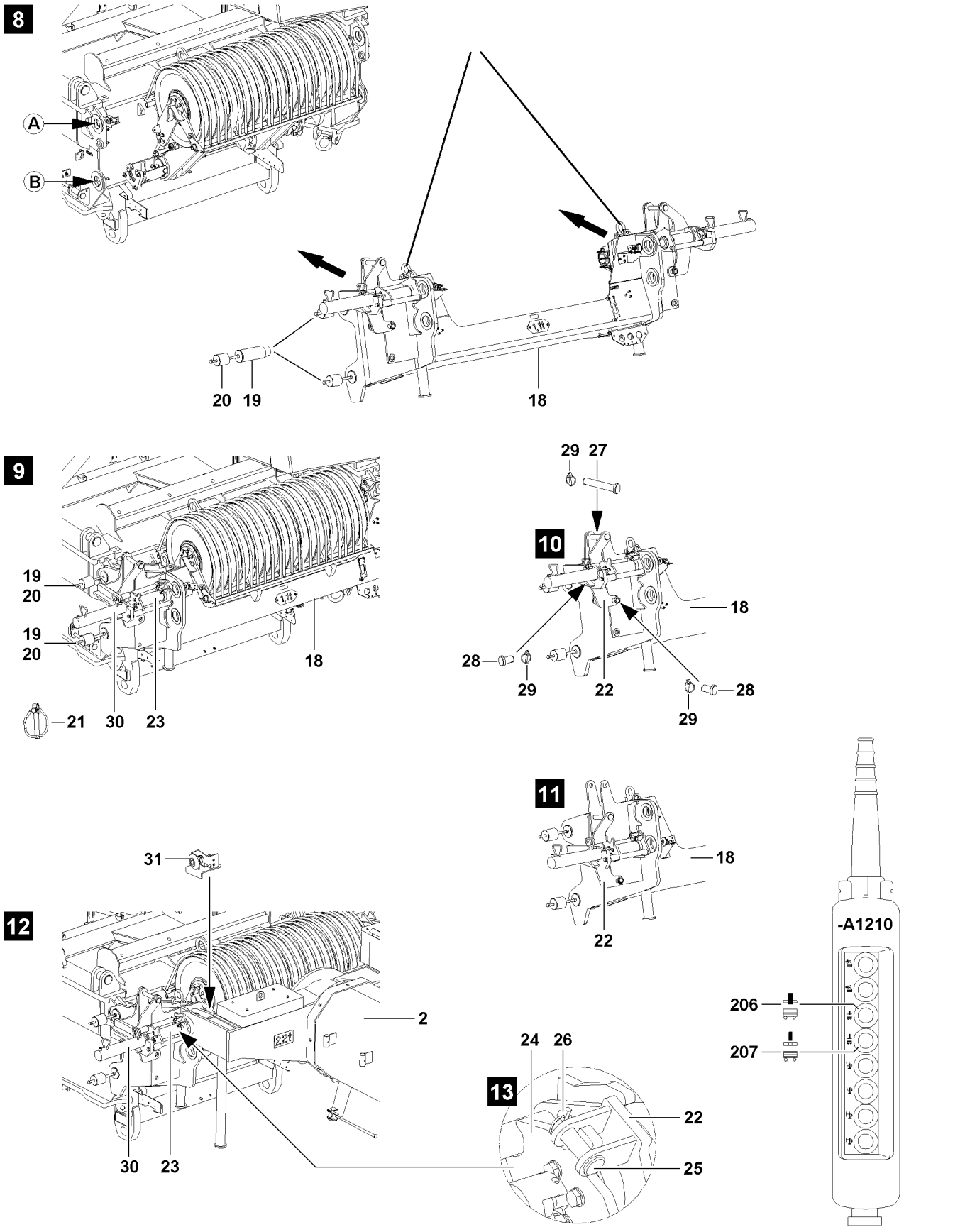

Fig.106865

copyright © Liebherr-Werk Ehingen GmbH 2018

2.3 Pinning the ballast trailer on the adapter

Make sure that the following prerequisites are met:
- The crane is positioned in axial alignment, as close as possible to the ballast trailer guide.
- The adapter is pinned and secured completely on the turntable frame.
- The electrical and hydraulic connections from the adapter to the turntable have been established.
- The crane engine is turned off.
- The ballast trailer is supported.

2.3.1 Establishing the electrical connection from the ballast trailer to the adapter

Note
- ▶ For assembly of the ballast trailer, the electrical connection from the ballast trailer to the turntable must be established to be able to control the support cylinders, if necessary.
- ▶ The „Ballast UP / DOWN“ release is independent of whether the ballast trailer is attached, providing the conditions in the shut off diagram are fulfilled.
- ▶ The „Ballast UP“ release allows the retraction of the pull and support cylinders.
- ▶ The „Ballast DOWN“ release allows the extension of the pull and support cylinders.
- ▶ This means, the support cylinders and the pull cylinders can be moved, even if the „Ballast trailer pinned“ signal is not yet present.

Note
- ▶ To establish the electrical connections, use the separate electrical wiring diagram.

▶ Establish the electrical connections.

2.3.2 Establishing the hydraulic connection from the ballast trailer to the adapter

When connecting and releasing hydraulic lines with quick couplings, make sure that the coupling procedure is carried out correctly.

DANGER
Danger of accident due to loss of pressure or leakage!
Incorrectly coupled or self-loosening quick couplings (particularly return lines) can result in serious accidents due to component failure.
- ▶ Check that the quick couplings have been properly connected before using the crane.

▶ Release the pressure in the hydraulic system before connecting or disconnecting: Turn the engine off and wait for short time.
▶ Connect the coupling components (sleeve and connector) and screw together with the knurled nut.
▶ Tighten the hydraulic coupling by hand: Rotate the knurled nut until it reaches a tangible, fixed stop position.

LWE/LR 1600-2-001/18101-07-02/en

copyright © Liebherr-Werk Ehingen GmbH 2018

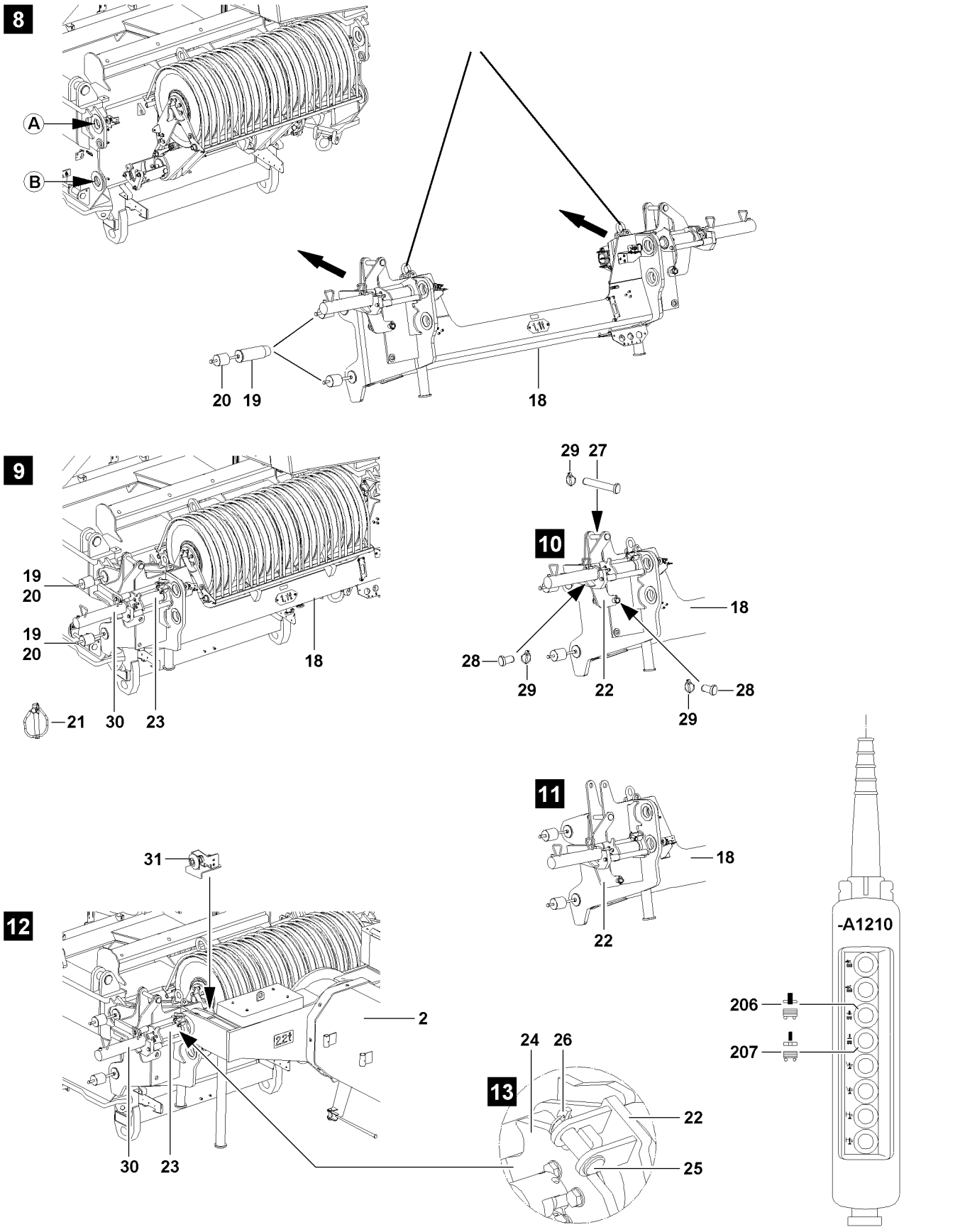

Fig.106865

copyright © Liebherr-Werk Ehingen GmbH 2018

2.3.3 Pin pulling device on the adapter

The pin pulling device on the adapter must be suitable for the special situations on the crane. Therefore the pin pulling device is moved „downward“ if the crane is adjusted via a quick-connection (QC) and in the opposite case on the adapter is adjusted „upward“, if the crane is **not** adjusted via QC.

Adjusting the pin pulling device on the adapter upward

Note
▶ See illustration **10**.

▶ Fasten the pin pulling device **22** on the auxiliary crane.

If the pin pulling device is attached to the auxiliary crane:
▶ Release and unpin the pin **28**.
▶ Release and unpin the pin **27**.
▶ Lift the pin pulling device **22** with the auxiliary crane until the for the pin bores are aligned „upward“.
▶ Insert the pin **27** and secure with the spring retainer **29**.
▶ Insert the pin **28** and secure with the spring retainer **29**.

Adjust pin pulling device on the adapter upward

Note
▶ See illustration **11**.

▶ Fasten the pin pulling device **22** on the auxiliary crane.

If the pin pulling device is attached to the auxiliary crane:
▶ Release and unpin the pin **28**.
▶ Release and unpin the pin **27**.
▶ Lift the pin pulling device **22** with the auxiliary crane until the for the pin bores are aligned „downward“.
▶ Insert the pin **27** and secure with the spring retainer **29**.
▶ Insert the pin **28** and secure with the spring retainer **29**.

LWE/LR 1600-2-001/18101-07-02/en

copyright © Liebherr-Werk Ehingen GmbH 2018

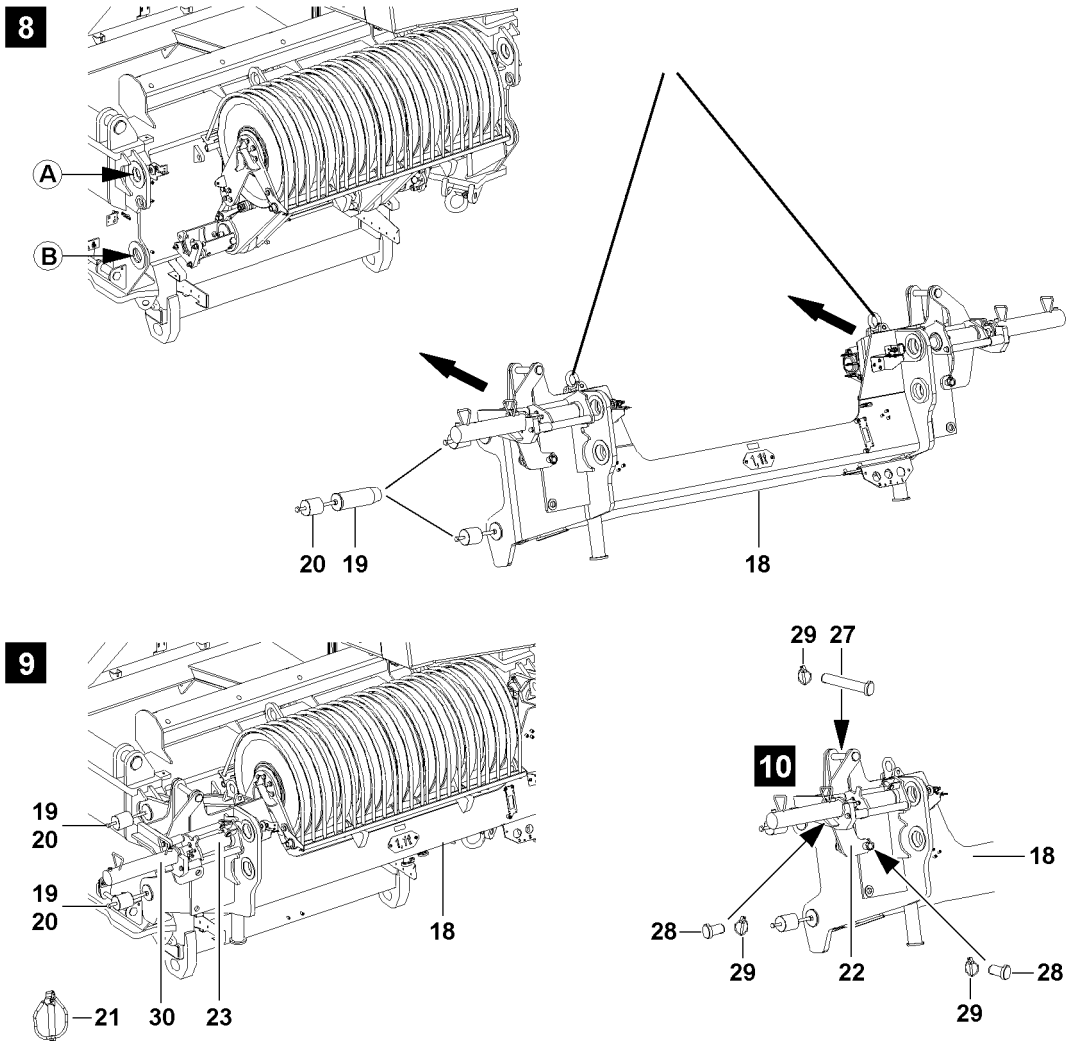

LWE/LR 1600-2-001/18101-07-02/en

Fig.106865

copyright © Liebherr-Werk Ehingen GmbH 2018

2.3.4 Aligning the ballast trailer

Make sure that the following prerequisites are met:
- The electrical and hydraulic connections from the adapter to the ballast trailer have been established.
- The connector pins **23** are unpinned.
- The crane has been moved to the pin points on the ballast trailer guide.

▶ Align the ballast trailer by lifting or lowering in such a way until the pin bores align between the adapter on the turntable and the ballast trailer guide.

Note

▶ In order to achieve alignment the pin bores between the adapter on the turntable and the ballast trailer guide, it may be required that the turntable be „swung back“ somewhat, perform a visual inspection.

DANGER

Danger due to operating error!
When „swinging“ the turntable, severe accidents can occur.
Personnel can be severely injured or killed.
Significant damage can occur on the crane and on the ballast trailer.

▶ Initiate all movements with utmost caution and at the least possible speed.
▶ It is prohibited to stand in the danger zone while „swinging“.

▶ Align the ballast trailer until the pin bores align.

2.3.5 Pinning procedure

Make sure that the following prerequisites are met:
- The ballast trailer is aligned on the adapter.
- The pin bores between the adapter and ballast trailer guide align.

NOTICE

Damage to the pin pulling device!
If the retaining pins **25** are not unpinned before the pin procedure, the pin pulling device **22** can be damaged.

▶ The retaining pins **25** on the pin pulling device **22** must be released and unpinned before pinning the connector pins **23**.

▶ Release the retaining pins **25** and unpin at both sides.
▶ Press the button **207** on the control panel **-A1210**.

Result:

- The pin pulling cylinders **30** move out.
- The connector pins **23** extend and the ballast trailer is pinned on the adapter.

copyright © Liebherr-Werk Ehingen GmbH 2018

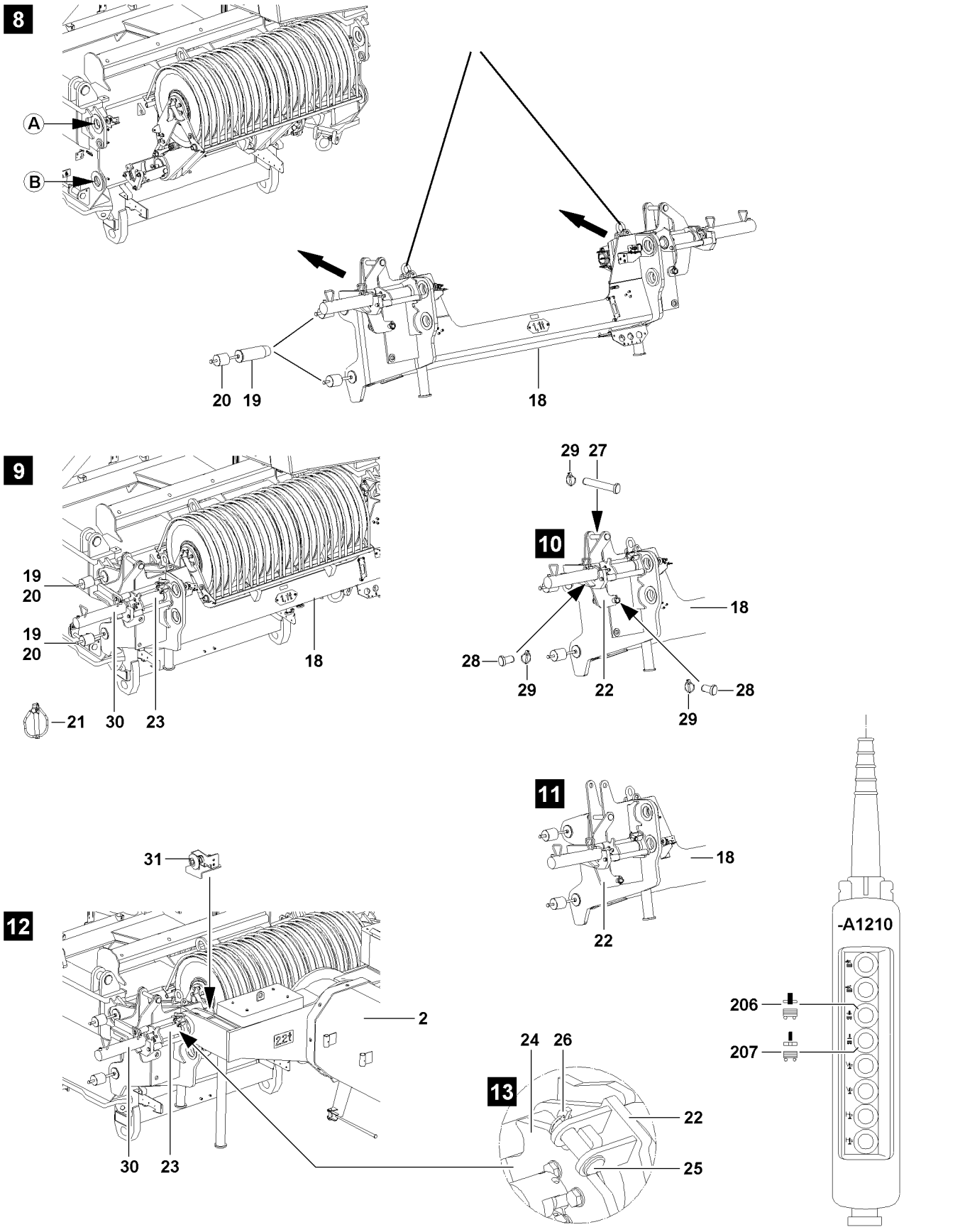

Fig.106865

copyright © Liebherr-Werk Ehingen GmbH 2018

Note

- The crane control uses the limit switch initiators **31** left and right of the pin points, to determine whether the connector pins **23** are pinned completely on the adapter!
- If both connector pins **23** are fully and correctly pinned, the crane control, via the limit switch initiators **31** receives the message, „Ballast trailer installed on left“ and „Ballast trailer installed on right. “This means: the turntable can no longer be turned and the crawler cannot be moved.
- After pinning, it must be checked again if the electrical and hydraulic connector lines are fully and correctly connected.
- The control release for the crane is only made when the wheels sets are in one of the required positions, „Circular travel“, „Towing“ or „Parallel travel“.

DANGER

Danger due to operating error!

If only one connector pin **23** is pinned and if the crane control therefore has only one message „Ballast trailer installed“ from a limit switch initiator, then the turntable can be turned anyway and the crane can be moved.

Personnel can be severely injured or killed.

The crane or the ballast trailer can be severely damaged.

- All movements are to be „performed“ with extreme caution and at the lowest possible speed.

The ballast trailer is pinned on the adapter **18** on both sides:

- Secure the connector pins **23** via the pressure plate **24**, see illustration **13**.
- Pin the retaining pins **25** on the pin pulling device **22**.
- Secure the retaining pins **25** with the linch pins **26**.

Problem remedy

The second connector pin **23** cannot be pinned?

You did not align the ballast trailer exactly before assembly.

- Slightly lift or lower the ballast trailer via the support cylinder.
- Carefully telescope the ballast trailer guide in or out.
- Carefully swing the turntable after.

If the second pin bore aligns between the adapter **18** and the ballast trailer guide **2**:

- Pin the connector pins **23** with the hydraulic pin pulling device **22**.

LWE/LR 1600-2-001/18101-07-02/en

copyright © Liebherr-Werk Ehingen GmbH 2018

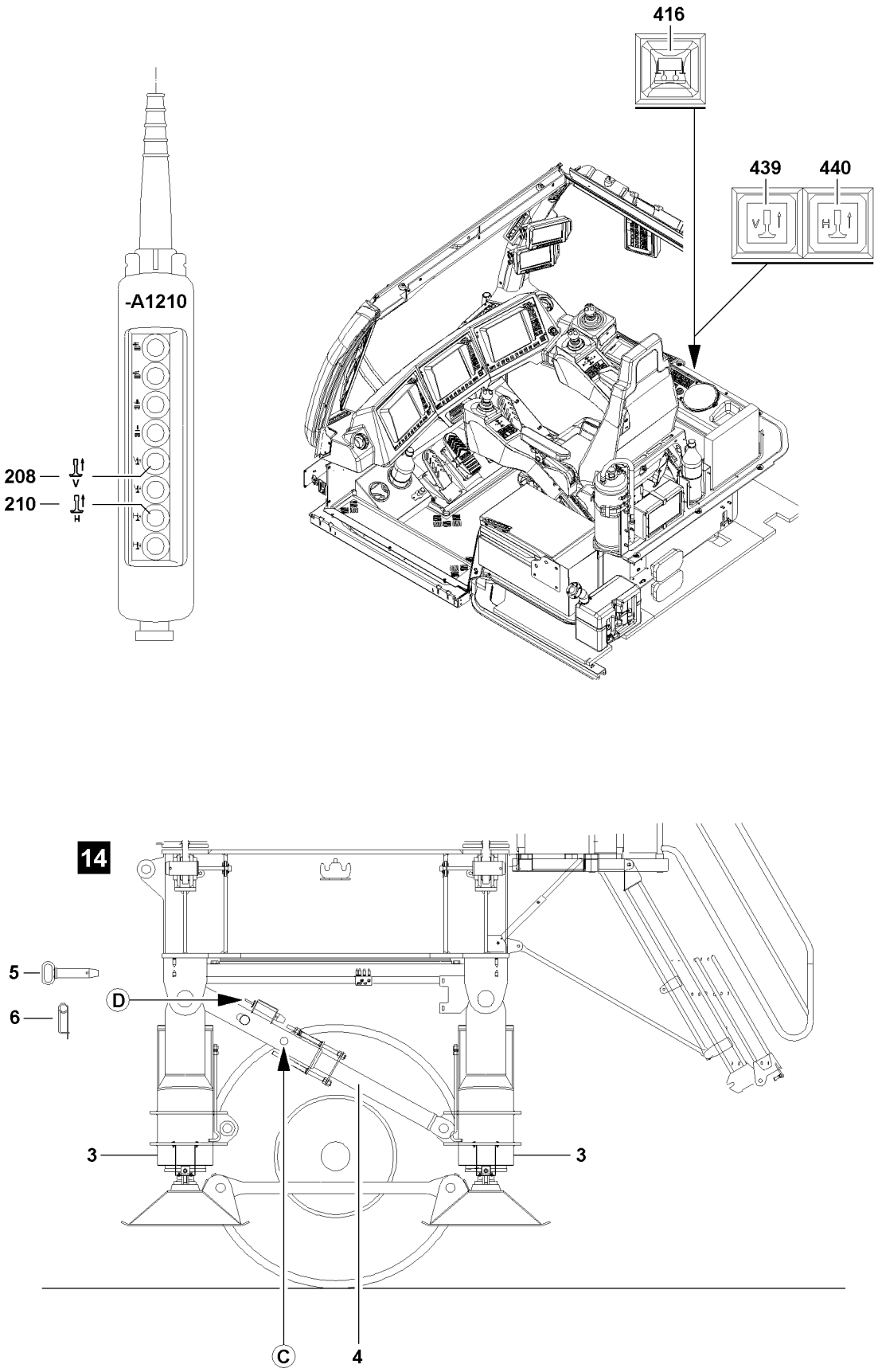

LWE/LR 1600-2-001/18101-07-02/en

Fig.106866

copyright © Liebherr-Werk Ehingen GmbH 2018

2.4 Retracting the support cylinders

Note

- ▶ The support cylinders **3** can be moved in via the control panel **-A1210**, or via the corresponding button on the instrument panel of the crane operator's cab.
- ▶ When the pin procedure between the ballast trailer and the adapter (turntable) is completed, retract the support cylinders **3**.

Make sure that the following prerequisites are met:

- The ballast trailer is pinned and secured on both sides of the adapter.
- The electrical and hydraulic connections are connected.

Retract the support cylinders 3 completely on the front and rear:

▶ Press the button **439** and button **440** in the crane operator's cab.
or
Press the button **208** and button **210** on the control panel **-A1210**.

Result:

– The support cylinders **3** move in.

Note

- ▶ The locking pin **5** can only be unpinned if the support cylinders **3** are relieved.

When the support cylinders **3** are relieved:

- ▶ Release and unpin the locking pin **5** on the strut **4** at point **C**.
- ▶ Insert the locking pin **5** into the transport retainer, point **D**, and secure with spring retainer **6**.

NOTICE

Damage of ballast trailer!

If the following notes are not observed, the support cylinders of the ballast trailer can be significantly damaged.

- ▶ Unpin the locking pin **5** as soon as the ballast trailer on the adapter is assembled and the support is relieved!
- ▶ If the ballast trailer is assembled on the adapter and ballasted, then the locking pins **5 must** be unpinned so that equalisation is possible with support between strut **4** and the support cylinders **3**.
- ▶ Supporting the ballasted ballast trailer with pinned strut **4** is prohibited.

▶ Retract the support cylinders **3** completely.

Result:

– The warning light **416** („Ballast trailer support moved in“) lights up.

LWE/LR 1600-2-001/18101-07-02/en

copyright © Liebherr-Werk Ehingen GmbH 2018

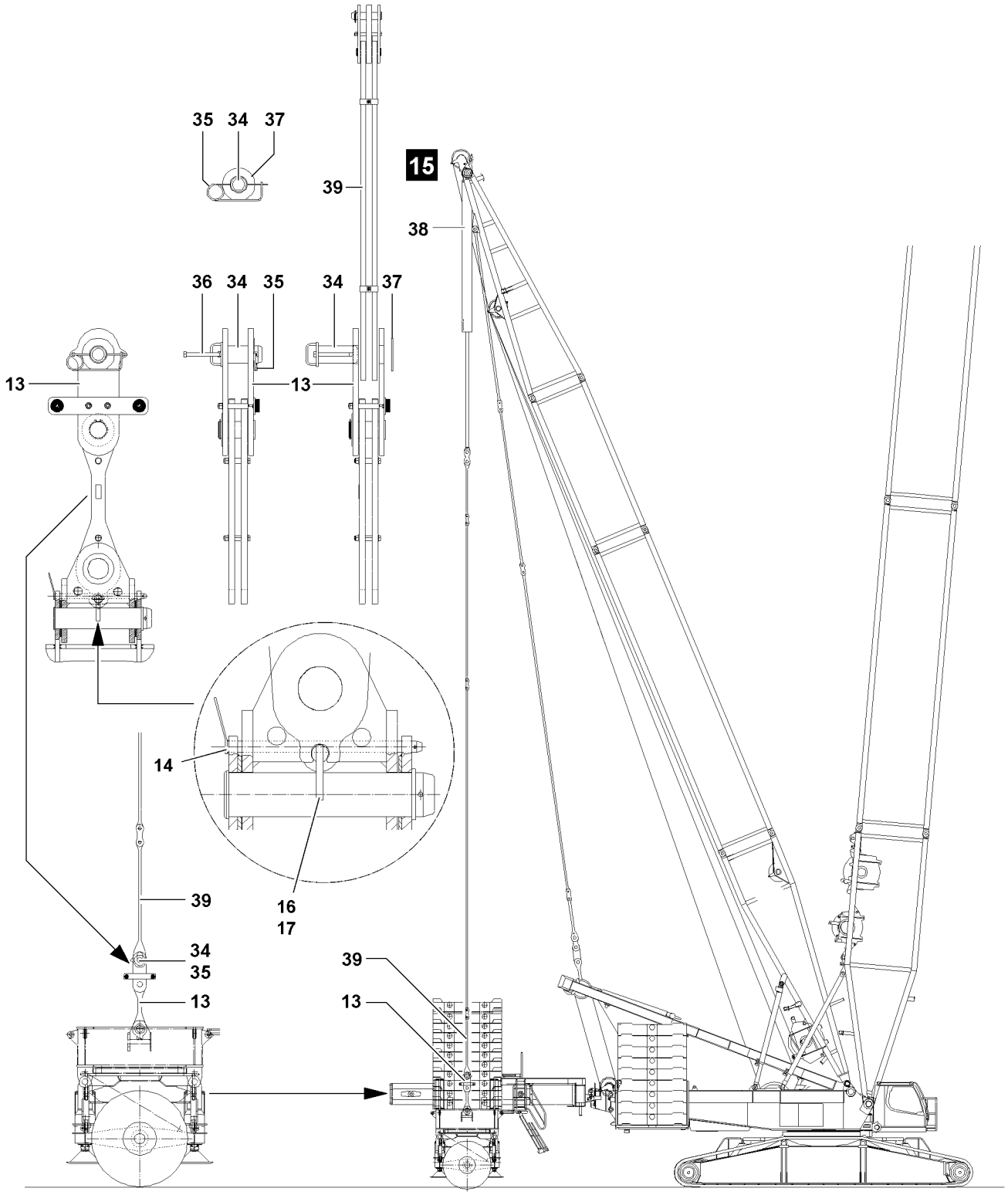

Fig.121375

LWE/LR 1600-2-001/18101-07-02/en

copyright © Liebherr-Werk Ehingen GmbH 2018

2.5 Assembling the ballast trailer guying

Make sure that the following prerequisites are met:
- The derrick boom radius is 13 m.
- The ballast trailer radius is 13 m.
- The guy rods **13** on the ballast trailer are in operating position and are pinned and secured, see section „Bringing the guy rods on the ballast trailer into operating position“.
- The guy rods on the derrick boom are pinned and secured.

Note

▶ The ballast trailer guy rods must be assembled and secured according to the separately supplied assembly drawings. The numbering on the assembly drawings must be identical to the numbering on the guy rods.

DANGER

Guy rods **not** pinned!
By removing the retaining pin **14** or the retaining pin **16** the guy rods **13** drop sideways.
Death, severe injury, property damage.

▶ Before unpinning the retaining pins **14**, make sure that the entire derrick guying is properly pinned and secured. Perform a visual inspection.
▶ Before unpinning the retaining pins **16**, make sure that the entire derrick guying is properly pinned and secured. Perform a visual inspection.

The guy rods **39** of the derrick boom must be pinned with the guy rods **13** on the ballast trailer. The connector pins **34** are held in „pulled“ condition by the Allen screws **36** in the pin position.

▶ Unpin the connector pin **34**: Remove the spring retainer **35** and unpin connector pins **34** on both sides.
▶ Position the guy rods **39** by extending the pull cylinder **38** over the guy rods **13**.
▶ Align the guy rods **39** on the guy rods **13**.
▶ Pin the guy rods **39** on both sides with the guy rods **13**: Insert the connector pins **34**.
▶ Secure the connector pins **34** with washer **37** and spring retainer **35**.

NOTICE

Retaining pins are pinned in crane operation!
Ballast trailer will be damaged.

▶ Make sure, that during crane operation with the ballast trailer, both retaining pin **14** and retaining pin **16** are unpinned on the cross bracket.

When the guy rods **39** are pinned and secured with the guy rods **13** on both sides:

▶ Perform a visual inspection. On each cross bracket, release and unpin both retaining pin **14** and retaining pin **16**.

LWE/LR 1600-2-001/18101-07-02/en

copyright © Liebherr-Werk Ehingen GmbH 2018

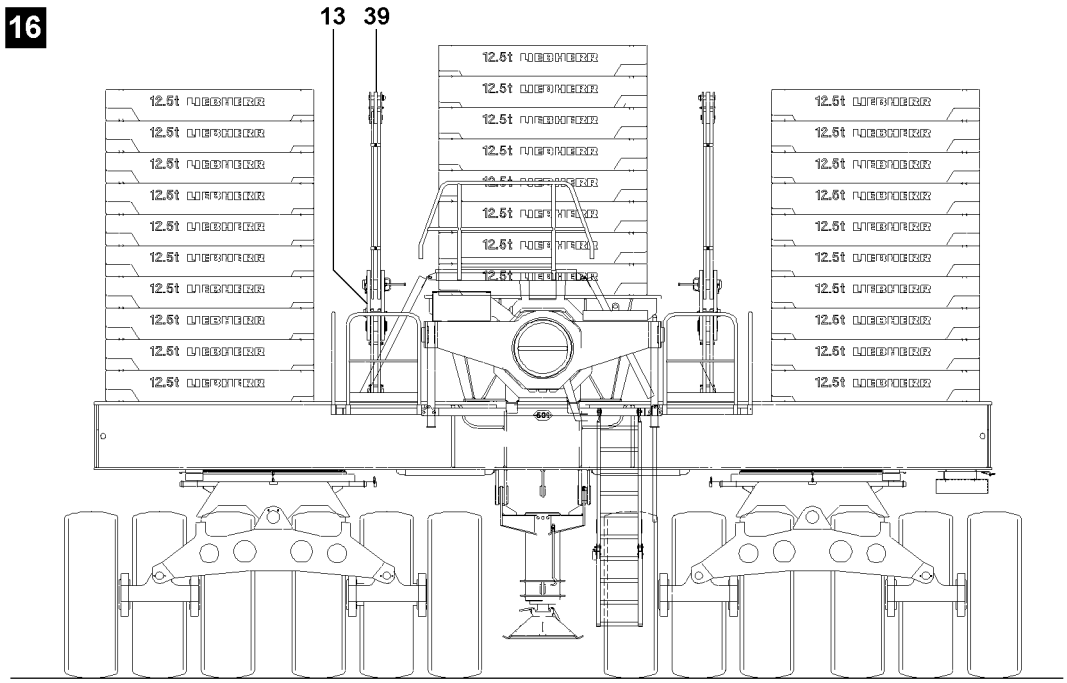

Fig.106868

LWE/LR 1600-2-001/18101-07-02/en

copyright © Liebherr-Werk Ehingen GmbH 2018

2.6 Ballasting

The ballast plates are marked with their own weights.

– Ballast plate 12.5 t

Note

▶ Instead of ballast plates of 12.5 t , 25.0 t ballast plates can also be used.

Make sure that the following prerequisites are met:

– The ballast trailer is pinned and secured on the turntable on both sides.
– The derrick guy rods are pinned and secured on both sides.
– On every cross bracket, both retaining pins **14** and the retaining pin **16** are unpinned.

NOTICE

Damage to the support cylinders!
If the support cylinders are **not** retracted, they can be significantly damaged during ballasting of the ballast trailer.

▶ Completely retract the support cylinder before ballasting of the ballast trailer!
▶ The warning lights **416** („ballast trailer support retracted“) must illuminate.

WARNING

Falling ballast plates!
If more than the specified loads are lifted with the ropes, then they or the studs for the ballast plates will be overloaded!
The ballast plates can topple!
Personnel can be severely injured or killed.

▶ Do not subject fastening ropes up to the maximum load bearing capacity!
▶ Place the ballast plates correctly on the ballast trailer!
▶ Replace damaged ballast plates.

▶ Use the auxiliary crane to evenly distribute the ballast plates on the ballast trailer and centre them on the cantering plates.
▶ Lay ballast plates individually or as a packet on the ballast trailer.

LWE/LR 1600-2-001/18101-07-02/en

copyright © Liebherr-Werk Ehingen GmbH 2018

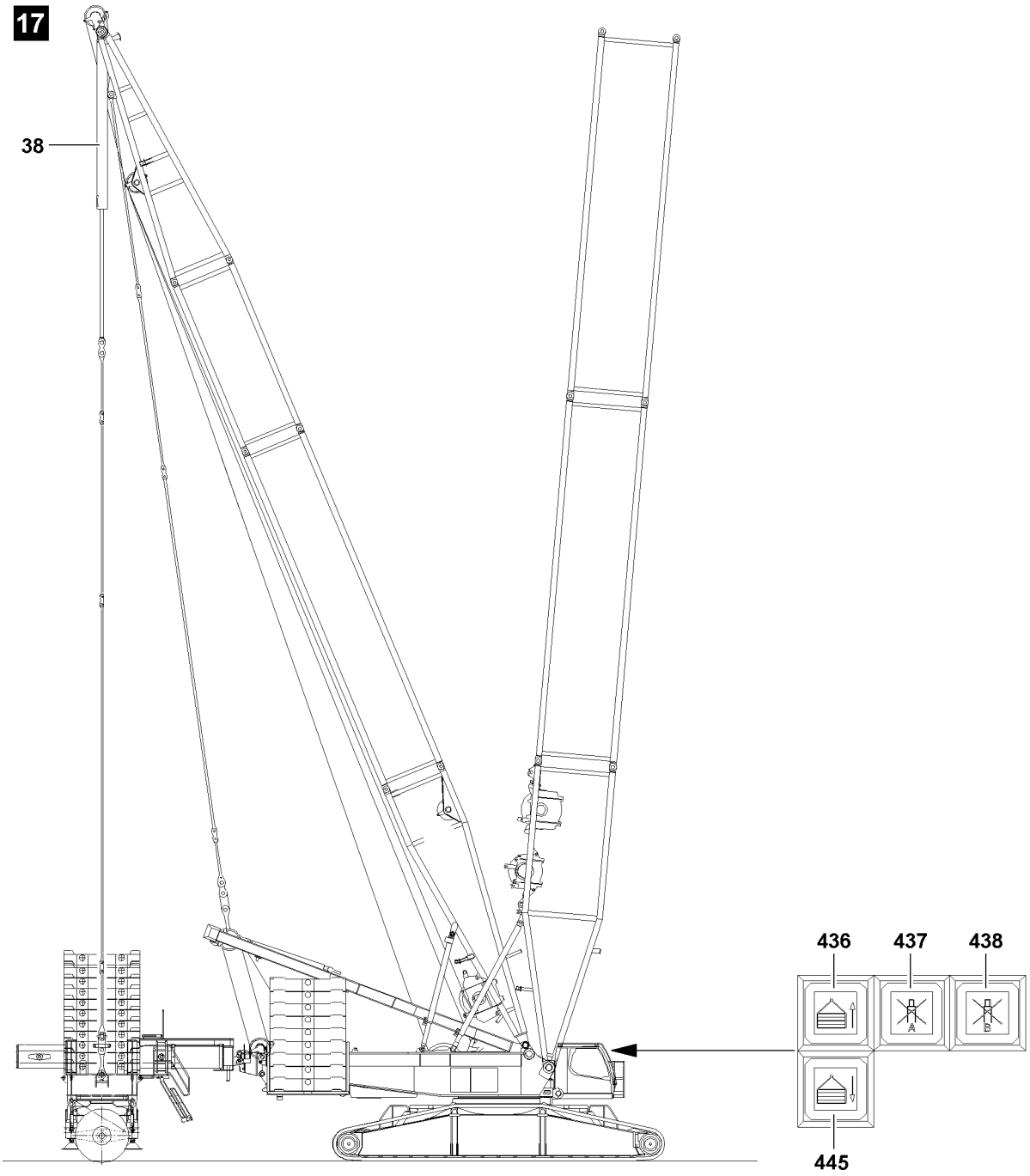

LWE/LR 1600-2-001/18101-07-02/en

Fig.106869

copyright © Liebherr-Werk Ehingen GmbH 2018

2.7 Lifting and lowering the ballast trailer with the pull cylinders

The pull cylinders **38** in the derrick ballast guying can only be controlled from the crane operator's cab.

Note

- If the ballast trailer is raised via the button **436** or lowered via the button **445**, then the horizontal alignment of the ballast trailer is automatically regulated by a level sensor.
- For a ballast utilization of **more than** or **equal to** 90 %, the level sensor regulates the ballast trailer level to ± 0.45°.
- At a ballast utilization of **less than** 90 %, the level sensor regulates the ballast trailer level to ± 2.5°. This makes it possible to set the ballast trailer down to a ground slope of 2.5°.

DANGER

Danger of accident!
If the following notes are not observed, personnel can be severely injured or killed.
In addition, damage can occur on the ballast trailer.

- When lifting or lowering the ballast trailer, pay attention to the horizontal alignment of the ballast trailer.
- When lifting or lowering the ballast trailer, the forces in the ballast guyings must be regularly checked on the LICCON monitor. If the difference of the forces between the „Derrick ballast guying A“ and „Derrick ballast guying B“ are too large, an acoustical warning will be issued and the values on the LICCON monitor blink, see also section „Difference force monitoring of ballast guying“.
- When pressing the button **437** („Stop cylinders A on the derrick ballast“) or the button **438** („Stop cylinders B on the derrick ballast“) then the level sensor is bypassed and the ballast trailer can be included within the limited angle range. This is only permitted when setting down the ballast trailer on uneven ground and applying utmost caution.

2.7.1 Lifting the ballast trailer

▶ Press the button **436**.

Result:

– The ballast trailer is raised.

2.7.2 Lowering the ballast trailer

▶ Press the button **445**.

Result:

– The ballast trailer is lowered.

2.7.3 Stopping the pull cylinder on the derrick ballast

▶ Press the button **437**.

Result:

– The pull cylinder (A) on the derrick ballast is stopped.

▶ Press the button **438**.

Result:

– The pull cylinder (B) on the derrick ballast is stopped.

LWE/LR 1600-2-001/18101-07-02/en

copyright © Liebherr-Werk Ehingen GmbH 2018

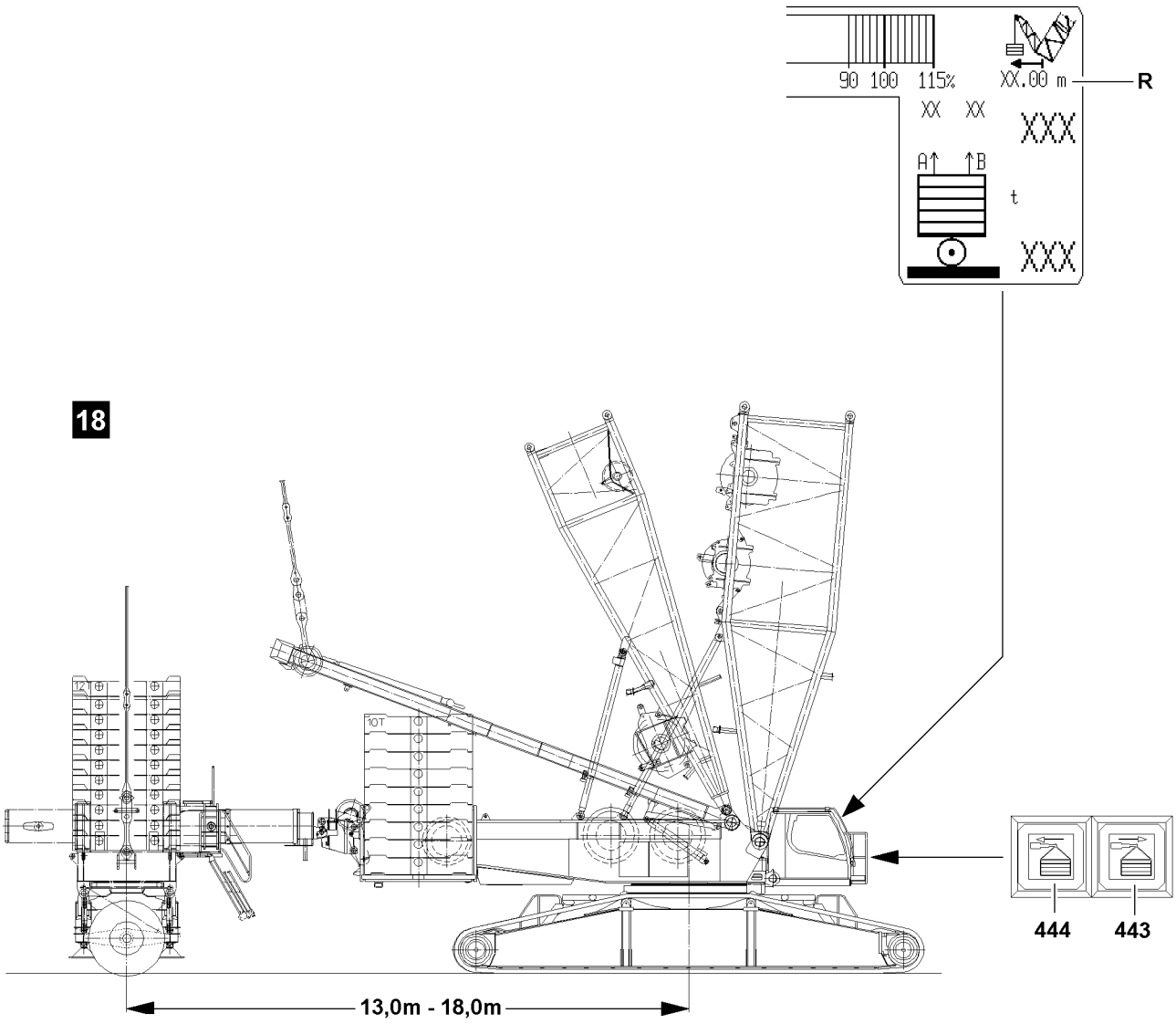

LWE/LR 1600-2-001/18101-07-02/en

Fig.106870

copyright © Liebherr-Werk Ehingen GmbH 2018

3 Setting the ballast trailer radii

The ballast trailer can be telescoped steplessly hydraulically from 13 m to 18 m.

The ballast trailer is equipped with a telescopeable ballast trailer guide. This allows the derrick ballast radius to be adjusted to suit the environment or type of lifting work. The derrick ballast radius **R** is displayed on the LICCON monitor.

Note

- ▶ The release for telescoping the ballast trailer guide out and in is only given when the wheel sets are in „towing“ mode, see section „Towing“.
- ▶ If the ballast trailer is supported for installation on the turntable, then it is possible to telescope the ballast trailer guide out and in with reduced pressure.
- ▶ When telescoping the ballast trailer guide out, monitor the derrick ballast radius **R** on the LICCON monitor constantly.
- ▶ The crane operator may not blindly rely on the derrick ballast radius measurement, he must think for himself and check if the length sensor measure functions correctly, see chapter 4.02 in the crane operator's instructions.

3.1 Telescoping the ballast trailer guide out

Make sure that the following prerequisite is met:

– The wheel sets of the ballast trailer are in „Towing“ position.

▶ Press the button **443**.

Result:

– The ballast trailer guide moves out.

▶ Observe the force display in the derrick guying $F1_{min}$-$F1_{max}$.

3.2 Telescoping the ballast trailer guide in

Make sure that the following prerequisite is met:

– The wheel sets of the ballast trailer are in „Towing“ position.

▶ Press the button **444**.

Result:

– The ballast trailer guide moves in.

▶ Observe the force display in the derrick guying $F1_{min}$-$F1_{max}$.

LWE/LR 1600-2-001/18101-07-02/en

copyright © Liebherr-Werk Ehingen GmbH 2018

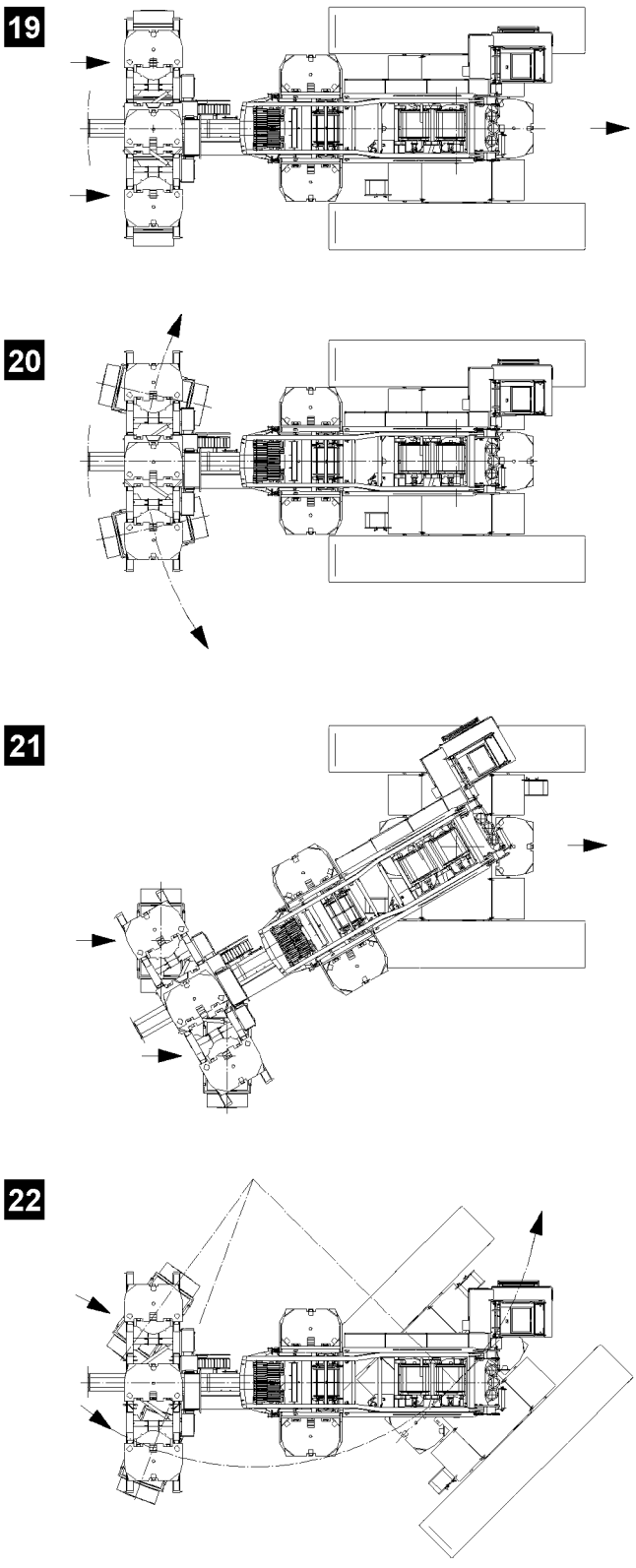

LWE/LR 1600-2-001/18101-07-02/en

Fig.106871

copyright © Liebherr-Werk Ehingen GmbH 2018

4 Steering programs

The ballast trailer has the following computer controlled steering programs:
- Towing, illustration **19**
- Circular travel, illustration **20**
- Parallel travel, illustration **21**
- Corrective steering, illustration **22**

The steering programs „Towing“, „Circular travel“ and „Parallel travel“ can only be actuated from the crane operator's cab.

WARNING
Danger when moving the wheel sets on the ballast trailer!
When moving the wheel sets on the ballast trailer, personnel can be severely injured or killed.
- ▶ The crane operator as well as any operating personnel must make sure that there are no persons within the danger zone - between the wheel sets.
- ▶ It is prohibited for anyone to remain between the wheel sets for all setting / adjustment work on the ballast trailer.
- ▶ It is prohibited to anyone to remain between the wheel sets when selecting the various steering programs.

LWE/LR 1600-2-001/18101-07-02/en

copyright © Liebherr-Werk Ehingen GmbH 2018

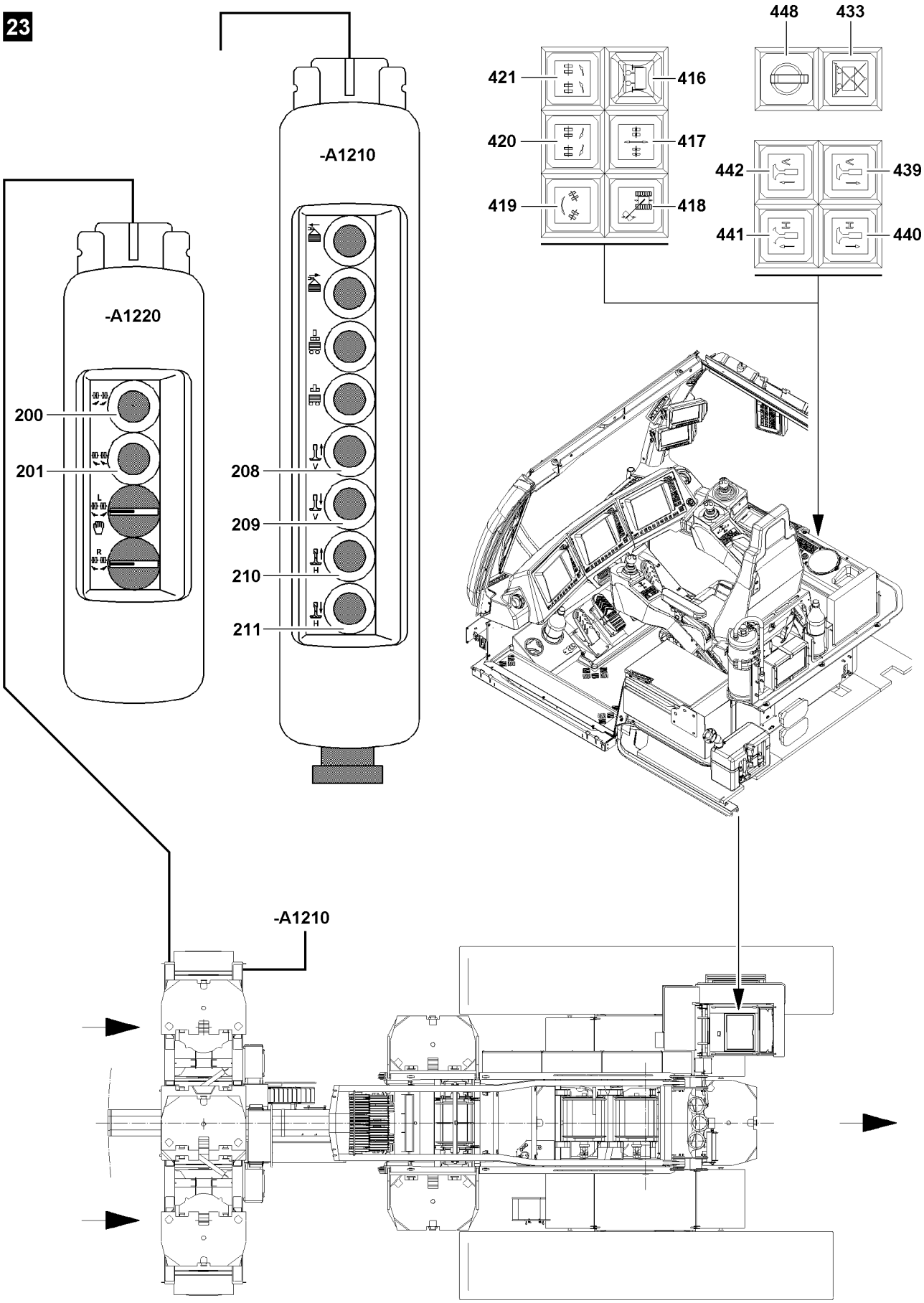

Fig.106872

copyright © Liebherr-Werk Ehingen GmbH 2018

4.1 Notes to change the wheel sets

Note

▶ The buttons for the setting of the various steering programs are in the instrument panel of the crane operator's cab, see crane operating instructions, chapter 4.01.

Moving the wheel sets for „Towing“ is made with the button **417**.

Moving the wheel sets for „Circular travel“ is made with the button **419**.

Moving the wheel sets for „Parallel travel“ is made with the button **418**.

The wheel sets are steered correctively „to the right“ with the button **420** from the crane operator's cab, or with the button **201** from the control panel **-A1220** on the ballast trailer.

The wheel sets are steered correctively „to the left“ with the button **421** from the crane operator's cab, or with the button **200** from the control panel **-A1220** on the ballast trailer.

The manual change of the wheel sets for assembly purposes is only possible with the buttons on the control panel **-A1220** on the ballast trailer.

Note

▶ If the ballast trailer is suspended above the ground, the wheel sets can be positioned in any mode, if the key button **448** „Ballast trailer lifted off“ was turned on. Turning and driving of the crane is possible.

NOTICE

Danger of accidents when turning or driving!
If the lifted off ballast trailer scrapes on the ground - with turned on key button **448** - when turning or driving the crane, then the ballast trailer and the crane can be significantly damaged.

▶ If the ballast trailer has been lifted off the ground, the key button **448** „Ballast trailer lifted off“ is actuated, then it must be checked that the wheels do **not scrape on the ground**. An instructed person must check visually.
▶ It is prohibited to remain within the danger zone.

WARNING

The crane can topple over!
If the ballast trailer is lifted off the ground past the **maximum permissible** 250 mm , then the crane can topple over to the rear if the load rips off.
Personnel can be severely injured or killed.

▶ Do not lift the ballast trailer by more than 250 mm off the ground.

LWE/LR 1600-2-001/18101-07-02/en

copyright © Liebherr-Werk Ehingen GmbH 2018

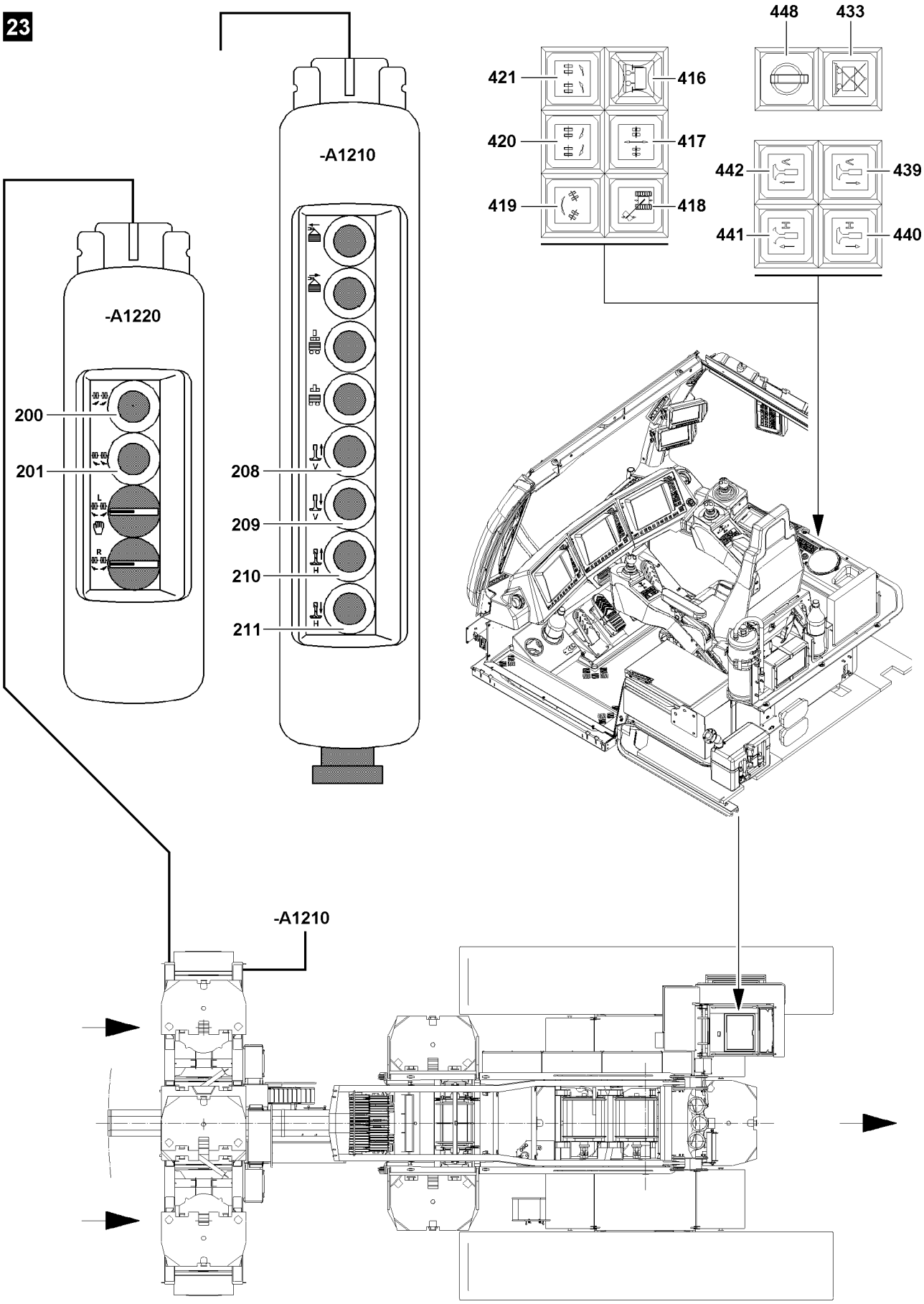

Fig.106872

LWE/LR 1600-2-001/18101-07-02/en

copyright © Liebherr-Werk Ehingen GmbH 2018

4.2 Adjustment procedure

The adjustment procedure for the various steering programs is identical.

Note

- If the ballast trailer is **not loaded**, the wheel sets can be changed without relieving the tires.
- If the ballast trailer is **loaded**, the ballast trailer must be raised first with the support cylinders until the tires are relieved.

DANGER

Danger of accident due to overloading the crane!

By raising the ballast trailer with the support cylinders, the force at test point 1 (MS1) can increase to the permissible maximum value. The extension of the support cylinders is then turned off.

- Monitor the actual force display of test point 1 (MS1) on the LICCON monitor and stop the extending of the support cylinders in time before the shut-off, see crane operating instructions, chapter 4.02.

- Actuate the support cylinders from the crane operator's cab and at the same time, monitor the „Actual force display of test point 1 (MS1)“ on the LICCON monitor.
- Before reaching the maximum operating force, „$F1_{max\text{-}operation}$“: Stop the extension of the support cylinders.

LWE/LR 1600-2-001/18101-07-02/en

copyright © Liebherr-Werk Ehingen GmbH 2018

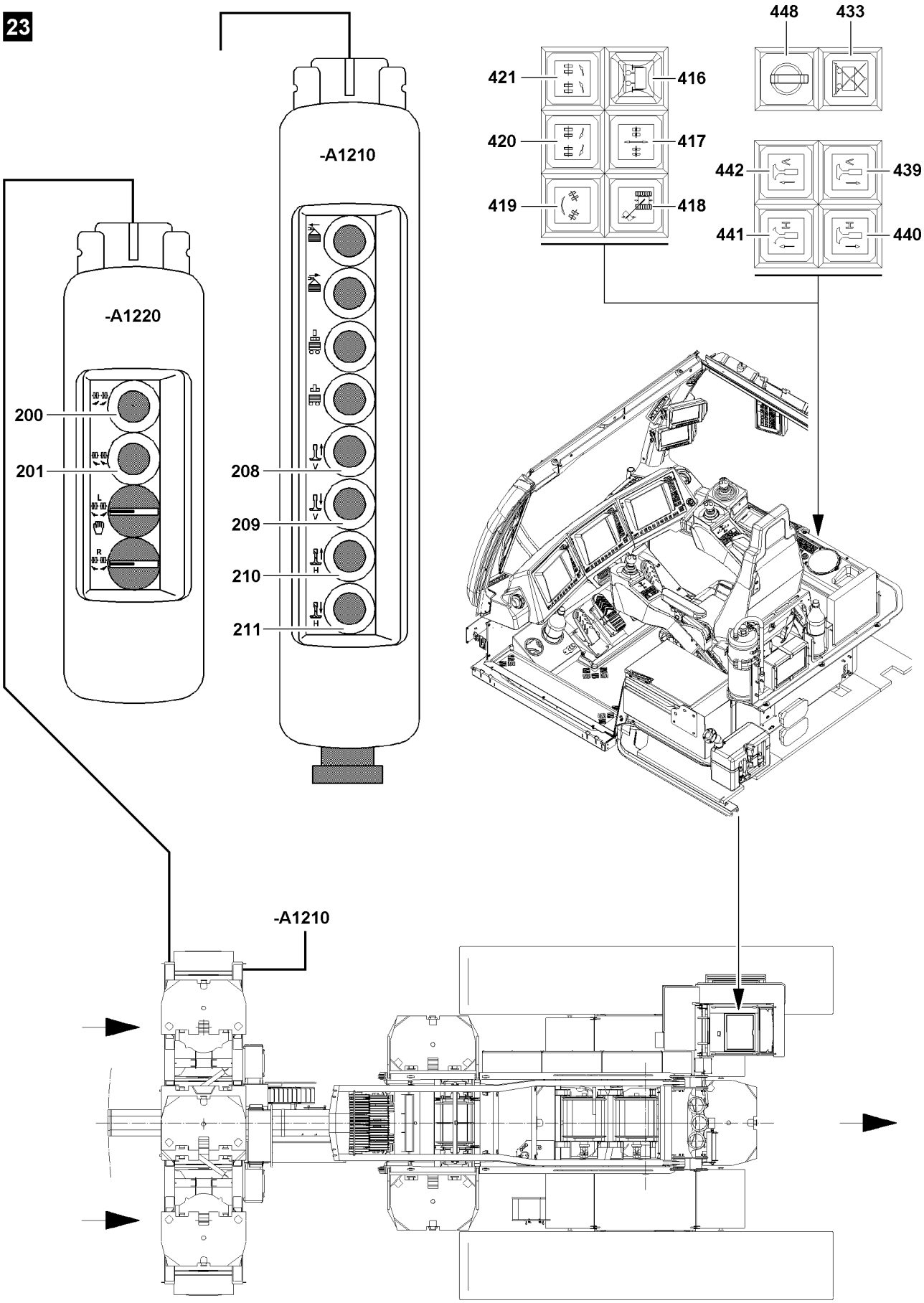

Fig.106872

LWE/LR 1600-2-001/18101-07-02/en

copyright © Liebherr-Werk Ehingen GmbH 2018

4.3 Towing

4.3.1 Lifting the ballast trailer with the support cylinders

Note
▶ The support cylinders of the ballast trailer must always be moved out evenly.

Move the front and rear support cylinders out:

▶ Press the button **442** and button **441** in the crane operator's cab.
or
Press the button **209** and button **211** on the control panel **-A1210**.

4.3.2 Aligning the wheel sets in towing position

Make sure that the following prerequisite is met:
– The ballast trailer is raised via the support cylinders to the point where the wheel sets are relieved.

▶ Press the button **417**.

Result:

– The wheel sets of the ballast trailer are aligned in towing position.
– During the turning procedure of the wheel sets, the indicator light in the button **417 blinks**.
– When the towing position is reached, the indicator light in the button **417 lights up**.

4.3.3 Lowering the ballast trailer with the support cylinders

Note
▶ The support cylinders of the ballast trailer must always be moved in evenly.

Retract the support cylinders completely on the front and rear:

▶ Press the button **439** and button **440** in the crane operator's cab.
or
Press the button **208** and button **210** on the control panel **-A1210**.

Result:

– The support cylinders move in.

Note
▶ The release to drive the crane in steering program „Towing“ is only made when both wheel sets are in travel direction (neutral position) and the support cylinders are fully moved in.
▶ Check the settings of the wheel sets and the support cylinders before driving the crane.

▶ Retract the support cylinders completely.

Result:

– The warning light **416** („Ballast trailer support moved in“) **lights up**.

LWE/LR 1600-2-001/18101-07-02/en

copyright © Liebherr-Werk Ehingen GmbH 2018

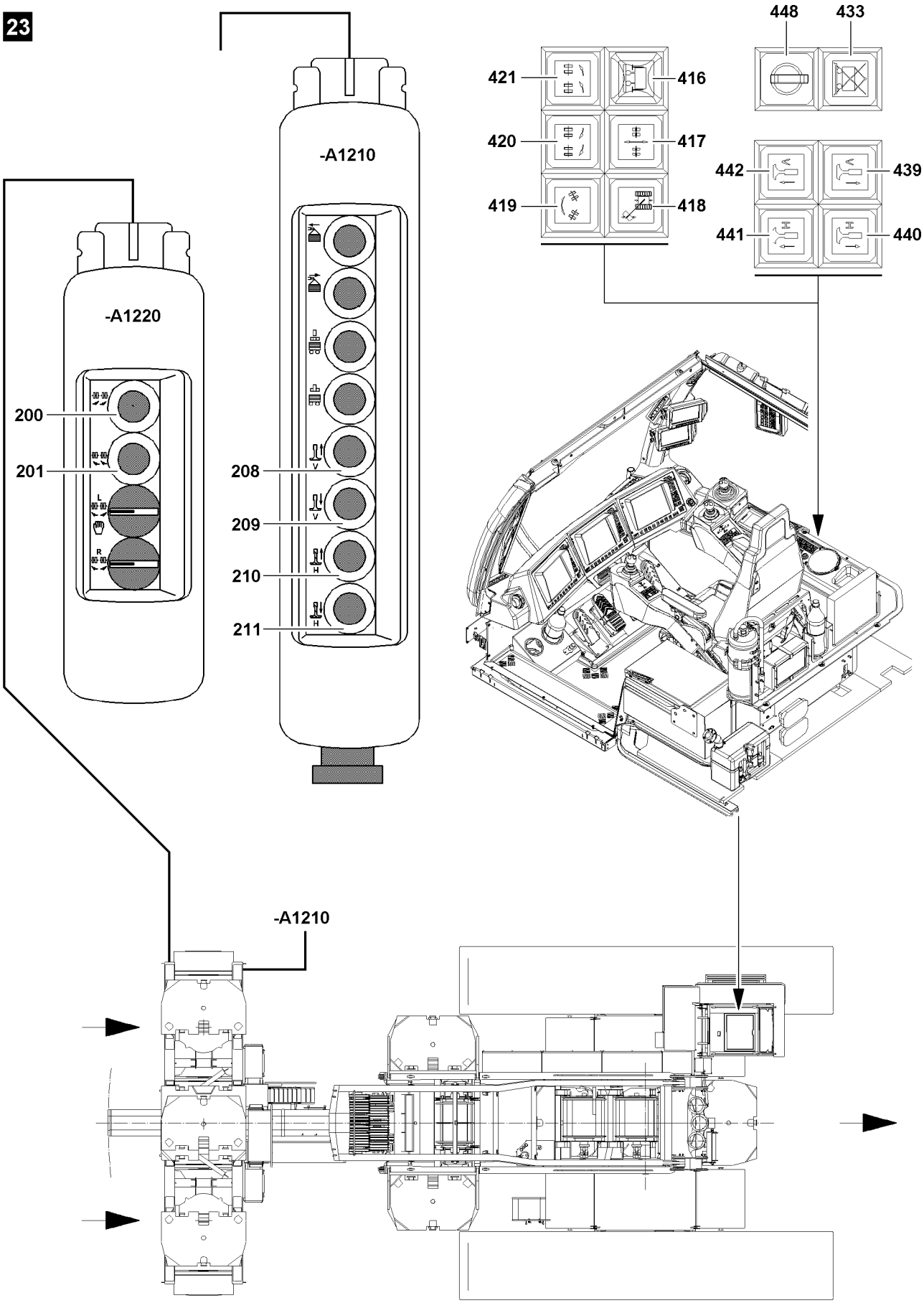

Fig.106872

copyright © Liebherr-Werk Ehingen GmbH 2018

4.3.4 Corrective steering the wheel sets

NOTICE
Damage of ballast trailer!
Through corrective steering of wheel sets while at a standstill, the ballast trailer can be damaged.
- ▶ If the ballast trailer is ballasted, the corrective steering of the wheel sets at a standstill is **prohibited**.
- ▶ When the ballast trailer is ballasted, the corrective steering of the wheel sets is only permissible while driving.
- ▶ Monitor the distortion of the tires.

Note
- ▶ Changing from the steering program „Towing“ into the steering program „Corrective steering“ and back is possible while driving the crawler.
- ▶ If the steering program „Corrective steering“ is switched into the steering program „Towing operation“ then the indicator light **blinks** on the „button“ **417** until the towing operation position of the wheel sets is achieved.
- ▶ If one of the wheel sets deviates from the specified limit angle, the „indicator light in the button“ **417** blinks and the wheel sets must be reset as described above.
- ▶ **In general, the following applies:** The wheel sets only move if either the button **420**, the button **421**, or the button **417** in the crane operator's cab, or the button **200** or the button **201** on the control panel is pressed in the respective steering program or if the crawler is driven.

LWE/LR 1600-2-001/18101-07-02/en

copyright © Liebherr-Werk Ehingen GmbH 2018

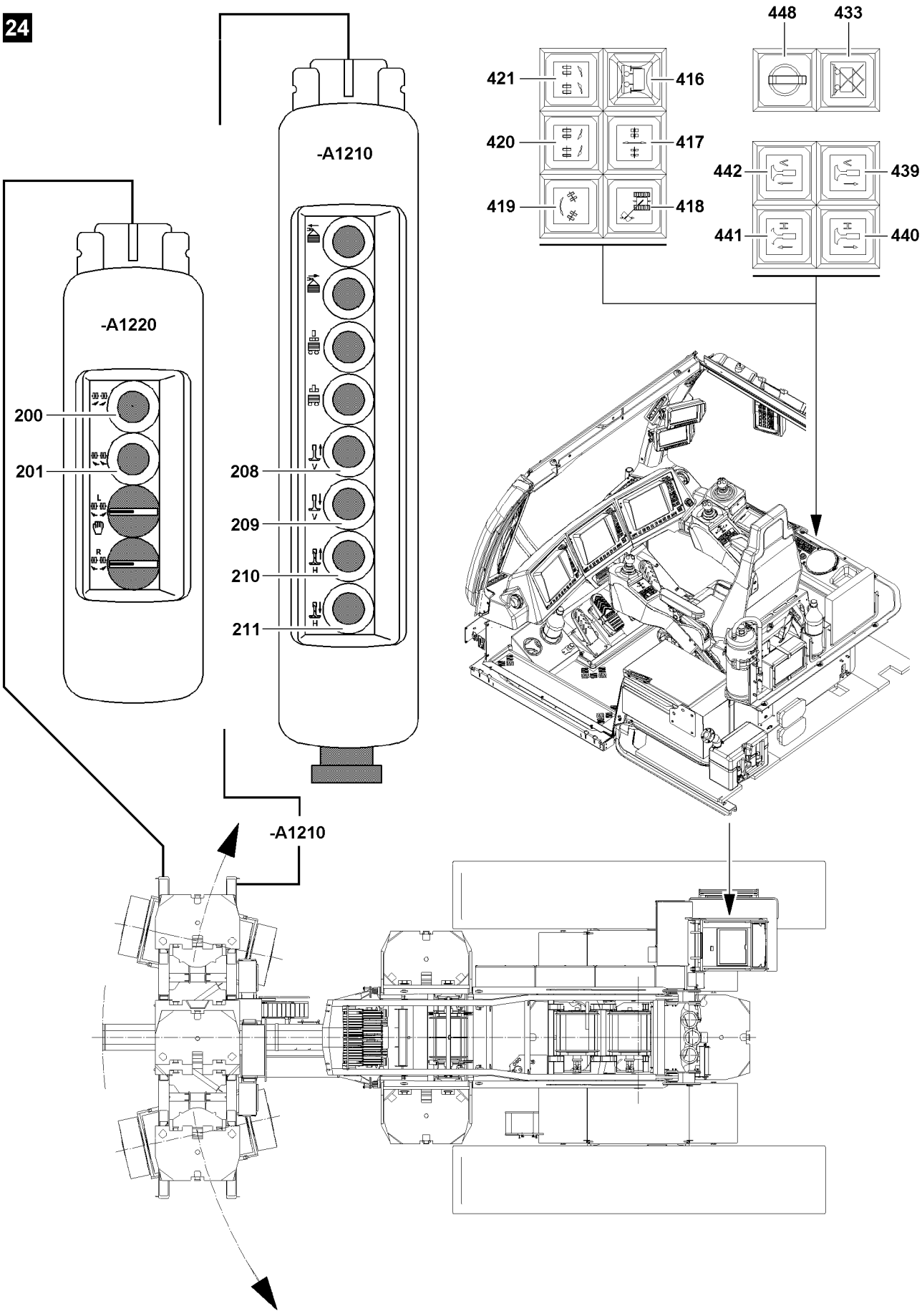

Fig.108926

LWE/LR 1600-2-001/18101-07-02/en

copyright © Liebherr-Werk Ehingen GmbH 2018

4.4 Circular travel

Make sure that the following prerequisite is met:
- The ballast trailer guide is telescoped out to the required derrick ballast radius.

4.4.1 Lifting the ballast trailer with the support cylinders

Note
▶ See section Towing operation.

4.4.2 Aligning wheel sets into circular travel position

Make sure that the following prerequisite is met:
- The ballast trailer is raised via the support cylinders to the point where the wheel sets are relieved.

▶ Press the button **419**.

Result:

- The ballast trailer wheel sets are aligned in the circular travel position.
- During the turning procedure of the wheel sets, the indicator light in the button **419 blinks**.
- When the circular travel position is reached, the indicator light in the button **419 lights up**.

Note
▶ If one of the wheel sets deviates from the specified angle, the indicator light in the button **419** blinks and the wheel sets must be reset as described above.

▶ Press the button **419** again.

4.4.3 Lowering the ballast trailer with the support cylinders

Note
▶ See section Towing operation.

Note
▶ The release for turning the turntable in the steering program „Circular travel“ is only made when both wheel sets are in turning position (circular travel) and the support cylinders are completely moved in.
▶ Check the settings for the wheel sets and support cylinders before inspecting turning of the turntable.

LWE/LR 1600-2-001/18101-07-02/en

copyright © Liebherr-Werk Ehingen GmbH 2018

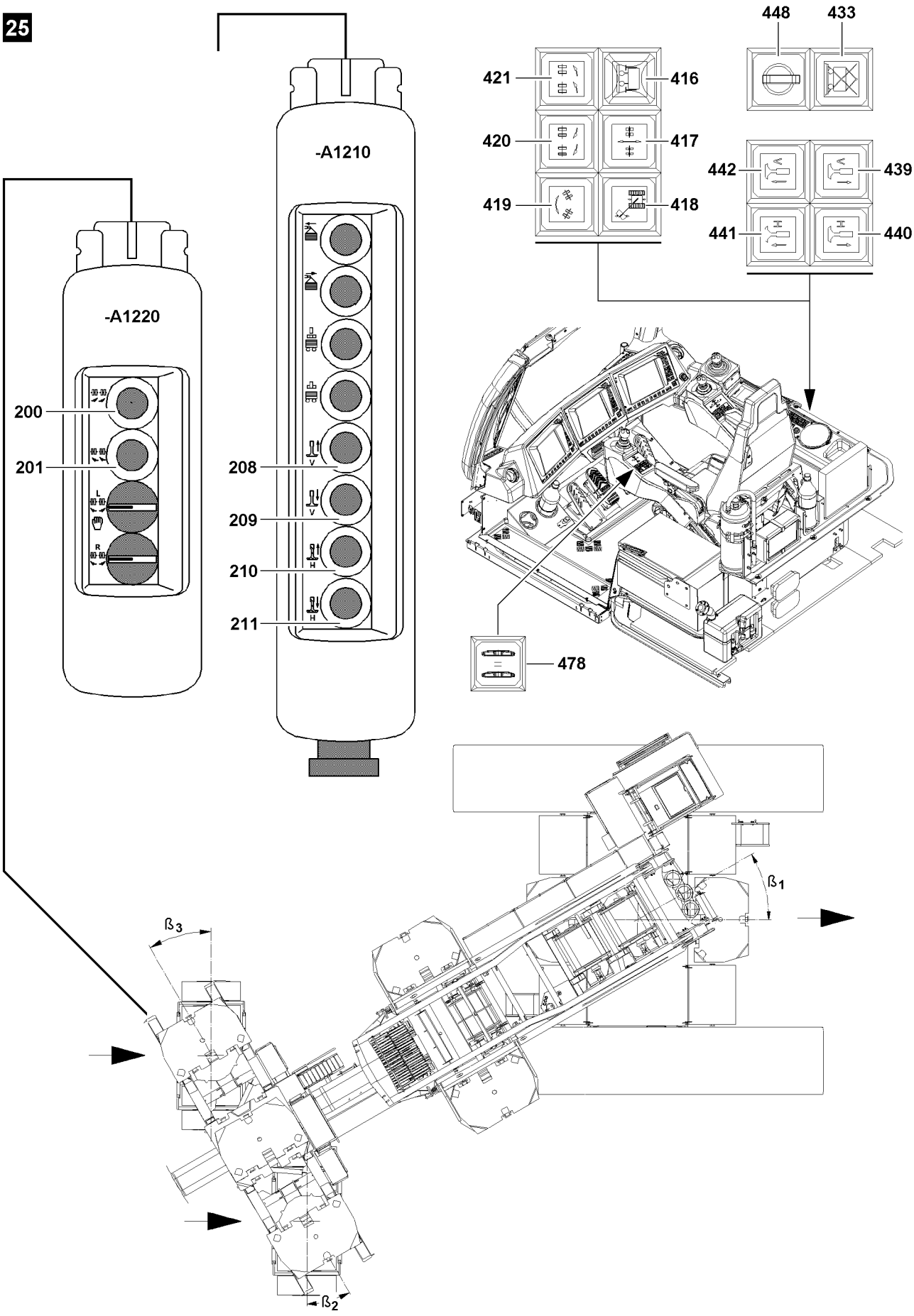

Fig.106874

LWE/LR 1600-2-001/18101-07-02/en

copyright © Liebherr-Werk Ehingen GmbH 2018

4.5 Parallel travel

NOTICE
Danger of damage to the crane and the ballast trailer!
Due to steering movements on the crawler tracks while driving parallel, the crane and the ballast trailer can be significantly damaged.
- ▶ For parallel travel, steering the crawler track is **prohibited**.
- ▶ For parallel travel, the side tire distortion on the wheel sets must be observed by an instructed person over the entire travel route of the crane. If the tires distort by more than 100 mm , then the position of the wheel sets must be corrected.

Note
- ▶ Independently of whether the ballast trailer stands on the ground or is lifted off the ground, the wheel sets must always stand in a „Parallel travel“ position.
- ▶ In deviating position for the wheel sets, the control turns itself off.
- ▶ To drive the crane in „Parallel travel“, the switch **478** on the left control panel is to be actuated.

Note
- ▶ The travel drive of the crawler is locked until the wheel sets are in parallel travel position.
- ▶ When driving the crawler, the slewing gear brake of the crane remains applied and the hydraulic coasting is opened.
- ▶ If the angles $ß_2$ and $ß_3$ deviate in relation to $ß_1$ by more than the permissible limit angle, the crawler track is stopped, the indicator light in the button **418** blinks.
- ▶ Only through renewed alignment of the wheel sets to the required specified angle can the crawler track be driven again.
- ▶ If the switch **478** „Crawler parallel travel“ is turned on, the crawler moves straight forward on appropriate terrain. This simplifies driving the crane with the ballast trailer in steering program „Parallel travel“.

4.5.1 Lifting the ballast trailer with the support cylinders

Note
- ▶ See section Towing operation.

LWE/LR 1600-2-001/18101-07-02/en

copyright © Liebherr-Werk Ehingen GmbH 2018

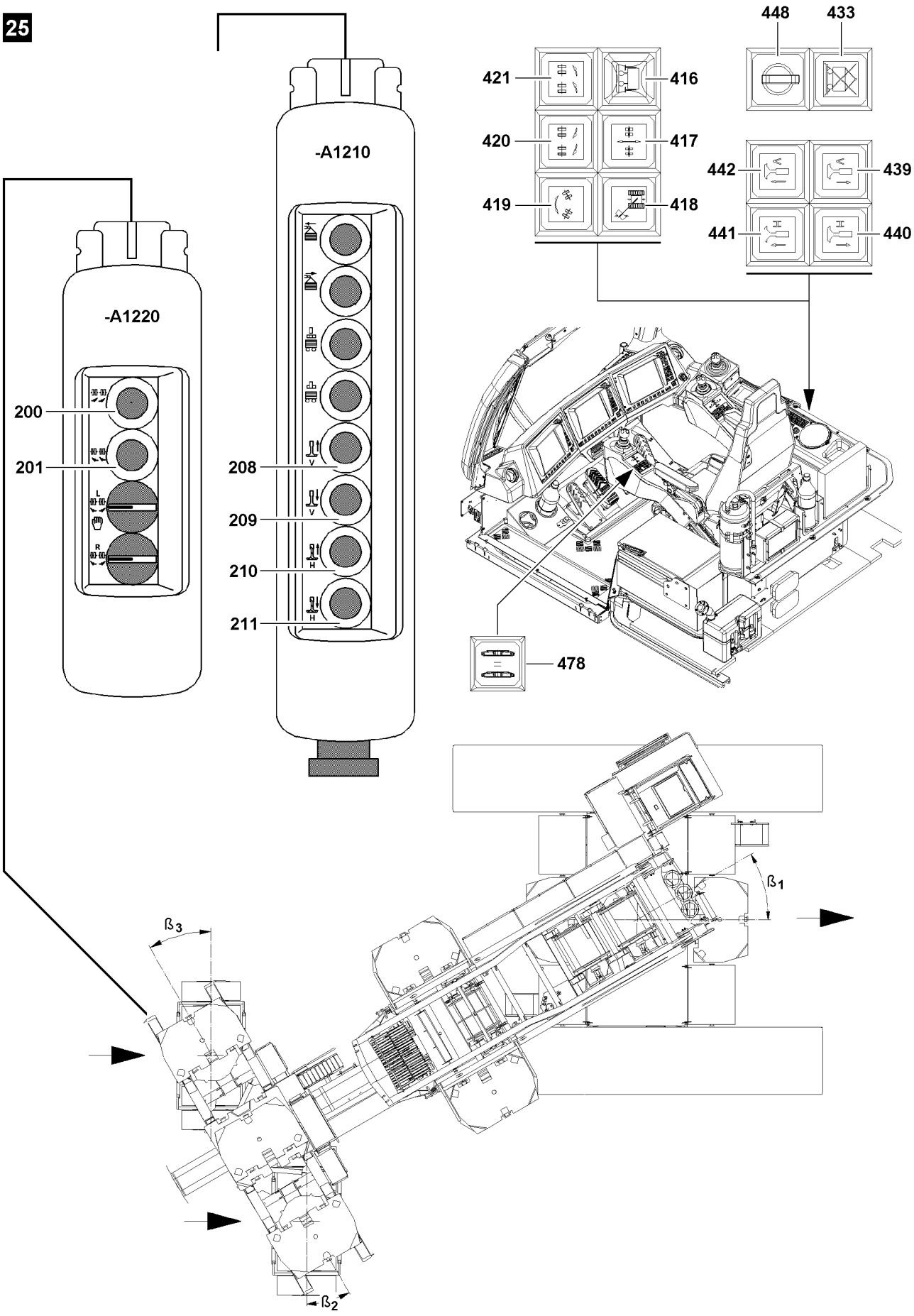

Fig.106874

LWE/LR 1600-2-001/18101-07-02/en

copyright © Liebherr-Werk Ehingen GmbH 2018

4.5.2 Aligning the wheel sets into parallel travel position

Make sure that the following prerequisite is met:
- The ballast trailer is raised via the support cylinders to the point where the wheel sets are relieved.

▶ Press the button **418**.

Result:

- The ballast trailer wheel sets are aligned in the parallel travel position.
- During the turning procedure of the wheel sets, the indicator light in the button **418 blinks**.
- When the parallel travel position is reached, the indicator light in the button **418 lights up**.

Note

▶ If one of the wheel sets deviates from the specified angle, the indicator light in the button **418** blinks and the wheel sets must be reset as described above.

▶ Check the parallel position of the wheel sets.

4.5.3 Lowering the ballast trailer with the support cylinders

Note

▶ See section Towing operation.

copyright © Liebherr-Werk Ehingen GmbH 2018

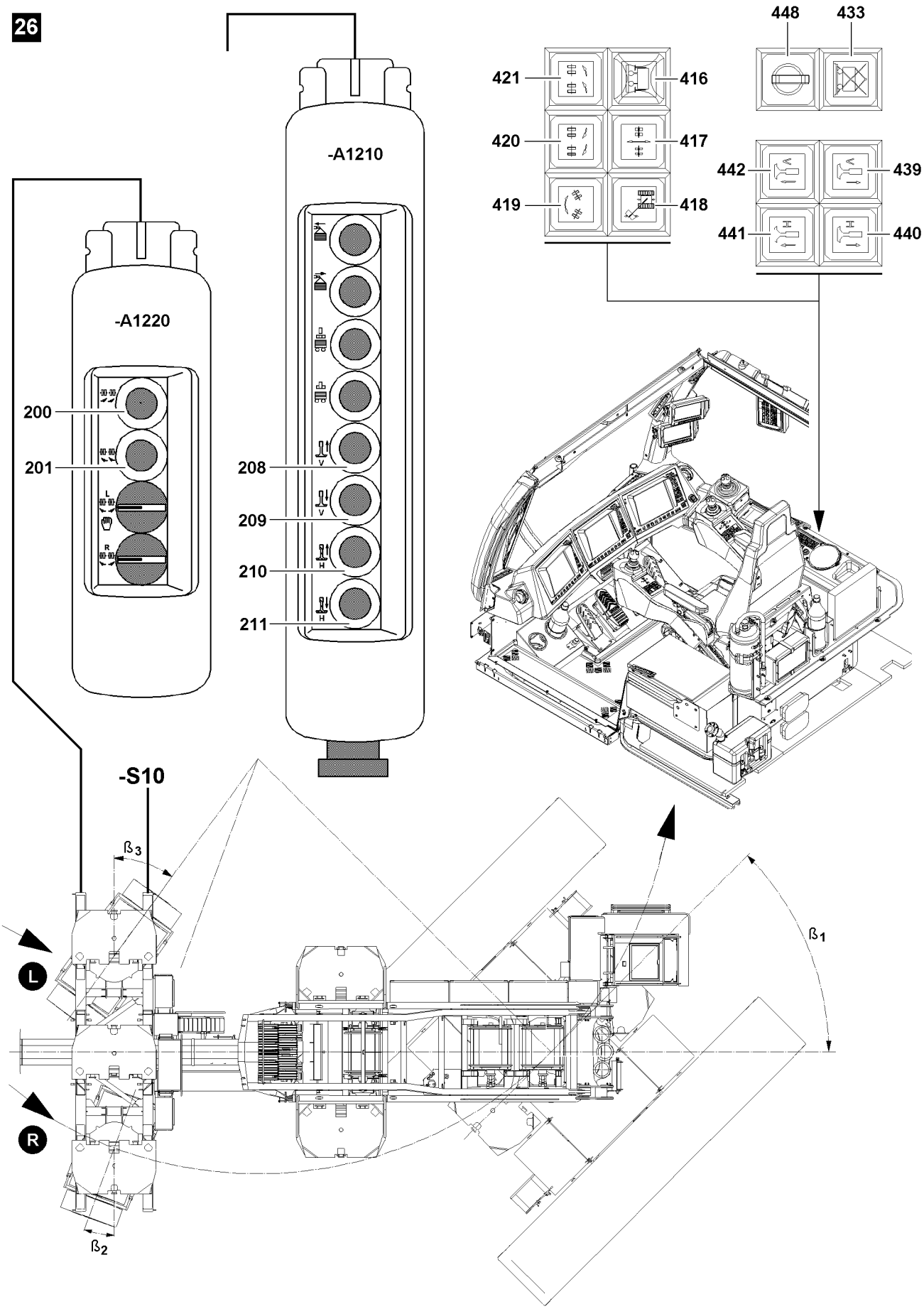

Fig.106875

LWE/LR 1600-2-001/18101-07-02/en

copyright © Liebherr-Werk Ehingen GmbH 2018

4.6 Corrective steering

Make sure that the following prerequisite is met:
- Crawler operation is turned on.

4.6.1 Steering and corrective steering of the wheel sets

Make sure that the following prerequisites are met:
- The steering program „Towing“ is selected **and** the wheel sets are in towing position.
- The indicator light in the button **417** lights up.

Turn wheel sets to the right:

▶ Press the button **420** in the crane operator's cab.
or
Press the button **200** on the control panel **-A1220**.

Turn wheel sets to the left:

▶ Press the button **421** in the crane operator's cab.
or
Press the button **201** on the control panel **-A1220**.

The right wheel set is regulated by the computer-controlled steering program so that there is always a center steering position. The angle $ß_1$ is determined by the travel of the crawler and the angle $ß_3$ is determined by the steering of the operator, whereby the angle $ß_2$ is continually corrected. Switching from the steering program „Corrective steering“ into the steering program „Towing“ and back, after achieving the towing position, is possible while driving the crawler! If the steering program „Corrective steering“ is selected from the steering program „Towing“ the indicator light in the button **420** and the indicator light in the button **421** lights up.

Note
- ▶ The left wheel set can be steered to the specified limit angle $ß_3$. It is not possible to steer beyond this limit angle.
- ▶ The right wheel set is corrected to follow the center steering position. If the right correctively steered wheel set cannot follow the left wheel set, then the left wheel set is stopped until the right correctively steered wheel set has caught up.
- ▶ If the right wheel set still deviates from the specified limit angle, the indicator light in the button **420** and the indicator light in the button **421** blinks and you must begin again with „Towing“.
- ▶ If the crawler is driven and exceeds the angle $ß_1$ the turntable automatically switches the specified value into the steering program „Towing“. The indicator light in the button **420**, the indicator light in the button **421** and the indicator light in the button **417** blinks.
- ▶ When the towing position is reached, manual corrective steering can continue. The indicator light in the button **417** lights up.
- ▶ **In general, the following applies:** The wheel sets only move during corrective steering if either the button **420** or the button **421** from the crane operator's cab, **or** the button **200** or the button **201** on the control panel is pressed in the respective steering program or if the crawler is driven.

▶ Check the settings.

LWE/LR 1600-2-001/18101-07-02/en

copyright © Liebherr-Werk Ehingen GmbH 2018

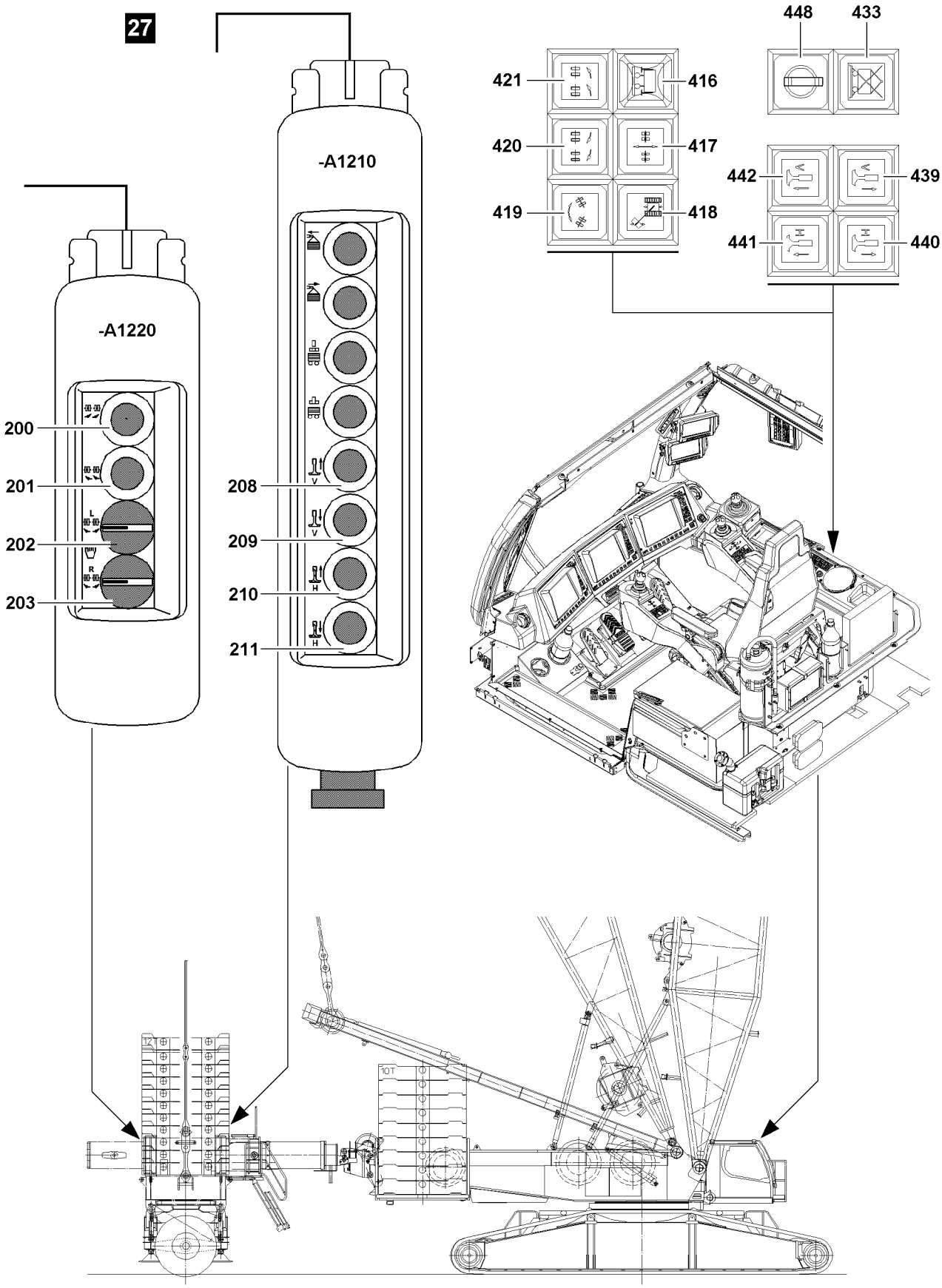

Fig.107243

LWE/LR 1600-2-001/18101-07-02/en

copyright © Liebherr-Werk Ehingen GmbH 2018

4.7 Manual operation for assembly

The ballast trailer is equipped with a program which allows for each wheel set to be turned individually at assembly.

4.7.1 Lifting the ballast trailer with the support cylinders

Note
▶ See section Towing operation.

4.7.2 Setting the wheel sets

For setting the wheel sets, the rotary switch on the control panel **-A1220** is to be activated.

▶ Turn rotary switch **202** to the right.

Result:

– Turn left wheel set to right.

▶ Turn rotary switch **202** to the left.

Result:

– Turn left wheel set to the left.

▶ Turn rotary switch **203** to the right.

Result:

– Turn right wheel set to right.

▶ Turn rotary switch **203** to the left.

Result:

– Turn right wheel set to the left.

4.7.3 Lowering the ballast trailer with the support cylinders

Note
▶ See section Towing operation.

LWE/LR 1600-2-001/18101-07-02/en

copyright © Liebherr-Werk Ehingen GmbH 2018

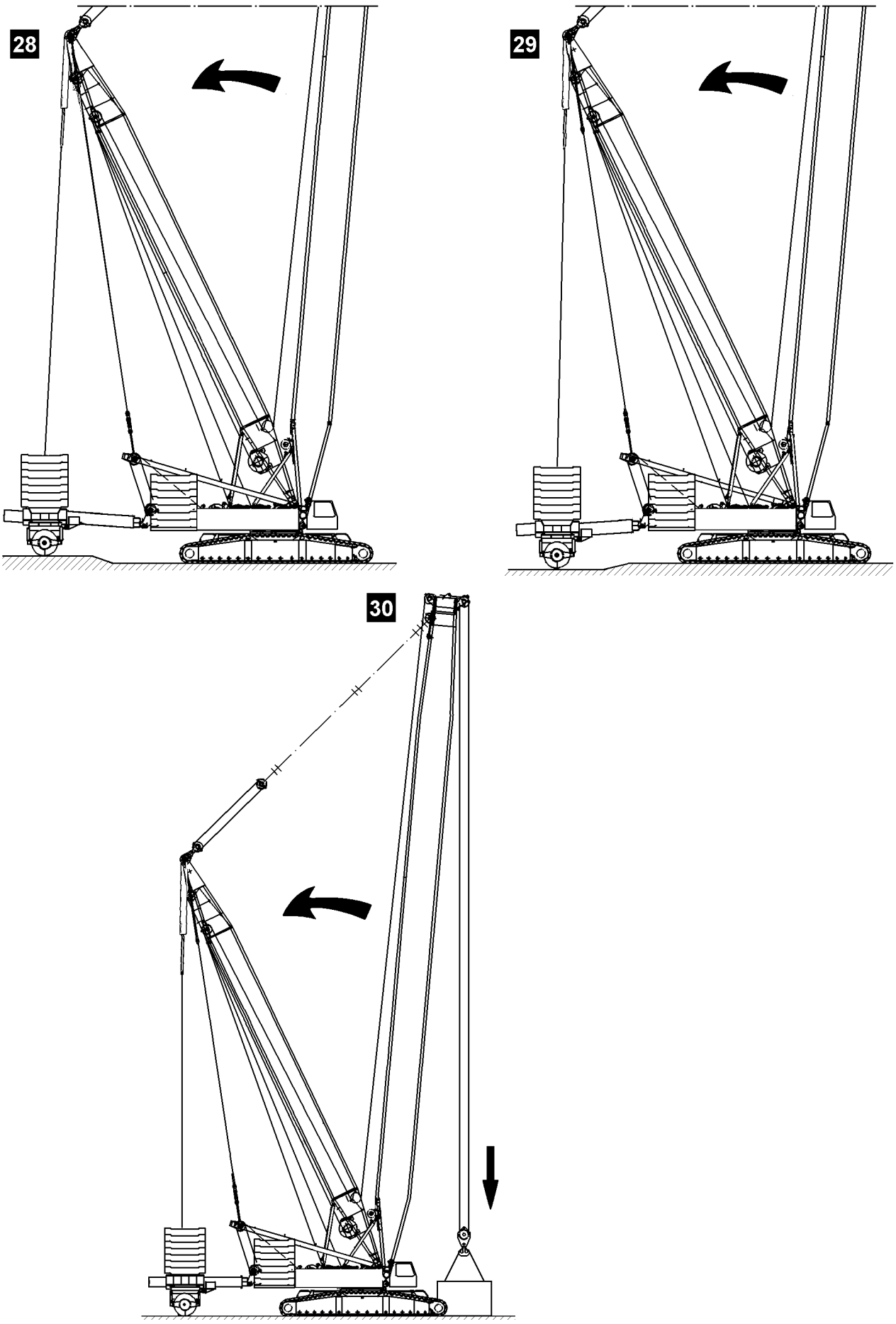

Fig.107244

LWE/LR 1600-2-001/18101-07-02/en

copyright © Liebherr-Werk Ehingen GmbH 2018

5 Driving with the ballast trailer

5.1 Procedure

Note
- ▶ It is only permitted to drive the ballast trailer on level ground capable of supporting the load.
- ▶ Driving over obstacles is not permitted.

DANGER
The crane can topple over!
In case of non-permissible level difference between the ballast trailer travel route and the crane position level, the entire crane system can be pulled back suddenly.
The relapse cylinders can thereby run into the mechanical block position and be significantly damaged.
The crane can topple over and personnel can be severely injured or killed.
- ▶ Do not exceed or fall below the permissible level difference between the ballast trailer roadway and the crane placement level.

5.1.1 Pressure monitoring in extension cylinder

Through propelling force of the crawler upon forward and backward travel, the extension cylinder can be overloaded in the pull and push direction if the ballast trailer travels over ground unevenness or slopes.

Note
- ▶ If the maximum permissible pressure in the extension cylinder is exceeded, an acoustic signal will sound and an error message appears.
- ▶ There is **no** shut off.

NOTICE
Piston rod on block!
If the piston rod of the extension cylinder is already on block through telescoping out or in of the ballast trailer guide, no pressure monitoring occurs.
The extension cylinder can be significantly damaged.
- ▶ It is prohibited to move the piston rod in or out up to the block position.

LWE/LR 1600-2-001/18101-07-02/en

copyright © Liebherr-Werk Ehingen GmbH 2018

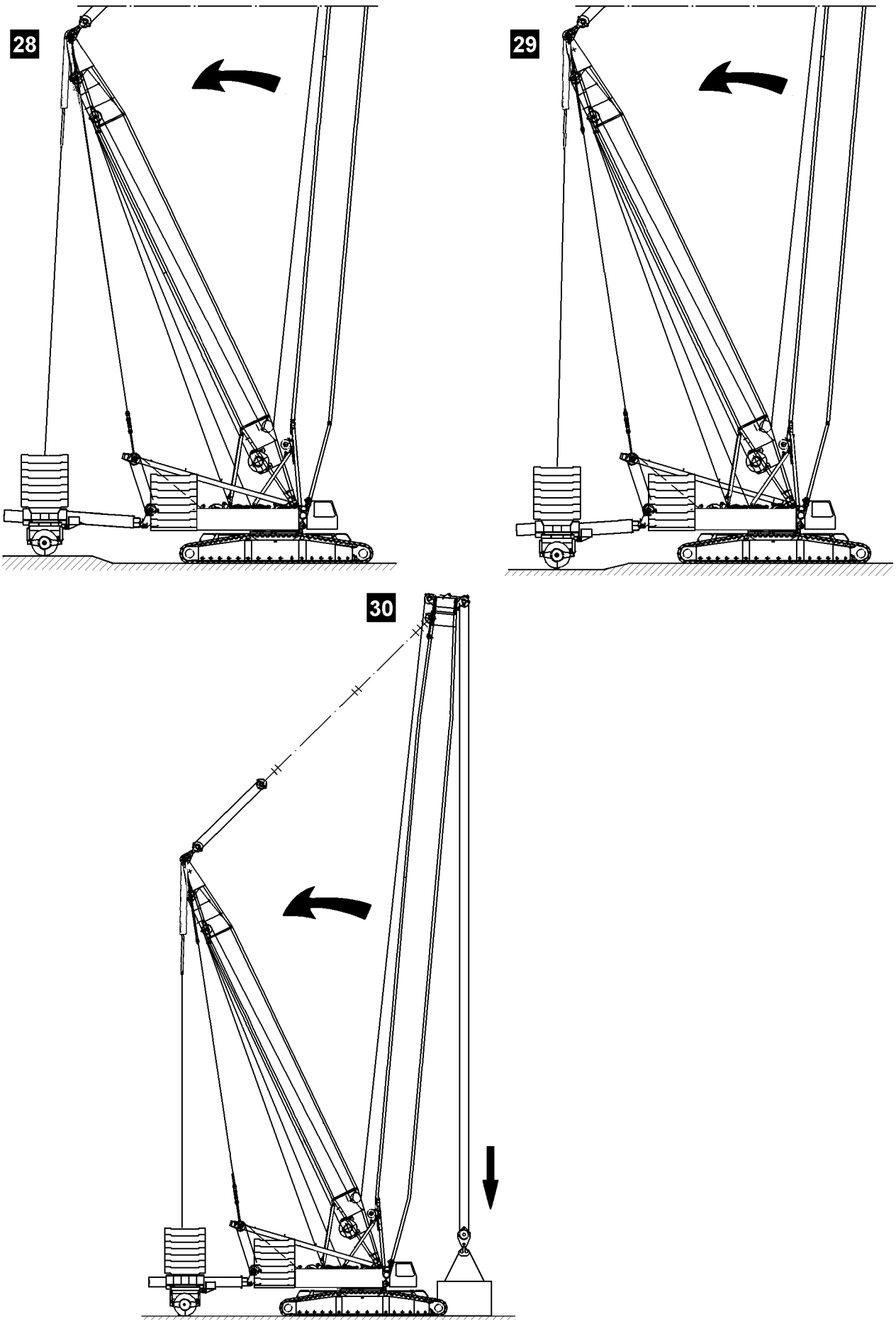

Fig.107244

LWE/LR 1600-2-001/18101-07-02/en

copyright © Liebherr-Werk Ehingen GmbH 2018

5.2 Safety guidelines for travel operation

5.2.1 Relapse cylinder

When the steepest operating position of the main boom is reached, luffing up is turned off by the LIC-CON overload protection in all operating modes.

Note

▶ However, there are cases when the relapse cylinders move mechanically to block position, due to a movement of the entire crane system to the rear.

5.2.2 Block position relapse cylinders

NOTICE

Damage to the relapse cylinder and the boom!
Through level difference between the ballast trailer and crane route, the boom can suddenly be pulled backward and the relapse cylinder can go into the block position.
The relapse cylinder or the boom can be damaged.

▶ Make sure before taking up the driving mode, or before turning the crane superstructure, that the crane driving track or the ballast trailer circular path is even and capable of supporting the load.

In normal crane operation without bypass of the LICCON overload protection, a block position is not possible. Should a block position still occur, the movement is turned off and the boom limitation icon shown on the operating screen indicates which block position has been started up.

With this boom limitation icon it is to be determined which limit switch on which relapse cylinder has been actuated. Reverse the last movement which was carried out until the corresponding limit switch is released again.

5.2.3 Case 1

Note

▶ Refer to illustration **28**.

When driving or turning the crane with steeply positioned boom, the ballast trailer can be lowered, due to the level differences. This causes the whole boom system to be pulled backward and there is a risk of reaching the block position in the relapse cylinders. The same risk applies when turning if the ballast trailer sinks due to level differences.

Note

▶ Due to the signals „Main boom relapse cylinder on block“ or „Derrick relapse cylinder on block“ in operation with ballast trailer, the movements „Crawler travel“ and „Turning“ are automatically turned off.

LWE/LR 1600-2-001/18101-07-02/en

copyright © Liebherr-Werk Ehingen GmbH 2018

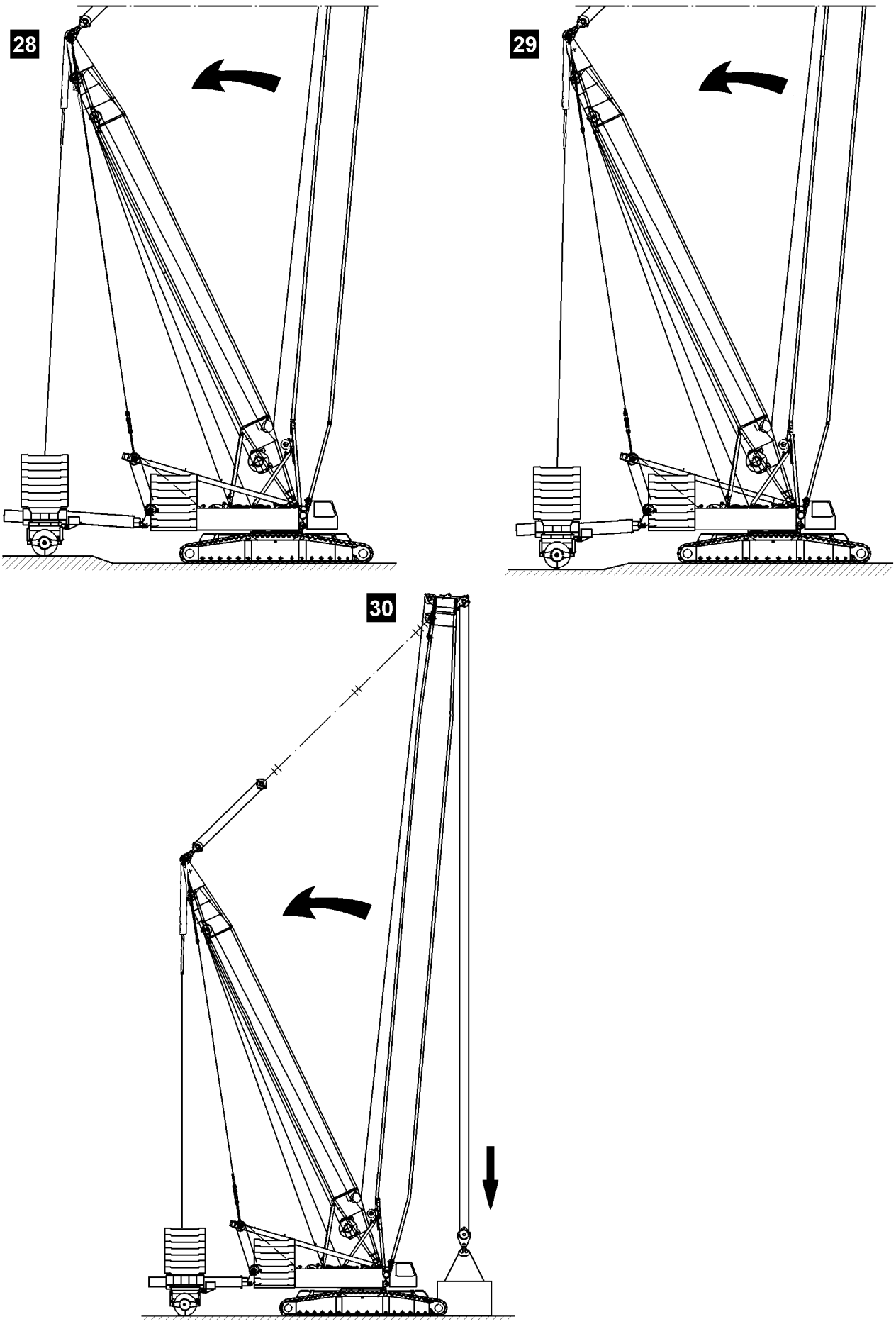

Fig.107244

LWE/LR 1600-2-001/18101-07-02/en

copyright © Liebherr-Werk Ehingen GmbH 2018

5.2.4 Case 2

Note
▶ Refer to illustration **29**.

If the level under the crane increases, the boom system is also pulled back. There is a risk that the relapse cylinders reach the block position.

Note
▶ Due to the signals „Main boom relapse cylinder on block“ or „Derrick relapse cylinder on block“ in operation with ballast trailer, the movements Crawler travel and Turning are automatically turned off.

5.2.5 Case 3

Note
▶ Refer to illustration **30**.

When the load is set down with the hoist gear, the crane is relieved. This causes the booms to move backward, refer to section „Monitoring the minimum force F1“.

5.3 Maximum permissible ground unevenness

WARNING
The crane can topple over!
By exceeding the maximum permissible value for ground unevenness while driving the crane, the crane can topple.
Personnel can be severely injured or killed.
▶ The permissible ground unevenness may not be exceeded.

Level change between placement surface of the crane and the ballast trailer during towing, parallel and circular travel may not exceed a maximum permissible value.

Note
▶ The level difference of the ballast trailer route in relation to the crane route during **towing** and **parallel travel** may be no more than ± 250 mm.
▶ The level difference of the ballast trailer route in relation to the crane route during **circular travel** may be no more than ± 250 mm - with a constant uphill or downhill slope over a 90° slewing range.

5.3.1 Compensating for ground unevenness

The maximum permissible ground unevenness can be compensated by means of pull cylinders by lifting or sinking the ballast trailer.

Note
▶ The pull cylinders are operated from the crane operator's cab.

copyright © Liebherr-Werk Ehingen GmbH 2018

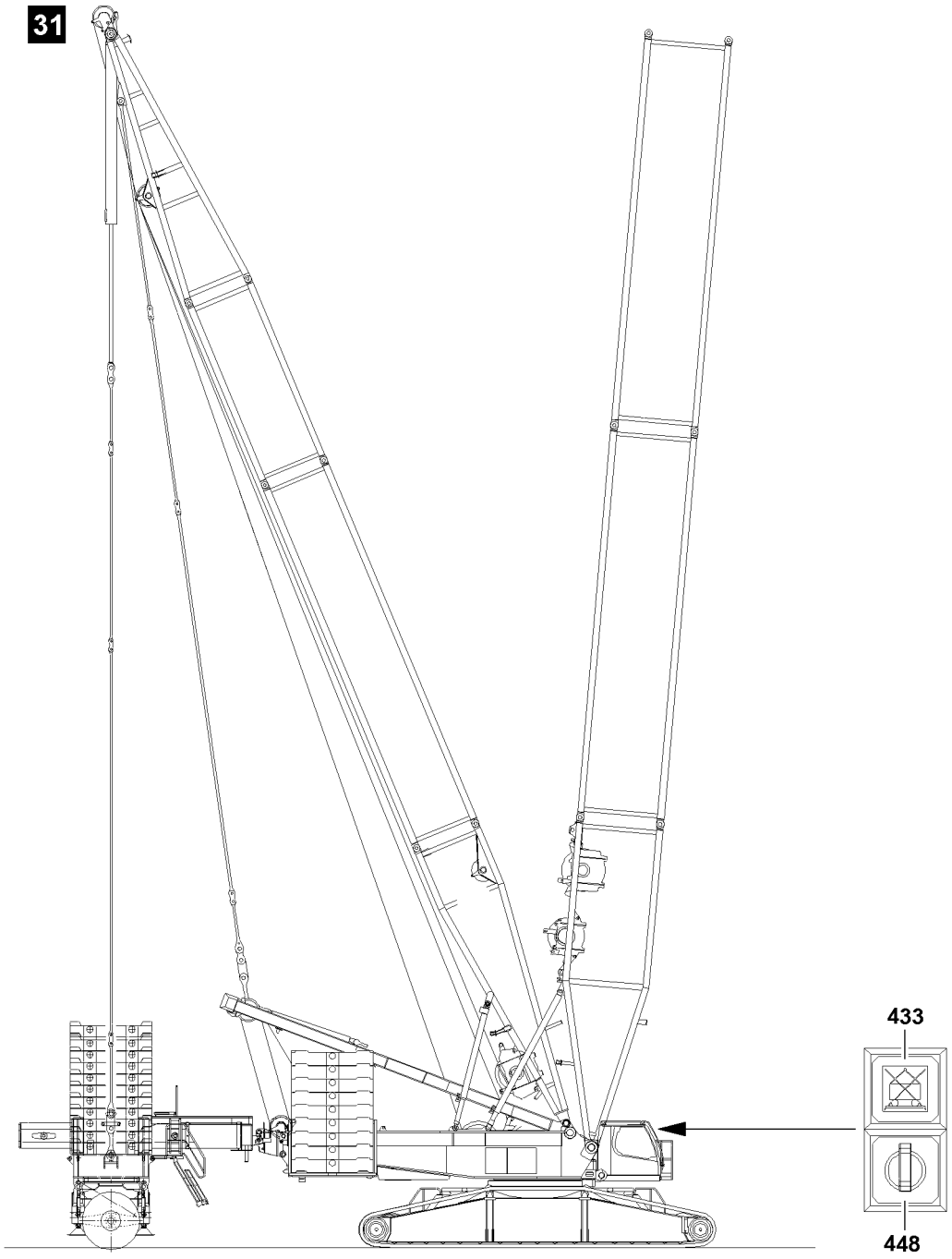

LWE/LR 1600-2-001/18101-07-02/en

Fig.107245

copyright © Liebherr-Werk Ehingen GmbH 2018

5.4 Key button „Ballast trailer lifted off“

When „Crawler driving“ and key button **448** is not operated, i.e. „Ballast trailer not lifted off“, the slewing gear brake and hydraulic slewing gear coasting are opened. For „crawler travel“ with **lifted off ballast trailer** (constant visual check), the key button **448** „Ballast trailer lifted off“ must be turned on.

DANGER
Danger of accident!
If the ballast trailer is lifted from the ground during crawler driving in the steering program „Towing“, there is a danger that the wind turns the turntable to the side during „Crawler driving“.

- ▶ After lifting the ballast trailer off, the key button **448** „Ballast trailer lifted off“ must be turned on immediately, so that the slewing gear brake remains closed for „Crawler driving“, however the hydraulic coasting remains open.
- ▶ If, when „Driving the crawler“, the ballast trailer scrapes on the ground or gets stuck on the ground, so that the turntable twists with the ballast trailer against the crawler track, the slewing gear brake can slip. The slewing gear will not be damaged.
- ▶ However, if the wheel sets of the ballast trailer are not aligned in „Towing position“, the ballast trailer or the crane will be damaged.

Note

- ▶ When the function „Ballast trailer lifted off“ is turned on, the warning light in the button **433** blinks, it is possible to turn the turntable or to drive the crane even though the wheel sets of the ballast trailer are not set on „Circular driving“, „Towing“ or „Parallel driving“.

Add „Ballast trailer lifted off“:

- ▶ Press key button **448** „Ballast trailer lifted off“.

Result:

- – The warning light in the button **433** blinks.
- – The ballast trailer icon on LICCON-Monitor 1 is represented „suspended“.

Turn „Ballast trailer lifted off“ off:

- ▶ Press the button **433**.

Result:

- – The warning light in the button **433** turns off.
- – The ballast trailer icon on LICCON-Monitor 1 is represented „on the ground“ (placed down).

LWE/LR 1600-2-001/18101-07-02/en

copyright © Liebherr-Werk Ehingen GmbH 2018

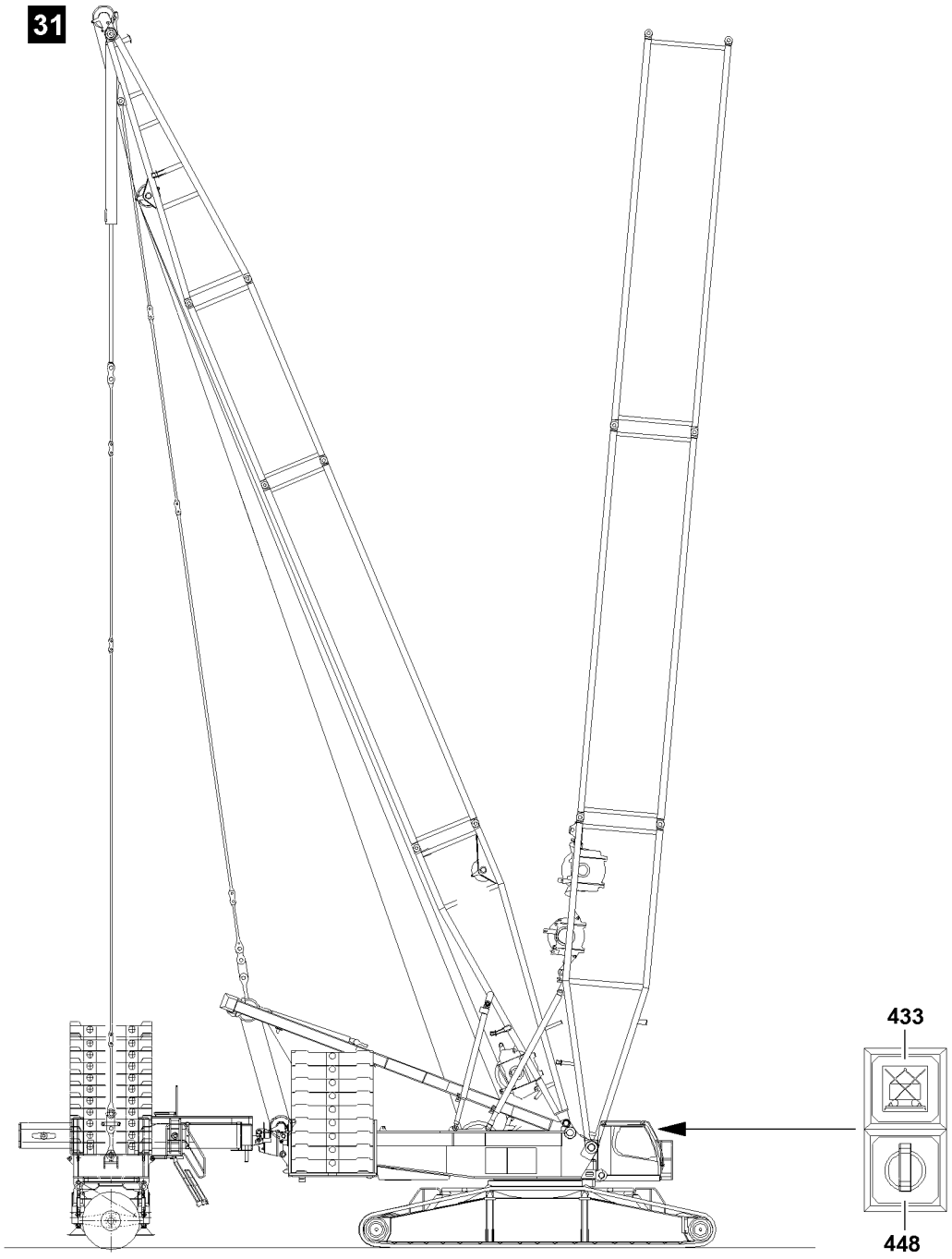

LWE/LR 1600-2-001/18101-07-02/en

Fig.107245

copyright © Liebherr-Werk Ehingen GmbH 2018

5.5 Defined ballast trailer operation

DANGER
Danger of accident!
If the ballast trailer is operated in an undefined condition, it can result in severe accidents up to toppling of the crane.
Personnel can be severely injured or killed.
▶ The ballast trailer must always be in a defined condition.
▶ Operation of the ballast trailer in an undefined state is prohibited.

The ballast trailer may not raised or set down when driving, rather this be done **before** starting to travel.

5.5.1 Ballast trailer lifted off

„Ballast trailer defined lifted from the ground“ means:

The ballast trailer is lifted from the ground and the key button **448 „Ballast trailer lifted off“** is pressed. As a result, the slewing gear brake does **not** open during „Crawler driving“ and the wind cannot turn the turntable during „Crawler driving“.

Make sure that the following prerequisites are met:
– The ballast trailer has been completely lifted off the ground.
– The key button **448** is pressed.
– The warning light in the button **433** blinks.

5.5.2 Ballast trailer on the ground

„Ballast trailer defined on the ground“ means:

That the ballast trailer and its residual load are resting on the ballast trailer tires and the key button **448** is **not** pressed. This residual load is large enough to prevent the wind from turning the turntable, if the slewing gear brake is opened when actuating „Crawler driving“.

Make sure that the following prerequisites are met:
– The ballast trailer is located with a residual load on the ground.
– The key button **448** is **not** pressed.
– The warning light in the button **433** does **not** blink.

LWE/LR 1600-2-001/18101-07-02/en

copyright © Liebherr-Werk Ehingen GmbH 2018

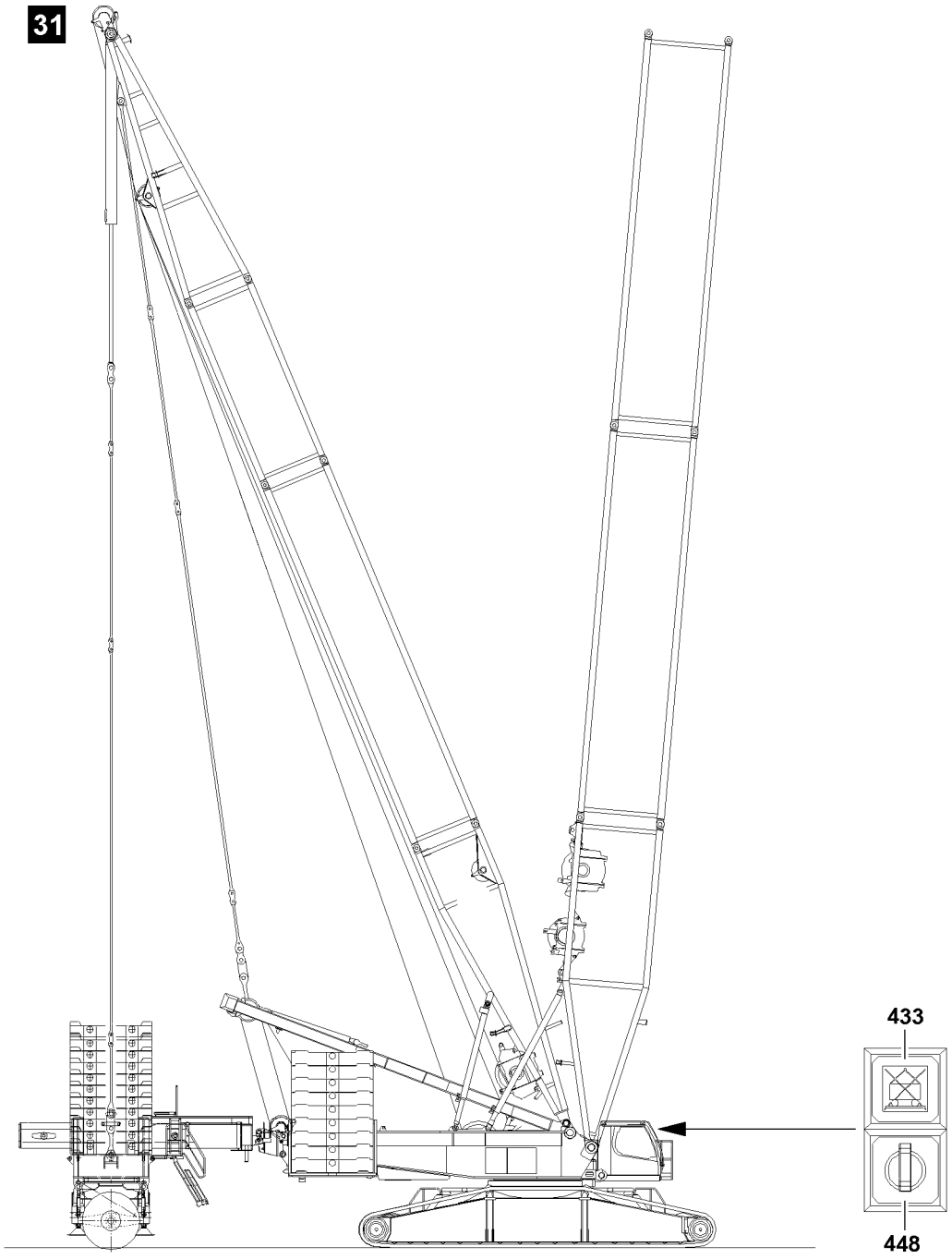

LWE/LR 1600-2-001/18101-07-02/en

Fig.107245

copyright © Liebherr-Werk Ehingen GmbH 2018

5.6 Undefined ballast trailer operation

DANGER
Danger of accident!
If the ballast trailer is operated in an undefined condition, it can result in severe accidents up to toppling of the crane.
Personnel can be severely injured or killed.
▶ The ballast trailer must always be in a defined condition.
▶ Operation of the ballast trailer in an undefined state is prohibited.

5.6.1 Ballast trailer lifted off

Note
▶ Only operate the ballast trailer in a defined condition.

„Ballast trailer undefined lifted off the ground“ means:

That the ballast trailer with a residual load of approx 1 t is placed on the ballast trailer tires and the key button **448** is pressed. As a result, the slewing gear brake does **not** open when cornering the „crawler“ and the ballast trailer tires or the slewing gear brake slip.

5.6.2 Ballast trailer on the ground

Note
▶ Only operate the ballast trailer in a defined condition.

DANGER
Swinging load!
Personnel can be killed or severely injured by swinging loads.
▶ Operation of the ballast trailer in an undefined state is prohibited.

„Ballast trailer undefined on the ground“ means: that the ballast trailer with a residual load of approx. 1 t is placed on the ballast trailer tires and the key button **448** is **not** pressed. This residual load is so small that the wind can turn the turntable, if the slewing gear brake opens when actuating „Crawler driving“.

LWE/LR 1600-2-001/18101-07-02/en

copyright © Liebherr-Werk Ehingen GmbH 2018

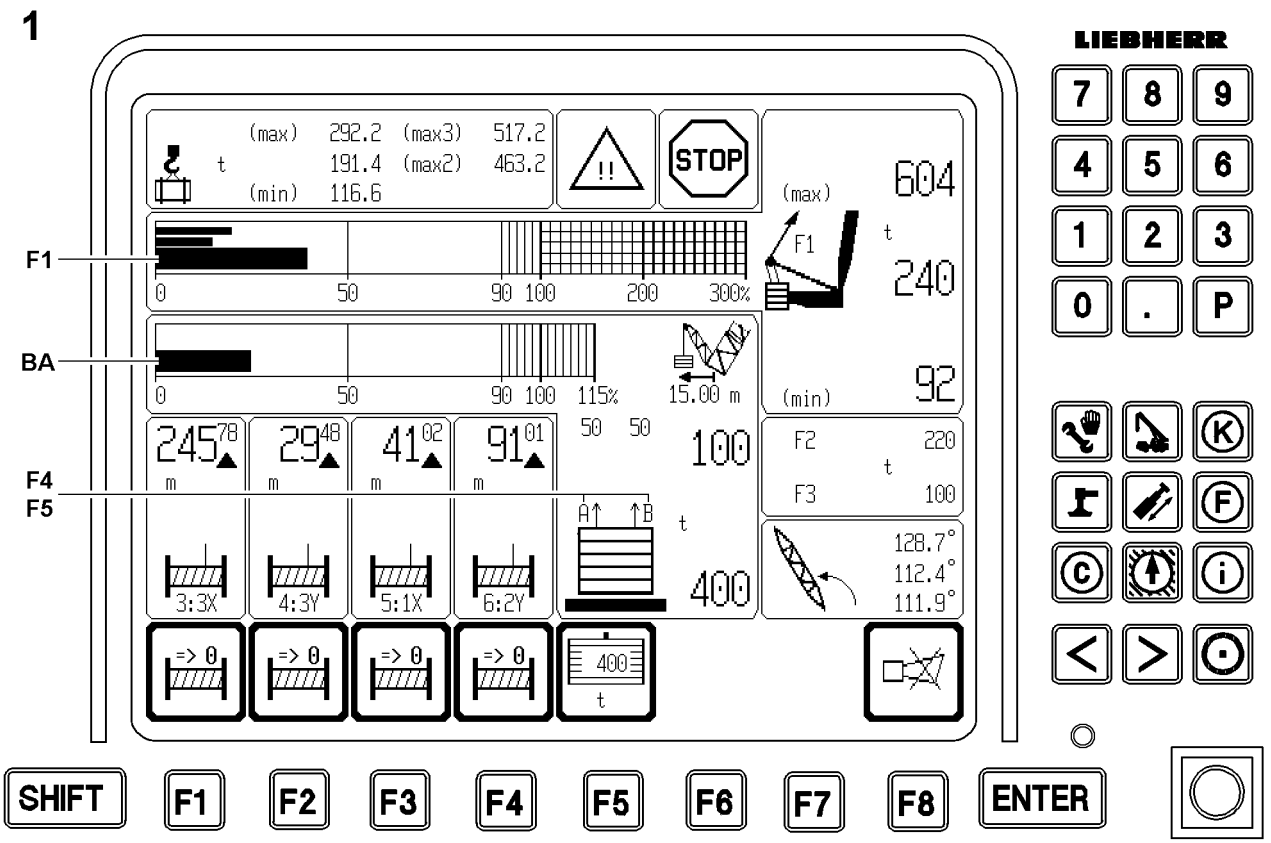

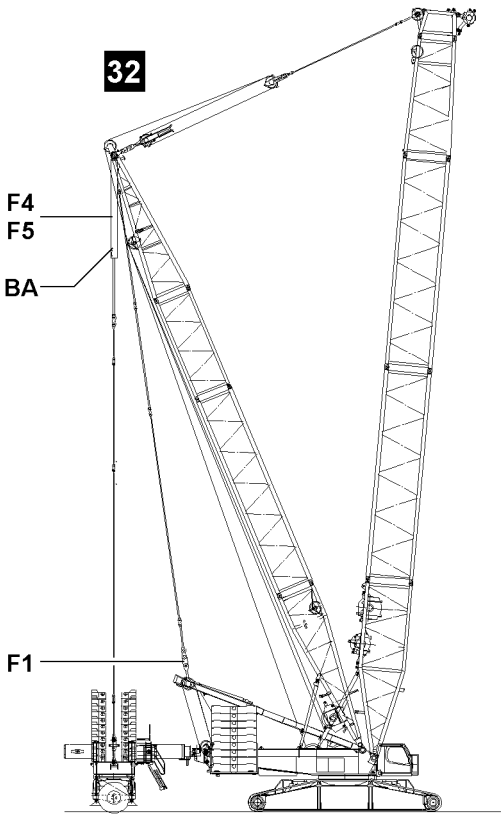

Fig.107246

LWE/LR 1600-2-001/18101-07-02/en

copyright © Liebherr-Werk Ehingen GmbH 2018

6 Crane operation with derrick ballast

6.1 Safety guidelines

Note

- The test points must be checked for function before taking on crane operation.
- The weight of the load to be lifted must be known.
- The placement level of the ballast trailer may be no more than 250 mm above or 250 mm below the placement level of the crane.
- There may be no obstacles within the slewing range of the crane, the suspended derrick ballast and the load.
- The lift off of the derrick ballast must be monitored by the crane operator or a guide.
- Before setting down the load and the suspended derrick ballast, the crane operator must make sure that a safe placement is ensured.
- The placement level of the ballast trailer, at the end of the load lift, must be level, horizontal and have sufficient load bearing capacity to safely take on the weight of the ballast trailer.

DANGER

Danger of accidents due to angular pull!
The crane can topple over by angular pulling of the load.
Personnel can be severely injured or killed.

- Angular pull is prohibited.
- When taking up the load, it must be ensured that the derrick ballast, the center of rotation of the turntable and the load are in one line.

When lifting the load, the guying between the derrick ballast and derrick end section must be relieved to the point where the actual force F1 ($F1_{actual}$) is larger than the F1 minimum force ($F1_{min}$).

DANGER

Danger of accident!
If the guying between the SA-frame and the derrick end section is without force ($F1\text{-}_{min}$ is fallen below), then this can lead to uncontrolled movements of the boom system and cause the crane to topple over.

- The guying between the SA-frame and the derrick end section, test point 1 **F1**, may never be without power.
- The F1-minimum force ($F1_{min}$) may not be fallen below.

LWE/LR 1600-2-001/18101-07-02/en

copyright © Liebherr-Werk Ehingen GmbH 2018

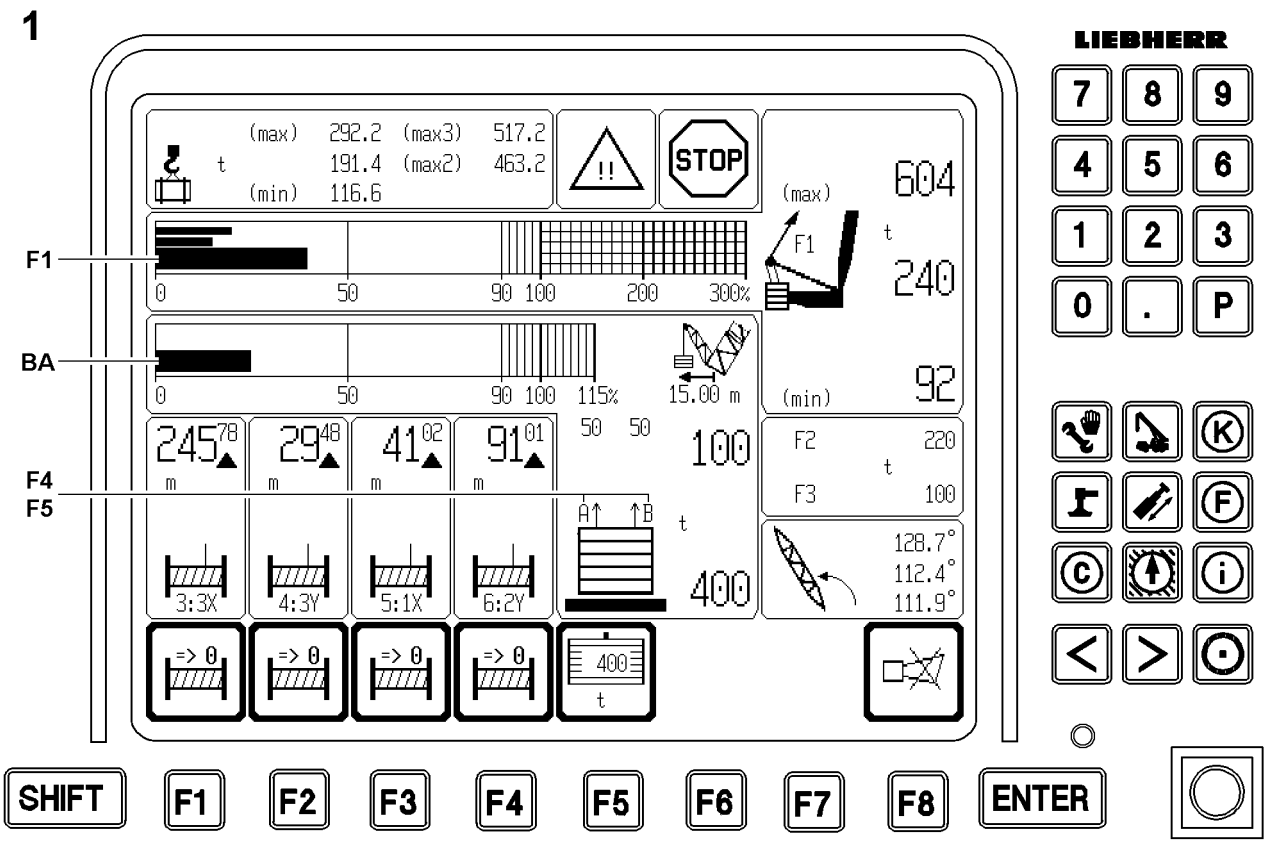

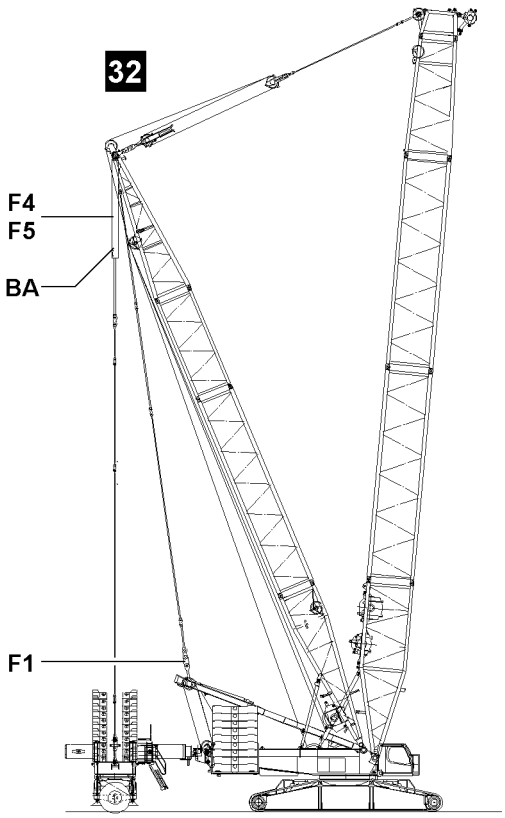

Fig.107246

LWE/LR 1600-2-001/18101-07-02/en

copyright © Liebherr-Werk Ehingen GmbH 2018

6.2 LICCON overload protection

On cranes with derrick ballast, during operation also under load, by increasing or reducing the derrick ballast, the maximum load or the minimum load required for the balance of the crane, can be increased or decreased.

Note
- ▶ The suspended ballast and ballast trailer are generally referred to as the **derrick ballast**.
- ▶ The fixed compensation weight that is installed on the turntable is generally referred to as the **counterweight**.

Make sure that the following prerequisites are met:
- – The required derrick ballast according the load chart is placed and exactly entered and confirmed in the LICCON overload protection.
- – The D-boom is in crane operating position.

6.2.1 Presettings

▶ Set the LICCON overload protection according to the data in the load chart and confirm.

Note
- ▶ Enter the actually present derrick ballast weight in the LICCON overload protection.
- ▶ Enter the actually present reeving in the LICCON overload protection.

▶ Enter the derrick ballast weight and derrick ballast radius into the LICCON overload protection, refer to chapter 4.02 and chapter 4.03 of the crane operating instructions.

DANGER
Danger of accident due to set-up parameters!
Dangerous operational situations can occur due to an incorrect ballast entry.
Personnel can be severely injured or killed.
- ▶ The set derrick ballast value must correspond to the actual derrick ballast weight added.
- ▶ All settings carried out in the „Set up“ program must agree with the actual settings on the crane.

▶ Check the settings.

LWE/LR 1600-2-001/18101-07-02/en

copyright © Liebherr-Werk Ehingen GmbH 2018

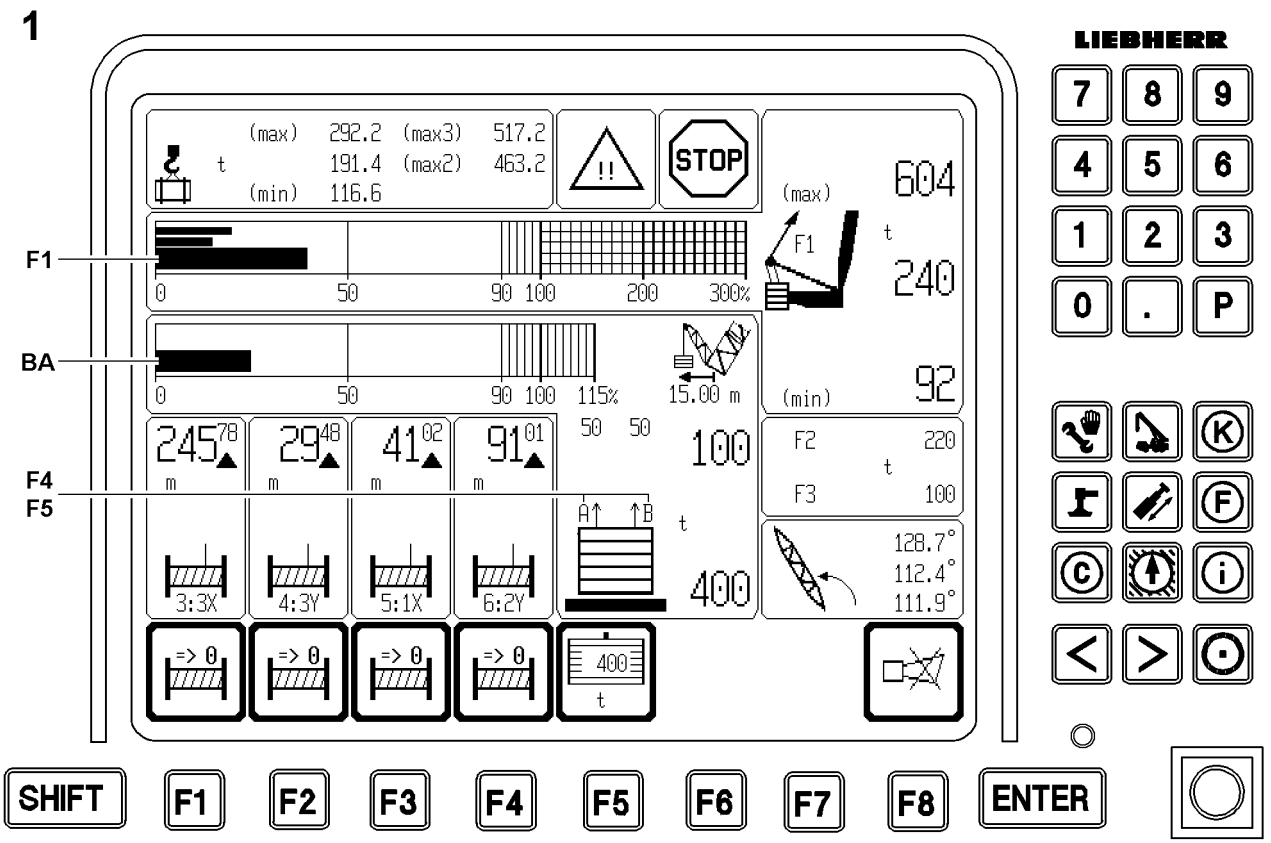

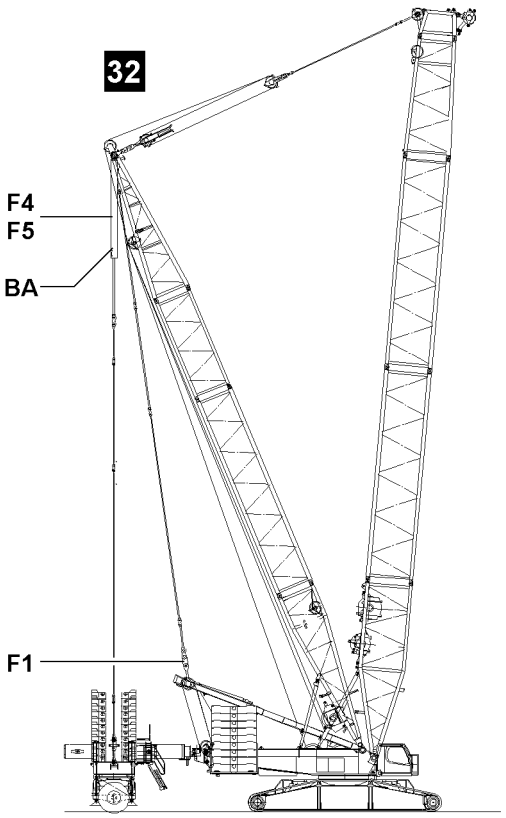

Fig.107246

LWE/LR 1600-2-001/18101-07-02/en

copyright © Liebherr-Werk Ehingen GmbH 2018

6.2.2 Crane operation

Note

▶ For crane operation with derrick ballast, the data in chapter 4.02 of the crane operating instructions must be observed and maintained.

WARNING

Danger of toppling the crane!
The jerky execution / braking of turning maneuvers can cause the load or suspended derrick ballast to swing.
This can cause the boom to break or the crane to topple over.
Personnel can be severely injured or killed.

▶ There may be no persons or obstacles within the slewing range of the crane and the ballast trailer.
▶ While turning, a guide must watch the main boom, D-boom and derrick ballast for a danger of collision.
▶ The turning movement or braking must be initiated extremely carefully when turning with a load and suspended derrick ballast.

Note

▶ For crane operation, observe the section „lifting and lowering the ballast trailer with pull cylinders“ and „ballasting guying differential force monitoring“.

▶ Observe the extension condition of the pull cylinder and the inclination of the ballast trailer.

LWE/LR 1600-2-001/18101-07-02/en

copyright © Liebherr-Werk Ehingen GmbH 2018

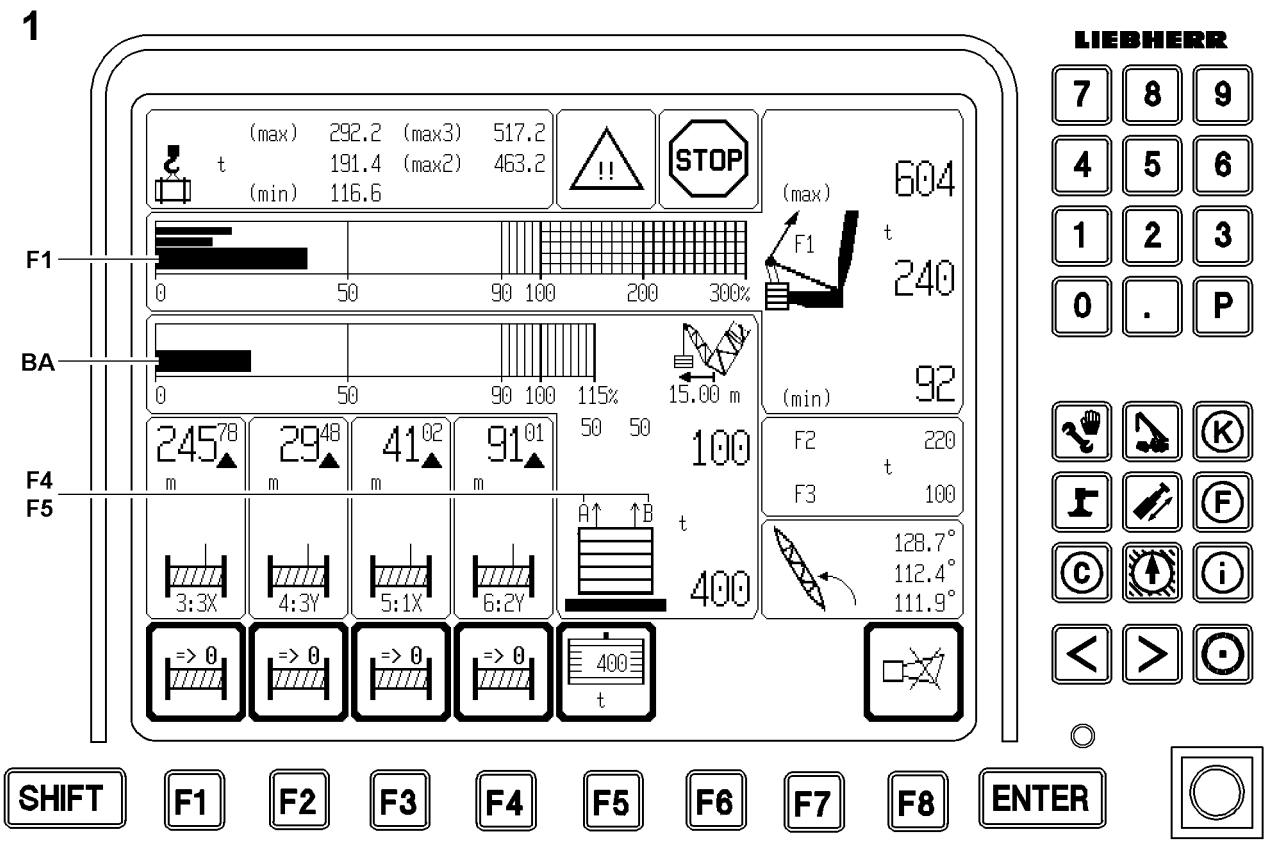

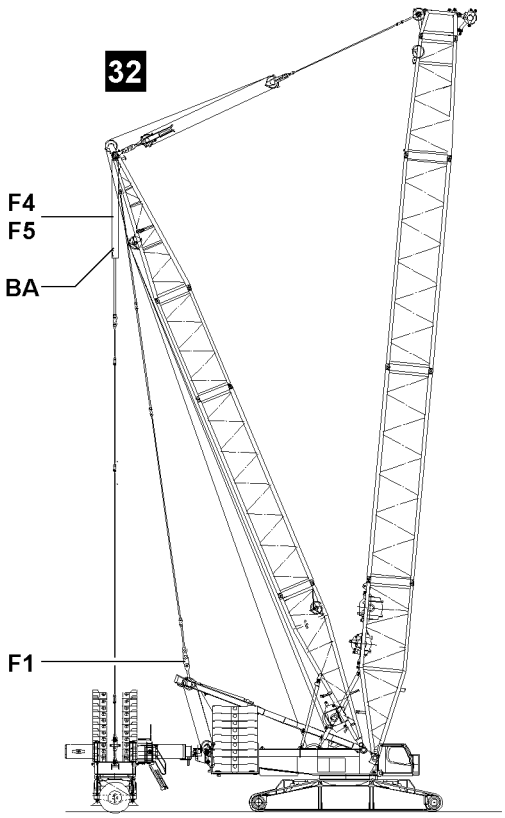

Fig.107246

LWE/LR 1600-2-001/18101-07-02/en

copyright © Liebherr-Werk Ehingen GmbH 2018

6.3 Determination of forces in operating mode with derrick ballast

In all operating modes with derrick ballast, the load is divided between the guy rods from the derrick head to the SA-frame (F1) and the derrick ballast (F4/5).

Note

▶ See Crane operating instructions, chapter 4.02.

6.3.1 Force F1 (test point 1) between guying SA-frame - derrick end section

The force F1 (test point 1) is determined in the guy rods from the SA-frame to the derrick head by 2 force test boxes and is shown on the LICCON monitor as total force of the guying.

From the „Operating force“ (F1) and the „Maximum operating force“ ($F1_{max\text{-}operation}$) results the F1-utilization. This is shown on the LICCON monitor on the utilization bar in percent.

6.3.2 Force F4/F5 (test point 4/5) guying derrick ballast - derrick end section

The forces F4/F5 (test point 4/5) are effective in the guy rods from the derrick ballast to the derrick end section.

The existing forces in the guy rods (A = left and B = right) are calculated from the four pressure sensors, which are installed on the pull cylinders and shown in the LICCON monitor as individual forces.

The ballast being pulled is calculated from the forces in each guying, i.e. the proportion of ballast which is pulled up by the guying. The remaining part is laying on the ground. The derrick ballast utilization results from the pulled ballast and the placed ballast. This is shown on the LICCON monitor with a utilization bar (BA in %).

Pull cylinder on block

DANGER

The crane can topple over!
By completely moving one or both pull cylinders in (block position moved in), the pressure increases strongly on the ring surface of the pull cylinder and the weighing of the currently pulled derrick ballast is incorrectly calculated and displayed.
The LICCON overload protection therefore assumes that a larger derrick ballast is pulled than is actually the case, and calculates too large a load capacity as a result.
An overload of the crane is recognized too late by the LICCON overload protection and the crane can topple.
Personnel can be severely injured or killed.

▶ If the pull cylinders are „retracted“ in the block position, **crane operation is explicitly prohibited**.
▶ The forces in the derrick ballast guying A and B must be carefully monitored on the LICCON monitor.
▶ Potentially occurring error messages must be observed.

WARNING

The LICCON overload protection shuts off too early!
By moving one or two pull cylinder completely out (block position moved out), the LICCON overload protection calculates a load which is too low.
Possible shut off by the LICCON overload protection takes place too early.

▶ If the pull cylinders are in block position „moved out“, crane operation on the basis of reduced load is not meaningful.

LWE/LR 1600-2-001/18101-07-02/en

copyright © Liebherr-Werk Ehingen GmbH 2018

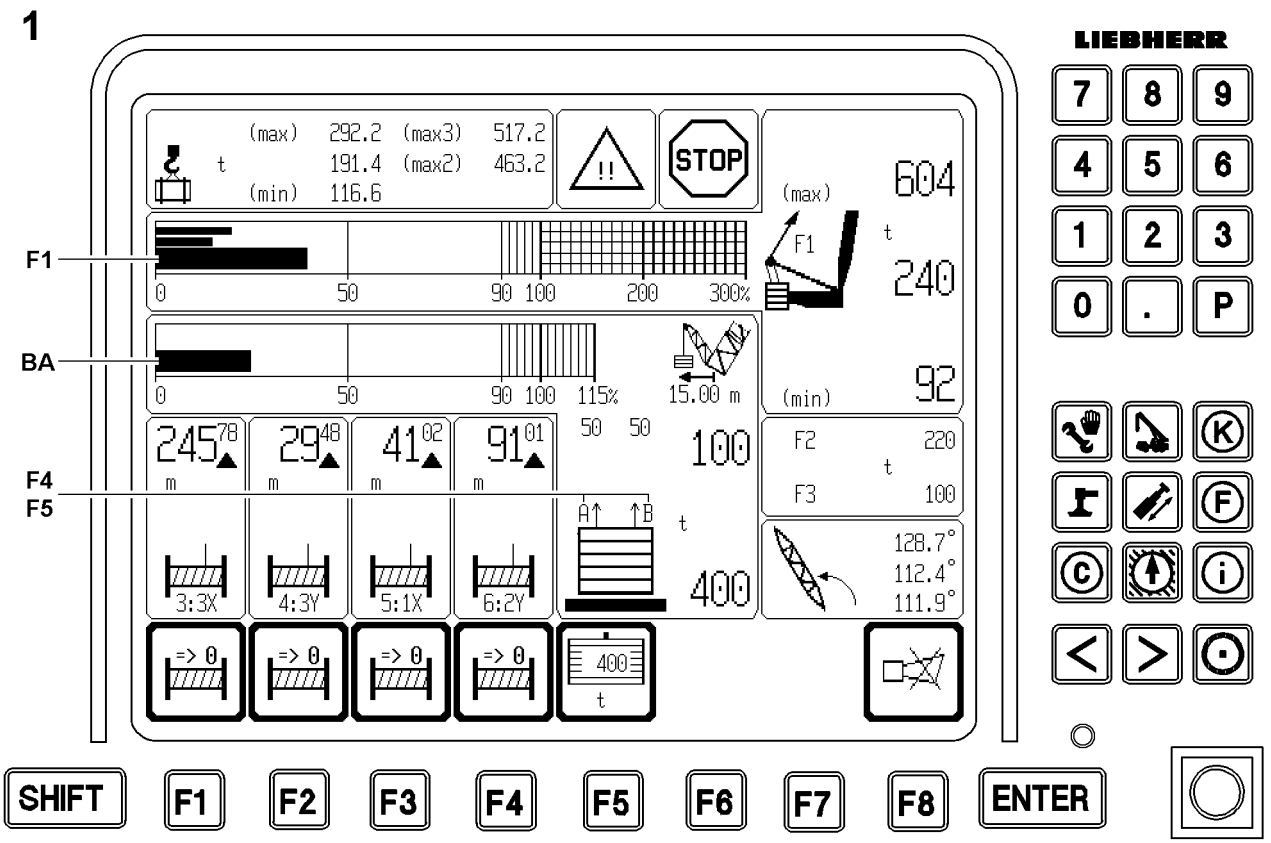

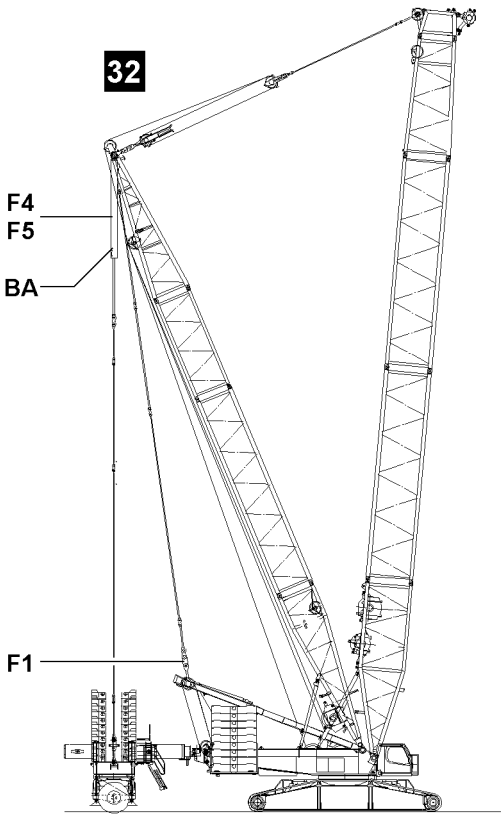

Fig.107246

LWE/LR 1600-2-001/18101-07-02/en

copyright © Liebherr-Werk Ehingen GmbH 2018

6.3.3 Monitoring of minimum force F1

If more than 50 % of the set derrick ballast is being pulled (ballast utilization bar > 50 %) and the minimum force $F1_{min}$ (test point 1) is fallen below, all crane movements that **increase load moment** are turned off.

DANGER
Danger of accident!
It is prohibited to fall below the minimum force $F1_{min}$ (test point 1) if more than 50 % of the derrick ballast is pulled. If this is not observed, in case of loose tension from test point 1 (F1) and **derrick ballast on the ground**, the derrick ballast can suddenly lift off the ground due to the increased load moment and the boom system can suddenly move forward. This causes the load to swing back and forth too much, which could damage the boom and the crane.
▶ Do not fall below the minimum force - $F1_{min}$.

If more than 90 % of the set derrick ballast is being pulled (ballast utilization bar greater than 90 %) and the force drops below the minimum value $F1_{min}$ (test point 1) fall below, all crane **movements that increase the load moment** and all **crane movements that decrease the load moment** are turned off. This also turns off the „spooling out“ movement of the winch.

DANGER
Danger of accident!
It is prohibited to fall below the minimum force $F1_{min}$ (test point 1) if more than 90 % of the derrick ballast is pulled. If this is not observed and the load torque is decreased when the guying is slack at test point 1 (F1) and the derrick ballast is suspended, the derrick ballast can suddenly drop to the ground, causing the boom system to suddenly move backwards. As a result, the relapse cylinders can be pressed on block and be overloaded. There is the danger that the relapse cylinders on the boom and D-boom will be damaged. This causes the load to swing back and forth too much, which could damage the boom and the crane.
▶ Do not fall below the minimum force - $F1_{min}$.

Note
▶ By actuating the assembly key button, the test point 1 - minimum force ($F1_{min}$) is reduced by several tons, this allows one to reverse the maneuver and drive out from the situation in which the $F1_{min}$ shut-off occurred.
▶ This is the only exception on the crane, where, after a shut-off, a load torque increasing movement may be continued with the assembly key button.

DANGER
Danger of accident!
If the LICCON overload protection is bypassed, there is no further protection against crane overload. There is an increased danger of accidents.
Personnel can be severely injured or killed.
▶ The crane driver bears the complete and sole responsibility when bypassing the LICCON overload protection.

After shut off via $F1_{min}$ the force F1 on test point 1 must be increased by a movement. If the derrick ballast is suspended, this can be achieved by setting down the ballast.

If the assembly key button is already pressed and the F1 force under the reduced minimal force by the assembly key button $F1_{min}$ sinks further, then $F1_{min}$ shut-off is no longer bypassed.

LWE/LR 1600-2-001/18101-07-02/en

copyright © Liebherr-Werk Ehingen GmbH 2018

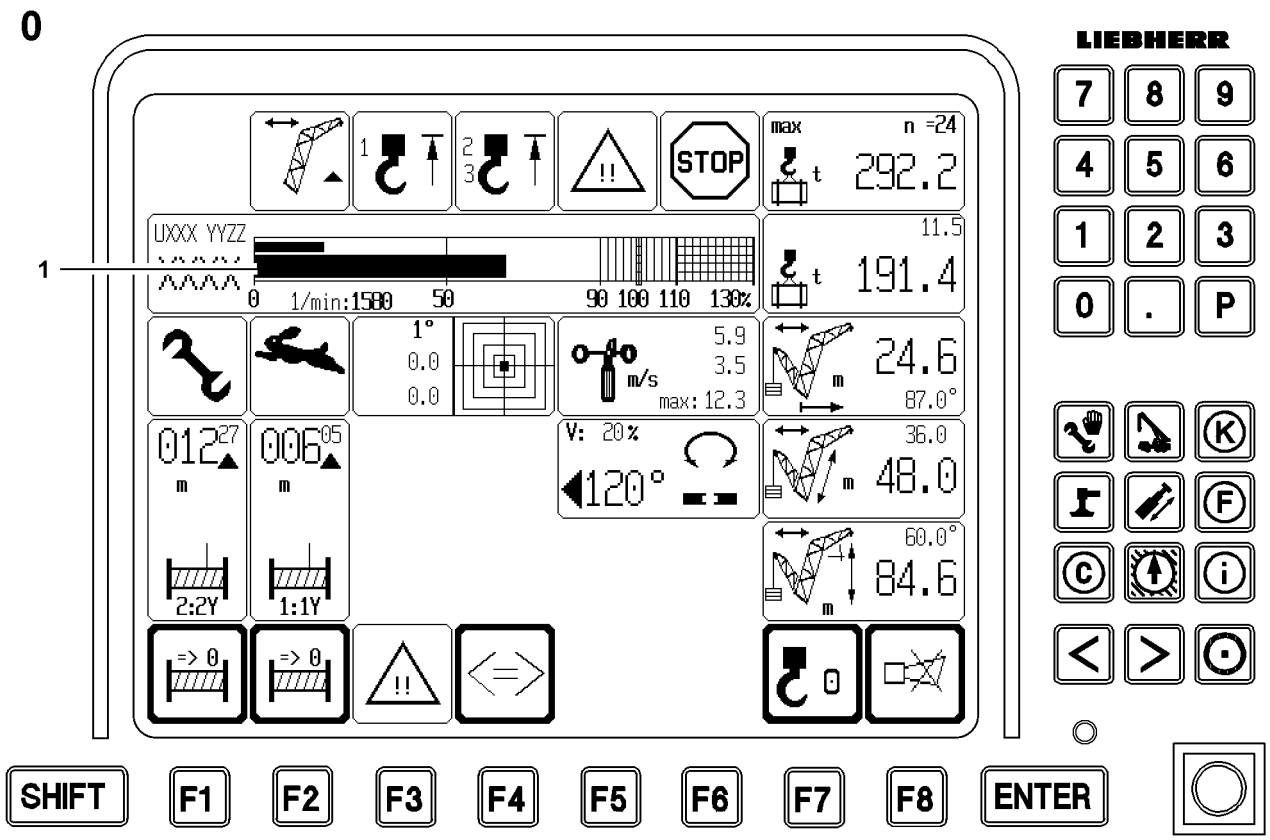

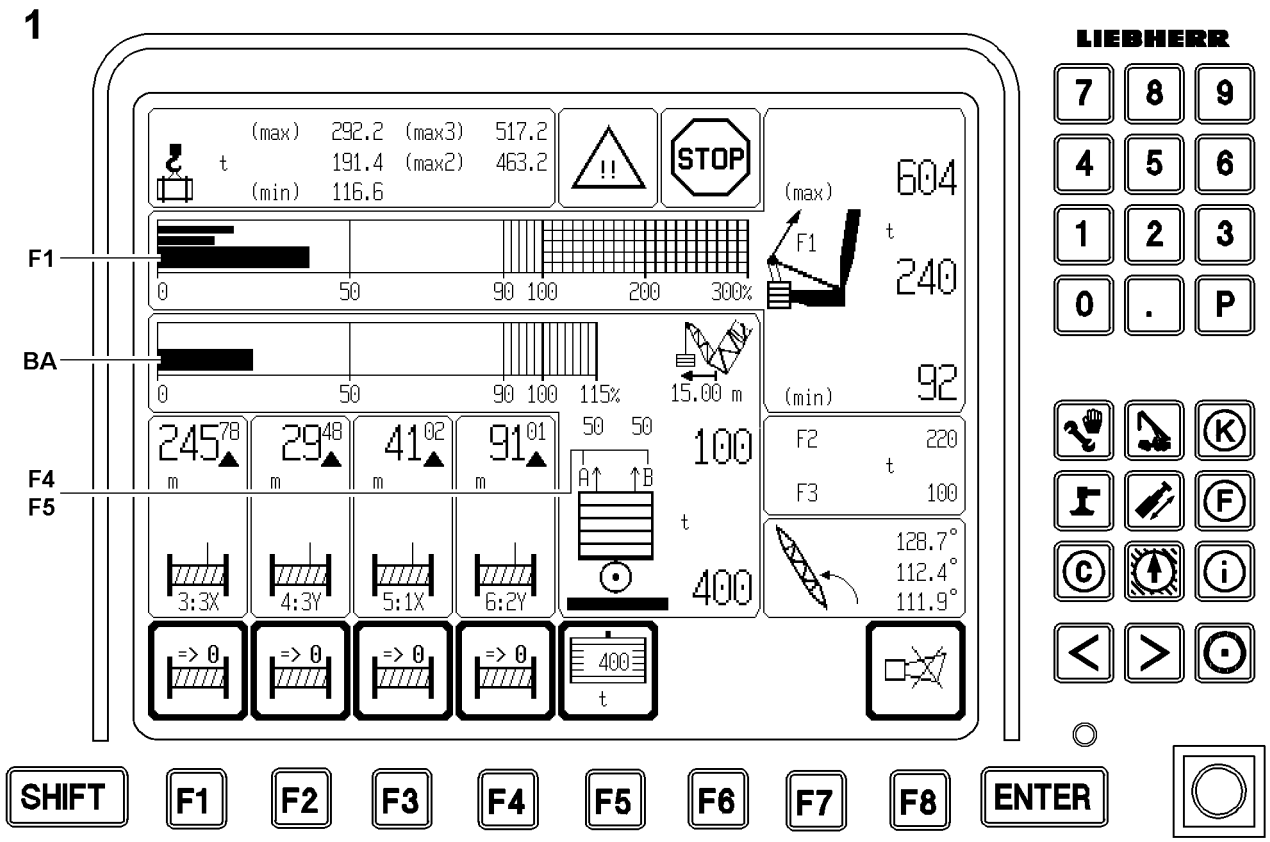

Fig.107247

LWE/LR 1600-2-001/18101-07-02/en

copyright © Liebherr-Werk Ehingen GmbH 2018

6.4 Overload monitoring in operating mode with derrick ballast

In operating modes with derrick ballast, the „maximum load for the current crane condition“ is monitored two ways:

1. Monitoring of maximum load on the LICCON monitor 0
2. Monitoring of test point 1-operational maximum force LICCON monitor 1.

6.4.1 Monitoring of maximum load on the LICCON monitor 0

It monitors the „maximum load according to load chart and reeving“.

In operating modes with derrick ballast, this is the maximum load of the current crane condition. It is shown on LICCON monitor 0. The current utilization of the crane results from the load utilization bar (1) on LICCON monitor 0.

If the load utilization bar reaches 90 %, an advance warning is given in the form of a „notice icon“ and a „SHORT HORN“ on LICCON monitor 0.

At 100 % on the load utilization bar, the shut off of all load moment increasing movements with the „stop icon“ and the acoustical warning „HORN“ occurs on LICCON monitor 0.

Note

▶ The „maximum load of the current crane condition“ can possibly be increased further, refer to section „utilization conditions“.

6.4.2 Monitoring of test point 1-operational maximum force (= $F1_{max}$ operation)

It is shown on LICCON monitor 1. When F1 is greater than $F1_{max\text{-}shut\text{-}off\ value}$ shut off of all movements which could increase load moment with the stop icon and the acoustic warning „HORN“ by LICCON monitor 1.

Note

▶ The maximum load can be safely monitored by the „LICCON overload protection“ itself.

▶ The „$F1_{max}$-monitoring“ is an additional monitoring function which shows the overload parallel to the „LICCON overload protection“.

▶ In all cases, where the maximum load capacity according to the load chart „max-load“ is smaller than the maximum load of the current equipment configuration with optimal derrick ballast „max3-load“, which means „max-load“ appears smaller „max3-load“, when lifting the maximum load, the monitor display looks as if the „LMB utilization bar of the crane“ is at 100 % and the „F1 utilization bar“ is approximately at 100 %.

▶ At the just completed LMB-Stop („current load“ / „max-load“ greater than 100 percent) $F1_{actual}$ already lies just over $F1_{max}$ or just below. There is a certain tolerance due to the component weights and the wind influences. Since the maximum load can always be raised, shut off will not occur at $F1_{actual}$ / $F1_{max}$ greater than 100 %. Shut off will only occur at $F1_{actual}$ / $F1_{max\ operation\ shut\ off\ value}$. For this crane, the following applies: $F1_{max\text{-}operation\ shut\text{-}off\ value}$ = $F1_{max\text{-}operation}$ +$F1_{addition\ for\ shut\ off}$ (also see Crane operating instructions chapter 4.02). The $F1_{addition\ for\ shut\ off}$ is selected such that $F1_{\ max\text{-}operation\ shut\text{-}off}$ should normally never happen. This shut off provides an additional safety, particularly in cases with „max-load“ smaller „max3-load“. For example, if the load weighing is far too low due to a sensor failure, then a load would be pulled which would be greater than the maximum permissible load without shut off of the LICCON overload protection. The crane could be overloaded. In this particular case, with the „max-load“ smaller than the „max3-load“, with $F1_{max}$ larger $F1_{max\text{-}operation\ shut\ off\ value}$ the $F1_{max\text{-}shut\ off}$ triggers. In this case, the crane is already slightly overloaded, however shut off prevents an overload in certain cases or toppling of the crane. This means that the $F1_{max\text{-}operation\ shut\ off}$ can protect the crane from overload in certain cases.

▶ Make sure that the load weighing and the shut off function reliably on the maximum load.

LWE/LR 1600-2-001/18101-07-02/en

copyright © Liebherr-Werk Ehingen GmbH 2018

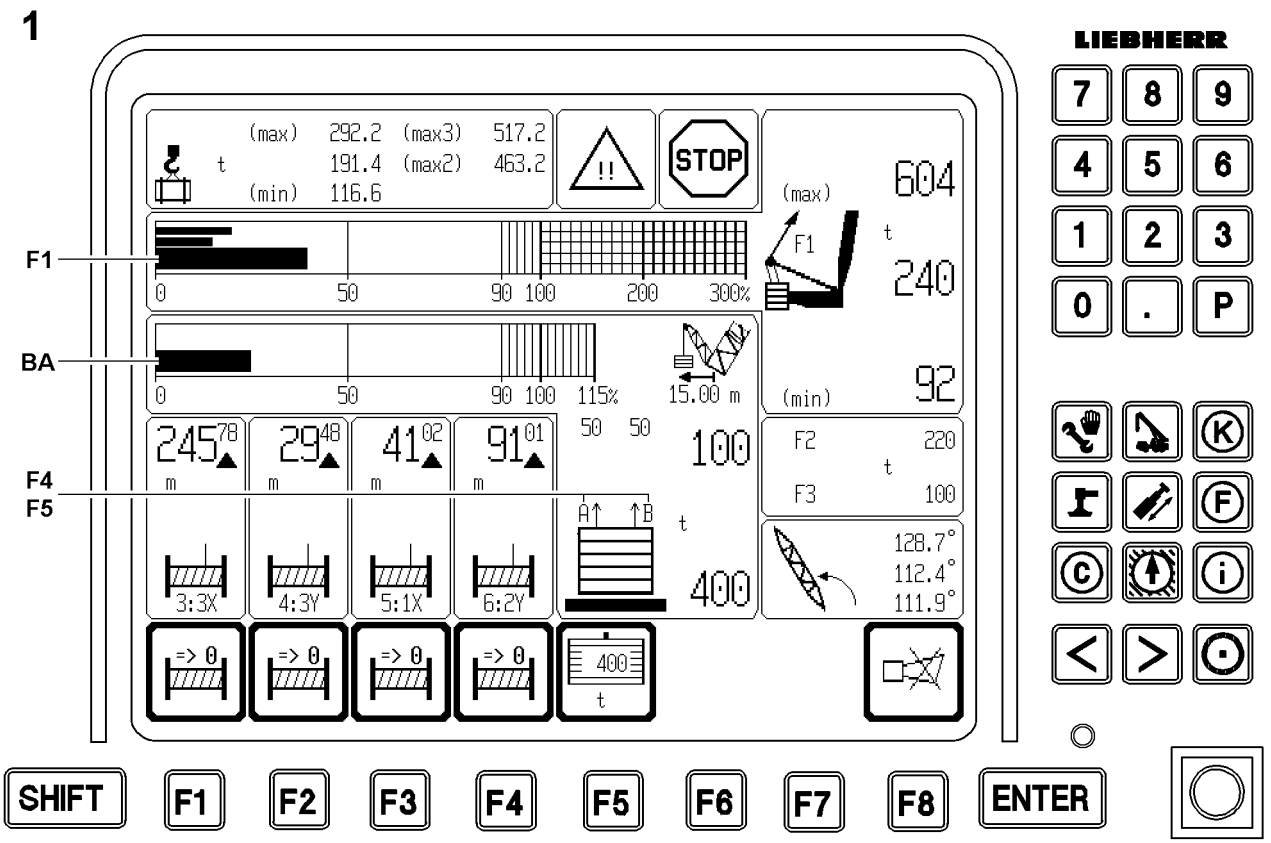

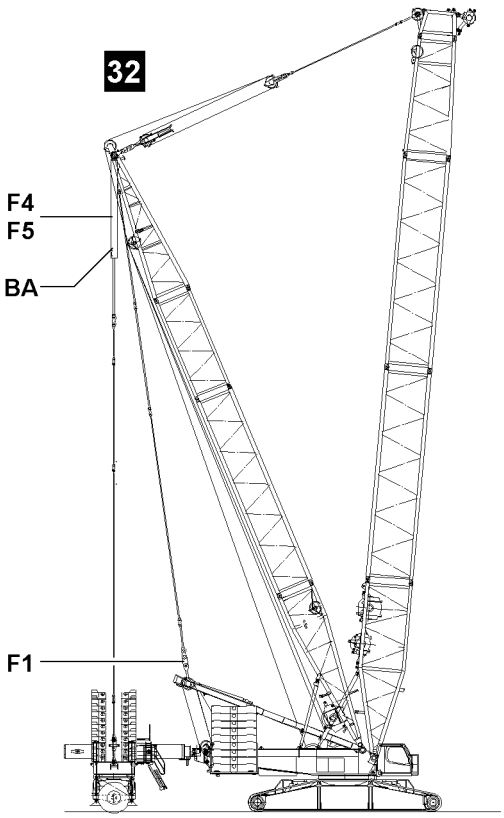

Fig.107246

LWE/LR 1600-2-001/18101-07-02/en

copyright © Liebherr-Werk Ehingen GmbH 2018

DANGER
The crane can topple over!
In cases with „max-load“ = „max3-load“, the $F1_{max}$-shut off value does not offer protection. The $F1_{max}$ shut off value is so high that the crane will probably topple over or be damaged before the shut off value is reached.
▶ Carefully monitor the displays on the LICCON monitor.

WARNING
Danger of accident!
▶ The test point 1-Operation-Maximum force not only depends on the current set up configuration but also on the force measured with the pressure sensors in the pull cylinders.
▶ If the pulled derrick ballast is larger, then the maximum permissible $F1_{max}$ force is generally reduced and vice versa.
▶ It is therefore important to carefully monitor the ballast weighing and the value for the pulled derrick ballast to ensure that this value is even plausible.

DANGER
The crane can topple over!
If the pulled derrick ballast value has been incorrectly determined and is too low, the calculated $F1_{max}$ may be too high and the crane could be overloaded or topple over without this becoming evident.
▶ Carefully monitor the displays on the LICCON monitor.

LWE/LR 1600-2-001/18101-07-02/en

copyright © Liebherr-Werk Ehingen GmbH 2018

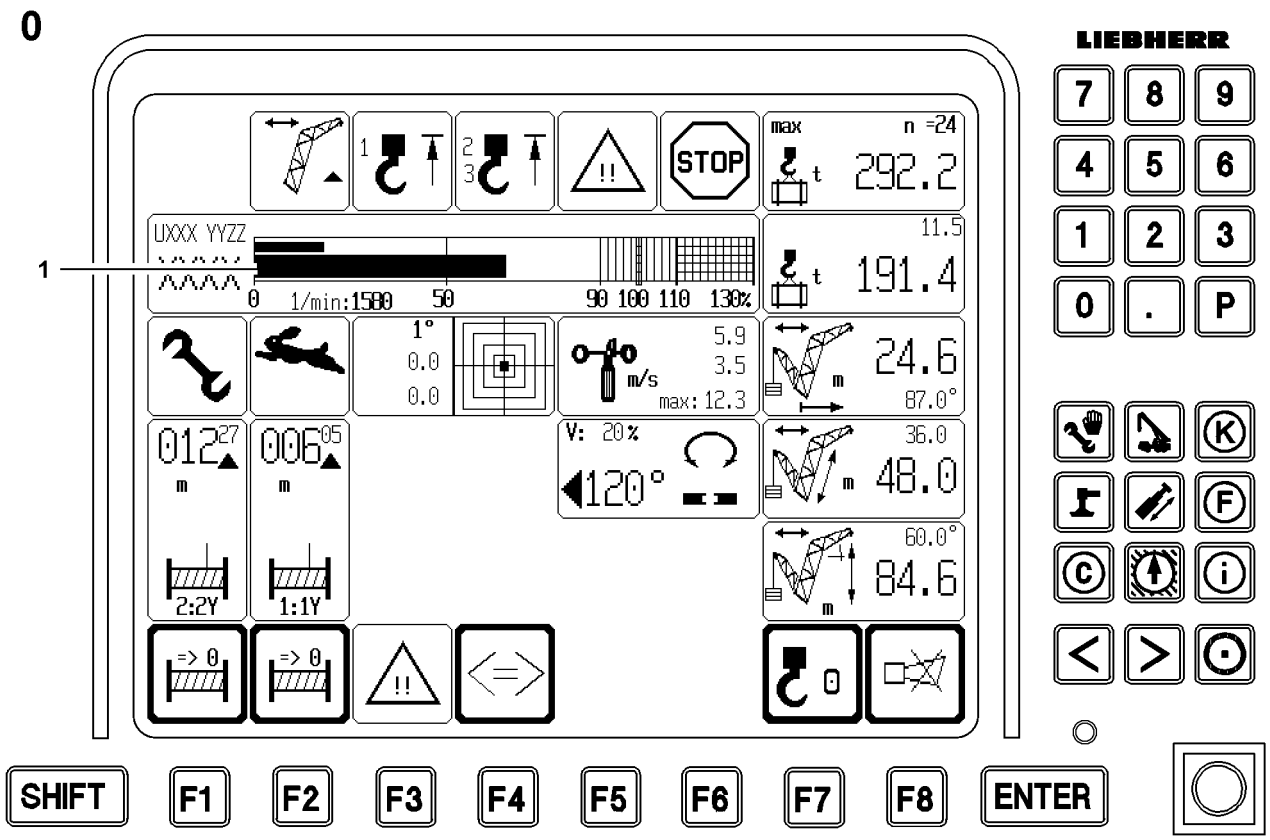

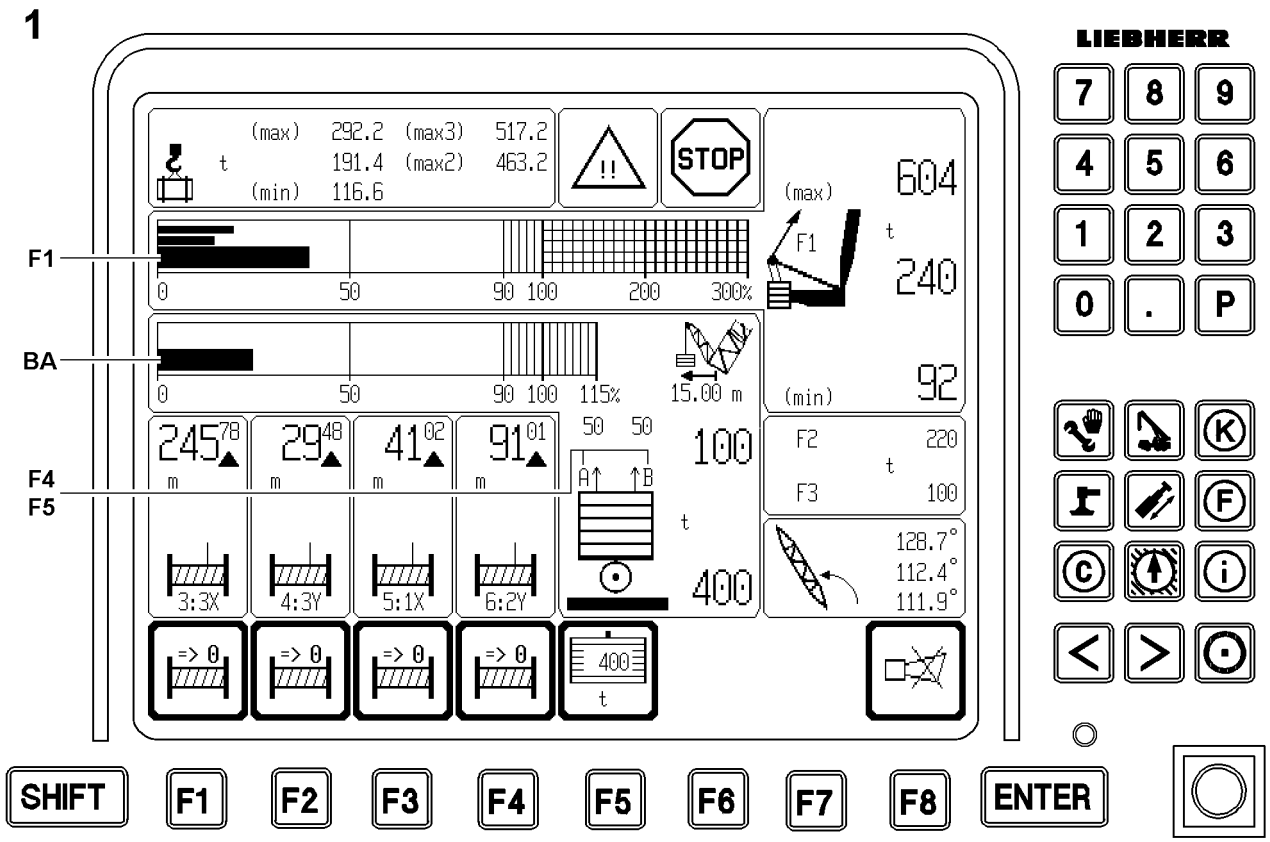

Fig.107247

LWE/LR 1600-2-001/18101-07-02/en

copyright © Liebherr-Werk Ehingen GmbH 2018

6.4.3 Utilization conditions

The current utilization of the crane results from the „utilization bar of the crane“ **1** on the LICCON monitor 0.

Max. load:

– The „maximum load capacity in the current operating condition (**„max-load“**)“ is obtained, when the „utilization bar of the crane“ **1** displays 100 percent.
This is the case when the „utilization of the crane according to the load chart and reeving“ reaches 100 % („Current load“ is equal to the „Maximum load“).
When the „max-load“ is smaller or equal to the „max2-load“, then the „max-load“ can be increased through:

  • Pulling up the derrick ballast, if the derrick ballast is not already suspended and the currently pulled derrick ballast is still smaller than the optimum derrick ballast.

Max2-load:

– The „maximum load capacity of the current crane equipment“ (**„max2-load“**) is obtained when the „crane utilization bar of the crane“ **1** is at 100 % **and** the „derrick ballast utilization bar display“ **BA** is greater than or equal to 100 % (the current derrick ballast is completely lifted off the ground), and the derrick ballast input value and the ballast weighing are correct.
This is the case when the „current load“ and the „max2-load“ reaches 100 percent („current load“ is equal to the „max2-load“).
When the „max2-load“ is smaller than the „max3-load“, then the „max-load“ can be increased through:

  • Increasing the derrick ballast by adding additional ballast plates if the placed derrick ballast is still smaller than the optimum derrick ballast.

Max3-load:

– The „maximum load capacity of the current set up configuration with optimum derrick ballast“ (**„max3-load“**) is obtained when the „crane utilization bar“ **1** stands at 100 % **and** the „derrick ballast utilization bar display“ **BA** is at 100 % (the optimal derrick ballast is completely lifted off the ground), and the derrick ballast input value and the ballast weighing are correct.
This is the case when the „current load“ and the „max3-load“ reaches 100 percent („current load“ is equal to the „max3-load“).
Here, the optimum derrick ballast is already entirely pulled.
Further increasing the derrick ballast at this derrick ballast radius will not increase the load further than „max3-load“.

Note

▶ In some cases it may be possible to increase the load capacity, in some cases reducing the derrick ballast radius as well; refer to the load chart manual or LICCON job planner.

This also applies for:

– „Current load“ equal to „max-load“.
– „Current load“ equal to „max2-load“.

LWE/LR 1600-2-001/18101-07-02/en

copyright © Liebherr-Werk Ehingen GmbH 2018

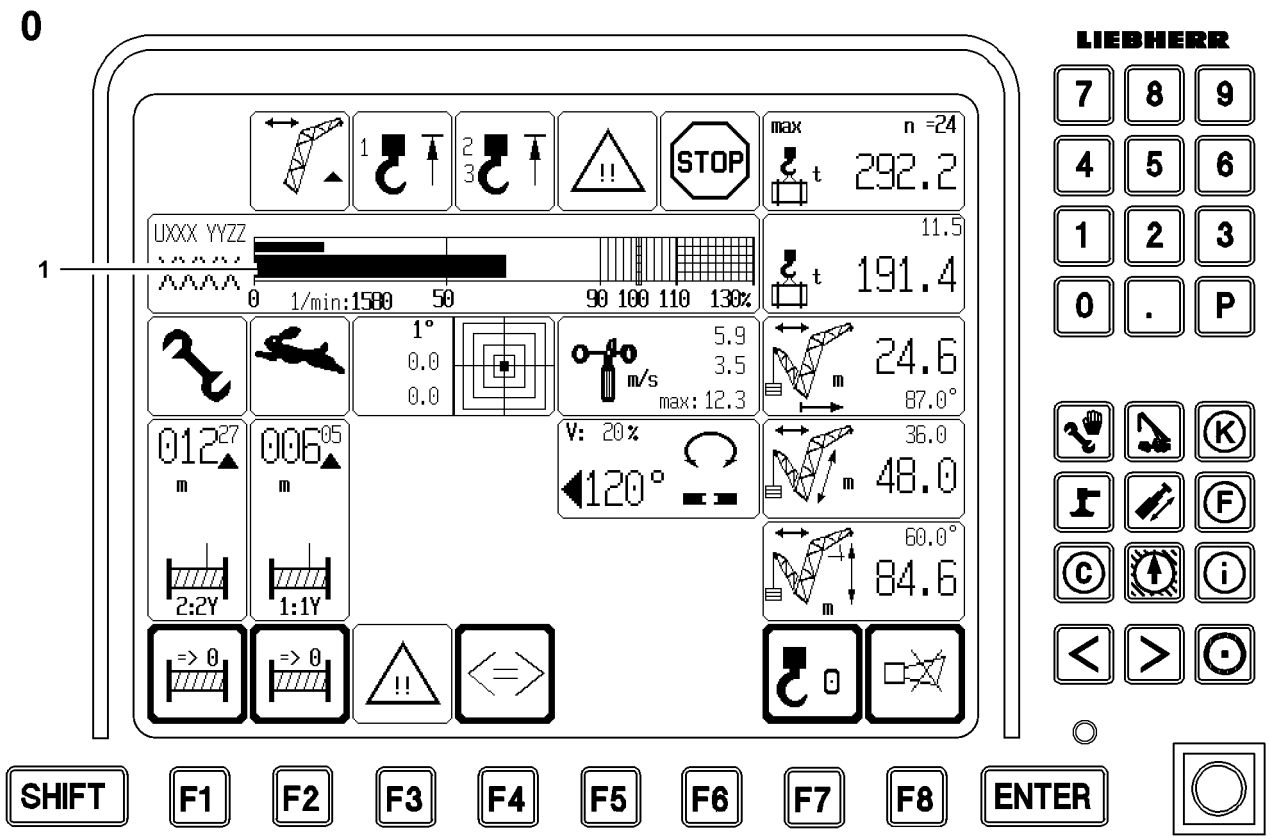

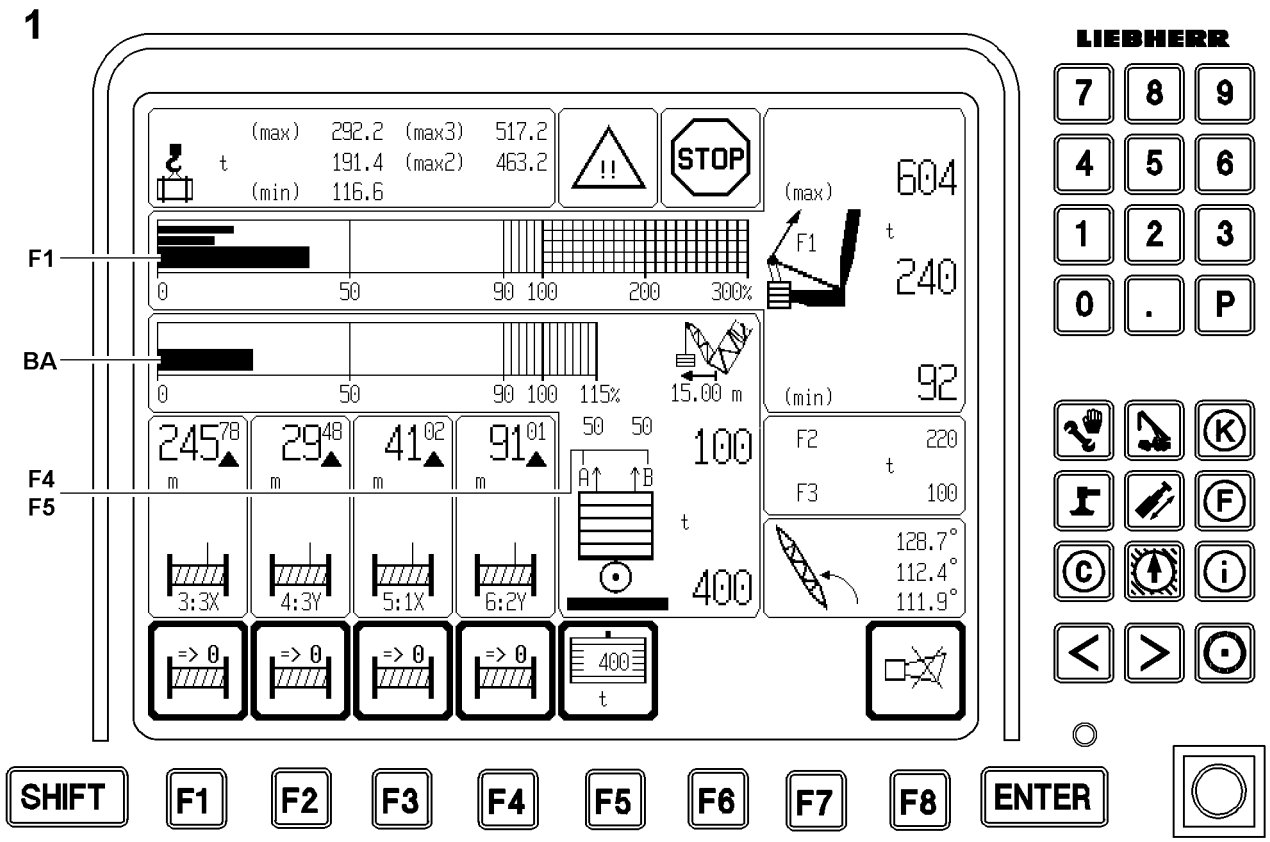

Fig.107247

LWE/LR 1600-2-001/18101-07-02/en

copyright © Liebherr-Werk Ehingen GmbH 2018

The bypass of the maximum load according to the load chart and reeving (crane utilization bar **1 is at 100 percent) can be bypassed by:**

1. Bypass key button D on the LICCON monitor 0.
2. Assembly key button in the instrument panel.
3. **Note:**
   The test point 1-assembly - maximum force shut off (= F1 max-assembly) cannot be bypassed.

DANGER
The crane can topple over!
When the assembly key button is turned on, the LICCON overload protection is bypassed and is thereby no longer effective.
The crane can be overloaded unnoticed and topple over.
Personnel can be severely injured or killed.

- ▶ When the assembly key button is turned on, only load moment decreasing crane movements up to a permissible operating and load range can be carried out.
- ▶ The assembly key button must be turned off immediately after reaching the permissible load range!
- ▶ The crane operator alone is completely responsible for his actions during a bypass of the LICCON overload protection.

Note

- ▶ The movement „Derrick ballast up“ or „Derrick ballast down“ requires utmost attention by the crane operator.

6.5 Checking the length sensor value on the ballast trailer

CAUTION
Danger of accident!
If the derrick ballast radius is measured incorrectly, the false radius value will result in the calculated maximum lifted load and F1-Operation-max-force being too high.
The crane will be overloaded unnoticed and can topple over.
Personnel can be severely injured or killed.

- ▶ The crane driver may not rely blindly on the derrick ballast radius measurement, but he must think for himself and check, if the measurement is still working correctly.
- ▶ If the derrick ballast is fully telescoped out or in, the display „Derrick ballast radius“ must show almost the end position of the radius 13 m or 18 m.

Note

- ▶ When telescoping the ballast trailer guide, the indicator must change the display „Derrick ballast radius“ on the LICCON monitor corresponding to the movement of the derrick ballast. If this is not the case, the crane operator can immediately recognize that if the length sensor rope drum jams when spooling in or out.

- ▶ When telescoping the derrick ballast in and out, the „Derrick ballast radius“ display must be observed carefully on the LICCON monitor.

LWE/LR 1600-2-001/18101-07-02/en

copyright © Liebherr-Werk Ehingen GmbH 2018

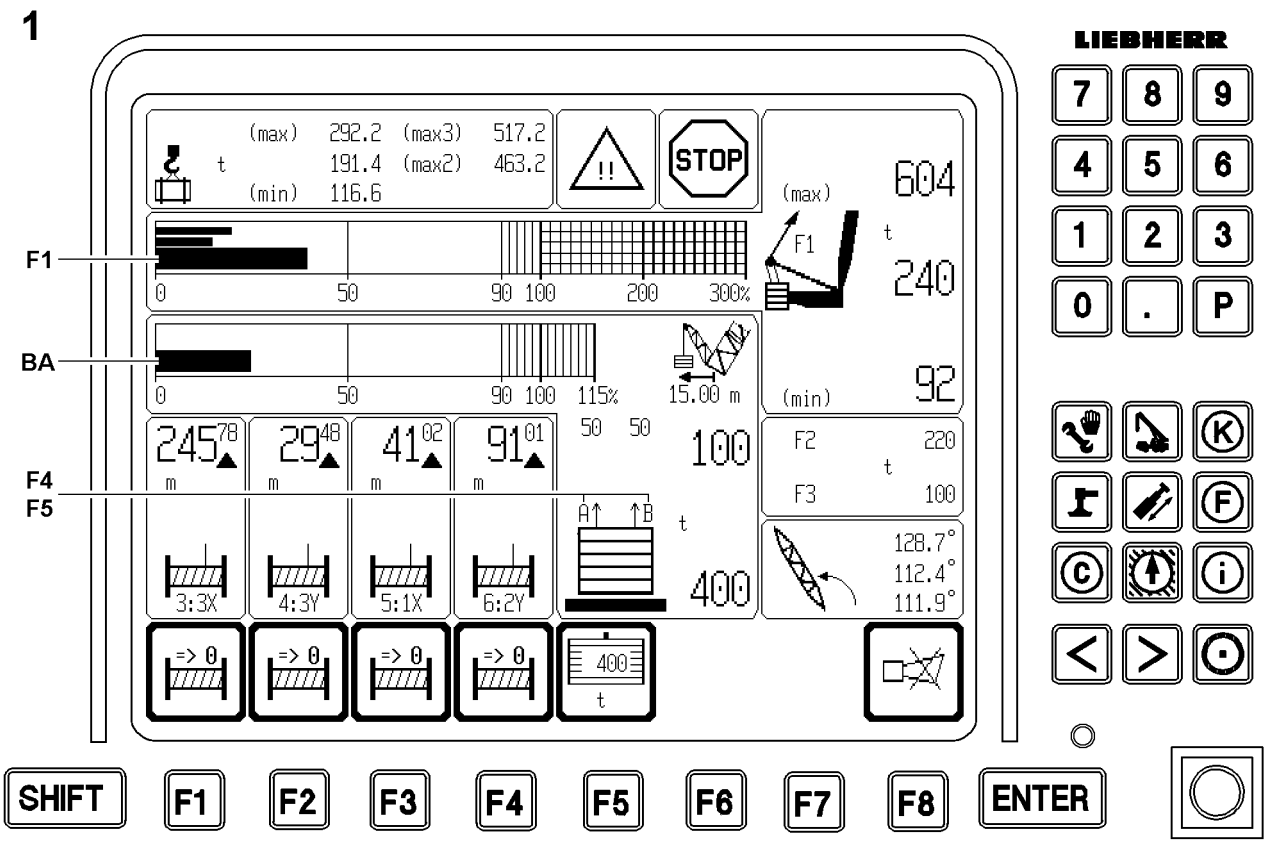

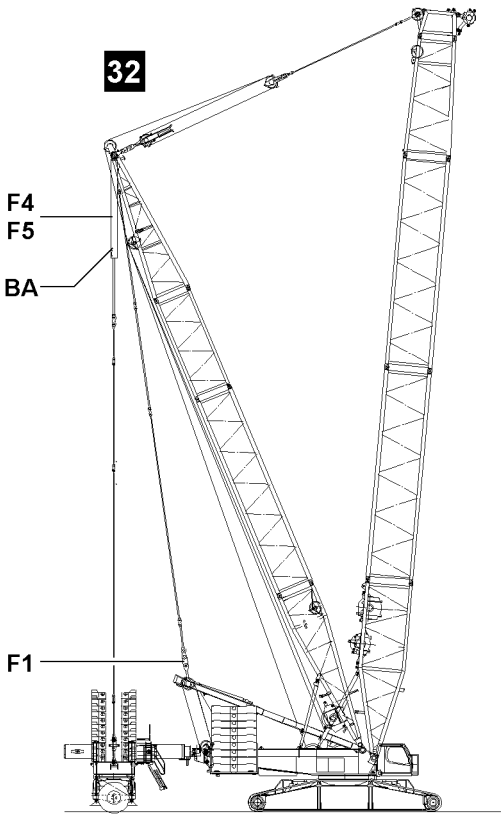

Fig.107246

LWE/LR 1600-2-001/18101-07-02/en

copyright © Liebherr-Werk Ehingen GmbH 2018

6.6 Difference force monitoring of ballast guying

In operating modes with derrick ballast, the difference between the forces on derrick guying A and B is monitored on LICCON monitor 1. If the difference exceeds a permissible value, an acoustic warning is issued and the two force values blink.

WARNING
Danger of accident due to damaged crane components!
Too high a difference in the derrick ballast guying A and B can have the result that the derrick ballast moves in an impermissible inclined position, and thereby the derrick end section, the ballast guide or other crane components may be damaged.
Personnel can be severely injured or killed.

- ▶ The forces in the derrick ballast guying A and B must be carefully monitored on the LICCON monitor.
- ▶ If the specified limit value is exceeded, there occurs **no shut off** of crane movements.

Exceeding the limit value can have the following causes:

- Taking up the load: by relieving the tires on the ballast trailer or flexing of the turntable.
- The ground under the derrick ballast is uneven.
- The crane is leaning to one side.
- The derrick ballast is loaded one-sided.
- The force measurement in one derrick ballast guying is incorrect.

The crane driver must recognize the correct cause and take countermeasures:

- Error message appears.
- The error, which caused the one-sided force, must be remedied.
- The following measures are permitted providing the ground is only slightly uneven:
  Lock one pull cylinder and with the other pull cylinder lift the derrick ballast or „Derrick ballast lower“ activate until the difference between the forces A and B is smaller.
- If sensor values are implausible: Check whether the ballast weighing pressure sensors or inputs for the ballast weighing are faulty. If necessary, pull out the sensor or replace the CPU.

LWE/LR 1600-2-001/18101-07-02/en

copyright © Liebherr-Werk Ehingen GmbH 2018

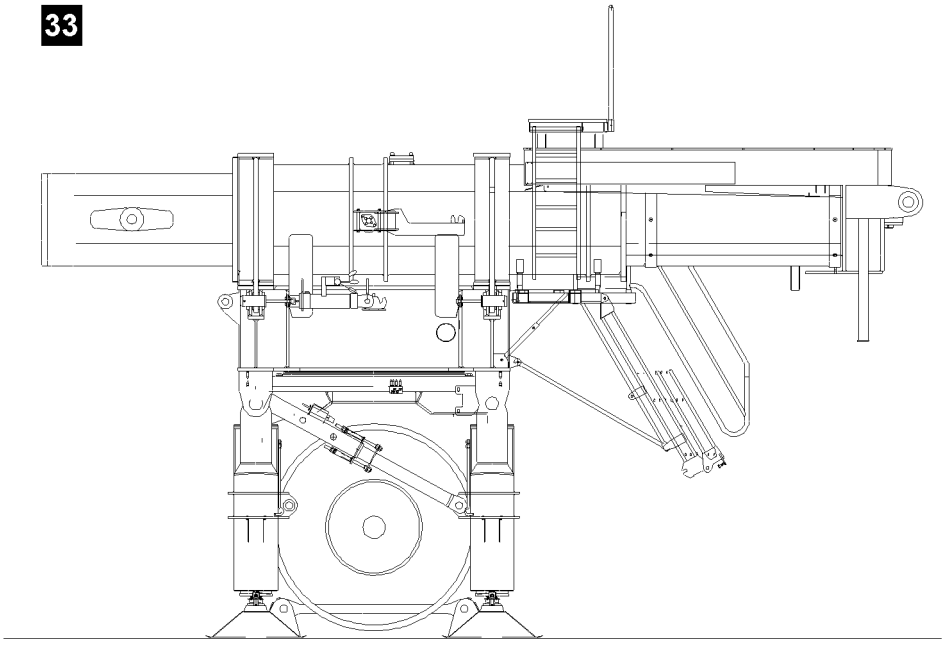

LWE/LR 1600-2-001/18101-07-02/en

Fig.107248

copyright © Liebherr-Werk Ehingen GmbH 2018

7 Removing the ballast trailer

WARNING
Danger of falling!
During assembly and disassembly, assembly personnel must be secured with appropriate aids to prevent them from falling. If this is not observed, assembly personnel could fall and suffer life-threatening or fatal injuries.

- ▶ Any work, where there is a danger of falling, must be carried out with suitable aids (for example: lifting platforms, scaffoldings, ladders, auxiliary crane).
- ▶ If the work cannot be carried out with such aids nor from the ground, then the assembly personnel must secure themselves with approved fall arrest systems to avoid falling, see Crane operating instructions chapter 2.04.
- ▶ If railings are present on the components, then they must be brought into the corresponding position and secured for assembly / disassembly work.
- ▶ Step on aids and fall protection equipment only with clean shoes.
- ▶ Keep aids and fall protection equipment clean and free from snow and ice.
- ▶ During all assembly and disassembly work, maintenance work and inspections, travel or crane operation is prohibited.

Make sure that the following prerequisites are met:

- The boom equipment is placed down.
- The ballast trailer guide is fully telescoped in.
- The ballast plates on the ballast trailer are removed.
- An auxiliary crane and an aerial platform are available.

Note

- ▶ Observe the information in the erection and take-down charts when taking down the boom equipment.

WARNING
Danger of tipping the ballast trailer!
If the ballast trailer is unpinned on the turntable, there is a danger of tipping over.
Personnel can be severely injured or killed.

- ▶ The disassembly of the ballast trailer may only be carried out by authorized personnel.
- ▶ The disassembly of the ballast trailer may only be conducted on a level and load-bearing surface.
- ▶ The ballast trailer has **no** brake system. The ballast trailer must be supported with the support cylinders if it is **not** pinned on the turntable.
- ▶ Before unpinning the ballast trailer on the turntable it must be ensured that the stability and tipping safety of the ballast trailer is ensured, see section „Stability and tipping safety for ballast trailers not assembled on the turntable“.

LWE/LR 1600-2-001/18101-07-02/en

copyright © Liebherr-Werk Ehingen GmbH 2018

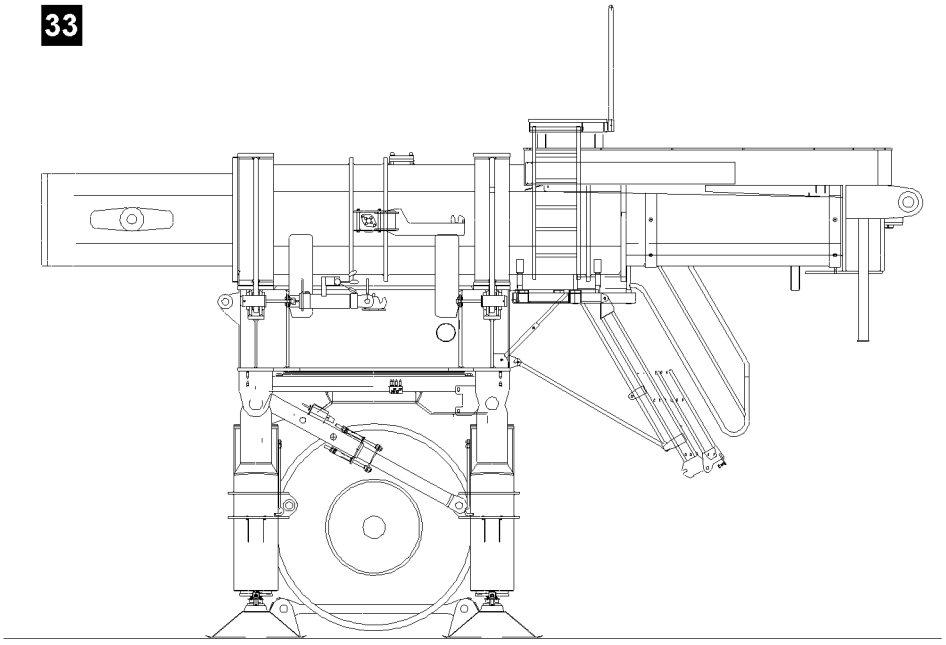

LWE/LR 1600-2-001/18101-07-02/en

Fig.107248

copyright © Liebherr-Werk Ehingen GmbH 2018

7.1 Ballasting the ballast trailer down

The ballast plates are marked with their own weights.

Make sure that the following prerequisites are met:
– The ballast trailer is pinned and secured on the turntable on both sides.

WARNING
Falling ballast plates!
If more than the specified loads are lifted with the ropes, then they or the studs for the ballast plates will be overloaded.
The ballast plates can topple!
Personnel can be severely injured or killed.
▶ Do not subject fastening ropes up to the maximum load bearing capacity!
▶ Fasten the ballast plates correctly and remove them correctly from the ballast trailer.
▶ Replace damaged ballast plates.

▶ Use the auxiliary crane to evenly remove the ballast plates from the ballast trailer.
▶ Lift ballast plates individually or as a packet from the ballast trailer.

LWE/LR 1600-2-001/18101-07-02/en

copyright © Liebherr-Werk Ehingen GmbH 2018

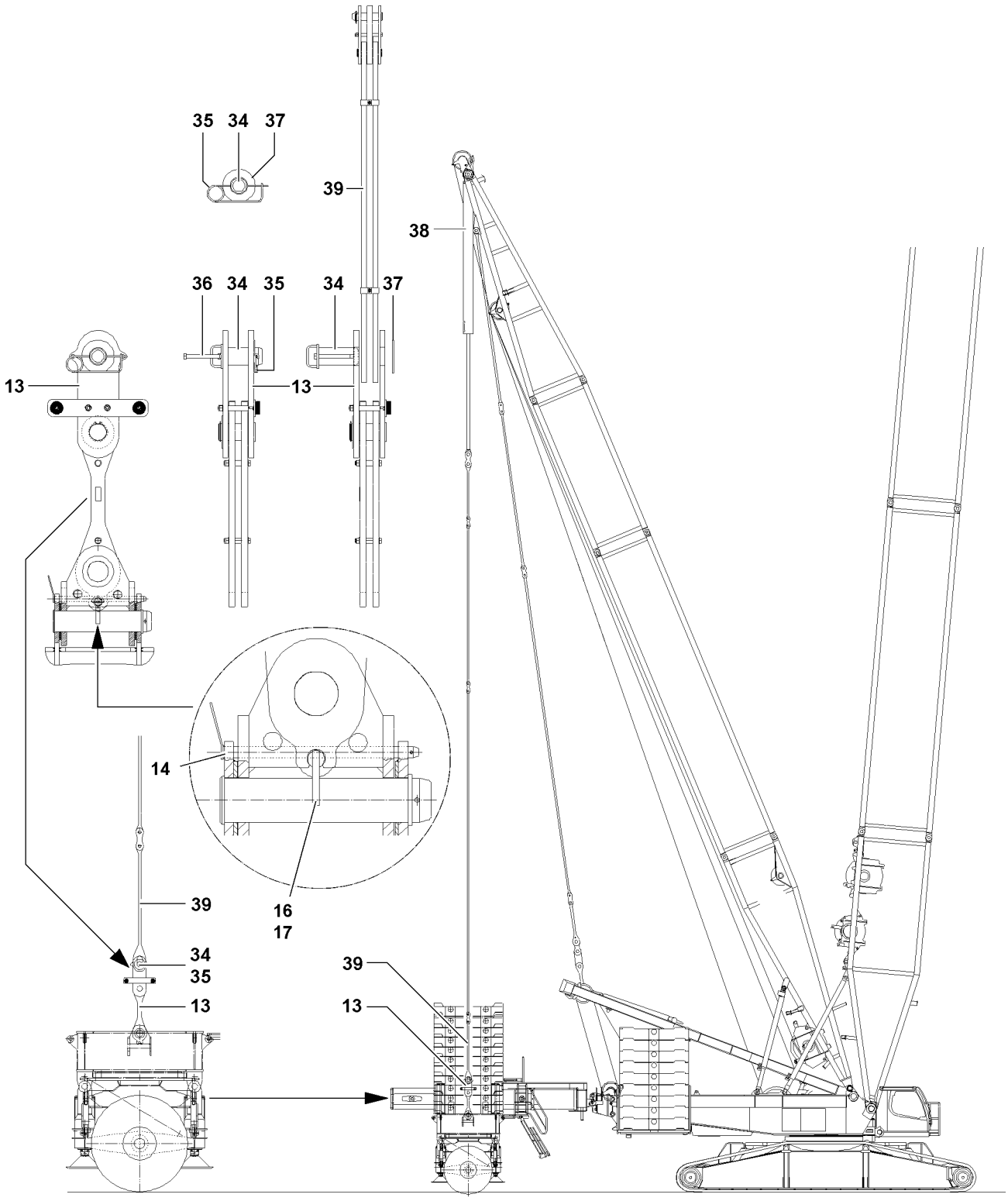

Fig.121376

LWE/LR 1600-2-001/18101-07-02/en

copyright © Liebherr-Werk Ehingen GmbH 2018

7.2 Disassembling the ballast trailer guying

7.2.1 Unpinning the guy rods

Make sure that the following prerequisites are met:
- The ballast trailer guide is fully retracted.
- The derrick radius and the ballast trailer radius are identical (13.0 m).
- The guy rods hang vertically.
- The guy rods are relieved by moving the pull cylinders out.

WARNING
Danger of accident due to oscillating guy rods!
The guy rods can sway during the unpinning procedure.
Personnel can be severely injured or killed.
- ▶ Set the derrick boom and derrick ballast to the same radius before unpinning.
- ▶ If this is not possible, secure the guy rods against swaying with the auxiliary crane.

DANGER
Retaining pins **not** inserted!
By unpinning the connector pins **34** the guy rods **13** will fall sideways.
Death, severe injury, property damage.
- ▶ Make sure, before unpinning the connector pins **34**, that the retaining pins **14** are pinned and secured. Perform a visual inspection.
- ▶ Make sure, before unpinning the connector pins **34**, that the retaining pins **16** are pinned and secured. Perform a visual inspection.

- ▶ Pin and secure the retaining pins **14**.
- ▶ Pin and secure the retaining pins **16**.

When both retaining pins **14** and the retaining pin **16** are pinned and secured on each guy rod:
- ▶ Perform a visual inspection. Unpin the guy rods **39** on the guy rods **13**: Remove the spring retainer **35** and unpin the connector pin **34**.
- ▶ Move the pull cylinders **38** in and pull the guy rods **39** up.

7.2.2 Bringing the guy rods on the ballast trailer into transport position

Make sure that the following prerequisites are met:
- The guy rods **39** are unpinned.
- The guying is pulled over the pull cylinder **38** „upward“.

- ▶ Attach the guy rod **13** on the auxiliary crane.

If the guy rod **13** is securely attached on the auxiliary crane:
- ▶ Release and unpin the retaining pin **14**.
- ▶ Place the guy rod **13** with the auxiliary crane to the side.

If the guy rod **13** is laterally placed on the ballast trailer:
- ▶ Insert the retaining pin **14** and secure with the spring retainer.
- ▶ Remove the auxiliary crane.

LWE/LR 1600-2-001/18101-07-02/en

copyright © Liebherr-Werk Ehingen GmbH 2018

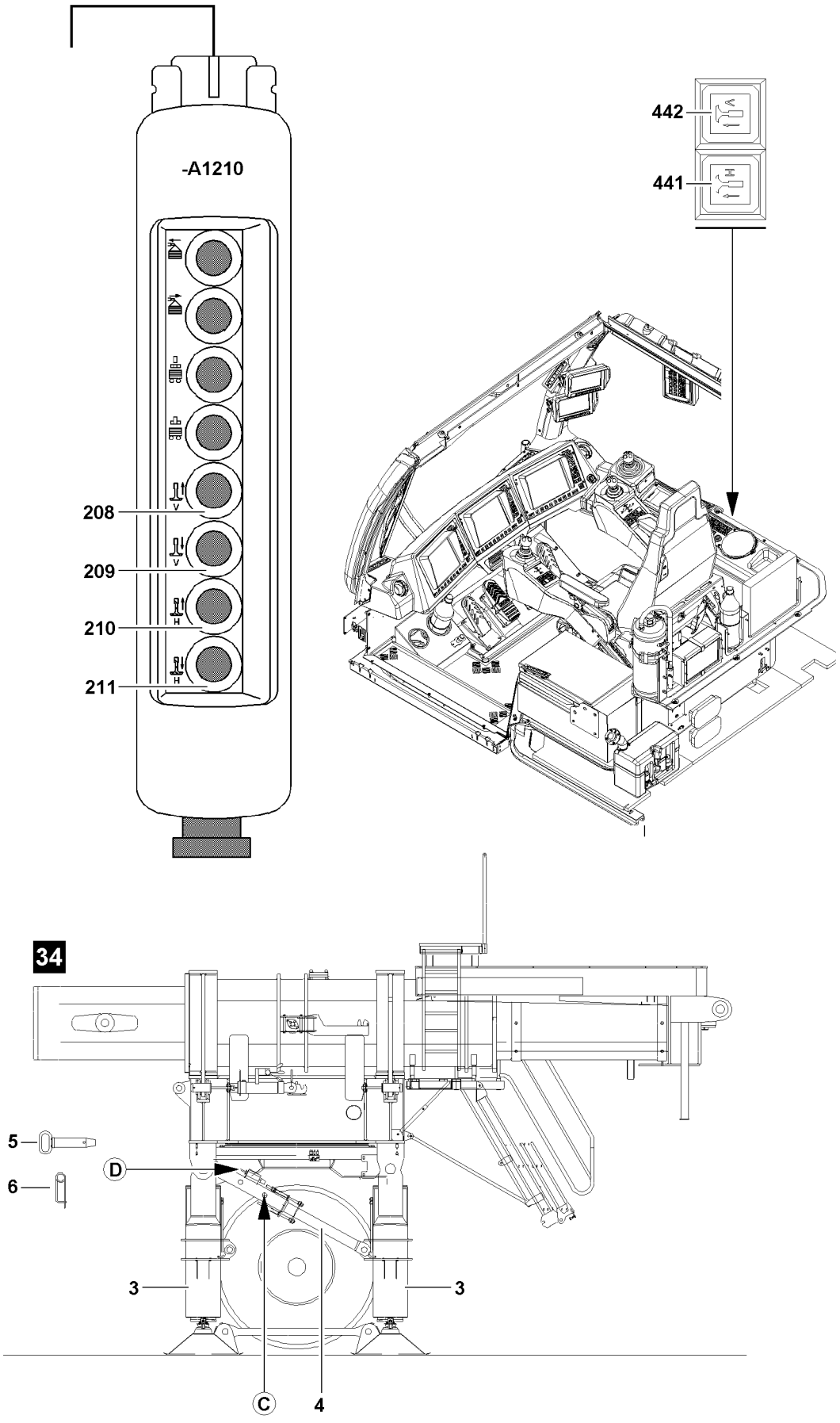

LWE/LR 1600-2-001/18101-07-02/en

Fig.107250

copyright © Liebherr-Werk Ehingen GmbH 2018

7.3 Supporting the ballast trailer

The ballast trailer is supported before unpinning on the turntable or on the adapter.

Before supporting the ballast trailer, the locking pin **5** must be pinned and secured on the strut **4**.

Make sure that the following prerequisites are met:
- The ballast plates and the guy rods are disassembled.
- The ballast trailer guide is fully retracted.
- The crane is aligned in horizontal direction.

7.3.1 Pinning the strut on the ballast trailer

WARNING
Risk of tipping the ballast trailer!
If the strut **31** is not pinned before ballast trailer disassembly at point **C**, then the ballast trailer can tip over.
Personnel can be severely injured or killed.
▶ Always pin the strut **31** before disassembly of the ballast trailer.

▶ Release and unpin the locking pin **32** from the transport receptacle **D**.
▶ Pin locking pin **32** into operating position **C** and secure with spring retainer **33**.

7.3.2 Extending the support cylinders

Move the front and rear support cylinders out:

▶ Press the button **442** and button **441** in the crane operator's cab.
or
Press the button **209** and button **211** on the control panel **-A1210**.
▶ Check the moved out support cylinder visually.

LWE/LR 1600-2-001/18101-07-02/en

copyright © Liebherr-Werk Ehingen GmbH 2018

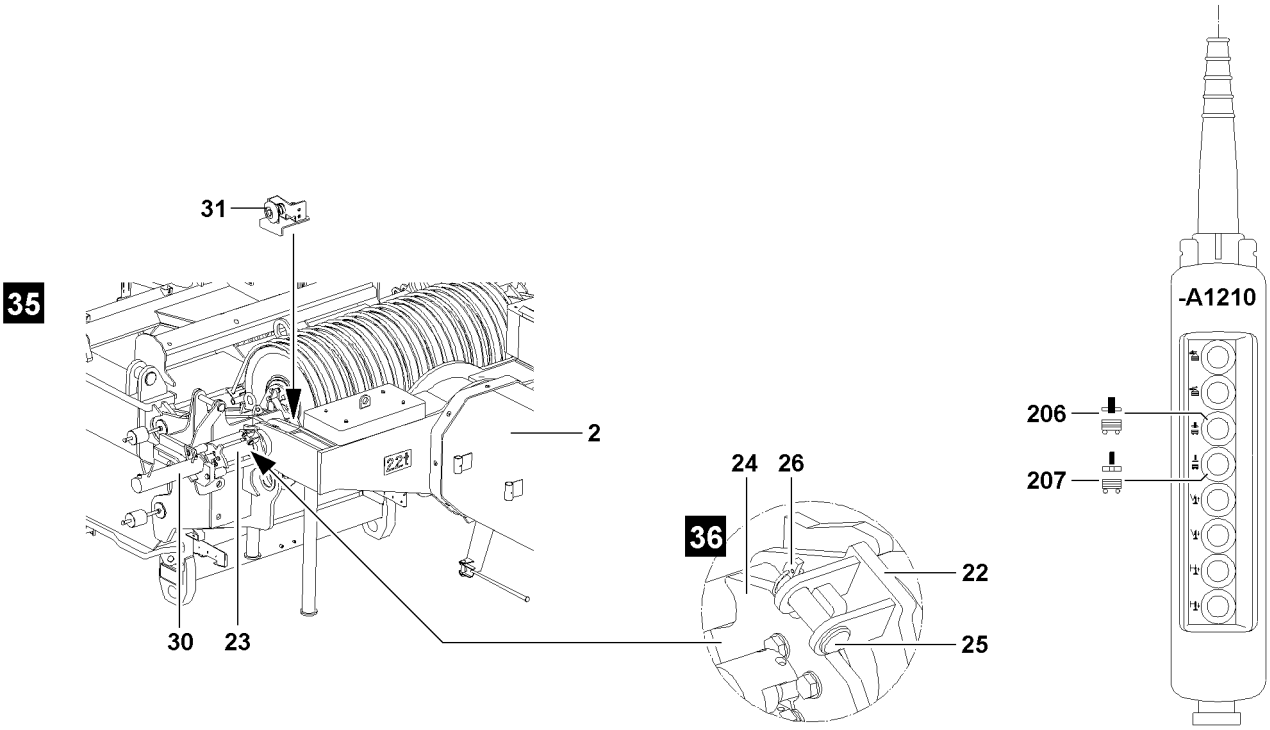

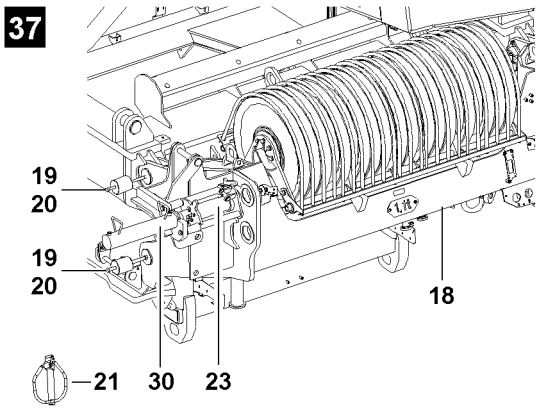

LWE/LR 1600-2-001/18101-07-02/en

Fig.107251

copyright © Liebherr-Werk Ehingen GmbH 2018

7.4 Unpinning the ballast trailer on the adapter

Make sure that the following prerequisites are met:
- The ballast trailer is supported.
- The strut **31** is pinned with the locking pin **32**.
- The electrical and hydraulic connections are present.

7.4.1 Unpinning procedure

NOTICE
Damage to the retaining pins!
If the retaining pins **25** are not unpinned before the unpinning procedure, the pin pulling device can be damaged.
▶ The retaining pins **25** on the pin pulling device **22** must be released and unpinned before unpinning the connector pins **23**!

If the retaining pins **25** are completely unpinned on both sides:
▶ Press the button **206** on the control panel **-A1210**.

Result:

- The pin pulling cylinders move in.
- The retaining pins **23** are unpinned on the adapter.

NOTICE
Damage to the ballast trailer or to the turntable!
When unpinning the ballast trailer, only one connector pin **23** can be unpinned on the turntable due to distortions, (signal „Ballast trailer installed“ is no longer present), then the crane control no longer recognizes that the ballast trailer is installed, even though the ballast trailer is still connected with the turntable via the second connector pin **23**.
Due to the missing signal, „Ballast trailer installed“, it is possible to turn the turntable, to drive the crane or to telescope the ballast trailer guide out / in.
This could significantly damage the crane or the ballast trailer.
▶ All crane movements are to be limited to a „minimal degree“ and must be driven with extreme caution and the lowest possible speed!
▶ After unpinning of the second connector pin **23**, it must again be checked whether both connector pins are completely unpinned.

▶ Perform a visual inspection.

If the ballast trailer guide has been telescoped out during the unpinning procedure:
▶ Move the ballast trailer guide all the way in.

LWE/LR 1600-2-001/18101-07-02/en

copyright © Liebherr-Werk Ehingen GmbH 2018

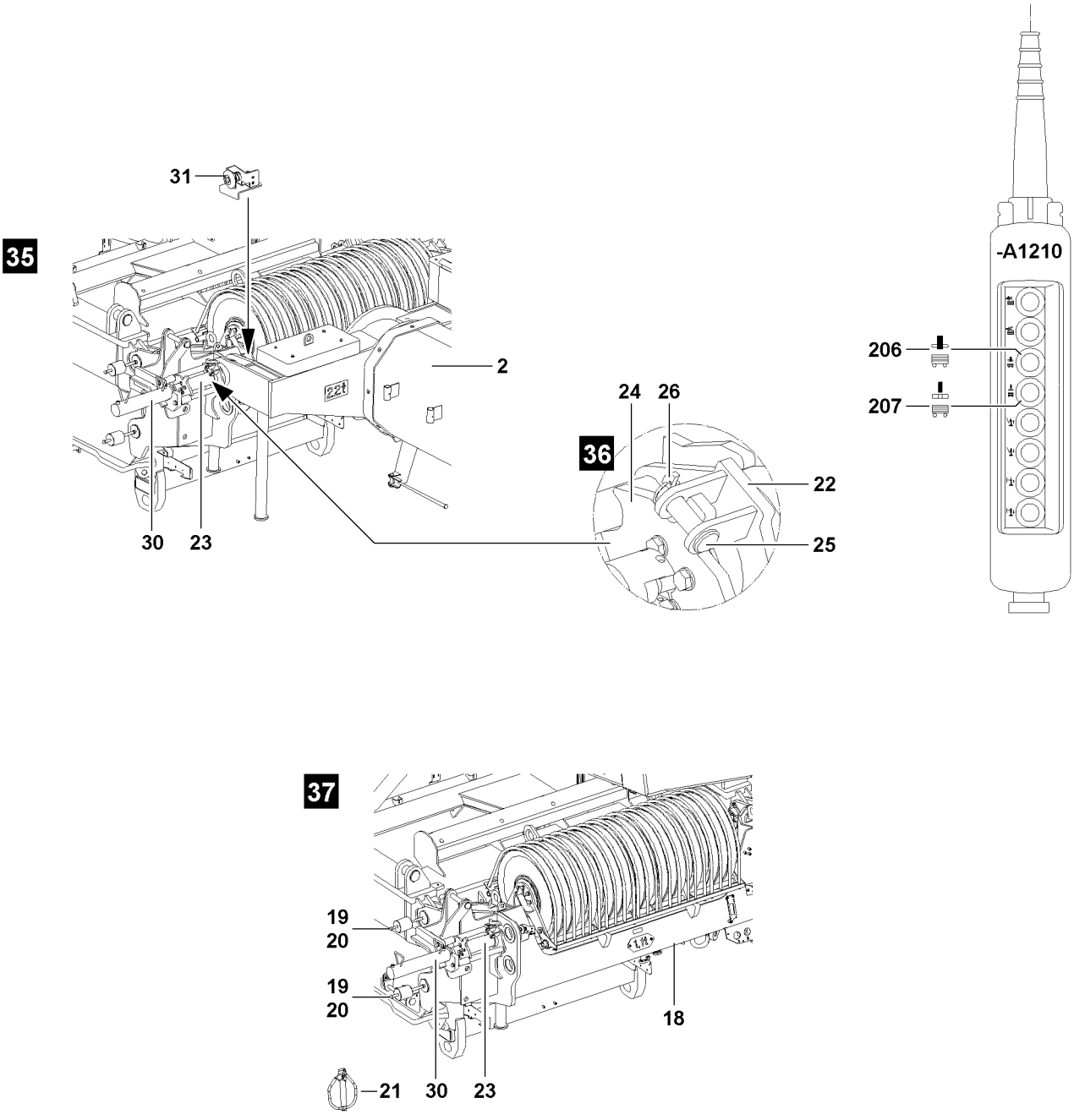

Fig.107251

LWE/LR 1600-2-001/18101-07-02/en

copyright © Liebherr-Werk Ehingen GmbH 2018

7.4.2 Releasing the electrical connection from the ballast trailer to the adapter

Note

▶ Release the electrical connections only when the ballast trailer is completely unpinned on the turntable, which means both connector pins **23** must be unpinned.

Make sure that the following prerequisite is met:

– The ballast trailer is completely unpinned on the turntable.

▶ Disconnect the electrical connections and store properly on the ballast trailer.

7.4.3 Releasing the hydraulic connections from the ballast trailer to the adapter

When connecting and releasing hydraulic lines with quick couplings, make sure that the coupling procedure is carried out correctly.

DANGER

Danger of accident due to loss of pressure or leakage!
Incorrectly coupled or self-loosening quick couplings (particularly return lines) can result in serious accidents due to component failure.

▶ Check that the quick couplings have been properly connected before using the crane.

▶ Release the pressure in the hydraulic system before connecting or disconnecting. Turn the engine off and wait for short time.
▶ Install the coupling components (sleeve and connector) with the knurled nut.
▶ Disconnect the coupling sections.
▶ Store hydraulic hoses on the ballast trailer properly.
▶ Protect the coupling sections with caps to prevent contamination and damage.

7.4.4 Releasing the electrical connection from the adapter to the turntable

▶ Disconnect the electrical connections and store on the adapter carefully.

7.4.5 Releasing the hydraulic connection from the adapter to the turntable

When connecting and releasing hydraulic lines with quick couplings, make sure that the coupling procedure is carried out correctly.

DANGER

Danger of accident due to loss of pressure or leakage!
Incorrectly coupled or self-loosening quick couplings (particularly return lines) can result in serious accidents due to component failure.

▶ Check that the quick couplings have been properly connected before using the crane.

▶ Release the pressure in the hydraulic system before connecting or disconnecting. Turn the engine off and wait for short time.
▶ Install the coupling components (sleeve and connector) with the knurled nut.
▶ Disconnect the coupling sections.
▶ Protect the coupling sections with caps to prevent contamination and damage.

LWE/LR 1600-2-001/18101-07-02/en

copyright © Liebherr-Werk Ehingen GmbH 2018

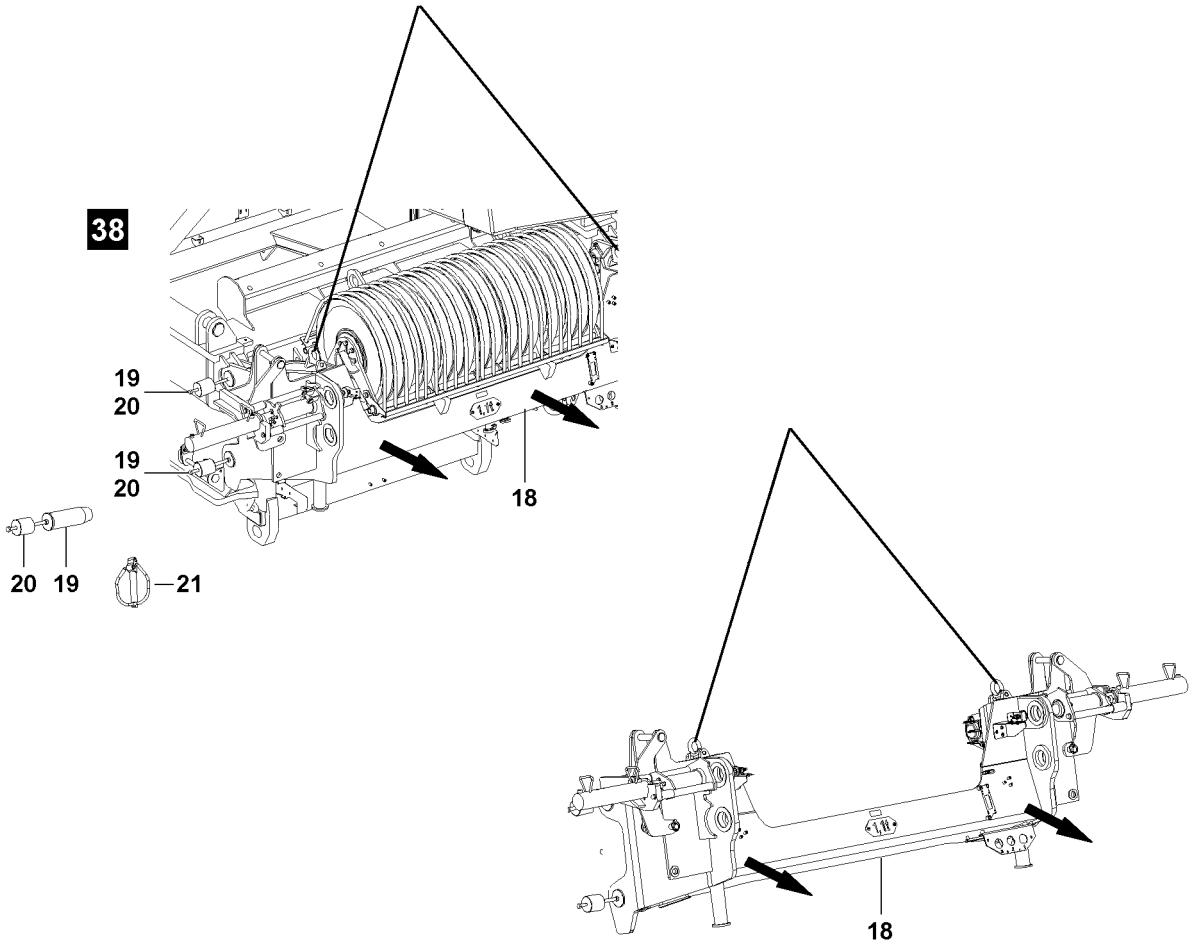

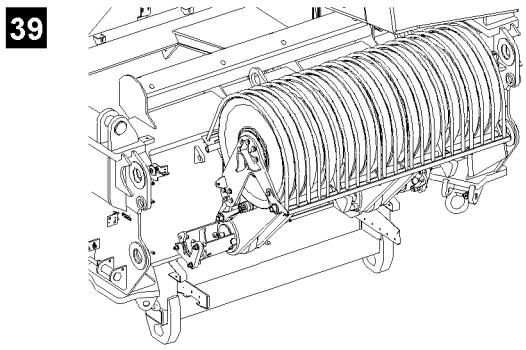

LWE/LR 1600-2-001/18101-07-02/en

Fig.107252

copyright © Liebherr-Werk Ehingen GmbH 2018

7.5 Disassembling the adapter on the turntable

Note

- ▶ The disassembly of the adapter onto the turntable should take place as much as possible with regard to the disassembly of the derrick boom, or after taking down the derrick boom.
- ▶ Disassembly of the adapter can also take place with an erected derrick boom, access to the turntable can be significantly restricted by the SA-frame.

Make sure that the following prerequisites are met:

- The electrical connections from the adapter to the turntable are disconnected and properly stored
- The hydraulic connections from the adapter to the turntable are disconnected and properly stored.
- The ballast trailer is disassembled.

▶ Fasten the adapter **18** onto the lashing lugs on the auxiliary crane, see illustration **38**.
▶ Tension the fastening equipment carefully.
▶ Remove the linch pin **21** on the connector pin **19**.

When the linch pins **21** are removed:

▶ Unpin the connector pins **19** using the striker **20**.

When the connector pins **19** are completely unpinned:

▶ Swing the adapter out on the turntable with the auxiliary crane.
▶ Take down the adapter on a suitable substructure.
▶ Remove the auxiliary crane.

LWE/LR 1600-2-001/18101-07-02/en

copyright © Liebherr-Werk Ehingen GmbH 2018

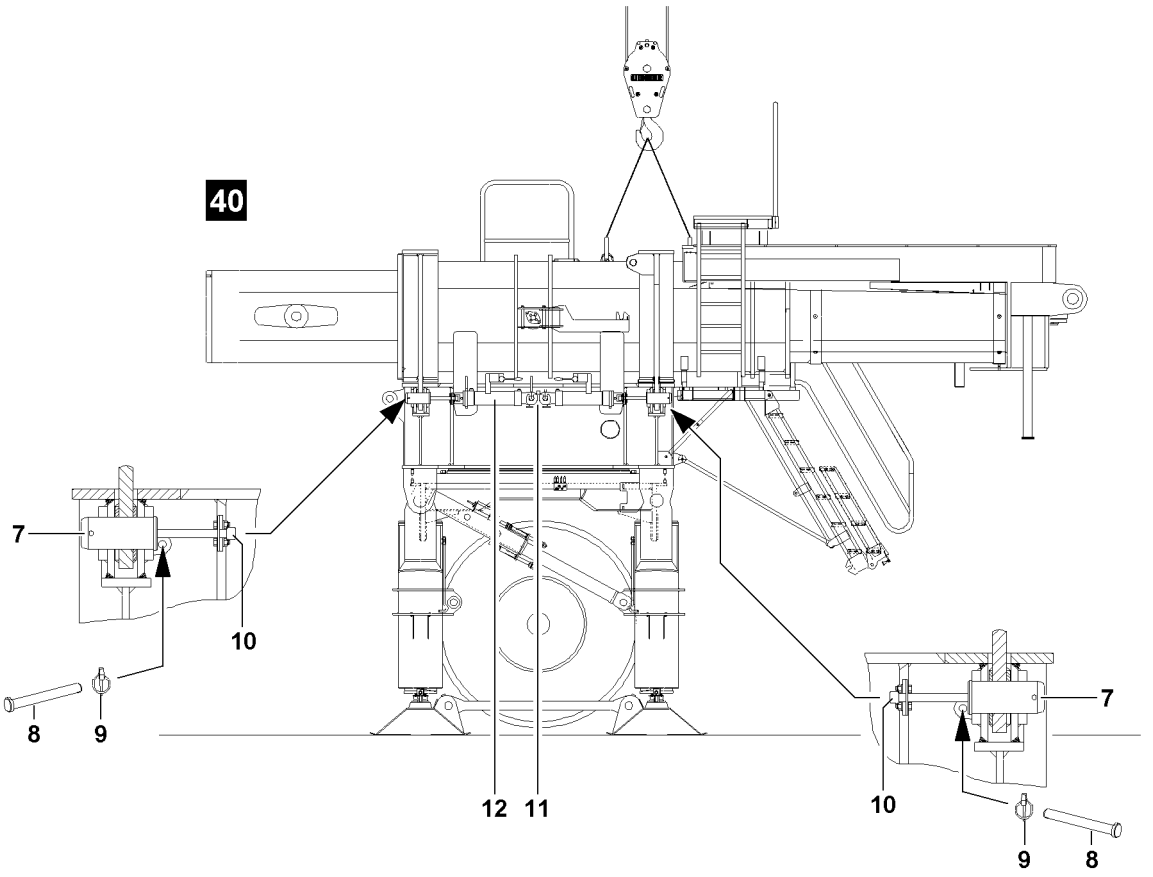

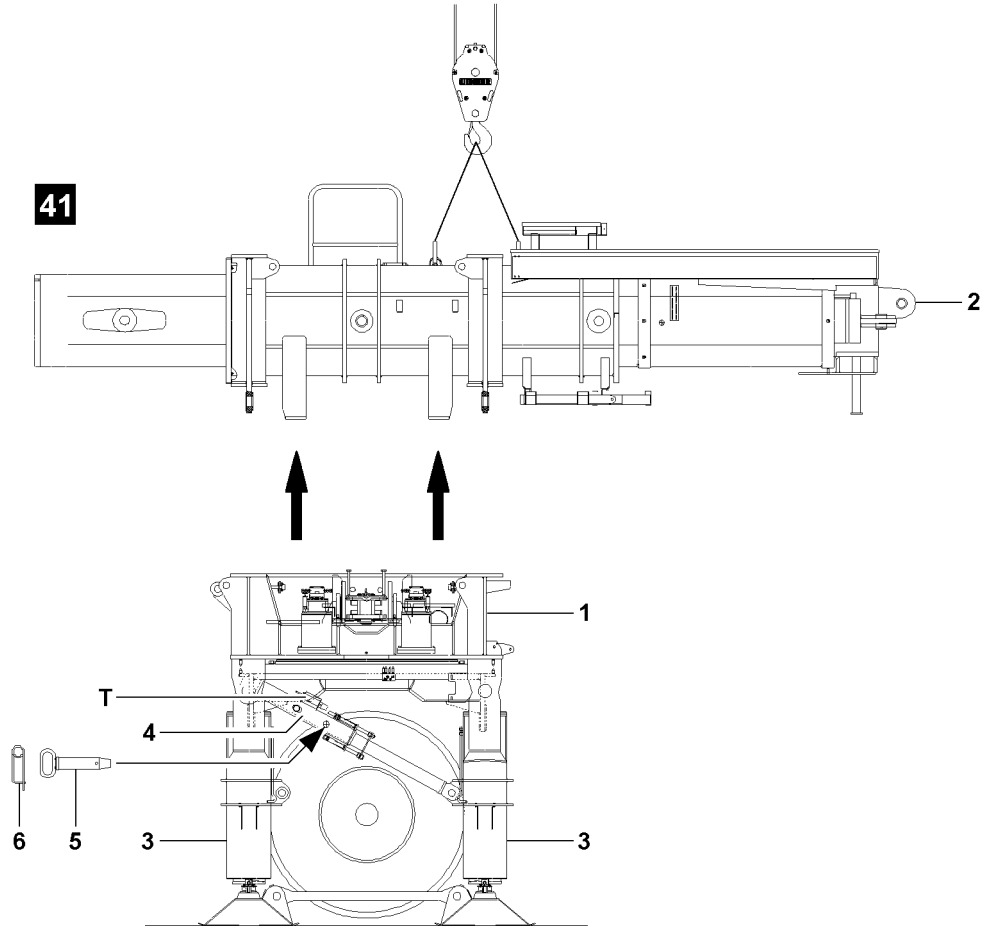

LWE/LR 1600-2-001/18101-07-02/en

Fig.107253

copyright © Liebherr-Werk Ehingen GmbH 2018

7.6 Disassembling the ballast trailer guide

Make sure that the following prerequisites are met:
- The locking pin **5** is pinned in and secured in the strut **4**.
- The ballast trailer is supported with the support cylinders **3** and aligned in horizontal direction.
- The wheel sets are relieved.
- The ascent for the ballast trailer is in transport position.

WARNING
Danger of tipping the ballast trailer!
If the stability and tipping safety guidelines for the ballast trailer are not observed, the ballast trailer can tip over.
Personnel can be severely injured or killed.
▶ Observe section „Stability and tipping safety for ballast trailer not assembled on the turntable“.

▶ Attach the ballast trailer guide **2** on the auxiliary crane.
▶ Tension the fastening equipment carefully.
▶ Attach the pin pulling cylinder **12** to the retainer **11** and hook into the screw head **10**.
▶ Establish the hydraulic connection of the pin pulling cylinder **12** to the hydraulic aggregate, see crane operating instructions, chapter 5.30.
▶ Remove the linch pin **9** on the retaining pins **8**, see illustration **40**.
▶ Unpin the retaining pin **8**.

When the retaining pins **8** are unpinned and the fastening equipment on the ballast trailer guide **2** are tensioned:
▶ Actuate the lever on the pin pulling cylinder and unpin the connector pins **7**.

When all four connector pins **7** are completely unpinned:
▶ Lift and swing ballast trailer guide **2** with auxiliary crane from the ballast trailer, see illustration **41**.
▶ Disassemble ascent for the ballast trailer.
▶ Place ballast trailer guide **2** on suitable and sufficiently load-bearing substructure.
▶ Remove the auxiliary crane.

LWE/LR 1600-2-001/18101-07-02/en

copyright © Liebherr-Werk Ehingen GmbH 2018

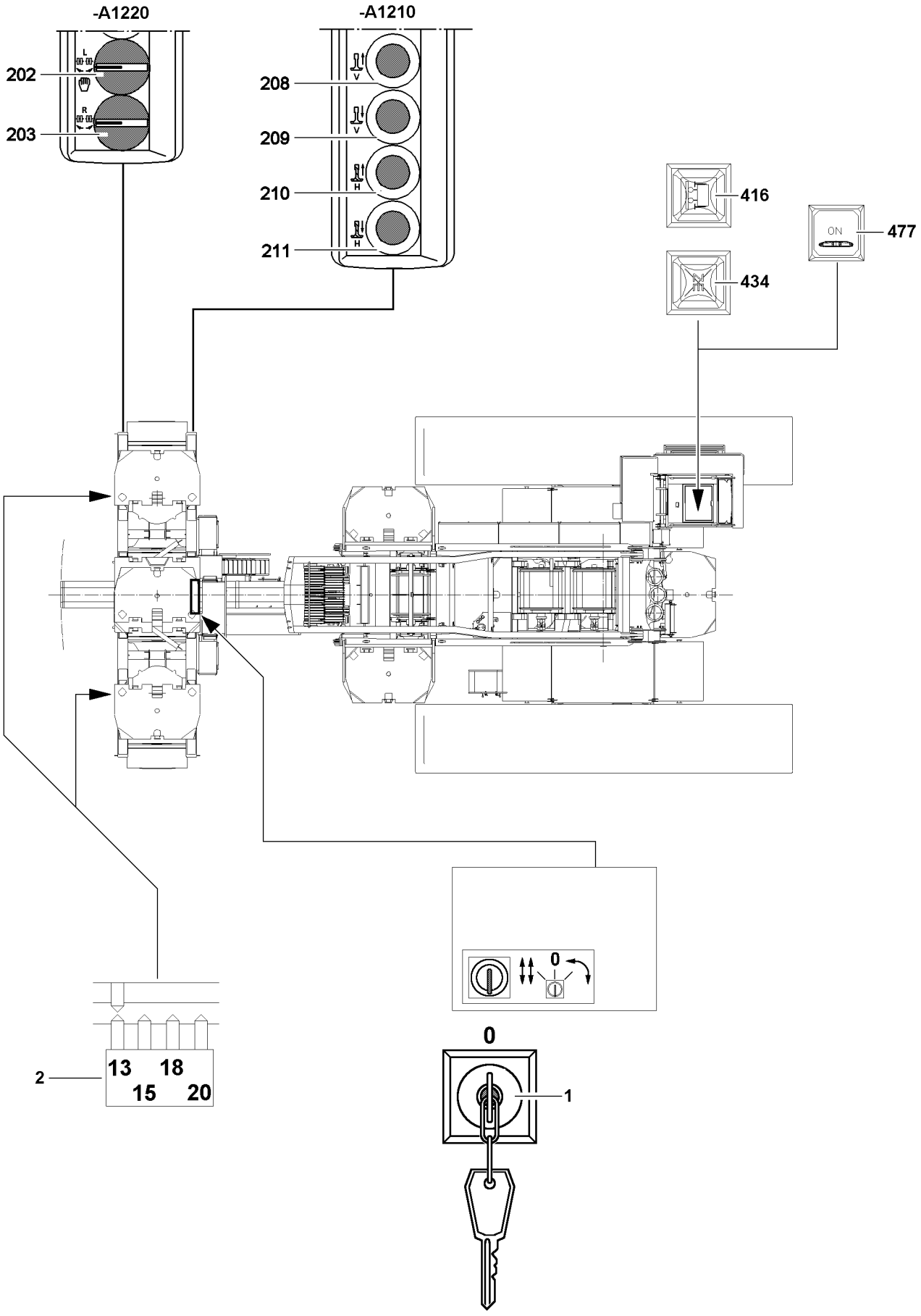

LWE/LR 1600-2-001/18101-07-02/en

Fig.107254

copyright © Liebherr-Werk Ehingen GmbH 2018

8 Emergency operation with a defective CPU

8.1 Emergency operation of ballast trailer

With a defect on the ballast trailer CPU, a warning light **434** is lit, the electronic steering of the ballast trailer can no longer be steered.

The signals „Towing“ and „circular travel“ are no longer transmitted by the ballast trailer control to the crane control.

However, by actuating the key switch **1** in the control cabinet on the ballast trailer, the CPU can be bypassed.

Key switch positions
- 0 (center) = no emergency operation
- I (left) = emergency operation towing
- II (right) = emergency operation circular travel

NOTICE
Damage of ballast trailer!
By activating the key switch **1** the signal „Towing“ or „Circular travel“ is released in the crane control, even though the wheel sets could potentially be incorrectly aligned.
This can result in severe damage on the ballast trailer or on the crane.
- ▶ Operate the key switch **1** only if the electronic fails.
- ▶ Before driving the crane, check the alignment of the wheel sets.
- ▶ All travel movements may only be conducted with utmost caution, minimum acceleration and careful braking.
- ▶ If the key switch **1** is activated, then the crane operator bears the full and sole responsibility for his actions.

WARNING
Danger of accident due to faulty operation!
If the key switch **1** is activated, there is an increased danger of accidents due to the bypassed ballast trailer control.
Personnel can be severely injured or killed.
- ▶ It is prohibited to remain within the danger zone of the ballast trailer.
- ▶ The alignment of wheel sets is to be monitored manually, perform a visual inspection.
- ▶ Observe the angle scale on the ballast trailer.
- ▶ Emergency operation should only be carried out by authorized personnel. They must be aware of all related supervisory tasks and hazards.
- ▶ If the key switch **1** is activated, then the crane operator bears the full and sole responsibility for his actions.

LWE/LR 1600-2-001/18101-07-02/en

copyright © Liebherr-Werk Ehingen GmbH 2018

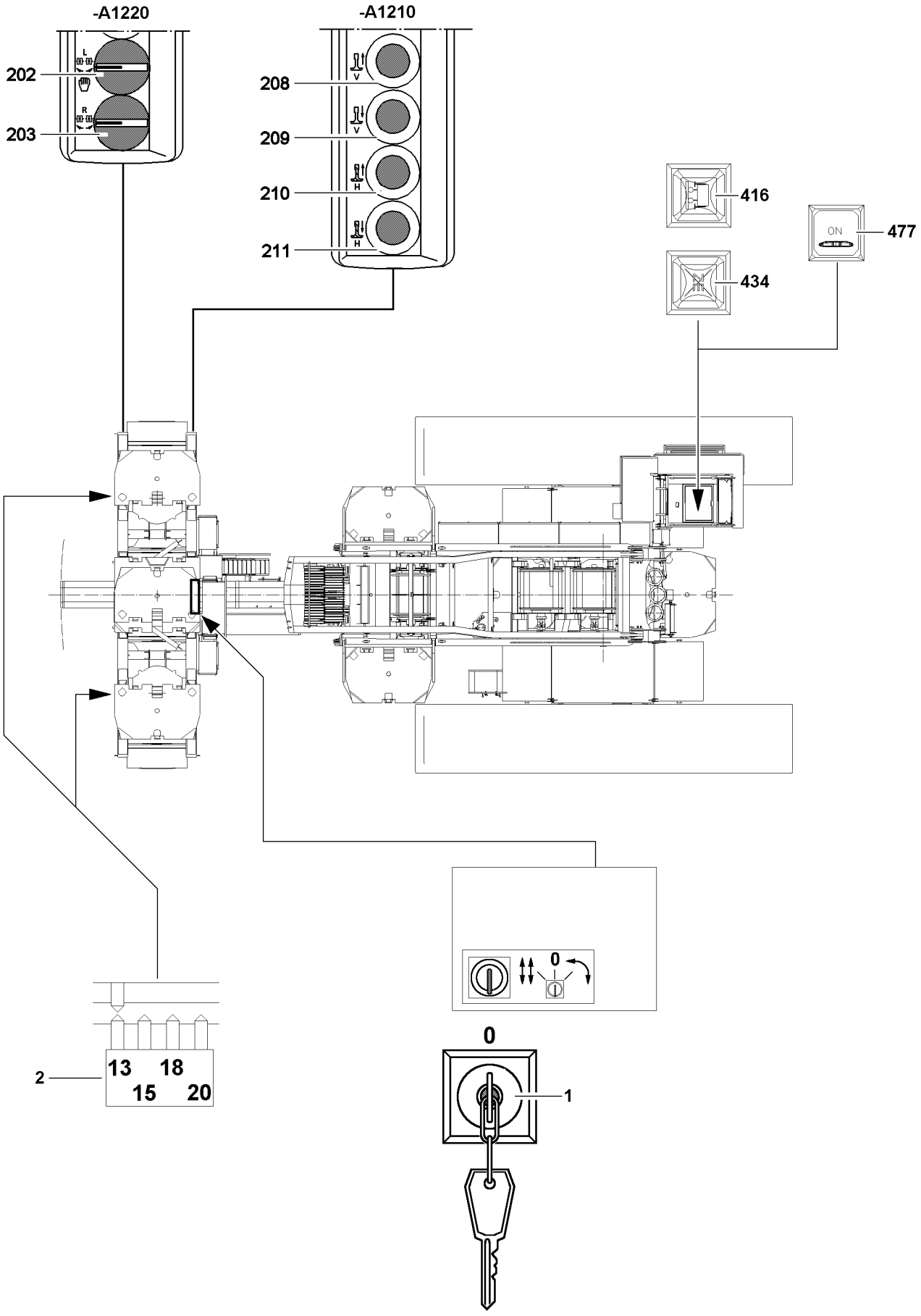

LWE/LR 1600-2-001/18101-07-02/en

Fig.107254

copyright © Liebherr-Werk Ehingen GmbH 2018

8.2 Emergency operation - towing

Make sure that the following prerequisites are met:
- The ballast trailer is properly assembled.
- Crawler operation is turned on (switch **477**).

8.2.1 Lifting the ballast trailer with the support cylinders

Note
▶ The support cylinders of the ballast trailer must always be moved out evenly.

Move the front and rear support cylinders out:

▶ Press the button **209** and the button **211**.

8.2.2 Aligning the wheel sets in towing position

To be able to align the wheel sets in towing position, the ballast trailer must be lifted with the support cylinders.

Make sure that the following prerequisite is met:
- The ballast trailer is raised via the support cylinders to the point where the wheel sets are relieved.

▶ Turn the key switch **1** on the ballast trailer to the „left“.

Note
▶ By actuating the key switch **1** in position „left“, the command „Towing“ is passed on to the crane and emergency operation is turned on.
▶ During emergency operation the support can only be actuated from the control panel **-A1210** on the ballast trailer.

When the wheel sets are relieved:
▶ Activate the rotary switch **202** on the control panel **-A1220** and align the left wheel set into towing position.
▶ Activate the rotary switch **203** on the control panel **-A1220** and align the right wheel set into towing position.
▶ Check the settings.

LWE/LR 1600-2-001/18101-07-02/en

copyright © Liebherr-Werk Ehingen GmbH 2018

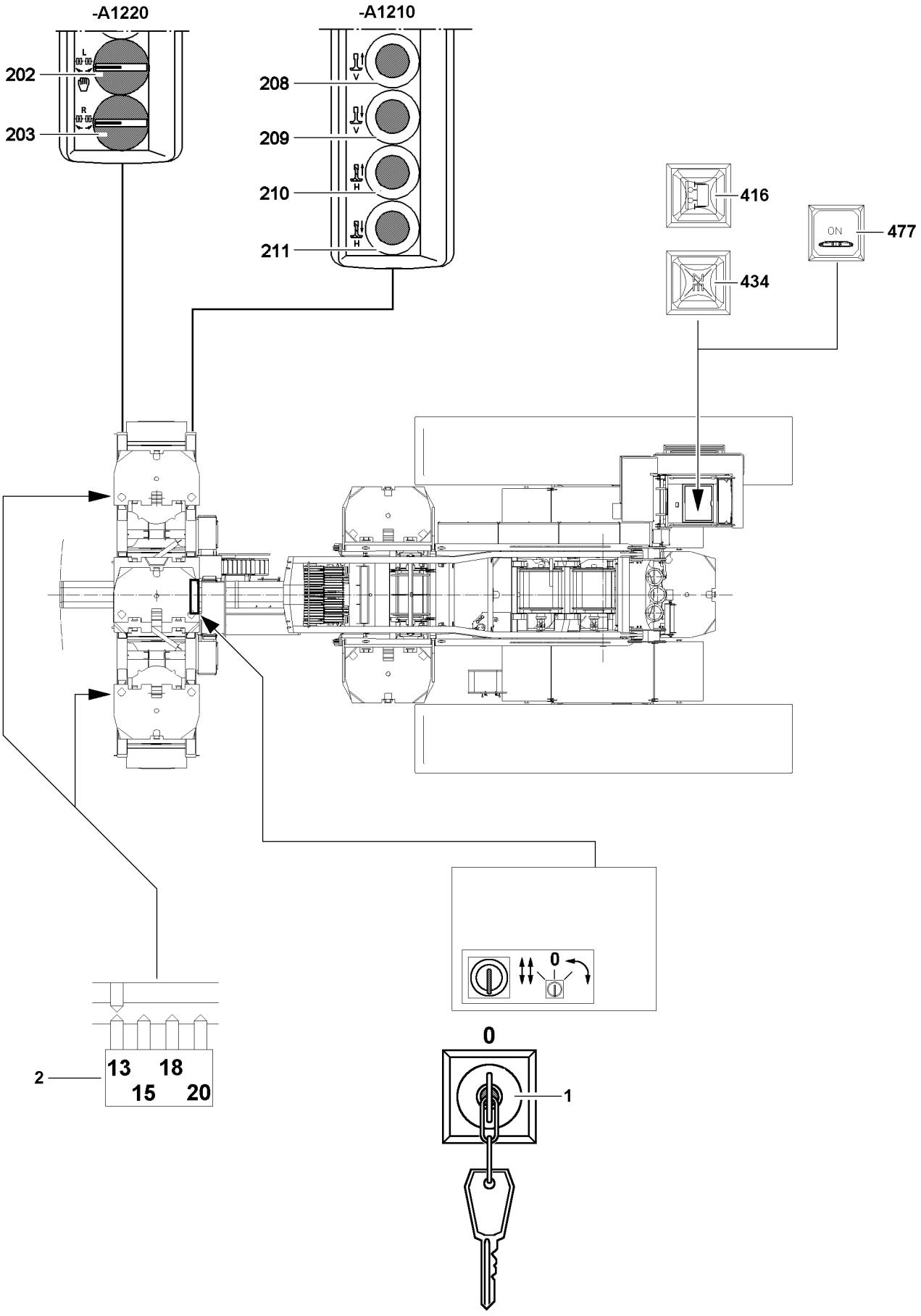

LWE/LR 1600-2-001/18101-07-02/en

Fig.107254

copyright © Liebherr-Werk Ehingen GmbH 2018

8.2.3 Lowering the ballast trailer with the support cylinders

Note
▶ The support cylinders of the ballast trailer must always be moved in evenly.

Retract the support cylinders completely on the front and rear:

▶ Press the button **208** and the button **210**.

Result:

– The support cylinders move in.

▶ Retract the support cylinders completely.

Result:

– The warning light **416** („Ballast trailer support moved in“) **lights up**.

8.2.4 Towing

Make sure that the following prerequisites are met:
– The wheel sets are in the towing position.

NOTICE
Damage of ballast trailer!
If the angle settings on the wheel sets are not monitored during driving in emergency operation, it can lead to significant damage on the wheel sets.
▶ The angle settings **2** on the wheel sets are to be constantly checked.
▶ Constantly monitor the alignment of the wheel sets while driving.
▶ If the wheel sets become excessively deformed, then they must be realigned.

LWE/LR 1600-2-001/18101-07-02/en

copyright © Liebherr-Werk Ehingen GmbH 2018

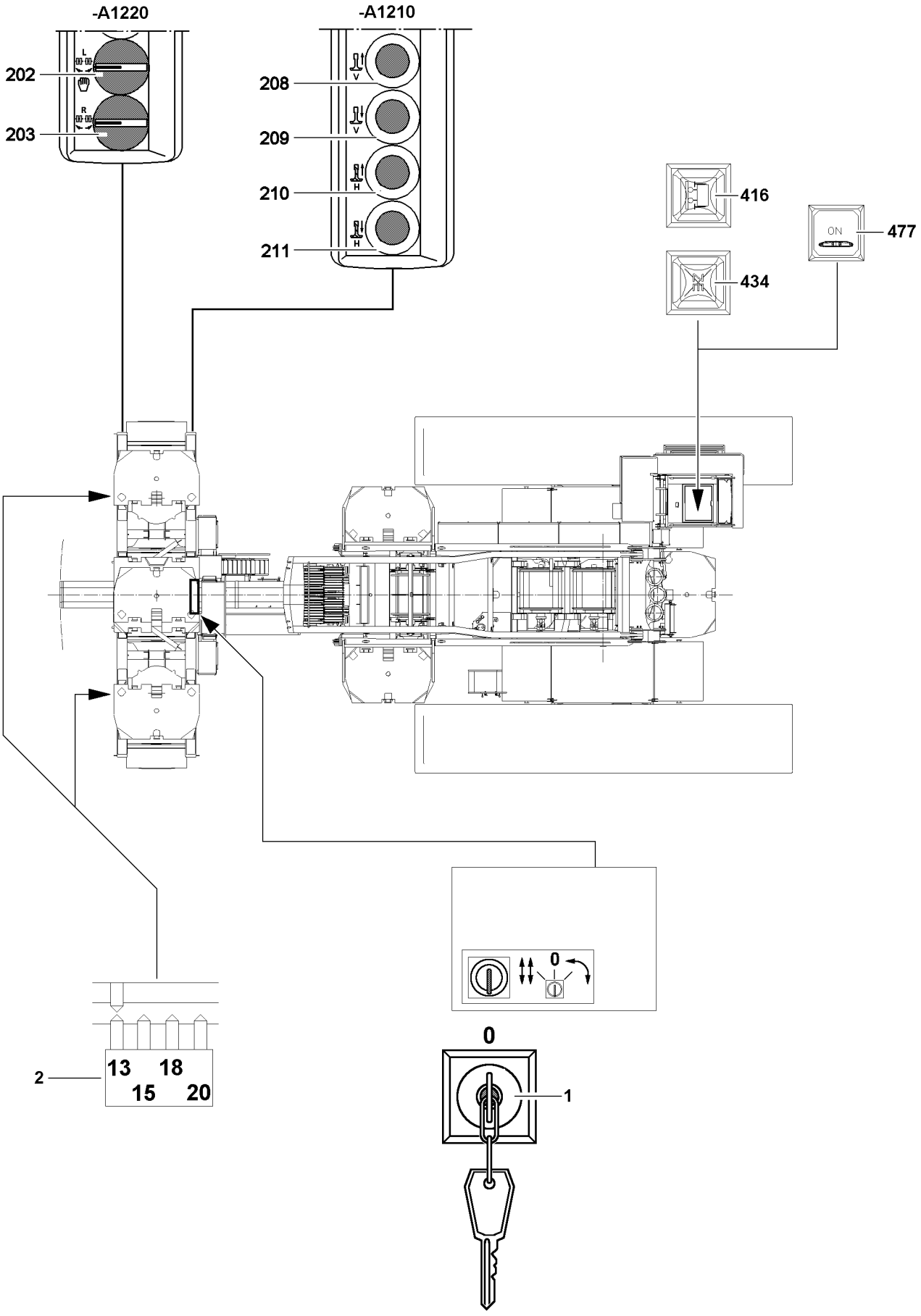

LWE/LR 1600-2-001/18101-07-02/en

Fig.107254

copyright © Liebherr-Werk Ehingen GmbH 2018

8.3 Emergency operation - circular travel

Make sure that the following prerequisites are met:
- The ballast trailer is properly assembled.
- Crawler operation is turned on (switch **477**).

8.3.1 Lifting the ballast trailer with the support cylinders

Note
▶ The support cylinders of the ballast trailer must always be moved out evenly.

Move the front and rear support cylinders out:

▶ Press the button **209** and the button **211**.

8.3.2 Aligning wheel sets into circular travel position

To be able to align the wheel sets in circular travel position the ballast trailer must be lifted with the support cylinders.

Make sure that the following prerequisite is met:
- The ballast trailer is raised via the support cylinders to the point where the wheel sets are relieved.

▶ Turn the key switch **1** on the ballast trailer to the „right“.

Note
▶ By actuating the key switch **1** in position „right“, the command „Circular driving“ is transmitted to the crane and emergency operation is turned on.
▶ During emergency operation the support can only be actuated from the control panel **-A1210** on the ballast trailer.

When the wheel sets are relieved:
▶ Activate the rotary switch **202** on the control panel **-A1220** and align the left wheel set into circular travel.
▶ Activate the rotary switch **203** on the control panel **-A1220** and align the right wheel set into circular travel.
▶ Check the settings.

LWE/LR 1600-2-001/18101-07-02/en

copyright © Liebherr-Werk Ehingen GmbH 2018

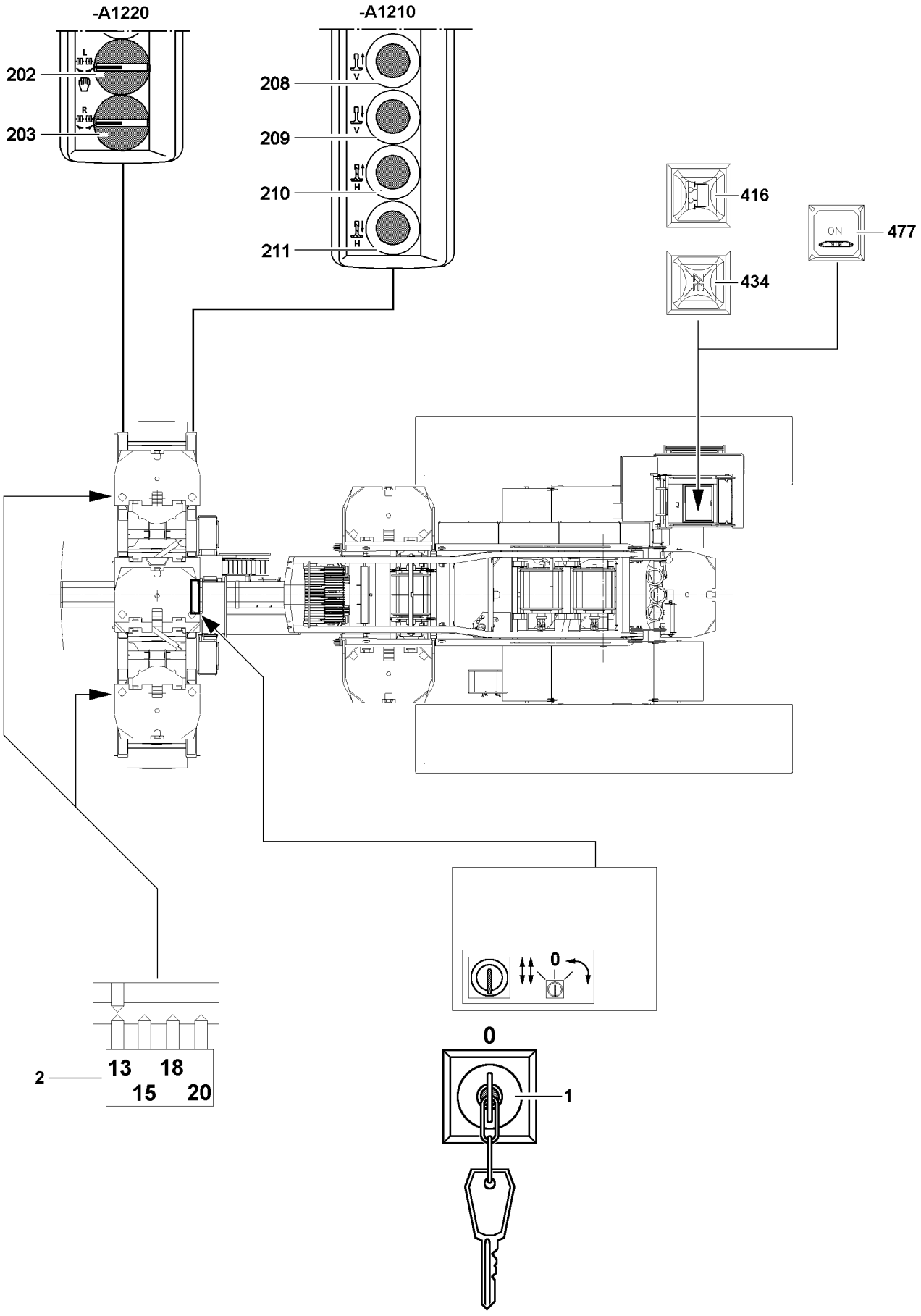

LWE/LR 1600-2-001/18101-07-02/en

Fig.107254

copyright © Liebherr-Werk Ehingen GmbH 2018

8.3.3 Lowering the ballast trailer with the support cylinders

Note
▶ The support cylinders of the ballast trailer must always be moved in evenly.

Retract the support cylinders completely on the front and rear:

▶ Press the button **208** and the button **210**.

Result:

– The support cylinders move in.

▶ Retract the support cylinders completely.

Result:

– The warning light **416** („Ballast trailer support moved in“) **lights up**.

8.3.4 Circular travel

Make sure that the following prerequisites are met:
– The wheel sets are in the circular travel position.

NOTICE
Damage of ballast trailer!
If the angle settings on the wheel sets are not monitored during driving in emergency operation, it can lead to significant damage on the wheel sets.
▶ The angle settings **2** on the wheel sets are to be constantly checked.
▶ Constantly monitor the alignment of the wheel sets while driving.
▶ If the wheel sets become excessively deformed, then they must be realigned.

9 Maintenance intervals for the ballast trailer

Note
▶ See Crane operating instructions, chapter 7.02.

LWE/LR 1600-2-001/18101-07-02/en

copyright © Liebherr-Werk Ehingen GmbH 2018

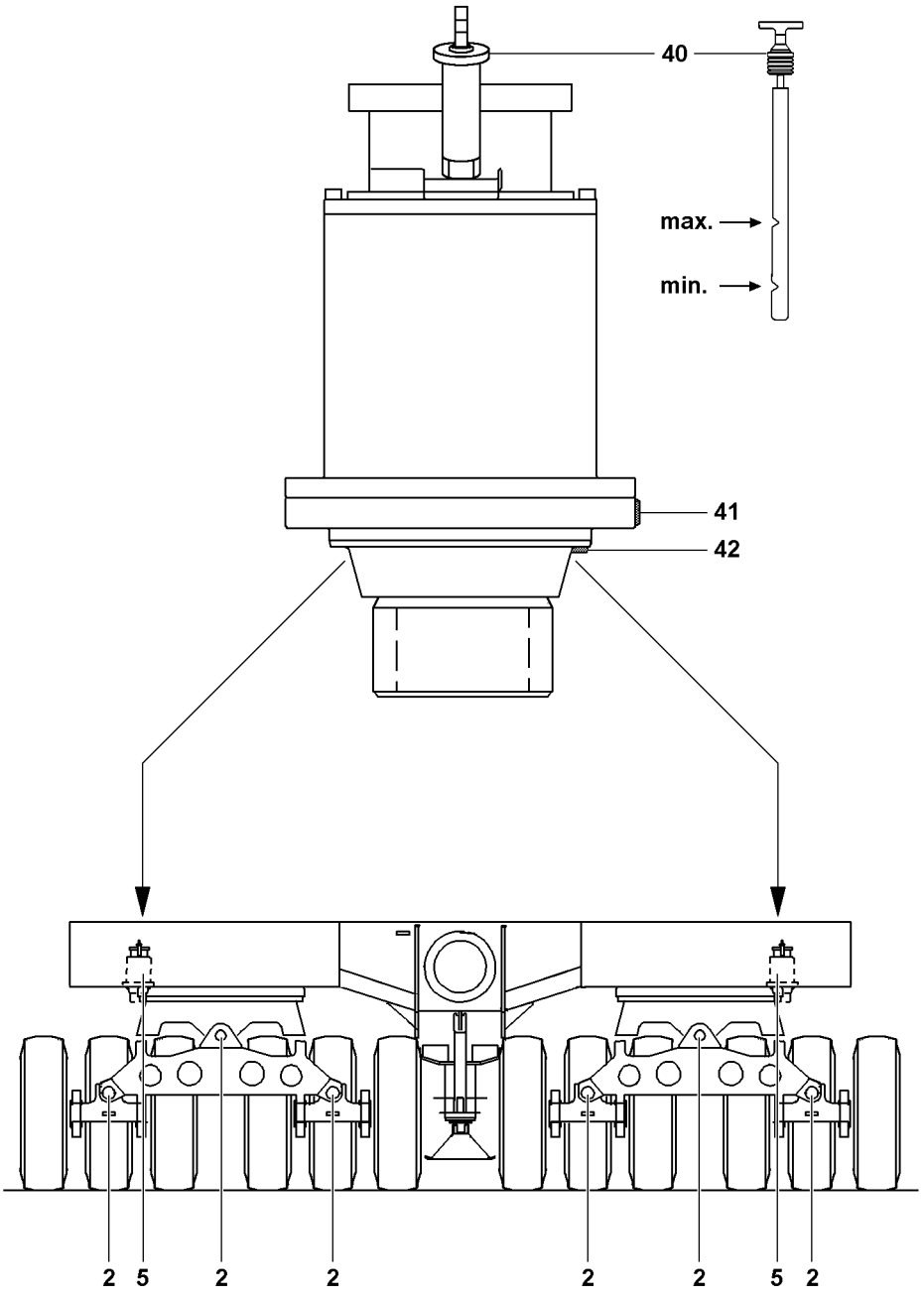

LWE/LR 1600-2-001/18101-07-02/en

Fig.107255

copyright © Liebherr-Werk Ehingen GmbH 2018

10 Maintenance

10.1 Ballast trailer tires

10.1.1 Ballast trailer tires

Note
▶ See Crane operating instructions, chapter 2.15.

10.1.2 Ballast trailer tires and disk wheels

Note
▶ See Crane operating instructions, chapter 8.01.

10.2 Hydraulic hose lines

Note
▶ See Crane operating instructions, chapter 7.05.

10.3 Slewing gear

Please maintain utmost cleanliness during all work to prevent dirt from entering the interior of the gear system.

10.3.1 Checking the oil level

Make sure that the following prerequisites are met:
– The ballast trailer is in horizontal position.

▶ Remove and wipe off the dipstick **40**.
▶ Reinsert the dipstick **40** and pull it out again.

The oil level must be between the min. and max. mark on the dipstick **40**.

▶ Check the oil level.

NOTICE
Danger of gear damage!
If the oil level has dropped below the Minimum mark, top up engine oil as shown in the lubrication chart until the oil level is between the Minimum and Maximum marks.
If the required minimum mark is fallen below, the gear will be destroyed.
▶ Add oil, wait a short time and then check the oil level again.

▶ Reinsert the dipstick **40**.

LWE/LR 1600-2-001/18101-07-02/en

copyright © Liebherr-Werk Ehingen GmbH 2018

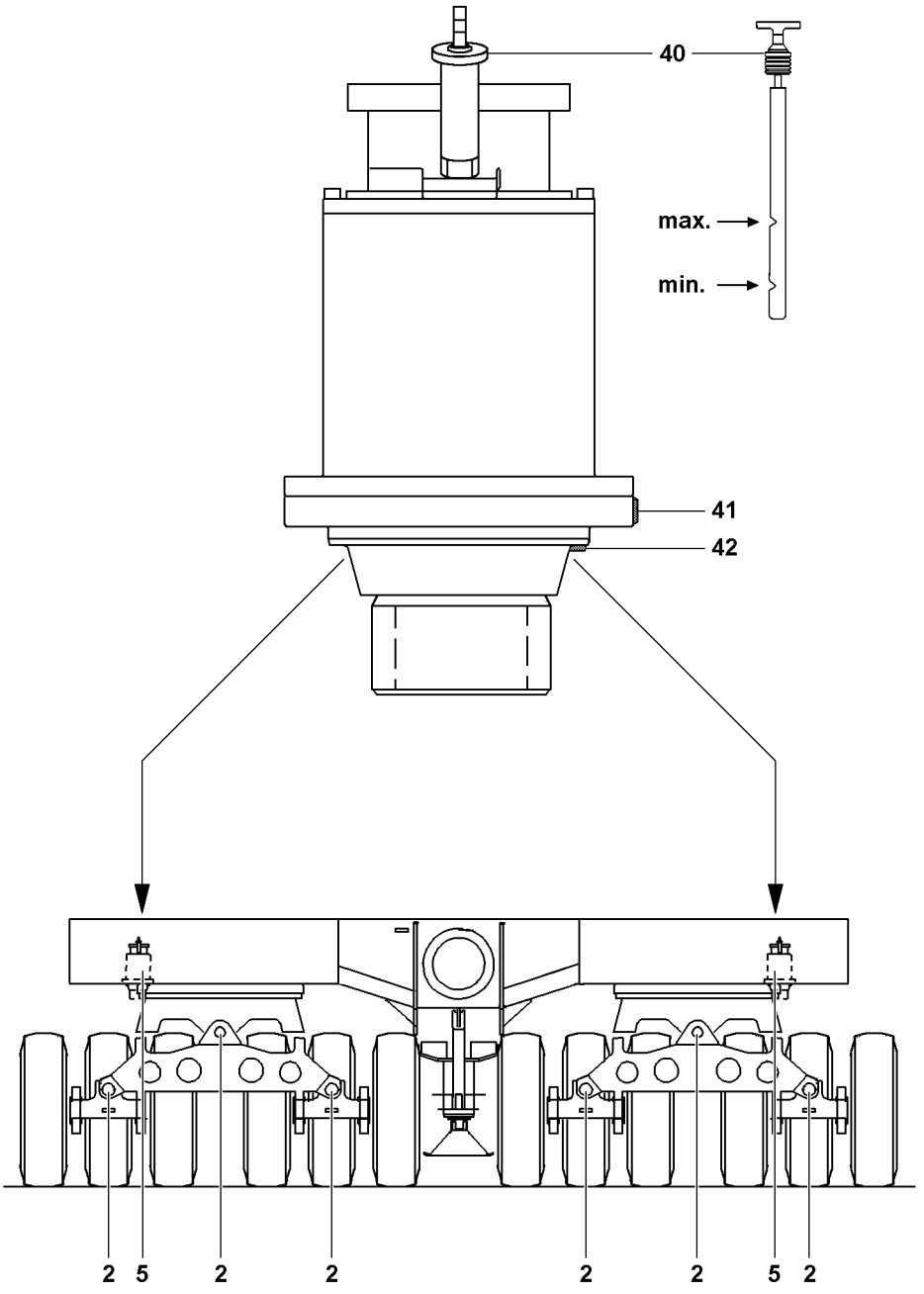

LWE/LR 1600-2-001/18101-07-02/en

Fig.107255

copyright © Liebherr-Werk Ehingen GmbH 2018

10.3.2 Changing the oil

Note
▶ On the slewing gear as desired, the gear oil at the oil drain plug **41** or at the oil drain plug **42** or be released from both oil drain plugs at the same time.

Make sure that the following prerequisites are met:
– The ballast trailer is in horizontal position.
– The slewing gear is warm.

▶ Open the oil filler port by unscrewing the dipstick **40**.
▶ Remove the oil drain plug **41** and oil drain plug **42** and drain the oil completely with the seal ring loosened.
▶ Clean the oil drain plug **41** and sealing surface on the housing.
▶ Clean the oil drain plug **42** and sealing surface on the housing.
▶ Reinstall the oil drain plug **41** and the oil drain plug **42** with a new seal ring and tighten.
▶ Add oil as specified in the lubrication chart at the oil filler port until the oil level is between the minimum and maximum mark on the dipstick **40**.
▶ Close the oil filler port by screwing in the dipstick **40**.
▶ Check the oil level as described in the section „Checking the oil level“.

10.4 Central lubrication system

Note
▶ See Crane operating instructions, chapter 7.05.

11 Lubrication and fill quantities

Explanations for the lubrication chart:
2 Special grease
5 Synthetic gear oil

Fill quantities - chart

The specified fill quantities (change quantities) are orientation values. The markings on the dipsticks, inspection ports or sight gauges are decisive for filling.

NOTICE
Danger of property damage!
▶ Do not mix synthetic oils with mineral oils.

Description	Media	Fill quantity
Slewing gear	Synthetic gear oil	4.4 l
Central lubrication system	Special grease	2.5 kg
Lube points (grease fitting)	Special grease	0.1 kg

LWE/LR 1600-2-001/18101-07-02/en

copyright © Liebherr-Werk Ehingen GmbH 2018

Empty page!

LWE/LR 1600-2-001/18101-07-02/en

copyright © Liebherr-Werk Ehingen GmbH 2018

5.36.10 Derrick ballast - suspended ballast

1	Component overview of suspended ballast	3
2	Fastening points	4
3	Derrick ballast radii and standing levels	7
4	Derrick ballast radii and standing levels - standard crane	11
5	Derrick ballast radii and standing levels - narrow track crane	14
6	Assembling	19
7	Assembling the suspended ballast guide*	20
8	Assembling the suspended ballast pallet	31
9	Ballasting the suspended ballast pallet	38
10	Function check before lifting the derrick ballast	41
11	Lifting and lowering the derrick ballast using the pull cylinders	42
12	Crane operation with derrick ballast	44
13	Crawler operation with derrick ballast	56
14	Disassembly	57
15	Setting down the suspended ballast pallet	58
16	Removing the ballast plates	59
17	Disassembling the suspended ballast pallet	61
18	Disassembling the suspended ballast guide*	67

LWE/LR 1600-2-001/18101-07-02/en

copyright © Liebherr-Werk Ehingen GmbH 2018

LWE/LR 1600-2-001/18101-07-02/en

Fig.195219

copyright © Liebherr-Werk Ehingen GmbH 2018

1 Component overview of suspended ballast

Note

- ▶ The crane components are marked with their own weights.
- ▶ Dimensions and weights, see chapter 1.03.

Definitions and limits:

- The suspended ballast and ballast trailer are generally referred to as the derrick ballast.
- The compensation weight which is installed on the turntable is generally referred to as the counterweight.

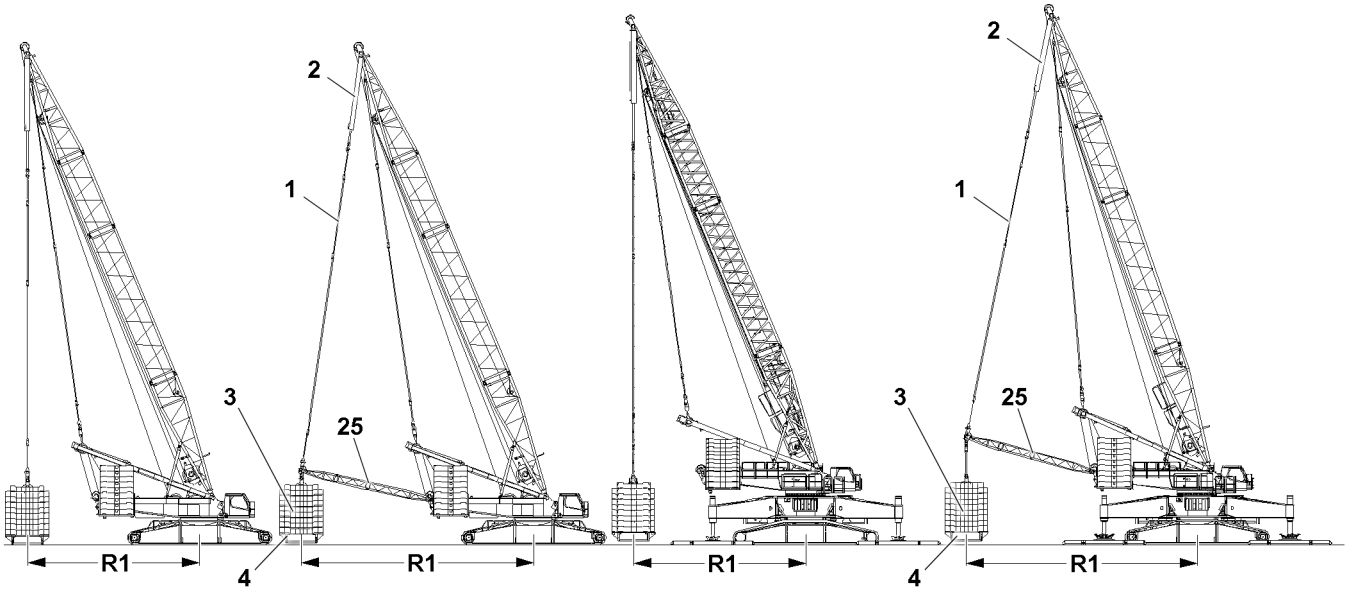

Fig.149286: Suspended ballast without / with suspended ballast guide

1 D-guying
2 Pull cylinder
3 Ballast plates
4 Suspended ballast pallet
25 Suspended ballast guide B2*
R1 Derrick ballast radius

1.1 Suspended ballast guide*

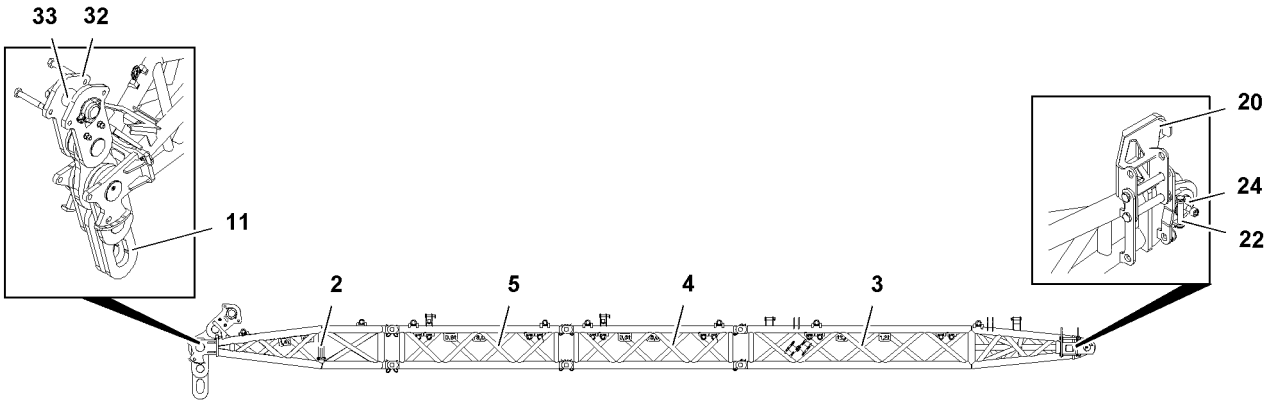

Fig.119255: Components of suspended ballast guide R1 20 m

2 End section
3 Pivot section
4 Intermediate section
5 Intermediate section
11 Lug
20 Console
22 Retaining pin
24 Pin
32 Lug
33 Pin

LWE/LR 1600-2-001/18101-07-02/en

copyright © Liebherr-Werk Ehingen GmbH 2018

1.2 Suspended ballast pallet

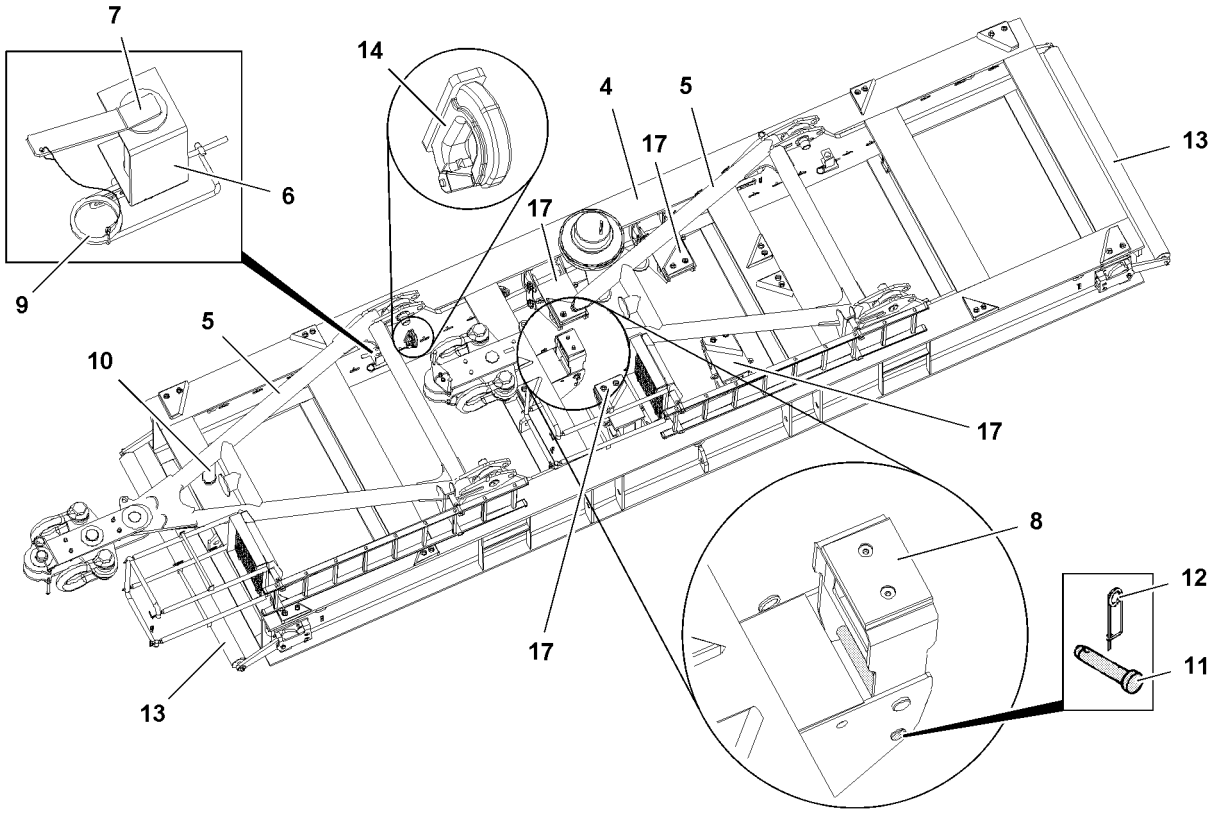

Fig.119780: Components of the suspended ballast pallet

4 Suspended ballast pallet
5 Erection rack
6 Receptacle for retaining pin **7**
7 Retaining pins for erection rack
8 Support for erection rack
9 Spring retainer
10 Assembly support
11 Pin
12 Spring retainer
13 Limit switch
14 Hook (fastening point)
17 Consoles for ballast centering

2 Fastening points

WARNING
Falling crane components!
Incorrectly fastened crane components can become detached from the fastening equipment and fall down during transport and / or assembly.
Death, severe bodily injuries, property damage.
▶ Fasten the components on all defined fastening points.
▶ Make sure that the fastening equipment is properly fastened on the fastening points.

2.1 Suspended ballast guide*

Note
▶ The suspended ballast guide with installed components is fastened on four fastening points.

For transport the individual parts are installed as a transport unit.

Every fastening points is present on both sides of the component on a horizontal level.

LWE/LR 1600-2-001/18101-07-02/en

copyright © Liebherr-Werk Ehingen GmbH 2018

2.1.1 Transport unit

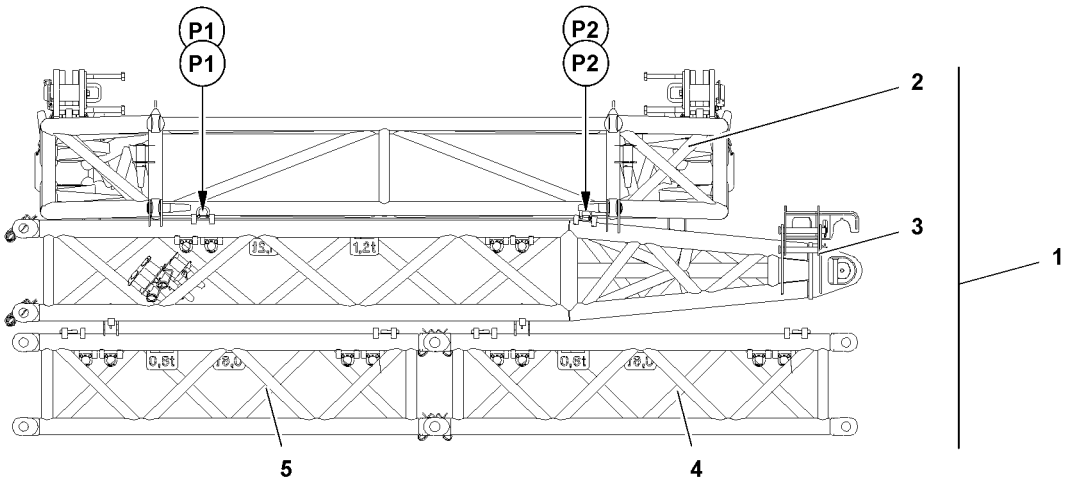

Fig.118548: Transport unit fastening points

1 Transport unit
2 End section
3 Pivot section
4 Intermediate section
5 Intermediate section

Fastening points	
P1 and P2	Transport unit **1**

2.1.2 End section

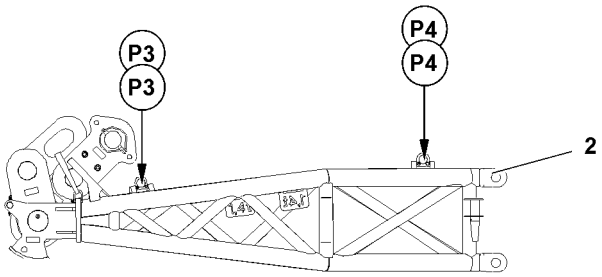

Fig.119209: End section fastening points

Fastening points	
P1 and P2	End section **2**

copyright © Liebherr-Werk Ehingen GmbH 2018

2.1.3 Pivot section

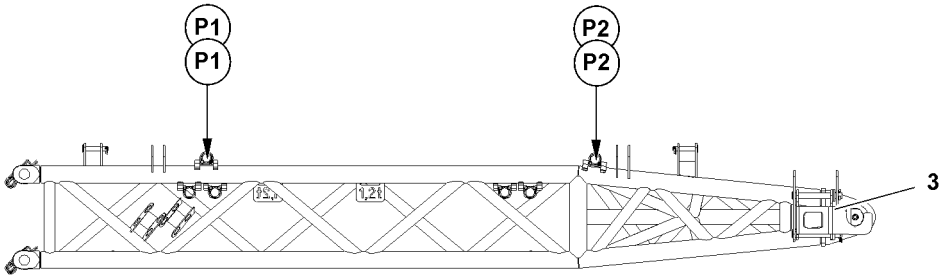

Fig.119251: Pivot section fastening points

Fastening points	
P1 and P2	Pivot section **3**

2.1.4 Intermediate sections

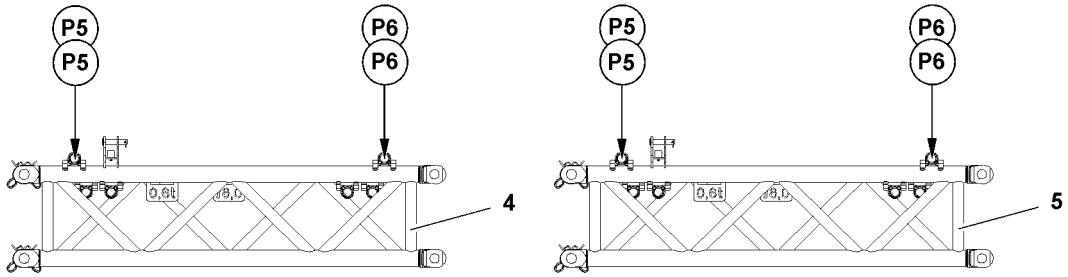

Fig.119252: Intermediate section fastening points

Fastening points	
P5 and P6	Intermediate section **4** and intermediate section **5**

2.2 Suspended ballast pallet

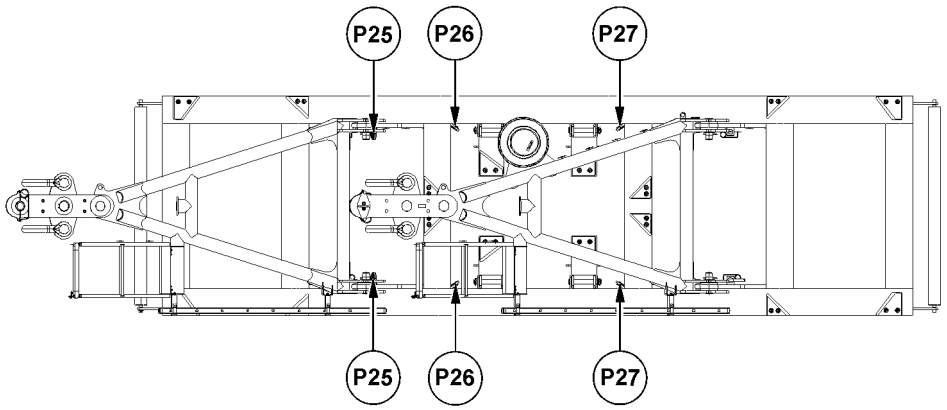

Fig.119208: Suspended ballast palette fastening points, view from above, erection racks taken down

LWE/LR 1600-2-001/18101-07-02/en

copyright © Liebherr-Werk Ehingen GmbH 2018

Fastening points	
P25 and P27	Suspended ballast palette **4**, erection racks taken down
P26 and P27	Suspended ballast palette **4**, erection racks erected

3 Derrick ballast radii and standing levels

WARNING
The crane can topple over.
If the derrick ballast is lifted past the maximum permissible 250 mm from the respective standing level of the derrick ballast, then the crane can be topple over to the rear if the load rips off.
Death, severe bodily injuries, property damage.

- ▶ There may be no personnel, objects or obstacles within the entire slewing range of the crane, derrick ballast and the load.
- ▶ In crane operation, lift the derrick ballast no more than maximum 250 mm from the respective standing level of the derrick ballast.
- ▶ The position of the standing level depends on the set up configuration of the crane, see the following charts.
- ▶ The ground in the entire working area of the crane - including the derrick ballast and the load - must be even and of sufficient load bearing capacity, in order to be able to securely absorb the encountered ground pressures and weight loads.

Note

- ▶ Lifting of the derrick ballast must be observed by a guide.

P1 Derrick ballast standing level at the level of the crane standing level
P2 Derrick ballast standing level above the crane standing level (above ground level)
P3 Derrick ballast standing level below the crane standing level (below ground level)

LWE/LR 1600-2-001/18101-07-02/en

copyright © Liebherr-Werk Ehingen GmbH 2018

3.1 Standing levels at D 30 m without guide

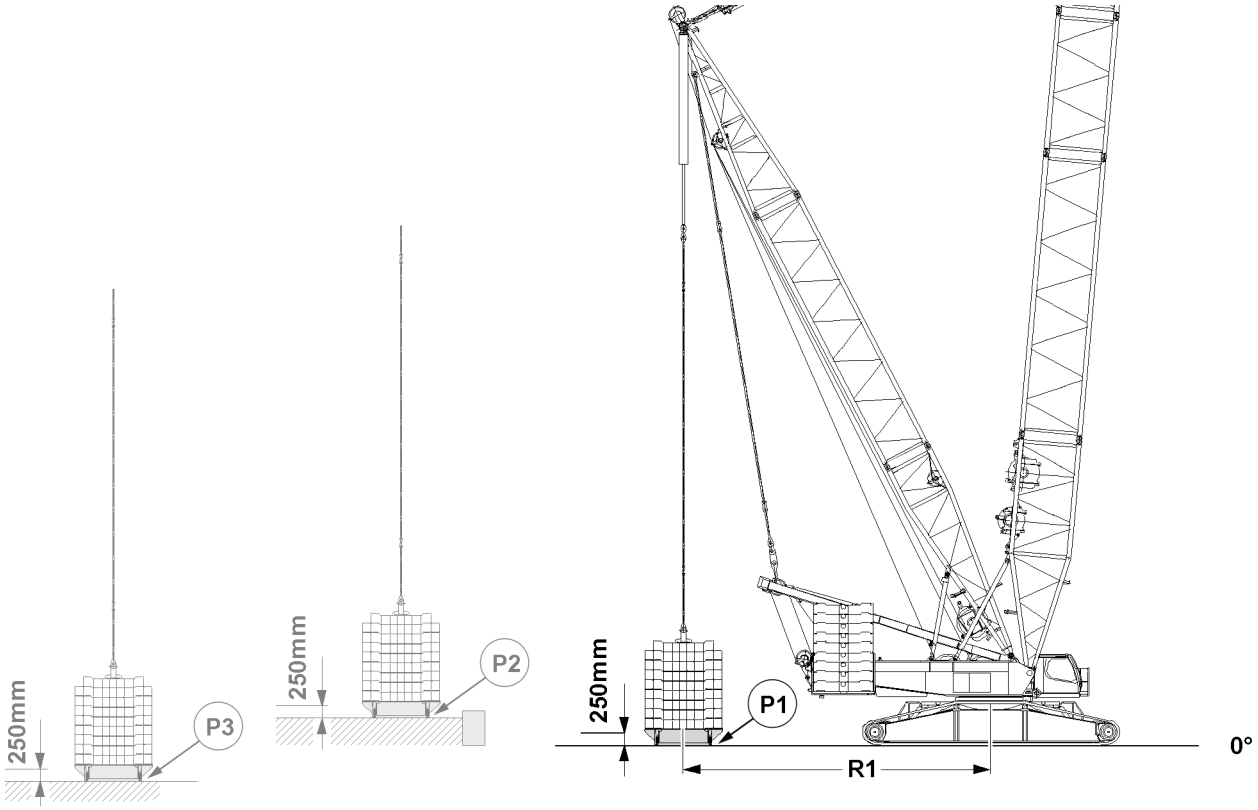

Fig.149266: Lifting the suspended ballast no more than maximum 250 mm from the standing level of the derrick ballast for crane operation

LWE/LR 1600-2-001/18101-07-02/en

copyright © Liebherr-Werk Ehingen GmbH 2018

3.2 Standing levels at D 36 m with guide B2

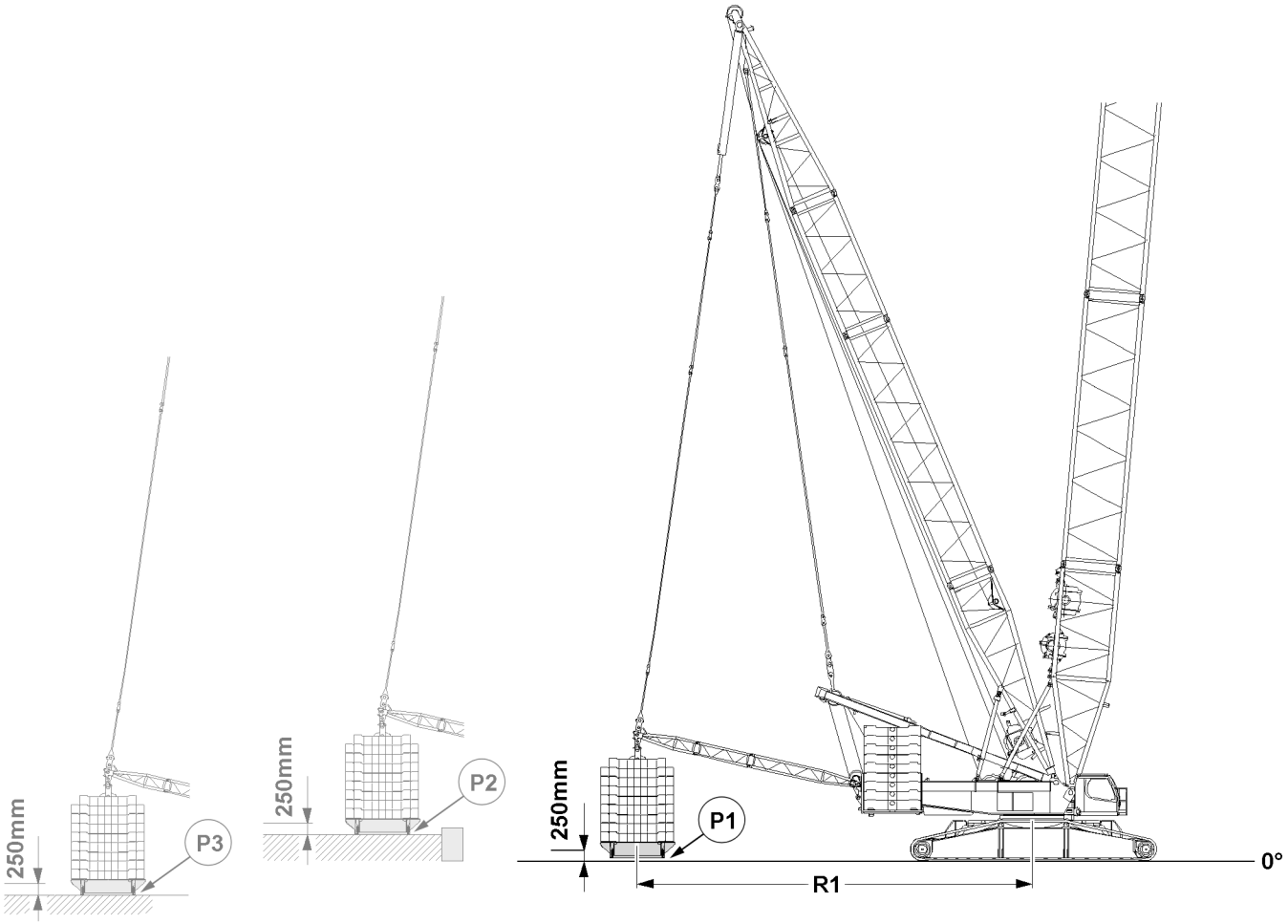

Fig.149271: Lifting the suspended ballast no more than maximum 250 mm from the standing level of the derrick ballast for crane operation

copyright © Liebherr-Werk Ehingen GmbH 2018

3.3 Narrow track crane: Standing levels at D 36 m without guide

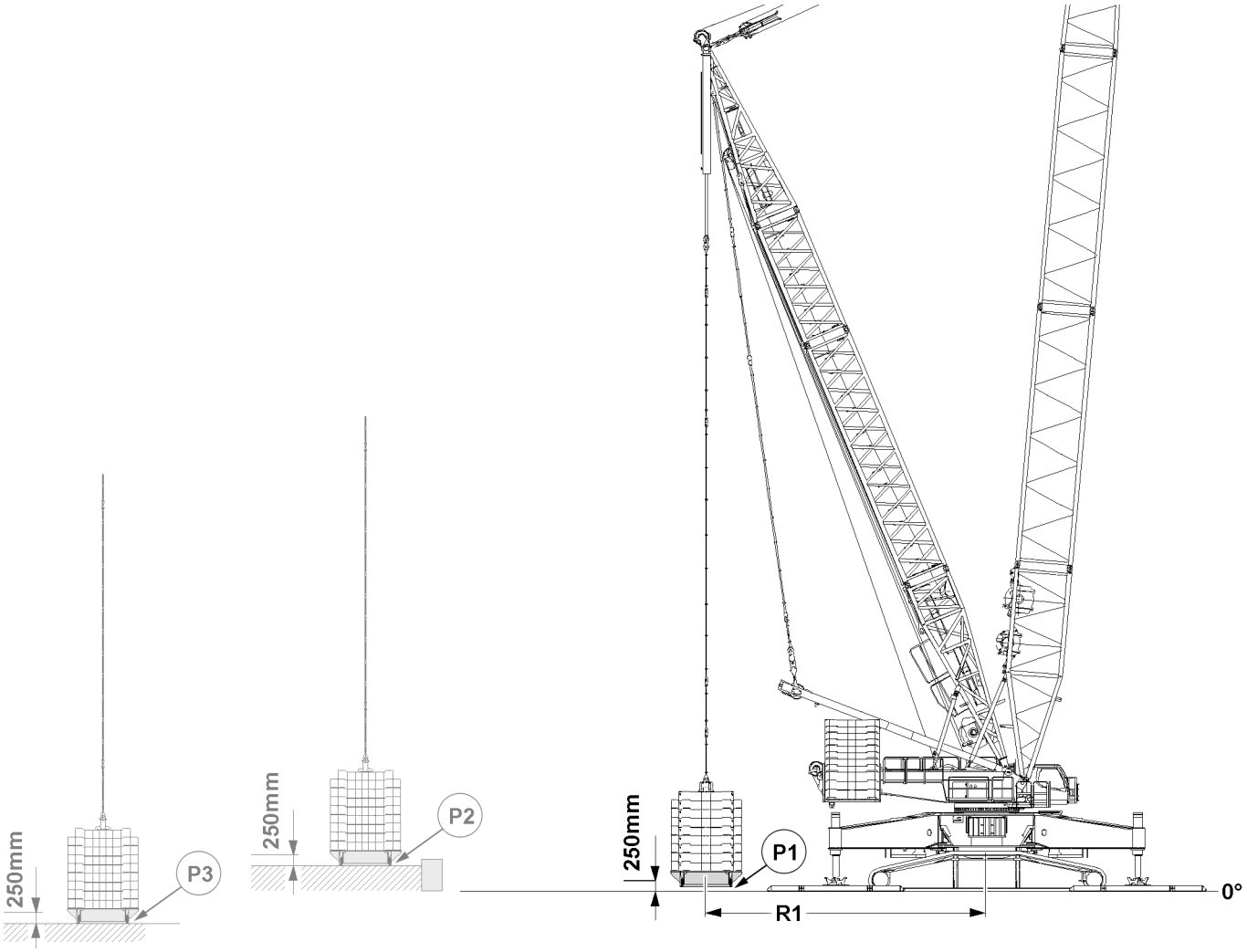

Fig.149280: Narrow track crane: Lifting the suspended ballast no more than maximum 250 mm from the standing level of the derrick ballast for crane operation

LWE/LR 1600-2-001/18101-07-02/en

copyright © Liebherr-Werk Ehingen GmbH 2018

3.4 Narrow track crane: Standing levels at D 36 m with guide B2

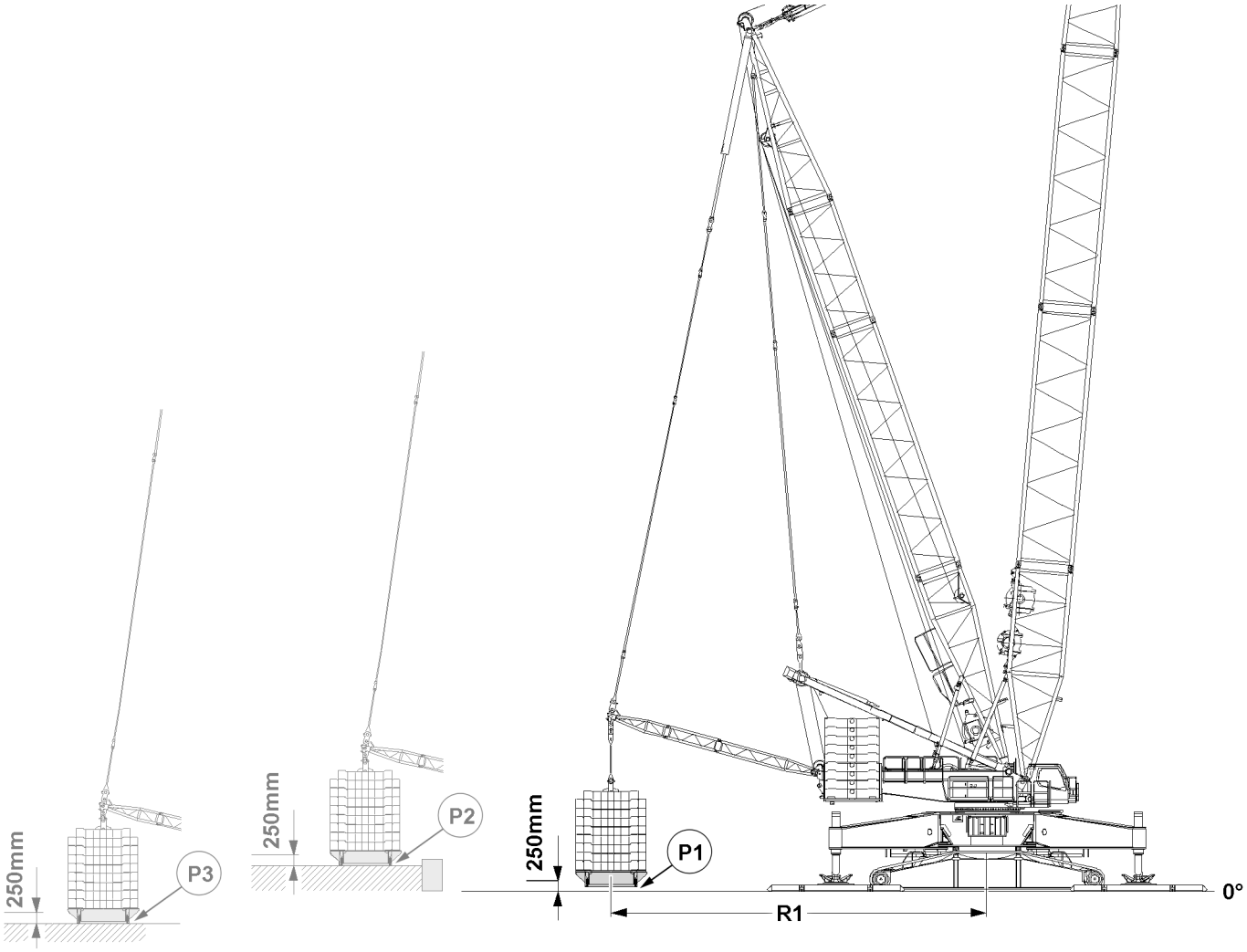

Fig.149277: Narrow track crane: Lifting the suspended ballast no more than maximum 250 mm from the standing level of the derrick ballast for crane operation

4 Derrick ballast radii and standing levels - standard crane

4.1 Derrick ballast without suspended ballast guide

The required derrick ballast radius is set by adjusting the derrick boom.

LWE/LR 1600-2-001/18101-07-02/en

copyright © Liebherr-Werk Ehingen GmbH 2018

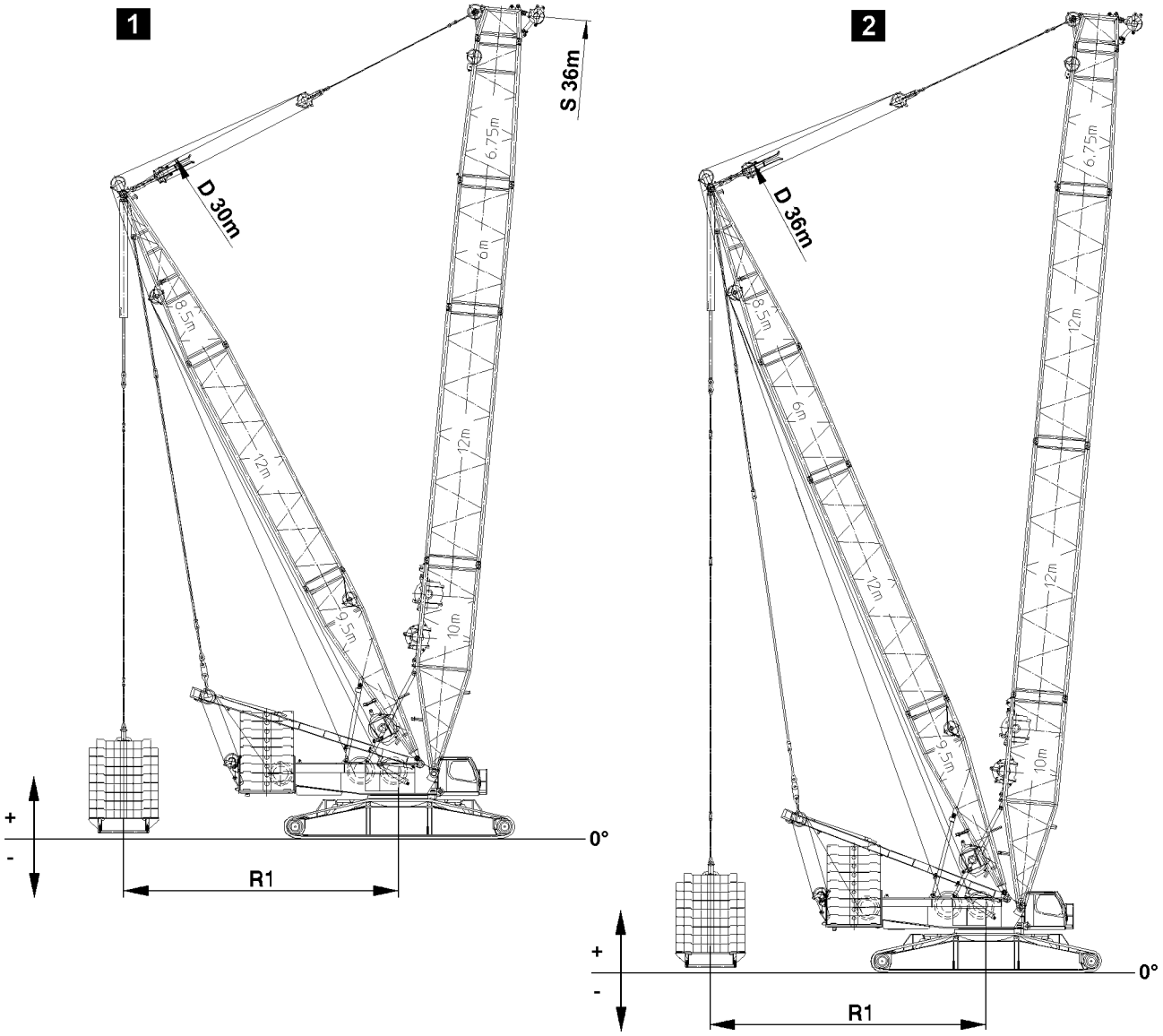

Fig.119205: Derrick ballast standing levels without suspended ballast guide

4.1.1 30 m derrick

Note

▶ For the 30 m derrick there is only one operating mode with S- 36 m , observe the load chart.

Derrick ballast radius R1	Derrick ballast standing level	
	Over standing level	Below standing level
10 m	+ 4050 mm	- 950 mm
15 m	+ 1550 mm	- 3450 mm

30 m derrick without suspended ballast guide: Derrick ballast radius depending on the lifting height

LWE/LR 1600-2-001/18101-07-02/en

copyright © Liebherr-Werk Ehingen GmbH 2018

4.1.2 36 m derrick

Derrick ballast radius R1	Derrick ballast standing level	
	Over standing level	Below standing level
10 m	+ 4410 mm	- 590 mm
18 m	+ 750 mm	- 4250 mm

36 m derrick without suspended ballast guide: Derrick ballast radius depending on the lifting height

4.2 Derrick ballast with suspended ballast guide

Note

- ▶ The **derrick ballast radius** is **not** identical to the **derrick radius**.
- ▶ One suspended ballast guide is installed between the turntable and the suspended ballast pallet.

The required derrick ballast radius is set by the length of the suspended ballast guide and by adjusting the derrick boom.

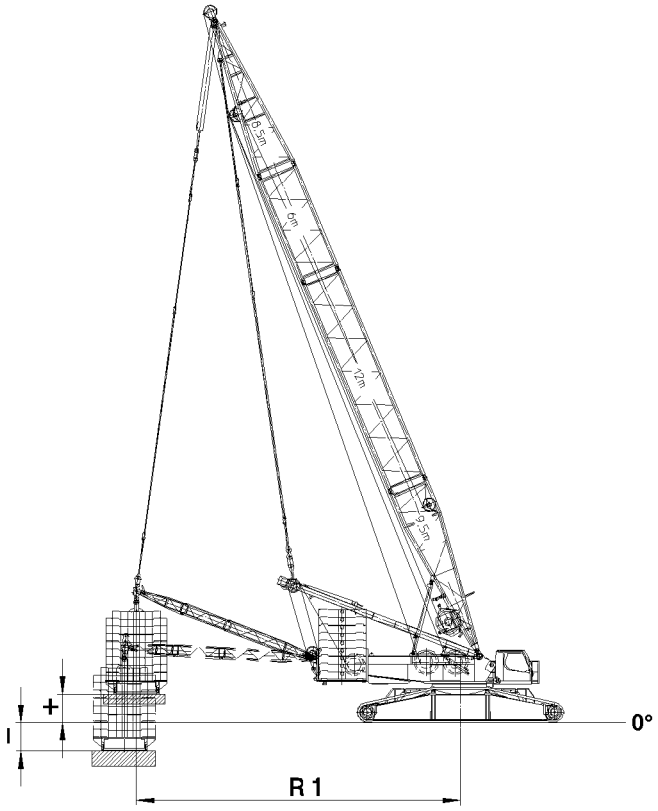

Fig.119256: Derrick ballast standing levels with suspended ballast guide

LWE/LR 1600-2-001/18101-07-02/en

copyright © Liebherr-Werk Ehingen GmbH 2018

4.2.1 36 m derrick

Derrick ballast radius R1	Derrick ballast standing levels	
	Over standing level	Below standing level
15 m	+ 1500 mm	- 1500 mm
17.5 m	+ 1500 mm	- 1500 mm
20 m	+ 1500 mm	- 1500 mm

36 m derrick with suspended ballast guide: Derrick ballast radius depending on the lifting height

5 Derrick ballast radii and standing levels - narrow track crane

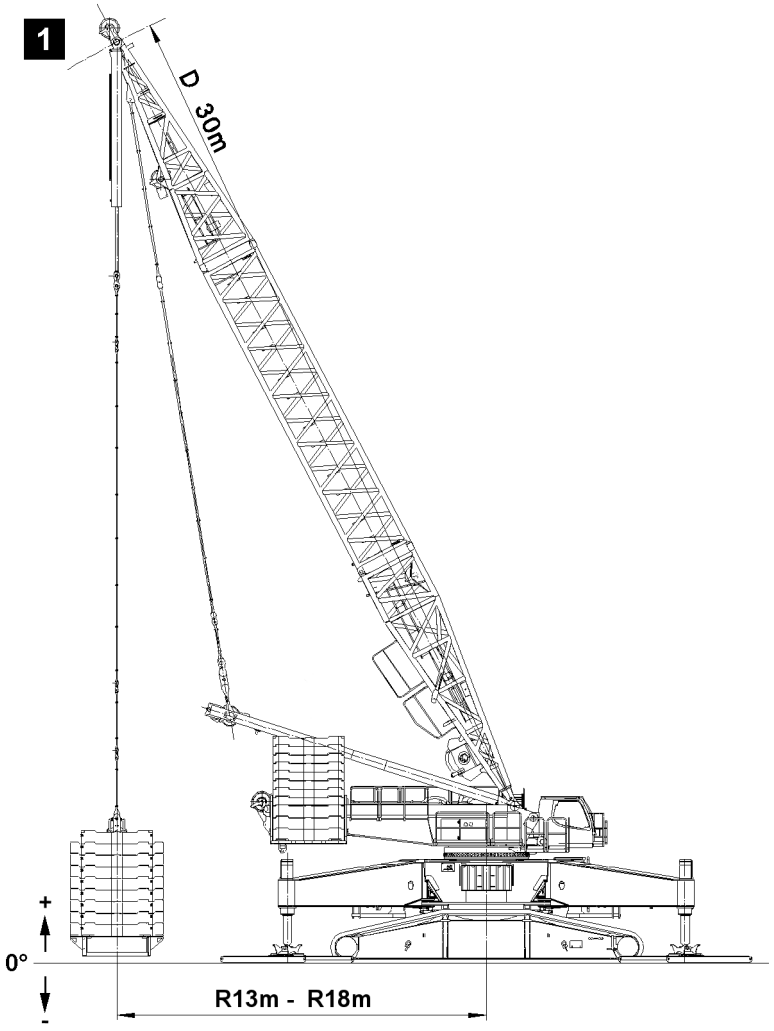

Fig.146509: Derrick ballast standing levels without suspended ballast guide

Note
- ▶ **No** guide is installed between the turntable and the suspended ballast pallet.
- ▶ The derrick ballast radius and the derrick boom radius are identical.
- ▶ The derrick ballast radius changes depending on the derrick boom radius.

LWE/LR 1600-2-001/18101-07-02/en

copyright © Liebherr-Werk Ehingen GmbH 2018

The following derrick ballast radii can be set:
- R 13 m
- R 16 m
- R 18 m

5.1 30 m derrick

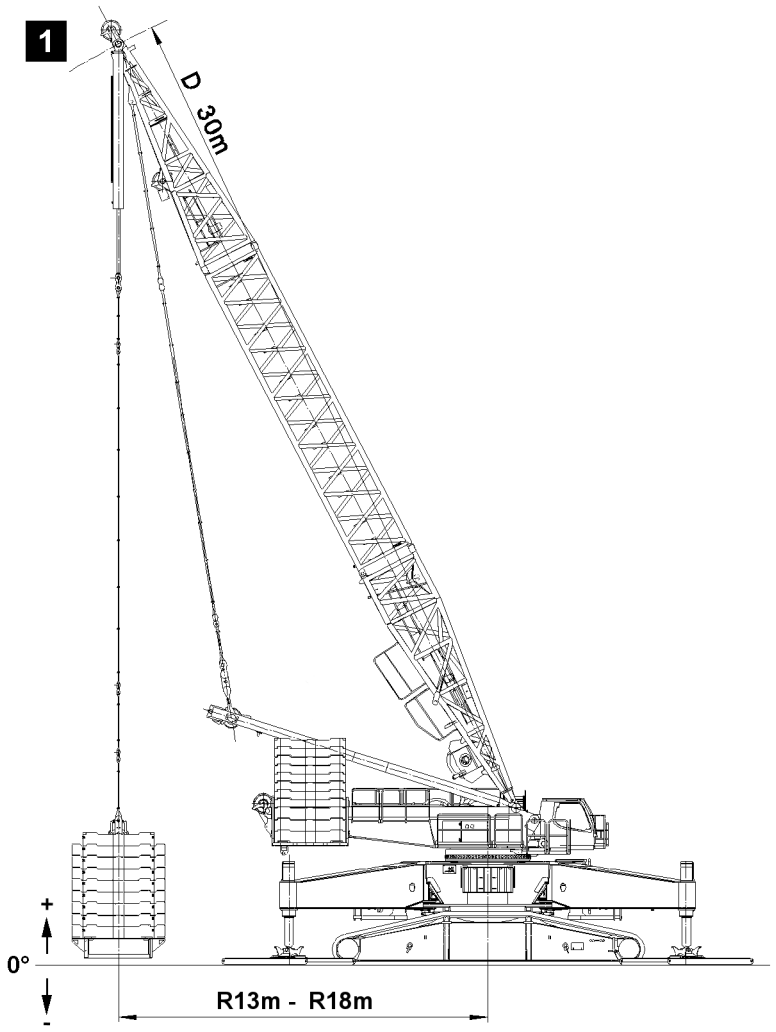

Fig.146509

With the 30 m derrick, the following radii are possible: R 13 m and R 16 m , see illustration **1**.

5.1.1 Standing levels of the suspended ballast, reference placement surface of the crawler

Derrick ballast radius	Derrick ballast standing levels	
R 13 m	Above standing levels	Below standing levels
Crawler and support cylinder are standing on the ground	2370 mm	- 2620 mm
Support cylinder extended all the way	+ 2840 mm	- 2150 mm

LWE/LR 1600-2-001/18101-07-02/en

copyright © Liebherr-Werk Ehingen GmbH 2018

Derrick ballast radius	Derrick ballast standing levels	
R 16 m	Above standing levels	Below standing levels
Crawler and support cylinder are standing on the ground	+ 580 mm	- 4400 mm
Support cylinder extended all the way	+ 1050 mm	- 3930 mm

5.2 36 m derrick

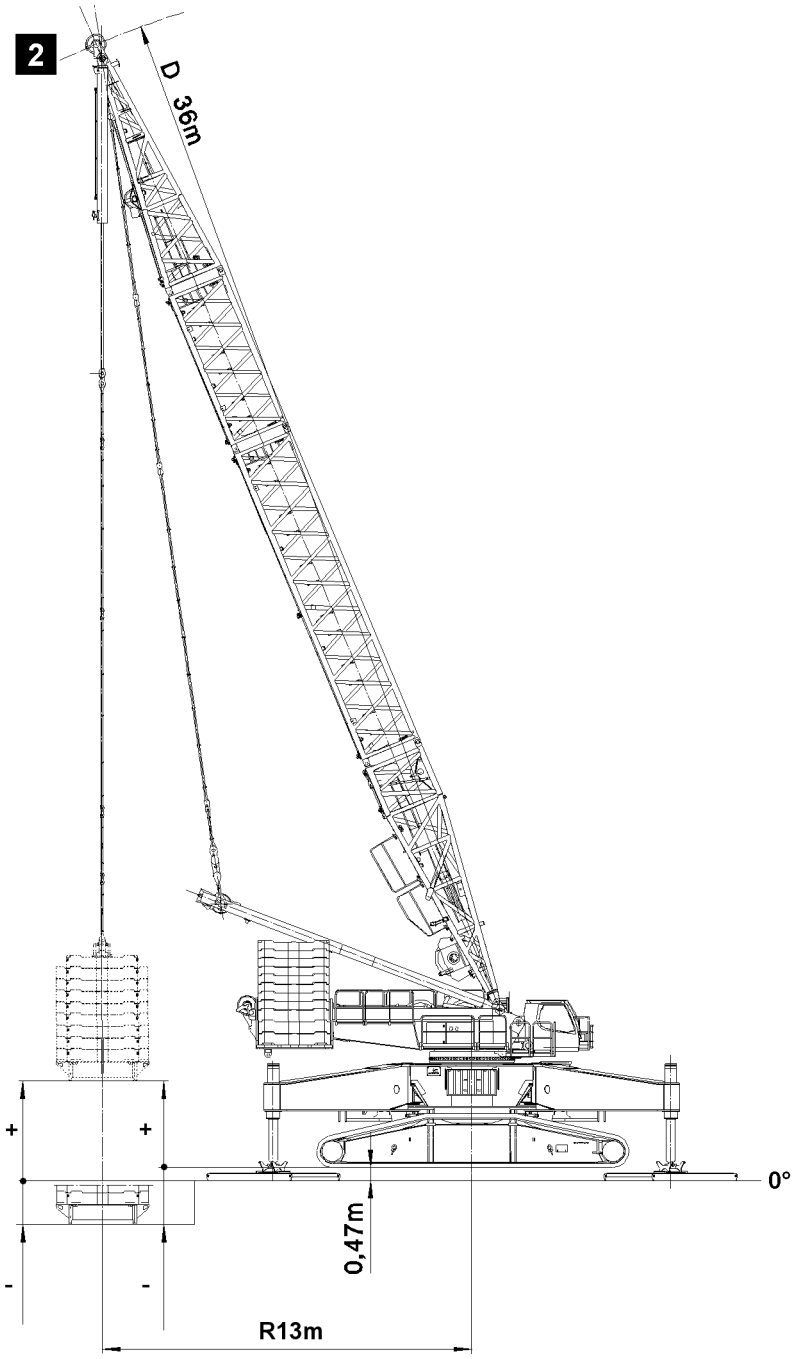

LWE/LR 1600-2-001/18101-07-02/en

Fig.146511

With the 36 m derrick, the following radii are possible: R 13 m and R 18 m.

Example: 36 m derrick with radius R 13 m , see illustration **2**.

copyright © Liebherr-Werk Ehingen GmbH 2018

5.2.1 Standing levels of the suspended ballast, reference placement surface of the crawler

Example: 36 m derrick with radius R 13 m , see illustration **2**.

Derrick ballast radius	Derrick ballast standing levels	
R 13 m	**Over standing level**	**Below standing level**
Crawler and support cylinder are standing on the ground	+ 3000 mm	- 2000 mm
Support cylinder extended all the way	+ 3470 mm	- 1530 mm

Derrick ballast radius	Derrick ballast standing levels	
R 18 m	**Over standing level**	**Below standing level**
Crawler and support cylinder are standing on the ground	+ 430 mm	- 4560 mm
Support cylinder extended all the way	+ 900 mm	- 4090 mm

LWE/LR 1600-2-001/18101-07-02/en

copyright © Liebherr-Werk Ehingen GmbH 2018

5.3 36 m derrick with suspended ballast guide

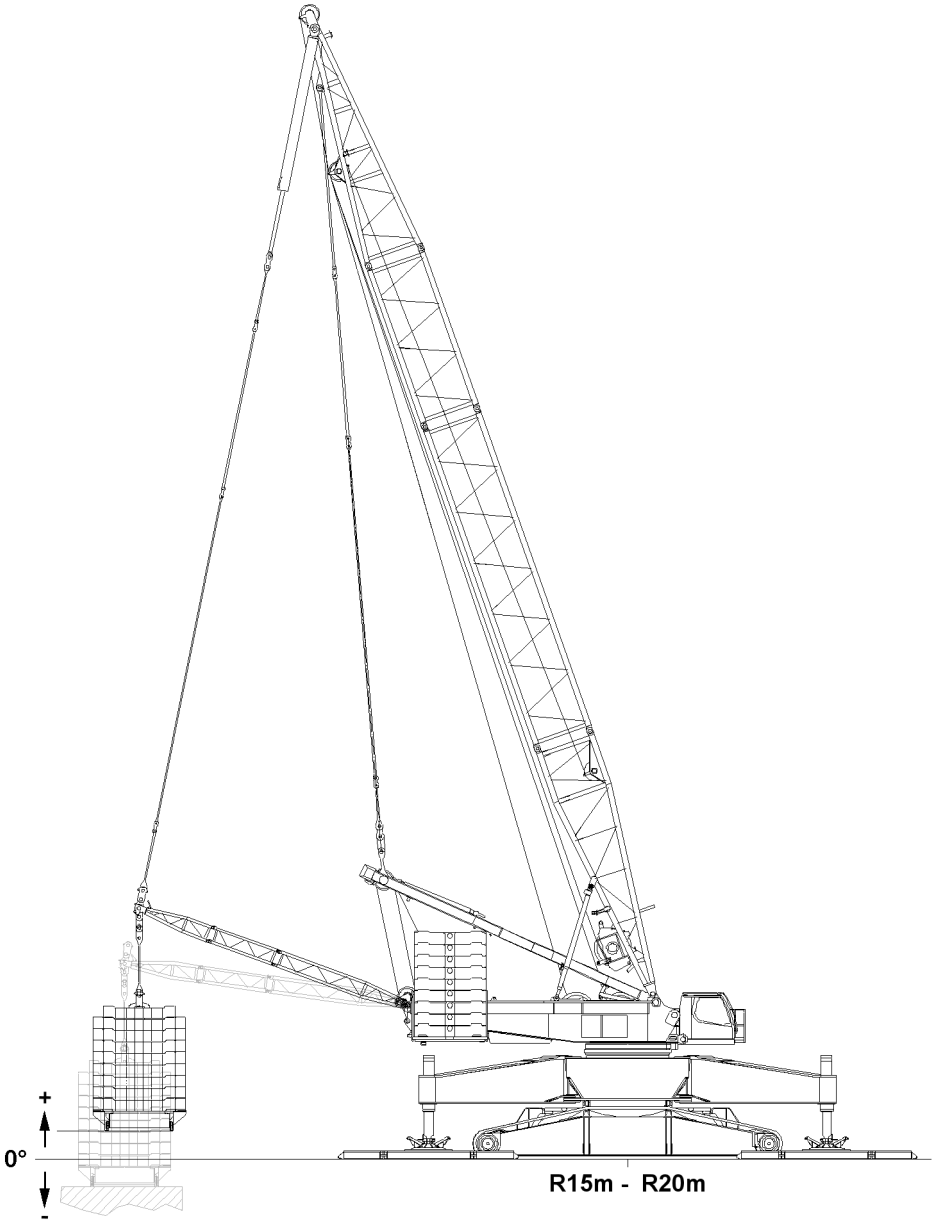

Fig.146513: Derrick ballast standing levels with suspended ballast guide

With the 36 m derrick, the following radii are possible: R 15 m to R 20 m.

5.3.1 Standing levels of the suspended ballast

Note

▶ Reference: Crane placement surface with crane support / narrow track and suspended ballast placement surface.

Example: 36 m derrick with derrick ballast radius R 15 m to R 20 m.

LWE/LR 1600-2-001/18101-07-02/en

copyright © Liebherr-Werk Ehingen GmbH 2018

Derrick ballast radius	Derrick ballast standing level	
R 15 m to R 20 m	Over standing level	Below standing level
Crawler and support cylinder are standing on the ground	- 1000 mm	+ 1000 mm

6 Assembling

WARNING
Danger of falling!
During assembly / disassembly, inspection and maintenance work, personnel must be secured with appropriate aids to prevent them from falling.
If this is not observed, the assembly personnel can fall down.
Death, severe bodily injuries, property damage.
- ▶ All work at a height, when there is a danger of falling, must be carried out with suitable aids.
- ▶ If aids are not available and work cannot be carried out from the ground, then assembly personnel must secure themselves with the supplied fall arrest system to prevent falling, see chapter 2.04.
- ▶ If fall protection equipment is available, then it must be used, see chapter 2.06.
- ▶ When lifting, lowering, swinging crane parts in and out, no persons may remain in the danger zone.
- ▶ If railings are present on the components, then they must be brought into the corresponding position and secured for assembly / disassembly work.
- ▶ Only step on the aids, ladders and catwalks with clean shoes.
- ▶ Keep aids, ladders and catwalks free of heavy dirt, snow and ice.
- ▶ During all assembly and disassembly work, maintenance work and inspections, travel or crane operation is prohibited.
- ▶ Remaining on a suspended load is prohibited.
- ▶ Stepping or walking on crane components and lattice sections, which have an incline of more than 20° is prohibited.
- ▶ For all assembly work, the crane operator of the main crane must be in voice contact with the crane operator / crane operators of the auxiliary crane / auxiliary cranes.
- ▶ For assembly / disassembly tasks, the crane operator may only initiate crane movements when the responsible guide has explicitly released the movement.

WARNING
Danger of impact / crushing!
When installing / removing crane components with the auxiliary crane, crane components can start to swing back and forth.
When lifting / lowering and positioning crane components, there is an increased danger of impacts / crushing.
Death, severe bodily injuries, property damage.
- ▶ Make sure that personnel cannot be caught by components.
- ▶ When working in danger zones: Use aids to protect limbs.
- ▶ Guide components with suitable aids to minimize oscillation.

DANGER
The components can fall down!
If the corresponding component is disengaged from the auxiliary crane before the corresponding component is pinned, then the corresponding component can fall down.
Death, severe bodily injuries, property damage.
- ▶ Do not disengage the auxiliary crane until the respective component is pinned and secured.

LWE/LR 1600-2-001/18101-07-02/en

copyright © Liebherr-Werk Ehingen GmbH 2018

Make sure that the following prerequisites are met:
- The crane is properly supported (LR1600/2-W narrow track).
- The crane is horizontally aligned.
- An auxiliary crane is available.
- The main boom and the derrick boom are installed on the turntable.
- The main boom and the derrick boom are in crane operating position.
- The counterweight has been installed on the turntable according to the load chart.
- The LICCON overload protection has been set according to the data in the load chart.
- The LICCON overload protection settings have been compared with the actual set up configuration.

7 Assembling the suspended ballast guide*

The mechanical suspended ballast guide makes different derrick ballast radii possible.

The derrick ballast radius determines the number of intermediate sections which must be installed, see chart.

Derrick ballast radius R1	Number of intermediate sections
15.0 m	0
17.5 m	1
20.0 m	2

Dependency between derrick ballast radius and number of intermediate sections

7.1 Removing the transport unit

Make sure that the following prerequisites are met:
- The transport unit is on the transport vehicle.
- An auxiliary crane is available.

LWE/LR 1600-2-001/18101-07-02/en

copyright © Liebherr-Werk Ehingen GmbH 2018

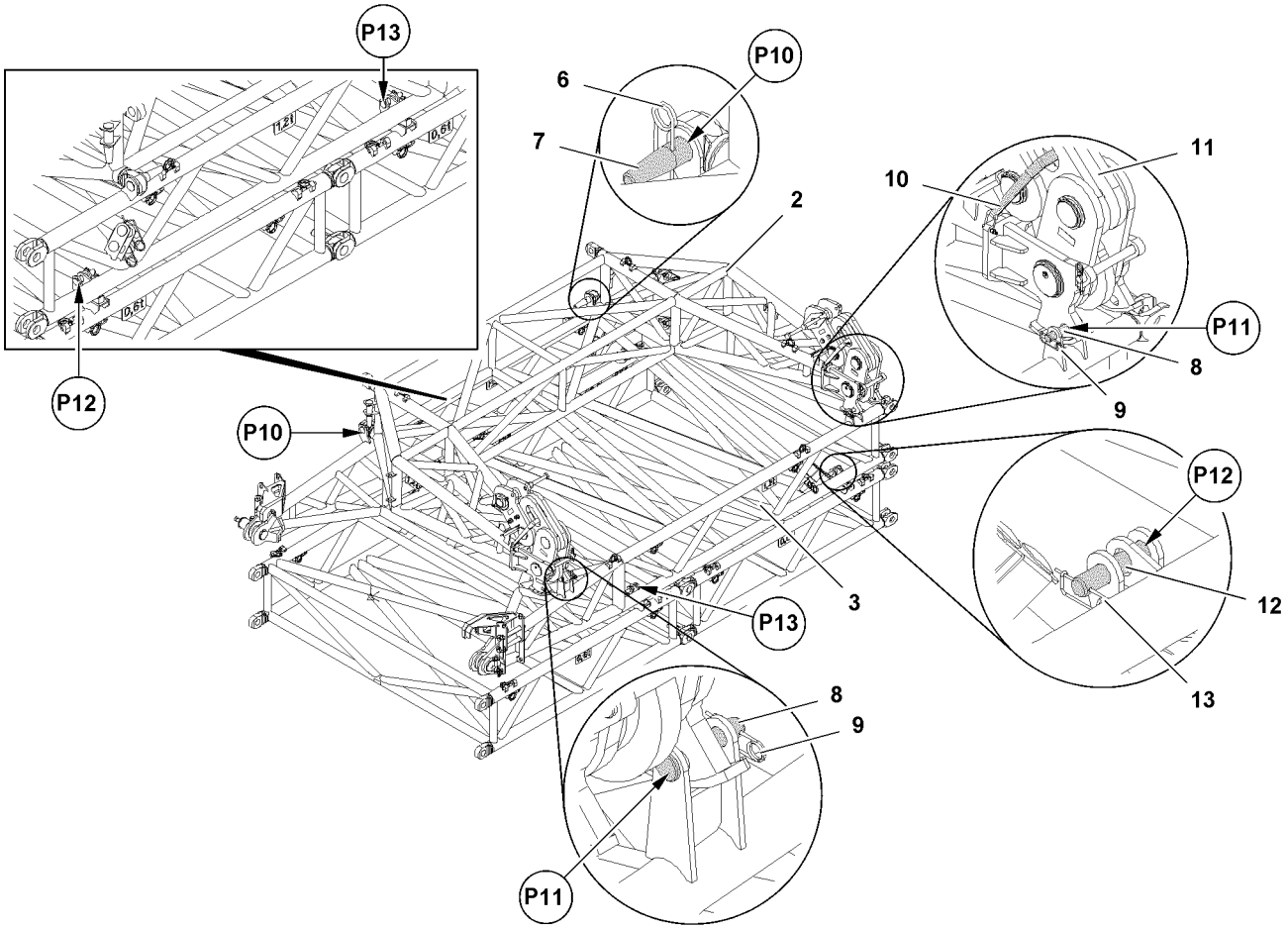

Fig.118549: Removing the suspended ballast guide transport unit

WARNING
Unsecured brackets **11**!
Death, severe bodily injuries, property damage.
▶ Make sure that the brackets **11** on both sides are secured with transport straps **10**.

▶ Release and remove the riggings on the transport vehicle.
▶ Fasten the auxiliary crane to the end section **2**.
▶ Secure the end section **2** with an auxiliary crane to prevent it from falling.

The end section is unpinned at four points. Every point is present on both sides of the component on one level.

▶ Unpin the end section **2** at point **P10**: Remove spring retainers **6** and unpin pins **7**.
▶ Unpin the end section **2** at point **P11**: Remove spring retainers **9** and unpin pins **8**.
▶ Take the end section **2** down on the ground with the auxiliary crane.
▶ Fasten the auxiliary crane to the pivot section **3**.
▶ Secure the pivot section **3** with an auxiliary crane to prevent it from falling.

The pivot section is unpinned at four points. Every point is present on both sides of the component on one level.

▶ Unpin the pivot section **3** on both sides at point **P12**: Remove spring retainers **13** and unpin pins **12**.
▶ Unpin the pivot section **3** on both sides at point **P13**: Remove spring retainers **13** and unpin pins **12**.
▶ Take the pivot section **3** down on the ground with the auxiliary crane.

copyright © Liebherr-Werk Ehingen GmbH 2018

7.2 Assembling the components for the suspended ballast guide

Note
- ▶ The assembly procedure is described for the 20 m derrick ballast radius.
- ▶ For the 17.5 m derrick ballast radius, an intermediate section is solely installed.
- ▶ For the 15 m derrick ballast radius, **no** intermediate section is installed.

Make sure that the following prerequisites are met:
- The transport unit is removed.
- Suitable material for support is available.

7.2.1 Assembling the pivot section

Make sure that the following prerequisite is met:
- Both intermediate sections are installed and horizontally supported.

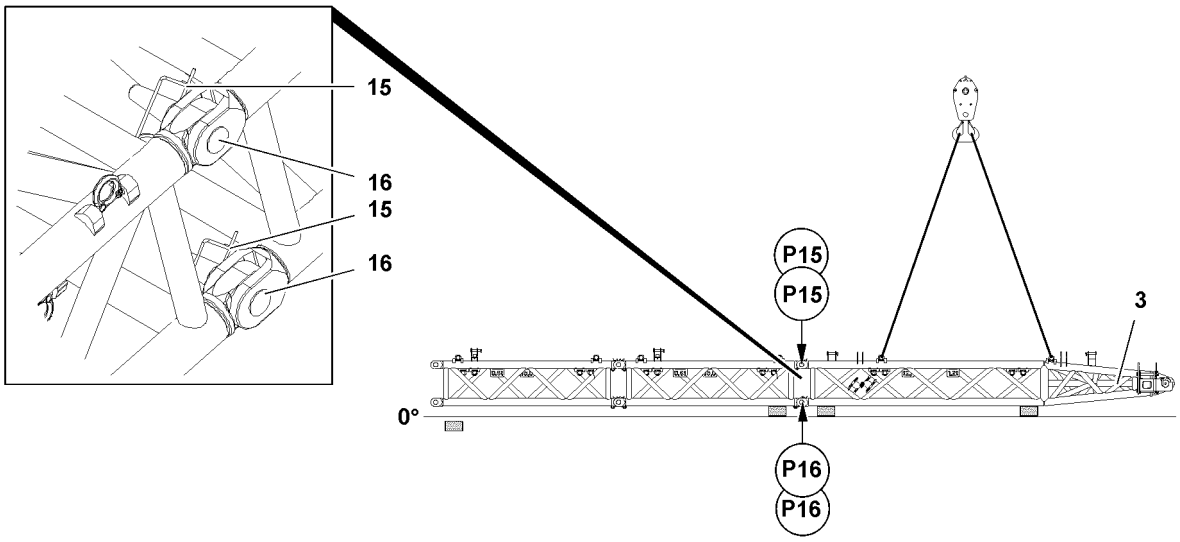

Fig.118913: Assembling the pivot section

- ▶ Make sure that the pins **16** are unpinned.
- ▶ Position the pivot section **3** on the intermediate section with the auxiliary crane until the pin points align.
- ▶ Support the pivot section **3**.

The pivot section and the intermediate section are pinned together at four points. Every point is present on both sides of the component on one level.

- ▶ Pin the pivot section **3** at point **P15** to the intermediate section: Insert the pins **16** and secure with the spring retainers **15**.
- ▶ Pin the pivot section **3** at point **P16** to the intermediate section: Insert the pins **16** and secure with the spring retainers **15**.
- ▶ Remove the fastening equipment.

7.2.2 Assembling the end section

Make sure that the following prerequisite is met:
- The assembled lattice sections are horizontally supported.

LWE/LR 1600-2-001/18101-07-02/en

copyright © Liebherr-Werk Ehingen GmbH 2018

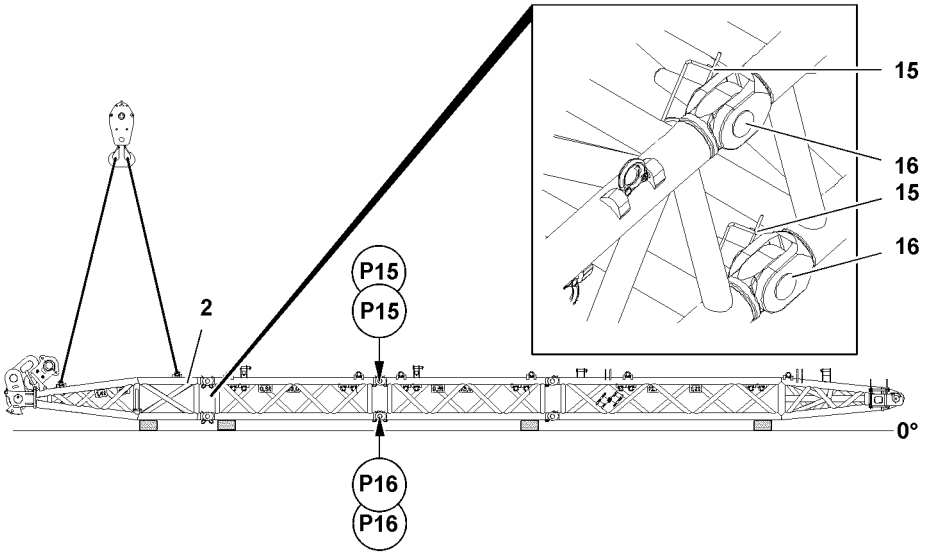

Fig.118914: Assembling the end section

- ▶ Make sure that the pins **16** are unpinned.
- ▶ Position the end section **2** on the intermediate section with the auxiliary crane until the pin points align.
- ▶ Support the end section **2**.

The end section and the intermediate section are pinned together at four points. Every point is present on both sides of the component on one level.

- ▶ Pin the end section **2** at point **P15** to the intermediate section: Insert the pins **16** and secure with the spring retainers **15**.
- ▶ Pin the end section **2** at point **P16** to the intermediate section: Insert the pins **16** and secure with the spring retainers **15**.
- ▶ Remove the fastening equipment.

Result:

– The components of the suspended ballast guide are assembled.

7.3 Assembling the suspended ballast guide on the turntable frame

Make sure that the following prerequisites are met:
- 17.5 m derrick ballast radius: Suitable material for the substructure of the end section is available.
- 20.0 m derrick ballast radius: An auxiliary crane or suitable aid is available for the substructure of the end section.

LWE/LR 1600-2-001/18101-07-02/en

copyright © Liebherr-Werk Ehingen GmbH 2018

7.3.1 Folding the consoles into working position

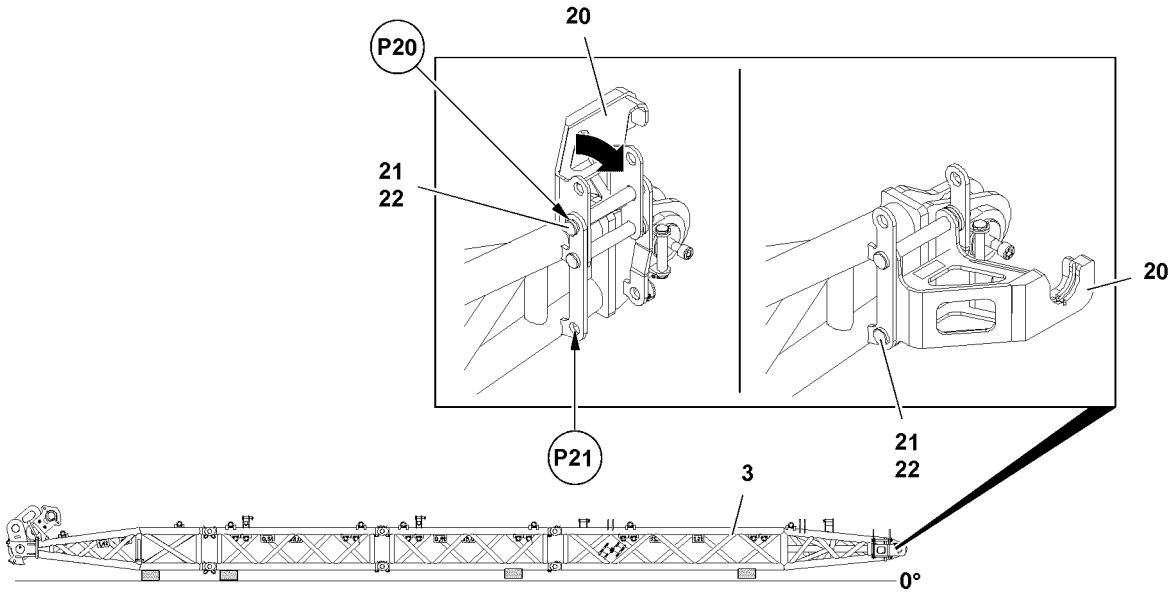

Fig.118915: Folding the consoles into working position

To be able to hang the pin pulling cylinders on the consoles, the consoles are folded on both sides on the pivot section into working position.

When the pin **21** is unpinned, then the console **20** can fold down.

- ▶ Secure the console **20** to prevent it from folding down.
- ▶ Unpin the console **20** at point **P20**: Remove the locking pin **22** and unpin the pin **21**.
- ▶ Fold the console **20** down in a controlled manner.
- ▶ Pin the console **20** at point **P21**: Insert the pin **21** and secure with the locking pin **22**.
- ▶ Fold the second console into the pin position, pin and secure.

LWE/LR 1600-2-001/18101-07-02/en

copyright © Liebherr-Werk Ehingen GmbH 2018

7.3.2 Pinning the suspended ballast guide on the turntable

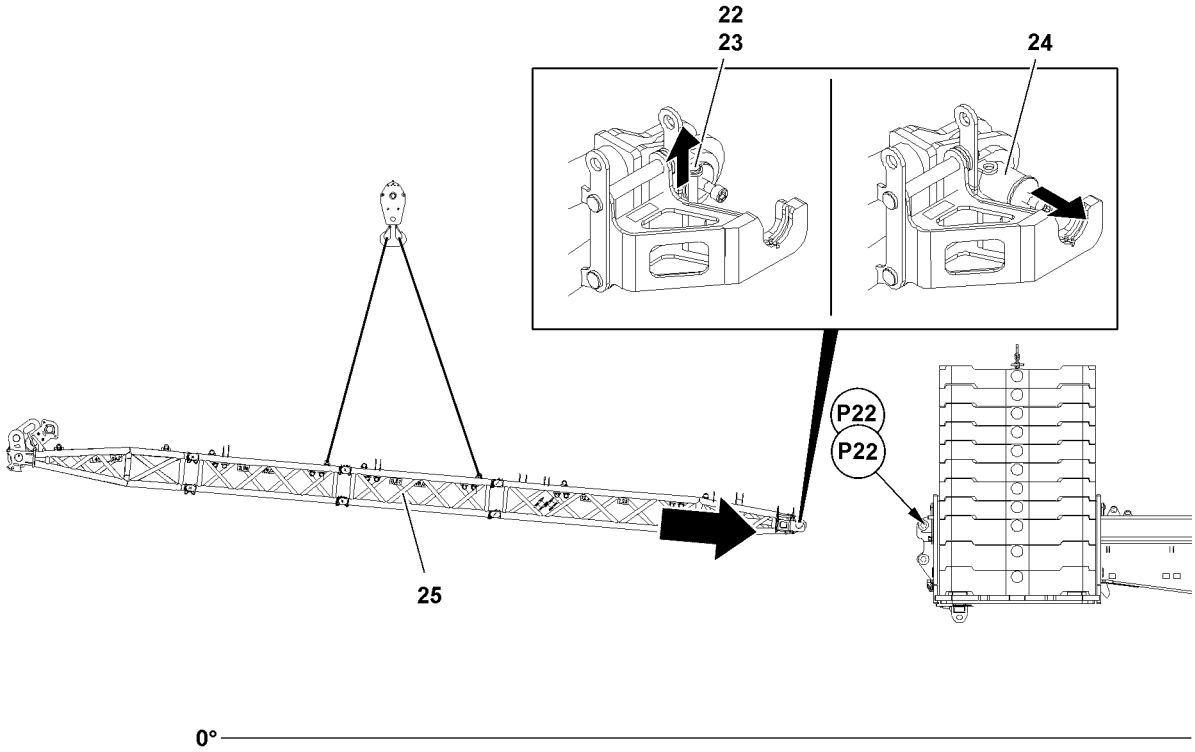

*Fig.146514: Pinning the suspended ballast guide **25** on the turntable*

The suspended ballast guide is fastened to the auxiliary crane in such a way that the end section is lifted slightly at an angle and the pivot section is lowered slightly at an angle.

▶ Fasten the suspended ballast guide **25** to the auxiliary crane.

The suspended ballast guide **25** is pinned on both sides on point **P22**.

▶ Lift the suspended ballast guide **25** to the pin points on the rear of the turntable.

The pins **24** are unpinned on both sides on the suspended ballast guide **25** so that the suspended ballast guide can be positioned on the pin points.

▶ Release the pin **24**: Remove the spring retainer **23** and unpin the retaining pin **22**.
▶ Unpin the second pin **24**.
▶ Position the suspended ballast guide **25** on the rear of the turntable until the pin bores align.

Note
▶ Pin with the pin pulling device, see chapter 5.30.

copyright © Liebherr-Werk Ehingen GmbH 2018

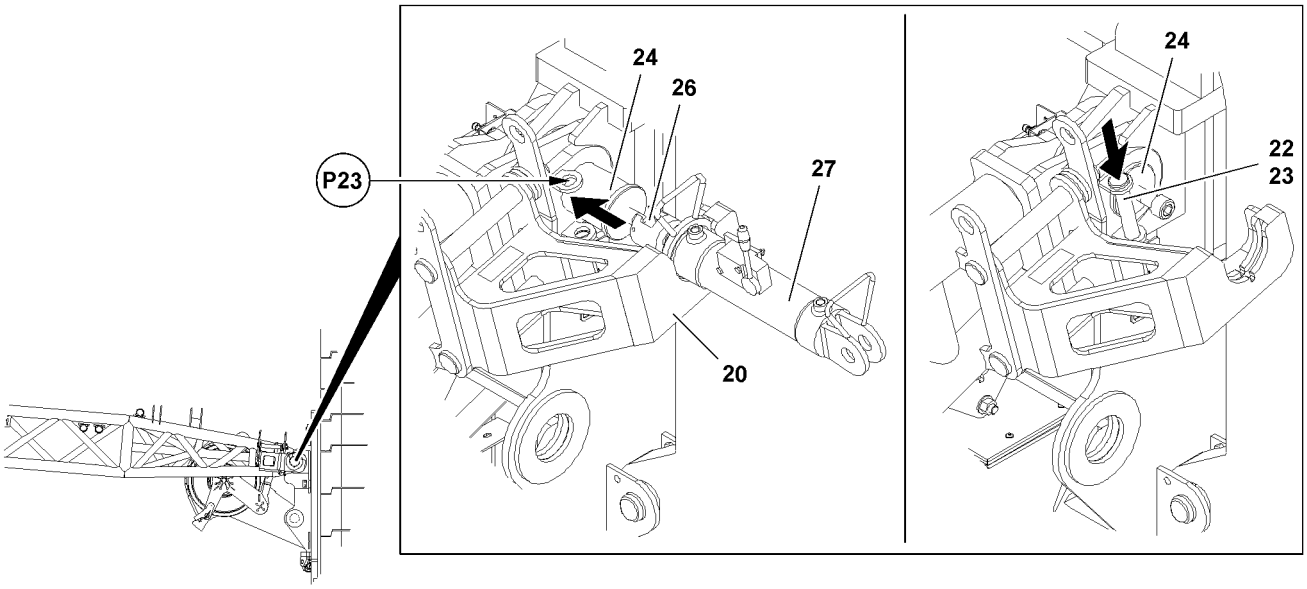

Fig.118916: Inserting the pins with the pin pulling device

The suspended ballast guide is pinned on two points. The pin procedure is described for one pin as an example.

- ▶ Insert the pin pulling cylinder **27** on the console **20** and hang on the screw **26**.
- ▶ Pin the suspended ballast guide on the turntable: Insert the pin **24** with the pin pulling cylinder **27**.
- ▶ Secure the pin **24**: Insert the retaining pin **22** at point **P23** and secure with spring retainer **23**.
- ▶ Insert the second pin **24** on the suspended ballast guide.

LWE/LR 1600-2-001/18101-07-02/en

copyright © Liebherr-Werk Ehingen GmbH 2018

7.4 Assembling the guy rods on the suspended ballast guide

7.4.1 Standard crane

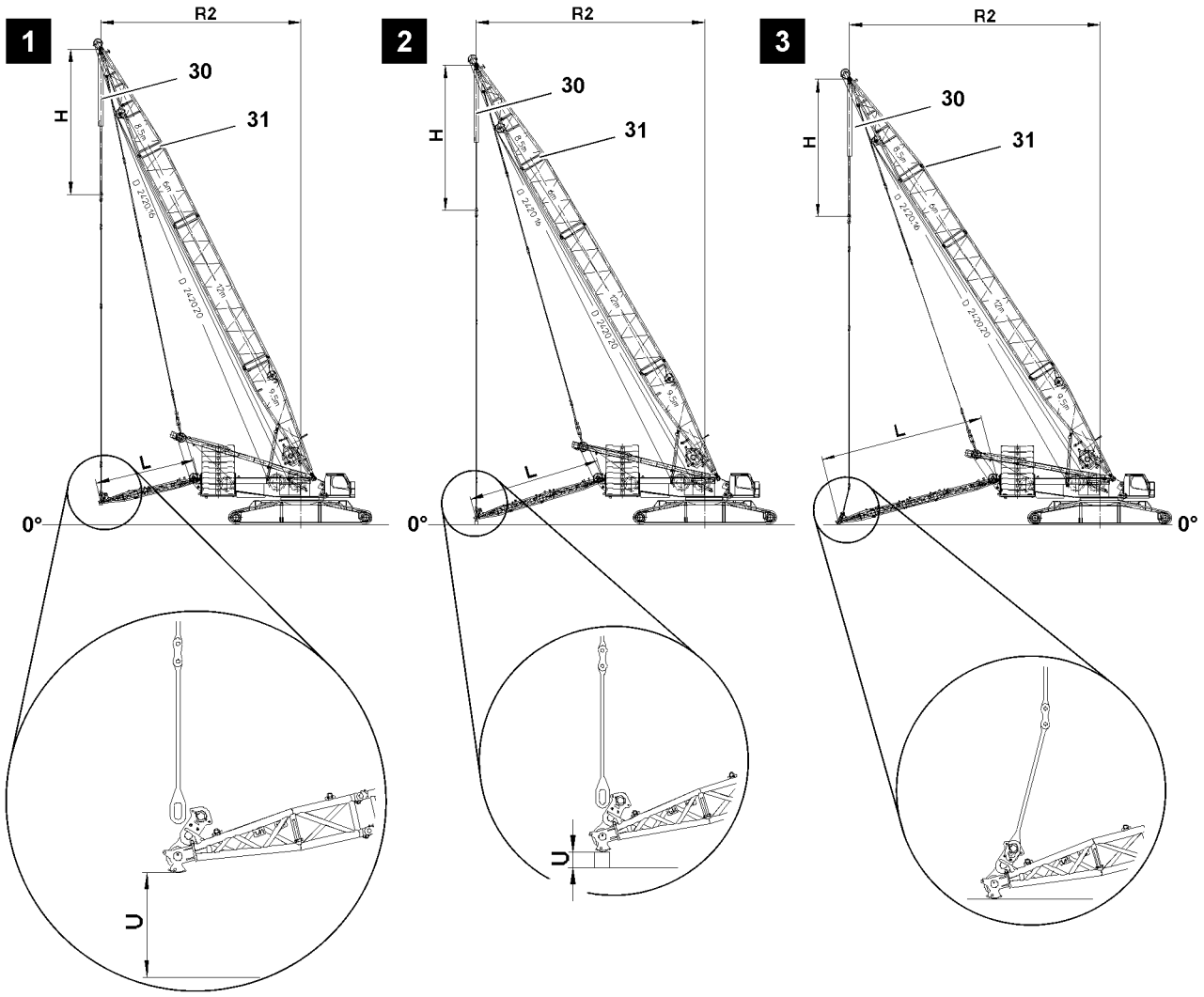

Fig.118919: Assembly positions depending on the derrick ballast radius

Make sure that the following prerequisites are met:
- The suspended ballast guide is properly pinned and secured on the rear of the turntable.
- The assembly substructure for the suspended ballast guide is properly prepared with the required height and load bearing capacity.

Depending on the derrick ballast radius, the suspended ballast guide is supported after assembly on the turntable on the end section of the suspended ballast guide. Height of the substructure **U**, see chart.

To be able to pin the end section of the suspended ballast guide on the D-guy rods, the derrick radius **R2** and the dimension **H** are set depending on thederrick ballast radius **R1** respectively with the derrick boom **31** and the hoist cylinders **30**, see chart.

LWE/LR 1600-2-001/18101-07-02/en

copyright © Liebherr-Werk Ehingen GmbH 2018

Derrick ballast radius R1	Illustration	L	R2	H	U
15.0 m	**1**	7575 mm	15133 mm	11000 mm	1465 mm
17.5 m	**2**	10025 mm	17348 mm	11000 mm	250 mm
20.0 m	**3**	12475 mm	19000 mm	10400 mm	End section is placed on the ground

When the 15.0 m derrick ballast radius is installed:

▶ Lower the suspended ballast guide with the auxiliary crane to height **U** or take down the end section on a substructure, height **U**.

When the 17.5 m derrick ballast radius is installed:

▶ Lower the suspended ballast guide with the auxiliary crane and take down the end section on the substructure, height **U**.

When the 20.0 m derrick ballast radius is installed:

▶ Lower the suspended ballast guide with the auxiliary crane and take the end section down on the ground.

▶ Set the derrick boom **31** and the hoist cylinder **30** to the derrick radius **R2** and dimension **H**.

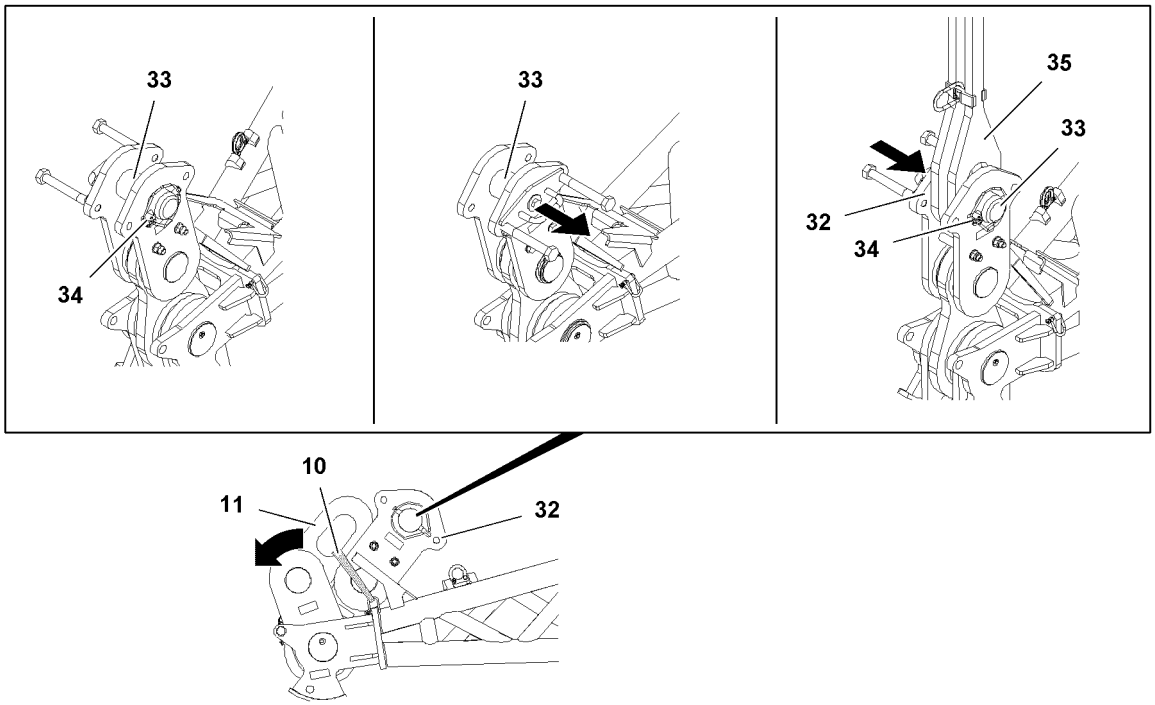

Fig.118920: Assembling the guy rods on the end section of the suspended ballast guide

▶ Remove the transport straps **10**.

▶ On both sides, take the brackets **11** down to the rear or fold them down.

The D-guy rods **35** are pinned on both sides on the end section. The pin procedure is described on the example for one D-guy rod.

▶ Remove the locking pin **34** and unpin the pin **33**.

▶ Position the brackets **32** and the D-guy rods **35** until the pin bores align.

▶ Pin the D-guy rods **35** on the brackets **32**: Insert the pin **33** and secure with the locking pin **34**.

▶ Assemble the second D-guy rod **35** on the end section of the suspended ballast guide.

LWE/LR 1600-2-001/18101-07-02/en

copyright © Liebherr-Werk Ehingen GmbH 2018

Result:

– The suspended ballast guide is assembled.

7.4.2 Narrow track crane

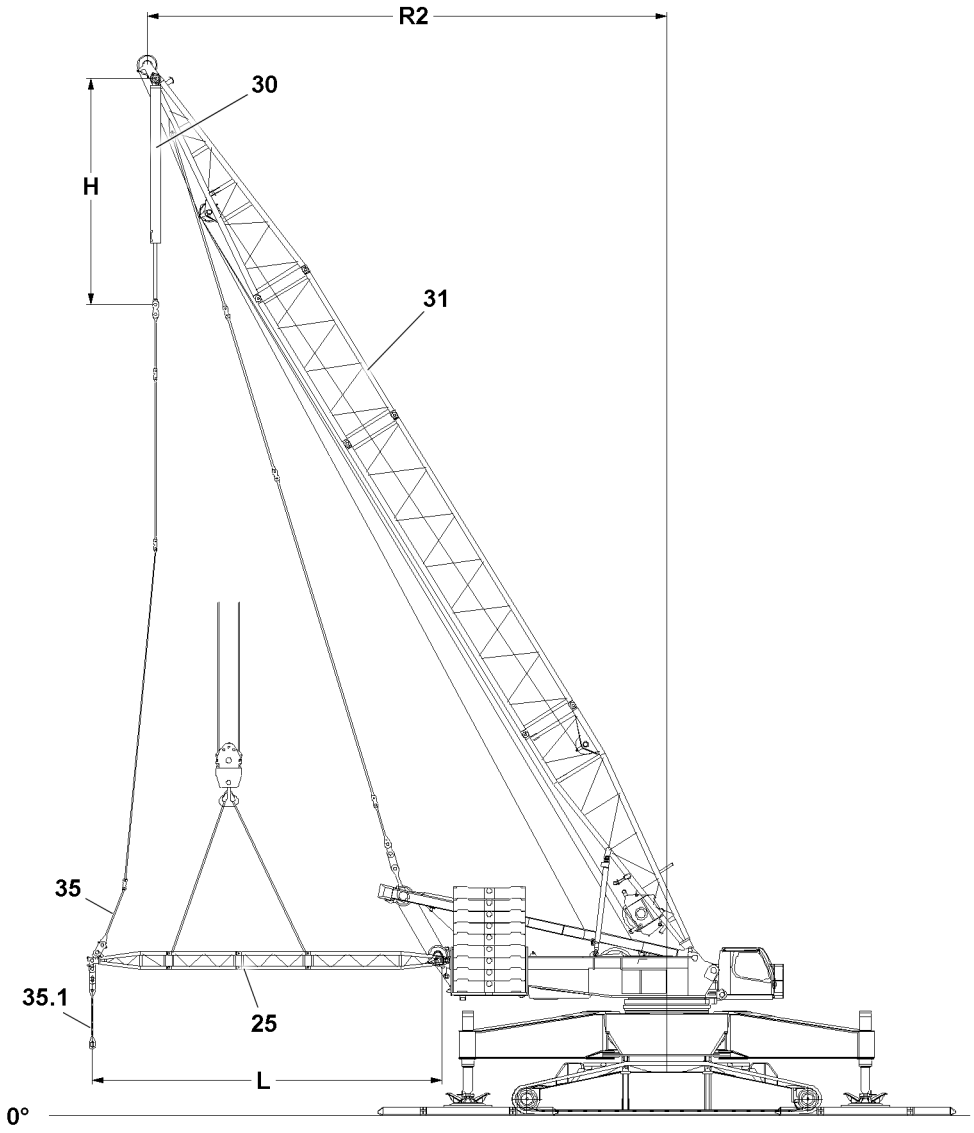

Fig.146512: Assembly positions depending on the derrick ballast radius

Make sure that the following prerequisites are met:
- The suspended ballast guide is properly pinned and secured on the rear of the turntable.
- The suspended ballast guide is safely held by the auxiliary crane.

Assembling the D-guy rods

To be able to pin the end section of the suspended ballast guide on the D-guy rods, set the derrick boom **31** to the derrick boom radius **R2** and the hoist cylinder **30** to the dimension **H**, see chart.

Derrick ballast radius R	L	R2	H
15.0 m	7575 mm	15000 mm	—
17.5 m	10025 mm	17500 mm	—
20.0 m	12475 mm	18000 mm	7956 mm

copyright © Liebherr-Werk Ehingen GmbH 2018

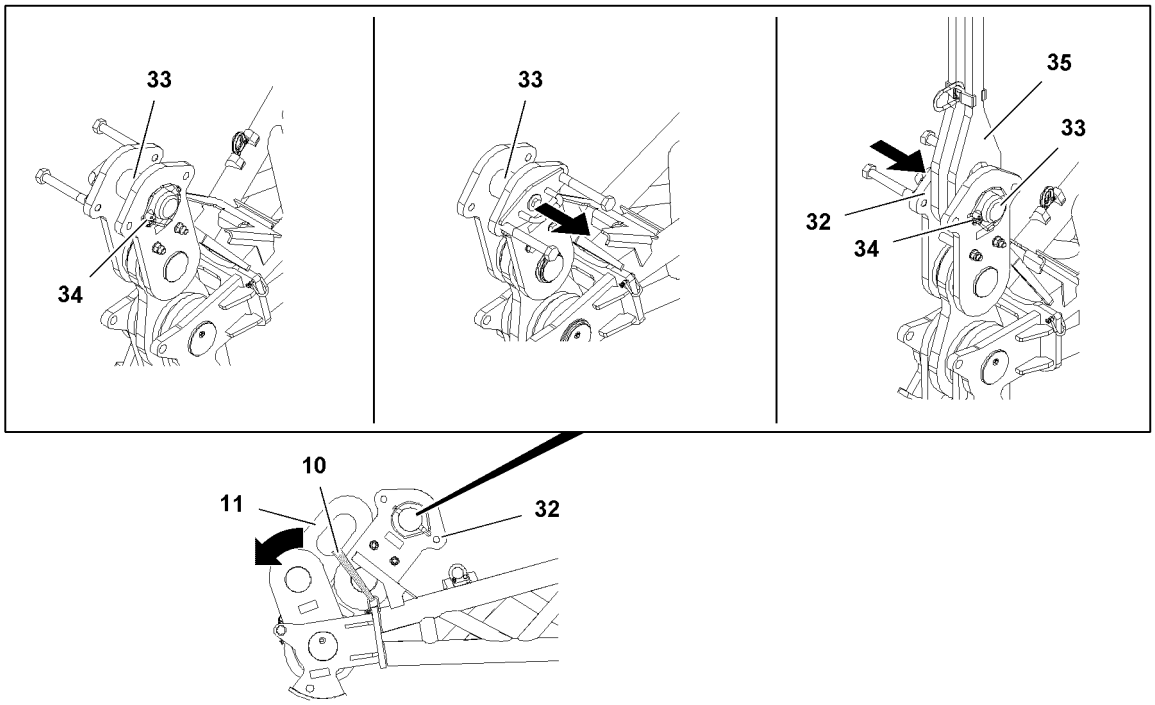

Fig.118920: Assembling the guy rods on the end section of the suspended ballast guide

- ▶ Remove the transport straps **10**.
- ▶ On both sides, take the brackets **11** down to the rear or fold them down.

The D-guy rods **35** are pinned on both sides on the end section of the suspended ballast guide. The pin procedure is described on the example for one D-guy rod.

- ▶ Remove the locking pin **34** and unpin the pin **33**.
- ▶ Position the brackets **32** and the D-guy rods **35** until the pin bores align.
- ▶ Pin the D-guy rods **35** on the brackets **32**: Insert the pin **33** and secure with the locking pin **34**.
- ▶ Assemble the second D-guy rod **35** on the end section of the suspended ballast guide.

Result:

– The suspended ballast guide is assembled.

Assembling the D-auxiliary rods for the suspended ballast

DANGER
Falling components!
If the visual inspection on the pin connections is not carried out, then the pins can release by themselves and components can fall down.
Death, severe bodily injuries, property damage.
- ▶ All pins must be secured after assembly with the intended safety elements. Check visually.
- ▶ The guy rods must be inspected regularly, see chapter 8.15.

- ▶ Fasten the D-auxiliary rods **35.1** to the auxiliary crane.
- ▶ Swing in the D-auxiliary rods **35.1** with the auxiliary crane to the suspended ballast guide.
- ▶ Position the D-auxiliary rods **2** with the auxiliary crane on the pin point of the suspended ballast guide, observe the Rod plan.
- ▶ Pin the D-auxiliary rods **35.1** on the suspended ballast guide: Insert the pin from the outside to the inside and secure properly with the retaining element.
- ▶ Assemble the second D-auxiliary rods **35.1** on the other side.

LWE/LR 1600-2-001/18101-07-02/en

copyright © Liebherr-Werk Ehingen GmbH 2018

8 Assembling the suspended ballast pallet

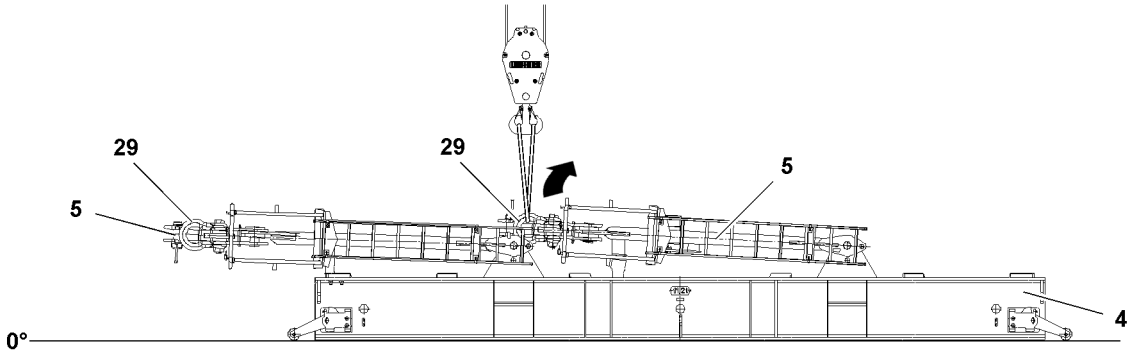

Fig.149296: Assembling the suspended ballast pallet

The pinning of the erection racks differs due to the following prerequisites:
- The suspended ballast guide***** is assembled: Pin to the suspended ballast guide.
- The suspended ballast guide***** is **not** assembled: Pin to the D-guy rods.

8.1 Setting the suspended ballast pallet in the assembly position

▶ Set the derrick boom to the required derrick boom radius.
▶ Hang the suspended ballast pallet **4** on the auxiliary crane and position it within the slewing range of the crane under the brackets on the suspended ballast guide*****.
or
Hang the suspended ballast pallet **4** on the auxiliary crane and position it within the slewing range of the crane under the D-guy rods on the derrick.

Note
▶ Stop the suspended ballast pallet **4** in the lengthwise direction of the turntable for easier assembly.

▶ Align the suspended ballast pallet **4** horizontally.

LWE/LR 1600-2-001/18101-07-02/en

copyright © Liebherr-Werk Ehingen GmbH 2018

8.2 Erecting the erection racks

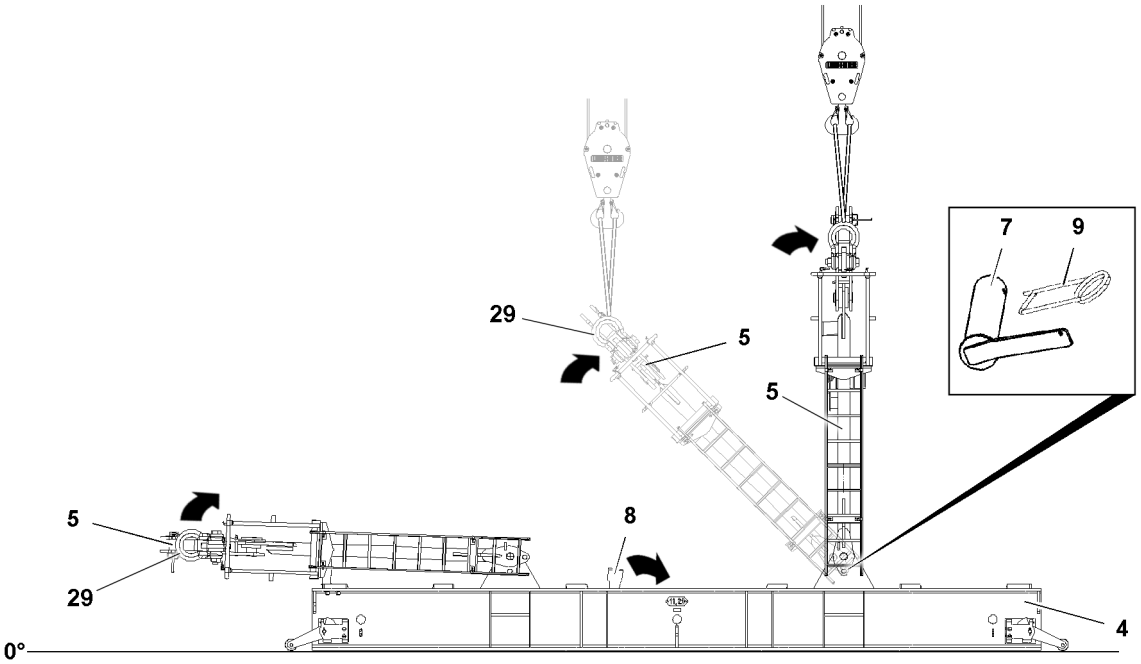

Fig.149297: Erecting the erection racks

- ▶ Assemble the shackle **29** properly on the erection racks.
- ▶ Hang the erection rack **5** on the auxiliary crane.
- ▶ Set the erection rack **5** vertically with the auxiliary crane.

DANGER
Danger of accident during assembly / disassembly of the erection racks!
The erection racks must hang securely on the auxiliary crane, otherwise the erection racks can tip over.
Death, severe bodily injuries, property damage.

- ▶ The two erection racks must be locked and secured in a vertical position with four retaining pins **7**. Only then may the auxiliary crane be removed.
- ▶ Never unpin the retaining pins of unsecured or unsupported erection racks.
- ▶ It is prohibited for anyone to remain under the erection racks or within the complete danger zone during the pinning and unpinning procedure.

- ▶ Insert the retaining pins **7** on the first erection rack **5** on both sides.
- ▶ Secure the retaining pins **7** with spring retainers **9**.
- ▶ Erect, pin and secure the second erection rack according to the assembly of the first erection rack.

LWE/LR 1600-2-001/18101-07-02/en

copyright © Liebherr-Werk Ehingen GmbH 2018

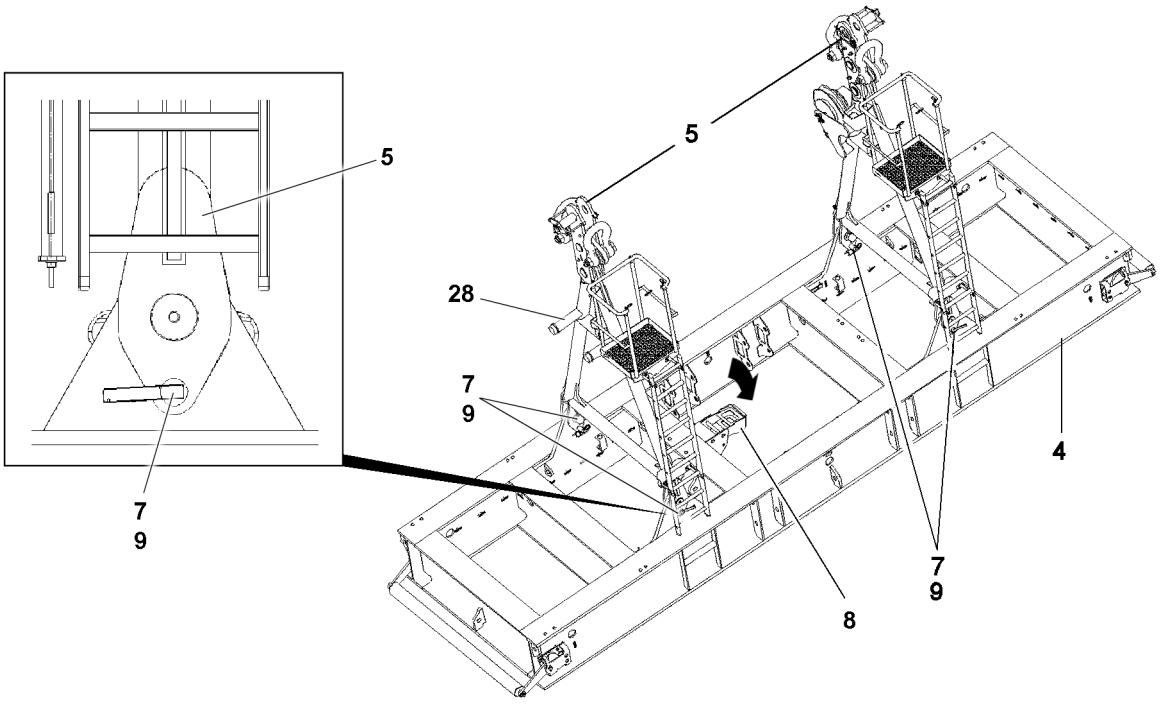

Fig.149298

WARNING
Falling ballast plates!
If the support for the erection rack **8** is not brought into the park position after erecting the erection racks, then the ballast plates cannot be locked in the centerings during ballasting.
The ballast plates can slip and fall from the suspended ballast pallet.
Death, severe bodily injuries, property damage.

▶ Make sure that the support for the erection rack **8** is folded into the park position and secured after erecting the erection racks.

▶ Fold the support for the erection rack **8** into the park position (arrow).
▶ Secure the support for the erection rack **8** in the park position with the pin and locking pin.

LWE/LR 1600-2-001/18101-07-02/en

copyright © Liebherr-Werk Ehingen GmbH 2018

8.3 Assembling the consoles for ballast centering

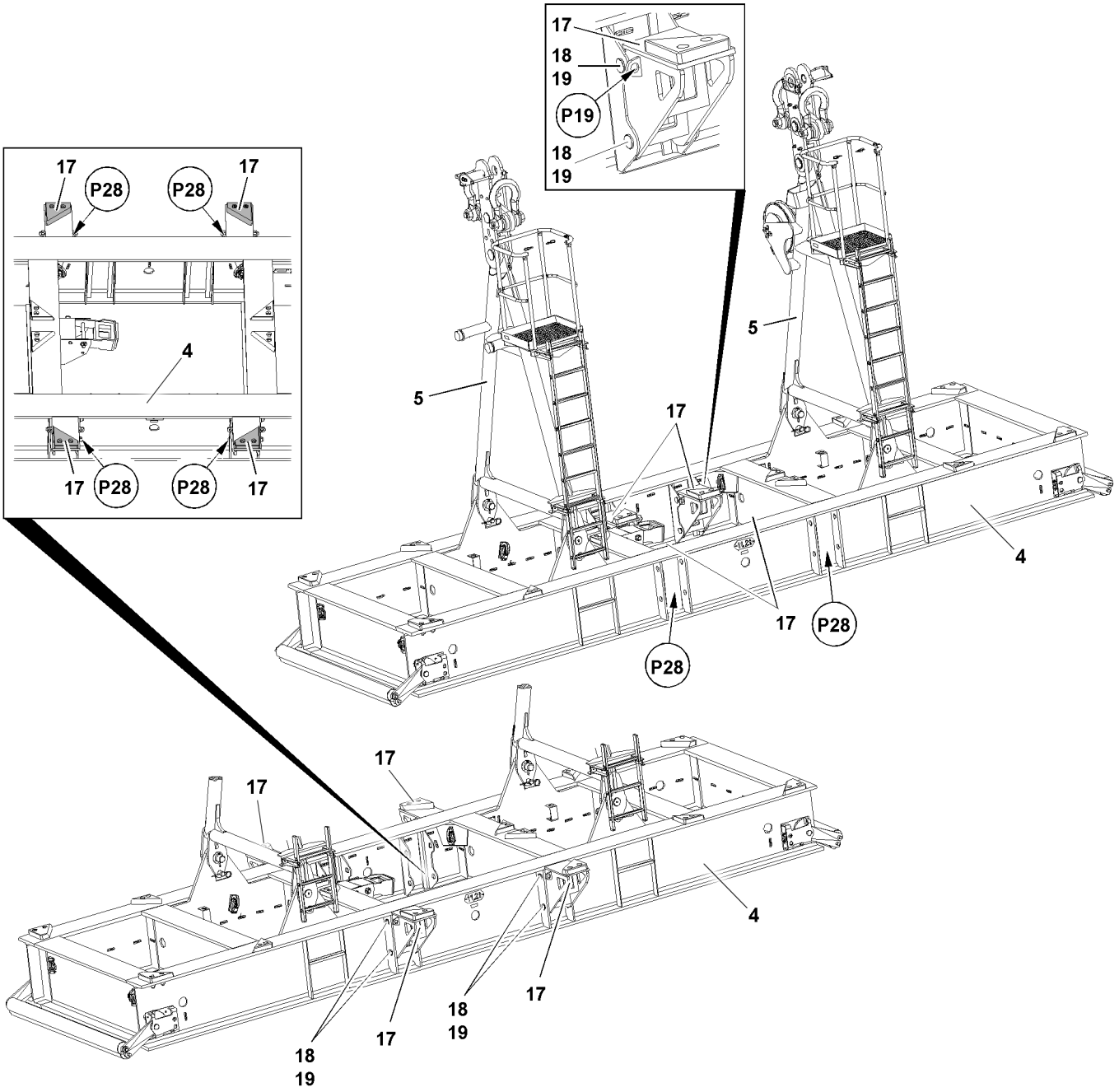

Fig.149288: Assembling the consoles for ballast centering

Make sure that the following prerequisite is met:
– The erection racks are properly pinned and secured in assembly position.

Note
▶ The assembly is described as an example on one console for ballast centering **17**.
▶ The assembly of the additional consoles for ballast centering **17** is identical.

LWE/LR 1600-2-001/18101-07-02/en

copyright © Liebherr-Werk Ehingen GmbH 2018

WARNING
Slipping ballast plates!
If the consoles for ballast centering **17** are not properly installed, then the ballast plates cannot be centered correctly.
The ballast plates can slip and fall down.
Death, severe bodily injuries, property damage.
▶ Make sure that the consoles for ballast centering **17** are properly assembled on the suspended ballast pallet. Pay attention to the alignment of the centerings.

▶ Fasten the console for ballast centering **17** to the auxiliary crane at points **P19**.
▶ Unpin the console for ballast centering **17** in the park position: Remove the spring retainer **19** and unpin the pin **18**.
▶ Lift the console for ballast centering **17** with the auxiliary crane from the park position **P24**.
▶ Swing in the console for ballast centering **17** to the operating position **P28** and pin with the pin **18** and secure with the spring retainer **19**.

When the console for ballast centering **17** is pinned and secured properly:
▶ Remove the auxiliary crane.
▶ Install additional consoles for the ballast centering **17** in operating position.

8.4 Pinning the suspended ballast pallet on the suspended ballast guide*

Make sure that the following prerequisites are met:
– The erection racks are erected and secured with four retaining pins **7**.
– Hang the brackets **11** for the suspended ballast guide over the brackets of the erection racks.
– The derrick is set to the required radius.

LWE/LR 1600-2-001/18101-07-02/en

copyright © Liebherr-Werk Ehingen GmbH 2018

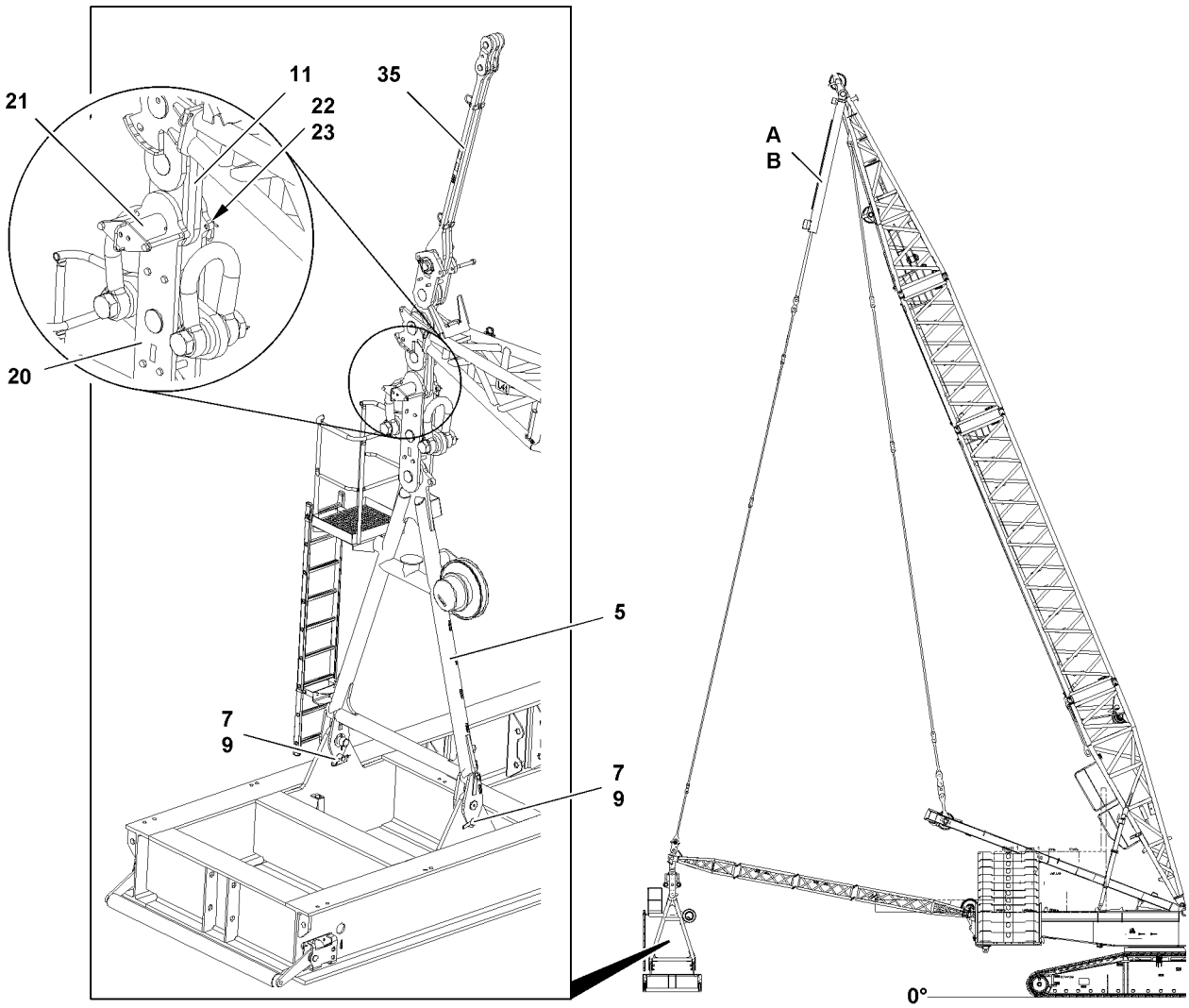

Fig.119254: Pinning the suspended ballast pallet on the suspended ballast guide

▶ Lower the brackets **11** by extending the piston rods on the pull cylinder **A** and on the pull cylinder **B** into the brackets **20** until the pin bores align.

WARNING
Incomplete pinning of the erection racks **5**!
Death, severe bodily injuries, property damage.
▶ On both erection racks: Pin the bracket **11** on the bracket **20** and secure.

The suspended ballast pallet is pinned on two points. The pin procedure is described for one pin as an example

▶ Pin the bracket **11** on the bracket **20**: Insert the pin **21**, insert the spacer **22** and secure with the spring retainer **23**.
▶ Pin the second bracket **20** to the suspended ballast guide.

8.5 Pinning the suspended ballast pallet on the D-guy rods

Make sure that the following prerequisites are met:
– The erection racks are erected and secured with four retaining pins **7**.
– The D-guy rods hang over the brackets of the erection racks.
– The derrick is set to the required radius.

LWE/LR 1600-2-001/18101-07-02/en

copyright © Liebherr-Werk Ehingen GmbH 2018

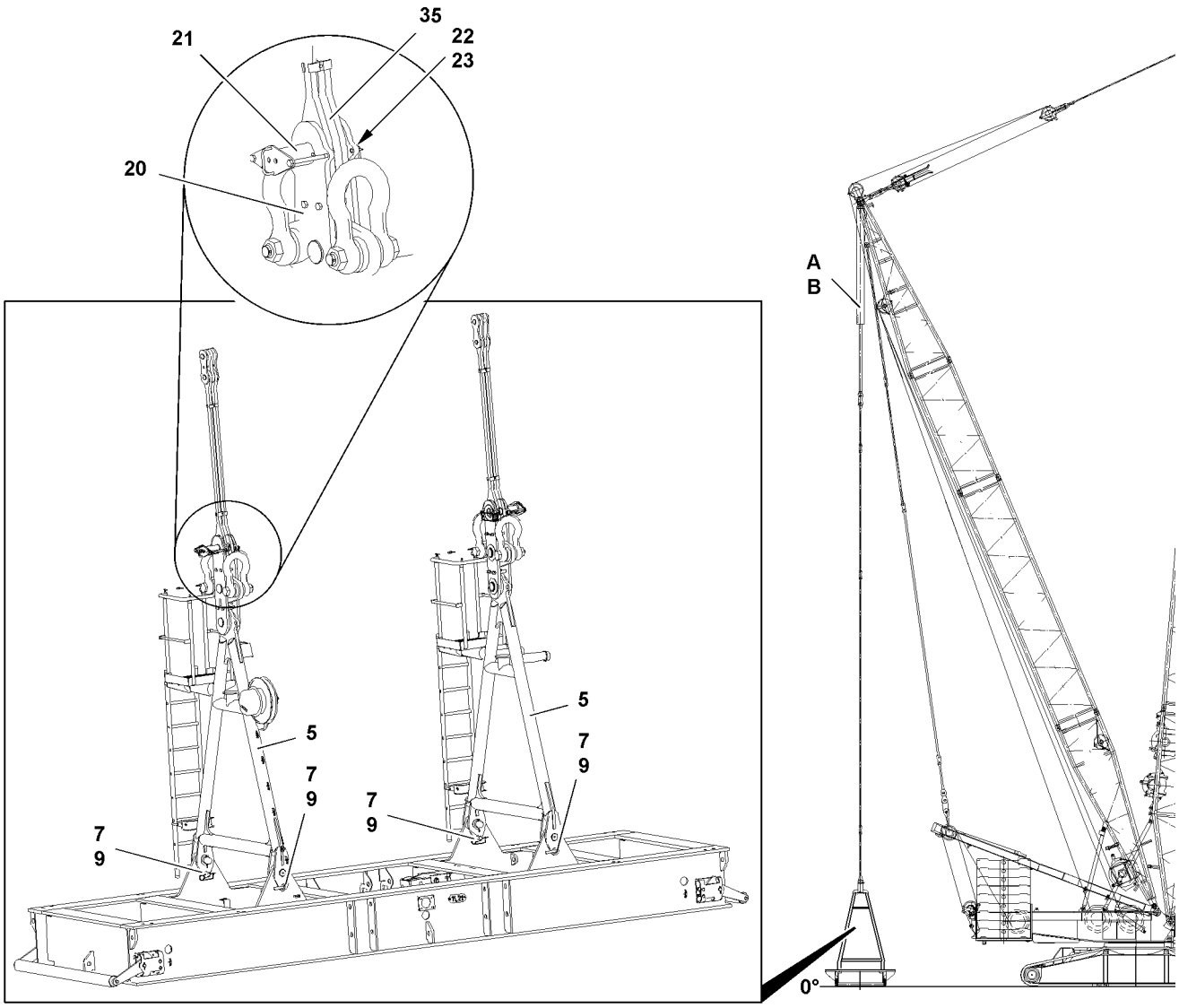

Fig.119253: Pinning the suspended ballast pallet on the D-guy rods

▶ Lower the D-guy rods **35** by extending the piston rods on the pull cylinder **A** and on the pull cylinder **B** into the brackets **20** until the pin bores align.

WARNING
Incomplete pinning of the erection racks **5**!
Death, severe bodily injuries, property damage.
▶ On both erection racks: Pin the D-guy rod **35** to the bracket **20** and secure it.

The suspended ballast pallet is pinned on two points. The pin procedure is described for one pin as an example

▶ Pin the D-guy rod **35** to the bracket **20**: Insert the pin **20**, insert the spacer **22** and secure with the spring retainer **23**.
▶ Pin the second bracket **20** to the guy rod.

copyright © Liebherr-Werk Ehingen GmbH 2018

8.6 Aligning the suspended ballast pallet horizontally

WARNING
Uncontrolled swinging of the suspended ballast pallet!
When the suspended ballast pallet is lifted, it can start to swing.
Death, severe bodily injuries, property damage.
▶ It is prohibited to remain in the danger zone.
▶ Secure the suspended ballast pallet with auxiliary rope.

▶ Lift the empty suspended ballast pallet with the pull cylinder **A** and pull cylinder **B** and set it down again.

Result:

– The empty suspended ballast pallet is vertically aligned.

8.7 Unpinning the retaining pin

Make sure that the following prerequisite is met:
– The suspended ballast pallet is pinned and secured on the suspended ballast guide*.
or:
– The suspended ballast pallet is pinned and secured on the D-guy rods.

NOTICE
Damage to the retaining pins!
If the retaining pins **7** are not unpinned before crane operation, then they can be damaged in crane operation.
▶ Unpin the retaining pins **7** before starting crane operation.

▶ Release and unpin the retaining pins **7** on the erection racks on both sides.

9 Ballasting the suspended ballast pallet

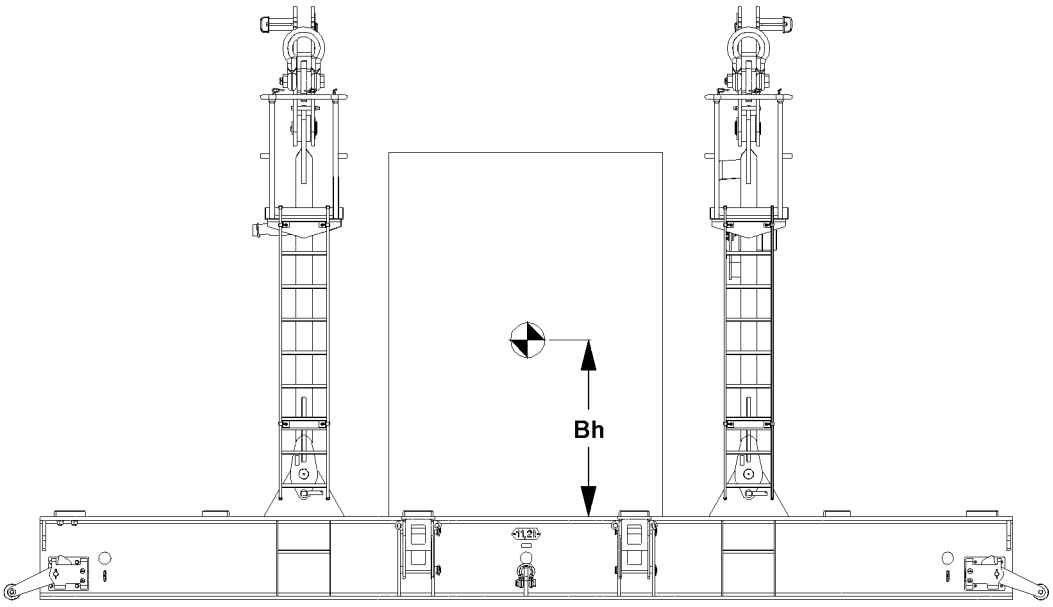

Fig.149289: Ballasting the suspended ballast pallet

LWE/LR 1600-2-001/18101-07-02/en

copyright © Liebherr-Werk Ehingen GmbH 2018

WARNING
The crane can topple over!
If the following danger notes are not observed, the ballast plates or the ballast stack can slip on the suspended ballast pallet and fall down.
The crane can topple over.
Death, severe bodily injuries, property damage.

- ▶ The ground on which the suspended ballast pallet is ballasted must be level and have an adequate load bearing capacity.
- ▶ Always place the ballast plates symmetrically, in reference to the longitudinal axis.
- ▶ When ballasting the two outer ballast stacks, only one ballast plate may be placed at the start of every ballast stack.
- ▶ Do **not** start with the two center ballast stacks.
- ▶ The two outer ballast stacks may be ballasted with ballast assemblies of two ballast plates after the first ballast plate has been placed on each stack.
- ▶ The difference for the center ballast stack may not be more than a maximum of one ballast plate during ballasting.
- ▶ The outer ballast stacks must always weigh the same and be the same height after ballasting.
- ▶ The two center ballast stacks must always weigh the same and be the same height after ballasting.
- ▶ The outer ballast stacks can differ in stack height from the inner ballast stacks.
- ▶ The maximum permissible ballast center of gravity height **Bh** of 1750 mm may not be exceeded.
- ▶ The maximum permissible total weight of the suspended ballast may not exceed 350 t.
- ▶ Secure all ballast plates so they cannot move and fall down.
- ▶ Replace damaged ballast plates immediately with new ballast plates.

Make sure that the following prerequisites are met:

- – The suspended ballast pallet is properly pinned and secured to the derrick ballast guying.
- – An auxiliary crane is available.
- – The support for the erection rack **8** is in the park position.
- – The consoles for ballast centering **17** are properly assembled and secured in the operating position.

9.1 Placing the ballast plates, fastening system: „Twistlock“

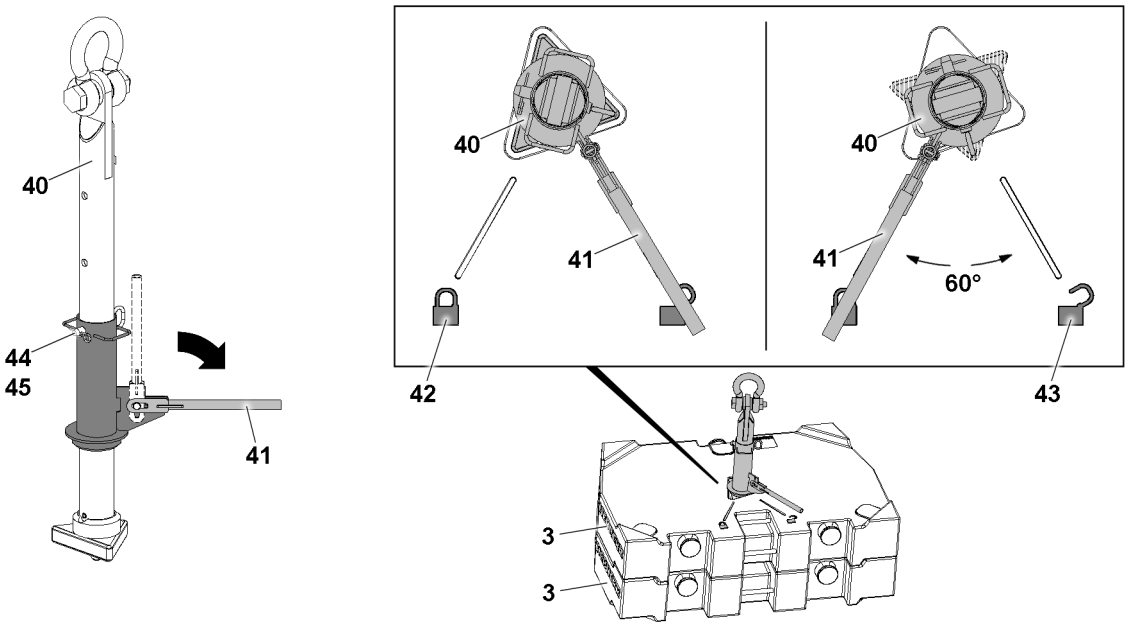

Fig.128899: Ballast plates, fastening system: „Twistlock“

LWE/LR 1600-2-001/18101-07-02/en

copyright © Liebherr-Werk Ehingen GmbH 2018

WARNING
Danger of accident!
If more than the permissible two ballast plates are lifted with the receptacle stud, the receptacle stud will be overloaded and can be damaged.
Death, severe bodily injuries, property damage.
▶ Make sure that the ballast plates are placed correctly in the centerings.
▶ Replace damaged ballast plates.

To stack the ballast plate(s) **3**, use the receptacle stud **40**.

Before the receptacle stud **40** is guided into the ballast plates, it must be ensured that the length of the receptacle stud **40** is set correctly. The length of the receptacle stud **40** can be adjusted with the pin **44**.

If the length of the receptacle stud **40** is to be adjusted:
▶ Release and unpin the pin **44**.
▶ Adjust the length of the receptacle stud by moving the receptacle stud **40**.
▶ Insert the pin **44** and secure with the spring retainer.
▶ Fasten the receptacle stud **40** to the auxiliary crane and guide it into the ballast plate(s).
▶ Pull the lever **41** up and fold it down.
▶ Turn the lever **41** 60° until the lever **41** points to the icon **42**.

Result:

– The receptacle stud **40** is locked with the ballast plate.

▶ Lift one ballast plate at a time with the receptacle stud **40** and take it down carefully on the outer centerings of the suspended ballast pallet.

When the ballast plate has been taken down on the outer centerings of the suspended ballast pallet:
▶ Turn the lever **41** 60° until the lever **41** points to the icon **43**.

Result:

– The receptacle stud **40** is unlocked.

▶ Carefully pull the receptacle stud **40** out of the ballast plate.
▶ Stack the ballast plates according to the load chart, observe the danger notes.

9.2 Placing the ballast plates, fastening points: Bitt

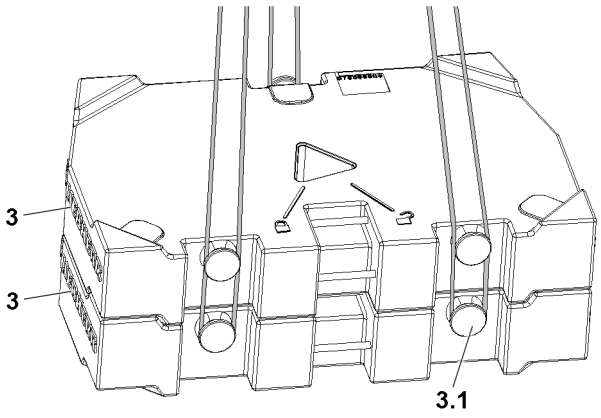

Fig.128900: Ballast plates, fastening system: „Bitt“

LWE/LR 1600-2-001/18101-07-02/en

copyright © Liebherr-Werk Ehingen GmbH 2018

WARNING
Falling ballast plates!
If more than the permissible loads are lifted, then the bitts **3.1** are overloaded and the ballast plates can fall down.
Death, severe bodily injuries, property damage.
- ▶ Lift no more than maximum 20 t with the ropes, 3 fastening points.
- ▶ Replace damaged ballast plates immediately.

WARNING
Incorrect handling of the fastening equipment!
If fastening equipment cannot be attached correctly and if it is not secured sufficiently to prevent it from loosening up, loads can fall down.
Death, severe bodily injuries, property damage.
- ▶ Make sure that the fastening equipment is correctly attached on the bitts **3.1** and that it is secured sufficiently to prevent it from loosening up.

Note
- ▶ Place the ballast plates individually or as a ballast assembly, maximum 20 t.
- ▶ The weight difference between the outer ballast stacks no more than maximum 20 t.

- ▶ Place only one ballast plate at a time on the outer centerings on the suspended ballast pallet.

When a ballast plate has been placed on the outer centerings of the suspended ballast pallet:
- ▶ Place the ballast plates individually or as an assembly of a maximum of two plates alternately on the left and right with the auxiliary crane.
- ▶ Stack the ballast plates according to the load chart.

10 Function check before lifting the derrick ballast

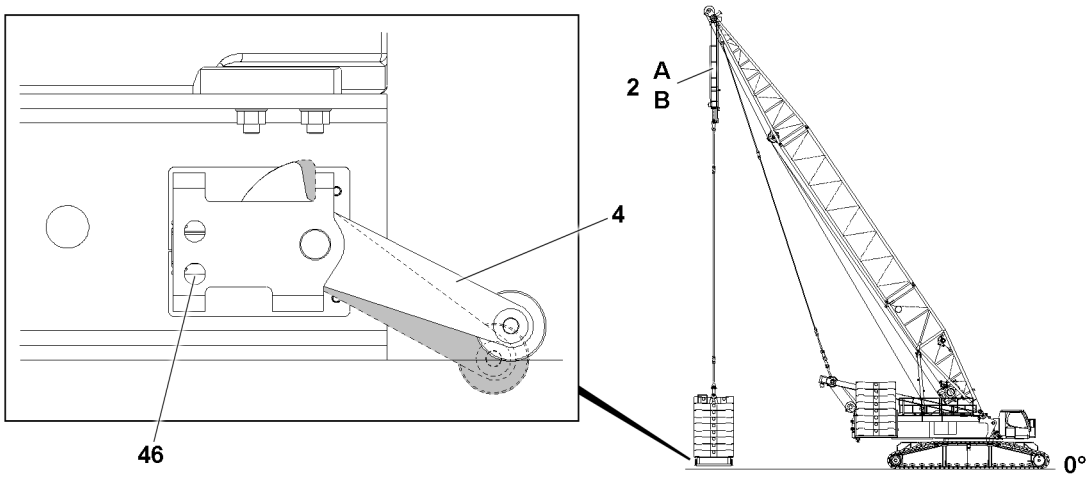

*Fig.128901: Checking the function of the ground contact rollers **4** on the suspended ballast pallet*

LWE/LR 1600-2-001/18101-07-02/en

copyright © Liebherr-Werk Ehingen GmbH 2018

Make sure that the following prerequisites are met:
- The electrical connection from the derrick ballast to the turntable has been established.
- The cable drum cable is plugged in on the turntable.
- The ground contact rollers must move easily.

DANGER
Danger of accident if the derrick ballast touches the ground unintentionally!
If the ground is very uneven, the danger exists that the derrick ballast rests on the ground even one of the ground contact rollers **4** was not actuated.
Death, severe bodily injuries, property damage.
- ▶ If the suspended ballast pallet touches the ground, **at least one** ground contact switch **46** must be actuated via the ground contact roller **4**.
- ▶ The turning the **turntable** and **driving** the **crawler** crane movements turn off.

- ▶ Check the ease of movement of the ground contact rollers **4**.
- ▶ Manually operate the ground contact roller **4**.

Result:

- The ground contact switch **46** is actuated.
- The **turning the turntable** and **driving** the **crawler** crane movements turn off.

11 Lifting and lowering the derrick ballast using the pull cylinders

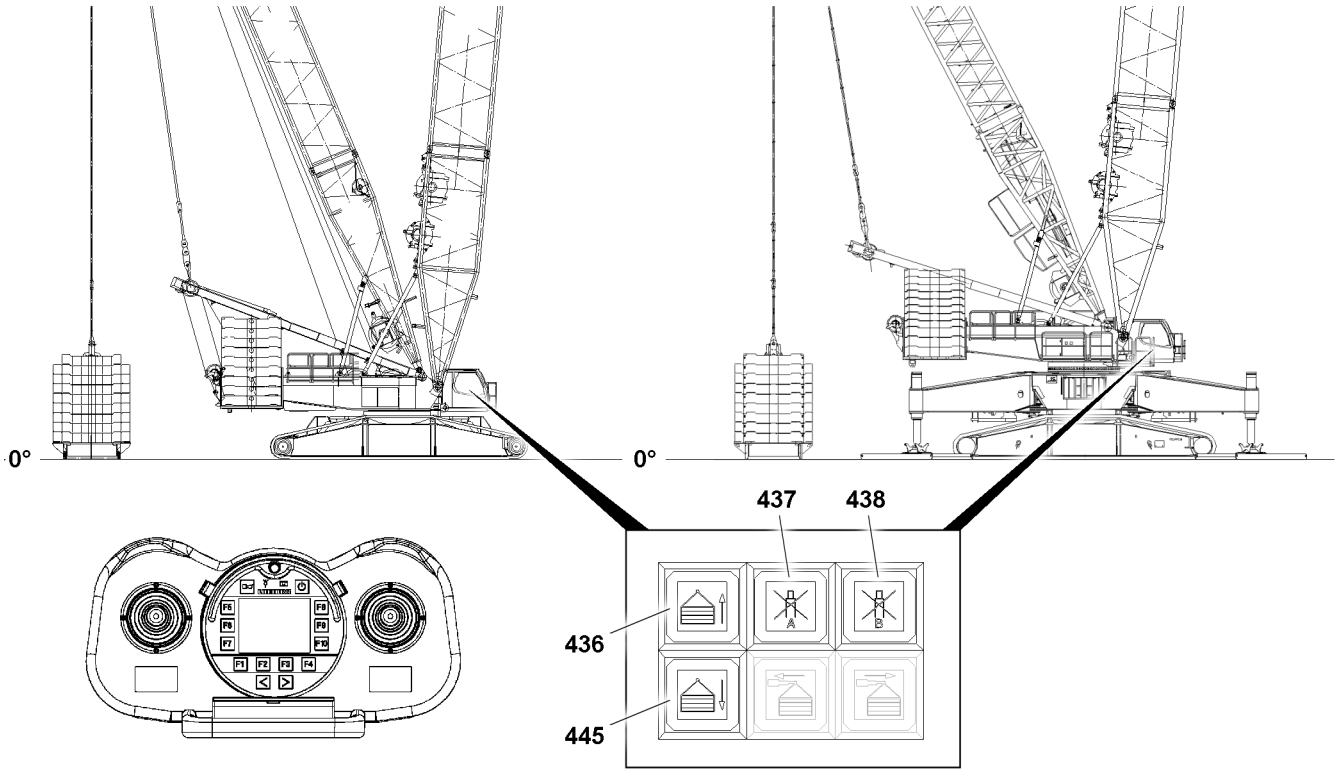

Fig.149283: Lifting and lowering the derrick ballast using the pull cylinders

LWE/LR 1600-2-001/18101-07-02/en

copyright © Liebherr-Werk Ehingen GmbH 2018

WARNING
The crane can topple over!
If the derrick ballast is lifted up off the ground beyond the **maximum permissible** 250 mm , the crane can topple over to the rear if the load rips off.
Death, severe bodily injuries, property damage.
- ▶ Do not lift the derrick ballast more than 250 mm off the ground.
- ▶ Make sure that there are no persons within the danger zone when lifting and lowering the derrick ballast.

Note
- ▶ If the derrick ballast is raised or lowered using the pull cylinders, then the horizontal alignment of the derrick ballast is automatically regulated by both length sensors of the pull cylinders.
- ▶ For a ballast utilization of **more than** or **equal to** 90 percent, the level sensor regulates the pull cylinders to a difference of 1 cm.
- ▶ With a ballast utilization of **less than** 90 percent, the level sensor monitors the derrick ballast level to ± 2.5°. This makes it possible to set the derrick ballast down up to a ground slope of 2.5°.

DANGER
Danger of accident!
Death, severe bodily injuries, property damage.
- ▶ Pay attention to the horizontal alignment of the derrick ballast when lifting and lowering the derrick ballast.
- ▶ When lifting and lowering the derrick ballast, check the forces in the ballast guyings regularly on LICCON monitor 1. If the difference of forces between „derrick ballast guying **A**“ and „derrick ballast guying **B**“ is too large, an acoustic warning sounds and the values on the LICCON monitor 1 blink, see section „Differential force monitoring of ballast guying“.
- ▶ When pressing the button **437** („Stop cylinder A on the derrick ballast“) or the button **438** („Stop cylinder B on the derrick ballast“), the level sensor is bypassed and the derrick ballast can be inclined within a limited angle range. This is exclusively permitted when setting down the derrick ballast on uneven ground and only by observing utmost caution.

11.1 Lifting / lowering the derrick ballast using the instrument panel

11.1.1 Lifting the derrick ballast

▶ Press the button **436**.

Result:

– The derrick ballast is raised.

11.1.2 Lowering the derrick ballast

▶ Press the button **445**.

Result:

– The derrick ballast is lowered.

11.1.3 Stopping the pull cylinder on the derrick ballast

▶ Press the button **437**.

Result:

– The pull cylinder (A) on the derrick ballast is stopped.

▶ Press the button **438**.

Result:

– The pull cylinder (B) on the derrick ballast is stopped.

LWE/LR 1600-2-001/18101-07-02/en

copyright © Liebherr-Werk Ehingen GmbH 2018

11.2 Lifting / lowering the derrick ballast using the radio remote control BTT-E

Note

▶ The „Lifting / lowering the derrick ballast using the radio remote control BTT-E“ assembly function is only available for cranes that are equipped with the corresponding technical prerequisites.

▶ Operation of the pull cylinders with the manual control levers of the radio remote control, see the radio remote control operating instructions.

12 Crane operation with derrick ballast

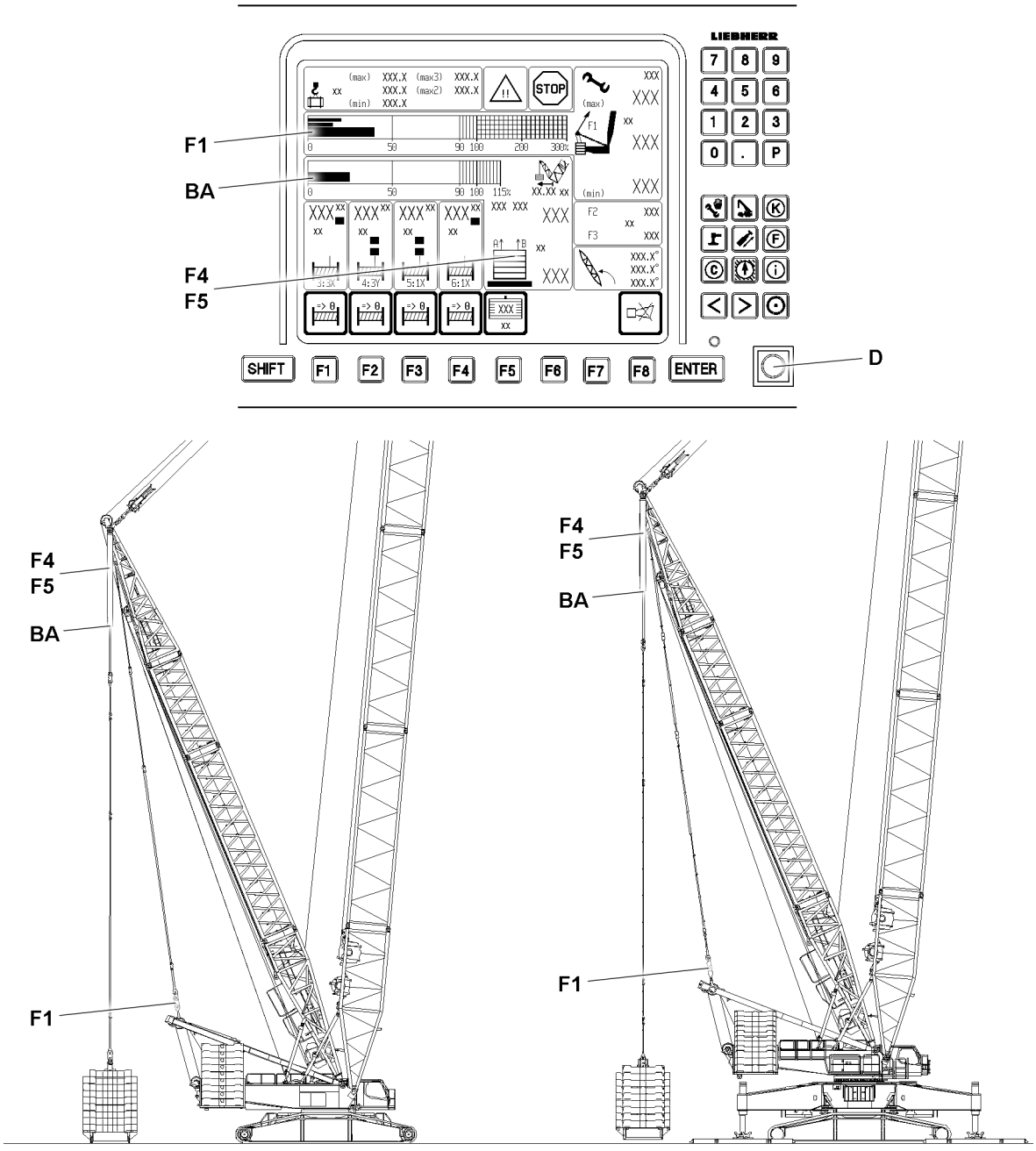

Fig.149281

LWE/LR 1600-2-001/18101-07-02/en

copyright © Liebherr-Werk Ehingen GmbH 2018

12.1 LICCON overload protection

The maximum or minimum load required to balance the crane can be increased or decreased on cranes with a derrick ballast operating under load by increasing or reducing the derrick ballast.

Note
- ▶ The suspended ballast and ballast trailer are generally referred to as the **derrick ballast**.
- ▶ The fixed compensation weight that is installed on the turntable is generally referred to as the **counterweight**.

Make sure that the following prerequisites are met:
- – The required derrick ballast according the load chart is placed and entered and confirmed on LICCON monitor 1.
- – The derrick boom is in the operating position.

12.1.1 Presettings

▶ Set the LICCON overload protection according to the data in the load chart and confirm.

Note
- ▶ Enter the placed derrick ballast on LICCON monitor 1.
- ▶ Enter the actual reeving on the pulley head on LICCON monitor 0.

To set the derrick ballast - see chapter 4.03.

DANGER
Danger of accident!
The set derrick ballast must match the derrick ballast weight that is actually applied.
- ▶ Incorrect entry of the ballast weight can result in dangerous operating situations.

▶ Check the settings.

12.2 Crane operation

WARNING
The crane can topple over!
If the derrick ballast is lifted up off the ground beyond the **maximum permissible** 250 mm , the crane can topple over to the rear if the load rips off.
Death, severe bodily injuries, property damage.
- ▶ Do not lift the derrick ballast more than 250 mm off the ground.
- ▶ Make sure that there are no persons within the danger zone when lifting and lowering the derrick ballast.

For crane operation with the derrick ballast, observe the data in the „Crane operation“ program on LICCON monitor 1, see chapter 4.02.

DANGER
Danger of accident!
There may be no persons or obstacles within the slewing range of the derrick ballast.
During the turning procedure, a guide person must closely watch the main boom, derrick and derrick ballast for any risk of collision.
The turning movement or braking must be initiated extremely carefully when turning with a load and suspended derrick ballast.
Death, severe bodily injuries, property damage.
- ▶ Jerky initiation / braking of the turning movement can cause the load or suspended derrick ballast to swing.
- ▶ This can cause the boom to break or the crane to topple over.

LWE/LR 1600-2-001/18101-07-02/en

copyright © Liebherr-Werk Ehingen GmbH 2018

Note
▶ See section „Lifting and lowering with pull cylinders“ and section „Differential force monitoring for derrick ballast guying“.

Monitor the extension condition of the pull cylinders and the incline of the derrick ballast.

12.2.1 Safety guidelines

Note
▶ The test points must be checked for function before crane operation.
▶ The weight of the load to be lifted must be known.
▶ The placement surface of the derrick ballast may be no more than maximum 250 m above, or 250 m below, the placement level of the crane.
▶ The placement surface on which the derrick ballast is placed after the load hoist has been completed must be level, horizontal and of sufficient load bearing capacity in order to safely support the weight.

CAUTION
Danger of accident!
▶ Before setting down the load and suspended derrick ballast, the crane operator must make sure that it can be taken down safely.

Note
▶ There may not be any obstacles in the slewing range of the crane, derrick ballast and load.
▶ The lifting of the derrick ballast must be supervised by a guide or the crane operator.

DANGER
Danger of accidents due to angular pull!
▶ When picking up the load, angular pull must be avoided, which means the derrick ballast, the center of rotation of the turntable and the load must be on one line.
▶ If this is not observed, there is a danger of tipping when lifting with ballast plates and this could cause the crane to topple over.

When picking up the load, the guying from the derrick ballast to the derrick end section must be relieved to the point where the actual force at test point 1 (F1 - actual) is higher than the minimum force-$F1_{min}$ (test point 1).

DANGER
Danger of accident!
▶ The guying between the SA-frame and the derrick end section, test point 1, may never be without power.
▶ This could cause uncontrolled movements of the boom system and therefore an accident.

12.3 Determination of forces in operating mode with derrick ballast

In all operating modes with derrick ballast, the load is divided between the guy rods from the derrick head to the SA-frame (F1) and the derrick ballast (F4/5).

Note
▶ For a detailed description see Chapter 4.02.

12.3.1 Force F1 (test point 1) guying of SA-frame - derrick end section

The force F1 (test point 1) is determined in the guy rods from the SA-frame to the derrick end section by 2 force test boxes and is shown on the LICCON monitor 1 as total force of the guying.

LWE/LR 1600-2-001/18101-07-02/en

copyright © Liebherr-Werk Ehingen GmbH 2018

The F1-utilization results from the F1 operating force and the F1-maximum operating force. This is represented on LICCON monitor 1 with the utilization bar (F1 percent).

12.3.2 Force F4/F5 (test point 4/5) in the guying derrick ballast - derrick end section

The forces F4/F5 (test point 4/5) are effective in the guy rods from the derrick ballast to the derrick head.

The existing forces in the guy rods (A = left and B = right) are calculated from the four pressure sensors, which are attached to the pull cylinders and shown on LICCON monitor 1 as individual forces.

The pulled ballast is calculated from the forces of the individual guyings, which means the part of the ballast pulled up by the guying. The remaining part is laying on the ground. The ballast utilization results from the pulled ballast and the placed ballast. This is shown on LICCON monitor 1 with a utilization bar (BA in %).

Pull cylinder on block

DANGER
The crane can topple over!
By retracting one or both pull cylinders (block position moved in), the pressure increases strongly on the ring surface of the pull cylinder and the weighing of the currently pulled derrick ballast is incorrectly calculated and displayed.
The LICCON overload protection therefore assumes that a larger derrick ballast is pulled than is actually the case, and calculates too large a load capacity as a result.
An overload of the crane is recognized too late by the LICCON overload protection and the crane can topple.
Death, severe bodily injuries, property damage.
- ▶ If the pull cylinders are „retracted“ in the block position, **crane operation is explicitly prohibited**.
- ▶ The forces in the derrick ballast guyings A and B must be carefully monitored on LICCON monitor 1.
- ▶ Potentially occurring error messages must be observed.

WARNING
The LICCON overload protection shuts off too early!
By extending one or two pull cylinder completely (block position moved out), the LICCON overload protection calculates a load which is too low.
Possible shut-off by the LICCON overload protection takes place too early.
- ▶ If the pull cylinders are in block position „moved out“, crane operation on the basis of reduced load is not meaningful.

LWE/LR 1600-2-001/18101-07-02/en

copyright © Liebherr-Werk Ehingen GmbH 2018

12.3.3 Monitoring of minimum force F1

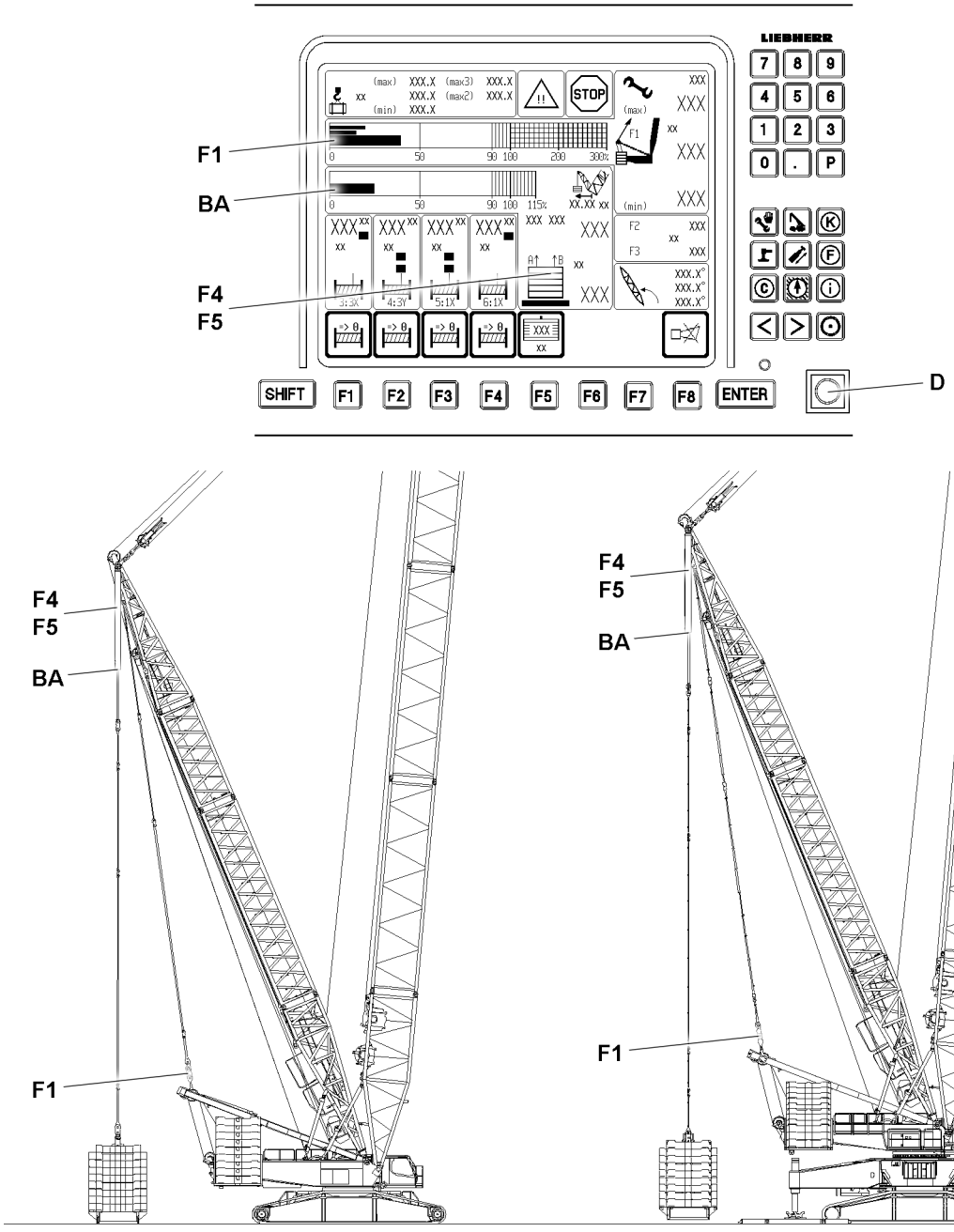

Fig.149281

If more than 50 percent of the set derrick ballast is being pulled (ballast utilization bar > 50 percent) and the minimum force $F1_{min}$ (test point 1) is fallen below, all crane movements that **increase load torque** are turned off.

DANGER
Danger of accident!
It is prohibited to fall below the minimum force $F1_{min}$ (test point 1) if more than 50 percent of the derrick ballast is pulled. If this is not observed, in case of slack guying from test point 1 (F1) and **derrick ballast on the ground**, the derrick ballast can suddenly lift off the ground due to the increased load torque and the boom system can suddenly move forward. This causes the load to swing back and forth too much, which could damage the main boom and the crane.
▶ Do not fall below the minimum force - $F1_{min}$.

LWE/LR 1600-2-001/18101-07-02/en

copyright © Liebherr-Werk Ehingen GmbH 2018

If more than 90 percent of the set derrick ballast is being pulled (ballast utilization bar greater than 90 percent) and the minimum force $F1_{min}$ (test point 1) is fallen below, all crane movements **that increase the load torque** and all crane movements **that decrease the load torque** are turned off. This also turns off the „spooling out“ movement of the winch.

DANGER
Danger of accident!
It is prohibited to fall below the minimum force $F1_{min}$ (test point 1) if more than 90 percent of the derrick ballast is pulled. If this is not observed and the load torque is decreased when the guying is slack at test point 1 (F1) and the derrick ballast is suspended, the derrick ballast can suddenly drop to the ground, causing the boom system to suddenly move backwards. As a result, the relapse cylinders can be pressed on the block and be overloaded. There is the danger that the relapse cylinders on the main boom and the derrick boom will be damaged. This causes the load to swing back and forth too much, which could damage the main boom and the crane.
▶ Do not fall below the minimum force - $F1_{min}$.

Note
▶ By activating the assembly operation, the test point 1 - minimum force ($F1_{min}$) is reduced by a few tons, which allows one to reverse the movement and retreat from the situation in which the $F1_{min}$ shut-off occurred.
▶ This is the only exception on the crane, where, after a shut-off, a load torque increasing movement may be continued in assembly operation.

DANGER
Danger of accident!
If the LICCON overload protection is bypassed, there is no further protection against crane overload. There is an increased danger of accidents.
Death, severe bodily injuries, property damage.
▶ The crane driver bears the complete and sole responsibility when bypassing the LICCON overload protection.

After a shut-off via $F1_{min}$, the force F1 on test point 1 must be increased by a movement. If the derrick ballast is suspended, this can be achieved by setting down the ballast.

If the assembly operation is already activated and the F1-force continues to drop below the minimum force $F1_{min}$, which was reduced in assembly operation, then the $F1_{min}$ shut-off can no longer be bypassed.

LWE/LR 1600-2-001/18101-07-02/en

copyright © Liebherr-Werk Ehingen GmbH 2018

12.4 Overload monitoring in operating mode with derrick ballast

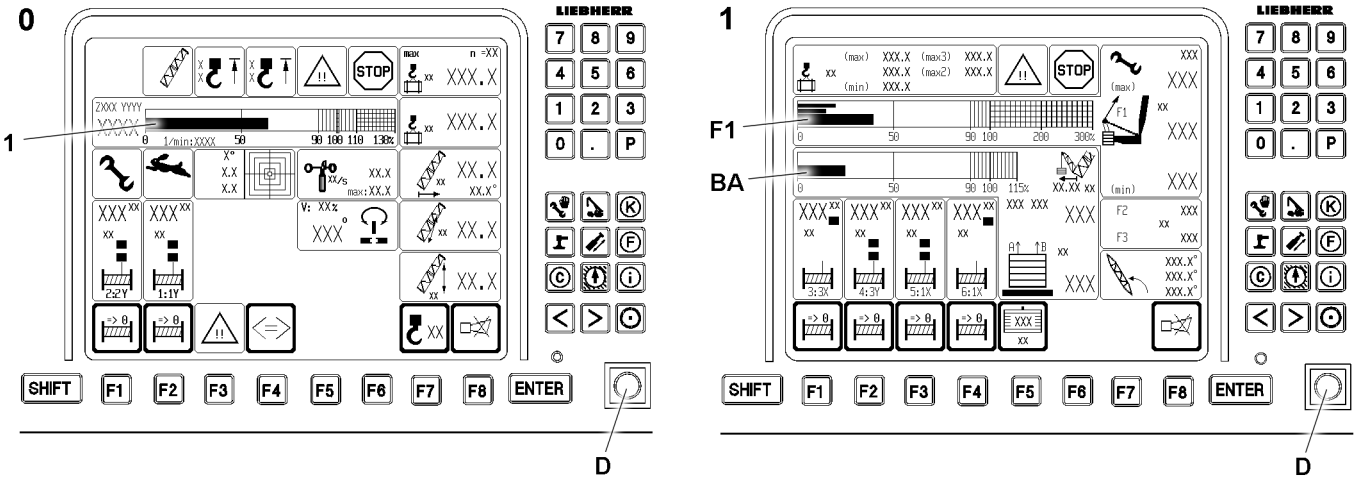

Fig.149282

In operating modes with derrick ballast, the „maximum load for the current crane condition“ is monitored two ways:

1. Monitoring of maximum load on the LICCON monitor 0
2. Monitoring of test point 1-operational maximum force on the LICCON monitor 1

12.4.1 Monitoring of maximum load on the LICCON monitor 0

It monitors the „maximum load according to load chart and reeving“.

In operating modes with derrick ballast, this is the maximum load of the current crane condition. It is displayed on LICCON monitor 0. The current utilization of the crane results from the load utilization bar (1) on LICCON monitor 0.

If the load utilization bar reaches 90 %, an advance warning is given in the form of a „notice icon“ and a „SHORT HORN“ on LICCON monitor 0.

At 100 % on the load utilization bar, the shut-off of all load moment increasing movements occurs with the „stop icon“ and the acoustical warning „HORN“ on LICCON monitor 0.

Note

▶ The „maximum load of the current crane condition“ can possibly be increased further, refer to section „utilization conditions“.

12.4.2 Monitoring of test point 1-operational maximum force (= $F1_{max}$ operation)

It is displayed on LICCON monitor 1. When F1 is greater than $F1_{max\text{-}shut\text{-}off\ value}$, a shut-off of all movements which could increase load torque occurs with the „stop icon“ and the acoustic warning „HORN“ by LICCON monitor 1.

LWE/LR 1600-2-001/18101-07-02/en

copyright © Liebherr-Werk Ehingen GmbH 2018

Note

- The maximum load can be safely monitored by the „LICCON overload protection“ itself.
- The „$F1_{max}$-monitoring“ is an additional monitoring function which shows the overload parallel to the „LICCON overload protection“.
- In all cases where the maximum load according to the load chart „max-load“ is less than the maximum load of the current set up configuration with optimal derrick ballast „max3-load“, which means „max-load“ is less than „max3-load“, when lifting the maximum load, the monitor display looks as if the „utilization bar of the crane“ is at 100 percent and the „F1 utilization bar“ is approximately at 100 percent.
- At the just completed LMB-Stop („current load“ / „max-load“ greater than 100 percent) $F1_{actual}$ can already lie just above $F1_{max}$ or just below. There is a certain tolerance due to the component weights and the wind influences. Since the maximum load can always be raised, shut-off will not occur at $F1_{actual}$ / $F1_{max}$ greater than 100 %. Shut-off will only occur at $F1_{actual}$ / $F1_{max\ operation\ shut\text{-}off\ value}$. For this crane, the following applies: $F1_{max\text{-}operation\ shut\text{-}off\ value}$ = $F1_{max\text{-}operation}$ + F1 addition for shut-off (see chapter 4.02). The $F1_{addition\ for\ shut\text{-}off}$ is selected such that $F1_{max\text{-}operation\ shut\text{-}off}$ should normally never happen. This shut-off provides an additional safety, particularly in cases with „max-load“ less than „max3-load“. For example, if the load weighing is far too low due to a sensor failure, then a load would be pulled which would be greater than the maximum permissible load without shut off of the LICCON overload protection. The crane could be overloaded. In this particular case, with the „max-load“ less than the „max3-load“, with $F1_{max}$ larger $F1_{max\text{-}operation\ shut\text{-}off\ value}$ the $F1_{max\ shut\text{-}off}$ triggers. In this case, the crane is already slightly overloaded, however shut-off prevents an overload in certain cases or toppling of the crane. This means that the $F1_{max\text{-}operation\ shut\text{-}off}$ can protect the crane from overload in certain cases.
- Make sure that the load weighing and the shut-off function reliably on the maximum load.

DANGER

The crane can topple over!

In cases with „max-load“ = „max3-load“, the $F1_{max}$ shut-off value does not offer safety. The $F1_{max}$ shut-off value is so high that the crane will probably topple over or be damaged before the shut-off value is reached.

- Carefully monitor the displays on LICCON monitor 1.

WARNING

Danger of accident!

- The test point 1-Operation-Maximum force not only depends on the current set up configuration but also on the force measured with the pressure sensors in the pull cylinders.
- If the pulled derrick ballast is larger, then the maximum permissible $F1_{max}$ force is generally reduced and vice versa.
- It is therefore important to carefully monitor the ballast weighing and the value for the pulled derrick ballast to ensure that this value is even plausible.

DANGER

The crane can topple over!

If the pulled derrick ballast value has been incorrectly determined and is too low, the calculated $F1_{max}$ may be too high and the crane could be overloaded or topple over without this becoming evident.

- Carefully monitor the displays on LICCON monitor 1.

copyright © Liebherr-Werk Ehingen GmbH 2018

12.4.3 Utilization conditions

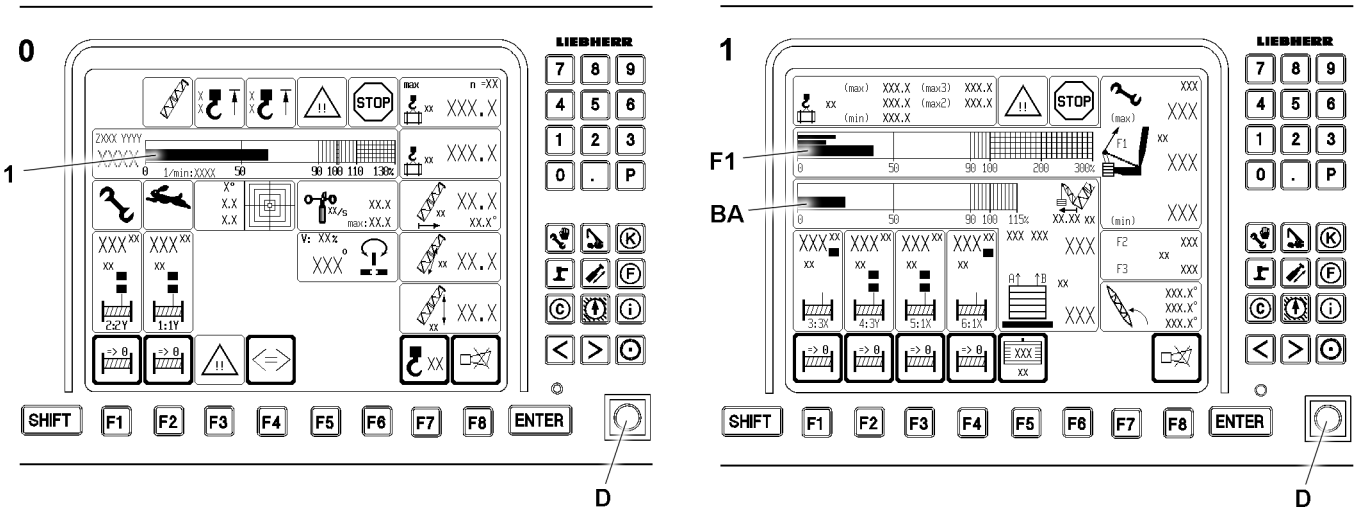

Fig.149282

The current utilization of the crane results from the „utilization bar of the crane“ **1** on the LICCON monitor 0.

Max. load:

– The „maximum load capacity in the current operating condition (**„max-load“**)“ is obtained, when the „utilization bar of the crane“ **1** displays 100 percent.
This is the case when the „utilization of the crane according to the load chart and reeving“ reaches 100 % („Current load“ is equal to the „Maximum load“).
When the „max-load“ is less than or equal to the „max2-load“, then the „max-load“ can be increased through:

  • Pulling up the derrick ballast, if the derrick ballast is not already suspended and the currently pulled derrick ballast is still smaller than the optimum derrick ballast.

Max2-load:

– The „maximum load of the current crane equipment“ (**„max2-load“**) is reached when the „utilization bar of the crane“ **1** is at 100 percent **and** the „derrick ballast utilization bar display“ **BA** is greater than or equal to 100 percent (the current derrick ballast is completely lifted off the ground), and the derrick ballast input value and the ballast weighing are correct.
This is the case when the „current load“ and the „max2-load“ reach 100 percent („current load“ is equal to the „max2-load“).
When the „max2-load“ is less than the „max3-load“, then the „max-load“ can be increased through:

  • Increasing the derrick ballast by adding additional ballast plates if the placed derrick ballast is still smaller than the optimum derrick ballast.

Max3-load:

– The „maximum load of the current set up configuration with optimum derrick ballast“ (**„max3-load“**) is obtained when the „crane utilization bar“ **1** is at 100 % **and** the „derrick ballast utilization bar display“ **BA** is at 100 % (the optimal derrick ballast is placed and completely lifted off the ground), and the derrick ballast input value and the ballast weighing are correct.
This is the case when the „current load“ and the „max3-load“ reach 100 percent („current load“ is equal to the „max3-load“).
Here, the optimum derrick ballast is already entirely pulled.
A further increase of the derrick ballast at this derrick ballast radius will not increase the load further than „max3-load“.

Note

▶ In some cases it may be possible to increase the load, in some cases reducing the derrick ballast radius as well; refer to the load chart manual or LICCON job planner.

LWE/LR 1600-2-001/18101-07-02/en

copyright © Liebherr-Werk Ehingen GmbH 2018

This also applies for:
- „Current load“ equal to „max-load“.
- „Current load“ equal to „max2-load“.

Activating assembly operation / bypass of the LICCON overload protection
- Activate assembly operation, see chapter 4.02

WARNING
The crane can topple over!
When the assembly operation is activated, the LICCON overload protection is exceeded.
In the event of deliberate improper use, the crane could collapse, the main boom can break off or the crane can topple over.
Death, severe bodily injuries, property damage.
- ▶ When the assembly operation is activated, only load torque reducing crane movements may be carried out up to a permissible operating and load range.
- ▶ Make sure that the assembly operation is turned off after reaching the permissible load range.
- ▶ The crane operator alone is completely responsible for his actions during a bypass of the LICCON overload protection.

Note
- ▶ The „Lift derrick ballast“ or „Lower derrick ballast“ movement requires utmost attention by the crane operator.

LWE/LR 1600-2-001/18101-07-02/en

copyright © Liebherr-Werk Ehingen GmbH 2018

12.5 Differential force monitoring for derrick ballast-guying

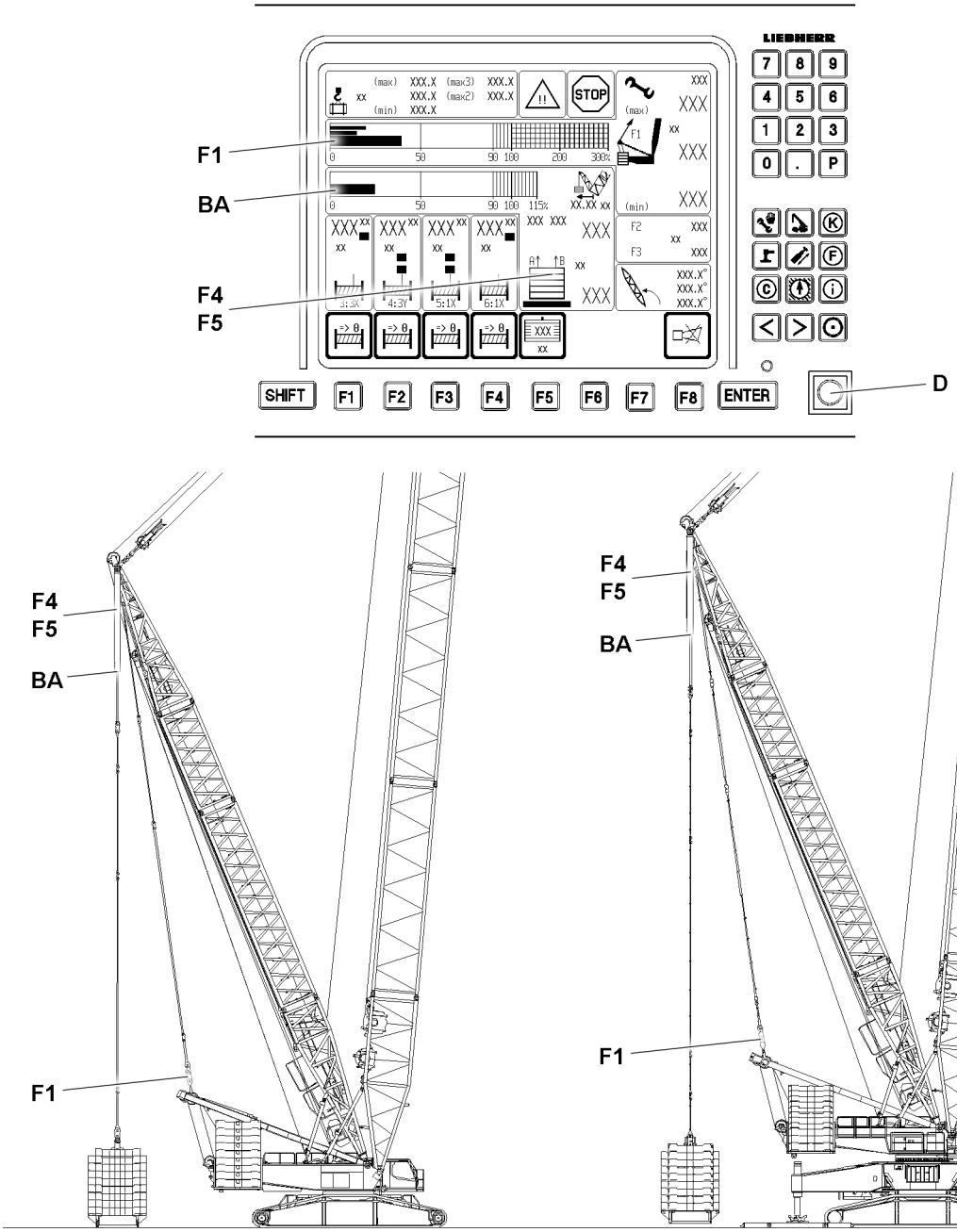

Fig.149281

In operating modes with derrick ballast, the difference of the forces of derrick ballast guying A and B is monitored on LICCON monitor 1.

DANGER
Danger of accident!
Large differences between these forces can damage the derrick end section and other crane components.
▶ There is a danger of accident.

The forces in the derrick ballast guyings A and B are shown and compared on LICCON monitor 1. If the difference exceeds a permissible value, an acoustic warning is issued and the two force values blink. However, **no shut-off of movements** occurs.

LWE/LR 1600-2-001/18101-07-02/en

copyright © Liebherr-Werk Ehingen GmbH 2018

If the difference of the forces of the derrick ballast guyings A and B exceeds the specified limit value, then this can have various causes:

- The flexing of the turntable.
- The ground under the derrick ballast is uneven.
- The crane is leaning to one side.
- The derrick ballast has been loaded on one side.
- The force measurement in one guying is incorrect.

The crane driver must recognize the correct cause and take countermeasures:

- The error, which caused the one-sided force, must be remedied.
- The following measures are permitted providing the ground is only slightly uneven:
  Lock one ballast cylinder and use the other ballast cylinder to „Lift the ballast“ or „Lower the ballast“ until the difference between the forces reduces. Ensure that the derrick ballast is not tilted at an inadmissible angle with respect to the crane, otherwise the derrick ballast guide and attachments will be damaged.
- If the sensor values are implausible: Check if the pressure sensors for the ballast weighing or the inputs of the ballast weighing are faulty. If necessary, remove the sensor or replace the CPU.

LWE/LR 1600-2-001/18101-07-02/en

copyright © Liebherr-Werk Ehingen GmbH 2018

13 Crawler operation with derrick ballast

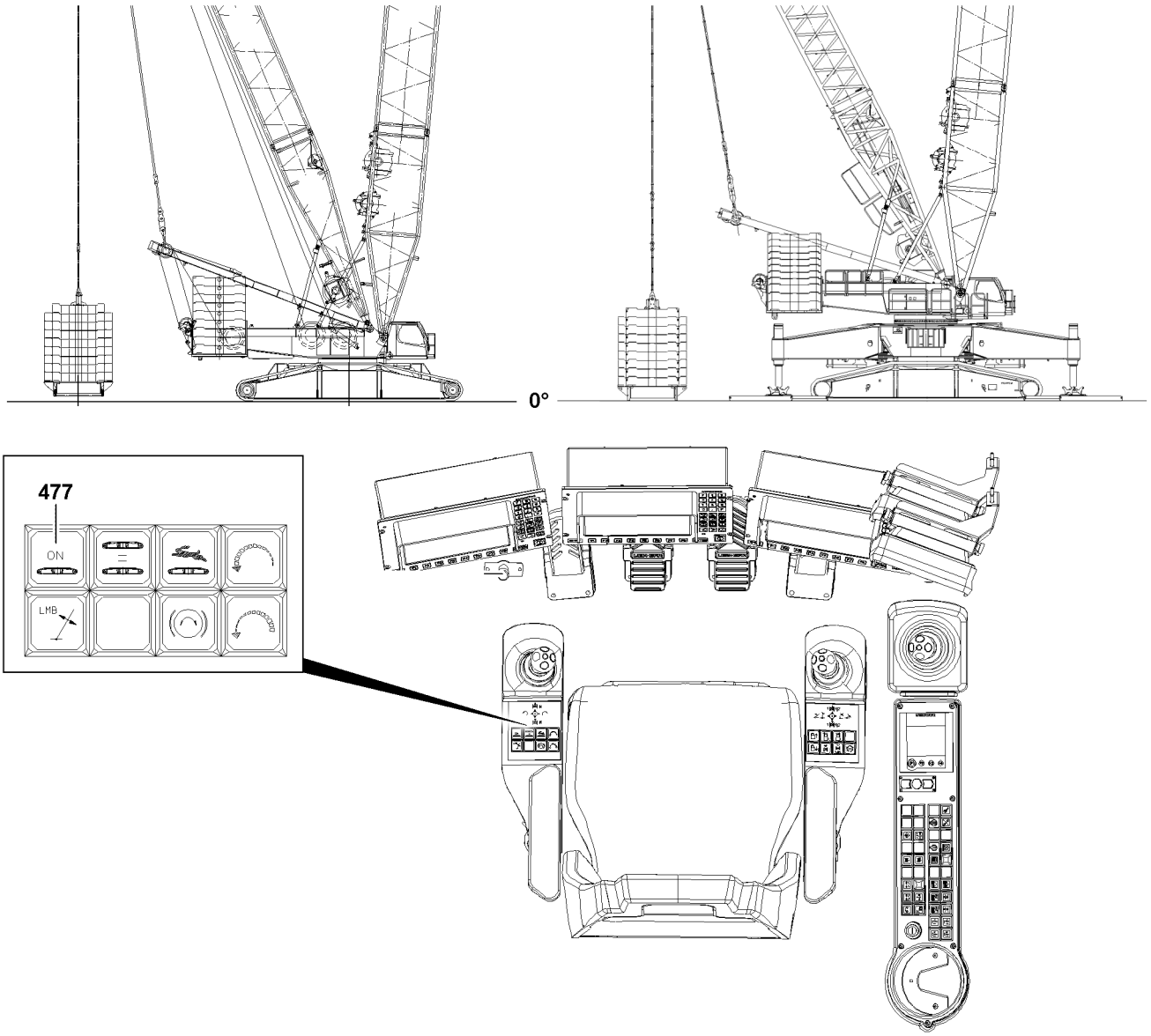

Fig.149287

13.1 Driving the crawler

Driving with raised, suspended derrick ballast.

LWE/LR 1600-2-001/18101-07-02/en

copyright © Liebherr-Werk Ehingen GmbH 2018

Make sure that the following prerequisites are met:
- The derrick ballast is lifted off the ground.
- The derrick ballast icon on LICCON monitor 1 is shown in the suspended state.
- The derrick ballast is horizontally aligned.
- The ground is able to support the weight of the crane, the load and the derrick ballast.

Note
- ▶ Observe the danger notes, see chapter 4.10.
- ▶ Crawler driving is released when all four ground contact rollers are **not in contact with the ground**.
- ▶ The crawler operation must be switched on with the switch **477**.

DANGER
Danger of accident!
If the following points are not observed, the crane can topple over.
Death, severe bodily injuries, property damage.
- ▶ There are no persons or objects in the danger zone.
- ▶ The travel range must be monitored by cameras or a supervisor.
- ▶ Only drive at the lowest possible speed.
- ▶ Avoid jerky driving movements.
- ▶ The attached load and suspended derrick ballast must be secured to prevent it from swinging. If the derrick ballast swings by more than +/- 0.5 m , set the derrick ballast quickly on the ground with the pull cylinders. In this connection, the upper load threshold at test point 1 (F1) may not be exceeded.
- ▶ Steering maneuvers are prohibited.
- ▶ Uphill or downhill travel is prohibited.

14 Disassembly

WARNING
Danger of falling!
During assembly / disassembly, inspection and maintenance work, personnel must be secured with appropriate aids to prevent them from falling.
If this is not observed, the assembly personnel can fall down.
Death, severe bodily injuries, property damage.
- ▶ All work at a height, when there is a danger of falling, must be carried out with suitable aids.
- ▶ If aids are not available and work cannot be carried out from the ground, then assembly personnel must secure themselves with the supplied fall arrest system to prevent falling, see chapter 2.04.
- ▶ If fall protection equipment is available, then it must be used, see chapter 2.06.
- ▶ When lifting, lowering, swinging crane parts in and out, no persons may remain in the danger zone.
- ▶ If railings are present on the components, then they must be brought into the corresponding position and secured for assembly / disassembly work.
- ▶ Only step on the aids, ladders and catwalks with clean shoes.
- ▶ Keep aids, ladders and catwalks free of heavy dirt, snow and ice.
- ▶ During all assembly and disassembly work, maintenance work and inspections, travel or crane operation is prohibited.
- ▶ Remaining on a suspended load is prohibited.
- ▶ Stepping or walking on crane components and lattice sections, which have an incline of more than 20° is prohibited.
- ▶ For all assembly work, the crane operator of the main crane must be in voice contact with the crane operator / crane operators of the auxiliary crane / auxiliary cranes.
- ▶ For assembly / disassembly tasks, the crane operator may only initiate crane movements when the responsible guide has explicitly released the movement.

LWE/LR 1600-2-001/18101-07-02/en

copyright © Liebherr-Werk Ehingen GmbH 2018

WARNING
Danger of impact / crushing!
When installing / removing crane components with the auxiliary crane, crane components can start to swing back and forth.
When lifting / lowering and positioning crane components, there is an increased danger of impacts / crushing.
Death, severe bodily injuries, property damage.
▶ Make sure that personnel cannot be caught by components.
▶ When working in danger zones: Use aids to protect limbs.
▶ Guide components with suitable aids to minimize oscillation.

DANGER
The components can fall down!
If the corresponding component is disengaged from the auxiliary crane before the corresponding component is pinned, then the corresponding component can fall down.
Death, severe bodily injuries, property damage.
▶ Do not disengage the auxiliary crane until the respective component is pinned and secured.

Make sure that the following prerequisites are met:
– The crane is properly supported and horizontally aligned.
– An auxiliary crane is available.
– The counterweight has been installed on the turntable according to the load chart.
– The maximum ground unevenness for the placement surface of the derrick ballast is plus / minus 1°.
– The LICCON overload protection has been set according to the data in the load chart.
– The LICCON overload protection settings have been compared with the actual set up configuration.

15 Setting down the suspended ballast pallet

WARNING
Danger of toppling the ballast stack!
The placement surface for the derrick ballast must be level, horizontal and of sufficient load bearing capacity, otherwise the ballast stacks can tip over.
Death, severe bodily injuries, property damage.
▶ Check the horizontal position of the crane during the set down procedure.
▶ Check the horizontal position of the derrick ballast during the set down procedure.
▶ Constantly check the differential forces in the guying on LICCON monitor 1.
▶ It is strictly prohibited for anyone to stand under the derrick ballast or in any part of the danger zone during the set down procedure.

Make sure that the following prerequisites are met:
– The placement surface for the derrick ballast must be level, horizontal and of sufficient load bearing capacity.
– A guide or crane driver monitor the setting down of the derrick ballast and the load.

▶ Press the button **445**.

Result:

– The piston rods of the pull cylinders extend.
– The derrick ballast is lowered.

▶ When the suspended ballast pallet touches the ground, the ground contact switches are actuated.

Result:

– The **turning the turntable** and **driving the crawler** crane movements turn off.

LWE/LR 1600-2-001/18101-07-02/en

copyright © Liebherr-Werk Ehingen GmbH 2018

16 Removing the ballast plates

Make sure that the following prerequisite is met:
– The retaining chains are disassembled.

Note
▶ The ballast plates are marked with their own weights.

WARNING
The crane can topple over!
If more than 20 t are removed with one lift from a ballast stack or if the ballast is removed asymmetrically, then the crane can topple over.
Death, severe bodily injuries, property damage.
▶ A weight difference between the right and left ballast stack of more than 20 t * is prohibited.
▶ Alternately remove no more than maximum 20 t ballast assemblies from the ballast stack, symmetrically on the left and right.

16.1 Removing the ballast plates, fastening system: „Twistlock“

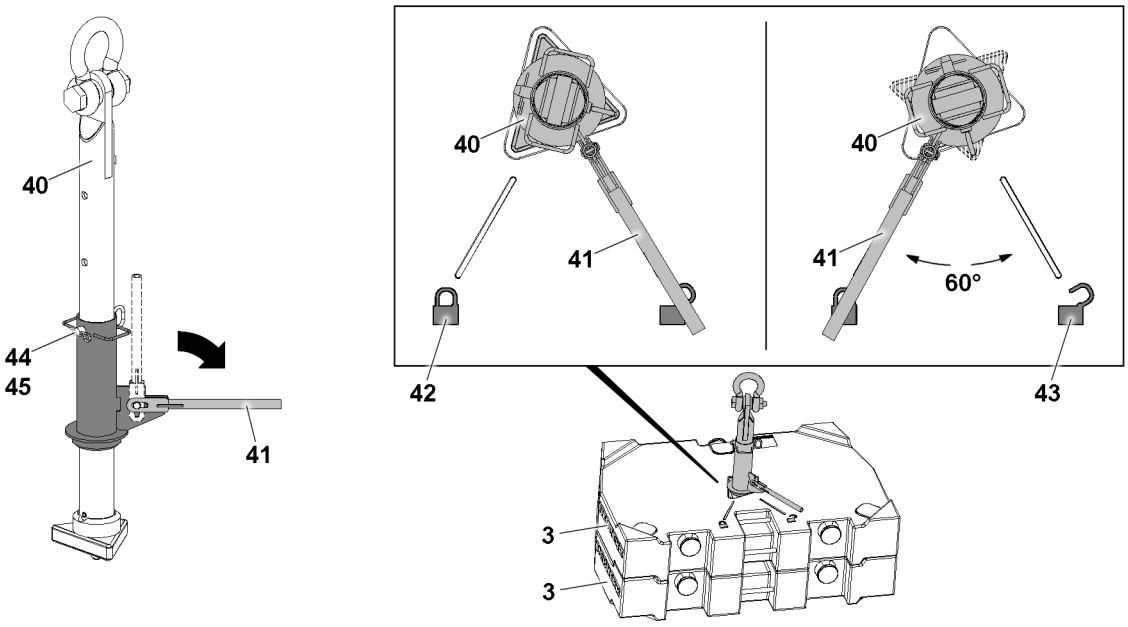

Fig.128899: Ballast plates, fastening system: „Twistlock“

DANGER
Danger of accident!
If more than the permissible two ballast plates are lifted with the receptacle stud, the receptacle stud will be overloaded and can be damaged.
Death, severe bodily injuries, property damage.
▶ Make sure that the ballast plates are placed correctly in the centerings.
▶ Replace damaged ballast plates.

To remove the ballast plate(s) **3**, use the receptacle stud **40**.

Before the receptacle stud **40** is guided into the ballast plates, it must be ensured that the length of the receptacle stud **40** is set correctly. The length of the receptacle stud **40** can be adjusted with the pin **44**.

If the length of the receptacle stud **40** is to be adjusted:
▶ Release and unpin the pin **44**.

LWE/LR 1600-2-001/18101-07-02/en

copyright © Liebherr-Werk Ehingen GmbH 2018

- ▶ Adjust the length of the receptacle stud by moving the receptacle stud **40**.
- ▶ Insert the pin **44** and secure with the spring retainer.
- ▶ Attach the receptacle stud **40** to the auxiliary crane and guide it into the ballast plate(s).
- ▶ Pull the lever **41** up and fold it down.
- ▶ Turn the lever **41** 60° until the lever **41** points to the icon **42**.

Result:

– The receptacle stud **40** is locked with the ballast plate.

- ▶ Lift the ballast plate with the receptacle stud **40** and remove it from the ballast stack or the suspended ballast pallet.
- ▶ Turn the lever **41** 60° until the lever **41** points to the icon **43**.

Result:

– The receptacle stud **40** is unlocked from the ballast plate.

- ▶ Carefully pull the receptacle stud **40** out of the ballast plate.
- ▶ Alternately remove the ballast plates on both sides.

16.2 Removing the ballast plates, fastening points: Bitt

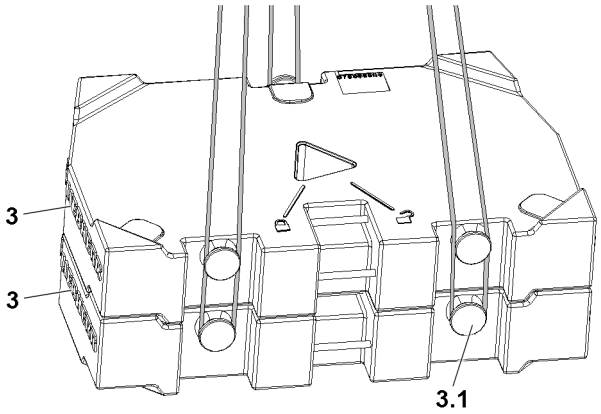

Fig.128900: Ballast plates, fastening system: „Bitt“

WARNING
Falling ballast plates!
If more than the permissible loads are lifted, then the bitts **3.1** are overloaded and the ballast plates can fall down.
Death, severe bodily injuries, property damage.
- ▶ Lift no more than maximum 20 t with the ropes, 3 fastening points.
- ▶ Replace damaged ballast plates immediately.

WARNING
Incorrect handling of the fastening equipment!
If fastening equipment cannot be attached correctly and if it is not secured sufficiently to prevent it from loosening up, loads can fall down.
Death, severe bodily injuries, property damage.
- ▶ Make sure that the fastening equipment is correctly attached on the bitts **3.1** and that it is secured sufficiently to prevent it from loosening up.

Note
- ▶ Remove the ballast plates individually or as a ballast assembly, maximum 20 t.
- ▶ The weight difference between the outer ballast stacks no more than maximum 20 t.

LWE/LR 1600-2-001/18101-07-02/en

copyright © Liebherr-Werk Ehingen GmbH 2018

▶ Lift the ballast plate **3** or ballast assembly and remove it from the ballast stack or the suspended ballast pallet.

17 Disassembling the suspended ballast pallet

The unpinning of the erection racks differs due to the following prerequisites:
– The suspended ballast guide* is assembled: Unpin on the suspended ballast guide.
– The suspended ballast guide* is **not** assembled: Unpin on the D-guy rods.

Make sure that the following prerequisites are met:
– The ballast plates are removed.
– The suspended ballast pallet is standing on the ground.

17.1 Inserting the retaining pins

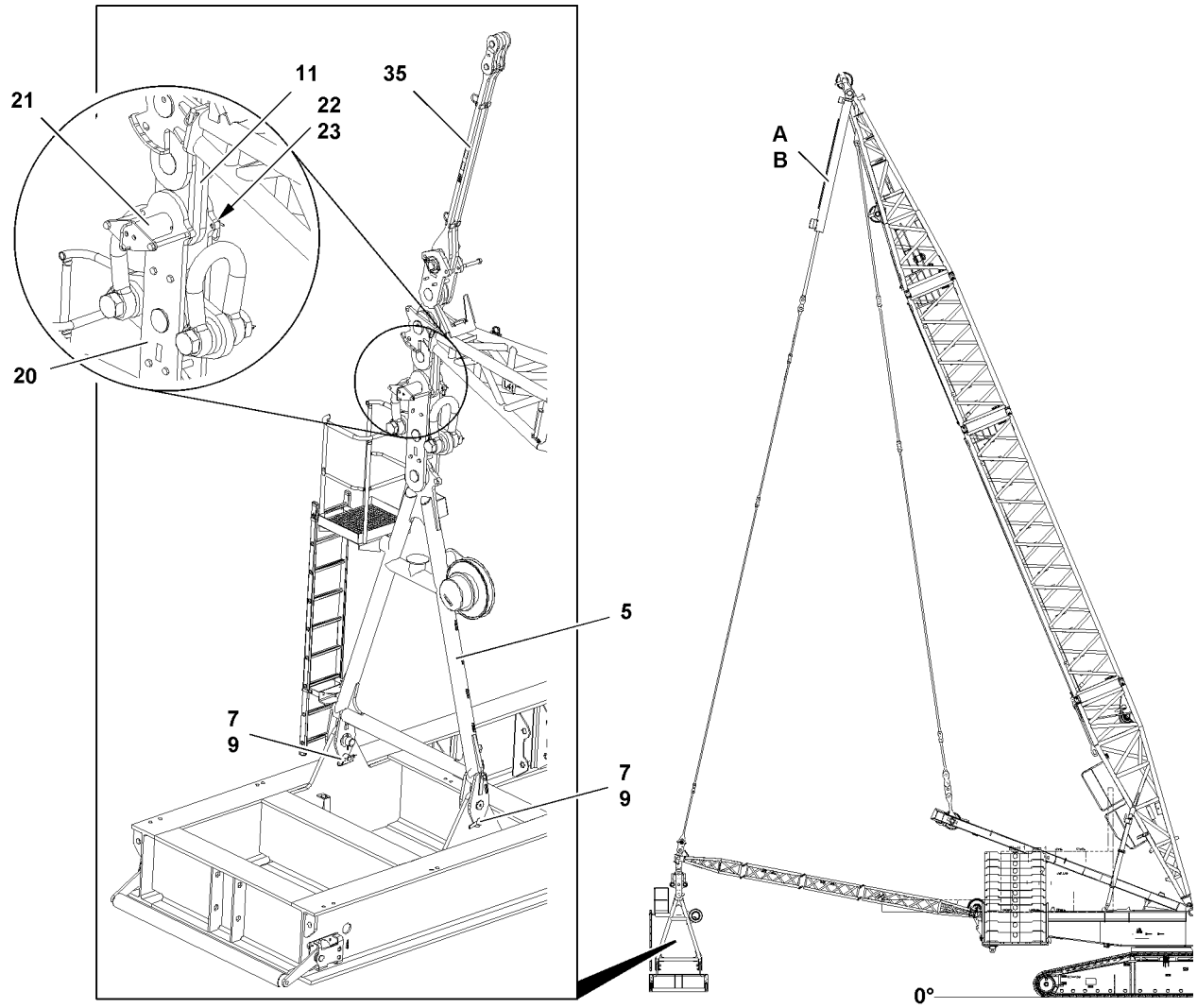

Fig.119254: Unpinning the suspended ballast pallet on the suspended ballast guide

WARNING
Unsecured erection racks!
Death, severe bodily injuries, property damage.
▶ Secure the erection frames to prevent them from tipping over: Pin and secure the retaining pins **7**.

copyright © Liebherr-Werk Ehingen GmbH 2018

▶ Insert the retaining pins **7** on the erection racks on both sides and secure with spring retainers **9**.

17.2 Unpinning the suspended ballast pallet on the suspended ballast guide*

WARNING
Unsecured erection racks!
Death, severe bodily injuries, property damage.
▶ Make sure that the erection racks are secured with retaining pins **7** to prevent them from tipping over.

The erection racks are unpinned at two points. The unpinning procedure is described for one pin as an example.

▶ Relieve the D-guy rods until the pin **21** can be unpinned.
▶ Unpin the suspended ballast guide on the bracket **20**: Remove the spring retainer **23** and spacer **22** and unpin pins **21**.
▶ Unpin the second erection rack.

Note
▶ For the LR1600/2-W, the suspended ballast pallet must be unpinned on the D-auxiliary rods.
▶ The disassembly of the D-auxiliary rods is described in section „Disassembling the D-auxiliary rods for the suspended ballast“.

LWE/LR 1600-2-001/18101-07-02/en

copyright © Liebherr-Werk Ehingen GmbH 2018

17.3 Unpinning the suspended ballast pallet on the D-guy rods

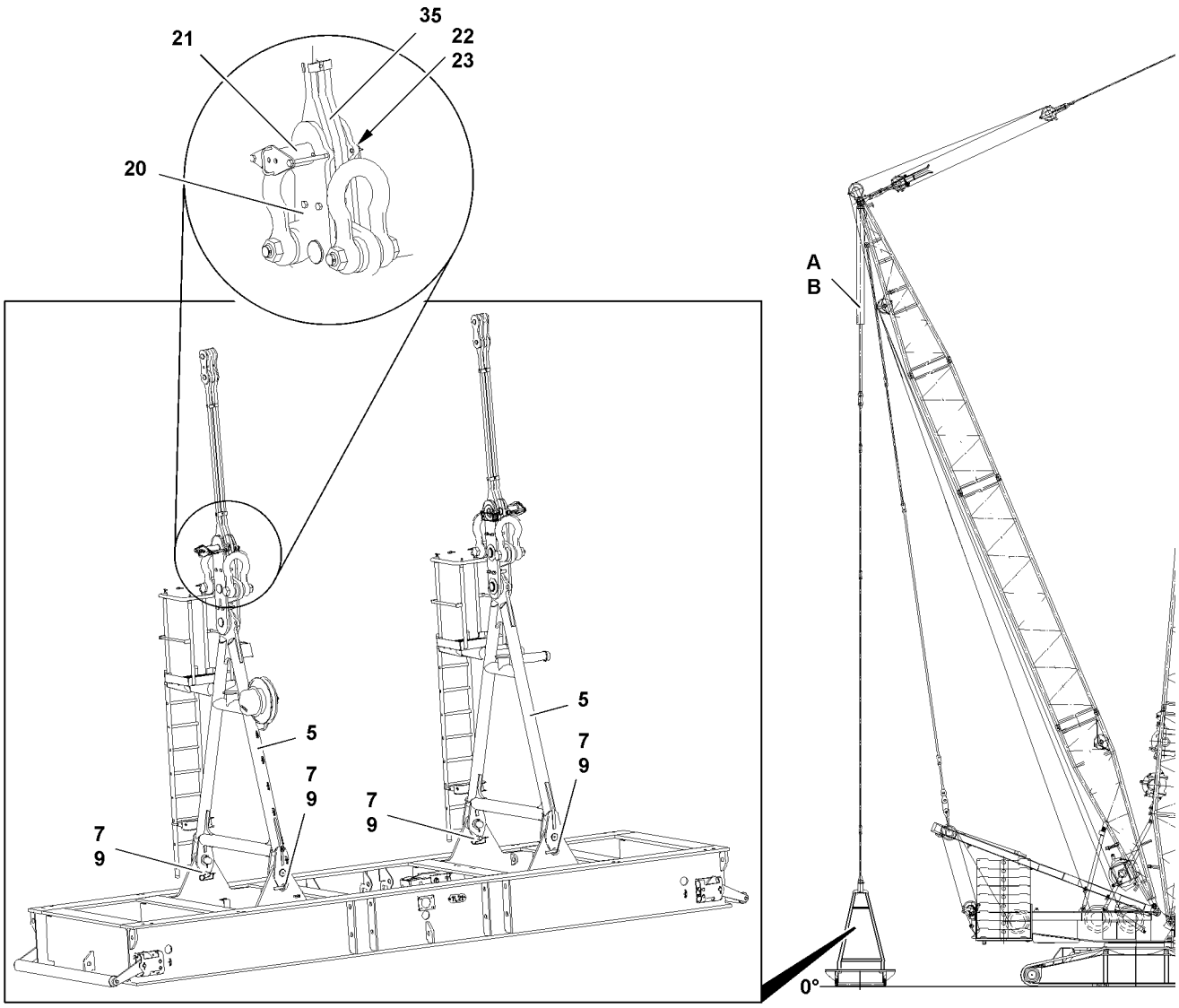

Fig.119253: Unpinning the suspended ballast pallet on the D-guy rods

WARNING
Unsecured erection racks!
Death, severe bodily injuries, property damage.
▶ Make sure that the erection racks are secured with retaining pins **7** to prevent them from tipping over.

The erection racks are unpinned at two points. The unpinning procedure is described for one pin as an example.

▶ Relieve the D-guy rods until the pin **21** can be unpinned.
▶ Unpin the D-guy rod **35** on the bracket **20**: Remove the spring retainer **23** and spacer **22** and unpin pins **21**.
▶ Unpin the second erection rack.

LWE/LR 1600-2-001/18101-07-02/en

copyright © Liebherr-Werk Ehingen GmbH 2018

17.4 Removing the consoles for ballast centering

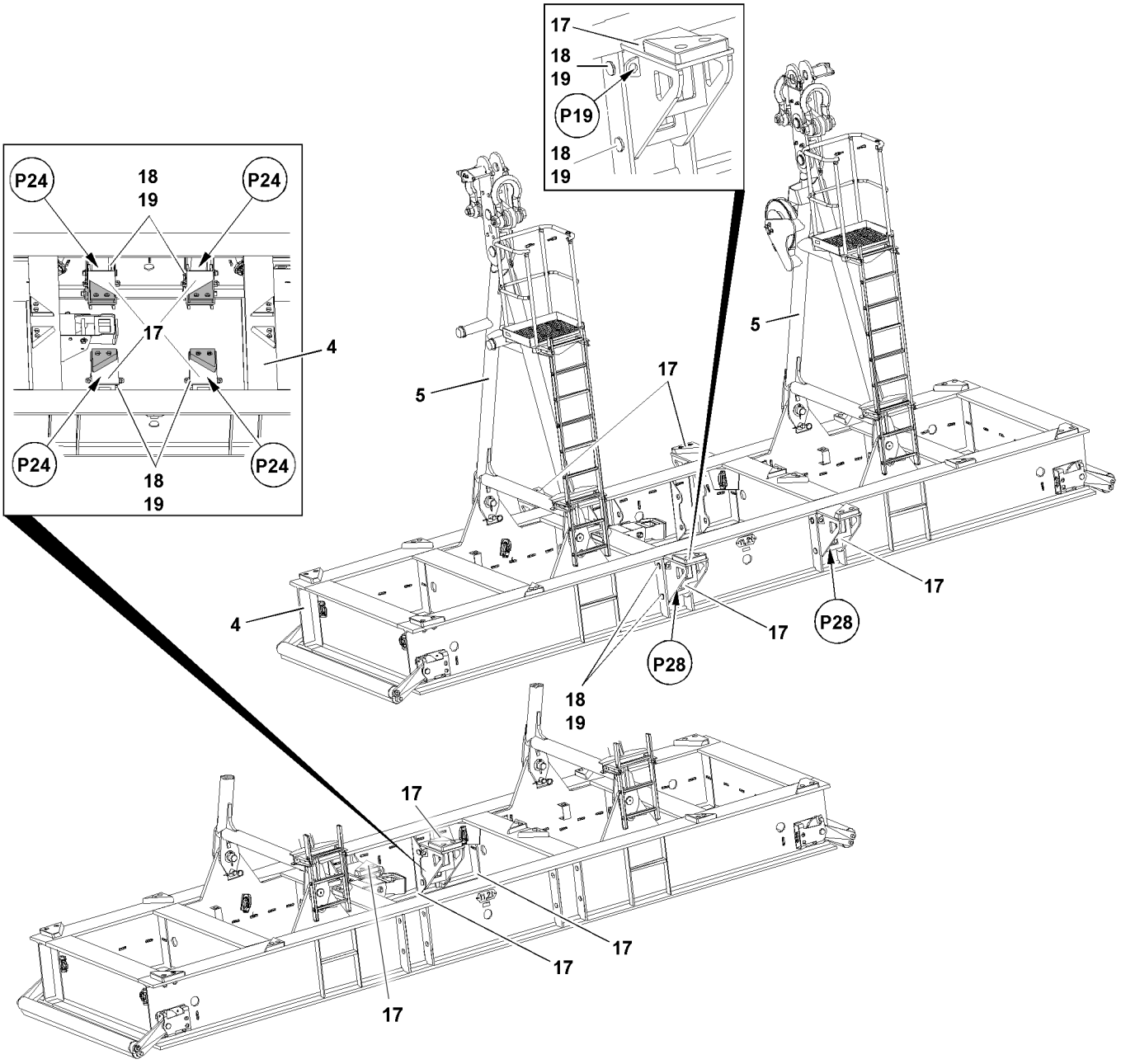

Fig.149292: Removing the consoles for ballast centering

Make sure that the following prerequisites are met:
- The erection racks **5** are in the assembly position.
- The ballast plates are completely removed from the suspended ballast pallet.

Note
- ▶ The disassembly is described as an example on one console for ballast centering **17**.
- ▶ The disassembly of the additional consoles for ballast centering **17** is identical.

- ▶ Fasten the console for ballast centering **17** to the auxiliary crane at points **P19**.
- ▶ Unpin the console for ballast centering **17** at point **P28**: Remove the spring retainer **19** and unpin the pin **18**.
- ▶ Lift the console for ballast centering **17** with the auxiliary crane from the operating position **P28**.
- ▶ Swing in the console for ballast centering **17** to the park position **P24** and pin with the pin **18** and secure with the spring retainer **19**.

LWE/LR 1600-2-001/18101-07-02/en

copyright © Liebherr-Werk Ehingen GmbH 2018

When the console for ballast centering **17** is pinned and secured properly in the park position **P24**:
- ▶ Remove the auxiliary crane.
- ▶ Assemble additional consoles for ballast centering **17** in the park position.

17.5 Taking down the erection racks

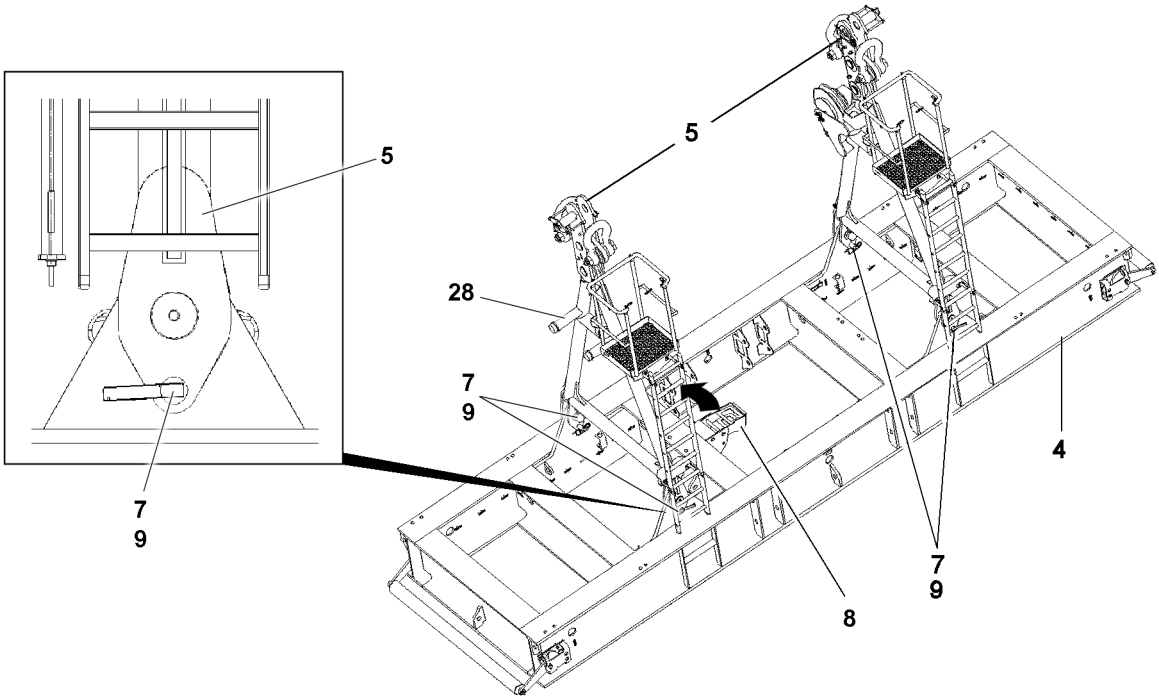

Fig.149293: Taking down the erection racks

Make sure that the following prerequisites are met:
- The consoles for ballast centering **17** are in the park position.
- The support for the erection rack **8** is in the operating position.

Note
- ▶ Take the erection rack **5** down first with the side supports **28**.

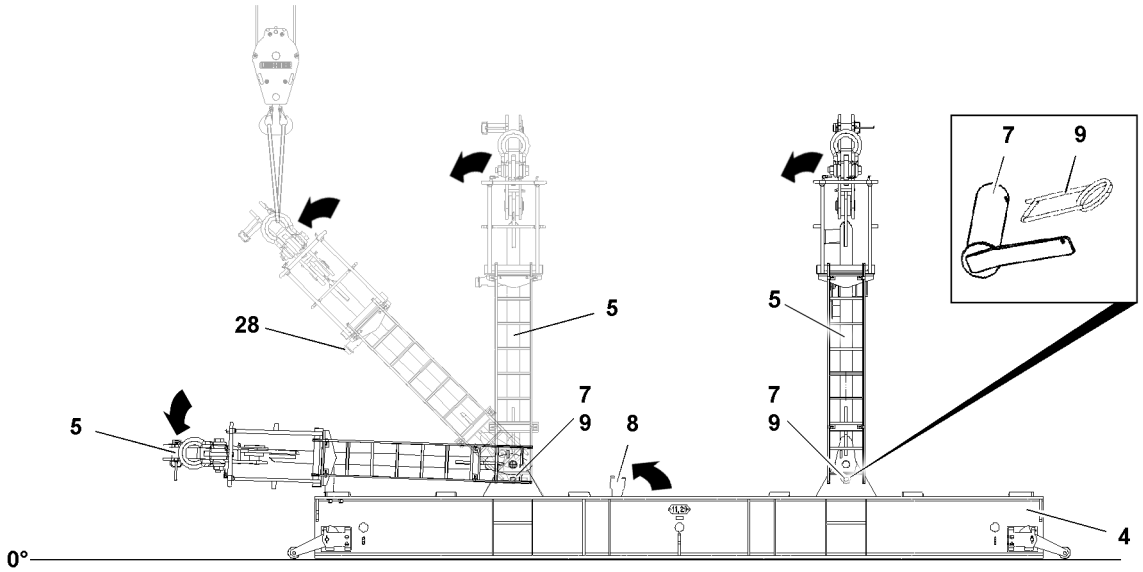

Fig.149294: Taking the first erection rack down

LWE/LR 1600-2-001/18101-07-02/en

copyright © Liebherr-Werk Ehingen GmbH 2018

WARNING
Danger of accident during disassembly of the erection racks!
Before unpinning the retaining pins **7**, the erection racks must hang securely on the auxiliary crane, otherwise the erection racks can tip over.
Death, severe bodily injuries, property damage.
- ▶ Never unpin the retaining pins of unsecured or unsupported erection racks.
- ▶ It is prohibited for anyone to remain under the erection racks or within the complete danger zone during the pinning and unpinning procedure.

- ▶ Fasten the erection rack **5** to the auxiliary crane and secure it to prevent it from tipping over.
- ▶ Remove both spring retainers **9** and unpin the retaining pins **7**.
- ▶ Insert the retaining pins **7** in the transport receptacle.
- ▶ Lower the erection rack **5** with the auxiliary crane until the supports **28** are resting on the suspended ballast frame **4**.

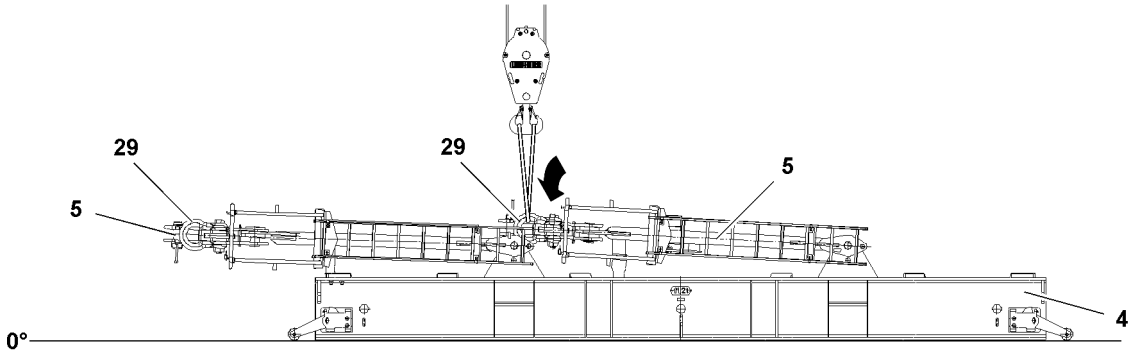

Fig.149295: Taking the second erection rack down

When the first erection rack is properly taken down:
- ▶ Take down the second erection rack on the support for the erection rack **8**.
- ▶ Remove the shackles **29** on the erection racks **5** and store them properly.

LWE/LR 1600-2-001/18101-07-02/en

copyright © Liebherr-Werk Ehingen GmbH 2018

18 Disassembling the suspended ballast guide*

18.1 Disassembling the guy rods on the suspended ballast guide

18.1.1 Standard crane

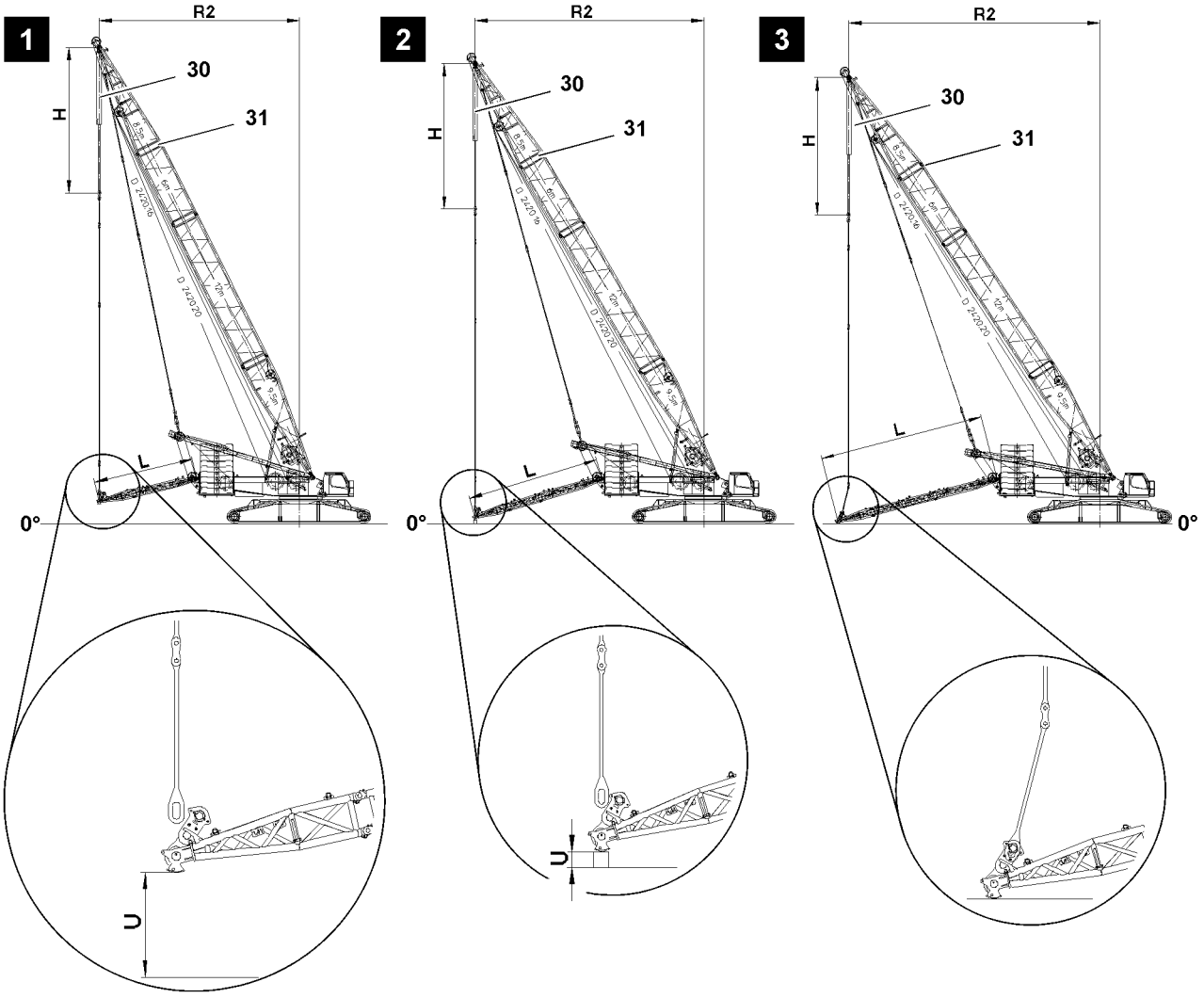

Fig.118919: Assembly positions depending on the derrick ballast radius

Depending on the derrick ballast radius, the suspended ballast guide is supported before disassembly on the turntable. Height of the substructure **U**, see chart.

To unpin the end section on the guy rods, the derrick radius **R2** and the dimension **H** are set depending on the derrick ballast radius with the derrick boom **31** and the hoist cylinders **30**, see chart.

Derrick ballast radius R1	Illustration	L	R2	H	U
15.0 m	**1**	7575 mm	15133 mm	11000 mm	1465 mm
17.5 m	**2**	10025 mm	17348 mm	11000 mm	250 mm
20.0 m	**3**	12475 mm	19000 mm	10400 mm	End section is placed on the ground

LWE/LR 1600-2-001/18101-07-02/en

copyright © Liebherr-Werk Ehingen GmbH 2018

Make sure that the following prerequisite is met:
– The suspended ballast pallet has been properly disassembled from the suspended ballast guide.

▶ Set the derrick boom **31** and the hoist cylinder **30** to the derrick radius **R2** and dimension **H**.

When the 15.0 m derrick ballast radius is disassembled:
▶ Lower the suspended ballast guide with the auxiliary crane to height **U** or take down the end section on a substructure, height **U**.

When the 17.5 m derrick ballast radius is disassembled:
▶ Lower the suspended ballast guide with the auxiliary crane and take down the end section on the substructure, height **U**.

When the 20.0 m derrick ballast radius is disassembled:
▶ Lower the suspended ballast guide with the auxiliary crane and take the end section down on the ground.

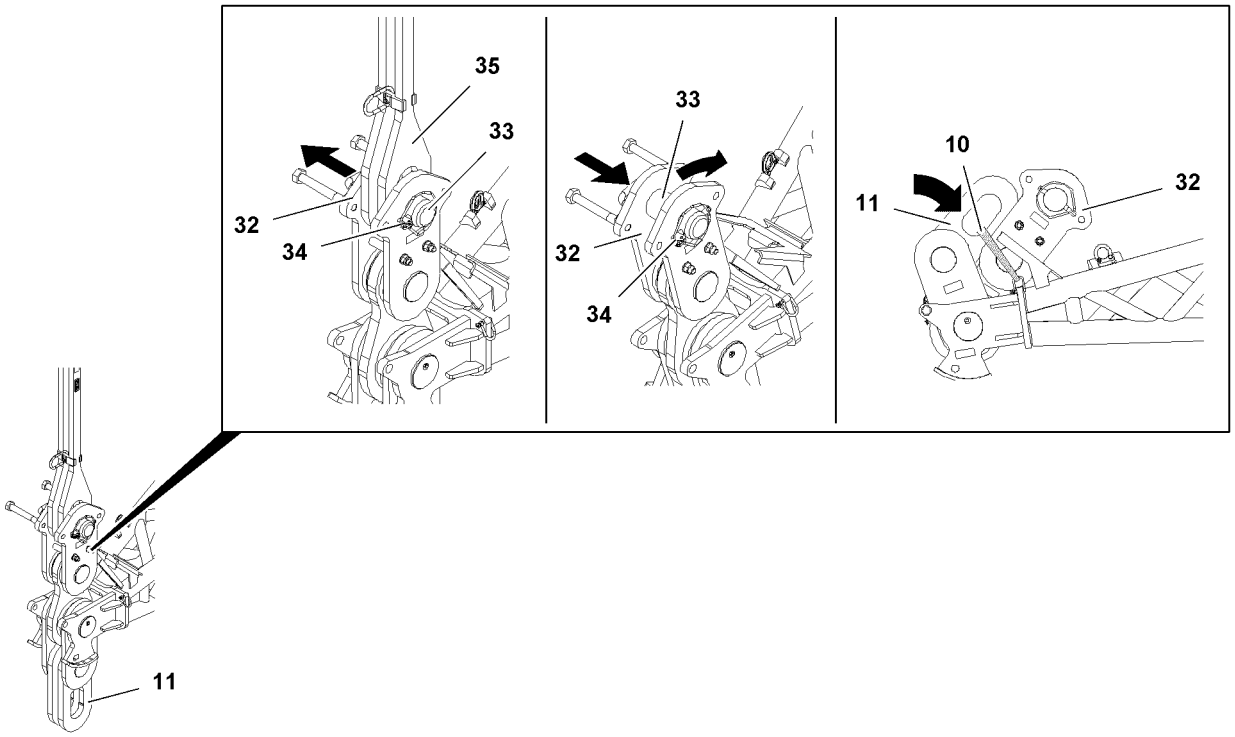

Fig.119200: Disassembling the guy rods on the end section of the suspended ballast guide

The guy rods are removed on both sides on the end section.

The pin procedure is described for one guy rod as an example.

WARNING
Swinging guy rod **35**!
Swinging guy rods can sheer off limbs or cause serious crushing.
Death, severe bodily injuries, property damage.
▶ Before unpinning, make sure that the bracket **32** is secured to prevent it from folding down.

When the 20.0 m derrick ballast radius is disassembled:
▶ Before unpinning, make sure that the guy rod **35** is secured to prevent it from swinging.

▶ Unpin the guy rod **35** on the bracket **32**: Remove the locking pin **34** and unpin the pin **33**.
▶ Lift the guy rod **35** and fold the bracket **32** in direction of the pivot section.
▶ Insert the pin **33** and secure with the locking pin **34**.
▶ Fold the bracket **11** into the transport position in direction of the bracket **32**.
▶ Secure the bracket **11** and bracket **32** with the transport strap **10**.
▶ Unpin the second guy rod **35** on the end section.

LWE/LR 1600-2-001/18101-07-02/en

copyright © Liebherr-Werk Ehingen GmbH 2018

18.1.2 Narrow track crane

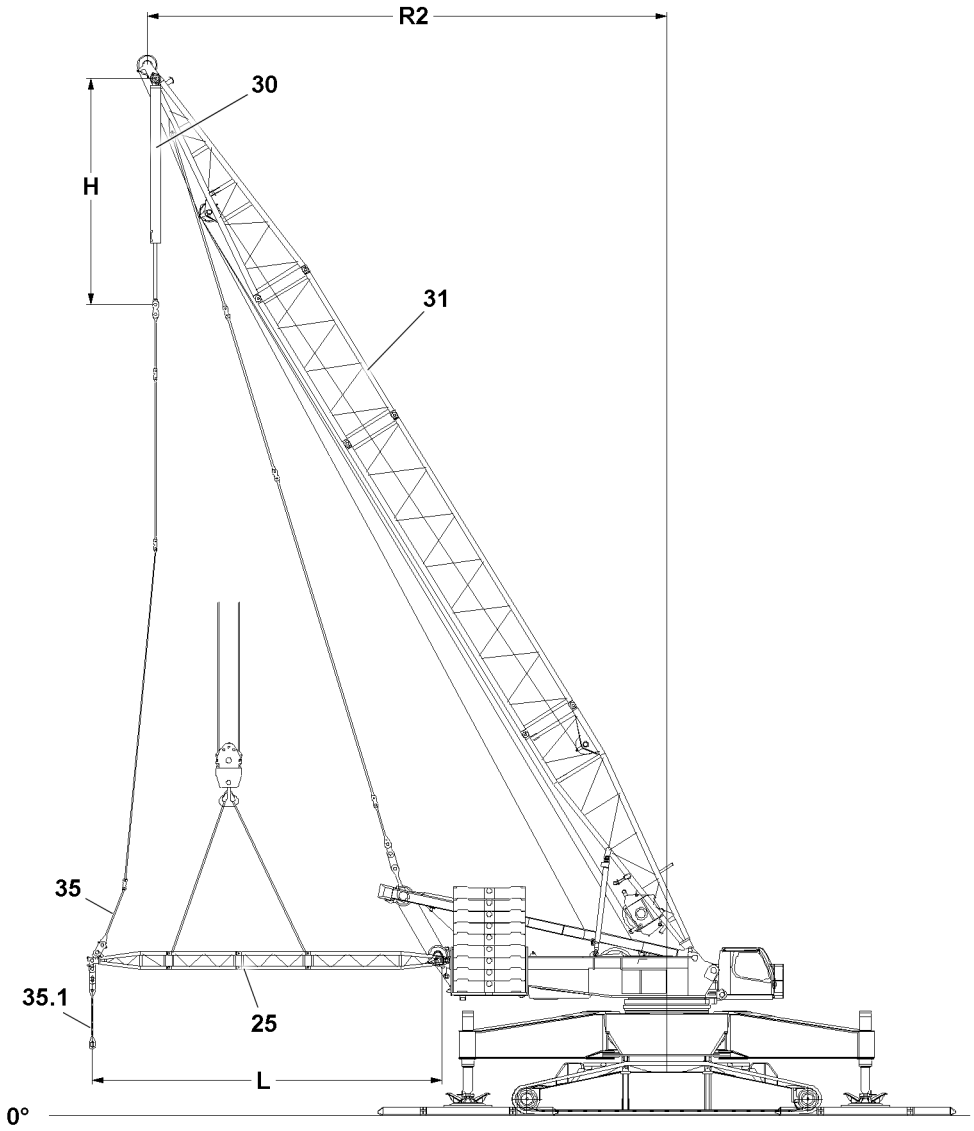

Fig.146512: Assembly positions depending on the derrick ballast radius

Make sure that the following prerequisites are met:
- The suspended ballast pallet has been properly disassembled from the suspended ballast guide.
- The suspended ballast guide is safely held by the auxiliary crane.

Disassembling the D-auxiliary rods for the suspended ballast

WARNING
Falling D-auxiliary rods!
Death, severe bodily injuries, property damage.
▶ Make sure that no personnel is within the danger zone during the disassembly of the D-auxiliary rods **35.1**.

▶ Fasten the D-auxiliary rods **35.1** to the auxiliary crane.

When the D-auxiliary rods **35.1** are safely held by the auxiliary crane:
▶ Unpin the D-auxiliary rods **35.1** on the suspended ballast guide **25**.
▶ Swing the D-auxiliary rods **35.1** out with the auxiliary crane and take it down.

LWE/LR 1600-2-001/18101-07-02/en

copyright © Liebherr-Werk Ehingen GmbH 2018

Disassembling the D-guy rods

To be able to unpin the end section of the suspended ballast guide **25** on the D-guy rods, set the derrick boom **31** to the derrick boom radius **R2** and the hoist cylinder **30** to the dimension **H**, see chart.

Derrick ballast radius R	L	R2	H
15.0 m	7575 mm	15000 mm	—
17.5 m	10025 mm	17500 mm	—
20.0 m	12475 mm	18000 mm	7956 mm

Make sure that the following prerequisite is met:
– The suspended ballast guide is safely held by the auxiliary crane.

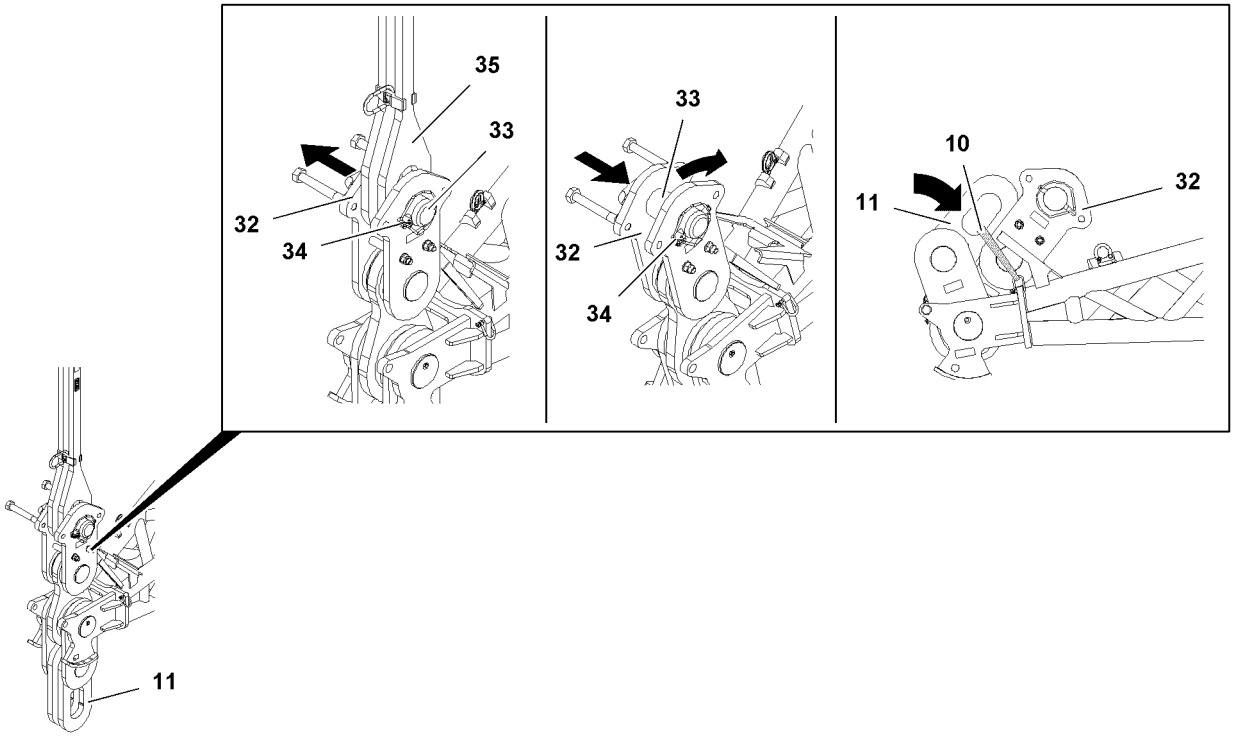

*Fig.119200: Disassembling the guy rods on the end section of the suspended ballast guide **25***

▶ On both sides, take the brackets **11** down to the rear or fold them down.

The D-guy rods **35** are pinned on both sides on the end section of the suspended ballast guide. The pin procedure is described on the example for one D-guy rod.

▶ Remove the locking pin **34** and unpin the pin **33**.
▶ Position the brackets **32** and the D-guy rods **35** until the pin bores align.
▶ Pin the D-guy rods **35** on the brackets **32**: Insert the pin **33** and secure with the locking pin **34**.
▶ Assemble the second D-guy rod **35** on the end section of the suspended ballast guide.

Result:

– The suspended ballast guide **25** is disassembled on the D-guying.

LWE/LR 1600-2-001/18101-07-02/en

copyright © Liebherr-Werk Ehingen GmbH 2018

18.2 Disassembling the suspended ballast guide on the turntable frame

18.2.1 Unpinning the suspended ballast guide on the turntable

Make sure that the following prerequisites are met:
- The suspended ballast pallet is properly disassembled.
- The suspended ballast guide is safely held by the auxiliary crane.

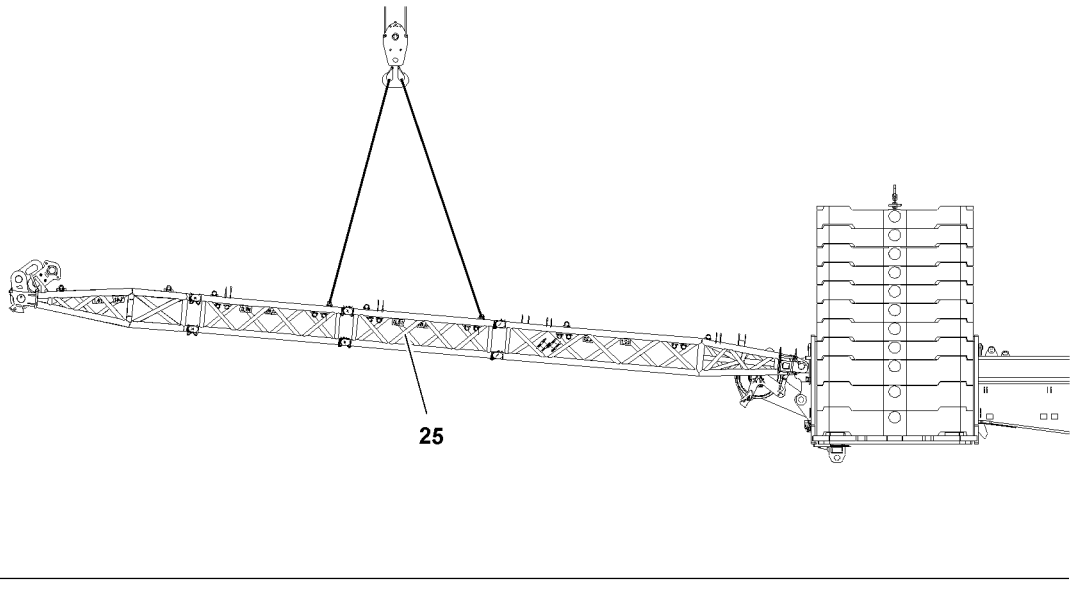

Fig.146662: Suspended ballast guide secured for disassembly with the auxiliary crane

WARNING
Swinging of the suspended ballast guide!
Death, severe bodily injuries, property damage.
▶ Position the auxiliary crane in such a way that the suspended ballast guide **25** cannot swing after unpinning.

Note
▶ Unpin with the pin pulling device, see chapter 5.30.

copyright © Liebherr-Werk Ehingen GmbH 2018

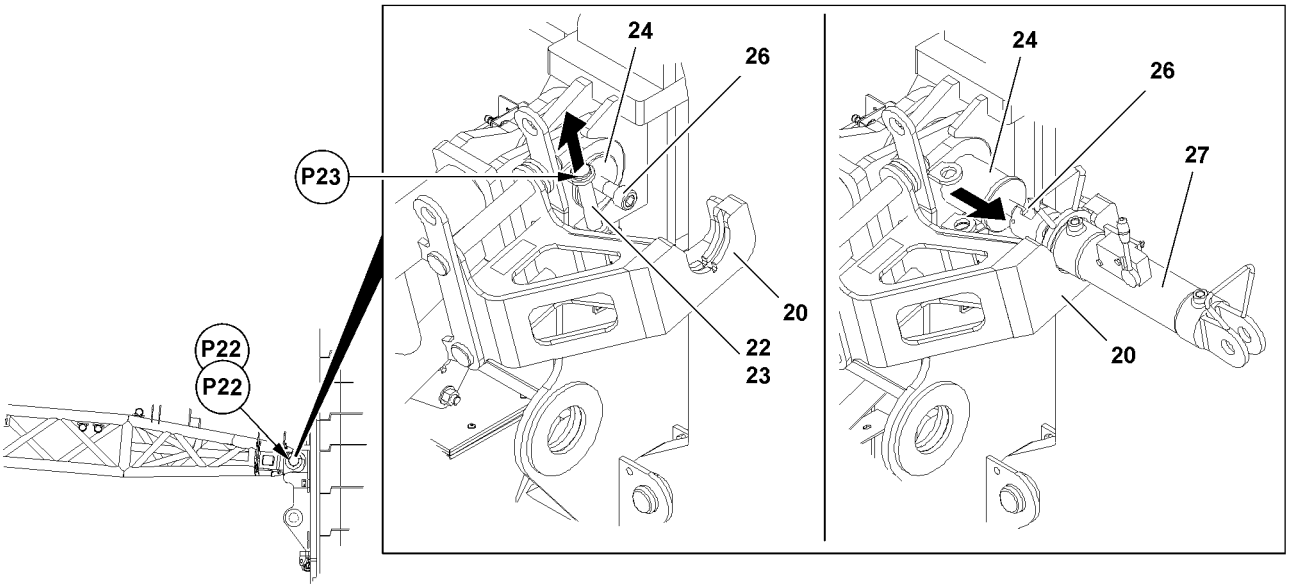

Fig.119201: Unpinning the pin with the pin pulling device

The suspended ballast guide is unpinned on both sided on point **P22**. The unpinning procedure is described for one pin as an example.

- ▶ Release the pin **24** at point **P23**: Remove the spring retainer **23** and unpin the retaining pin **22**.
- ▶ Insert the pin pulling cylinder **27** on the console **20** and hang on the screw **26**.
- ▶ Unpin the suspended ballast guide on the turntable: Unpin the pin **24** with the pin pulling cylinder **27**.
- ▶ Unhook the pin pulling cylinder **26**.
- ▶ Unpin the second pin **24** on the suspended ballast guide.

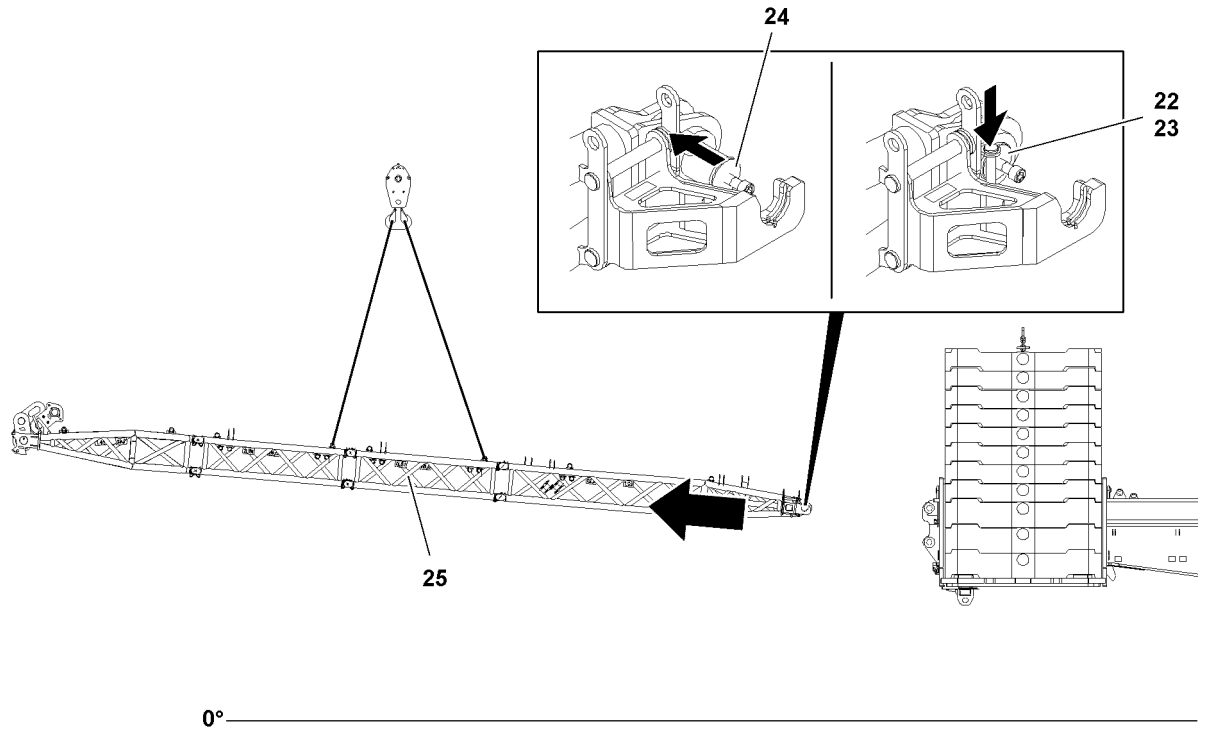

LWE/LR 1600-2-001/18101-07-02/en

Fig.146663: Removing the suspended ballast guide from the turntable

- ▶ Remove the suspended ballast guide **25** from the rear of the turntable.

copyright © Liebherr-Werk Ehingen GmbH 2018

The pins **24** are pinned on both sides in transport position. The pin procedure is described for one pin as an example.

- ▶ Insert the pin **24**.
- ▶ Secure the pin **24**: Insert the retaining pin **22** and secure with the spring retainer **23**.
- ▶ Insert the second pin **24**.
- ▶ Take down the suspended ballast guide **25** on the substructure on the ground.

18.2.2 Folding the consoles into the transport position

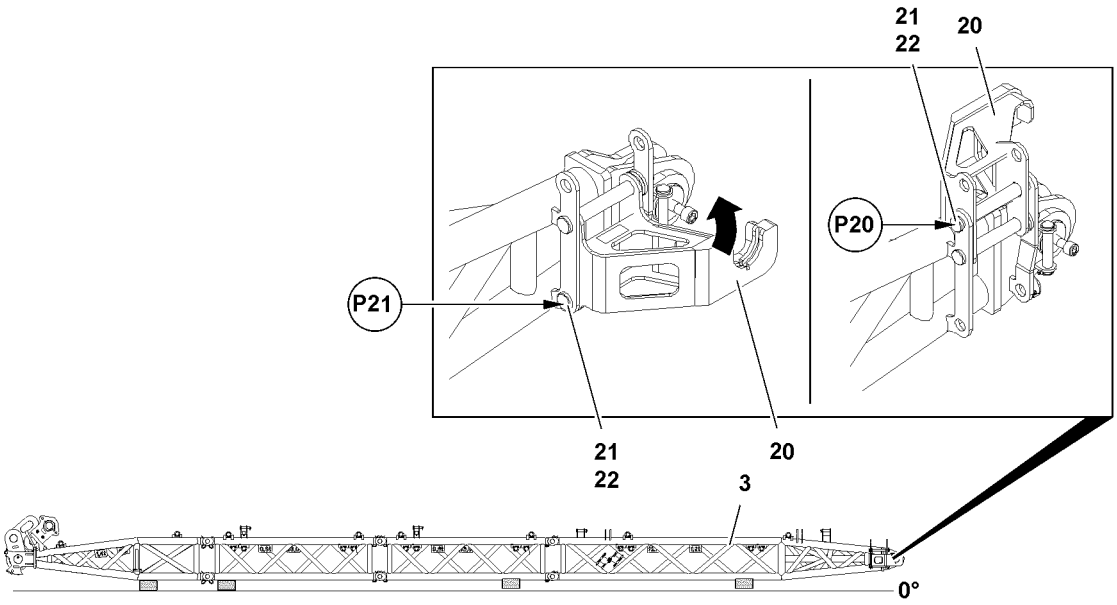

Fig.119203: Folding the consoles into the transport position

The consoles are folded on both sides on the pivot section into transport position. The assembly procedure is described for one console as an example.

- ▶ Unpin the console **20** at point **P21**: Remove the locking pin **22** and unpin the pin **21**.
- ▶ The console **20** can fold up in a controlled manner.
- ▶ Pin the console **20** at point **P20**: Insert the pin **21** and secure with the locking pin **22**.
- ▶ Fold the second console **20** into the transport position and pin it.

18.3 Disassembling the components for the suspended ballast guide

Note

- ▶ The disassembly procedure for the 20 m derrick ballast radius is described.
- ▶ For the 17.5 m derrick ballast radius, an intermediate section is solely installed. To be able to install the transport unit, both intermediate sections are pinned together.
- ▶ For the 15 m derrick ballast radius, **no** intermediate section is installed.

18.3.1 Disassembling the end section

Make sure that the following prerequisites are met:

– The lattice sections are horizontally supported.

copyright © Liebherr-Werk Ehingen GmbH 2018

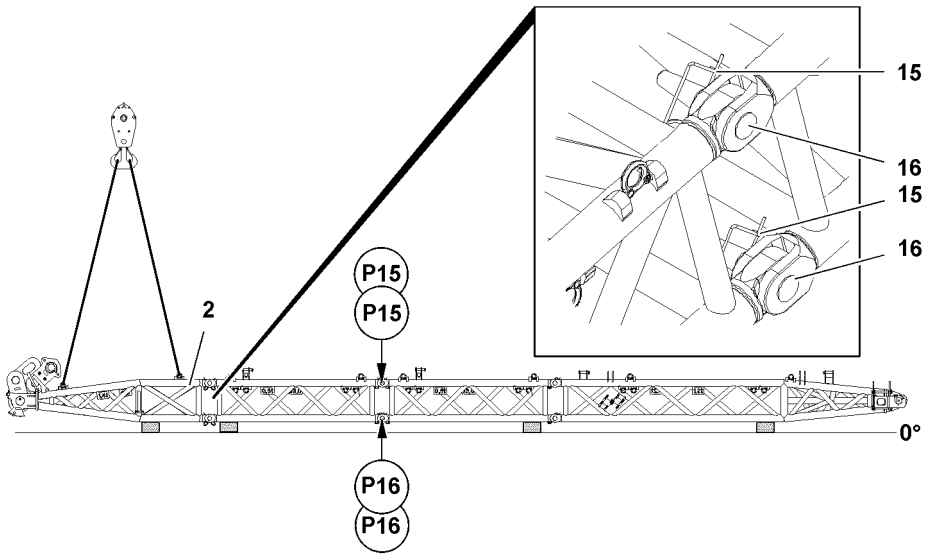

Fig.118914: Disassembling the end section

▶ Secure the end section **2** with the auxiliary crane.

The end section and the intermediate section are unpinned at four points. Every point is present on both sides of the component on one level.

▶ Unpin the end section **2** at point **P16** on the intermediate section: Remove spring retainers **15** and unpin pins **16**.
▶ Unpin the end section **2** at point **P15** on the intermediate section: Remove spring retainers **15** and unpin pins **16**.
▶ Remove the end section **2** and take it down.
▶ Remove the fastening equipment.

18.3.2 Disassembling the pivot section

Make sure that the following prerequisite is met:
– The lattice sections are horizontally supported.

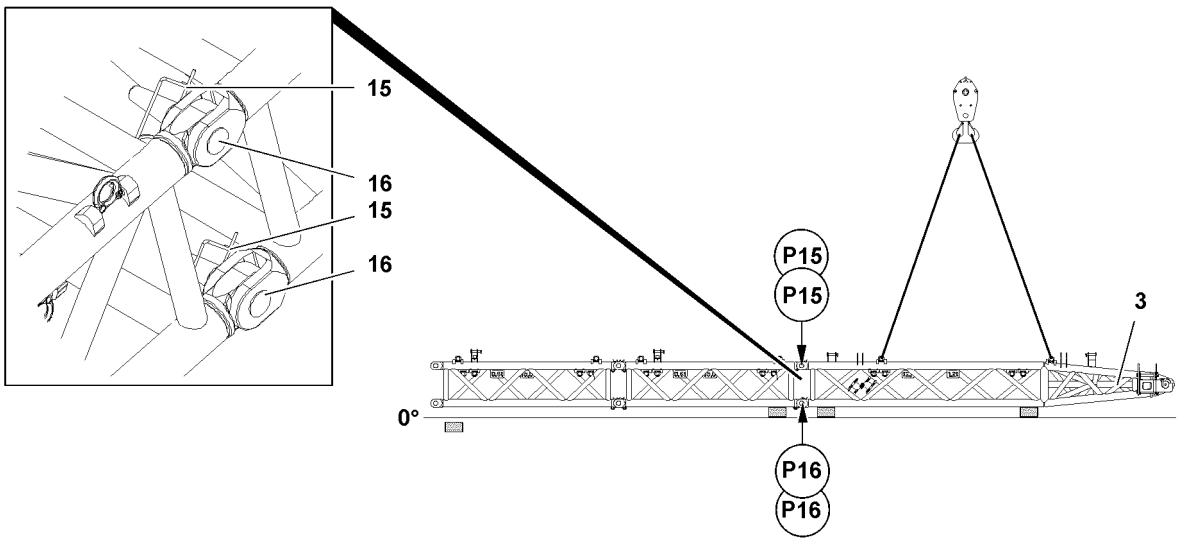

Fig.118913: Disassembling the pivot section

▶ Secure the pivot section **3** with the auxiliary crane.

The pivot section and the intermediate section are unpinned at four points. Every point is present on both sides of the component on one level.

LWE/LR 1600-2-001/18101-07-02/en

copyright © Liebherr-Werk Ehingen GmbH 2018

- ▶ Unpin the pivot section **3** at points **P18** on the intermediate section: Remove spring retainers **15** and unpin pins **16**.
- ▶ Unpin the pivot section **3** at points **P17** on the intermediate section: Remove spring retainers **15** and unpin pins **16**.
- ▶ Support the pivot section **3**.
- ▶ Remove the fastening equipment.

18.4 Assembling the transport unit

Make sure that the following prerequisites are met:
- The suspended ballast guide is disassembled.
- The intermediate sections are pinned together.
- An auxiliary crane is available.

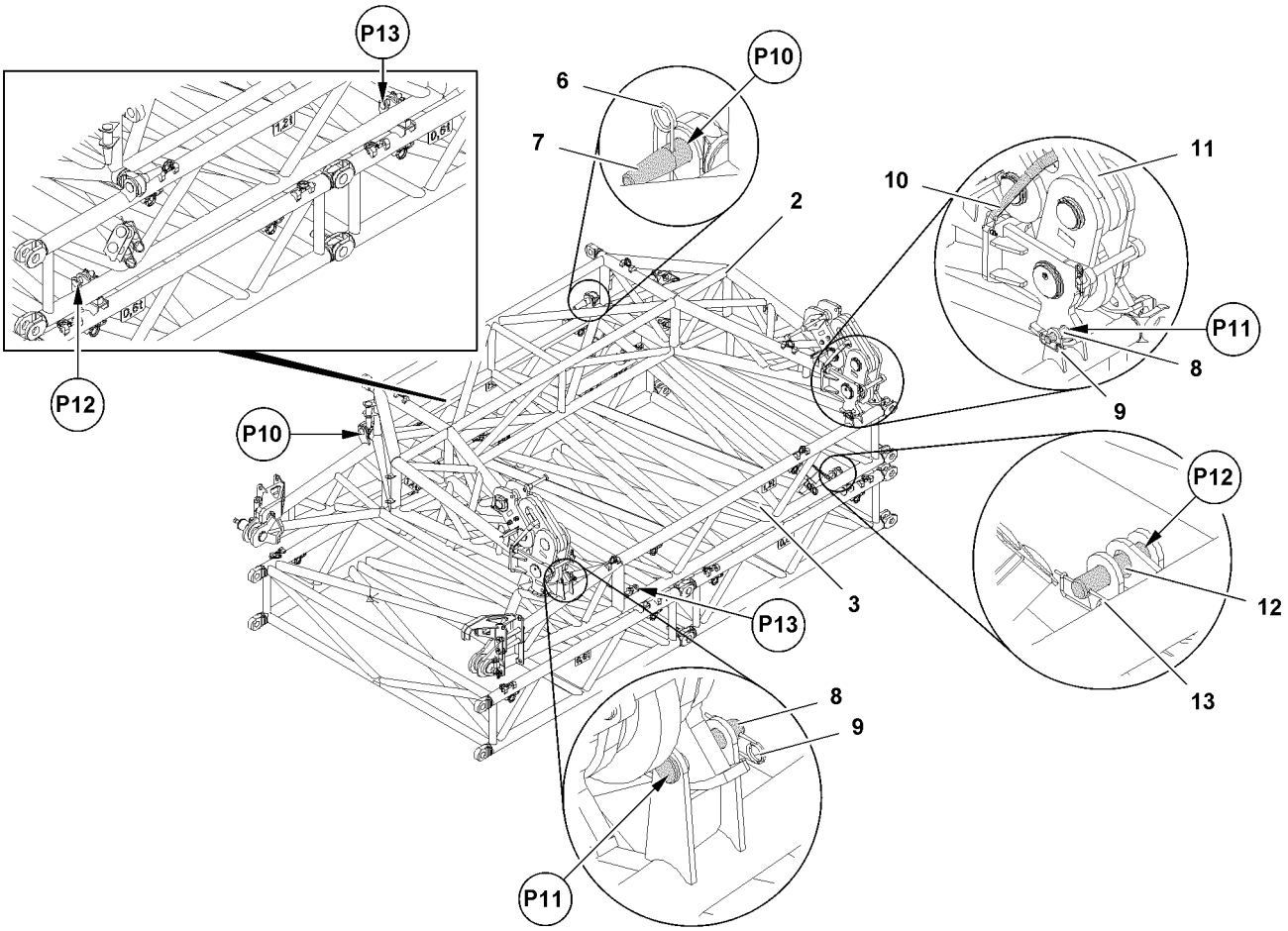

Fig.118549: Assembling the transport unit for the suspended ballast guide

- ▶ Fasten the auxiliary crane to the pivot section **3**.
- ▶ Position the pivot section **3** on the intermediate sections until the pin bores align.

The pivot section is pinned at four points. Every point is present on both sides of the component on one level.

- ▶ Pin the pivot section **3** at point **P12** on the lattice sections: Insert the pins **12** and secure with the spring retainers **13**.
- ▶ Pin the pivot section **3** at point **P13** on the lattice sections: Insert the pins **12** and secure with the spring retainers **13**.
- ▶ Fasten the auxiliary crane to the end section **2**.

LWE/LR 1600-2-001/18101-07-02/en

copyright © Liebherr-Werk Ehingen GmbH 2018

WARNING
Unsecured brackets **11**!
Death, severe bodily injuries, property damage.
▶ Make sure that the brackets **11** are secured with transport straps **10**.

▶ Position the end section **2** on the pivot section until the pin bores align.

The end section is pinned at four points. Every point is present on both sides of the component on one level.

▶ Pin the end section **2** at point **P10** on the pivot section: Insert the pins **8** and secure with the spring retainers **6**.
▶ Pin the end section **2** at point **P11** on the pivot section: Insert the pins **8** and secure with the spring retainers **9**.

Result:

– The transport unit is installed for transport.

LWE/LR 1600-2-001/18101-07-02/en

copyright © Liebherr-Werk Ehingen GmbH 2018

5.38 S/SL-boom

1	Component overview S-pivot section	3
2	Attachment points	3
3	Assembling the S/SL boom	5
4	Operating the crane	41
5	Disassembling the S/SL boom	43

LWE/LR 1600-2-001/18101-07-02/en

copyright © Liebherr-Werk Ehingen GmbH 2018

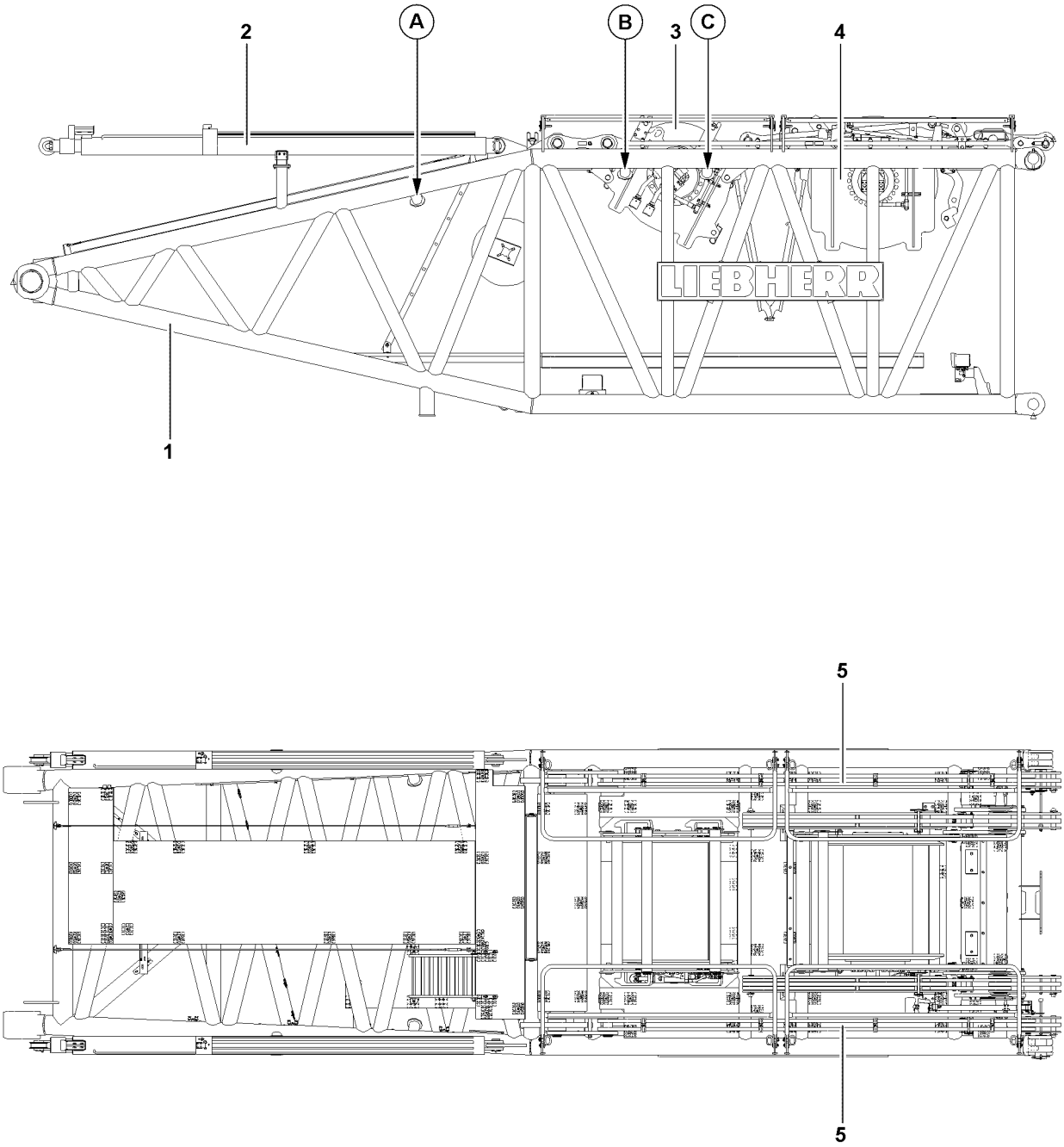

LWE/LR 1600-2-001/18101-07-02/en

Fig.113355

copyright © Liebherr-Werk Ehingen GmbH 2018

1 Component overview S-pivot section

Position	Component	Weight
1	S-pivot section	12.0 t
2	S-relapse retainer	1.1 t
3	Winch VI including rope	4.6 t
4	Winch V including rope	8.0 t
5	Rods WA-frame	0.5 t
	S-pivot section complete	26.2 t

2 Attachment points

Fastening points	
A + C	for S-pivot section **without** winches
B + C	for S-pivot section **with** winch 5 **without** winch 6
A + C	for S-pivot section **without** winch 5 **with** winch 6
B + C	for S-pivot section **with** winch 5 and **with** winch 6

LWE/LR 1600-2-001/18101-07-02/en

copyright © Liebherr-Werk Ehingen GmbH 2018

LWE/LR 1600-2-001/18101-07-02/en

Fig.195219

copyright © Liebherr-Werk Ehingen GmbH 2018

3 Assembling the S/SL boom

Note

▶ The assembly is described using the S-boom example!

WARNING

Risk of falling!

During assembly and disassembly, personnel must be secured with appropriate antifall guards to prevent them from falling. If this is not observed, assembly personnel can fall and suffer life-threatening or fatal injuries!

- ▶ Any work where there is a danger of falling must be carried out with suitable aids (for example: lifting platforms, scaffoldings, ladders, auxiliary crane)!
- ▶ If the work cannot be carried out with such aids nor from the ground, then the assembly personnel must secure themselves with approved catch systems to avoid falling, see „Chapter 2.04“!
- ▶ If railings are present for the crane, then they must be brought into the corresponding position and secured for assembly / disassembly, inspection and maintenance work.
- ▶ Only step on aids and antifall guards with clean shoes!
- ▶ Keep aids and antifall guards clean and free of snow and ice!
- ▶ During all assembly / disassembly work, maintenance work and inspections, travel or crane operation is prohibited!

WARNING

The lattice sections can fall down!

If the lattice sections are not pinned and secured correctly, then the lattice jib can fall down and fatally injure personnel!

- ▶ Unpin or pin both pins at the same horizontal level, i.e. **left and right**!
- ▶ Do not stand under the booms or within the entire danger zone during the boom pinning and unpinning procedure!
- ▶ Safely secure the pins in the bearing points as well as receptacles!
- ▶ It is prohibited to lean the ladder against the component being disassembled!

WARNING

Danger of crushing!

While assembling crane components, body limbs can be crushed or severed by the swing movement of the swing beam!

- ▶ Make sure that the components do not swing back and forth during assembly!

DANGER

Falling down of components!

If each component hangs from the auxiliary crane before each component is pinned on, each component can fall down and kill personnel!

- ▶ Do not disengage the auxiliary crane until each component is pinned on and secured!

LWE/LR 1600-2-001/18101-07-02/en

copyright © Liebherr-Werk Ehingen GmbH 2018

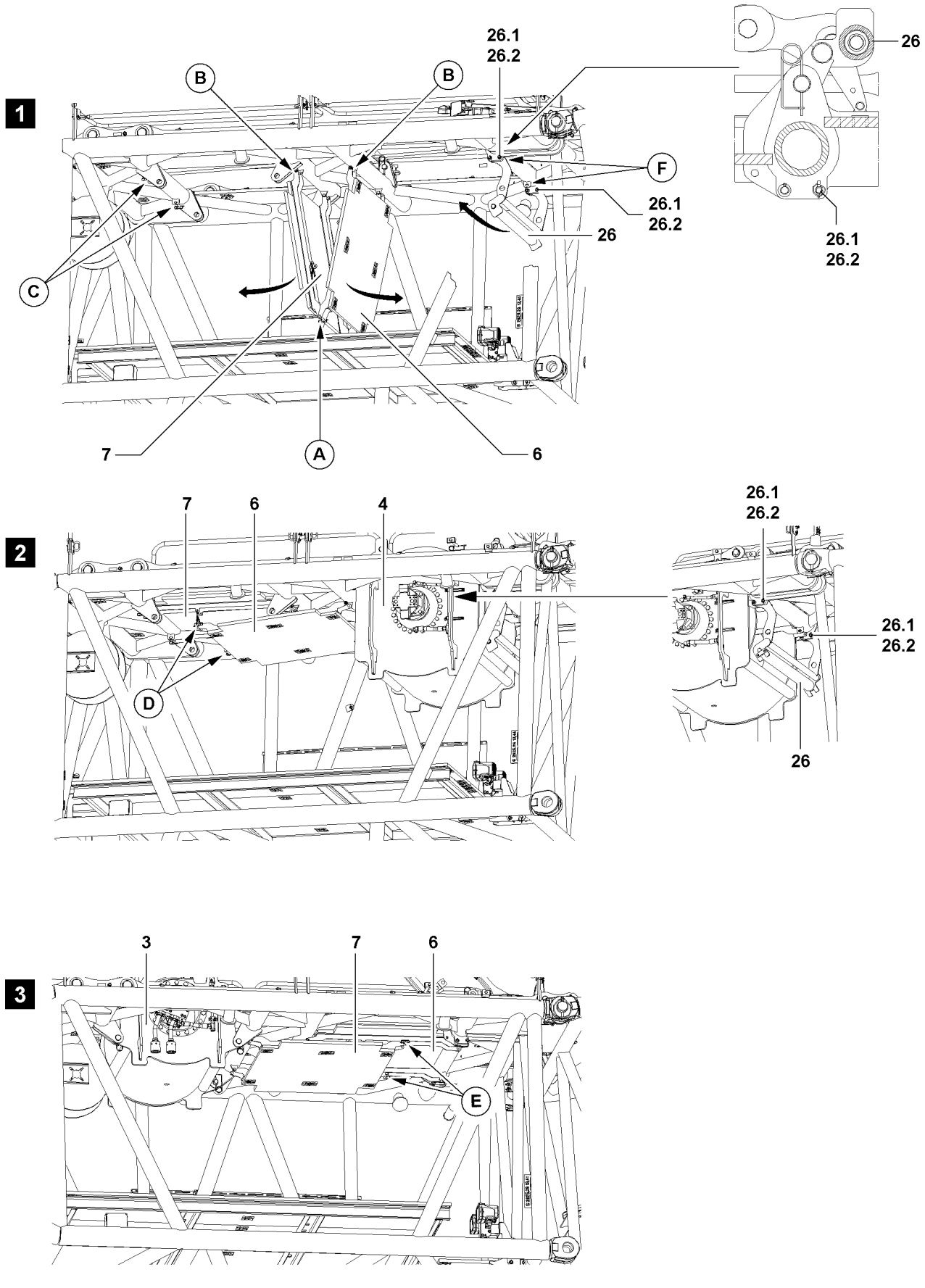

Fig.106747

copyright © Liebherr-Werk Ehingen GmbH 2018

LWE/LR 1600-2-001/18101-07-02/en

3.1 Swing guard rails on the S-pivot section into operating position

WARNING
Risk of falling!
During guard rail assembly and disassembly, assembly personnel must be secured with appropriate antifall guards to prevent them from falling!
A danger of falling also exists during assembly of protective equipment!
Assembly personnel can fall down and thereby be severely injured or killed!
- ▶ During assembly and disassembly, maintenance and testing work on the S-pivot section, all guard rails must be installed and secured.
- ▶ Step onS-pivot section **1** only with „clean shoes“.

- ▶ Swing guard rails on the S-pivot section **1** into operating position, with handle bolts and with spring retainers.

3.2 Assemble the catwalks

WARNING
Disassembled or incompletely assembled catwalks!
If the catwalks are not assembled, if the winches are missing or if the catwalks are not completely assembled, then personnel can fall and be severely injured or killed!
- ▶ For each non-assembled winch on the S-pivot section: assemble the catwalks.
- ▶ The catwalks may only be accessed when they are completely folded open, pinned and secured, visually inspected!

WARNING
Catwalks swinging downward!
Catwalks swinging downward can result in severe facial or head injuries to assembly personnel!
Personnel can be severely injured or killed!
- ▶ For safety reasons, installation of catwalks is always to be carried out by two persons!

Note
- ▶ If winch V is not assembled, the protective roller **26** must be pinned into position during crane operation „above“!
- ▶ If winch V is to be assembled, the protective roller **26** must be folded down and pinned - into position before assembly of winch V „below“!

Catwalks are assigned to the openings for the winches:
- Winch V - catwalk **6**
- Winch VI - catwalk **7**

Ensure that the following precondition is met:
- the guard rails are pinned in operating position and secured.

LWE/LR 1600-2-001/18101-07-02/en

copyright © Liebherr-Werk Ehingen GmbH 2018

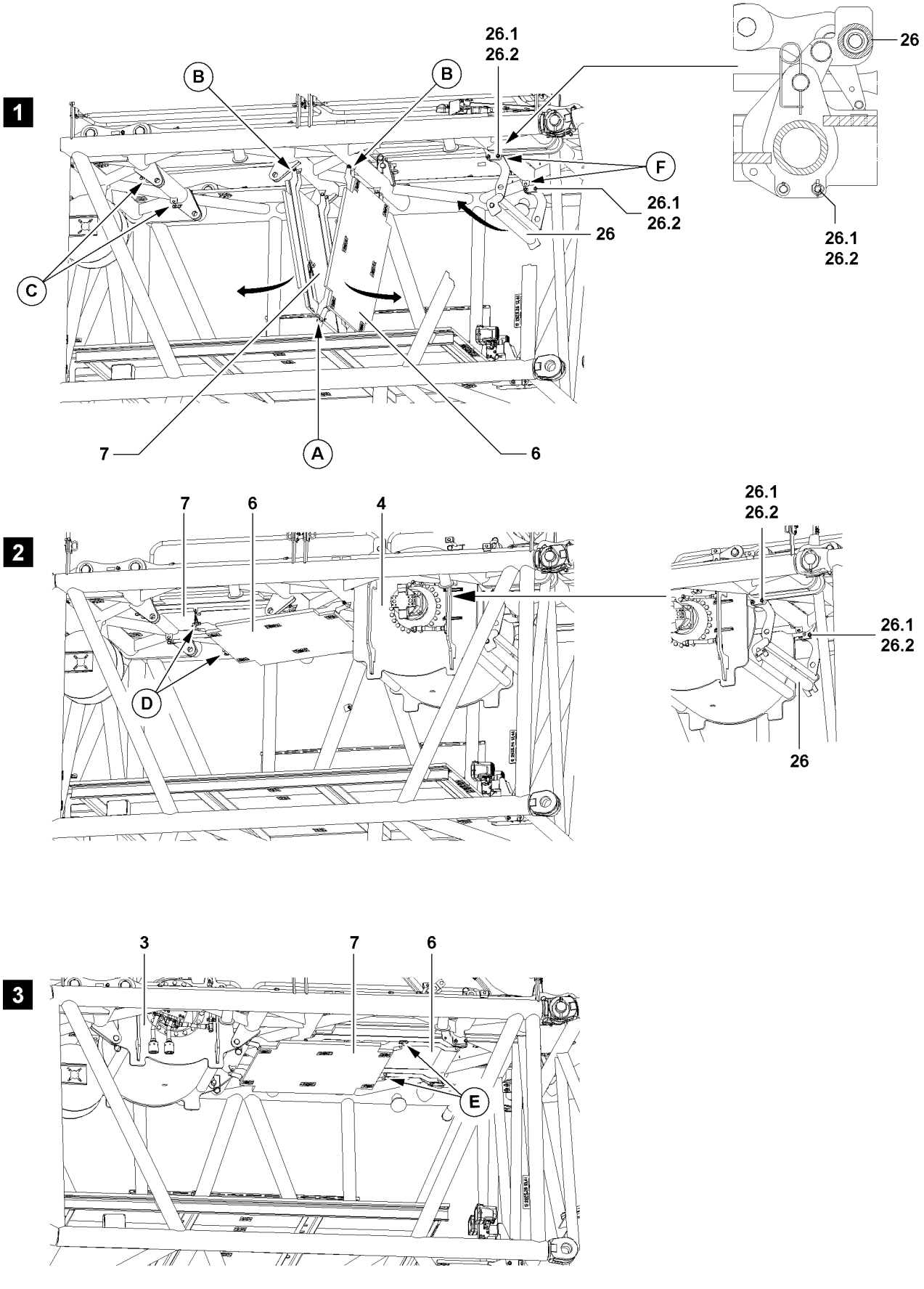

Fig.106747

LWE/LR 1600-2-001/18101-07-02/en

copyright © Liebherr-Werk Ehingen GmbH 2018

3.2.1 S-pivot section without winches

Make sure that the following prerequisites are met:
- catwalks are pinned into transport position in the point **A**,
- protective roller **26** is pinned and secured in position „above“.

▶ Release and unpin the catwalks in point **A**.

Swing and pin catwalks individually in operation position „upward“.

▶ Swing catwalk **7** into operating position and pin and secure on the points **C** see figure **1**.
▶ Swing catwalk **6** into operating position and pin and secure on the points **F** see figure **1**.

3.2.2 S-pivot section before installation of winch V

Make sure that the following prerequisites are met:
- winch V is not assembled,
- winch VI is not assembled,
- protective roller **26** is pinned and secured in position „above“,
- catwalk **6** and catwalk **7** are pinned and secured in operating position.

▶ Hang the catwalk **6** onto the auxiliary crane.

If the catwalk **6** is held securely by the auxiliary crane:
▶ unpin the catwalk **6** on the points **F**.
▶ Drop catwalk **6** downward and remove auxiliary crane.
▶ Lower catwalk **6** to the opposite lying side upward and pin and secure pin points **D** of the catwalk **7** see figure **2**.
▶ Release and unpin protective roller **26** in position „above“.
▶ Lower protective roller **26** into position „downward“, with retaining pins **26.1** secure and pin with linchpin **26.2**.

Result:

– Winch V can be assembled.

LWE/LR 1600-2-001/18101-07-02/en

copyright © Liebherr-Werk Ehingen GmbH 2018

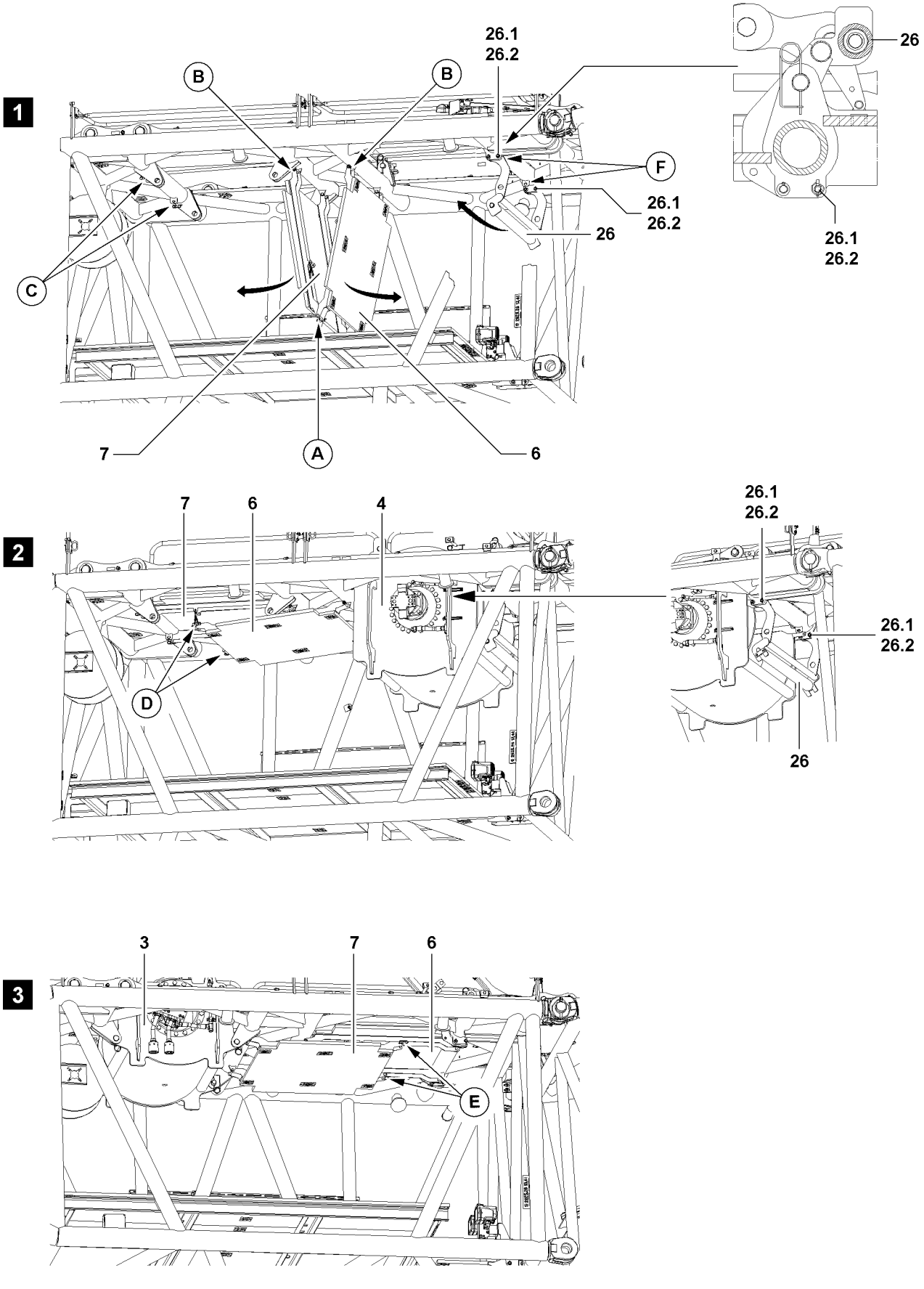

Fig.106747

copyright © Liebherr-Werk Ehingen GmbH 2018

LWE/LR 1600-2-001/18101-07-02/en

3.2.3 S-pivot section before assembly of winch VI

Make sure that the following prerequisites are met:
- winch V is not assembled,
- winch VI is not assembled,
- protective roller **26** is pinned and secured in position „above“,
- catwalk **6** and catwalk **7** are pinned and secured in operating position.

▶ Hang the catwalk **7** onto the auxiliary crane.

If the catwalk **7** is held securely by the auxiliary crane:
▶ unpin the catwalk **7** on the points **C**.
▶ Drop catwalk **7** downward and remove auxiliary crane.
▶ Lower catwalk **7** to the opposite lying side upward and pin and secure pin points **E** of the catwalk **6** see figure **3**.

Result:

– Winch VI can be assembled.

3.2.4 S-pivot section before installation of both winches

Make sure that the following prerequisites are met:
- protective roller **26** is pinned and secured in position „above“,
- catwalk **6** and catwalk **7** are pinned and secured in operating position.

Note
▶ Lower catwalks downward individually and in sequence with auxiliary crane!

If the catwalk is held securely by the auxiliary crane:
▶ release and unpin the catwalk into operating position, see fig. **1**.
▶ Lower catwalk and remove auxiliary crane.

If catwalk **6** and catwalk **7** are lowered downward:
▶ pin and secure catwalks in the point **A**, see figure **1**.
▶ Release and unpin protective roller **26** in position „above“.
▶ Lower protective roller **26** into position „downward“, with retaining pins **26.1** secure and pin with linchpin **26.2**.

Result:

– Winch V and winch VI can be assembled.

LWE/LR 1600-2-001/18101-07-02/en

copyright © Liebherr-Werk Ehingen GmbH 2018

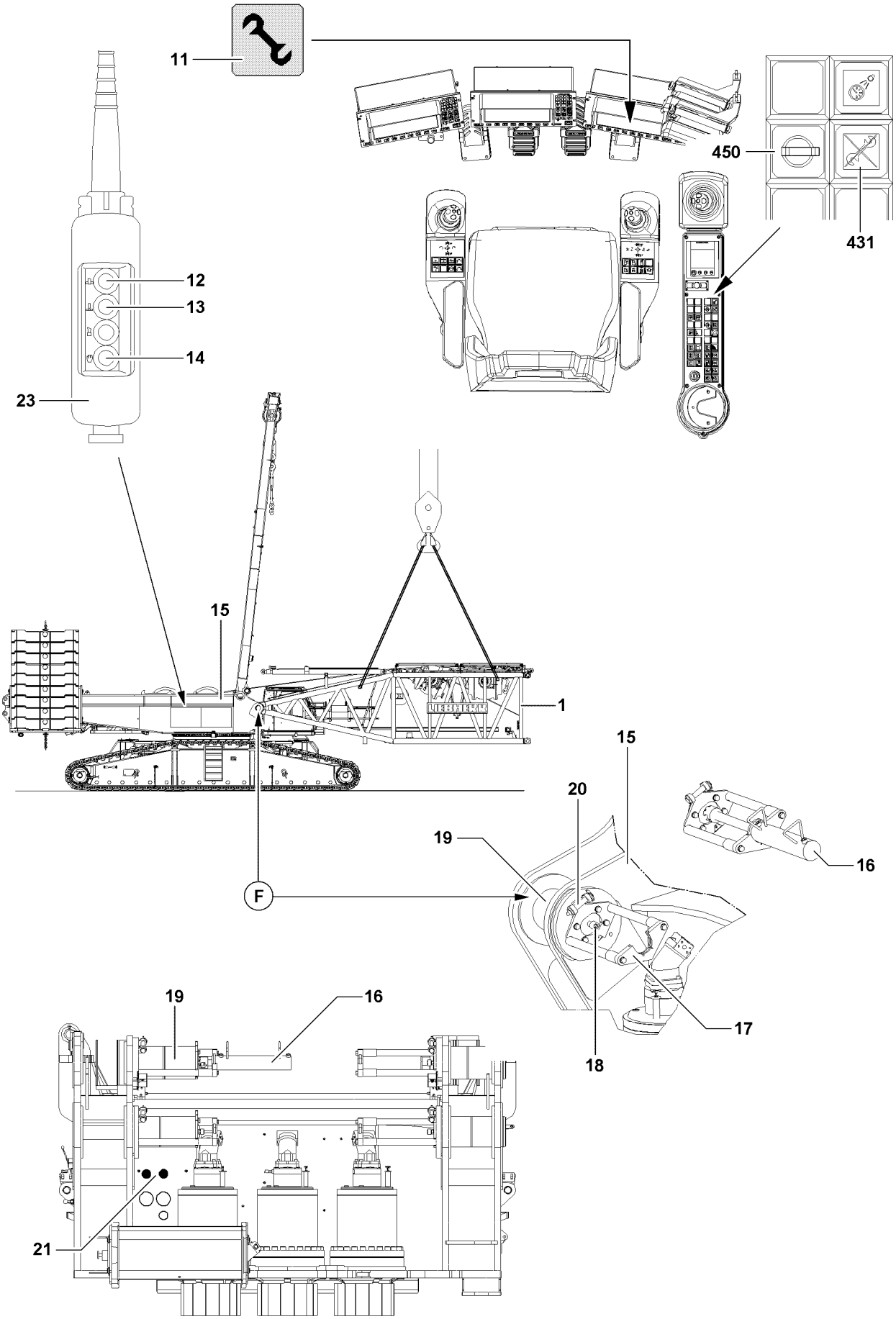

Fig.106759

LWE/LR 1600-2-001/18101-07-02/en

copyright © Liebherr-Werk Ehingen GmbH 2018

3.3 Assembling the boom

Note

▶ The boom combinations must be assembled according to the separately supplied rod and assembly plans!

Make sure that the following prerequisites are met:
- the crane is aligned in horizontal direction,
- an auxiliary crane is available,
- an assembly scaffolding / work platform is available,
- the counterweight has been attached to the turntable according to the load chart,
- the LICCON overload protection has been set according to the data in the load chart.

3.3.1 Turning the turntable into assembly position

WARNING

Crane can topple over!

If the following conditions are not met before turning the turntable - **without**assembled S-boom, the crane can topple over. Personnel can be severely injured or killed!

▶ Observe the data in the erection and take down charts!

▶ Observe the maximum permissible ballast combinations in Chapter 3.06!

Note

▶ If the turntable is turned to the side for the installation of the boom, then boom and lattice sections must be supported, depending on the ground condition.

▶ Turn the turntable in longitudinal direction of the crawler travel gear or to the side.

3.3.2 Adding the operating mode „Assembly“

DANGER

Risk of fatal injury in crane operation with enabled assembly key button.

▶ The actuation of the assembly key button **450** is only permitted for assembly tasks!

▶ The assembly key button may only be operated by persons who are aware of the consequences of a bypass!

▶ If the assembly key button **450** is turned on, the hoist limit switch and the LICCON overload protection is bypassed!

▶ Crane operation with the assembly key button **450** turned on is strictly prohibited!

▶ After assembly work is completed, the assembly keyed button **450** must be pulled immediately and turned over to an authorized person!

▶ Actuate the assembly key button **450**.

Result:

- The LICCON overload protection is bypassed.
- The indicator light in the button **431** lights up.
- The Assembly icon **11** on the LICCON monitor blinks.
- An acoustical signal sounds.
- The three-colored light illuminates in red.
- The warning lights on the turntable illuminates in red.

LWE/LR 1600-2-001/18101-07-02/en

copyright © Liebherr-Werk Ehingen GmbH 2018

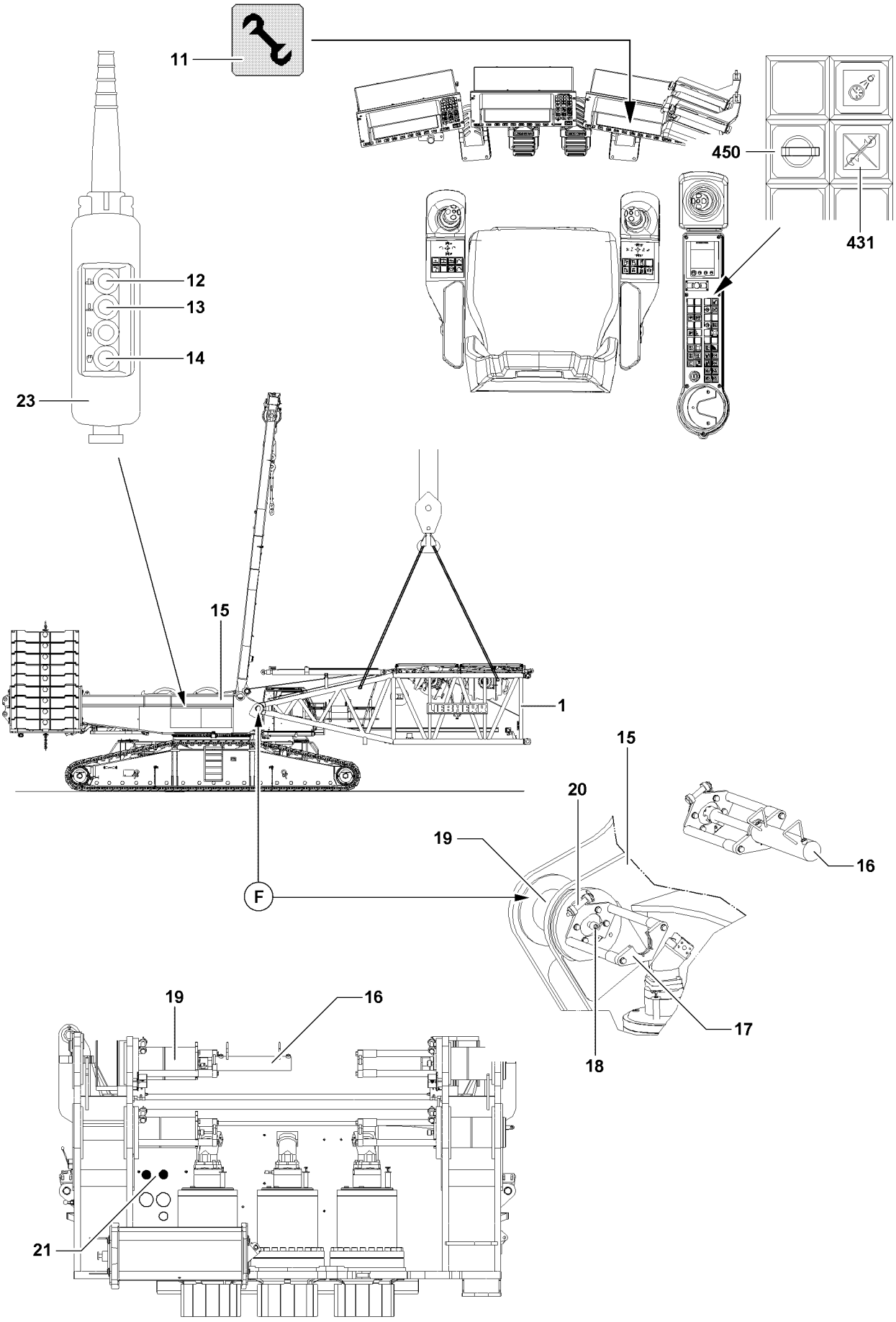

Fig.106759

LWE/LR 1600-2-001/18101-07-02/en

copyright © Liebherr-Werk Ehingen GmbH 2018

3.4 Pinning the S-pivot section on the turntable

WARNING
General danger notes!
- ▶ Support the S-boom during assembly with suitable materials!
- ▶ All pins are to be secured after assembly with the intended safety elements!
- ▶ The guy rods must be checked regularly! Please refer to Chapter 8.15.

Ensure that the following precondition is met:
- – the pins **20** on the connector points **F** are unpinned.

▶ Hang the S-pivot section **1** onto the auxiliary crane and swing in to the pin points **F** on the turntable.

Establish the hydraulic connection to the pin pulling device via two quick couplers.

▶ Hang the pin pulling cylinder **16** into the receptacle **17** and the screw **18** on the pin **19**.
▶ Connect the pin pulling cylinder **16** on quick couplers **21**, hydraulic turntable.

WARNING
Falling S-pivot section!
Due to non-secured or insufficiently secured connector pins, the S-pivot section can fall down!
Personnel can be severely injured or killed!
▶ Secure the pins **19** between the S-pivot section **1** and the turntable **15** after the pin procedure with the pins **20**.

▶ Pin the pins **19** on both sides with the hydraulic pin pulling cylinder **16**: actuate key **14** on the control console **23** and „hold down“, finally actuate the key **12** until the pin **19** is fully pinned in.

When the pins **19** are completely pinned on the left and right on the S-pivot section **1**:
▶ insert the pins **19** on the left and right and secure with the pins **20** and spring retainer.

NOTICE
Damage to the S-pivot section!
When the assembled S-pivot section is placed on the ground, the S-pivot section can be damaged.
▶ Slowly place the S-pivot section **1** with the auxiliary crane and at low speed onto the ground!
▶ Before placing it on the ground, support the S-pivot section **1**!

▶ Carefully place the S-pivot section **1** down.
▶ Remove the auxiliary crane.

LWE/LR 1600-2-001/18101-07-02/en

copyright © Liebherr-Werk Ehingen GmbH 2018

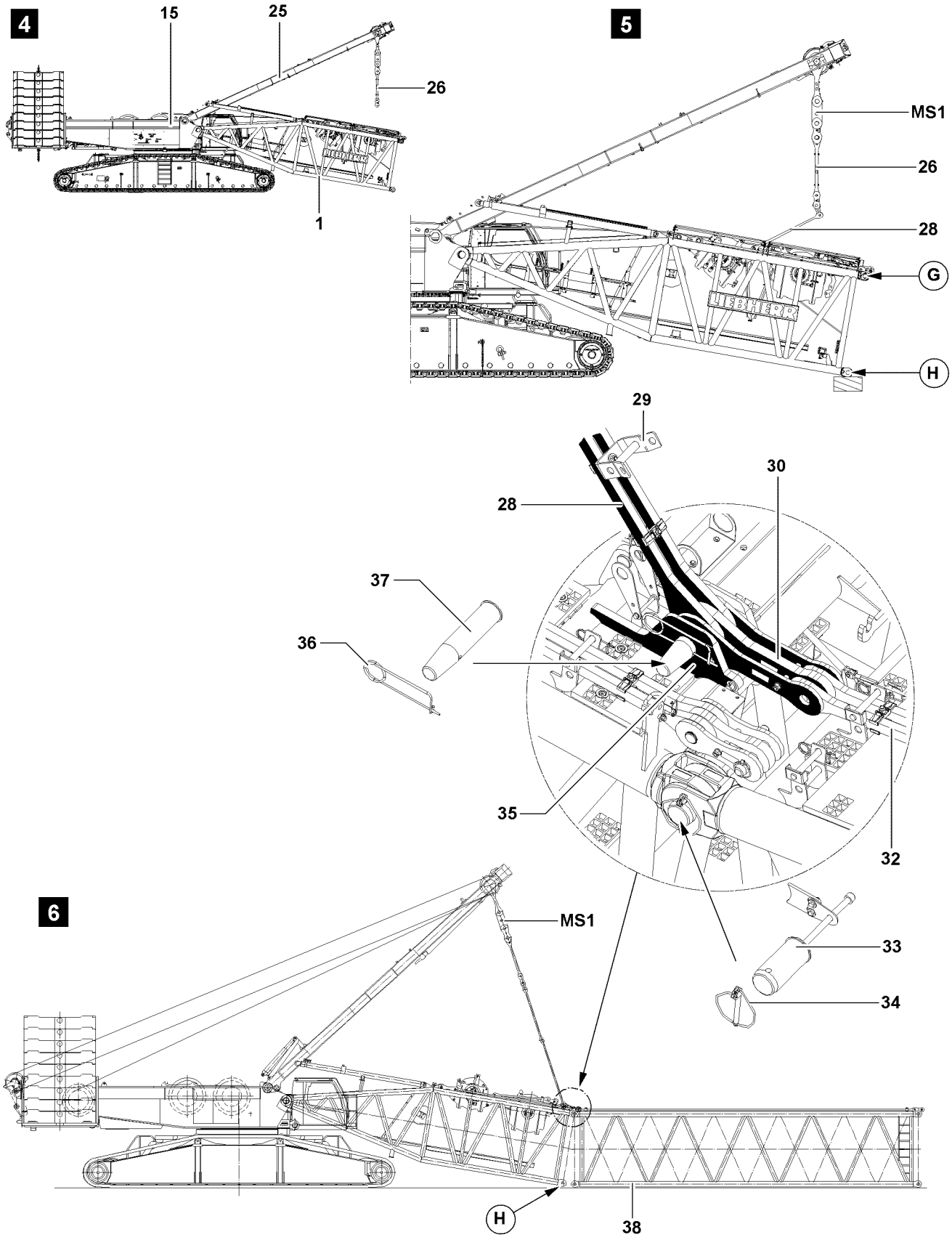

Fig.105479

LWE/LR 1600-2-001/18101-07-02/en

copyright © Liebherr-Werk Ehingen GmbH 2018

3.5 Assemble the S-intermediate sections

3.5.1 Install the S-intermediate section on the S-pivot section

Make sure that the following prerequisites are met:
- the S-pivot section **1** is pinned and secured on the turntable,
- theS-pivot section **1** is placed on the ground,
- the auxiliary crane is removed.

WARNING
General danger notes!
- ▶ All pins are to be secured after assembly with the intended safety elements!
- ▶ The guy rods must be checked regularly! Please refer to Chapter 8.15.

Note
- ▶ The S-intermediate sections **38** are pinned with the aid of the pin pulling device, see Chapter 5.30.
- ▶ For more convenient assembly / disassembly of the S-intermediate pieces, these should be supported!

Connect the guy rods SA-frame with the guy rod's S-pivot section

- ▶ Unpin the transport retainers **29** for the guy rods **28**.
- ▶ Lower the SA-frame **25** forward until the guy rods **26** hang freely over the guy rods **28** of the S-pivot section **1**, fig. **4**.
- ▶ Pin the guy rods **26** of the SA-frame with the guy rods **28** of the S-pivot section, see fig. **5**.
- ▶ Make sure that the guy rods **28** of the SA-frame are pinned on the assembly brackets **35** with pins **37** and secured with spring retainers **36**.
- ▶ Erect the SA-frame **25** until the guy rods are completely tensioned, fig. **6**.

Pinning the S-intermediate section on the S-pivot section above

- ▶ Attach the S-intermediate section **38** on the auxiliary crane and align on the S-pivot section **1**, fig. **6**.

When the pin bores on the S-pivot section **1** and on the S-intermediate section **38** „on top“ (point **G**) align:
- ▶ insert in the pin **33** and secure with linchpin **34**.

LWE/LR 1600-2-001/18101-07-02/en

copyright © Liebherr-Werk Ehingen GmbH 2018

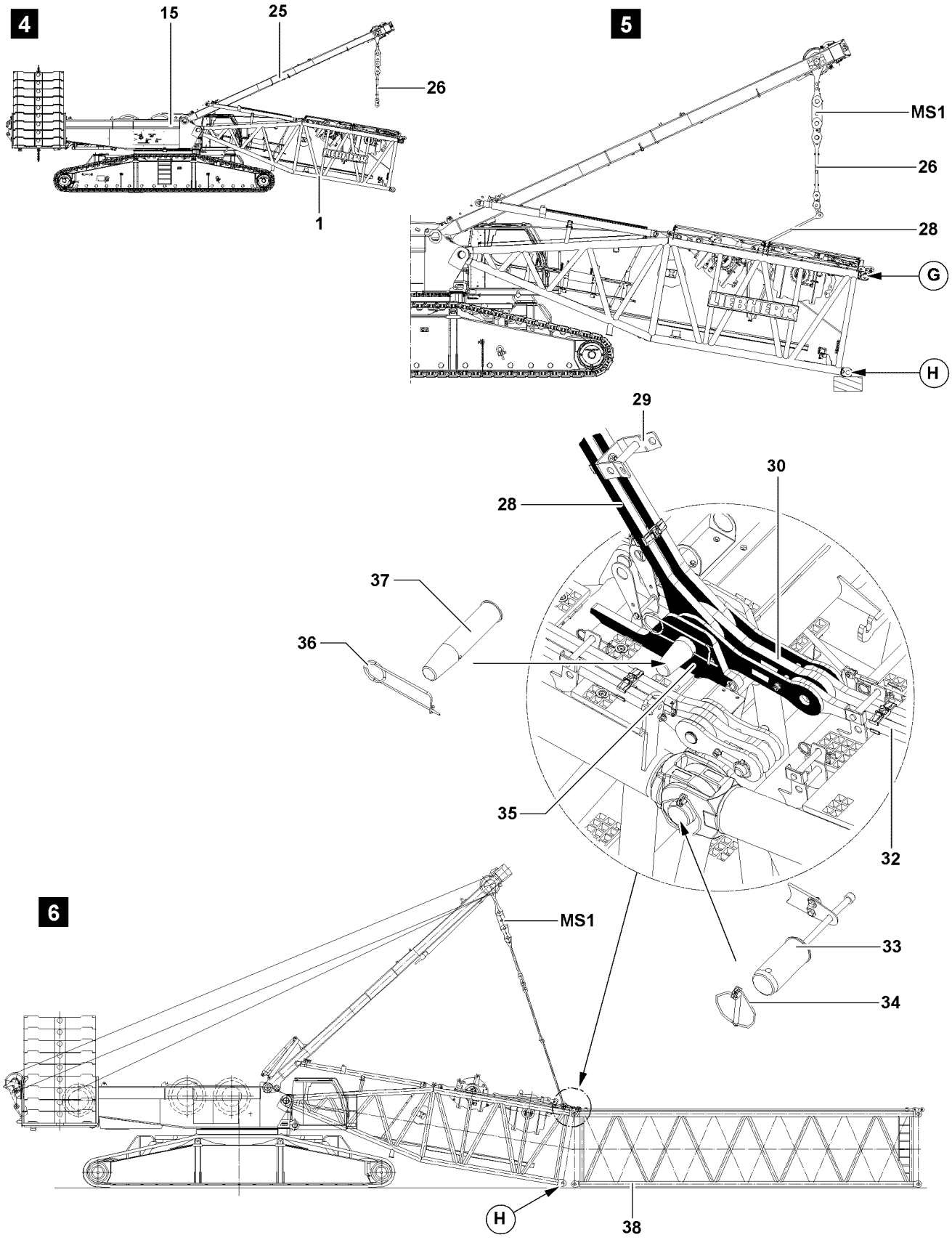

Fig.105479

LWE/LR 1600-2-001/18101-07-02/en

copyright © Liebherr-Werk Ehingen GmbH 2018

Closing the boom

WARNING
Crane can topple over!
If the following conditions are not met, the crane can topple over or be significantly damaged!
Personnel can be severely injured or killed!
- ▶ During the „closing procedure“ of the S-intermediate sections, the maximum total force on test point **MS1** of 70 t , may **not** be exceeded.
- ▶ The end section of the corresponding S/SL-boom combination during the „closing procedure“ may **not** lift off the ground!
- ▶ With the SA-frame, S-boom combinations to maximum **S 96 m** may be lifted / closed.
- ▶ With the SA-frame, SL-boom combinations to maximum **SL 102 m** may be lifted / closed.
- ▶ With the SA-frame, SL-boom combinations to maximum **SL3 108 m** may be lifted / closed.

Note
- ▶ The actual force on the test point **MS1** - which is exerted during the closing procedure of the boom system - is shown on the LICCON monitor 1.
- ▶ The actual force is noted and kept ready for the disassembly of the boom system.
- ▶ During the boom disassembly, the guying is tensioned with the noted actual force (assembly) so that the connector pins of the intermediate sections can be unpinned.

Note
- ▶ The guy rods of the intermediate sections are only assembled after the closing procedure.
- ▶ The brackets **30** and guy rods **32** are not pinned for the closing procedure.

Before closing the S-boom, assemble the S-boom to the required length.

- ▶ Pin the S-intermediate sections **38** „on top“ and „bottom“ with pins **33** and secure with linchpins **34**.

When the S/SL-boom combination is assembled to the desired length:
- ▶ lift the S-pivot section **1** with the SA-frame **25** until the pin bores on the „bottom“ align at point **H**, fig. **6**.
- ▶ Read the actual force of the test point **MS1** on the LICCON monitor and note.
- ▶ Insert the pin **33** at point **H** and secure with linchpin **34**.

LWE/LR 1600-2-001/18101-07-02/en

copyright © Liebherr-Werk Ehingen GmbH 2018

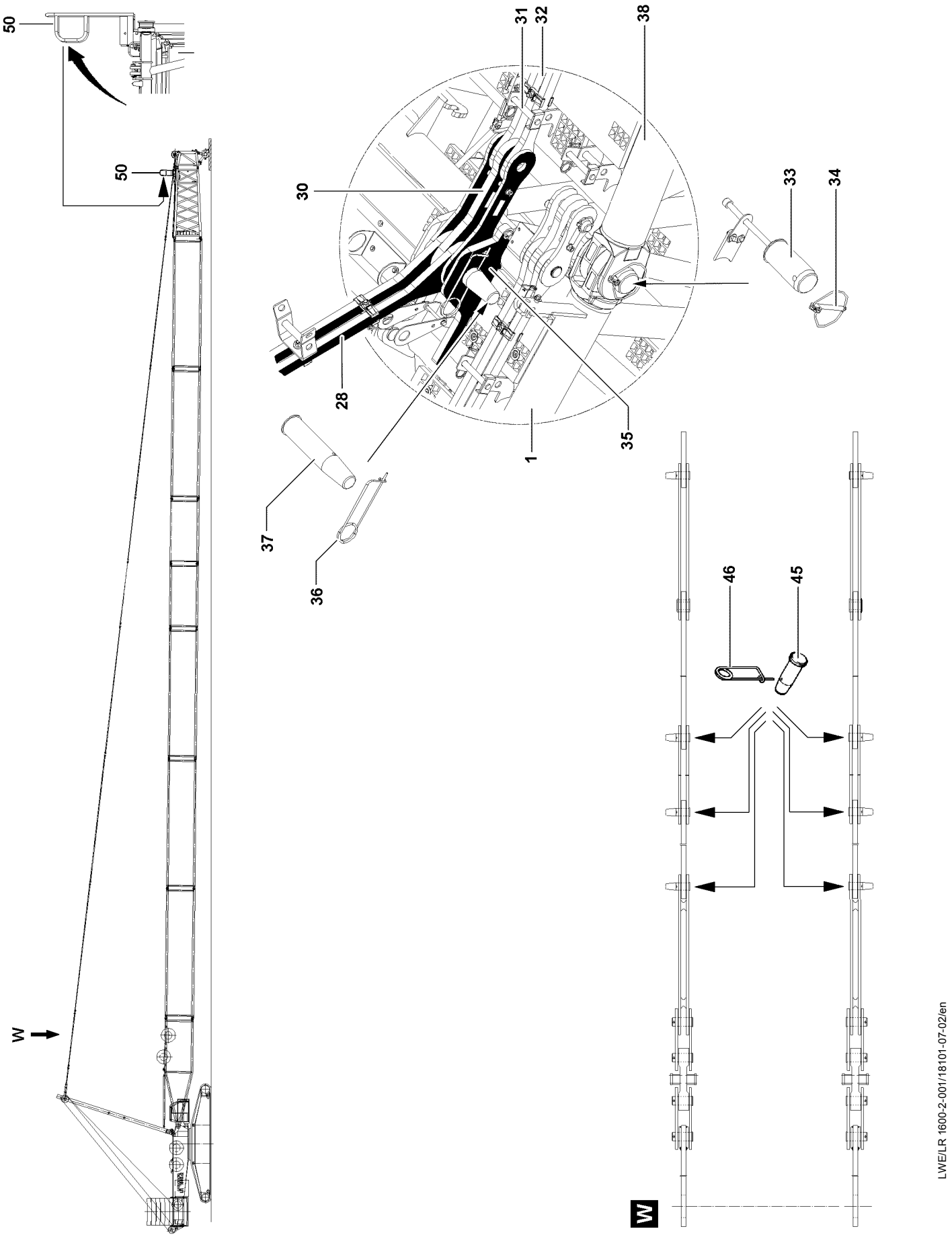

Fig.106841

copyright © Liebherr-Werk Ehingen GmbH 2018

3.5.2 Install the S-guy rods

WARNING
Not carrying out inspection and maintenance on guy rods!
If the regular inspection and maintenance of the guy rods is not carried out or is carried out only in irregular intervals, then severe accidents can occur due to existing and unrecognized damage to the guy rods!
Personnel can be severely injured or killed!
▶ Check the guy rods before every assembly, see Chapter 8.15.

Note
▶ The S-guy rods must be assembled and secured according to the separately supplied assembly drawings. The numbering on the assembly drawings must be identical to the numbering on the guy rods.

Ensure that the following precondition is met:
– the fold platforms **50** on the SL reducer section are folded and secured „upwards“.

WARNING
Falling components!
If the intermediate sections are incompletely pinned, then components can fall down. Personnel can be severely injured or killed!
▶ Make sure that all components of the boom are completely pinned and secured.

▶ Relieve the guy rods between the SA-frame and the S-pivot section: Lower the SA-frame somewhat to the front.

Result:

– The guy rods between the SA-frame and the S-pivot section are relieved.

The guy rods are placed and secured for transport on the S-intermediate sections. Before assembly of the guy rods, remove the transport retainers.

▶ Release and unpin the transport retainers **31**.

NOTICE
Property damage!
▶ Always insert the pins of the guy rods from the „inside“ to the „outside“.

Note
▶ The guy rods of the S-intermediate sections are pinned to each other starting from the fixed point on the end section of the boom.

▶ Pin the guy rods of all intermediate sections: insert the pins **45** from the „inside“ to the „outside“.
▶ Secure the pin **45** with spring retainer **46**.

When all guy rods on the boom system are pinned:
▶ release and unpin the pins **37** on the assembly brackets **35**.
▶ Erect the SA-frame until the guy rods between the SA-frame and the S-end section tension.

LWE/LR 1600-2-001/18101-07-02/en

copyright © Liebherr-Werk Ehingen GmbH 2018

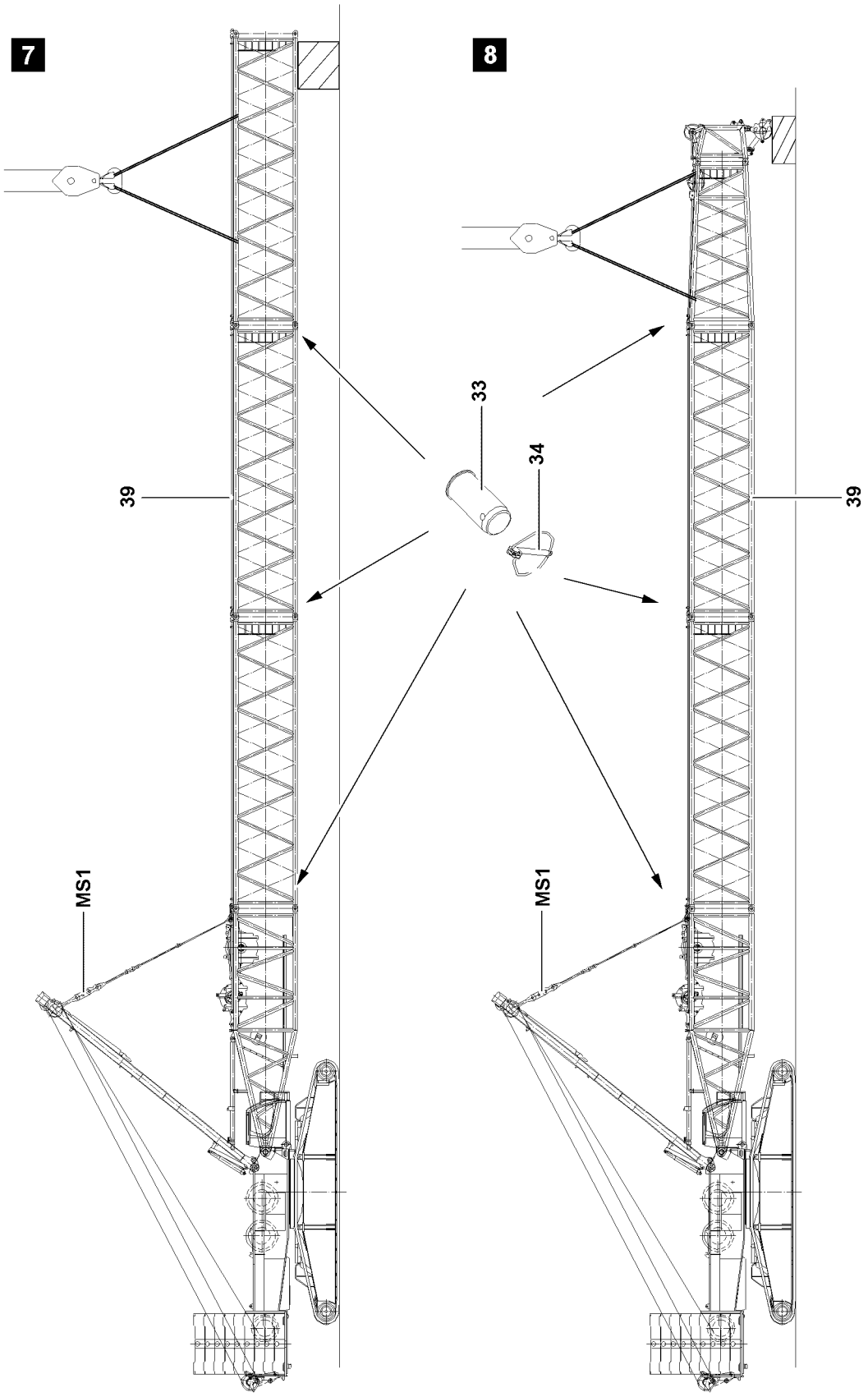

LWE/LR 1600-2-001/18101-07-02/en

Fig.105481

copyright © Liebherr-Werk Ehingen GmbH 2018

3.6 Flying installation of the S-intermediate sections

If spatial prerequisites on the job site are limited for the assembly of the S-boom, or if they are limited by buildings or similar, then the S-boom can be assembled in flying mode.

WARNING
General danger notes!
- ▶ Support the S-boom during assembly with suitable materials!
- ▶ All pins are to be secured after assembly with the intended safety elements!
- ▶ The guy rods must be checked regularly! Please refer to Chapter 8.15.

WARNING
Crane can topple over!
If the following conditions are not met, the crane can topple over or be significantly damaged. Personnel can be severely injured or killed!
- ▶ For the „flying“ boom assembly, the maximum permissible total force on the test point **MS1** may **not** be exceeded. The „actual force“ is shown on LICCON monitor 1.
- ▶ The „flying“ boom assembly is only permissible up to a certain system length, observe the following charts!
- ▶ The data in the erection and take down charts as well as the load charts must be observed!

Maximum permissible total force MS1 160 t				
Boom system	**Maximum system length**	**Equipment**	**DB_{min} 1)**	**ZB_{min} 2)**
S	48 m	- with SW-end section - with S- and WA-frame II guy rods	110 t	5 t
S	52 m	- without SW-end section - with S- and WA-frame II guy rods	110 t	5 t
SL	54 m	- with SW-end section - with S-guy rods	110 t	5 t

1) This counterweight must be at least assembled on the turntable for „flying assembly“.
2) This central ballast must be at least assembled on the crawler center section for „flying assembly“.

LWE/LR 1600-2-001/18101-07-02/en

copyright © Liebherr-Werk Ehingen GmbH 2018

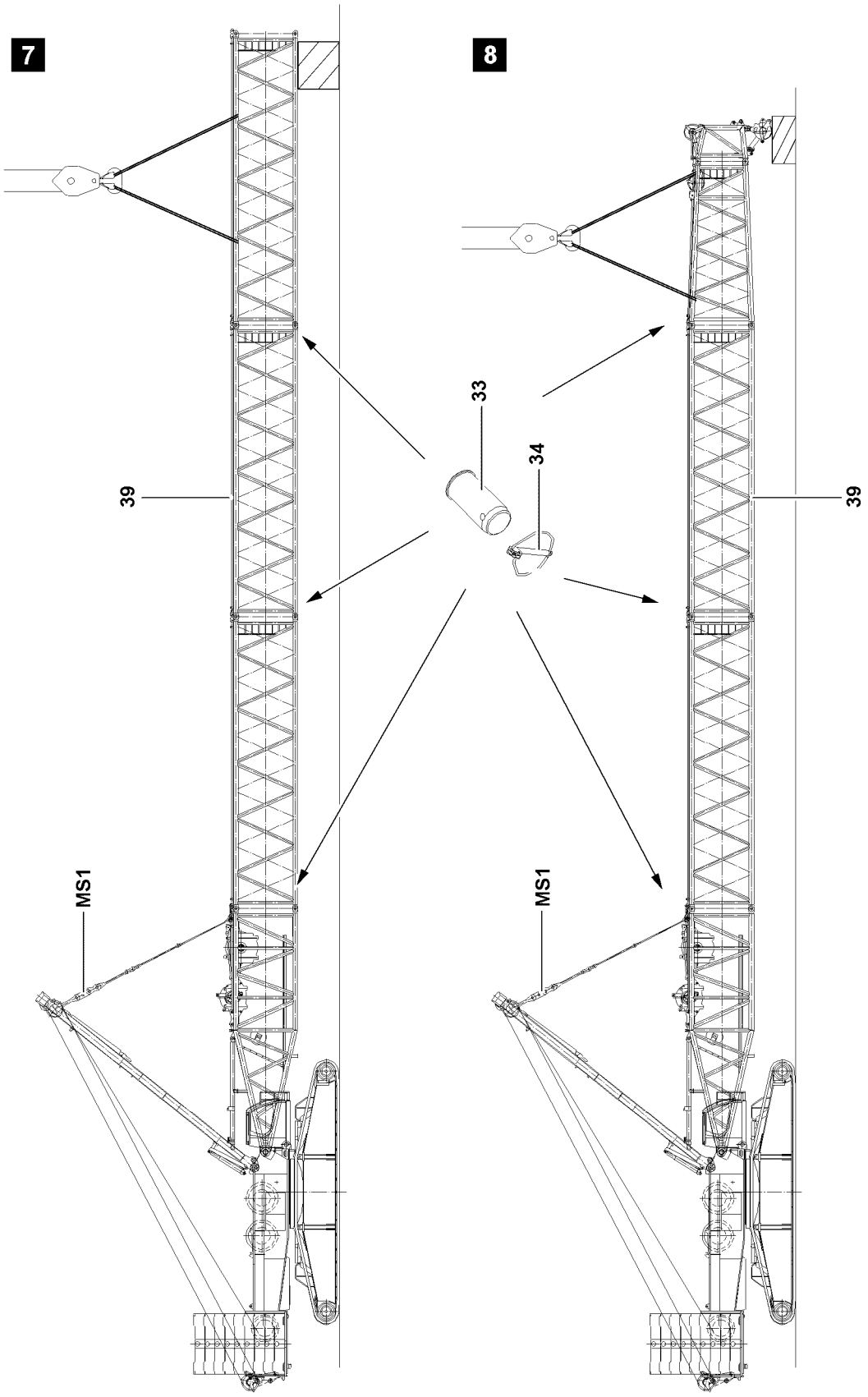

LWE/LR 1600-2-001/18101-07-02/en

Fig.105481

copyright © Liebherr-Werk Ehingen GmbH 2018

3.6.1 Assembling the intermediate section „flying“ on the S-pivot section

For „flying“ assembly of the intermediate sections, they can be assembled individually or as preassembled boom unit on the S-pivot section.

WARNING
Impermissible boom lengths!
If impermissible boom lengths are assembled on the crane, significant property damage can occur on the crane. Personnel can be severely injured or killed!
- ▶ The maximum permissible boom lengths for the „flying assembly“ may not be exceeded!
- ▶ The data in the erection and take down charts as well as the load charts must be observed!

Note
- ▶ For weights of intermediate sections with placed guy rods, see Chapter 1.03!

Make sure that the following prerequisites are met:
- the S-pivot section is pinned and secured on the turntable,
- the S-pivot section is horizontally tensioned,
- a minimum of 110 t counterweight is placed on the turntable,
- a minimum of 5 t central ballast is assembled on the crawler center section,
- an auxiliary crane is available.

WARNING
Falling components!
If unsecured or non-supported components are assembled or removed, they can fall down. Personnel can be killed or seriously injured!
- ▶ During pinning and unpinning of the intermediate sections, it is prohibited for anyone to remain **under** or **on** the components as well as within the entire danger zone!
- ▶ Before unpinning: support crane components and boom.
- ▶ Secure the pins in the bearing points and in the receptacles.
- ▶ It is prohibited to lean a ladder against the crane section which is being disassembled!

- ▶ Attach intermediate sections or preassembled boom unit **39** on the auxiliary crane.
- ▶ Lift the intermediate sections or preassembled boom unit **39** with the auxiliary crane and position on the S-pivot section **1**.

When the pin points between the S-pivot section **1** and on the S-intermediate section or the preassembled boom unit **39** align „on top“ and „bottom“:
- ▶ Pin the pins **33** „on top“ and „bottom“ and secure with linchpins **34**.

When the pins are properly pinned and secured on „top“ and „bottom“ between the S-pivot section **1** and the S-intermediate section or the preassembled boom unit **39**:
- ▶ remove the auxiliary crane.

LWE/LR 1600-2-001/18101-07-02/en

copyright © Liebherr-Werk Ehingen GmbH 2018

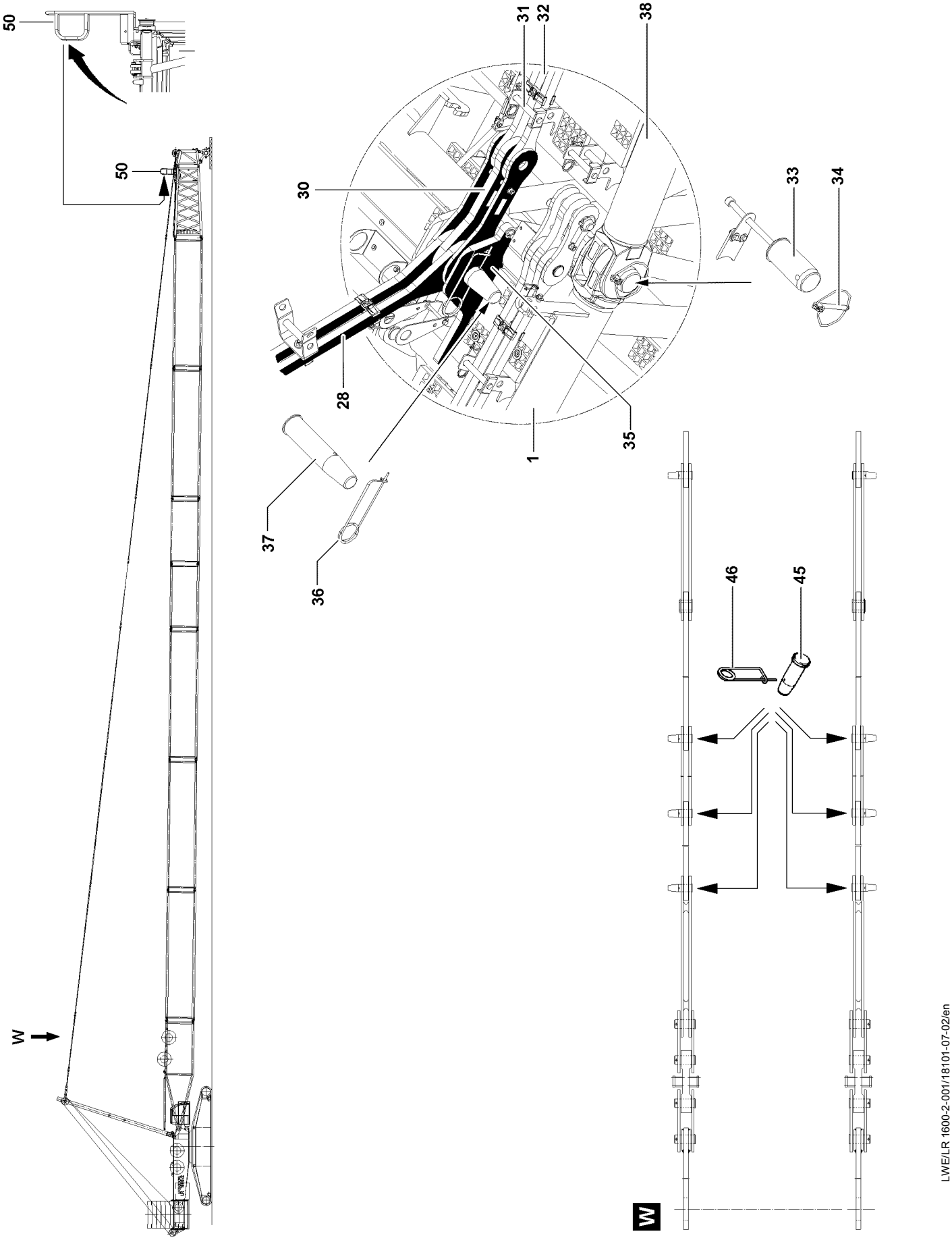

Fig.106841

copyright © Liebherr-Werk Ehingen GmbH 2018

3.6.2 Install the S-guy rods

WARNING
Not carrying out inspection and maintenance on guy rods!
If the regular inspection and maintenance of the guy rods is not carried out or is carried out only in irregular intervals, then severe accidents can occur due to existing and unrecognized damage to the guy rods!
Personnel can be severely injured or killed!
▶ Inspect the guy rods before every assembly, see Chapter 8.15.

Note
▶ The S-guy rods must be assembled and secured according to the separately supplied assembly drawings. The numbering on the assembly drawings must be identical to the numbering on the guy rods.

Ensure that the following precondition is met:
– the fold platforms **50** on the SL reducer section are folded and secured „upwards“.

WARNING
Falling components!
If the intermediate sections are incompletely pinned or secured, then components can fall down. Personnel can be severely injured or killed!
▶ Make sure that the intermediate sections or preassembled boom unit are pinned and secured on the S-pivot section.
▶ Make sure that the intermediate sections or preassembled boom unit are supported with suitable materials or secured with an auxiliary crane, see fig. **7** and fig. **8**.

▶ Relieve the guy rods: Lower the SA-frame somewhat to the front.

Result:

– The guy rods between the SA-frame and the S-pivot section are relieved.

The guy rods are placed and secured for transport on the S-intermediate sections. Before assembly of the guy rods, remove the transport retainers.

▶ Release and unpin the transport retainers **31**.

NOTICE
Property damage!
▶ Always insert the pins of the guy rods from the „inside“ to the „outside“.

copyright © Liebherr-Werk Ehingen GmbH 2018

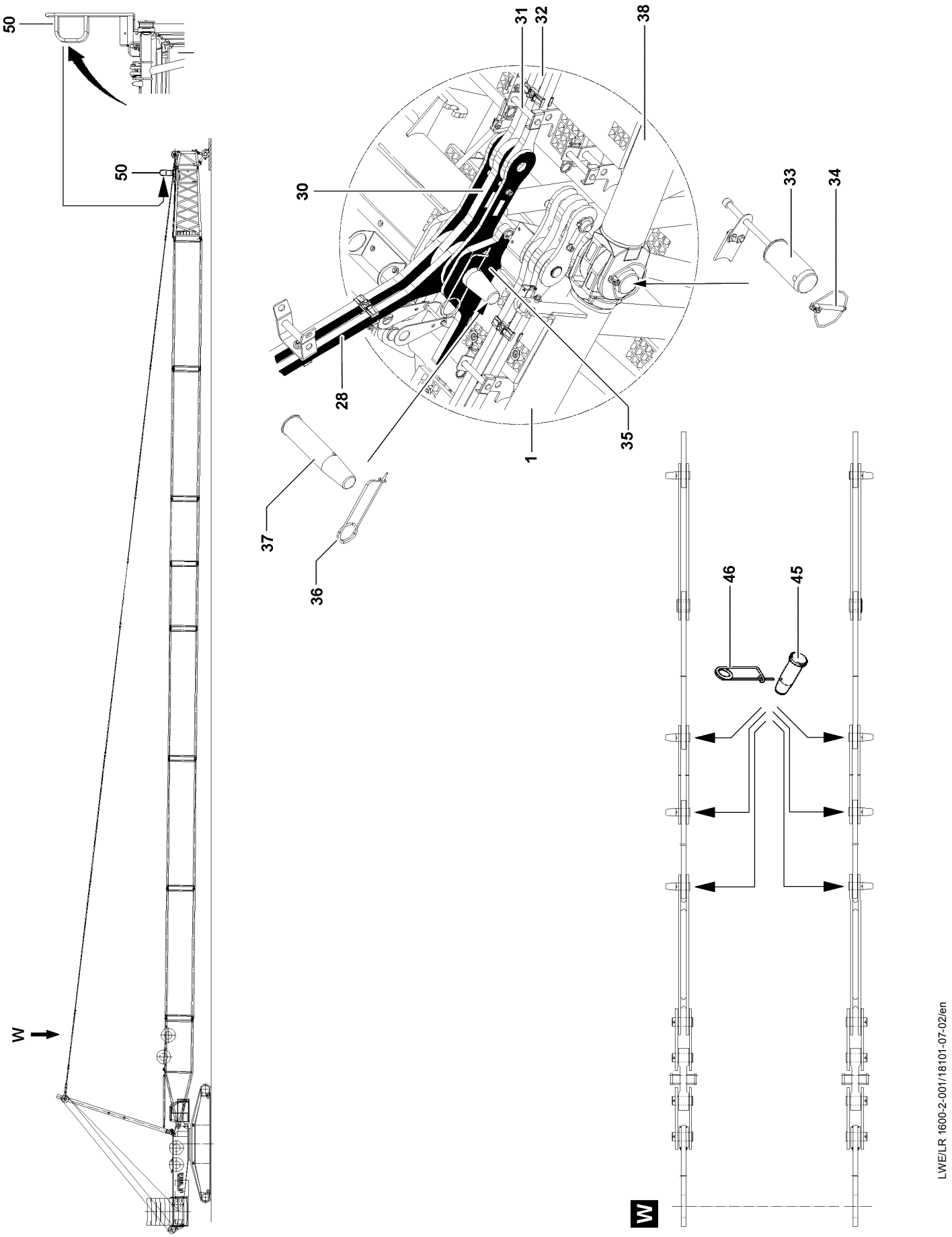

Fig.106841

copyright © Liebherr-Werk Ehingen GmbH 2018

Note

▶ The guy rods of the S-intermediate sections are pinned to each other starting from the fixed point on the end section of the boom.

▶ Pin the guy rods of all intermediate sections: Insert the pins **45** from the „inside“ to the „outside“.
▶ Secure the pin **45** with spring retainer **46**.

WARNING

Folding down boom!
If the pins on the hollow axle are unpinned, then the boom can fold down. Personnel can be severely injured or killed!

▶ Unpin the pins **37** on the assembly brackets **35** only when it is ensured that the intermediate sections are supported with suitable materials or if they are held by an auxiliary crane.

When all guy rods on the boom system are pinned:

▶ release and unpin the pins **37** on the assembly brackets **35**.
▶ Erect the SA-frame until the guy rods between the SA-frame and the S-end section tension.

LWE/LR 1600-2-001/18101-07-02/en

copyright © Liebherr-Werk Ehingen GmbH 2018

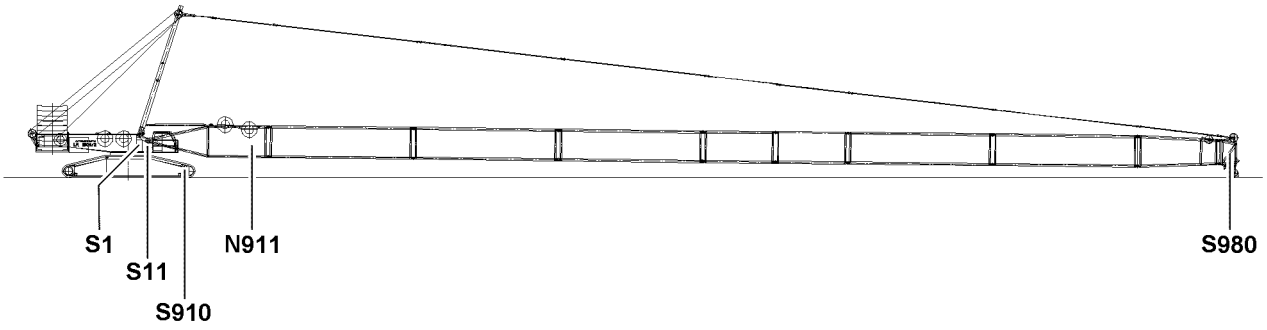

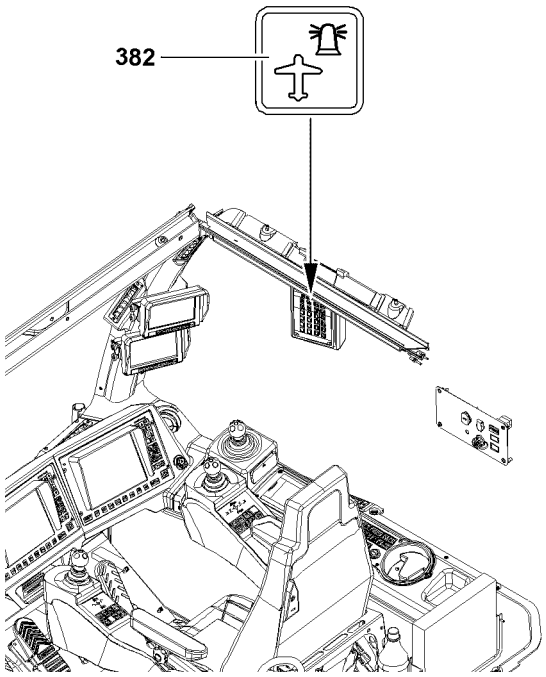

LWE/LR 1600-2-001/18101-07-02/en

Fig.106760

copyright © Liebherr-Werk Ehingen GmbH 2018

3.7 Establishing the electrical connections

NOTICE
Damage to the electrical connection on the cable drum!
If the electrical connection from the cable drum to the terminal box on the S-pivot section is established first before the connection to the terminal box on the S-end section, the electrical connection can be damaged when spooling out the cable drum.
▶ Make the electrical connection from the cable drum in the S-head piece to the terminal box on the S-head piece and then effect the electrical connection from the terminal box in the S-articulated piece to the cable drum!

Note
▶ For production of the electrical connections on the S-boom, the separate electrical diagram is to be employed.

Ensure that the following precondition is met:
– the S-boom is completely assembled,
– the flight warning lamp and the wind-speed gauge are assembled.

▶ Establish the electrical connections.
▶ Make sure that all electrical connections on the boom are established.

3.8 Checking the function of the safety devices

WARNING
Non-functioning safety devices!
If the function of the safety devices is defective, personnel can be severely injured or killed.
▶ Crane operation with non-functioning safety devices is **prohibited**!

Note
▶ The function of the individual limit switches must be checked before erection!
▶ The function of the limit switch initiators must be checked in the test system, see separate „Diagnostics“ manual.

Note
▶ If a function check on the limit switches or on the safety devices does not lead to the desired shut offs, then the plug connections on the connector boxes or the components itself must be checked. If no visible connection errors or component defects can be found, contact **LIEBHERR** Service.

Make sure that the following prerequisites are met:
– all electrical connections have been made,
– the crane engine is running,
– the corresponding operating mode is set on the LICCON monitor.

LWE/LR 1600-2-001/18101-07-02/en

copyright © Liebherr-Werk Ehingen GmbH 2018

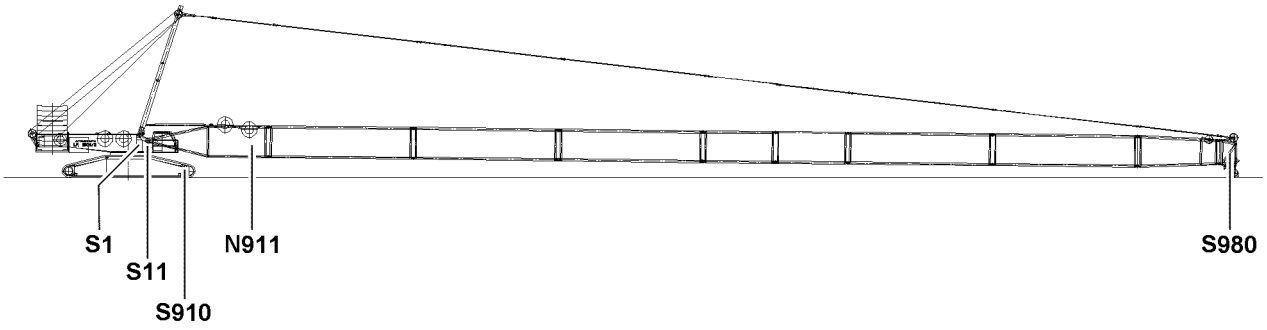

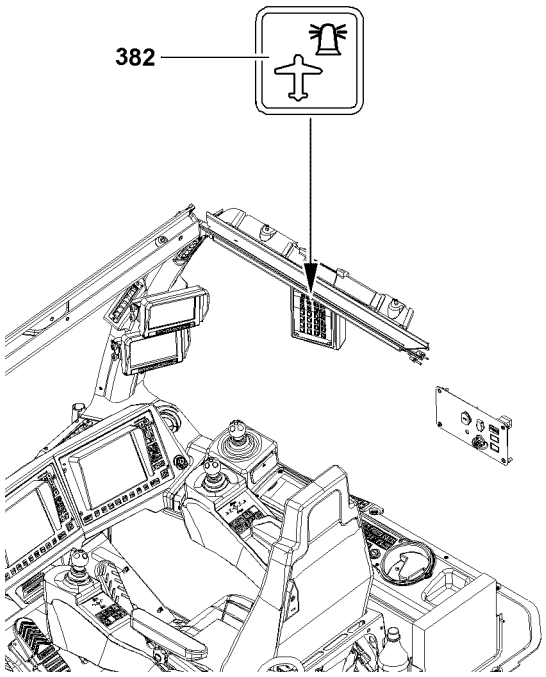

LWE/LR 1600-2-001/18101-07-02/en

Fig.106760

copyright © Liebherr-Werk Ehingen GmbH 2018

3.8.1 Checking the wind speed sensor

▶ Test the movement and the function of the wind speed sensor.

3.8.2 Check the airplane warning light

▶ Turn on the airplane warning light on with the button **382**.
▶ Visually check functionality.

3.8.3 Check the hoist limit switch on the pulley head

Note
▶ When replacing or changing a hoist limit switch (HES), the corresponding hoist limit switch must have the correct bus address and the correct software version in order to be detected again by the bus system (LSB).

▶ Actuate the hoist limit switch manually on the pulley head.

Result:

– The spool up function of the hoist winch turns off.
– The icon „Hoist top“ appears on the LICCON monitor 0.
– Limit switch is functioning.

3.8.4 Check the limit switch S-boom „steepest position“

Note
▶ The limit switch functions have to be checked individually before erection!

▶ Cover the limit switch initiators on the S-relapse cylinder individually with a metal plate.

Result:

– The hoist limit switch is actuated manually.
– The spool up function of winch IV (control winch) turns off.
– The icon „boom limitation“ appears on the LICCON monitor 0.
– Limit switch is functioning.

LWE/LR 1600-2-001/18101-07-02/en

copyright © Liebherr-Werk Ehingen GmbH 2018

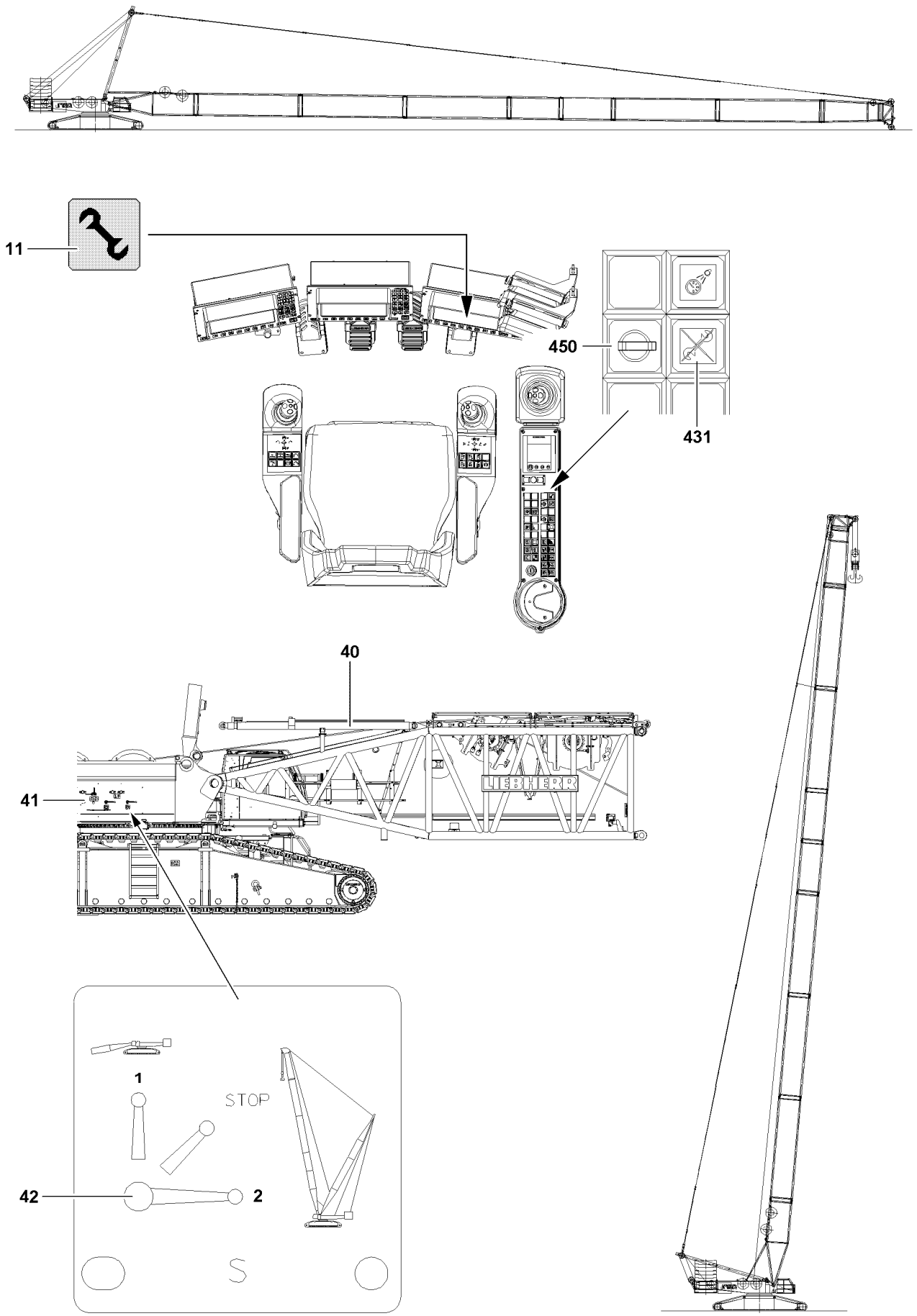

Fig.106758

LWE/LR 1600-2-001/18101-07-02/en

copyright © Liebherr-Werk Ehingen GmbH 2018

3.9 Erect the S-boom

DANGER
Crane can topple over!
- ▶ It is not permitted to turn the crane during erection!
- ▶ Observe the data in the erection and take down charts!

WARNING
Crane can topple over!
If the following conditions are not met before erecting the boom, the crane can topple over. Personnel can be severely injured or killed!
- ▶ Observe the safety technical guidelines in Chapter 5.01.
- ▶ Extend the S-relapse cylinder before erection.
- ▶ Do not allow slack cable to build up on the control winch!

WARNING
Falling hoist rope!
If the hoist rope before the erection procedure is not properly secured onto the corresponding length on the S-boom, it can fall down backward on the basis of its own weight.
Personnel can be severely injured or killed!
- ▶ Reeve in the hoist rope with sufficient length on the S-boom before the erection process!
- ▶ The hoist rope is to be observed continuously during erection!
- ▶ The danger zone must not be entered!

Make sure that the following prerequisites are met:
- – the crane is aligned in horizontal direction,
- – all electrical connections have been established,
- – all limit switches are functioning,
- – the counterweight has been attached to the turntable according to the load chart,
- – all pin connections have been secured,
- – the hoist rope has been correctly placed in the rope pulleys and is prevented from jumping out with the rope retaining pins,
- – there are no loose parts on the boom,
- – the LICCON overload protection has been adjusted according to the data in the load chart,
- – the LICCON overload protection settings have been compared with the actual crane configuration,
- – the assembly key button **450** is actuated,
- – the indicator light **431** „Assembly“ lights up,
- – the Assembly icon **11** on the LICCON monitor 0 lights up.

LWE/LR 1600-2-001/18101-07-02/en

copyright © Liebherr-Werk Ehingen GmbH 2018

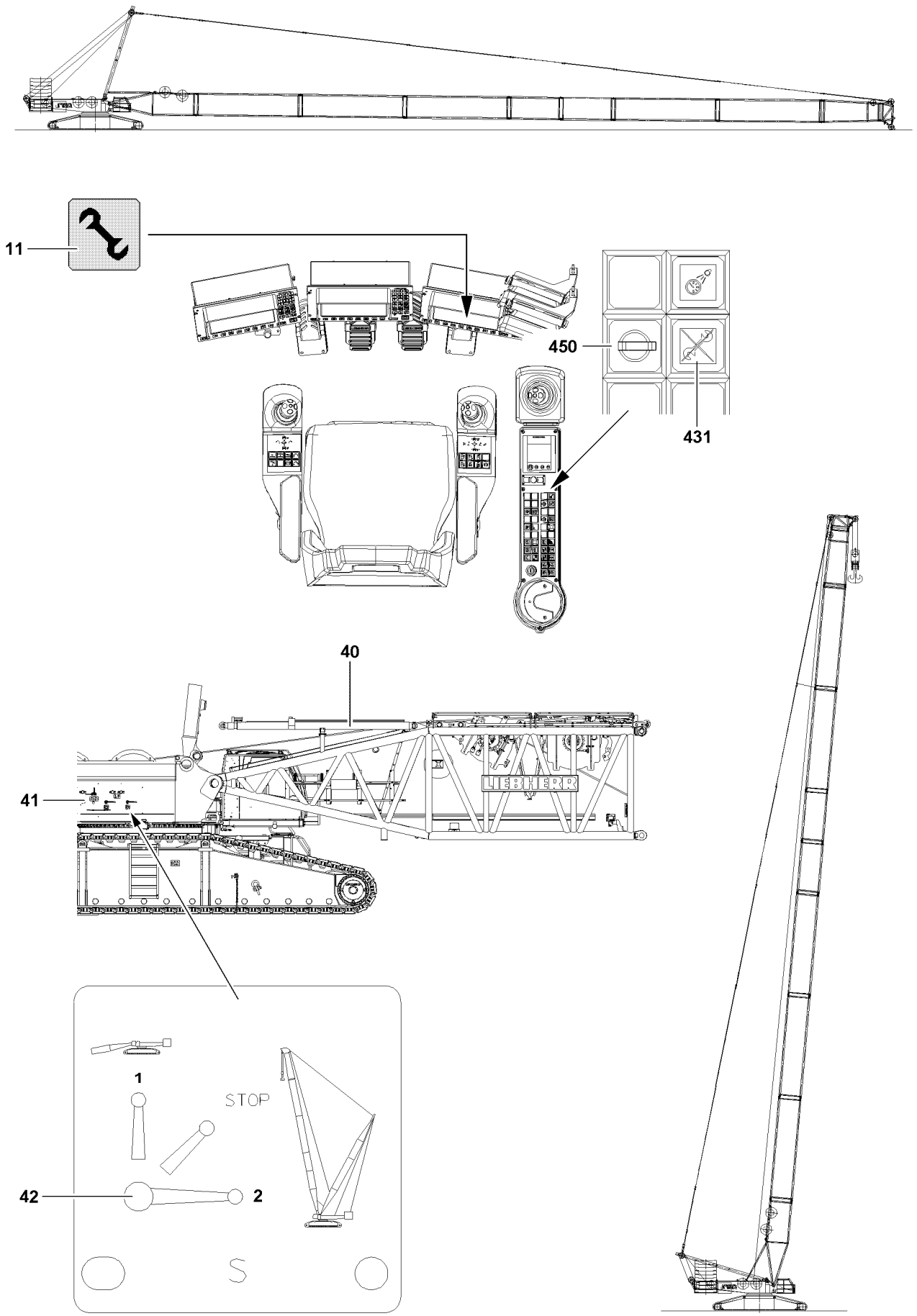

Fig.106758

LWE/LR 1600-2-001/18101-07-02/en

copyright © Liebherr-Werk Ehingen GmbH 2018

3.9.1 Extending the S-relapse cylinder

WARNING
Crane can topple over!
If the S-relapse cylinders are not extended before erecting the S-boom, then the S-boom can fall off to the rear in crane operation and the crane can topple over. Personnel can be severely injured or killed!
▶ Extend the S-relapse cylinders **40** before erecting the S-boom.
▶ Secure the ball cock **42** during crane operation to prevent inadvertent actuation.

Ball cock positions	
2	Crane operation, extend the piston rod
1	Assembly, retract the piston rod
STOP	The piston rod cannot be retracted / extended

The piston rods on the S-relapse cylinders **40** can be extended with the ball cock **42**.

▶ Set the ball cock **42** to **position 2**.

Result:

– The piston rods of the S-relapse cylinders **40** extend.

Note
▶ The ball cock **42** is secured by closing the cabinet door and removing the key.

▶ Close the cabinet door and pull the key.
▶ Hand the key to an authorized person.

copyright © Liebherr-Werk Ehingen GmbH 2018

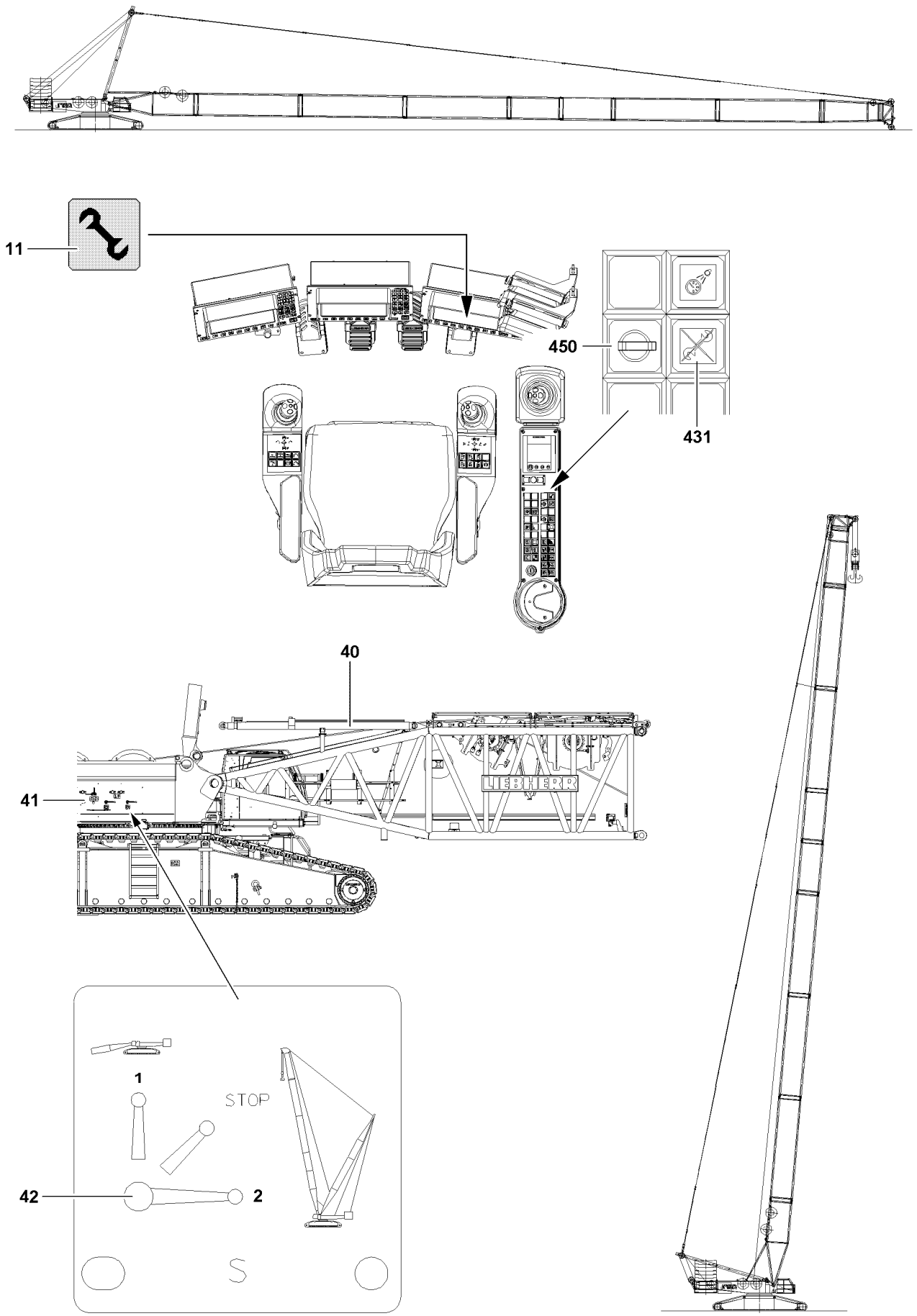

Fig.106758

LWE/LR 1600-2-001/18101-07-02/en

copyright © Liebherr-Werk Ehingen GmbH 2018

3.9.2 Erecting the boom

DANGER
Crane can topple over!
- ▶ It is prohibited to turn the crane superstructure while erecting the boom!
- ▶ Observe the data in the erection and take down charts!

Reeving in the hook block

- ▶ Luff up the boom until the end section lifts off the ground.
- ▶ Reeve in the hook block properly and secure the hoist rope on the rope fixed point, for reeving, see separate reeving plans.
- ▶ Attach the hoist limit switch weight.

Erecting the boom

DANGER
Crane can topple over!
In crane operation with bypassed safety devices, the crane can topple over. Personnel can be severely injured or killed!
- ▶ When the lowest operating position of the boom is reached, turn off the assembly key button **450** immediately.
- ▶ The radii listed in the load chart may not be exceeded or fallen below, even if there is no load on the hook!

Note
- ▶ When the lowest operating position of the boom is reached, the displays turn off.
- ▶ In the „Maximum load“ icon appears a load number in „t“ instead of the display „???“!

- ▶ Luff the boom up to the lowest operating position.

When the boom has reached the lowest operating position:
- ▶ Turn the assembly keyed button **450** off: Press the button **431**.

Result:

- – The LICCON overload protection is active.
- – The indicator light **431** turns off.
- – The assembly symbol **11** on the LICCON monitor turns off.
- – The acoustical signal turns off.
- – The three-colored light illuminates in green.
- – The warning lights on the turntable are off.

LWE/LR 1600-2-001/18101-07-02/en

copyright © Liebherr-Werk Ehingen GmbH 2018

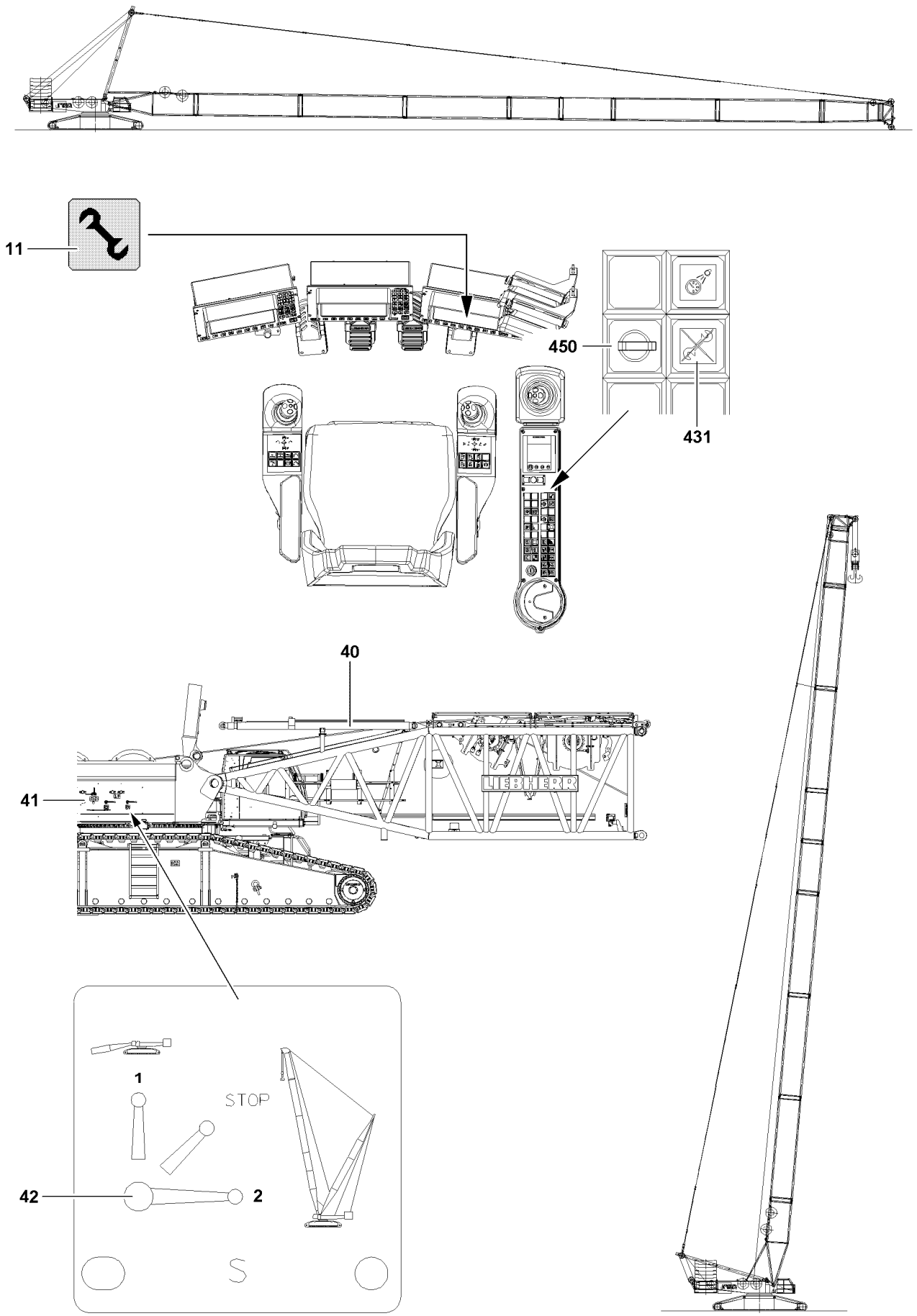

Fig.106758

LWE/LR 1600-2-001/18101-07-02/en

copyright © Liebherr-Werk Ehingen GmbH 2018

4 Operating the crane

4.1 Preparing for crane operation

Note

▶ Observe the notes in chapters 4.05, 4.08 and 5.01.

Make sure that the following prerequisites are met:

– the LICCON overload protection has been set according to the data in the load chart,
– the assembly key button **450** is turned off.

WARNING

Crane can topple over!

▶ Check the horizontal position of the crane before and during operation!
▶ If the crane operator leaves the cab, even for a short time, the operating mode setting must be checked and reset if necessary before resuming crane operation!

4.2 Checking the settings

▶ Check the function of the overload protection by running against the operating positions „on top“ and „bottom“.
▶ Check the hoist limit switch by running against the hoist limit switch weight.
▶ Check the function of the limit switches on the relapse cylinders.

LWE/LR 1600-2-001/18101-07-02/en

copyright © Liebherr-Werk Ehingen GmbH 2018

LWE/LR 1600-2-001/18101-07-02/en

Fig.195219

copyright © Liebherr-Werk Ehingen GmbH 2018

5 Disassembling the S/SL boom

Note

▶ The disassembly is described on the example of the S-boom!

WARNING

Risk of falling!

During assembly and disassembly, personnel must be secured with appropriate antifall guards to prevent them from falling. If this is not observed, assembly personnel can fall and suffer life-threatening or fatal injuries!

- ▶ Any work where there is a danger of falling must be carried out with suitable aids (for example: lifting platforms, scaffoldings, ladders, auxiliary crane)!
- ▶ If the work cannot be carried out with such aids nor from the ground, then the assembly personnel must secure themselves with approved catch systems to avoid falling, see „Chapter 2.04“!
- ▶ If railings are present for the crane, then they must be brought into the corresponding position and secured for assembly / disassembly, inspection and maintenance work.
- ▶ Only step on aids and antifall guards with clean shoes!
- ▶ Keep aids and antifall guards clean and free of snow and ice!
- ▶ During all assembly / disassembly work, maintenance work and inspections, travel or crane operation is prohibited!

WARNING

The lattice sections can fall down!

If the lattice sections are not pinned and secured correctly, then the lattice jib can fall down and fatally injure personnel!

- ▶ Unpin or pin both pins at the same horizontal level, i.e. **left and right**!
- ▶ Do not stand under the booms or within the entire danger zone during the boom pinning and unpinning procedure!
- ▶ Safely secure the pins in the bearing points as well as receptacles!
- ▶ It is prohibited to lean the ladder against the component being disassembled!

WARNING

Danger of crushing!

While assembling crane components, body limbs can be crushed or severed by the swing movement of the swing beam!

- ▶ Make sure that the components do not swing back and forth during assembly!

DANGER

Falling down of components!

If each component hangs from the auxiliary crane before each component is pinned on, each component can fall down and kill personnel!

- ▶ Do not disengage the auxiliary crane until each component is pinned on and secured!

LWE/LR 1600-2-001/18101-07-02/en

copyright © Liebherr-Werk Ehingen GmbH 2018

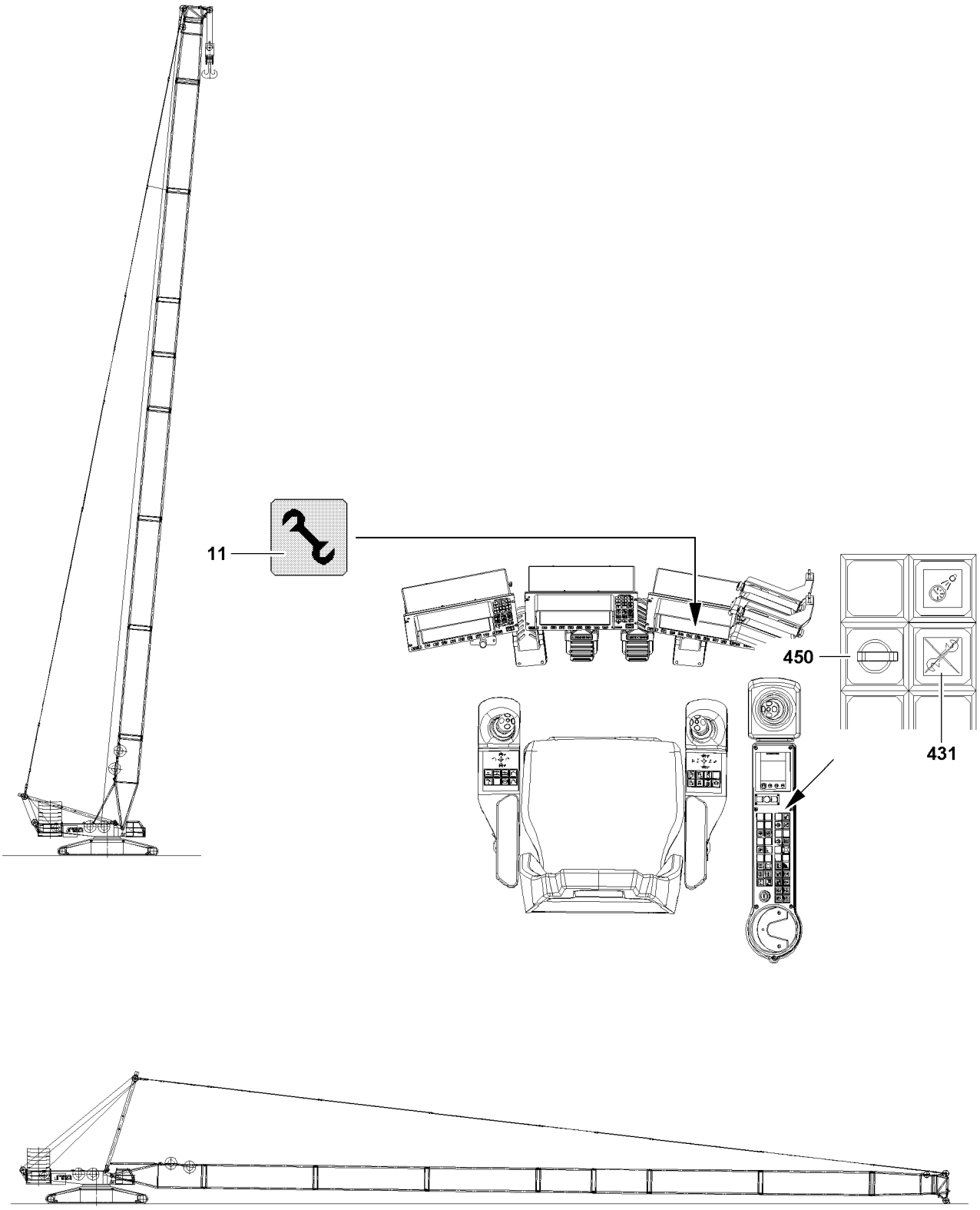

LWE/LR 1600-2-001/18101-07-02/en

Fig.106757

copyright © Liebherr-Werk Ehingen GmbH 2018

5.1 Setting down the boom

WARNING
Crane can topple over!
If the following conditions are not met before taking down the boom, the crane can topple over and fatally injure personnel!
- ▶ Observe the safety technical guidelines in Chapter 5.01!
- ▶ Observe the data in the erection and take down charts!

NOTICE
Damage of boom components!
Taking down the boom system can lead to a collision between the hook block and the pulley head. Boom components can be severely damaged.
- ▶ Luff the boom system down at the same time and spool the hoist winch out.

5.1.1 Luffing the boom down

Note
- ▶ The Luff down movement is turned off as soon as the lowest operating position is reached.
- ▶ When the lowest operating position of the boom is reached, the load display in the „Maximum load“ icon turns off and instead of the load display appears the display „???“.
- ▶ In the crane operating screen appear alarm functions.

▶ Luff the S-boom down to the **lowest** operating position.

Result:

The following alarm functions become active:
– „STOP“
– „Horn“ and acoustical signal

DANGER
Crane operation with added assembly key button!
- ▶ The actuation of the assembly key button **450** is only permitted for assembly tasks!
- ▶ The assembly key button **450** may only be operated by persons who are aware of the consequences of a bypass!
- ▶ If the assembly key button **450** is turned on, the hoist limit switch and the LICCON overload protection is bypassed!
- ▶ Crane operation with the assembly key button **450** turned on is strictly prohibited!
- ▶ The assembly key button **450** must be removed immediately after carrying out the assembly work and handed to an authorized person!

When the boom has reached the lowest operating position:
▶ turn the assembly key button **450** on:

Result:

– The LICCON overload protection is deactivated.
– Control light **431** illuminates.
– The assembly icon **11** on the LICCON monitor blinks.
– The „STOP“ icon on the LICCON monitor blinks.
– An acoustical signal sounds.
– The three-colored light illuminates in red.
– The warning lights on the turntable illuminates in red.

▶ At the same time, spool the hoist winch out and luff the S-boom down until the hook block touches the ground.

LWE/LR 1600-2-001/18101-07-02/en

copyright © Liebherr-Werk Ehingen GmbH 2018

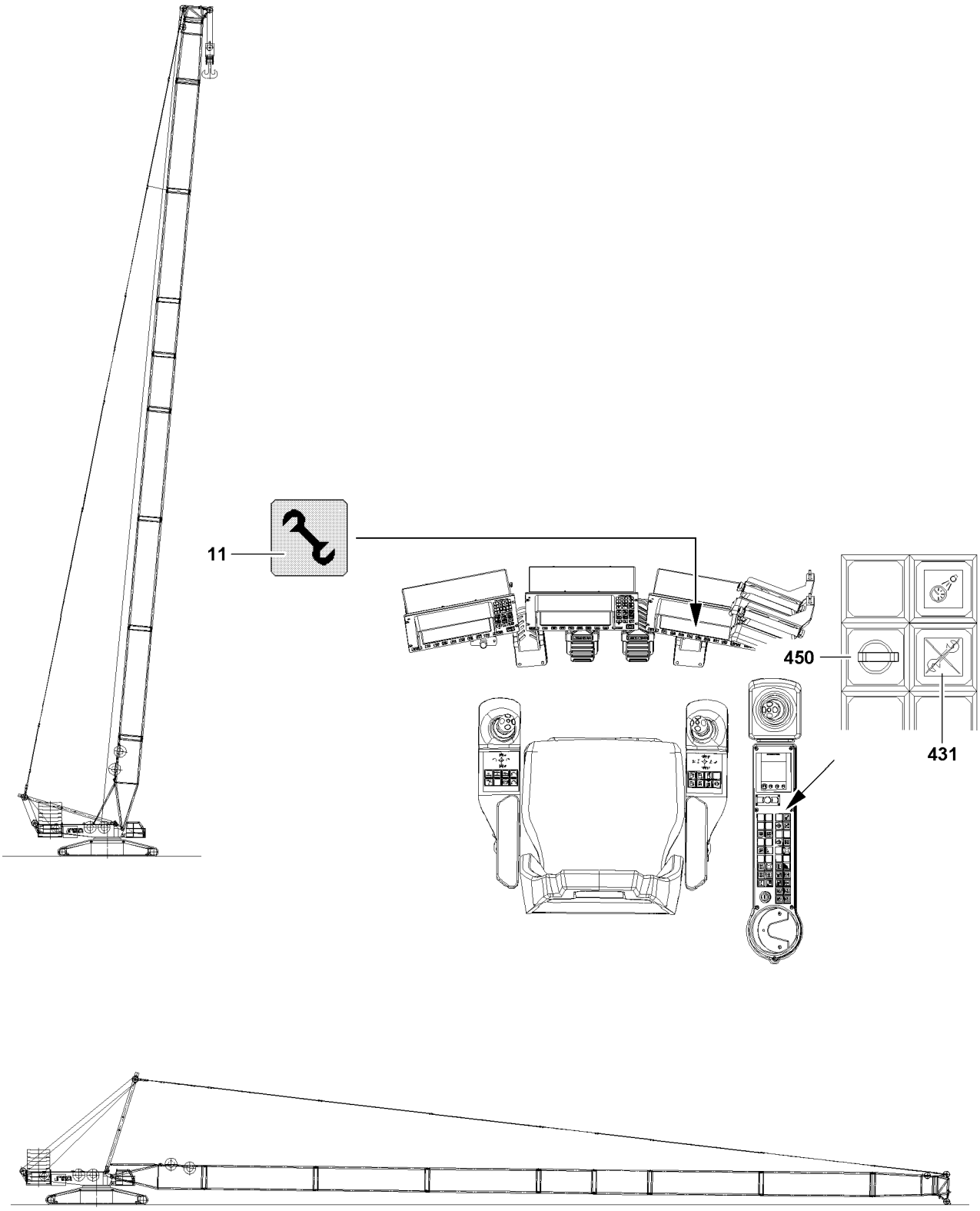

LWE/LR 1600-2-001/18101-07-02/en

Fig.106757

copyright © Liebherr-Werk Ehingen GmbH 2018

5.1.2 Unreeving the hook block

- ▶ Remove the hoist limit switch weight and unreeve the hook block.
- ▶ Luff the boom down until the boom head is laying on the support on the ground.

5.1.3 Spooling up the hoist rope

WARNING
Falling hoist rope!
By spooling up the hoist rope, personnel can be severely injured or killed!
- ▶ All rope retaining pins / pipes are removed on the S-boom!
- ▶ Slowly spool up the hoist rope over the rope pulleys back to the winch!
- ▶ Make sure that no personnel may be found within the danger zone!

NOTICE
Over spooled winch!
If the rope is pulled under the winch when spooling up, then the adjustment of the winch turn sensor is incorrect. A new adjustment by **LIEBHERR Service** is required.
- ▶ Stop the winch in time, with sufficient rope reserve!
- ▶ Do not over spool the winch!

- ▶ Spool up the hoist rope.

5.2 Disconnect the electrical connections

Ensure that the following precondition is met:
- the S-boom has been placed down.

NOTICE
Damage to the cable drum or cable!
If the cable drum cable is not properly spooled up on the cable drum after disconnection on the S-end section, the cable drum or the cable can be significantly damaged!
- ▶ Spool up cable drum after disconnection!

- ▶ Spool the cable drum up and secure it to prevent inadvertent spooling out.

LWE/LR 1600-2-001/18101-07-02/en

copyright © Liebherr-Werk Ehingen GmbH 2018

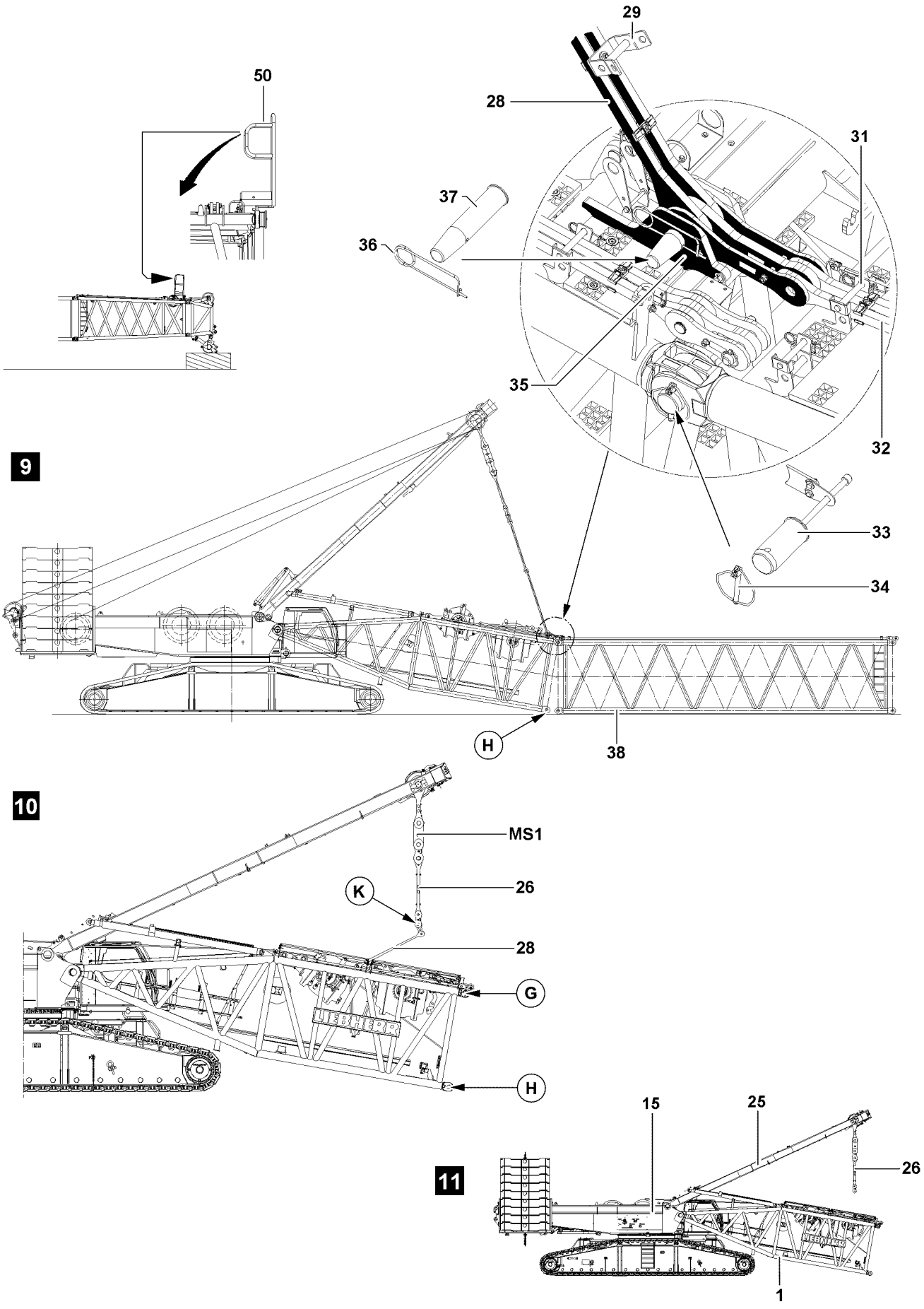

Fig.106842

LWE/LR 1600-2-001/18101-07-02/en

copyright © Liebherr-Werk Ehingen GmbH 2018

5.3 Disassemble the S-booms

WARNING
Folding down boom!
If the following conditions are not met before disassembling the boom, the boom can fold down. Personnel can be severely injured or killed!
- ▶ Support the S-boom during disassembly with suitable materials!
- ▶ Before unpinning the S-intermediate section **38**, the guy rods **28** on the assembly brackets **35** must be pinned and secured!
- ▶ During pinning and unpinning of the intermediate sections, it is prohibited for anyone to remain **under** or **on** the components as well as within the entire danger zone!

Ensure that the following precondition is met:
– all electrical connections are separated on the boom.

- ▶ Place the guy rods on the S-intermediate sections.
- ▶ Release and unpin the guy rods on the S-intermediate sections.
- ▶ Secure the guy rods with the transport retainers **31**.

Note
- ▶ For maintenance of the system dimension for highway transport, the fold platforms **50** must be folded and pinned in transport position!

- ▶ Bring fold platforms **50** into transport position with auxiliary crane.
- ▶ Pin and secure fold platforms **50** into transport position.
- ▶ Pin the guy rods **28** of the S-pivot section on the assembly brackets **35**: insert the pin **37** and secure with spring retainer **36**, see figure **9**.

WARNING
Crane can topple over!
If the following conditions are not met, the crane can topple over or be significantly damaged! Personnel can be severely injured or killed!
- ▶ The maximum permissible total force on test point **MS1** may **not** be exceeded. The „actual force“ is shown on LICCON monitor 1.
- ▶ Lifting the following boom length is permissible if the maximum permissible total force on test point 1 (**MS1**) is noted, observe the following charts!

LWE/LR 1600-2-001/18101-07-02/en

copyright © Liebherr-Werk Ehingen GmbH 2018

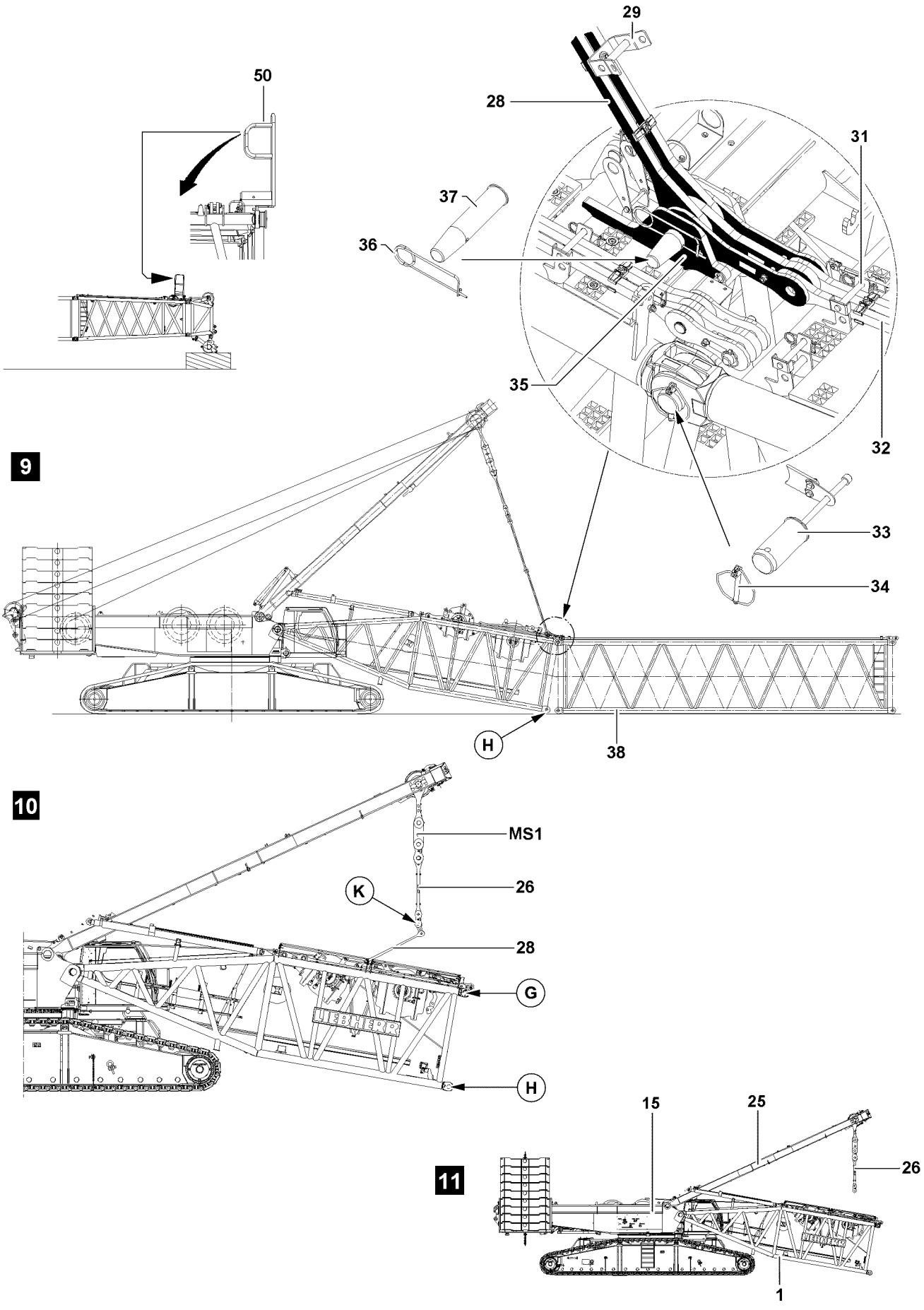

Fig.106842

LWE/LR 1600-2-001/18101-07-02/en

copyright © Liebherr-Werk Ehingen GmbH 2018

Maximum permissible total force MS1 160 t				
Boom system	**Maximum system length**	**Equipment**	**DB_{min} 1)**	**ZB_{min} 2)**
S	48 m	- with SW-end section - with S- and WA-frame II guy rods	110 t	5 t
S	52 m	- without SW-end section - with S- and WA-frame II guy rods	110 t	5 t
SL	54 m	- with SW-end section - with S-guy rods	110 t	5 t

1) This counterweight must be at least assembled on the turntable for „flying assembly“.
2) This central ballast must be at least assembled on the crawler center section for „flying assembly“.

Note
▶ Unpin the intermediate sections with the pin pulling device, see Chapter 5.30.

NOTICE
Property damage!
If the maximum permissible total force is not observed when lifting the boom system for disassembly, then components can be severely damaged.
▶ Do not exceed the maximum permissible total force!

Note
▶ The ACTUAL force on test point **MS1** is shown on monitor 1.
▶ Tension the guy rods on the SA-frame with the same force as during the assembly.
▶ Refer to the ACTUAL force, which was measured and noted during assembly on test point **MS1**.
▶ The pins can be pulled easier and the pins and lugs are therefore not damaged.

▶ Lift the SA-frame and tension the guy rods **28** until the force on test point **MS1** corresponds to the force at assembly.
▶ Unpin the S-pivot section on both sides „on the bottom“ at point **H**: remove the linchpin **34** and unpin the pin **33**.
▶ Lower the S-pivot section on the support.
▶ Lower the SA-frame and place the guy rods **28** on the S-pivot section.
▶ Unpin the guy rods **28** S-pivot section from the guy rods **26** SA-frame in point **K**, place them down and securely with transport retainers **29**, see fig. **10** and fig. **11**.
▶ Erect the SA-frame to the point where the S-pivot section can be attached on the auxiliary crane.
▶ Unpin and disassemble the intermediate sections **38**.

copyright © Liebherr-Werk Ehingen GmbH 2018

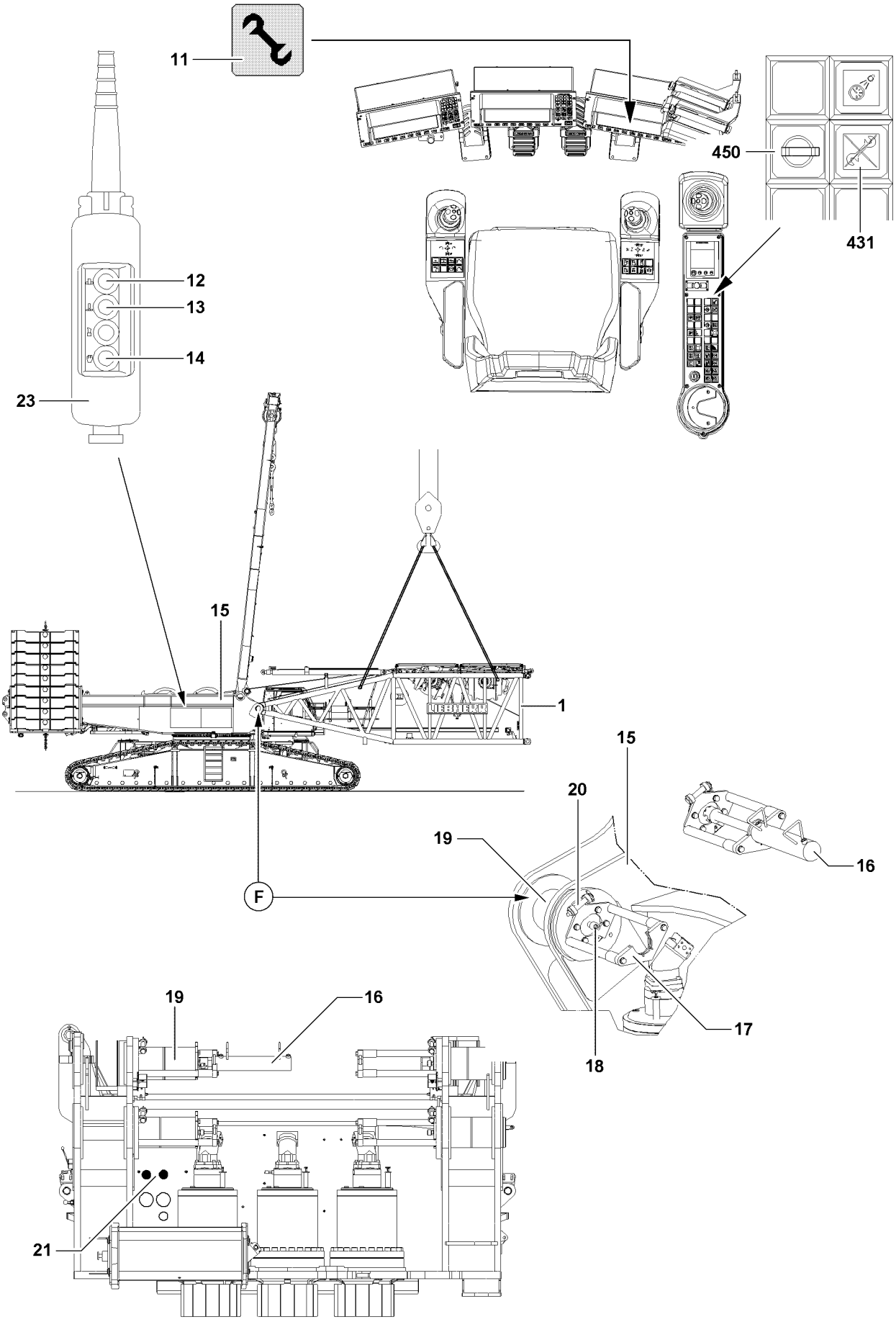

Fig.106759

LWE/LR 1600-2-001/18101-07-02/en

copyright © Liebherr-Werk Ehingen GmbH 2018

5.4 Unpin the S-pivot section

- ▶ Attach the S-pivot section **1** on the auxiliary crane.
- ▶ Lift the S-pivot section **1** with the auxiliary crane to the horizontal.

Establish the hydraulic connection to the pin pulling device via two quick couplers.

- ▶ Release and unpin the pin **20**.
- ▶ Hang the pin pulling cylinder **16** into the receptacle **17** and the screw **18** on the pin **19**.
- ▶ Connect the pin pulling cylinder **16** on quick couplers **21**, hydraulic turntable.

WARNING
Falling S-pivot section!
- ▶ Make sure that the S-pivot section is secured with the auxiliary crane before unpinning the pin **19**.

- ▶ Unpin the pins **19** with the hydraulic pin pulling cylinder **16**: actuate key **14** on the control console **23** and hold down, finally actuate the key **13** until the pin is completely unpinned.

When the pins **19** are completely unpinned on the left and right on the S-pivot section **1**:
- ▶ pin and secure the pin **20** on the left and right.

NOTICE
Damage on the turntable and the S-pivot section!
- ▶ Slowly swing the S-pivot section **1** with the auxiliary crane and at low speed from the turntable.
- ▶ Before placing it on the ground, support the S-pivot section **1**.

- ▶ Carefully place the S-pivot section **1** down.
- ▶ Remove the auxiliary crane.
- ▶ Place the SA-frame on the turntable, see Chapter 5.02.

LWE/LR 1600-2-001/18101-07-02/en

copyright © Liebherr-Werk Ehingen GmbH 2018

Empty page!

LWE/LR 1600-2-001/18101-07-02/en

copyright © Liebherr-Werk Ehingen GmbH 2018

5.39 LD/SLD/SD-boom combination

1	Component overview	3
2	Fastening points	3
3	Assembling the SLD / SD-boom	6
4	Operating the crane	57
5	Disassembling the SLD / SD-boom	57

LWE/LR 1600-2-001/18101-07-02/en

copyright © Liebherr-Werk Ehingen GmbH 2018

LWE/LR 1600-2-001/18101-07-02/en

Fig.195219

copyright © Liebherr-Werk Ehingen GmbH 2018

1 Component overview

Note
- ▶ The boom components as well as the dimensions and weights are described in chapter 1.03.
- ▶ For the combination of the various boom systems, refer to the Rod plan and chapter 5.03.

2 Fastening points

WARNING
Falling lattice sections!
Death, severe bodily injuries, property damage.
- ▶ Make sure that the lattice sections are properly fastened on the respective fastening points.
- ▶ Make sure that the fastening equipment has the appropriate length and a sufficient load bearing capacity.
- ▶ Pay attention and adhere to the labels on the fastening points on the lattice sections and crane components.

2.1 Fastening points S-pivot section

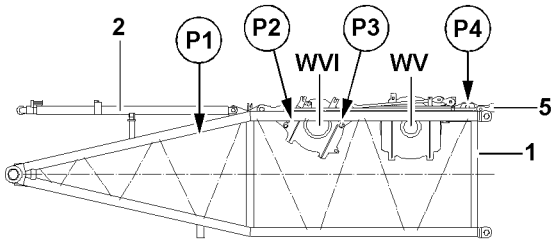

Fig.125155: Fastening points S-pivot section

Fastening points	
P1 + P3	S-pivot section without winch 5, without winch 6
P2 + P3	S-pivot section with winch 5, without winch 6
P1 + P3	S-pivot section without winch 5, with winch 6
P2 + P3	S-pivot section with winch 5, with winch 6

2.2 Fastening points S-intermediate sections 2825.25, 3 m

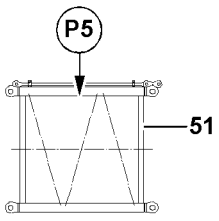

Fig.125156: Fastening points S-intermediate sections 2825.25, 3 m

copyright © Liebherr-Werk Ehingen GmbH 2018

Note
- ▶ The S-intermediate sections are available in various system dimensions.
- ▶ The lattice section must be fastened on both sides to the fastening points.

Fastening points	
P5	S-intermediate sections 2825.25, 3 m

2.3 Fastening points S-intermediate sections 2825.25, 12 m

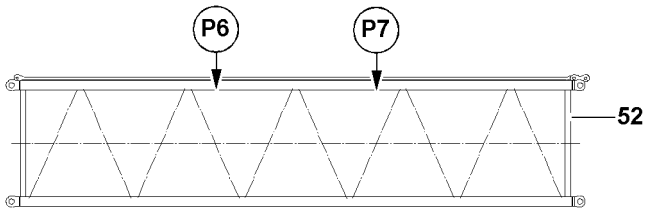

Fig.125157: Fastening points S-intermediate sections 2825.25, 12 m

Note
- ▶ The S-intermediate sections are available in various system dimensions.
- ▶ The distance between the fastening pints can vary, depending on the respective S-intermediate section.
- ▶ The lattice section must be fastened on both sides to the fastening points.

Fastening points	
P6 + P7	S-intermediate sections 2825.25, 12 m

2.4 Fastening points S-intermediate sections 2825.20, 6 m

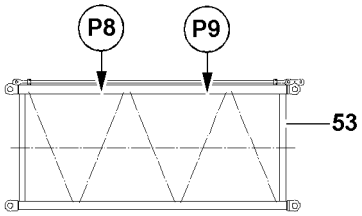

Fig.125158: Fastening points S-intermediate sections 2825.20, 6 m

Note
- ▶ The S-intermediate sections are available in various system dimensions.
- ▶ The distance between the fastening pints can vary, depending on the respective S-intermediate section.
- ▶ The lattice section must be fastened on both sides to the fastening points.

Fastening points	
P8 + P9	S-intermediate sections 2825.20, 6 m

LWE/LR 1600-2-001/18101-07-02/en

copyright © Liebherr-Werk Ehingen GmbH 2018

2.5 Fastening points S-intermediate sections 2825.20, 12 m FLM for flying assembly

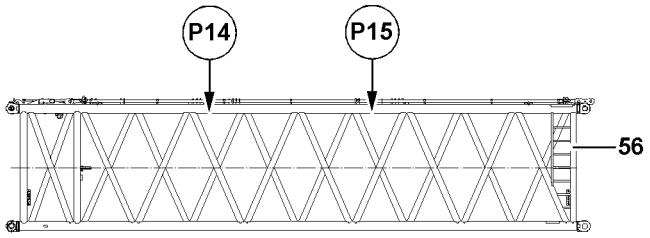

Fig.125161: Fastening points S-intermediate sections 2825.20, 12 m FLM for flying assembly

Note
- ▶ The S-intermediate sections are available in various system dimensions.
- ▶ The distance between the fastening pints can vary, depending on the respective S-intermediate section.
- ▶ The lattice section must be fastened on both sides to the fastening points.

Fastening points	
P14 + P15	S-intermediate sections 2825.20, 12 m FLM for flying assembly

2.6 Fastening points LI-intermediate sections 2420.10Z, 12 m

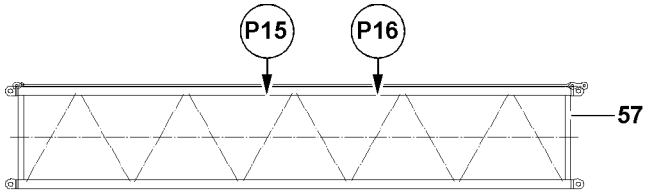

Fig.125162: Fastening points LI-intermediate sections 2420.10Z, 12 m

Note
- ▶ The S-intermediate sections are available in various system dimensions.
- ▶ The distance between the fastening points can vary.
- ▶ The lattice section must be fastened on both sides to the fastening points.

Fastening points	
P16 + P17	LI-intermediate sections 2420.10Z, 12 m

LWE/LR 1600-2-001/18101-07-02/en

copyright © Liebherr-Werk Ehingen GmbH 2018

2.7 Fastening points SL-reducer

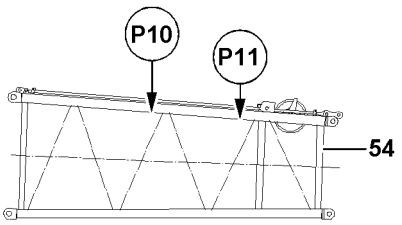

Fig.125159: Fastening points SL-reducer

Note
▶ The lattice section must be fastened on both sides to the fastening points.

Fastening points	
P10 + P11	SL-reducer

2.8 SW-end section fastening points

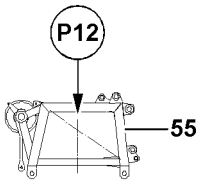

Fig.125160: SW-end section fastening points

Fastening points	
P12	SW-end section, without roller set

3 Assembling the SLD / SD-boom

Note
▶ For the combination of the boom lattice sections, observe and adhere to the Rod plan and chapter 5.03.

LWE/LR 1600-2-001/18101-07-02/en

copyright © Liebherr-Werk Ehingen GmbH 2018

WARNING
Danger of falling!
During assembly / disassembly, inspection and maintenance work, assembly personnel must be secured with appropriate aids to prevent them from falling.
Death, severe bodily injuries, property damage.
- ▶ All work at a height, when there is a danger of falling, must be carried out with suitable aids.
- ▶ If aids are not available and work cannot be carried out from the ground, then assembly personnel must secure themselves with the supplied fall arrest system to prevent falling, see chapter 2.04.
- ▶ If fall protection equipment is available, then it must be used, see chapter 2.06.
- ▶ When lifting, lowering, swinging crane parts in and out, no persons may remain in the danger zone.
- ▶ When closing or opening boom systems during boom assembly or boom disassembly, no persons may remain on the boom system or in the danger zone.
- ▶ If railings are present on the components, then they must be brought into the corresponding position and secured for assembly / disassembly work.
- ▶ Only step on the aids, ladders and catwalks with clean shoes.
- ▶ Keep aids, ladders and catwalks free of heavy dirt, snow and ice.
- ▶ During all assembly and disassembly work, maintenance work and inspections, travel or crane operation is prohibited.
- ▶ Remaining on a suspended load is prohibited.
- ▶ Stepping or walking on crane components and lattice sections, which have an incline of more than 20° is prohibited.
- ▶ For all assembly work, the crane driver of the main crane must be in voice contact with the crane driver / crane drivers of the auxiliary crane / auxiliary cranes.
- ▶ For assembly tasks, the crane driver may only initiate crane movements when the responsible guide has explicitly released the movement.

WARNING
The lattice sections can fall down!
If the lattice sections are not pinned and secured correctly, then they can fall down.
Death, severe bodily injuries, property damage.
- ▶ Insert or unpin both pins at the same horizontal level, i.e. **left and right**.
- ▶ Do not stand under the lattice sections or within the entire danger zone during the pinning and unpinning procedure of the boom.
- ▶ Safely secure the pins in the storage locations as well as in the receptacles.
- ▶ It is prohibited to lean the ladder against the component being disassembled.

WARNING
Danger of impact / crushing!
When installing / removing crane components with the auxiliary crane, crane components can start to swing back and forth.
When lifting / lowering and positioning crane components, there is an increased danger of impacts / crushing.
Death, severe bodily injuries, property damage.
- ▶ Make sure that personnel cannot be caught by components.
- ▶ Make sure that the crane is horizontally aligned.
- ▶ When working in danger zones: Use aids to protect limbs.
- ▶ Guide components with suitable aids to minimize oscillation.

DANGER
The components can fall down!
If the corresponding component is disengaged from the auxiliary crane before the corresponding component is pinned, then the corresponding component can fall down.
Death, severe bodily injuries, property damage.
- ▶ Do not disengage the auxiliary crane until the respective component is pinned and secured.

LWE/LR 1600-2-001/18101-07-02/en

copyright © Liebherr-Werk Ehingen GmbH 2018

WARNING
The crane can topple over!
- ▶ The turntable may not be turned during the assembly of the boom.
- ▶ Observe the assembly conditions, see chapter 3.06.

WARNING
Danger of accident!
Death, severe bodily injuries, property damage.
- ▶ For assembly of the boom combinations, the rod plan must be observed and adhered to.
- ▶ Depending on the condition of the ground, the boom and the lattice sections must be supported from below for the assembly of the boom.
- ▶ Observe the technical safety instructions, see chapter 5.01.

Make sure that the following prerequisites are met:
- – The crane is horizontally aligned.
- – An auxiliary crane is available.
- – An assembly scaffolding / work platform is available.
- – The central ballast is installed according to the load chart.
- – The counterweight has been installed on the turntable according to the load chart.
- – The LICCON overload protection has been set according to the data in the load chart.

LWE/LR 1600-2-001/18101-07-02/en

copyright © Liebherr-Werk Ehingen GmbH 2018

Empty page!

LWE/LR 1600-2-001/18101-07-02/en

copyright © Liebherr-Werk Ehingen GmbH 2018

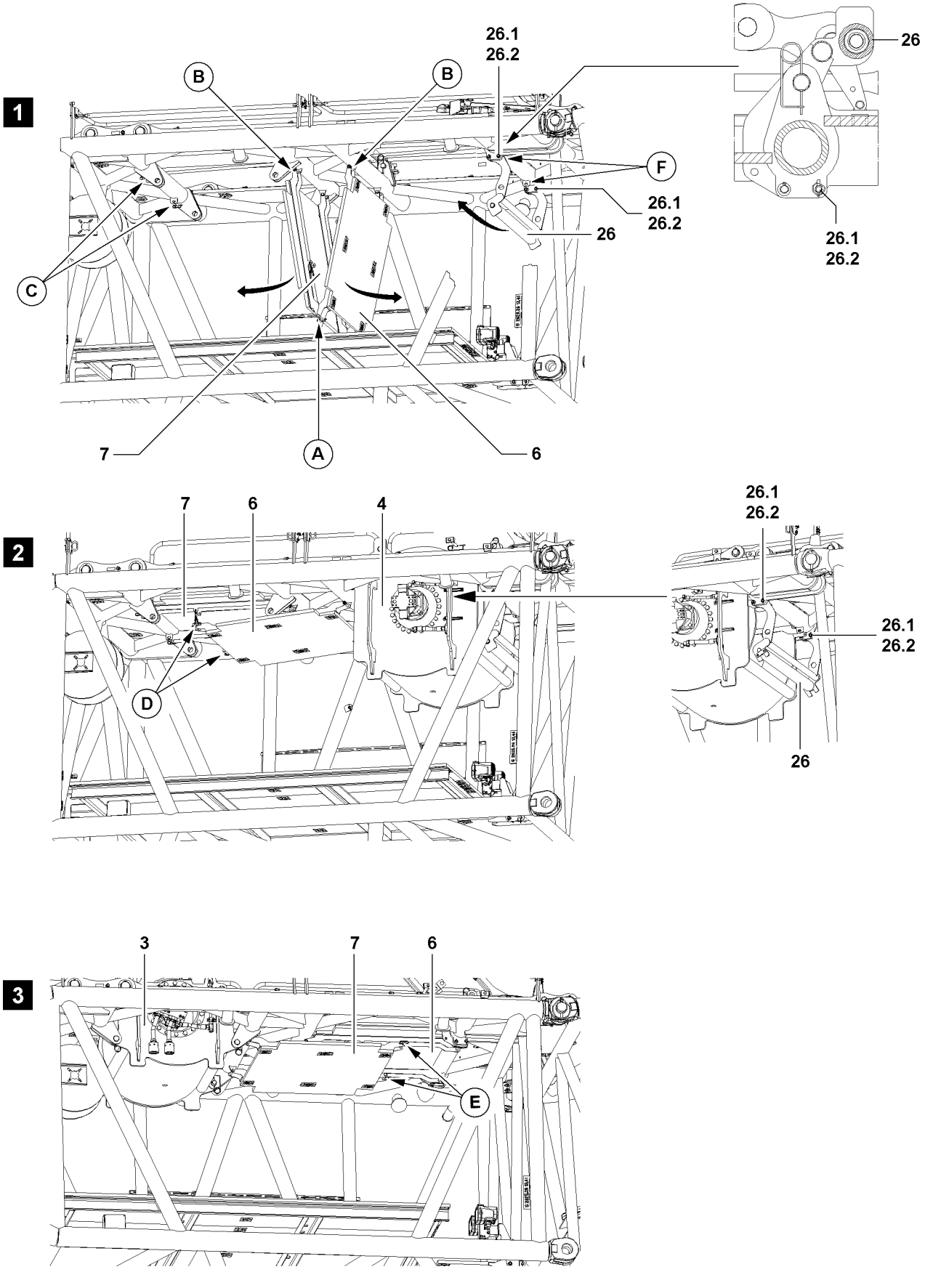

Fig.106747

LWE/LR 1600-2-001/18101-07-02/en

copyright © Liebherr-Werk Ehingen GmbH 2018

3.1 Swinging the railing on the S-pivot section into the operating position

WARNING
Danger of falling!
During assembly and disassembly of the railings, assembly personnel must be secured with appropriate aids to prevent them from falling.
Even during the assembly of protective equipment there is a danger of falling.
Death, severe bodily injuries, property damage.
- ▶ For assembly and disassembly work, maintenance and inspection work on the S-pivot section, all railings must be assembled and secured.
- ▶ Only step on the S-pivot section **1** with „clean shoes“.

- ▶ Swing the railing on the S-pivot section **1** into the operating position, pin with the grip pin and secure with the spring retainer.

3.2 Assembling the catwalks

WARNING
Disassembled or incompletely assembled catwalks!
If the catwalks are not installed when the winches are missing or if the catwalks are not completely installed, then personnel can fall down.
Death, severe bodily injuries, property damage.
- ▶ For each non-assembled winch on the S-pivot section: Assemble the catwalk.
- ▶ The catwalks may only be accessed when they are pinned and secured in the operating position, check visually.

WARNING
Catwalks swung down!
Catwalks that swing down by themselves can cause severe face or head injuries for assembly personnel.
Death, severe bodily injuries, property damage.
- ▶ For safety reasons, assemble the catwalks always with two persons.

Note
- ▶ If winch 5 is not assembled, the protective roller **26** must be pinned in the „up“ position during crane operation.
- ▶ If winch 5 is to be assembled, then - before assembly of winch 5 - the protective roller **26** must be folded down and pinned in the „down“ position.

Catwalks are assigned to the openings for the winches:
- Winch 5 – catwalk **6**.
- Winch 6 – catwalk **7**.

Make sure that the following prerequisite is met:
- The railings are pinned and secured in the operating position.

3.2.1 S-pivot section without winches

Make sure that the following prerequisites are met:
- Catwalks are pinned in the transport position in point **A**.
- The protective roller **26** is pinned and secured in the „up“ position.

- ▶ Release and unpin the catwalks in point **A**.

Swing the catwalks „up“ individually into the operating position and pin.

- ▶ Swing the catwalk **7** into the operating position and pin and secure in points **C**, see illustration **1**.
- ▶ Swing the catwalk **6** into the operating position and pin and secure in points **F**, see illustration **1**.

LWE/LR 1600-2-001/18101-07-02/en

copyright © Liebherr-Werk Ehingen GmbH 2018

3.2.2 S-pivot section before installation of winch 5

Make sure that the following prerequisites are met:
- Winch 5 is not installed.
- Winch 6 is not installed.
- The protective roller **26** is pinned and secured in the „up“ position.
- The catwalk **6** and catwalk **7** are pinned and secured in the operating position.

▶ Hang the catwalk **6** on the auxiliary crane.

When the catwalk **6** is safely held by the auxiliary crane:
▶ Unpin the catwalk **6** in points **F**.
▶ Lower the catwalk **6** downward and remove the auxiliary crane.
▶ Swing the catwalk **6** upward to the opposite side and pin and secure in the points **D** of the catwalk **7**, see illustration **2**.
▶ Release and unpin the protective roller **26** in the „up“ position.
▶ Swing the protective roller **26** into the „down“ position, pin with the retaining pin **26.1** and secure with the locking pin **26.2**.

Result:

– Winch 5 can be installed.

3.2.3 S-pivot section before installation of winch 6

Make sure that the following prerequisites are met:
- Winch 5 is not installed.
- Winch 6 is not installed.
- The protective roller **26** is pinned and secured in the „up“ position.
- The catwalk **6** and catwalk **7** are pinned and secured in the operating position.

▶ Hang the catwalk **7** on the auxiliary crane.

When the catwalk **7** is safely held by the auxiliary crane:
▶ Unpin the catwalk **7** in points **C**.
▶ Lower the catwalk **7** downward and remove the auxiliary crane.
▶ Swing the catwalk **7** upward to the opposite side and pin and secure in the points **E** of the catwalk **6**, see illustration **3**.

Result:

– Winch 6 can be installed.

3.2.4 S-pivot section before installation of both winches

Make sure that the following prerequisites are met:
- The protective roller **26** is pinned and secured in the „up“ position.
- The catwalk **6** and catwalk **7** are pinned and secured in the operating position.

Note
▶ Lower the catwalks individually and one after the other with the auxiliary crane.

When the catwalk is safely held by the auxiliary crane:
▶ Release and unpin the catwalk in the operating position, see illustration **1**.
▶ Lower the catwalk and remove the auxiliary crane.

When the catwalk **6** and the catwalk **7** are lowered down:
▶ Pin and secure the catwalks in point **A**, see illustration **1**.
▶ Release and unpin the protective roller **26** in the „up“ position.
▶ Swing the protective roller **26** into the „down“ position, pin with the retaining pin **26.1** and secure with the locking pin **26.2**.

Result:

– Winch 5 and winch 6 can be assembled.

LWE/LR 1600-2-001/18101-07-02/en

copyright © Liebherr-Werk Ehingen GmbH 2018

3.3 Assembling the boom

WARNING
The crane can topple over!
- ▶ The turntable may not be turned during the assembly of the boom.
- ▶ Observe the assembly conditions, see chapter 3.06.

WARNING
Danger of accident!
Death, severe bodily injuries, property damage.
- ▶ For assembly of the boom combinations, the rod plan must be observed and adhered to.
- ▶ Depending on the condition of the ground, the boom and the lattice sections must be supported from below for the assembly of the boom.
- ▶ Observe the technical safety instructions, see chapter 5.01.

Make sure that the following prerequisites are met:
- The crane is horizontally aligned.
- An auxiliary crane is available.
- An assembly scaffolding / work platform is available.
- The central ballast is installed according to the load chart.
- The counterweight has been installed on the turntable according to the load chart.
- The LICCON overload protection has been set according to the data in the load chart.

3.3.1 Turning the turntable into the assembly position

WARNING
The crane can topple over!
If the following conditions are not met before turning the turntable - **without** assembled S-boom, the crane can topple over.
Death, severe bodily injuries, property damage.
- ▶ Observe the specifications in the erection and take-down charts.
- ▶ Observe the maximum permissible ballast combinations depending on the assembly status, see chapter 3.06.

- ▶ Turn the turntable into the assembly position, see the „Erection and take down charts“.

LWE/LR 1600-2-001/18101-07-02/en

copyright © Liebherr-Werk Ehingen GmbH 2018

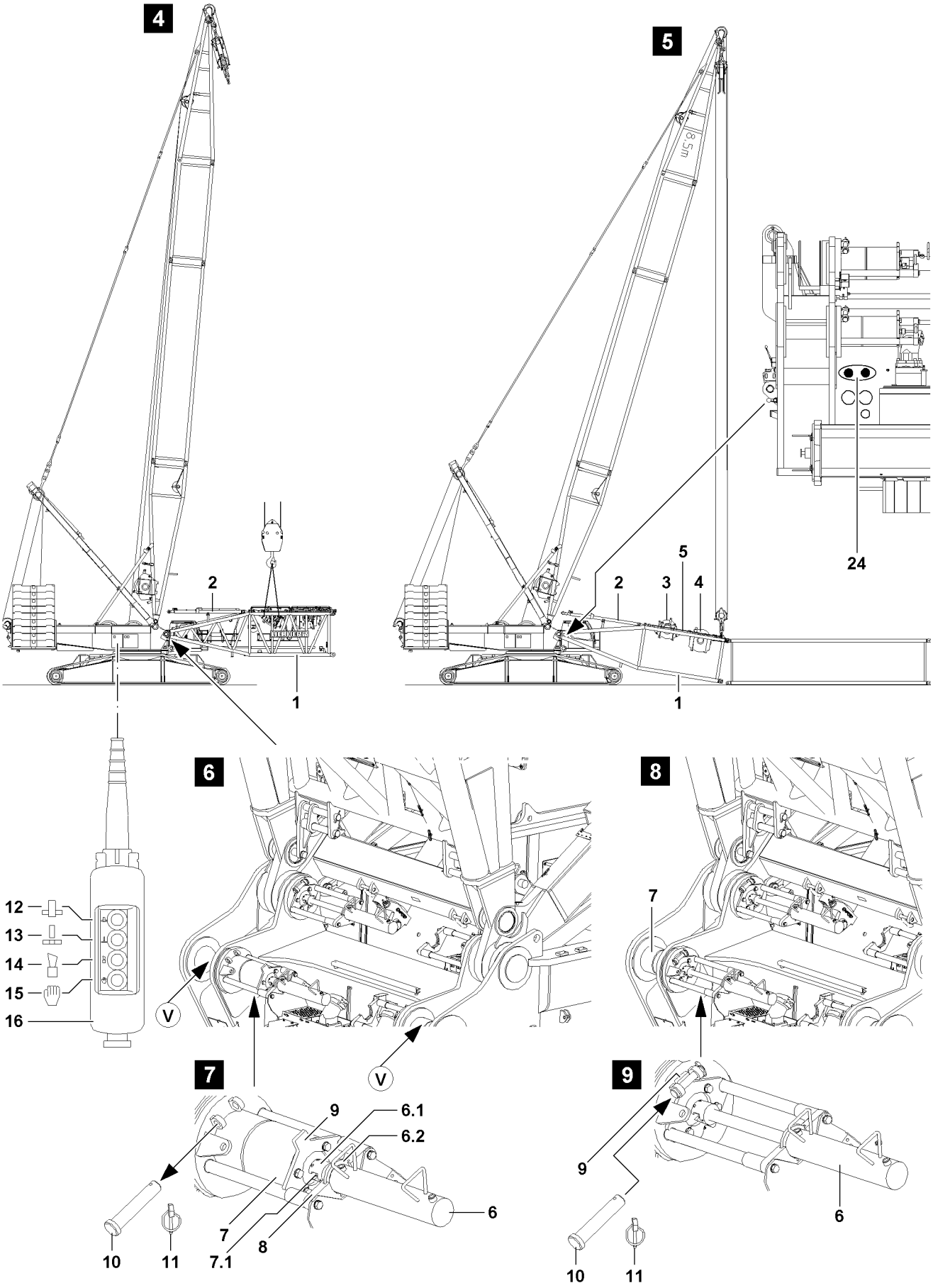

Fig.119482

LWE/LR 1600-2-001/18101-07-02/en

copyright © Liebherr-Werk Ehingen GmbH 2018

3.3.2 Exceeding the LICCON overload protection for assembly

WARNING
Danger of accident due to the „Exceedance of shut-off limits of the LICCON overload protection“ function!
If the shut off limits of the LICCON overload protection are exceeded, there is no additional protection against crane overload.
Due to erroneous operation or deliberate misuse, the crane could collapse, the boom can break off or the crane can topple over.
Death, severe bodily injuries, property damage.
- ▶ The function „Exceedance of shut off limits of the LICCON overload protection“ is only permissible in emergencies and for assembly purposes.
- ▶ The function „Exceeding the shut off limits of the LICCON overload protection“ may only be actuated by persons who know the effects of their actions regarding the function „Exceeding the shut off limits of the LICCON overload protection“.
- ▶ The „Exceedance of shut off limits of the LICCON overload protection“ function requires the presence of an authorized person and must be performed with utmost caution.
- ▶ Crane operation with activated function „Exceedance of shut off limits of the LICCON overload protection“ is prohibited.

▶ Exceeding the shut off limits of the LICCON overload protection: Engage assembly operation.

Result:

– The shut off limits of the LICCON overload protection are exceeded.
– The assembly icon appears on the LICCON monitor.

Note
▶ See chapter 4.02.

3.4 Pinning the S-pivot section on the turntable

Note
▶ Always arrange the intermediate sections according to the rod plan.
▶ Observe chapter 5.03.

WARNING
General danger notes!
▶ Support the S-boom during assembly with suitable materials.
▶ All pins are to be secured after assembly with the intended retaining elements.
▶ The guy rods must be inspected regularly, see chapter 8.15.

Make sure that the following prerequisite is met:
– The connector pins **7** on the turntable are unpinned, see illustration **7**.
– The retaining pins **10** are unpinned.

Note
▶ Select the fastening points on the S-pivot section in such a way that the S-pivot section hangs horizontally on the auxiliary crane upon assembly. See section „Fastening points“.

▶ Fasten the S-pivot section **1** in the fastening points to the auxiliary crane.
▶ Swing the S-pivot section **1** in with the auxiliary crane to the pin points on the turntable, illustration **4** and illustration **6**.

Note
▶ The pin pulling device is operated with the control panel **16** of the turntable, see illustration.

Establish the hydraulic connection to the pin pulling device via two quick couplers.

LWE/LR 1600-2-001/18101-07-02/en

copyright © Liebherr-Werk Ehingen GmbH 2018

Note

▶ When hooking the pin pulling cylinder **6**, make sure that the collar **6.2** on the cylinder mount **8** and the catch **6.1** on the screw **7.1** are properly hooked.

▶ Hang the pin pulling cylinder **6** in the cylinder receptacle **8** and the screw **7.1** on the pin **7**.
▶ Connect the pin pulling cylinder **6** to the quick couplers **24**, see Hydraulic wiring diagram.

DANGER

Insufficiently secured connector pins!
Due to non-secured or insufficiently secured connector pins, the S-pivot section can fall down.
Death, severe bodily injuries, property damage.

▶ Secure the connector pins **7** between the S-pivot section **1** and the turntable after the pinning procedure with the pins **10**.

▶ Pin the pins **7** on both sides with the hydraulic pin pulling cylinder **6**: Press the button **15** on the control panel **16** and hold down, then press the button **12** until the pin **7** is completely pinned.

When the pins **7** are completely pinned on the left and right on the S-pivot section:

▶ Secure the pins **7** on the left and right: Insert the pin **10** and secure with the locking pin **11**.

Result:

– The pins **7** have been secured with the retaining pins **10** to prevent them from unpinning by themselves.

NOTICE

Damage to the S-pivot section!
When the installed S-pivot section is taken down on the ground, the S-pivot section can be damaged.

▶ Slowly take the S-pivot section **1** down with the auxiliary crane and at low speed onto the substructure.
▶ Before taking it down on the ground, support the S-pivot section **1**.

▶ Carefully take the S-pivot section **1** down on the substructure.
▶ Remove the auxiliary crane.

3.5 Establishing the electric and hydraulic connections on the S-pivot section

3.5.1 Establishing the electrical connections

NOTICE

Danger of damage to the electrical connections!
If the electrical connection between the terminal box and the S-pivot section and the cable drum in the S-pivot section is established before the boom end section is installed and electrically connected, then the electric connection can be damaged.

▶ Make sure that the electric connection between the terminal box in the S-pivot section and the cable drum in the S-pivot section is only established **after** assembly and the connection of the electric wiring for the boom end section.

Note

▶ To establish the electrical connections on the S-pivot section: Use the Electrical wiring diagram.

Make sure that the following prerequisite is met:

– The S-pivot section is completely assembled and taken down on the substructure.

▶ Establish the electrical connections.
▶ Make sure that all electrical connections to the S-pivot section have been established.

LWE/LR 1600-2-001/18101-07-02/en

copyright © Liebherr-Werk Ehingen GmbH 2018

WARNING
Malfunction if dummy plugs are not installed!
If the dummy plugs on the non-required electrical connections are not installed, then malfunctions or functional limitations can occur on the crane.
- ▶ Make sure that all non-required electrical connections, which have a dummy plug are closed off with dummy plugs.
- ▶ Pay attention to the Electrical wiring diagram.

- ▶ As a rule, close off on-required electrical connections (for example for accessories which cannot be installed) with the respective dummy plugs.

NOTICE
Property damage due to dirt and / or corrosion!
If non-required electrical connections are not closed off with the respective protective caps, then dirt and / or corrosion can damage the electrical connections.
This could result in malfunctions.
- ▶ Make sure that all non-required electrical connections are always closed off properly.
- ▶ Pay attention to the Electrical wiring diagram.

- ▶ Close electrical connections, which have no dummy plugs, properly off with the corresponding protective caps.

3.5.2 Establishing the hydraulic connections

When connecting and releasing hydraulic lines with quick couplings, make sure that the coupling procedure is carried out correctly.

Note
- ▶ To connect or release the hydraulic lines with quick couplings, see chapter 5.01.

WARNING
Pressure in the hydraulic lines!
If the pressure supply is not interrupted before connecting / releasing the hydraulic lines, the hydraulic oil can escape with high pressure.
Death, severe bodily injuries, property damage.
- ▶ Release the pressure in the hydraulic system before connecting / disconnecting: Interrupt the pressure supply and wait for a short time.

WARNING
Loss of pressure or leakage!
Incorrectly coupled or self-loosening quick couplings (particularly return lines) can result in serious accidents due to component failure.
- ▶ Check that the quick couplings have been properly connected before using the crane.

- ▶ Connect the coupling components (sleeve and connector) and screw together with the knurled nut.
- ▶ Tighten the hydraulic coupling by hand. Turn the knurled nut until it reaches a tangible, fixed stop position.
- ▶ Establish the hydraulic connections, see the Hydraulic diagram.

LWE/LR 1600-2-001/18101-07-02/en

copyright © Liebherr-Werk Ehingen GmbH 2018

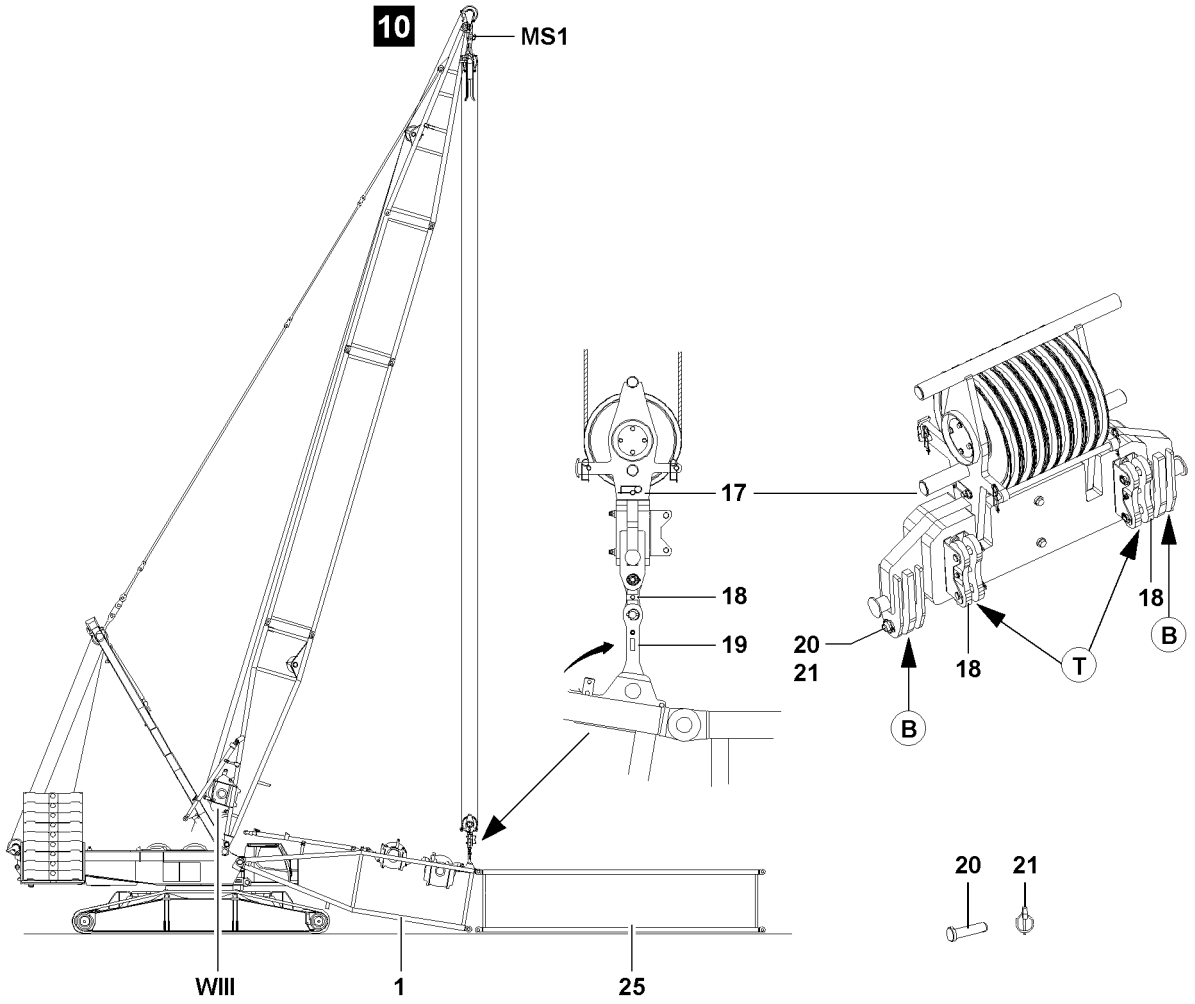

LWE/LR 1600-2-001/18101-07-02/en

Fig.106748

copyright © Liebherr-Werk Ehingen GmbH 2018

3.6 Pinning the upper pulley block on the S-pivot section

To be able to „close“ the S-boom combination after assembly, it is necessary to luff the D-boom down to the front and lower the upper pulley block via control winch 3 **W III** to the S-pivot section **1**. Then pin the upper pulley block **17** with the S-pivot section **1** and secure.

Note

▶ Luff the D-boom down to the front only to the point where the upper pulley block **17** „stands“ vertically above the pin points on the S-pivot section **1**.

Make sure that the following prerequisites are met:

– The S-pivot section **1** is pinned and secured on the turntable.
– The S-pivot section **1** is taken down onto the substructure on the ground.
– The auxiliary crane is removed.

▶ Luff the D-boom down to the front until the upper pulley block **17** hangs freely over the assembly bracket **19** of the S-pivot section **1**.
▶ Lower the upper pulley block **17** to the S-pivot section **1**.
▶ Remove the bracket **18** from the transport receptacle **T** on the upper pulley block **17**.
▶ Pin the bracket **18** in the operating position **B** on the upper pulley block **17** with the pin **20** and secure with locking pin **21**.
▶ Pin and secure the bracket **18** with the assembly brackets **19** of the S-pivot section **1**.
▶ Use the pin **20** and locking pin **21**.

LWE/LR 1600-2-001/18101-07-02/en

copyright © Liebherr-Werk Ehingen GmbH 2018

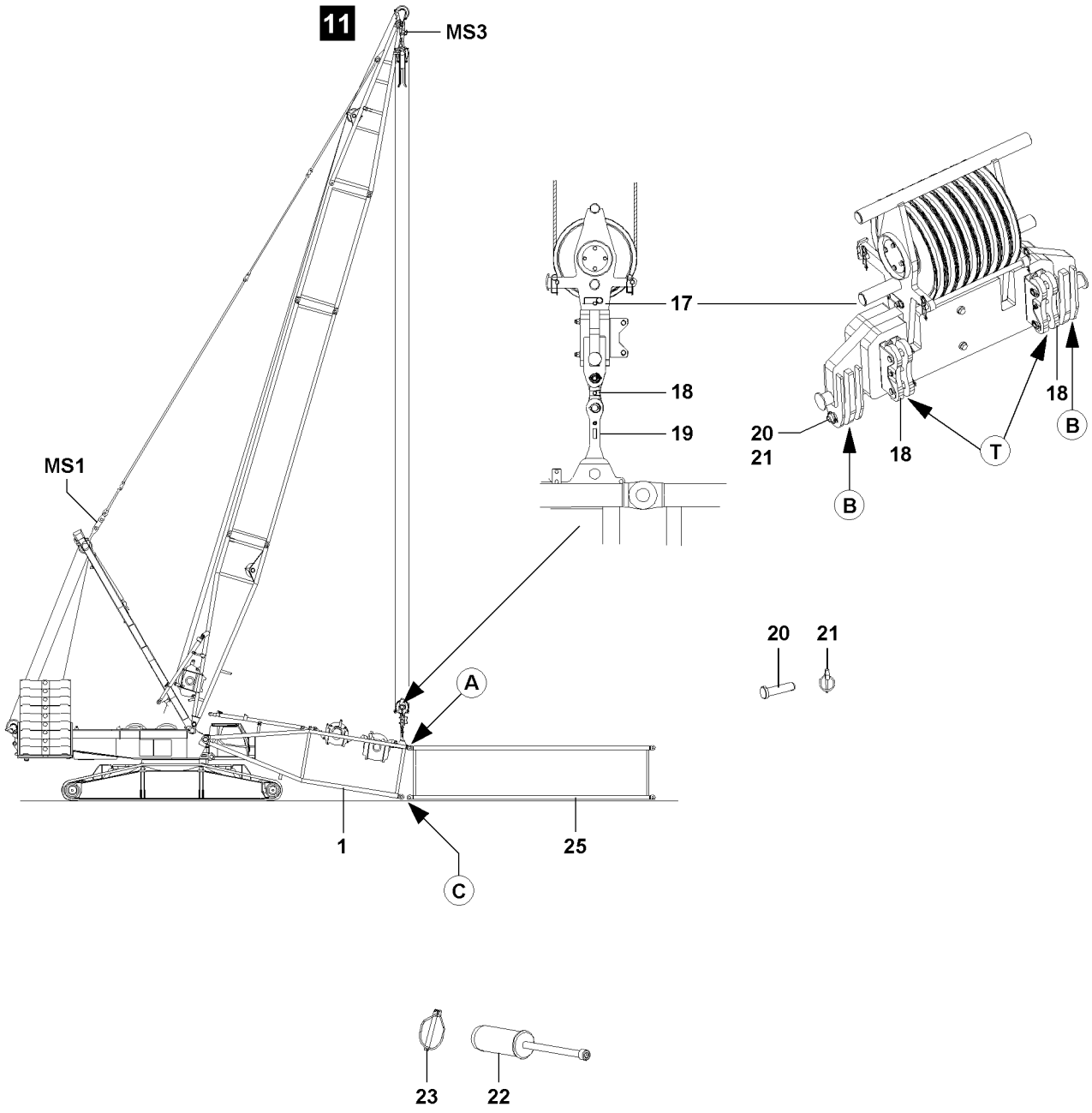

LWE/LR 1600-2-001/18101-07-02/en

Fig.106749

copyright © Liebherr-Werk Ehingen GmbH 2018

3.7 Assembling the S-intermediate sections on the S-pivot section

Make sure that the following prerequisites are met:
- The S-pivot section **1** is pinned and secured on the turntable.
- The S-pivot section **1** is taken down onto the substructure on the ground.
- The upper pulley block **17** is pinned and secured with the S-pivot section **1**.
- The auxiliary crane is removed.

Note
- ▶ The S-intermediate sections are pinned with the aid of the pin pulling device, see chapter 5.30.
- ▶ Support the S-intermediate sections for easier assembly / disassembly.

WARNING
General danger notes!
- ▶ All pins are to be secured after assembly with the intended retaining elements.

Pin the S-intermediate section **25** on the S-pivot section **1** „on top“.

▶ Fasten the S-intermediate section **25** to the auxiliary crane and align it with the S-pivot section **1**.

When the pin bores on the S-pivot section **1** and on the S-intermediate section **25** „on top“ (point **A**) align, illustration **11**:

▶ Insert the pin **22** from the inside to the outside and secure with the locking pin **23**, illustration **11**.

Assemble the S-boom to the required length and pin and secure the intermediate sections „on top“ and „bottom“.

▶ Insert the pin **22** from the inside to the outside and secure with the locking pin **23**.

WARNING
The crane can topple over!
If the following conditions are not met, the crane can topple over or be significantly damaged.
Death, severe bodily injuries, property damage.
- ▶ During the „closing procedure“ of the S-intermediate sections, the maximum permissible total force of **146 t** on test point **MS1** may **not** be exceeded.
- ▶ During the „closing procedure“ of the S-intermediate sections, the maximum permissible total force of **90 t** on test point **MS3** may **not** be exceeded.
- ▶ The end section of the corresponding SL / S-boom combination may **not** lift off the ground during the „closing procedure“.

LWE/LR 1600-2-001/18101-07-02/en

copyright © Liebherr-Werk Ehingen GmbH 2018

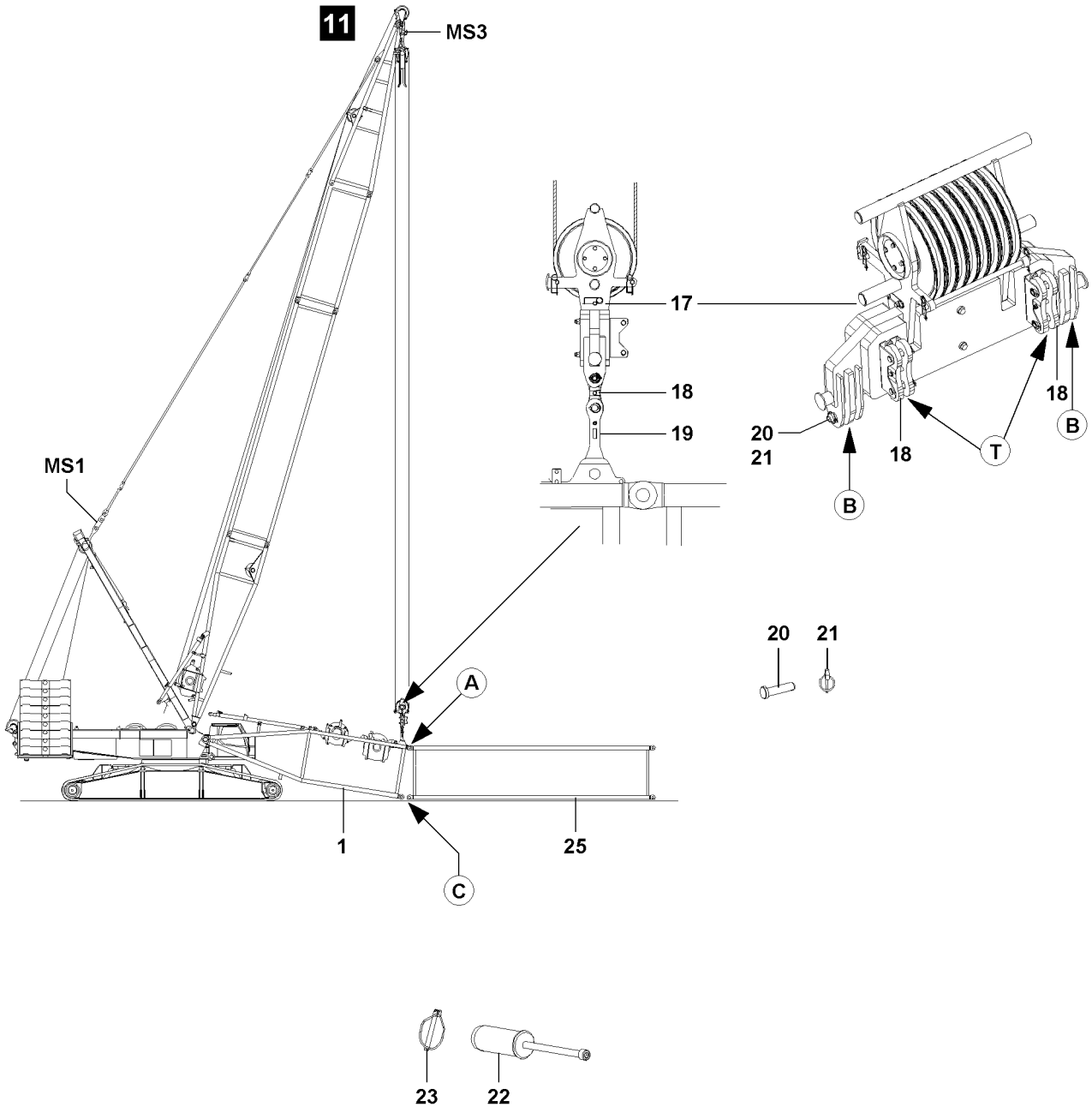

LWE/LR 1600-2-001/18101-07-02/en

Fig.106749

copyright © Liebherr-Werk Ehingen GmbH 2018

Note

- ▶ The actual forces of test point **MS1** and the test point **MS3** - which are used during the closing procedure of the S-boom system - are displayed on LICCON monitor 1.
- ▶ Note the actual forces of test point **MS1** and test point **MS3** and keep them ready for the disassembly of the S-boom system.
- ▶ At boom disassembly, „tension“ the control rope of winch 3 until the noted (assembly) actual forces of test point **MS1** and test point **MS3** on the LICCON monitor are reached, so that the connector pins of the S-intermediate sections can be unpinned.

When the SL / S-boom combination is assembled to the desired length:

- ▶ Lift the S-pivot section **1** with the upper pulley block **17** until the pin bores on the „bottom“ align in point **C**, illustration **11**.
- ▶ Insert the pin **22** from the inside to the outside and secure with the locking pin **23**, illustration **11**.

WARNING

Danger of fatal injury due to folding down of boom!
By unpinning the upper pulley block **17** on the assembly brackets **19**, the boom can suddenly fold down if the boom is not pinned in point **C** „on the bottom“.
Death, severe bodily injuries, property damage.

- ▶ It is prohibited for anyone to remain under the raised boom combination during the pinning / unpinning procedure.
- ▶ Unpin the upper pulley block **17** only when it is ensured that the S-pivot section **1** is pinned and secured „on top“ and „bottom“ with the S-intermediate section **25**.

When the S-boom is „closed“:

- ▶ Unpin the bracket **18** on the assembly bracket **19**: Release and unpin the pin **20**.
- ▶ Unpin the bracket **18** on the upper pulley block **17**: Release and unpin the pin **20**.
- ▶ Pin and secure the bracket **18** in the transport position **T** on the upper pulley block **17**.

LWE/LR 1600-2-001/18101-07-02/en

copyright © Liebherr-Werk Ehingen GmbH 2018

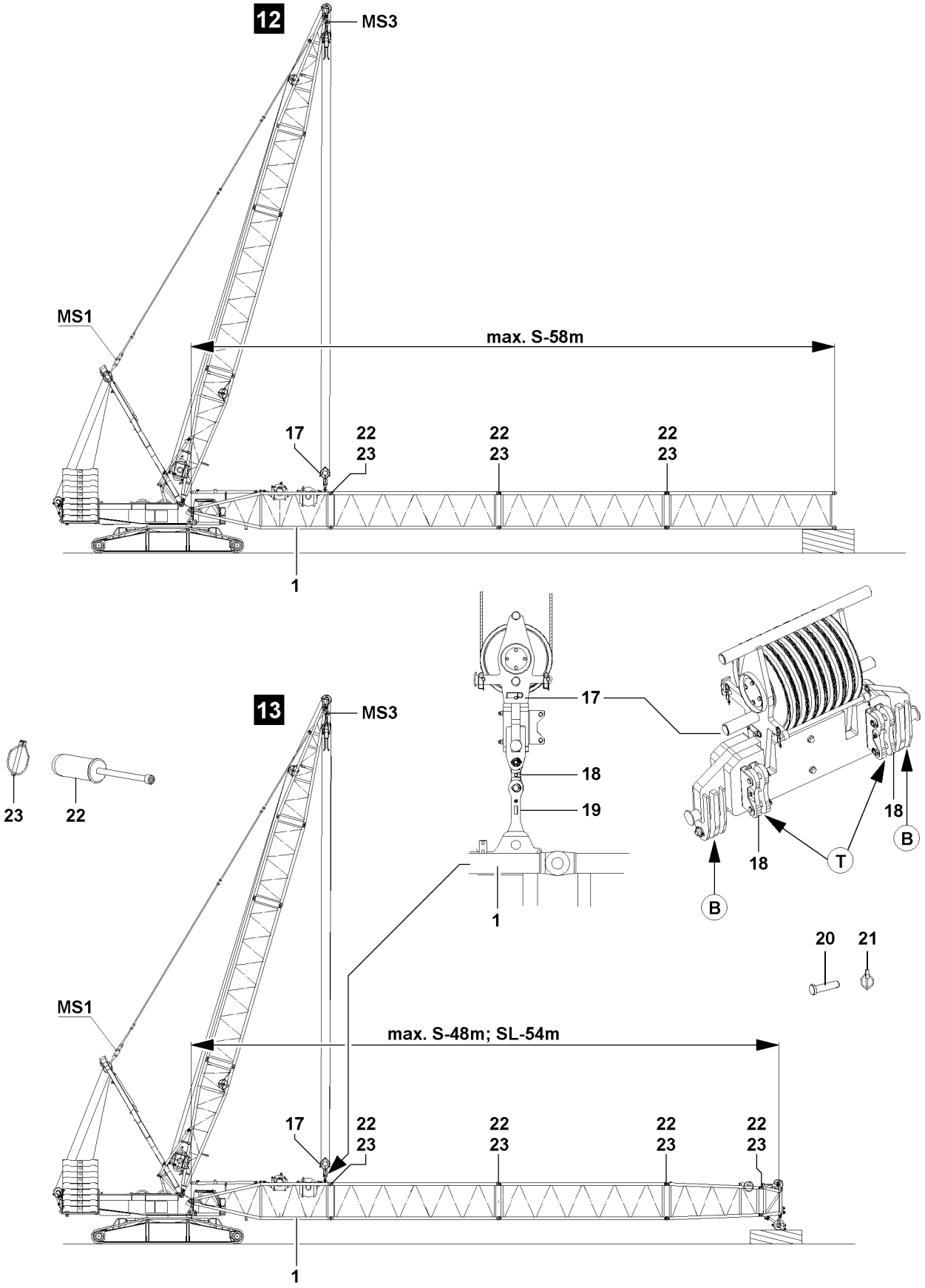

Fig.106750: Flying assembly — Guying on S-pivot section

LWE/LR 1600-2-001/18101-07-02/en

copyright © Liebherr-Werk Ehingen GmbH 2018

3.8 Assembling the SL/S-boom in „Flying mode“ (guying on S-pivot section)

If spatial prerequisites on the job site are limited for the assembly of the S-boom, or if they are limited by buildings or similar, then the S-boom can be assembled in „flying“ mode.

WARNING
General danger notes!
- ▶ Support the S-boom during assembly with suitable materials.
- ▶ All pins are to be secured after assembly with the intended retaining elements.

WARNING
The crane can topple over!
If the following conditions are not met, the crane can topple over or be significantly damaged.
Death, severe bodily injuries, property damage.
- ▶ For the „flying mode“ boom assembly, the maximum permissible total force on the test point **MS1** and test point **MS3** may **not** be exceeded. The „Actual forces“ are shown on LICCON monitor 1.
- ▶ The „flying mode“ boom assembly is only permissible up to certain system lengths.
- ▶ The maximum permissible system lengths may **not** be exceeded, refer to the following chart.

Note
- ▶ Weights of the individual lattice sections, including the corresponding guy rods, see chapter 5.03.

Maximum permissible system lengths for a maximum total force MS1 of 200 t and a maximum total force MS3 of 138 t

Boom system	Maximum system length	Equipment	DB_{min} 1)	ZB_{min} 2)	Illustration
SL(D)	54.0 m		150 t	65 t	13
	60.0 m	- with reducer - without head	150 t	65 t	12
S(D)	48.0 m		150 t	65 t	13
	58.0 m		150 t	65 t	12
	66.0 m	- without reducer - without head	150 t	65 t	12

1) This counterweight must be installed at least on the turntable for „flying assembly“.
2) This central ballast must be installed at least on the crawler center section for „flying assembly“.

LWE/LR 1600-2-001/18101-07-02/en

copyright © Liebherr-Werk Ehingen GmbH 2018

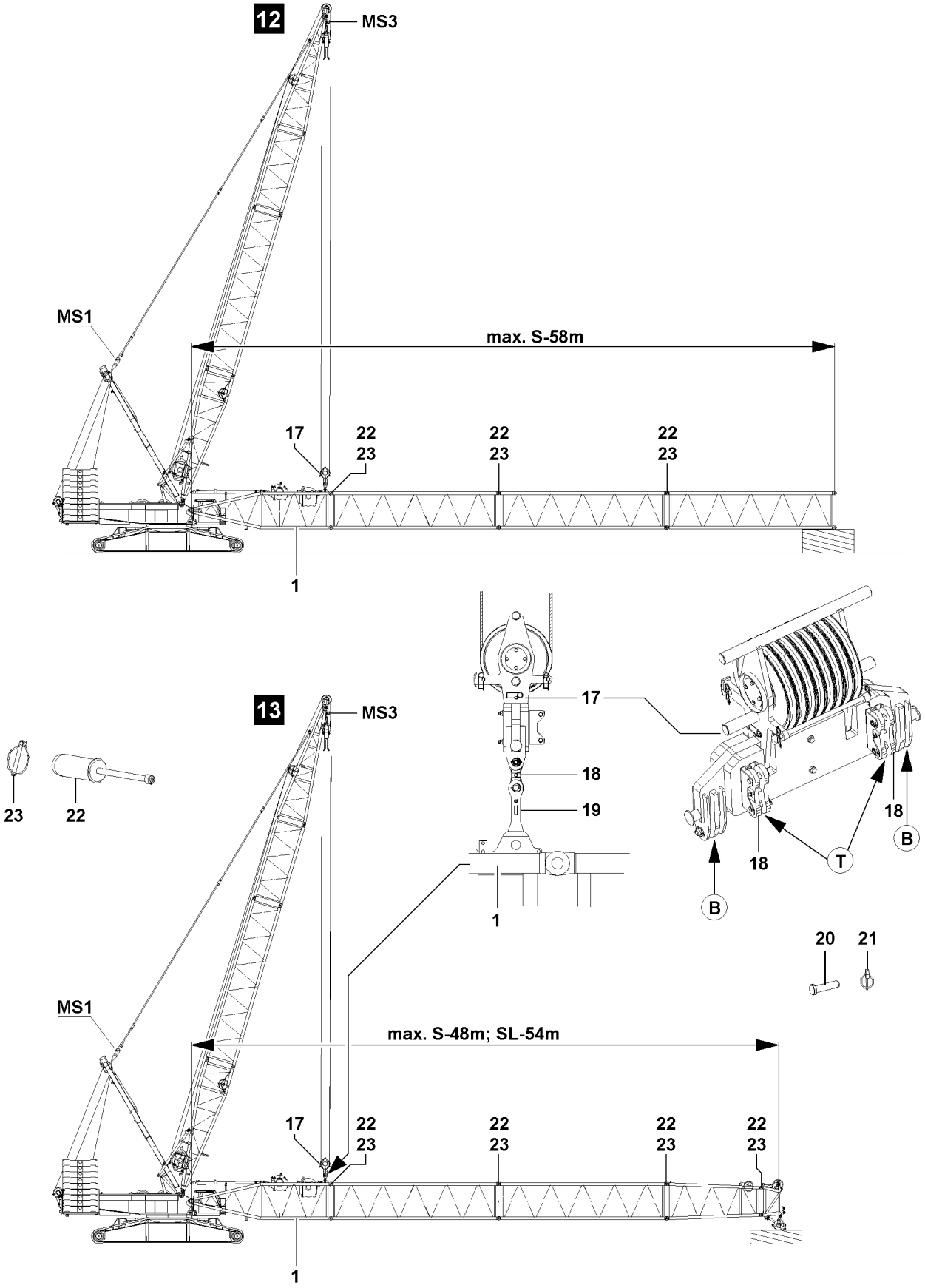

LWE/LR 1600-2-001/18101-07-02/en

Fig.106750: Flying assembly — Guying on S-pivot section

copyright © Liebherr-Werk Ehingen GmbH 2018

3.8.1 Assembling the S-intermediate sections in „flying mode“ on the S-pivot section

In „flying“ assembly, the intermediate sections can be pinned and secured with the auxiliary crane individually or as a preassembled unit on the pivot section.

WARNING
Impermissible boom lengths!
If impermissible boom lengths are installed on the crane, significant property damage can occur on the crane.
Death, severe bodily injuries, property damage.
- ▶ The maximum permissible boom lengths for the „flying assembly“ may not be exceeded.
- ▶ The specifications in the erection and take-down charts as well as the load charts must be observed.

Make sure that the following prerequisites are met:
- The S-pivot section is pinned and secured on the turntable.
- The S-pivot section is horizontally tensioned.
- A minimum of 150 t counterweight is placed on the turntable.
- A minimum of 65 t central ballast is installed on the crawler center section.
- An auxiliary crane is available.

WARNING
Falling components!
If unsecured or non-supported components are assembled or disassembled, they can fall down.
Death, severe bodily injuries, property damage.
- ▶ During pinning and unpinning of the intermediate sections it is prohibited for anyone to remain **under** or **on** the components as well as within the entire danger zone.
- ▶ Before unpinning: Support the components and boom.
- ▶ Secure the pins in the storage locations and in the receptacles.
- ▶ It is prohibited to lean a ladder against the crane section that is being disassembled.

- ▶ Fasten the S-intermediate sections or preassembled boom unit to the auxiliary crane.
- ▶ Lift the S-intermediate sections or the preassembled boom unit with the auxiliary crane and position on the S-pivot section **1**.

When the pin points between the S-pivot section **1** and the S-intermediate section **or** the S-pivot section **1** and pre-assembled boom unit align on „top“ and „bottom“:
- ▶ Insert the pins **22** „on top“ and „bottom“ and secure with locking pins **23**.

When the pins between the S-pivot section **1** and the S-intermediate section **or** the S-pivot section **1** and pre-assembled boom unit are properly pinned and secured on „top“ and „bottom“:
- ▶ Take the boom down on the substructure.
- ▶ Remove the auxiliary crane.

When the boom is safely taken down on the substructure:
- ▶ Unpin the bracket **18** on the assembly bracket **19**: Release and unpin the pin **20**.
- ▶ Unpin the bracket **18** on the upper pulley block **17**: Release and unpin the pin **20**.
- ▶ Pin and secure the bracket **18** in the transport position **T** on the upper pulley block **17**.

3.9 Flying assembly of the SD/SLD/SL(X)D-boom (guying on flying assembly intermediate section)

If spatial prerequisites on the job site are limited for the assembly of the S-boom, or if they are limited by buildings or similar, then the S-boom can be installed in flying mode.

WARNING
General danger notes!
- ▶ Support the S-boom during assembly with suitable materials.
- ▶ All pins are to be secured after assembly with the intended retaining elements.
- ▶ The guy rods must be inspected regularly, see chapter 8.15.

LWE/LR 1600-2-001/18101-07-02/en

copyright © Liebherr-Werk Ehingen GmbH 2018

Note

▶ Weights of the individual lattice sections, see chapter 1.03.

WARNING

The crane can topple over!

If the following conditions are not met, the crane can topple over or be significantly damaged.

Death, severe bodily injuries, property damage.

▶ For the flying mode boom assembly, the maximum permissible total forces on test point 1 **MS1** and test point 3 **MS3** may not be exceeded. The „actual forces“ are shown on LICCON monitor 1.

▶ The flying boom assembly is only permissible up to the maximum system lengths according to the following chart overview.

▶ Always carry out the combination of the intermediate sections according to the rod plan.

▶ The data in the erection and take-down charts as well as the load charts must be observed.

WARNING

The crane can topple over!

If the crane is not sufficiently ballasted for flying assembly on the flying assembly intermediate section, then the crane can be overloaded and topple over.

Death, severe bodily injuries, property damage.

▶ Make sure that the central ballast is installed according to the requirements in the erection and take-down charts.

▶ Make sure that the counterweight is installed according to the requirements in the erection and take-down charts.

▶ Make sure that the derrick ballast is installed according to the requirements in the erection and take-down charts.

▶ Make sure that the maximum permissible boom lengths for the flying assembly are **not** exceeded.

Make sure that the following prerequisites are met:

– The crane is horizontally aligned.
– The S-pivot section is pinned and secured on the turntable.
– The counterweight is placed according to the specifications.
– The central ballast is placed according to the specifications.
– The S-intermediate sections are installed up to the flying assembly intermediate section.
– The guy rods **64** are properly pinned and secured with the hollow axle in point **P13** on bracket **60**.
– An auxiliary crane is available.

LWE/LR 1600-2-001/18101-07-02/en

copyright © Liebherr-Werk Ehingen GmbH 2018

3.9.1 SLD-boom with SW-end section

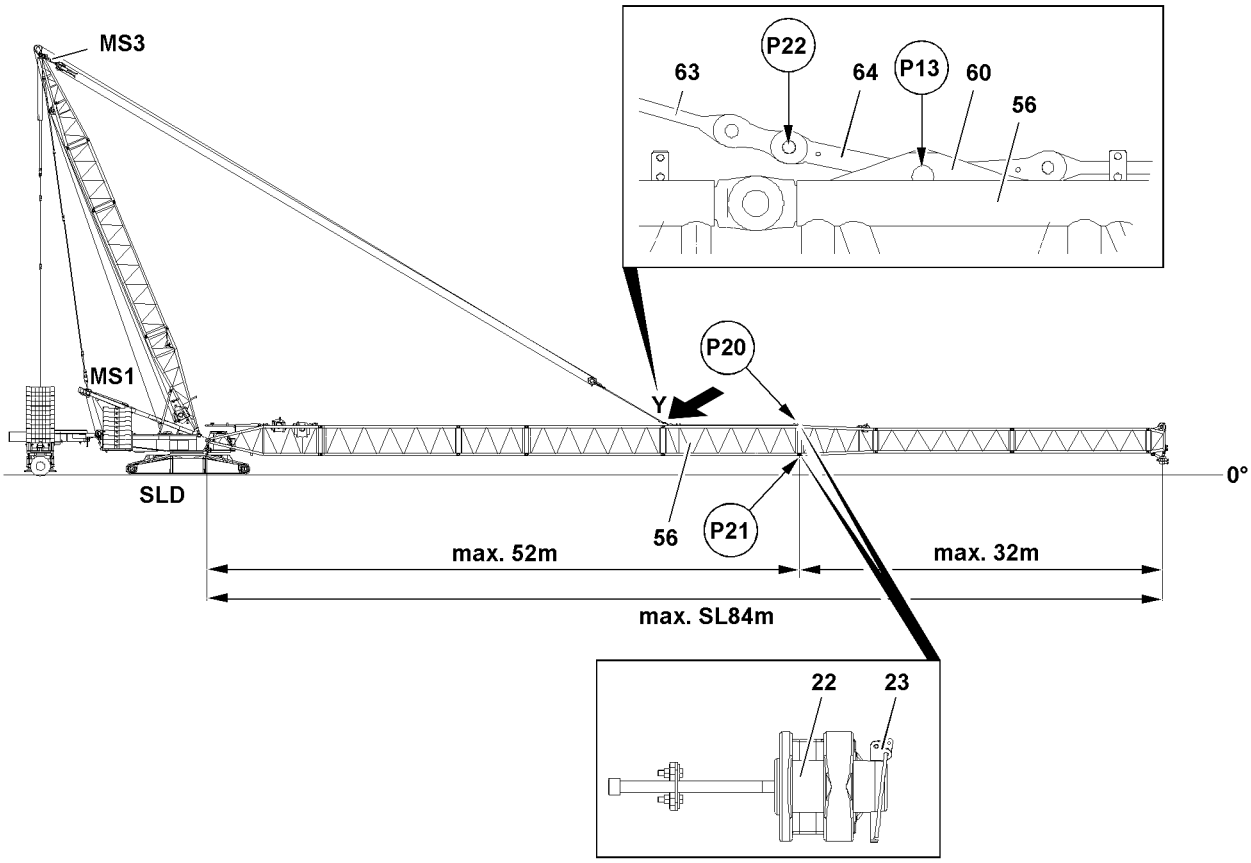

Fig.125178: SLD-boom with SW-end section

Counterweight, derrick ballast and central ballast, see Erection chart, depending on the boom length			
Boom system	**Maximum permissible flying assembly length**	**Equipment (without hook block)**	**Preassembly according FLM[1)]**
SLD	84 m	- partially equipped: - without WA-frame II guy rods - with SW-end section and **one** roller set	32 m

1) maximum permissible preassembly after flying assembly intermediate section (FLM-intermediate section) **56**

LWE/LR 1600-2-001/18101-07-02/en

copyright © Liebherr-Werk Ehingen GmbH 2018

3.9.2 SD // SL2D // SL4D with end section

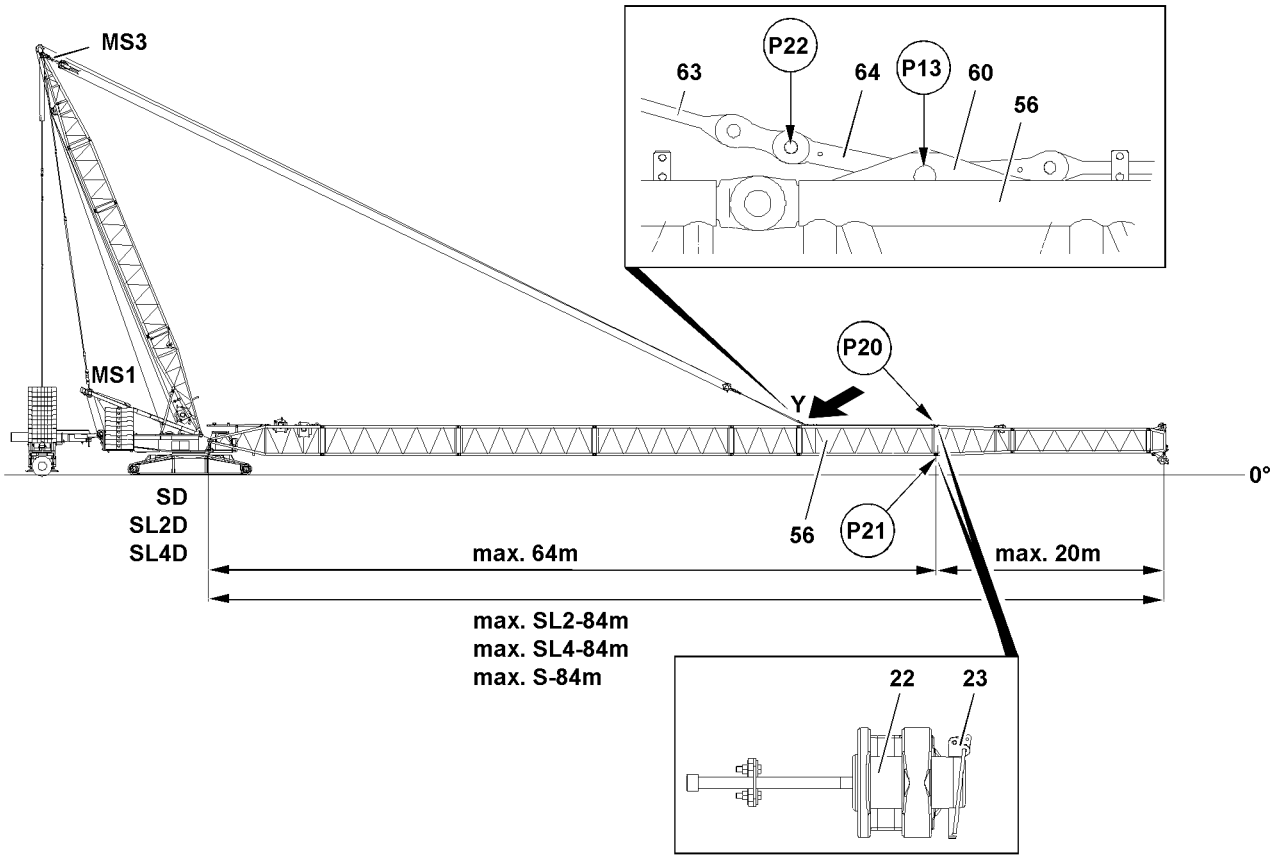

Fig.125179: SD // SL2D // SL4D with end section

Counterweight, derrick ballast and central ballast, see Erection chart, depending on the boom length			
Boom system	**Maximum permissible flying assembly length**	**Equipment (without hook block)**	**Preassembly according FLM[1)]**
SD	84 m	- partially equipped: - without WA-frame II guy rods - with SW-end section and **two** roller sets	20 m
SL2D		- partially equipped: - without WA-frame II guy rods - with SW-end section and **one** roller set	
SL4D		- partially equipped: - without WA-frame II guy rods - with F-adapter	

1) maximum permissible preassembly after flying assembly intermediate section (FLM-intermediate section) **56**

LWE/LR 1600-2-001/18101-07-02/en

copyright © Liebherr-Werk Ehingen GmbH 2018

3.9.3 SD // SLD // SL2D // SL4D

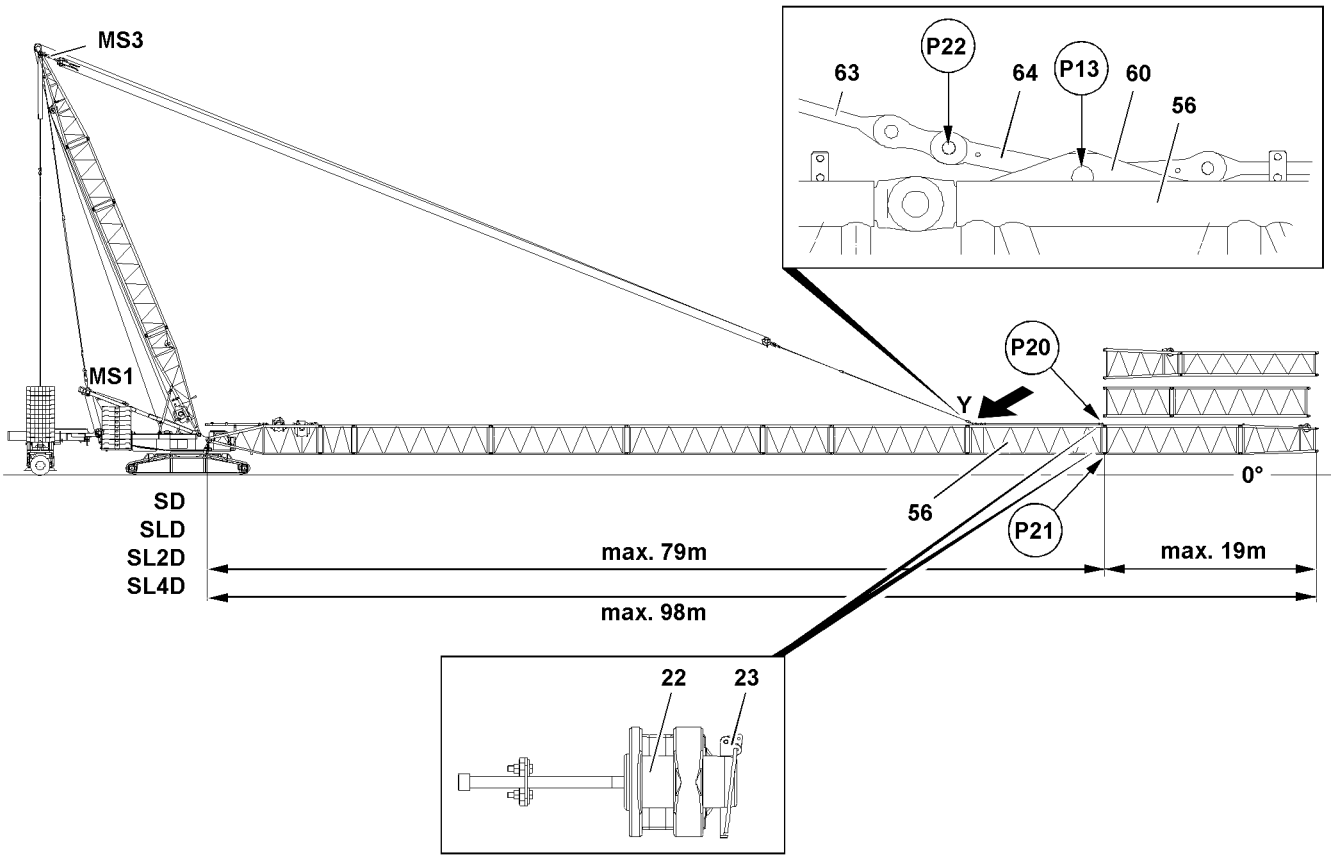

Fig.125182: SD // SLD // SL2D // SL4D

Counterweight, derrick ballast and central ballast, see Erection chart, depending on the boom length			
Boom system	**Maximum permissible flying assembly length**	**Equipment (without hook block)**	**Preassembly according FLM[1)]**
SD	98 m	- partially equipped: - without WA-frame II guy rods	19 m
SLD			
SL2D			
SL4D			

1) maximum permissible preassembly after flying assembly intermediate section (FLM-intermediate section) **56**

LWE/LR 1600-2-001/18101-07-02/en

copyright © Liebherr-Werk Ehingen GmbH 2018

3.9.4 SL10D // SL11D – target boom lengths 102 m to 117 m

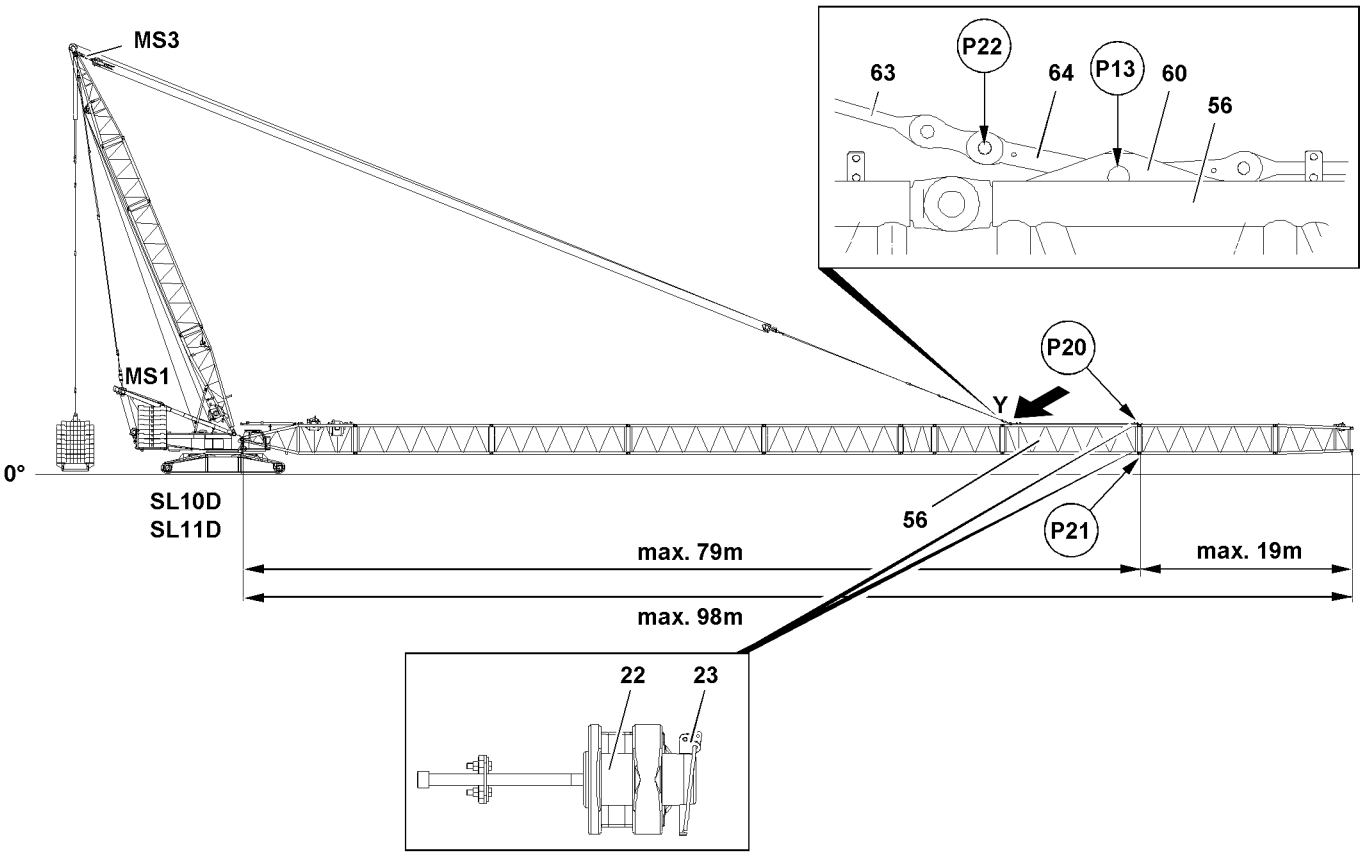

Fig.125183: SL10D // SL11D – target boom lengths 102 m to 117 m

WARNING
The crane can topple over!
If boom systems are assembled in flying mode, where their target boom / operational lengths are not released for the flying assembly, the crane can be overloaded and topple over.
Death, severe bodily injuries, property damage.
▶ For all not listed target boom / operational lengths the flying assembly is **prohibited**.

Counterweight, derrick ballast and central ballast, see Erection chart, depending on the boom length			
Boom system	**Maximum permissible flying assembly length[4)]**	**Equipment (without hook block)**	**Preassembly according FLM[1)]**
SL10D	98 m	- partially equipped:	19 m
SL11D		- without WA-frame II guy rods	

1) maximum permissible preassembly after flying assembly intermediate section (FLM-intermediate section) **56**
4) only valid in connection with the target boom / operational length required for crane operation

LWE/LR 1600-2-001/18101-07-02/en

copyright © Liebherr-Werk Ehingen GmbH 2018

3.9.5 SL10D // SL11D – target boom lengths 126 m , 129 m , 138 m , 141 m , 150 m , 153 m

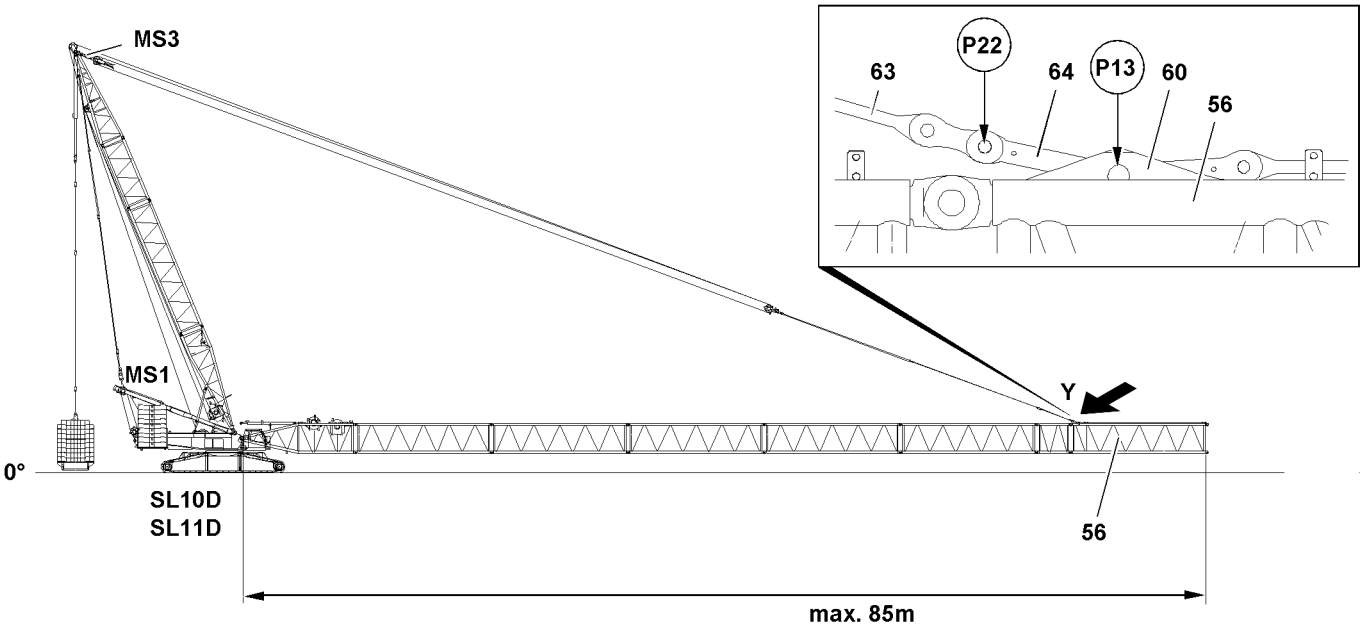

Fig.125184: SL10D // SL11D – target boom lengths 126 m , 129 m , 138 m , 141 m , 150 m , 153 m

WARNING
The crane can topple over!
If boom systems are assembled in flying mode, where their target boom / operational lengths are not released for the flying assembly, the crane can be overloaded and topple over.
Death, severe bodily injuries, property damage.
▶ For all not listed target boom / operational lengths the flying assembly is **prohibited**.

Counterweight, derrick ballast and central ballast, see Erection chart, depending on the boom length			
Boom system	**Maximum permissible flying assembly length[4)]**	**Equipment (without hook block)**	**Preassembly according FLM[1)]**
SL10D	85 m	- partially equipped:	3)
SL11D		- without WA-frame II guy rods	3)

1) maximum permissible preassembly after flying assembly intermediate section (FLM-intermediate section) **56**
3) no preassembly after flying assembly intermediate section (FLM-intermediate section) **56** possible
4) only valid in connection with the target boom / operational length required for crane operation

LWE/LR 1600-2-001/18101-07-02/en

copyright © Liebherr-Werk Ehingen GmbH 2018

3.9.6 SL13D, SL14D – target boom lengths 102 m to 111 m

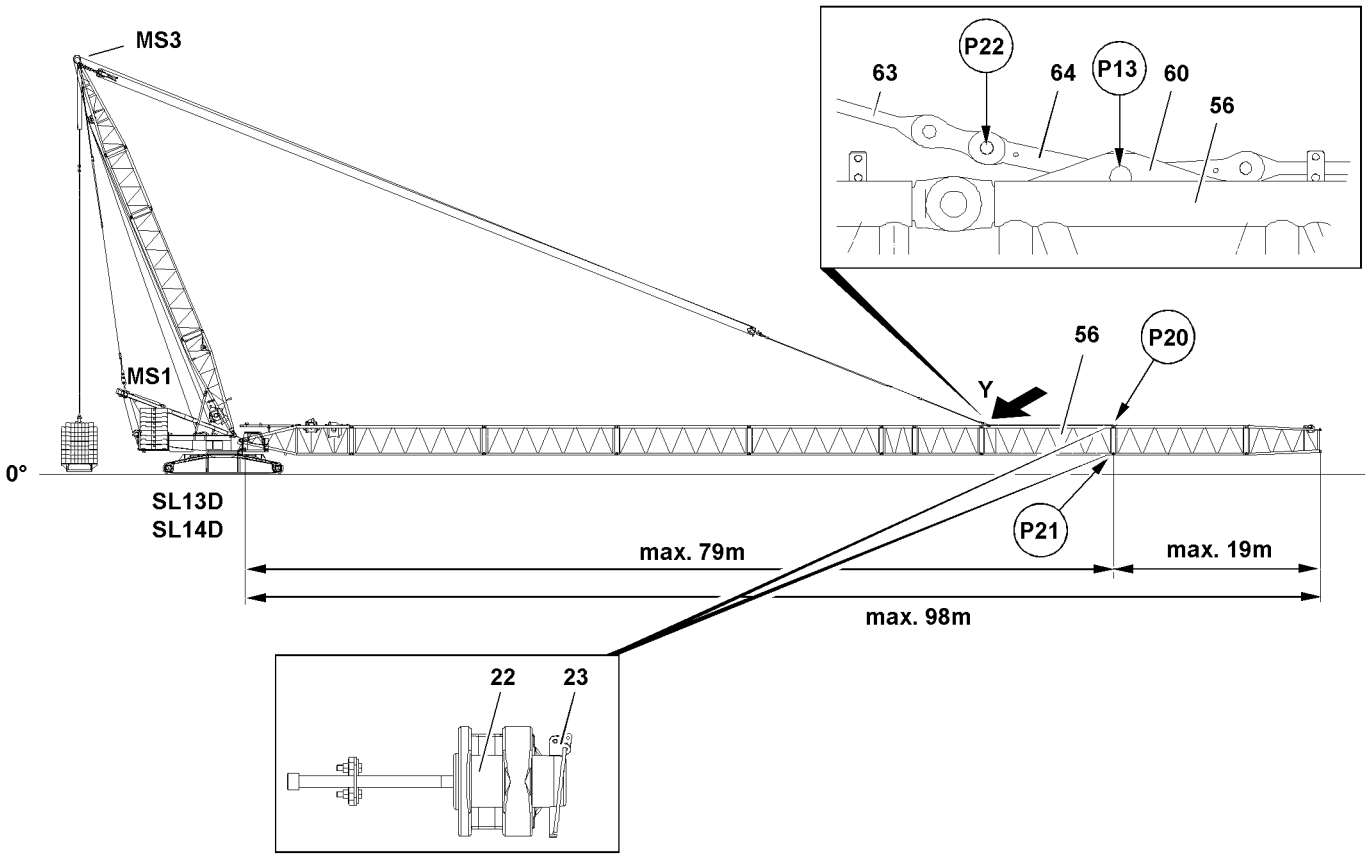

Fig.125185: SL13D, SL14D – target boom lengths 102 m to 111 m

WARNING
The crane can topple over!
If boom systems are assembled in flying mode, where their target boom / operational lengths are not released for the flying assembly, the crane can be overloaded and topple over.
Death, severe bodily injuries, property damage.
▶ For all not listed target boom / operational lengths the flying assembly is **prohibited**.

Counterweight, derrick ballast and central ballast, see Erection chart, depending on the boom length			
Boom system	**Maximum permissible flying assembly length[4)]**	**Equipment (without hook block)**	**Preassembly according FLM[1)]**
SL13D	98 m	- partially equipped:	19 m
SL14D		- without WA-frame II guy rods	

1) maximum permissible preassembly after flying assembly intermediate section (FLM-intermediate section) **56**
4) only valid in connection with the target boom / operational length required for crane operation

LWE/LR 1600-2-001/18101-07-02/en

copyright © Liebherr-Werk Ehingen GmbH 2018

3.9.7 SL13D, SL14D – target boom lengths 114 m to 117 m

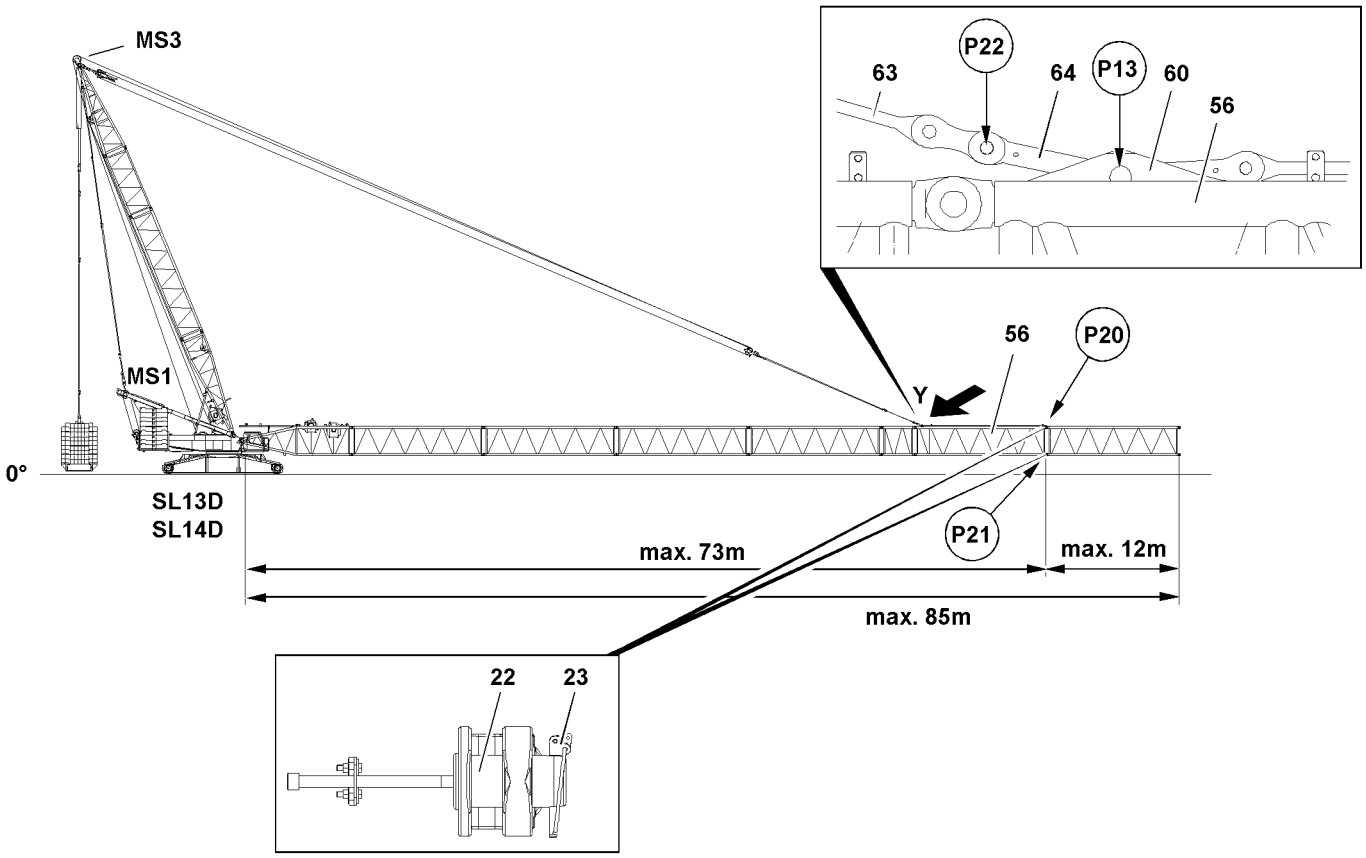

Fig.125186: SL13D, SL14D – target boom lengths 114 m to 117 m

WARNING
The crane can topple over!
If boom systems are assembled in flying mode, where their target boom / operational lengths are not released for the flying assembly, the crane can be overloaded and topple over.
Death, severe bodily injuries, property damage.
▶ For all not listed target boom / operational lengths the flying assembly is **prohibited**.

Counterweight, derrick ballast and central ballast, see Erection chart, depending on the boom length			
Boom system	**Maximum permissible flying assembly length[4)]**	**Equipment (without hook block)**	**Preassembly according FLM[1)]**
SL13D	85 m	- partially equipped:	12 m
SL14D		- without WA-frame II guy rods	

1) maximum permissible preassembly after flying assembly intermediate section (FLM-intermediate section) **56**
4) only valid in connection with the target boom / operational length required for crane operation

copyright © Liebherr-Werk Ehingen GmbH 2018

3.9.8 SL13D, SL14D – target boom lengths 120 m to 156 m

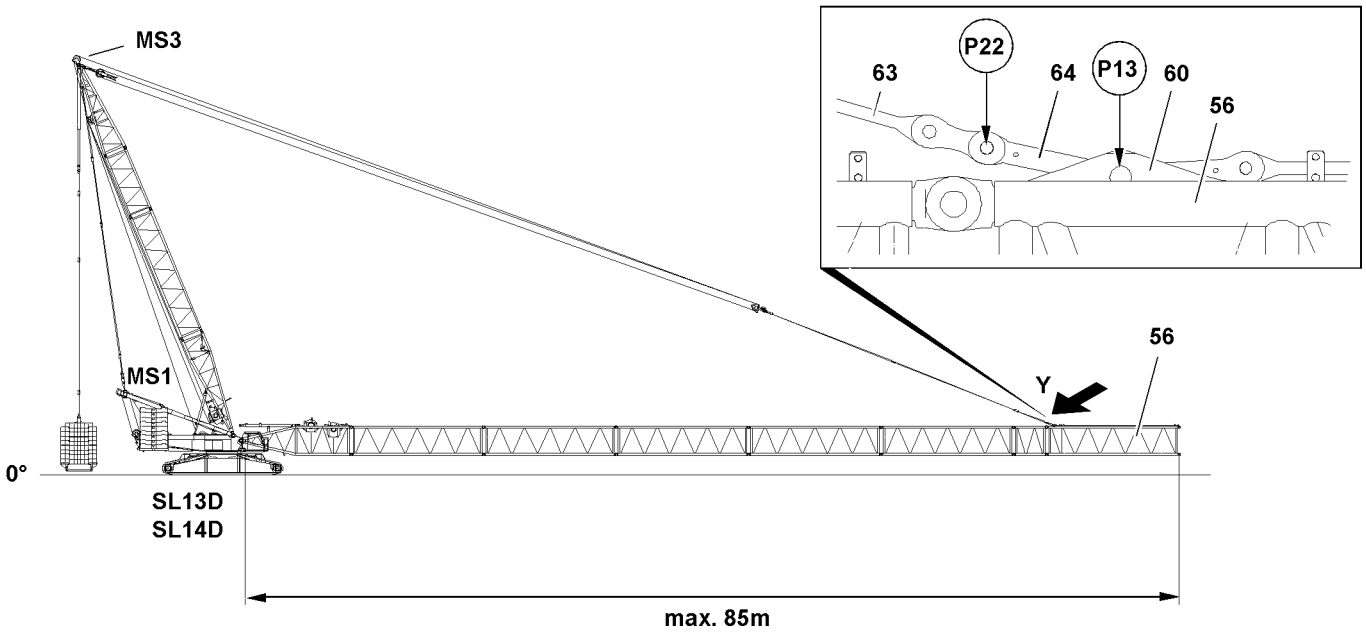

Fig.125187: SL13D // SL14D – target boom lengths 120 m to 156 m

WARNING
The crane can topple over!
If boom systems are assembled in flying mode, where their target boom / operational lengths are not released for the flying assembly, the crane can be overloaded and topple over.
Death, severe bodily injuries, property damage.
▶ For all not listed target boom / operational lengths the flying assembly is **prohibited**.

Counterweight, derrick ballast and central ballast, see Erection chart, depending on the boom length			
Boom system	**Maximum permissible flying assembly length[4)]**	**Equipment (without hook block)**	**Preassembly according FLM[1)]**
SL13D	85 m	- partially equipped:	3)
SL14D		- without WA-frame II guy rods	

1) maximum permissible preassembly after flying assembly intermediate section (FLM-intermediate section) **56**
3) no preassembly after flying assembly intermediate section (FLM-intermediate section) **56** possible
4) only valid in connection with the target boom / operational length required for crane operation

LWE/LR 1600-2-001/18101-07-02/en

copyright © Liebherr-Werk Ehingen GmbH 2018

3.9.9 Assembling the S-intermediate sections in flying mode on the flying assembly intermediate section

WARNING
Falling components!
If unsecured or non-supported components are assembled or disassembled, they can fall down.
Death, severe bodily injuries, property damage.
- ▶ During pinning and unpinning of the intermediate sections it is prohibited for anyone to remain **under** or **on** the components as well as within the entire danger zone.
- ▶ Before unpinning: Support the components and boom.
- ▶ Secure the pins in the storage locations and in the receptacles.
- ▶ It is prohibited to lean a ladder against the crane section that is being disassembled.

Note
- ▶ The „actual force“ is displayed on LICCON monitor.
- ▶ The flying assembly of the intermediate sections is carried out without a hook block.

WARNING
The crane can topple over!
If the derrick boom is luffed up to more than 85° to the horizontal, then the crane can topple over.
Death, severe bodily injuries, property damage.
- ▶ Make sure that the derrick boom at S-boom assembly is not luffed up more than maximum 85° to the horizontal.

- ▶ Fasten the S-intermediate sections or preassembled boom unit to the auxiliary crane.
- ▶ Lift the S-intermediate sections or the preassembled boom unit with the auxiliary crane and position on the S-pivot section **1**.

When the pin points between the S-pivot section **1** and the S-intermediate section **or** the S-pivot section **1** and pre-assembled boom unit align on „top“ and „bottom“:
- ▶ Insert the pin **22** in point **P20** „on top“ and point **P21** „on the bottom“ on both sides and secure with spring retainer **23**.

When the pins between the S-pivot section **1** and the S-intermediate section **or** the S-pivot section **1** and pre-assembled boom unit are properly pinned and secured on „top“ and „bottom“:
- ▶ Take the boom down on the substructure.
- ▶ Remove the auxiliary crane.

When the boom is safely taken down on the substructure or held by an auxiliary crane:
- ▶ Slowly lower the upper pulley block in direction of the boom.
- ▶ Pull the upper pulley block with the auxiliary crane to the guy rods.
- ▶ Pin the upper pulley block with the guy rods of the intermediate sections.

WARNING
Overload of crane!
If the guy rods and the rope of winch 3 **W III** are tensioned when luffing up the derrick boom into the operating position, then the crane can be overloaded.
- ▶ Make sure, when luffing up the derrick boom into the operating position, that the guy rods and the rope of winch 3 **W III** always sag slightly.
- ▶ Make sure that no slack rope forms.

- ▶ Luff the derrick up to the operating position.

Note
- ▶ The S-intermediate section for flying assembly **56** weighs more in comparison to standard intermediate sections.
- ▶ The additional weight of the S-intermediate section for flying assembly **56** is not taken into account in the load charts and must therefore be added to the load to be lifted, as applicable.

LWE/LR 1600-2-001/18101-07-02/en

copyright © Liebherr-Werk Ehingen GmbH 2018

- ▶ Spool up winch 3 **W III** until the guying between the upper pulley block and the S-intermediate section for flying assembly **56** is tensioned and the auxiliary crane is relieved.
- ▶ Pay attention to the horizontal alignment of the boom.

When the boom is tensioned horizontally:

- ▶ Remove the auxiliary crane.

Install the additional S- / L-intermediate sections and the respective end section, depending on the permissible boom length, individually or fully preassembled on the S-intermediate section for flying assembly **56**.

Note

- ▶ Note and observe the maximum permissible boom lengths for flying assembly.

- ▶ Assemble the S-intermediate sections or L-intermediate sections on the S-intermediate section for flying assembly **56**: Use the pin **22** and spring retainer **23**.

WARNING
Unutilized guy rods on boom!
If the guy rods, which are not needed for crane operation, are on the lattice sections, then they can release and fall down during crane operation.
Death, severe bodily injuries, property damage.
The load display of the LICCON computer system shows a value that is too high.
The weight of the boom is too heavy for erection.

- ▶ Disassemble and remove unutilized guy rods on the transport retainers before erecting the boom.

- ▶ Pin and secure the guy rods with each other.
- ▶ Hang the assembled boom on the auxiliary crane.
  or
  Support the assembled boom from below with materials of adequate load bearing capacity.
- ▶ Spool out winch 3 **WIII** until the guying between the upper pulley block and the S-intermediate section for flying assembly **56** is relieved.

DANGER
The boom can fold down!
If the pins on the brackets **60** are unpinned, then the boom can fold down by itself.
Death, severe bodily injuries, property damage.

- ▶ Make sure that the boom is safely held with the auxiliary crane or that it is supported with stable materials before the pins are unpinned in point **P13**.

- ▶ Unpin the pin in point **P13** from the brackets **60**.
- ▶ Tension the guying.

3.10 Assembling SD/SLD/SL(X)D-boom combination(s) with substructure

NOTICE
Overload of boom!
If the boom is not supported before the erection procedure, then the boom will be overloaded during the erection procedure.
The crane will be damaged.

- ▶ Support the SL-boom from a length of more than 114 m.
- ▶ Support the SL2/SL4 boom from a length of more than 120 m.
- ▶ Support the SL10-boom from a length of more than 123 m.
- ▶ Support the SL11-boom from a length of more than 123 m.
- ▶ Support the SL13-boom from a length of more than 117 m.
- ▶ Support the SL14-boom from a length of more than 117 m.
- ▶ Support the boom with suitable material of sufficient load bearing capacity.

LWE/LR 1600-2-001/18101-07-02/en

copyright © Liebherr-Werk Ehingen GmbH 2018

The SL-boom combination - consisting of a S-pivot section and S- and L-intermediate sections, SL-reducer and the respective end section must be preassembled in a suitable location.

Swing the preassembled SL-boom combination with the auxiliary crane(s) in to the turntable, pin and secure.

Note

▶ The boom combinations must each be supported below the auxiliary guying to the heights noted in the following chart, see illustrations.

3.10.1 Supporting the SL-boom from a length of more than 114 m

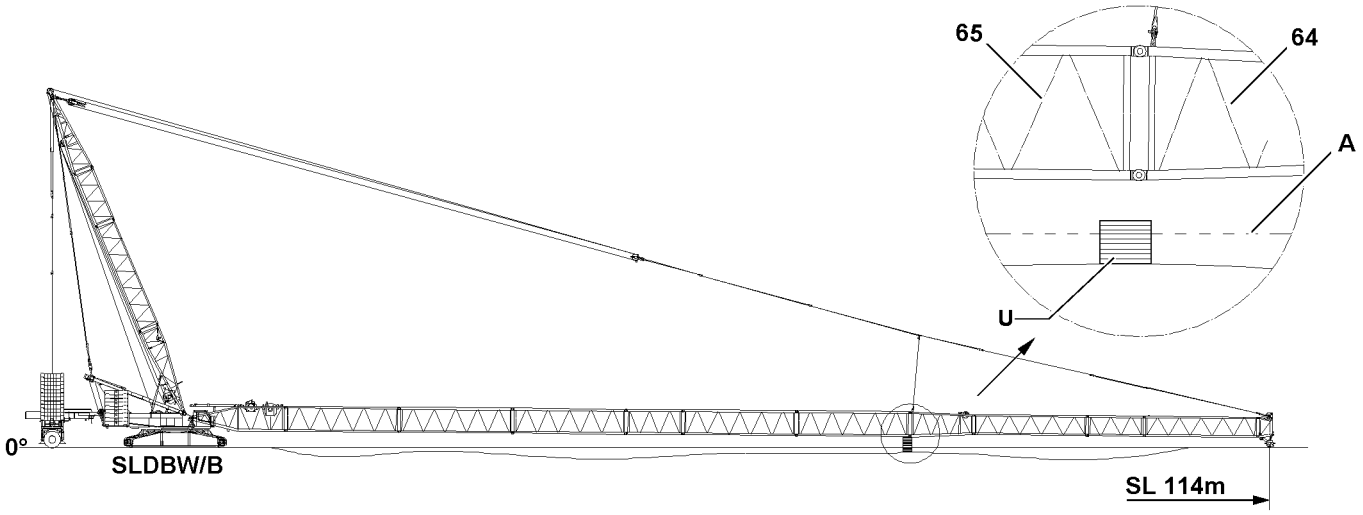

Fig.125174: Supporting from SL 114 m

Note

▶ The alignment level **A** is the placement level of the crane.

Operating mode	**Support from length**	Substructure **U height**
SL	114 m	0.3 m above alignment level **A**

copyright © Liebherr-Werk Ehingen GmbH 2018

3.10.2 Supporting the SL2/SL4 boom from a length of more than 120 m

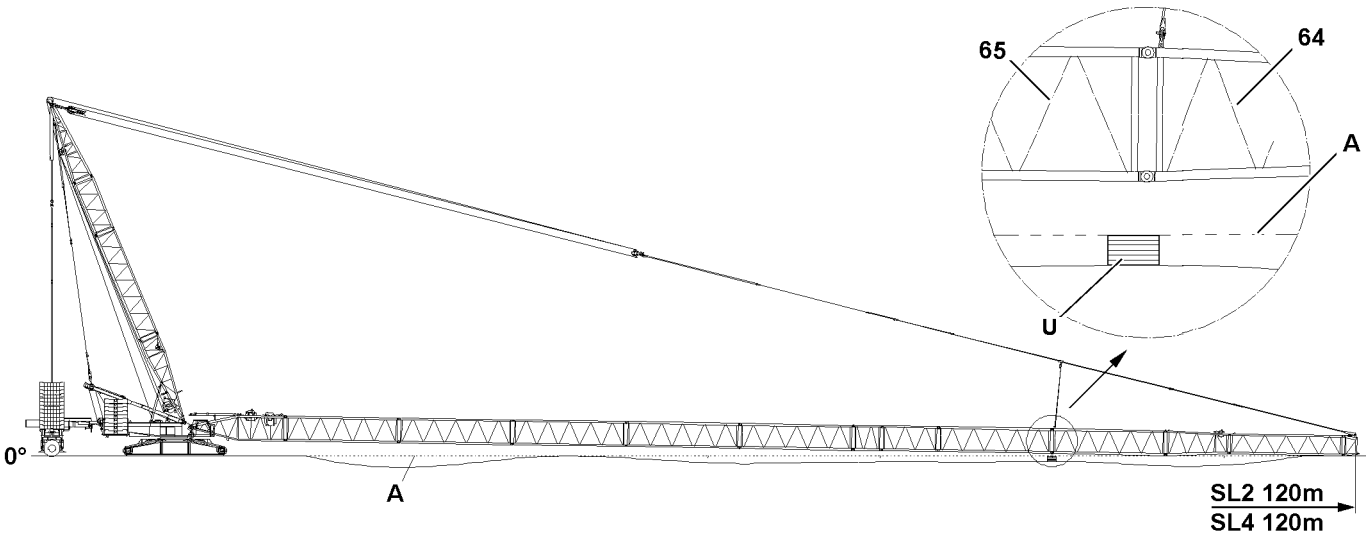

Fig.125172: Supporting from SL2 120 m // SL4 120 m

Note
▶ The alignment level **A** is the placement level of the crane.

Operating mode	Support from length	Substructure **U height**
SL2	120 m	to alignment level **A**
SL4	120 m	to alignment level **A**

3.10.3 Support the SL10-boom from a length of more than 123 m

NOTICE
Damage to the boom system!
▶ Make sure that the maximum permissible flexation of the boom system is not exceeded.

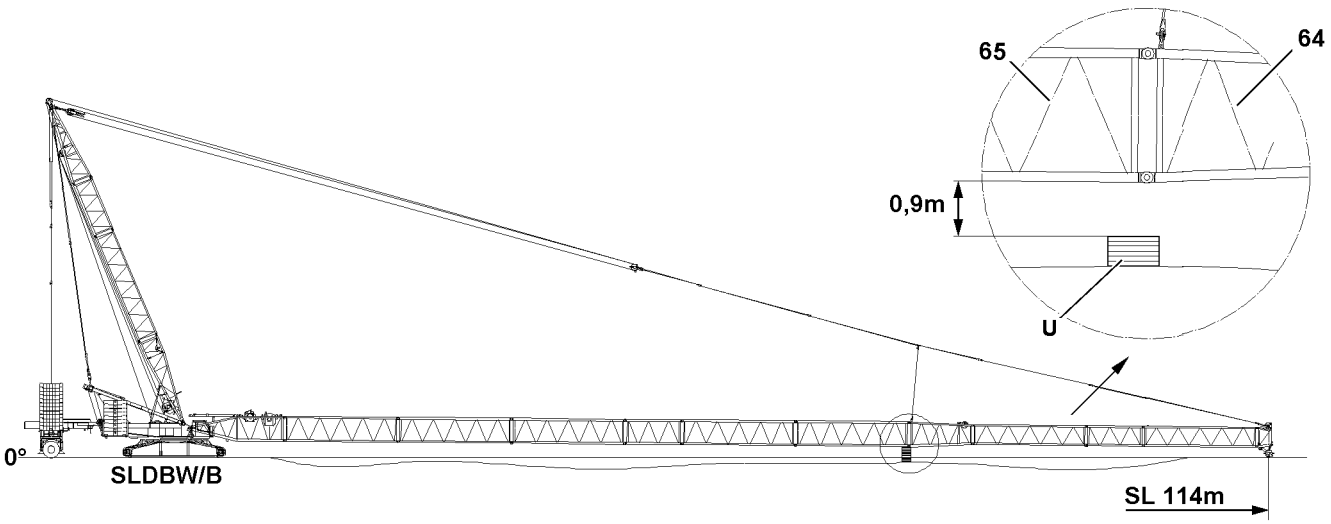

Fig.125173: Support from SL10- 123 m

LWE/LR 1600-2-001/18101-07-02/en

copyright © Liebherr-Werk Ehingen GmbH 2018

Operating mode	Support from length	Maximum permissible flexation
SL10	123 m	0.9 m

3.10.4 Supporting the SL11-boom from a length of more than 123 m

NOTICE
Damage to the boom system!
▶ Make sure that the maximum permissible flexation of the boom system is not exceeded.

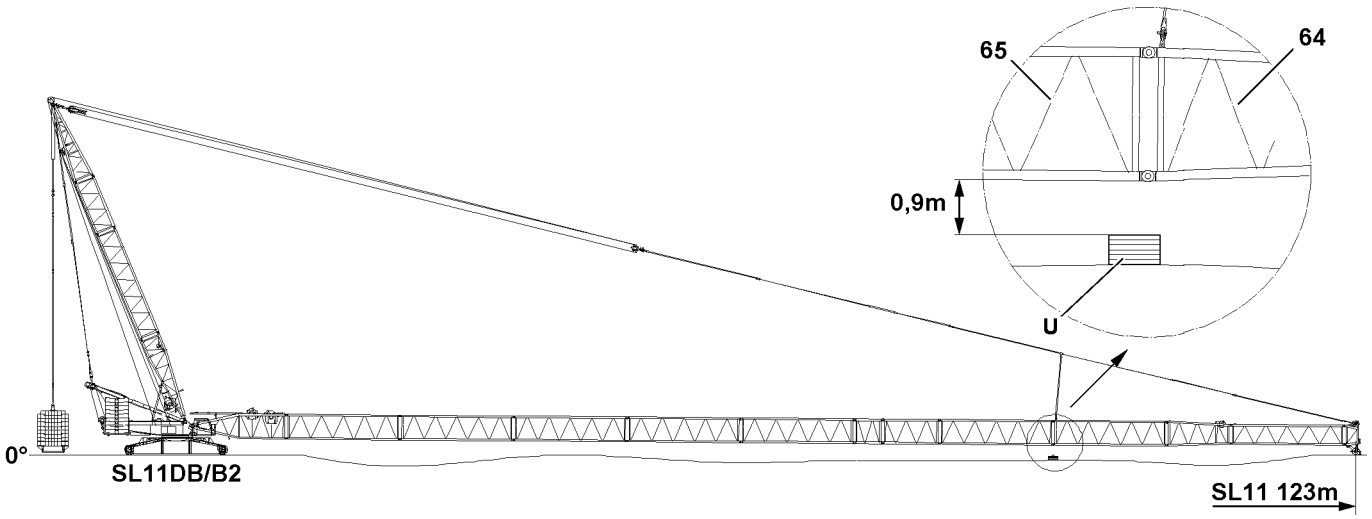

Fig.125175: Supporting from SL11- 123 m

Operating mode	Support from length	Maximum permissible flexation
SL11	123 m	0.9 m

3.10.5 Supporting the SL13-boom from a length of more than 117 m

NOTICE
Damage to the boom system!
▶ Make sure that the maximum permissible flexation of the boom system is not exceeded.

LWE/LR 1600-2-001/18101-07-02/en

copyright © Liebherr-Werk Ehingen GmbH 2018

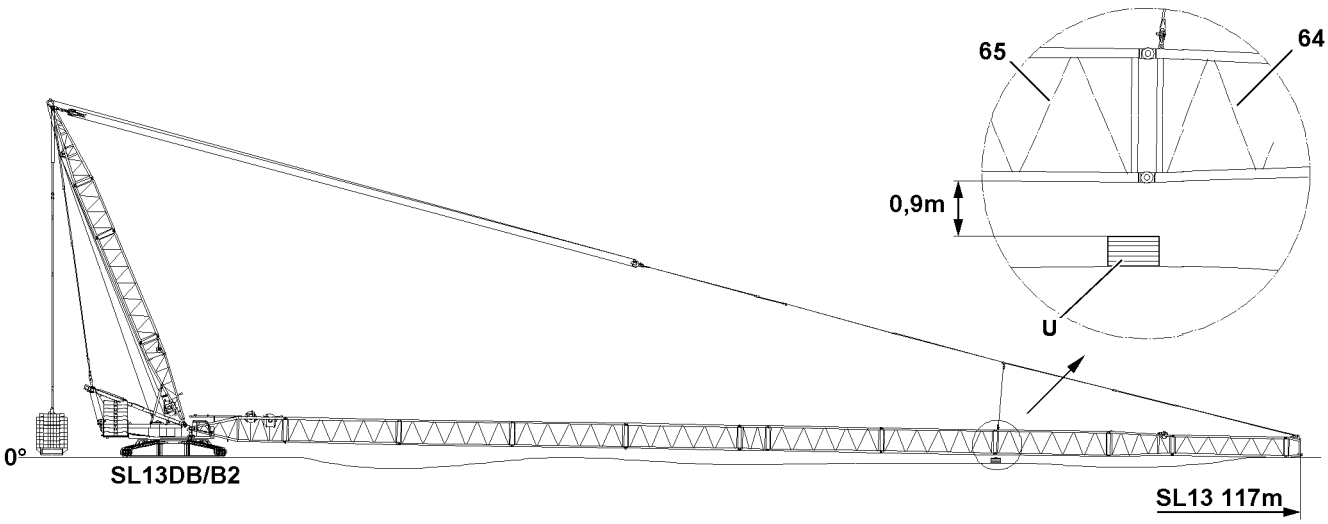

Fig.125177: Supporting from SL13 117 m

Operating mode	Support from length	Maximum permissible flexation
SL13	117 m	0.9 m

3.10.6 Supporting the SL14-boom from a length of more than 117 m

NOTICE
Damage to the boom system!
▶ Make sure that the maximum permissible flexation of the boom system is not exceeded.

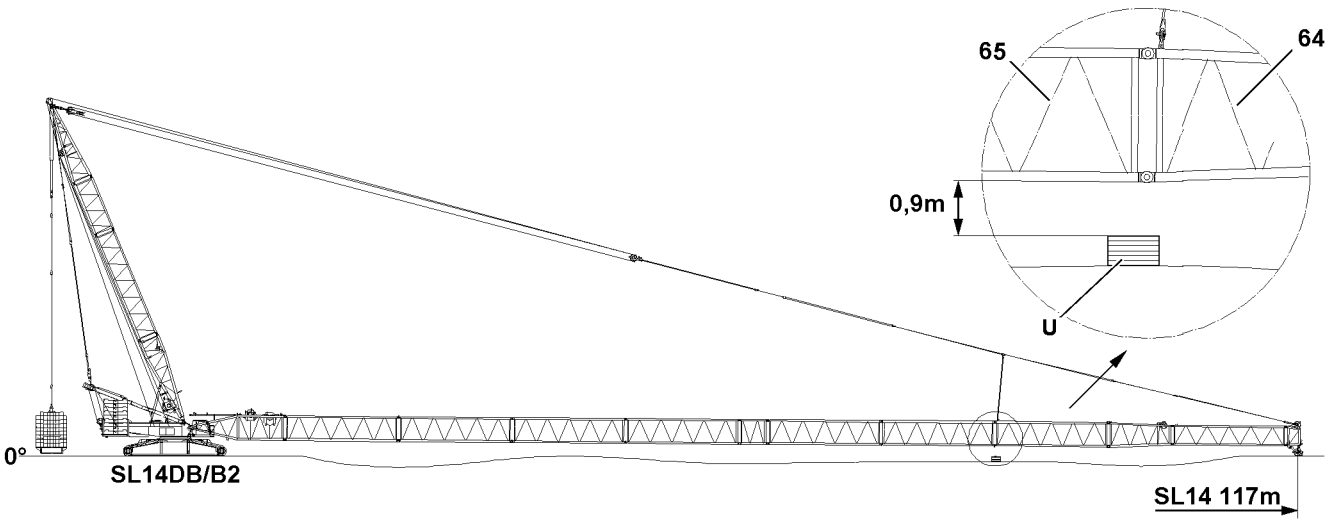

Fig.125176: Supporting from SL14 117 m

Operating mode	Support from length	Maximum permissible flexation
SL14	117 m	0.9 m

LWE/LR 1600-2-001/18101-07-02/en

copyright © Liebherr-Werk Ehingen GmbH 2018

3.10.7 Assembling the boom systems with the substructure

WARNING
Danger due to crane components!
Death, severe bodily injuries, property damage.
▶ Make sure that the ground has sufficient load-bearing capacity to take on the weight of the crane components or the preassembled boom safely.

▶ Preassemble the SL-boom combination in a suitable location.

WARNING
Danger of impact / crushing!
Death, severe bodily injuries, property damage.
▶ Make sure that there are no persons within the danger zone.
▶ Make sure that no obstacles or objects are within the danger zone.

▶ Swing the preassembled SL-boom combination with the auxiliary crane in to the turntable.
▶ Pin and secure the SL-boom combination with the S-pivot section on the turntable, see section „Pinning the S-pivot section on the turntable“.

When the boom combination is pinned on the turntable and secured:
▶ Take the boom combination down on the ground.

3.11 Establishing the electrical connections

NOTICE
Damage to the electrical connection on the cable drum!
If the electrical connection from the cable drum to the terminal box on the S-pivot section is established first before the connection to the terminal box on the S-end section, the electrical connection can be damaged when spooling out the cable drum.
▶ Establish first the electrical connection from the cable drum in the S-pivot section to the terminal box on the S-end section and then the electrical connection from the terminal box in the S-pivot section to the cable drum.

Note
▶ To establish the electrical connections on the S-boom, use the Electric wiring diagram.

Make sure that the following prerequisites are met:
– The S-boom is completely assembled.
– The airplane warning light and the wind speed sensor are assembled.

▶ Establish the electrical connections.
▶ Make sure that all electrical connections on the boom are established.

3.12 Checking the function of the safety equipment

WARNING
Non-functioning safety equipment!
Death, severe bodily injuries, property damage.
▶ Crane operation with non-functioning safety equipment is **prohibited**.

Note
▶ The function of the individual limit switches must be checked before erection.
▶ The function of the limit switch initiators must be checked in the test system, see the Diagnostics manual.

LWE/LR 1600-2-001/18101-07-02/en

copyright © Liebherr-Werk Ehingen GmbH 2018

Note

▶ If a function check on the limit switches or on the safety equipment does not lead to the desired shut offs, then the plug connections on the connector boxes or the components itself must be checked. If no visible connection errors or component defects can be found, contact **LIEBHERR** Service.

Make sure that the following prerequisites are met:
- All electrical connections have been made.
- The crane engine is running.
- The corresponding operating mode is set on the LICCON monitor.

3.12.1 Checking the wind speed sensor

▶ Check the movement and the function of the wind speed sensor.

3.12.2 Checking the airplane warning light

▶ Turn on the airplane warning light on with the button.
▶ Check the function visually.

3.12.3 Checking the hoist limit switch on the pulley head

Note

▶ When replacing or changing a hoist limit switch (HES), the corresponding hoist limit switch must have the correct bus address and the correct software version in order to be detected again by the bus system (LSB).

▶ Actuate the hoist limit switch manually on the pulley head.

Result:

– The spool up function of the hoist winch turns off.
– The icon „Hoist top“ appears on the LICCON monitor 0.
– The limit switch is functioning.

3.12.4 Checking the limit switch S-boom „steepest position“

Note

▶ The limit switch functions have to be checked individually before erection.

▶ Cover the limit switch initiators on the S-relapse cylinders individually with a metal plate.

Result:

– The limit switch is actuated manually.
– The spool up function of winch 4 (control winch) turns off.
– The „Boom limitation“ icon appears on LICCON monitor 0.
– The limit switch is functioning.

LWE/LR 1600-2-001/18101-07-02/en

copyright © Liebherr-Werk Ehingen GmbH 2018

Empty page!

LWE/LR 1600-2-001/18101-07-02/en

copyright © Liebherr-Werk Ehingen GmbH 2018

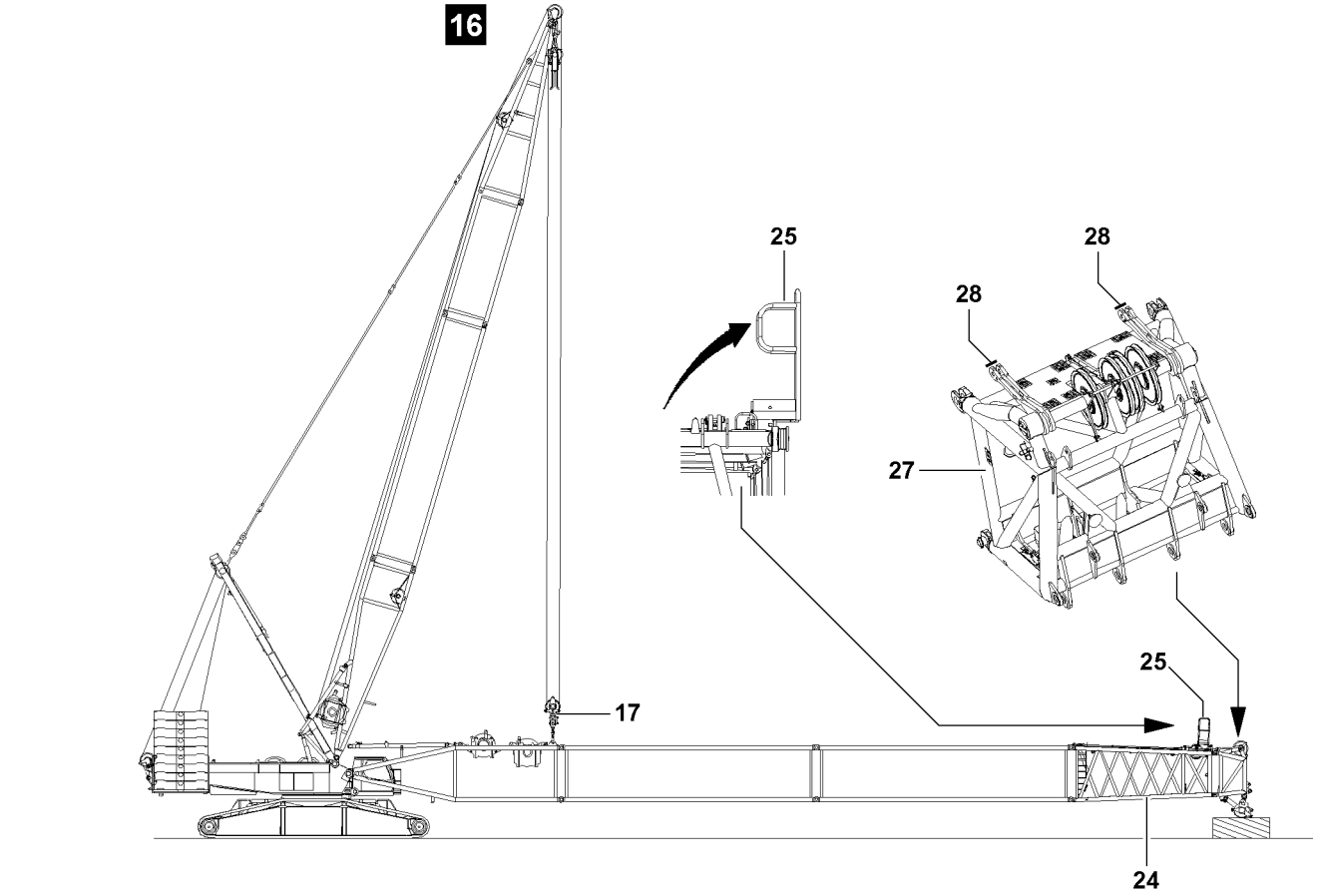

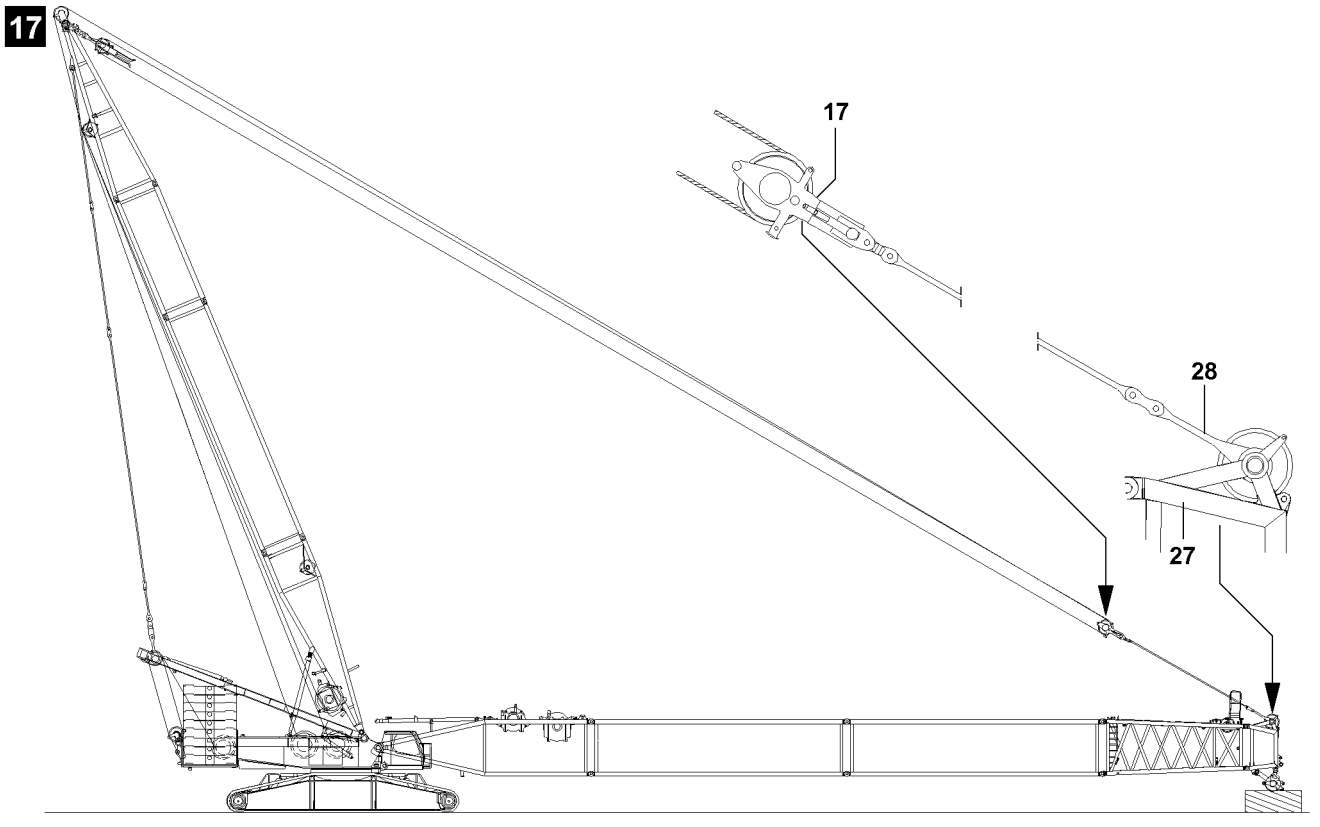

LWE/LR 1600-2-001/18101-07-02/en

Fig.106752

copyright © Liebherr-Werk Ehingen GmbH 2018

3.13 Assembling the S-guy rods

WARNING
Neglected inspection and maintenance on guy rods!
If the regular inspection and maintenance of the guy rods is not carried out or is carried out only in irregular intervals, then severe accidents can occur due to existing and unrecognized damage to the guy rods.
Death, severe bodily injuries, property damage.
- ▶ Inspect the guy rods before each assembly, see chapter 8.15.
- ▶ The S-guy rods must be assembled and secured, see the Rod plan. The numbering in the rod plan must be identical to the numbering on the guy rods.

Note
- ▶ The guy rods must be installed and secured according to the separately supplied rod plans. The numbering on the rod plans must be identical to the numbering on the guy rods.

Make sure that the following prerequisites are met:
- The S-boom is completely assembled.
- All lattice sections are properly pinned with each other.
- All pin connections are secured.
- The upper pulley block **17** is unpinned on the S-pivot section.
- The folding platforms **25** on the SL-reducer **24** are folded and secured „upward“ in the operating position, see chapter 2.06.

- ▶ Luff the D-boom down to the front.
- ▶ Lower the upper pulley block **17** to the boom: Spool out winch 3.

The guy rods are taken down and secured for transport on the corresponding intermediate sections. Before assembly, the transport retainers must be released.

- ▶ Release the transport retainers of the guy rods.

NOTICE
Danger of property damage!
If the pins of the guy rods are not pinned from the „inside“ to the „outside“, the hoist rope can scrape on the pins and be damaged.
- ▶ Always insert the pins of the guy rods from the „inside“ to the „outside“.
- ▶ Pay attention to the Rod plan.

LWE/LR 1600-2-001/18101-07-02/en

copyright © Liebherr-Werk Ehingen GmbH 2018

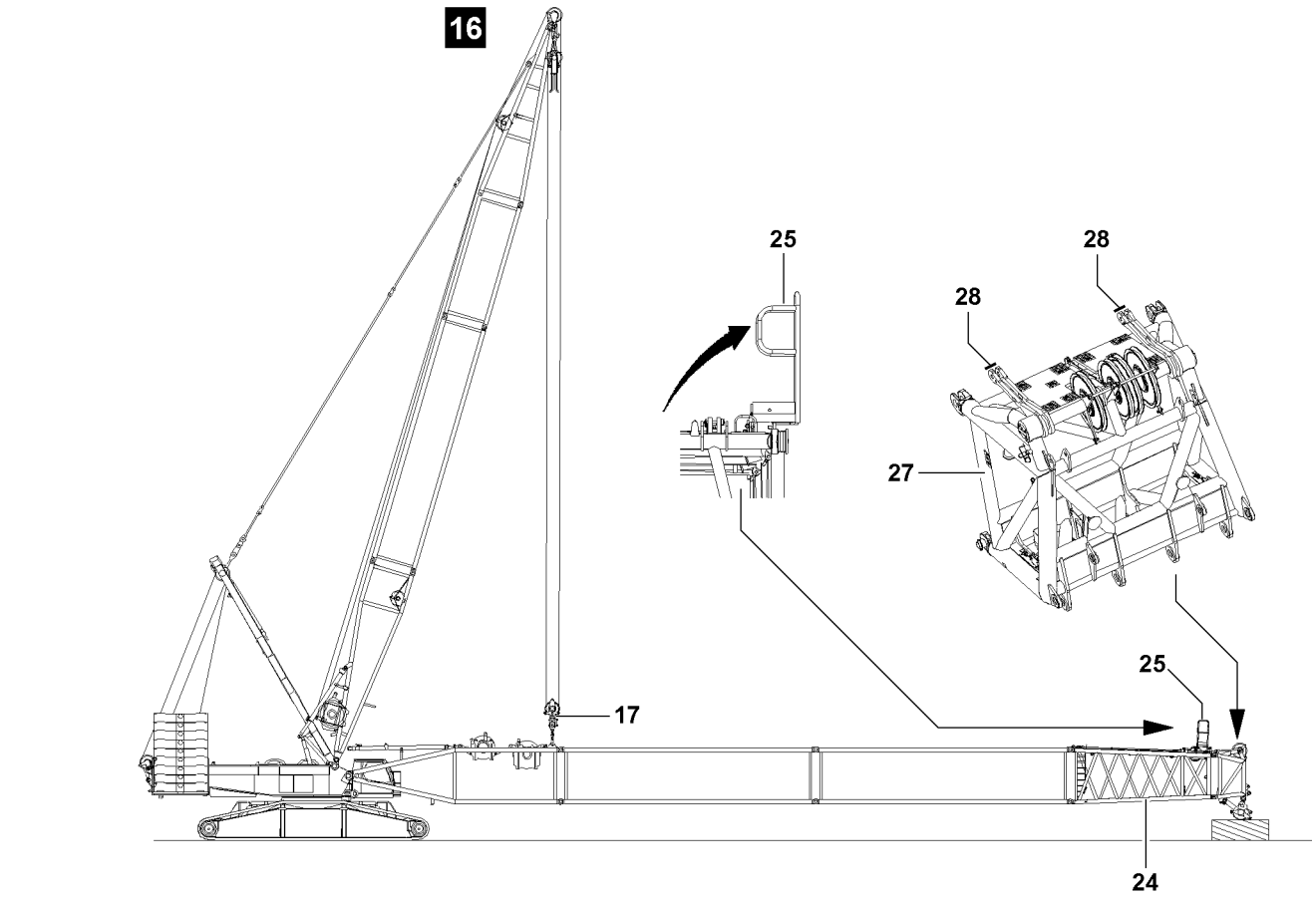

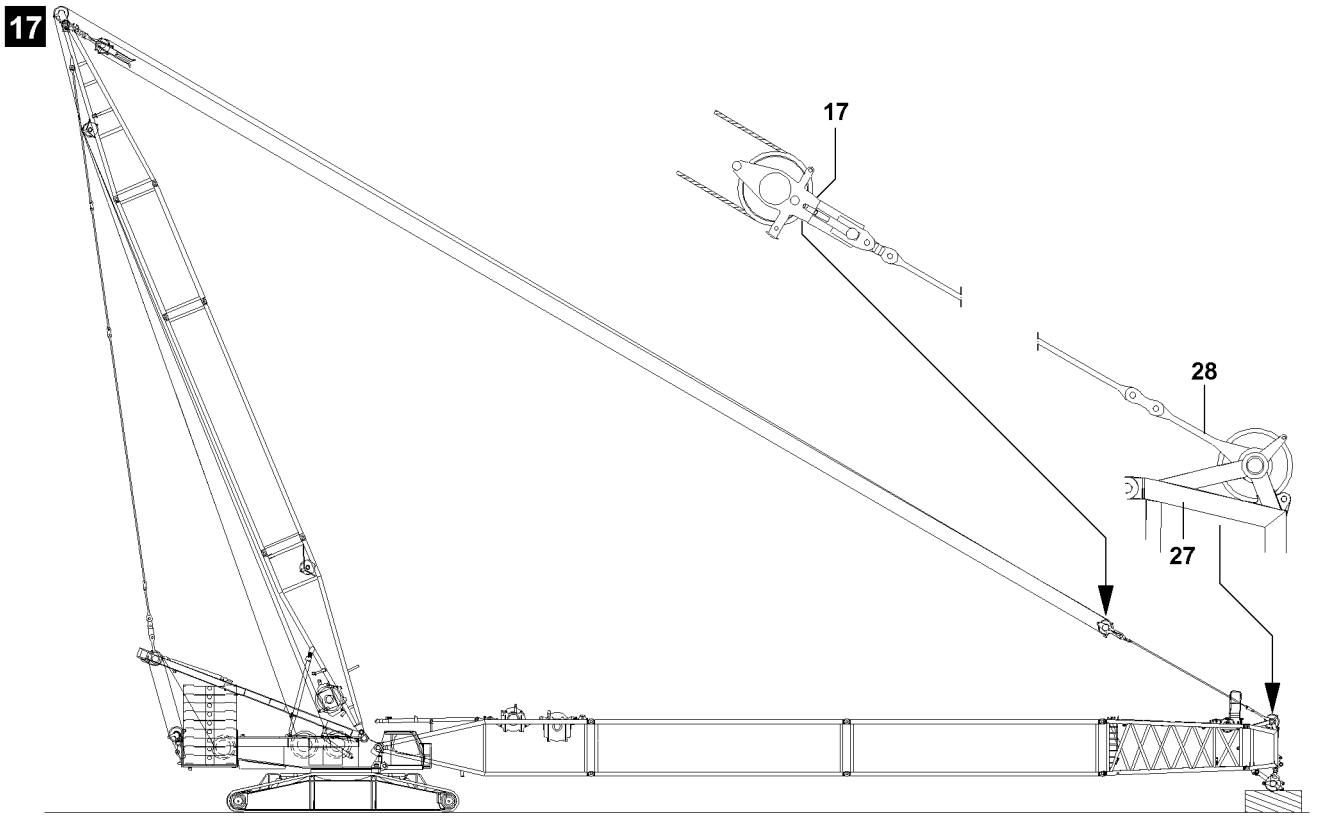

LWE/LR 1600-2-001/18101-07-02/en

Fig.106752

copyright © Liebherr-Werk Ehingen GmbH 2018

Note

▶ The guy rods of the S-intermediate sections are pinned and secured together starting from the lugs **28** on the fixed point of the S-end section.

▶ Pin and secure the guy rods for the intermediate sections according to the Rod plan.
▶ Pin and secure the guy rods with the upper pulley block **17**.

Note

▶ The S-boom must remain on the ground when erecting the D-boom and may **not** be pulled up along.

When the guy rods are pinned and secured with the upper pulley block **17**:
▶ Erect the D-boom to operating position and at the same time, spool out winch 3.

When the D-boom has reached the operating position:
▶ Tension the guying between the D-boom and the S-boom head, see illustration **17**.

WARNING

The boom can fold down!
If the following notes are not observed, the boom can suddenly fold down when the auxiliary crane or the substructure is removed.
Death, severe bodily injuries, property damage.

▶ Remove the auxiliary crane or the substructure only if it is ensured that the D-boom is in operating position and the S-boom is safely being held by the guying.

▶ Remove the auxiliary crane on the S-boom head.
or
Remove the substructure.
▶ Guide the hoist rope over the rope pulley(s) on the S-boom head, see separate reeving plans.

LWE/LR 1600-2-001/18101-07-02/en

copyright © Liebherr-Werk Ehingen GmbH 2018

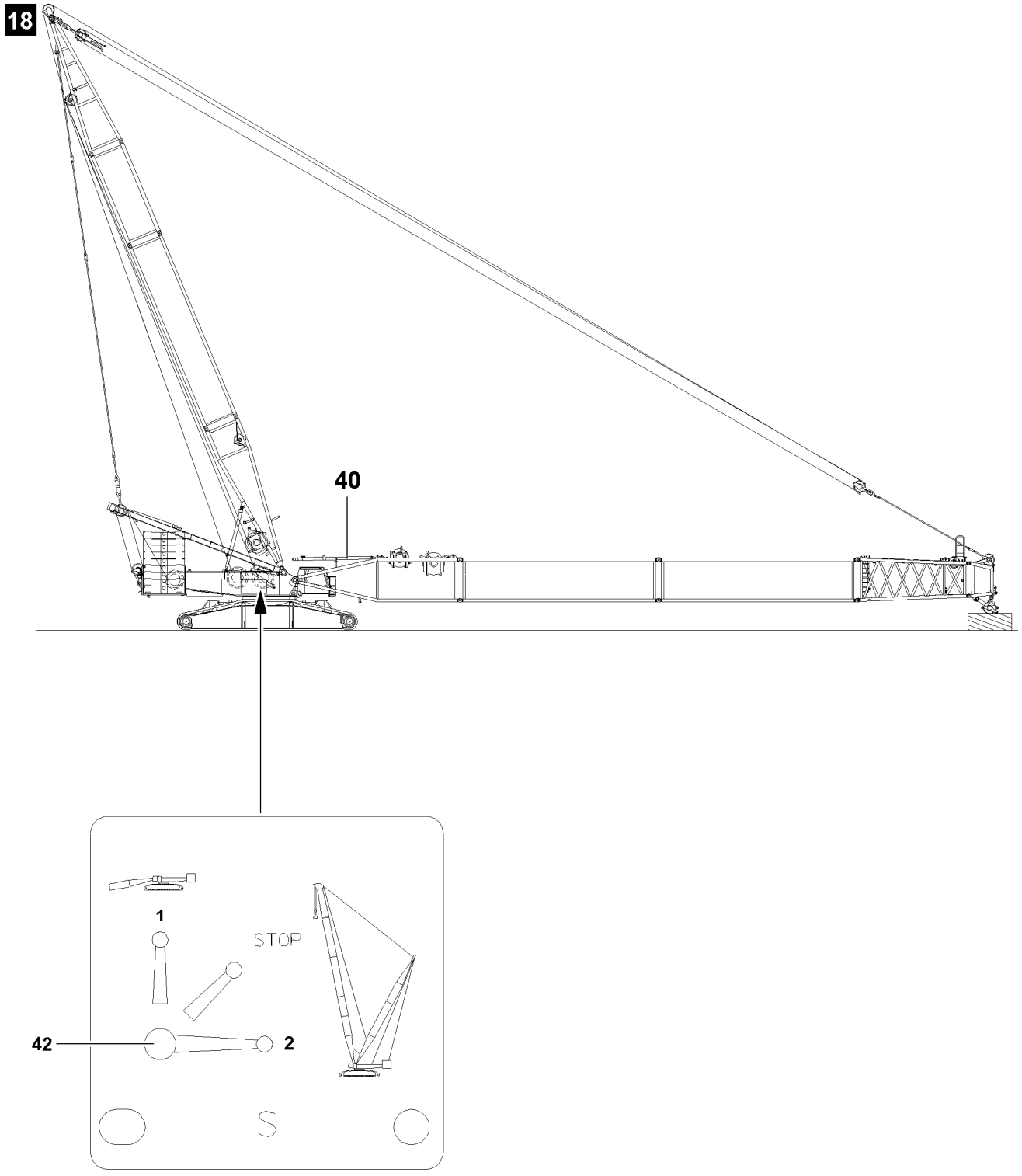

LWE/LR 1600-2-001/18101-07-02/en

Fig.119483

copyright © Liebherr-Werk Ehingen GmbH 2018

3.14 Erecting the boom

WARNING
The crane can topple over!
If the following conditions are not met before erecting the boom, the crane can topple over.
Death, severe bodily injuries, property damage.
- ▶ It is not permitted to turn the crane during the erection procedure.
- ▶ Observe the specifications in the erection and take-down charts.
- ▶ Observe the technical safety instructions, see chapter 5.01.
- ▶ Extend the S-relapse cylinder before erection.
- ▶ Do not allow slack rope formation on the control winch.

WARNING
Unutilized guy rods on boom!
If guy rods are on the lattice sections which are not used for operation, then there is a danger of accident.
Death, severe bodily injuries, property damage.
Guy rods can loosen up and fall down.
The load chart is invalid.
The load display of the LICCON computer system shows an incorrect value.
The weight of the boom is too heavy for erection.
- ▶ Disassemble and remove unutilized guy rods on the transport retainers before erecting the boom.

WARNING
Falling hoist rope!
If the hoist rope is not reeved with the respective length before the erection procedure, then it can fall down backward due to its own weight.
Death, severe bodily injuries, property damage.
- ▶ Reeve in the hoist rope properly according to the reeving plan.
- ▶ Reeve in the hoist rope with sufficient length before the erection procedure.
- ▶ The hoist rope must be constantly monitored during erection.
- ▶ Do not step into the danger zone.

Make sure that the following prerequisites are met:
- – The crane is horizontally aligned.
- – All electrical connections have been made.
- – All hydraulic connections have been made.
- – All limit switches are functioning.
- – The central ballast has been attached according to the data in the load chart.
- – The counterweight has been installed on the turntable according to the load chart.
- – All pin connections are secured.
- – The hoist rope has been correctly placed in the rope pulleys and is prevented from jumping out with the rope retaining pins.
- – There are no loose parts on the boom.
- – The LICCON overload protection has been set according to the data in the load chart.
- – The LICCON overload protection settings have been compared with the actual set up configuration.
- – The LICCON overload protection is exceeded.
- – The assembly icon is visible on the LICCON monitor.
- – No persons are present in the danger zone.

LWE/LR 1600-2-001/18101-07-02/en

copyright © Liebherr-Werk Ehingen GmbH 2018

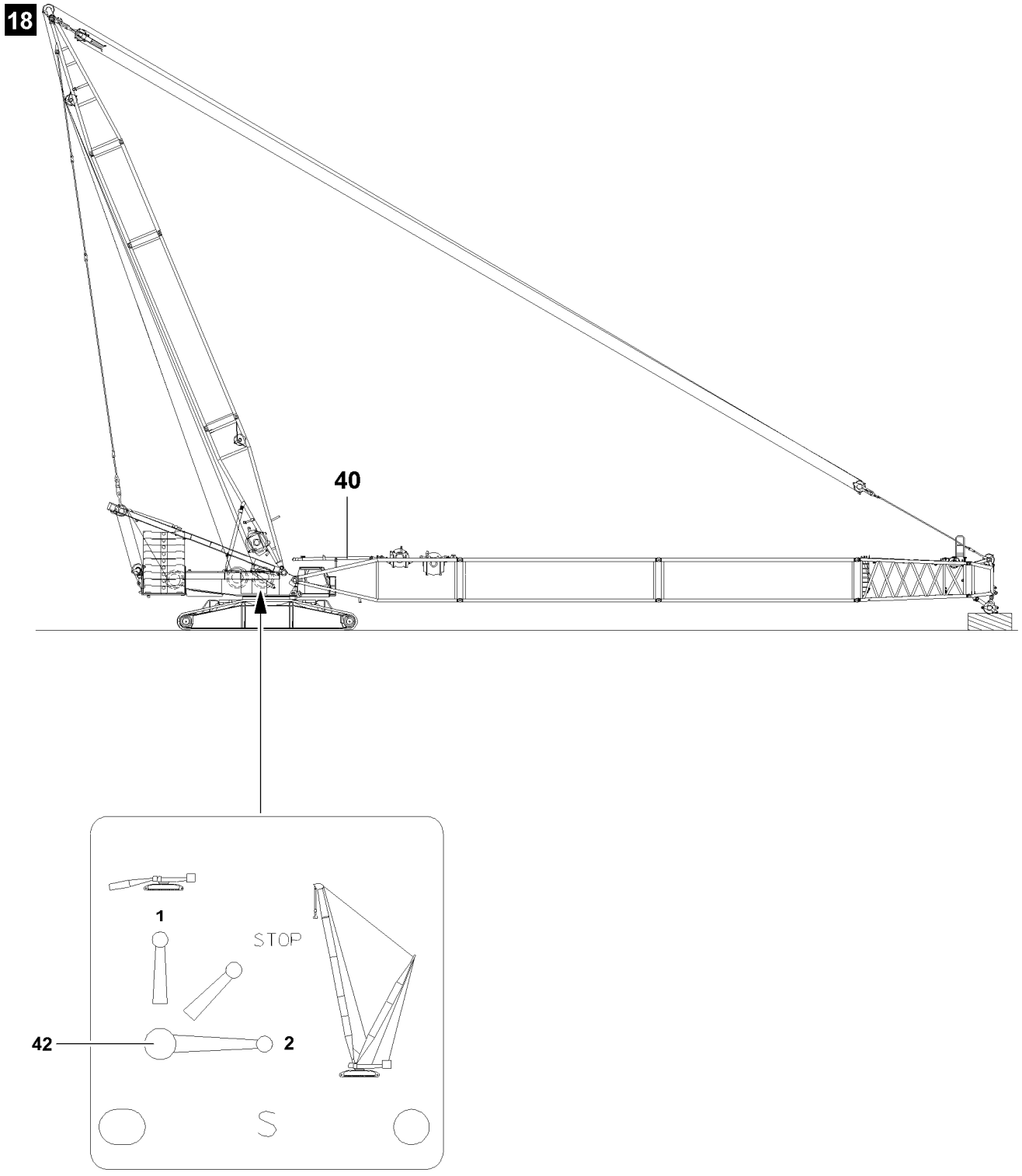

LWE/LR 1600-2-001/18101-07-02/en

Fig.119483

copyright © Liebherr-Werk Ehingen GmbH 2018

3.14.1 Extending the S-relapse cylinders

NOTICE
Damage to the relapse cylinders!
By extending the S-relapse cylinders, a collision with the D-relapse cylinders can occur.
This can result in severe damage to the relapse cylinders.
▶ Extend the S-relapse cylinders only when the D-boom is in the operating position.

WARNING
The crane can topple over!
If the S-relapse cylinders are not extended before erecting the S-boom, then the S-boom can fall off to the rear during crane operation and the crane can topple over.
Death, severe bodily injuries, property damage.
▶ Extend the S-relapse cylinders **40** before erecting the S-boom.
▶ Secure the ball valve **42** during crane operation to prevent inadvertent actuation.

Ball valve positions	
2	Crane operation, extend the piston rod
1	Assembly, retract the piston rod
STOP	The piston rod cannot be retracted / extended

The piston rods on the S-relapse cylinders **40** can be extended with the ball valve **42**.

▶ Set the ball valve **42** to position **2**.

Result:

– The piston rods of the S-relapse cylinders **40** extend.

Note
▶ The ball valve **42** is secured by closing the cabinet door and removing the key.

When the piston rods of the S-relapse cylinders **40** are fully extended:
▶ Close the cabinet doors and pull out the key.
▶ Hand the key to an authorized person.

LWE/LR 1600-2-001/18101-07-02/en

copyright © Liebherr-Werk Ehingen GmbH 2018

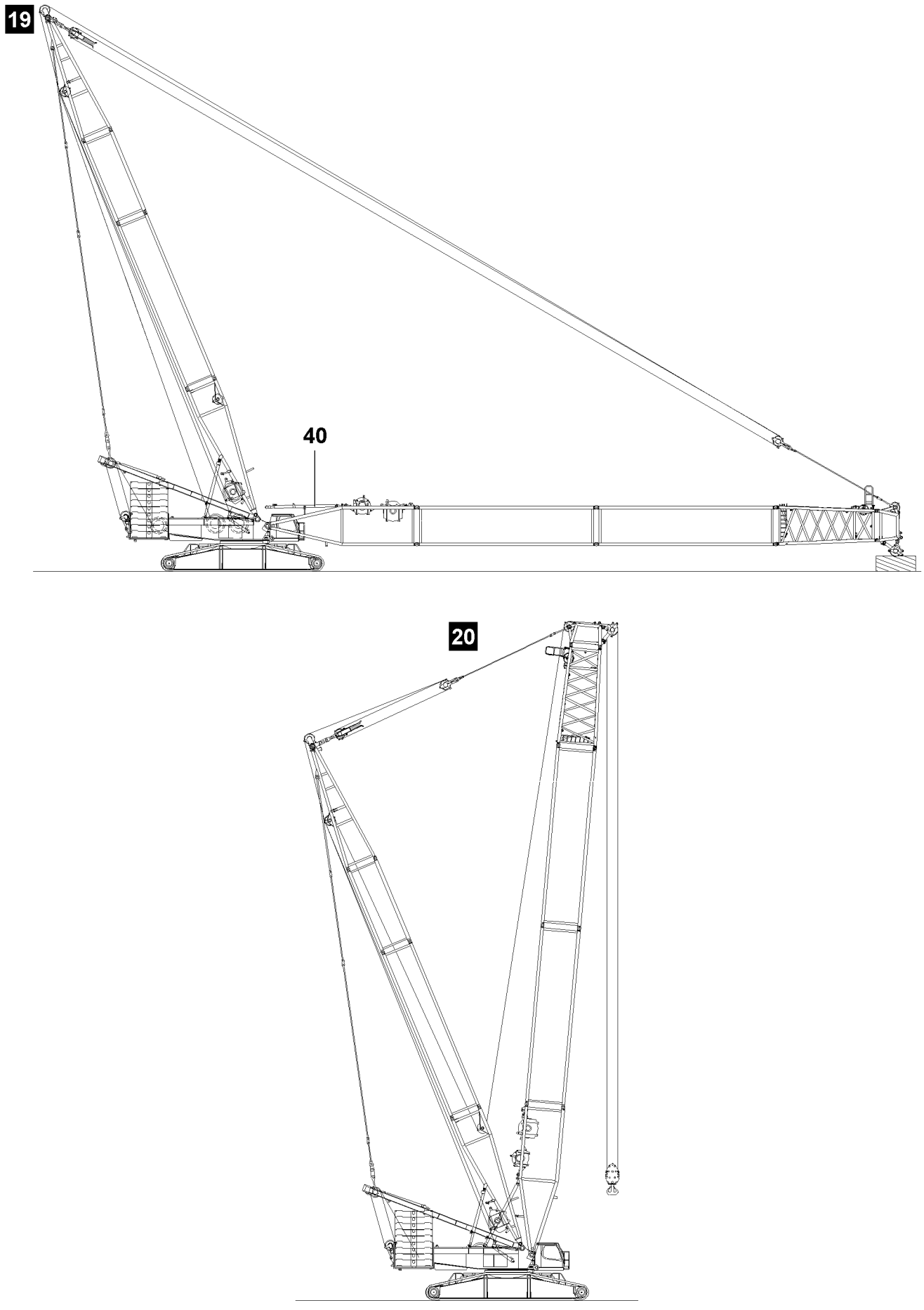

Fig.119484

LWE/LR 1600-2-001/18101-07-02/en

copyright © Liebherr-Werk Ehingen GmbH 2018

3.14.2 Erection procedure

DANGER
The crane can topple over!
- ▶ It is prohibited to turn the crane superstructure while erecting the boom.
- ▶ Observe the data in the Erection and take down charts.

Make sure that the following prerequisite is met:
- – The boom has been lifted off the ground.

Reeving in the hook block

- ▶ Erect the boom until the end section lifts off the ground.
- ▶ Check the actual load on the LICCON monitor.

Problem remedy
Actual load on the LICCON monitor is larger than 0.0 t !
- ▶ Observe the notes for input of hook block weight, see chapter 4.02.

Note
- ▶ Hoist rope reevings, see chapter 4.06 and Reeving plan.

- ▶ Reeve in the hook block properly and secure the hoist rope on the rope fixed point, for reeving, see the reeving plan.
- ▶ Attach the hoist limit switch weight.
- ▶ Enter the weight of the hook block in the LICCON computer system.

Erecting the boom

WARNING
The crane can topple over!
In crane operation with exceeded LICCON overload protection, the crane can topple over.
Death, severe bodily injuries, property damage.
- ▶ The boom radii listed in the load chart may not be exceeded or fallen below, even if there is no load on the hook.

If required in the erection and take down chart:
- ▶ Carry the hook block along with the auxiliary crane.

Note
- ▶ When the lowest operating position of the boom is reached, the LICCON overload protection is activated.
- ▶ The displays on the LICCON monitor turn off.
- ▶ In the maximum load icon, a load number appears in „t“ instead of the display „???“.

- ▶ Luff the boom up to the lowest operating position.

When the boom has reached the lowest operating position:
- ▶ Make sure that the assembly icon on the LICCON monitor turns off.

Result:

- – The LICCON overload protection is active.

LWE/LR 1600-2-001/18101-07-02/en

copyright © Liebherr-Werk Ehingen GmbH 2018

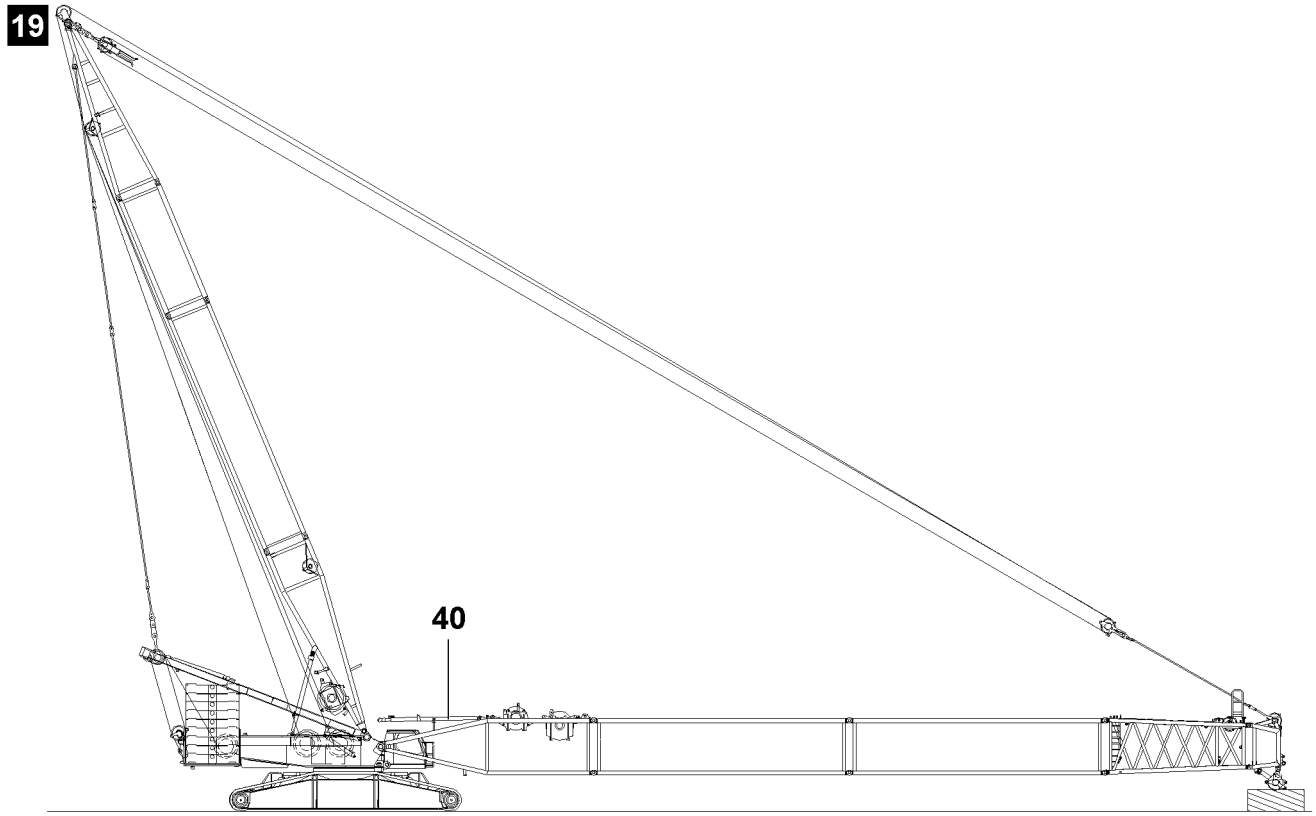

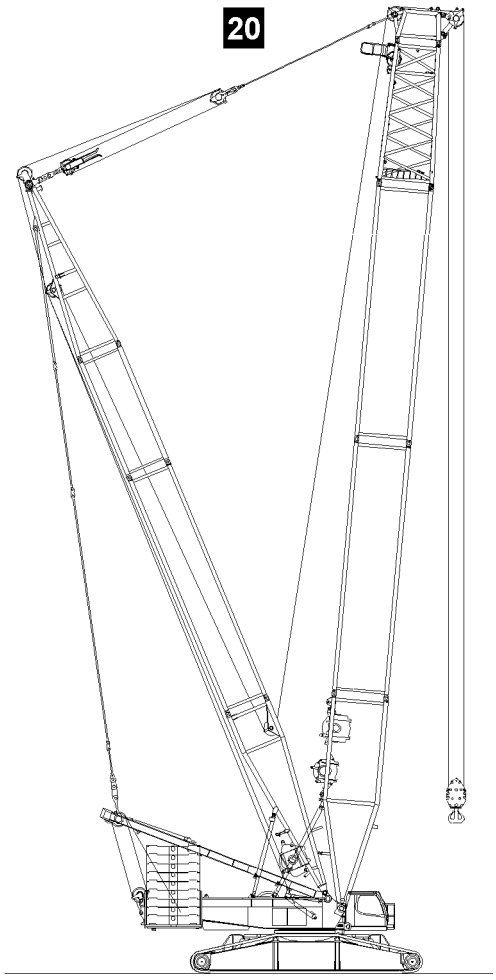

Fig.119484

LWE/LR 1600-2-001/18101-07-02/en

copyright © Liebherr-Werk Ehingen GmbH 2018

4 Operating the crane

4.1 Preparing for crane operation

Note

▶ Observe the notes, see chapter 4.02, chapter 4.05, chapter 4.08 and chapter 5.01.

Make sure that the following prerequisites are met:
- The LICCON overload protection is active.
- The LICCON overload protection has been set according to the data in the load chart.

WARNING

The crane can topple over!

▶ Check the horizontal position of the crane before and during crane operation.

▶ If the crane operator leaves the cab, even for a short time, the operating mode setting must be checked and reset if necessary before resuming crane operation.

4.1.1 Checking the settings

▶ Check the function of the overload protection by running against the operating positions „on top“ and „bottom“.

▶ Check the hoist limit switch by running against the hoist limit switch weight.

▶ Check the function of the limit switches on the jib stop cylinders.

5 Disassembling the SLD / SD-boom

WARNING

Danger of falling!

During assembly / disassembly, inspection and maintenance work, assembly personnel must be secured with appropriate aids to prevent them from falling.

Death, severe bodily injuries, property damage.

▶ All work at a height, when there is a danger of falling, must be carried out with suitable aids.

▶ If aids are not available and work cannot be carried out from the ground, then assembly personnel must secure themselves with the supplied fall arrest system to prevent falling, see chapter 2.04.

▶ If fall protection equipment is available, then it must be used, see chapter 2.06.

▶ When lifting, lowering, swinging crane parts in and out, no persons may remain in the danger zone.

▶ When closing or opening boom systems during boom assembly or boom disassembly, no persons may remain on the boom system or in the danger zone.

▶ If railings are present on the components, then they must be brought into the corresponding position and secured for assembly / disassembly work.

▶ Only step on the aids, ladders and catwalks with clean shoes.

▶ Keep aids, ladders and catwalks free of heavy dirt, snow and ice.

▶ During all assembly and disassembly work, maintenance work and inspections, travel or crane operation is prohibited.

▶ Remaining on a suspended load is prohibited.

▶ Stepping or walking on crane components and lattice sections, which have an incline of more than 20° is prohibited.

▶ For all assembly work, the crane driver of the main crane must be in voice contact with the crane driver / crane drivers of the auxiliary crane / auxiliary cranes.

▶ For assembly tasks, the crane driver may only initiate crane movements when the responsible guide has explicitly released the movement.

LWE/LR 1600-2-001/18101-07-02/en

copyright © Liebherr-Werk Ehingen GmbH 2018

WARNING
The lattice sections can fall down!
If the lattice sections are not pinned and secured correctly, then they can fall down.
Death, severe bodily injuries, property damage.
- ▶ Insert or unpin both pins at the same horizontal level, i.e. **left and right**.
- ▶ Do not stand under the lattice sections or within the entire danger zone during the pinning and unpinning procedure of the boom.
- ▶ Safely secure the pins in the storage locations as well as in the receptacles.
- ▶ It is prohibited to lean the ladder against the component being disassembled.

WARNING
Danger of impact / crushing!
When installing / removing crane components with the auxiliary crane, crane components can start to swing back and forth.
When lifting / lowering and positioning crane components, there is an increased danger of impacts / crushing.
Death, severe bodily injuries, property damage.
- ▶ Make sure that personnel cannot be caught by components.
- ▶ Make sure that the crane is horizontally aligned.
- ▶ When working in danger zones: Use aids to protect limbs.
- ▶ Guide components with suitable aids to minimize oscillation.

DANGER
The components can fall down!
If the corresponding component is disengaged from the auxiliary crane before the corresponding component is pinned, then the corresponding component can fall down.
Death, severe bodily injuries, property damage.
- ▶ Do not disengage the auxiliary crane until the respective component is pinned and secured.

WARNING
The crane can topple over!
- ▶ The turntable may not be turned during the assembly of the boom.
- ▶ Observe the assembly conditions, see chapter 3.06.

WARNING
Danger of accident!
Death, severe bodily injuries, property damage.
- ▶ For assembly of the boom combinations, the rod plan must be observed and adhered to.
- ▶ Depending on the condition of the ground, the boom and the lattice sections must be supported from below for the assembly of the boom.
- ▶ Observe the technical safety instructions, see chapter 5.01.

Make sure that the following prerequisites are met:
- The crane is horizontally aligned.
- An auxiliary crane is available.
- An assembly scaffolding / work platform is available.
- The central ballast is installed according to the load chart.
- The counterweight has been installed on the turntable according to the load chart.
- The LICCON overload protection has been set according to the data in the load chart.

LWE/LR 1600-2-001/18101-07-02/en

copyright © Liebherr-Werk Ehingen GmbH 2018

Empty page!

LWE/LR 1600-2-001/18101-07-02/en

copyright © Liebherr-Werk Ehingen GmbH 2018

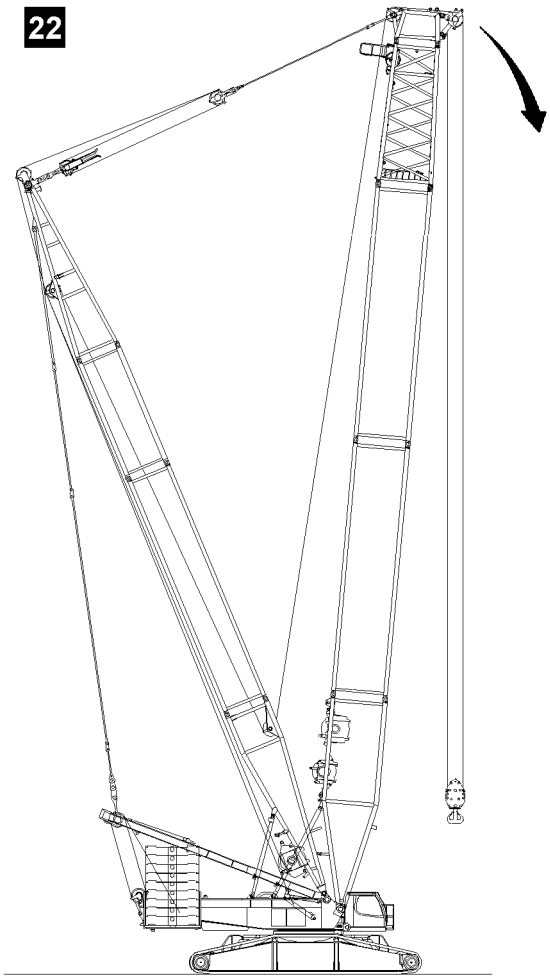

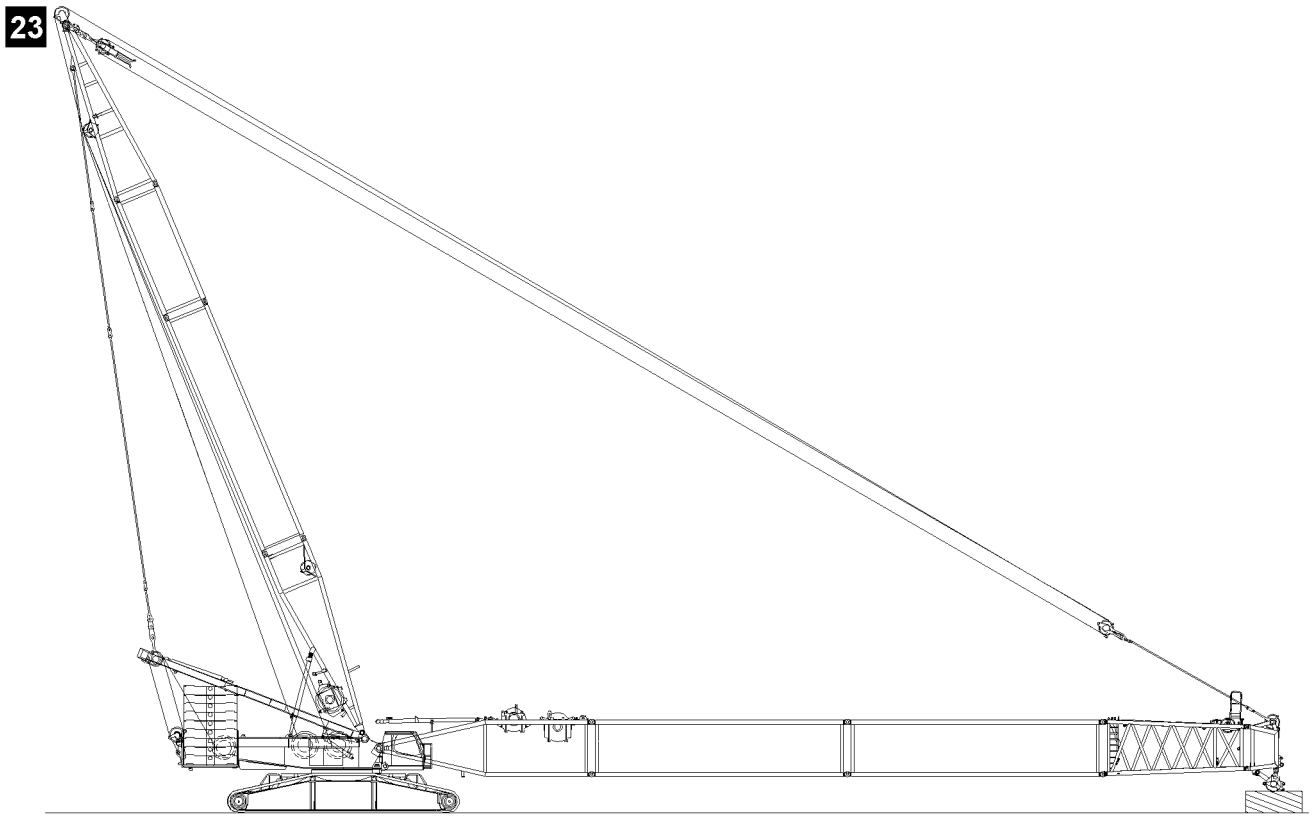

Fig.119485

LWE/LR 1600-2-001/18101-07-02/en

copyright © Liebherr-Werk Ehingen GmbH 2018

5.1 Taking the S-boom down

WARNING
The crane can topple over!
If the following conditions are not met before taking down the boom, the crane can topple over and fatally injure personnel.
- ▶ The turntable may not be turned during the disassembly of the boom
- ▶ Observe the technical safety instructions, see chapter 5.01.
- ▶ Observe the specifications in the erection and take-down charts.

If required in the erection and take down chart:
- ▶ Carry the hook block along with the auxiliary crane.

NOTICE
Damage of boom components!
Taking down the boom system can lead to a collision between the hook block and the pulley head. Boom components can be severely damaged.
- ▶ Luff the boom system down at the same time and spool the hoist winch out.
- ▶ When luffing the boom system down, the D-boom must remain in the operating position until the S-end section is laying on the ground or on a substructure.

Note
- ▶ Depending on the condition of the ground, the boom and the lattice sections must be supported for the disassembly of the boom.

Make sure that the following prerequisites are met:
- The crane is horizontally aligned.
- An auxiliary crane is available.
- An assembly scaffolding / work platform is available.
- The central ballast is installed according to the erection and take-down charts.
- The counterweight has been installed on the turntable according to the erection and take-down charts.
- The LICCON overload protection has been set according to the data in the load chart.

5.2 Luffing the boom down

Note
- ▶ The luff down movement is turned off as soon as the lowest operating position is reached.
- ▶ When the lowest operating position of the S-boom is reached, the load display in the maximum load icon turns off and instead of the load display appears the display „???“.
- ▶ Alarm functions appear on the crane operation screen.

- ▶ Luff the S-boom down to the „lowest“ operating position.

Result:

- The luff down movement is turned off.
- The „STOP“ icon appears on the LICCON monitor.
- The horn icon appears on the LICCON monitor.

LWE/LR 1600-2-001/18101-07-02/en

copyright © Liebherr-Werk Ehingen GmbH 2018

WARNING
Danger of accident due to the „Exceedance of shut-off limits of the LICCON overload protection“ function!
If the shut off limits of the LICCON overload protection are exceeded, there is no additional protection against crane overload.
Due to erroneous operation or deliberate misuse, the crane could collapse, the boom can break off or the crane can topple over.
Death, severe bodily injuries, property damage.
- ▶ The function „Exceedance of shut off limits of the LICCON overload protection“ is only permissible in emergencies and for assembly purposes.
- ▶ The function „Exceeding the shut off limits of the LICCON overload protection“ may only be actuated by persons who know the effects of their actions regarding the function „Exceeding the shut off limits of the LICCON overload protection“.
- ▶ The „Exceedance of shut off limits of the LICCON overload protection“ function requires the presence of an authorized person and must be performed with utmost caution.
- ▶ Crane operation with activated function „Exceedance of shut off limits of the LICCON overload protection“ is prohibited.

▶ Exceeding the shut off limits of the LICCON overload protection: Engage assembly operation.

Result:

– The shut off limits of the LICCON overload protection are exceeded.
– The assembly icon appears on the LICCON monitor.

Note
▶ See chapter 4.02.

▶ At the same time, spool the hoist winch out and luff the S-boom down until the hook block touches the ground.

5.3 Reeving out the hook block

▶ Remove the hoist limit switch weight and reeve the hook block out.

5.4 Spooling the hoist rope up

WARNING
Spooling up of hoist rope!
Death, severe bodily injuries, property damage.
- ▶ All rope retaining pins / pipes on the S-boom are removed.
- ▶ Slowly spool up the hoist rope over the rope pulleys back to the winch.
- ▶ No one may be present in the danger zone.

NOTICE
Overspooled winch!
If the rope is pulled under the winch when spooling up, the settings of the cam limit switch are no longer correct and there is an increased danger of accident.
As a result, extensive adjustment work on the cam limit switch is required.
- ▶ All rope retaining pins / pipes on the S-boom are removed.
- ▶ Slowly spool up the hoist rope over the rope pulleys back to the winch.
- ▶ Stop the winch in time, with sufficient rope reserve.
- ▶ Do not overspool the winch.

▶ Spool the hoist rope up.

LWE/LR 1600-2-001/18101-07-02/en

copyright © Liebherr-Werk Ehingen GmbH 2018

5.5 Disconnecting the electrical connections on the boom

Make sure that the following prerequisite is met:
– The S-boom is laying on the substructure on the ground.

NOTICE
Damage to the cable drum or the cable!
If the cable of the cable drum is not properly spooled up on the cable drum after unplugging the S-end section, then the cable drum or the cable can be significantly damaged.
▶ Spool the cable drum up after unplugging.

▶ Spool the cable drum up and secure it to prevent inadvertent spooling out.
▶ Make sure that all electrical connections on the S-boom have been disconnected.

5.6 Disconnecting the hydraulic connection on the boom

When releasing hydraulic lines with quick couplings, make sure that the coupling procedure is carried out correctly.

WARNING
Pressure in the hydraulic lines!
If the pressure supply is not interrupted before connecting / releasing the hydraulic lines, the hydraulic oil can escape with high pressure.
Death, severe bodily injuries, property damage.
▶ Release the pressure in the hydraulic system before connecting / disconnecting: Interrupt the pressure supply and wait for a short time.

▶ Install the coupling components (sleeve and connector) with the knurled nut.
▶ Disconnect the hydraulic connections.
▶ Install dust caps on the quick couplings.

LWE/LR 1600-2-001/18101-07-02/en

copyright © Liebherr-Werk Ehingen GmbH 2018

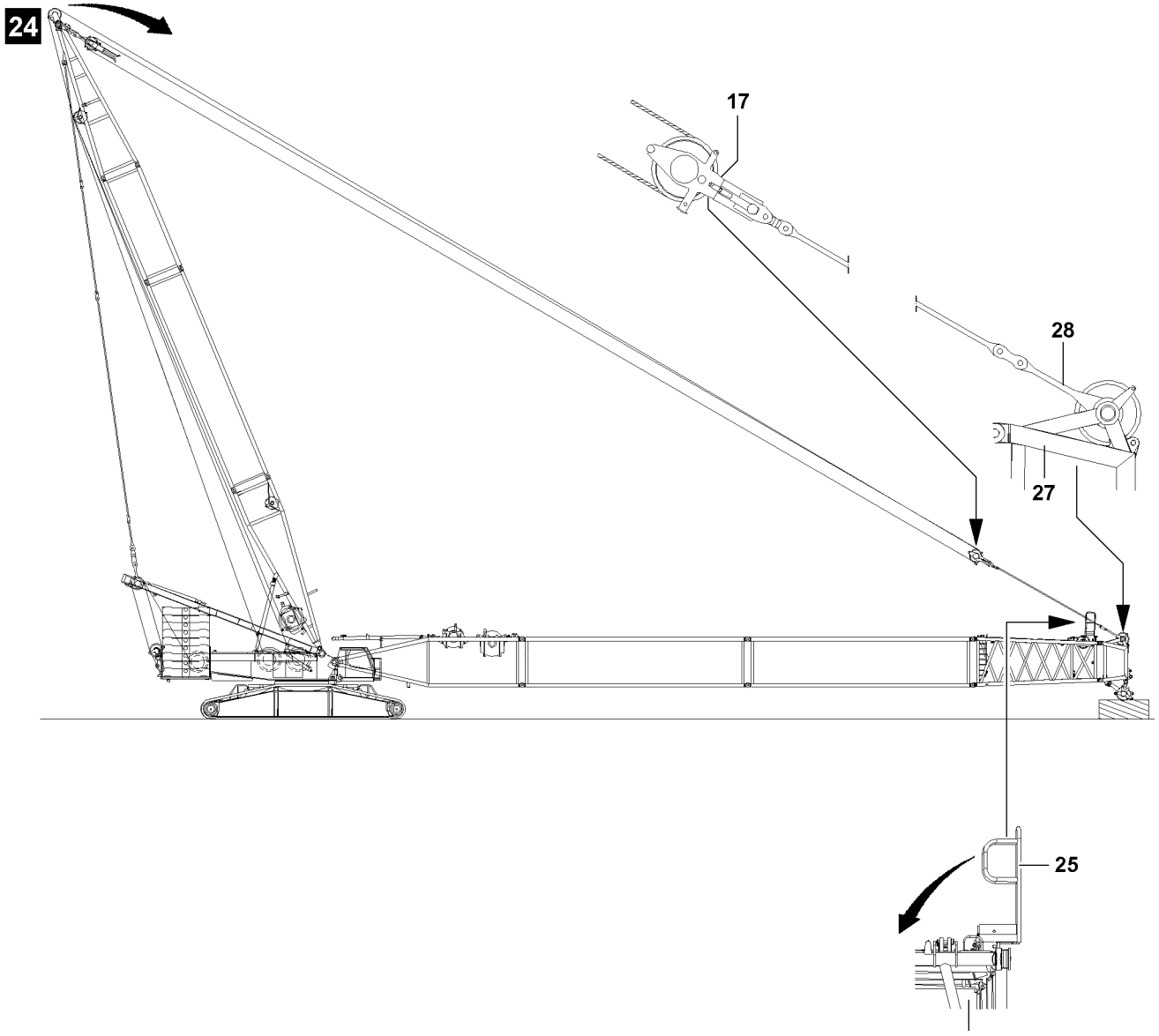

LWE/LR 1600-2-001/18101-07-02/en

Fig.106833

copyright © Liebherr-Werk Ehingen GmbH 2018

5.7 Disassembling the guy rods and folding in the folding platforms

▶ Relieve the guying: Luff the D-boom down to the front and at the same time spool out winch 3.

When the guying is relieved:
▶ Unpin the upper pulley block **17** on the guy rods.
▶ Take the guy rods down on the intermediate sections and secure with transport retainers.
▶ Disconnect the guy rods according to their association to the intermediate sections.

NOTICE
Damage to the intermediate sections!
▶ Do not pull the upper pulley block **17** over the intermediate sections, rather carry them along with the auxiliary crane.

When the guy rods are taken down in the transport retainers and secured:
▶ Erect the D-boom and spool the hoist rope up at the same time.

Note
▶ To retain the system dimensions for on road travel the folding platforms **25** must be folded in into the transport position and pinned, see illustration **24**.

▶ Bring the folding platforms **25** into the transport position, see chapter 2.06.

LWE/LR 1600-2-001/18101-07-02/en

copyright © Liebherr-Werk Ehingen GmbH 2018

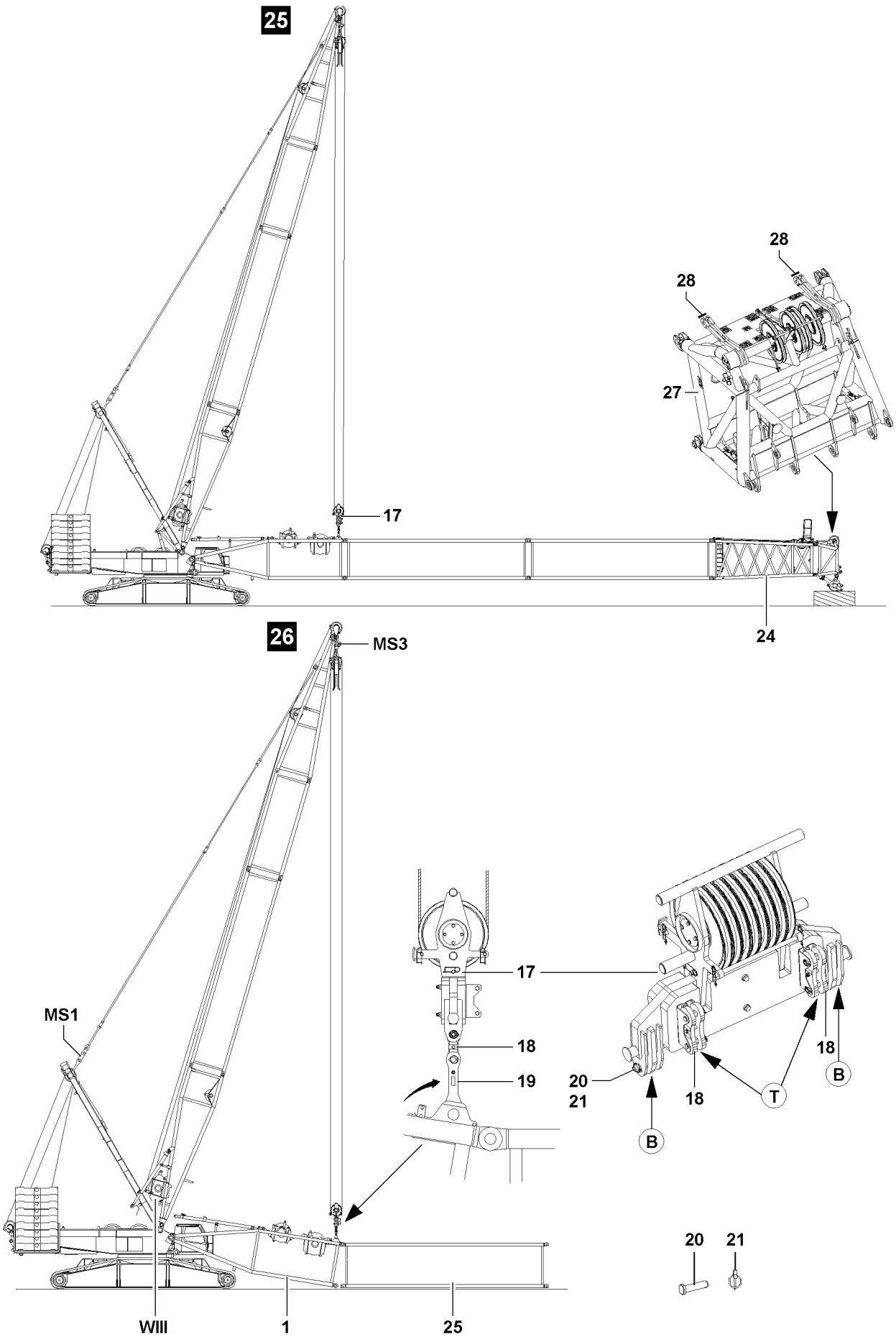

Fig.110730

LWE/LR 1600-2-001/18101-07-02/en

copyright © Liebherr-Werk Ehingen GmbH 2018

5.8 Disassembling the S-boom

WARNING
The boom can suddenly fold down!
If the following conditions are not met before disassembling the boom, the boom can fold down.
Death, severe bodily injuries, property damage.
- ▶ Support the S-boom during disassembly with suitable materials.
- ▶ During pinning and unpinning of the lattice sections, it is prohibited for anyone to remain **under** or **on** the components as well as within the entire danger zone.

Make sure that the following prerequisites are met:
- All electrical and hydraulic connections have been disconnected.
- The guy rods have been disassembled and taken down in the transport retainers.
- The folding platforms are pinned and secured in the transport position, see chapter 2.06.

- ▶ Lower the upper pulley block **17** until it is located over the assembly brackets **19** on the S-pivot section **1**.
- ▶ Pin and secure the upper pulley block **17** with the brackets **18** on the assembly bracket **19**.
- ▶ Use the pin **20** and locking pin **21**.

WARNING
The crane can topple over!
If the following conditions are not met, the crane can topple over or be significantly damaged.
Death, severe bodily injuries, property damage.
- ▶ The maximum permissible total force on test point **MS1** (**200 t**) may **not** be exceeded.
- ▶ The maximum permissible total force on test point **MS3** (**138 t**) may **not** be exceeded.
- ▶ Lifting the following boom lengths is permissible if the maximum permissible total force on test point 1 (MS1) and test point 3 (MS3) is noted, observe the following charts.

LWE/LR 1600-2-001/18101-07-02/en

copyright © Liebherr-Werk Ehingen GmbH 2018

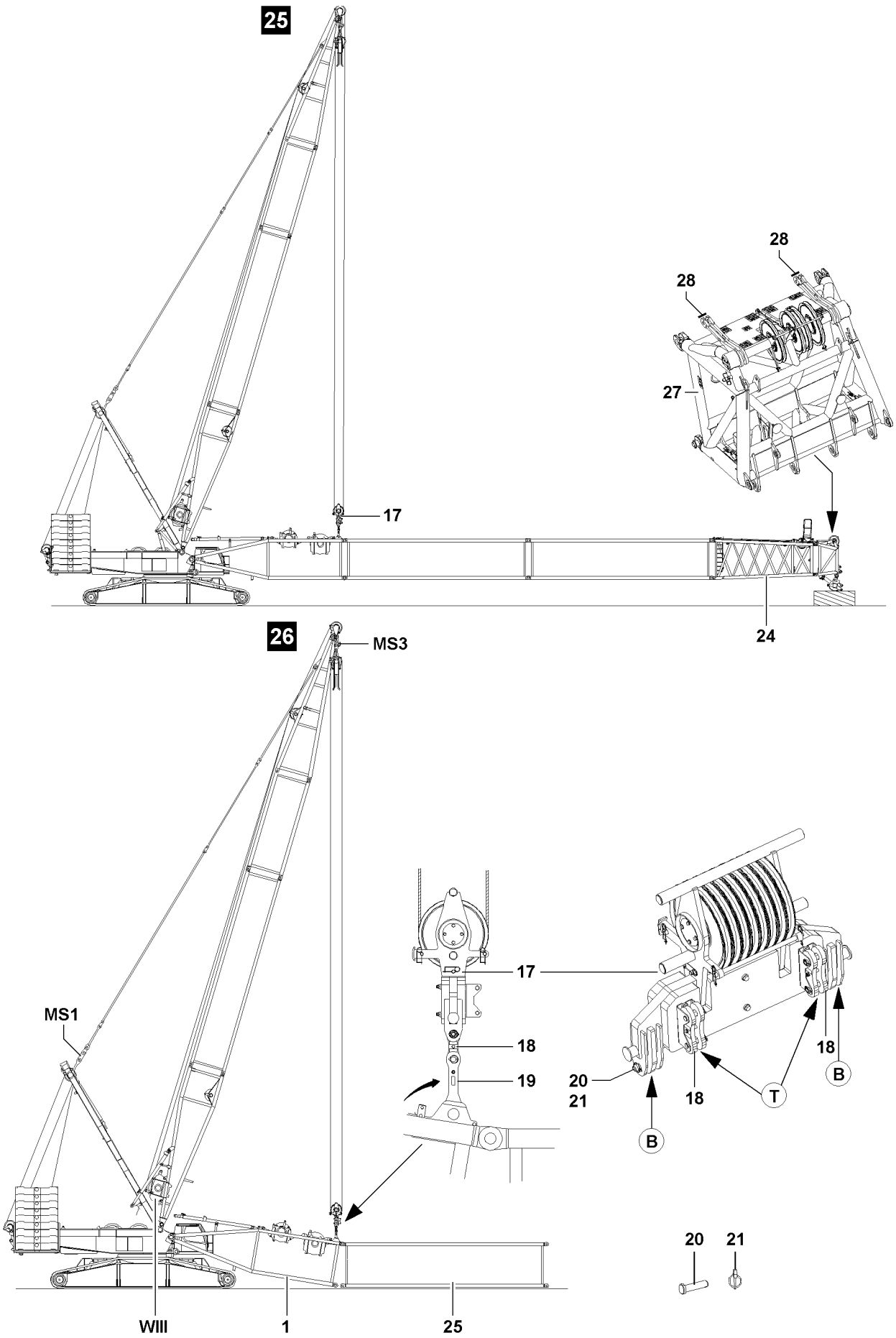

Fig.110730

LWE/LR 1600-2-001/18101-07-02/en

copyright © Liebherr-Werk Ehingen GmbH 2018

Note

- ▶ The actual forces on the test point **MS1** and on the test point **MS3** are shown on the LICCON monitor 1.
- ▶ Tension the guying on the SA-frame with the same force as during assembly.
- ▶ For this, refer to the ACTUAL force at test point 1 (MS1) measured and recorded during assembly.
- ▶ The pins can be pulled easier and the pins and lugs are therefore not damaged.

Maximum permissible system lengths for a maximum total force MS1 of 200 t and a maximum total force MS3 of 138 t					
Boom system	**Maximum system length**	**Equipment**	**DB_{min} 1)**	**ZB_{min} 2)**	**Illustration**
SL(D)	54.0 m		150 t	65 t	13
	60.0 m	- with reducer - without head	150 t	65 t	12
S(D)	48.0 m		150 t	65 t	13
	58.0 m		150 t	65 t	12
	66.0 m	- without reducer - without head	150 t	65 t	12

1) This counterweight must be at least installed on the turntable for „disassembly“.
2) This central ballast must be at least installed on the crawler center section for „disassembly“.

LWE/LR 1600-2-001/18101-07-02/en

copyright © Liebherr-Werk Ehingen GmbH 2018

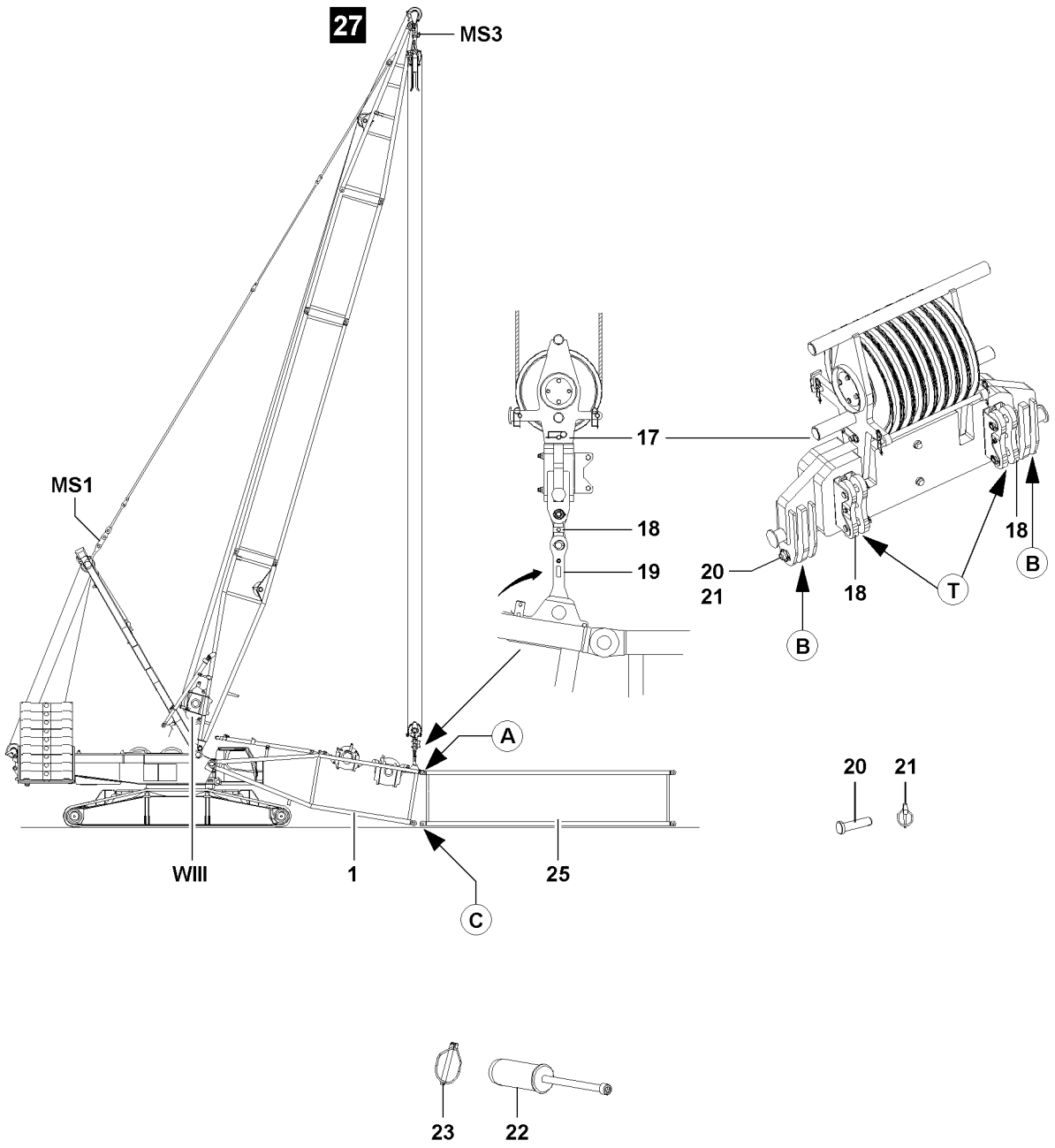

LWE/LR 1600-2-001/18101-07-02/en

Fig.110790

copyright © Liebherr-Werk Ehingen GmbH 2018

Note

▶ Unpin the intermediate sections with the pin pulling device, see chapter 5.30.

NOTICE

Danger of property damage!

If the maximum permissible total forces are not observed when lifting the boom system for disassembly, then crane components can be severely damaged.

▶ Do not exceed the maximum permissible total forces.

▶ Lift the S-boom from the substructure or off the ground by spooling up winch 3.

When the S-boom has been lifted off the ground and is safely held by winch 3:

▶ Unpin the S-pivot section **1** and S-intermediate section **25** at point **C** on both sides: Remove the locking pin **23** and unpin the pin **22**.

When the pins **22** are unpinned at point **C**:

▶ Carefully take the S-boom down on the ground.

▶ Unpin the S-pivot section **1** on both sides in point **A**: Remove the locking pin **23** and unpin the pin **22**.

▶ Relieve the guying by lowering the upper pulley block **17**.

▶ Unpin the upper pulley block **17** on the assembly brackets **19**: Remove the locking pin **21** and unpin the pin **20**.

▶ Unpin the bracket **18** on the upper pulley block **17** from the operating position **B** and pin it in the transport receptacle **T** on the upper pulley block **17**.

▶ Unpin and disassemble all intermediate sections.

LWE/LR 1600-2-001/18101-07-02/en

copyright © Liebherr-Werk Ehingen GmbH 2018

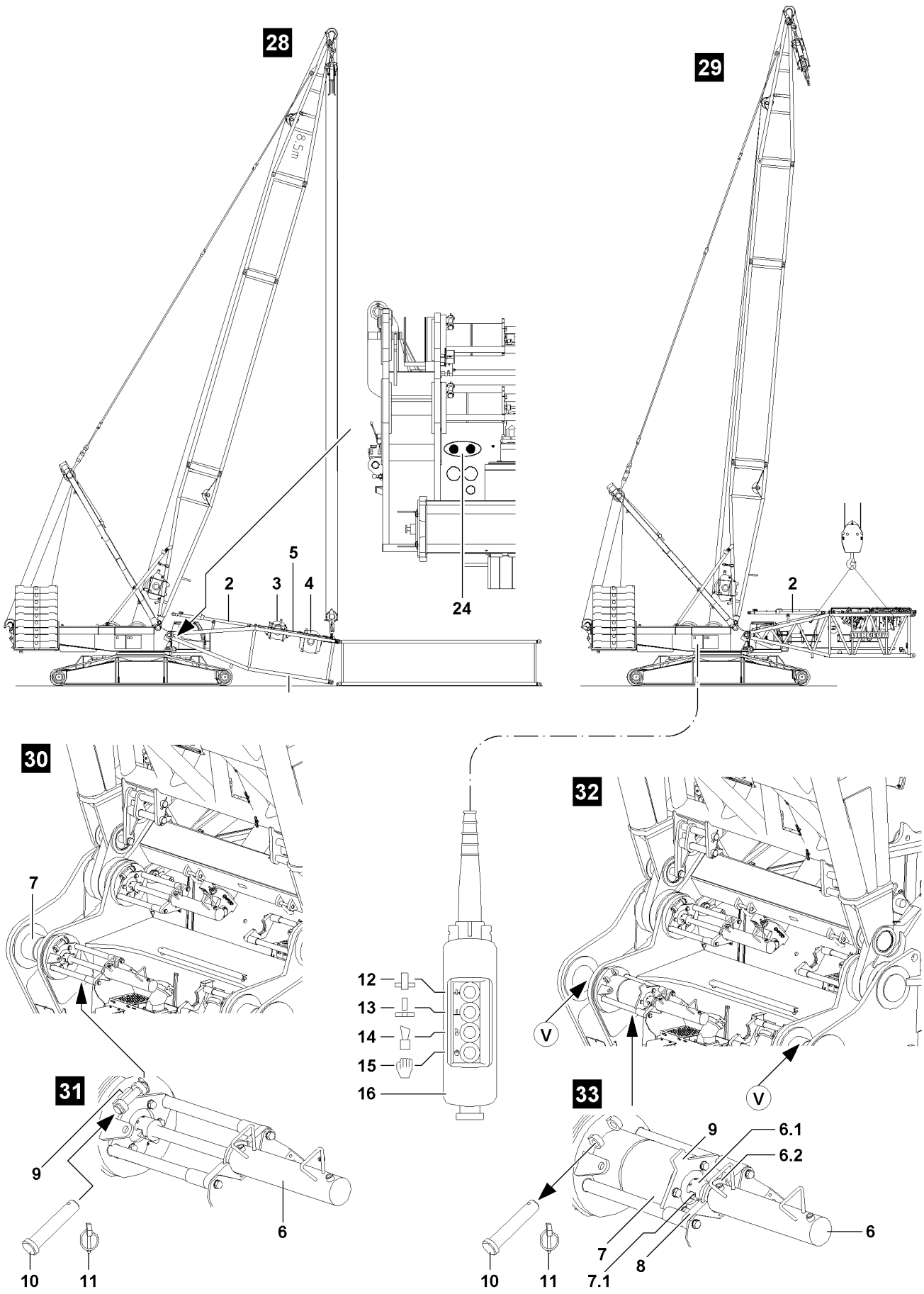

Fig.110791

LWE/LR 1600-2-001/18101-07-02/en

copyright © Liebherr-Werk Ehingen GmbH 2018

5.9 Unpinning the S-pivot section on the turntable

WARNING
General danger notes!
▶ Insert and secure all pins after disassembly in the intended transport receptacles.

Make sure that the following prerequisite is met:
– The D-boom is erected to the point where the S-pivot section can be disassembled without obstructions.

Note
▶ Select the fastening points on the S-pivot section in such a way that the S-pivot section hangs horizontally on the auxiliary crane upon assembly. See section „Fastening points“.

▶ Fasten the S-pivot section **1** on the fastening points **A** and fastening points **B** to the auxiliary crane.
or
Fasten the S-pivot section **1** on the fastening points **A** and fastening points **C** to the auxiliary crane.
▶ Lift the S-pivot section **1** with the auxiliary crane to the horizontal.

Establish the hydraulic connection to the pin pulling device via two quick couplers.

▶ Establish the hydraulic connection to the pin pulling device.

WARNING
Falling pivot section!
▶ Make sure that the pivot section is safely held by the auxiliary crane before unpinning the pins **7**.

▶ Unpin the retaining pin **10**.

Note
▶ When hooking the pin pulling cylinder **6**, make sure that the collar **6.2** on the cylinder mount **8** and the catch **6.1** on the screw **7.1** are properly hooked.
▶ Make sure that the retaining pins **10** are unpinned.

▶ Hook the pin pulling cylinder **6**.
▶ Connect the pin pulling cylinder **6** on the quick couplers **24**, illustration **28**.
▶ Unpin the connector pins **7** on both sides with the hydraulic pin pulling cylinder **6**: Press the button **15** on the control panel **16** and „hold it down“, then press the button **13** until the connector pin **7** is fully unpinned.

When the connector pins **7** are fully unpinned on both sides:
▶ Insert the retaining pins **10** in the pin bores and secure with locking pins **11**.
▶ Remove the pin pulling cylinder **6** from the cylinder receptacle **8**.
▶ Disconnect the hydraulic connections to the pin pulling device.

LWE/LR 1600-2-001/18101-07-02/en

copyright © Liebherr-Werk Ehingen GmbH 2018

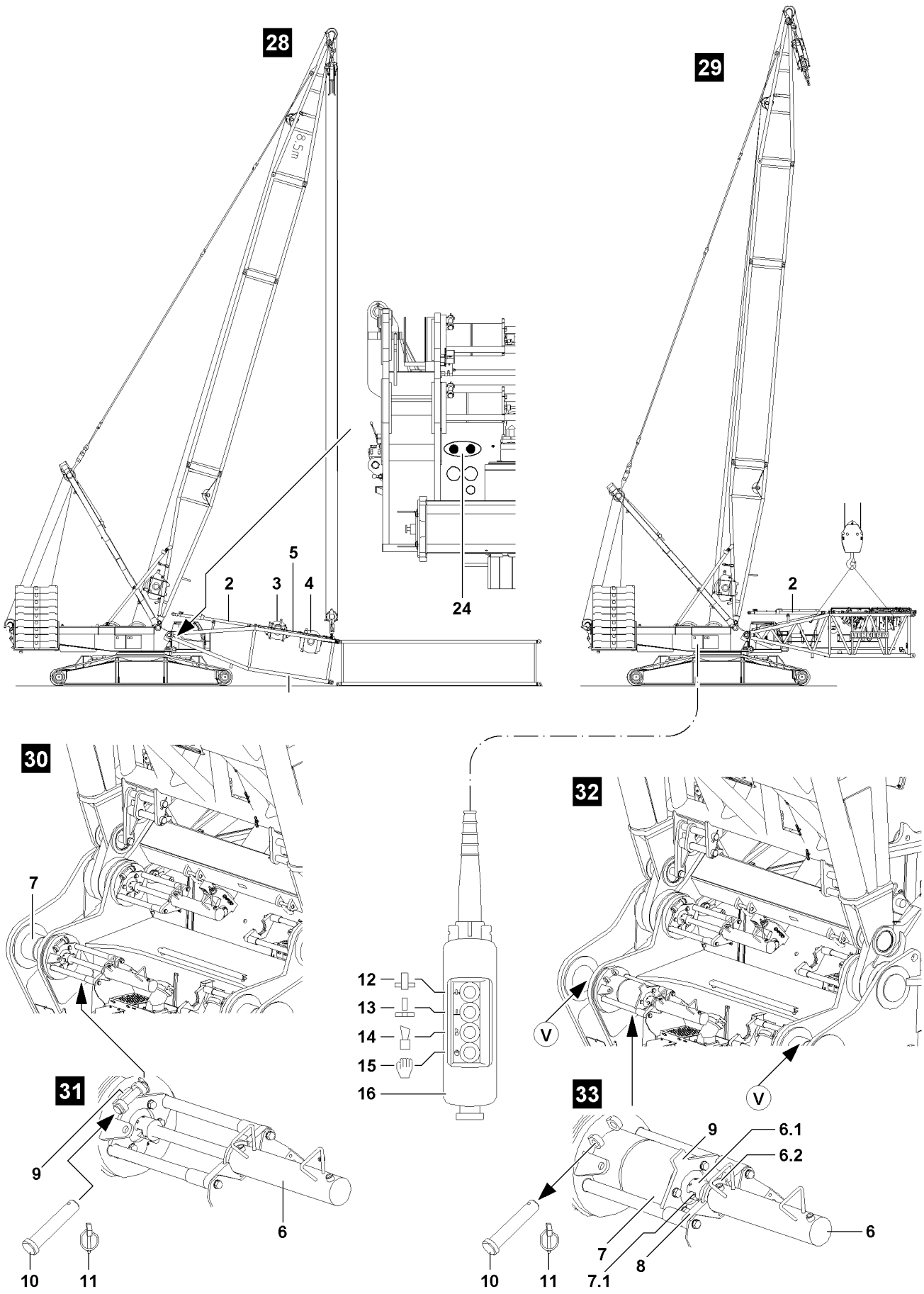

Fig.110791

LWE/LR 1600-2-001/18101-07-02/en

copyright © Liebherr-Werk Ehingen GmbH 2018

NOTICE
Damage to the turntable and the S-pivot section!
▶ Slowly swing the S-pivot section out with the auxiliary crane and at low speed on the turntable.

▶ Take the S-pivot section down with the auxiliary crane on the substructure on the ground.
▶ Remove the auxiliary crane.

Note
▶ Disassemble the D-boom, see chapter 5.05.

LWE/LR 1600-2-001/18101-07-02/en

copyright © Liebherr-Werk Ehingen GmbH 2018

Empty page!

LWE/LR 1600-2-001/18101-07-02/en

copyright © Liebherr-Werk Ehingen GmbH 2018

5.42 HS-auxiliary jib

1	Auxiliary jib „HS“	3
2	Installing the auxiliary jib „HS“ on the SL-boom	5
3	Erecting the SL-boom	15
4	Operating the crane	21
5	Removing the auxiliary jib „HS“	23

LWE/LR 1600-2-001/18101-07-02/en

copyright © Liebherr-Werk Ehingen GmbH 2018

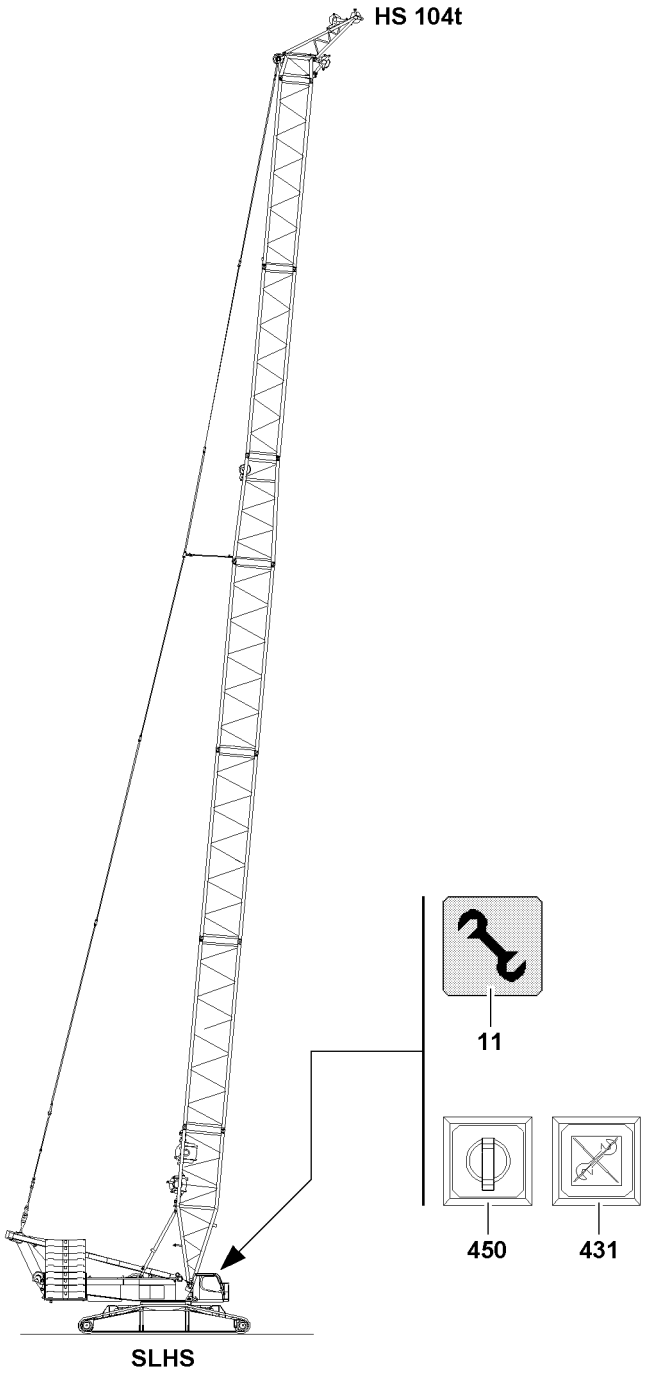

LWE/LR 1600-2-001/18101-07-02/en

Fig.110602

copyright © Liebherr-Werk Ehingen GmbH 2018

1 Auxiliary jib „HS“

Note
▶ The auxiliary jib „HS“ is installed on the boom system SLHS on the SW-end section!

1.1 Component overview of auxiliary jib „HS“

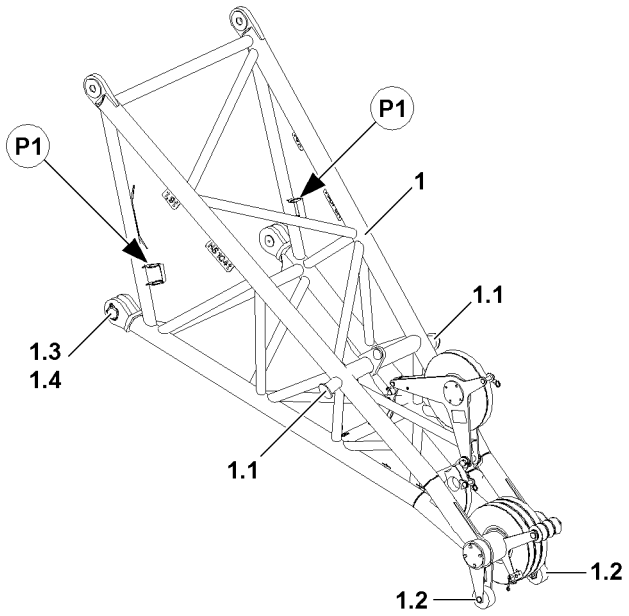

Fig.110603: Auxiliary jib “HS”

Position	Component	Weight
1	Auxiliary jib „HS“	1.9 t
1.1	Bitt	
1.2	Roller	
1.3	Pin	
1.4	Linch pin	

LWE/LR 1600-2-001/18101-07-02/en

copyright © Liebherr-Werk Ehingen GmbH 2018

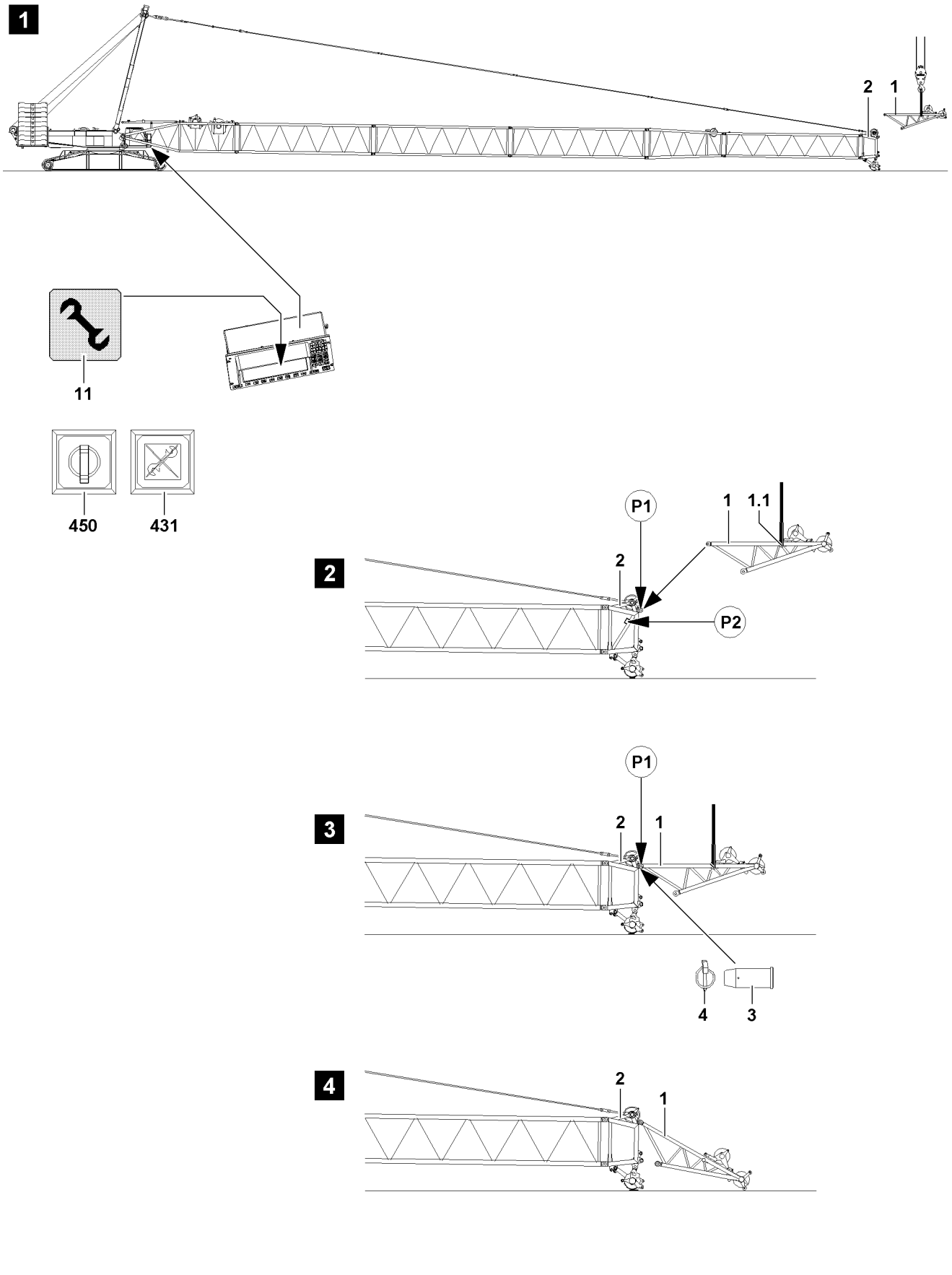

LWE/LR 1600-2-001/18101-07-02/en

Fig.110604

copyright © Liebherr-Werk Ehingen GmbH 2018

2 Installing the auxiliary jib „HS“ on the SL-boom

2.1 Installing the auxiliary jib „HS“

WARNING
Risk of falling!
During assembly / disassembly work, personnel must be secured with appropriate fall arresters to prevent them from falling. If this is not observed, assembly personnel can fall and suffer life-threatening or fatal injuries!

- ▶ Any work, where there is a danger of falling must be carried out with suitable aids (for example lifting platform, scaffolding, ladder, auxiliary crane)!
- ▶ If the work cannot be carried out with such aids nor from the ground, then the assembly personnel must secure themselves with approved fall arrest systems to avoid falling, see crane operating instructions, Chapter 2.04!
- ▶ Approved fall arrest systems must be hung into the respective fastening points on the crane, see Crane operating instructions, chapter 2.06!
- ▶ If railings are present on the components, then they must be brought into the corresponding position and secured for assembly / disassembly work!
- ▶ Step on aids and fall arresters only with clean shoes!
- ▶ Keep aids and fall arresters clean and free from snow and ice!
- ▶ During all assembly and disassembly work, maintenance work and inspections, travel and crane operation is prohibited!

WARNING
Falling components!
If unsecured or non-supported components are assembled or disassembled, they can fall down. Personnel can be killed or seriously injured!

- ▶ During pinning and unpinning of the lattice sections, it is prohibited for anyone to remain **under** or **on** the components as well as within the entire danger zone!
- ▶ Support the boom and components before pinning / unpinning!
- ▶ Pin or unpin both pins that lie in one horizontal level, i.e. **left** and **right**!
- ▶ Secure the pins in the bearing points and in the receptacles!
- ▶ Do not disengage the auxiliary crane until each component is pinned on and secured!
- ▶ It is prohibited to lean a ladder against the component being disassembled!

WARNING
Danger of impact / crushing!
When installing / removing counterweight components with the auxiliary crane, crane components can start to swing back and forth!
When lifting / lowering and positioning crane components, there is an increased danger of impacts / crushing!
Personnel can be caught and severely injured or killed!

- ▶ Make sure that personnel cannot be caught by components!
- ▶ When working in danger zones: Use aids to protect limbs!
- ▶ Guide components with suitable aids to minimize oscillation!

LWE/LR 1600-2-001/18101-07-02/en

copyright © Liebherr-Werk Ehingen GmbH 2018

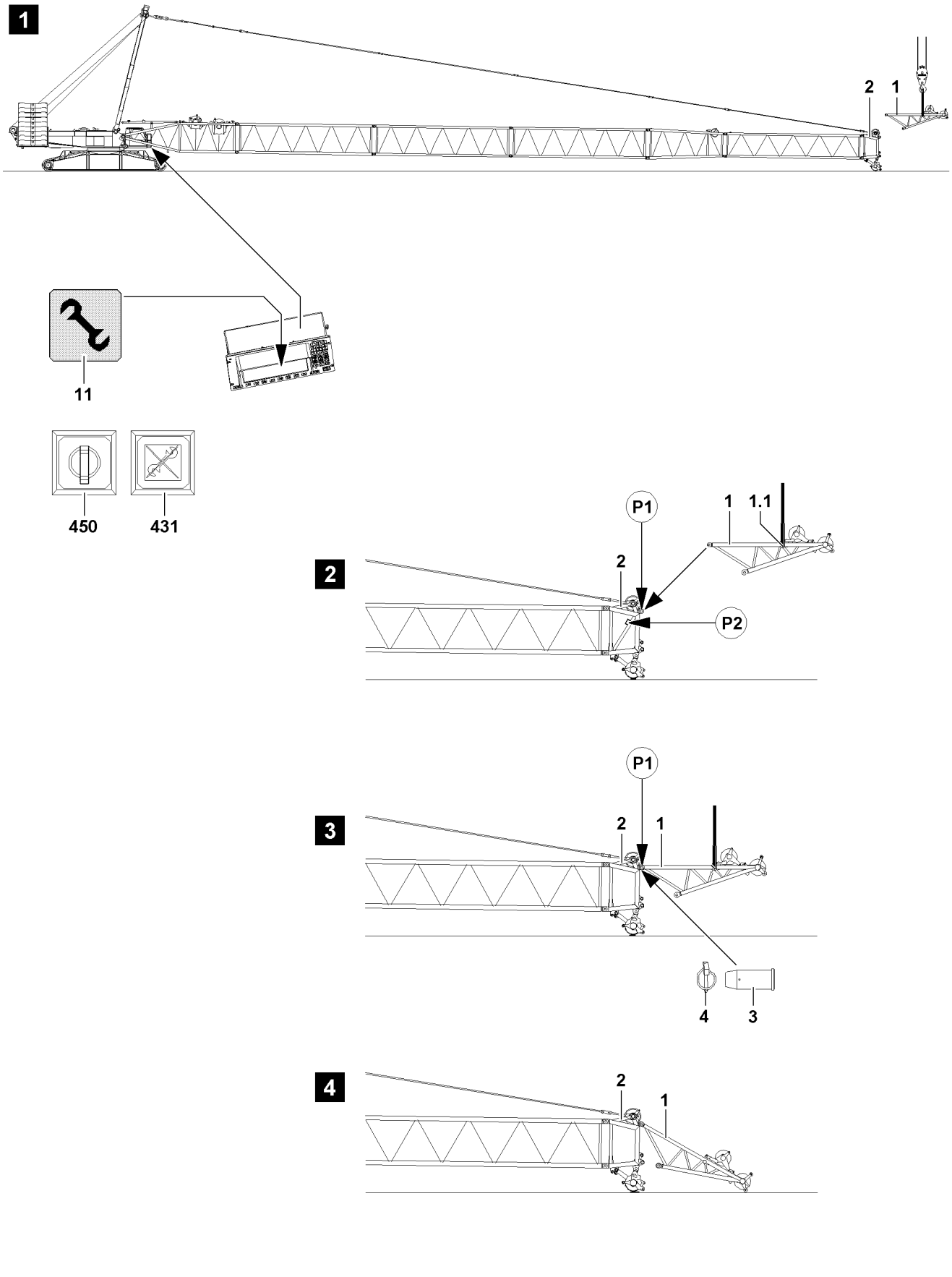

LWE/LR 1600-2-001/18101-07-02/en

Fig.110604

copyright © Liebherr-Werk Ehingen GmbH 2018

Note

- ▶ The SL-boom combination in connection with the auxiliary jib „HS“ must be installed according to the separately supplied rod and assembly plans!
- ▶ For assembly of the SL-boom combination, observe chapter 5.38 in the Crane operating instructions!

The auxiliary jib„HS“ **1** can be installed on the following basic configuration:

– SL-boom

DANGER

Risk of fatal injury at crane operation with turned on assembly key button!

- ▶ The actuation of the assembly key button **450** is only permitted for assembly tasks!
- ▶ The assembly key button **450** may only be operated by persons who are aware of the consequences of a bypass!
- ▶ If the assembly key button **450** is turned on, the hoist limit switch and the LICCON overload protection is bypassed!
- ▶ Crane operation with the assembly key button **450** turned on is strictly prohibited!
- ▶ The assembly key button **450** must be removed immediately after carrying out the assembly work and handed to an authorized person!

Make sure that the following prerequisites are met:

– The crane is aligned in horizontal direction.
– The SL-boom including SW-end section **2** is installed.
– The SL-boom is placed on a load-bearing support, illustration **1**.
– The counterweight has been installed to the turntable according to the load chart.
– The LICCON overload protection has been set according to the data in the load chart.
– The assembly key button **450** is pressed and the indicator light **431** lights up.
– The assembly icon **11** on the LICCON monitor blinks.
– An auxiliary crane is available.

LWE/LR 1600-2-001/18101-07-02/en

copyright © Liebherr-Werk Ehingen GmbH 2018

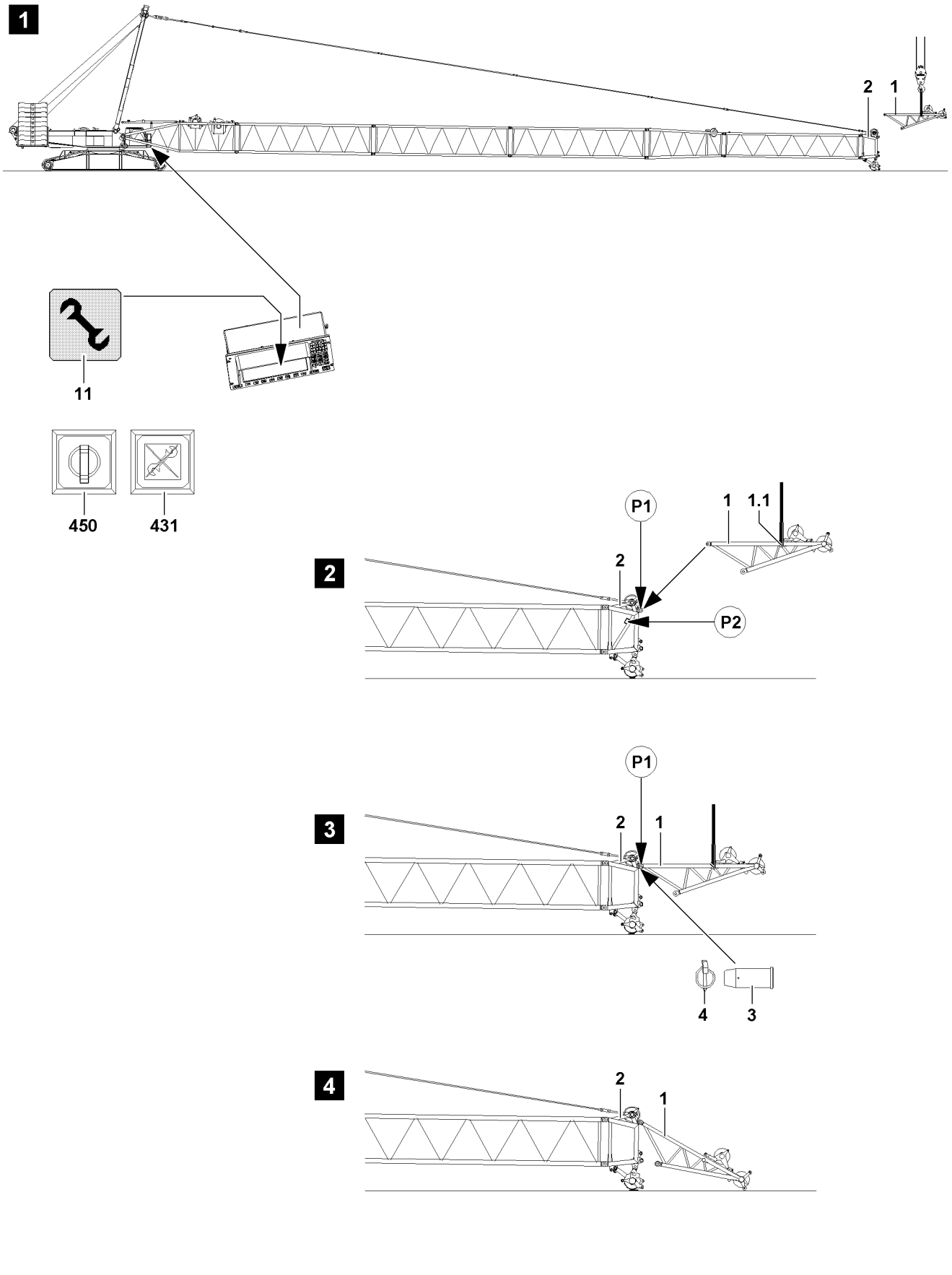

LWE/LR 1600-2-001/18101-07-02/en

Fig.110604

copyright © Liebherr-Werk Ehingen GmbH 2018

2.1.1 Installing the auxiliary jib „HS“ on the SW-end section

- ▶ Swing the auxiliary jib „HS“ **1** with the auxiliary crane in to the pin points, point **P1**, on the SW-end section **2**.
- ▶ pin the auxiliary jib „HS“ **1** on the SW-end section **2** on both sides at point **P1** „on top“: Use pins **3**.
- ▶ Secure the pins **3** on both sides with linch pins **4**.
- ▶ Carefully place the auxiliary jib „HS“ **1** with the auxiliary crane on the ground.
- ▶ Remove the auxiliary crane.
- ▶ Pull the hoist rope over the rope pulleys of the auxiliary jib „HS“ **1**, see separate reeving plan.

LWE/LR 1600-2-001/18101-07-02/en

copyright © Liebherr-Werk Ehingen GmbH 2018

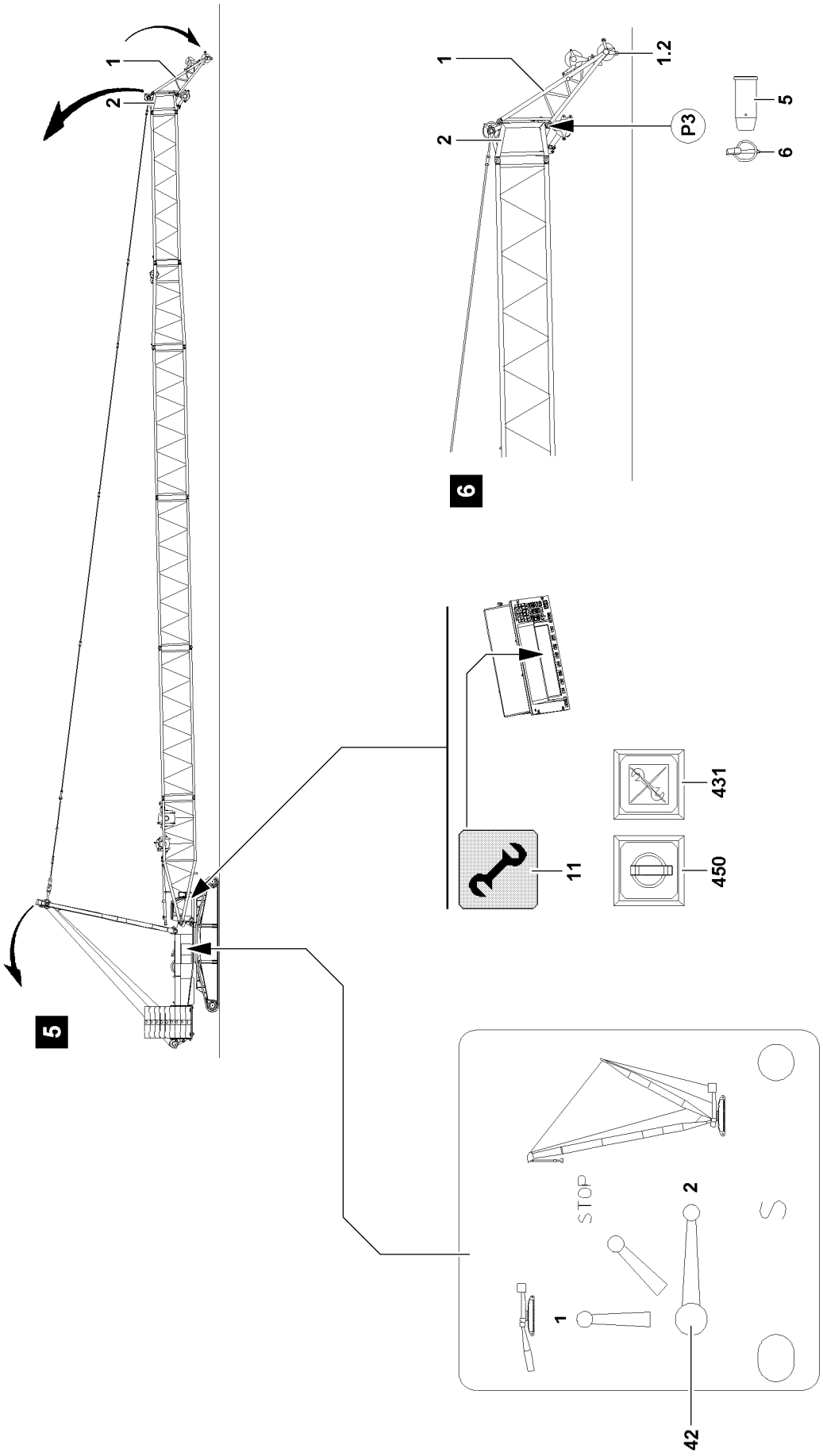

Fig.110605

LWE/LR 1600-2-001/18101-07-02/en

copyright © Liebherr-Werk Ehingen GmbH 2018

2.2 Lifting the SL-boom off the ground

WARNING
The crane can topple over!
During erection of the SL-boom, the crane can be overloaded and topple over!
Personnel can be severely injured or killed!
▶ Observe the data in the erection and take down charts!
▶ It is prohibited to turn the crane superstructure while erecting the boom!

▶ Carefully luff the SL-boom up.

Result:

– Due to its own weight, the auxiliary jib„HS“ **1** runs on the rollers **1.2** slowly toward the „inside“.

▶ Luff the SLHS-boom up until the auxiliary jib„HS“ **1** lifts off the ground.

Result:

– The auxiliary jib„HS“ **1** supports itself at point **P3** on the SW-end section **2**.

▶ Pin the auxiliary jib„HS“ **1** at point **P3** on the SW-end section **2**: Insert the pin **5** and secure with linch pin **6**.

NOTICE
Damage of auxiliary jib „HS“
After the auxiliary jib „HS“ **1** is pinned on the SW-end section **2**, the boom combination may not be placed on the ground in installed status, otherwise the auxiliary jib „HS“ **1** will be severely damaged!
▶ Place the boom combination only on the ground when the pins **5** are unpinned at point **P3**!

▶ Carefully place the boom combination down.

Result:

– The auxiliary jib „HS“ **1** folds out automatically when it is placed down and runs on the rollers **1.2** toward the „outside“.

2.3 Establishing the electrical connections

NOTICE
Damage to the electrical connection on the cable drum!
If the electrical connection from the cable drum on the S-pivot section to the terminal box on the S-pivot section is established first before the connection to the terminal box on the SW-end section, the electrical connection can be damaged when spooling out the cable drum!
▶ Establish first the electrical connection from the cable drum in the S-pivot section to the terminal box on the SW-end section and then the electrical connection from the terminal box in the S-pivot section to the cable drum in the S-pivot section!

Note
▶ To establish the electrical connections, use the separate electrical wiring diagram!

Make sure that the following prerequisites are met:
– The SLHS-boom is completely assembled.
– The airplane warning light and the wind speed sensor are assembled.

▶ Establish the electrical connections.
▶ Make sure that all electrical connections on the boom are established.

LWE/LR 1600-2-001/18101-07-02/en

copyright © Liebherr-Werk Ehingen GmbH 2018

2.4 Checking the function of the safety devices

WARNING
Non-functioning safety devices!
If the function of the safety devices is defective, personnel can be severely injured or killed!
▶ Crane operation with non-functioning safety devices is **prohibited**!

Note
▶ The function of the individual limit switches must be checked before erection!
▶ The function of the limit switch initiators must be checked in the test system, see separate „Diagnostics manual“!

Note
▶ If a function check on the limit switches or on the safety devices does not lead to the desired shut offs, then the plug connections on the terminal boxes or the components itself must be checked!
▶ If no visible connection errors or component defects can be found, contact **LIEBHERR** Service!

Make sure that the following prerequisites are met:
– All electrical connections have been made.
– The crane engine is running.
– The corresponding operating mode is set on the LICCON monitor.

2.4.1 Checking the wind speed sensor

▶ Test the movement and the function of the wind speed sensor.

2.4.2 Checking the airplane warning light

▶ Turn the airplane warning light on.
▶ Visually check functionality.

2.4.3 Checking the hoist limit switch on the pulley head

Note
▶ When replacing or changing a hoist limit switch (HES), the corresponding hoist limit switch must have the correct bus address and the correct software version in order to be detected again by the bus system (LSB)!

▶ Actuate the hoist limit switch manually on the pulley head.

Result:

– The spool up function of the hoist winch turns off.
– The icon „Hoist top“ appears on the LICCON monitor 0.
– Limit switch is functioning.

2.4.4 Checking the limit switch SL-boom „steepest position“

Note
▶ The limit switch functions have to be checked individually before erection!

▶ Cover the limit switch initiators on the S-relapse cylinder individually with a metal plate.

Result:

– The hoist limit switch is actuated manually.
– The spool up function of winch 4 turns off.
– The icon „boom limitation“ appears on the LICCON monitor 0.
– Limit switch is functioning.

LWE/LR 1600-2-001/18101-07-02/en

copyright © Liebherr-Werk Ehingen GmbH 2018

Empty page!

LWE/LR 1600-2-001/18101-07-02/en

copyright © Liebherr-Werk Ehingen GmbH 2018

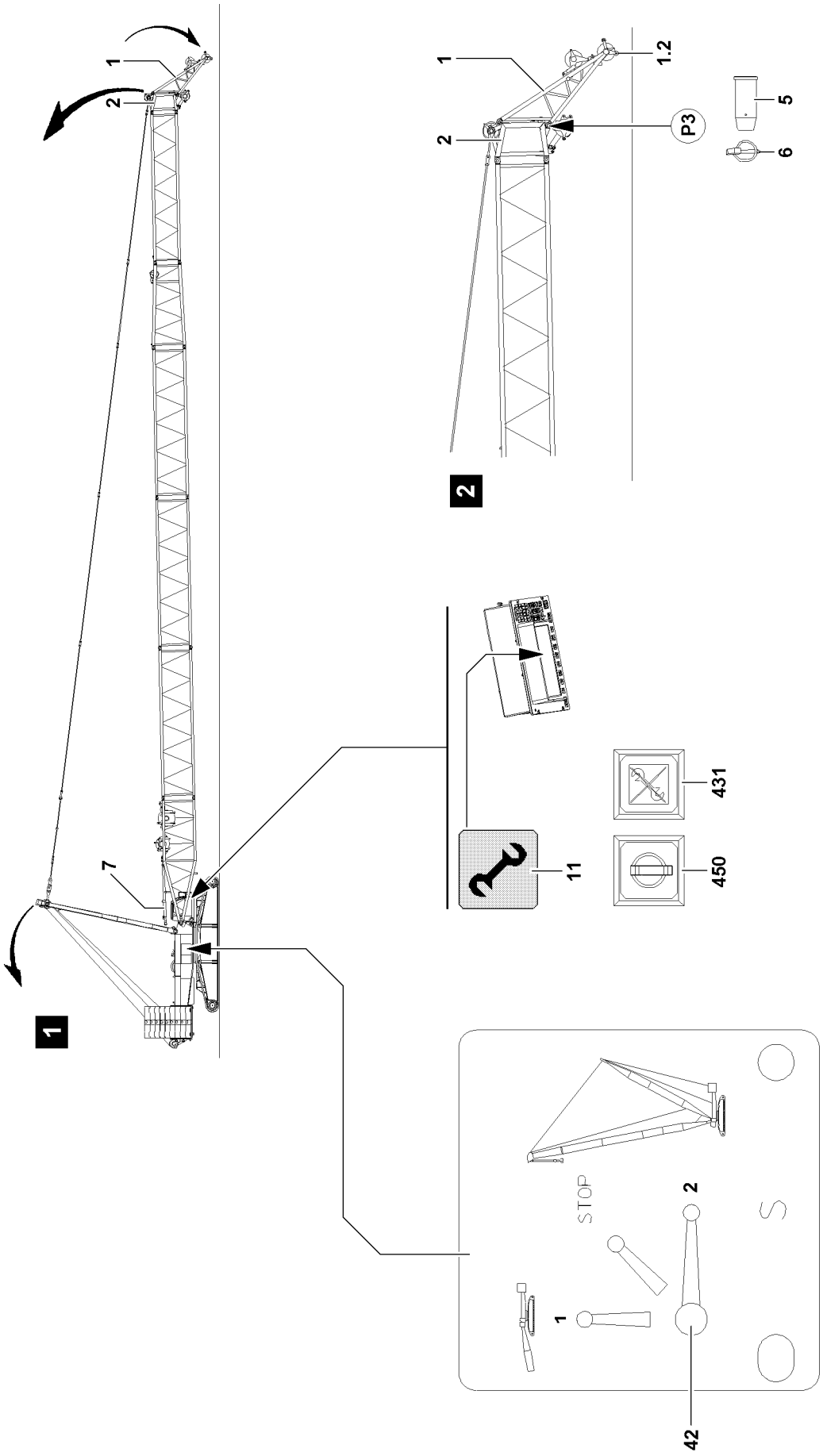

Fig.110606

LWE/LR 1600-2-001/18101-07-02/en

copyright © Liebherr-Werk Ehingen GmbH 2018

3 Erecting the SL-boom

3.1 Erection procedure

DANGER
The crane can topple over!
- ▶ It is prohibited to turn the crane superstructure while erecting the boom!
- ▶ Observe the data in the erection and take down charts!

WARNING
The crane can topple over!
If the following conditions are not met before erecting the boom, the crane can topple over!
Personnel can be severely injured or killed!
- ▶ Observe the Safety technical notes, see the Crane operating instructions, chapter 5.01!
- ▶ Extend the S-relapse cylinder **7** before erecting the boom combinations!
- ▶ Do not allow slack cable to build up on the control winch!

WARNING
Falling hoist rope!
If the hoist rope is not reeved before the erection procedure with the corresponding length on the auxiliary jib „HS“ **1**, then it can fall down backward due to its own weight!
Personnel can be severely injured or killed!
- ▶ Reeve the hoist rope with sufficient length on the auxiliary jib „HS“ **1** before the erection procedure!
- ▶ The hoist rope must be constantly monitored during erection procedure!
- ▶ Do not step into the danger zone!

Make sure that the following prerequisites are met:
- – The crane is aligned in horizontal direction.
- – All electrical connections have been established.
- – All limit switches are functioning.
- – The counterweight has been installed to the turntable according to the data in the erection and take down chart.
- – All pin connections have been secured.
- – The hoist rope has been correctly placed in the rope pulleys and is prevented from jumping out with the rope retaining pins.
- – There are no loose parts on the boom.
- – The LICCON overload protection has been adjusted according to the data in the load chart.
- – The LICCON overload protection settings have been compared with the actual crane configuration.
- – The assembly key button **450** is actuated.
- – The indicator light **431** „assembly“ lights up.
- – The assembly icon **11** on the LICCON monitor 0 lights up.

LWE/LR 1600-2-001/18101-07-02/en

copyright © Liebherr-Werk Ehingen GmbH 2018

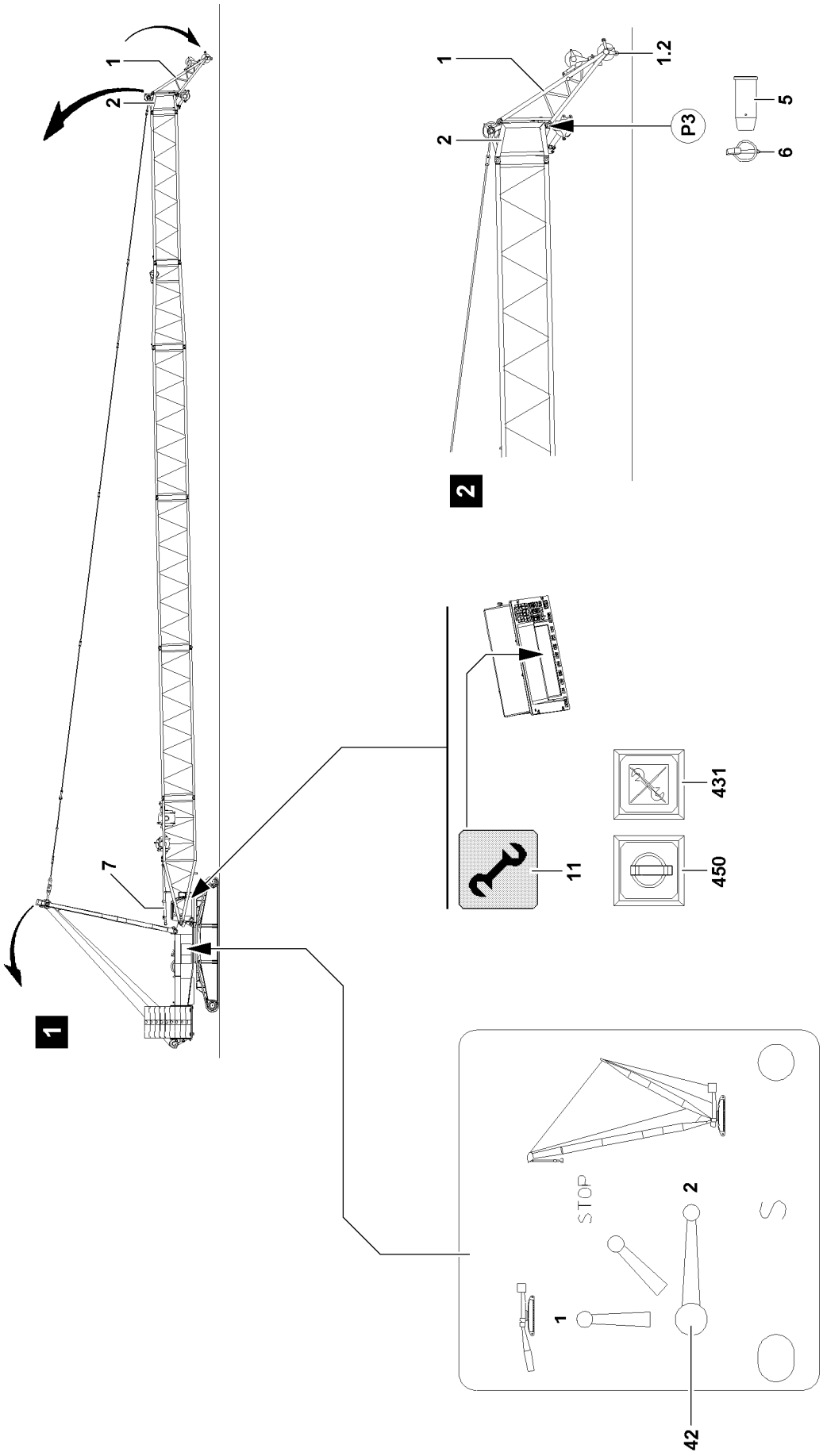

Fig.110606

LWE/LR 1600-2-001/18101-07-02/en

copyright © Liebherr-Werk Ehingen GmbH 2018

3.1.1 Extending the S-relapse cylinder

WARNING
The crane can topple over!
If the S-relapse cylinders **7** are not extended before erecting the SL-boom, then the SL-boom can fall down towards the rear during crane operation and the crane can topple over!
Personnel can be severely injured or killed!
▶ Extend the S-relapse cylinders **7** before erecting the SL-boom!
▶ Secure the ball valve **42** during crane operation to prevent inadvertent actuation!

Ball valve positions	
2	Crane operation, extend the piston rod
1	Assembly, retract the piston rod
STOP	The piston rod cannot be retracted / extended

Extend the piston rods on the S-relapse cylinders **7** by actuating the ball valve **42**.

▶ Set the ball valve **42** to **Position 2**.

Result:

– The piston rods of the S-relapse cylinders **7** extend.

Note
▶ The ball valve **42** is secured by closing the cabinet door and removing the key!

▶ Close the cabinet door and pull the key.
▶ Hand the key to an authorized person.

copyright © Liebherr-Werk Ehingen GmbH 2018

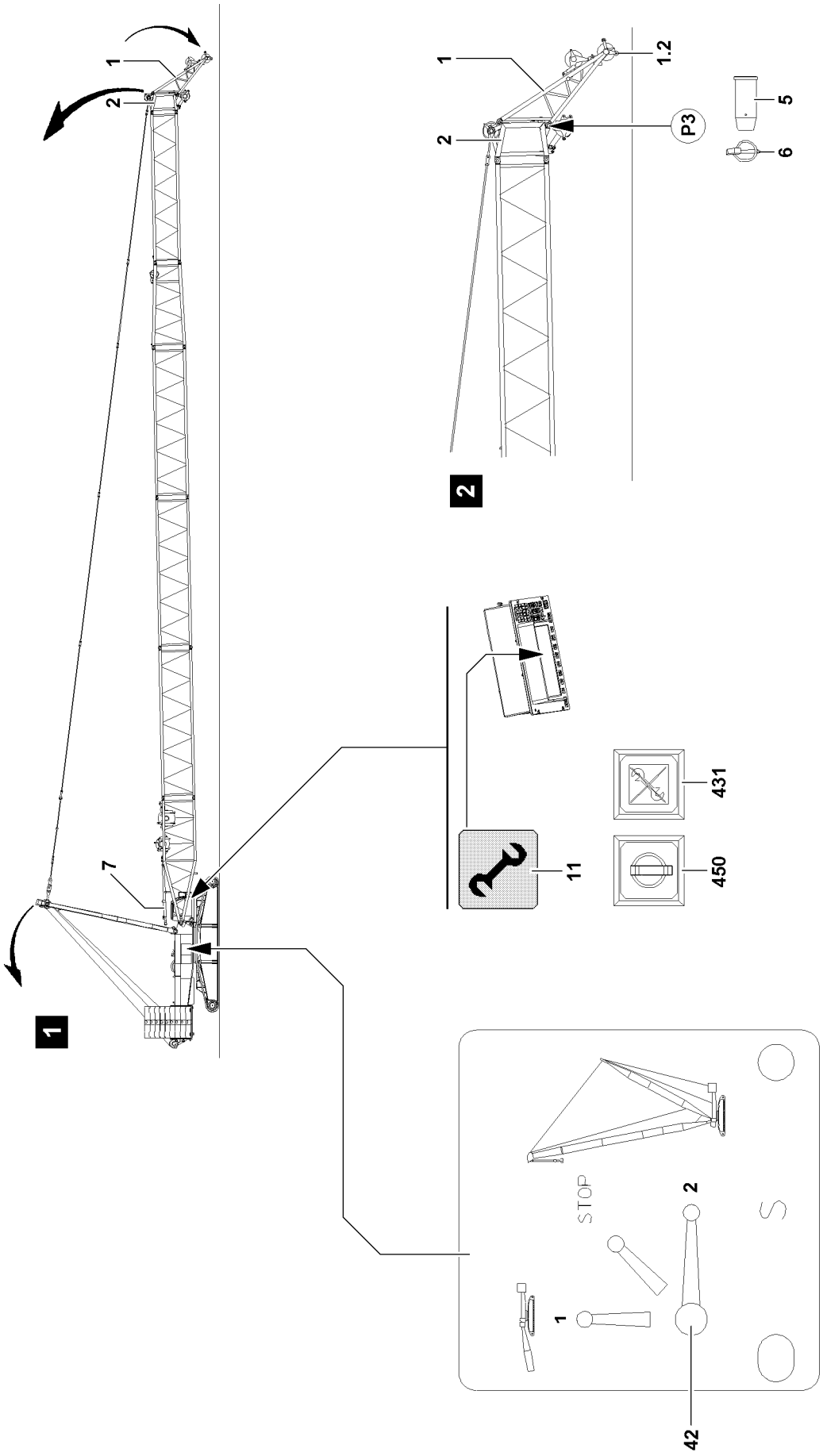

Fig.110606

LWE/LR 1600-2-001/18101-07-02/en

copyright © Liebherr-Werk Ehingen GmbH 2018

3.1.2 Erecting the boom

DANGER
The crane can topple over!
- ▶ It is prohibited to turn the crane superstructure while erecting the boom!
- ▶ Observe the data in the erection and take down charts!

Reeving in the hook block

- ▶ Reeve in the hook block properly and secure the hoist rope on the rope fixed point, for reeving, see separate reeving plans.
- ▶ Bolt in cable securing bolt and secure.
- ▶ Attach the hoist limit switch weight, see Crane operating instructions, chapter 4.06.

Erection

DANGER
The crane can topple over!
In crane operation with bypassed safety devices, the crane can topple over!
Personnel can be severely injured or killed!
- ▶ When the lowest operating position of the boom is reached, turn off the assembly key button **450** immediately!
- ▶ The radii listed in the load chart may not be exceeded or fallen below, even if there is no load on the hook!

Note
- ▶ When the lowest operating position of the boom is reached, the displays turn off!
- ▶ In the „Maximum load“ icon appears a load number in „t“ instead of the display „???“!

- ▶ Luff the boom up to the lowest operating position.

When the boom has reached the lowest operating position:
- ▶ Turn the assembly key button **450** off: Press the button **431**

Result:

– The LICCON overload protection is active.
– The indicator light **431** turns off.
– The assembly icon **11** on the LICCON monitor turns off.
– The acoustical signal turns off.
– The warning flashlight lights up „green“.

LWE/LR 1600-2-001/18101-07-02/en

copyright © Liebherr-Werk Ehingen GmbH 2018

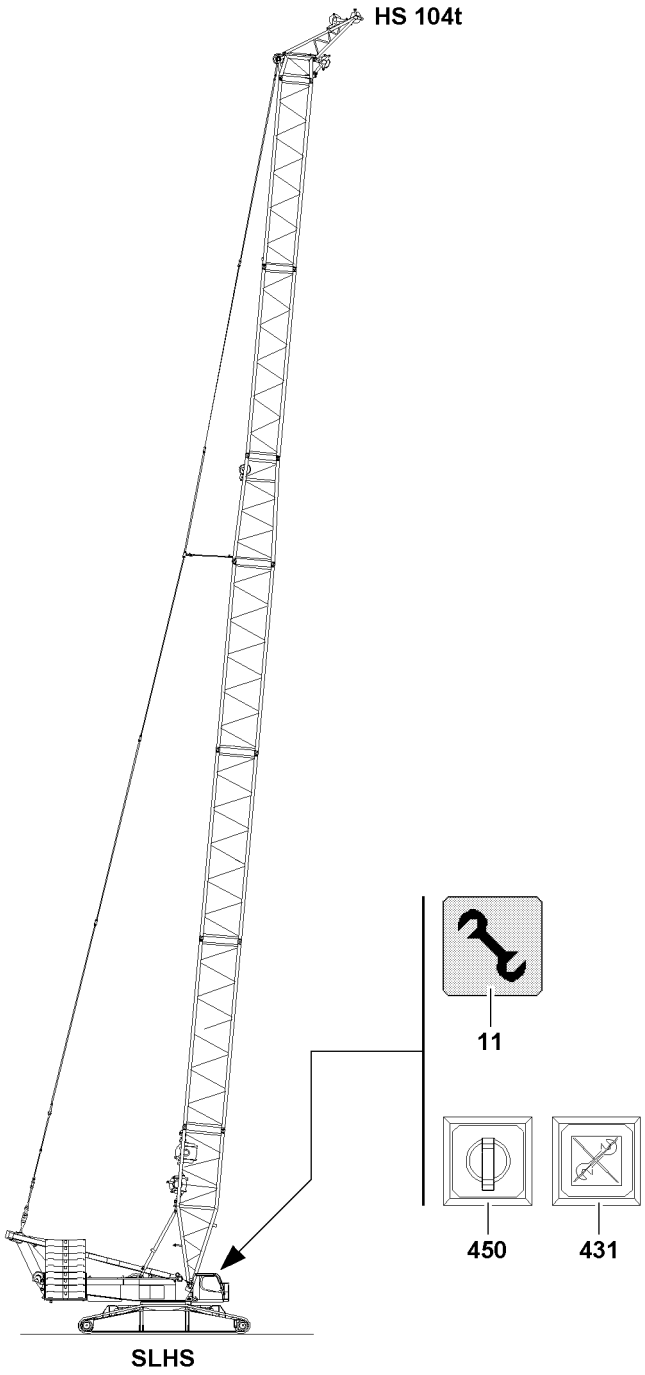

LWE/LR 1600-2-001/18101-07-02/en

Fig.110602

copyright © Liebherr-Werk Ehingen GmbH 2018

4 Operating the crane

4.1 Preparing for crane operation

Note

▶ Observe the notes in chapters 4.05, 4.08 and 5.01 in the Crane operating instructions!

Make sure that the following prerequisites are met:

– The LICCON overload protection has been set according to the data in the load chart.
– The assembly key button **450** is turned off.

WARNING

The crane can topple over!

▶ Check the horizontal position of the crane before and during operation!
▶ If the crane operator leaves the cab, even for a short time, the operating mode setting must be checked and reset if necessary before resuming crane operation!

4.2 Checking the settings

▶ Check the function of the overload protection by running against the operating positions „on top“ and „bottom“.
▶ Check the hoist limit switch by running against the hoist limit switch weight.
▶ Check the function of the limit switches on the relapse cylinders.

LWE/LR 1600-2-001/18101-07-02/en

copyright © Liebherr-Werk Ehingen GmbH 2018

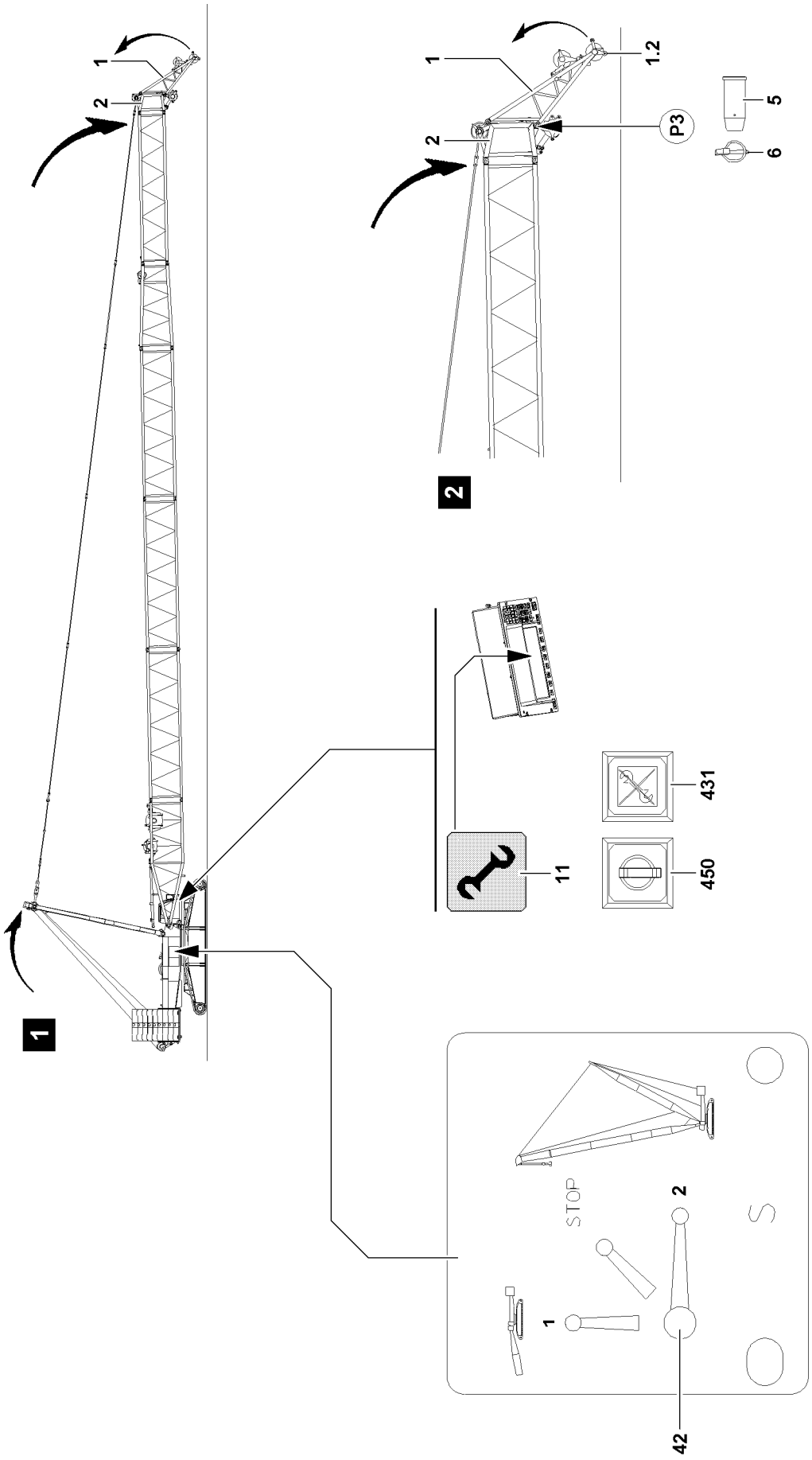

Fig.110607

LWE/LR 1600-2-001/18101-07-02/en

copyright © Liebherr-Werk Ehingen GmbH 2018

5 Removing the auxiliary jib „HS“

WARNING
Risk of falling!
During assembly / disassembly work, personnel must be secured with appropriate fall arresters to prevent them from falling. If this is not observed, assembly personnel can fall and suffer life-threatening or fatal injuries!

- ▶ Any work, where there is a danger of falling must be carried out with suitable aids (for example lifting platform, scaffolding, ladder, auxiliary crane)!
- ▶ If the work cannot be carried out with such aids nor from the ground, then the assembly personnel must secure themselves with approved fall arrest systems to avoid falling, see crane operating instructions, Chapter 2.04!
- ▶ Approved fall arrest systems must be hung into the respective fastening points on the crane, see Crane operating instructions, chapter 2.06!
- ▶ If railings are present on the components, then they must be brought into the corresponding position and secured for assembly / disassembly work!
- ▶ Step on aids and fall arresters only with clean shoes!
- ▶ Keep aids and fall arresters clean and free from snow and ice!
- ▶ During all assembly and disassembly work, maintenance work and inspections, travel and crane operation is prohibited!

WARNING
The lattice sections can fall down!
If the lattice sections are not pinned and secured correctly, then they can fall down and fatally injure personnel!

- ▶ Pin or unpin both pins at the same horizontal level, i.e. **left and right**!
- ▶ Do not stand under the booms or within the entire danger zone during the boom pinning and unpinning procedure!
- ▶ Safely secure the pins in the bearing points as well as receptacles!
- ▶ It is prohibited to lean the ladder against the component being disassembled!

WARNING
Danger of crushing!
When assembling crane components, limbs can be crushed or even severed due to oscillation of components!

- ▶ Make sure that the components do not swing back and forth during assembly!

DANGER
The components can fall down!
If the corresponding components are disengaged from the auxiliary crane before the corresponding component is pinned, the corresponding component can fall down and fatally injure personnel!

- ▶ Do not disengage the auxiliary crane until the corresponding component is pinned and secured!

LWE/LR 1600-2-001/18101-07-02/en

copyright © Liebherr-Werk Ehingen GmbH 2018

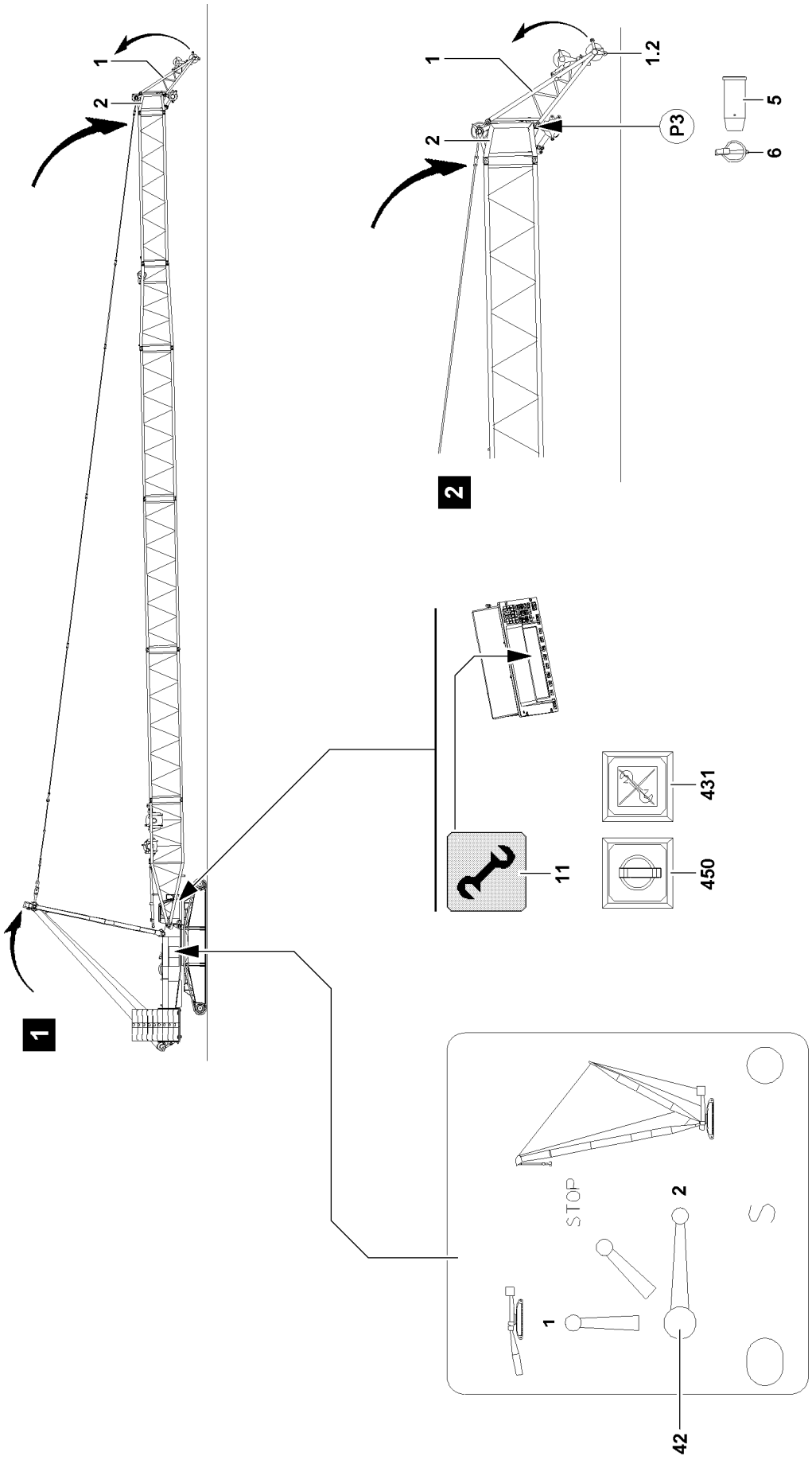

Fig.110607

LWE/LR 1600-2-001/18101-07-02/en

copyright © Liebherr-Werk Ehingen GmbH 2018

5.1 Placing the boom down

WARNING
The crane can topple over!
If the following conditions are not met before taking down the boom, the crane can topple over and fatally injure personnel!
- ▶ Observe the Safety technical notes, see chapter 5.01 in the crane operating instructions!
- ▶ Observe the data in the erection and take down charts!

NOTICE
Damage of boom components!
Taking down the boom system can lead to a collision between the hook block and the pulley head. Boom components can be severely damaged!
- ▶ Luff the boom system down at the same time and spool the hoist winch out!

5.1.1 Luffing the boom down

Note
- ▶ The luff down movement is turned off as soon as the lowest operating position is reached!
- ▶ When the lowest operating position of the boom is reached, the load display in the „Maximum load“ icon turns off and instead of the load display appears the display „???“.
- ▶ In the crane operating screen appear alarm functions!

▶ Luff the SL-boom down to the **lowest** operating position.

Result:

The following alarm functions become active:
– „STOP“
– „Horn“ and acoustical signal

DANGER
Crane operation with added assembly key button!
- ▶ The actuation of the assembly key button **450** is only permitted for assembly tasks!
- ▶ The assembly key button **450** may only be operated by persons who are aware of the consequences of a bypass!
- ▶ If the assembly key button **450** is turned on, the hoist limit switch and the LICCON overload protection is bypassed!
- ▶ Crane operation with the assembly key button **450** turned on is strictly prohibited!
- ▶ The assembly key button **450** must be removed immediately after carrying out the assembly work and handed to an authorized person!

When the boom has reached the lowest operating position:
▶ Turn the assembly key button **450** on:

Result:

– The LICCON overload protection is deactivated.
– The indicator light **431** in the button lights up.
– The assembly icon **11** on the LICCON monitor blinks.
– The „STOP“ icon on the LICCON monitor blinks.
– An acoustical signal sounds.
– The warning flashlight blinks „red“.

▶ At the same time, spool the hoist winch out and luff the SL-boom down until the hook block touches the ground.

LWE/LR 1600-2-001/18101-07-02/en

copyright © Liebherr-Werk Ehingen GmbH 2018

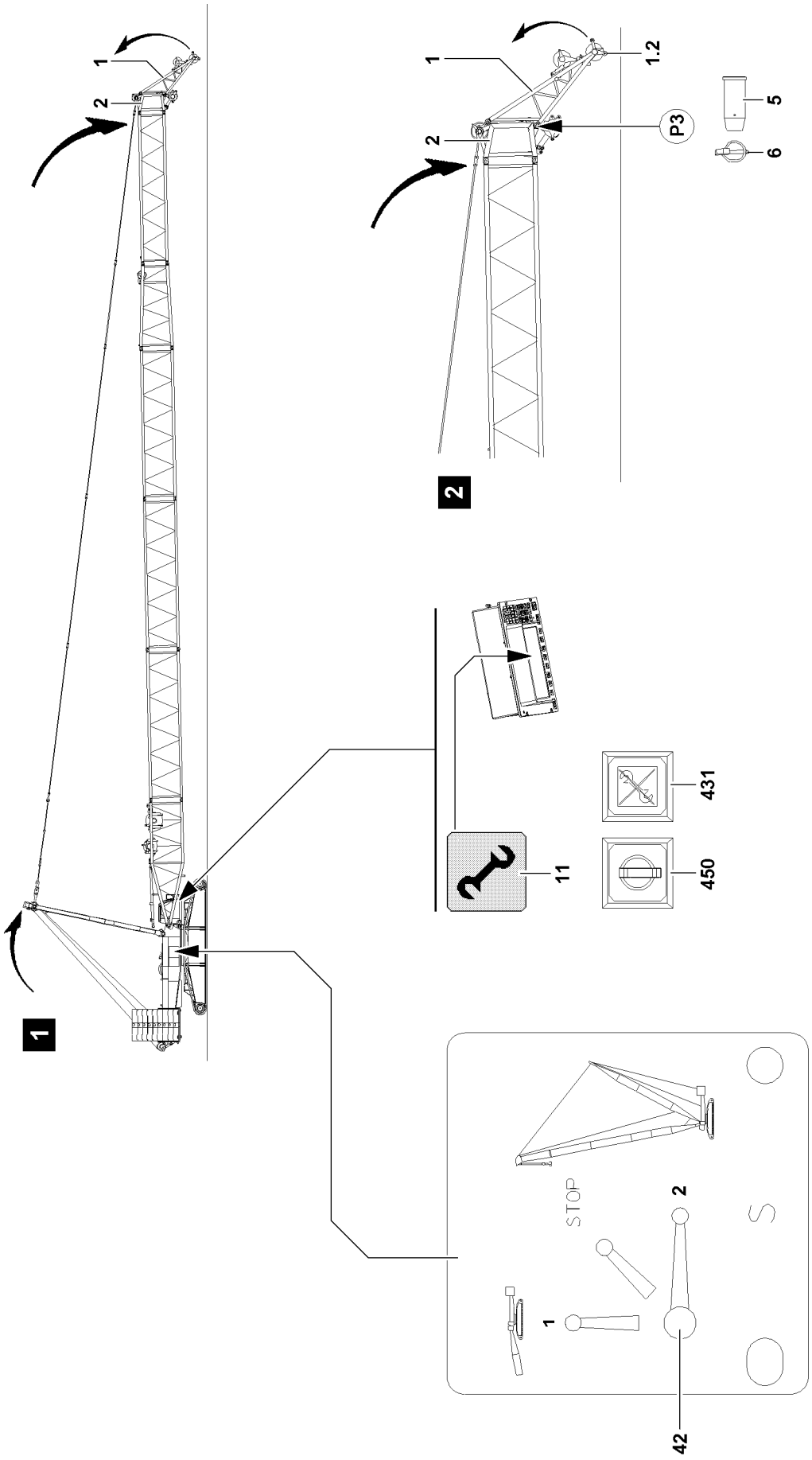

Fig.110607

LWE/LR 1600-2-001/18101-07-02/en

copyright © Liebherr-Werk Ehingen GmbH 2018

5.1.2 Unreeving the hook block

▶ Remove the hoist limit switch weight and unreeve the hook block.
▶ Carefully luff the SL-boom down until the auxiliary jib „HS“ **1** is just above the ground with the rollers **1.2**.

When the rollers **1.2** are just above the ground:
▶ Unpin the pins **5** on the auxiliary jib „HS“ at point **P3** „on the bottom“.

When the pins **5** are unpinned at point **P3** „on the bottom“:
▶ Luff the SL-boom down slowly until the auxiliary jib „HS“ **1** folds out by itself.
▶ Continue to luff the SL-boom down.

Result:

– The auxiliary jib „HS“ **1** runs on the rollers **1.2** toward the „outside“.

▶ Place the SL-boom on the support.

5.1.3 Spooling the hoist rope up

WARNING
Falling hoist rope!
By spooling the hoist rope up, personnel can be severely injured or killed!
▶ All rope retaining pins / pipes on the auxiliary jib „HS“ **1**have been removed!
▶ All rope retaining pins / pipes on the SW-end section **3** and on the S-boom have been removed!
▶ Slowly spool up the hoist rope over the rope pulleys back to the winch!
▶ Make sure that no personnel may be found within the danger zone!

NOTICE
Over spooled winch!
If the rope is pulled under the winch when spooling up, then the adjustment of the winch turn sensor changes!
A new adjustment by **LIEBHERR Service** must be made!
▶ Stop the winch in time, with sufficient rope reserve!
▶ Do not over spool the winch!

▶ Spool up the hoist rope.

5.2 Disconnecting the electrical connections

Make sure that the following prerequisite is met:
– The SL-boom has been placed down.

NOTICE
Damage to the electrical connections on the cable drum!
If the electrical connection from the cable drum on the S-pivot section to the terminal box on the SW-end section is disconnected and spooled up, then the electrical connection from the cable drum to the terminal box on the S-pivot section can be damaged!
▶ Disconnect the electrical connection from the cable drum to the terminal box on the S-pivot section first and then the electrical connection from the terminal box to the SW-end section!

▶ Store the cable from the terminal box on the S-pivot section properly.
▶ Spool the cable drum up and secure it to prevent inadvertent spooling out.

LWE/LR 1600-2-001/18101-07-02/en

copyright © Liebherr-Werk Ehingen GmbH 2018

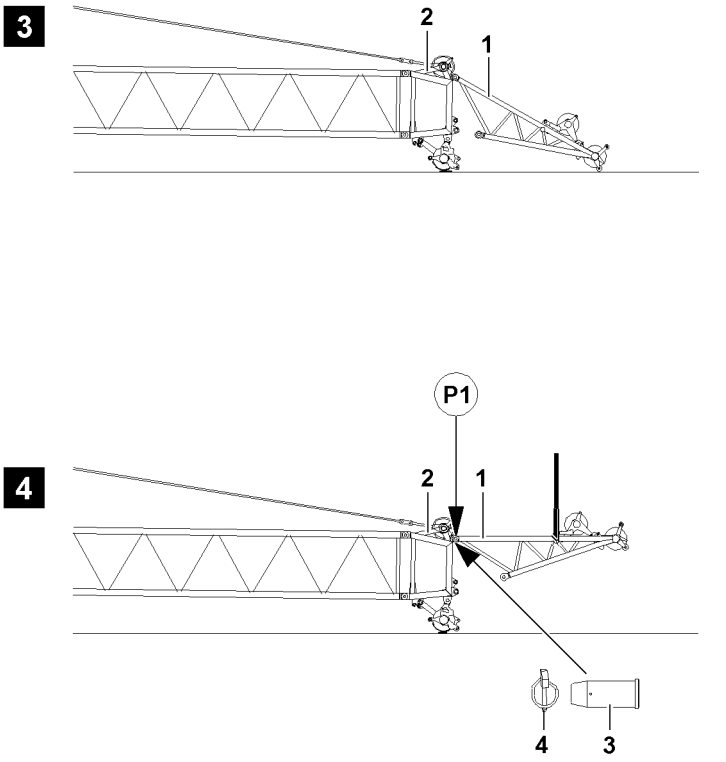

LWE/LR 1600-2-001/18101-07-02/en

Fig.110608

copyright © Liebherr-Werk Ehingen GmbH 2018

5.3 Removing the auxiliary jib „HS“

WARNING
Folding down boom!
If the following conditions are not met before disassembling the auxiliary jib „HS“ **1**, the boom can fold down!
Personnel can be severely injured or killed!
▶ Support the SL-boom during disassembly with suitable materials!

Make sure that the following prerequisites are met:
– The SL-boom is placed on a load-bearing support.
– The auxiliary jib „HS“ **1** is laying on the ground.
– All electrical connections on the SL-boom are disconnected.

▶ Attach the auxiliary jib „HS“ **1** on the auxiliary crane.
▶ Lift the auxiliary jib „HS“ **1** with the auxiliary crane until the auxiliary jib „HS“ **1** hangs horizontally.
▶ Release and unpin pin **3** on the auxiliary jib„HS“ **1** at point **P1**.

When the pins **3** are unpinned:
▶ Remove the auxiliary jib „HS“ **1** with the auxiliary crane.
▶ Insert the pins **3** in the transport receptacle **P2** on the SW-end section **2**.

Note
▶ Carry out the disassembly of the SL-boom according to chapter 5.38 of the Crane operating instructions!

▶ Disassemble the SL-boom.

LWE/LR 1600-2-001/18101-07-02/en

copyright © Liebherr-Werk Ehingen GmbH 2018

Empty page!

LWE/LR 1600-2-001/18101-07-02/en

copyright © Liebherr-Werk Ehingen GmbH 2018

5.61 Roller cart

1	Overview components pulley cart	3
2	Installing / removing the pulley cart	5

LWE/LR 1600-2-001/18101-07-02/en

copyright © Liebherr-Werk Ehingen GmbH 2018

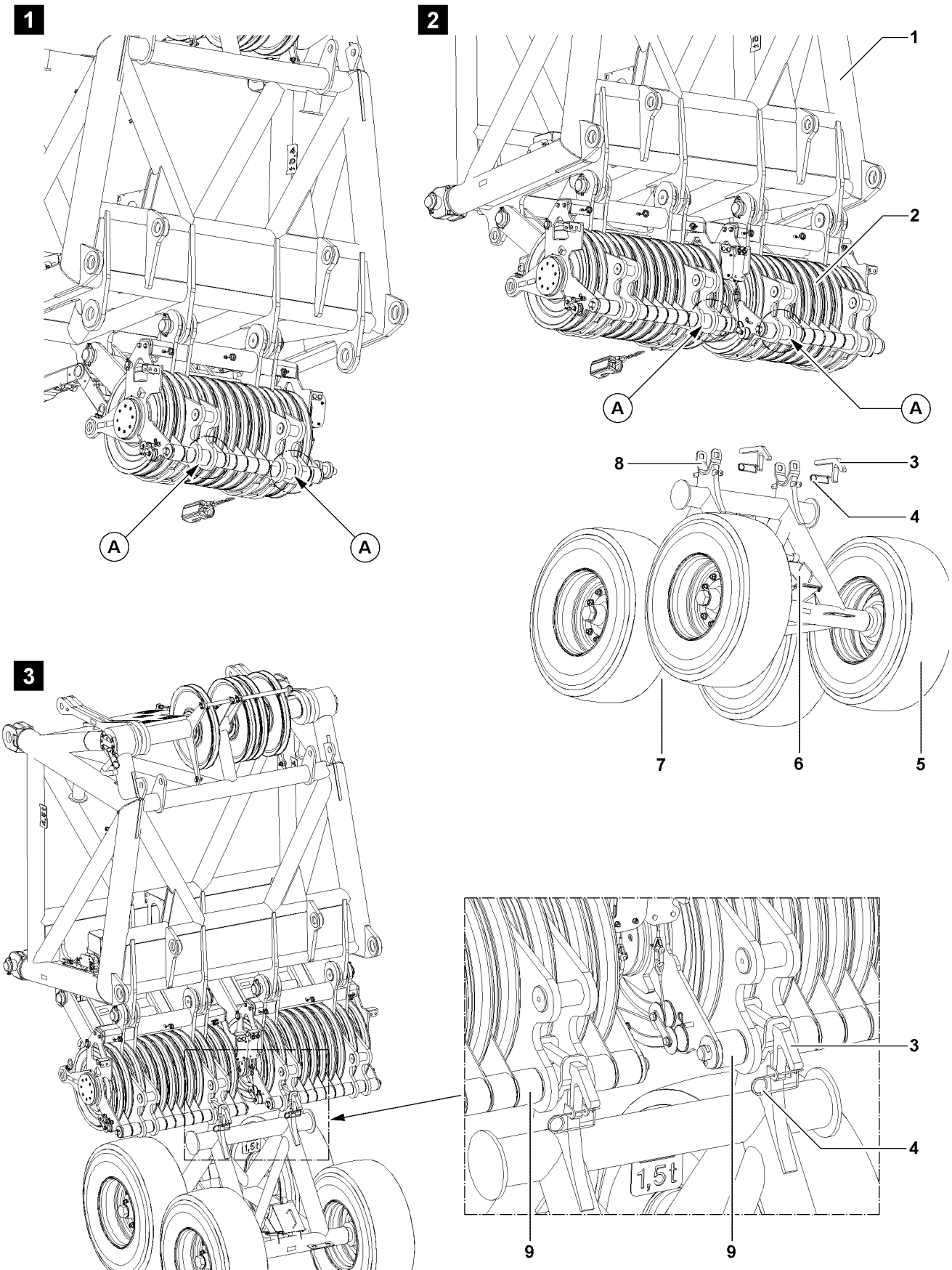

Fig.105346

LWE/LR 1600-2-001/18101-07-02/en

copyright © Liebherr-Werk Ehingen GmbH 2018

1 Overview components pulley cart

Position	Description
1	SW-end section
2	Roller set
3	Retainer
4	Spring retainer
5	Tires
6	Wedge
7	Pulley cart
8	Receptacle
9	Pulleys on the pulley set

LWE/LR 1600-2-001/18101-07-02/en

copyright © Liebherr-Werk Ehingen GmbH 2018

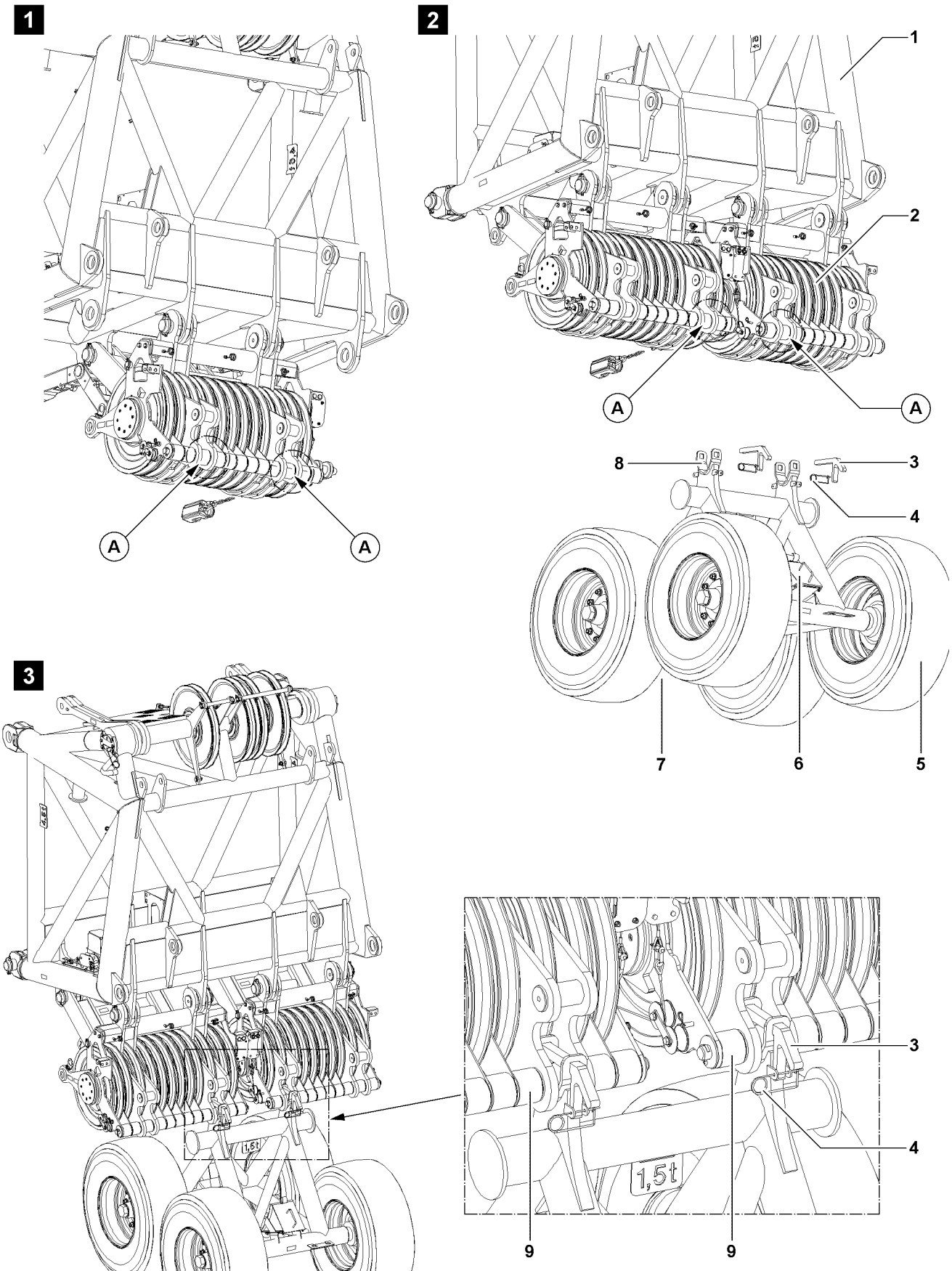

Fig.105346

LWE/LR 1600-2-001/18101-07-02/en

copyright © Liebherr-Werk Ehingen GmbH 2018

2 Installing / removing the pulley cart

2.1 Installing the pulley cart

- For illustration of a SW-end section with installed pulley set, see fig. **1**.
- For installation of the pulley cart on example of a SW-end section with two pulley sets, see fig. **2** and fig. **3**.

▶ Position the pulley cart **7** below the SW-end section **1** and secure the tires **5** with wedges **6**.
▶ Slowly lower the SW-lattice jib until the pulleys of the pulley set **9** in point **A** are laying in the receptacle **8** of the pulley cart.
▶ Plug in the retainer **3**and secure with spring retainer **4**.
▶ Remove the wedges **6**.

2.2 Removing the pulley cart

WARNING
Risk of accident!
▶ Observe and adhere to the data in the erection and take down charts.
▶ Observe chapter 5.07.

▶ Secure the pulley cart **7** with wedges **6**.
▶ Release the spring retainer **4** and pull the retainer **3**.
▶ Luff up boom combination.

LWE/LR 1600-2-001/18101-07-02/en

copyright © Liebherr-Werk Ehingen GmbH 2018

Empty page!

LWE/LR 1600-2-001/18101-07-02/en

copyright © Liebherr-Werk Ehingen GmbH 2018

6 Auxiliary equipment

LWE/LR 1600-2-001/18101-07-02/en

copyright © Liebherr-Werk Ehingen GmbH 2018

LWE/LR 1600-2-001/18101-07-02/en

copyright © Liebherr-Werk Ehingen GmbH 2018

6.02 Crane operator's cab heater / engine preheating / air conditioning system

1 Heating the crane cab 3

LWE/LR 1600-2-001/18101-07-02/en

copyright © Liebherr-Werk Ehingen GmbH 2018

LWE/LR 1600-2-001/18101-07-02/en

Fig.195219

copyright © Liebherr-Werk Ehingen GmbH 2018

1 Heating the crane cab

The cab can be heated with three independent heaters:
- Engine-dependent heater
- Engine-independent auxiliary heater with engine pre-heating, at ambient temperatures down to -40 °C , WEBASTO; Thermo 90 ST*
- Engine-independent auxiliary heater for cab preheating, at ambient temperatures less than -40 °C , WEBASTO; DBW 2020*

The individual heat adjustment (both for engine-dependent as well as the engine-independent auxiliary heater*) are made solely via the „Climate control settings“ menu on the touch display.

NOTICE
Damage in the electrical / electronic component area when carrying out electric welding work on the crane.
▶ Disconnect the negative and positive cables from the batteries and connect the positive cables to the vehicle ground.

2 Menu „Climate control settings“

2.1 General

The „Climate control settings“ menu is accessed - with the ignition turned on - by pressing the function key **F1** on the touch display.

Note
▶ The „Climate control settings“ menu is removed automatically after 30 sec. if no settings are changed during this time.

If the crane ignition is turned off, the LICCON computer system and the touch display also turn themselves off. The settings made in the „Climate control settings“ menu are retained.

Note
▶ If the auxiliary heater has been programmed, the settings are saved when the ignition is turned „OFF“.

LWE/LR 1600-2-001/18101-07-02/en

copyright © Liebherr-Werk Ehingen GmbH 2018

2.2 Operating the touch display

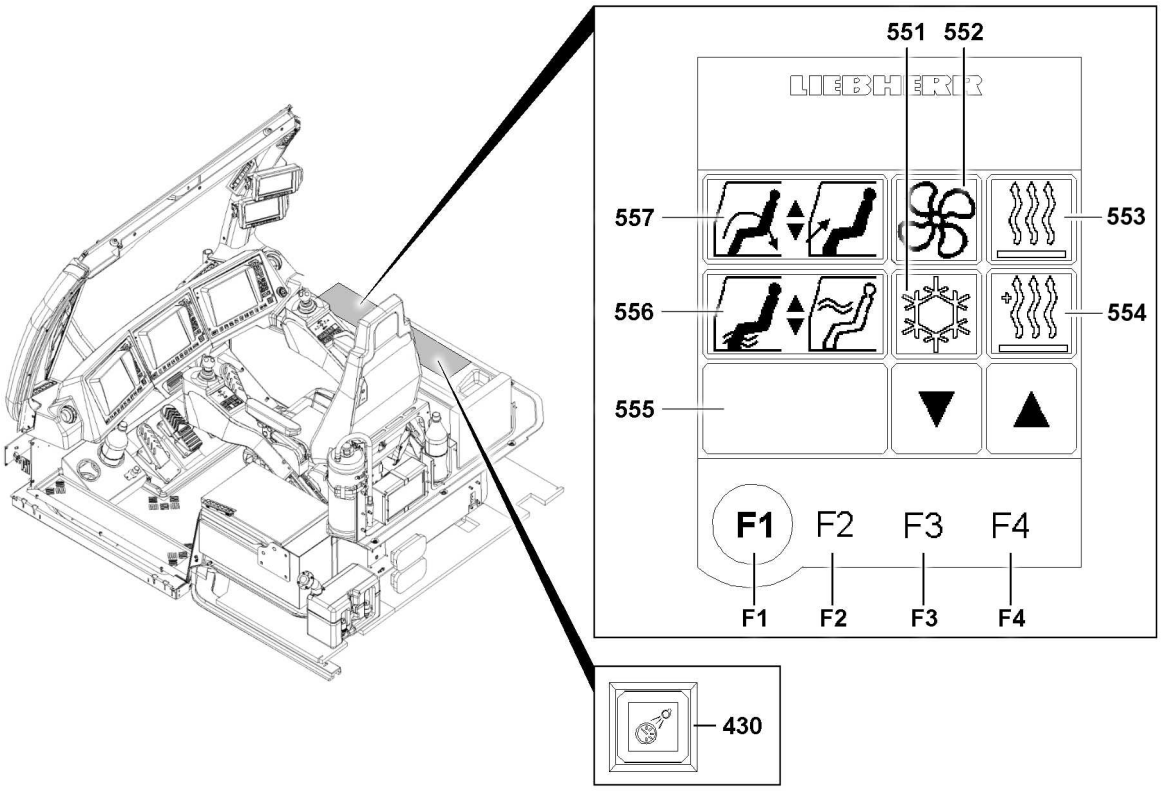

Fig.127301: Touch display in the right instrument panel

On the touch display, all functions are available for making and operating all heating, ventilation and air conditioning settings and for programming the auxiliary heater on the crane:

- **557** Recirculating air / fresh air
  - Function selection
- **556** Air distribution „up“ / „down“
  - Function selection
- **555** Status display
  - Display function

  The status display **555** shows the following, depending on the selected function:
  - The adjustment ratios between the overhead area and the floorboard area for recirculating air / fresh air.
  - The adjustment ratios for air distribution.
  - The temperature setting in manual heating mode.
  - The temperature setting in AUTO heating mode.
  - Climate control system „ON“.
  - Climate control system „OFF“.
  - The programming display for auxiliary heater.
- **551** Air conditioning system
  - Function selection
- **552** Fan / blower
  - Function selection
- **553** Heater
  - Function selection
- **554** Auxiliary heater
  - Function selection

LWE/LR 1600-2-001/18101-07-02/en

copyright © Liebherr-Werk Ehingen GmbH 2018

The background illumination for the touch display can be turned on or off with the button **430**.

▶ Press the button **430**.

Result:

– The background illumination for the touch display is turned on.

▶ Press the button **430** again.

Result:

– The background illumination for the touch display is turned off.

2.3 Adjusting the recirculating air / fresh air

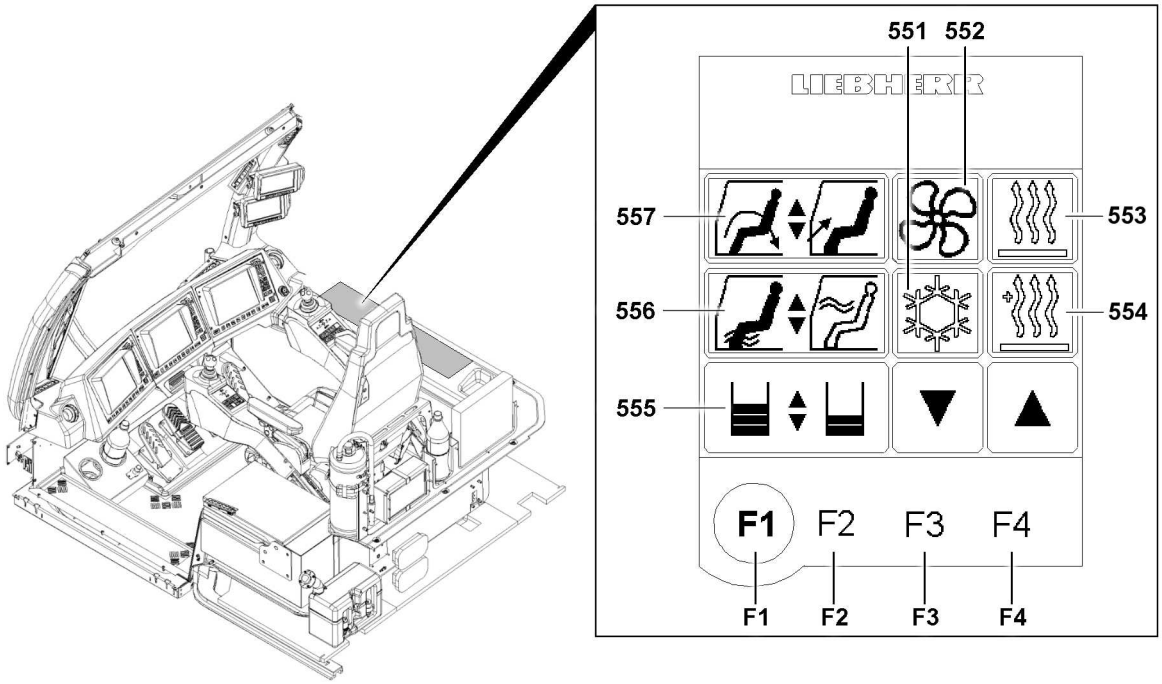

Fig.127302: Adjusting the recirculating air / fresh air

The „recirculating air / fresh air“ function is selected by „touching“ the icon **557** on the left touch display.

The adjustment rate is displayed in the status display **555** as a double bar display for „recirculating air“ and „fresh air“.

The adjustment rate between „recirculating air / fresh air“ is changed with the function key **F3** and the function key **F4**.

Adjustment rates for recirculating air / fresh air			
Status display	Recirculating air	Fresh air	Icon display
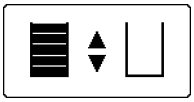	**5**	**0**	*Fresh air „OFF“*
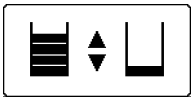	**4**	**1**	

LWE/LR 1600-2-001/18101-07-02/en

copyright © Liebherr-Werk Ehingen GmbH 2018

Adjustment rates for recirculating air / fresh air			
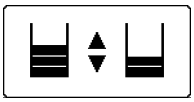	**3**	**2**	
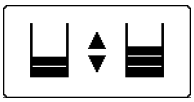	**2**	**3**	
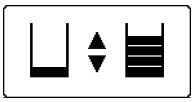	**1**	**4**	
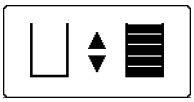	**0**	**5**	*Recirculating air „OFF“*

▶ Select „Recirculating air / fresh air“ **557** function by „touching“.

Result:

– The „Recirculating air / fresh air“ icon is surrounded with a black border.
– The current adjustment rate is displayed in the status display **555** as a double bar display for „recirculating air“ and „fresh air“.

▶ Press the function key **F3**.

Result:

– The „proportion of circulating air“ is reduced, the „proportion of fresh air“ increases at the same time.

▶ Press the function key **F4**.

Result:

– The „proportion of fresh air“ is reduced, the „proportion of circulating air“ increases at the same time.

LWE/LR 1600-2-001/18101-07-02/en

copyright © Liebherr-Werk Ehingen GmbH 2018

2.4 Adjusting the „lower“ / „upper“ air distribution

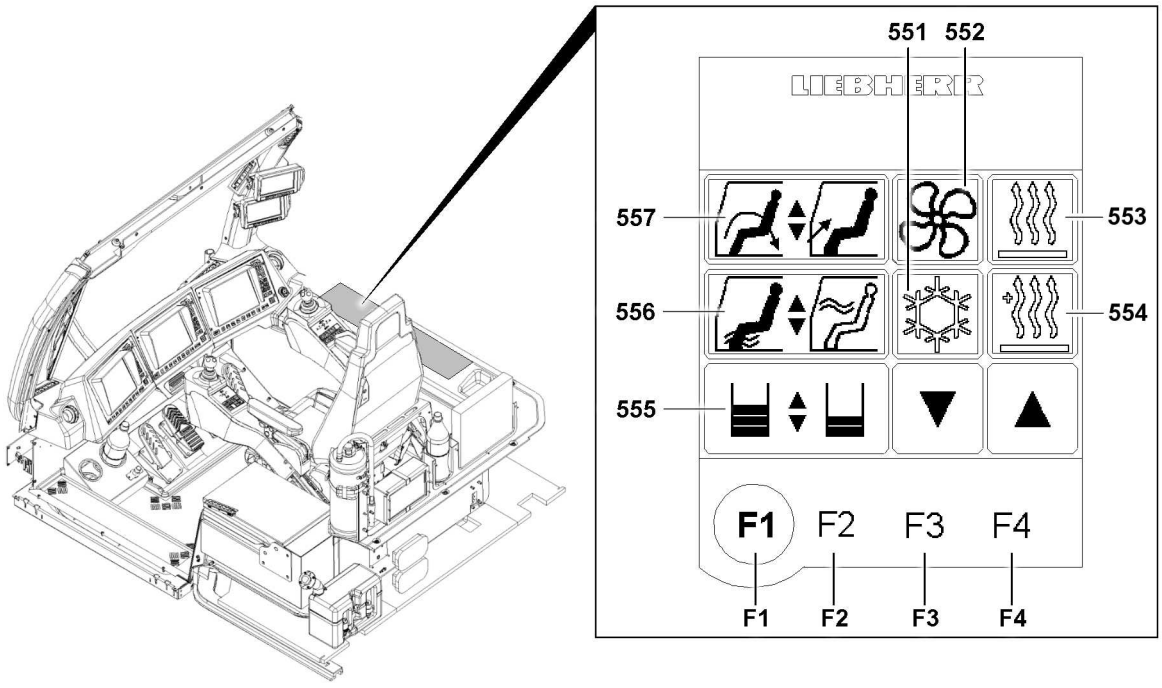

Fig.127302: Adjusting the lower / upper air distribution

The „lower“ / „upper“ air distribution function is selected by „touching“ the icon **556** on the left touch display.

The adjustment ratio is displayed in the Status display **555** - as a double bar display - for the „lower“ and „upper“ air distribution.

The „lower“ and „upper“ adjustment rate is changed with the function key **F3** and the function key **F4**.

Air distribution adjustment rates			
Status display	„Down“	„Up“	Icon display
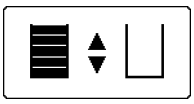	**5**	**0**	*Up „OFF“*
	4	**1**	
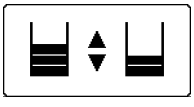	**3**	**2**	

copyright © Liebherr-Werk Ehingen GmbH 2018

Air distribution adjustment rates			
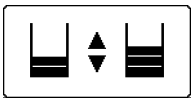	**2**	**3**	
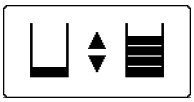	**1**	**4**	
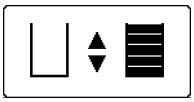	**0**	**5**	*Down „OFF“*

▶ Select Air distribution „upper / lower“ **556** function by „touching“.

Result:

– The „lower / upper“ air distribution icon is surrounded with a black border.
– The current adjustment rate is displayed in the status display **555** - as a double bar display - for „lower“ and „upper“.

▶ Press the function key **F3**.

Result:

– The proportion of air on the „bottom“ is reduced, the proportion of air on the „top“ increases at the same time.

▶ Press the function key **F4**.

Result:

– The proportion of air „on the top“ is reduced, the proportion of air „on the bottom“ increases at the same time.

LWE/LR 1600-2-001/18101-07-02/en

copyright © Liebherr-Werk Ehingen GmbH 2018

2.5 Fan / blower adjustment

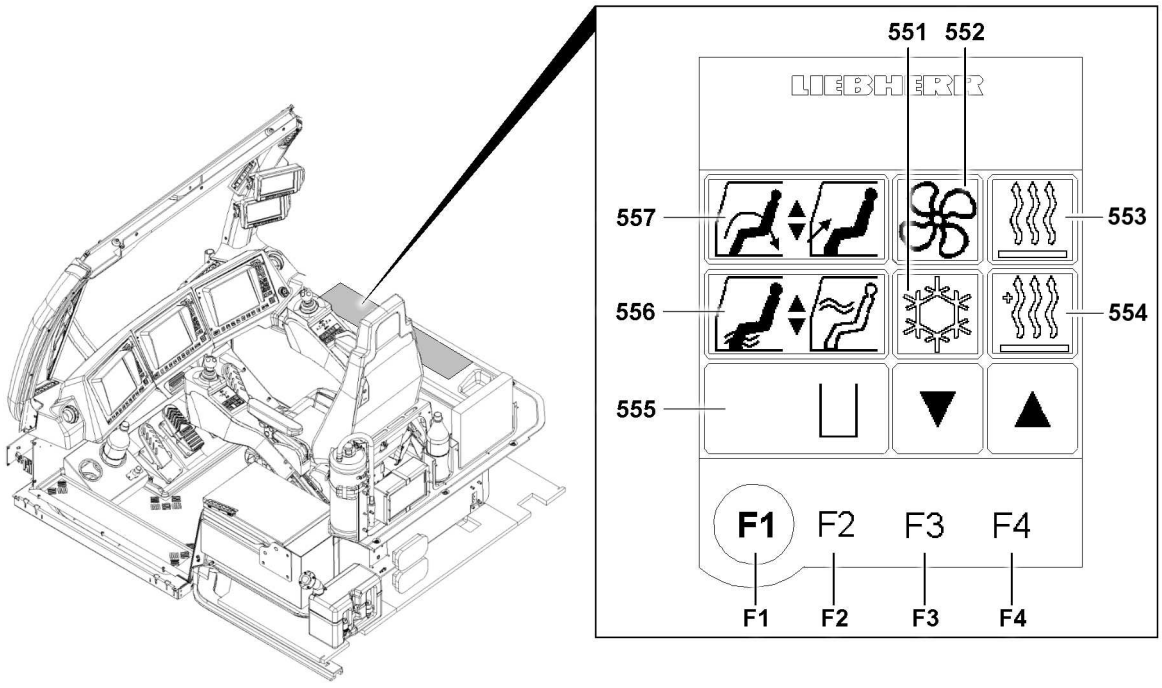

Fig.127303: Fan / blower adjustment

The „fan / blower“ function is selected by „touching“ the icon **552** on the left touch display.

The current „fan“ / „blower setting“ is shown as a bar display in the status display **555**.

The „fan“ / „blower setting“ is reduced with the function key **F3** and increased with the function key **F4**.

„Fan“ / „blower stage“		
Status display	Stage	Icon display
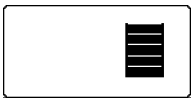	**5**	
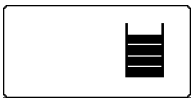	**4**	
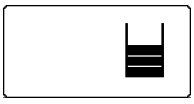	**3**	
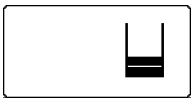	**2**	
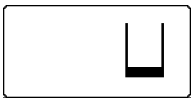	**1**	
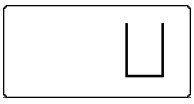	**0**	*Fan „OFF“*

copyright © Liebherr-Werk Ehingen GmbH 2018

▶ Select „fan / blower **552**“ by „touch“.

Result:

– The „fan / blower“ icon is then surrounded with a black border.
– In the current status display **555**, the „fan“ / „blower stage“ is shown as a bar display.

▶ Press the function key **F3**.

Result:

– The „fan“ / „blower stage“ is reduced.

▶ Press the function key **F4**.

Result:

– The „fan“ / „blower stage“ is increased.

2.6 Climate control system operation

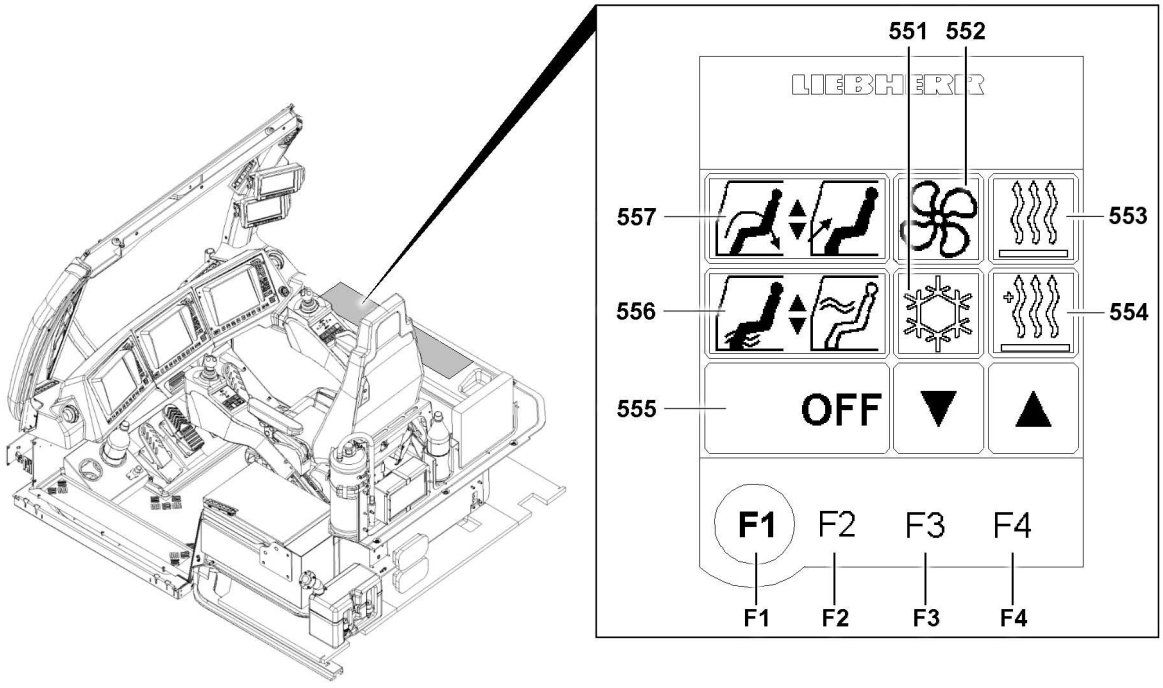

Fig.127304: Climate control system operation

The „Climate control system“ function is selected by „touching“ the icon **551** in the left touch display.

The status of the climate control system is displayed in the status display **555**.

The „Air conditioning system“ is turned off with the function key **F3** („OFF“) and turned with the function key **F4** („ON“).

Note

▶ The climate control system turns itself on automatically if the „AUTO“ heating mode is activated.

LWE/LR 1600-2-001/18101-07-02/en

copyright © Liebherr-Werk Ehingen GmbH 2018

Air conditioning system		
Status display	Status	Icon display
OFF	„OFF“	
ON	„ON“	

Make sure that the following prerequisites are met before operating the climate control system:

- The air intake opening for recirculated air operation is clear.
- All windows and the cab door are closed.
- The recirculating air / fresh air adjustment ratio is 5:0.

▶ Select „Climate control system **551**“ function by „touching“.

Result:

– The „Climate control system“ icon is surrounded with a black border.
– The switching status of the climate control system appears in the status display **555**.

▶ Press the function key **F3**.

Result:

– The climate control system is turned off.

▶ Press the function key **F4**.

Result:

– The climate control system is turned on.

▶ Open or close the air vents, as desired.
▶ Open the appropriate air vent for upward air distribution.
▶ Turn the fan / blower on.
▶ Select the heater and change into „MANUAL“ heating mode.
▶ Set the temperature stage.
or
Select heater and change into „AUTO“ heating mode.
▶ Set the temperature in [°C] or [°F].

2.7 Turning the heater on

2.7.1 General

The „heater“ function is selected by „touching“ the icon **553** on the left touch display.

The status of the heater is displayed in the status display **555**.

The temperature is regulated in „MANUAL“ heating mode via the function key **F3** („reduce“ temperature) and function key **F4** („increase“ temperature).

Function key **F2** is used to switch from „MANUAL“ heating mode to „AUTO“ heating mode and vice versa.

LWE/LR 1600-2-001/18101-07-02/en

copyright © Liebherr-Werk Ehingen GmbH 2018

2.7.2 Manual heating mode

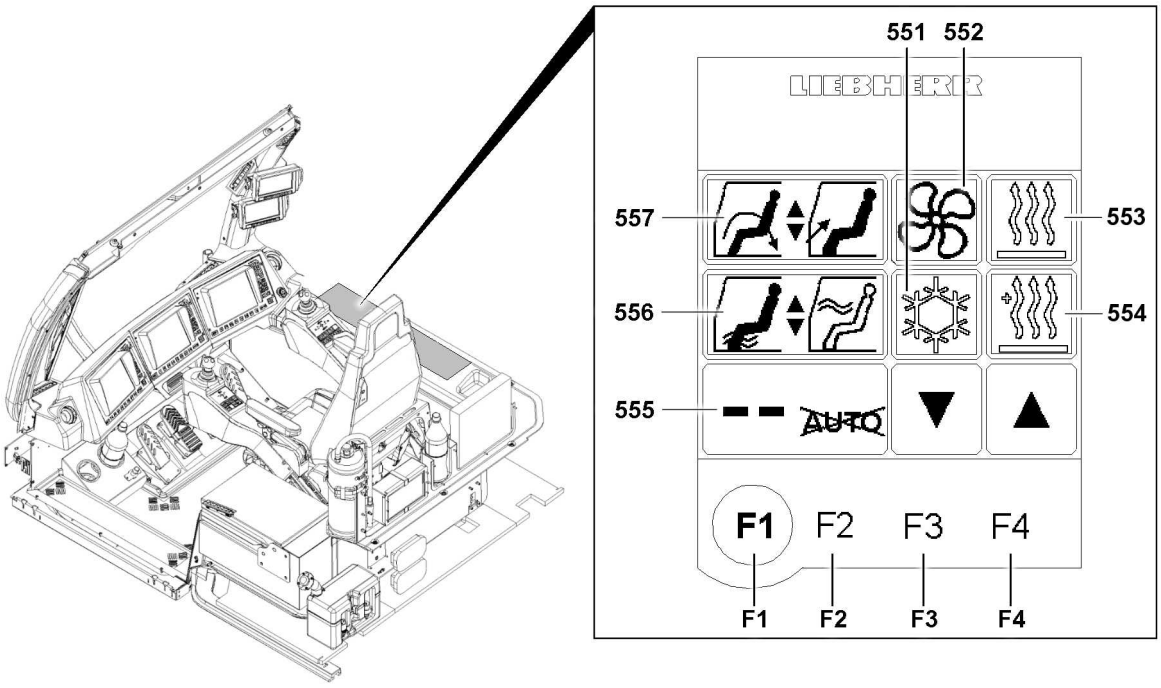

Fig.127305: Turning the heater on

In „MANUAL“ heating mode, the temperature stages - from stage 1 to stage 16 - are available to the crane driver for temperature adjustment.

With the function key **F3**, the temperature stages can be reduced from stage 16 in increments until „Heater OFF“.

Note
- ▶ If the status „Heater OFF“ is reached, the heater does not operate.
- ▶ The crane cab is **not** heated.

Press the function key **F4** to leave the „OFF“ status and to increase the temperature stages incrementally from stage 1 to maximum stage 16.

Heating mode „MANUAL“			
Status display	Status	Stage	Icon display
-- AUTO	**„OFF“**	**— —**	*Heater „OFF“*
1 AUTO	**„ON“**	**1**	
16 AUTO	**„ON“**	**16**	

- ▶ Select the „heater **553**“ function by „touching“.

LWE/LR 1600-2-001/18101-07-02/en

copyright © Liebherr-Werk Ehingen GmbH 2018

Result:

– The „heater“ icon is then surrounded with a black border.
– The status display **555** contains the current status of the „heater“.

▶ Press the function key **F2**.

Result:

– Heating mode „AUTO“ is switched to heating mode „MANUAL“.

▶ Press the function key **F3**.

Result:

– The „temperature stages“ are reduced incrementally by one stage.
– The amount of warm air supply into the crane cab is reduced accordingly.

▶ Press the function key **F4**.

Result:

– The „temperature stages“ are increased incrementally by one stage.
– The amount of warm air supply into the crane cab is increased.

2.7.3 AUTO heating mode

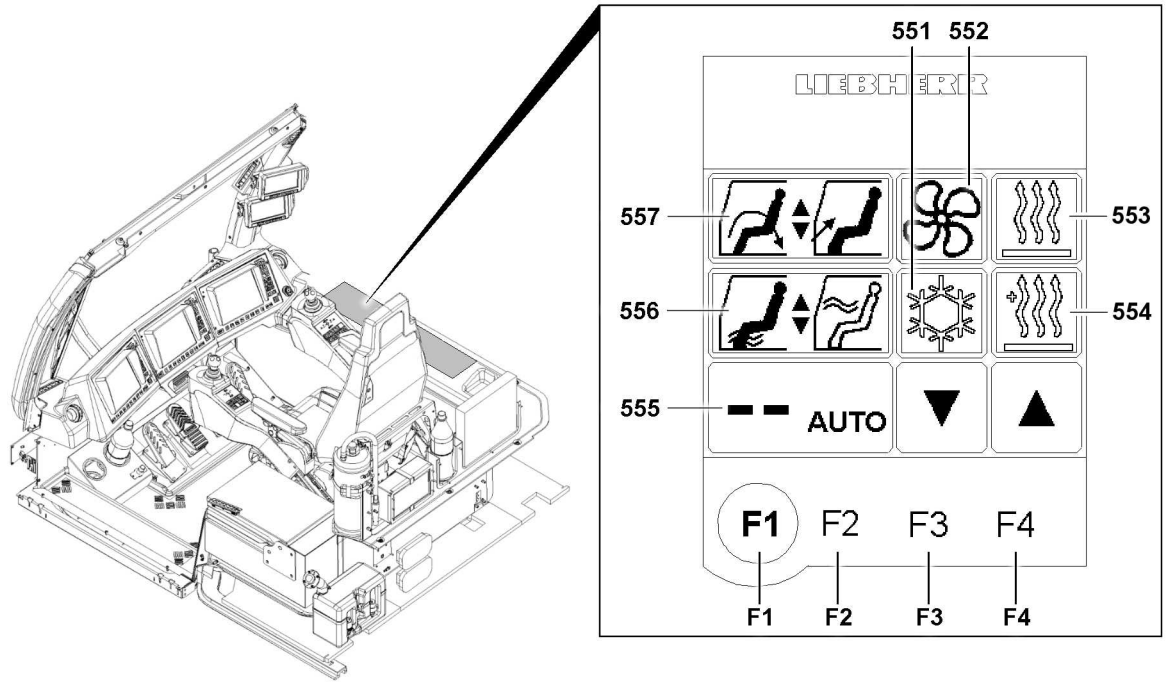

Fig.127306: AUTO heating mode

If heating mode „AUTO“ is selected, the climate control system is automatically enabled.

Note

▶ The blower / fan stage is automatically regulated in the „AUTO“ heating mode, whereby the maximum blower / fan stage is available, which was set before manually.

In „AUTO“ heating mode, the crane driver can adjust the temperature infinitely variable.

By pressing the function key **F3**, the temperature is reduced steplessly from maximum value to minimum value and if the function key **F3** is pressed again, the heater is turned off.

LWE/LR 1600-2-001/18101-07-02/en

copyright © Liebherr-Werk Ehingen GmbH 2018

Note

- ▶ If a status „Heater OFF“ has been reached, the heater does **not** operate but the cab can continue to be cooled.
- ▶ The crane cab is **not** heated.

Leave the „OFF“ state by pressing the function key **F4** and the temperature can be increased infinitely variable from minimum value to maximum value.

Heating mode „AUTO“			
Status display	Status	Temperature in [**°C**] or [°F]	Icon display
-- AUTO	**„OFF“**	**—**	*Heater „OFF“*
15 °X AUTO *Minimum value*	**„ON“**	**15**	
30 °X AUTO *Maximum value*	**„ON“**	**30**	

▶ Select the „heater **553**“ function by „touching“.

Result:

– The „heater“ icon is then surrounded with a black border.
– The status display **555** contains the current status of the „heater“.

▶ Press the function key **F2**.

Result:

– Heating mode „MANUAL“ is switched to heating mode „AUTO“.

▶ Press the function key **F3**.

Result:

– The „temperature setting“ is reduced in stages in 1 °C increments.
– The amount of warm air supply into the crane cab is regulated according to the current temperature setting.

▶ Press the function key **F4**.

Result:

– The „temperature setting“ is increased in stages in steps of 1 °C.
– The amount of warm air supply into the crane cab is regulated according to the current temperature setting.

LWE/LR 1600-2-001/18101-07-02/en

copyright © Liebherr-Werk Ehingen GmbH 2018

2.8 Procedure for fogged windows

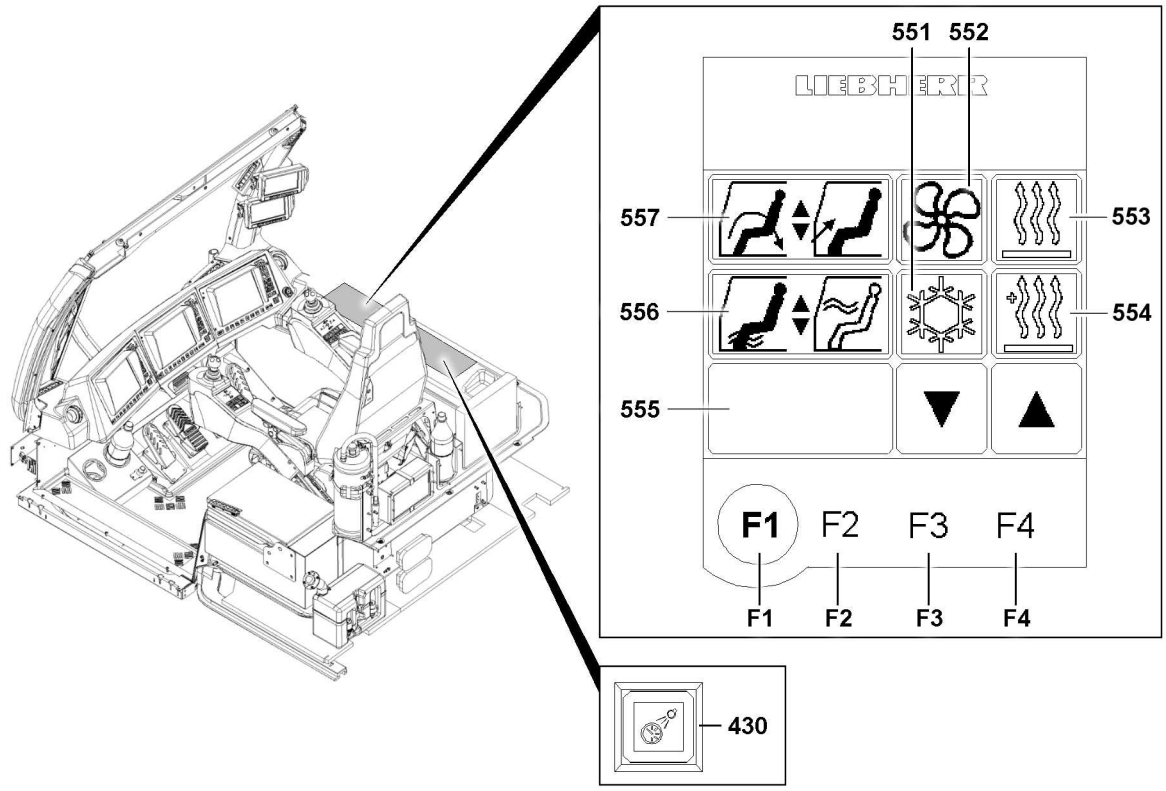

Fig.127301

2.8.1 General

A certain order must be followed to clear the windows quickly for subsequent crane operation.

The settings can be made manually or semi-automatically.

2.8.2 Adjusting the settings manually in the „Climate control settings“ menu

- ▶ Set the air distribution **556** to maximum level „up“ - stage 5.
- ▶ Open the air vents.
- ▶ Set recirculating air **557** to maximum level - stage 5.
- ▶ Set the fan / blower **552** to maximum level - stage 5.
- ▶ Set the climate control system **551** to „ON“.
- ▶ Set the heater **553** to maximum possible level in „**manual**“ heating mode.
- ▶ If the crane engine is cold, add the auxiliary heater **554**, if required.

2.8.3 Making adjustments semi-automatically in the „Climate control settings“ menu

- ▶ Set the heater **553** to „**AUTO**“ heating mode.
- ▶ Set the air distribution **556** to maximum level „up“ - stage 5.
- ▶ Open the air vents.
- ▶ If the crane engine is cold, add the auxiliary heater **554**, if required.

Note

- ▶ The other functions are automatically added by the system.

LWE/LR 1600-2-001/18101-07-02/en

copyright © Liebherr-Werk Ehingen GmbH 2018

2.9 Operating the engine-independent auxiliary heater

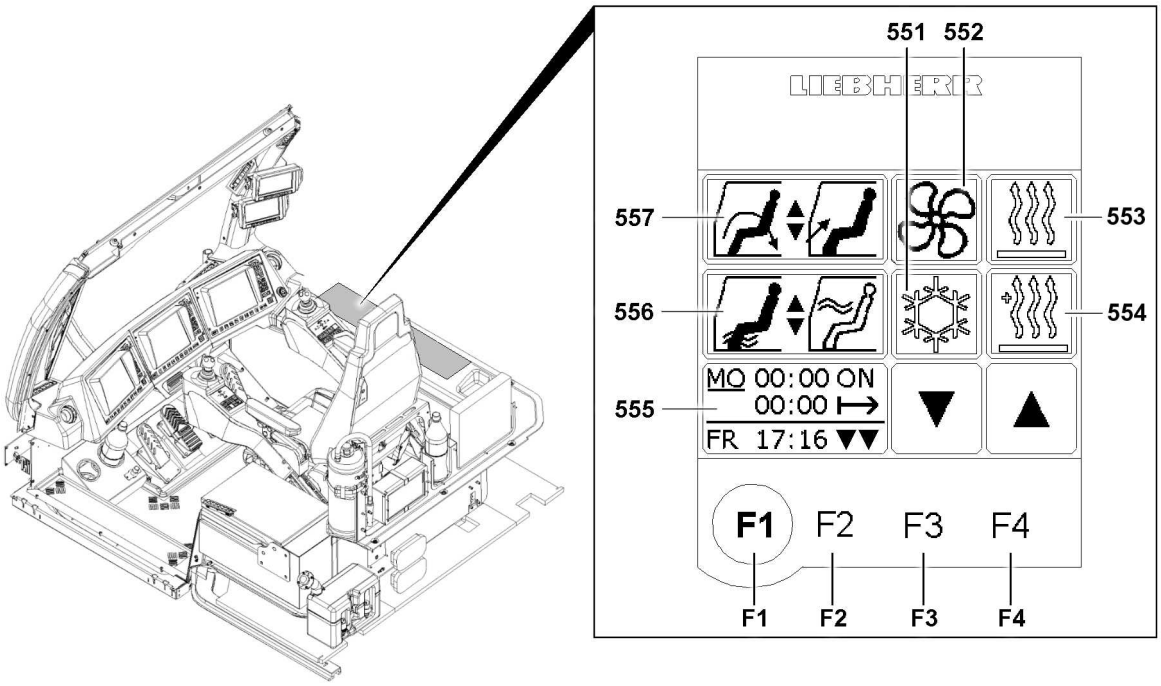

Fig.127307

The engine-independent auxiliary heater is used to heat the crane cab when the engine is turned off and as auxiliary heater at low ambient temperatures, if the engine-dependent heater is insufficient.

At ambient temperatures of below -20 °C , the crane engine must be pre-heated by the engine-independent auxiliary heater. In this case, the crane cab does not have to be heated too.

Note

▶ In summer, run the auxiliary heater once a month for approx. 15 to 20 minutes.

Carry out maintenance work on the auxiliary heater according to the supplied manufacturer's operating instructions.

2.9.1 General

NOTICE

Damage of auxiliary heater!

▶ Fill all units with sufficient service fluids for winter operation according to the lubrication chart.

DANGER

Danger of poisoning and suffocation in enclosed areas!

▶ Only operate the engine-independent auxiliary heater in enclosed areas such as garages or workshops only if an exhaust system is used, even in „Programming mode“.

DANGER

Danger of explosion!

In areas where combustible fumes or dust could form, e.g. in the vicinity of storage areas for fuel, coal, wood dust or grain or similar and in the vicinity of filling stations or tank farms, there is a danger of explosion.

▶ Turn the auxiliary heater off.

LWE/LR 1600-2-001/18101-07-02/en

copyright © Liebherr-Werk Ehingen GmbH 2018

2.9.2 Adding the engine-independent auxiliary heater manually

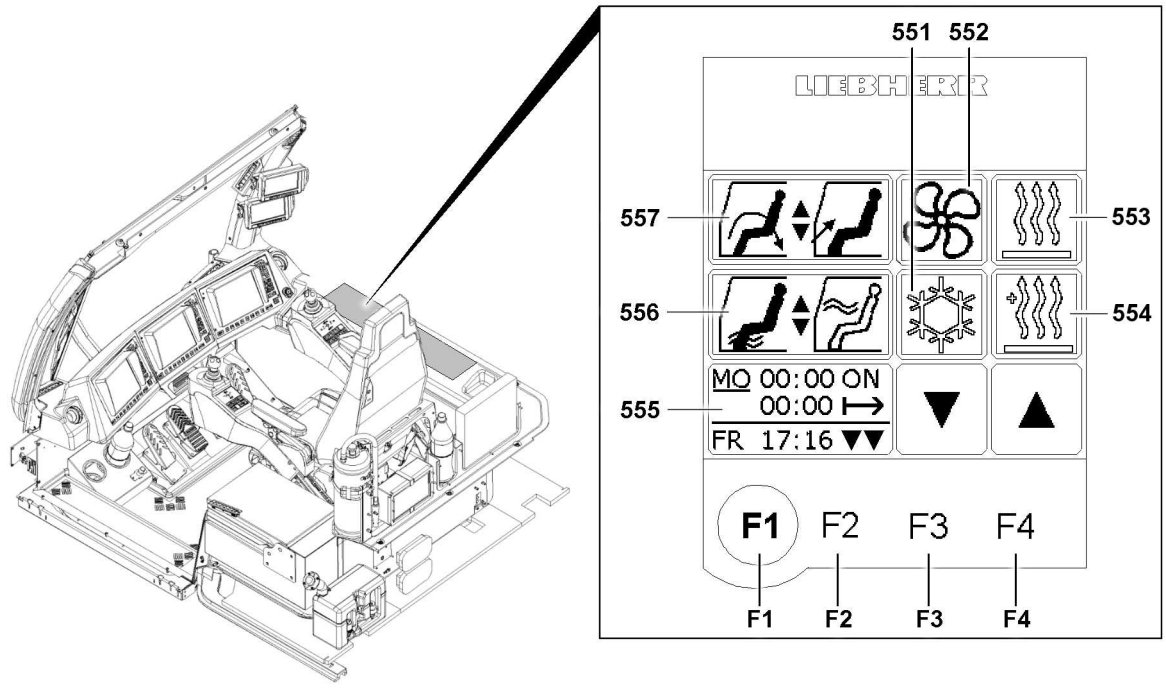

Fig.127307

The engine-independent auxiliary heater can be added manually in driving or crane operation mode. The auxiliary heater, icon **554**, must be selected and turned on.

If the auxiliary heater is in the „OFF“ state, pressing function key **F4** once adds the cab auxiliary heater.

Pressing the function key **F4** again turns engine preheating auxiliary heater on.

Note

▶ If the auxiliary heater it added for engine pre-heating, then the crane cab is **not** heated.

Manual auxiliary heater			
Status display	Function key **F4**	Function key **F3**	Icon display
MO 06:45 ON 00:30 FR 17:16 **OFF**	▲ F4	— —	*Auxiliary heater „OFF“*
MO 06:45 ON 00:30 FR 17:16 **ON**	▲ F4	▼ F3	*Auxiliary heater - cab „ON“*
MO 06:45 ON 00:30 FR 17:16 **ON**	▲ F4	▼ F3	*Auxiliary heater - engine pre-heating „ON“*

LWE/LR 1600-2-001/18101-07-02/en

copyright © Liebherr-Werk Ehingen GmbH 2018

Engaging the auxiliary heater

▶ Select heat **553** and set the required temperature via function key **F3** or function key **F4** (see section entitled „Turning the heater on“).

Note

▶ The temperature adjustment via function key **F3** or function key **F4** is only needed to heat the crane cab.

▶ Select auxiliary heater **554** and press function key **F3** or function key **F4** until the required setting is displayed in the status display **555** (see chart).

Result:

– The auxiliary heater is switched on.
– Depending on the setting, the crane cab or the engine is heated.

Note

▶ When the crane cab is „warm“ and the engine is at the operating temperature, turn the auxiliary heater off.
▶ This increases the service life of the auxiliary heater.

Turning the auxiliary heater off

▶ Select auxiliary heater **554** and press the function key **F3** until the status display **555** shows the setting auxiliary heater „OFF“ (**OFF**).

Result:

– The auxiliary heater is turned off.
– An shut off delay is carried out each time the auxiliary heater is turned off.

▶ Turn the battery master switch off if the crane is temporarily not being used.

2.9.3 Adding the engine-independent auxiliary heater in programming mode

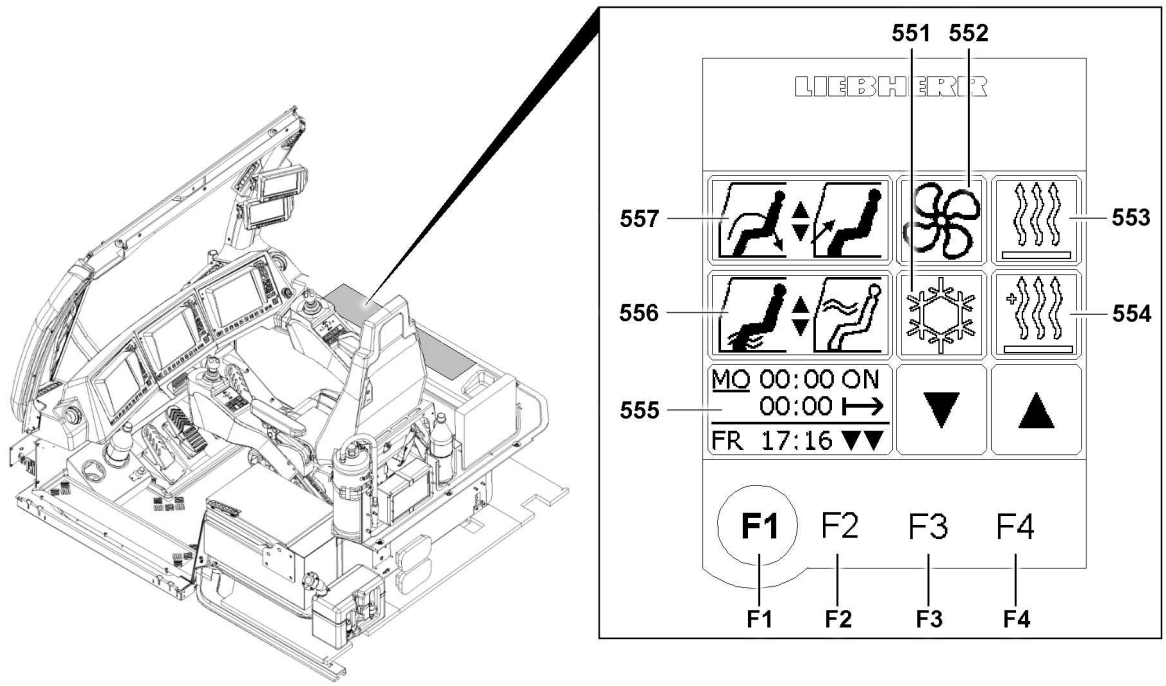

Fig.127307

LWE/LR 1600-2-001/18101-07-02/en

copyright © Liebherr-Werk Ehingen GmbH 2018

The engine-independent auxiliary heater to heat the cab or for engine preheating can be programmed a **maximum** of one week in advance.

Note

▶ It is advisable to restrict auxiliary heater programming to two days, since there is a risk of the battery discharging extremely quickly at minus temperatures.

NOTICE

Clogging of auxiliary heater

In the transitional period, the auxiliary heater can clog up and be damaged as a result of the short time in operation.

▶ By selecting the program „Summer operation“, the clogging and damage of the auxiliary heater can be prevented.

Auxiliary heater programmed			
Status display	Function key **F4**	Function key **F3**	Icon display
MO 06:45 ON 00:30 ↦ FR 17:16 **OFF**	▲ F4	— —	*Auxiliary heater „OFF“*
MO 06:45 ON 00:30 ↦ FR 17:16 ☼	▲ F4	▼ F3	*Auxiliary heater „Summer operation“*
MO 06:45 ON 00:30 ↦ FR 17:16 **ON**	▲ F4	▼ F3	*Auxiliary heater „On“*
MO 06:45 ON 00:30 ↦ FR 17:16 ◴	▲ F4	▼ F3	*Auxiliary heater „programmed“*
MO 06:45 ON 00:30 ↦ FR 17:16**ON**≒	▲ F4	▼ F3	*Auxiliary heater with engine preheating „On“*
MO 06:45 ON 00:30 ↦ FR 17:16 ◴≒	— —	▼ F3	*Auxiliary heater with engine preheating „programmed“*

copyright © Liebherr-Werk Ehingen GmbH 2018

Programming the auxiliary heater

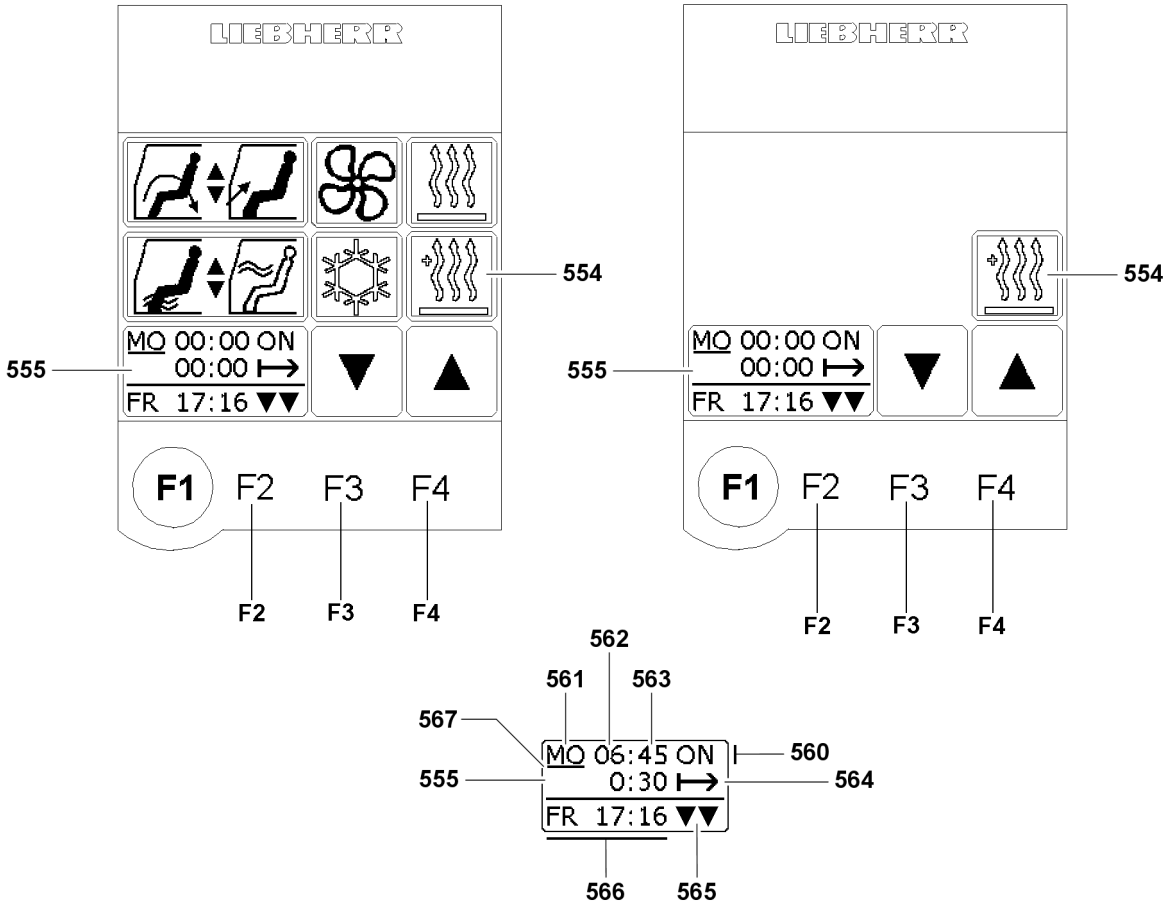

Fig.127308

In order to access auxiliary heater programming mode, press the function key **F4** until the status display shows the „clock“ (programming mode for cab heater), or the „clock with wave“ (programming mode for engine preheating), illustration **1**.

The status display **555** contains the current day of the week with the time **566**. The time in the status display **555** is coupled to the „real-time clock“ in the test system.

Note

▶ The procedure for programming the auxiliary heater (to heat the crane cab or for engine preheating) is identical in both cases.

Make sure that the following prerequisites are met **before** the auxiliary heater is programmed:

– The desired temperature for the heater has been set.
– The fan / blower is set to stage 0 („OFF“).
– The desired programming mode, cab heater („clock“) or engine preheating („clock with wave“) has been set.

▶ Press the function key **F2**.

Result:

– The auxiliary heater programming interface is displayed, illustration **2**.
– The status display **555** shows the cursor **567** below the editable input value.

Note

▶ The cursor **567** is positioned on day programming **560** by default.

LWE/LR 1600-2-001/18101-07-02/en

copyright © Liebherr-Werk Ehingen GmbH 2018

▶ Press the function key **F4** and select the required day of the week **561** (**ascending** order).
or
Press the function key **F3** and select the required day of the week **561** (**descending** order).

Result:

– The selected day of the week is „set“.

▶ Press the function key **F2**.

Result:

– The cursor **567** changes from day programming **561** to hour programming **560**.

▶ Press the function key **F4** and select the desired hour **562** (**ascending** order).
or
Press the function key **F3** and select the desired hour **562** (**descending** order).

Result:

– The selected hour is „set“.

▶ Press the function key **F2**.

Result:

– The cursor **567** changes from hour programming **562** to minute programming **563**.

▶ Press the function key **F4** and select the desired minute **563** (**ascending** order).
or
Press the function key **F3** and select the desired minute **563** (**descending** order).

Result:

– The selected minute is „set“.

▶ Press the function key **F2**.

Result:

– The cursor **567** changes from minute programming **563** to turn on duration **564**.

▶ Press the function key **F4** and select the desired turn on duration **564** (ascending).
or
Press the function key **F3** and select the desired turn on duration **564** (descending).

Result:

– The selected turn on duration **564** is „set“.

Note
▶ The turn on duration **564** for the auxiliary heater is restricted to a maximum of **0:55 minutes**.
▶ The cursor **567** automatically changes to the minutes setting for the turn on duration **564**.
▶ The turn on duration **564** can only be changed in 5 minute increments.

▶ Press the function key **F2**.

Result:

– The cursor **567** changes from turn on duration **564** to day programming **560**.
– The programming for the auxiliary heater is complete.

▶ Select the auxiliary heater **554** icon by „touching“.

Result:

– The programmed settings are taken over.
– The „Climate control settings“ menu is displayed.
– The auxiliary heater starts to operate when the programmed turn on time for the heater operation is reached and turns the heater operation off again when the selected turn on duration has expired.

LWE/LR 1600-2-001/18101-07-02/en

copyright © Liebherr-Werk Ehingen GmbH 2018

– The auxiliary heater runs in automatic regulating operation, depending on the heater setting in „manual“ or „AUTO“.

Note

▶ The auxiliary heater programming must be manually reset to „zero“ after the programmed heating period. Otherwise, the auxiliary heater is turned on automatically according to the programming.

Resetting the auxiliary heater programming

To reset the auxiliary heater programming, proceed as described in „Auxiliary heater programming“.

▶ Reset the values in the status display **555** to „zero“.

Result:

– The programming is turned off.

Note

▶ The programming can be manually changed at any time or it can be turned off altogether.

2.10 Bleeding the heating system

When draining the engine coolant, the contents of the heating system will also be drained because the engine and heater operate as one circuit. When refilling the system, it must be carefully bled.

▶ Fill the coolant via the expansion tank of the engine cooling circuit as specified in the lubrication chart.
▶ Start the engine as described in the Crane operating instructions, chapter 4.03.
▶ Set the heater to „warm“.
▶ Check the expansion tank for air bubbles.

Result:

– The engine is bled as soon as no more air bubbles rise up.

When no more air bubbles appear in the expansion tank:
▶ Set the heater to „cold“.

Result:

– The heater circuit will be bled.

▶ Check the expansion tank for air bubbles.

Result:

– The heater circuit is bled as soon as no more air bubbles rise up.

LWE/LR 1600-2-001/18101-07-02/en

copyright © Liebherr-Werk Ehingen GmbH 2018

6.05 Emergency take down

1	Emergency operation	3
2	Emergency operation with assembly plate Variation 1 (V1)	9
3	Emergency operation of slewing gear(s) with assembly plate Variation 1 (V1)	15
4	Emergency operation with assembly plate(s) Variation 2 (V2)	19
5	Emergency operation slewing gear(s) with assembly plate(s) Variation 2 (V2)	29
6	Emergency operation of winch 4 (W IV) on the LR1600/2 and LR1600/2-W	33
7	Ending emergency operation	37

LWE/LR 1600-2-001/18101-07-02/en

copyright © Liebherr-Werk Ehingen GmbH 2018

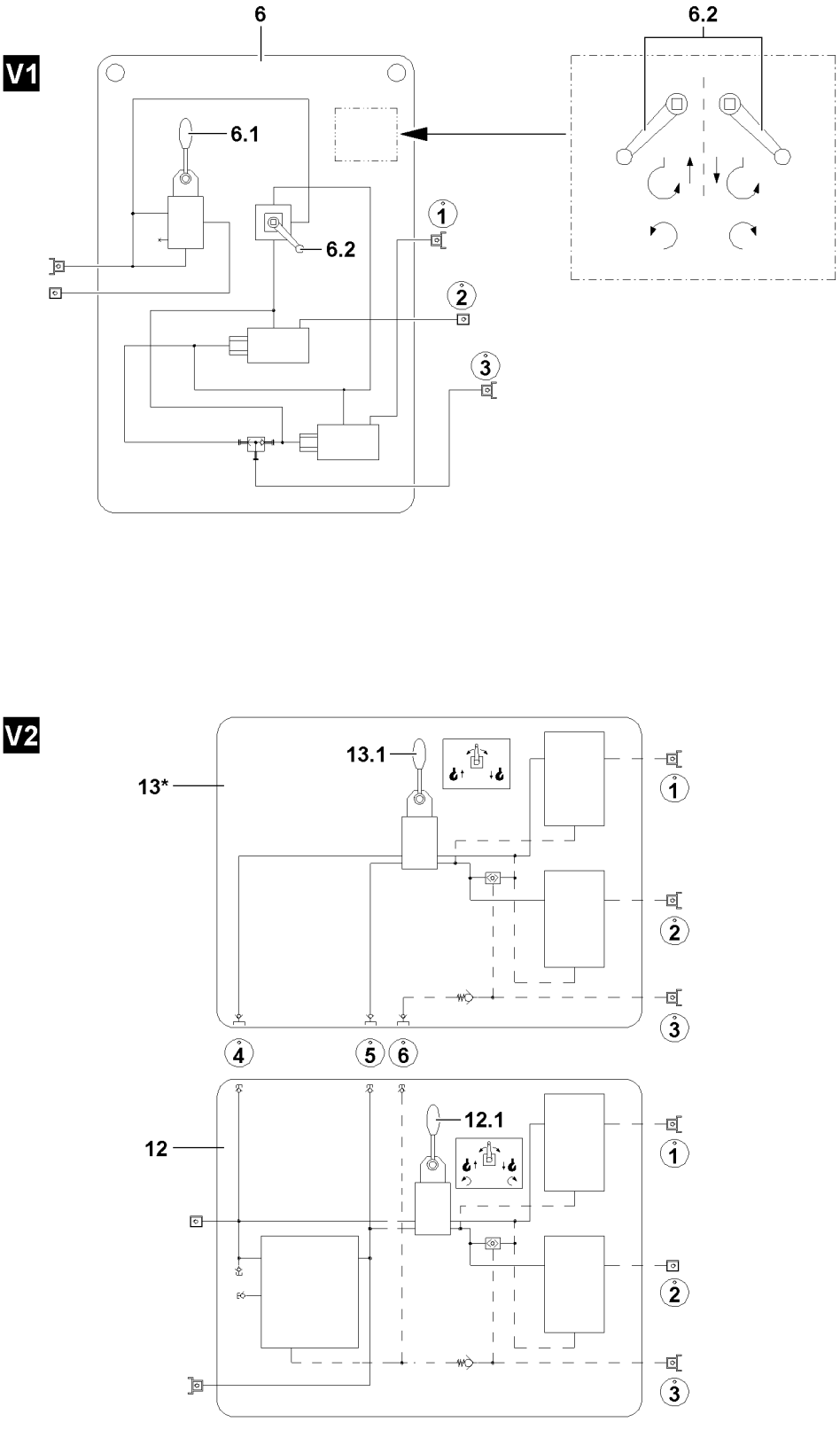

LWE/LR 1600-2-001/18101-07-02/en

Fig.109407

copyright © Liebherr-Werk Ehingen GmbH 2018

1 Emergency operation

Note
▶ The illustrations in this chapter are examples and may not apply exactly to your crane!

Note
▶ Before you start with preparations for emergency operation, check which of the following assembly plates you have available to carry out the emergency operation!

There are two **different** variations of assembly plates.

With variation 1 **V1**, all winches, which are equipped with the respective auxiliary hydraulic for emergency operation and the slewing gear can be actuated, each individually.

With variation 2 **V2**, which consists of two assembly plates, all winches, which are equipped with the respective auxiliary hydraulic for emergency operation can be actuated, each individually, **or** winch 1 **WI** and winch 2 **WII** can be actuated in parallel operation or the slewing gear can be actuated individually.

Note
▶ Observe the following charts!

	Variation 1 (V1)	**Variation 2(V2)**
	each in individual operation	each in individual operation
Winch 1	X	X
Winch 2	X	X
Winch 1II2[1)]	—	X
Winch 3	X	X
Winch 4	X	X
Winch 5	X	X
Winch 6	X	X
Slewing gear	X	X

1) Parallel operation Winch 1 and winch 2 (1II2)

LWE/LR 1600-2-001/18101-07-02/en

copyright © Liebherr-Werk Ehingen GmbH 2018

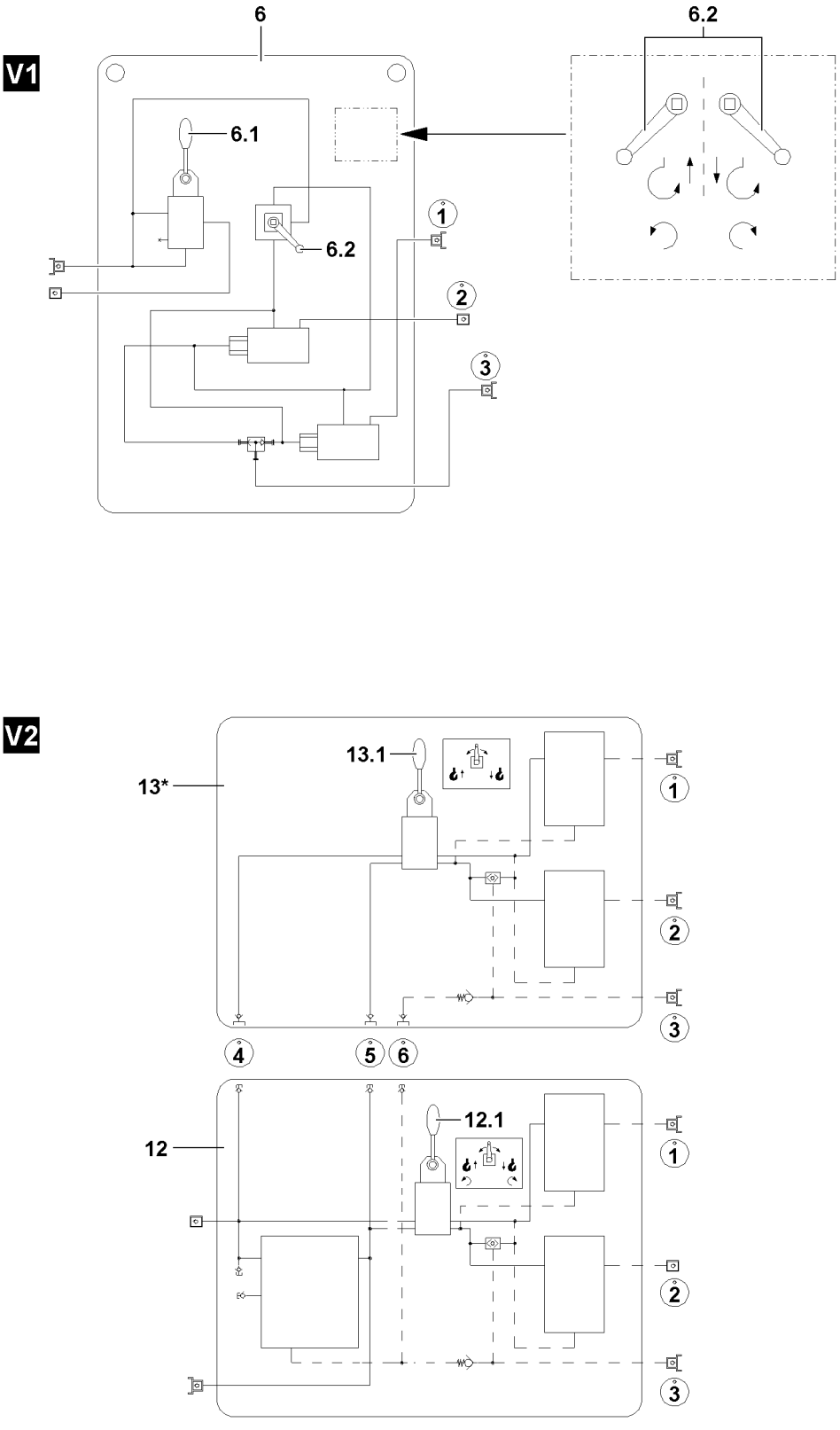

LWE/LR 1600-2-001/18101-07-02/en

Fig.109407

copyright © Liebherr-Werk Ehingen GmbH 2018

1.1 General danger notes

DANGER
Significant accident risk during emergency operation!
During an emergency operation, crane movements are no longer monitored by the LICCON computer system!
In the event of improper operation or deliberate misuse, the crane can topple over!
There is an increased risk of accident if the following danger notes are not observed!
Personnel can be severely injured or killed!
This could result in high property damage!
▶ All hazard warnings are to be observed and maintained!

General danger notes!

1. **Emergency operation of the crane superstructure may only be carried out:**
   - **To remove a dangerous situation.**
   - **After consultation with customer service at LIEBHERR-Werk Ehingen GmbH.**
   - **By authorized personnel who are knowledgeable of the hydraulic circuit diagram, the connection diagram and carrying out emergency operation.**
   - **By authorized personnel who are aware of the risks of emergency operation.**
   - **To carry out load reducing movements.**
2. **The danger zone must be blocked off!**
3. **No persons or objects may remain in the danger zone!**
4. **If a load is on the hook, then it must first be set down to relieve the boom!**
5. **During emergency operation, all safety devices, with the exception of „winch spooled out“ are automatically bypassed**!
6. **In the event of a defect or failure of the LICCON computer system, each step must be carried out and monitored with extreme caution and care, since a visual check on the LICCON monitor is no longer possible. Visual check!**
7. **All crane movements must be travelled with extreme caution and at the lowest speed!**
8. **The crane operator must be in visual contact with auxiliary personnel or guides person!**

Note
Please note!
▶ The hydraulic supply for the crane can, to the extent that the crane has been equipped, take place through an emergency unit*. If this is not the case, the crane must be taken down by using additional auxiliary cranes!

WARNING
The crane can topple over!
▶ The boom may only be luffed down if the stability of the crane permits this action, observe information in the load tables and maintain them!
▶ When taking down the boom, the information in the erection and take down charts are to be observed and followed!

LWE/LR 1600-2-001/18101-07-02/en

copyright © Liebherr-Werk Ehingen GmbH 2018

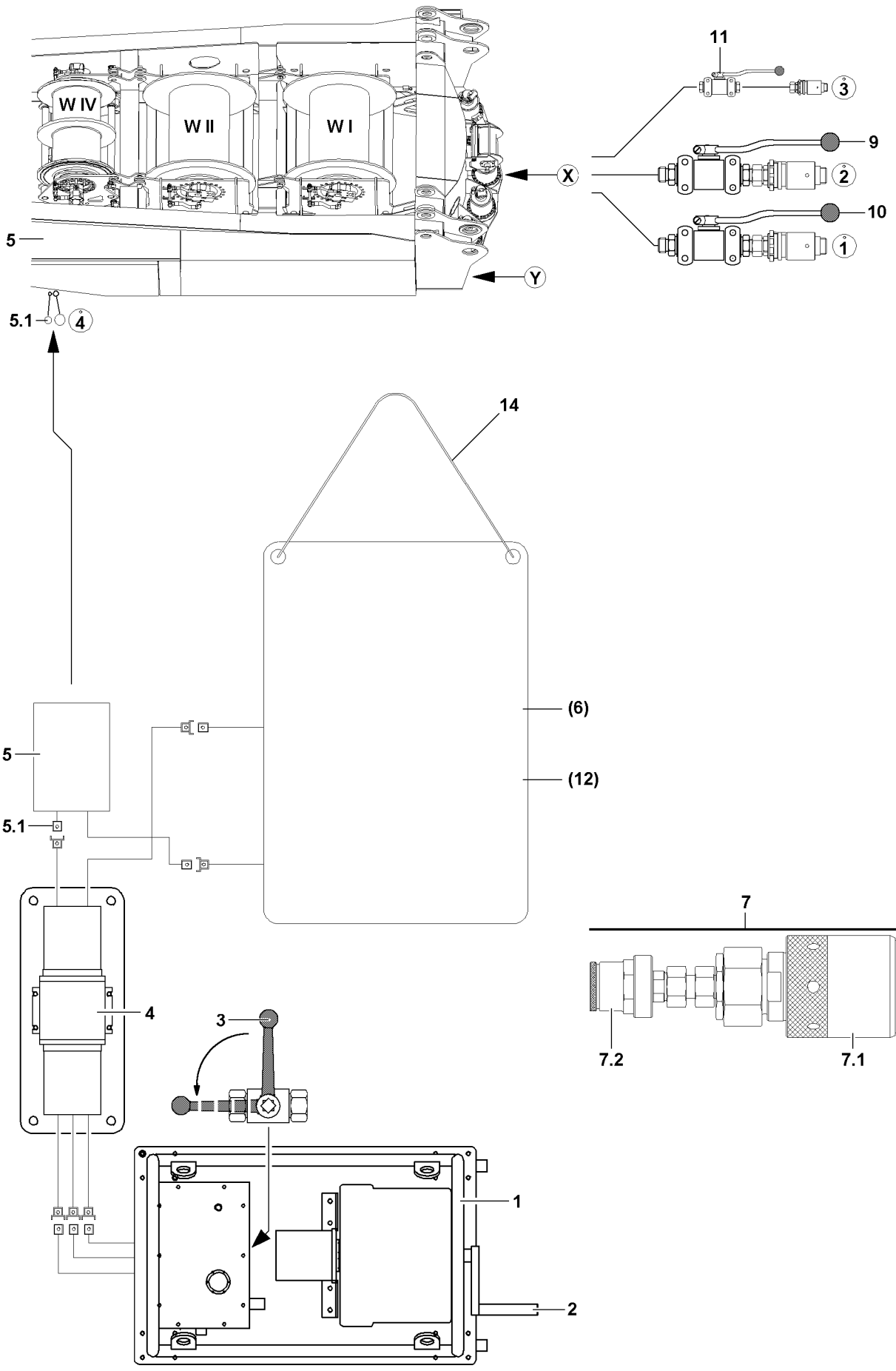

Fig.109408

LWE/LR 1600-2-001/18101-07-02/en

copyright © Liebherr-Werk Ehingen GmbH 2018

1.2 Handling of assembly plates

WARNING
Falling assembly plates!
Non-secured assembly plates can fall down when carrying out the emergency operation!
Personnel can be severely injured or killed!
- ▶ For emergency operation, secure the assembly plates with the chains **14** to prevent them from falling down!
- ▶ Do not secure the assembly plates near movable crane components!

1.3 Prerequisites for emergency operation

Note
- ▶ On the basis of different line diameters on the hydraulic lines, false couplings are prevented, additionally the hydraulic connections are identified with numbers!

Make sure that the following prerequisites are met:
- The hydraulic circuit diagram is available.
- The hydraulic system is functioning.
- An emergency operation aggregate **1** is available.
- A „Hydraulic transformer **4**“ is available.
- The assembly plate(s) are available.
- Reducer sections **7** (adapter) are available.
- The dust plugs for the hydraulic connections are removed.

1.4 Establishing the hydraulic connections

WARNING
Danger due to hydraulic pressure!
If the hydraulic lines are pressurized when releasing the connections, it can lead to severe injuries to assembly personnel!
- ▶ Relieve the pressure in the hydraulic lines before releasing!

- ▶ Establish the hydraulic connections from the emergency operation aggregate* **1** to the transformer **4**.
- ▶ Establish the hydraulic connection from the transformer **4** to the (suction line) on theturntable **5** of the crane, connection **5.1**.
- ▶ Hydraulic connection (return line, number **4**) from the turntable of the crane to the assembly plate **6** or to the assembly plate **12**.
- ▶ Establish the hydraulic connection (pressure line) from the transformer **4** to the assembly plate **6** or to the assembly plate **12**.

LWE/LR 1600-2-001/18101-07-02/en

copyright © Liebherr-Werk Ehingen GmbH 2018

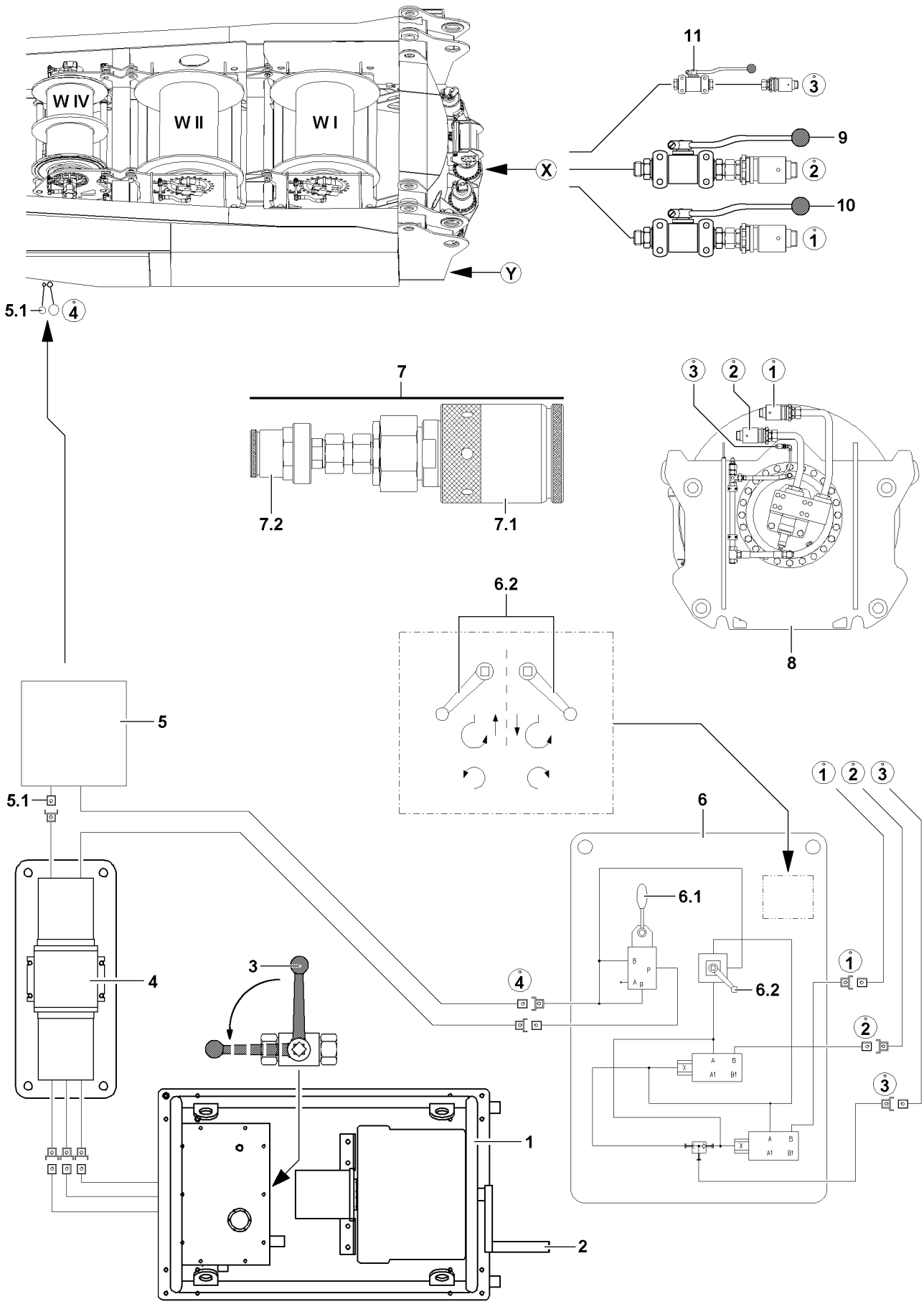

Fig.108301

copyright © Liebherr-Werk Ehingen GmbH 2018

2 Emergency operation with assembly plate Variation 1 (V1)

Note

▶ The procedure of the emergency operation - except winch 4 on the LR1600/2 and LR1600/2-W - is identical for all winches and is described on the example of one winch!

Exception LR1600/2 and LR1600/2-W:

▶ Before emergency operation of winch 4 **W IV** on the LR1600/2 and LR1600/2-W, in addition to the hydraulic connections to lift, lower and for the control pressure of the brake, a control line must be connected, see section: „Emergency operation of winch 4 **W IV** on the LR1600/2 and LR1600/2-W!“

To carry out the emergency operation, use an emergency operation aggregate **1**, a hydraulic transformer **4** and the assembly plate **6**.

2.1 Functional selection on the assembly plate

With the ball valve **6.2** on the assembly plate **6** the following movements are preselected:
– Lift or lower
– Turn left or right

▶ Preselect crane movement: Activate ball valve **6.2** in the corresponding direction.

Moving the hand lever **6.1** determines the speed of the each crane movement.

▶ Operate the hand lever **6.1** and carry out the respective crane movement carefully.

2.2 Start the emergency operation aggregate

▶ Turn the crank **2** on the emergency operation aggregate*** 1**.
▶ Switch the ball valve **3** to „horizontal“ position.

Note

▶ The engine rpm on the emergency operation aggregate can be set via a separate speed regulator!

LWE/LR 1600-2-001/18101-07-02/en

copyright © Liebherr-Werk Ehingen GmbH 2018

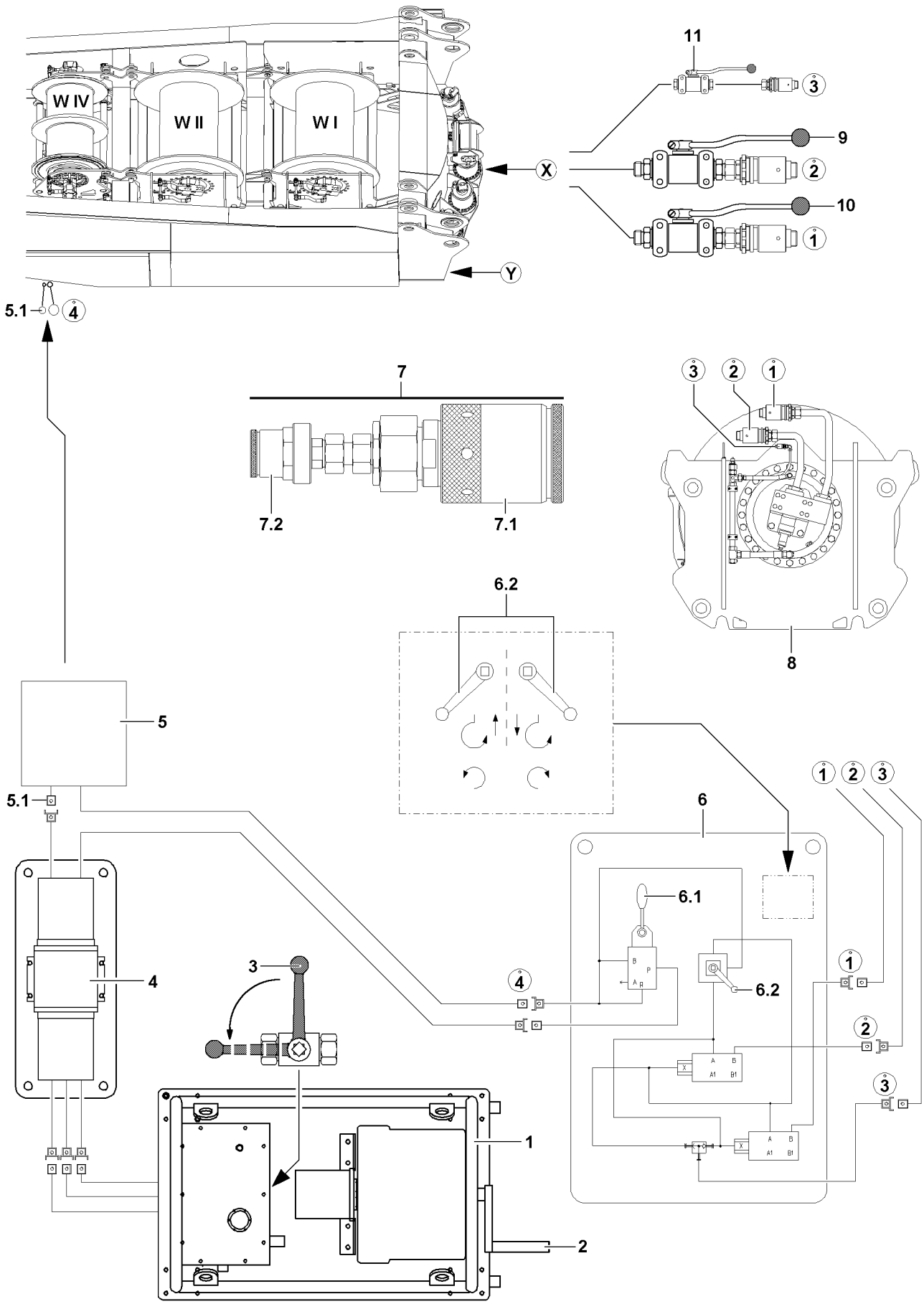

Fig.108301

LWE/LR 1600-2-001/18101-07-02/en

copyright © Liebherr-Werk Ehingen GmbH 2018

2.3 Emergency operation of winch 4 on the LR1600/2 and LR1600/2-W

WARNING
Emergency operation winch 4 **W IV**!
▶ Observe the section „Emergency operation of winch 4 (W IV) on the LR1600/2 and LR1600/2-W“!

2.4 Emergency operation winches

2.4.1 Establishing the hydraulic connections to the winch

Make sure that the following prerequisite is met:
– The pressure in the hydraulic system has been relieved.

▶ Release the hydraulic connections on the corresponding winch.
▶ Install the reducer sections **7** (adapter) with coupling sleeve **7.1** on the connection **1** and on the connection **2** of the winch **8**.

Note
▶ Observe the numbering of the hydraulic lines!

▶ Establish the hydraulic connections for the assembly plate **6** (connection **1**, connection **2** and brake **3**) to the winch **8**.

LWE/LR 1600-2-001/18101-07-02/en

copyright © Liebherr-Werk Ehingen GmbH 2018

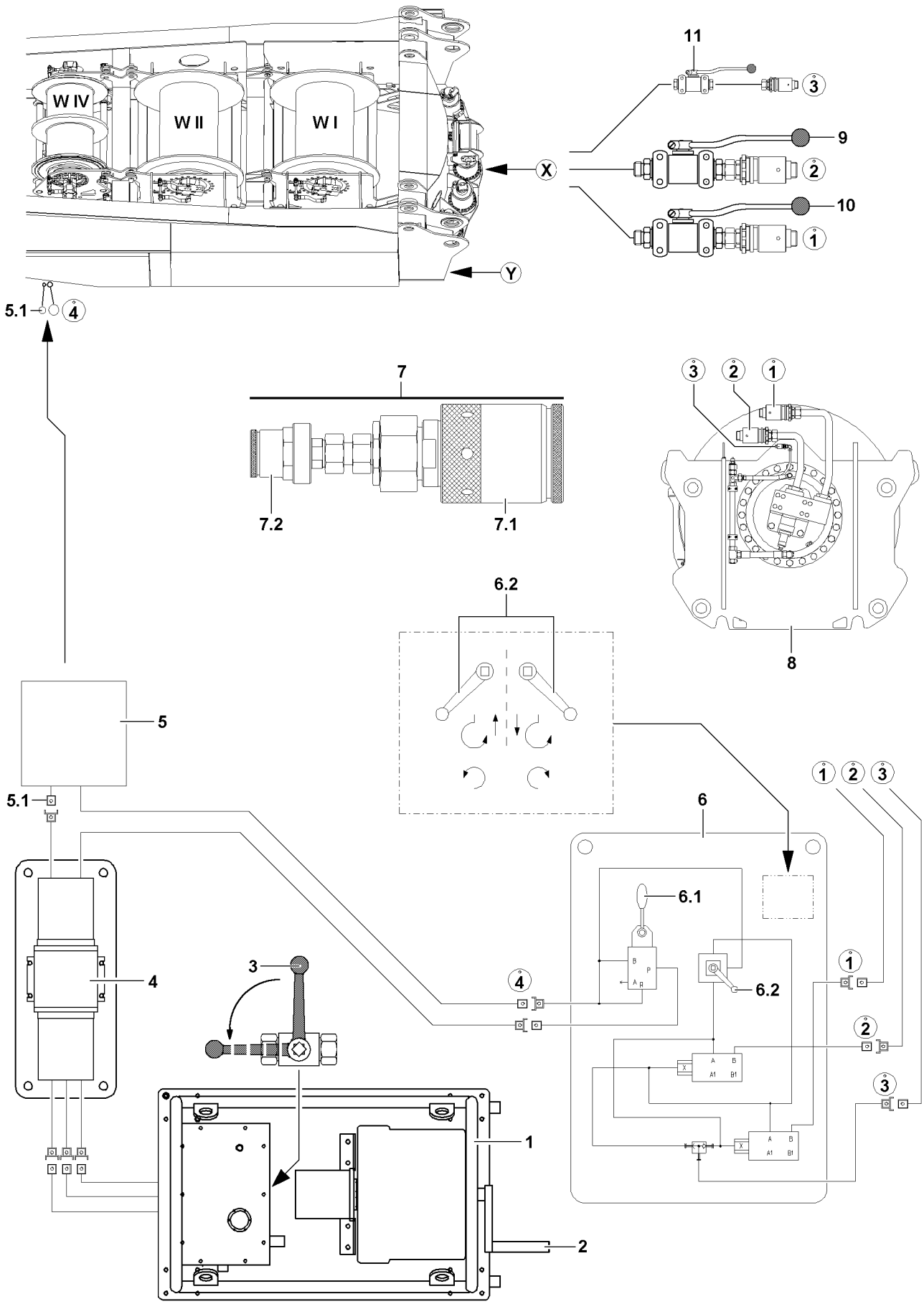

Fig.108301

LWE/LR 1600-2-001/18101-07-02/en

copyright © Liebherr-Werk Ehingen GmbH 2018

2.4.2 Spooling the winch out

▶ Set the ball valve **6.2** for the assembly plate **6** on „lower“.
▶ Move the manual lever **6.1** carefully.

Result:

– The winch spools out.

2.4.3 Spooling the winch up

▶ Set the ball valve **6.2** for the assembly plate **6** on „lift“.
▶ Move the manual lever **6.1** carefully.

Result:

– The winch spools up.

2.5 Disconnecting the hydraulic connections

Make sure that the following prerequisites are met:
– The emergency operation is completed.
– The pressure in the hydraulic system has been relieved.

▶ Disconnect the hydraulic connections from the winch **8** to the assembly plate **6**.
▶ Remove the reducer sections **7** (adapter).
▶ Close off the hydraulic connections of the winch **8** with dust caps.
or
Reconnect the winch **8** onto the hydraulic system of the crane.

LWE/LR 1600-2-001/18101-07-02/en

copyright © Liebherr-Werk Ehingen GmbH 2018

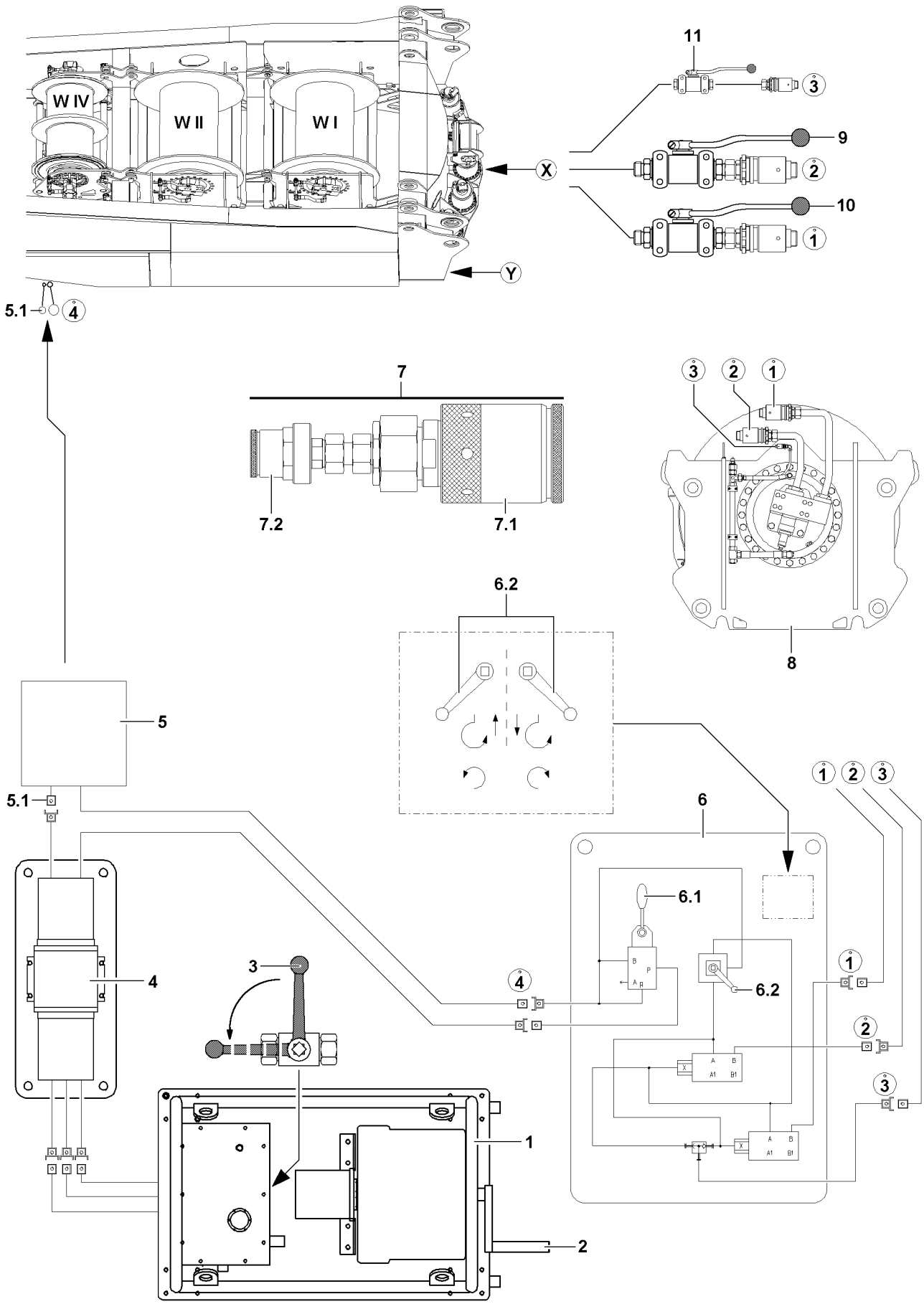

LWE/LR 1600-2-001/18101-07-02/en

Fig.108301

copyright © Liebherr-Werk Ehingen GmbH 2018

3 Emergency operation of slewing gear(s) with assembly plate Variation 1 (V1)

WARNING
Danger due to hydraulic pressure!
If the hydraulic lines are pressurized when releasing the connections, it can lead to severe injuries to assembly personnel!
▶ Relieve the pressure in the hydraulic lines before releasing!

Note
▶ For each crane type, the installation position of the ball valves for emergency operation of the slewing gear on the turntable varies!
▶ Possible installation positions of the ball valve: Point **X** or point **Y**!

3.1 Establishing the hydraulic connection to the slewing gears

Make sure that the following prerequisite is met:
– The pressure in the hydraulic system has been relieved.

Note
▶ Observe the numbering of the hydraulic lines!

▶ Establish the hydraulic connections of the assembly plate **6** (connection **1**, connection **2** and brake **3**) to the „Ball valves“ on the turntable.

3.2 Turning the turntable to the left

▶ Set the ball valve **9** into emergency operation position.
▶ Set the ball valve **10** into emergency operation position.
▶ Set the ball valve **11** into emergency operation position.
▶ Set the ball valve **6.2** for the assembly plate **6** on „turn left“.
▶ Move the manual lever **6.1** carefully.

Result:

– The turntable turns to the left.

LWE/LR 1600-2-001/18101-07-02/en

copyright © Liebherr-Werk Ehingen GmbH 2018

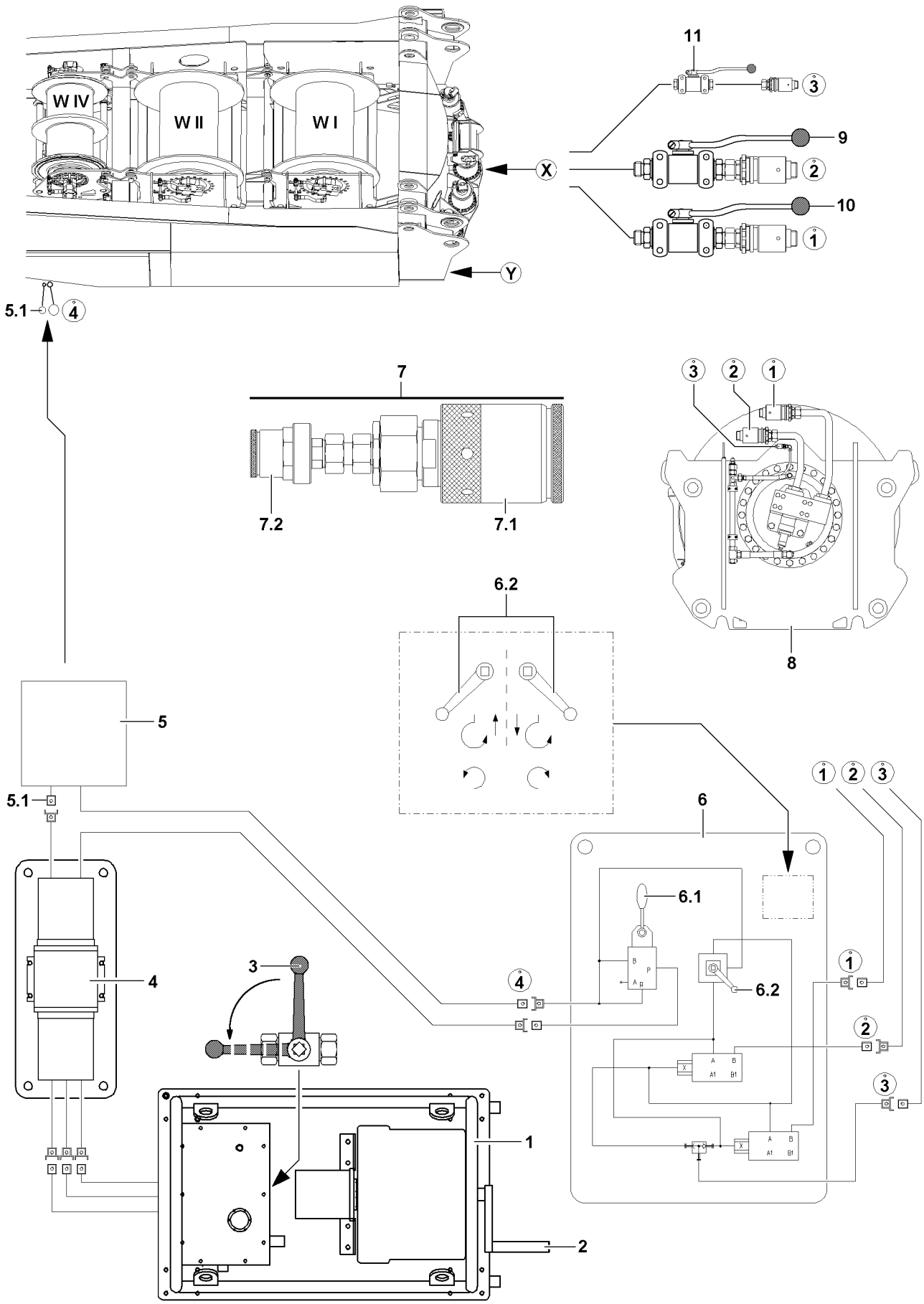

Fig.108301

LWE/LR 1600-2-001/18101-07-02/en

copyright © Liebherr-Werk Ehingen GmbH 2018

3.3 Turning the turntable to the right

▶ Set the ball valve **9** into emergency operation position.
▶ Set the ball valve **10** into emergency operation position.
▶ Set the ball valve **11** into emergency operation position.
▶ Set the ball valve **6.2** for the assembly plate **6** on „turn right“.
▶ Move the manual lever **6.1** carefully.

Result:

– The turntable turns to the right.

3.4 Disconnecting the hydraulic connections

Make sure that the following prerequisites are met:
– The emergency operation is completed.
– The pressure in the hydraulic system has been relieved.

Disconnect the hydraulic connections to the assembly plate **6**.

▶ Reposition the ball valve **9** in position for crane operation.
▶ Reposition the ball valve **10** in position for crane operation.
▶ Reposition the ball valve **11** in position for crane operation.

When the ball valve **9**, ball valve **10** and ball valve **11** are repositioned into crane operation position:
▶ Disconnect the hydraulic connections to the assembly plate **6**.
▶ Close off the hydraulic connections with dust plugs.

LWE/LR 1600-2-001/18101-07-02/en

copyright © Liebherr-Werk Ehingen GmbH 2018

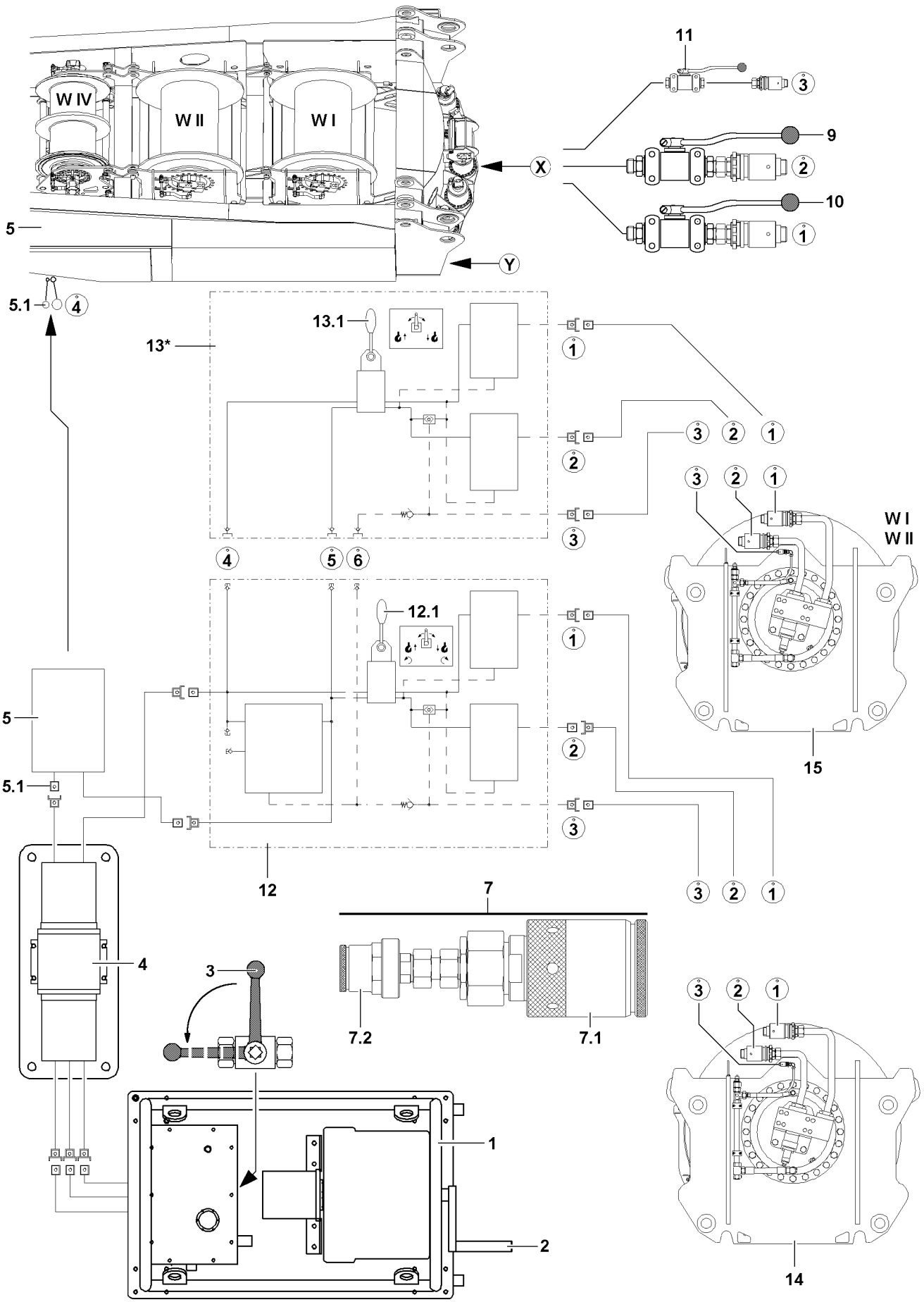

Fig.109393

copyright © Liebherr-Werk Ehingen GmbH 2018

4 Emergency operation with assembly plate(s) Variation 2 (V2)

Note

▶ The procedure of the emergency operation - except winch 4 on the LR1600/2 and LR1600/2-W - is identical for all winches and is described on the example of one winch!

Exception LR1600/2 and LR1600/2-W:

▶ Before emergency operation of winch 4 **W IV** on the LR1600/2 and LR1600/2-W, in addition to the hydraulic connections to lift, lower and for the control pressure of the brake, a control line must be connected, see section: „Emergency operation of winch 4 **W IV** on the LR1600/2 and LR1600/2-W!“

To carry out the emergency operation, use an emergency operation aggregate **1**, a hydraulic transformer **4** and the assembly plate **12**. To carry out the emergency operation from winch 1 **W I** and winch 2 **W II** in parallel operation (1II2), in addition to the assembly plate **12**, the assembly plate **13** is needed. Connect the assembly plate **12** with the assembly plate **13** hydraulically on hydraulic connections 4, 5 and 6.

4.1 Start the emergency operation aggregate

▶ Turn the crank **2** on the emergency operation aggregate*** 1**.
▶ Switch the ball valve **3** to „horizontal“ position.

Note

▶ The engine rpm on the emergency operation aggregate can be set via a separate speed regulator!

4.2 Emergency operation of winch 4 on the LR1600/2 and LR1600/2-W

WARNING

Emergency operation winch 4 **W IV**!

▶ Observe the section „Emergency operation of winch 4 (W IV) on the LR1600/2 and LR1600/2-W“!

copyright © Liebherr-Werk Ehingen GmbH 2018

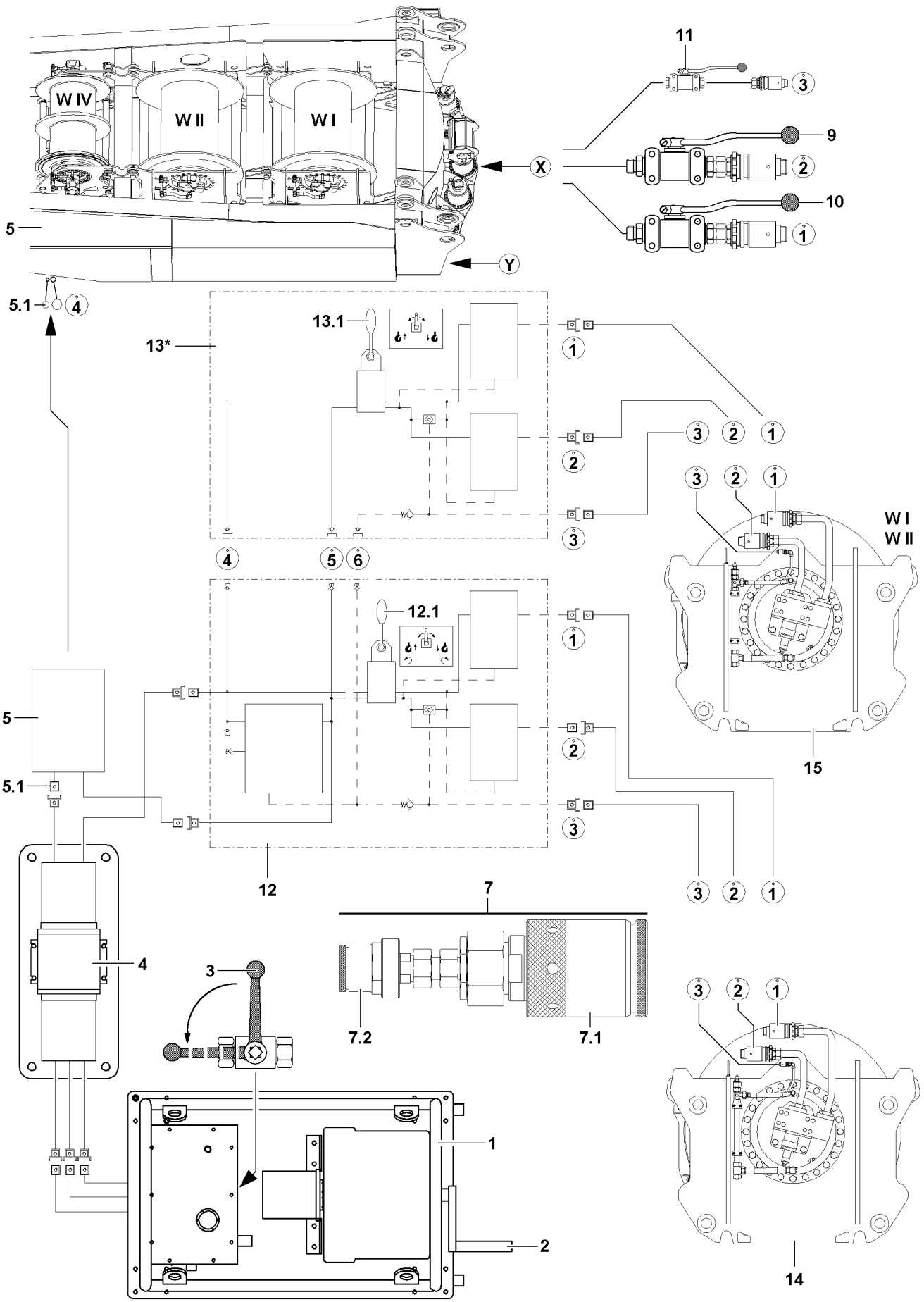

Fig.109393

LWE/LR 1600-2-001/18101-07-02/en

copyright © Liebherr-Werk Ehingen GmbH 2018

4.3 Emergency operation of winches, individual operation

Note

▶ The crane movements are actuated and the speed of the respective crane movement is determined via the ball valve **12.1** and ball valve **13.1**!

4.3.1 Establishing the hydraulic connections to the winch

Make sure that the following prerequisite is met:

– The pressure in the hydraulic system has been relieved.

▶ Release the hydraulic connections on the corresponding winch.

▶ Install the reducer sections **7** (adapter) with coupling sleeve **7.1** on the connection **1** and on the connection **2** of the respective winch.

Note

▶ Observe the numbering of the hydraulic lines!

▶ Establish the hydraulic connection of the assembly plate **12** (connection **1**, connection **2** and brake **3**) to the respective winch.

4.3.2 Spooling the winch out

▶ Set the ball valve **12.1** for the assembly plate **12** on „lower“.

Result:

– The winch spools out.

copyright © Liebherr-Werk Ehingen GmbH 2018

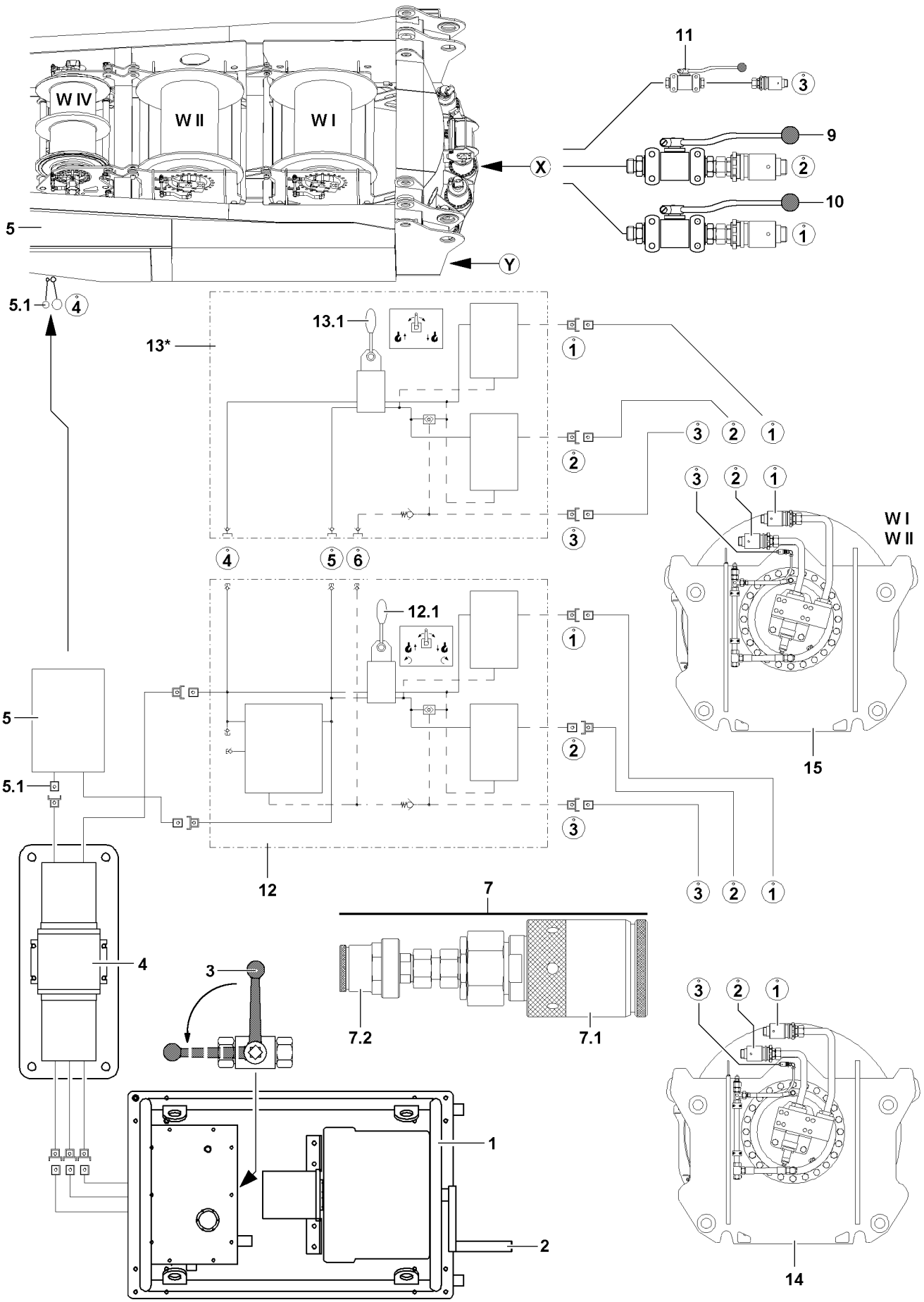

Fig.109393

copyright © Liebherr-Werk Ehingen GmbH 2018

LWE/LR 1600-2-001/18101-07-02/en

4.3.3 Spooling the winch up

▶ Set the ball valve **12.1** for the assembly plate **12** on „lift“.

Result:

– The winch spools up.

4.3.4 Disconnecting the hydraulic connections

Make sure that the following prerequisites are met:
– The emergency operation is completed.
– The pressure in the hydraulic system has been relieved.

▶ Separate the hydraulic connections from the respective winch to the assembly plate **12**.
▶ Remove the reducer sections **7** (adapter).
▶ Close off the hydraulic connections of the winch with dust plugs.
or
Reconnect the winch to the hydraulic system of the crane.

4.4 Emergency operation of winches, parallel operation winch 1II2

Note
▶ The crane movements are actuated and the speed of the respective crane movement is determined via the ball valve **12.1** and ball valve **13.1**!

WARNING
Risk of accident!
If the following notes are not observed, dangerous situations can arise!
Personnel can be severely injured or killed!
▶ If winch 1 and winch 2 are actuated in emergency operation in parallel operation, then it must be ensured that the hook blocks are horizontally aligned!
▶ Always actuate winch 1 and winch 2 simultaneously!

LWE/LR 1600-2-001/18101-07-02/en

copyright © Liebherr-Werk Ehingen GmbH 2018

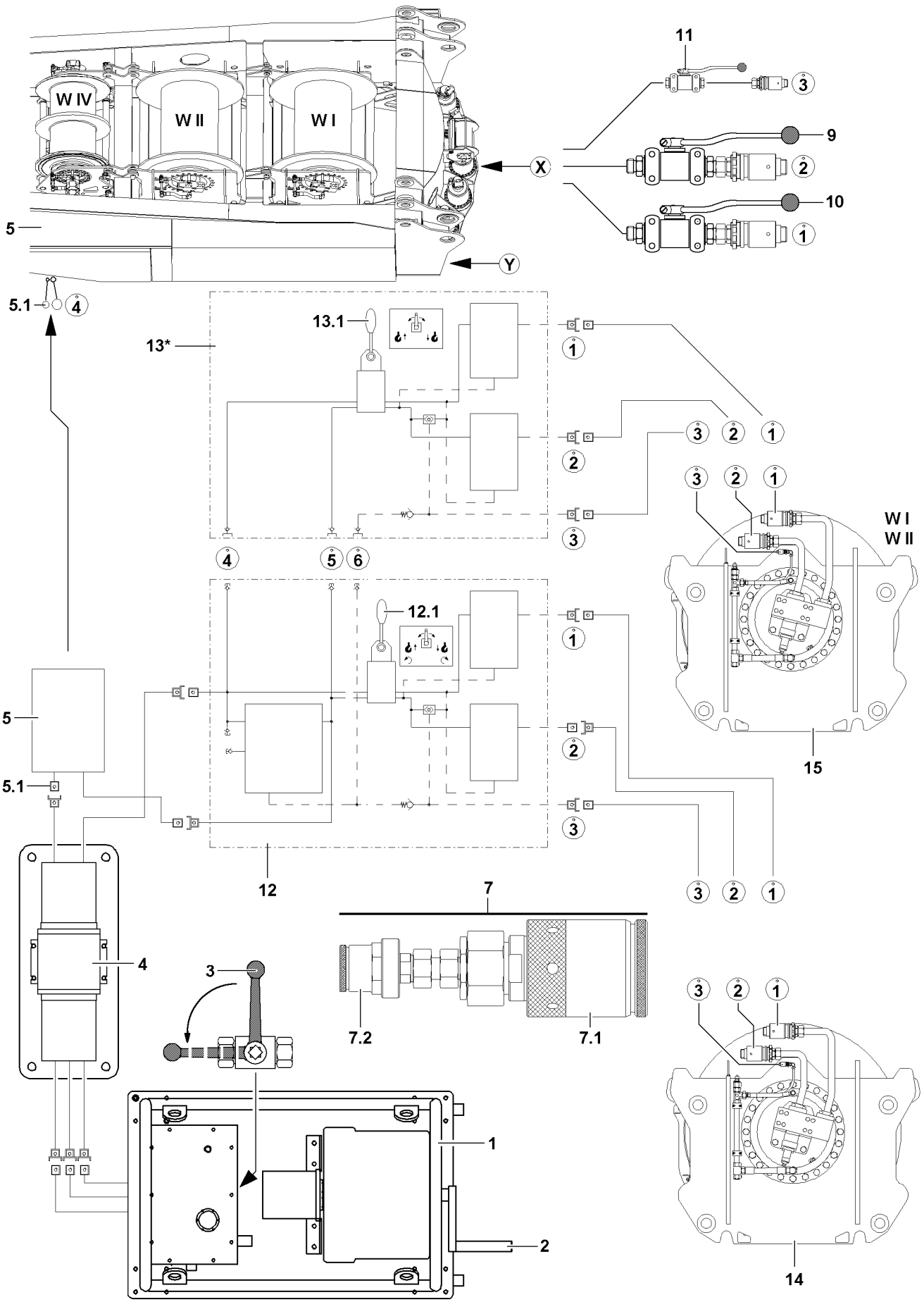

Fig.109393

copyright © Liebherr-Werk Ehingen GmbH 2018

4.4.1 Establishing the hydraulic connections to the winches

Make sure that the following prerequisite is met:
– The pressure in the hydraulic system has been relieved.

▶ Release the hydraulic connections on winch 1 and winch 2.
▶ Install the reducer sections **7** (adapter) with coupling sleeve **7.1** on the connection **1** and on the connection **2** of the respective winch.

Note
▶ Observe the numbering of the hydraulic lines!

▶ Establish the hydraulic connections for the assembly plate **12** (connection **1**, connection **2** and brake **3**) to winch 1.
or
Establish the hydraulic connections for the assembly plate **12** (connection **1**, connection **2** and brake **3**) to winch 2.
▶ Establish the hydraulic connections for the assembly plate **13** (connection **1**, connection **2** and brake **3**) to winch 1.
or
Establish the hydraulic connections for the assembly plate **13** (connection **1**, connection **2** and brake **3**) to winch 2.

4.4.2 Spooling the winches out

Note
▶ Check which winch you have connected to which assembly plate!

▶ Set the ball valve **12.1** for the assembly plate **12** on „lower“.

Result:

– Winch 1 **or** winch 2 spools out.

▶ Set the ball valve **13.1** for the assembly plate **13** on „lower“.

Result:

– Winch 2 **or** winch 1 spools out.

LWE/LR 1600-2-001/18101-07-02/en

copyright © Liebherr-Werk Ehingen GmbH 2018

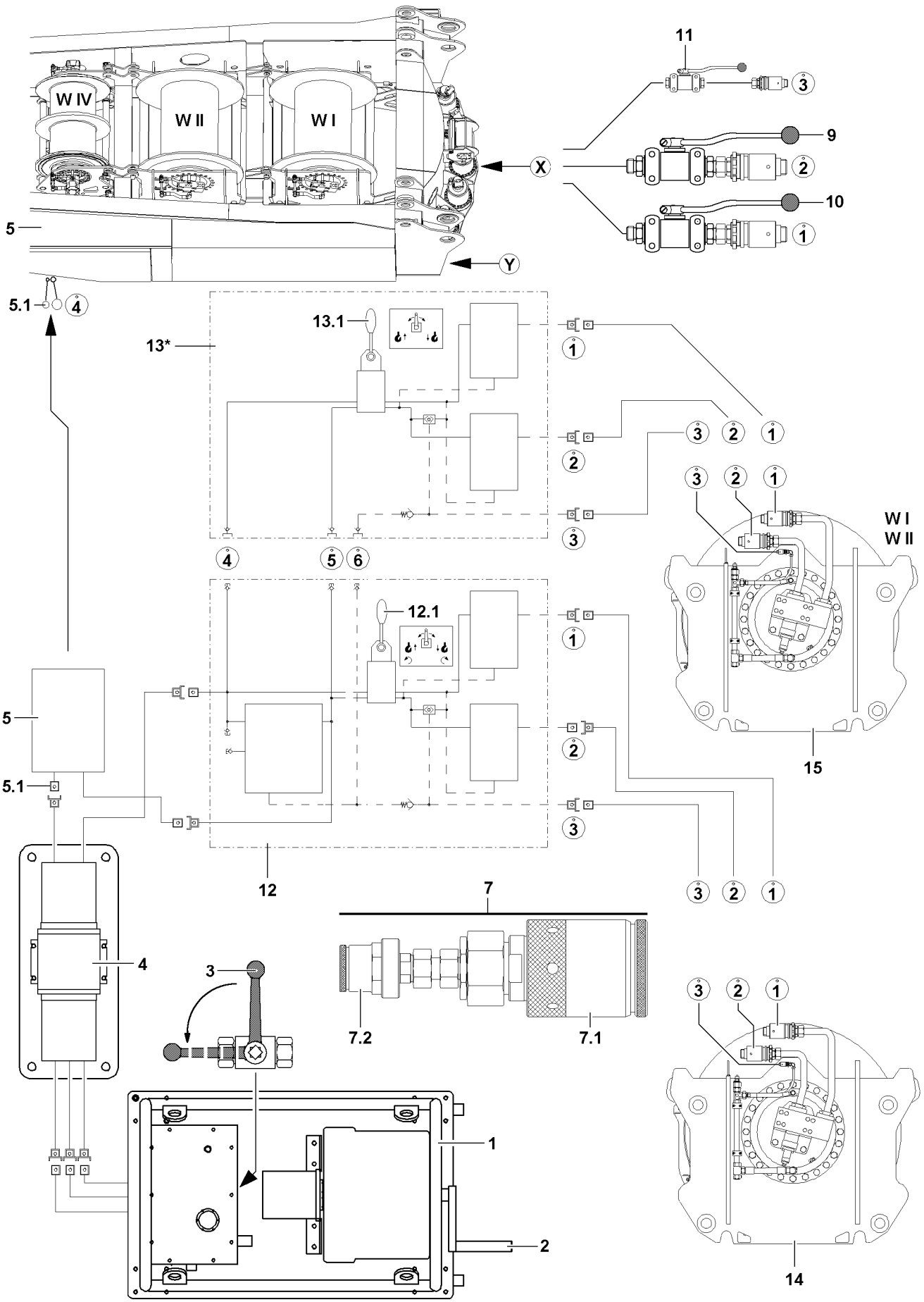

Fig.109393

LWE/LR 1600-2-001/18101-07-02/en

copyright © Liebherr-Werk Ehingen GmbH 2018

4.4.3 Spooling the winches up

▶ Set the ball valve **12.1** for the assembly plate **12** on „lift“.

Result:

– Winch 1 **or** winch 2 spools up.

▶ Set the ball valve **13.1** for the assembly plate **13** on „lift“.

Result:

– Winch 2 **or** winch 1 spools up.

4.4.4 Disconnecting the hydraulic connections

Make sure that the following prerequisites are met:
- The emergency operation is completed.
- The pressure in the hydraulic system has been relieved.

▶ Disconnect the hydraulic connections of winch 1 and winch 2 to the respective assembly plates.
▶ Remove the reducer sections **7** (adapter).
▶ Close off the hydraulic connections of the winches with dust plugs.
or
Reconnect the winches to the hydraulic system of the crane.

LWE/LR 1600-2-001/18101-07-02/en

copyright © Liebherr-Werk Ehingen GmbH 2018

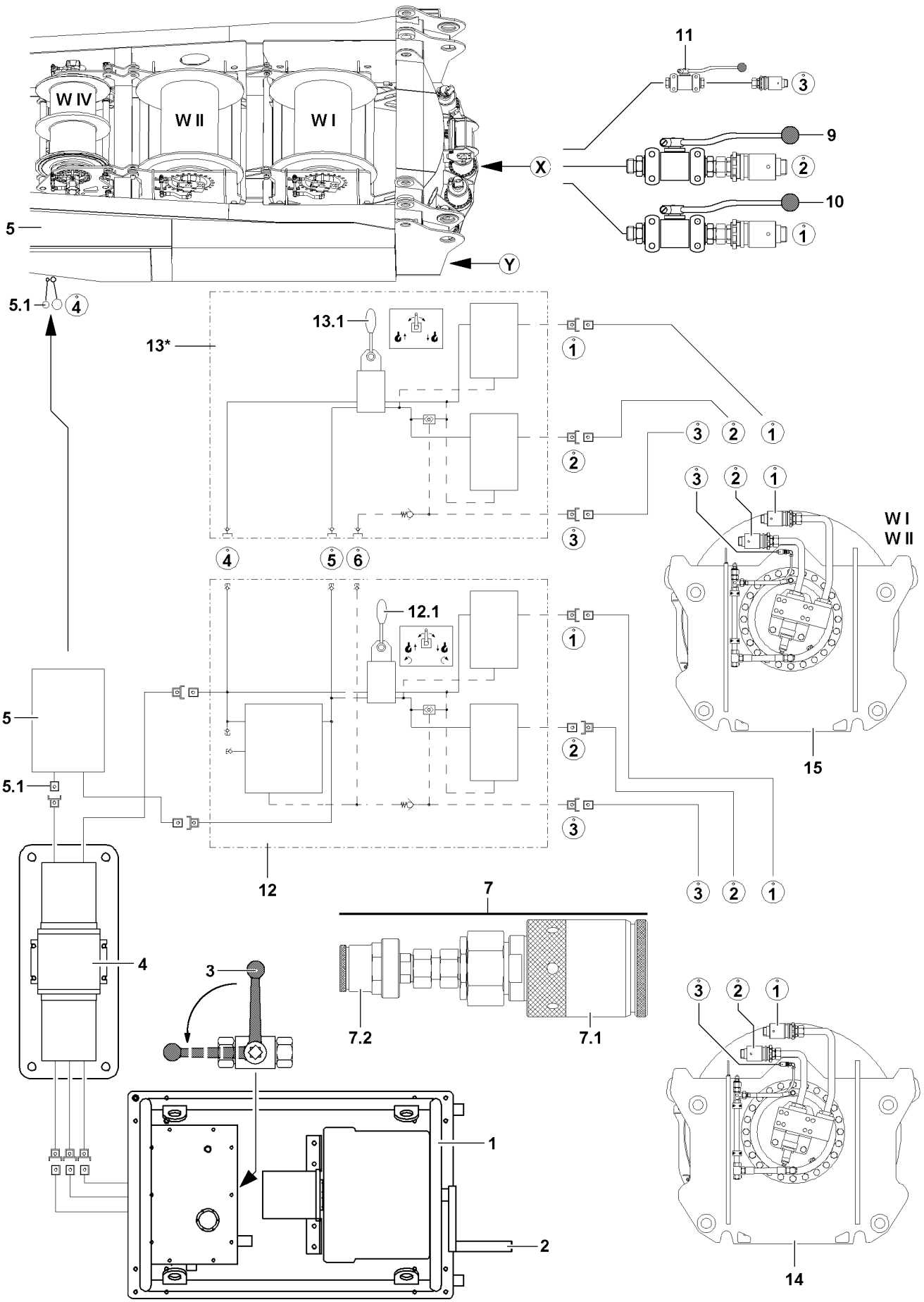

Fig.109393

LWE/LR 1600-2-001/18101-07-02/en

copyright © Liebherr-Werk Ehingen GmbH 2018

5 Emergency operation slewing gear(s) with assembly plate(s) Variation 2 (V2)

WARNING
Danger due to hydraulic pressure!
If the hydraulic lines are pressurized when releasing the connections, it can lead to severe injuries to assembly personnel!
▶ Relieve the pressure in the hydraulic lines before releasing!

Note
▶ For each crane type, the installation position of the ball valves for emergency operation of the slewing gear on the turntable varies!
▶ Possible installation positions of the ball valve: Point **X** or point **Y**!

Note
▶ The slewing movement is actuated and the speed of the slewing movement is determined via the ball valve **12.1**!

5.1 Establishing the hydraulic connection to the slewing gears

Make sure that the following prerequisite is met:
– The pressure in the hydraulic system has been relieved.

Note
▶ Observe the numbering of the hydraulic lines!

▶ Establish the hydraulic connections of the assembly plate **12** (connection **1**, connection **2** and brake **3**) to the „Ball valves“ on the turntable.

5.2 Turning the turntable to the left

▶ Set the ball valve **9** into emergency operation position.
▶ Set the ball valve **10** into emergency operation position.
▶ Set the ball valve **11** into emergency operation position.
▶ Set the ball valve **12.1** for the assembly plate **12** on „turn left“.

Result:

– The turntable turns to the left.

LWE/LR 1600-2-001/18101-07-02/en

copyright © Liebherr-Werk Ehingen GmbH 2018

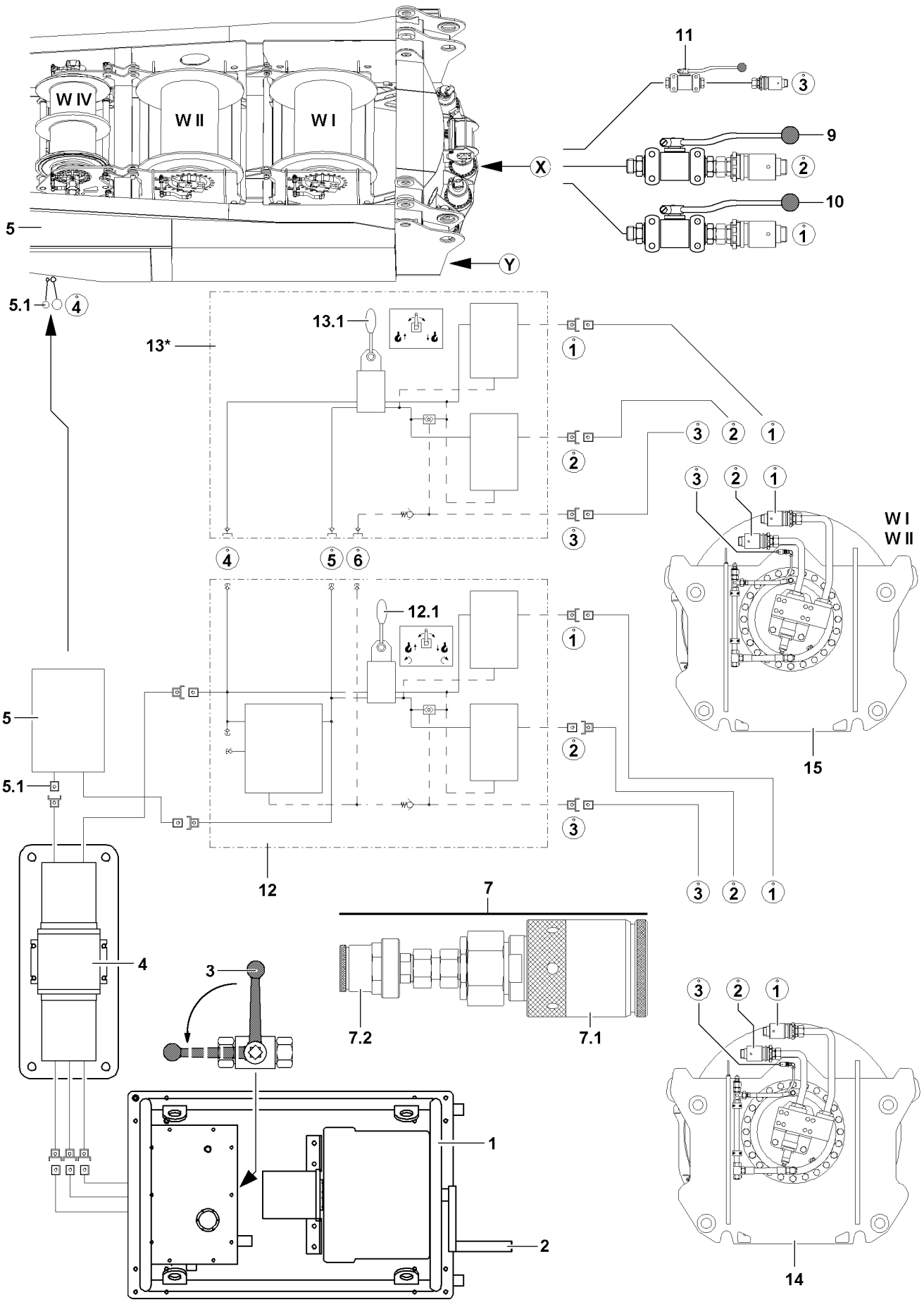

Fig.109393

copyright © Liebherr-Werk Ehingen GmbH 2018

5.3 Turning the turntable to the right

▶ Set the ball valve **9** into emergency operation position.
▶ Set the ball valve **10** into emergency operation position.
▶ Set the ball valve **11** into emergency operation position.
▶ Set the ball valve **12.1** for the assembly plate **12** on „turn right“.

Result:

– The turntable turns to the right.

5.4 Disconnecting the hydraulic connections

Make sure that the following prerequisites are met:
– The emergency operation is completed.
– The pressure in the hydraulic system has been relieved.

Disconnect the hydraulic connections to the assembly plate **12**.

▶ Reposition the ball valve **9** in position for crane operation.
▶ Reposition the ball valve **10** in position for crane operation.
▶ Reposition the ball valve **11** in position for crane operation.

When the ball valve **9**, ball valve **10** and ball valve **11** are repositioned into crane operation position:
▶ Disconnect the hydraulic connections to the assembly plate **12**.
▶ Close off the hydraulic connections with dust plugs.

LWE/LR 1600-2-001/18101-07-02/en

copyright © Liebherr-Werk Ehingen GmbH 2018

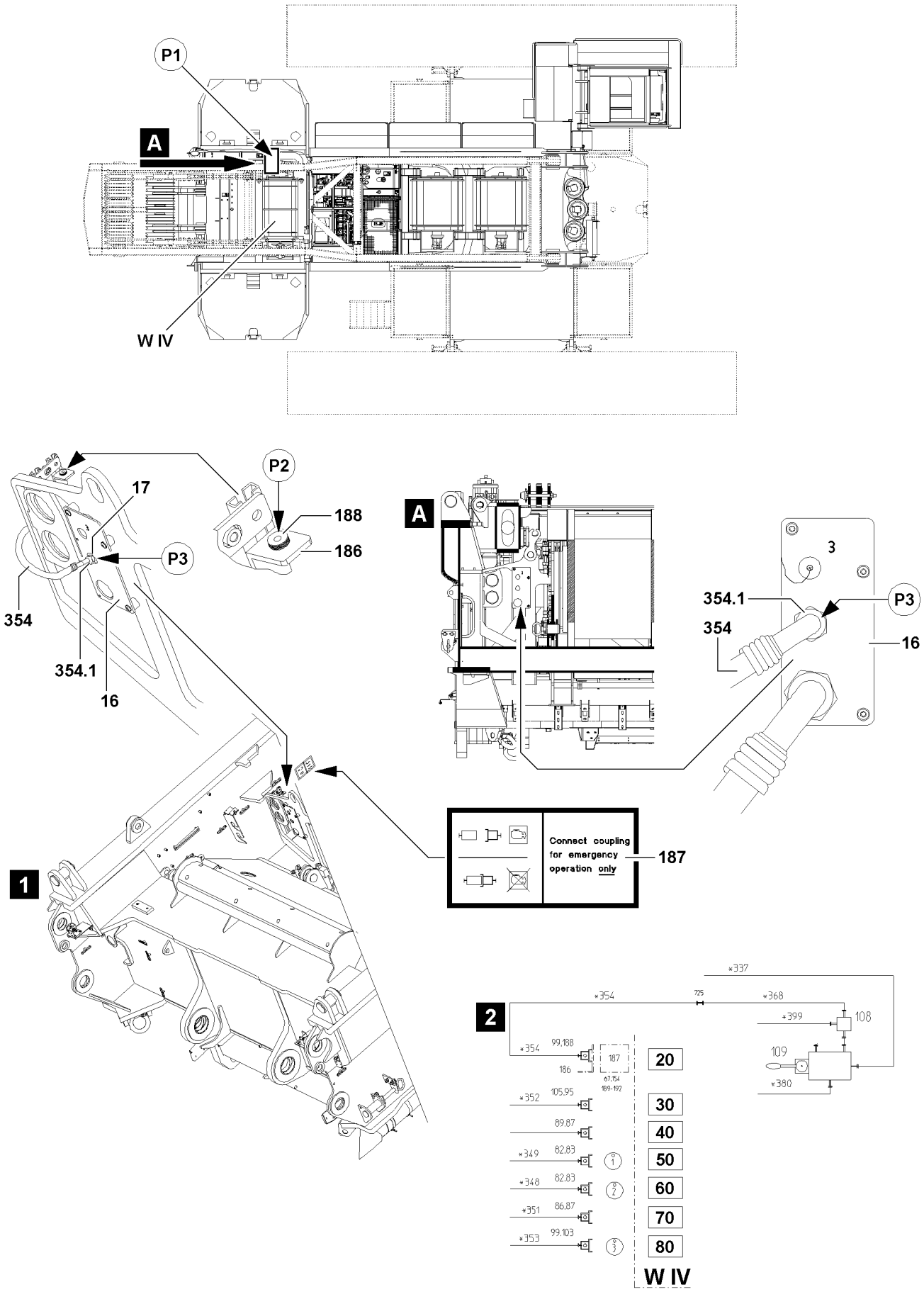

Fig.112453

LWE/LR 1600-2-001/18101-07-02/en

copyright © Liebherr-Werk Ehingen GmbH 2018

6 Emergency operation of winch 4 (W IV) on the LR1600/2 and LR1600/2-W

NOTICE
Damage of crane components!
If the hydraulic hose (control line) **354** for the emergency operation is not connected properly, then hydraulic parts or crane components can be damaged!
▶ Make sure, before starting the emergency operation, that the hydraulic hose **354** is properly connected!

6.1 Emergency operation winch 4 (WIV)

6.1.1 Establishing the hydraulic connections to winch 4 (WIV)

Note
▶ The hydraulic connections to winch 4 - connection 1, connection 2 and brake - have been established, see section „Emergency operation of winches“!
▶ Pay attention to the different variations of the assembly plates!

Before emergency operation of winch 4 **W IV**, in addition to the hydraulic connections for the emergency operation of the winch, the hydraulic hose **354** must be connected.

Make sure that the following prerequisites are met:
– The hydraulic connections to winch 4 are established.
– The hydraulic hose **354** is in park position, point **P2**.

▶ Release the hydraulic hose **354** with the fitting **354.1** on the plug **188** (park position), point **P2**.
▶ Guide the hydraulic hose **354** to the front to the connector plate **16**.
▶ Connect the hydraulic hose **354** with the fitting **354.1** on the supply line **17**, point **P3**, of the connector plate **16**.

Note
▶ Observe the notes in the sections „Emergency operation of winches“!

LWE/LR 1600-2-001/18101-07-02/en

copyright © Liebherr-Werk Ehingen GmbH 2018

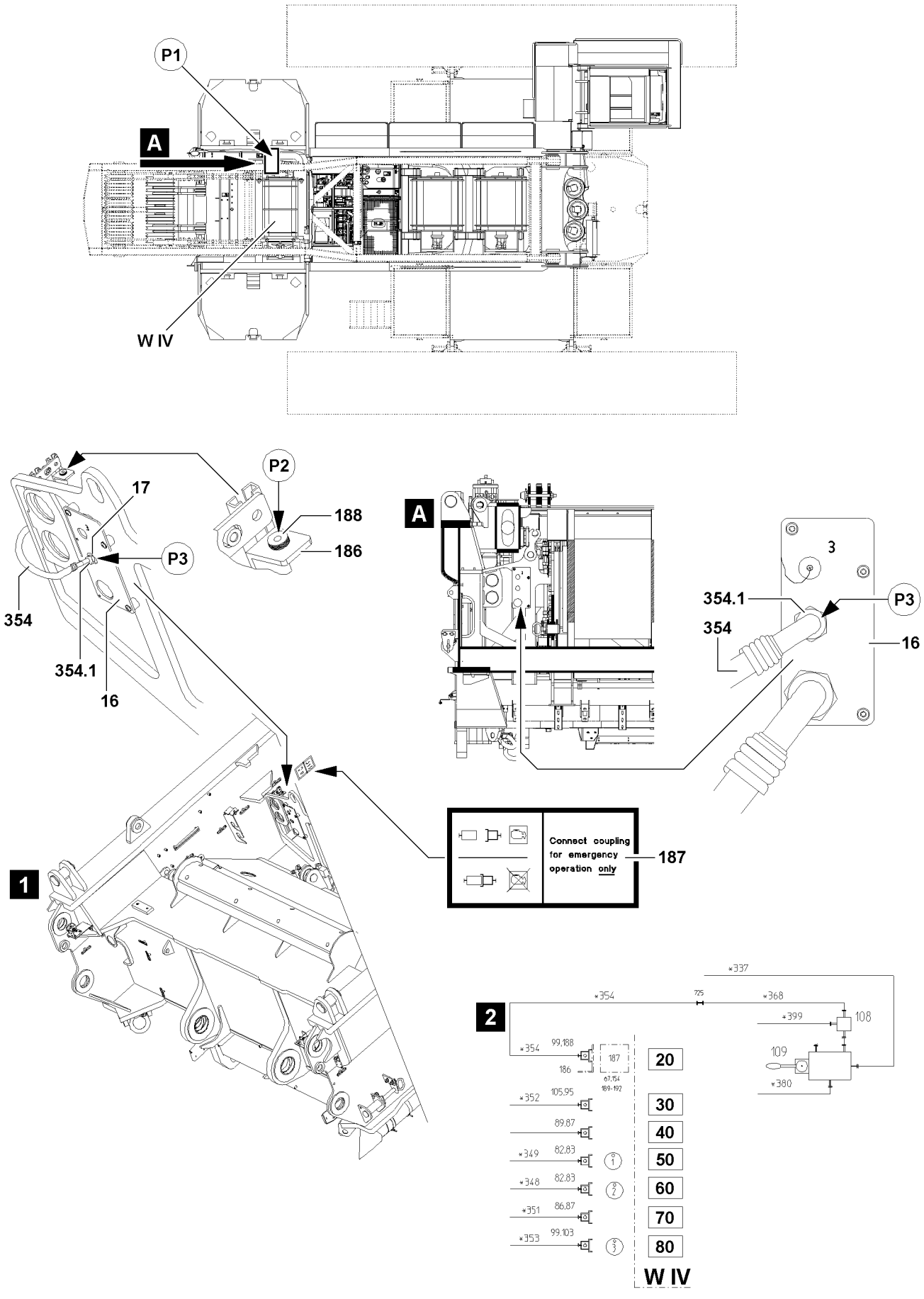

Fig.112453

LWE/LR 1600-2-001/18101-07-02/en

copyright © Liebherr-Werk Ehingen GmbH 2018

6.1.2 Spooling the winch out

▶ See section: „Emergency operation with assembly plate Variation 1 (V1)“
or
See section: „Emergency operation with assembly plate Variation 2 (V2)“

6.1.3 Spooling the winch up

▶ See section: „Emergency operation with assembly plate Variation 1 (V1)“
or
See section: „Emergency operation with assembly plate Variation 2 (V2)“

6.2 Disconnecting the hydraulic connections

Make sure that the following prerequisites are met:
– The emergency operation is completed.
– The pressure in the hydraulic system has been relieved.

▶ Disconnect the hydraulic connections from the winch 4 to the assembly plate.
▶ Remove the reducer sections (adapter).
▶ Close off the hydraulic connections of the winch 4 **W IV** with dust caps.
or
Reconnect the winch 4 **W IV** onto the hydraulic system of the crane.
▶ Disconnect the hydraulic hose **354** at point **P3**.
▶ Bring the hydraulic hose **354** in parking position: Install the fitting **354.1** onto the plug **188**.

LWE/LR 1600-2-001/18101-07-02/en

copyright © Liebherr-Werk Ehingen GmbH 2018

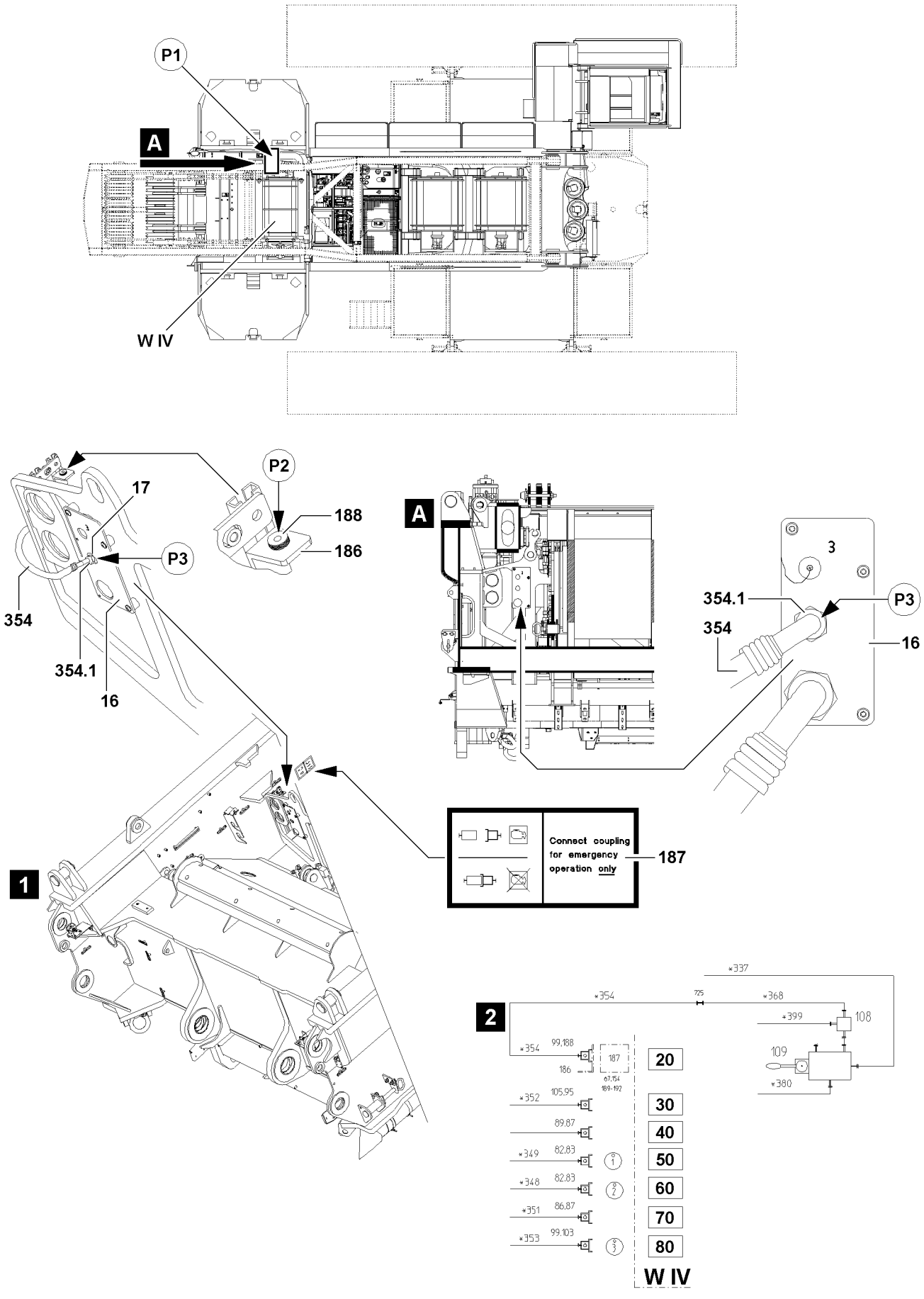

Fig.112453

LWE/LR 1600-2-001/18101-07-02/en

copyright © Liebherr-Werk Ehingen GmbH 2018

6.3 Connection schematic for emergency operation, illustration 2

Note
▶ See also Hydraulic schematic!

Position	Connection / description
20	Control pressure SA-frame
50	Lifting
60	Lowering
80	Replenishing pressure brake

7 Ending emergency operation

7.1 Procedure

▶ Turn the emergency operation aggregate*** 1** off.
▶ Close the ball valve **3**.
▶ Disconnect the hydraulic connections and close them off with dust plugs.

LWE/LR 1600-2-001/18101-07-02/en

copyright © Liebherr-Werk Ehingen GmbH 2018

Empty page!

LWE/LR 1600-2-001/18101-07-02/en

copyright © Liebherr-Werk Ehingen GmbH 2018

7 Maintenance and service

LWE/LR 1600-2-001/18101-07-02/en

copyright © Liebherr-Werk Ehingen GmbH 2018

LWE/LR 1600-2-001/18101-07-02/en

copyright © Liebherr-Werk Ehingen GmbH 2018

7.01 Maintenance and service - General

1	Technical safety instructions	3
2	Warranty and coverage	7
3	Liebherr Service	7
4	Taking an oil sample	8
5	Taking care of the crane	8
6	Disposal	14

LWE/LR 1600-2-001/18101-07-02/en

copyright © Liebherr-Werk Ehingen GmbH 2018

LWE/LR 1600-2-001/18101-07-02/en

Fig.195219

copyright © Liebherr-Werk Ehingen GmbH 2018

1 Technical safety instructions

WARNING
Maintenance instructions **not** adhered to!
Death, severe injury, increased wear and failure of components.
- ▶ Observe the following listed safety notes and the generally applicable safety rules!
- ▶ Adhere to the maintenance intervals.
- ▶ Carry out only applicable maintenance tasks.
- ▶ Repair and maintenance tasks are to be carried out carefully.
- ▶ For aggregates and components: Follow the operating instructions of the manufacturer.

1.1 Description of intervals and tasks

Note
- ▶ Fill quantities and descriptions of service items and lubricants are specified in the Service fill.

The maintenance intervals and scope of maintenance are described in several chapters.

For crane maintenance, observe the following chapters:
- Crane operating instructions, chapter 7.02: Maintenance intervals - Crane chassis [1)]
- Crane operating instructions, chapter 7.02.50: Maintenance intervals Ballast trailer*[1)]
- Crane operating instructions, chapter 7.03: Maintenance intervals - Crane superstructure [1)]
- Crane operating instructions, chapter 7.03.50: Maintenance intervals - Crane boom [1)]
- Crane operating instructions, chapter 7.04: Maintenance instructions - Crane chassis [2)]
- Crane operating instructions, chapter 7.04.50: Ballast trailer maintenance instructions [2)]
- Crane operating instructions, chapter 7.05: Maintenance instructions - Crane superstructure [2)]
- Crane operating instructions, chapter 7.05.50: Crane boom maintenance instructions [2)]
- Crane operating instructions, chapter 7.06: Fill quantities, lubrication chart
- Crane operating instructions, chapter 7.07: Operating fluids and lubricants

[1)] These chapters contain a list of maintenance intervals for all maintenance tasks.
[2)] For aggregates, observe and adhere to additionally to the instructions of the manufacturer.

1.2 Definition of „Checking“

The action of „Checking“ includes all required task in connection with the maintenance, for example:
- Determining a specified value
- Cleaning
- Adjusting
- Refilling
- Replacing

1.3 Maintenance intervals

Use the following rules for interval determination:
- Carry out maintenance and inspection tasks on the crane chassis after reaching the specified driven mileage, operating hours or calendar intervals. The interval which occurs first is the deciding factor.
- Carry out maintenance and inspection tasks on the crane superstructure after reaching the specified operating hours or calendar intervals. The interval which occurs first is the deciding factor.
- The maintenance intervals complement each other. If a higher interval is coming up, then carry out the tasks according to the lower interval also.

LWE/LR 1600-2-001/18101-07-02/en

copyright © Liebherr-Werk Ehingen GmbH 2018

1.4 Securing against start up

WARNING
Impermissible travel or crane operation during maintenance or repair tasks!
Death, severe injury, severe property damage.
- ▶ Make sure that travel and crane operation is not possible during maintenance and repair tasks.
- ▶ Show clearly with signs that maintenance or repair tasks are being carried out on the mobile crane.
- ▶ Use signs which show without a doubt that it travel operation and crane operation are prohibited.
- ▶ Adhere to the national regulations regarding tagging on mobile crane and signs.
- ▶ Turn the engine on the crane superstructure and the crane chassis off!
- ▶ Apply the „parking brake crane chassis“.

If possible:
- ▶ Lock the driver’s cab and the crane cab.
- ▶ Hand the ignition key from the crane superstructure and the crane chassis to an authorized person.

1.5 Personnel

WARNING
Unauthorized and **untrained** expert personnel!
Improper maintenance, personal injury, property damage.
- ▶ Observe and follow the personnel requirements for the respective maintenance task.

If there are no personnel requirements:
- ▶ The crane operator can perform the maintenance task.
- ▶ Have the repair tasks performed exclusively by authorized and trained expert personnel.
- ▶ Make sure that only authorized persons are in the danger zone.

Maintenance tasks may only be carried out by expert, authorized and trained employees.

An expert is someone who possesses the required expert knowledge for performing a certain task. Requirements regarding the technical qualification depends on the type of task.

Requirements regarding the technical qualification of a person:
- – Corresponding professional training.
- – Professional experience or a currently performed corresponding professional activity.
- – Participation in training to keep the expert knowledge up to date.

1.6 Securing against falls

WARNING
Personnel is **not** secured against falls!
During maintenance tasks on the crane superstructure or boom, personnel must be secured with appropriate safety measures to prevent them from falling. If this is **not** observed, working personnel can fall and be killed or severely injured.
- ▶ For all tasks on the crane where there is a danger of falling, take suitable safety measures.
- ▶ The crane superstructure or the boom may **not** be accessed without suitable aids.
- ▶ Suitable aids are, for example: Lifting platforms, scaffoldings, ladders, assembly platforms, auxiliary crane.
- ▶ If railings are present on the crane superstructure, then they must be swung into operating position and secured for all tasks. See the Crane operating instructions, chapter 2.06.
- ▶ Only step on such aids with clean shoes.
- ▶ Keep aids clean, free of snow and ice.
- ▶ If tasks cannot be carried out using these aids or from the ground, then the maintenance personnel must be protected from falling using approved fall arrest systems. See the Crane operating instructions, chapter 2.04.
- ▶ It is prohibited to step on the driver’s cab or cab roof and specially marked surfaces. See the Crane operating instructions, chapter 2.05.

LWE/LR 1600-2-001/18101-07-02/en

copyright © Liebherr-Werk Ehingen GmbH 2018

WARNING
Dirty slip-resistant mats!
Fall
- ▶ Keep slip-resistant mats clean and free of snow and ice!
- ▶ Only step on slip-resistant mats with clean shoes!
- ▶ Replace or renew missing or damaged slip-resistant mats!

1.7 Preventing fires

WARNING
Excess fuel, excess oil in engine compartment during operation!
Death, severe injury, fire damage.
- ▶ Check the diesel engine after repairs and Service tasks but also in regular intervals for leaking oil and fuel.
- ▶ Fix the leaks. Replace damaged components.
- ▶ Do **not** spill service fluids.

WARNING
Disregard of general safety regulations during tasks on the fuel system or on the electrical system!
Severe burns, fire damage.
- ▶ Disconnect the battery from the power supply.
- ▶ Do **not** smoke.
- ▶ Do **not** work near open flames.
- ▶ Keep a functioning fire extinguisher ready.

WARNING
Sound insulation mats are contaminated with fuel, engine oil, gear oil, hydraulic oil or solvents!
The sound insulation mats can ignite. Severe burns, fire damage.
- ▶ Remove any polluted sound insulation mats **immediately** and **replace immediately** with **Original Liebherr spare parts**.

If there are sound insulation mats in the chassis near the starter:
- ▶ **Immediately remove** any sound insulation mats located in an area of 0.5 m around the starter and **do not replace them**

If there are sound insulation mats in the superstructure in the engine compartment flap:
- ▶ **Immediately remove** the sound insulation mats and **do not replace them**.
- ▶ Also observe and adhere to the section „Sound insulation mats“.

1.8 Protecting against burns

WARNING
Hot surfaces!
Severe burns.
- ▶ Let any components to be maintained or inspected cool off.
- ▶ Let hot components cool off.
- ▶ Avoid contact with hands and skin.
- ▶ Wear personal protective equipment and suitable protective gloves.

WARNING
Hot service fluids!
Severe burns.
- ▶ Let hot service fluids cool off.
- ▶ Avoid contact with hands, skin and eyes.
- ▶ Wear safety glasses.
- ▶ Wear personal protective equipment and suitable protective gloves.

LWE/LR 1600-2-001/18101-07-02/en

copyright © Liebherr-Werk Ehingen GmbH 2018

WARNING
Electric short circuit!
Severe burns.
- ▶ Prevent short circuits in the electrical system, especially on the battery.
- ▶ Replace or change missing or defective protective insulation.

1.9 Protecting from scalding

WARNING
Cooling system is pressurized!
When the coolant reservoir is opened, hot coolant can escape explosively.
Severe scalding.

When the engine is warm:
- ▶ Do **not** open the cover of the coolant reservoir.
- ▶ To protect face, hands and arms from hot steam of hot coolant, cover the cap with a large rag when opening.

1.10 Rotating parts

WARNING
Rotating parts, ignition system on running engine!
The cooler fan can turn on suddenly.
Death, severe injury.
- ▶ Proceed especially careful.
- ▶ Do **not** reach into rotating parts.
- ▶ Never reach into the cooler fan when the engine is warm.

1.11 Using suitable operating fluids

WARNING
Operating fluids **not** suitable for ambient temperature!
Death, severe injuries, property damage.
- ▶ Adjust the operating fluids in time to the ambient temperatures.
- ▶ Only use service fluids approved by Liebherr-Werk Ehingen GmbH. See chapter 7.07.

1.12 Replacing damaged crane components

WARNING
Damaged crane components **not** replaced!
Death, severe injury, failure of components.
- ▶ Maintain crane components according to the data in the maintenance intervals, the maintenance guidelines and the chart for service items and lubricants.
- ▶ Replace damaged crane components immediately.

1.13 After replacement of components

Type of oil, see data tag and supplied „Service fill“.

The following instructions must be observed when replacing components such as the engine, transmission or axle:

LWE/LR 1600-2-001/18101-07-02/en

copyright © Liebherr-Werk Ehingen GmbH 2018

WARNING
Maintenance of a replaced component **not** carried out!
- ▶ Before start up, be sure to refill with the correct type of oil to the center of the minimum / maximum mark.
- ▶ Carry out first maintenance. See chapter „Maintenance intervals“.
- ▶ Adhere to regular maintenance intervals.
- ▶ Follow the break-in instructions. See the Crane operating instructions, chapter 2.02.

1.14 Tire size

When changing certain tire sizes, the mobile crane must be modified.

Contact Liebherr customer service to change the following tire sizes:
- From 385/95 R 25 to 445/95 R 25
- From 385/95 R 25 to 525/80 R 25
- From 445/95 R 25 to 385/95 R 25
- From 525/80 R 25 to 385/95 R 25

2 Warranty and coverage

NOTICE
Maintenance intervals and maintenance guidelines **not** adhered to, impermissible lubricants used!
Damage, failure of crane components.
The warranty for the respective crane component is voided.
- ▶ Maintain crane components according to the data in the maintenance intervals, the maintenance guidelines and the chart for service items and lubricants.

NOTICE
Not using Original Liebherr spare parts and **not** using Original Liebherr Service items!
In the event that replacement parts are used that are **not** Original Liebherr replacement parts and **not** Original Liebherr service items and lubricants, Liebherr-Werk Ehingen GmbH disclaims all liability for system functionality as well as for the parts.
- ▶ Use exclusively Original Liebherr spare parts.

Note
- ▶ Original Liebherr replacement parts have been tested for crane operation and may be used without risking safety.

The buyer in entitled to warranty or coverage only:
- when exclusively Original Liebherr spare parts are used.
- when Liebherr Service items and Liebherr lubricants are used for the Liebherr crane.

3 Liebherr Service

Liebherr mobile cranes, whether truck-mounted, mobile or crawler cranes - are technically advanced products, which prove their worth daily even under tough conditions.

The high technical standards of these cranes provide functional security, resistance to failure and ease of maintenance.

Liebherr is continuously developing the drive and control components. The combination of well proven units and modern manufacturing methods produces cranes that are safe to operate and easy to maintain.

LWE/LR 1600-2-001/18101-07-02/en

copyright © Liebherr-Werk Ehingen GmbH 2018

Several hundred cranes are built every year for the international market, supported by international service.

Liebherr's „After Sales Service" plays an important role at Liebherr in ensuring operational readiness and high crane availability.

With Liebherr, Service begins when the crane is handed over. Your crane operators will be professionally trained in line with their level of knowledge and we devote much time to this.

We also train your workshop staff in all crane-specific matters, because we know that they can deal with more than just minor repairs themselves. Often there are specialists who can quickly and reliably carry out crane repairs.

We have special service advisers available who will solve any problems you may have. This phone contact saves time and money. You should take advantage of it as soon as possible.

Our service technicians are specialists with years of experience, who can be deployed from local support points. Naturally these experts have specialized knowledge and special tools.

But before you call these specialists, it is worth making use of the facilities for getting advice mentioned above.

4 Taking an oil sample

Note

- ▶ Liebherr recommends taking oil samples for the gears, engines and hydraulic system in regular intervals.
- ▶ Based on the trend analysis of the oil analysis results, changes can be determined in the lubricity of the oil and increased component wear.

WARNING

Tasks on components and operating fluids at operating temperature!
Burns.

- ▶ Carry out all tasks with utmost caution.
- ▶ Wear protective clothing.

Make sure that the following prerequisites are met:

– Oil has a normal operating temperature.

- ▶ Always take oil in the same location.
- ▶ Take oil always according to the same method.
- ▶ Do **not** take oil right after an oil change.
- ▶ Do **not** take oil immediately after larger amounts of oil have been added.

Note

Recommendation:

- ▶ Fill oil into original laboratory sample containers.

- ▶ Fill oil exclusively in a clean and dry sample container.

5 Taking care of the crane

5.1 Washing the crane

In order to ensure a consistent surface quality, the crane must be washed regularly. See the maintenance intervals, chapter 7.02, chapter 7.03, chapter 7.03.50. Clean the crane in particular after contact with highly corrosive materials or highly adherent contaminants.

LWE/LR 1600-2-001/18101-07-02/en

copyright © Liebherr-Werk Ehingen GmbH 2018

Highly adherent contaminants are:
- Residual road salt
- Oils, grease and fuel
- Insect remains
- Rust film
- Tar splashes, concrete splatter

Check the crane for corrosion and paint damage. See the maintenance intervals, chapter 7.02, chapter 7.03, chapter 7.03.50. If detected, have corrosion and paint damage removed by authorized and trained service personnel.

NOTICE
Impermissible cleaning agent!
Damage to the surface.
- ▶ Do not use aggressive cleaning agents.
- ▶ Do not use scouring cleaning agents.
- ▶ Do not use a phosphate based cleaner.
- ▶ Do not solvents or cleaning agents that contain solvents.
- ▶ Only use cleaning agents with a pH value that is less than / equal to 12.
- ▶ Make sure that the cleaning agent and water ratio of 3% is not exceeded.
- ▶ Rinse with clear water (not salt water).

Make sure that the following prerequisites are met:
- The crane is switched off and secured against unauthorized start up.
- The crane has cooled down.
- The battery master switch is turned off.

5.1.1 High pressure cleaner

The water jet of a circular jet nozzle can cause damage to the tyres or parts of the travel gear that cannot be seen exteriorly.

NOTICE
High pressure cleaner with circular jet nozzle used!
Damaged components could fail unexpectedly.
- ▶ Do not use a high pressure cleaner with a circular jet nozzle.
- ▶ Replace damaged components.

CAUTION
Hot steam and compressed air!
Burns.
- ▶ Wear personal protective equipment.

Do **not** expose the following components to a water jet:
- Inside of the driver's cab and cab
- Electric motor
- Electrical plug connections, line drums and power distributor
- Control units
- Transmitter
- Relay circuit boards and fuse circuit boards
- Hydraulic block
- Intake manifolds for combustion air
- Seals
- Bellows
- Gear shafts
- Retracted sliding beams
- Sealing lips on slewing ring connections
- Radial shaft sealing rings on winches
- Slewing gears

LWE/LR 1600-2-001/18101-07-02/en

copyright © Liebherr-Werk Ehingen GmbH 2018

- Hoist rope, control rope, assembly rope
- Piston rods
- Slip-resistant mats
- Signs
- Overflow container on the equipment
- Generator
- Lighting
- Wind speed sensor / airplane warning light
- Bearing on the rope pulleys
- Carrier rollers
- Swivel joints
- Pin points
- Head camera inclusive of the transmitter and receiver unit
- Hand pump on the folding jib

The crane can be cleaned with the high pressure cleaner. The water pressure, minimum distance and water temperature are specified in the following chart:

Washing painted surfaces		
Water pressure	**Minimum distance**	**Water temperature**
maximum 150 bar	30 cm to 40 cm	60 °C

Adjusting the high pressure cleaner

Washing surfaces covered with film		
Water pressure	**Minimum distance**	**Water temperature**
maximum 150 bar	80 cm	60 °C

Adjusting the high pressure cleaner

Washing surfaces protected against corrosion with Carlofon 81		
Water pressure	**Minimum distance**	**Water temperature**
maximum 30 bar	30 cm to 40 cm	40 °C

Adjusting the high pressure cleaner

Clean electrical systems, cables, cable harnesses and sound insulation mats with low pressure.

▶ Before cleaning, cover all openings.
▶ Wash the crane and equipment with a high pressure cleaner.
▶ Lubricate the crane and equipment.

Note
Environmental pollution!
▶ Dispose of auxiliary and cleaning materials contaminated with oil according to national and international regulations and directives.
▶ Only direct cleaning water through the oil separator of the drainage system.

LWE/LR 1600-2-001/18101-07-02/en

copyright © Liebherr-Werk Ehingen GmbH 2018

5.1.2 Exhaust system

NOTICE
Ingress of water, steam or cleaning substances into the AGN-module!
Sensors and electrics for the exhaust aftertreatment can be destroyed, the coating of the catalytic converter can be washed off.
- ▶ Before cleaning, let the AGN system cool down (surface temperature 50 °C).
- ▶ Before cleaning, cover all openings.
- ▶ Make sure that **no** fluids and **no** dirt gets into the tailpipe opening of the AGN module.
- ▶ During cleaning, maintain a sufficient distance from the tailpipe opening.

5.1.3 Sound insulation mats

NOTICE
Improper cleaning (tools or cleaning methods)!
Sound insulation mats can be destroyed or damaged.
- ▶ Remove severe contamination with suitable tools, for example with soft plastic scrapers.
- ▶ Do **not** use tools with sharp edges.
- ▶ Use high pressure cleaners **exclusively** with extreme caution and with a sufficient distance to the sound insulation mats and with low water pressure.
- ▶ Do **not** use solvents for cleaning.

If sound insulation mats are contaminated with fuel, engine oil, gear oil, hydraulic oil or solvents:
- ▶ Observe and adhere to the section „Preventing fires“.

5.1.4 Slip-resistant mats

WARNING
Heavily worn slip-resistant mats!
People can slip and fall down from the crane.
- ▶ Replace heavily worn slip-resistant mats.
- ▶ Do **not** wax slip-resistant mats.

- ▶ Before every access: Check the slip-resistant mats for slip resistance and cleanliness.
- ▶ If dirty: Clean the slip-resistant mats with a brush with hard plastic bristles.
- ▶ For cleaning the surfaces, use commercially available cleaners.
- ▶ Flush with water.

5.1.5 Driver’s cab and crane cab

Note
- ▶ The steering wheel, center console, instrument panel cover, floor covering and dirty upholstery in the driver’s cab and the crane cab should only be cleaned with warm water mixed with dishwashing detergent.
- ▶ Keep the driver’s cab and crane cab free from trash.

5.1.6 Ladders

- ▶ Remove any dirt on the ladders.
- ▶ Make sure that the grooves on the rungs are free of dirt.

LWE/LR 1600-2-001/18101-07-02/en

copyright © Liebherr-Werk Ehingen GmbH 2018

5.2 Protecting the crane against corrosion

NOTICE
Aggressive environmental conditions!
Crane components can corrode and be damaged.
▶ Protecting the crane against corrosion

The corrosion protection agent **Carlofon 81** must be reapplied regularly according to wear. See the maintenance intervals, chapter 7.02, chapter 7.03, chapter 7.03.50.

The corrosion protection agent **Metacorin 822** must be reapplied regularly according to wear on the mechanically machined, blank surfaces. See the maintenance intervals, chapter 7.02, chapter 7.03, chapter 7.03.50.

The corrosion protection agent **Lube Protection** must be reapplied regularly on the chrome-plated piston rods. See the maintenance intervals, chapter 7.02, chapter 7.03, chapter 7.03.50. Before applying the corrosion protection agent **Lube Protection**, the surface must be cleaned of oil, grease and any other dirt with the industrial cleaner **Super-Clean**. **Lube Protection** and **Super-Clean** can be ordered from the spare parts sales department at Liebherr-Werk Ehingen GmbH.

WARNING
Improper corrosion protection!
Injury to the respiratory system, suffocation.
▶ Wear a respirator mask.

NOTICE
Improper corrosion protection!
Damage to the crane.
▶ Make sure that crane corrosion protection is carried out only by authorized and trained service personnel.
▶ Make sure that the inspection and reconditioning intervals are not exceeded.

Make sure that the following prerequisites are met:
– A sufficient quantity of corrosion protection agent is available.
– Appropriate tools and aids are available.
– The crane is switched off and secured against unauthorized start up.
– The crane has cooled down.
– The battery master switch is turned off.
– Protective equipment is worn.

5.2.1 Crane

▶ Wash the crane thoroughly with a high pressure cleaner.
▶ Let the crane dry.

If corrosion or paint damage is found:
▶ Remove the corrosion and paint damage.

The following surfaces must be masked prior to corrosion protection:
– Walking surfaces and stepping surfaces
– Vents on brake valves and control valves
– Vents and drains on electrical equipment
– Mechanically machined, blank surfaces
– Piston rods

WARNING
Walking surfaces and stepping surfaces **not** masked!
Personnel can slip and fall down.
▶ Mask walking surfaces and stepping surfaces prior to corrosion protection.

LWE/LR 1600-2-001/18101-07-02/en

copyright © Liebherr-Werk Ehingen GmbH 2018

- ▶ All surfaces that should **not** be corrosion protected should be masked.
- ▶ Protect the crane against corrosion with **Carlofon 81**.
- ▶ Remove the masking.
- ▶ Protect mechanically machined, blank surfaces against corrosion with **Metacorin 822**.
- ▶ Lubricate the crane.

5.2.2 Cylinders

NOTICE
Impermissible corrosion protection agent!
The cylinder can be damaged.
- ▶ Do not use **Lube Protection** for piston rods with NiL35 coating.
- ▶ Do **not** apply corrosion protection to piston rods with NiL35 coating.

If it is **not** possible to ensure if a piston rod has a NiL35 coating:
- ▶ Contact Customer Service at Liebherr-Werk Ehingen GmbH to clarify.

Note
- ▶ Only use **Lube Protection** as corrosion protection for cylinders with chrome-plated piston rods.

Piston rods with a NiL35 coating can be optically differentiated due to its darker appearance than chrome.

To protect a cylinder against damage by the industrial cleaner, mask the following components:
- The piston rod, approx. 100 mm before the scraper
- Detached parts of the scraper
- Areas with a coat of paint

- ▶ Mask the components listed below on the cylinders.
- ▶ Carefully clean the free-standing surfaces on the piston rods with the industrial cleaner **Super-Clean**. Do not spray the industrial cleaner **Super-Clean** on the scraper.
- ▶ Spray **Lube Protection** on the piston rods.
- ▶ Until the propellant has evaporated: Wait approx. 2 minutes. Observe the manufacturer's instructions.
- ▶ Until a persistent protective film has formed on the surface: Repeat the procedure once or twice.

Problem remedy
Was **Lube Protection** used as corrosion protection on a piston rod with NiL35 coating?
The cylinder can be damaged.
- ▶ Clean the piston rod thoroughly before retracting it.

5.3 Protecting the crane against corrosion for storage

Note
- ▶ When storing the crane, contact the Service department at Liebherr-Werk Ehingen GmbH.

5.4 Protecting the crane against corrosion for shutdown

Note
- ▶ Before shutting down the crane, contact the Service department at Liebherr-Werk Ehingen GmbH.

LWE/LR 1600-2-001/18101-07-02/en

copyright © Liebherr-Werk Ehingen GmbH 2018

6 Disposal

6.1 Operating fluids and lubricants

WARNING
Operating items and lubricants are dangerous waste products!
- ▶ Dispose of operating fluids and lubricants separately.
- ▶ Service items and lubricants may **not** be disposed of in the ground, bodies of waters, wastewater systems, sewers or in the groundwater.
- ▶ Dispose of operating items and lubricants in an environmentally safe manner.
- ▶ When disposing operating items and lubricants observe and follow the valid regulations of the relevant authorities.

Service items and lubricants are:
- – Fuels
- – Coolant
- – Urea
- – Engine oils, gear oils
- – Hydraulic fluids
- – Brake fluids
- – Window washer concentrate
- – Greases

6.2 Batteries

WARNING
Batteries contain harmful substances!
- ▶ Do **not** dispose of batteries in regular household trash.
- ▶ Collect batteries separately and send them for environmentally safe disposal.
- ▶ Leave batteries at a qualified workshop or at a collection points for used batteries.

LWE/LR 1600-2-001/18101-07-02/en

copyright © Liebherr-Werk Ehingen GmbH 2018

7.02 Maintenance intervals - Crawler chassis

1 Maintenance and inspection schedule 3

LWE/LR 1600-2-001/18101-07-02/en

copyright © Liebherr-Werk Ehingen GmbH 2018

LWE/LR 1600-2-001/18101-07-02/en

Fig.195219

copyright © Liebherr-Werk Ehingen GmbH 2018

1 Maintenance and inspection schedule

Note

- ▶ Carry out maintenance work after reaching the specified operating hours or calendar intervals. The interval which occurs first is the deciding factor.
- ▶ The maintenance intervals complement each other. If a higher interval is coming up, then carry out the work according to the lower interval also.
- ▶ The operating hour meter of the crawler travel gear is the determining factor for the operator hour intervals.
- ▶ The „crawler travel gear“ operating hour meter* is located in the control cabinet.

First maintenance after	Operating hour intervals 10 h	100 h	1000 h	Calendar intervals Daily	Weekly	Annually	Work to be carried out	O.K.
Safety systems								□
						X	Personal protective equipment Follow the instructions of the manufacturer	
						X	Height rescue system Follow the instructions of the manufacturer	
Fall protection equipment								□
						X	Check protection points	
						X	Check safety ropes	
						X	Check the ladders for technically immaculate condition	
						X	Check railings, steps and pedestals for safe function	
						X	Check catwalks and open mesh flooring for safe function	
Crane surface								□
					X		Check accessible surfaces for cleanliness	
						X	Check accessible surfaces for completeness and slip resistance	
						X	Check labels for completeness and legibility	
Rigging and fastening points								□
				X [2)]			Check condition and mounting	
						X	Check for continued suitability by expert	

LWE/LR 1600-2-001/18101-07-02/en

copyright © Liebherr-Werk Ehingen GmbH 2018

First maintenance	Operating hour intervals			Calendar intervals			Work to be carried out	O.K.
after	10 h	100 h	1000 h	Daily	Weekly	Annually		
Travel gear								□
		X					Check for leaks	
	X						Grease the sprocket bearing if it is not lubricated via the central lubrication system	
		X					Check the tightness of the mounting screws	
		500 h					Check the gear oil via oil analysis	
200 h			1000 h			Every 4 years	Change the gear oil	
Crawler carrier								□
		X					Check track rollers, carrier rollers with oil lubrication for leaks	
	X						Grease the track rollers, carrier rollers if it is not lubricated via the central lubrication system	
	X				Every 4 weeks		Check the wear on the roll off surfaces of the track rollers / carrier rollers, replace the track rollers / carrier rollers if necessary	
	X				Every 4 weeks		Check for wear on the glide rails	
						X	Grease guide rails on sliding section	
						X	Lubricate the consoles	
					Every 4 weeks		Lubricate the connector pins between crawler carrier and crawler center section or crawler carrier and cross carriers	

LWE/LR 1600-2-001/18101-07-02/en

copyright © Liebherr-Werk Ehingen GmbH 2018

First maintenance after	Operating hour intervals 10 h	100 h	1000 h	Calendar intervals Daily	Weekly	Annually	Work to be carried out	O.K.
Crawler chain								□
		X					Check the connector pin retainer	
		X					Check for damage	
	X				Every 4 weeks		Check the chain tension, retension the track chain if necessary	
	X						Check the wear on the bores of the track pads, replace track pads if necessary	
	X						Check the wear on the connector pins of the track pads, replace pins if necessary	
	X				Every 4 weeks		Check the wear on the roll off surfaces of the track pads / track rollers, replace track pads if necessary	
					Every 4 weeks		Check the wear on the sprocket wheels and the transport cams of the track pads	
Assembly support								□
					X		Check the hydraulic cylinder for leaks	
						X	Check support beam for ease of movement, grease	
						X	Lubricate the bearing points of the support beams	
						X	Check sight gauge, adjust if necessary	
Crane support								□
					X		Check the hydraulic cylinder for leaks	
						X	Check support beams for ease of movement, grease	
						X	Lubricate the struts	
						X	Lubricate the mounting pins on the struts	
						X	Lubricate the support pad bearing	
Concrete ballast plates / concrete catwalks (central ballast) (only LR1500)								
				X			Check for damage	
						X[4)]	Have an authorized inspector check that the fastening points are fit tightly and for continued suitability	

copyright © Liebherr-Werk Ehingen GmbH 2018

First maintenance after	Operating hour intervals 10 h	100 h	1000 h	Calendar intervals Daily	Weekly	Annually	Work to be carried out	O.K.
Pin connections								□
					Every 2 months [3]		Check the retainer of the pin connections	
					Every 2 months [3]		Check the pins and / or connector elements for damage, visual inspection	
					Every 2 months [3]		Check the retaining elements for damage, visual inspection	
Rotary connection								□
			X				Lubricate (grease lubrication)	
Hydraulic cylinder								□
					X		Check for leaks	
Hydraulic hose lines								□
				X			Check for leaks and damage	
						X	Have safe working condition checked by expert	
Central lubrication system								□
					Every 6 months [1]		Carry out intermediate lubrication (with central lubrication system with control unit)	
		X					Check for correct function	
	8 h			X			Check the lubricant level	

[1] if the crane is not moved: every 3 months
[2] before every start up: perform a visual inspection
[3] also for cranes used for a long period of time
[4] and at each assembly / disassembly

LWE/LR 1600-2-001/18101-07-02/en

copyright © Liebherr-Werk Ehingen GmbH 2018

7.02.50 Maintenance intervals - Ballast trailer

1 Maintenance and inspection schedule 3

LWE/LR 1600-2-001/18101-07-02/en

copyright © Liebherr-Werk Ehingen GmbH 2018

LWE/LR 1600-2-001/18101-07-02/en

Fig.195219

copyright © Liebherr-Werk Ehingen GmbH 2018

1 Maintenance and inspection schedule

Note

- Carry out maintenance work after reaching the specified operating hours or calendar intervals. The interval which occurs first is the deciding factor!
- The maintenance intervals complement each other. If a higher interval is coming up, then carry out the work according to the lower interval also!

First maintenance after	Operating hour intervals			Calendar intervals			Work to be carried out	O.K.
	10 h	100 h	1000 h	Daily	Weekly	Annually		
Fall protection equipment								
						X	Check protection points	
						X	Check safety ropes	
						X	Check the ladders for technically immaculate condition	
						X	Check railings, steps and pedestals for safe function	
						X	Check catwalks and open mesh flooring for safe function	
Ballast trailer surface								
					X		Check accessible surfaces for cleanliness	
						X	Check accessible surfaces for completeness and slip resistance	
						X	Check labels for completeness and legibility	
Rigging and fastening points								
				X [2)]			Check condition and mounting	
						X	Check for continued suitability by an authorized inspector, inspection expert	
Tires								
					X		Check for external damage and distortion	
					X		Check the tire pressure	
	X						Check lug nuts for tight seating, retighten if necessary	
						Every 5 years	Replace tires; have further service life confirmed by a tire manufacturer expert	
Axle link								
						X	Lubricate	
Hydraulic cylinder								
					X		Check for leaks	

LWE/LR 1600-2-001/18101-07-02/en

copyright © Liebherr-Werk Ehingen GmbH 2018

First maintenance after	Operating hour intervals 10 h	100 h	1000 h	Calendar intervals Daily	Weekly	Annually	Work to be carried out	O.K.
Hydraulic hose lines								
				X			Check for leaks and damage	
						X	Check for a safe condition by an authorized inspector, inspection expert	
Travel drive								
						X	Check the mounting screws for tight seating	
					X		Check for leaks	
						X	Check the oil level	
						Every 5 years	Change the gear oil if necessary	
Slewing gear								
						X	Check the mounting screws for tight seating	
					X		Check for leaks	
						X	Check the oil level	
						Every 5 years	Change the gear oil if necessary	
Central lubrication system								
				X			Check grease supply of central lubrication system. Fill the reservoir if the grease supply has dropped below 1/4 of the reservoir content.	
						X	Check for correct function	
Pin connections								
					Every 2 months [3]		Check the retainer of the pin connections	
					Every 2 months [3]		Check the pins and / or connector elements for damage, visual inspection	
					Every 2 months [3]		Check the retaining elements for damage, visual inspection	
Emergency control								
						X	Check for correct function	

[2] before every start up: checking visually
[3] also for cranes used for a long period of time

LWE/LR 1600-2-001/18101-07-02/en

copyright © Liebherr-Werk Ehingen GmbH 2018

7.03 Maintenance intervals - Crane superstructure

1 Maintenance and inspection schedule 2

LWE/LR 1600-2-001/18101-07-02/en

copyright © Liebherr-Werk Ehingen GmbH 2018

1 Maintenance and inspection schedule

Note

- ▶ Carry out maintenance work after reaching the specified operating hours or calendar intervals. The interval which occurs first is the deciding factor!
- ▶ The maintenance intervals complement each other. If a higher interval is coming up, then carry out the work according to the lower interval also!

First maintenance	Operating hour intervals			Calendar intervals			Work to be carried out	O.K.
after	250 h	500 h	1000 h	Daily	Weekly	Annually		
Safety systems								□
						X	Personal protective equipment Follow the instructions of the manufacturer	
						X	Height rescue system Follow the instructions of the manufacturer	
Fall protection equipment								□
						X	Check protection points	
						X	Check safety ropes	
						X	Check the ladders for technically immaculate condition	
						X	Check railings, steps and pedestals for safe function	
						X	Check catwalks and open mesh flooring for safe function	
Crane surface								□
					X		Check accessible surfaces for cleanliness	
						X	Check accessible surfaces for completeness and slip resistance	
						X	Check labels for completeness and legibility	
Rigging and fastening points								□
				X [2)]			Check condition and mounting	
						X	Check for continued suitability by an authorized inspector, inspection expert	
Load handling equipment and assembly aids								□
				X [2)]			Check for cracks, damage, wear and distortion	
						X	Check for continued suitability by an authorized inspector, inspection expert	

LWE/LR 1600-2-001/18101-07-02/en

copyright © Liebherr-Werk Ehingen GmbH 2018

First maintenance after	Operating hour intervals 250 h	500 h	1000 h	Calendar intervals Daily	Weekly	Annually	Work to be carried out	O.K.
Fastening equipment and load securing devices								□
				X [2)]			Observe and adhere to the manufacturer's instructions	
Fire extinguishing system								□
						X	Carry out a visual inspection of the system For all other maintenance tasks, observe the instructions of the fire extinguisher manufacturer.	
						Every 5 years	Replace trigger elements and extinguisher tank.	
Diesel engine								□
				X			Check the oil level For all other maintenance tasks, observe the instructions of the engine manufacturer	
Cooling system								□
				X			Check the coolant level in the expansion tank	
			6000 h			Every 4 years	Replace the coolant if filled with **Liebherr Antifreeze OS Mix**	
			3000 h			Every 2 years	Replacing the coolant	
SCR Exhaust aftertreatment								□
			4500 h			Every 2 years	Replace foam and filter element of urea pump	
Engine-independent heater (auxiliary heater)								□
				X			Check the fluid level in the expansion tank	
					Every 4 weeks [8)]		Operate and check the function for 10 minutes with the engine cold and the highest fan stage	
					X [9)]		Operate and burn-free for 15 minutes with the engine cold and the highest fan stage	
						X	Carry out maintenance work before and after every heating period	
						Every 2 years	Replace the fluid for the heating system	
				X			Check the fill level of the fuel container	

LWE/LR 1600-2-001/18101-07-02/en

copyright © Liebherr-Werk Ehingen GmbH 2018

First maintenance after	Operating hour intervals 250 h	500 h	1000 h	Calendar intervals Daily	Weekly	Annually	Work to be carried out	O.K.
Air filter								□
					X		Check monitoring device	
						X	Clean, change the filter insert Observe the instructions of the engine manufacturer	
Slewing ring connection								□
	X						Lubricate the gears	
						X [1]	Lubricating the slewing ring connection	
					Every 6 months [1]		Drain water on the water drain bores of the slewing ring connection (only LTM 11200-9.1, LTR 11200)	
250 h			1500 h			X	Check the tightness of the mounting screws	
						X	Checking the tilt play	
Winches								□
250 h			X			X	Check the tightness of the mounting screws	
				X			Check for leaks	
					X [6]		Check the oil level	
250 h			3000 h			Every 4 years	Change the gear oil	
			1500 h [4]			X [4]	Lubricate the space between V-ring / winch bearing (only for winches with a winch bearing that is lubricated with a grease fitting)	
			200 h			X	Check the condition of the tooth flanks; determining factor are the operating hours of the winch (only for winches with gear ring drive)	
						X	Check the remaining theoretical service life by an authorized inspector	
						Every 4 years	Check the remaining theoretical utilization life by an inspection expert	
Winch brakes								□
				X			Check for leaks	
						X	Check for correct function	

LWE/LR 1600-2-001/18101-07-02/en

copyright © Liebherr-Werk Ehingen GmbH 2018

First maintenance after	Operating hour intervals 250 h	500 h	1000 h	Calendar intervals Daily	Weekly	Annually	Work to be carried out	O.K.
Relapse supports								□
					Every 3 months 5), 6)		Lubricating the bearings	
X 2), 6)							Check the oscillation guard for easy movement	
Relapse cylinder								□
X 2), 6)					X		Check for leaks	
					Every 3 months 5), 6)		Lubricating the bearings	
X 2), 6)		X				X	Check pretension pressure (nitrogen)	
X 2), 6)		X				X	Check the oil quantity	
Pneumatic springs								□
X 2), 5), 6)		X				X	Check for correct function	
A-frame								□
		X					Lubricate the bearing	
X 2), 6)						X	Check the lever for the limit switch on the A-frame 3 for easy movement and reset of spring	
X 2), 6)						X	Check the rods with guide rail on the A-frame 2 and A-frame 3 for easy movement and distortion	
Counterweight frame								□
						X	Check the cylinder stroke of the locking pin on the swinging arms (only LTM 1450-8.1)	
Counterweight								□
1000 km		or 10,000 km				X	Check tightening torque of mounting screws	
Concrete ballast plates (ballast container) (only LR 13000)								□
				X			Check for damage	
						Every 5 years	Check by licensing agency	
Ballasting								□
	X					X	Lubricating the bearings	
						X	Check the swing play (only LTM 11200-9.1)	
						X	Check the braid ropes (only LTM 11200-9.1)	

copyright © Liebherr-Werk Ehingen GmbH 2018

First maintenance after	Operating hour intervals 250 h	500 h	1000 h	Calendar intervals Daily	Weekly	Annually	Work to be carried out	O.K.
Press on pulleys of rope winches								□
	X					X	Grease guides	
Rope pulleys								□
					X [5), 6)]		Check groove base for cleanliness	
			X			X	Check for wear, damage, cracks and easy movement	
			3000 h			Every 3 years	Lubricate the bearings	
Carrier rollers								□
				X [2)]			Check for damage and distortion	
			X			X	Check for wear, damage and easy movement	
			X			X	Check the tightness of the mounting screws	
Crane cab								□
				X			Check instruments for function	
				X			Check indicator lights for function	
						X	Replace the filter insert for switch cabinet ventilation	
						X	Replace filter insert in water heater	
				X			Check fluid level in expansion tank of engine regulation	
		X				X	Check the sliding or incline device for function	
		X				X	Lubricate the bearings of the sliding or incline device	
		X				X [7)]	Check the lift device (telescope arm) for function	
		X				X [7)]	Lubricate the bearings of the lift device and telescope arm	
Window washing bays, camera washing bays								□
				X			Check the fluid level in the reservoir for the washing bays	
Overload protection								□
				X			Check for correct function	
		X				X	Check length sensor for function	
		X				X	Check length sensor rope for damage	

LWE/LR 1600-2-001/18101-07-02/en

copyright © Liebherr-Werk Ehingen GmbH 2018

First maintenance after	Operating hour intervals 250 h	500 h	1000 h	Calendar intervals Daily	Weekly	Annually	Work to be carried out	O.K.
Remote diagnostics device								□
						X	Check for correct function	
						X	Check the validity of the SIM card	
Electrical system								□
						X	Cable connections	
					Every 6 months [3]		Service the batteries	
					Every 6 months [3]		Empty the acid collection container	
						X [5]	Replace the interior compartment filter of the switch cabinet ventilation	
Fuel system								□
				X			Check for leaks	
						X	Check condition and mounting	
						X	Drain off water and sediments	
						X	Clean preliminary filter for auxiliary fuel pump	
	Every 50 h						Check fuel preliminary filter, drain off water if necessary	
		Every 1000 h					Replace the fuel preliminary filter	
Slewing gear								□
250 h			X			X	Check the tightness of the mounting screws	
				X			Check for leaks	
					X		Check the oil level	
250 h			3000 h			Every 4 years	Change the gear oil	
Slewing gear brakes								□
				X			Check for leaks	
						X	Check for correct function	
Turntable lock								□
		X				X	Grease	
		X				X	Check for correct function	
Bearings								□
						X	Checking the retaining elements	

copyright © Liebherr-Werk Ehingen GmbH 2018

First maintenance	Operating hour intervals			Calendar intervals			Work to be carried out	O.K.
after	250 h	500 h	1000 h	Daily	Weekly	Annually		
Pin connections								□
					Every 2 months [10]		Check the retainer of the pin connections	
					Every 2 months [10]		Check the pins and / or connector elements for damage, visual inspection	
					Every 2 months [10]		Check the retaining elements for damage, visual inspection	
Pump distributor gear								□
				X			Check for leaks	
					X		Check the oil level	
500 h			1500 h			X	Change the gear oil	
Miter gear crane drive								□
					X		Check for leaks	
	X						Check mounting	
100 h			1500 h			X	Oil change	
Hydraulic hose lines								□
				X			Check for leaks and damage	
						X	Check for a safe condition by an authorized inspector, inspection expert	
Hydraulic system								□
				X			Check the oil level	
					X		Check for leaks	
250 h		X				X	Replace the servo pressure and replenishing pressure filter inserts	
250 h		X				X	Replace return filter inserts (only for cranes with open hydraulic circuit)	
250 h		X				X	Replace bleeder filter of hydraulic tank	
500 h			X			X	Check hydraulic oil, required degree of purity: 20/18/15 Take an oil sample and have it checked by the oil supplier	
Hydraulic cylinder								□
					X		Check for leaks	
					Every 3 months [5), 6)]		Lubricating the bearings	

LWE/LR 1600-2-001/18101-07-02/en

copyright © Liebherr-Werk Ehingen GmbH 2018

First maintenance after	Operating hour intervals 250 h	500 h	1000 h	Calendar intervals Daily	Weekly	Annually	Work to be carried out	O.K.
Hydraulic pressure accumulator (nitrogen)								□
		X [4]				X [4]	Check pretension pressures	
Hydraulic coupling system LIKUFIX								□
				X [2] [6]			Check for leaks, dirt and lubricate the guides	
Compressed air system								□
					X		Check for leaks	
					X		Check operating pressure	
					X		Check shut off pressure	
					X		Check operation of automatic drain valve	
						X	Replace air dryer granular cartridges	
						X	Clean air dryer preliminary filter	
Central lubrication system								□
					Every 6 months [1]		Carrying out an intermediate lubrication	
		X					Check for correct function	
					X		Check the grease container fill level	
Emergency control								□
						X	Check for correct function	
Suspended ballast								□
						X	Check the fall protection equipment	
						X	Check frame, suspension and guide section for distortion and cracks	
Crane superstructure								□
					X [11]		Wash the crane superstructure	
						Every 6 months [11]	Check the crane superstructure for corrosion and paint damage	

LWE/LR 1600-2-001/18101-07-02/en

copyright © Liebherr-Werk Ehingen GmbH 2018

First maintenance after	Operating hour intervals 250 h	500 h	1000 h	Calendar intervals Daily	Weekly	Annually	Work to be carried out	O.K.
Crane superstructure, protected against corrosion								□
						Every 6 months	Check the corrosion protection for wear, and if necessary reapply protection	
						Every 2 months	Check the corrosion protection on mechanically machined, blank surfaces for wear and reapply the corrosion protection if necessary	
						Every 3 months	Check the corrosion protection on the chrome-plated piston rods for wear, and if necessary reapply the corrosion protection	

[1)] if the crane is not moved: every 3 months
[2)] before every start up: Perform a visual inspection
[3)] in hot climate zones: every 3 months
[4)] observe maintenance instructions - crane superstructure, chapter 7.05
[5)] and as necessary
[6)] and during assembly
[7)] in Great Britain: every 6 months
[8)] outside of the heating period
[9)] during the heating period
[10)] also for cranes used for a long period of time
[11] each time after the crane is used if possible

LWE/LR 1600-2-001/18101-07-02/en

copyright © Liebherr-Werk Ehingen GmbH 2018

7.03.50 Maintenance intervals - Crane boom

1 Maintenance and inspection schedule 3

LWE/LR 1600-2-001/18101-07-02/en

copyright © Liebherr-Werk Ehingen GmbH 2018

LWE/LR 1600-2-001/18101-07-02/en

Fig.195219

copyright © Liebherr-Werk Ehingen GmbH 2018

1 Maintenance and inspection schedule

Note

- ▶ Carry out maintenance work after reaching the specified operating hours or calendar intervals. The interval which occurs first is the deciding factor!
- ▶ The maintenance intervals complement each other. If a higher interval is coming up, then carry out the work according to the lower interval also!

First maintenance after	Operating hour intervals 250 h	500 h	1000 h	Calendar intervals Daily	Weekly	Annually	Work to be carried out	O.K.
Safety systems								□
						X	Personal protective equipment Follow the instructions of the manufacturer	
						X	Height rescue system Follow the instructions of the manufacturer	
Fall protection equipment								□
						X	Check protection points	
						X	Check safety ropes	
						X	Check the ladders for technically immaculate condition	
						X	Check railings, steps and pedestals for safe function	
						X	Check catwalks and open mesh flooring for safe function	
Surface of crane boom								□
					X		Check accessible surfaces for cleanliness	
						X	Check accessible surfaces for completeness and slip resistance	
						X	Check labels for completeness and legibility	
Rigging and fastening points								□
				X [2)]			Check condition and mounting	
						X	Check for continued suitability by an authorized inspector, inspection expert	
Load handling equipment and assembly aids								□
				X [2)]			Check for cracks, damage, wear and distortion	
						X	Check for continued suitability by an authorized inspector, inspection expert	

LWE/LR 1600-2-001/18101-07-02/en

copyright © Liebherr-Werk Ehingen GmbH 2018

First maintenance after	Operating hour intervals 250 h	500 h	1000 h	Calendar intervals Daily	Weekly	Annually	Work to be carried out	O.K.
Fastening equipment and load securing devices								□
				X [2]			Observe and adhere to the manufacturer's instructions	
Lattice sections								□
						X	Check cracks, damage and distortion	
						X	Check protection points	
						X	Check safety ropes	
						X	Check railings and pedestals for safe function	
						X	Check catwalks and open mesh flooring for safe function	
X [6]						X	Grease the lube points of lattice sections	
Guy rods								□
						X	Check for cracks, damage and distortion by an authorized person	
						Every 4 years	Check cracks, damage and distortion by an authorized inspector	
						X	Checking the retaining elements	
						X	Check labels for completeness and legibility	
X [6]						X	Lubricate the lube points of guy rods	
Fiber guy ropes								□
					Every 3 months [7]		Check braid and intermediate layers for damage and distortion	
					Every 3 months [7]		Check rope end connections for cracks, damage and distortion	
					Every 3 months [7]		Check rope grommet transitions for damage and distortion	
Relapse supports								□
					Every 3 months [5], [6]		Lubricating the bearings	
X [2], [6]							Check the oscillation guard for easy movement	

LWE/LR 1600-2-001/18101-07-02/en

copyright © Liebherr-Werk Ehingen GmbH 2018

First maintenance after	Operating hour intervals 250 h	500 h	1000 h	Calendar intervals Daily	Weekly	Annually	Work to be carried out	O.K.
Relapse cylinder								□
X [2), 6)]					X		Check for leaks	
					Every 3 months [5), 6)]		Lubricating the bearings	
X [2), 6)]		X				X	Check pretension pressure (nitrogen)	
X [2), 6)]		X				X	Check the oil quantity	
Hydraulic hose lines								□
				X			Check for leaks and damage	
						X	Check for a safe condition by an authorized inspector, inspection expert	
Hydraulic cylinder								□
					X		Check for leaks	
					Every 3 months [5), 6)]		Lubricating the bearings	
Hydraulic pressure accumulator (nitrogen)								□
		X [4)]				X [4)]	Check pretension pressures	
Rope pulleys								□
					X [5), 6)]		Check groove base for cleanliness	
			X			X	Check for wear, damage, cracks and easy movement	
			3000 h			Every 3 years	Lubricate the bearings	
Carrier rollers								□
				X [2)]			Check for damage and distortion	
			X			X	Check for wear, damage and easy movement	
			X			X	Check the mounting screws for tight seating	
Auxiliary guying								□
						X [6)]	Check the rope connection between the guy point and the lattice section	
						X [6)]	Check cracks, damage and distortion	

LWE/LR 1600-2-001/18101-07-02/en

copyright © Liebherr-Werk Ehingen GmbH 2018

First maintenance after	Operating hour intervals 250 h	500 h	1000 h	Calendar intervals Daily	Weekly	Annually	Work to be carried out	O.K.
Pin connections								□
					Every 2 months 8)		Check the retainer of the pin connections	
					Every 2 months 8)		Check the pins and / or connector elements for damage, visual inspection	
					Every 2 months 8)		Check the retaining elements for damage, visual inspection	
Crane ropes								□
				X			Check for damage and distortion	
					Monthly 5)		Check, grease by expert personnel	
						X	Check by an authorized inspector	
						Every 4 years	Check by an inspection expert	

LWE/LR 1600-2-001/18101-07-02/en

copyright © Liebherr-Werk Ehingen GmbH 2018

First maintenance after	Operating hour intervals 250 h	500 h	1000 h	Calendar intervals Daily	Weekly	Annually	Work to be carried out	O.K.
Hook blocks								□
				X [3]			Check of the load hook for distortion, wear, damage and cracks by the crane operator	
			X			X	Check rope pulleys for distortion, wear, damage and cracks	
			3000 h			Every 3 years	Lubricate rope pulley bearings	
	100 h				Every 3 months [5]		Lubricate pressure bearings	
	100 h				Every 3 months [5]		Lubricate radial bushing	
	100 h				Every 3 months [5]		Lubricate suspension of hook beam	
					Every 6 months [5]		Replace batteries on incline sensor	
						X	Load hook: Check distance dimension (y)	
						X	Check of the load hook for distortion, wear, damage and cracks by an authorized person	
						Every 4 years	Check of the load hook for distortion, wear, damage and cracks by an inspection expert	

[2] before every start up: checking visually
[3] before starting crane operation: checking visually
[4] observe maintenance instructions - crane superstructure, chapter 7.05
[5] and as necessary
[6] and during assembly
[7] by authorized and trained expert personnel with boom taken down and before every erection procedure
[8] also for cranes used for a long period of time

LWE/LR 1600-2-001/18101-07-02/en

copyright © Liebherr-Werk Ehingen GmbH 2018

Empty page!

LWE/LR 1600-2-001/18101-07-02/en

copyright © Liebherr-Werk Ehingen GmbH 2018

7.04 Maintenance instructions - Crane chassis

1	Travel gear	3
2	Planetary gear and miter gear	5
3	Travel brake	7
4	Central lubrication system	9
5	Tensioning the crawler chain	13

LWE/LR 1600-2-001/18101-07-02/en

copyright © Liebherr-Werk Ehingen GmbH 2018

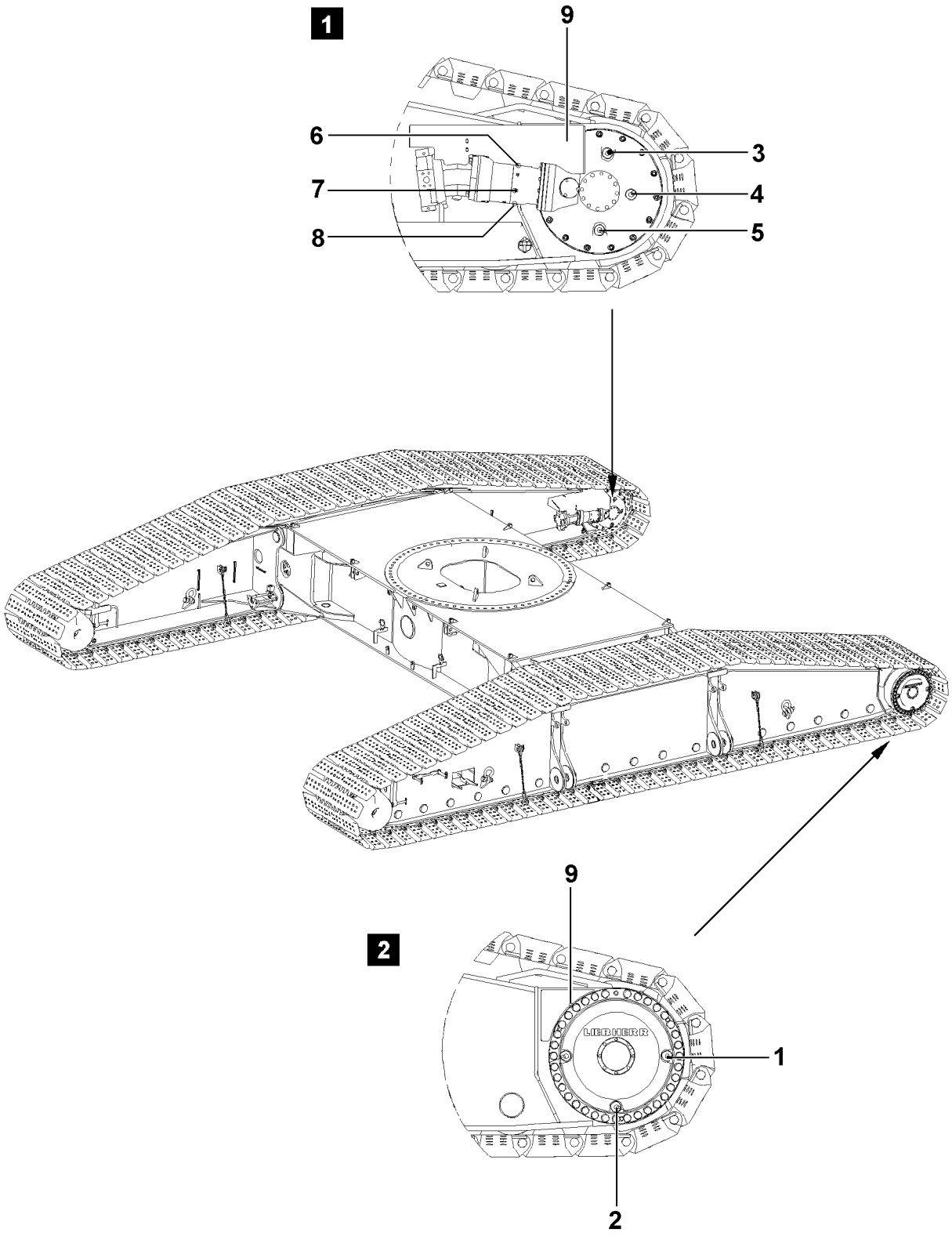

LWE/LR 1600-2-001/18101-07-02/en

Fig.105353

copyright © Liebherr-Werk Ehingen GmbH 2018

1 Travel gear

The travel gear consists of the planetary gear and miter gear. The planetary gear and the miter gear have separate, different sized oil chambers. The oil levels in the gear must be checked independently of each other.

CAUTION
Danger of gear damage!
▶ For all work on the travel gear, observe utmost cleanliness to avoid dirt infiltration into the inside of the travel gear.

1.1 Gear oil

Miter gear, see fig. **1**

3 Oil filler plug

4 Oil level plug

5 Oil drain plug

9 Grease lubrication

Planetary gear, see fig. **2**

1 Oil filler / level plug

2 Oil drain plug

9 Grease lubrication

1.1.1 Checking the oil level

Make sure that the following prerequisites are met:
– the crane is in horizontal position
– the travel gear is at a standstill

Note
▶ To ensure proper oil level check, make sure that the travel gears are at a standstill for at least two minutes before checking the oil level. This ensures that the oil has returned to the oil chamber completely.

▶ Carefully back out the oil level plug.
▶ If the oil runs out of the control port or if the oil level is at the height of the lower edge of the control port, then the oil level on the travel gear is ok.

CAUTION
Danger of gear damage!
▶ If the oil level has dropped below the control port edge, make sure to add gear oil according to the lubrication chart until the oil level is again at the height of the lower control port.

▶ Add oil on the oil filler port.
▶ Reinstall the oil level plug and tighten.

LWE/LR 1600-2-001/18101-07-02/en

copyright © Liebherr-Werk Ehingen GmbH 2018

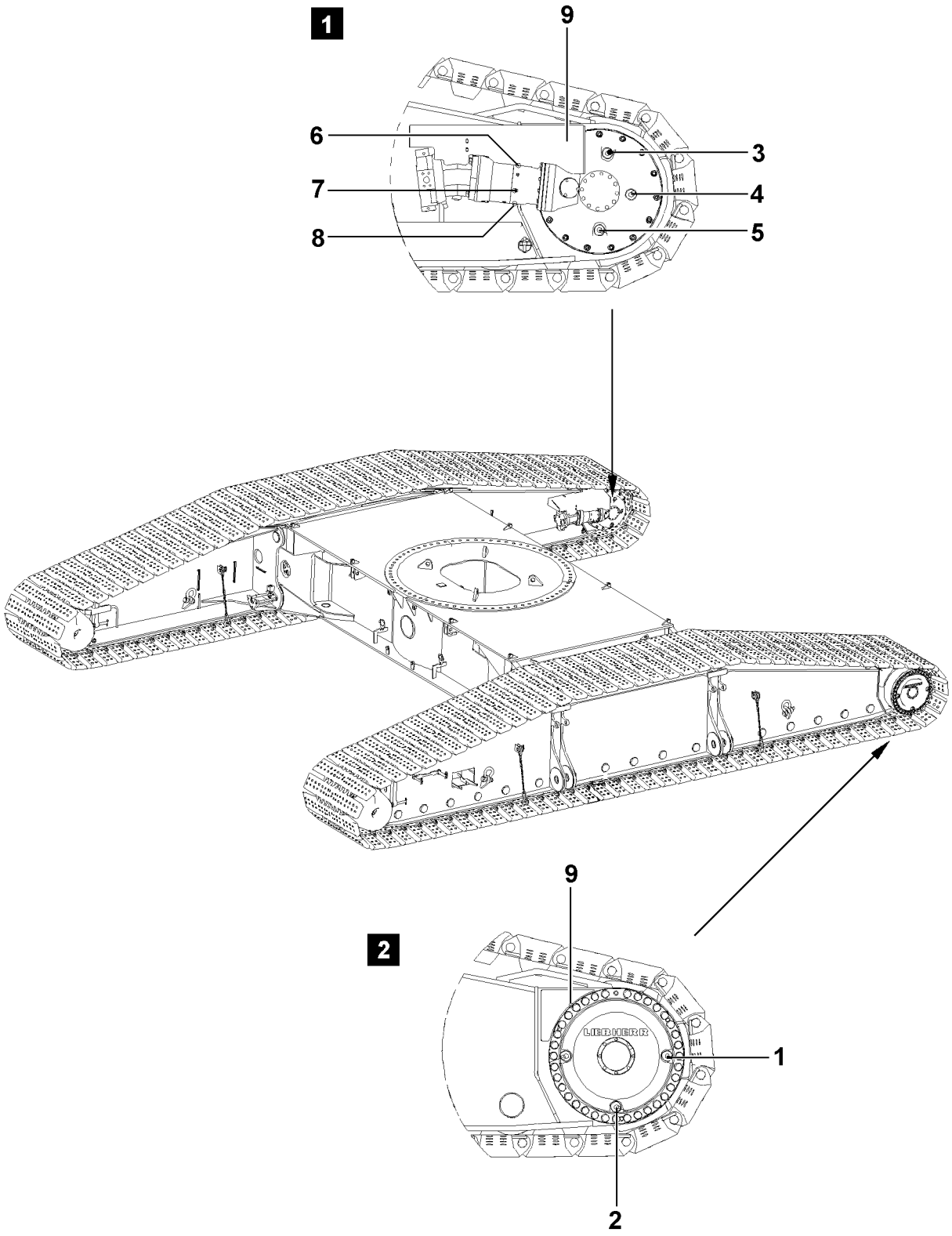

LWE/LR 1600-2-001/18101-07-02/en

Fig.105353

copyright © Liebherr-Werk Ehingen GmbH 2018

2 Planetary gear and miter gear

2.1 Oil change on the planetary gear

Make sure that the following prerequisites are met:
- the crane is in horizontal position
- the travel gear is at a standstill
- travel gear is at operating temperature
- a container to catch the „used oil“ is available

Note
- ▶ When selecting the container to catch the use oil, make sure that the container is sufficiently sized to be able to catch all the used oil.
- ▶ For fill quantity of travel gear, see chapter 7.06.

- ▶ Remove the oil level plug **1** for bleeding.
- ▶ Remove the oil drain plug **2** and drain oil into a suitable container.

Note
- ▶ Allow the planetary gear to empty completely.

- ▶ Clean the oil drain plug **2** and the sealing surfaces.
- ▶ Install the oil drain plug **2** with new seal and tighten.
- ▶ Add oil according to the lubrication chart on the oil level plug **1**, until it is „at the height“ of the oil level port or until it starts to run over.
- ▶ Install the oil level plug **1** with new seal and tighten.

2.2 Oil change on the miter gear

Make sure that the following prerequisites are met:
- the crane is in horizontal position
- the travel gear is at a standstill
- travel gear is at operating temperature
- a container to catch the „used oil“ is available

Note
- ▶ When selecting the container to catch the use oil, make sure that the container is sufficiently sized to be able to catch all the used oil.
- ▶ For fill quantity of travel gear, see chapter 7.06.

- ▶ Remove the oil level plug **4** for bleeding.
- ▶ Remove the oil drain plug **5** and oil drain plug **6** and drain the oil into a suitable container.

Note
- ▶ Allow the miter gear to empty completely.

- ▶ Clean the oil drain plug **5** and oil drain plug **6** and the sealing surfaces.
- ▶ Install the oil drain plug **5** and the oil drain plug **6** with new seal and tighten.
- ▶ Add oil according to the lubrication chart on the oil level plug **4**, until it is „at the height“ of the oil level port or until it starts to run over.
- ▶ Install the oil drain plug **4**, oil drain plug **5** and oil drain plug **6** with new seal and tighten.

LWE/LR 1600-2-001/18101-07-02/en

copyright © Liebherr-Werk Ehingen GmbH 2018

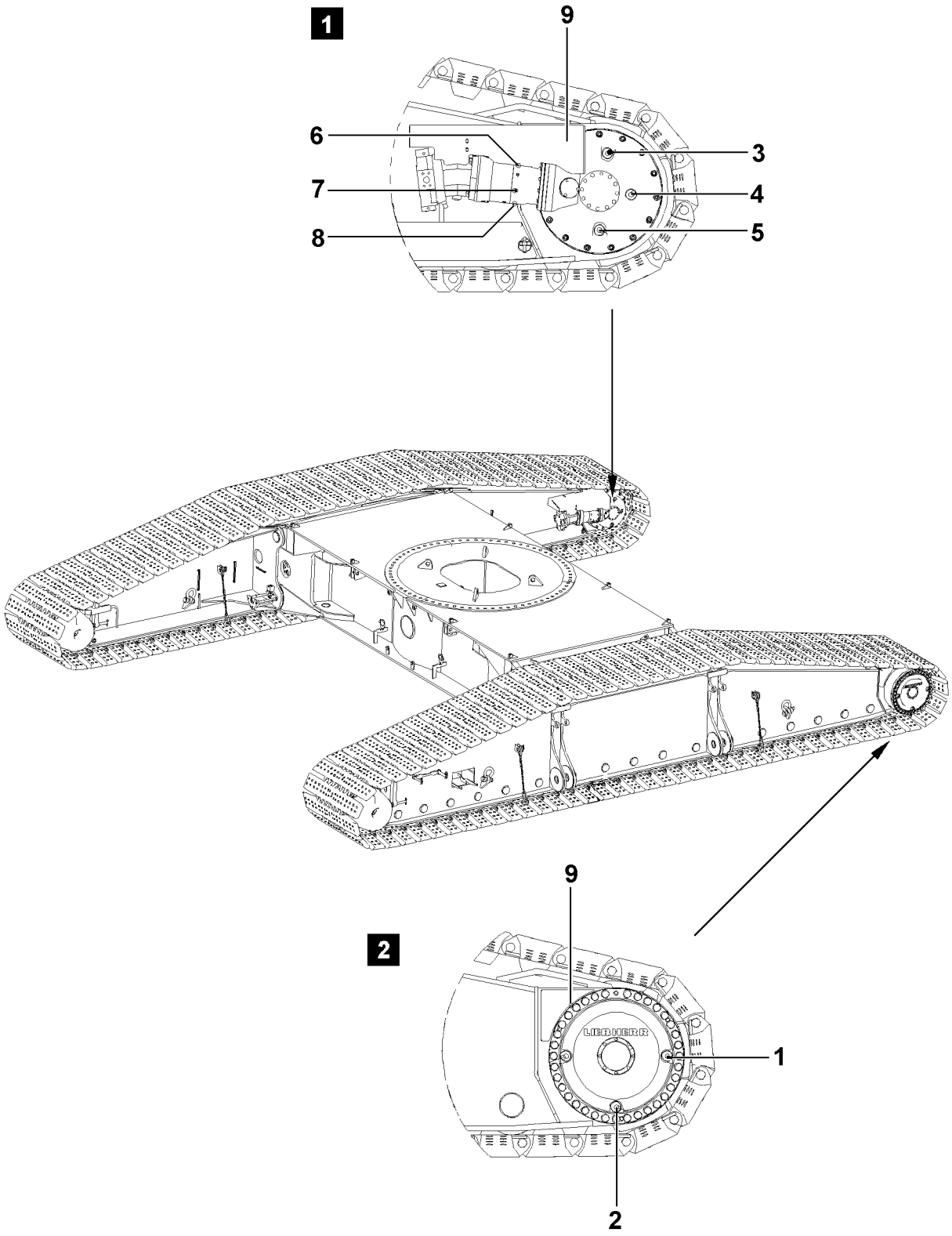

LWE/LR 1600-2-001/18101-07-02/en

Fig.105353

copyright © Liebherr-Werk Ehingen GmbH 2018

3 Travel brake

3.1 Checking the oil level

Make sure that the following prerequisites are met:
- the crane is in horizontal position
- the travel gear is at a standstill

Note
- ▶ To ensure proper oil level check, make sure that the travel gears are at a standstill for at least two minutes before checking the oil level. This ensures that the oil has returned to the oil chamber completely.

- ▶ Carefully back out the oil level plug **7**.
- ▶ If the oil runs out of the control port or if the oil level is at the height of the lower edge of the control port, then the oil level on the travel gear is ok.

CAUTION
Danger of damage!
- ▶ If the oil level has dropped below the control port edge, make sure to add oil according to the lubrication chart until the oil level is again at the height of the lower edge of the control port.

- ▶ Add oil on the oil filler plug **6**.
- ▶ Reinstall the oil filler plug **6** and tighten.

3.2 Oil change

Make sure that the following prerequisites are met:
- the crane is in horizontal position
- the travel gear is at a standstill
- travel gear is at operating temperature
- a container to catch the „used oil“ is available

Note
- ▶ When selecting the container to catch the use oil, make sure that the container is sufficiently sized to be able to catch all the used oil.
- ▶ For fill quantity of travel brakes, see chapter 7.06.

- ▶ Remove the oil level plug **7** for bleeding.
- ▶ Remove the oil drain plug **8** and drain oil into a suitable container.
- ▶ Clean the oil drain plug **8** and the sealing surfaces.
- ▶ Install the oil drain plug **8** with new seal and tighten.
- ▶ Add oil as specified in the lubrication chart on the oil filler plug **6** until it starts to overflow at the oil level plug **7**.
- ▶ Install the oil level plug **7** and the oil filler plug **6** with new seal and tighten.

LWE/LR 1600-2-001/18101-07-02/en

copyright © Liebherr-Werk Ehingen GmbH 2018

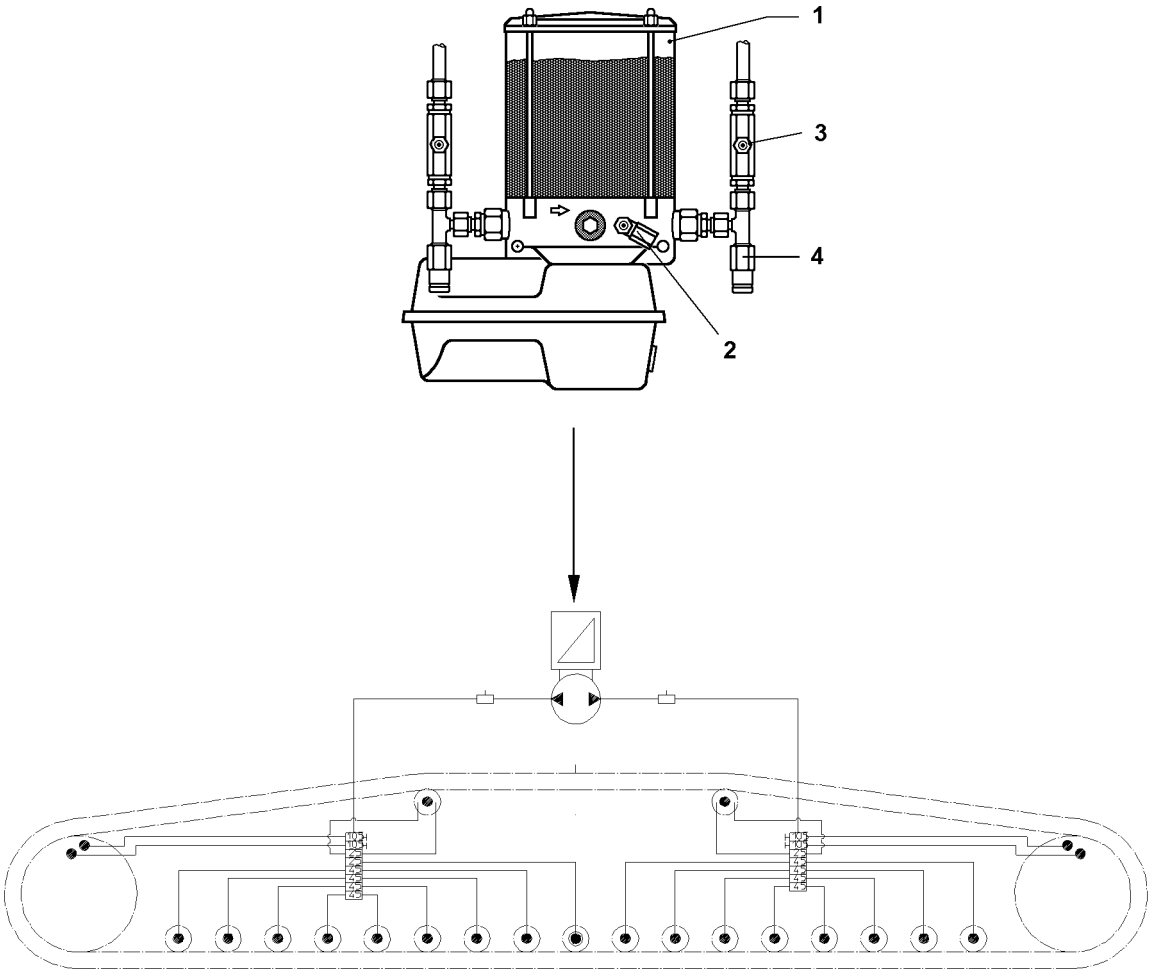

LWE/LR 1600-2-001/18101-07-02/en

Fig.105354

copyright © Liebherr-Werk Ehingen GmbH 2018

4 Central lubrication system

The crawler carriers are equipped with a central lubrication system. All grease points (see overview on the left) are automatically supplied with the correct amount of grease. If the crane has not been moved for more than 3 months, then it must be lubricated every 3 months with an external grease pump until grease emerges from all grease points. Then repeat the corresponding crawler movement several times and repeat the lubrication procedure.

Note

▶ Cleaning is permitted in washing bays or with steam cleaners!

4.1 Components of the system

- **1** Grease container
- Grease fitting **2**: Filling the grease container
- Grease fitting **3**: Filling the lube lines
- **4** Pump outlet

4.2 Filling the grease container

CAUTION

Risk of damage due to insufficient lubrication!

▶ There must be sufficient grease in the grease container **1** at all times.

▶ Observe utmost cleanliness when filling the grease container **1**.

▶ Fill the grease container **1** with a grease pump via the grease fitting **2** on the central lubrication pump.

4.3 Bleeding the central lubrication system

If the grease container **1** has been emptied, then it may be necessary to bleed the central lubrication system.

▶ Fill the grease container **1**.

▶ Unscrew the main line from the pump outlet **4**.

▶ Trigger the additional lubricating pulse until there are no more air bubbles in the emerging lubricant at the pump outlet **4**.

▶ Reconnect the main line.

▶ Trigger additional lubricating process.

4.4 Filling the grease lines

CAUTION

Risk of damage due to insufficient lubrication!

The grease lines must be refilled after any repair on components, which are lubricated with grease. If this is not observed, the component may run dry.

▶ Sufficient grease must be available in the grease lines after every repair on greased components.

▶ Observe utmost cleanliness when filling the grease lines!

▶ Add grease with an external grease pump via the grease fitting **3**.

LWE/LR 1600-2-001/18101-07-02/en

copyright © Liebherr-Werk Ehingen GmbH 2018

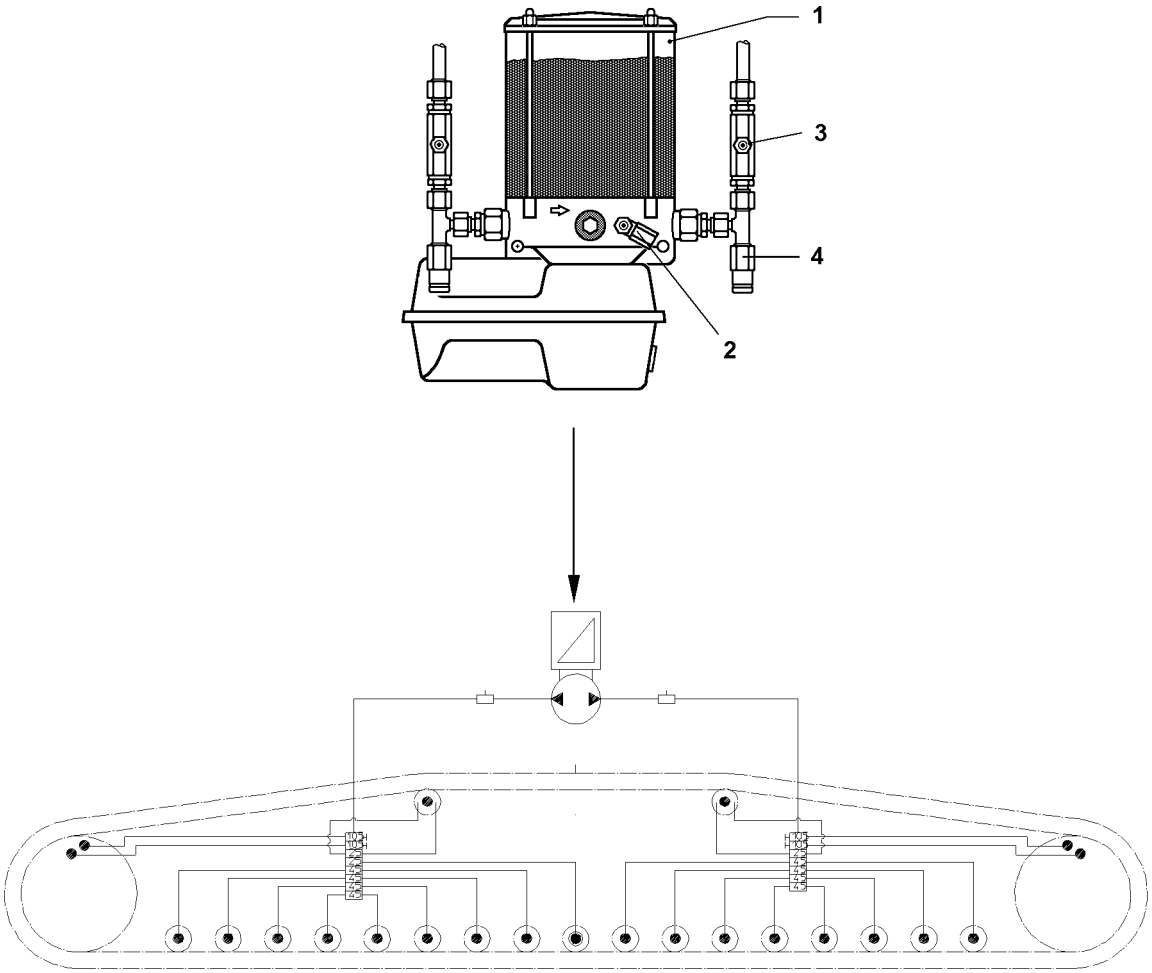

LWE/LR 1600-2-001/18101-07-02/en

Fig.105354

copyright © Liebherr-Werk Ehingen GmbH 2018

4.5 Troubleshooting on the central lubrication system

Problem	Cause	Remedy
Pump is not working	Integrated electronic control defective, electrical line interrupted, pump defective	replace lower part of motor protection housing, replace electrical line, replace pump
Pump operates, but does not deliver	Air cushion in delivery piston has dropped below minimum fill level, pump element defective	Bleed pump, fill reservoir, replace pump element
No grease collar on all lube points	Pump not operating, interval time too high or cycle time too short, system blocked	see „Pump not operating“, reduce interval time or increase number of cycles, refer to „Grease emerges on pressure relief valve“
No grease collar on several lube points	Supply lines to secondary distributors broken or leaking, screw connections leaking	Replace lines, tighten or replace screw connections
No grease collar on one lube point	associated lube line broken or leaking, screw connection leaking	Replace line, tighten or replace screw fitting
Pump speed reduced	Higher system pressure, lower ambient temperature	Check system / bearing points, no damage: Try 1 or 2 intermediate greasing operations
Grease escapes at the pressure relief valve	System pressure too high, progressive distributor blocked, system blocked, defective valve spring	Check system, replace distributor, repair blocked / seized bearing point, replace pressure relief valve
Control light lights up constantly	Engine is overloaded	Consult LIEBHERR or BekaMax customer service
Control light blinks in 0.5 second cycle	Error in the monitoring period from cycle start	Proximity switch is defective, possibly consult Liebherr or BekaMax customer service

LWE/LR 1600-2-001/18101-07-02/en

copyright © Liebherr-Werk Ehingen GmbH 2018

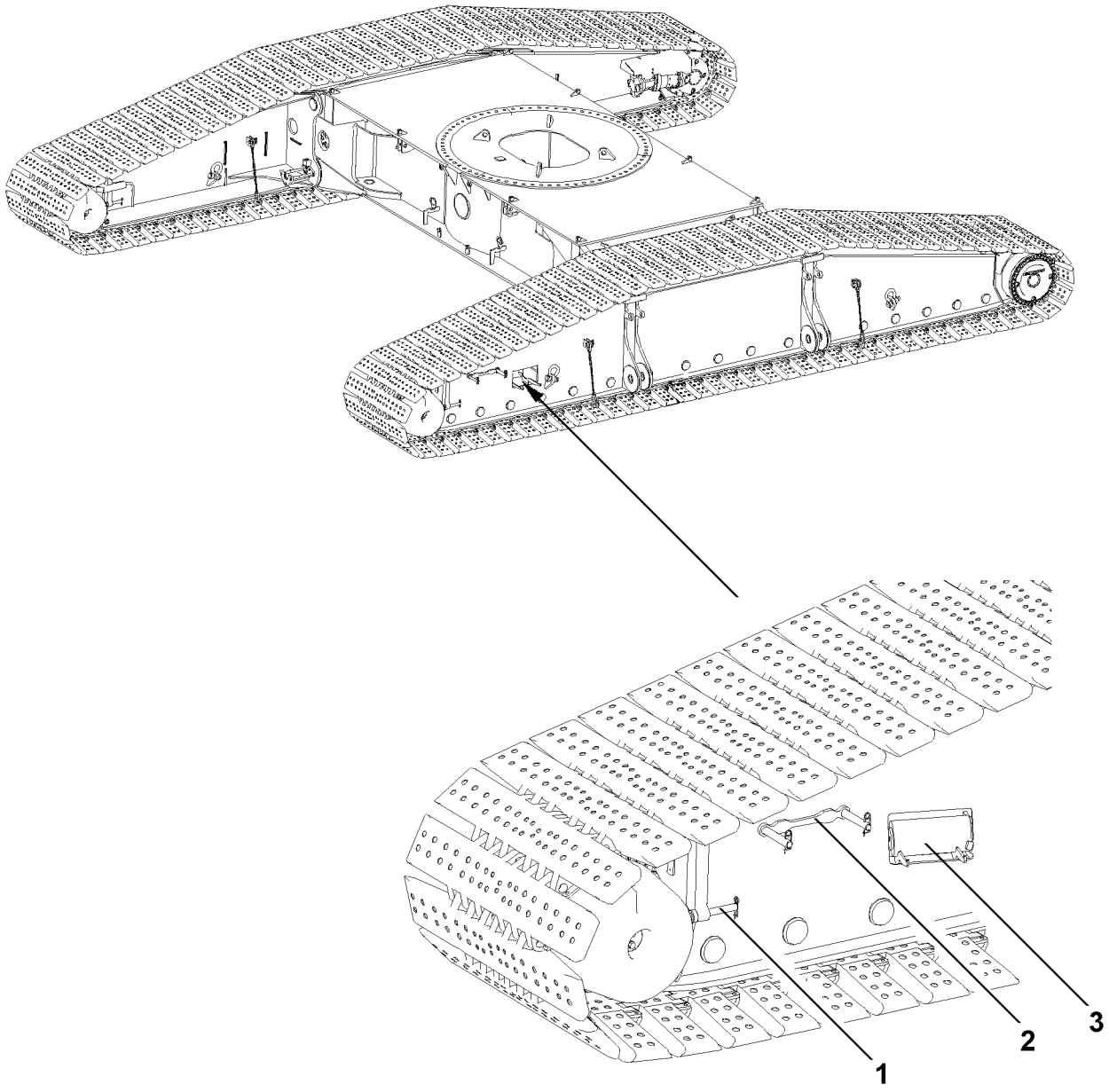

LWE/LR 1600-2-001/18101-07-02/en

Fig.105355

copyright © Liebherr-Werk Ehingen GmbH 2018

5 Tensioning the crawler chain

Note
▶ The crawler chains are tensioned with the tension cylinder **3**.

5.1 Tensioning

Make sure that the following prerequisites are met:

– the crane is in horizontal position
– the tension cylinder **3** is installed in the respective crawler track.

5.1.1 Tensioning procedure

CAUTION
Danger of damage to crawler chain or travel drive.
▶ Before tensioning the crawler chains, check the crawler chains and the travel gears for foreign particles, such as rocks.

▶ Extend the tension cylinder **3** with the manual lever until the tension resistance in the crawler chain is larger than the force on the tension cylinder.

Result:

– Crawler chain is tensioned.

▶ Push the spacer plates **2** between the sliding section and the crawler carrier. Secure the spacer plates **2** with pins **3**.
▶ Relieve the tension cylinder **1** again.
▶ After the tension procedure, move the crawler about one crawler length straight back and forth.

Result:

– The tension in the lower chain area is relieved.

Note
▶ If necessary, repeat the tension procedure of the crawler chain and insert additional spacer plates.

LWE/LR 1600-2-001/18101-07-02/en

copyright © Liebherr-Werk Ehingen GmbH 2018

Empty page!

LWE/LR 1600-2-001/18101-07-02/en

copyright © Liebherr-Werk Ehingen GmbH 2018

7.05 Maintenance instructions - Crane superstructure

1	Crane engine	3
2	Pump distributor gear	9
3	Hydraulic system	11
4	Slewing ring connection	17
5	Central lubrication system	19
6	Hoist gear 1 to 6, illustration 1	29
7	Assembly winch, illustration 2	31
8	Slewing gear	33
9	Air dryer of the compressed air system of the crane superstructure	35
10	Electrical system - Lighting	35

LWE/LR 1600-2-001/18101-07-02/en

copyright © Liebherr-Werk Ehingen GmbH 2018

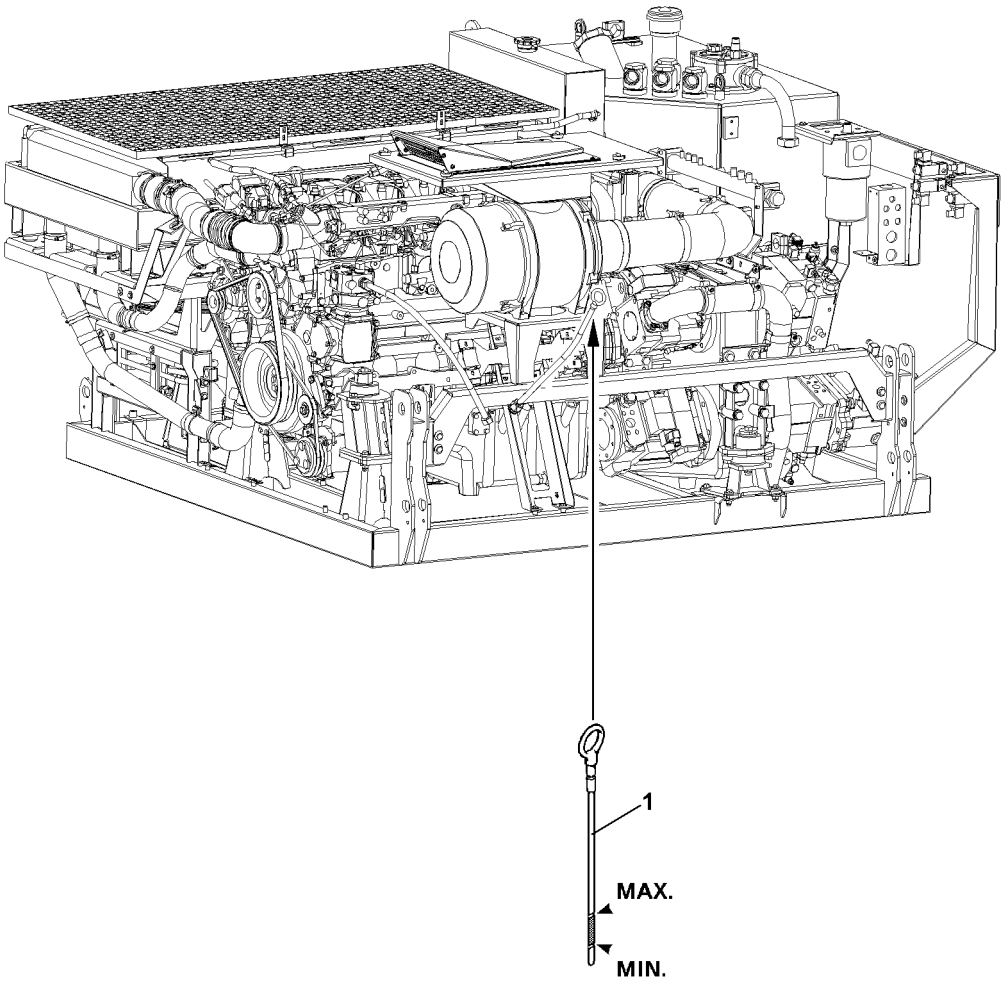

LWE/LR 1600-2-001/18101-07-02/en

Fig.105381

copyright © Liebherr-Werk Ehingen GmbH 2018

1 Crane engine

Never step on fuel lines during maintenance or repair work in the engine area!

DANGER
Danger of fire!
- ▶ Make sure that the engine area is kept free of diesel fuel!
- ▶ Extreme cleanliness is vital, particularly during filter changes and bleeding. Wipe up any spilled fuel!
- ▶ When replacing the filter, it is recommended to put down cleaning rags before removing the filter in order to absorb fuel!

1.1 Engine oil

1.1.1 Checking the oil level

Make sure that the following prerequisites are met:
- The crane is in horizontal position.
- The engine is turned off and the oil has collected in the oil pan.

- ▶ Remove the dipstick **1** and wipe it off.
- ▶ Reinsert the dipstick **1** and pull it out again.

The oil level must be between the min. and max. marks on the dipstick **1**.

- ▶ Check the oil level.

NOTICE
Risk of damaging the engine!
If the oil level has dropped below the minimum mark, add engine oil according to the lubrication chart until the oil level is between the minimum and maximum marks!
- ▶ Add engine oil and check again!

- ▶ Reinsert the dipstick **1**.

1.1.2 Changing the oil

Refer to the separate operating instructions for „LIEBHERR Diesel engines“.

LWE/LR 1600-2-001/18101-07-02/en

copyright © Liebherr-Werk Ehingen GmbH 2018

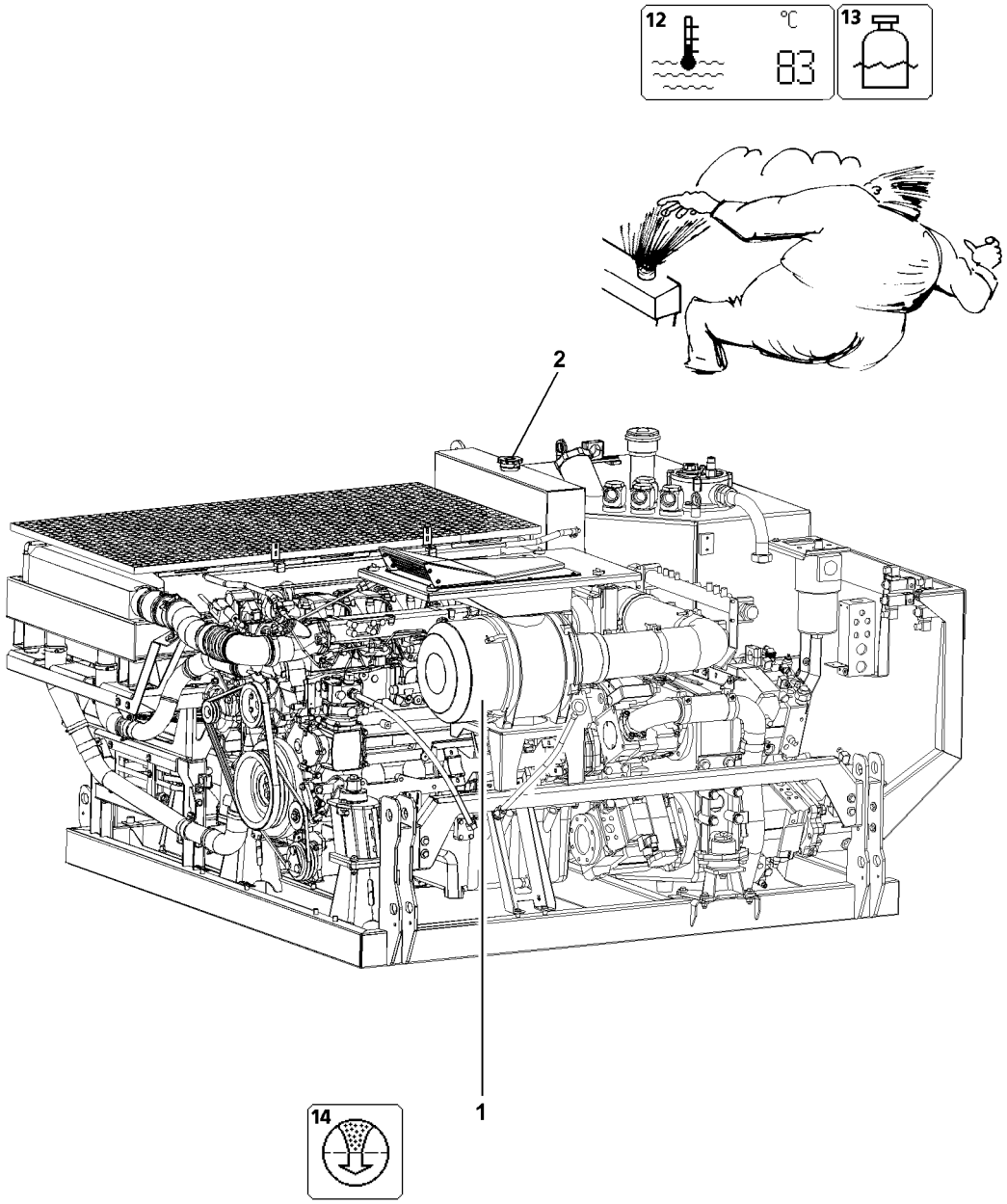

LWE/LR 1600-2-001/18101-07-02/en

Fig.105382

copyright © Liebherr-Werk Ehingen GmbH 2018

1.2 Engine coolant

The coolant level is monitored by the LICCON computer system. If the coolant level is too low the „Low coolant level“ **13** icon appears on the LICCON monitor.

The crane's engine coolant temperature can be read on the LICCON monitor in [°] on the „Engine coolant temperature“ icon.

WARNING
Danger of skin burns!
▶ Check the coolant only when the engine is cold!

▶ Turn the cap **2** on the filler neck of the water cooler expansion tank to the 1st notch.
▶ Release excess pressure.
▶ Remove the cap **2**.
▶ Check the coolant level.

Add coolant as specified in the lubrication chart only on the filler neck of the water cooler expansion tank.

▶ Add coolant to overflow level if necessary.

1.3 Air filter

The air filter **1** is monitored by the LICCON computer system. If the vacuum increases in the intake line due to dirty filter units, the „Air filter contaminated“ **14** icon is displayed on the LICCON monitor.

If the „Air filter contaminated“ **14** icon appears:
▶ Clean or replace the filter insert.

1.4 Diesel particle filter*

DANGER
Danger of igniting the diesel particle filter*!
▶ The diesel particle filter* may only be regenerated under the supervision of operating personnel!

Carry out the operation and maintenance of the diesel particle filter* according to the separate operating instructions of the diesel particle filter* manufacturer.

LWE/LR 1600-2-001/18101-07-02/en

copyright © Liebherr-Werk Ehingen GmbH 2018

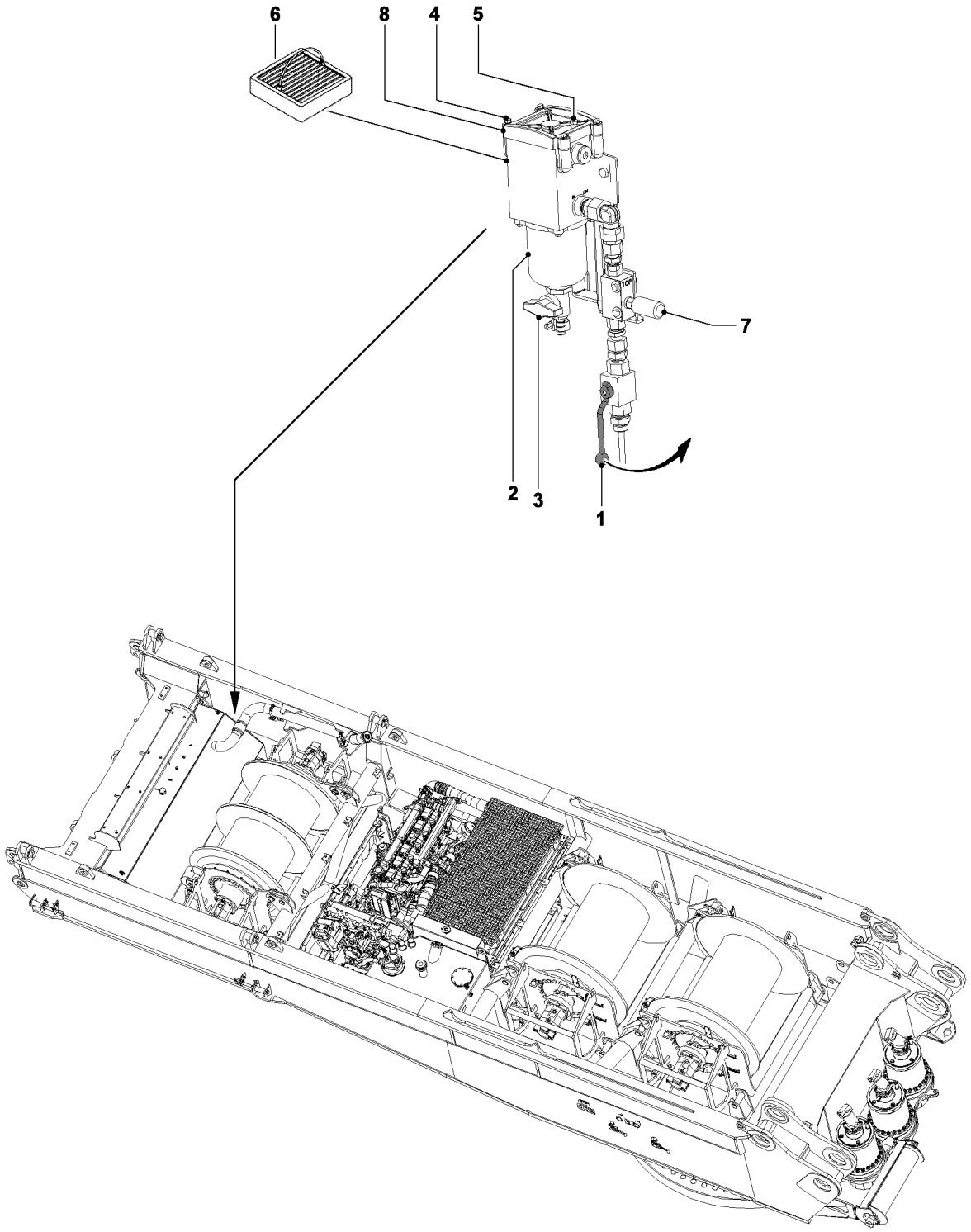

LWE/LR 1600-2-001/18101-07-02/en

Fig.105421

copyright © Liebherr-Werk Ehingen GmbH 2018

1.5 Fuel pre-filter

1.5.1 Draining the fuel pre-filter

Note

▶ The water separator **2** on the fuel pre-filter must be drained at regular intervals!

▶ Turn the engine off.
▶ Place a catch basin under the water separator.
▶ Close the ball valve **1**.
▶ Open the drain valve **3** and drain water until fuel emerges.
▶ Close the drain valve **3**.
▶ Open the ball valve **1**.
▶ Remove the catch basin and dispose of the fluid.

1.5.2 Cleaning the filter strainer

DANGER

Danger of fire and explosion!

▶ Do not smoke!
▶ Avoid open flames!
▶ Work only when the engine is turned off!
▶ Maintain extreme cleanliness during all work!

▶ Turn the engine off.
▶ Place a catch basin under the fuel pre-filter.
▶ Close the ball valve **1**.
▶ Open the drain valve **3** until no more fuel emerges.
▶ Remove the catch basin and dispose of the fluid.
▶ Remove the screws **4** and remove the cover **8**.
▶ Remove the filter strainer **6** and clean it properly.
▶ Insert the cleaned filter strainer **6** properly.
▶ Install the cover **8** with seals properly.
▶ Properly tighten the screws **4**.
▶ Open the ball valve **1**.
▶ Open the breather screw **5**.
▶ Operate the hand pump **7** and properly bleed the fuel filter.
▶ Properly tighten the breather screw **5**.
▶ Start the engine and check the fuel pre-filter for leaks.

LWE/LR 1600-2-001/18101-07-02/en

copyright © Liebherr-Werk Ehingen GmbH 2018

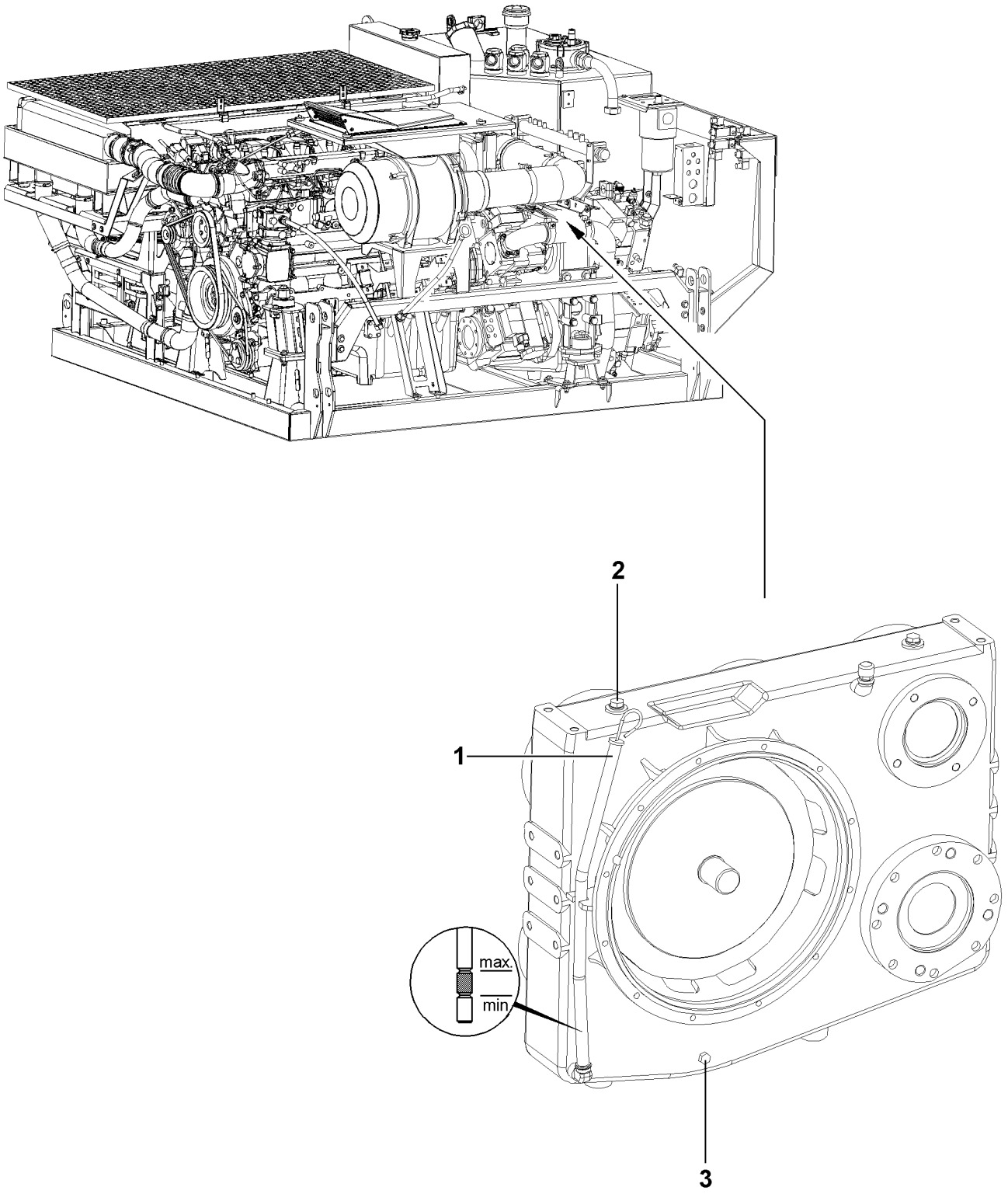

LWE/LR 1600-2-001/18101-07-02/en

Fig.105383

copyright © Liebherr-Werk Ehingen GmbH 2018

2 Pump distributor gear

Maintain utmost cleanliness during all work to prevent any dirt from entering the inside of the gear.

2.1 Checking the oil level

Make sure that the following prerequisite is met:
– The crane is in horizontal position.

▶ Remove the dipstick **1** and wipe it off.
▶ Reinsert the dipstick **1** and pull it out again.

The oil level must be between the min. and max. marks on the dipstick **1**.

▶ Check the oil level.

NOTICE
Danger of gear damage!
If the oil level has dropped below the minimum mark, add engine oil as specified in the lubrication chart until the oil level is between the minimum and maximum marks!
▶ Add oil and check again!

▶ Reinsert the dipstick **1**.

2.2 Changing the oil

Make sure that the following prerequisites are met:
– The crane is in horizontal position.
– The gear is warm.

▶ Remove the oil filler plug **2**.
▶ Remove the oil drain plug **3** and drain the oil.
▶ Install the oil drain plug **3** with new seal and tighten.
▶ Add oil as specified in the lubrication chart on the oil filler plug **2** until the oil level is between the min. and max. marks on the dipstick **1**.
▶ Install the oil filler plug **2** with new seal.
▶ Check the oil level.

LWE/LR 1600-2-001/18101-07-02/en

copyright © Liebherr-Werk Ehingen GmbH 2018

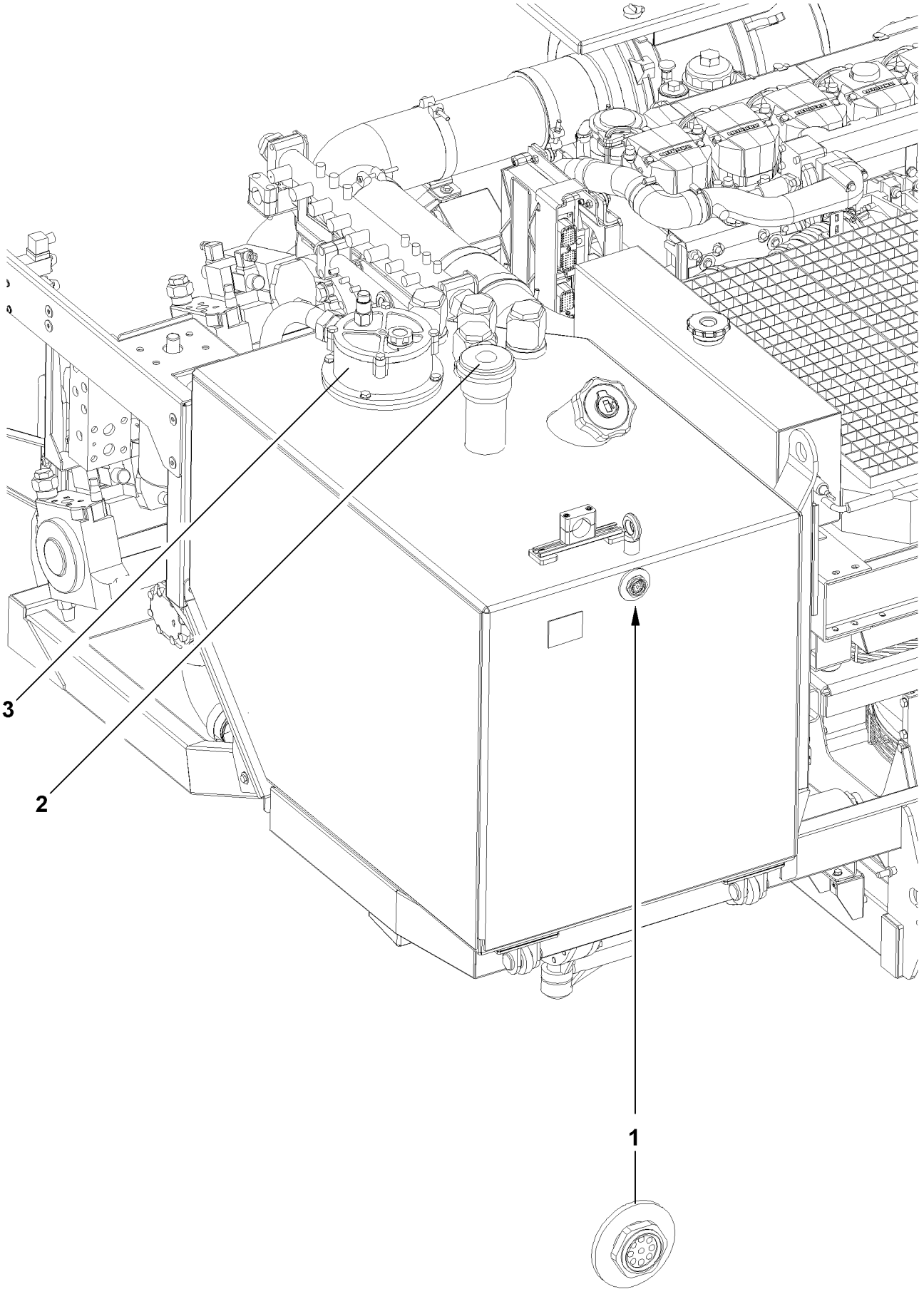

LWE/LR 1600-2-001/18101-07-02/en

Fig.105414

copyright © Liebherr-Werk Ehingen GmbH 2018

3 Hydraulic system

When adding oil, observe utmost cleanliness.

3.1 Hydraulic tank

3.1.1 Checking the oil level

Make sure that the following prerequisites are met:
- The crane is in horizontal position.
- All hydraulic cylinders are fully retracted.

The oil level must be in the center of the oil level sight gauge **1**.

▶ Check the oil level on the oil level sight gauge **1** of the hydraulic oil tank.

Problem remedy
No oil is visible in the oil level sight gauge **1**?
▶ Add oil as specified in the lubrication chart with a fine-mesh strainer until the oil level is visible in the center of the oil level sight gauge **1**.

3.1.2 Checking the vent / breather filter

▶ Open the cover with the turn lock.
▶ Check the filter **2** for impurities (visual inspection).

In the event of heavy contamination:
▶ Replace the filter **2**.
▶ Close the cover with the turn lock again.

3.1.3 Return filter

The return filter **3** is equipped with a maintenance indicator. If the red mark is visible when the oil is at operating temperature, then the filter insert must be replaced.

▶ Remove the filter cover.
▶ Remove the filter insert.
▶ Rinse out the filter housing.
▶ Clean sealing surface on the cover and the filter housing.
▶ Insert a new filter insert.
▶ Lubricate the rubber seal ring in the cover with oil.
▶ Replace the filter cover and tighten.
▶ Start the engine and check the filter for leaks.
▶ Check the oil level and add oil if necessary.

LWE/LR 1600-2-001/18101-07-02/en

copyright © Liebherr-Werk Ehingen GmbH 2018

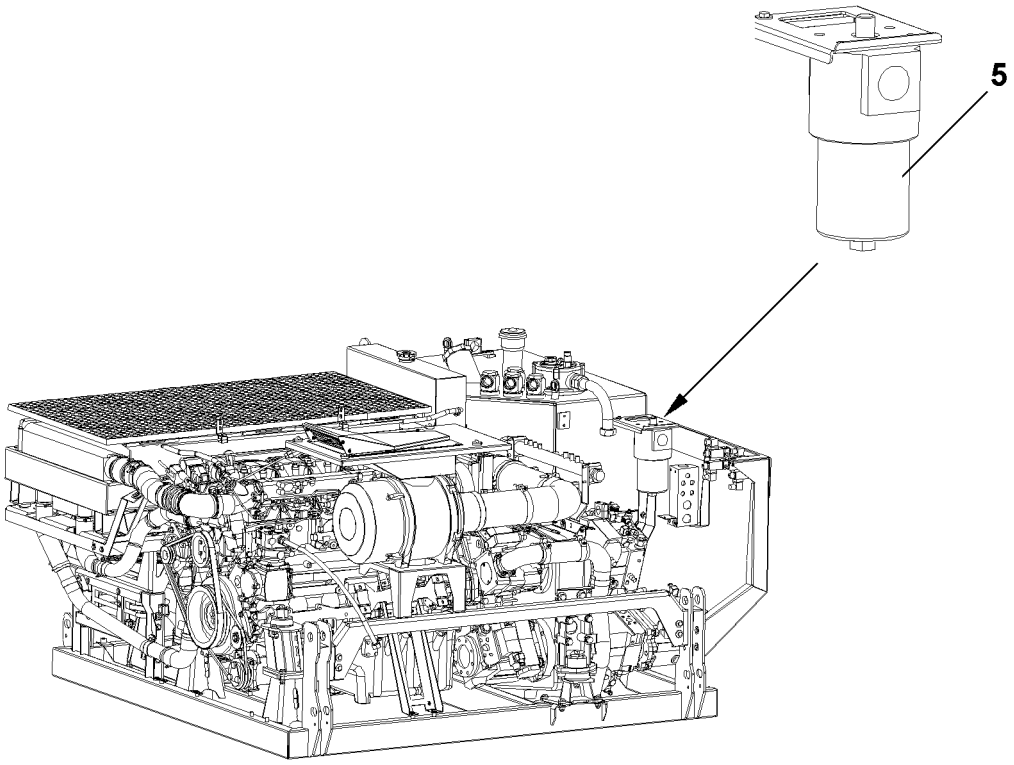

LWE/LR 1600-2-001/18101-07-02/en

Fig.105415

copyright © Liebherr-Werk Ehingen GmbH 2018

3.2 Pressure filters in the crane hydraulic

The pressure filter **5** is equipped with a maintenance indicator. If the red bar indicator is visible when the oil is at operating temperature, then the filter cartridge must be replaced.

- ▶ Turn the engine off.
- ▶ Release the filter cartridge and collect any escaping oil in a suitable container.
- ▶ Remove and dispose of the filter cartridge.
- ▶ Clean the sealing surface on the filter bracket.
- ▶ Lubricate the rubber seal ring on the new oil filter cartridge with oil.
- ▶ Install a new filter cartridge and tighten.
- ▶ Start the engine and check for leaks.
- ▶ Slowly run through all crane movements.

Result:

– This bleeds the hydraulic system.

▶ Check the oil level again and add oil if necessary.

3.3 Diaphragm reservoirs

Various diaphragm reservoirs are installed in the hydraulic system. The pretension pressures are specified in the hydraulic circuit diagram as well as on the individual diaphragm reservoirs. The pretension pressure must be measured separately in each diaphragm reservoir.

NOTICE
Risk of damaging the hydraulic system!
If the ambient temperatures fluctuate considerably, for example after transfer to countries with extremely hot or cold temperatures or in countries with considerable differences between the summer and winter temperatures, the accumulator pressures may change!
▶ Check the accumulator pressures and correct if necessary!

DANGER
Risk of explosion!
The pressure in the nitrogen cylinder must be less than the maximum permissible operating pressure of the accumulator or the pressure gauge. Otherwise install a pressure reducer between the cylinder and the filling device!
▶ The diaphragm reservoir must be relieved on the fluid side!
▶ Do not use air or oxygen to fill the diaphragm reservoir!

▶ Turn the engine off.

Result:

– The diaphragm reservoir is relieved on the fluid side.

The pretension pressure in the hydraulic reservoirs may only be checked by an expert with appropriate training and equipment. In addition, the national regulations for pressurized container inspections must also be observed.

▶ Check the pretension pressure with a testing and filling device and correct, if necessary.

3.4 Hydraulic hose lines

The hydraulic hose lines must be checked according to ISO 9927-1 by an **experienced technician** or **expert mechanic**, as required, depending on the duration of use and the operating conditions, but at least once a year.

Experienced technicians are persons who:
– possess sufficient knowledge about cranes due to their professional background and experience.
– are familiar with the relevant settings to detect any abnormal deviations from the nominal condition.
– have undergone special training.

LWE/LR 1600-2-001/18101-07-02/en

copyright © Liebherr-Werk Ehingen GmbH 2018

Expert mechanics are mechanics, who:
- are experienced in the design, construction or maintenance of cranes.
- possess sufficient knowledge about the relevant settings and standards.
- are fully equipped to perform inspections.
- are able to assess the safety status of the crane.
- can decide which action needs to be taken to ensure the crane can continue to be operated safely.

Note
▶ The applicable national regulations must also be complied with!

3.4.1 Checking the hydraulic hoses within area of responsibility of the German employer's liability insurance associations

At least once a year, an **expert** must inspect the hydraulic hoses to ensure they are in operationally safe condition. The crane must be inspected by an **authorized inspector** every four years from the day it was first licensed. After the 12th year of operation, the crane must be inspected by the authorized inspector annually.

The **expert** or **authorized inspector** must document the fact that the hydraulic hoses can continue to be used in the crane!

An expert is someone:
- whose technical training and experience means that he has adequate knowledge in the field of hydraulic hoses and hose systems.
- who is familiar with the relevant occupational health and safety regulations.
- who is familiar with the relevant accident prevention guidelines.
- who is familiar with the directives and generally accepted technical regulations (e.g. DIN standards, VDE regulations, technical regulations of other EU member states or other countries that have signed the European Economic Community agreement).
- who can properly assess whether hydraulic hoses and hose systems are deemed safe in accordance with the guidelines and regulations stated above.

Authorized inspector(s) is / are:
- an authorized expert employed by the technical supervisory authorities.
- in Hamburg this is the Amt für Arbeitsschutz (office for occupational health and safety).
- in Hessen these are the technical supervisory offices.
- an authorized expert appointed by the professional associations.

3.4.2 Examples of possible defects in hose lines

DANGER
Risk of fire or accident!
If problems are discovered during inspections, then they must be remedied immediately or suitable measures are to be taken. Failure to do this can result in serious injury to persons, death or damage to property!
▶ Remedy problems or take suitable measures!

- Damage to the outer layer as far as the intermediate later (e.g. chafing, cuts and cracks).
- Outer layer brittleness (crack formation of the hose material).
- Deformation that differs from the natural shape of the hose or hose line, in depressurized as well as in pressurized condition or in bends, for example layer separation, bubbling, crushing or kinking.
- Leaks.
- Failure to follow installation instructions.
- Damage or deformation of hose fittings that inhibit the function and strength of the fitting or the hose / fitting connection.
- Hose slipping out of fitting.
- Fitting corrosion that inhibits function and strength.
- Storage time or usage period exceeded.

LWE/LR 1600-2-001/18101-07-02/en

copyright © Liebherr-Werk Ehingen GmbH 2018

3.4.3 Maintenance of hose lines

- We recommend to check all hoses, hose lines and screw fittings daily, but at least every two weeks for leaks and externally recognizable signs of damage.
- Damaged parts must be replaced immediately! Oil spray can lead to injuries and fires!
- Hydraulic lines and hoses may not be repaired!
- Hoses that have already been used as a part of a hose line may not be reinstalled in hose lines.
- Always use Original Liebherr spare parts when replacing hoses and hose lines.
- Always ensure that the hoses are routed free of torsion. If high pressure hoses are being used, attach the screws of half clamps or full flange at both ends of the hose and then tighten.
- When using high pressure hoses with a bent fitting, tighten the end with the bent fitting first when tightening the flanges, then the end with the straight fitting.
- Any mounting clamps in the hose center may be attached and tightened only thereafter.
- Route the hoses in such a way that chafing with other hoses or other structures is prevented. Maintain a minimum clearance of approximately ½ the outer diameter of the hose to other parts. The clearance may never be less than 10 to 15 mm.

3.4.4 Replacing the hose lines

DANGER
Risk of fire or accident!
Failure to replace hose lines at appropriate intervals can cause serious injury to persons, death or damage to property!
▶ Replace hose lines according to appropriate intervals!

This must be documented in the crane's log book by the **expert** or the **authorized inspector**.

The service life of a hose line may not exceed six years, including a storage period of a maximum of two years (pay attention to the manufacturing date on the hoses). The duration of use can also be defined by the **expert** or **authorized inspector** in accordance with existing test and empirical data in the individual application areas, taking the usage conditions into consideration.

LWE/LR 1600-2-001/18101-07-02/en

copyright © Liebherr-Werk Ehingen GmbH 2018

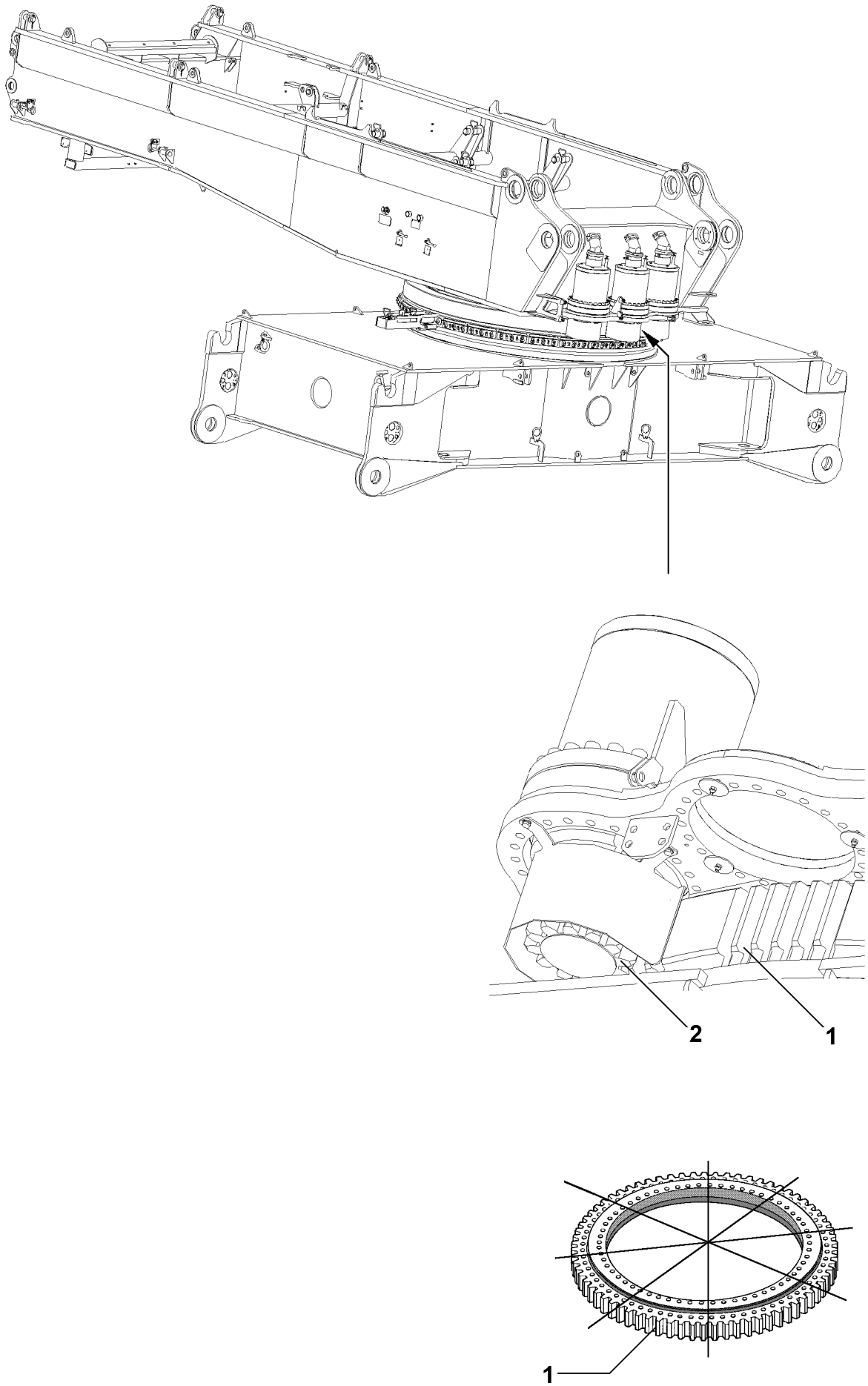

LWE/LR 1600-2-001/18101-07-02/en

Fig.105416

copyright © Liebherr-Werk Ehingen GmbH 2018

4 Slewing ring connection

4.1 Lubricate the slewing ring connection

Perform lubrication with extreme care before and after long operating intervals, particularly before and after any winter break, in order to provide the best possible corrosion protection.

If the crane has not been moved for more than 3 months, then it must be lubricated every 3 months with an external grease pump until grease emerges from all grease points, see also section of „Central lubrication system“. Then the relevant crane movement must be repeated several times and the lubrication procedure must be carried out again.

▶ Lubricate the slewing ring connection.

4.2 Lubricating the gear ring and the slewing gear pinion

Before and after extended breaks in service, grease the gear ring **1** and the slewing gear pinion **2** to ensure the best possible protection from corrosion.

▶ Grease the gear ring **1** and the slewing gear pinion **2** externally.

4.3 Tilt play of roller ring connection

The wear of the roller ring connection is determined by measuring the „tilt play“ with the ring installed.

Note

▶ The determination of the „Tilt play“ must be carried out according to the **test instructions** of **Liebherr-Werk Ehingen GmbH**!

▶ Contact the Service Dept. at **Liebherr-Werk Ehingen GmbH** for **test instructions**!

DANGER

Danger of accident if tilt play of roller ring connection is too large!

If the permissible tilt play of 2.0 mm is exceeded, then safe crane operation is no longer possible!

▶ Replace the roller ring connection if the tilt play is larger than 2.0 mm !

LWE/LR 1600-2-001/18101-07-02/en

copyright © Liebherr-Werk Ehingen GmbH 2018

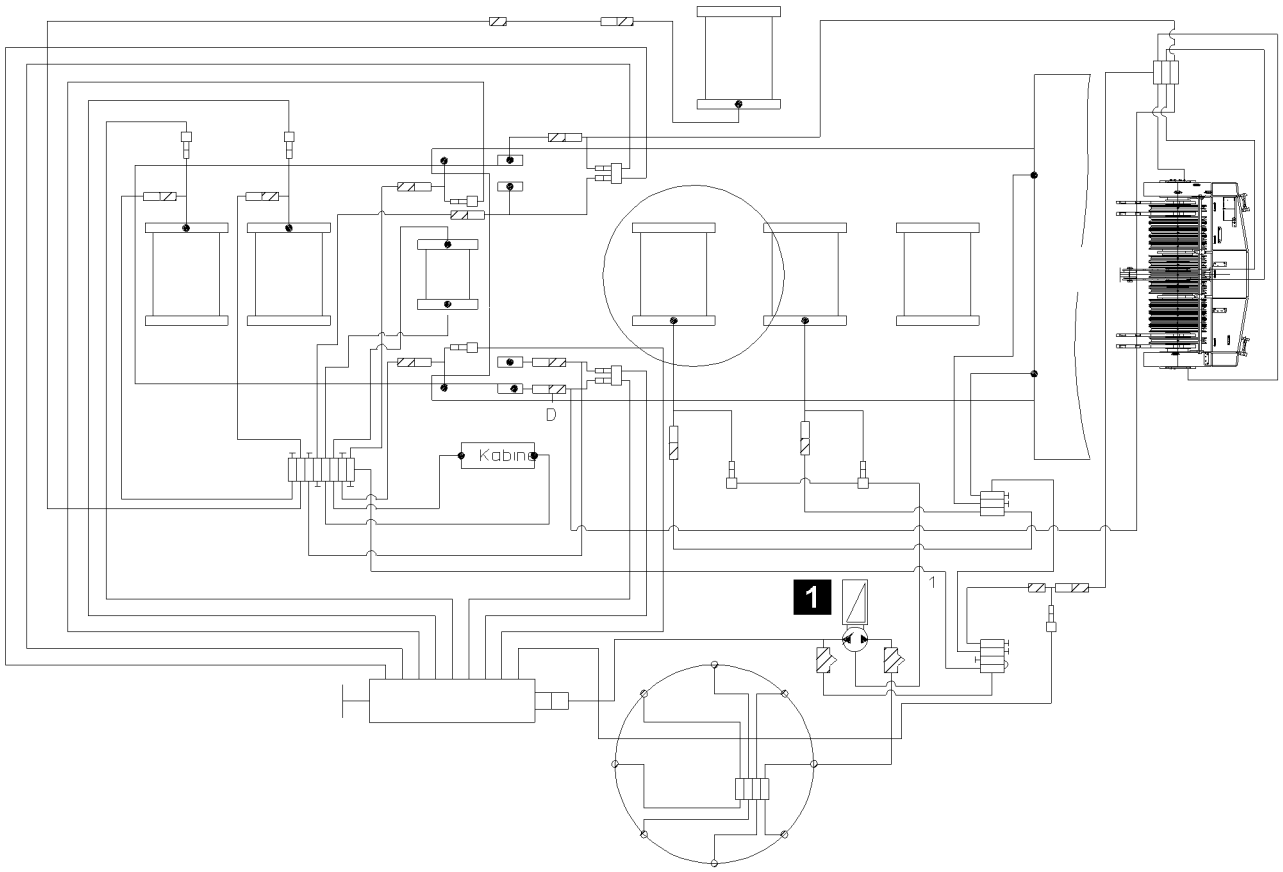

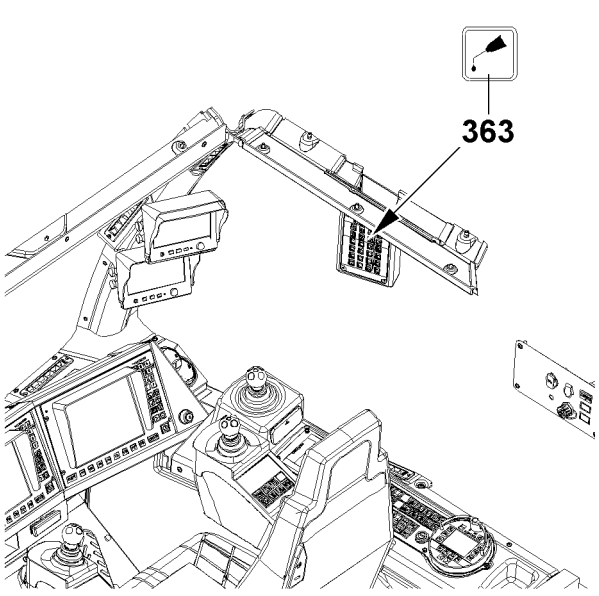

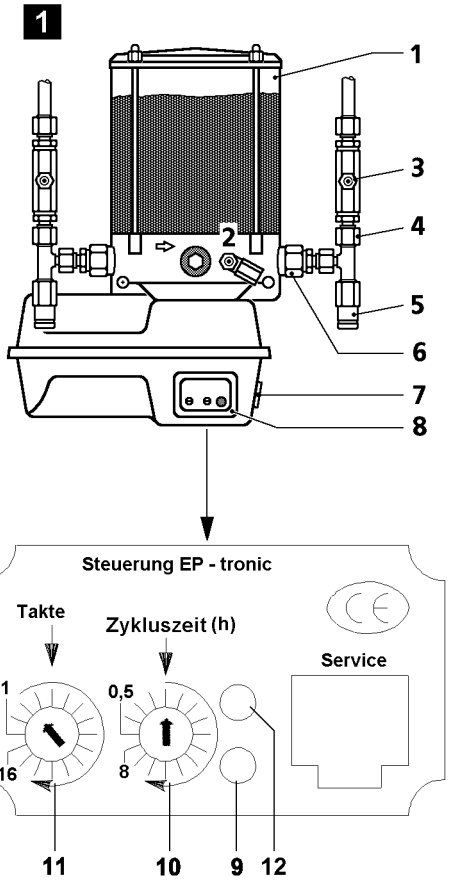

Fig.108923

LWE/LR 1600-2-001/18101-07-02/en

copyright © Liebherr-Werk Ehingen GmbH 2018

5 Central lubrication system

5.1 Overview of central lubrication system

The crane superstructure is equipped with a central lubrication system.

NOTICE
Dirty lubricant!
If the crane is not moved for longer than 3 months, then contaminants adhere to the lubricant! Components are exposed to increased wear!

If the crane has not been moved for longer than three months:
- ▶ Lubricate the grease fitting with an external grease pump until lubricant emerges on the sealing lips!
- ▶ Repeat crane movements several times and carry out the lubrication procedure again!

Note
- ▶ Cleaning is permitted in washing bays or with steam cleaners!

The central lubrication system consists of the following components:

1 Grease container
2 Grease nipple
- Fill the central lubrication pump

3 Grease nipple
- Fill the lube lines

4 Pump outlet
5 Pressure relief valve
6 Pump element
7 Push button
8 Control
9 Green LED
- Function display

10 Latched switch
- Cycle time in hours

11 Latched switch
- Lube time in cycles

12 Red LED
- Fault display

LWE/LR 1600-2-001/18101-07-02/en

copyright © Liebherr-Werk Ehingen GmbH 2018

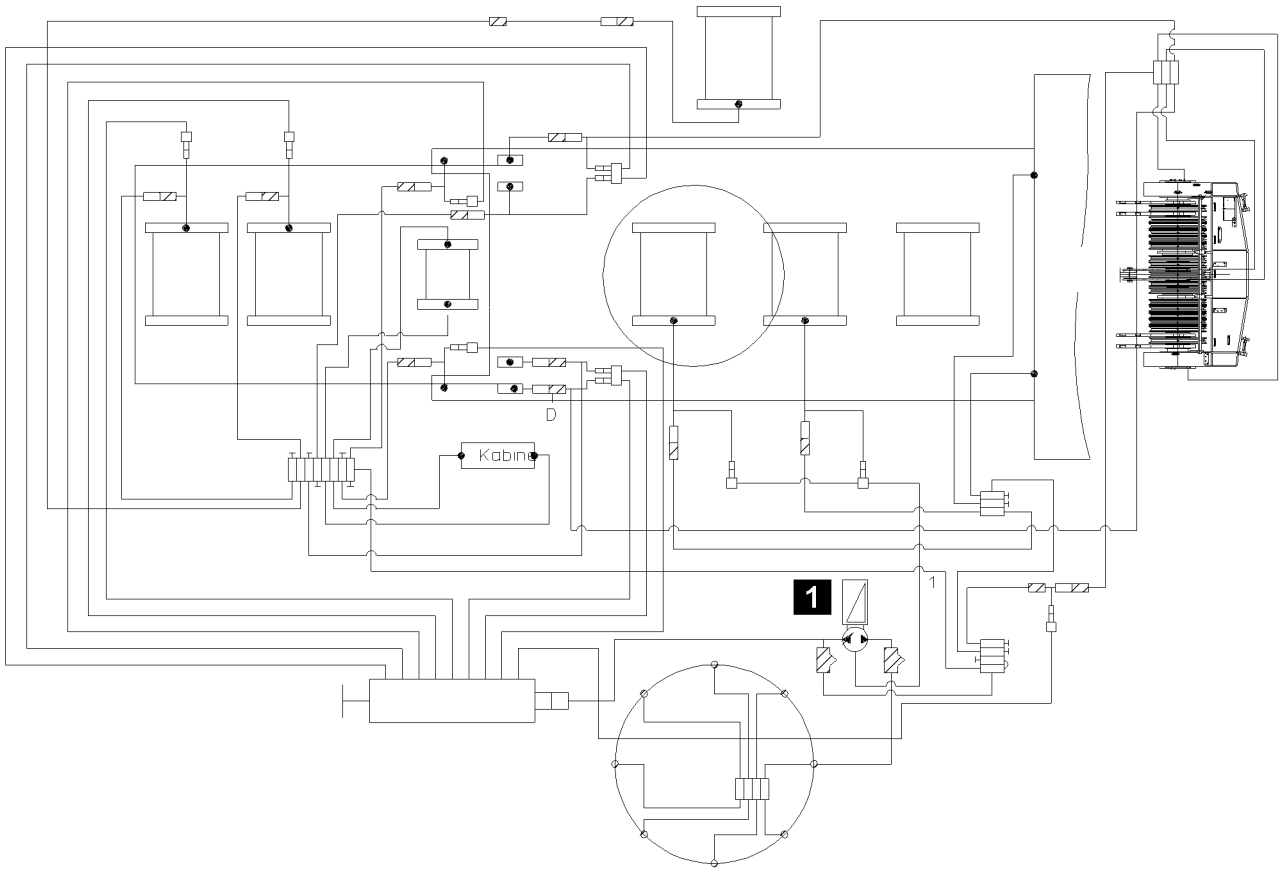

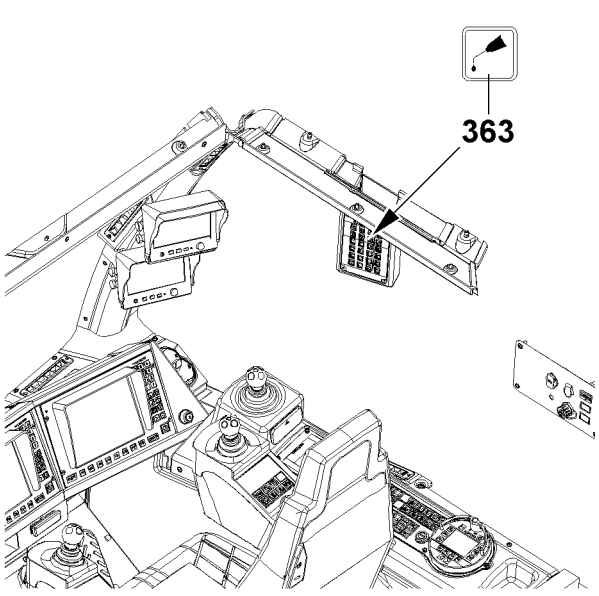

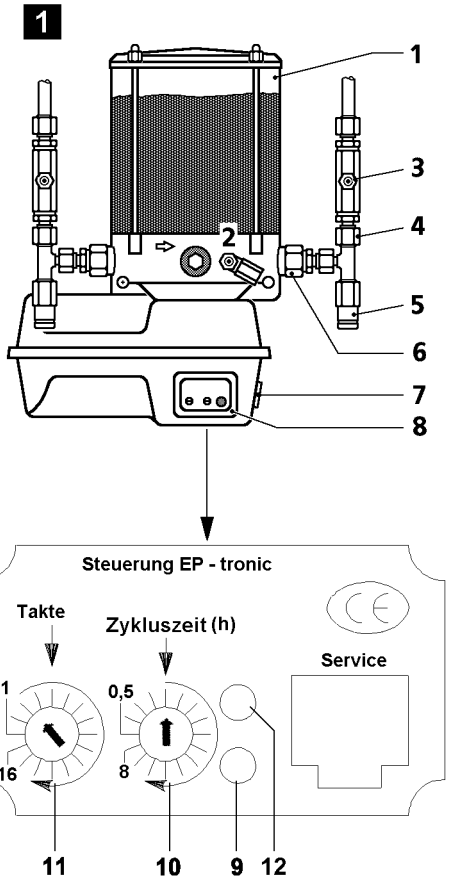

Fig.108923

LWE/LR 1600-2-001/18101-07-02/en

copyright © Liebherr-Werk Ehingen GmbH 2018

5.2 Indicator lights of the central lubrication system

Position	Beacon	LED condition	Description
363		Orange: Blinks once after engine start.	
12		Red: Blinks once after engine start.	
9		Green: Blinks once after engine start.	
363		Yellow: Lights up during the lubrication time.	Grease pump on, lubrication active
9		Green: Lights up during the lubrication time.	
363		Orange: Blinks.	Error monitoring time, lubrication time
12		Red: Blinks fast.	
9		Green: Blinks fast.	
363		Red: Blinks fast.	
12		Red: Blinks very fast.	

copyright © Liebherr-Werk Ehingen GmbH 2018

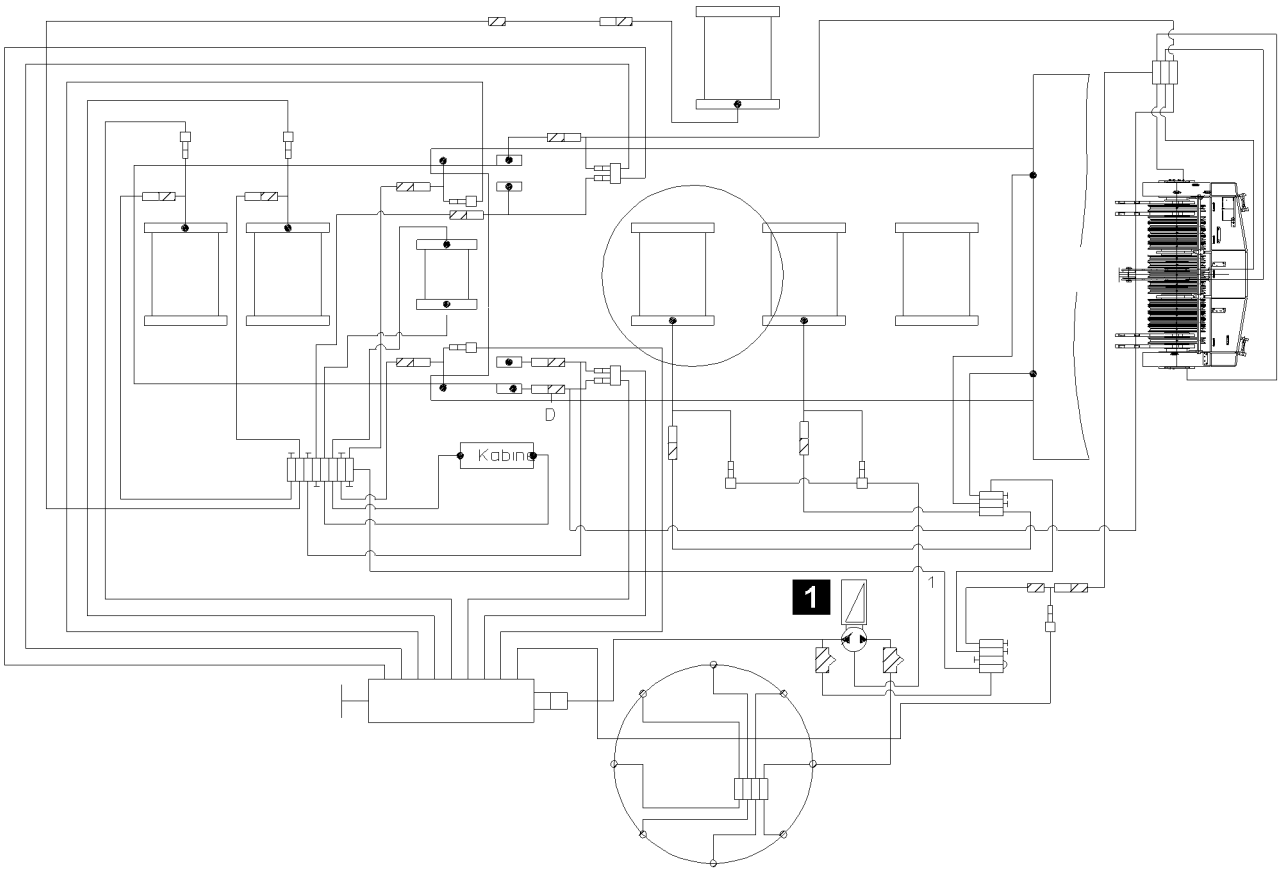

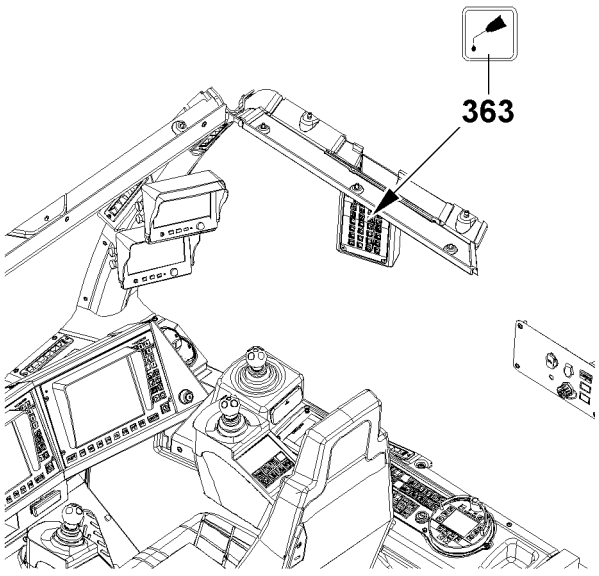

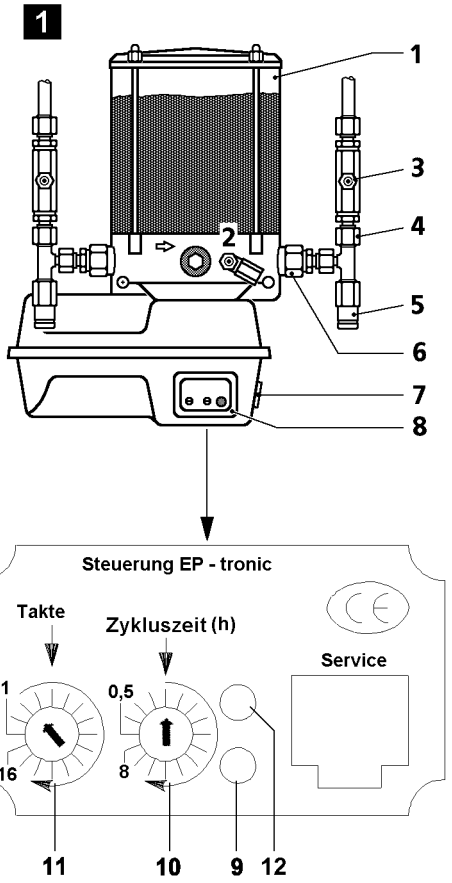

LWE/LR 1600-2-001/18101-07-02/en

Fig.108923

copyright © Liebherr-Werk Ehingen GmbH 2018

5.3 Servicing the central lubrication system

5.3.1 Setting the lubrication and break periods.

Note

- ▶ The pump running time is 3 cycles!
- ▶ The cycle time is 2.5 hours !
- ▶ During the lubrication procedure, the green LED **9** on the engine protection housing lights up!

The lubrication and pause time is set at the factory.

- ▶ Turn on the engine ignition.
- ▶ Set the cycles: Turn the latched switch **11**.
- ▶ Set the cycle time: Turn the latched switch **10**.
- ▶ Check functional readiness: Turn on the engine ignition.

Result:

– When turning the ignition on: The green LED **9** and the red LED **12** light up for approx. 2 s.

– The control **8** is functionally ready .

5.3.2 Checking the function of the central lubrication system

- ▶ Start the engine.
- ▶ Trigger 2 or 3 grease pulses using the push button **7**.

Result:

– Grease emerges on the grease points.
– If the system is blocked but the electric pump is properly functioning, the grease emerges through the pressure relief valve **5**.

5.3.3 Carrying out an intermediate lubrication

An intermediate lubrication is made in the following cases:
– After washing the crane
– After a repair

- ▶ With ignition turned on: Press the push button **7** on the engine protection housing of the grease pump.

LWE/LR 1600-2-001/18101-07-02/en

copyright © Liebherr-Werk Ehingen GmbH 2018

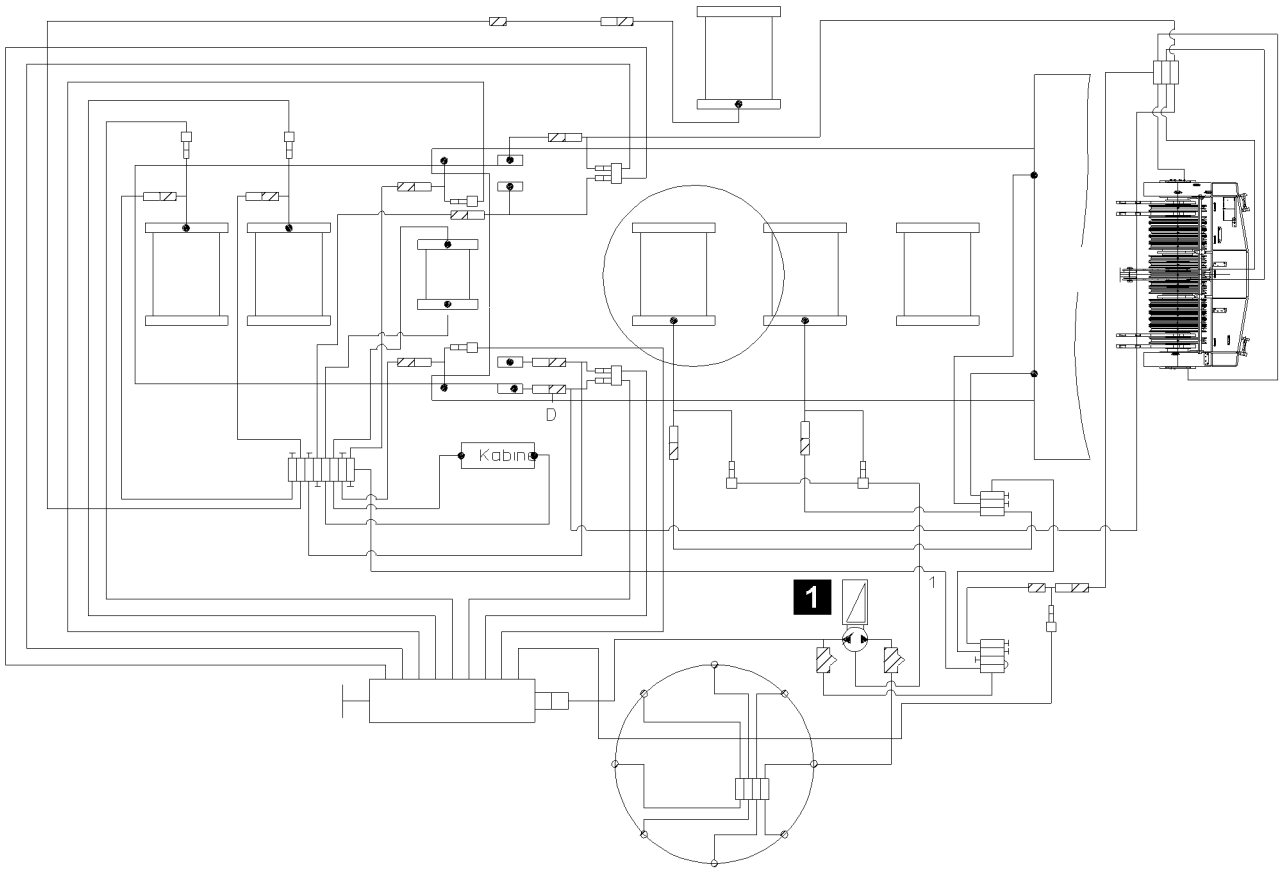

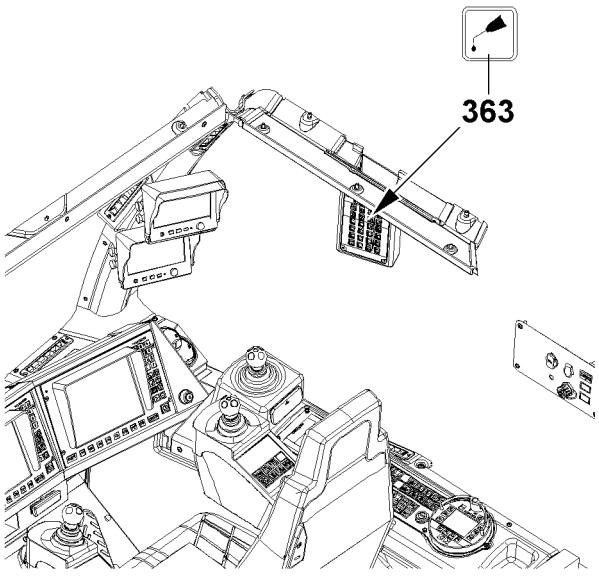

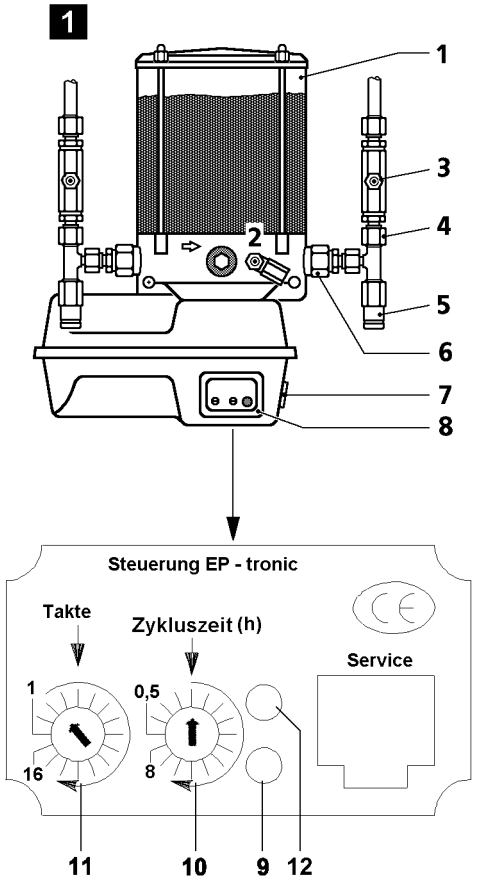

Fig.108923

LWE/LR 1600-2-001/18101-07-02/en

copyright © Liebherr-Werk Ehingen GmbH 2018

5.3.4 Filling the grease container of the central lubrication system

NOTICE
Insufficient lubrication!
If there is not enough grease in the container, components will be damaged or worn!
- ▶ There must always be sufficient grease in the grease container **1**!
- ▶ Observe utmost cleanliness when filling the grease container **1**!

- ▶ Fill the grease container **1** with a grease pump via the grease fitting **2** on the central lubrication pump.

5.3.5 Bleeding the central lubrication system

If the grease container **1** has been emptied, then it may be necessary to bleed the central lubrication system.

- ▶ Fill the grease container **1**.
- ▶ Unscrew the main line from the grease pump outlet **4**.
- ▶ Trigger additional lubricating pulses until there are no more air bubbles in the emerging grease at the grease pump outlet **4**.
- ▶ Reconnect the main line.
- ▶ Trigger an additional lubricating process.

5.3.6 Filling the lubrication lines

NOTICE
Risk of damage due to insufficient lubrication!
The lubrication lines must be refilled after any repair on components, which are lubricated with grease.
If this is not observed, the component may run dry!
- ▶ Sufficient grease must be available in the grease lines after every repair on greased components!
- ▶ Observe utmost cleanliness when filling the grease lines!

- ▶ Add grease with an external grease pump via the grease fitting **3**.
  or
  With the ignition turned on, press the push button **7** on the engine protection housing of the grease pump.

LWE/LR 1600-2-001/18101-07-02/en

copyright © Liebherr-Werk Ehingen GmbH 2018

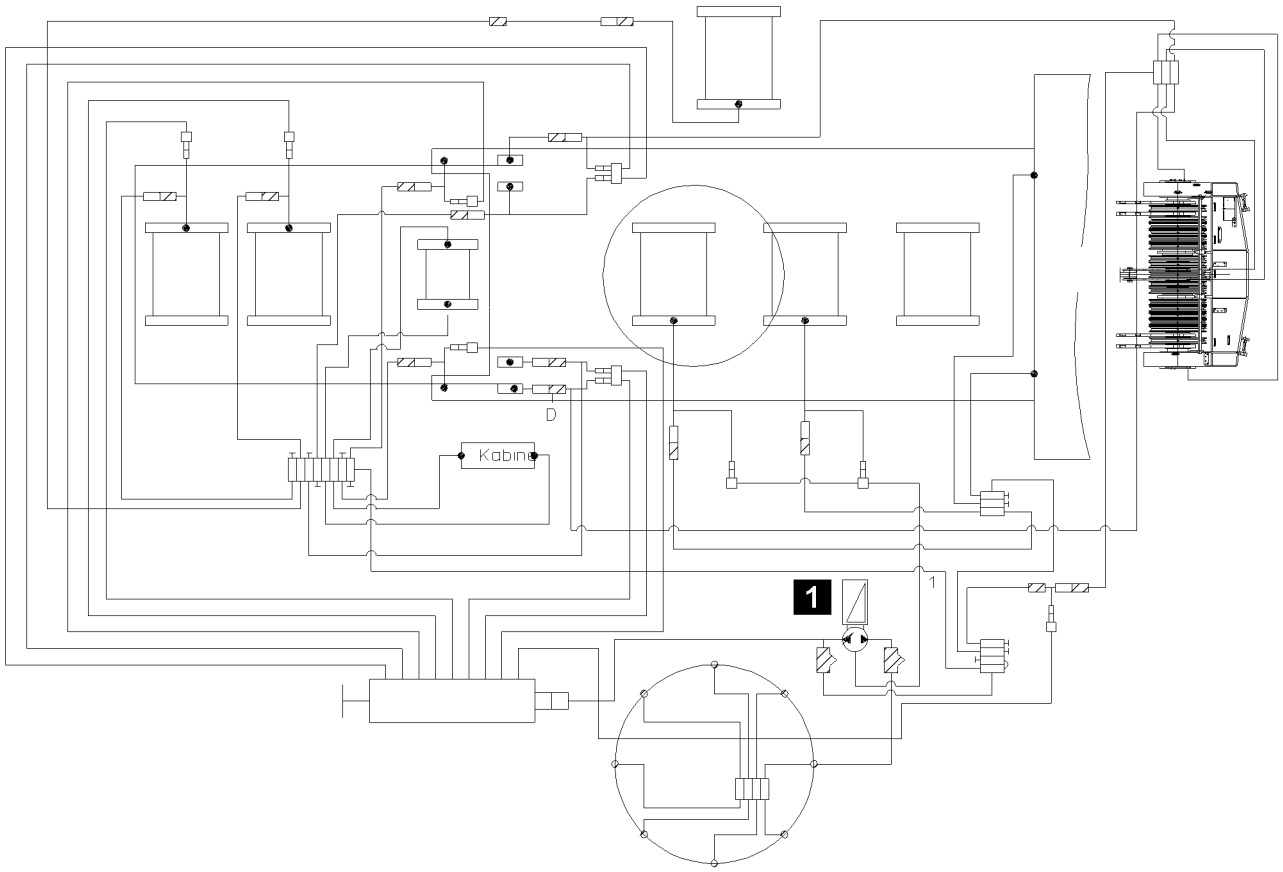

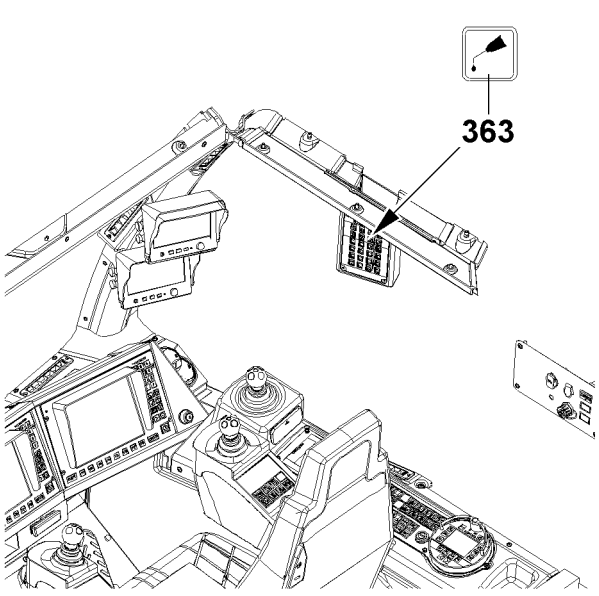

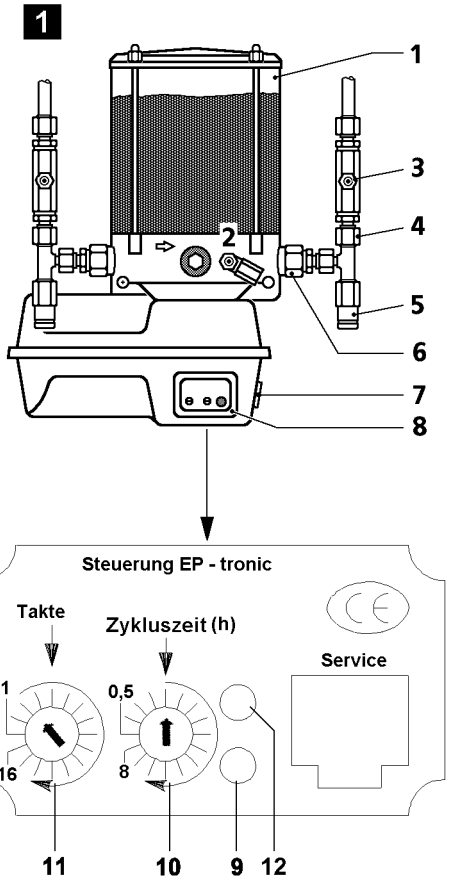

LWE/LR 1600-2-001/18101-07-02/en

Fig.108923

copyright © Liebherr-Werk Ehingen GmbH 2018

5.4 Troubleshooting on the central lubrication system

Problem	Cause	Remedy
The grease pump does not work.	Integrated electronic control defective, electrical line interrupted, grease pump defective.	Replace lower part of motor protection housing, replace electrical line, replace grease pump.
Grease pump operates, but does not deliver.	Air cushion in delivery piston, minimum fill level fallen below, grease pump element defective.	Bleed grease pump, fill reservoir, replace grease pump element.
No grease collar on all lube points.	Grease pump not operating, interval time too high or cycle time too short, system blocked.	See „Grease pump not operating“, reduce interval time or increase number of cycles, refer to „Grease emerges on pressure relief valve“.
No grease collar on several lube points.	Supply lines to secondary distributors broken or leaking, screw connections leaking.	Replace lines, tighten or replace screw connections.
No grease collar on one lube point.	Associated lube line broken or leaking, screw connection leaking.	Replace line, tighten or replace screw fitting.
Grease pump speed reduced.	Higher system pressure, lower ambient temperature.	Check system / bearing points, no damage: Grease intermediately once or twice, if necessary.
Grease escapes at the pressure relief valve.	System pressure too high, progressive distributor blocked, system blocked, defective valve spring.	Check system, replace distributor, repair blocked / seized bearing point, replace pressure relief valve.
The red LED blinks very fast.	Error CPU / memory.	Consult Liebherr Service.
The red LED and the indicator light blink fast.	Error in the monitoring period from cycle start.	The proximity switch is defective, consult Liebherr Service.

LWE/LR 1600-2-001/18101-07-02/en

copyright © Liebherr-Werk Ehingen GmbH 2018

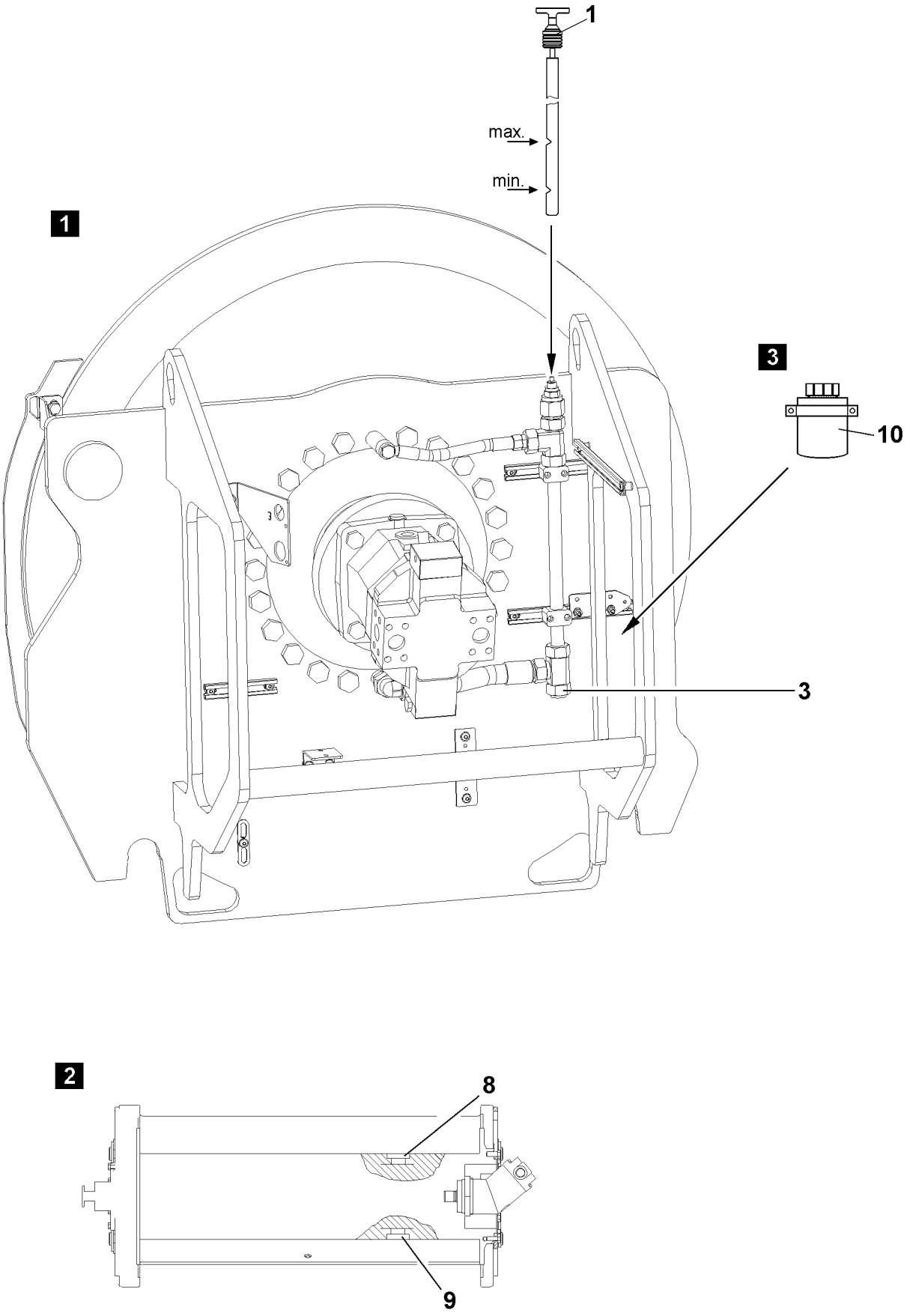

LWE/LR 1600-2-001/18101-07-02/en

Fig.105418

copyright © Liebherr-Werk Ehingen GmbH 2018

6 Hoist gear 1 to 6, illustration 1

Maintain utmost cleanliness during all work to prevent any dirt from entering the inside of the gear.

6.1 Overflow container, illustration 3

When the oil heats up in the hydraulic motor for the winches, the oil can enter the overflow container **10** via a check valve, but cannot flow back into the hydraulic system after cooling off. For this reason the oil that has collected in the overflow container **10** must be disposed of at regular intervals.

6.2 Winch

Make sure that the following prerequisites are met:
- The winch is inactive.
- The crane is in horizontal position.

6.2.1 Checking the oil level

▶ Remove the dipstick **1** and wipe it off.
▶ Reinsert the dipstick **1** and pull it out again.

The oil level must be between the min. and max. mark on the dipstick **1**.

▶ Check the oil level.

NOTICE
Danger of gear damage!
If the oil level has dropped below the minimum mark, add engine oil as specified in the lubrication chart until the oil level is between the minimum and maximum marks!
▶ Add oil and check again!

▶ Reinsert the dipstick **1**.

6.2.2 Oil change

▶ Pull out the oil dipstick **1**.
▶ Remove the oil drain plug **3** and drain the oil into a suitable container.
▶ Install the oil drain plug **3** with new seal and tighten.
▶ Add oil as specified in the lubrication chart at the oil filler port until the oil level is between the minimum and maximum mark on the dipstick **1**.
▶ Install the dipstick **1** and tighten.
▶ Check the oil level as described above.

LWE/LR 1600-2-001/18101-07-02/en

copyright © Liebherr-Werk Ehingen GmbH 2018

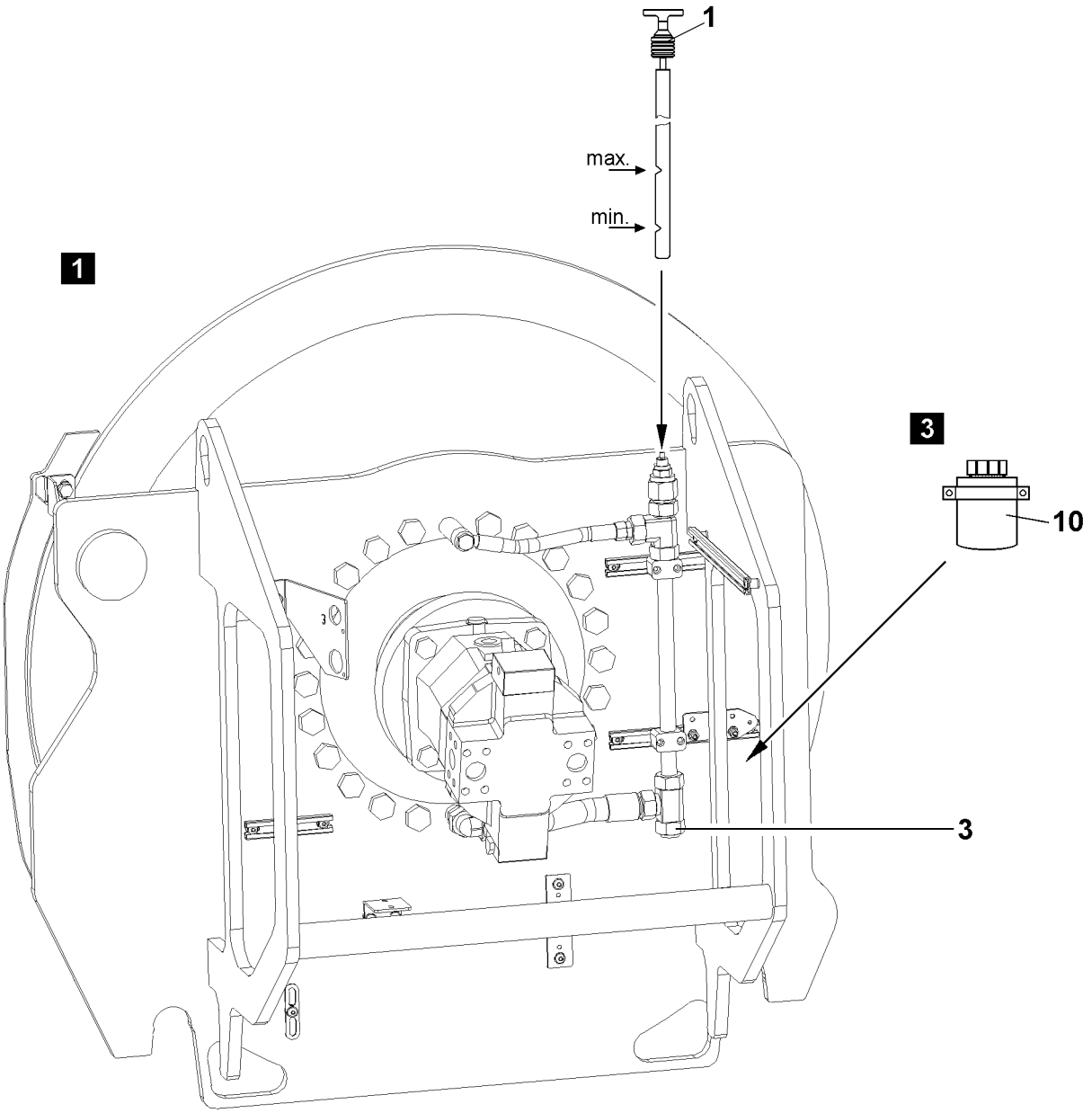

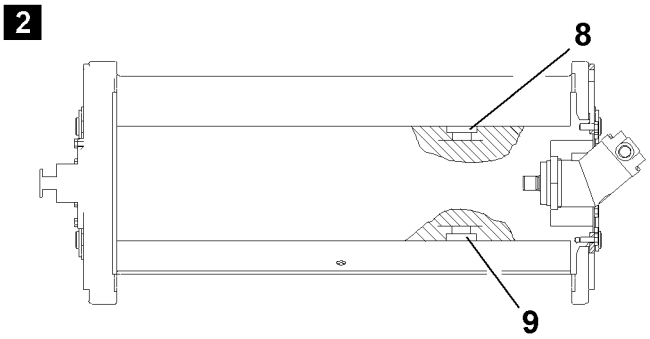

LWE/LR 1600-2-001/18101-07-02/en

Fig.105418

copyright © Liebherr-Werk Ehingen GmbH 2018

7 Assembly winch, illustration 2

7.1 Oil change

Ensure that the assembly winch has been spooled out.

- ▶ Remove the oil filler plug **8**.
- ▶ Remove the oil drain plug **9** and drain the oil into a suitable container.
- ▶ Install the oil drain plug **9** with new seal and tighten.
- ▶ Add oil as specified on the lubrication chart on the oil filler plug **8**.
- ▶ Install the oil filler plug **8** with new seal and tighten.

LWE/LR 1600-2-001/18101-07-02/en

copyright © Liebherr-Werk Ehingen GmbH 2018

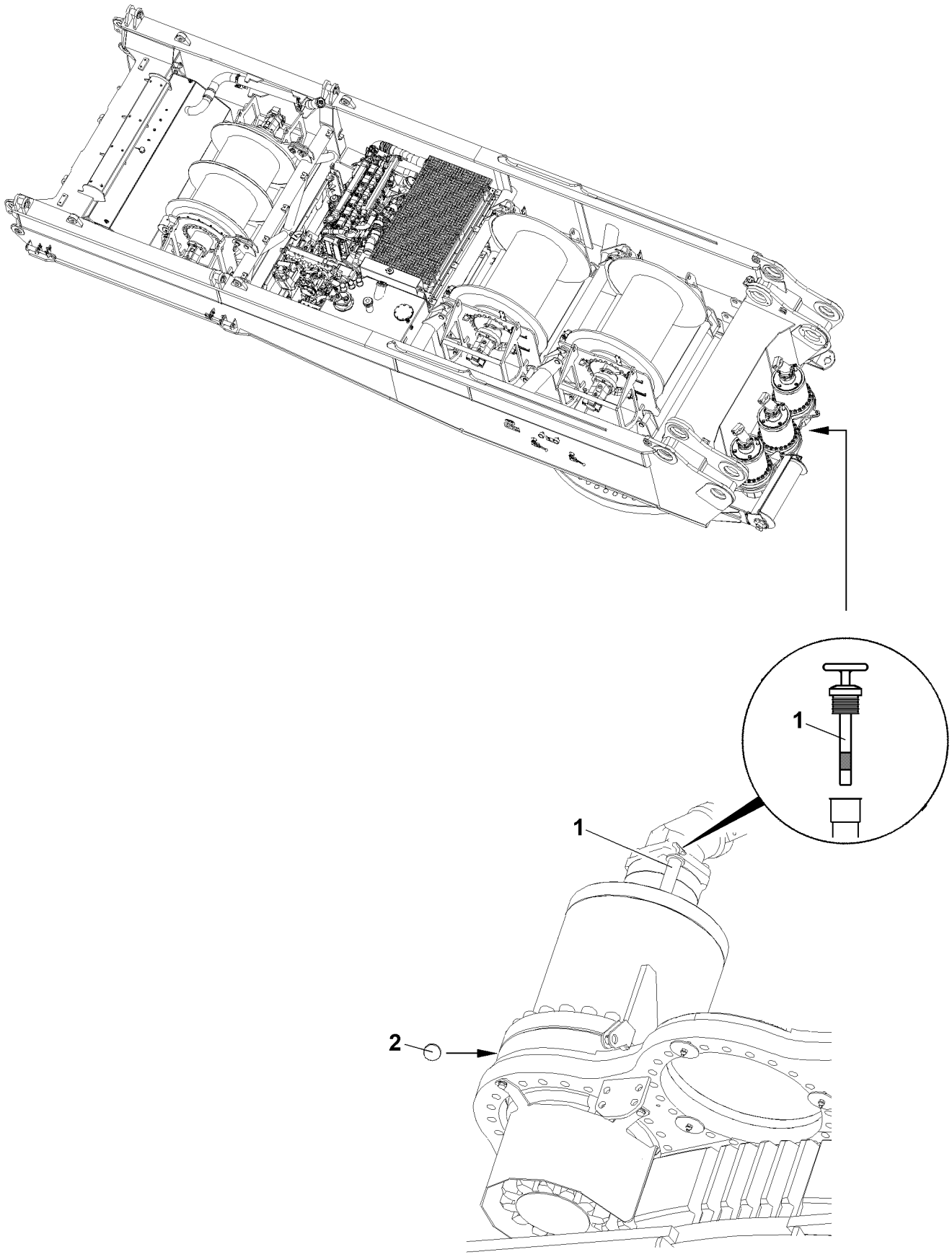

LWE/LR 1600-2-001/18101-07-02/en

Fig.105419

copyright © Liebherr-Werk Ehingen GmbH 2018

8 Slewing gear

Maintain utmost cleanliness during all work to prevent any dirt from entering the inside of the gear.

8.1 Checking the oil level

Make sure that the following prerequisite is met:
– The crane is in horizontal position.

▶ Remove the dipstick **1** and wipe it off.
▶ Reinsert the dipstick **1** and pull it out again.

The oil level must be between the two notches on the dipstick **1**.

▶ Check the oil level.

NOTICE
Danger of gear damage!
If the oil level has dropped below the lower notch, add oil as specified in the lubrication chart until the oil level is between the two notches!
▶ Add oil and check again!

▶ Reinsert the dipstick **1**.

8.2 Changing the oil

Make sure that the following prerequisites are met:
– The crane is in horizontal position.
– The gear is warm.

▶ Open the oil filler port by unscrewing the dipstick **1**.
▶ Remove the oil drain plug **2** with the seal ring and drain the oil.
▶ Clean the oil drain plug **2** and sealing surface on the housing.
▶ Install the oil drain plug **2** with new seal ring and tighten.
▶ Add oil as specified in the lubrication chart on the oil filler port until the oil level is between the two notches on the dipstick **1**.
▶ Close the oil filler port by screwing in the dipstick **1**.
▶ Check the oil level as described above.

LWE/LR 1600-2-001/18101-07-02/en

copyright © Liebherr-Werk Ehingen GmbH 2018

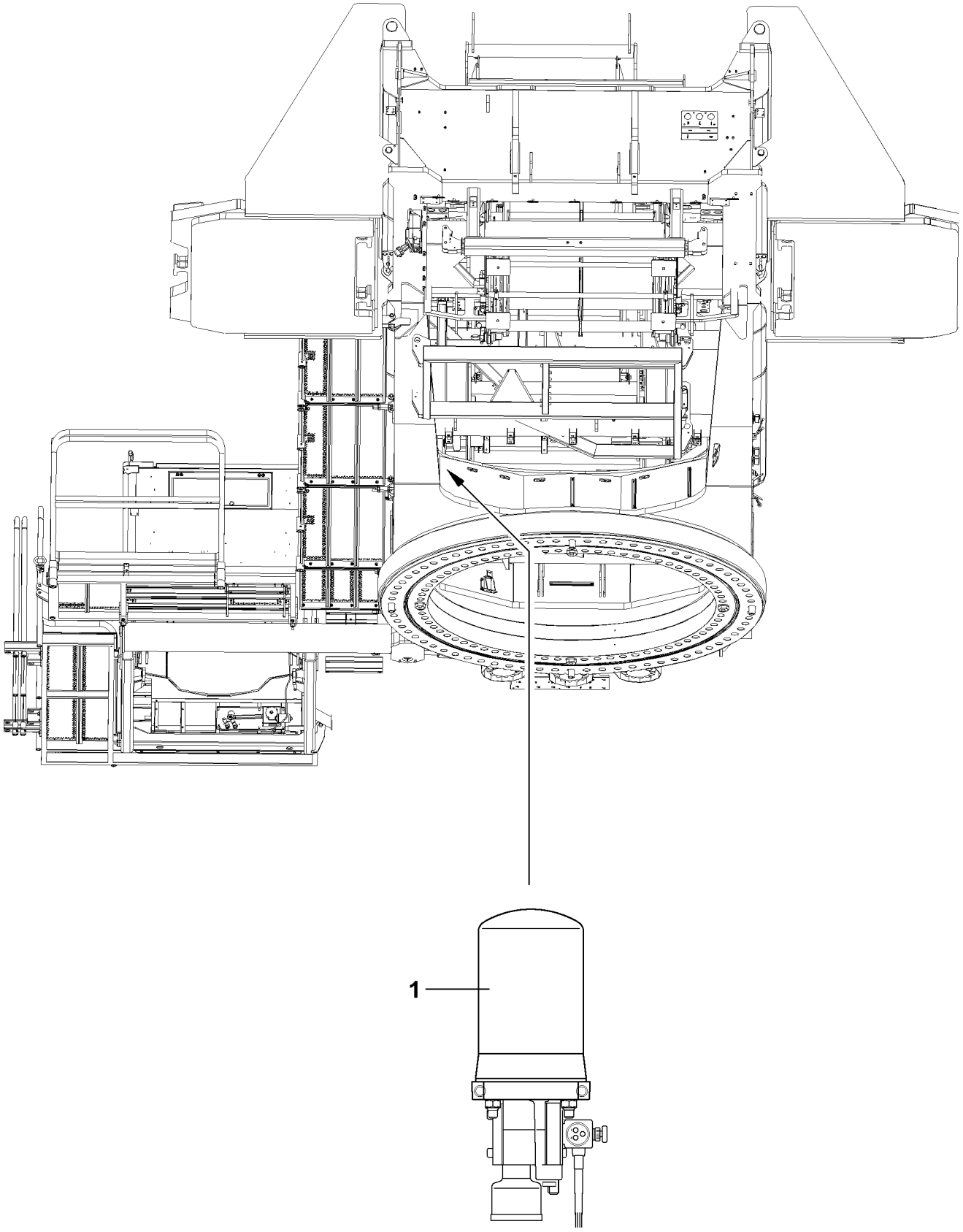

LWE/LR 1600-2-001/18101-07-02/en

Fig.105420

copyright © Liebherr-Werk Ehingen GmbH 2018

9 Air dryer of the compressed air system of the crane superstructure

9.1 Replacing the granular cartridge

WARNING
Risk of accident due to pretensioned granular cartridge!
The granular cartridge **1** is under spring tension!
▶ Caution when replacing the granular cartridge!

▶ Replace the granular cartridge **1** once per year!

10 Electrical system - Lighting

The maintenance of the electrical system is essentially limited to replacing defective fuses and bulbs and maintaining the batteries.

NOTICE
Damage to electrical system!
Never short circuit defective fuses with wire or similar items!
▶ Always replace defective fuses with fuses of the same amperage!
▶ If there is a repeat problem with the same fuse, check the electrical system!

10.1 Battery maintenance

DANGER
Risk of fatal injury!
▶ Always disconnect the batteries from the power circuits when working on the electrical system of the crane and during all welding work!

▶ Keep batteries dry and clean.
▶ Do not bring oil, grease, fuel or solvents into contact with the battery casting compound.
▶ Release dirty terminals, clean and grease them with an acid-free and acid-resistant grease.
▶ Check the acid levels in batteries at least once a year. In summer and in hot climate zones, check it at least twice a year.
▶ On conventional batteries, check electrolyte level at regular intervals and add distilled water to the specified „max mark“, if necessary.

When adding distilled water:
▶ Measure the acid concentration only after 30 minutes. The acid temperature for measuring should be + 20 °C if possible.

Proceed as follows when checking the battery charge:

Specific weight	Charge condition
1.28/1.23*	Well charged
1.20/1.16*	Semi-charged, recharge
1.12/1.08*	Discharged, recharge immedi-ately

* in tropical countries

Reduced battery performance requires greater power requirements.

copyright © Liebherr-Werk Ehingen GmbH 2018

▶ Ensure that batteries are well charged, particularly during the colder months.

10.2 Mixing battery acid

▶ Ensure that work area is well ventilated.

DANGER
Risk of explosion!
▶ When mixing battery acid, always pour distilled water into the container first, then the concentrated sulphuric acid!
▶ Observe this order, otherwise explosions and spattering can occur!

▶ Stir the mixture with an acid-proof stick (glass or plastic).

Desired acid concentration kg/l	1.23	1.24	1.25	1.26	1.27	1.28
Volume ratio of concentrated sulphuric acid (96 %) to distilled water	1:3.8	1:3.6	1:3.4	1:3.2	1:3.0	1:2.8

When adding the battery acid, the acid level should be 15 mm above the top edge of the battery plates and the temperature of the acid should be approximately 15 °C.

▶ Add battery acid to battery.

Wait approximately 20 minutes before connecting the battery. By that time, it will be balanced out.

▶ Connect the battery after approximately 20 minutes.

10.3 Removing and recharging the battery

WARNING
Danger of injuries!
▶ Do not place tools on batteries and keep open flames away!

10.3.1 Removing the battery

Make sure that the following prerequisites are met:
– The engine is turned off.
– All electrical users are turned off.

NOTICE
Damage to alternator!
▶ Do not disconnect batteries unless the engine has been turned off!

▶ Carry out work in well ventilated rooms and avoid sparks.
▶ Disconnect the negative terminal first (ground cable), then the positive terminal.
▶ Remove the battery.
▶ Avoid spark formation caused by electrostatic charge. To avoid this, touch the ground support point in the driver's cab.
▶ Do not tilt or shake the battery.

10.3.2 Recharging the battery

NOTICE
Damage to battery!
▶ Recharge only with direct current, the strength of which does not exceed 1/10 of the battery capacity!

LWE/LR 1600-2-001/18101-07-02/en

copyright © Liebherr-Werk Ehingen GmbH 2018

Recharging example: A battery with 170 Ah should be charged with a maximum charging current of 17.0 A.

- ▶ Frozen batteries must be thawed out before charging.
- ▶ Remove all plugs before charging.
- ▶ Provide ventilation during charging (risk of oxyhydrogen gas explosion!).
- ▶ Connect the battery to a battery charger (positive to positive and negative to negative).
- ▶ Turn on the battery charger after connecting the battery.

Stop charging immediately if:
- – The acid temperature exceeds 55 °C (casing more than warm to the touch).
- – The battery starts to give off gas.
- – The acid concentration or the charging voltage has not changed for 2 hours.

- ▶ Turn the battery charger off after charging, then remove the connector cables individually from battery and battery charger.

10.3.3 Installing the battery

- ▶ Reinstall the battery tightly in the vehicle.
- ▶ Avoid spark formation caused by electrostatic charge. To avoid this, touch the ground support point in the driver's cab.
- ▶ Connect the positive terminal to the battery first, then the negative terminal (ground cable).
- ▶ Check that the terminals are tightly seated (low transfer resistance).
- ▶ Grease the terminals and terminal posts with acid-free and acid-resistant grease (use corrosion protection even for modern maintenance-free batteries).

LWE/LR 1600-2-001/18101-07-02/en

copyright © Liebherr-Werk Ehingen GmbH 2018

Empty page!

LWE/LR 1600-2-001/18101-07-02/en

copyright © Liebherr-Werk Ehingen GmbH 2018

7.05.50 Maintenance instructions - Crane boom

1	Lattice mast boom	3
2	Rope pulleys and guide pulleys	4
3	Crane ropes	4

LWE/LR 1600-2-001/18101-07-02/en

copyright © Liebherr-Werk Ehingen GmbH 2018

LWE/LR 1600-2-001/18101-07-02/en

Fig.195219

copyright © Liebherr-Werk Ehingen GmbH 2018

1 Lattice mast boom

WARNING
Danger of falling!
Death, severe injuries.
▶ For all work on the crane where there is a danger of falling, suitable safety measures must be taken, see Crane operating instructions, chapter 2.06.

Note
▶ The following illustration is an example and may not exactly match to your crane.

1.1 Lubricating the pin bores on the lattice sections and guy rods

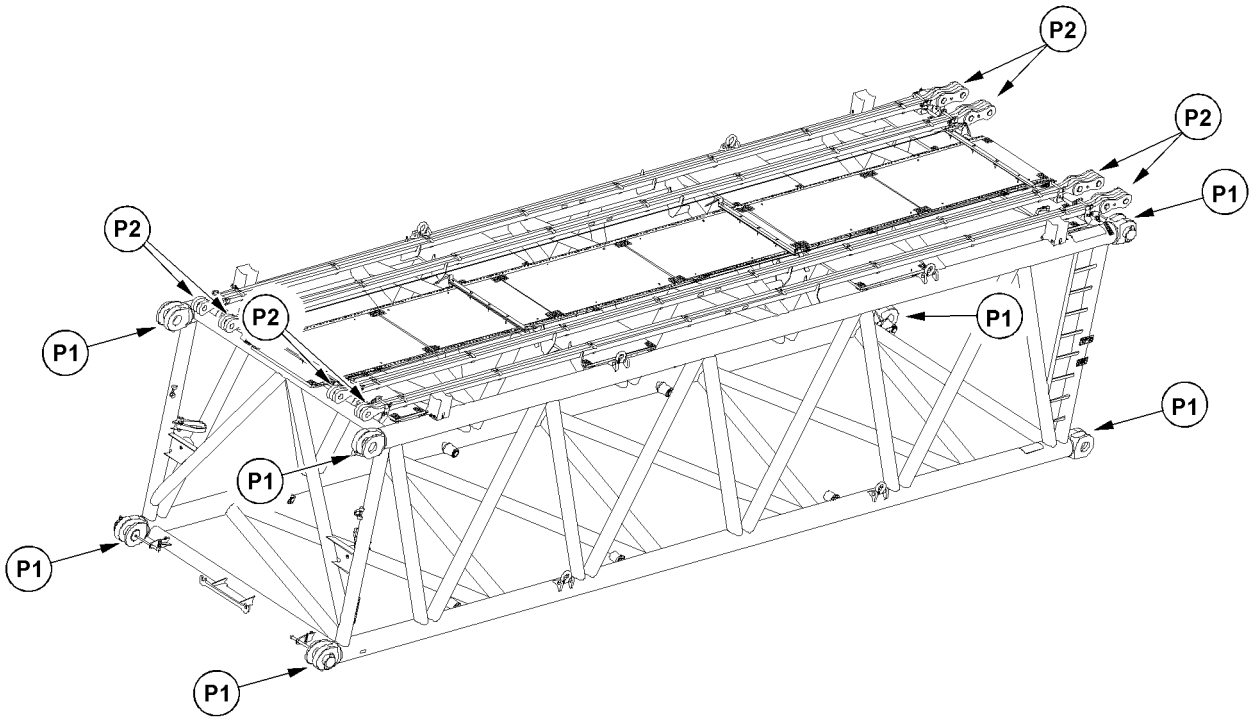

Fig.123861: Lube points on boom lattice sections and guy rods

Note
▶ For the pin bores on the lattice sections (points **P1**) and the guy rods (points **P2**), use special grease as lubricant. See Service fill and Crane operating instructions, chapter 7.07.
▶ Apply the grease on the pin bores over the entire circumference.
▶ The lubrication of the pin bores on the boom lattice sections and the guy rods is made before assembly or after disassembly.

Make sure that the following prerequisites are met:
– The lattice sections are not installed on the crane.
– The lattice sections are playing on a load bearing support on the ground.

▶ Grease the pin bores on the boom lattice sections and the guy rods.

LWE/LR 1600-2-001/18101-07-02/en

copyright © Liebherr-Werk Ehingen GmbH 2018

2 Rope pulleys and guide pulleys

2.1 Check bearings for easy movement

Stiff or blocked rope pulleys or compensation pulleys wear rapidly and unevenly and cause serious rope abrasion.

Ineffective compensation pulleys can lead to irregular rope tension.

▶ Check the rope pulleys for proper movement in their bearings.

When rope pulleys are **not** easily moveable in their bearings:
▶ Fix the bearings.

2.2 Checking for mechanical damage

Ropes can cause mechanical damage, such as stress marks.

▶ Check guide pulleys and rope pulleys for mechanical damage.

3 Crane ropes

3.1 Personal protective equipment

WARNING
Injury due to wires and skin irritation due to lubricant!
▶ When working with ropes, always wear work gloves.

WARNING
Injuries if protective equipment is **not** worn!
▶ Wear hard hat, safety shoes and safety glasses.

3.2 Safe and problem-free operation

WARNING
Wear, overload, incorrect use, damage, improper maintenance!
Failure of ropes. Death, severe injuries, property damage.
▶ Prevent failure of ropes: Observe and adhere to the following notes.

Carry out the following measures to ensure safe and problem-free rope operation.
- Service ropes and rope end connections regularly according to the maintenance intervals.
- Check ropes and rope end connections regularly according to the inspection intervals.
- When it is determined that the ropes should be withdrawn from service, do **not** continue to use them further.
- Exclude contact of rope with components except rope drive elements.
- Exclude contact of rope with structural parts, power lines or other objects within the surrounding area.
- Avoid corrosive and chemical surroundings.
- Avoid excessive soiling.
- Avoid excessive heat influence.
- Ensure proper condition of all elements of rope drive.
- Ensure proper spooling formation on the rope drum.
- Use the entire rope length of hoist ropes.
- Avoid slack rope formation on the drum.
- Do **not** bring outer twists into the rope.
- Avoid shock relief of the rope, such as sudden set down of the load.

LWE/LR 1600-2-001/18101-07-02/en

copyright © Liebherr-Werk Ehingen GmbH 2018

– Avoid **non-permissible** angular pull, for example by pulling the load at an angle.

3.3 Temperature operating limits

Adhere the temperature operating limits for steel ropes. The determining factors are wire material, lubricant, rope end connections. See Manufacturer's specifications.

3.4 Qualification Maintenance personnel

Make sure that the following prerequisites are met:
– The maintenance personnel is trained and instructed in maintenance tasks.
– The maintenance personnel is assigned (authorized) for the maintenance by the crane operator.

3.5 Damage on rope

Rope removal criteria: If severe damage reduces the operational safety, then the rope can reached the removal criteria.

This section provides an overview for possible damage on the rope. For clearer illustration, the distortions on the illustrations are exaggerated.

The displayed ropes show a condition, which is far above the removal criteria.

Damage on the rope causes uneven load distribution in the affected areas.

Damage on the rope is most often localized.

Typical examples for damage, which can be recognized during maintenance work:
– Broken strands
– Wire breaks
– Reduction of rope diameter
– Localized increase of rope diameter
– Corrosion
– Flattenings
– Corkscrew-like distortion
– Basket formation
– Protruding, distorted inlay or braiding
– Loop formation
– Kinking, rope loops (grommets) pulled closed
– Buckles
– Influence of heat or electrical voltage, such as arcing

3.5.1 Broken strands

A strand consists of several individual wires.

When a complete braid is broken, then the rope must be taken down.

3.5.2 Broken wire

Externally visible broken wires are the result of wear caused by operation.

Additional types of broken wires:
– Broken wire in the inside of the rope
– Broken wire in the strand valleys
– Broken wire on a rope connection

A broken wire does not endanger the safety of the rope.

3.5.3 Reduction of rope diameter

The rope diameter changes due to abrasion, settling and external influences.

LWE/LR 1600-2-001/18101-07-02/en

copyright © Liebherr-Werk Ehingen GmbH 2018

Abrasion of cover wires of outer strands of rope due to frictional contact. Especially in those areas where ropes are in contact with the rope pulleys during start up or slow down of the load.

Wear is increased by lack of or incorrect lubrication and the effect of dust.

Abrasion reduces the tensile strength of steel ropes because the cross section of the steel is reduced.

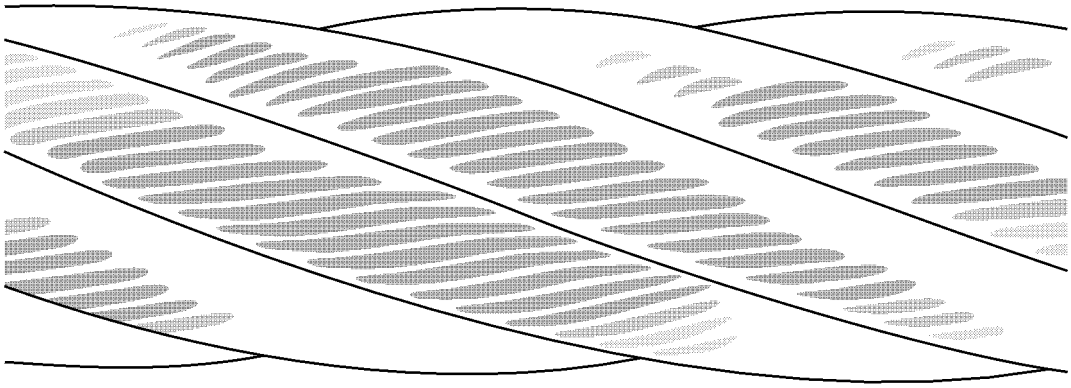

Fig.121001: External abrasion on the rope

When the rope diameter is reduced, the rope must be checked by **expert personnel for crane rope inspection**.

3.5.4 Localized increase of rope diameter

An increase, which occurs over a longer area of the rope can be caused by absorption of moisture in the fiber insert or due to corrosion in the inside of the rope.

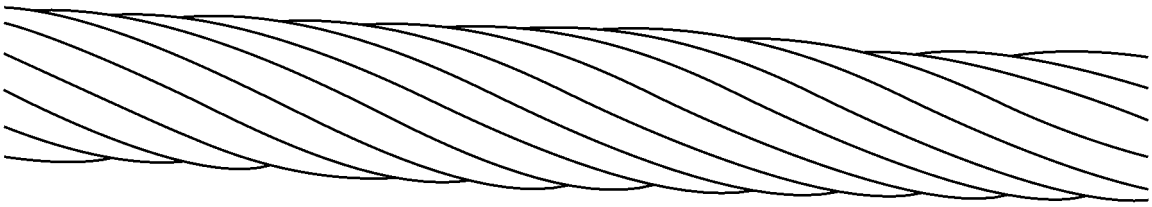

Fig.120992: Increase of rope diameter

When a localized increase of the rope diameter is present, then the rope must be checked by **expert personnel for crane rope inspection**.

3.5.5 Corrosion

Corrosion occurs due to insufficient lubrication, in maritime climates and in an atmosphere polluted by industrial fumes.

External corrosion is indicated by a rough wire surface. A superficial rust film can be wiped off.

Significant corrosion reduces the strength and elasticity of the rope due to the reduction of the rope diameter.

Inner corrosion is hard to detect.

LWE/LR 1600-2-001/18101-07-02/en

copyright © Liebherr-Werk Ehingen GmbH 2018

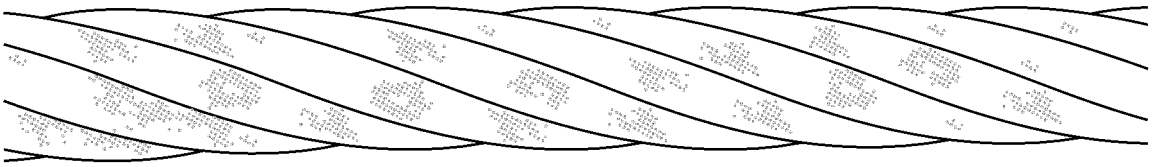

Fig.120994: External corrosion

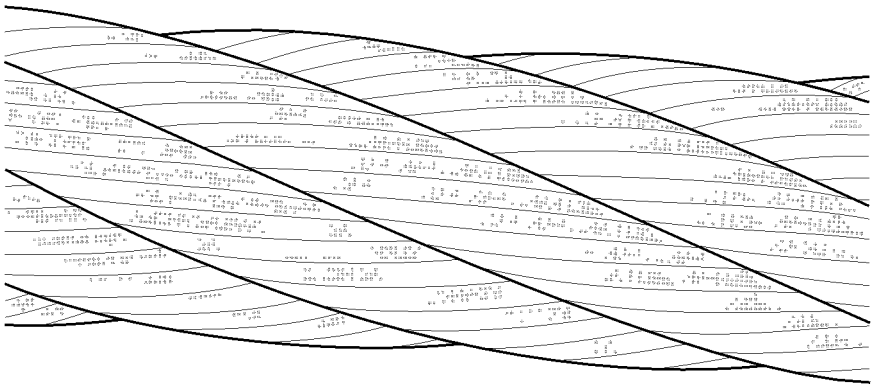

Fig.120995: Magnification of external corrosion for better depiction

When significant corrosion is present, the rope must be checked by **expert personnel for crane rope inspection**.

3.5.6 Flattening

Flattening occurs when the rope runs through the rope pulleys. In this area the rope wears quicker.

Corrosion occurs faster on retaining ropes and guy ropes.

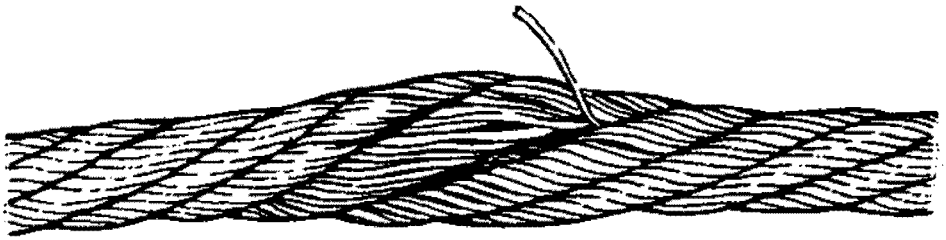

Fig.120997: Localized limited flattening, which leads to broken wires (single layer rope)

LWE/LR 1600-2-001/18101-07-02/en

copyright © Liebherr-Werk Ehingen GmbH 2018

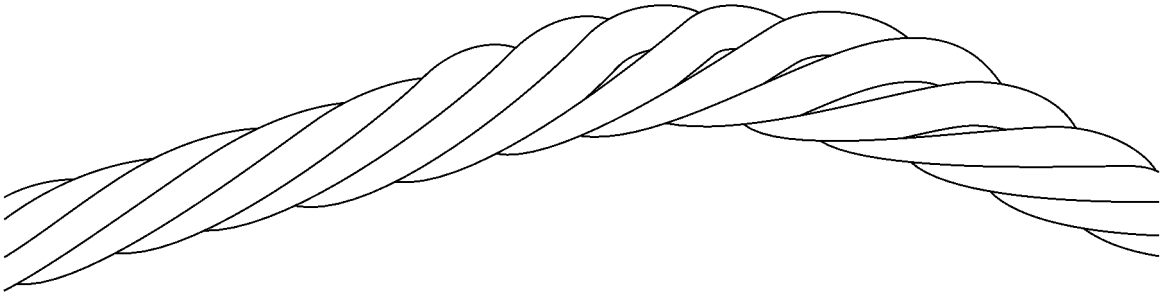

Fig.120996: Flattenings on multi layer spoolings

When flattening is present, the rope must be checked by **expert personnel for crane rope inspection**.

3.5.7 Corkscrew-like distortion

Distortion where the rope is in the form of a corkscrew along its longitudinal axis.

Corkscrew-like distortion causes rope wear, broken wires and bearing damage on rope pulleys.

Fig.120988: Corkscrew-like distortion

When corkscrew-like distortion is present, the rope must be checked by **expert personnel for crane rope inspection**.

3.5.8 Basket formation

This distortion occurs due to different layers between the outer strand layers and the inside of the rope.

Causes for basket formation are high angular pull angles during the run over the rope pulleys and run-in rope pulleys. Even load distribution over the entire cross section is not possible.

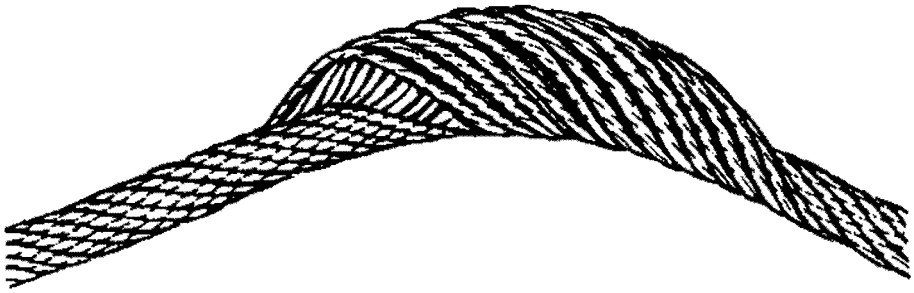

Fig.120989: Basket formation

When basket formation is present, then the rope must be taken down.

LWE/LR 1600-2-001/18101-07-02/en

copyright © Liebherr-Werk Ehingen GmbH 2018

3.5.9 Protruding, distorted inlay, braiding

This distortion is a special form of basket formation: The insert or the core of the rope protrudes between the external braids or an external braid protrudes from the rope banding.

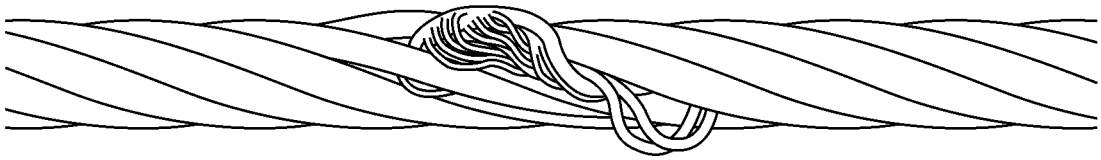

Fig.120990: Protrusion of an insert (rope single layer)

Fig.120991: Distorted or protruding strand

When the insert or a strand protrudes or is distorted, place the rope down. Have **expert personnel for crane rope inspection** check if the rope area with the distortion can be removed.

3.5.10 Loop formation

At loop formation individual wires protrude from the rope banding, when no broken wire ends can be seen.

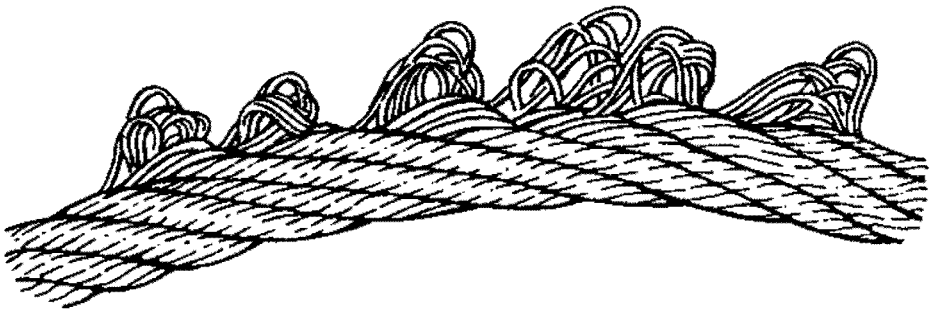

Fig.120993: Emergence of individual wires

When loop formation is present, take the rope down.

3.5.11 Kinking, rope loops (grommets) pulled closed

Deformation, where a loop has formed in the rope, without the possibility to rotate around its own axis during a load. The rope is subjected to more wear.

The rope is deformed. The strength remains only in part.

copyright © Liebherr-Werk Ehingen GmbH 2018

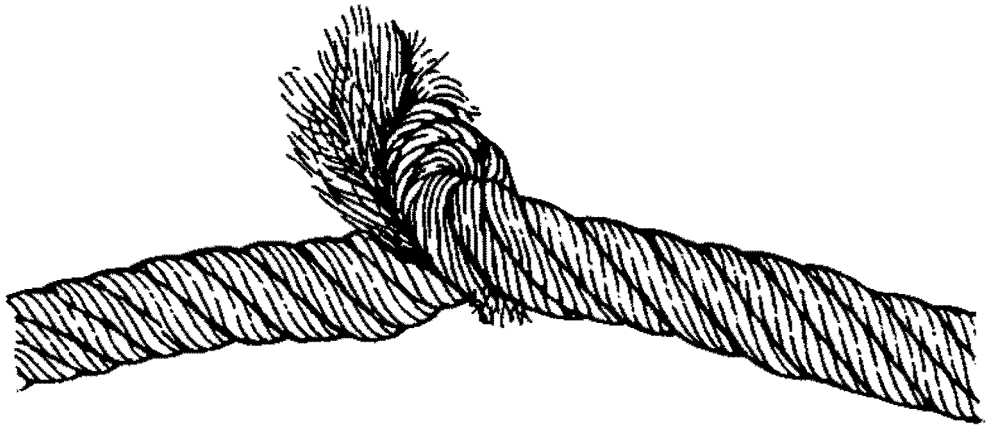

Fig.120998: Severe kinking or knots

When kinking or rope loops are present, place the rope down.

3.5.12 Buckles

Buckles are angular deformations. The rope was damaged due to external influences. Strong deformations of the rope cause stronger wear.

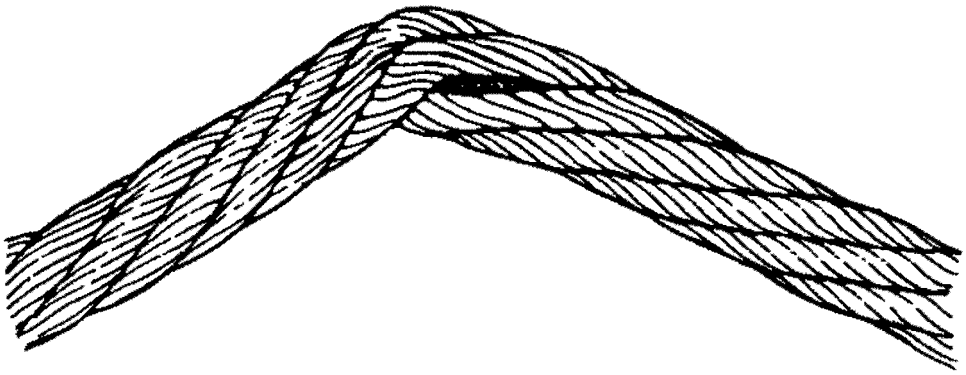

Fig.120999: Severe buckle

When buckles are present, take the rope down.

3.5.13 Effects of heat, arcs

Damage caused to the rope by welding work, for example.

Unusual heat impact is visible by tempering colors and loss of lubricant.

When heat impact has occurred on the rope, then the rope must be taken down.

3.6 Checking the ropes

WARNING
Operation with damaged rope!
Failure of rope. Death, severe injury, property damage.

When damage, wear and deformations are present:
▶ Have **expert personnel for crane rope inspection** determine if the rope has to be taken down.

LWE/LR 1600-2-001/18101-07-02/en

copyright © Liebherr-Werk Ehingen GmbH 2018

The following sections describe the tasks for **daily visual inspection**.

The crane operator can carry out a daily visual inspection if he is sufficiently trained in the tasks and considered to be able to do so.

3.6.1 Intervals

Intervals and situations where the daily visual inspection must be made:
- Daily, before starting to work
- In case of change of the reeving of the crane rope due to
  - Transport
  - New reeving
  - Removal and installation

3.6.2 Areas

The rope must be checked over the entire length.

The following areas must be checked with special diligence:
- Rope end connections
- Safety coils and fixed point on the winch
- Areas of the rope which run through the hook block
- Areas of the rope which run over the rope pulleys or laying on the rope pulleys
- Areas of the rope which are spooled on the winch, especially cross over areas
- Areas of the rope which are laying above the compensation pulleys
- Areas of the rope which are subjected to abrasion due to external components
- All areas of the rope which are subjected to temperatures above 60°C

3.6.3 Documentation of rope condition

Every visible change of the wire rope must be documented in the crane records.

3.6.4 Checking the lubrication

WARNING
Missing lubrication!
Functional problems. Inner and outer corrosion.
- ▶ Lubricate the rope regularly.
- ▶ Make sure that the rope is lubricated all around.
- ▶ Select manual or automatic lubrication procedures.

The lubrication must be checked at least once a **month**.

When the rope shows signs of drying out:
- ▶ Lubricate the rope, see section „Lubricating the rope“.

3.6.5 Check for wear and distortion

- ▶ Check all visible parts of the rope for wear and distortion.
- ▶ Check the rope end connections and fixed points especially carefully for wear, damage, cracks and distortion.
- ▶ Check pressed together rope end connection for slipping and traces on the rope.

Note
- ▶ The maximum permissible number for broken wires over a certain rope length may not be exceeded.
- ▶ Determine the maximum permissible number of broken wires, see Crane operating instructions, chapter 8.04.

- ▶ Check the rope end connection and rope area near the rope end connection for broken wires.

LWE/LR 1600-2-001/18101-07-02/en

copyright © Liebherr-Werk Ehingen GmbH 2018

When broken wires are present on the rope:
▶ Remove the broken wire, see section „Removing broken wires“.

When broken wires or damage is present on the rope end connection:
▶ Document visible changes of the rope condition.
▶ Have the rope checked by **expert personnel for crane rope inspection**.

When the rope can be shortened without reducing the operational safety:
▶ Shorten the rope, see section „Shortening the rope“.

3.6.6 Checking the rope drive for spooling problems

Lacking pretension of the rope on the winch can cause spooling problems in multi layer spooling.

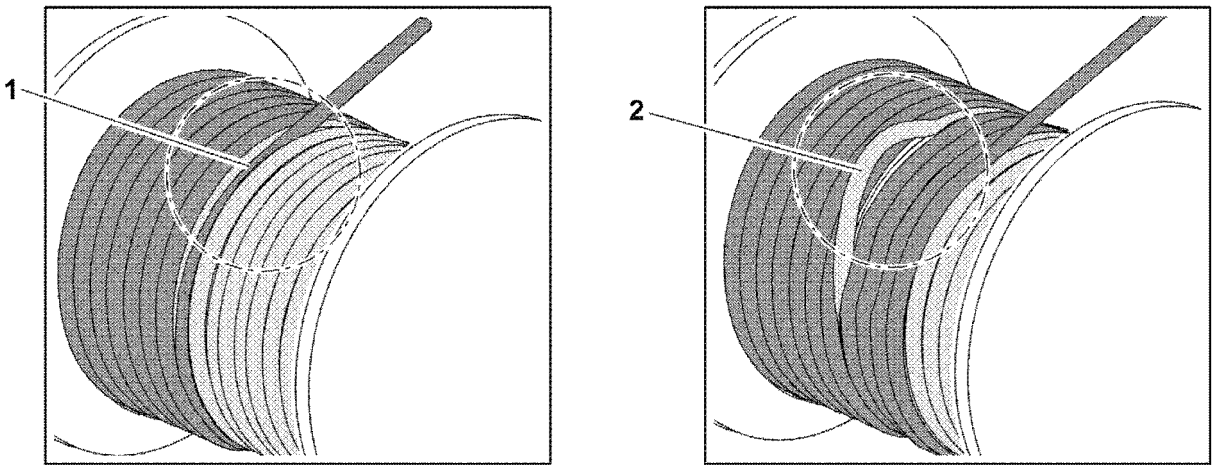

Fig.120967: Possible spooling problems on the rope winch

1 Cutting into the lower rope layers **2** Loop formation in the lower rope layers

▶ Check the spooling behavior of rope on the rope winch for cutting into the lower rope layers **1**.
▶ Check the spooling behavior of rope on the rope winch for loop formation in the lower rope layers **2**.

When spooling defects are found:
▶ Renew the pretension, see section „Renewing the pretension of hoist ropes“.
▶ Document visible changes of the rope condition.
▶ Have the rope checked by **expert personnel for crane rope inspection**.

3.6.7 Checking the position

▶ Check the correct position of the rope on the rope pulleys.

When the rope is **not** correctly laying on the rope pulley:
▶ Have the rope and rope pulley checked by **expert personnel for crane rope inspection**.

3.6.8 Checking for corrosion

A superficial „rust film“ can be wiped off.

▶ Do **not** clean the rope with solvents or cleaners.
▶ Clean the rope solely with a wire hand brush.
▶ Check rope for corrosion.

When the rope shows a rough surface:
▶ Document visible changes of the rope condition and have the rope checked by **expert personnel for crane rope inspection**.

LWE/LR 1600-2-001/18101-07-02/en

copyright © Liebherr-Werk Ehingen GmbH 2018

If there is any uncertainly regarding the condition of the rope:
▶ Place the rope down or contact Liebherr Service.

3.6.9 Checking for flattenings

In the cross over area of the spooled up rope layers on the winch the rope is stressed more. The rope can be flattened as a result.

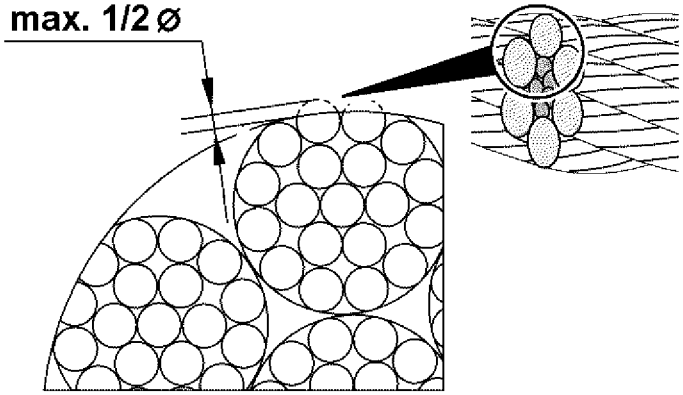

Fig.120966: Maximum flattening of wires on the outer strands

▶ Check the rope in the ascent zones of the rope spooling on the winch for flattenings.

When the outer braids are flattened more than half of the wire diameter:
▶ Document visible changes of the rope condition.
▶ Have the rope inspected by **expert personnel for crane rope inspection** or place the rope down.

When the rope can be shortened without reducing the operational safety:
▶ Shorten the rope on the rope drum fixed point, see section „Shortening the rope“.

3.7 Checking the control rope for distortions

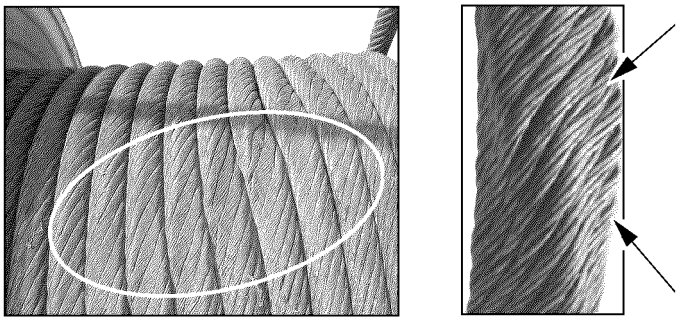

Fig.114002: Distortion on control ropes

▶ Check the first rope layer of the control rope for crushed areas and distortions.

When distortions are present:
▶ Have the rope checked by **expert personnel for crane rope inspection**.

LWE/LR 1600-2-001/18101-07-02/en

copyright © Liebherr-Werk Ehingen GmbH 2018

3.8 Lubricating the rope

WARNING
Missing lubrication!
Functional problems. Inner and outer corrosion.
▶ Lubricate the rope regularly.
▶ Make sure that the rope is lubricated all around.
▶ Select manual or automatic lubrication procedures.

NOTICE
Too much or incorrect lubricant!
Excessive soiling. Wear on rope, on rope pulley and on winch. Recognition of take down criteria is impeded.
▶ Use lubricant, which is compatible with the rope and the original lubricant.

▶ Do **not** clean the rope with solvents or cleaners.
▶ Clean the rope solely with a wire hand brush.

Areas, which must be lubricated especially well are bending zones on winch and rope pulleys.

▶ Lubricate the rope.

3.9 Removing broken wires

NOTICE
Broken wires!
Damage of other components in crane operation, for example rope pulleys and compensation pulleys.
▶ Remove broken wires.

Make sure that the following prerequisite is met:
– Suitable pliers are on hand.

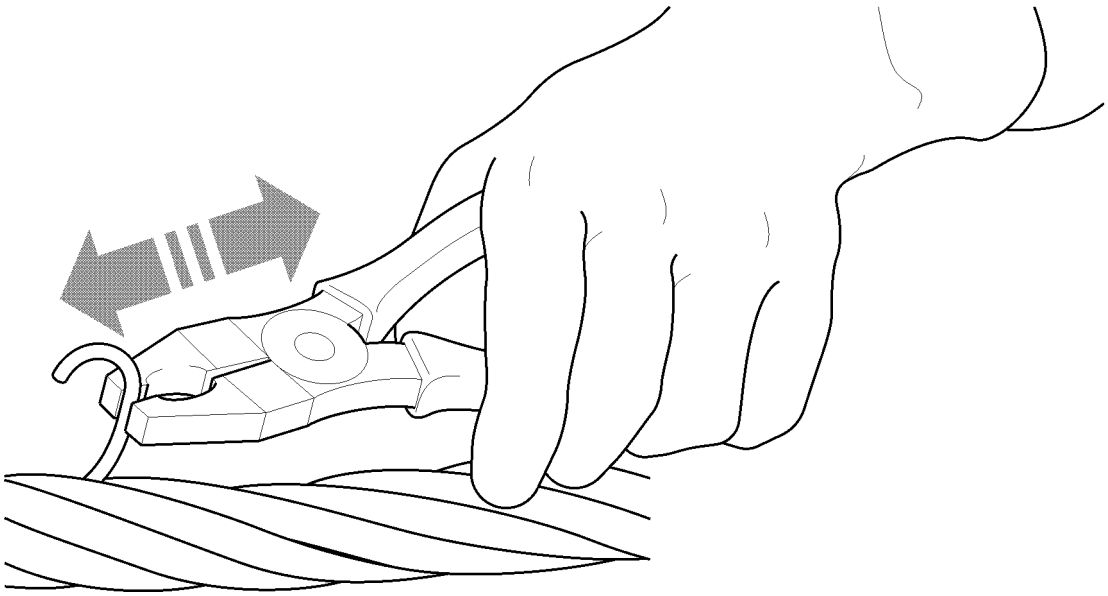

Fig.120979: Remove broken wire

▶ Grasp the wire on the upper end with pliers. Bend the wire back and forth until the wire breaks off in the braid valley.

LWE/LR 1600-2-001/18101-07-02/en

copyright © Liebherr-Werk Ehingen GmbH 2018

The position of a broken wire is important for subsequent inspection. Individual broken wires are counted and are recorded later in the evaluation for withdrawal from service.

▶ Document the position of the broken wires in the crane record. Inspection checklist, see chapter 8.04.

3.10 Turning an extremely rotation-resistant hoist rope out

WARNING
Damage of rope due to incorrect procedure!
▶ Use extreme caution for the following procedures.
▶ Observe the following instructions exactly.

The cause for the turn-in of the hook block can have various reasons.

Check the crane for the following peculiarities:
– Scrub marks: Are hoist rope scrub marks present on the crane components? If scrub marks are present, check the hoist rope run and correct it.
– Rope pulleys: Did the groove diameter become too small?
  • Groove diameter dimensional stability must be present.
  • If this is not the case, the rope pulley must be replaced.
– Rope lubrication: Has the hoist rope been sufficiently lubricated? If the rope surface is dry, the hoist rope must be re-lubricated.

If the crane does not display other peculiarities, the hoist rope must be spun out.

The following sections describe two methods of how to spin out the hoist rope. The methods must be applied in the described sequence.

3.10.1 Spinning out with single strand reeving

▶ Reeve in the single strand hoist rope.
▶ Extend the boom to the maximal boom length and hook height.
▶ Lower hooks to approximately 1 m above the ground and allow the hoist rope to spin out.
▶ With an empty hook block, carry out one complete hoist cycle.
▶ Lower the hook again to approximately 1 m above the ground and allow the hoist rope to spin out again.
▶ Reeve the number of strands of hoist rope carefully and spin free where the twisting of the hook block is largest.
▶ Distribute the spin out to the entire rope length: Run at least two entire hoist cycles at maximum boom length and hook height.

Note

When the hook block continues to turn in:
▶ Spin the rope out, see section „Spinning out by turning the hook block out“.

3.10.2 Spinning out by turning out the hook block

Make sure that the following prerequisite is met:
– The hook block is reeved with the number of strands where the twisting is the largest.

▶ Extend the boom completely and lower the hook block.
▶ Attach a load of approximately 10 % of the nominal rope pull on the hook block.

Before lifting the load, a helper must rotate the twisted hook block to a straight position by hand until the rope strands no longer touch each other.

▶ Continue to turn the hook block by one entire turn.

Result:

– The rope strands touch again.

LWE/LR 1600-2-001/18101-07-02/en

copyright © Liebherr-Werk Ehingen GmbH 2018

NOTICE
The hook block turns back under load in a straight position!

When the hook block turns back in a straight position:
▶ Release the hook block.

▶ Hold the hook block in the prescribed position until the load lifts off the ground.
▶ Move the load until approximately 15 m before the uppermost hook position of the completely extended boom.
▶ Lower load and set it down.

3.11 Renewing the pretension of hoist ropes

WARNING
Lacking pretension of the rope on the winch!
Excessive rope wear in the lower spooling layers, gap formation, rope cutting in.

When the lower rope layers on the winch are hardly used or **not**:
▶ Renew the pretension in the entire rope regularly.

Make sure that the following prerequisites are met:
– A reeving is selected where the entire rope length can be spooled.
– Clean spooling pattern on the drum at spooling.

Note
Recommendation!
▶ The rope application is the most economical when the entire rope length is utilized.

When only a part of the rope length is used for a longer period of time:
▶ Use a proportionally shorter rope.

▶ Spool the rope out until three safety coils.
▶ Spool the rope up with a rope tensile force of 10 % of the maximum rope tensile force.

3.12 Shortening the rope

WARNING
Distortions and mechanical damage!
Operational safety significantly disturbed, uneven load distribution within the rope.
▶ Have the manufacturer check if the distorted and damaged area can be severed.

Visible form changes often occur localized or in short rope sections.

When a safe operation of the rope is ensured, a distorted and damaged area can be severed.

To shorten the rope there are different prerequisites:
– Rope shows flattenings
– Broken wires occur solely within the area of the rope end connection, the remaining rope is undamaged

DANGER
Minimum number of remaining coils on the winch fallen below!
Rope releases or rips off, falling load. Death, severe injury, property damage.
▶ Make sure, after shortening the rope that **at least three remaining coils** remain on the winch in all working positions of the crane.

Make sure that the following prerequisite is met:
– The rope was shortened by authorized and trained expert personnel.

Multi layer spooling: When the rope on the fixed point on the winch is shortened by half the winch diameter, then the service life of the rope increases significantly.

LWE/LR 1600-2-001/18101-07-02/en

copyright © Liebherr-Werk Ehingen GmbH 2018

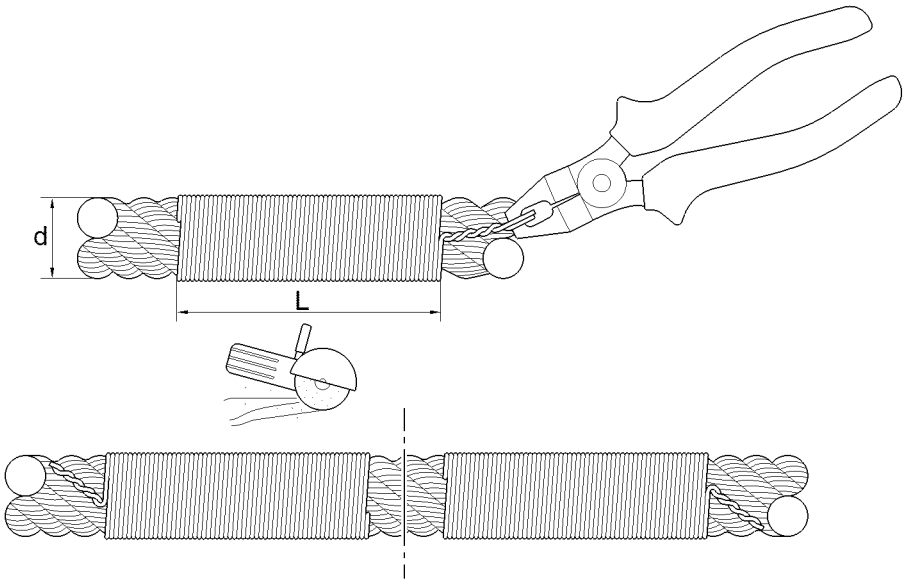

Fig.120972: Tie the rope before shortening it

d Rope nominal diameter **L** Length of tie, at least 2d

The length of the tie **L** must be at least 2 times the rope nominal diameter (2d).

The shortening of the rope in this section applies to a single layer rope. On rotation-resistance, parallel roped ropes it may be necessary to tie several times to prevent the rope from jumping open when it is cut.

- ▶ Tie the rope on both sides with wire.
- ▶ Twist the end of the wire with the pliers to prevent them from releasing.

WARNING
Danger of injury due to flying sparks!
- ▶ Wear safety glasses and safety gloves.

- ▶ Separate the rope vertically to the rope axis.
- ▶ Fasten the end connections on the rope according to the manufacturer's instructions.
- ▶ Remove the tie on both ends of the separation from the rope.

copyright © Liebherr-Werk Ehingen GmbH 2018

Empty page!

LWE/LR 1600-2-001/18101-07-02/en

copyright © Liebherr-Werk Ehingen GmbH 2018

7.06 Fill quantities, lubrication chart

1	Crane chassis	3
2	Crane superstructure	5

LWE/LR 1600-2-001/18101-07-02/en

copyright © Liebherr-Werk Ehingen GmbH 2018

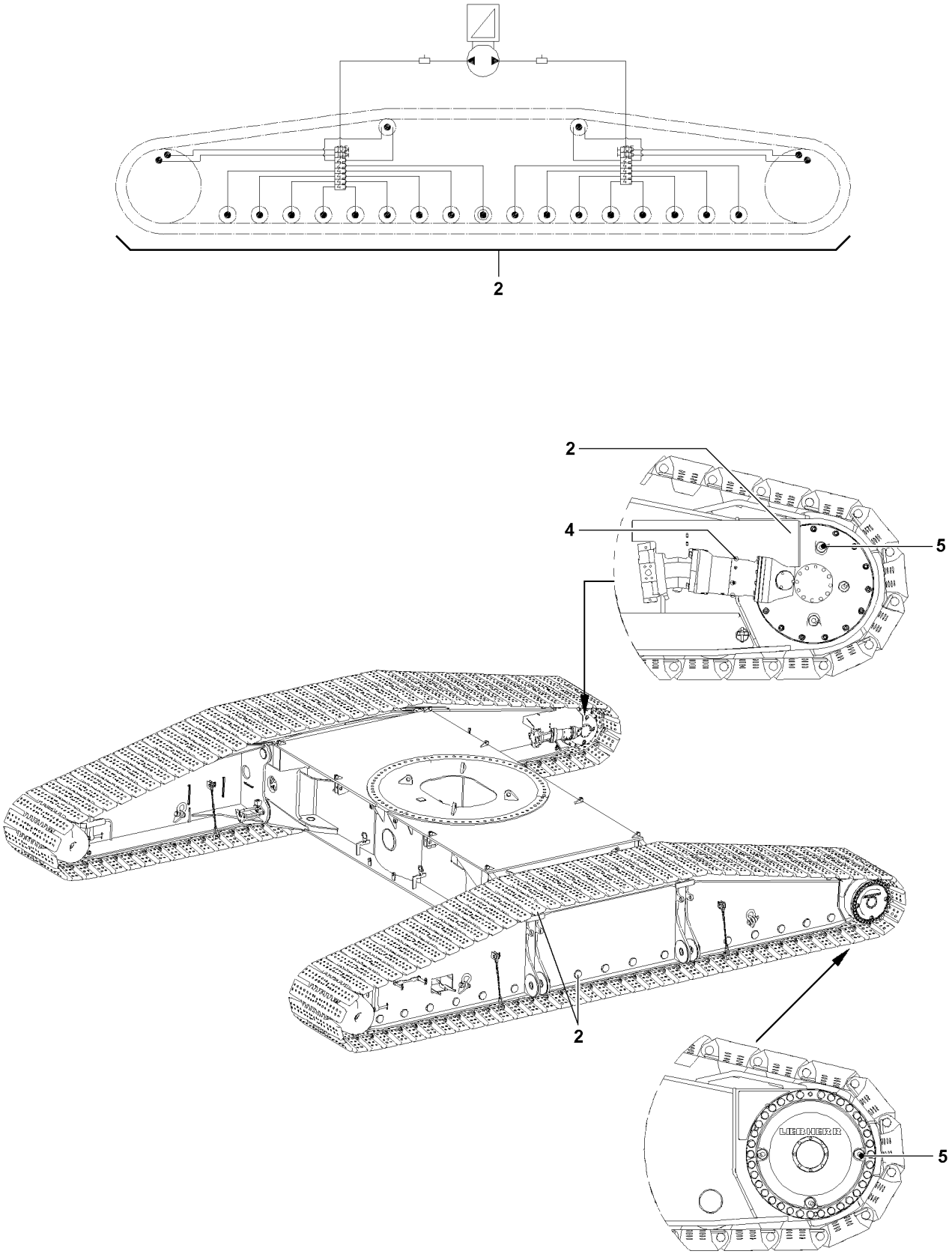

LWE/LR 1600-2-001/18101-07-02/en

Fig.107458

copyright © Liebherr-Werk Ehingen GmbH 2018

1 Crane chassis

Explanations for lubrication chart:

2 Special grease
4 Hydraulic oil
5 Synthetic gear oil

Fill quantities - chart

The specified filling quantities (change quantities) are orientation values. The markings on the dipsticks, inspection ports or sight gauges are decisive for filling.

NOTICE
Danger of property damage!
▶ Do not mix synthetic oils with mineral oils.

Description	Media	Fill quantity
Planetary gear	Synthetic gear oil	35.0 l
Angular gear	Synthetic gear oil	8.0 l
Brakes	Hydraulic oil	0.7 l
Central lubrication system	Special grease	2.5 kg

LWE/LR 1600-2-001/18101-07-02/en

copyright © Liebherr-Werk Ehingen GmbH 2018

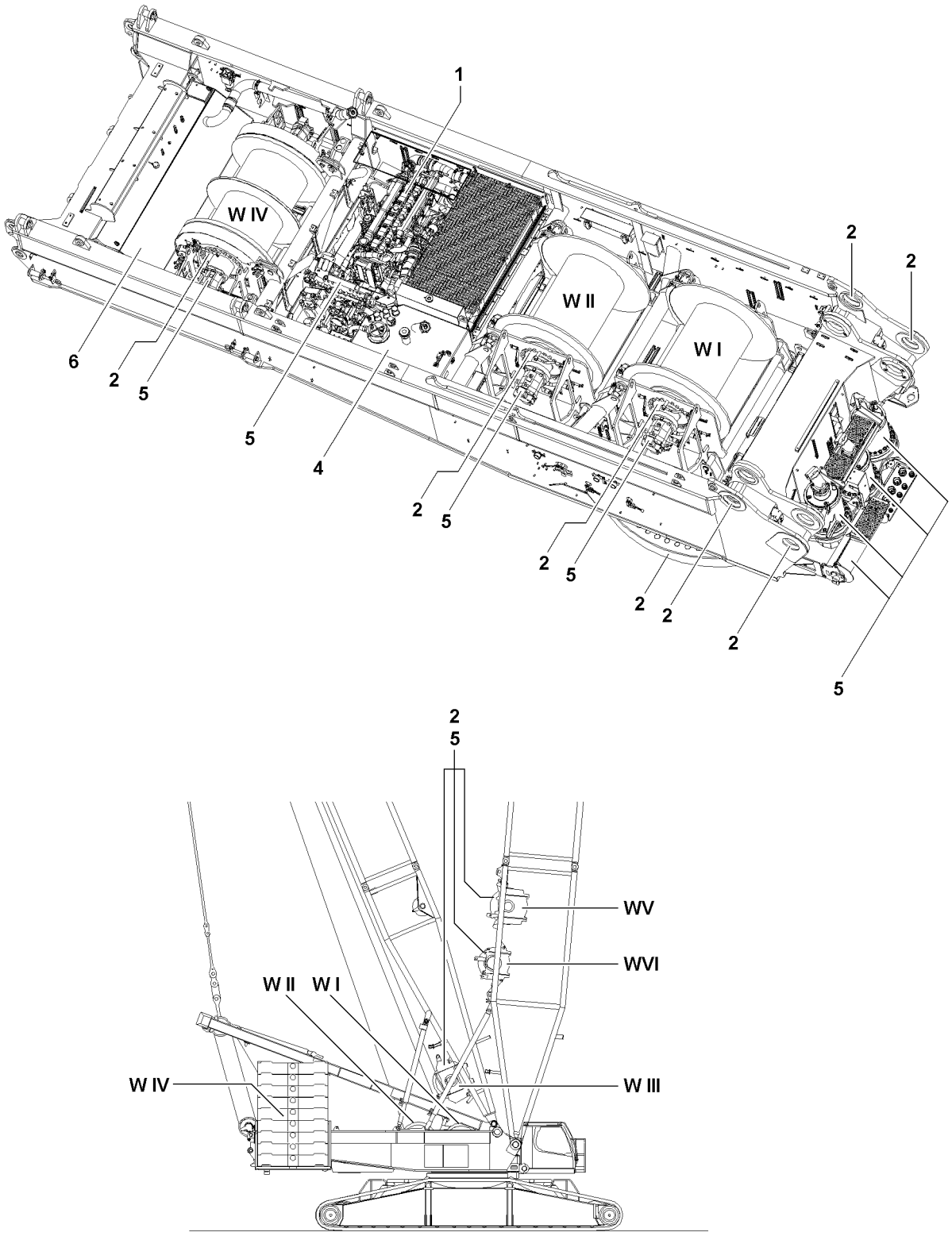

LWE/LR 1600-2-001/18101-07-02/en

Fig.107459

copyright © Liebherr-Werk Ehingen GmbH 2018

2 Crane superstructure

Explanations for lubrication chart:

1 Engine oil
2 Special grease
4 Hydraulic oil
5 Synthetic gear oil
6 Diesel fuel

Fill quantities - chart

The specified filling quantities (change quantities) are orientation values. The markings on the dipsticks, inspection ports or sight gauges are decisive for filling.

NOTICE
Danger of property damage!
▶ Do not mix synthetic oils with mineral oils.

Description	Media	Fill quantity
Diesel engine	Engine oil	37.0 l
Cooling system	Coolant	76.0 l
Fuel tank	Diesel fuel	1485.0 l
Winch 1 **W I**, Winch 2 **W II**, Winch 3 **W III**, Winch 5 **W V**	Synthetic gear oil	12.0 l
Winch 6 **W VI**	Synthetic gear oil	17.0 l
Winch 4 **W IV**	Synthetic gear oil	24.0 l
Assembly winch	Synthetic gear oil	0.4 l
Slewing gear	Synthetic gear oil	23.0 l
Pump distributor gearbox	Synthetic gear oil	15.0 l
Hydraulic oil tank [1]	Hydraulic oil	565.0 l
Central lubrication system	Special grease	4.0 kg
Gear ring, rotary connection and slewing gear pinion	Special grease	1.0 kg

[1] When the oil level is checked, all hydraulic cylinders must be retracted. The oil level must be in the centre of the sight gauge.

LWE/LR 1600-2-001/18101-07-02/en

copyright © Liebherr-Werk Ehingen GmbH 2018

Empty page!

LWE/LR 1600-2-001/18101-07-02/en

copyright © Liebherr-Werk Ehingen GmbH 2018

7.07 Operating fluids and lubricants

1 Specified service fluids and lubricants for Liebherr cranes 3

LWE/LR 1600-2-001/18101-07-02/en

copyright © Liebherr-Werk Ehingen GmbH 2018

LWE/LR 1600-2-001/18101-07-02/en

Fig.195219

copyright © Liebherr-Werk Ehingen GmbH 2018

1 Specified service fluids and lubricants for Liebherr cranes

No.	Crane components	Ambient temperature for driving and crane operation	
		-20 °C to +50 °C	-40 °C to +30 °C
1.1	Diesel engine **with** Exhaust aftertreatment US Tier 4, EU-Stage IV LMB D936 A7-04, D944 A7-04, D946 A7-04, D9508 A7-04 MTU 6R 1000 Euro V ECE R.49, K LMB D936 A7-50, D946 A7-50, D9508 A7-50	**LWE Id. No.: 10871536** **Liebherr Motoroil 5W-30** SAE 5W-30 and ACEA E6 **or:** SAE 10W-40 and ACEA E6 Observe the instructions of the engine manufacturer	**LWE Id. No.: 10871536** **Liebherr Motoroil 5W-30** SAE 5W-30 and ACEA E6 **or:** SAE 10W-40 and ACEA E6 Observe the instructions of the engine manufacturer **Below -20 °C** with pre-heating
	Note: To improve the cold start ability of the diesel engine at an ambient temperature below -10 °C , we recommend the use of Liebherr Motoroil 5W-30, **LWE-Id no.: 10871536**		
1.2	Diesel engine **with** Exhaust aftertreatment US Tier 4 interim, EU-Stage III B LMB D936 A7 SCR, D934 A7 SCR, D856 A7 SCR, D9508 A7 SCR MTU/Mercedes Benz OM 906, OM 926	**LWE Id. No.: 10663796** **Liebherr Motoroil 10W-40 low ash** SAE 10W-40 low ash and ACEA E6 Observe the instructions of the engine manufacturer	**LWE Id. No.: 11100934** **Liebherr Motoroil 5W-30 low ash** SAE 5W-30 low ash and ACEA E6 Observe the instructions of the engine manufacturer **Below -20 °C** with pre-heating
	Note: To improve the cold start ability of the diesel engine at an ambient temperature below -10 °C , we recommend the use of Liebherr Motoroil 5W-30 low ash, **LWE-Id no.: 11100934**		
1.3	Diesel engine **without** Exhaust aftertreatment US Tier 3, EU-Stage IIIA such as 1.2 or optionally also LMB D936 A6, D934 A6, D846 A7, D9508 A7 MTU/Mercedes Benz OM 906	**LWE Id. No.: 861005308** **Liebherr Motoroil 10W-40** SAE 10W-40 and ACEA E4 Observe the instructions of the engine manufacturer	**LWE Id. No.: 10871536** **Liebherr Motoroil 5W-30** SAE 5W-30 and ACEA E4 Observe the instructions of the engine manufacturer **Below -20 °C** with pre-heating
	Note: To improve the cold start ability of the diesel engine at an ambient temperature below -10 °C , we recommend the use of Liebherr Motoroil 5W-30, **LWE-Id no.: 10871536**		

LWE/LR 1600-2-001/18101-07-02/en

copyright © Liebherr-Werk Ehingen GmbH 2018

No.	Crane components	Ambient temperature for driving and crane operation	
		-20 °C to +50 °C	-40 °C to +30 °C
1.4	Diesel engine **without**	**LWE Id. No.: 10871536**	**LWE Id. No.: 10871536**
	Exhaust aftertreatment	**Liebherr Motoroil 5W-30**	**Liebherr Motoroil 5W-30**
	Power band H and I ECE R.96	SAE 5W-30 and ACEA E4	SAE 5W-30 and ACEA E4
		or: SAE 10W-40 and ACEA E4	**or:** SAE 10W-40 and ACEA E4
	LMB D936 A7-03, D944 A7-03, D946 A7-03, D9508 A7-03	Observe the instructions of the engine manufacturer	Observe the instructions of the engine manufacturer
			Below -20 °C with pre-heating
	Note: To improve the cold start ability of the diesel engine at an ambient temperature below -10 °C , we recommend the use of Liebherr Motoroil 5W-30, **LWE-Id no.: 10871536**		
1.5	Diesel engine **without**	**LWE Id. No.: 861005308**	**LWE Id. No.: 10871536**
	Exhaust aftertreatment	**Liebherr Motoroil 10W-40**	**Liebherr Motoroil 5W-30**
	US Tier 2, EU-Stage II	SAE 10W-40 and Cummins Engineering Standard CES 20078, 20077, 20076, 20075, 20071	SAE 5W-30 and Cummins Engineering Standard CES 20078, 20077, 20076, 20075, 20071
	Cummins QSK 23	SAE 10W-40 and API CI-4, CH-4, CF-4	SAE 5W-30 and API CI-4, CH-4, CF-4
		SAE 10W-40 and ACEA E7, E5, E3, E2	SAE 5W-30 and ACEA E7, E5, E3, E2
		Observe the instructions of the engine manufacturer	Observe the instructions of the engine manufacturer
			Below -20 °C with pre-heating
	Note: To improve the cold start ability of the diesel engine at an ambient temperature below -10 °C , we recommend the use of Liebherr Motoroil 5W-30, **LWE-Id no.: 10871536**		
2	Drive axle	**LWE Id. No.: 861901008**	**LWE Id. No.: 10425142**
	with differentials,	**Liebherr Gear Hypoid 90 EP**	**Liebherr Syntogear Plus 75W-90**
	planetary gear and	SAE 90 and API GL 5	SAE 75W-90 and API GL 5
	installed distributor gear		
3	Axle drive ZF DK-7	**LWE Id. No.: 861901008**	**LWE Id. No.: 10425142**
		Liebherr Gear Hypoid 90 EP	**Liebherr Syntogear Plus 75W-90**
		ZF TE-ML 05	ZF TE-ML 05
4.1	Vehicle distributor gear	**LWE Id. No.: 861901008**	**LWE Id. No.: 10425142**
	KESSLER	**Liebherr Gear Hypoid 90 EP**	**Liebherr Syntogear Plus 75W-90**
	VG 1800, VG 2400, VG 2550, VG 2600, VG 2700, VG 3750, VG 3751	SAE 90 and API GL 5	SAE 75W-90 and API GL 5
	W 3750, W 3751		

LWE/LR 1600-2-001/18101-07-02/en

copyright © Liebherr-Werk Ehingen GmbH 2018

No.	Crane components	Ambient temperature for driving and crane operation	
		-20 °C to +50 °C	-40 °C to +30 °C
4.2	Vehicle distributor gear with PTO for crane drive KESSLER VG 2700 with PTO VG 3751 with PTO	**LWE Id. No.: 10425142** **Liebherr Syntogear Plus 75W-90** SAE 75W-90 and API GL 5	**LWE Id. No.: 10425142** **Liebherr Syntogear Plus 75W-90** SAE 75W-90 and API GL 5
4.3	Vehicle distributor gear ZF Passau, STEYR PUCH VG 1200, VG 1600, VG 2000, VG 3800	**LWE Id. No.: 861901008** **Liebherr Gear Hypoid 90 EP** ZF TE-ML 19	**LWE Id. No.: 10425142** **Liebherr Syntogear Plus 75W-90** ZF TE-ML 19
5	Miter gear for crane drive	**LWE Id. No.: 10425142** **Liebherr Syntogear Plus 75W-90** SAE 75W-90 and API GL 5	**LWE Id. No.: 10425142** **Liebherr Syntogear Plus 75W-90** SAE 75W-90 and API GL 5
6	Offset gear (drop box) ZF Passau, STEYR PUCH	**LWE Id. No.: 861901008** **Liebherr Gear Hypoid 90 EP** ZF TE-ML 19	**LWE Id. No.: 10425142** **Liebherr Syntogear Plus 75W-90** ZF TE-ML 19
7.1	Pump distributor gear filled with **mineral** gear oil	**LWE Id. No.: 861901008** **Liebherr Gear Hypoid 90 EP** SAE 90 and API GL 5	**LWE Id. No.: 10425142** **Liebherr Syntogear Plus 75W-90** SAE 75W-90 and API GL 5
7.2	Pump distributor gear filled with **synthetic** gear oil	**LWE Id. No.: 861901208** **Liebherr Gear PG 220** CLP PG 220, DIN 51517-3 **WARNING: May not be mixed with other oils!**	**LWE Id. No.: 10664125** **Liebherr Gear PG 150** CLP PG 150, DIN 51517-3 **WARNING: May not be mixed with other oils!**
7.3	Pump distributor gear LTC 1055-3.1	**LWE Id. No.: 10425142** **Liebherr Syntogear Plus 75W-90** SAE 75W-90 and API GL 5	**LWE Id. No.: 10425142** **Liebherr Syntogear Plus 75W-90** SAE 75W-90 and API GL 5
8.1	Powershift transmission ZF torque converter WG 120, WG 150, WG 180, WG 181, WG 200, WG 201	**LWE Id. No.: 861005308** **Liebherr Motoroil 10W-40** ZF TE-ML 03	**LWE Id. No.: 861900608** **Liebherr Hydraulic-Gear ATF** ZF TE-ML 03 **Below -20 °C** run until warm according to the operating instructions

copyright © Liebherr-Werk Ehingen GmbH 2018

No.	Crane components	Ambient temperature for driving and crane operation	
		-20 °C to +50 °C	-40 °C to +30 °C
8.2	Powershift transmission ZF torque converter WG 251* ZF ERGOPOWER WG 210, WG 260, WG 310 * also for ambient temperatures above -10 °C	**LWE Id. No.: 861900608** **Liebherr Hydraulic-Gear ATF** ZF TE-ML 03	**LWE Id. No.: 861900608** **Liebherr Hydraulic-Gear ATF** ZF TE-ML 03 **Below -20 °C** run until warm according to the operating instructions
9	Powershift transmission CLARK	**LWE Id. No.: 861005308** **Liebherr Motoroil 10W-40** SAE 10W-40 and ACEA E4	**LWE Id. No.: 861900608** **Liebherr Hydraulic-Gear ATF** ATF Dexron II D and ALLISON C4 **Below -20 °C** run until warm according to the operating instructions
10	Offset gear (drop box) ALLISON	**LWE Id. No.: 861005308** **Liebherr Motoroil 10W-40** SAE 10W-40 and API CF, ACEA E4	**LWE Id. No.: 861900608** **Liebherr Hydraulic-Gear ATF** ALLISON C4 **Below -20 °C** run until warm according to the operating instructions
11.1	Automatic transmission ALLISON CLBT 740, CLBT 750, CLBT 754, CLBT 755 HT 755, HD 4560	**LWE Id. No.: 861900608** **Liebherr Hydraulic-Gear ATF** ALLISON C4	**LWE Id. No.: 861903708** **CASTROL Transynd** ALLISON C4 **Below -20 °C** run until warm according to the operating instructions
11.2	Automatic transmission ZF	**LWE Id. No.: 861900608** **Liebherr Hydraulic-Gear ATF** ZF TE-ML 14	**LWE Id. No.: 861900608** **Liebherr Hydraulic-Gear ATF** ZF TE-ML 14 **Below -20 °C** run until warm according to the operating instructions
12.1	Automatic transmission ZF AS-Tronic ZF TC-Tronic (basic gear) ZF TC-Tronic HD (basic gear)	**LWE Id. No.: 10218305** **ZF-Ecofluid M** ZF TE-ML 02	**LWE Id. No.: 10218305** **ZF-Ecofluid M** ZF TE-ML 02 **below -20 °C** preheat gear according to operating instructions

LWE/LR 1600-2-001/18101-07-02/en

copyright © Liebherr-Werk Ehingen GmbH 2018

No.	Crane components	Ambient temperature for driving and crane operation	
		-20 °C to +50 °C	-40 °C to +30 °C
12.2	Automatic transmission ZF TraXon ZF TraXon Torque (basic gear)	**LWE Id. No.: 10218305** **ZF-Ecofluid M** ZF TE-ML 02	**LWE Id. No.: 10218305** **ZF-Ecofluid M** ZF TE-ML 02 **below -20 °C** preheat gear according to operating instructions
13.1	Torque converter coupling ZF TC HD	**LWE Id. No.: 10218305** **ZF-Ecofluid M** ZF TE-ML 02	**LWE Id. No.: 10218305** **ZF-Ecofluid M** ZF TE-ML 02 **below -20 °C** preheat gear according to operating instructions
13.2	Torque converter coupling ZF TC 2	**LWE Id. No.: 861900608** **Liebherr Hydraulic-Gear ATF** ZF TE-ML 14	**LWE Id. No.: 861900608** **Liebherr Hydraulic-Gear ATF** ZF TE-ML 14
14	Transmission ZF ECO-Split	**LWE Id. No.: 10218305** **ZF-Ecofluid M** ZF TE-ML 02	**LWE Id. No.: 10218305** **ZF-Ecofluid M** ZF TE-ML 02
15	Slewing gear	**LWE Id. No.: 861901208** **Liebherr Gear PG 220** CLP PG 220, DIN 51517-3 **WARNING: May not be mixed with other oils!**	**LWE Id. No.: 861901208** **Liebherr Gear PG 220** CLP PG 220, DIN 51517-3 **WARNING: May not be mixed with other oils!**
16.1	Rope winch	**LWE Id. No.: 861901208** **Liebherr Gear PG 220** CLP PG 220, DIN 51517-3 **WARNING: May not be mixed with other oils!**	**LWE Id. No.: 861901208** **Liebherr Gear PG 220** CLP PG 220, DIN 51517-3 **WARNING: May not be mixed with other oils!**
16.2	Rope winch LR 13000	**LWE Id. No.: 11000948** **Liebherr Universal grease 9900** KPF2N-25, DIN 51502	**LWE Id. No.: 11000948** **Liebherr Universal grease 9900** KPF2N-25, DIN 51502
17	Winch of Telescopic boom guying	**LWE Id. No.: 861901208** **Liebherr Gear PG 220** CLP PG 220, DIN 51517-3 **WARNING: May not be mixed with other oils!**	**LWE Id. No.: 861901208** **Liebherr Gear PG 220** CLP PG 220, DIN 51517-3 **WARNING: May not be mixed with other oils!**
18.1	Crane hydraulics Crane chassis and crane superstructure Observe exceptions, see 18.2	**LWE Id. No.: 861903508** **Liebherr Hydraulic 37**	**LWE Id. No.: 10293807** **Liebherr Hydraulic Plus Arctic**

copyright © Liebherr-Werk Ehingen GmbH 2018

No.	Crane components	Ambient temperature for driving and crane operation	
		-20 °C to +50 °C	-40 °C to +30 °C
18.2	Crane hydraulics Crane chassis and crane superstructure LTM 11200-9.1 LTR 11200 LR 13000, LR 11000, LR 1600/2, LR 1600/2-W LTC 1055-3.1	**LWE Id. No.: 10293807** **Liebherr Hydraulic Plus Arctic**	**LWE Id. No.: 10293807** **Liebherr Hydraulic Plus Arctic**
19	Brake system if hydraulically actuated	**LWE Id. No.: 861000108** **DOT 4** SAE J 1703e	**LWE Id. No.: 861000108** **DOT 4** SAE J 1703e
20	Clutch actuator	**LWE Id. No.: 861000108** **DOT 4** SAE J 1703e	**LWE Id. No.: 861000108** **DOT 4** SAE J 1703e
21	King pin bearing Gear shaft if **not** maintenance-free	**LWE Id. No.: 861301308** **Liebherr Special grease 9610 Plus** KP2K-20, DIN 51502	**LWE Id. No.: 10296825** **Liebherr Universal grease Arctic** KPFHC1N-60, DIN 51502
22.1	Glide and roller bearing roller bearing joint	**LWE Id. No.: 861301308** **Liebherr Special grease 9610 Plus** KP2K-20, DIN 51502	**LWE Id. No.: 10296825** **Liebherr Universal grease Arctic** KPFHC1N-60, DIN 51502
22.2	Rope pulley bearing	**LWE Id. No.: 10296825** **Liebherr Universal grease Arctic** KPFHC1N-60, DIN 51502	**LWE Id. No.: 10296825** **Liebherr Universal grease Arctic** KPFHC1N-60, DIN 51502
23	Central lubrication system	**LWE Id. No.: 861301308** **Liebherr Special grease 9610 Plus** KP2K-20, DIN 51502	**LWE Id. No.: 10296825** **Liebherr Universal grease Arctic** KPFHC1N-60, DIN 51502
24.1	Slewing ring connection Roller bearing	**LWE Id. No.: 861301308** **Liebherr Special grease 9610 Plus** KP2K-20, DIN 51502	**LWE Id. No.: 10296825** **Liebherr Universal grease Arctic** KPFHC1N-60, DIN 51502
24.2	Slewing ring connection LR 13000	**LWE Id. No.: 11000948** **Liebherr Universal grease 9900** KPF2N-25, DIN 51502	**LWE Id. No.: 10296825** **Liebherr Universal grease Arctic** KPFHC1N-60, DIN 51502

LWE/LR 1600-2-001/18101-07-02/en

copyright © Liebherr-Werk Ehingen GmbH 2018

No.	Crane components	Ambient temperature for driving and crane operation	
		-20 °C to +50 °C	-40 °C to +30 °C
25.1	Support plate with equalization	**LWE Id. No.: 10877698** **Loctite LB 8104** Silicone oil base **WARNING: Do not use oils with another base!**	**LWE Id. No.: 10877698** **Loctite LB 8104** Silicone oil base **WARNING: Do not use oils with another base!**
25.2	Glide shoes for cab guidance on vehicle frame LTC 1045-3.1 LTC 1050-3.1	**LWE Id. No.: 861303608** **Liebherr Telescope grease 9613 Plus** KP2K-30, DIN 51502	**LWE Id. No.: 861303608** **Liebherr Telescope grease 9613 Plus** KP2K-30, DIN 51502
26	Sliding beam Plastic glide bearing Beam for track adjustment	**LWE Id. No.: 861303608** **Liebherr Telescope grease 9613 Plus** KP2K-30, DIN 51502	**LWE Id. No.: 861303608** **Liebherr Telescope grease 9613 Plus** KP2K-30, DIN 51502
27.1	Telescopic boom Plastic glide bearing Corner guide top	**LWE Id. No.: 861303608** **Liebherr Telescope grease 9613 Plus** KP2K-30, DIN 51502	**LWE Id. No.: 861303608** **Liebherr Telescope grease 9613 Plus** KP2K-30, DIN 51502
27.2	Telescopic boom Outer glide bearing Lower shell Inner glide bearing (only during assembly)	**LWE Id. No.: 861303308** **Liebherr Special grease 1336** KP2K-30, DIN 51502 Spray grease	**LWE Id. No.: 861303308** **Liebherr Special grease 1336** KP2K-30, DIN 51502 Spray grease
27.3	Telescopic boom LTC 1045-3.1 LTM 1050-3.1	**LWE Id. No.: 11651459** **Bechem Berulub TCG 1 V**	**LWE Id. No.: 11651459** **Bechem Berulub TCG 1 V**
28	Boom lock	**LWE Id. No.: 861301308** **Liebherr Special grease 9610 Plus** KP2K-20, DIN 51502	**LWE Id. No.: 10296825** **Liebherr Universal grease Arctic** KPFHC1N-60, DIN 51502
29	Guide rail on Telescoping cylinder	**LWE Id. No.: 861303308** **Liebherr Special grease 1336** KP2K-30, DIN 51502 Spray grease	**LWE Id. No.: 861303308** **Liebherr Special grease 1336** KP2K-30, DIN 51502 Spray grease
30	Gear ring rotary connection Slewing gear drive pinion	**LWE Id. No.: 861007708** **RHS-Fluid** OGPFOS-20, DIN 51502	**LWE Id. No.: 861007708** **RHS-Fluid** OGPFOS-20, DIN 51502
31	Running rope	**LWE Id. No.: 10173371** **Liebherr WR-Lube SC** Adhesive grease	**LWE Id. No.: 10173371** **Liebherr WR-Lube SC** Adhesive grease

LWE/LR 1600-2-001/18101-07-02/en

copyright © Liebherr-Werk Ehingen GmbH 2018

No.	Crane components	Ambient temperature for driving and crane operation	
		-20 °C to +50 °C	-40 °C to +30 °C
32	Radiator fluid Diesel engine and heating system	**LWE Id. No.: 10871121** **Liebherr Antifreeze OS Mix** Pre-mixed corrosion inhibitor / antifreeze **WARNING: May not be diluted and / or mixed with other corrosion inhibitors / antifreeze!**	**LWE Id. No.: 10871121** **Liebherr Antifreeze OS Mix** Pre-mixed corrosion inhibitor / antifreeze **WARNING: May not be diluted and / or mixed with other corrosion inhibitors / antifreeze!**
33.1	Travel gears Crawler crane	see data tag	see data tag
33.2	Travel gears telescope crawler crane	see data tag	see data tag
34	Recovery winch	See the data tag and manufacturer's specifications	See the data tag and manufacturer's specifications
35	Recovery winch rope	See the manufacturer's specifications	See the manufacturer's specifications
36	Steering uncoupling LTC 1045-3.1 LTC 1050-3.1	**LWE Id. No.: 10800345** **Teflon Spray**	**LWE Id. No.: 10800345** **Teflon Spray**
37	Pin connections	**LWE Id. No.: 11000948** **Liebherr Universal grease 9900** KPF2N-25, DIN 51502	**LWE Id. No.: 11000948** **Liebherr Universal grease 9900** KPF2N-25, DIN 51502

LWE/LR 1600-2-001/18101-07-02/en

copyright © Liebherr-Werk Ehingen GmbH 2018

7.15 Procedure in case of problems

1	Procedure to follow in case of a problem	3
2	Measures in clear problem cases	7
3	Carry out error diagnostics	17
4	Measures for defective components	19

LWE/LR 1600-2-001/18101-07-02/en

copyright © Liebherr-Werk Ehingen GmbH 2018

LWE/LR 1600-2-001/18101-07-02/en

Fig.197077

copyright © Liebherr-Werk Ehingen GmbH 2018

1 Procedure to follow in case of a problem

This chapter answers the following questions:
- What to do in case of a problem?
- Which data is important for communication with Liebherr Service?
- Which displays and component groups are relevant for error diagnostics?
- Which measures are to be taken in clear problem cases?
- How to proceed in case of error messages of the LICCON computer system?
- How can an error diagnostics be carried out?
- Which measures are to be taken for defective components?

DANGER
Incorrect operation!
Incorrect operation of the crane can result in death or serious injuries!
▶ The crane may only be operated by authorized and trained expert personnel!

WARNING
Measures without the help of Liebherr Service!
Measures in case of a problem, which are carried out without consulting Liebherr Service can cause damage to the crane!
Personnel can be severely injured or killed!
▶ If problems remain or in case of error messages, consult Liebherr Service to determine the cause of the problem and further procedure!

Note
Error diagnostics without the help of Liebherr Service!
▶ For information regarding error diagnostics and error remedy, see Diagnostics manual!

Note
▶ The monitor illustrations in this section are only examples!
▶ The error codes shown in the monitor illustrations and the corresponding error descriptions might not exactly match the crane!

1.1 Procedure to follow in case of a problem

▶ Observe and adhere to the notes and instructions in this chapter.
▶ Before contacting Liebherr Service: Determine relevant data about the problem.
▶ Carry out the error diagnostics with the aid of Liebherr Service or the Diagnostics manual.
▶ Follow the instructions given by Liebherr Service.
▶ After error diagnostics: Replace defective components, which are supplied as spare parts.

LWE/LR 1600-2-001/18101-07-02/en

copyright © Liebherr-Werk Ehingen GmbH 2018

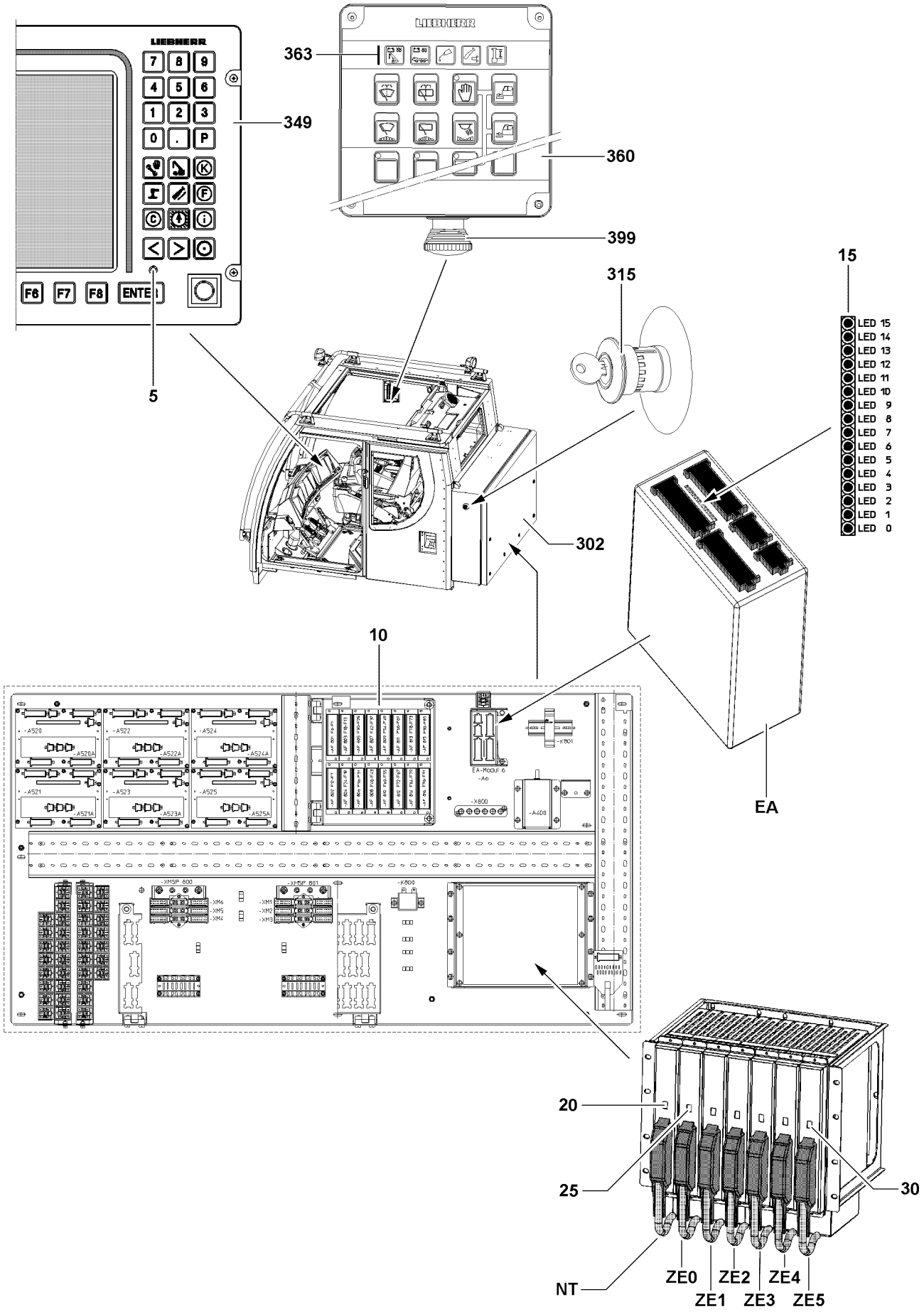

Fig.106378

LWE/LR 1600-2-001/18101-07-02/en

copyright © Liebherr-Werk Ehingen GmbH 2018

1.2 Overview of displays and component groups for error diagnostics

Various displays and component groups allow the crane driver:

- To localize error messages
- To communicate quicker and more precise with Liebherr Service
- With the aid of the diagnostics manual: To diagnose and remedy errors

Note
Error diagnostics without the help of Liebherr Service!
▶ For information regarding error diagnostics and error remedy, see Diagnostics manual!

349 LICCON Monitor 0
5 LED monitor 0
360 Operating and control unit (BKE)
302 Switch box
399 EMERGENCY OFF switch in the cab
315 EMERGENCY OFF switch on the switch box
10 Fuses
EA I / O module
15 LED display I / O module
NT Power supply
20 LED display power supply
ZE CPUs
- CPU 0 **ZE0** to CPU 5 **ZE5**

LED displays CPU
- LED display CPU0 **25** to LED display CPU5 **30**

1.3 Which data is required by Liebherr Service?

If the assistance of Liebherr Service is required, always provide the following information:
- Crane type
- Crane number
- Complete error code and any error message displayed on the LICCON monitor 0 **349**
- For certain errors: LED displays of power supply **NT** and CPUs **ZE**
- Application conditions of crane
- Action during which the error occurs
- Possibly frequency of error

LWE/LR 1600-2-001/18101-07-02/en

copyright © Liebherr-Werk Ehingen GmbH 2018

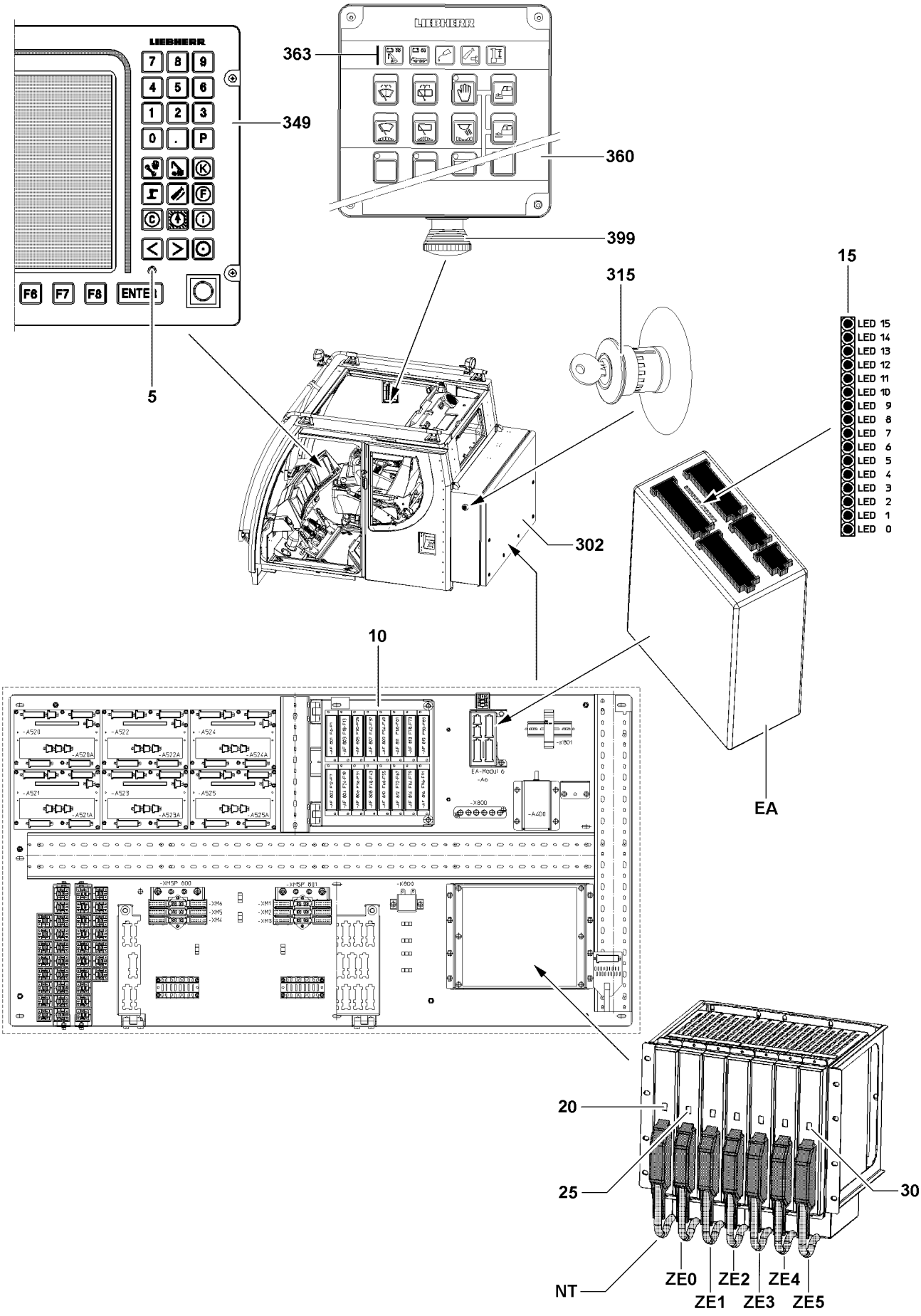

Fig.106378

LWE/LR 1600-2-001/18101-07-02/en

copyright © Liebherr-Werk Ehingen GmbH 2018

2 Measures in clear problem cases

Measures, which are taken in clear problem cases, are described in this section.

Note
- ▶ If a problem occurs, which is not described in this chapter:
- ▶ Contact Liebherr Service to determine the cause of the problem and further procedure!

Clear problem cases are:
- Engine does not start.
- Hydraulic, electric or engine failed.
- An alarm function occurs.
- LICCON computer system shows an error message.

2.1 The engine does not start?

- ▶ Make sure that the EMERGENCY OFF switch **399** on the BKE and the EMERGENCY OFF switch **315** on the switch box are not actuated.
- ▶ Make sure that the crane driver is seated on the crane driver's seat.
- ▶ Turn the ignition off.
- ▶ Start the engine again.

If the engine still cannot be started:
- ▶ Watch the indicator lights **363** on the BKE **360**.

Note
- ▶ For problem remedy, see Crane operating instructions, chapter 4.03!

If the error cannot be remedied:
- ▶ Contact Liebherr Service to determine the cause of the problem and further procedure.

2.2 Have the hydraulic, electric or engine failed?

Note
- ▶ If the equipment for hydraulic emergency control is part of the scope of delivery, then the crane can be taken down if the crane hydraulic, crane electric and crane engine failed!
- ▶ For emergency control, see Crane operating instructions, chapter 6.05!

LWE/LR 1600-2-001/18101-07-02/en

copyright © Liebherr-Werk Ehingen GmbH 2018

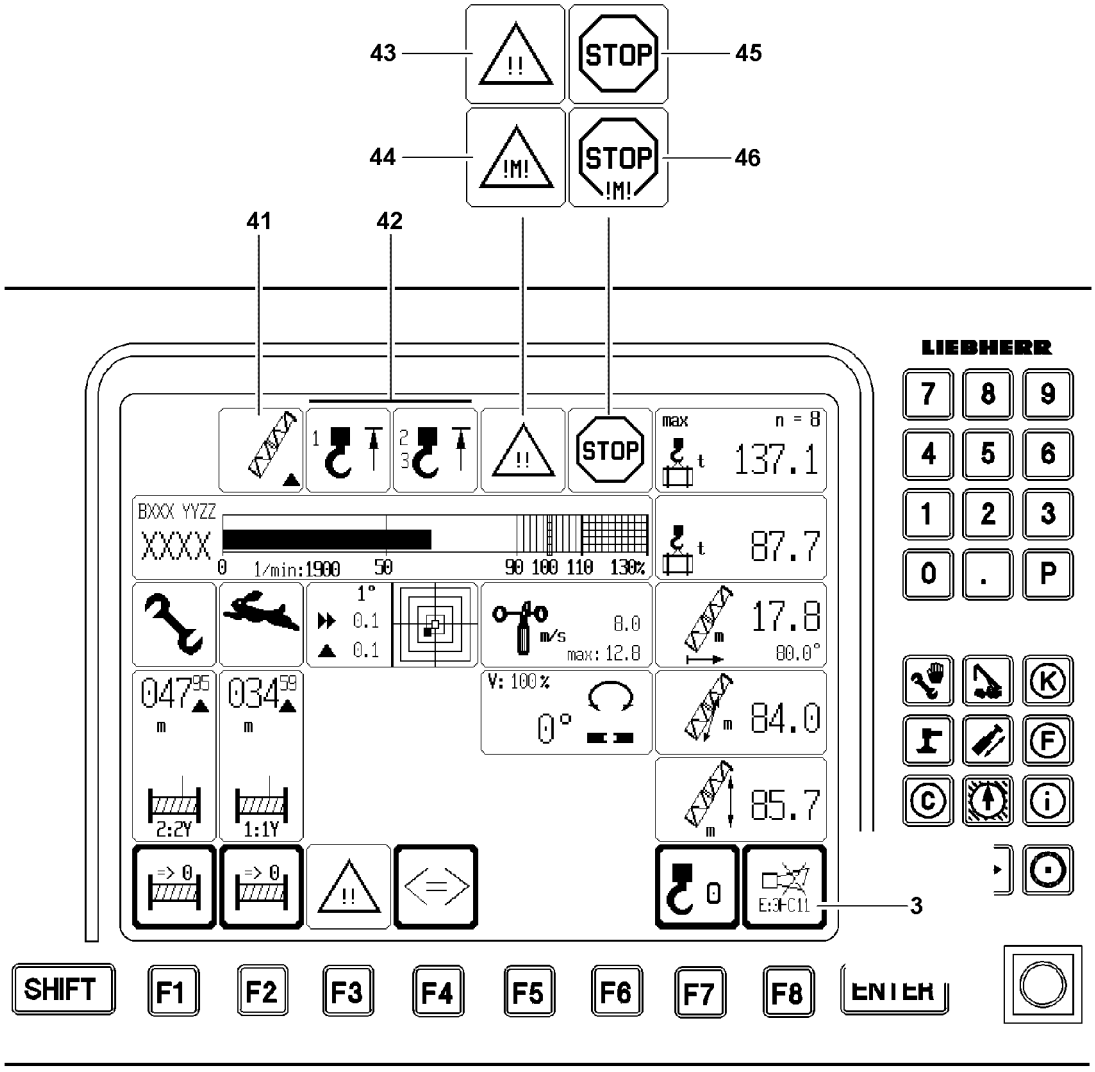

Fig.106382

LWE/LR 1600-2-001/18101-07-02/en

copyright © Liebherr-Werk Ehingen GmbH 2018

2.3 Did an alarm function occur?

Note
- ▶ For a detailed description of alarm functions, see Crane operating instructions, chapter 4.02!
- ▶ In case of an alarm function, an error message **3** with LICCON error code (LEC) appears at the same time!

The following alarm functions are indicated by blinking icons on the LICCON monitor 0:
- **41** Boom limitation
- **42** Hoist top limit switch
- Advance warning load **43** / Advance warning engine **44**
- Stop load **45** / Stop engine **46**

The limit ranges of the crane movements are monitored by:
- Hoist limit switch
- Angle sensors
- Pressure sensors
- Pull test brackets (force test boxes)
- Wind sensor
- Inductive sensors

If the limit ranges for these sensors are exceeded, the crane movements are turned off (LMB-STOP).

The load moment limiter (LML) is a program of the LICCON computer system to monitor the permissible load moment. If the permissible load moments of the load chart are exceeded, the LMB-STOP turns the crane movements off.

Note
- ▶ In case of certain shut offs, you can only continue to work by bypassing the safety devices!

WARNING
Risk of accident!
Personnel can be severely injured or killed!
- ▶ All instructions and data in the Crane operating instructions, chapter 4.04 must be observed and adhered to!

DANGER
Bypassing the overload protection!
If the overload protection is bypassed, there is no further protection against crane overload!
In the event of deliberate improper use, the crane could collapse, the boom can break off or the crane can topple over!
Personnel can be severely injured or killed!
This could result in high property damage!
- ▶ It is only permitted to bypass the overload protection for assembly or in emergencies!
- ▶ The bypass may only be carried out by persons who are aware of the effects of their acts regarding the bypass of the overload protection!
- ▶ Bypassing the overload protection requires the presence of the crane supervisor and must be performed with utmost caution!
- ▶ Crane operation with bypassed overload protection is prohibited!
- ▶ Contact Liebherr Service to determine the cause of the problem and further procedure!

If a LMB-STOP occurs due to boom limitation:
- ▶ Carry out load moment reducing crane movements.

LWE/LR 1600-2-001/18101-07-02/en

copyright © Liebherr-Werk Ehingen GmbH 2018

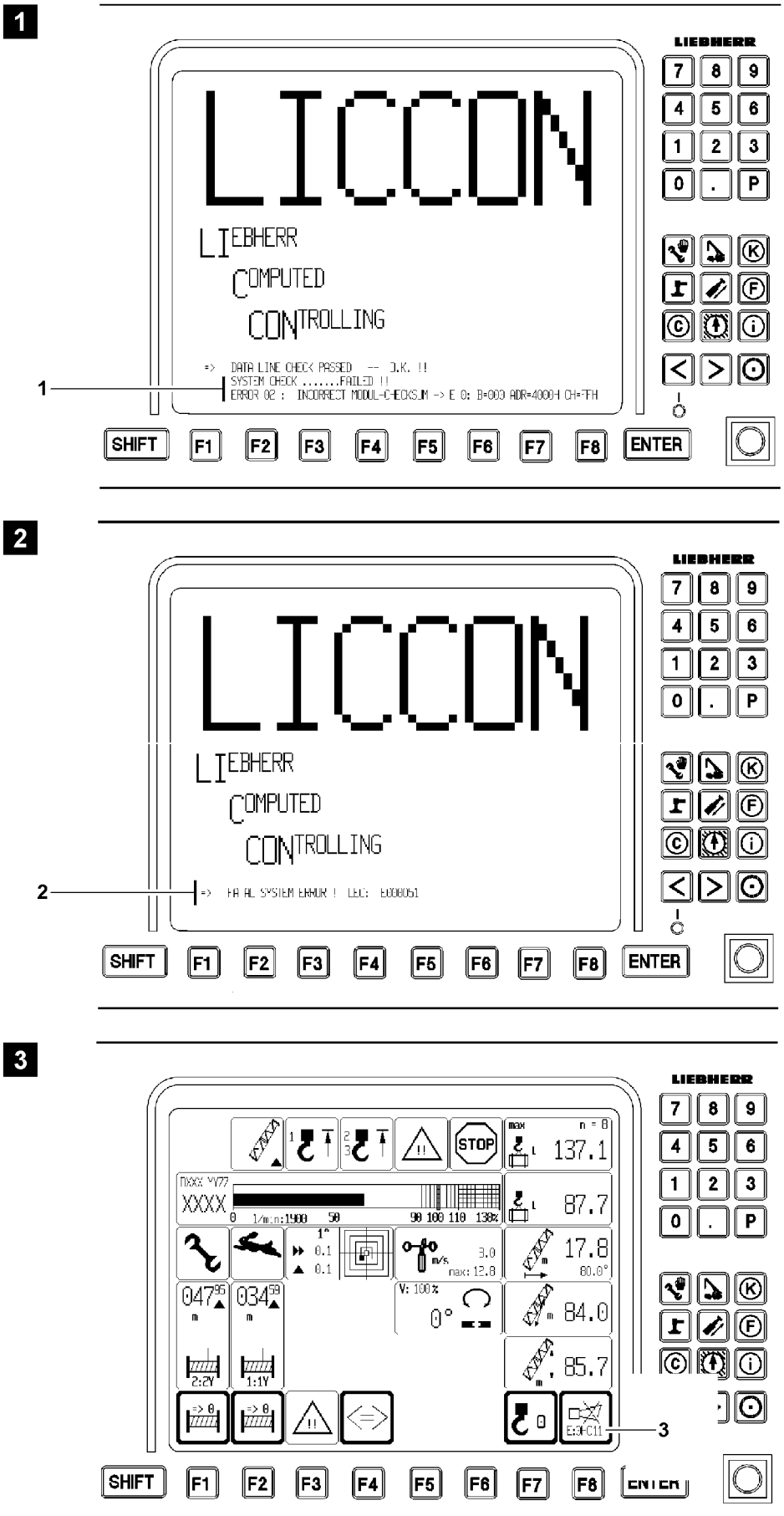

Fig.106380

LWE/LR 1600-2-001/18101-07-02/en

copyright © Liebherr-Werk Ehingen GmbH 2018

2.4 LICCON computer system shows an error message?

DANGER
Risk of accident!
Personnel can be severely injured or killed!
The crane can be severely damaged or destroyed!
▶ All instructions and data in the Crane operating instructions, chapter 4.04 must be observed and adhered to!

Examples of error messages:
– While the LICCON computer system starts up, see error display illustration **1**, example **1**.
– During operation, see error display illustration **2**, example **2**.
– During operation, see operating screen illustration **3**, example **3**.

Differentiation of error messages on the LICCON monitor:
– Error without LICCON Error Code (LEC), see example **1**.
– Error with LICCON Error Code (LEC), see example **2** and example **3**.

Differentiation of errors in crane operation:
– Errors which lead to shut down: The shut off icon is shown.
– Errors which do not lead to shut down: The crane operator is warned.

2.4.1 Remedying temporary errors during system start

Note
▶ While the LICCON computer system starts, temporary errors can occur, see illustration **1**!

Errors, which occur temporarily, can have the following causes:
– Loose contact
– Fluctuations in the power supply
– Error message can be a subsequent error

▶ Turn the LICCON computer system off and restart it after waiting for at least 5 s.
▶ Repeat this procedure up to three times (wait 2 min after 3 start attempts).

If the same error view appears several times:
▶ Turn the LICCON computer system off.
▶ Call up the test system, see section „Calling up the test system program“.
▶ Contact Liebherr Service to determine the cause of the problem and further procedure.

LWE/LR 1600-2-001/18101-07-02/en

copyright © Liebherr-Werk Ehingen GmbH 2018

1

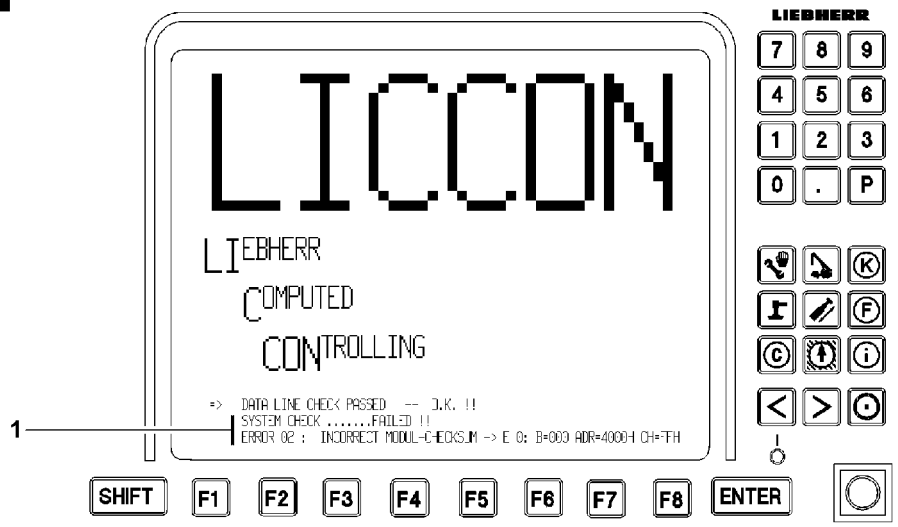

2

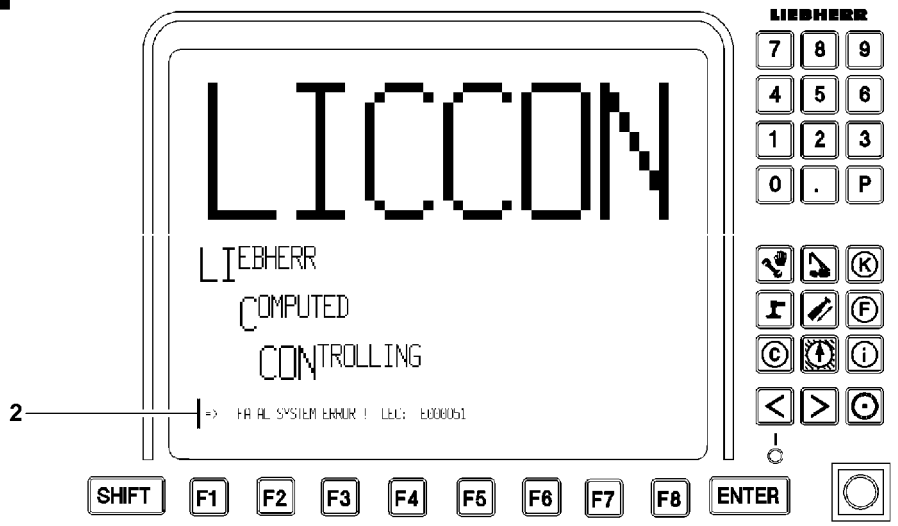

3

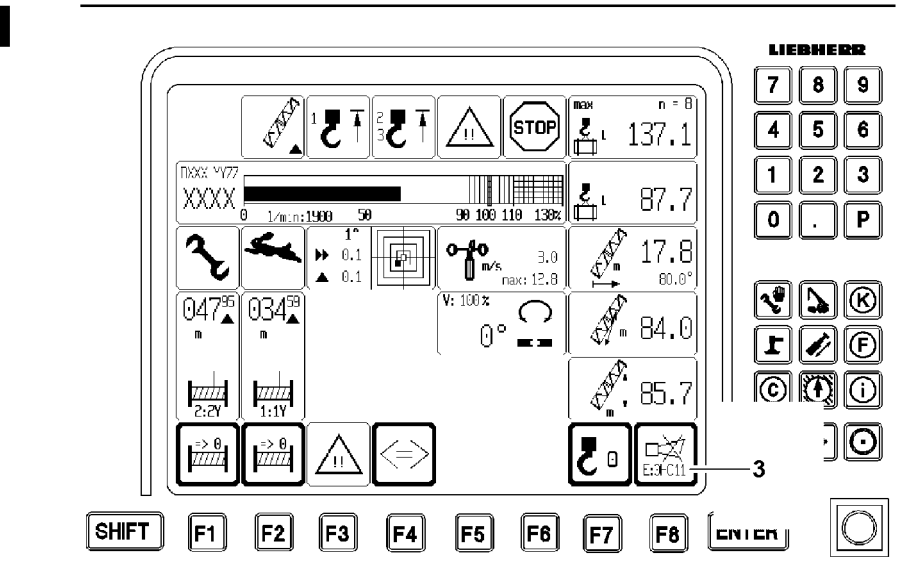

Fig.106380

LWE/LR 1600-2-001/18101-07-02/en

copyright © Liebherr-Werk Ehingen GmbH 2018

2.4.2 Procedure in case of error messages with LEC

Two different types of errors are differentiated with the LEC:
- Operating errors - Error code starts with a „B“.
- System errors / application errors - Error code starts with an „E“.

A LEC is always 6-digit.

Example of an error code: E:OHC11	
Element	**Description**
E:	Error class
0	CPU
HC11	I / O module and number, or processor of CPU

If an error code starts with a „B“:
▶ Correct the operating error.

If an error code starts with an „E“:
▶ Call up the test system, see section „Calling up the test system program“.
▶ Contact Liebherr Service to determine the cause of the problem and further procedure.

LWE/LR 1600-2-001/18101-07-02/en

copyright © Liebherr-Werk Ehingen GmbH 2018

4

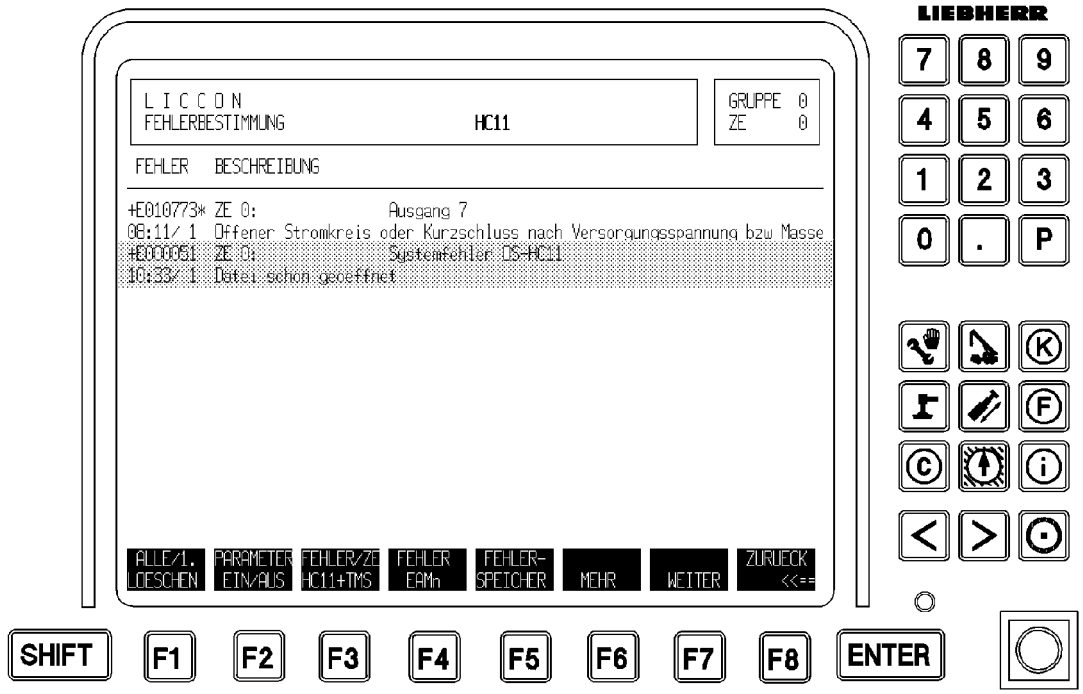

Fig.106381

LWE/LR 1600-2-001/18101-07-02/en

copyright © Liebherr-Werk Ehingen GmbH 2018

2.4.3 Calling up the „Test system“ program

Error messages of the LICCON computer systems with LEC are described in the error determination screen, illustration **4**. To do so, change into the test system program.

Listed errors in the error determination screen are differentiated by:
- Active errors - Error code starts with a „+“.
- Inactive errors - Error code starts with a „-“.

Note
▶ Active errors have higher priority than inactive errors and must be taken care of!

Calling up the „Test system“ from the operating screen

Make sure that the following prerequisites are met:
- Error message visible in the icon element „Horn“, see illustration **3**.
- Warning signal „Horn“ is audible.

▶ Press function key **F8** once.

Result:

– Horn is turned off.

▶ Press function key **F8** twice.

Result:

– Change into the error determination screen.
– Listing of errors with LEC and error text.

Calling up the „Test system“ after an error screen

Make sure that the following prerequisites are met:
- The operating screen changes into the error screen (system error), see illustration **2**.
- Crane functions are interrupted.

or:
- Error screen, while the LICCON computer system starts up, see illustration **3**.

▶ Turn the LICCON computer system off.
▶ Turn the LICCON computer system back on after approx. 5 s.

Result:

– Change into the error determination screen.
– Listing of errors with LEC and error text.

LWE/LR 1600-2-001/18101-07-02/en

copyright © Liebherr-Werk Ehingen GmbH 2018

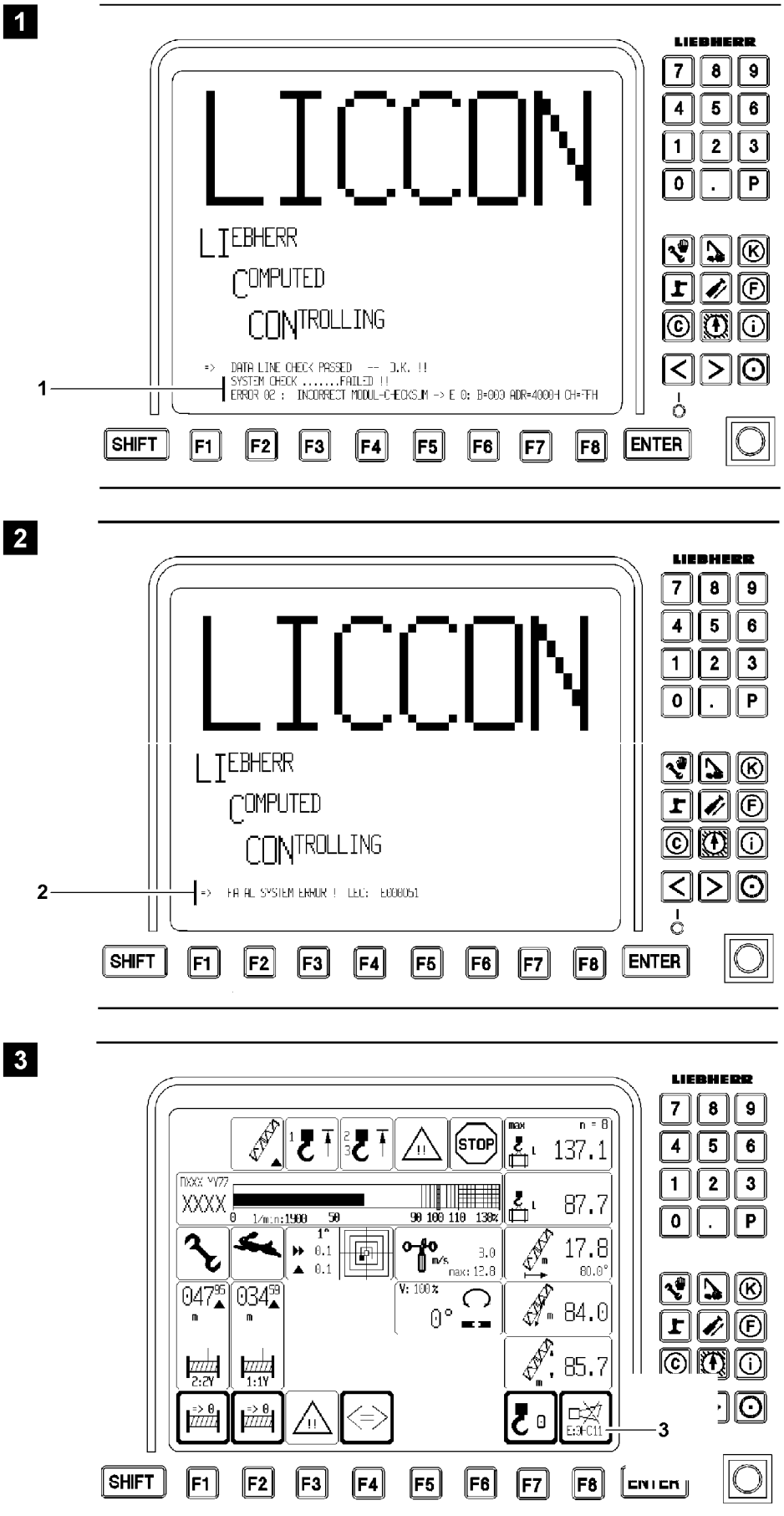

Fig.106380

LWE/LR 1600-2-001/18101-07-02/en

copyright © Liebherr-Werk Ehingen GmbH 2018

3 Carry out error diagnostics

Several possibilities exist for an error diagnostics:
- With the help of Liebherr Service
- With the help of Liebherr Service via remote diagnostics
- Without the help of Liebherr Service

3.1 Error diagnostics with the help of Liebherr Service

3.1.1 Error diagnostics by phone

▶ Contact Liebherr Service to determine the cause of the problem and further procedure.
▶ Follow the instructions given by Liebherr Service.

3.1.2 Remote diagnostics

The remote diagnostics makes it possible for Liebherr Service to check Liebherr cranes from a remote location in case of problems.

Activation of the remote diagnostics device is first carried out by Liebherr Service.

Make sure that the following prerequisites are met:
- The crane operator has a valid SIM-card (telephone card for mobile telephones) from a current mobile network operator.
- The telephone number of the data service is known.
- The PIN code request of the SIM-card is deactivated.
- The SIM-card is installed in the GSM module.
- For information for remote diagnostics, see Diagnostics manual!
- Follow the instructions given by Liebherr Service.

Note
▶ For information for remote diagnostics, see Diagnostics manual!

▶ Follow the instructions given by Liebherr Service.

3.2 Error diagnostics without the help of Liebherr Service

WARNING
Measures without the help of Liebherr Service!
Measures in case of a problem, which are carried out without consulting Liebherr Service can cause damage to the crane. Personnel can be severely injured or killed!
▶ If problems remain or in case of error messages, consult Liebherr Service to determine the cause of the problem and further procedure!

Note
Error diagnostics without the help of Liebherr Service!
▶ For information regarding error diagnostics and error remedy, see Diagnostics manual!

LWE/LR 1600-2-001/18101-07-02/en

copyright © Liebherr-Werk Ehingen GmbH 2018

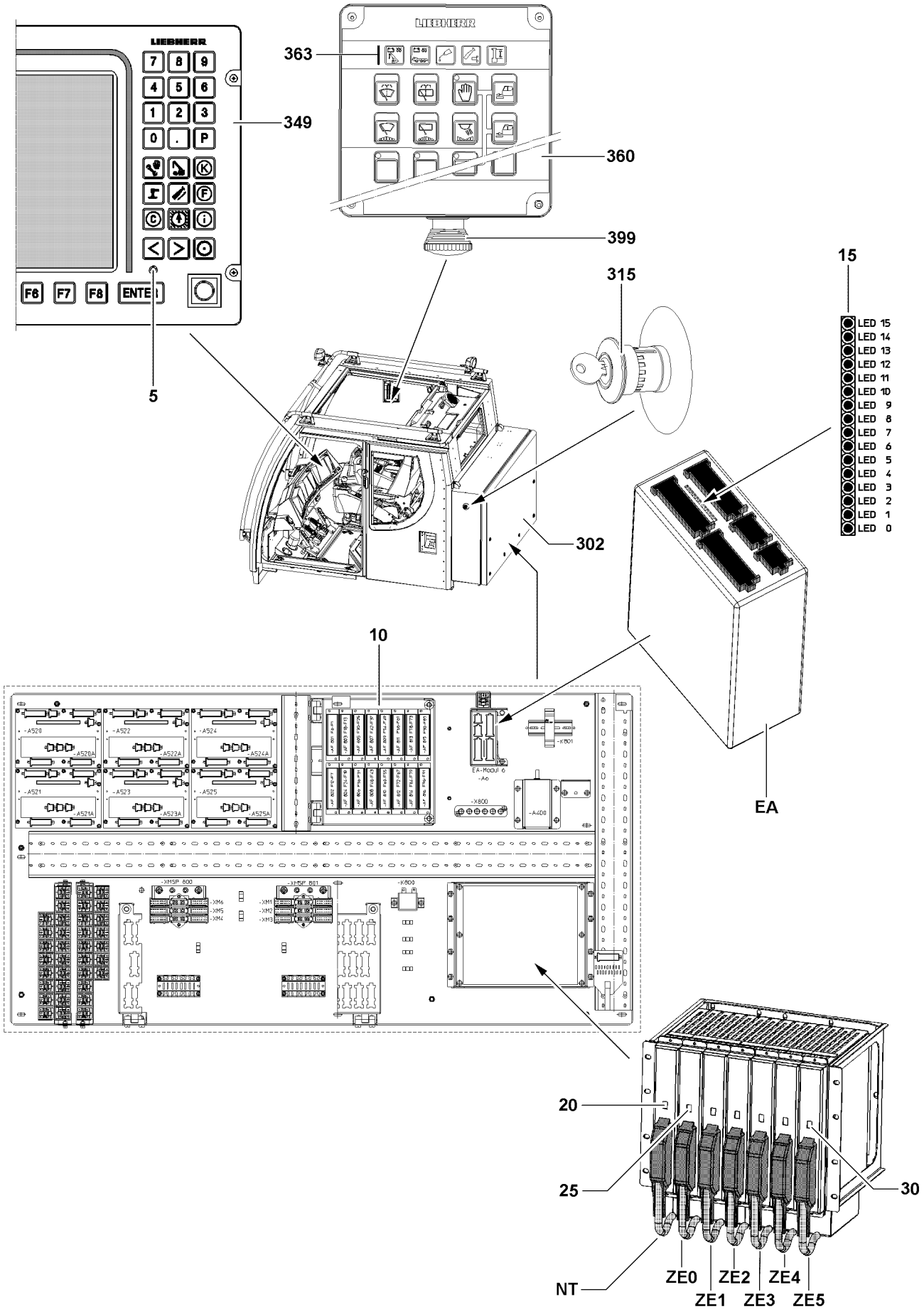

Fig.106378

LWE/LR 1600-2-001/18101-07-02/en

copyright © Liebherr-Werk Ehingen GmbH 2018

4 Measures for defective components

The following components are part of the scope of delivery as spare parts:
- **349** LICCON monitor
- **NT** Power supply
- **ZE** CPU

DANGER
Danger to life if original attachment parts are **not** used!
If the crane is operated with attachment parts, which are **not** original, then the crane can fail and cause fatal accidents!
Crane components can be damaged!
▶ Operate the crane only with original attachment parts!
▶ Crane operation with attachment parts, which do **not** belong to the crane is prohibited!

DANGER
The crane permit and the manufacturer's warranty will become void!
If any original installed parts are modified, manipulated or replaced (e.g. removal of parts, installation of non-original Liebherr parts), both the crane permit and the manufacturer's warranty will become void!
▶ Leave installed original parts unchanged!
▶ Do not remove installed original parts!
▶ Use only Original Liebherr spare parts!

Note
▶ For instructions describing the replacement of a defective LICCON monitor **349**, a defective power supply **NT** or a defective CPU **ZE**, see Diagnostics manual!

Make sure that the following prerequisites are met:
- Error diagnostics has been carried out.
- Defective component has been determined.

4.1 Is the LICCON monitor defective?

▶ Replace the LICCON monitor **349** with a functioning substitute monitor.

4.2 Is the power supply defective?

▶ Replace the power supply **NT** with a functioning power supply.

4.3 Is the CPU defective?

▶ Replace the CPU **ZE** with a functioning spare CPU.

4.4 Is the electrical connection of a cable drum interrupted?

WARNING
Interrupted electrical connection!
If the electrical connection of a cable drum is interrupted, then this causes a shut off (LMB STOP). No further crane movements are possible!
▶ Contact Liebherr Service to determine further procedure!

LWE/LR 1600-2-001/18101-07-02/en

copyright © Liebherr-Werk Ehingen GmbH 2018

LWE/LR 1600-2-001/18101-07-02/en

Fig.197077

copyright © Liebherr-Werk Ehingen GmbH 2018

4.5 Is a sensor or limit switch defective?

Certain crane functions are monitored with two sets of sensors and limit switches.

Note

- ▶ For double version: If only one of the two limit switches or sensor defective, then work can continue with the crane!

- ▶ Replace the defective limit switch or sensor.

Note

- ▶ For single version: If a limit switch or sensor is defective, then this causes a shut off (LMB STOP)!
- ▶ For double version: If both limit switches or sensors are defective, then this causes a shut off (LMB STOP)!

DANGER

Bypassing the overload protection!
If the overload protection is bypassed, there is no further protection against crane overload!
In the event of deliberate improper use, the crane could collapse, the boom can break off or the crane can topple over!
Personnel can be severely injured or killed!
This could result in high property damage!

- ▶ It is only permitted to bypass the overload protection for assembly or in emergencies!
- ▶ The bypass may only be carried out by persons who are aware of the effects of their acts regarding the bypass of the overload protection!
- ▶ Bypassing the overload protection requires the presence of the crane supervisor and must be performed with utmost caution!
- ▶ Missing values must be monitored manually and must match the load chart!
- ▶ Crane operation with bypassed overload protection is prohibited!
- ▶ Contact Liebherr Service to determine the cause of the problem and further procedure!
- ▶ All instructions and data in the Crane operating instructions, chapter 4.04 must be observed and adhered to!

- ▶ Contact Liebherr Service to determine further procedure.

LWE/LR 1600-2-001/18101-07-02/en

copyright © Liebherr-Werk Ehingen GmbH 2018

Empty page!

LWE/LR 1600-2-001/18101-07-02/en

copyright © Liebherr-Werk Ehingen GmbH 2018

8 Inspections of cranes

LWE/LR 1600-2-001/18101-07-02/en

copyright © Liebherr-Werk Ehingen GmbH 2018

LWE/LR 1600-2-001/18101-07-02/en

copyright © Liebherr-Werk Ehingen GmbH 2018

8.01 Periodic crane inspections

1	General information	3
2	Inspection of carrying crane structures, especially steel structures	4
3	Inspection of locking system of telescopic boom	79
4	Inspection of safety ropes and anchor points	81
5	Inspection of load handling equipment and assembly aids	83
6	Inspection of fastening equipment	84
7	Inspection of diaphragm reservoir	84
8	Inspection of relapse cylinders	84
9	Inspection of rope pulleys	85
10	Inspection of carrier rollers	85
11	Inspection of extension conditions of sliding beams	87
12	Inspection of the function of the overload protection	87
13	Inspecting the pin connections	87
14	Inspection of slewing ring connection	87
15	Inspection of the mounting of the load bearing equipment	88
16	Inspection of the tele extension with eccentric, illustration 1	89
17	Inspection of change over pulleys, illustration 2	90
18	Inspection of the oil and fuel tanks	90

LWE/LR 1600-2-001/18101-07-02/en

copyright © Liebherr-Werk Ehingen GmbH 2018

LWE/LR 1600-2-001/18101-07-02/en

Fig.195219

copyright © Liebherr-Werk Ehingen GmbH 2018

1 General information

This crane was tested at the manufacturer's facilities prior to shipment in accordance with the valid ISO, FEM and DIN Standards and DGUV 52 (DGUV 309-001).

The safety level achieved during initial start up may not be attainable during operation.

Examples of the root cause of such deviations include; e.g., wear and tear, corrosion, effects of external forces, changes in the environment and changes to the mode of operation.

The operator is responsible for taking the necessary steps to ensure that the level of safety is maintained.

Periodic inspections are regulated nationally in the BetrSichV.

The crane operator is therefore obligated to have the crane inspected by an **authorized inspector**, at intervals depending on the operational conditions but at least once per year, from the first day of vehicle registration.

Every 4 operating years, in the 13th operating year and thereafter at least annually, from the first day of vehicle registration, the crane must be inspected by an **inspection expert**.

Periodic inspection are principally a visual inspection, where the inspector (either type) appraises the condition of the crane and its components.

WARNING
There is a risk of weakening the supporting components when major changes or repairs are made to the crane!
▶ In this case, the operator must have the crane reinspected by an inspection expert before placing it back into service!

In addition, all respective local and national regulations also apply.

Authorized inspector
Authorized inspectors are those persons who through their professional training, their professional experience and their recent professional activity have the necessary knowledge for the inspection of work equipment.

Authorized inspector for pressure tanks
Authorized inspector for pressure tanks are authorized inspectors who additionally:
- Have relevant technical professional training.
- Have at least one year of experience with the manufacture, assembly, operation or maintenance of the equipment or components to be inspected in accordance with BetrSichV.
- Keep their knowledge about pressure-related hazards up to date by participating in training or instruction, in particular with regard to the following topics:
  - Design and manufacturing processes
  - Equipment and safeguarding concepts
  - Assembly, installation and operation / use
  - Destined use
  - Risk assessment
  - Inspections, inspection periods, inspection procedures including assessment of the results
  - Relevant influences and damage symptoms found in practice

Inspection expert
Inspection experts are authorized inspectors who also:
- Have completed training as an engineer or have equivalent knowledge and experience in the subject area with which their activities are involved.
- Have at least three years of experience in the design, construction, maintenance or inspection of cranes, of which at least half a year were involved in the inspection activities of an inspection expert.
- Possess sufficient knowledge of the relevant regulations and rules.
- Have the necessary facilities for inspection and documentation.
- Keep their professional knowledge up to date.

LWE/LR 1600-2-001/18101-07-02/en

copyright © Liebherr-Werk Ehingen GmbH 2018

To ensure the high safety standard of the crane, it is recommended, no later than the 12th year, in the 20th year, in the 26th year and then every 4 years, to have the crane undergo a **general inspection** by an **inspection expert**. At that time, in addition to the usual scope of inspection, all load carrying parts of the crane - the complete steel structure with all welding seams as well as all components and connecting devices - are to be subjected to a complete visual inspection. The following procedural notes for repeat inspections are to be observed for that.

The purpose of the inspections is to avoid accidents by detecting deficiencies early on. Any deficiencies found by the inspector must be documented, corrected and subsequently reinspected.

A number of important examples of items that are particularly important during the periodic crane inspections are listed in the following. We wish to advise that the **authorized inspectors** or **inspection experts** take sole responsibility for the crane inspections that they carry out.

Note

▶ The inspection may not be solely limited to the following positions shown in the sample construction illustrations. Rather the **entire** crane structure must be subjected to a careful inspection!

In the Crane operating instructions, chapter 8.90 is a checklist to assist the inspector during the periodic inspections of Liebherr mobile and crawler cranes.

If the inspector has any questions they should be directed through the Service Department of Liebherr-Werk Ehingen GmbH to the technical departments.

WARNING

Danger of accident!

▶ Adhere to the following inspection guidelines and intervals.

2 Inspection of carrying crane structures, especially steel structures

2.1 Basic principles and procedure

DANGER

Danger of fatal injury!

The crane structures, particularly steel constructions, have to be checked by an **authorized inspector** or **inspection expert** at least once a year. If this is not the case, they could fail and cause fatal injury or seriously damage the crane!

▶ Crane structures, particularly steel constructions must be checked by an **authorized inspector** or an **inspection expert** at least once a year!

▶ Shorten the inspection intervals when the crane is subjected to above-average load spectrums, for example when handling large material quantities or frequently erecting long boom systems.

▶ When the crane was subjected to excessive operating loads; e.g., due to an unusual impact, the crane structure, especially the steel structures must be inspected immediately!

Crane structures, especially steel structures, such as booms, turntables, chassis, support equipment (e.g., sliding beams or folding outriggers) must be carefully inspected, at the very least during the annual recommended crane inspections. Inspect welding seams especially through an intensive visual inspection.

If paint damage with corrosion (rust) is found on load carrying parts of the crane structure, especially on telescopic booms, lattice booms, lattice jibs, pull rods etc., then the rust must be removed, primed and painted.

During an electrolyte process, such as corrosion in combination with water, an atomic hydrogen is created, which causes to hydrogen induced corrosion with resulting cracks on high tensile fine grain construction steel.

LWE/LR 1600-2-001/18101-07-02/en

copyright © Liebherr-Werk Ehingen GmbH 2018

If disassembly and assembly work on the crane is required to carry out the inspections, then they must be carried out by taking the manufacturer's data into account or in coordination with the crane manufacturer.

We would like to point out that the framework of mobile cranes is designed for a limited number of stress work cycles. This also determines the utilization or service life of the framework. The service life is not determined solely by the number of stress cycles. It also depends on the loads (load spectrum) applied during the time in operation.

Liebherr mobile and crawler cranes are designed for specific characteristics and movements, such as constant deployment of drive forces, only occasional operation and load conditions according to EN 13000.

Liebherr mobile and crawler cranes are designed for assembly operation and, according to grouping in class A1 according to ISO 4301-1, they can only take on a limited number of work cycles (N = 63000) with a collective class Q1 = light (kp = 0.125).

Example of a load collective according to grouping in collective class Q_1 = light (k_p = 0.125).

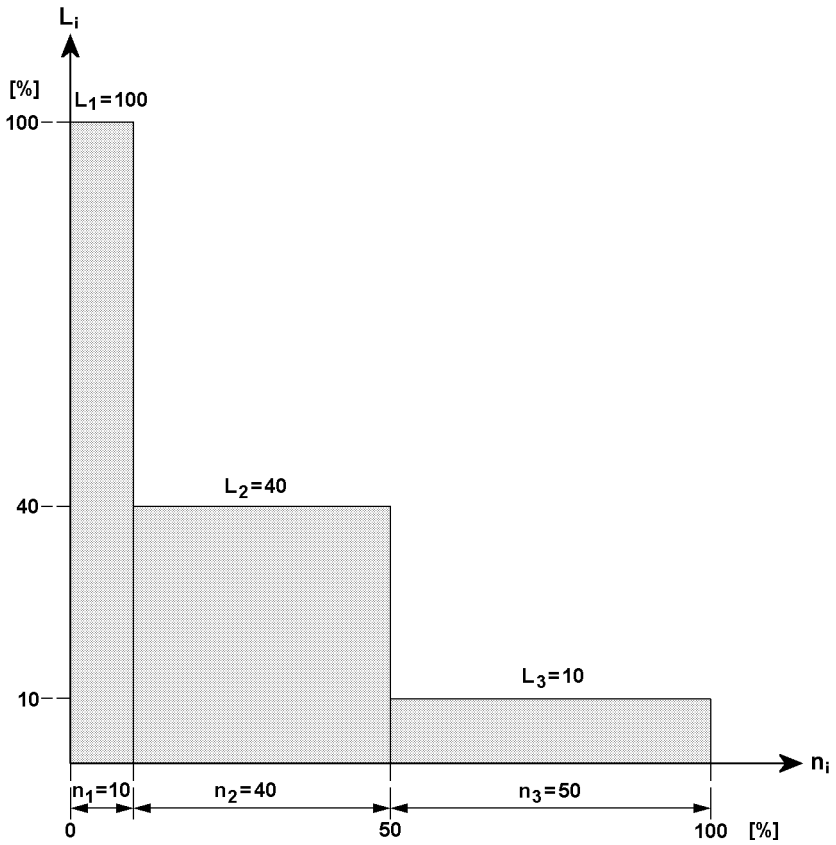

Fig.104716

L_i: Load proportion in relation to maximum load [%]

n_i: Load cycles in relation to maximum number [%]

Note

- The service life of Liebherr mobile and crawler cranes can be drastically reduced, for example when used in magnet, grapple or material handling applications!
- Repeated inspection of crane structure, especially the steel structure and the welding seams must then be carried out in shorter intervals than specified.

For that reason, the steel structures and the welding joints must be subjected to a visual intensive inspection by the **authorized inspector** or **inspection expert** during the specified periodic inspections.

If any damage (such as cracks or suspicion of cracks) are apparent on any part of the steel structure, the total extent of the damage must be determined by qualified specialists using appropriate material

LWE/LR 1600-2-001/18101-07-02/en

copyright © Liebherr-Werk Ehingen GmbH 2018

testing methods, such as magnetic crack detection, ultrasound or x-rays. Thereafter, the qualified personnel must determine whether or not the damaged area can be repaired by welding or by other means.

The following diagrams are samples of the load-bearing welding structures. The welding joints or seams or steel structural zones that require inspection may be present more than once and in various forms. The joints or zones must be inspected all around at the locations identified by arrows.

Note

- ▶ The scope and extent of all inspections remain the sole responsibility of the inspectors!
- ▶ The scope and results of tests should be documented to permit reproducibility. This documentation forms part of the crane records and should be safely stored during the entire service life of the crane!
- ▶ The following diagrams are provided to assist the inspector. The illustrations are only examples and are not necessarily 100 % complete!

2.2 Repair welding

Defects such as cracks or permanent deformation on load-bearing steel components must be immediately reported to the Service Department at **Liebherr-Werk Ehingen GmbH**.

The defect must immediately be appraised by an inspection expert according to standard welding technology rules. The inspection expert must immediately ascertain if the crane can continue to be safely operated due to danger of accident until a repair welding is performed.

Repair welding may solely be made in consultation and under the instructions of the Customer Service at **Liebherr-Werk Ehingen GmbH** by authorized and trained expert personnel.

WARNING

Repair welding **not** according to regulations!
Death, severe bodily injuries, property damage.

- ▶ Contact Customer Service at **Liebherr-Werk Ehingen GmbH**.
- ▶ Coordinate the procedure for repair welding with **Liebherr-Werk Ehingen GmbH**.

Note

Exclusion of liability!
For repair welding, which were not carried out by personnel from **Liebherr-Werk Ehingen GmbH** or by authorized personnel from **Liebherr-Werk Ehingen GmbH**, **Liebherr-Werk Ehingen GmbH** excludes any liability, for system functionality as well as for the parts.

- ▶ Have repair welding made solely by personnel of **Liebherr-Werk Ehingen GmbH** or by personnel authorized by **Liebherr-Werk Ehingen GmbH**.

LWE/LR 1600-2-001/18101-07-02/en

copyright © Liebherr-Werk Ehingen GmbH 2018

2.3 Example for test points

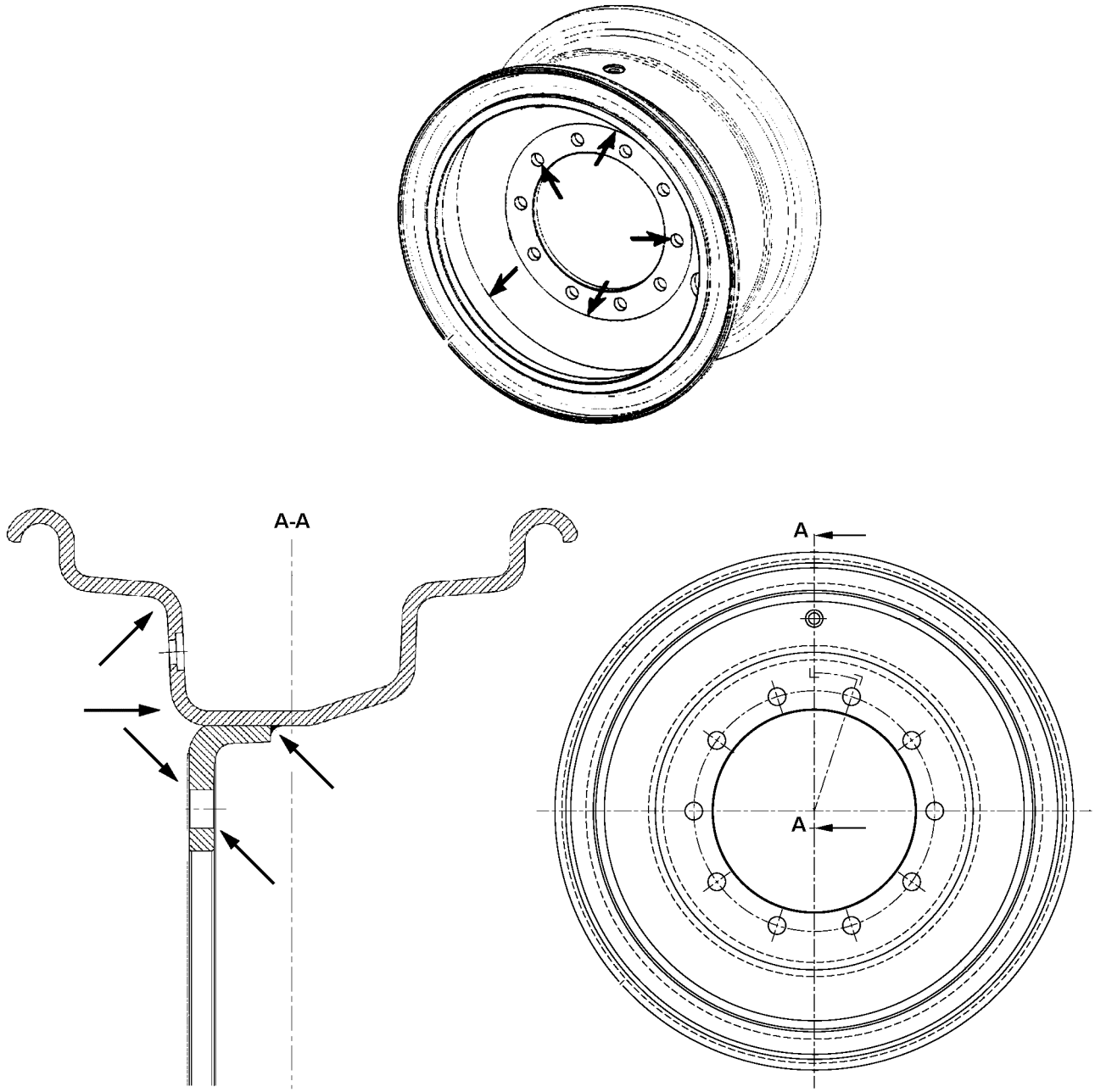

Fig.118052: Example for 1-part disk wheel

LWE/LR 1600-2-001/18101-07-02/en

copyright © Liebherr-Werk Ehingen GmbH 2018

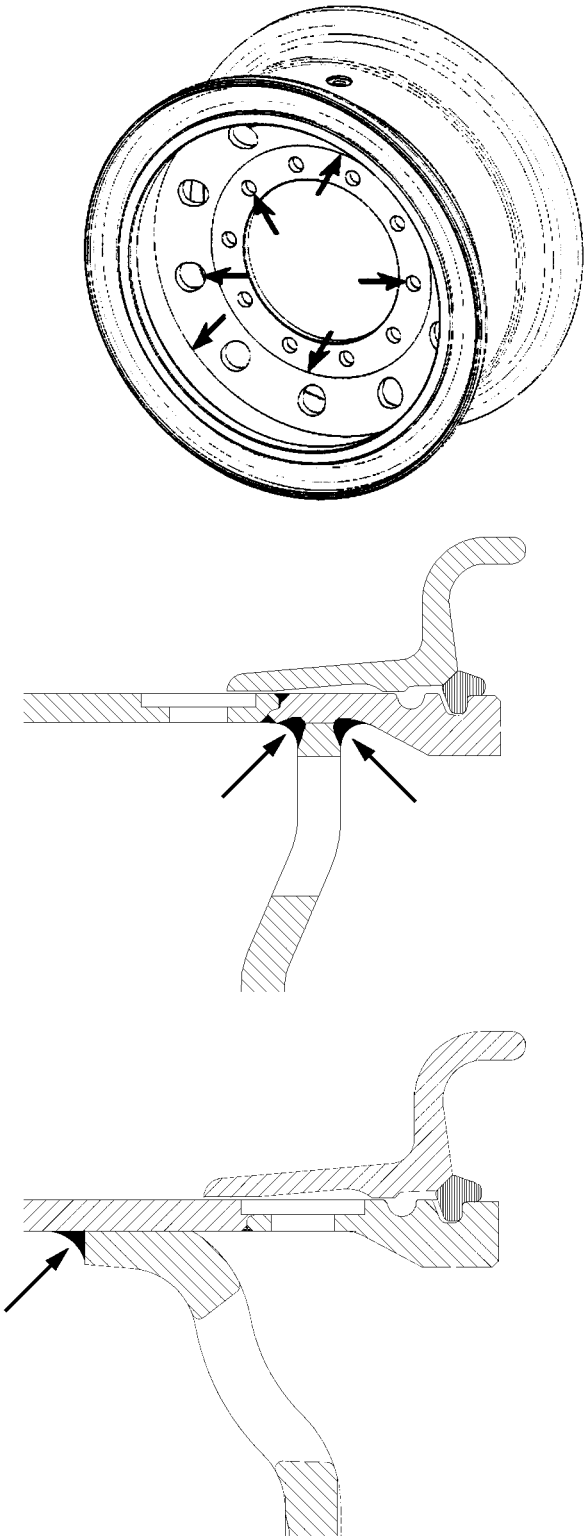

Fig.118053: Example for 3-part disk wheel

LWE/LR 1600-2-001/18101-07-02/en

copyright © Liebherr-Werk Ehingen GmbH 2018

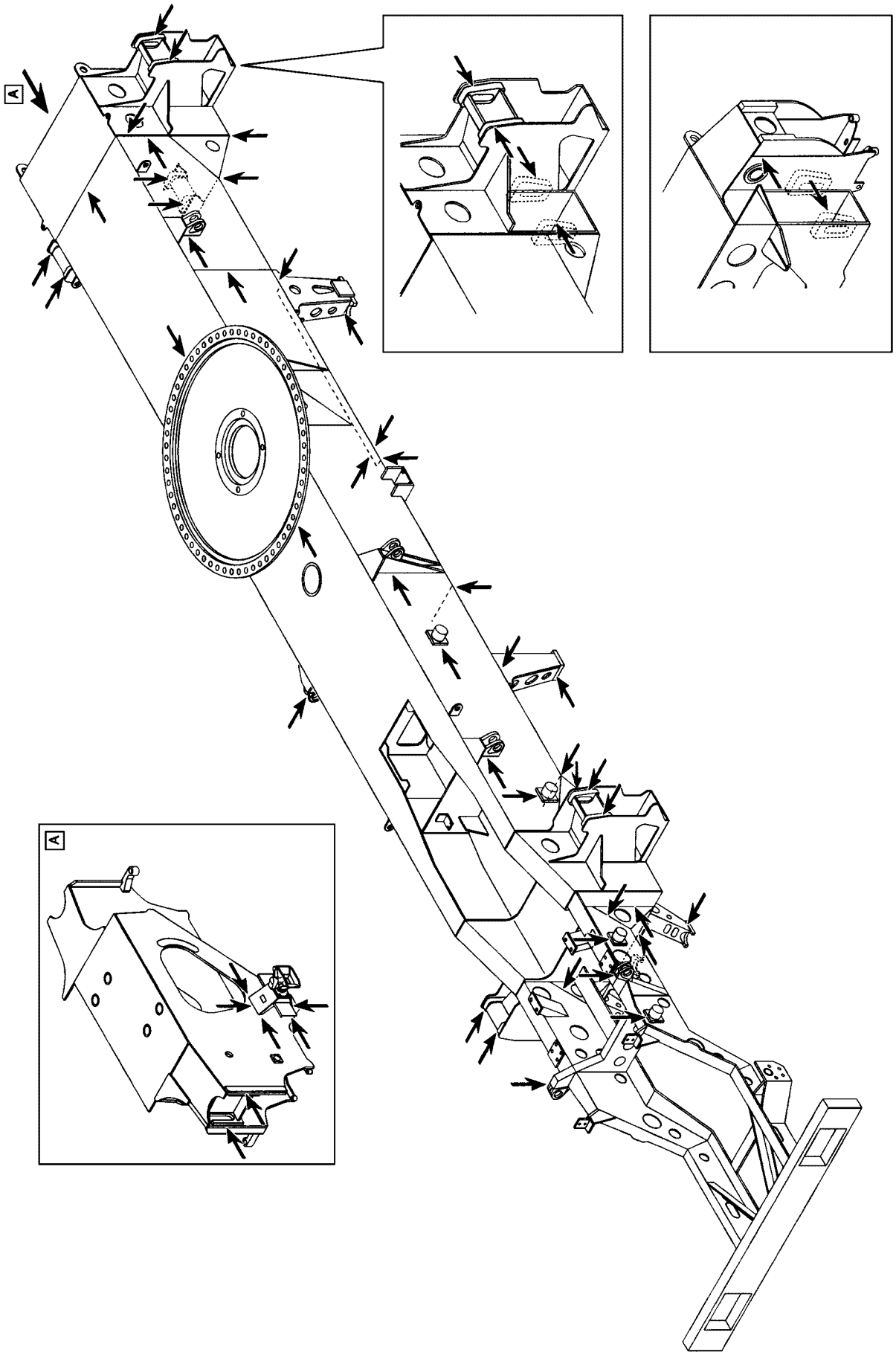

LWE/LR 1600-2-001/18101-07-02/en

Fig.185046: Example for vehicle frames

copyright © Liebherr-Werk Ehingen GmbH 2018

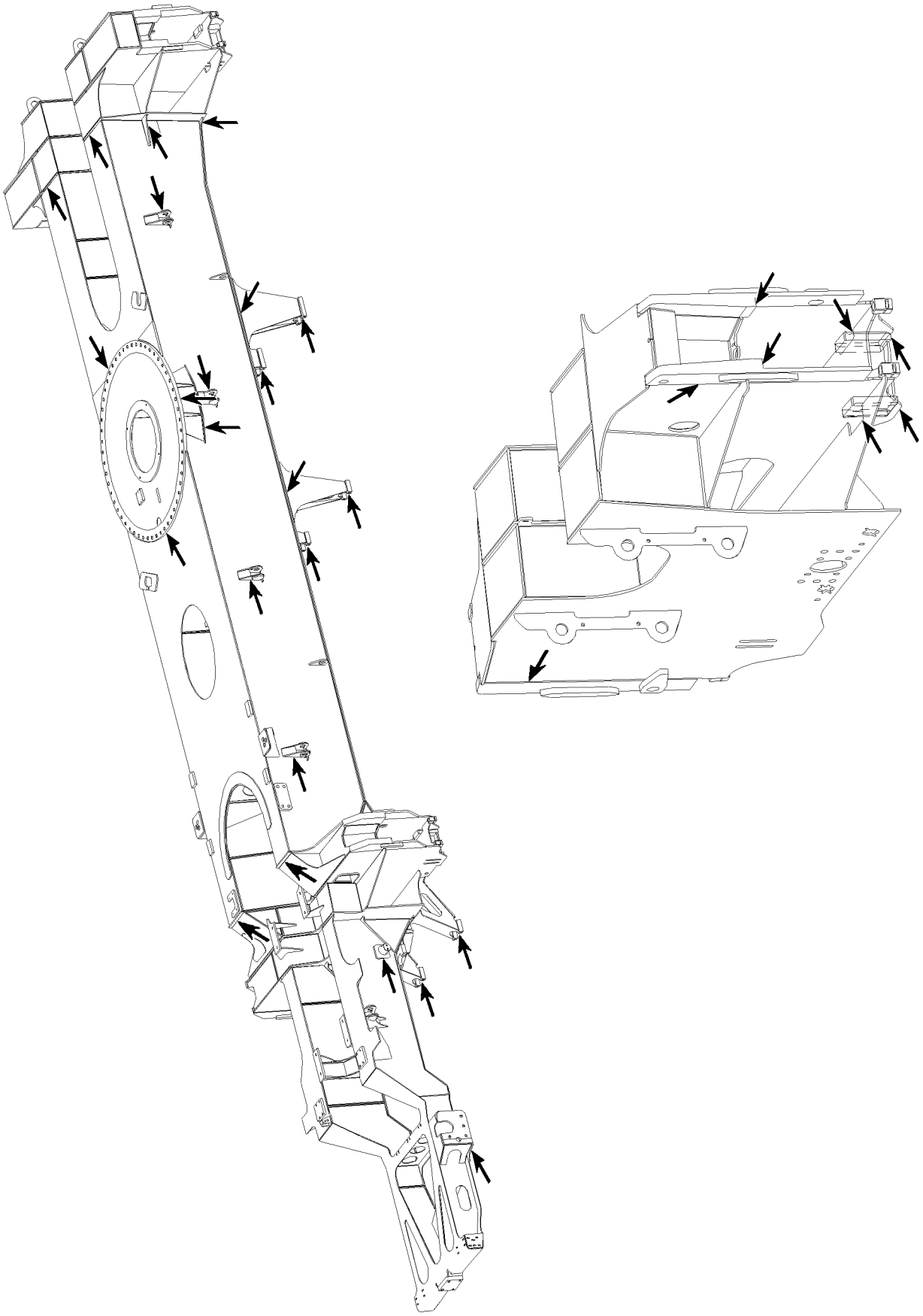

Fig.105702: Example for vehicle frames

LWE/LR 1600-2-001/18101-07-02/en

copyright © Liebherr-Werk Ehingen GmbH 2018

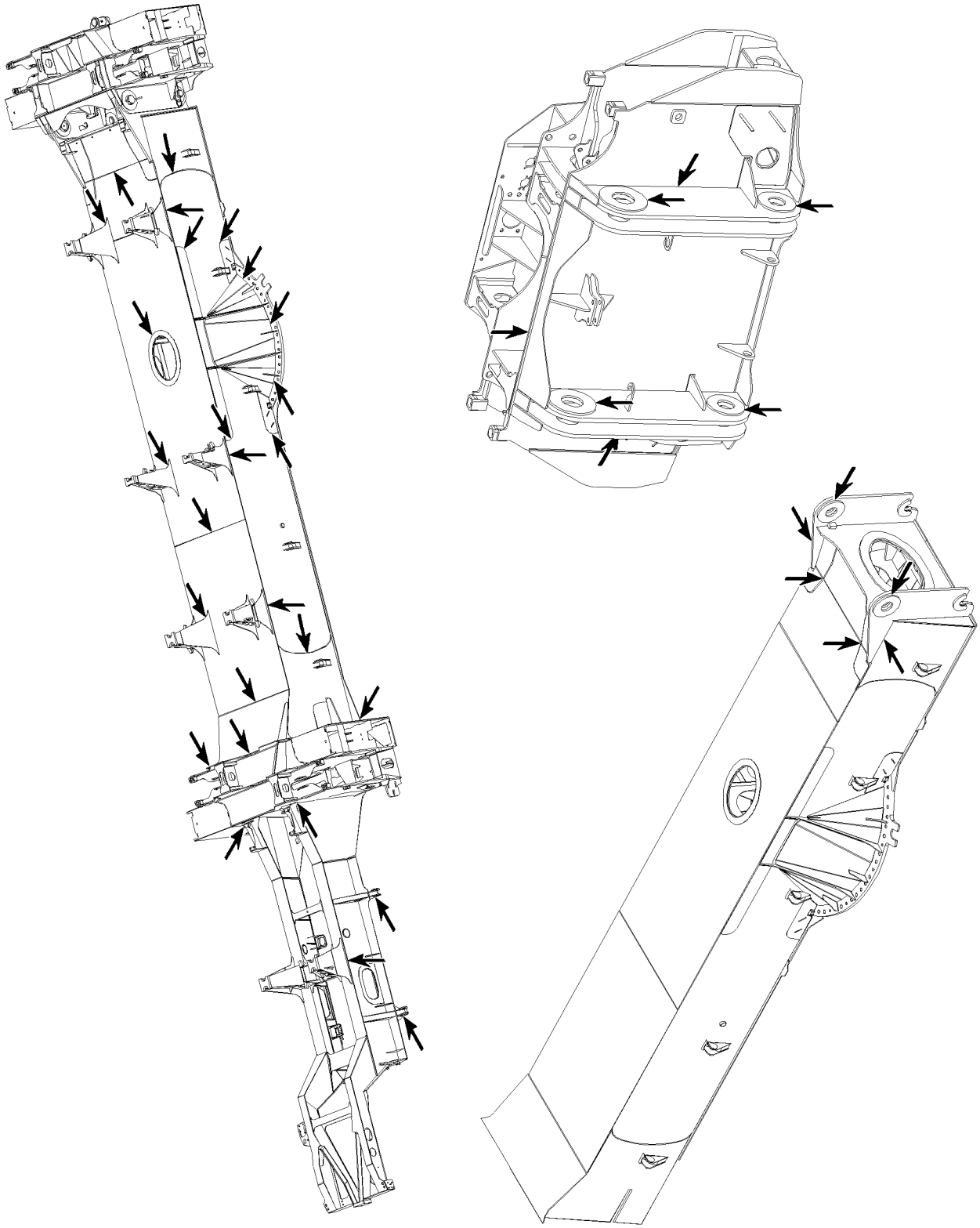

LWE/LR 1600-2-001/18101-07-02/en

Fig.105719: Example for vehicle frames

copyright © Liebherr-Werk Ehingen GmbH 2018

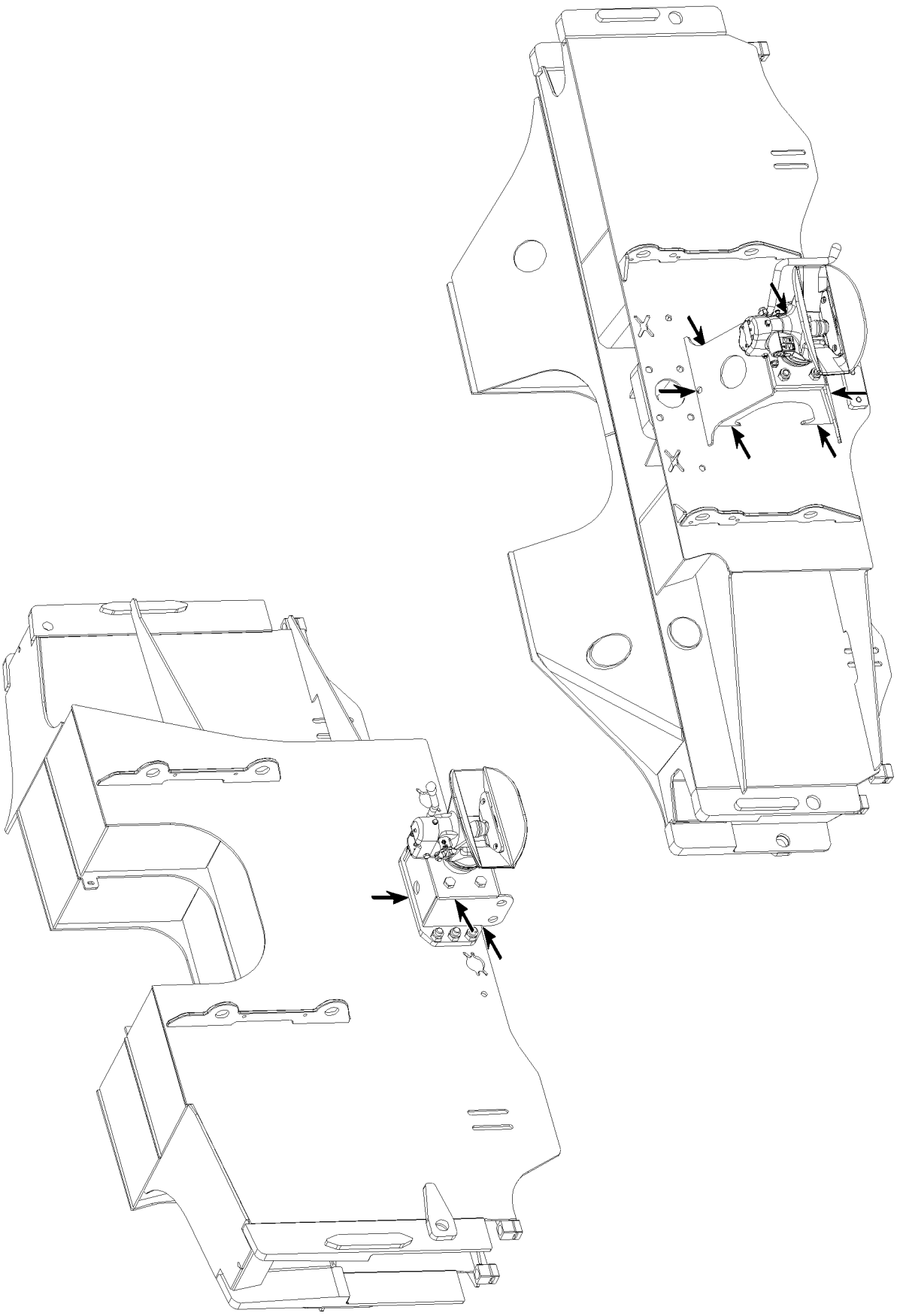

Fig.105687: Example for tow coupling

LWE/LR 1600-2-001/18101-07-02/en

copyright © Liebherr-Werk Ehingen GmbH 2018

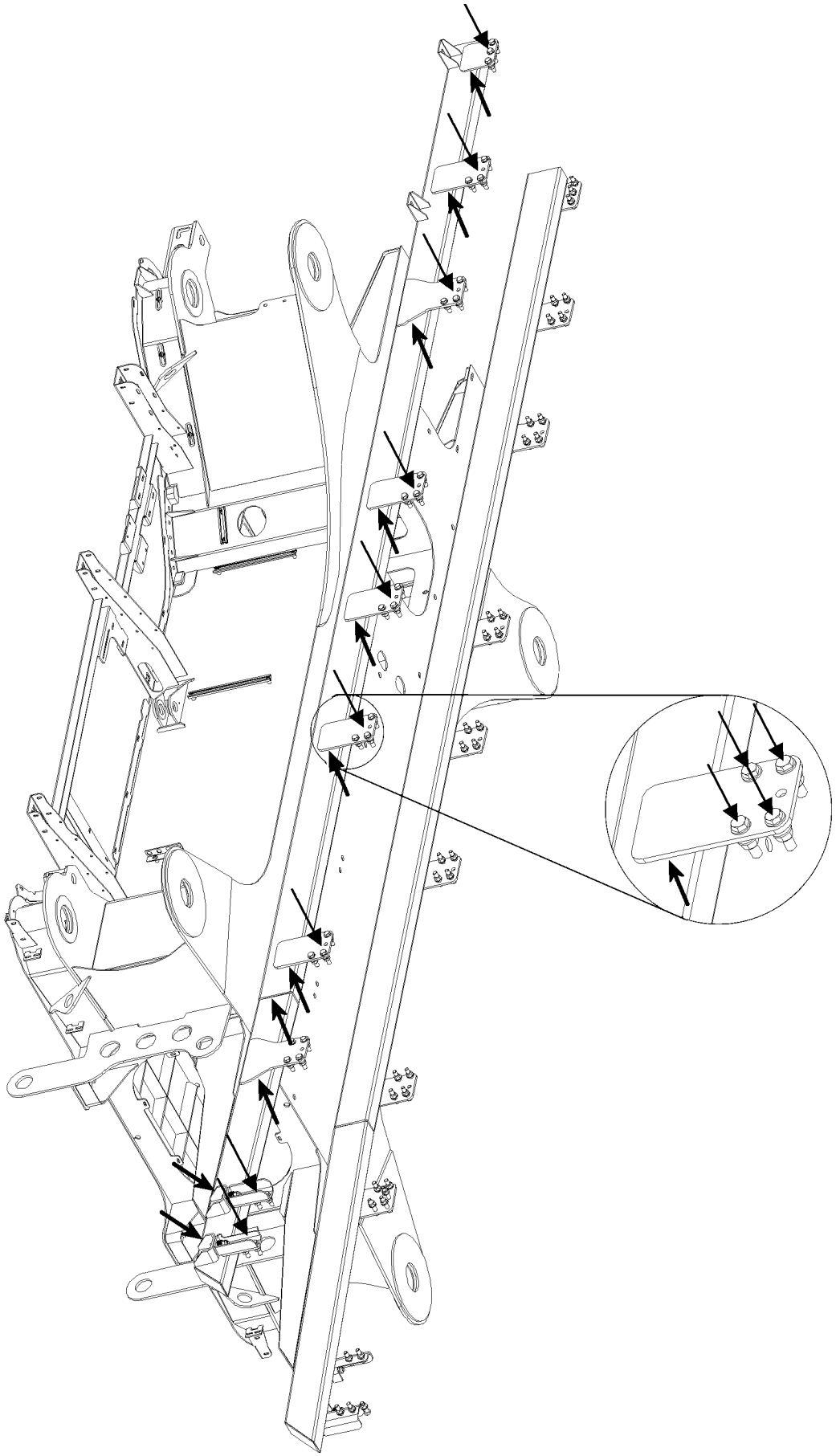

Fig.113940: Example for intermediate frame

LWE/LR 1600-2-001/18101-07-02/en

copyright © Liebherr-Werk Ehingen GmbH 2018

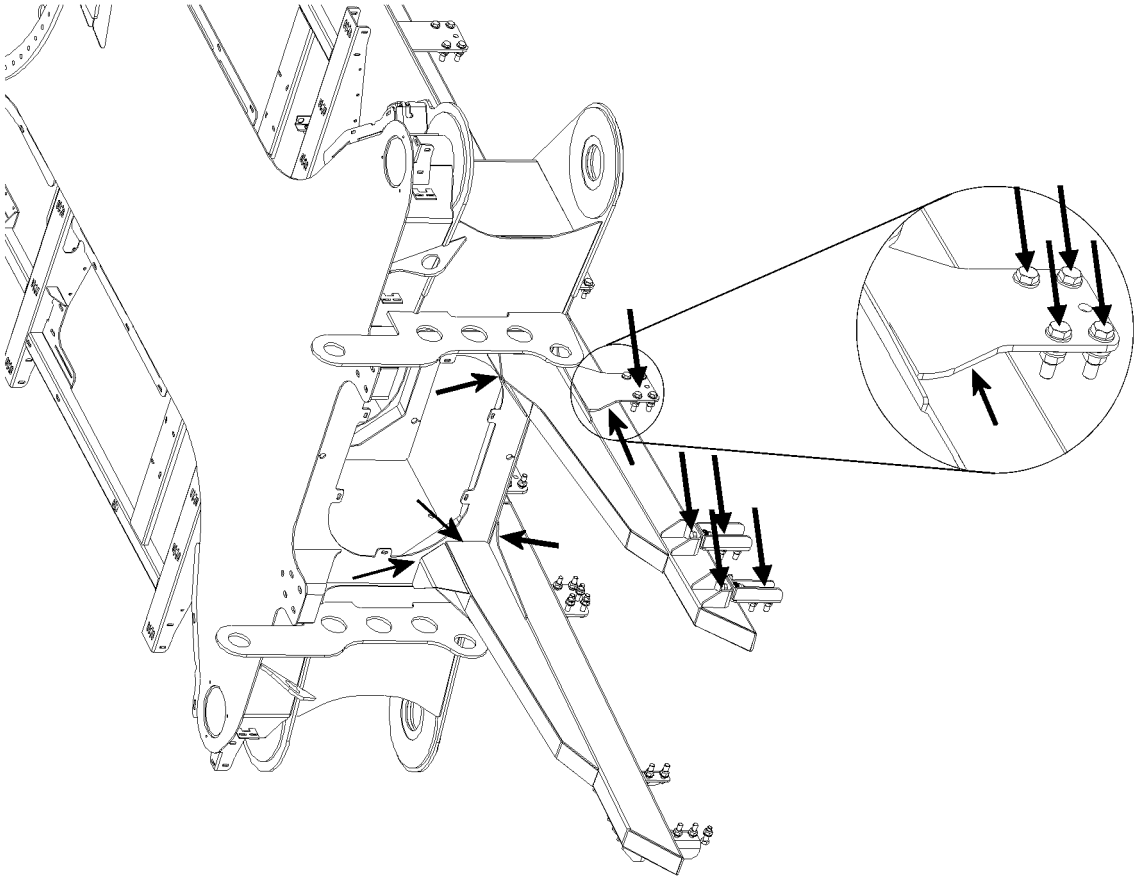

Fig.114000: Example for intermediate frame

LWE/LR 1600-2-001/18101-07-02/en

copyright © Liebherr-Werk Ehingen GmbH 2018

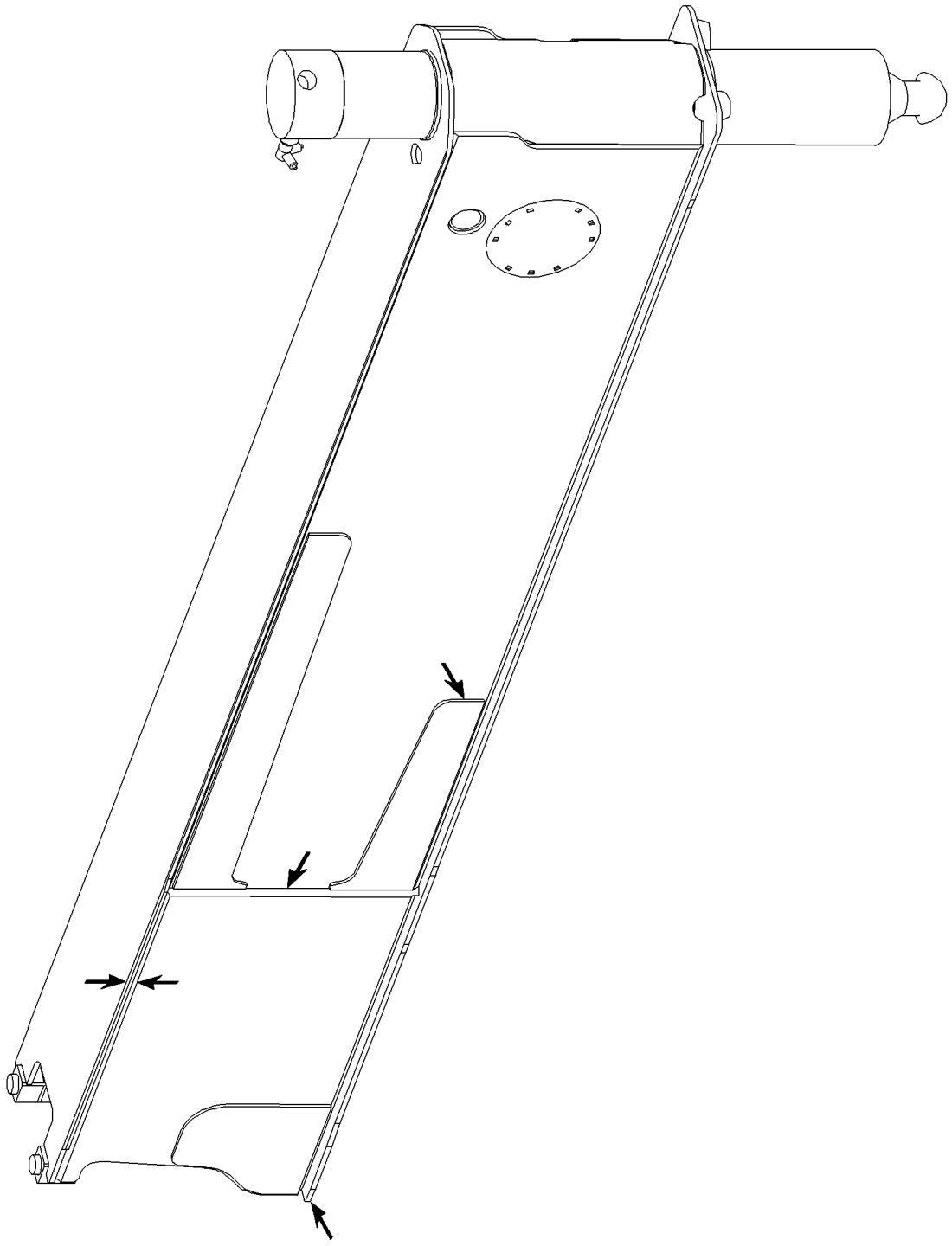

LWE/LR 1600-2-001/18101-07-02/en

Fig.105698: Example for sliding beam

copyright © Liebherr-Werk Ehingen GmbH 2018

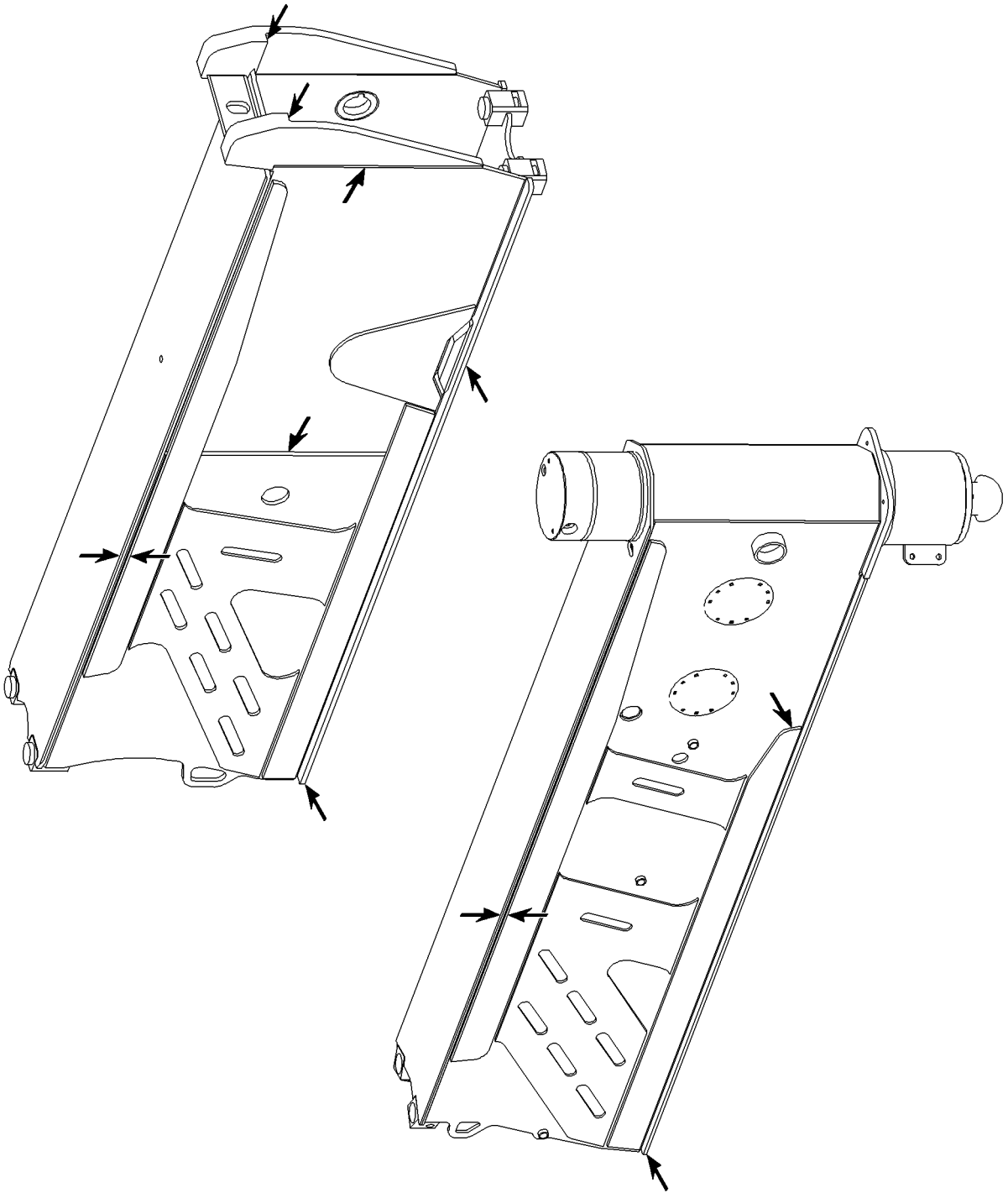

LWE/LR 1600-2-001/18101-07-02/en

Fig.105717: Example for sliding beam

copyright © Liebherr-Werk Ehingen GmbH 2018

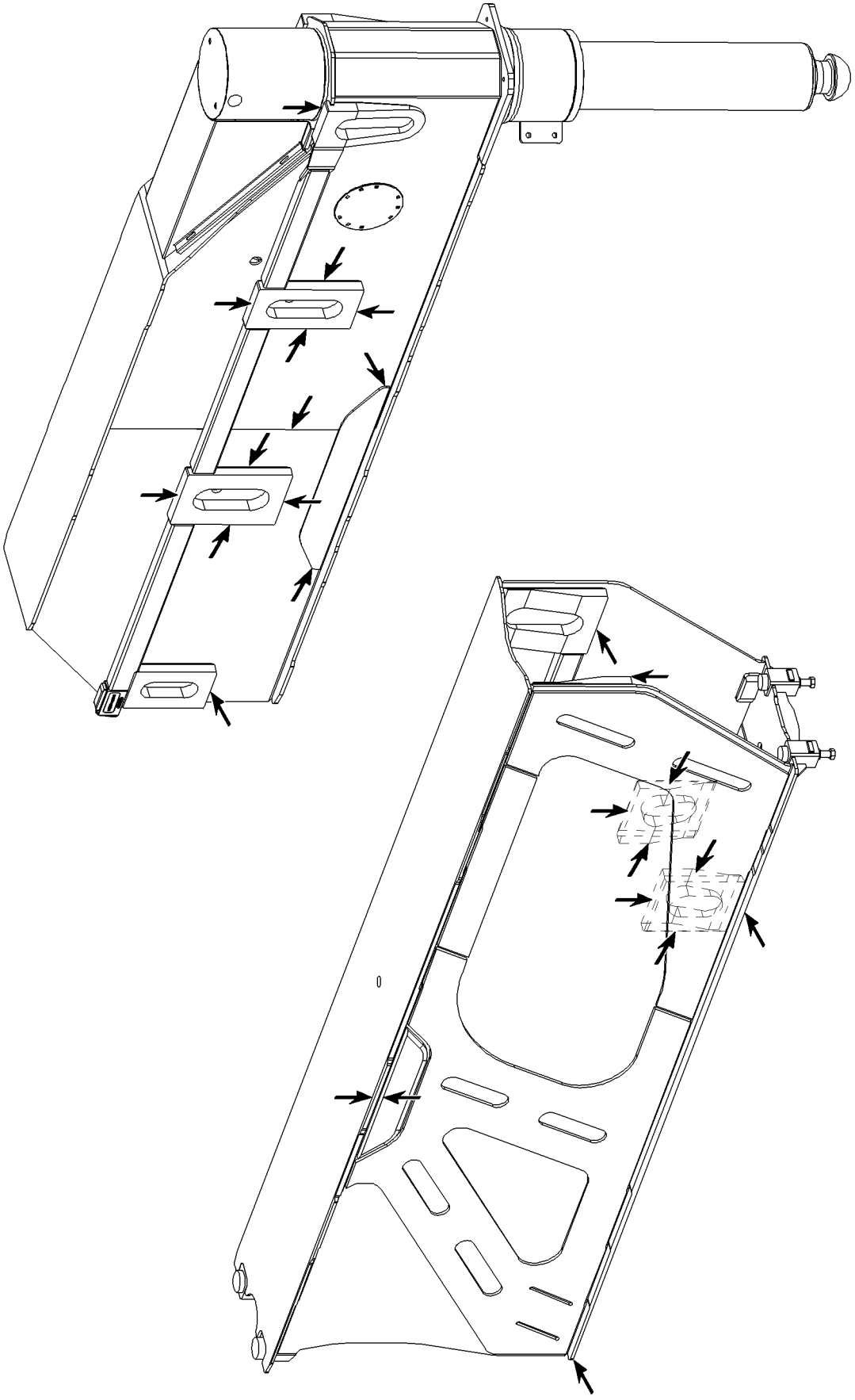

Fig.105718: Example for sliding beam

LWE/LR 1600-2-001/18101-07-02/en

copyright © Liebherr-Werk Ehingen GmbH 2018

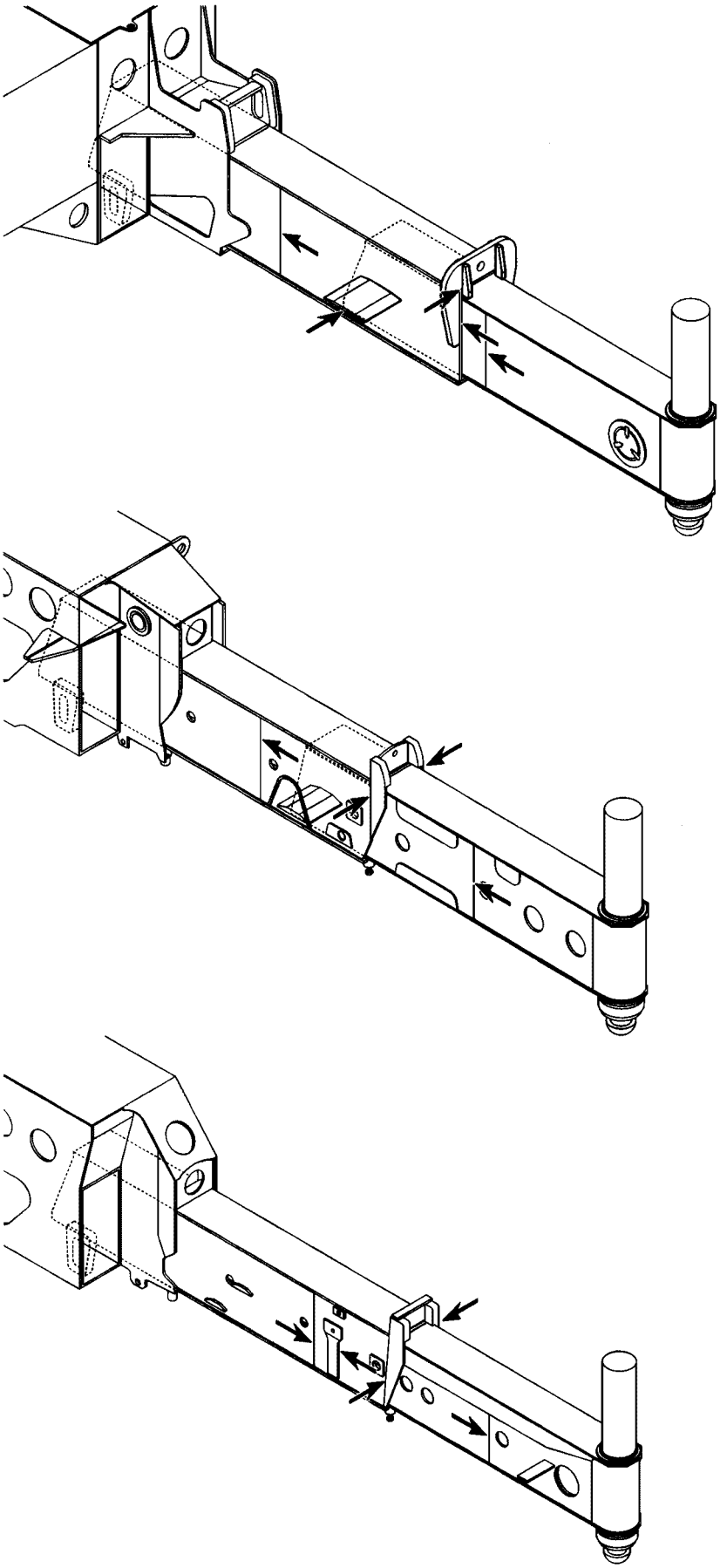

Fig.185047: Example for sliding beam

LWE/LR 1600-2-001/18101-07-02/en

copyright © Liebherr-Werk Ehingen GmbH 2018

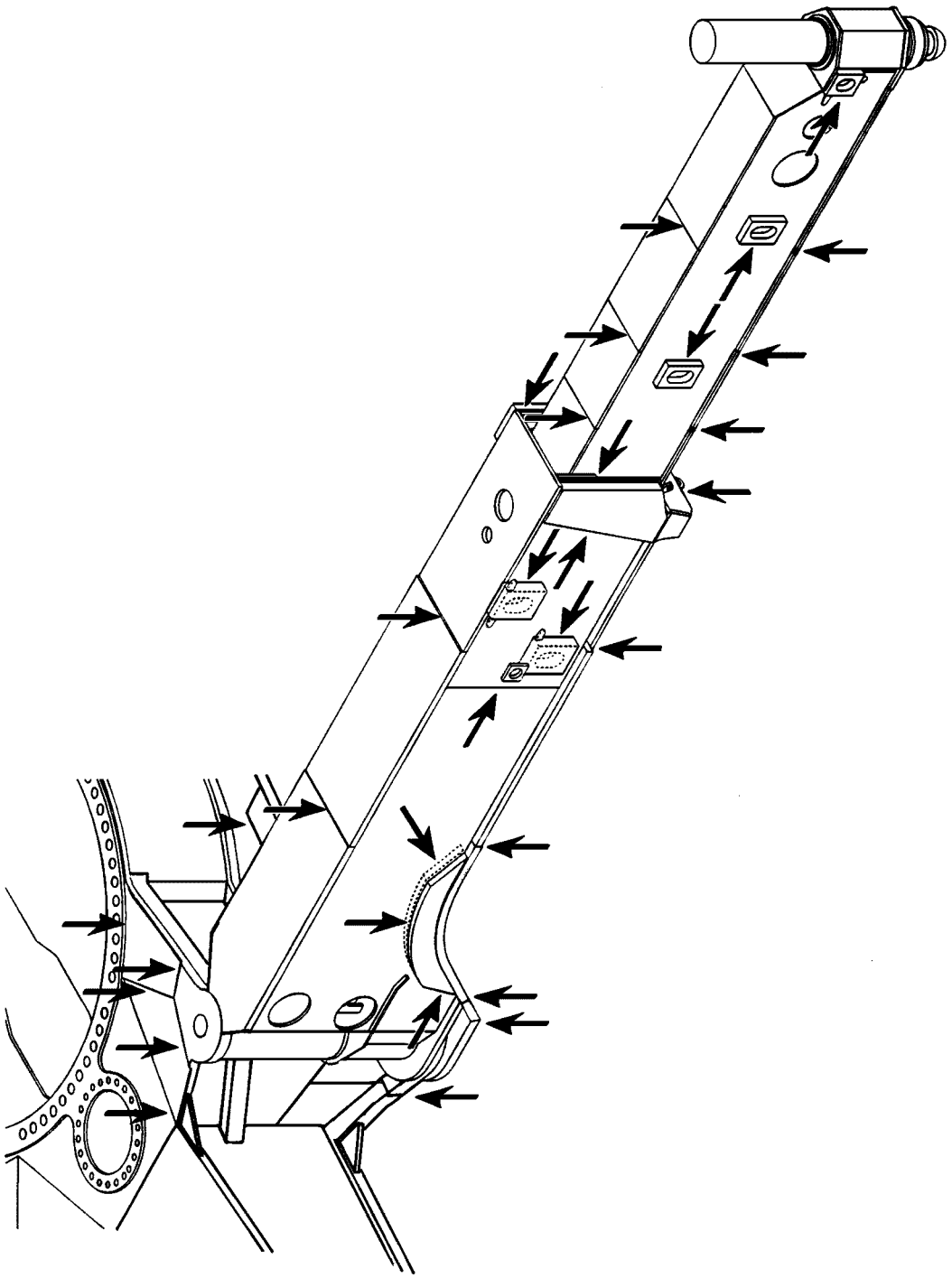

LWE/LR 1600-2-001/18101-07-02/en

Fig.185060: Example for swingable sliding beam

copyright © Liebherr-Werk Ehingen GmbH 2018

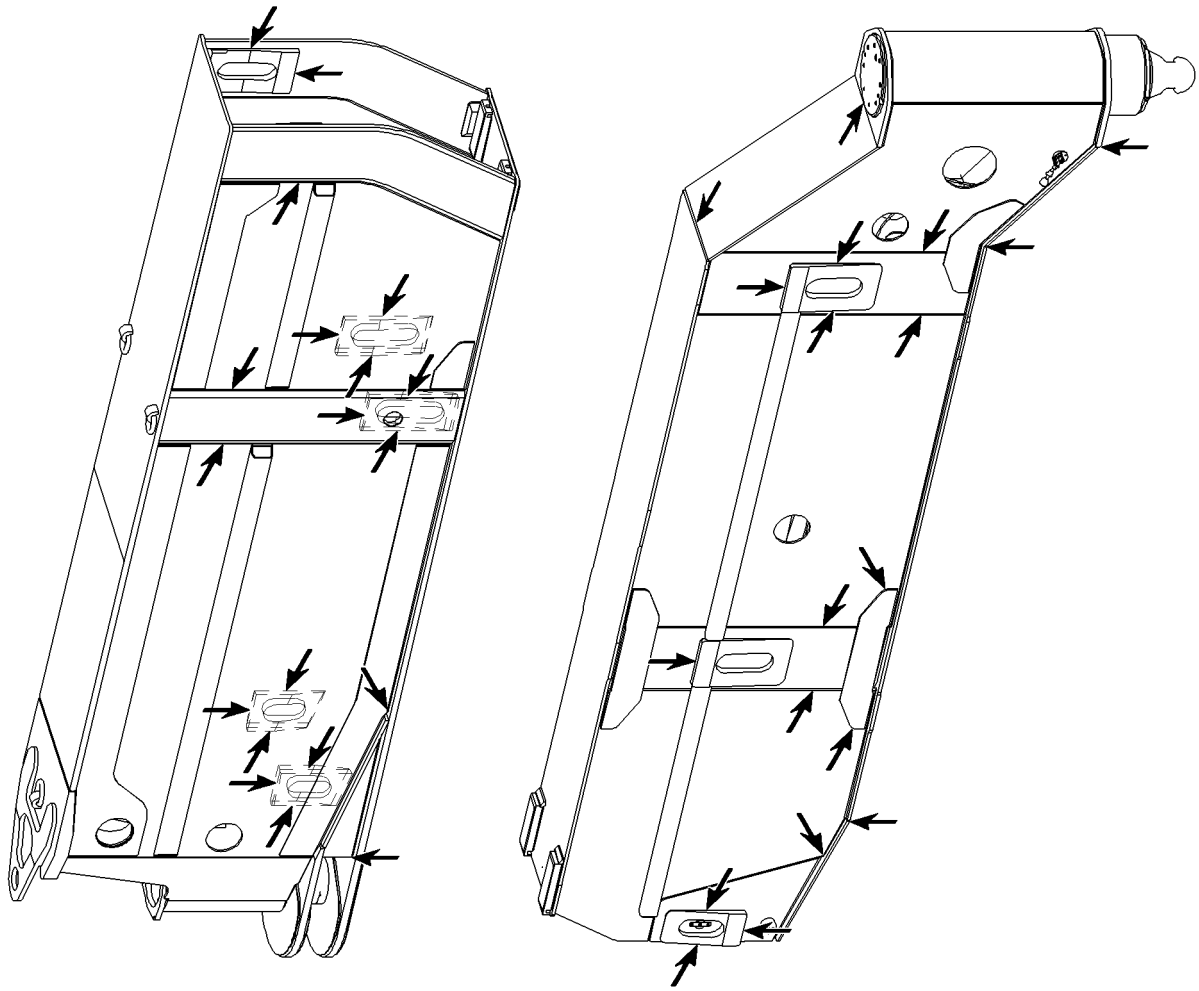

Fig.105690: Example for swingable sliding beam

LWE/LR 1600-2-001/18101-07-02/en

copyright © Liebherr-Werk Ehingen GmbH 2018

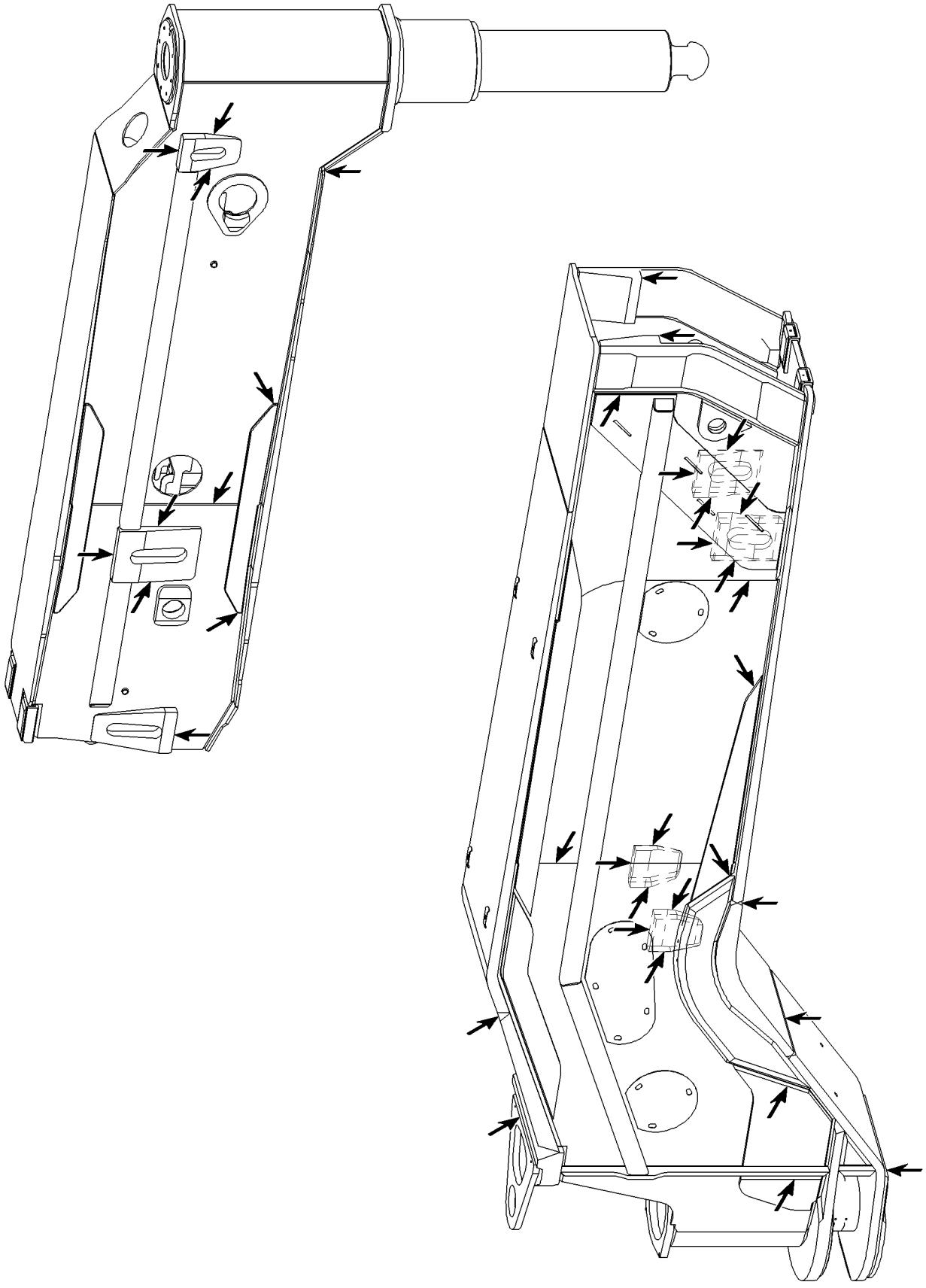

Fig.105704: Example for swingable sliding beam

LWE/LR 1600-2-001/18101-07-02/en

copyright © Liebherr-Werk Ehingen GmbH 2018

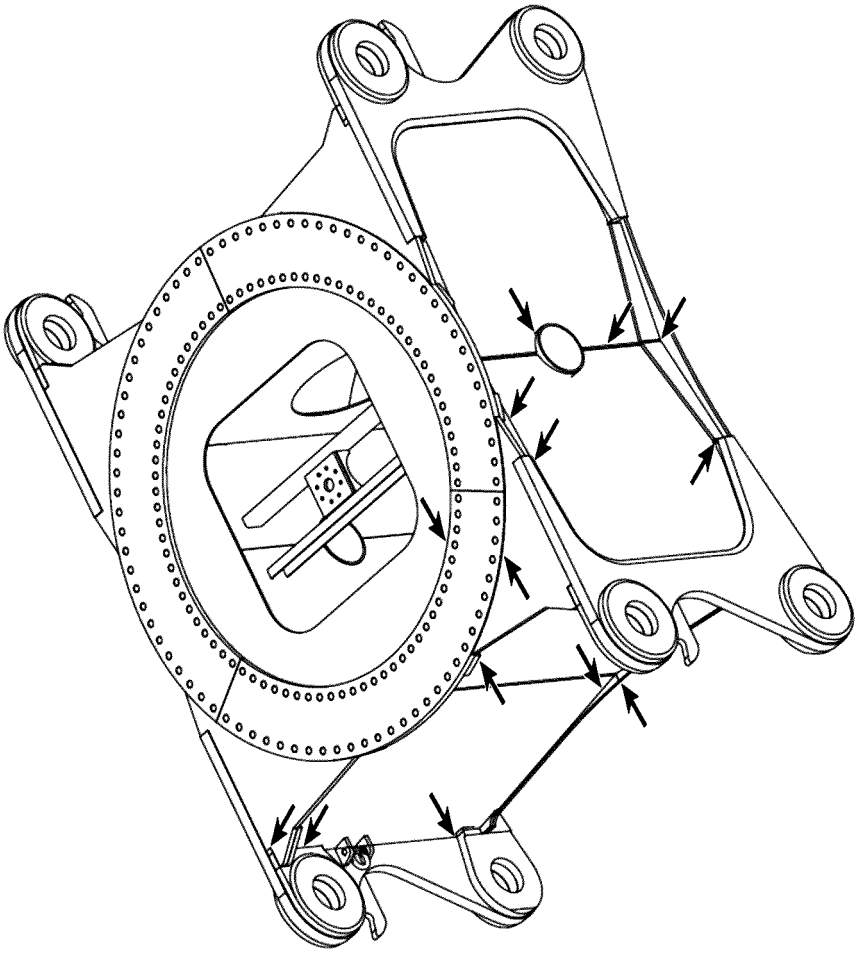

LWE/LR 1600-2-001/18101-07-02/en

Fig.105725: Example for crawler center section

copyright © Liebherr-Werk Ehingen GmbH 2018

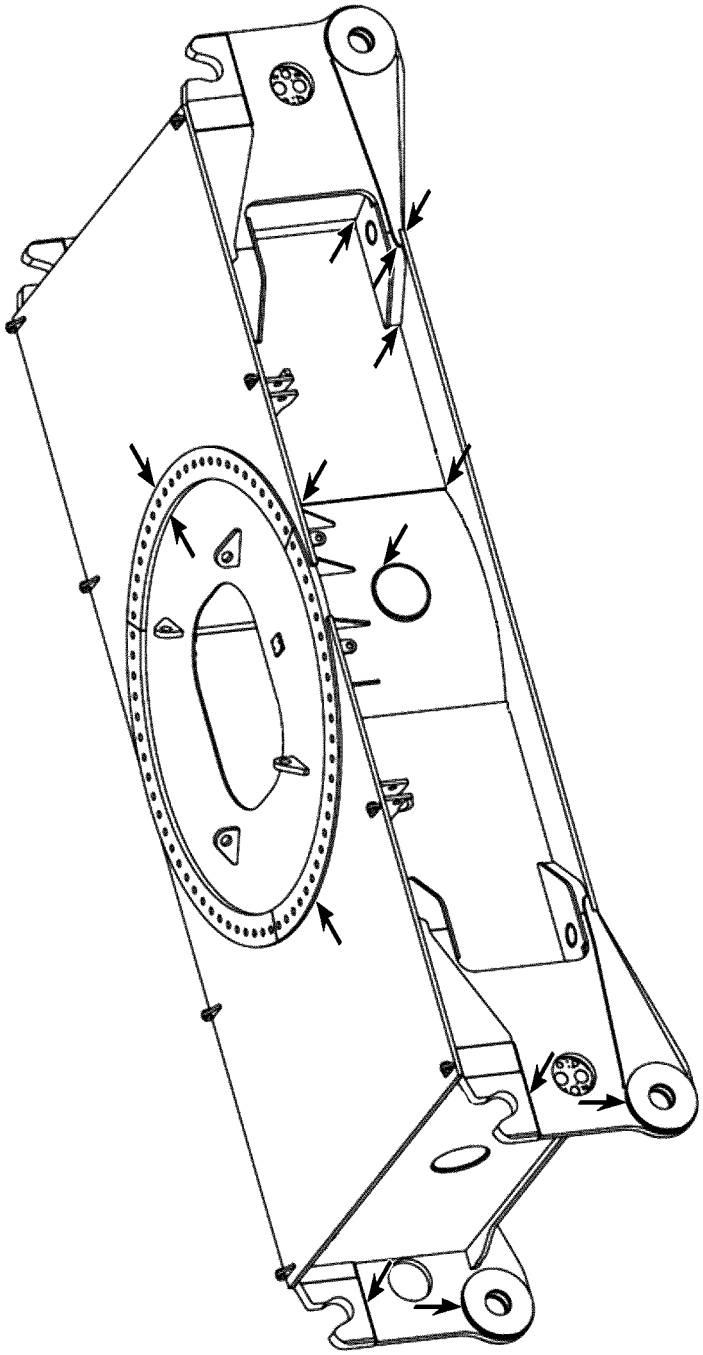

Fig.105726: Example for crawler center section

LWE/LR 1600-2-001/18101-07-02/en

copyright © Liebherr-Werk Ehingen GmbH 2018

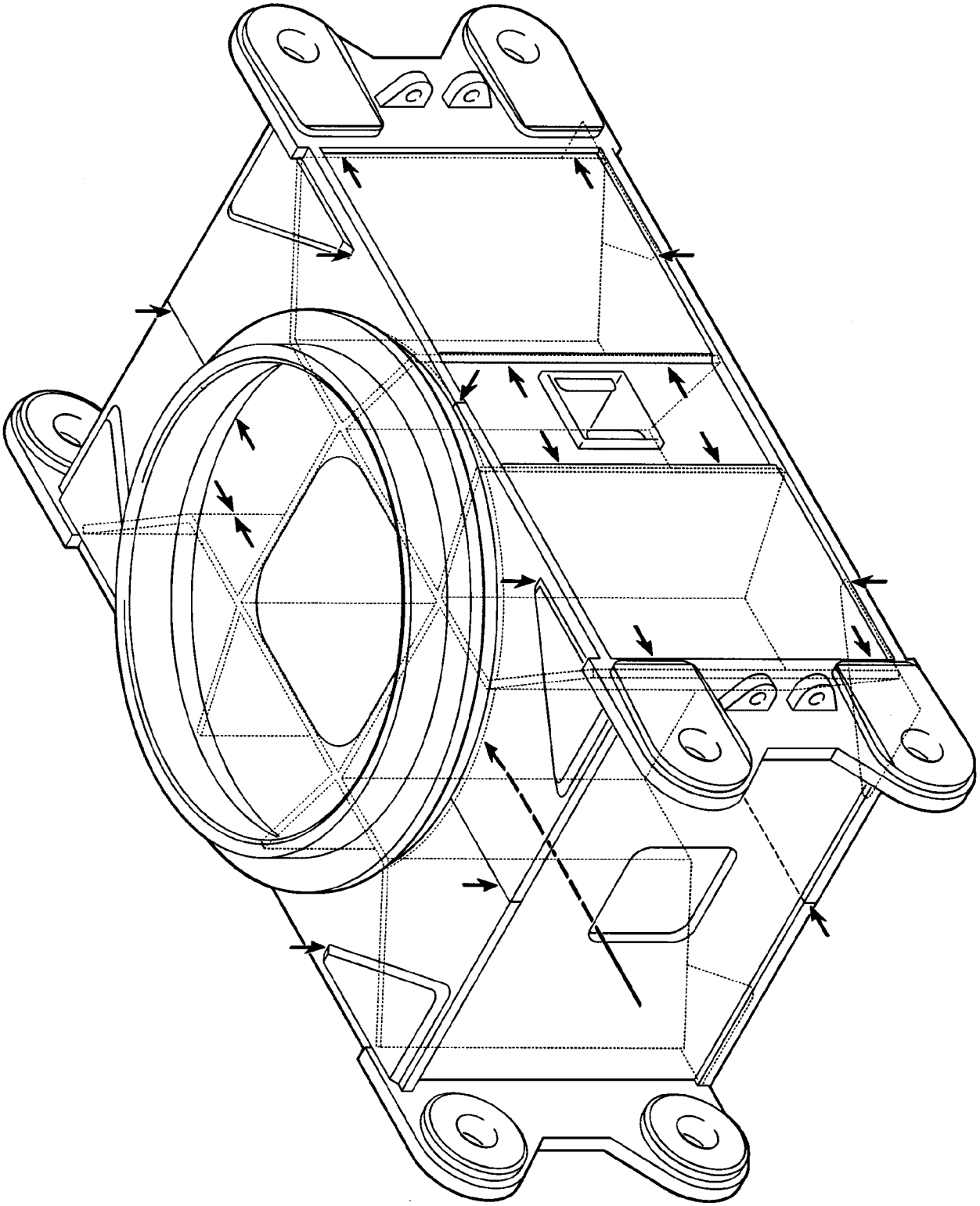

LWE/LR 1600-2-001/18101-07-02/en

Fig.187347: Example for crawler center section

copyright © Liebherr-Werk Ehingen GmbH 2018

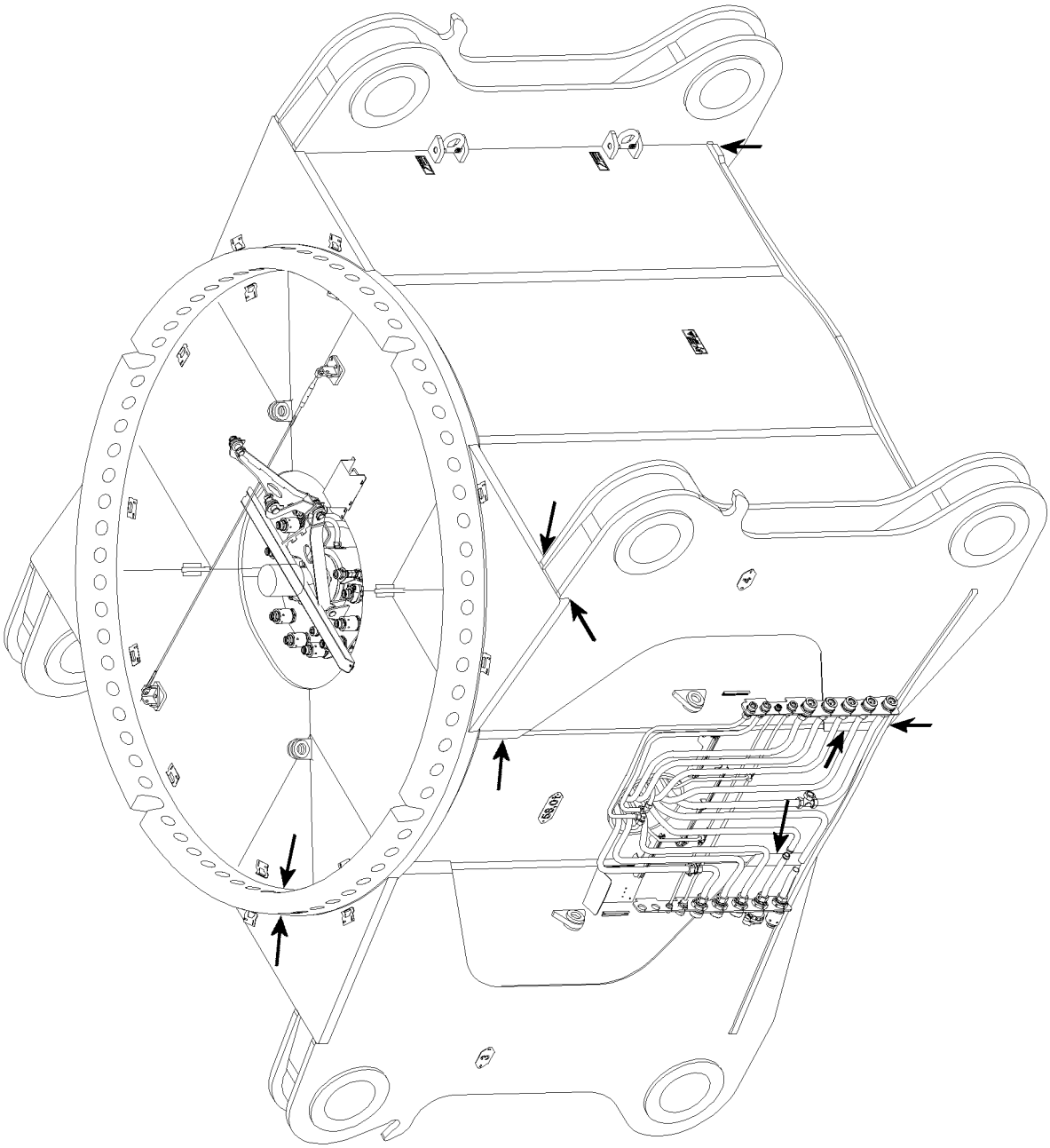

Fig.115920: Example for crawler center section

LWE/LR 1600-2-001/18101-07-02/en

copyright © Liebherr-Werk Ehingen GmbH 2018

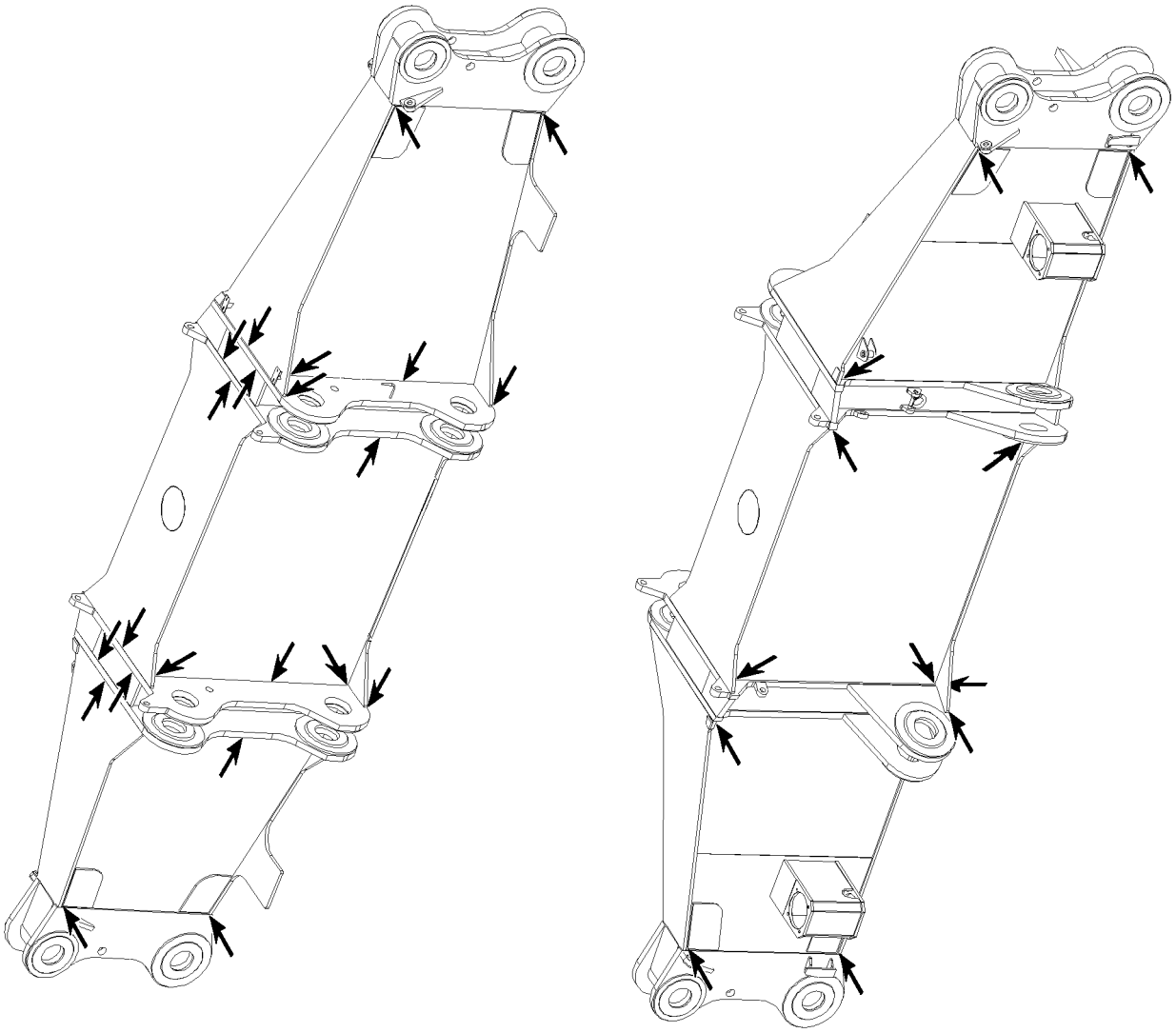

LWE/LR 1600-2-001/18101-07-02/en

Fig.105727: Example for cross carrier

copyright © Liebherr-Werk Ehingen GmbH 2018

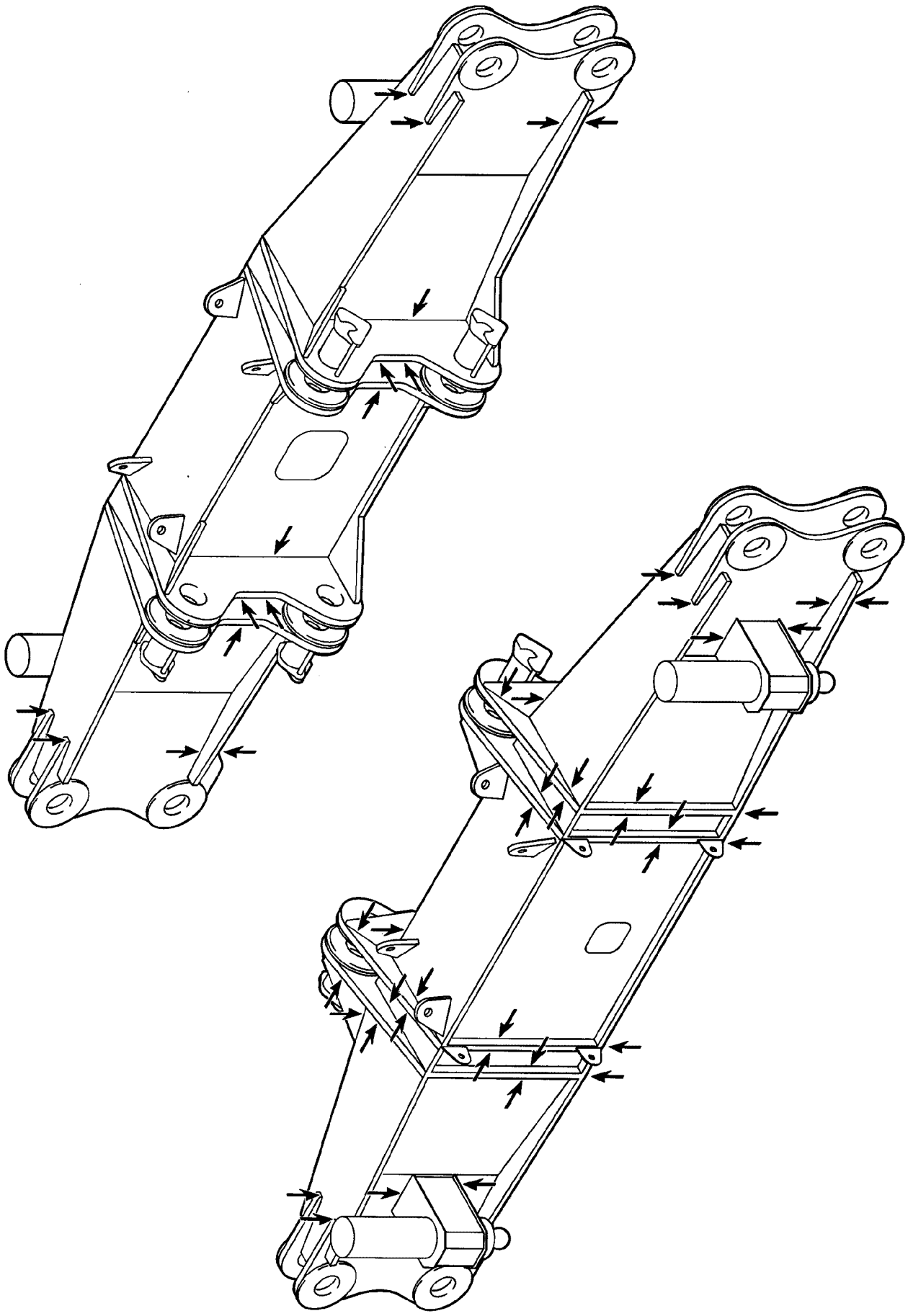

LWE/LR 1600-2-001/18101-07-02/en

Fig.187348: Example for cross carrier

copyright © Liebherr-Werk Ehingen GmbH 2018

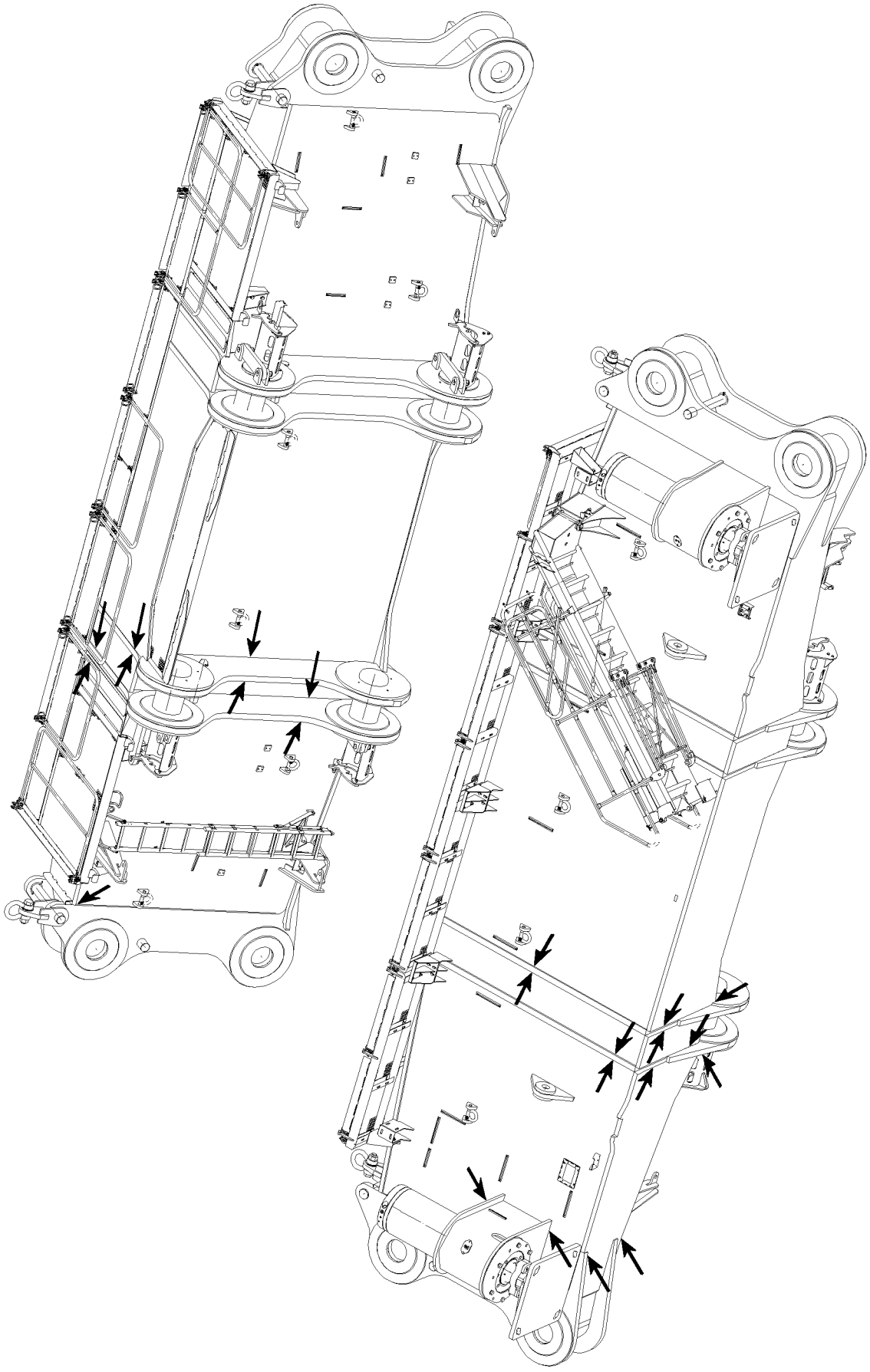

Fig.115921: Example for cross carrier

LWE/LR 1600-2-001/18101-07-02/en

copyright © Liebherr-Werk Ehingen GmbH 2018

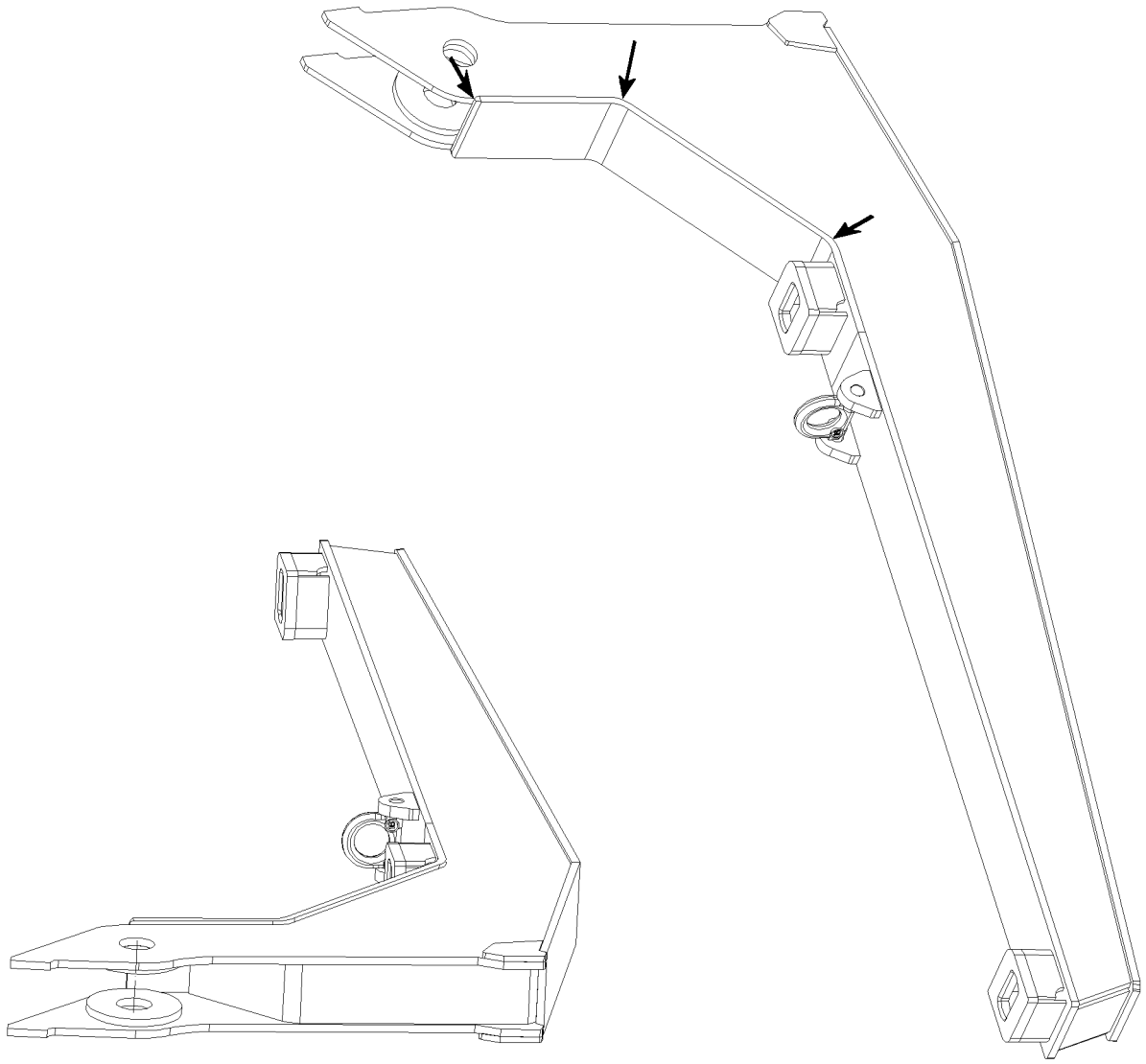

LWE/LR 1600-2-001/18101-07-02/en

Fig.115919: Example for carrier for central ballast

copyright © Liebherr-Werk Ehingen GmbH 2018

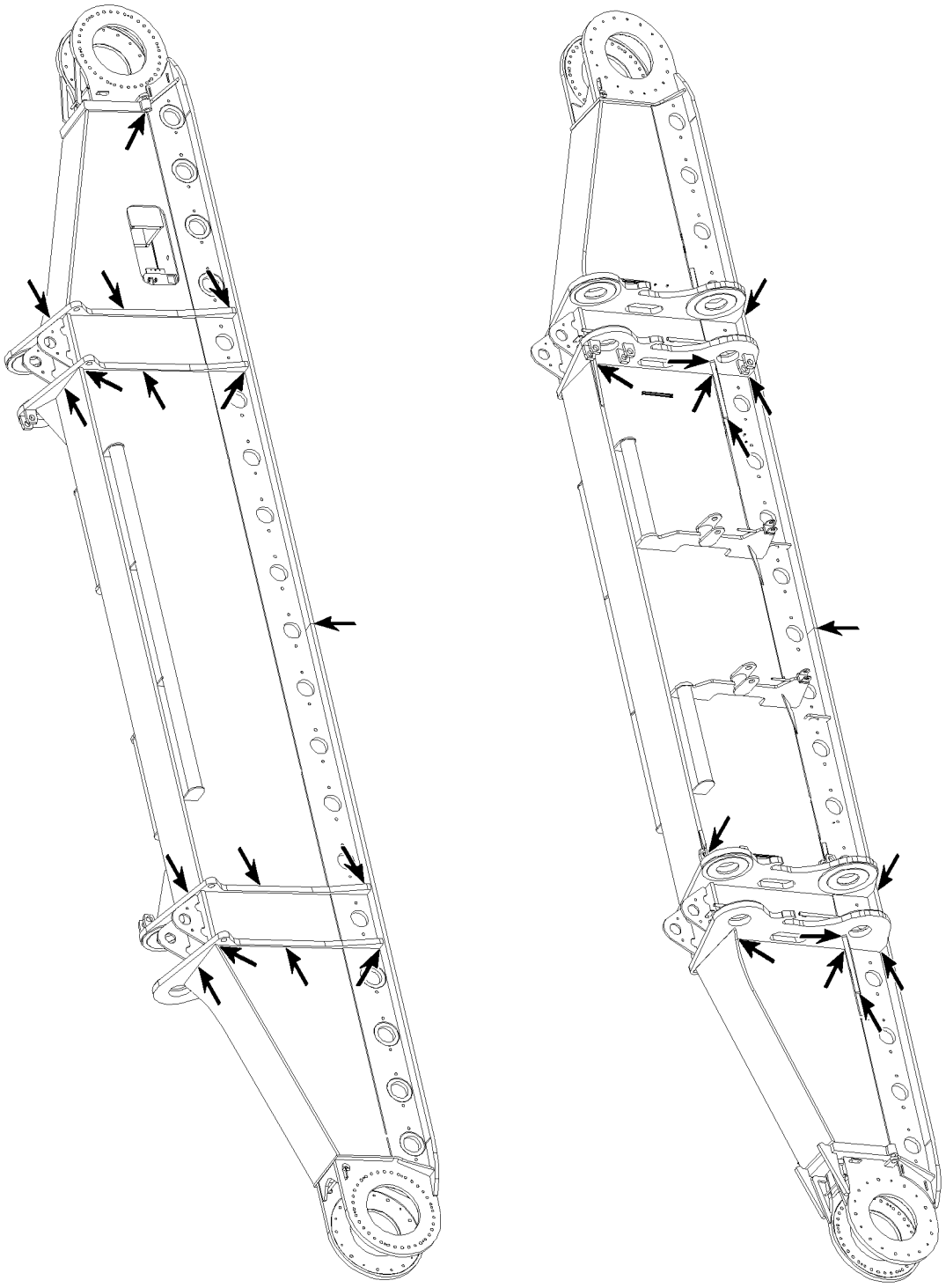

LWE/LR 1600-2-001/18101-07-02/en

Fig.105728: Example for crawler carrier

copyright © Liebherr-Werk Ehingen GmbH 2018

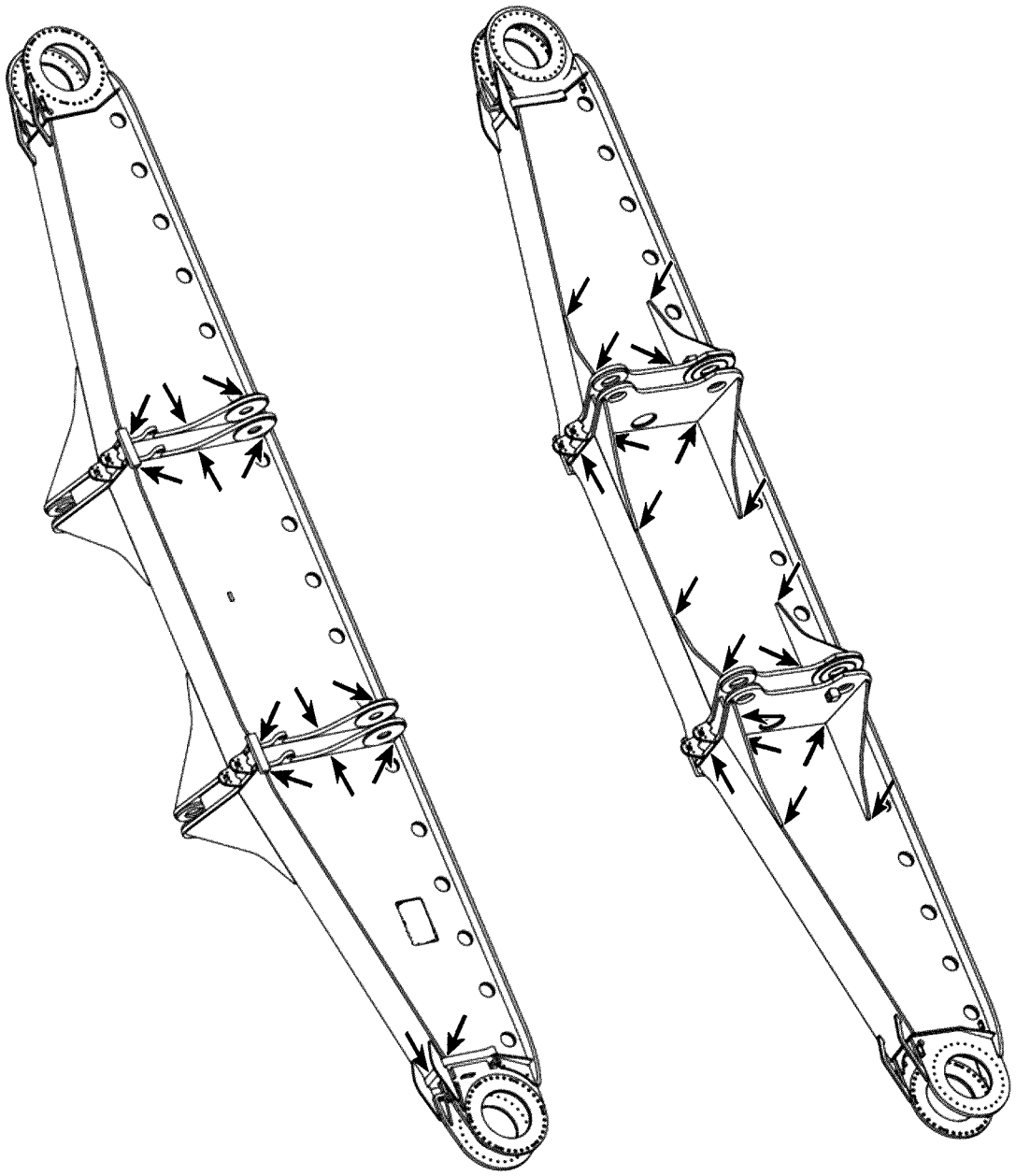

LWE/LR 1600-2-001/18101-07-02/en

Fig.105729: Example for crawler carrier

copyright © Liebherr-Werk Ehingen GmbH 2018

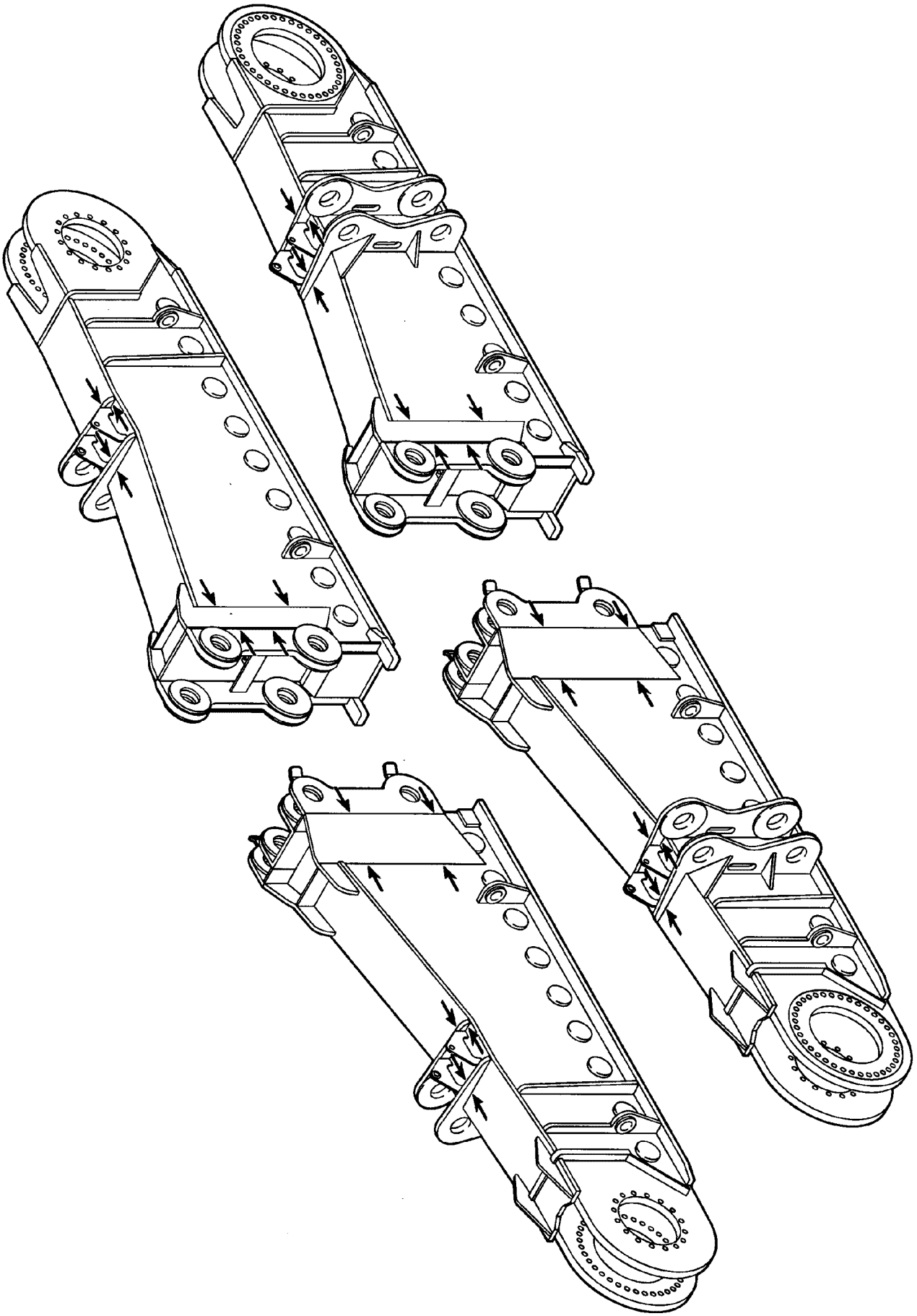

LWE/LR 1600-2-001/18101-07-02/en

Fig.187349: Example for crawler carrier

copyright © Liebherr-Werk Ehingen GmbH 2018

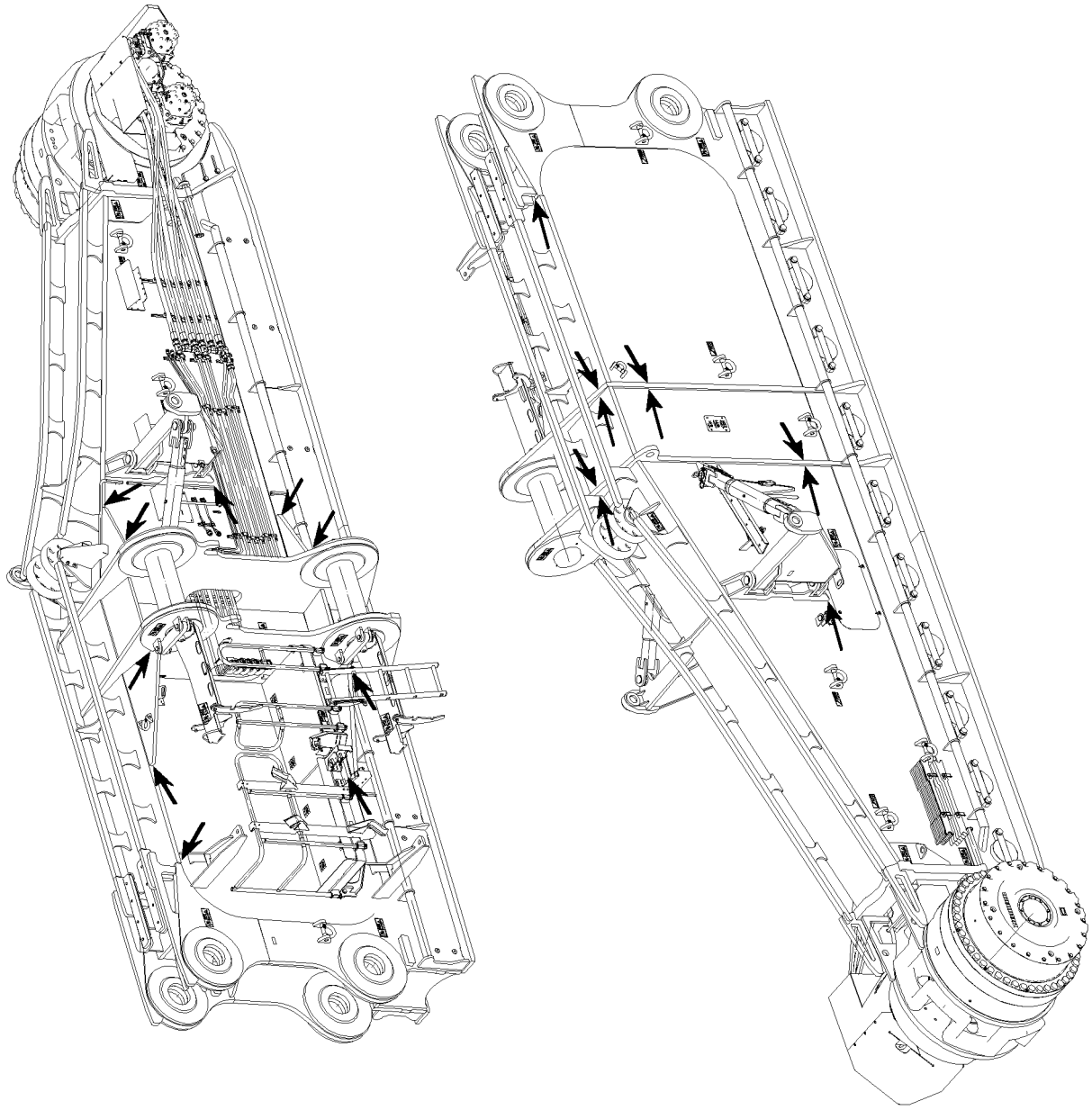

LWE/LR 1600-2-001/18101-07-02/en

Fig.115917: Example for crawler carrier

copyright © Liebherr-Werk Ehingen GmbH 2018

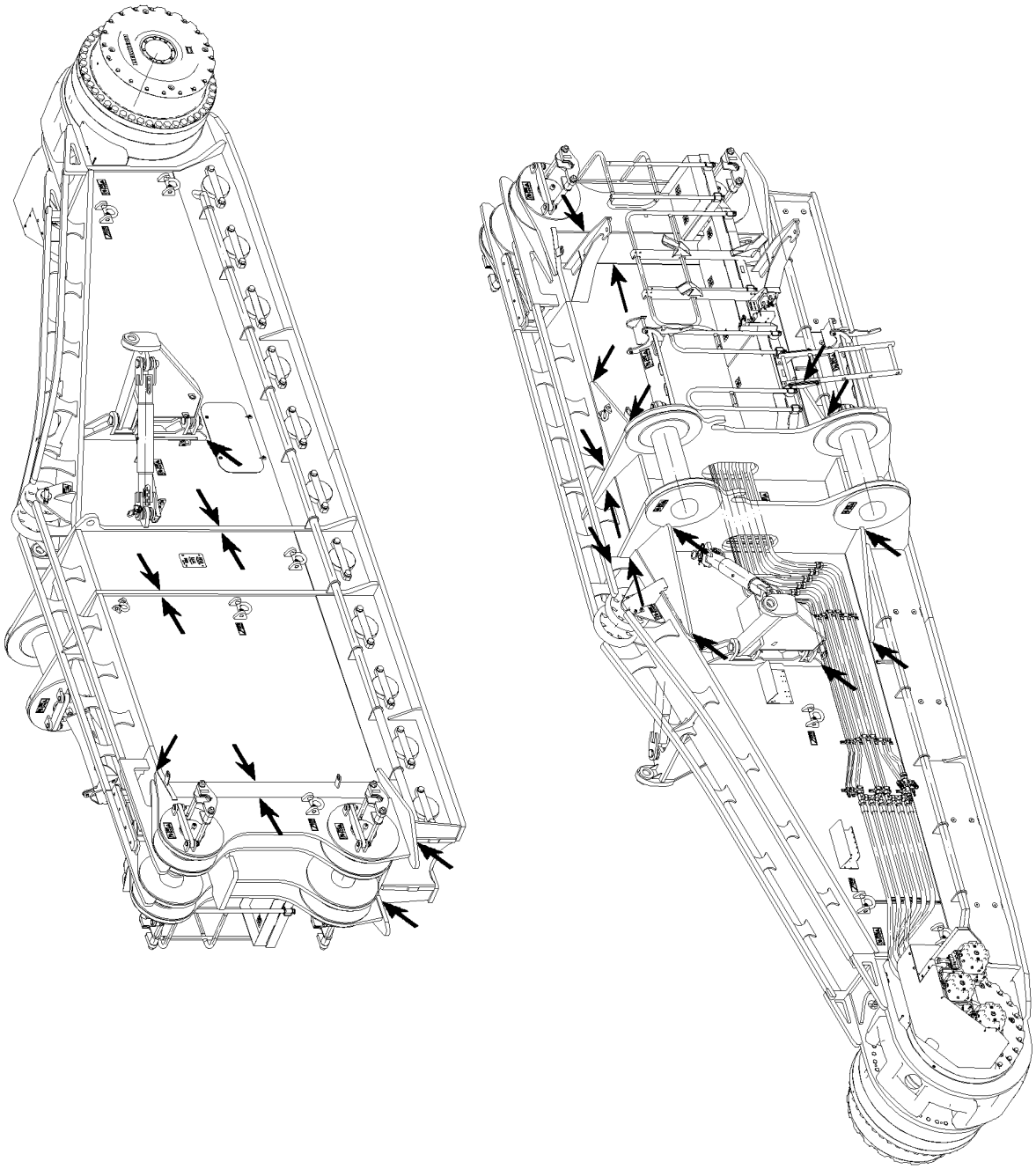

LWE/LR 1600-2-001/18101-07-02/en

Fig.115918: Example for crawler carrier

copyright © Liebherr-Werk Ehingen GmbH 2018

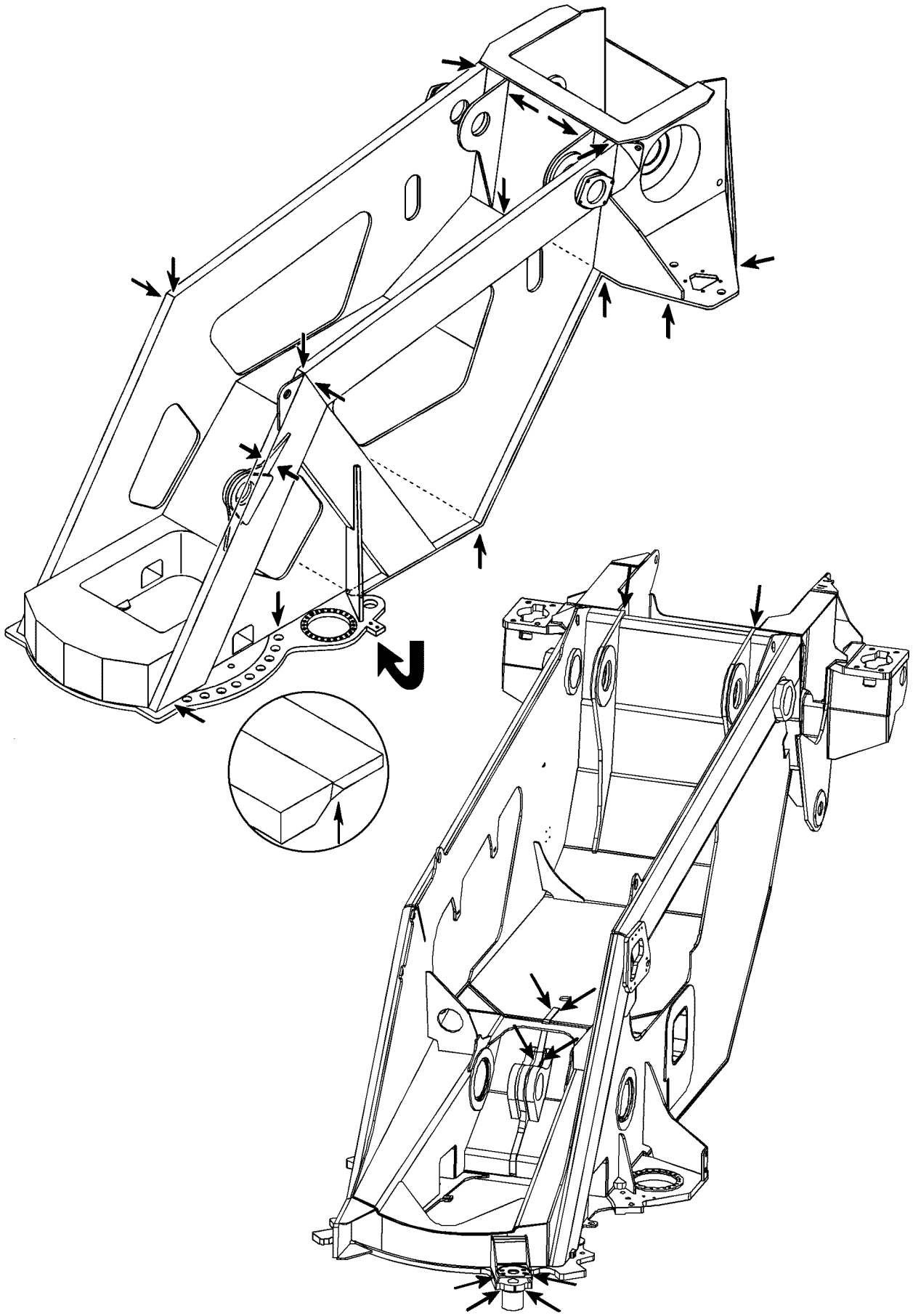

LWE/LR 1600-2-001/18101-07-02/en

Fig.185048: Example for turntable frame

copyright © Liebherr-Werk Ehingen GmbH 2018

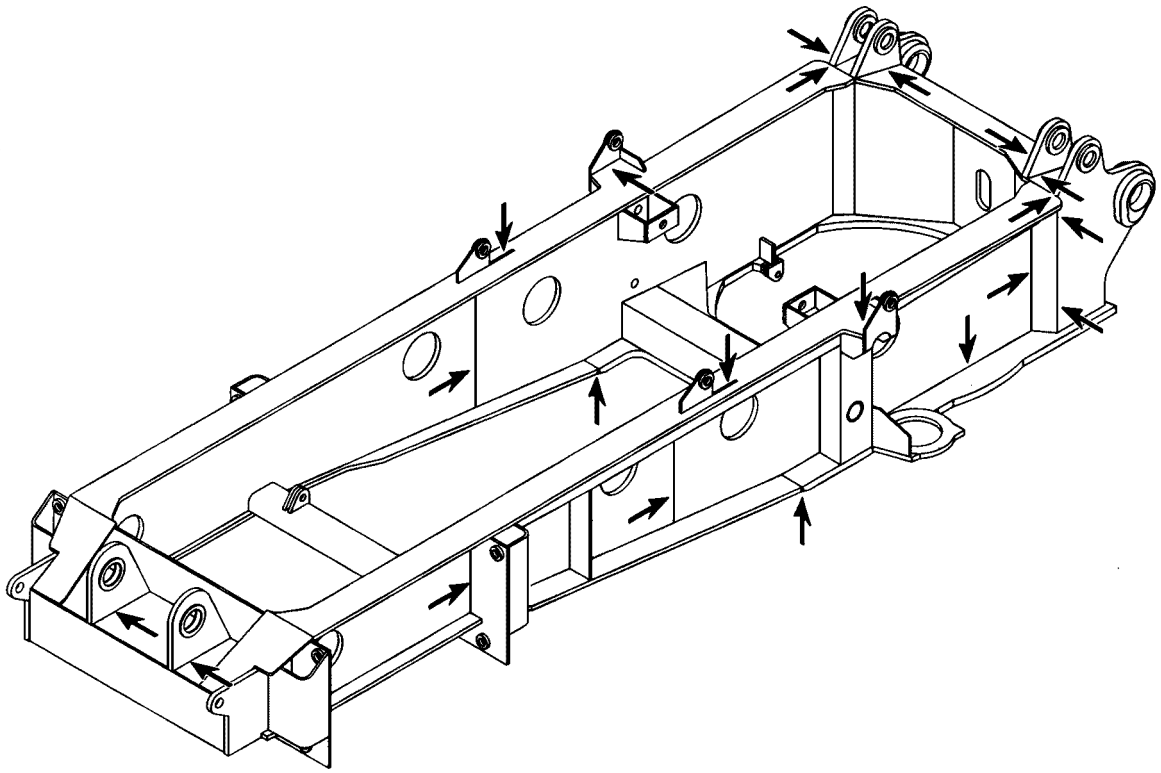

Fig.185049: Example for turntable frame

LWE/LR 1600-2-001/18101-07-02/en

copyright © Liebherr-Werk Ehingen GmbH 2018

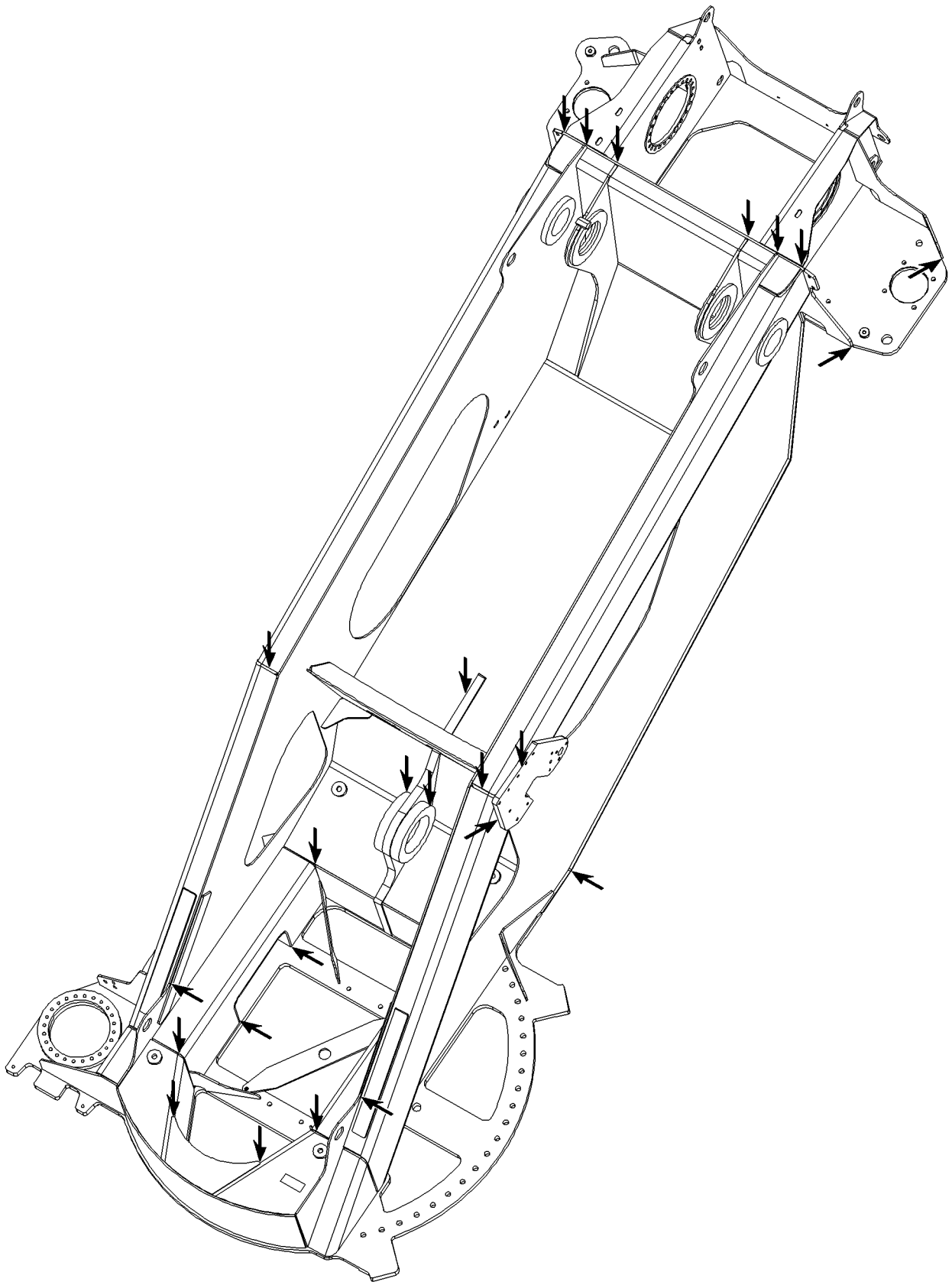

LWE/LR 1600-2-001/18101-07-02/en

Fig.105700: Example for turntable frame

copyright © Liebherr-Werk Ehingen GmbH 2018

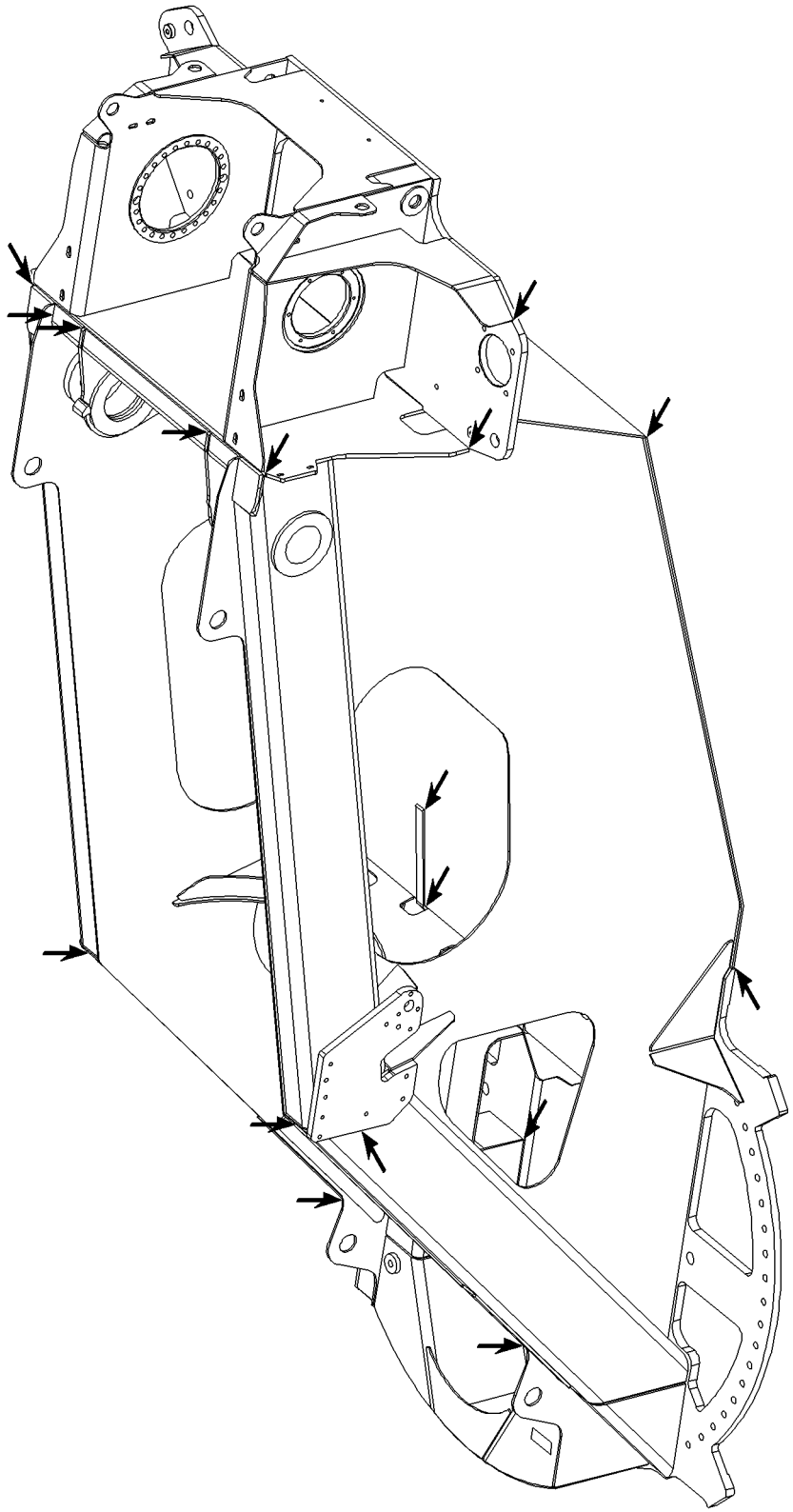

Fig.105701: Example for turntable frame

LWE/LR 1600-2-001/18101-07-02/en

copyright © Liebherr-Werk Ehingen GmbH 2018

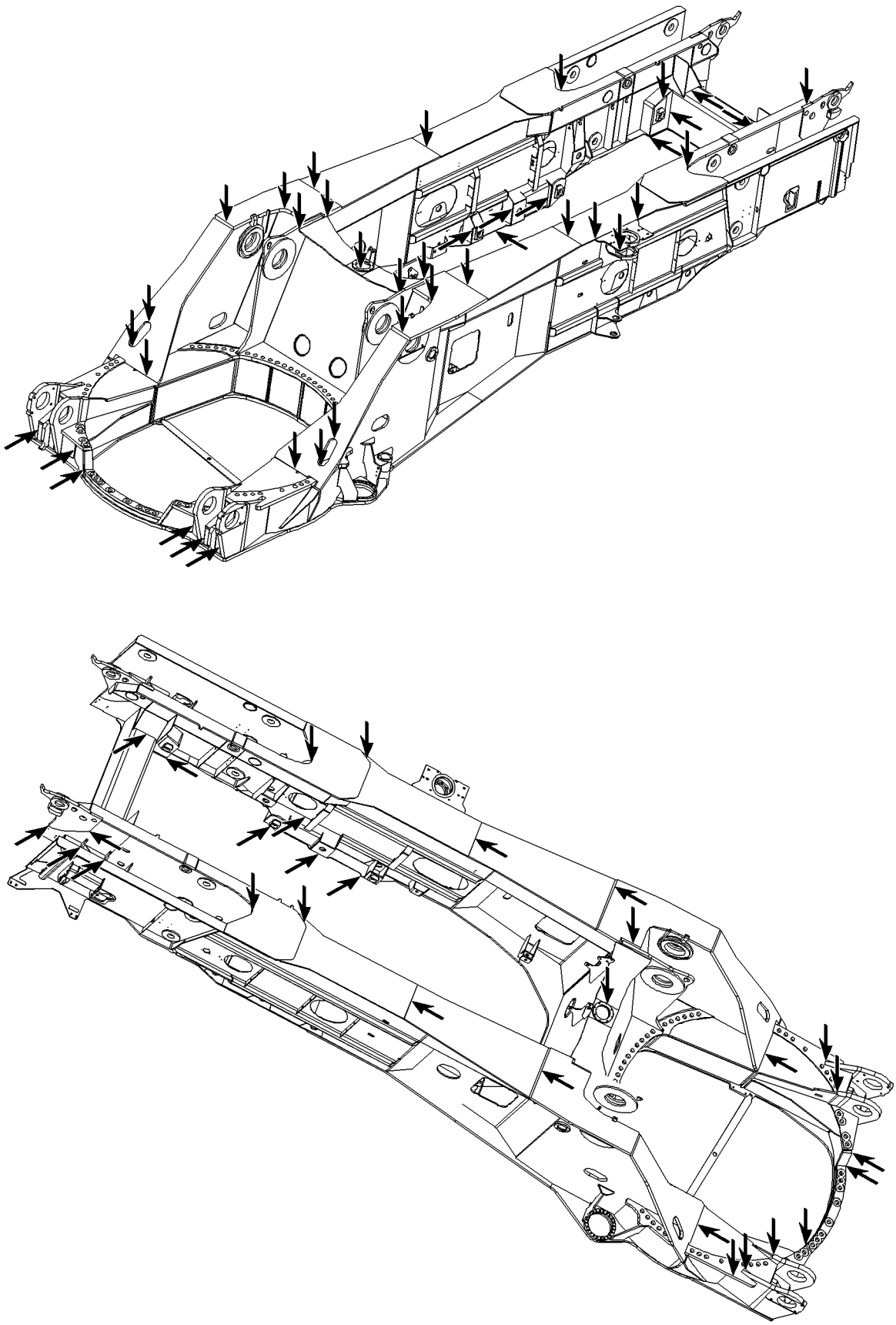

Fig.105706: Example for turntable frame

LWE/LR 1600-2-001/18101-07-02/en

copyright © Liebherr-Werk Ehingen GmbH 2018

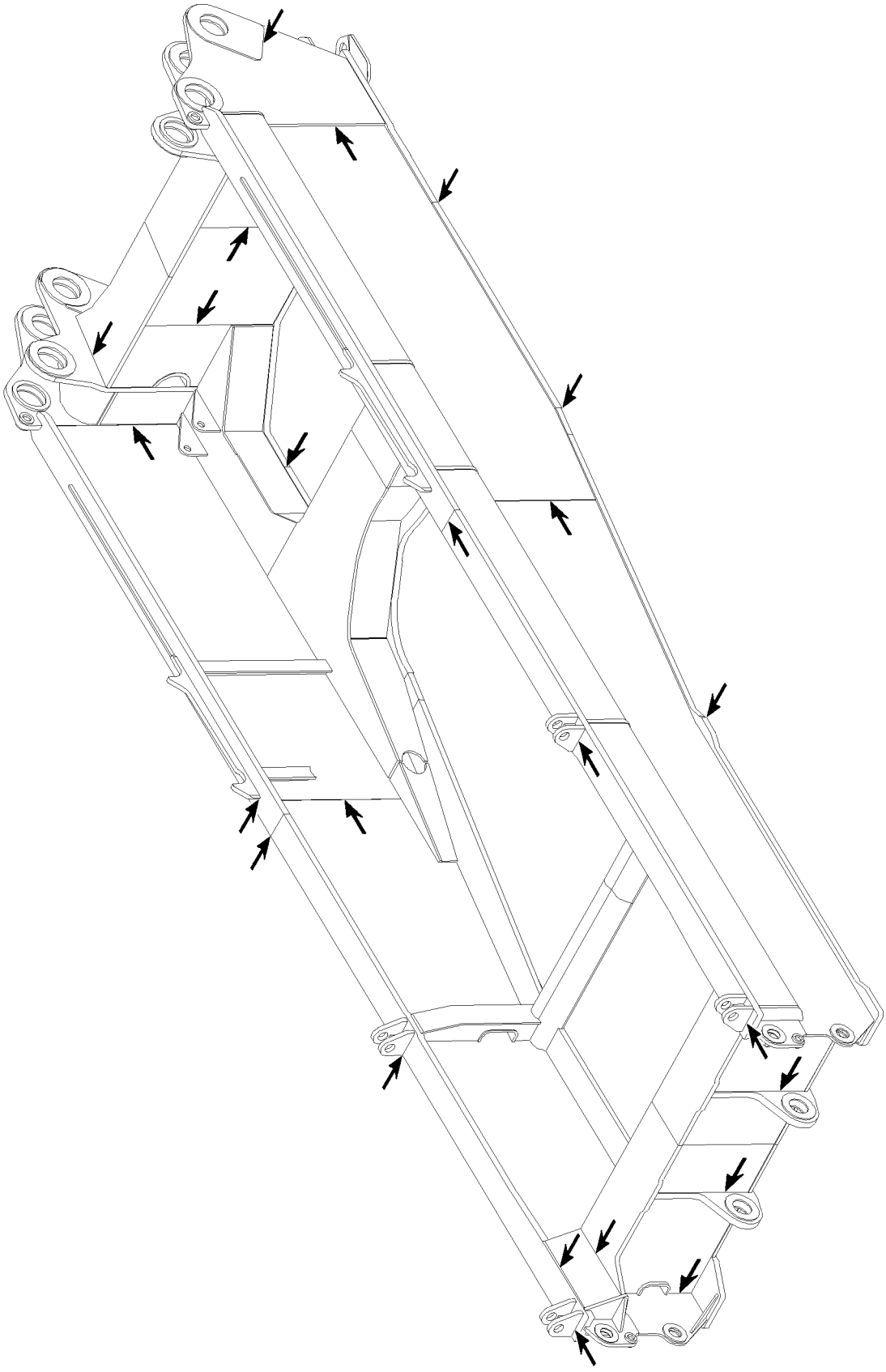

LWE/LR 1600-2-001/18101-07-02/en

Fig.105694: Example for turntable frame

copyright © Liebherr-Werk Ehingen GmbH 2018

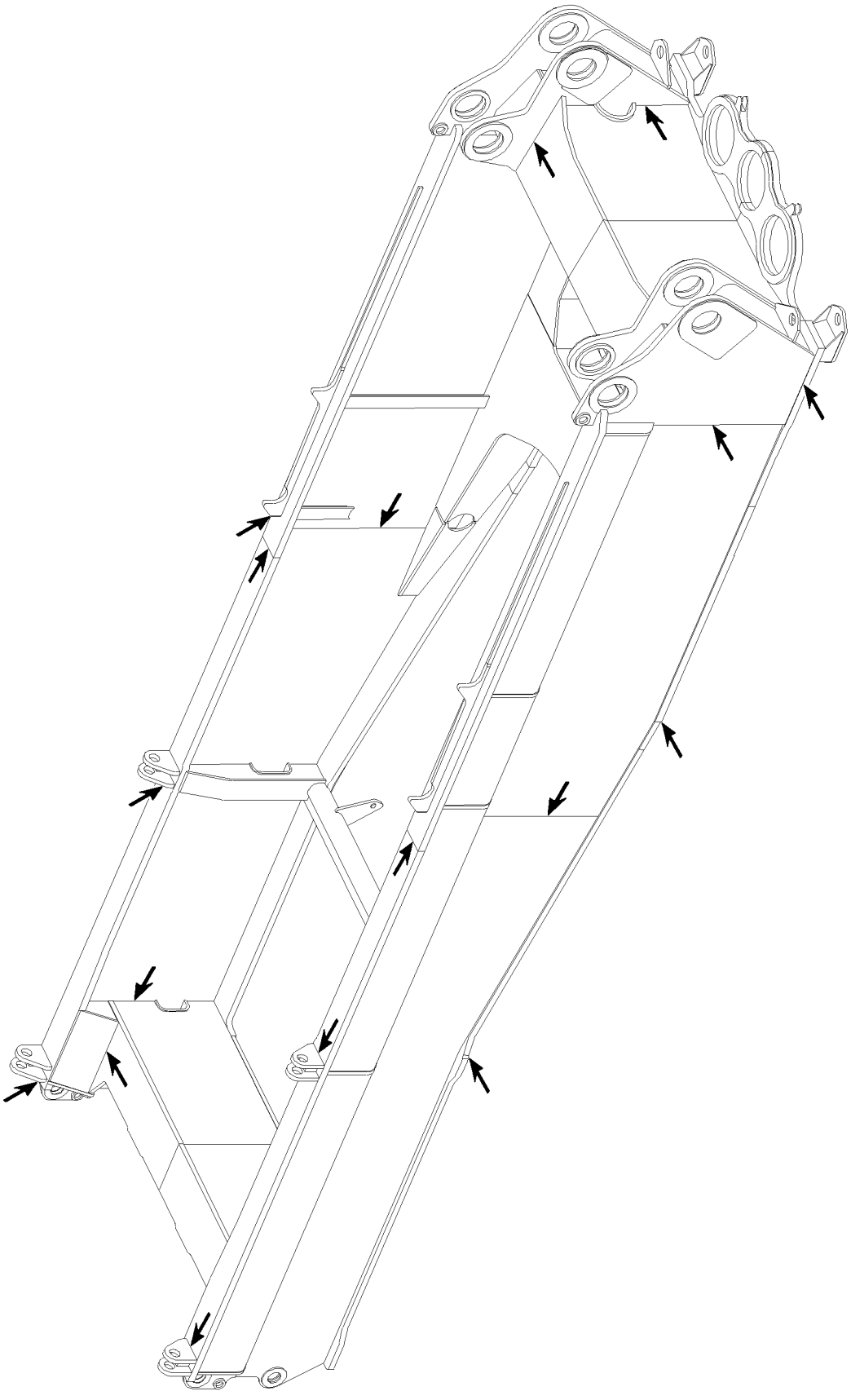

Fig.105695: Example for turntable frame

LWE/LR 1600-2-001/18101-07-02/en

copyright © Liebherr-Werk Ehingen GmbH 2018

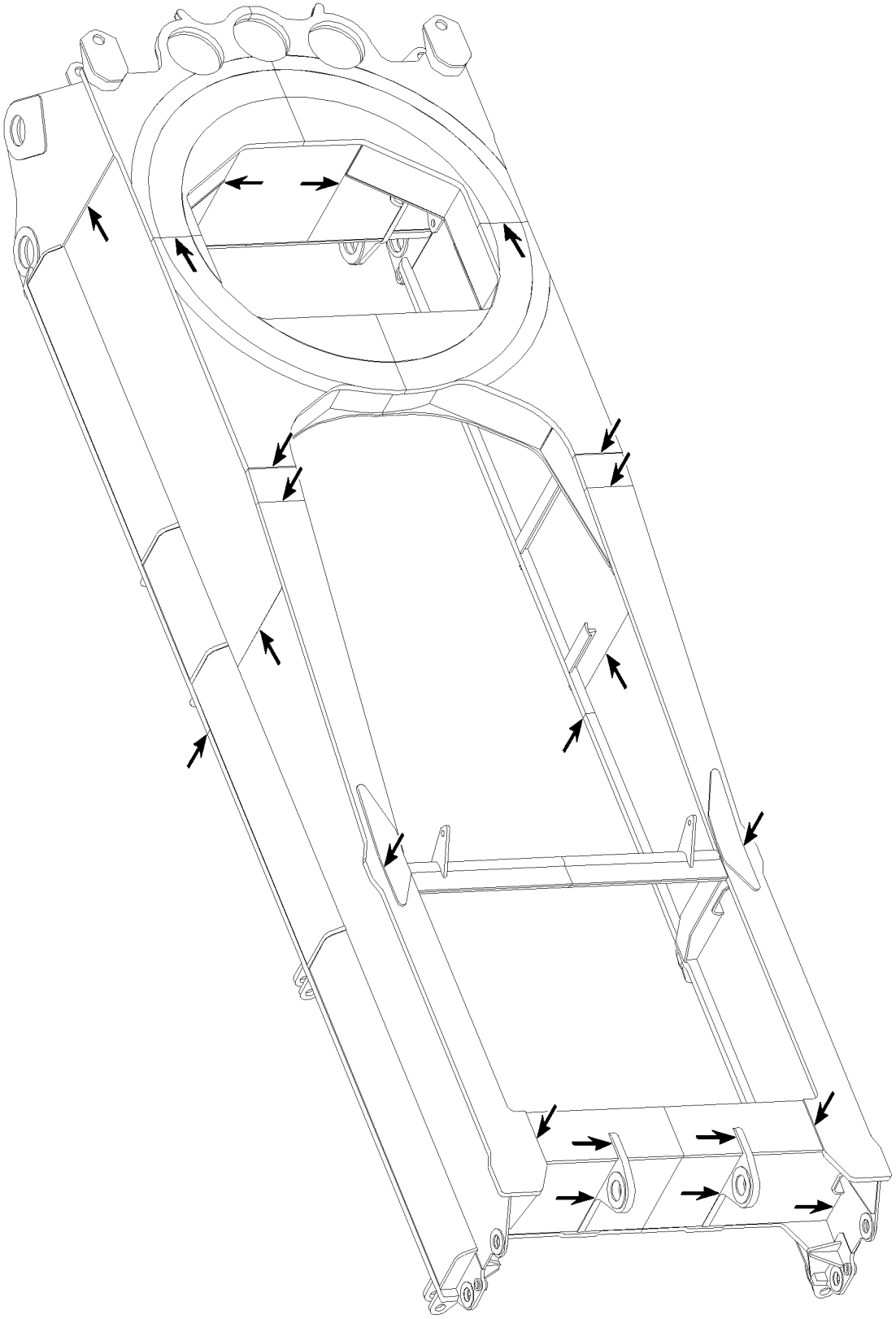

LWE/LR 1600-2-001/18101-07-02/en

Fig.105696: Example for turntable frame

copyright © Liebherr-Werk Ehingen GmbH 2018

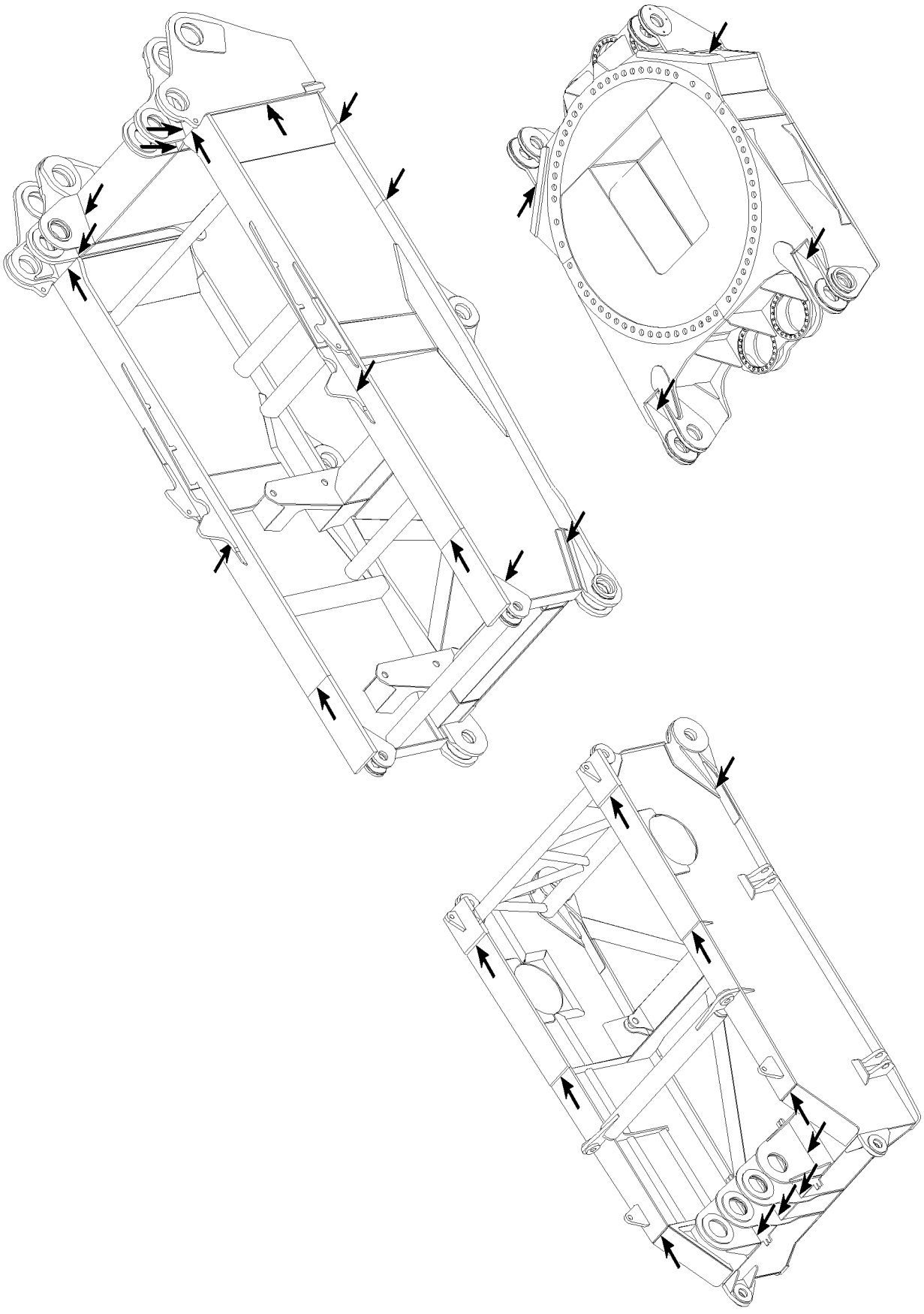

Fig.105691: Example for turntable frame

LWE/LR 1600-2-001/18101-07-02/en

copyright © Liebherr-Werk Ehingen GmbH 2018

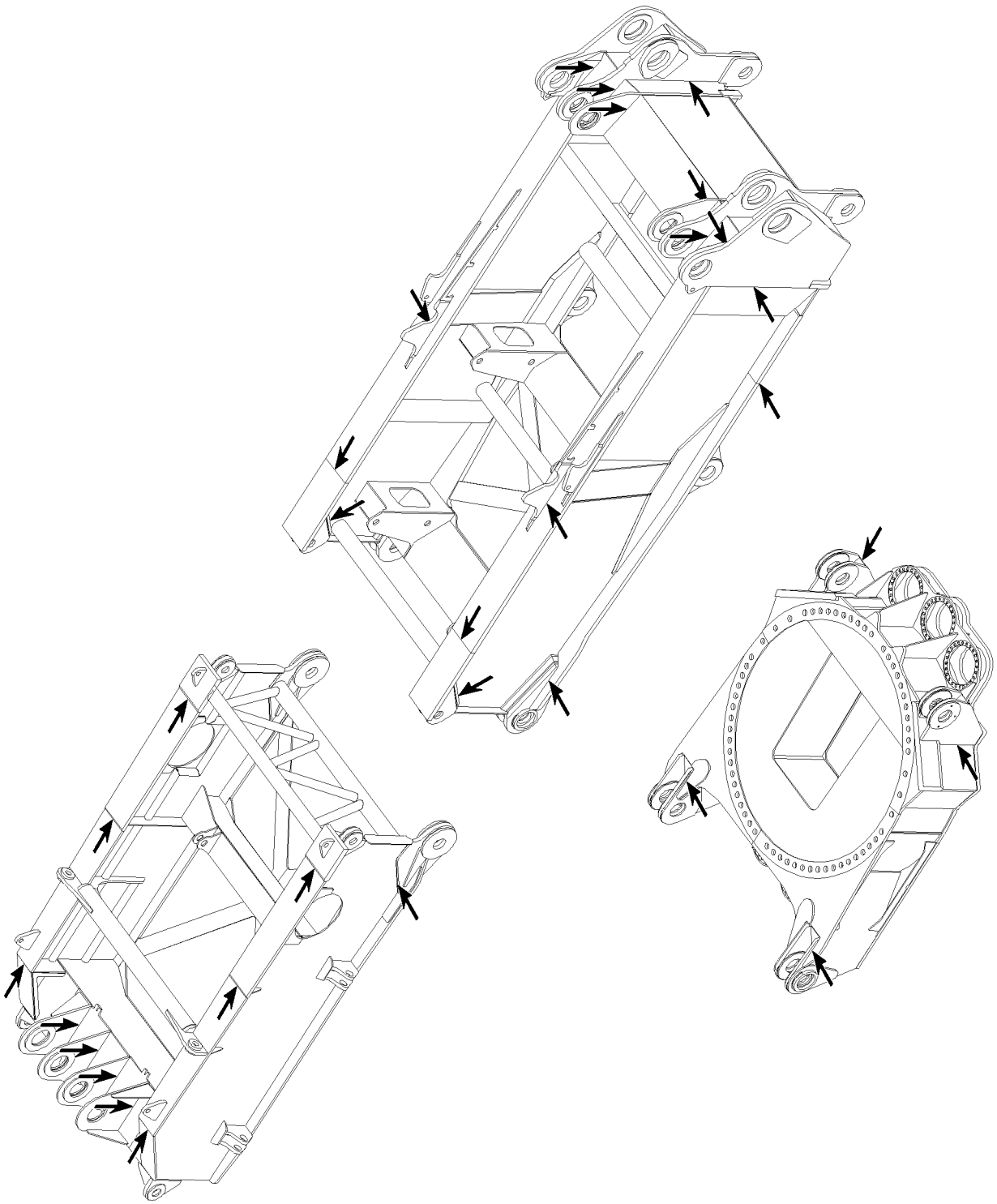

LWE/LR 1600-2-001/18101-07-02/en

Fig.105692: Example for turntable frame

copyright © Liebherr-Werk Ehingen GmbH 2018

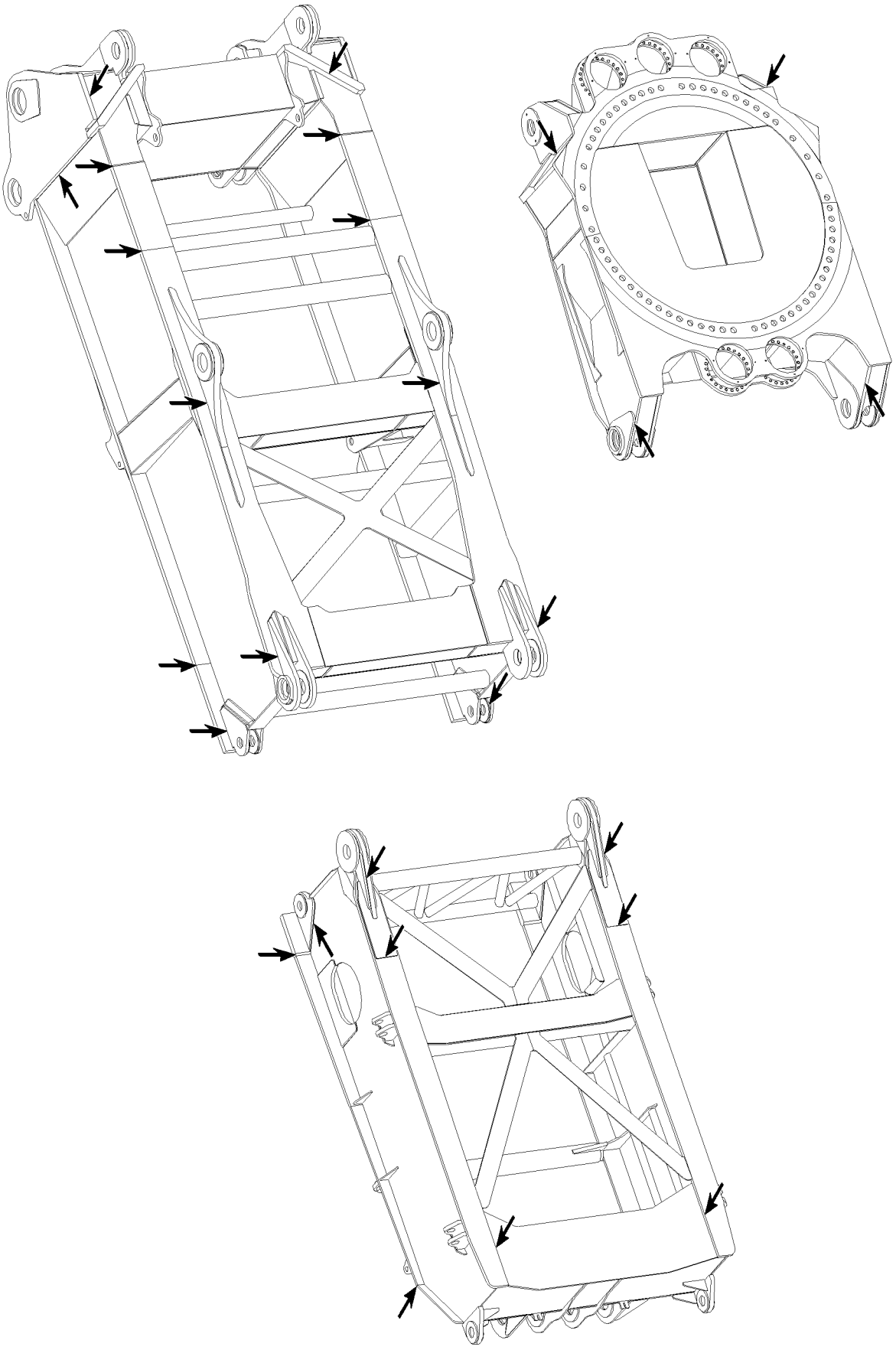

Fig.105693: Example for turntable frame

LWE/LR 1600-2-001/18101-07-02/en

copyright © Liebherr-Werk Ehingen GmbH 2018

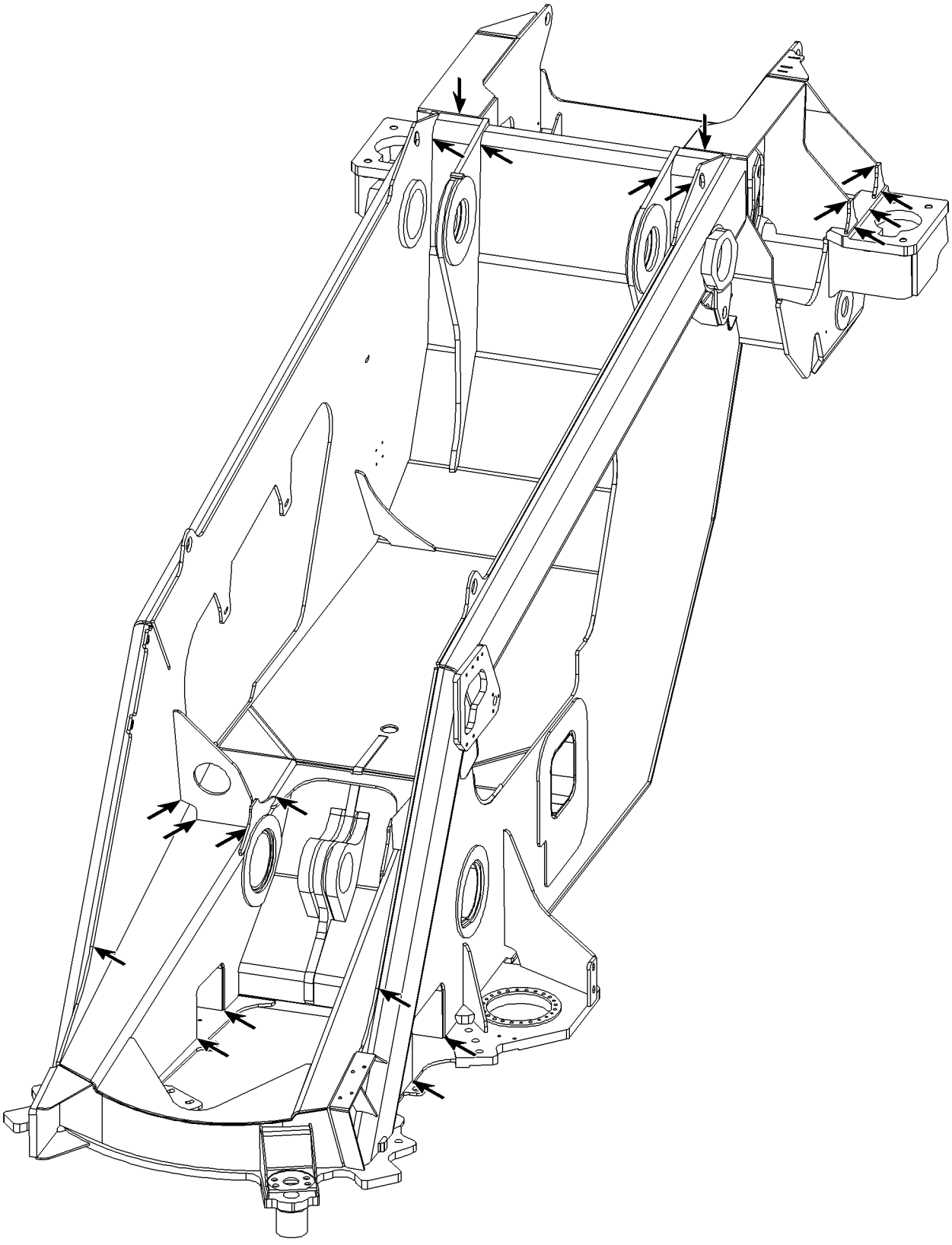

LWE/LR 1600-2-001/18101-07-02/en

Fig.105722: Example for turntable frame

copyright © Liebherr-Werk Ehingen GmbH 2018

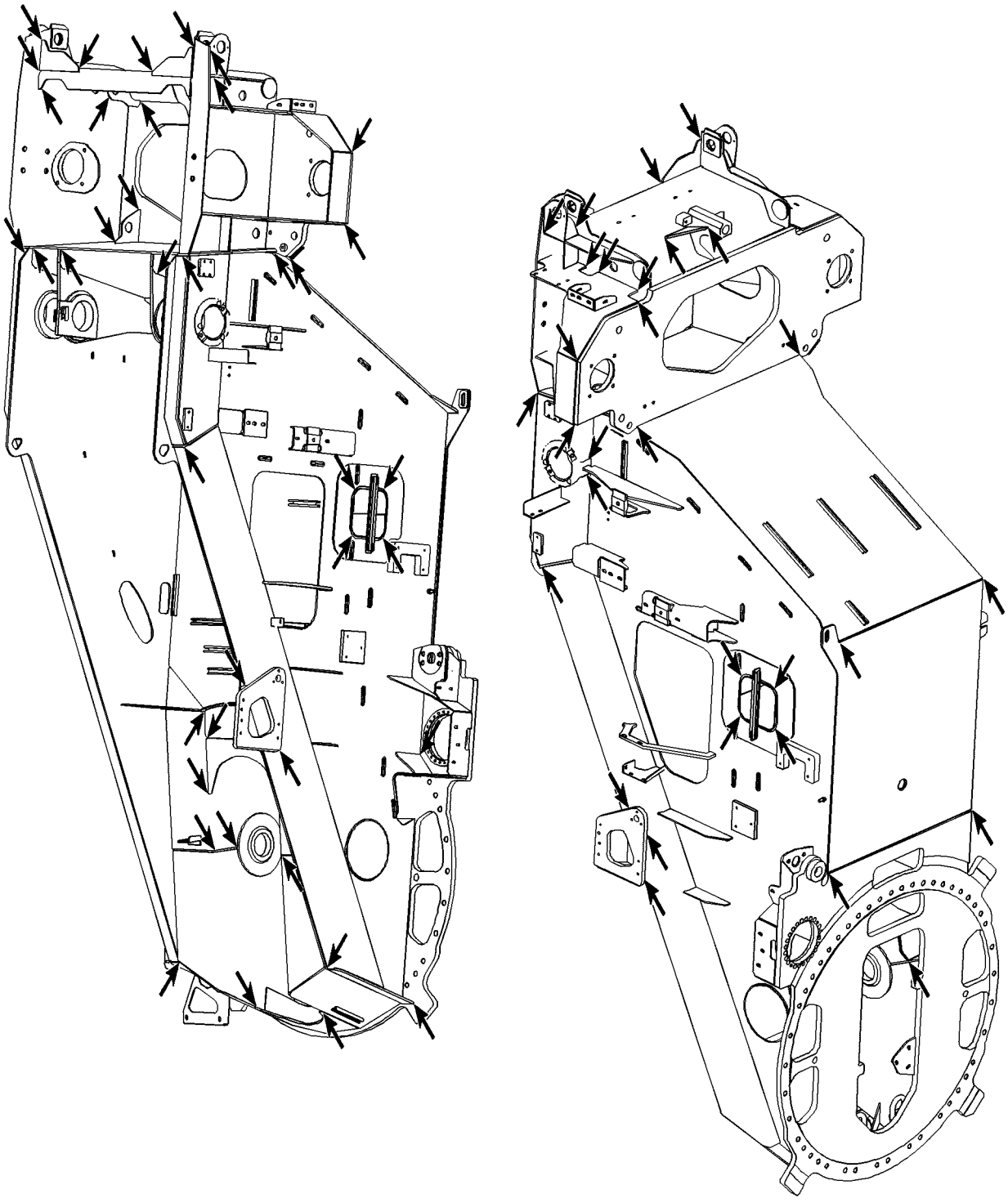

LWE/LR 1600-2-001/18101-07-02/en

Fig.105932: Example for turntable frame

copyright © Liebherr-Werk Ehingen GmbH 2018

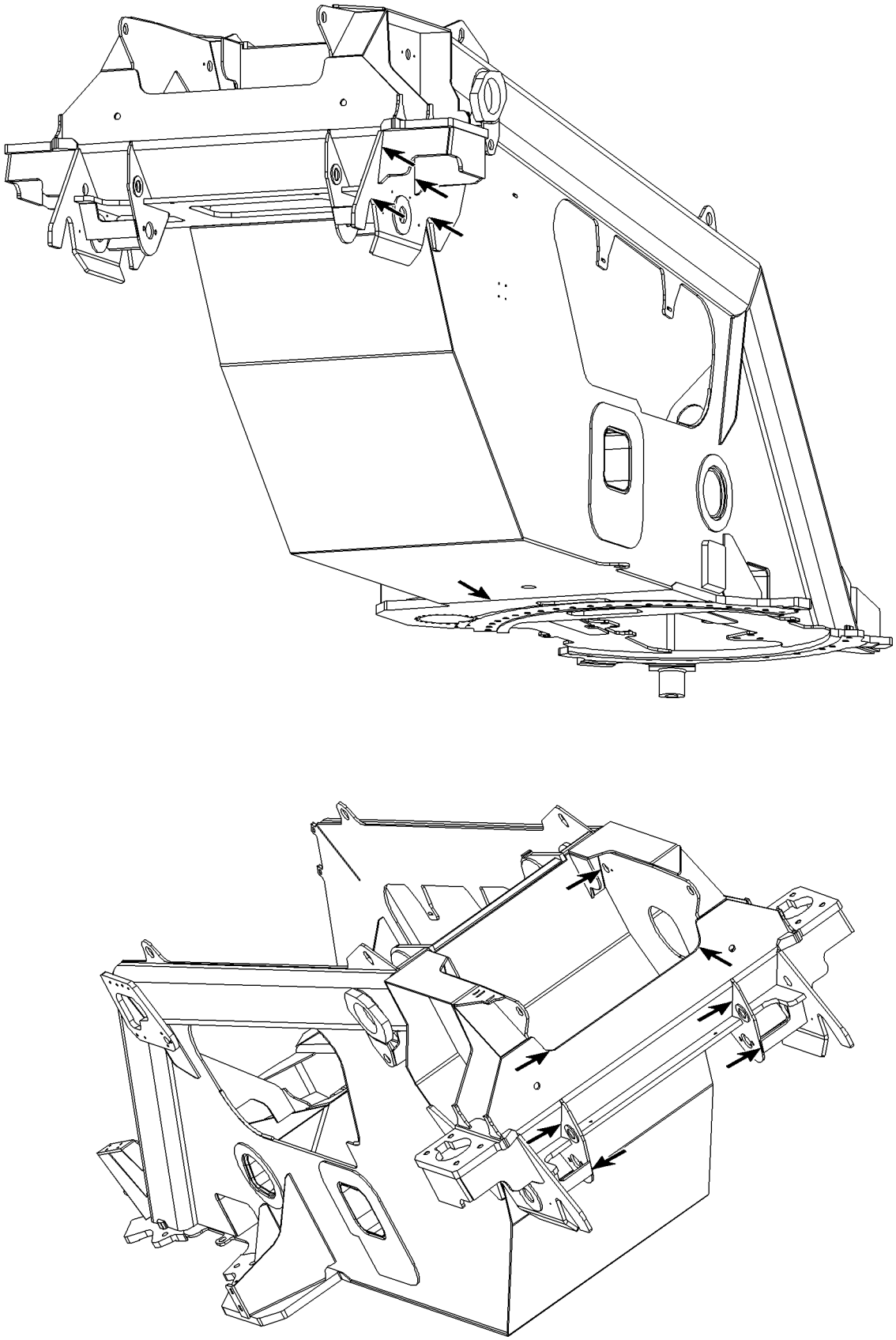

LWE/LR 1600-2-001/18101-07-02/en

Fig.105723: Example for turntable frame

copyright © Liebherr-Werk Ehingen GmbH 2018

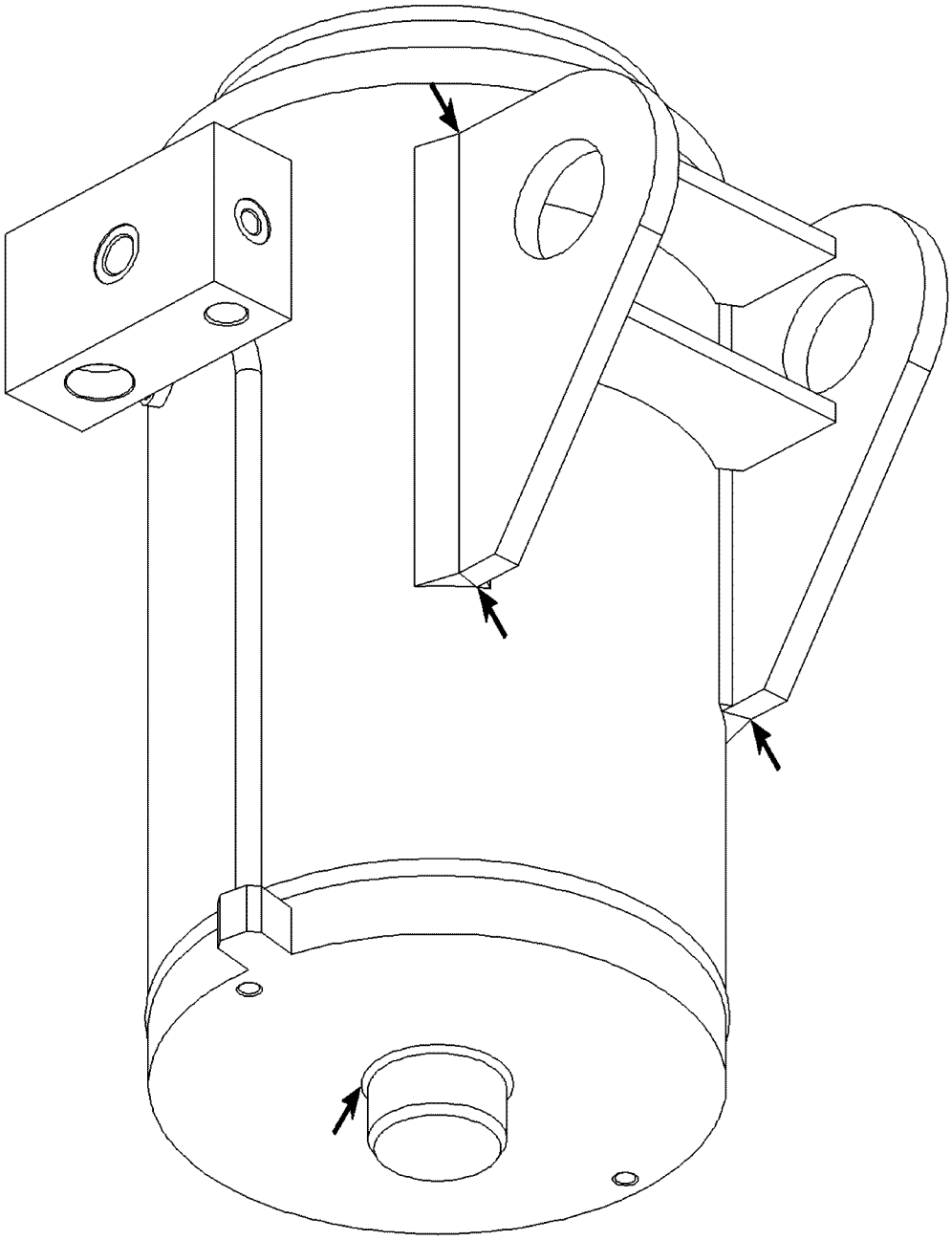

Fig.105801: Example for ballast cylinder

LWE/LR 1600-2-001/18101-07-02/en

copyright © Liebherr-Werk Ehingen GmbH 2018

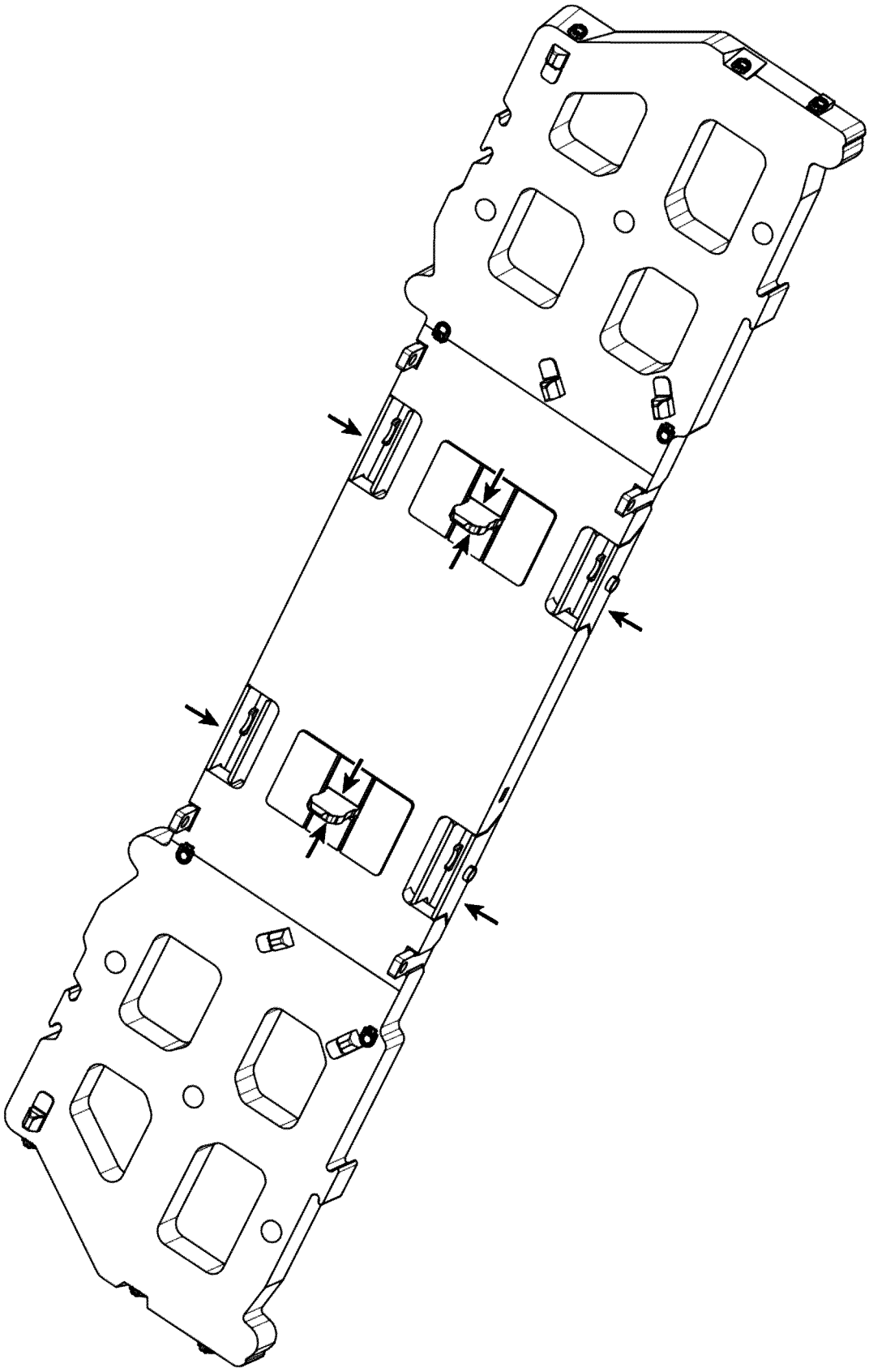

Fig.105705: Example for mounting plate

LWE/LR 1600-2-001/18101-07-02/en

copyright © Liebherr-Werk Ehingen GmbH 2018

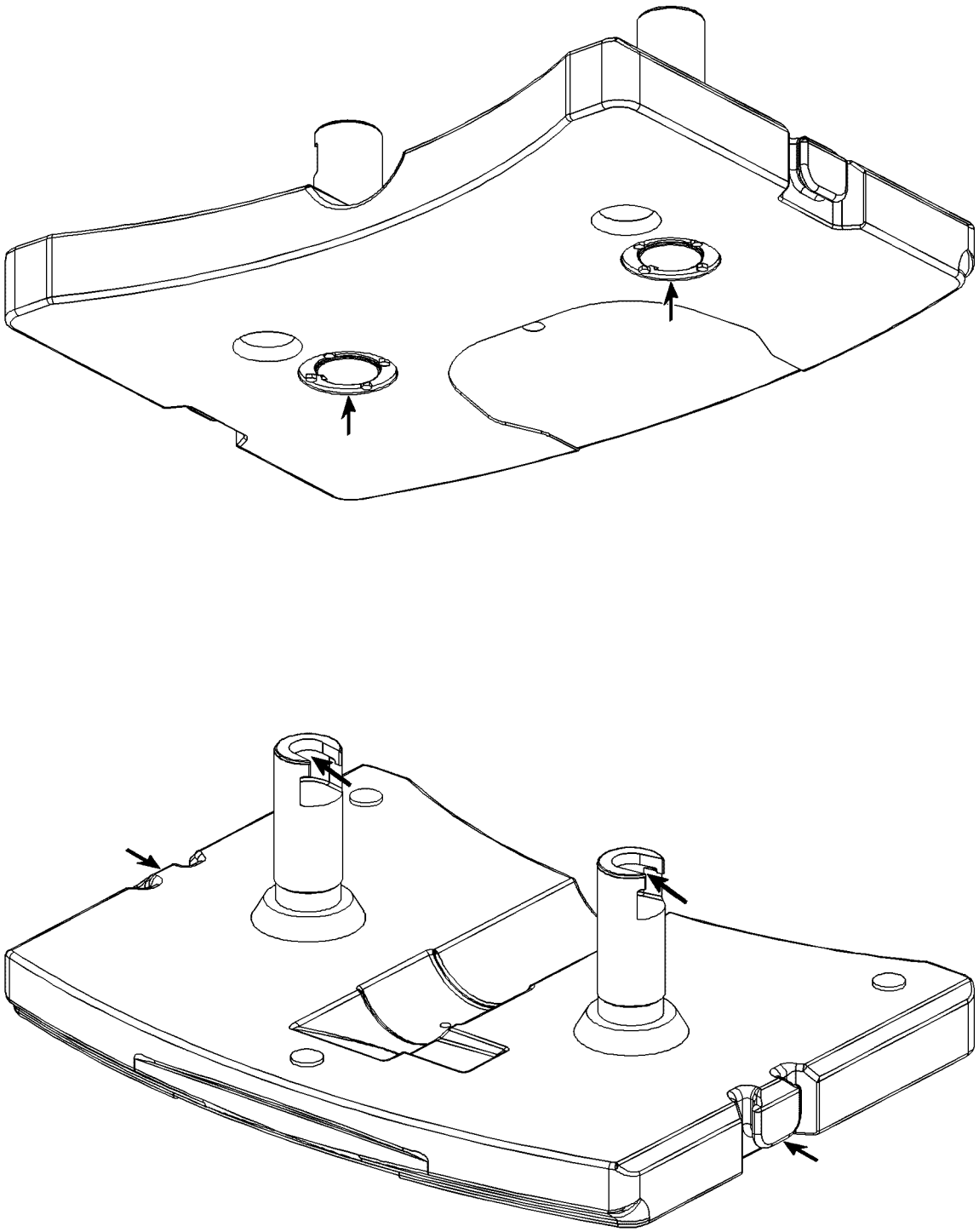

LWE/LR 1600-2-001/18101-07-02/en

Fig.105807: Example for base plate

copyright © Liebherr-Werk Ehingen GmbH 2018

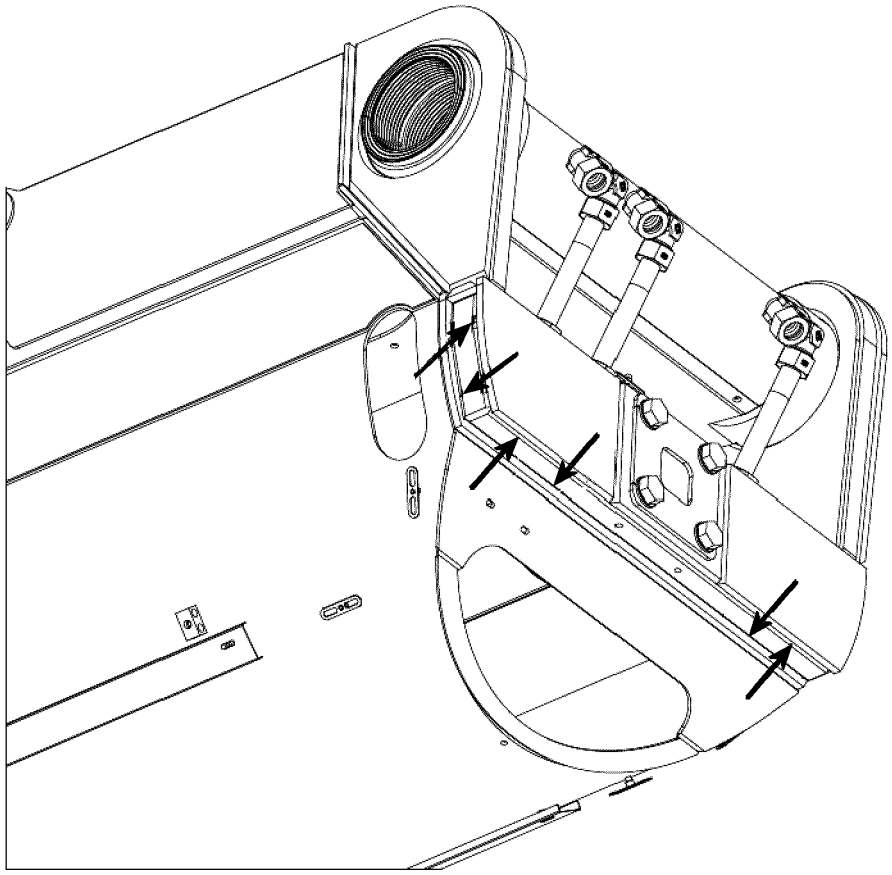

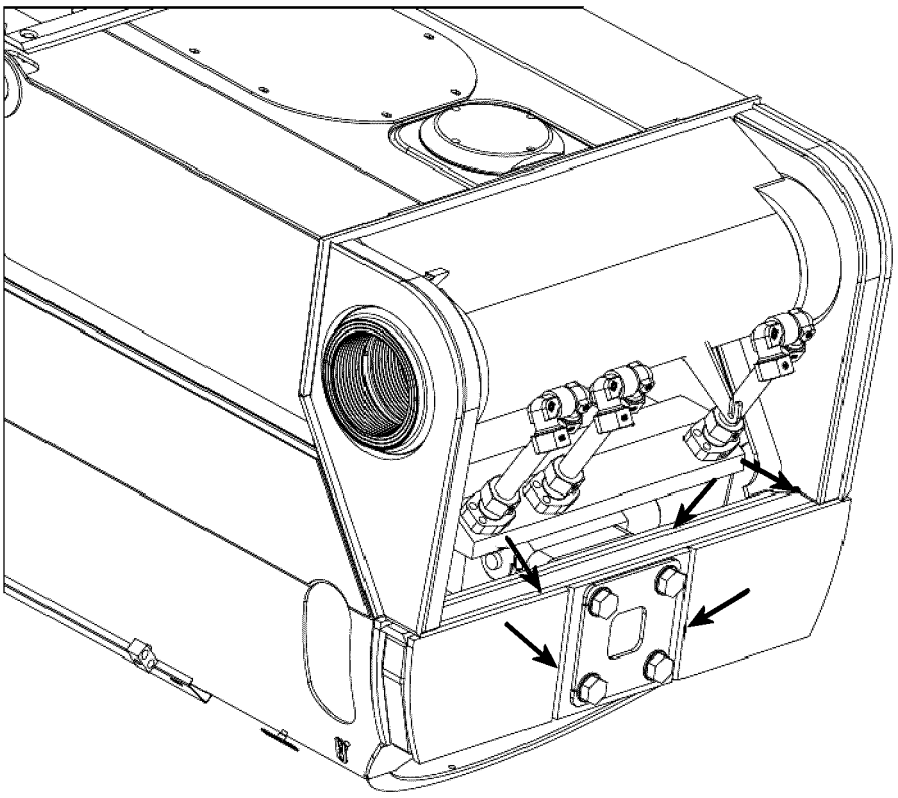

Fig.120273: Example for pivot section

LWE/LR 1600-2-001/18101-07-02/en

copyright © Liebherr-Werk Ehingen GmbH 2018

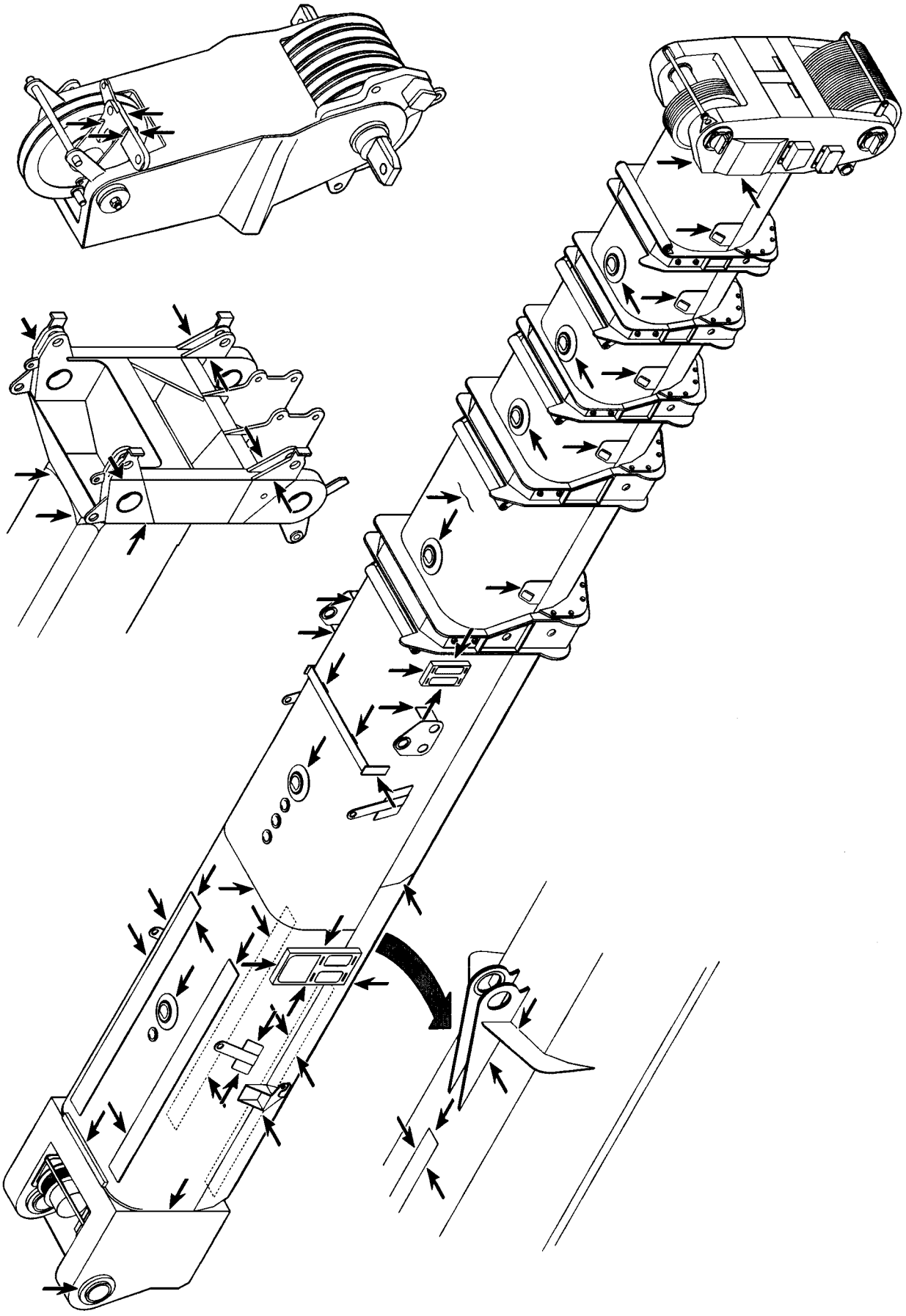

LWE/LR 1600-2-001/18101-07-02/en

Fig.185050: Example for telescopic boom

copyright © Liebherr-Werk Ehingen GmbH 2018

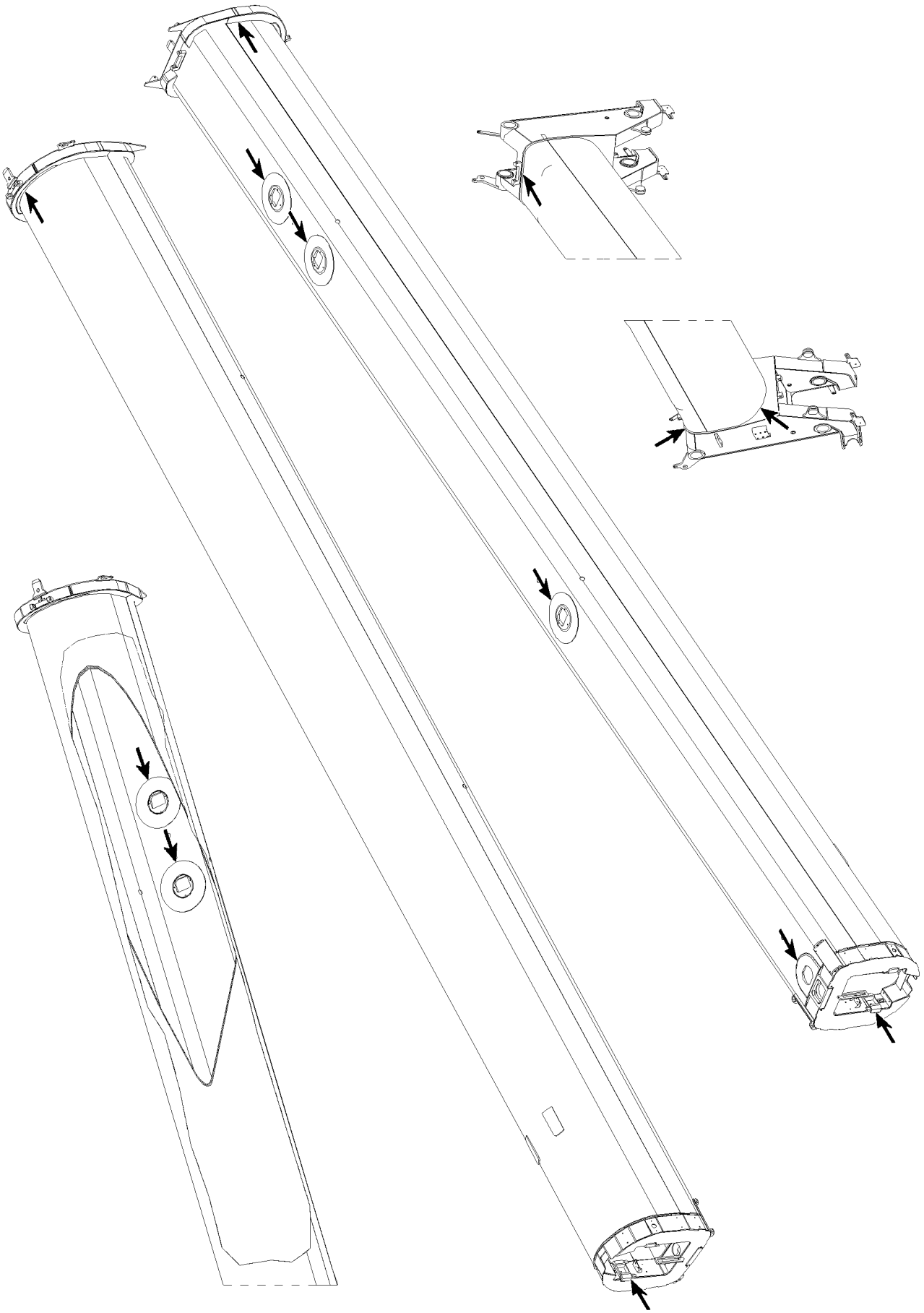

Fig.105710: Example for telescopic boom

LWE/LR 1600-2-001/18101-07-02/en

copyright © Liebherr-Werk Ehingen GmbH 2018

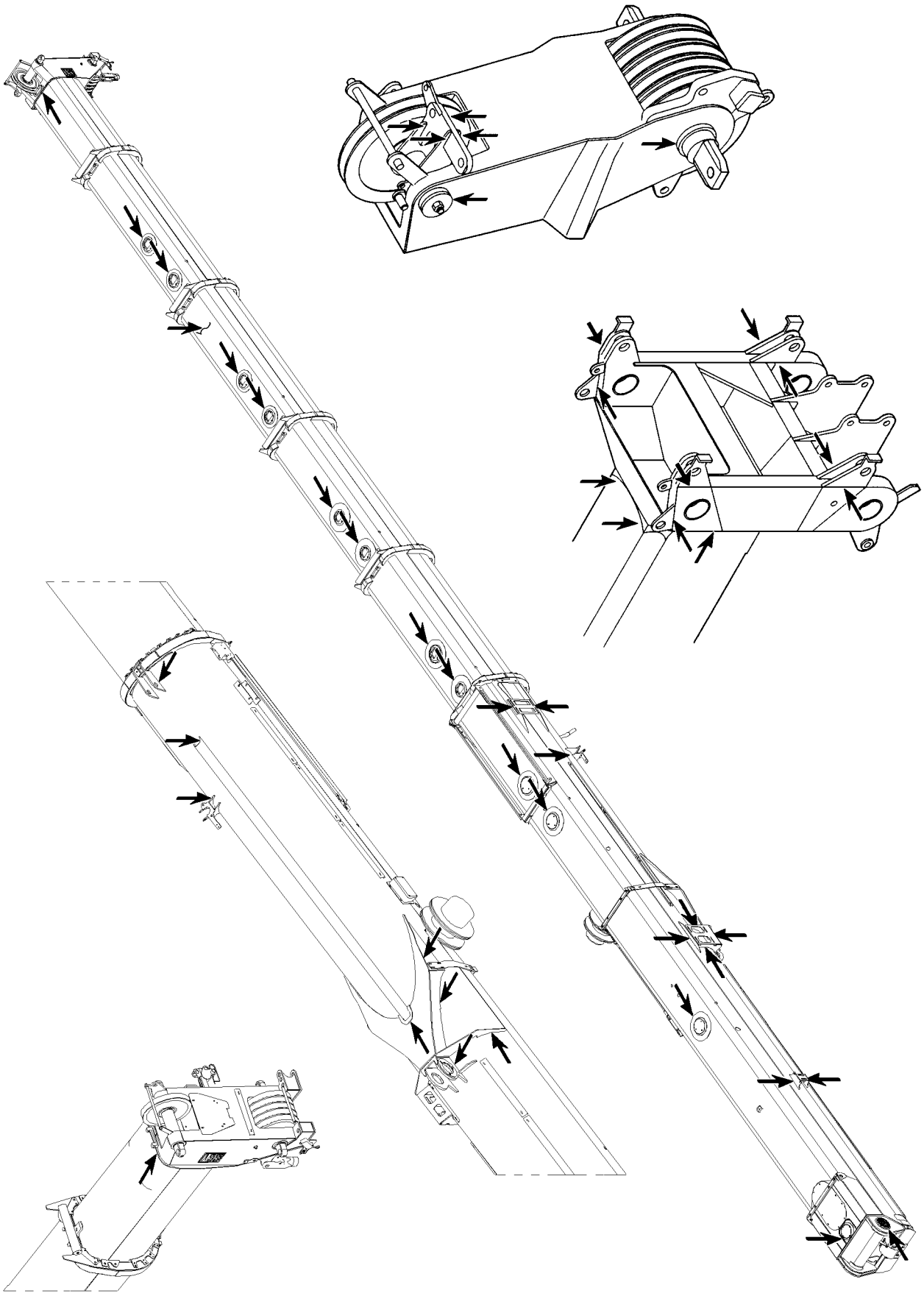

LWE/LR 1600-2-001/18101-07-02/en

Fig.105711: Example for telescopic boom

copyright © Liebherr-Werk Ehingen GmbH 2018

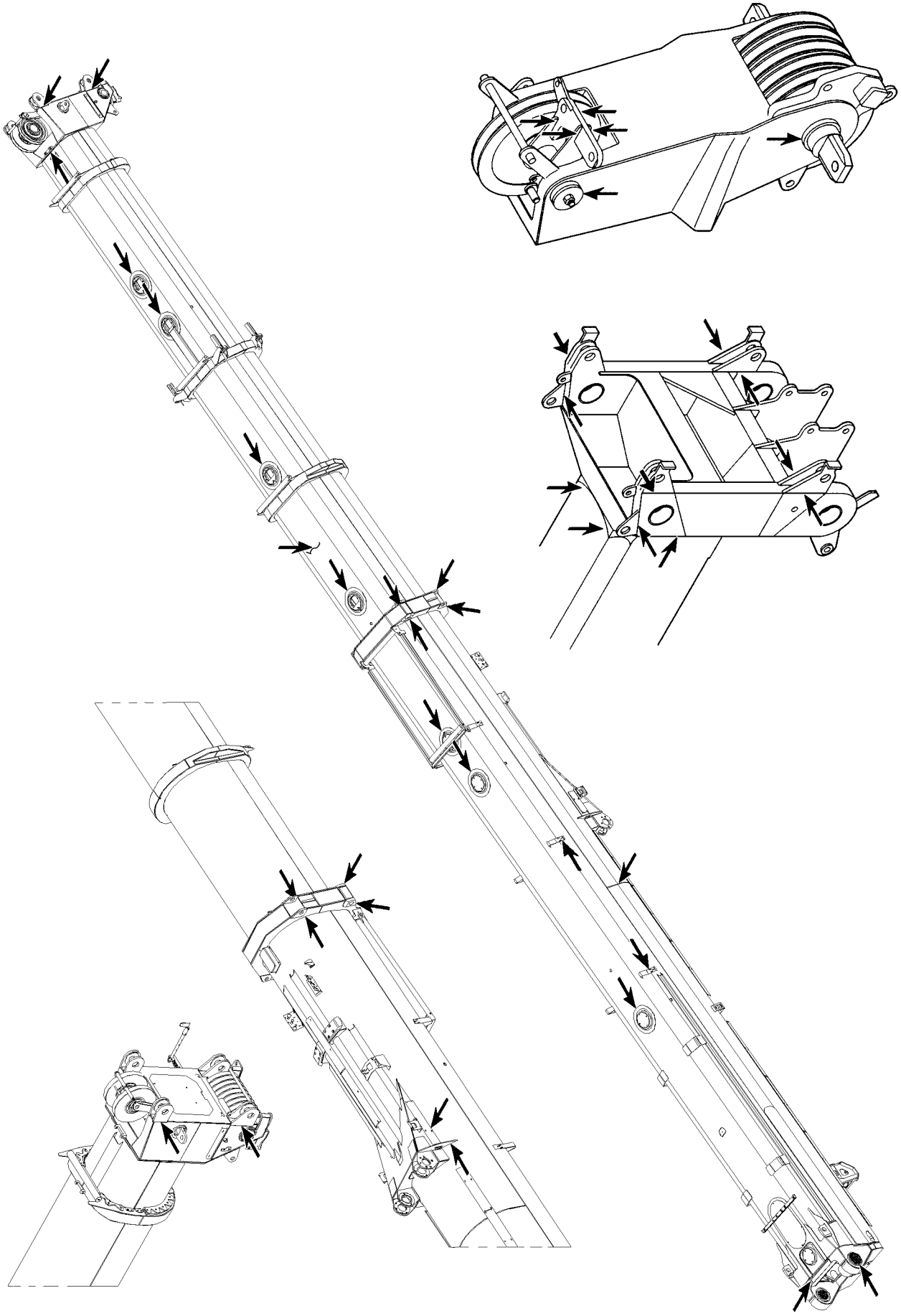

Fig.105720: Example for telescopic boom

LWE/LR 1600-2-001/18101-07-02/en

copyright © Liebherr-Werk Ehingen GmbH 2018

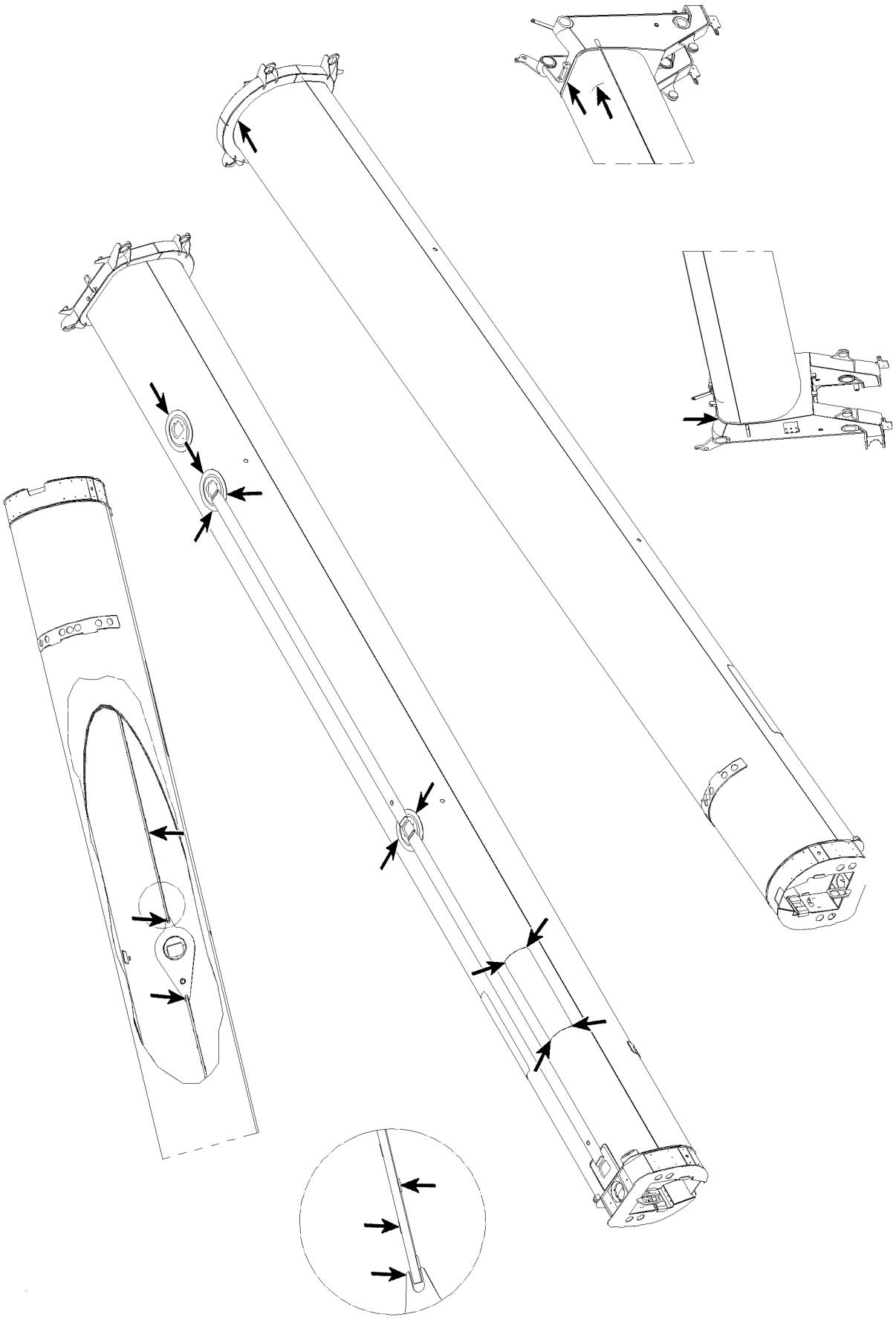

Fig.105721: Example for telescopic boom

LWE/LR 1600-2-001/18101-07-02/en

copyright © Liebherr-Werk Ehingen GmbH 2018

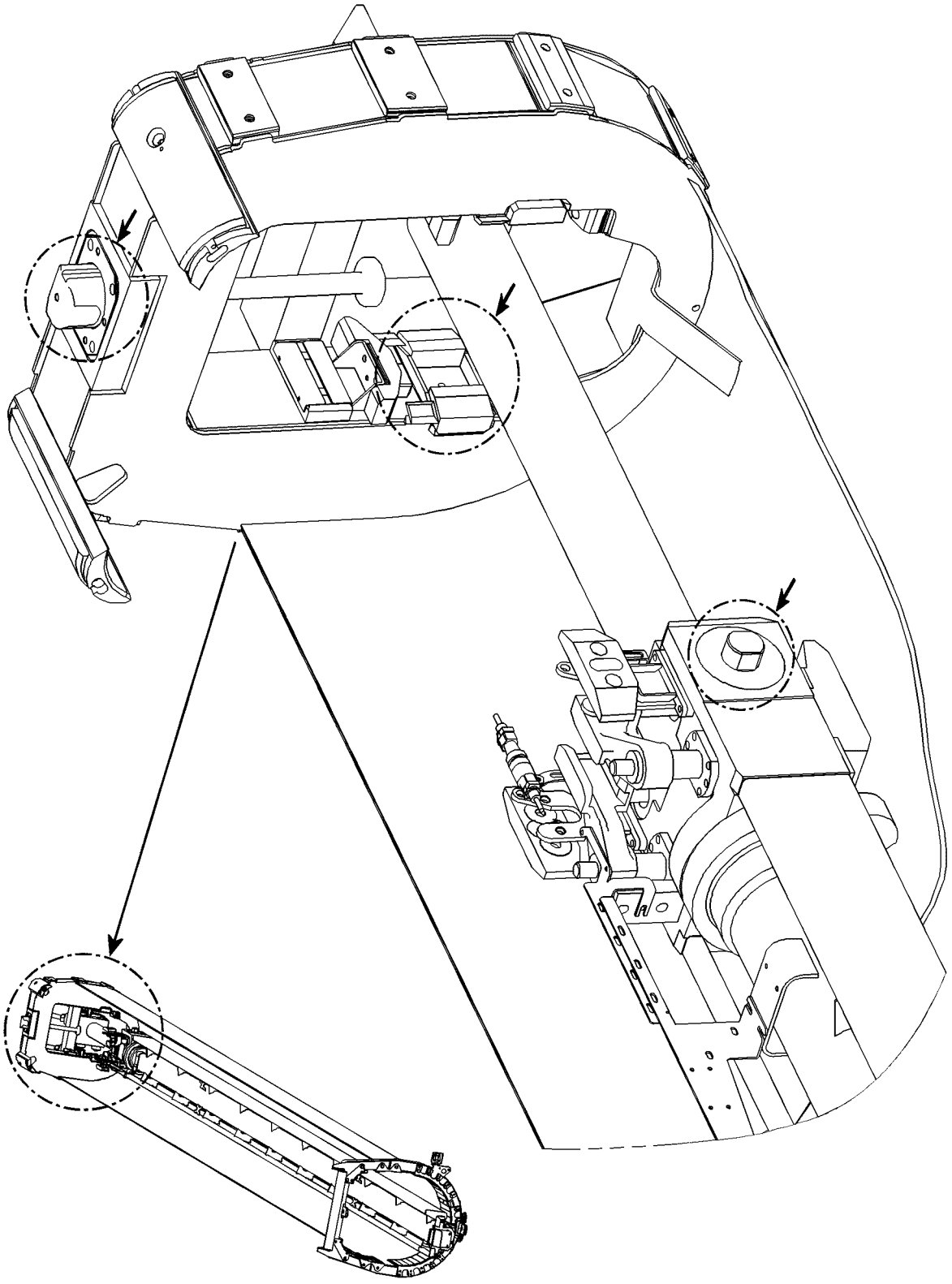

LWE/LR 1600-2-001/18101-07-02/en

Fig.105891: Example for push out mechanics telescopic boom

copyright © Liebherr-Werk Ehingen GmbH 2018

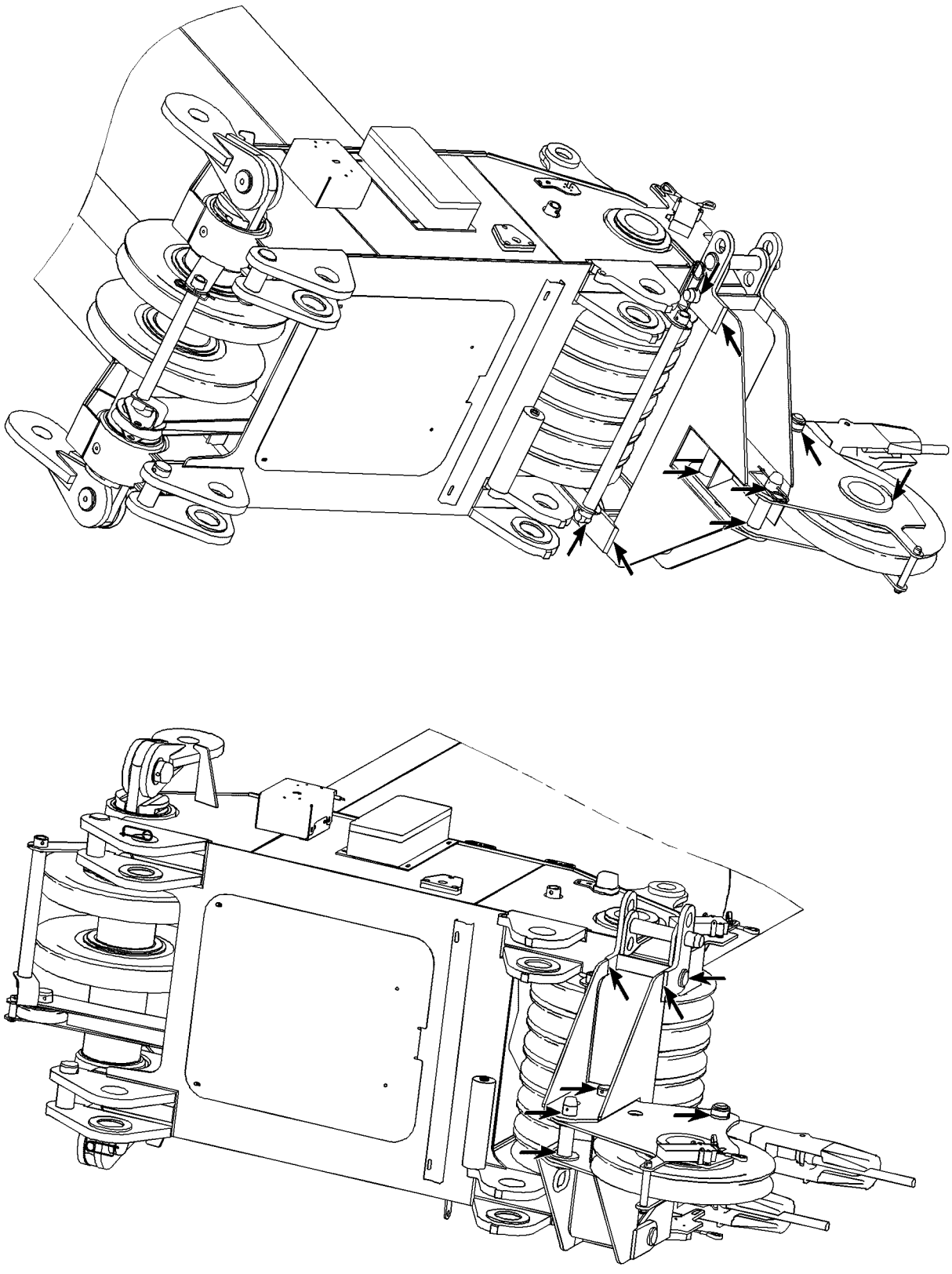

Fig.105892: Example for boom nose

LWE/LR 1600-2-001/18101-07-02/en

copyright © Liebherr-Werk Ehingen GmbH 2018

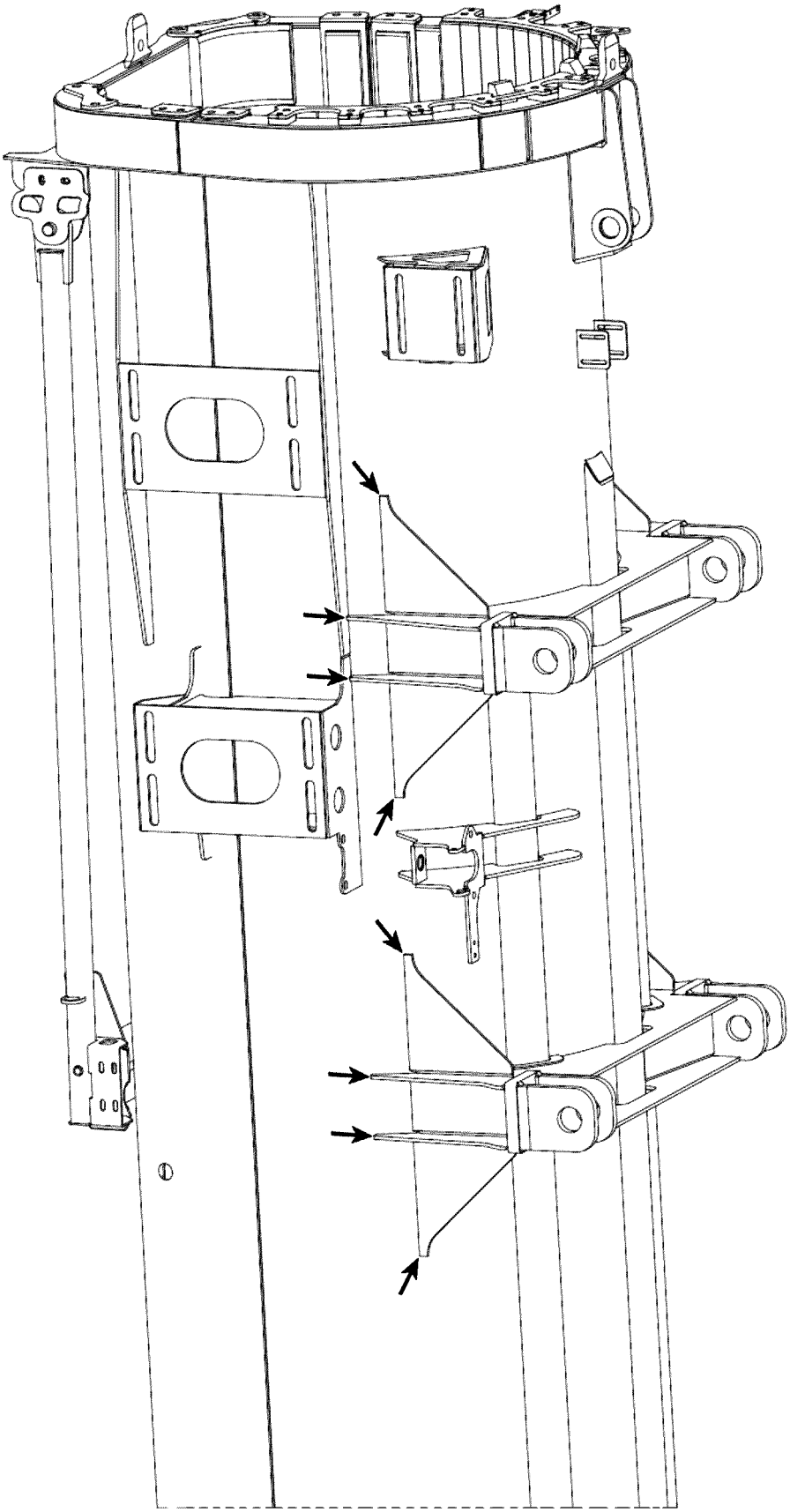

Fig.105689: Example for dolly console

LWE/LR 1600-2-001/18101-07-02/en

copyright © Liebherr-Werk Ehingen GmbH 2018

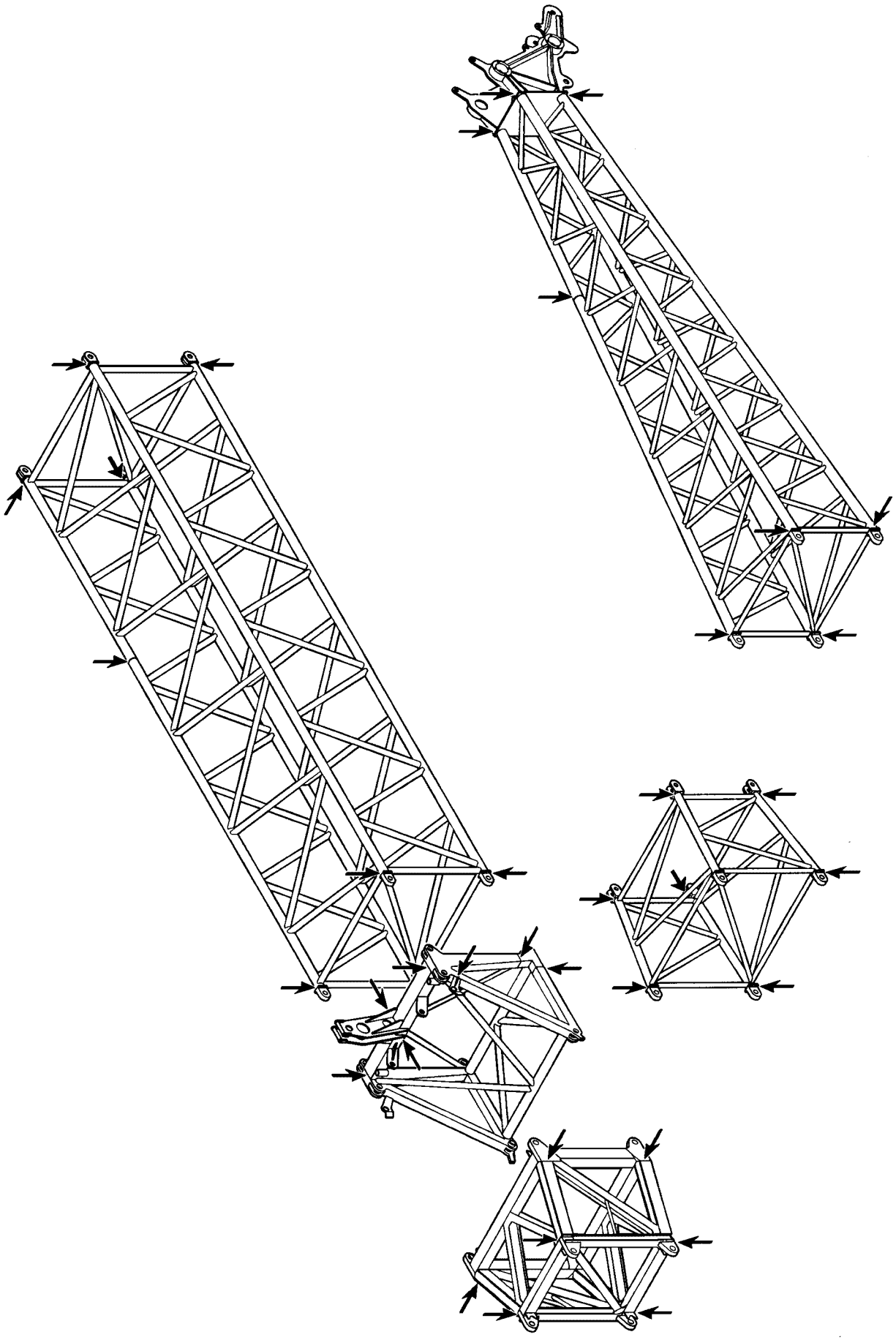

Fig.185051: Example for lattice jib

LWE/LR 1600-2-001/18101-07-02/en

copyright © Liebherr-Werk Ehingen GmbH 2018

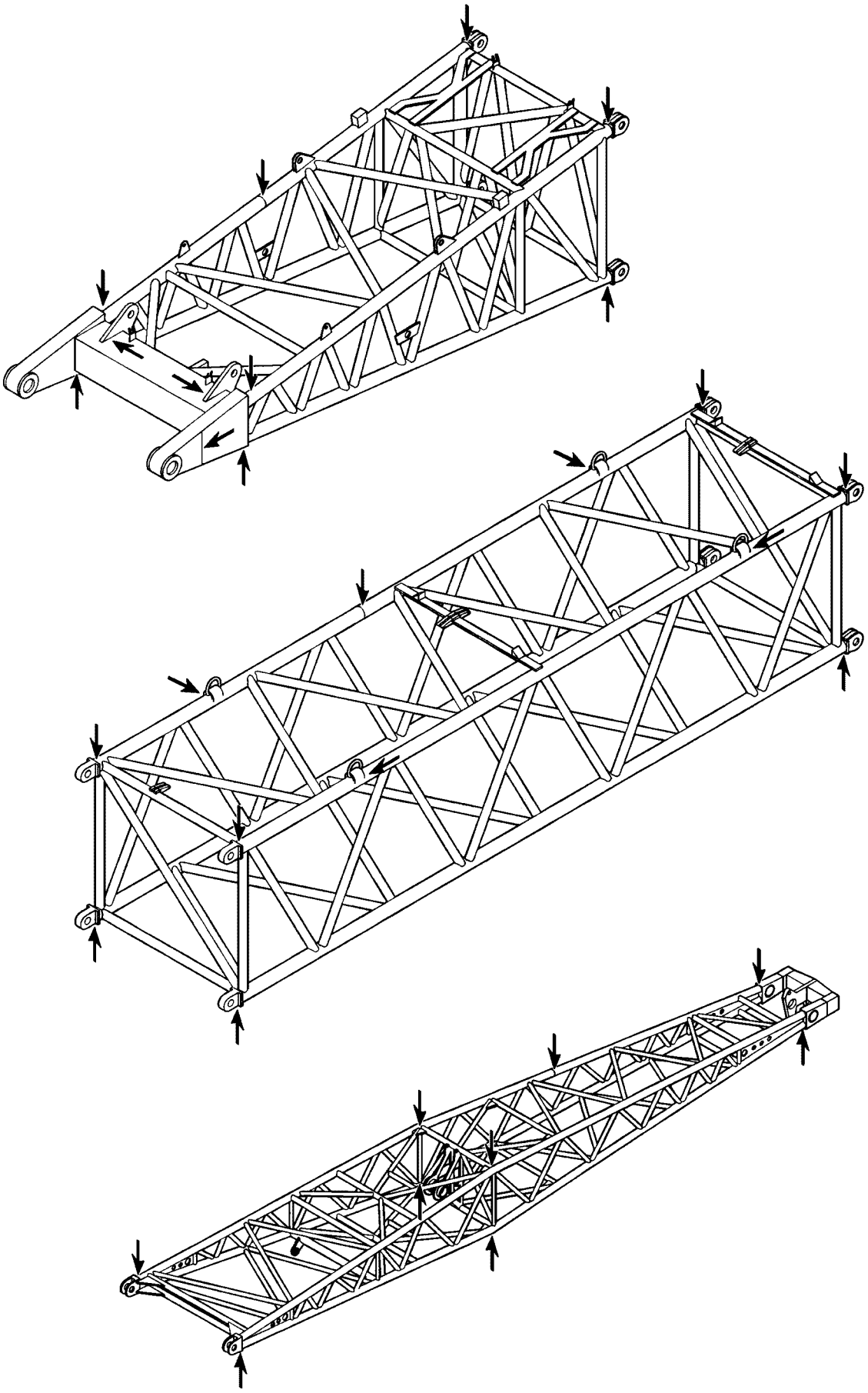

Fig.185052: Example for NA / WA-frame

LWE/LR 1600-2-001/18101-07-02/en

copyright © Liebherr-Werk Ehingen GmbH 2018

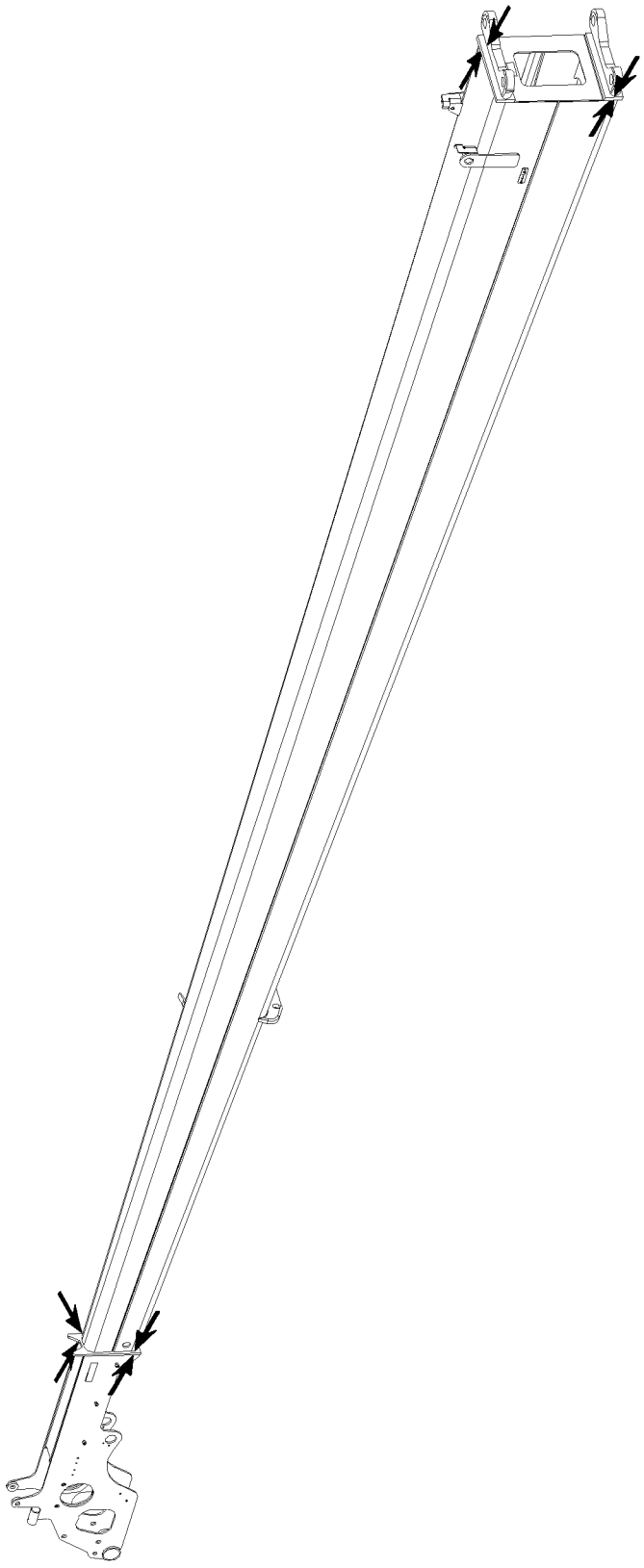

Fig.105713: Example for end section

LWE/LR 1600-2-001/18101-07-02/en

copyright © Liebherr-Werk Ehingen GmbH 2018

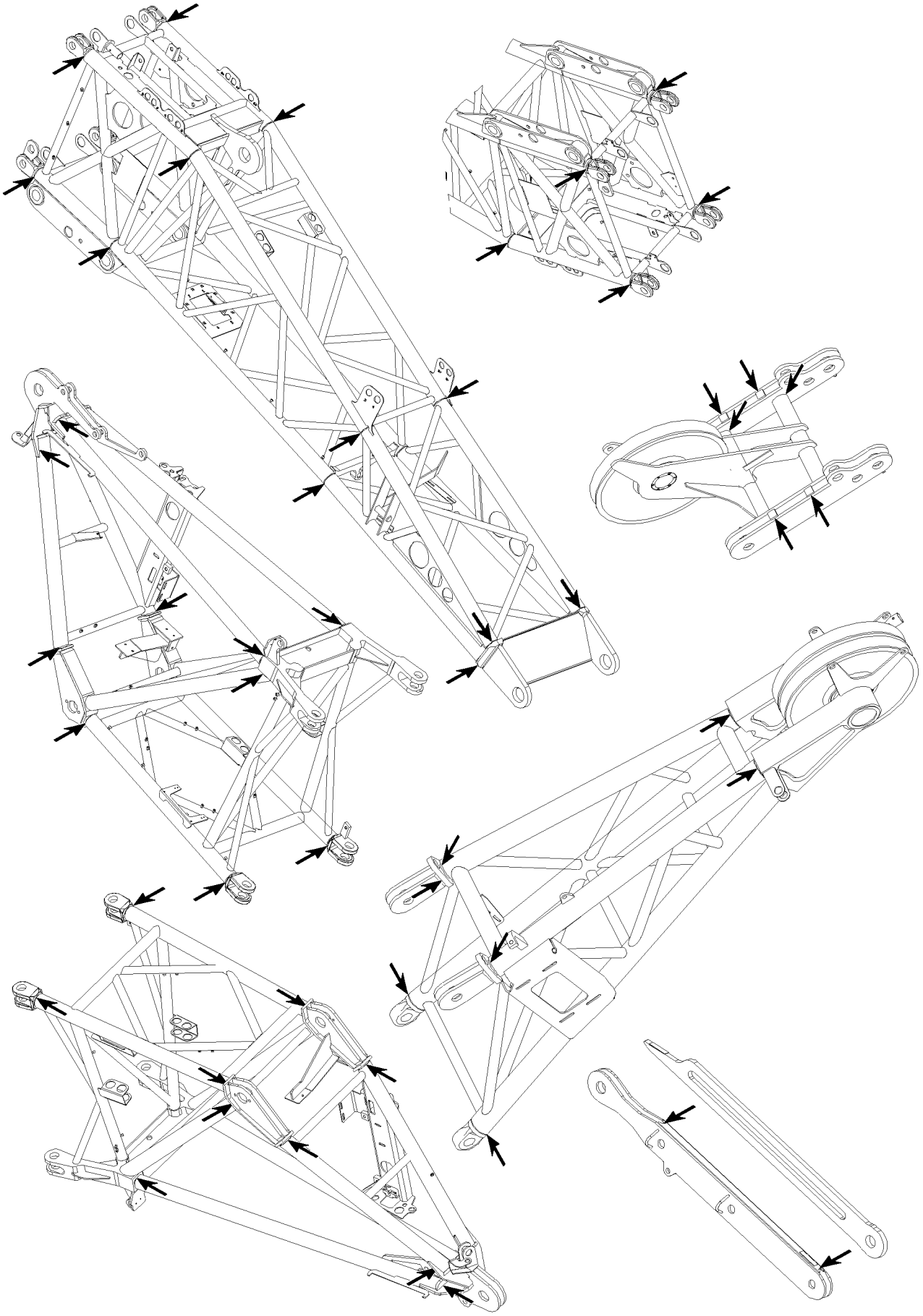

LWE/LR 1600-2-001/18101-07-02/en

Fig.105836: Example for pivot section, adapter and boom nose

copyright © Liebherr-Werk Ehingen GmbH 2018

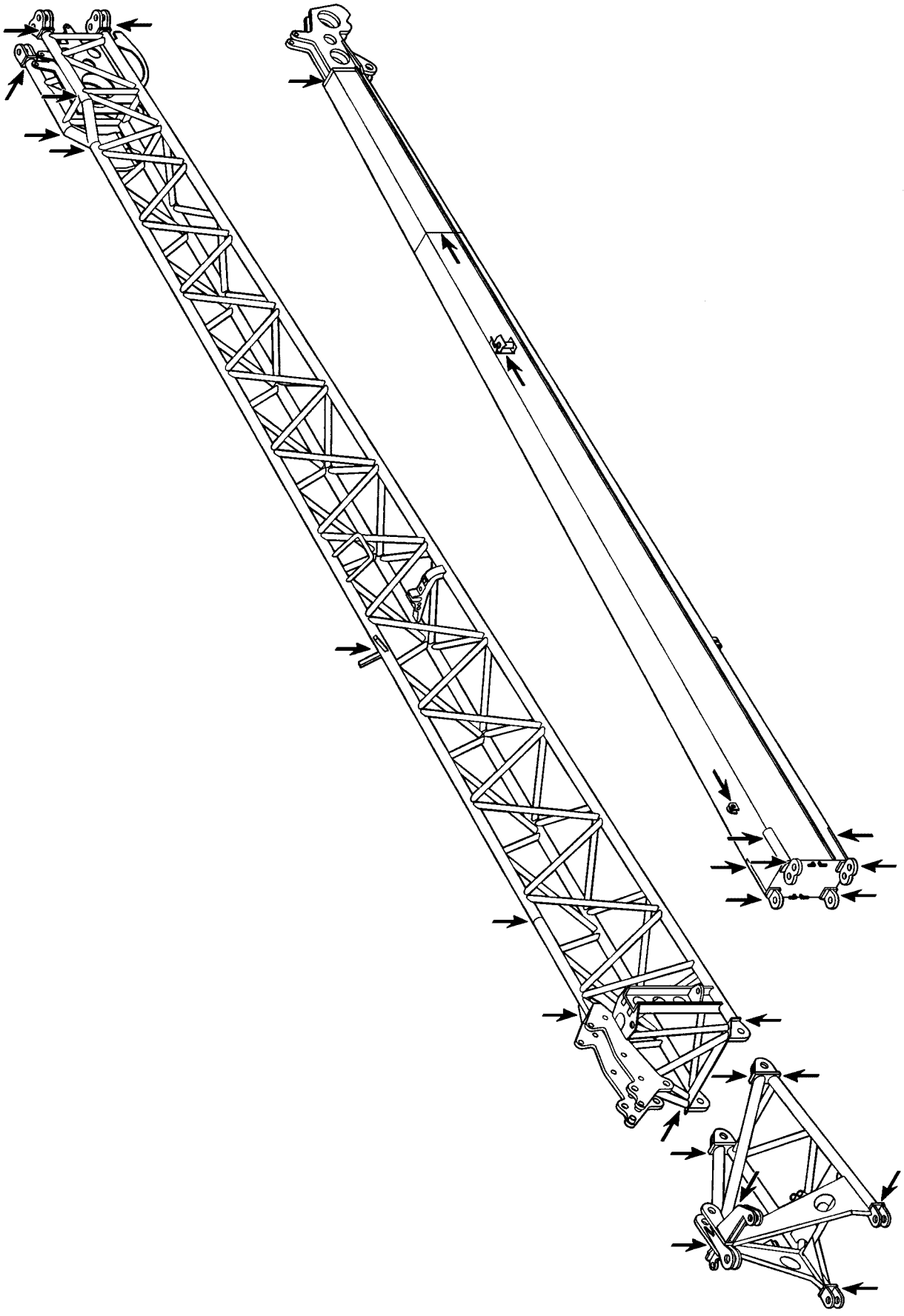

LWE/LR 1600-2-001/18101-07-02/en

Fig.185058: Example for folding jib

copyright © Liebherr-Werk Ehingen GmbH 2018

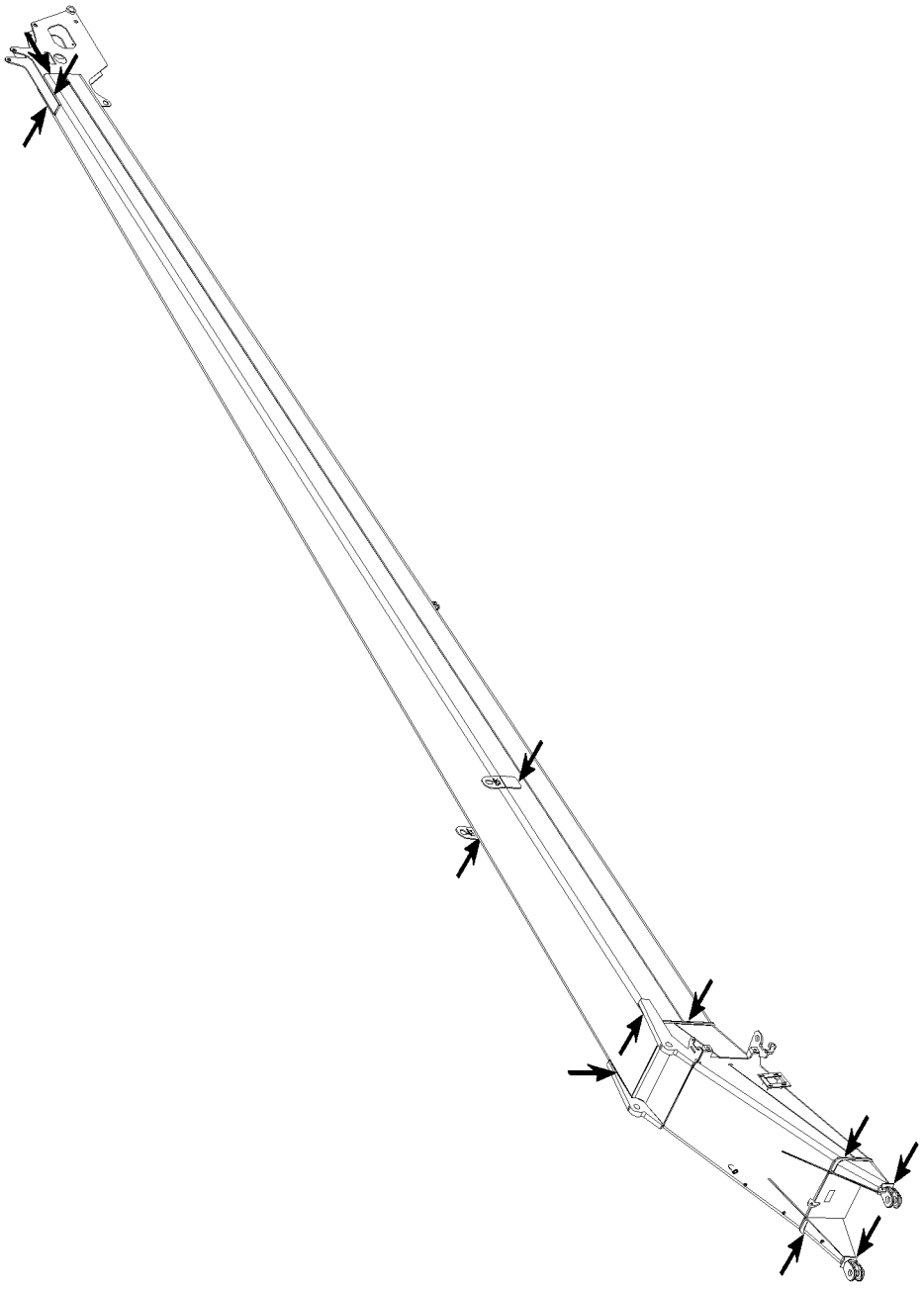

LWE/LR 1600-2-001/18101-07-02/en

Fig.105697: Example for folding jib

copyright © Liebherr-Werk Ehingen GmbH 2018

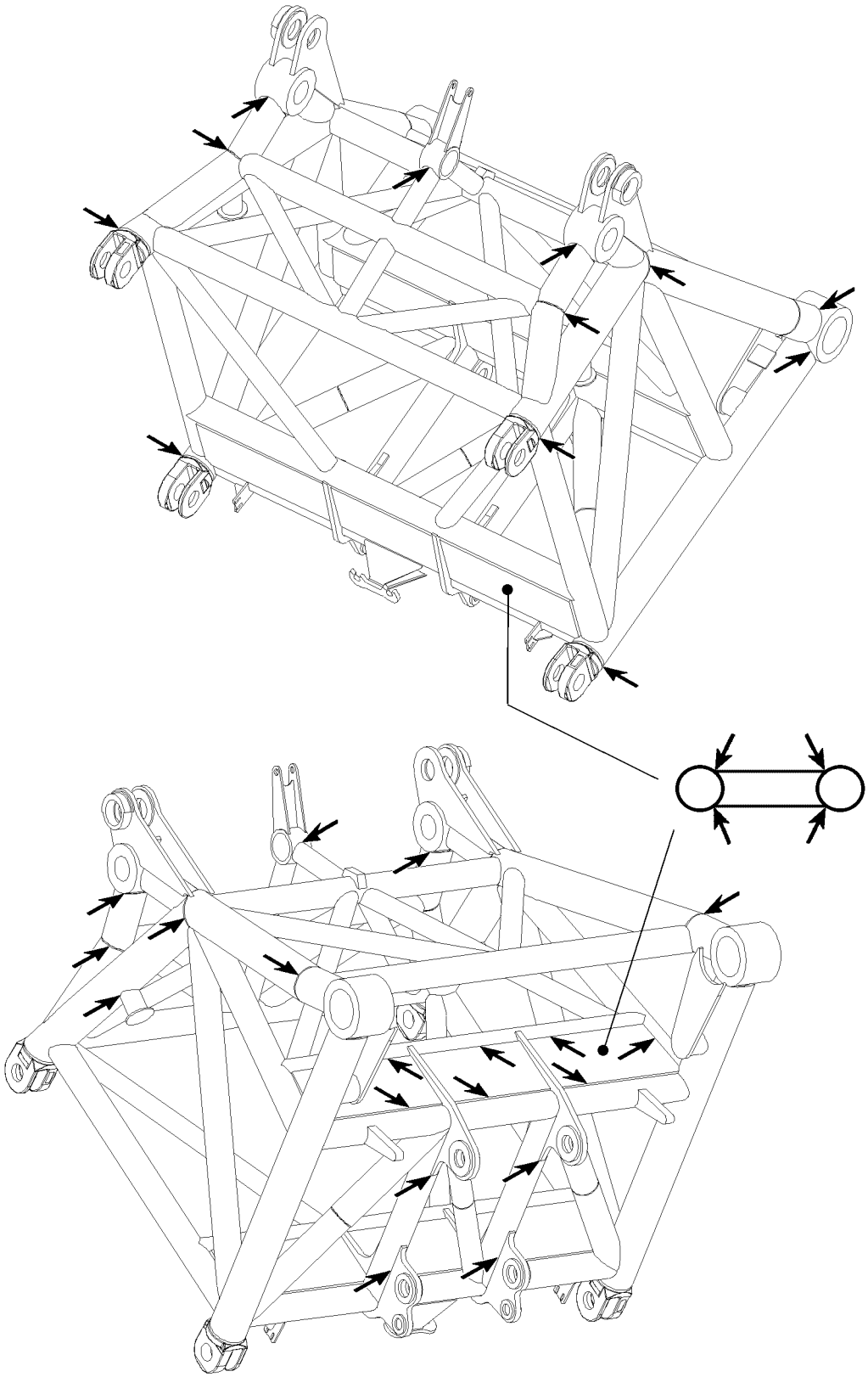

LWE/LR 1600-2-001/18101-07-02/en

Fig.105732: Example for W-connector head

copyright © Liebherr-Werk Ehingen GmbH 2018

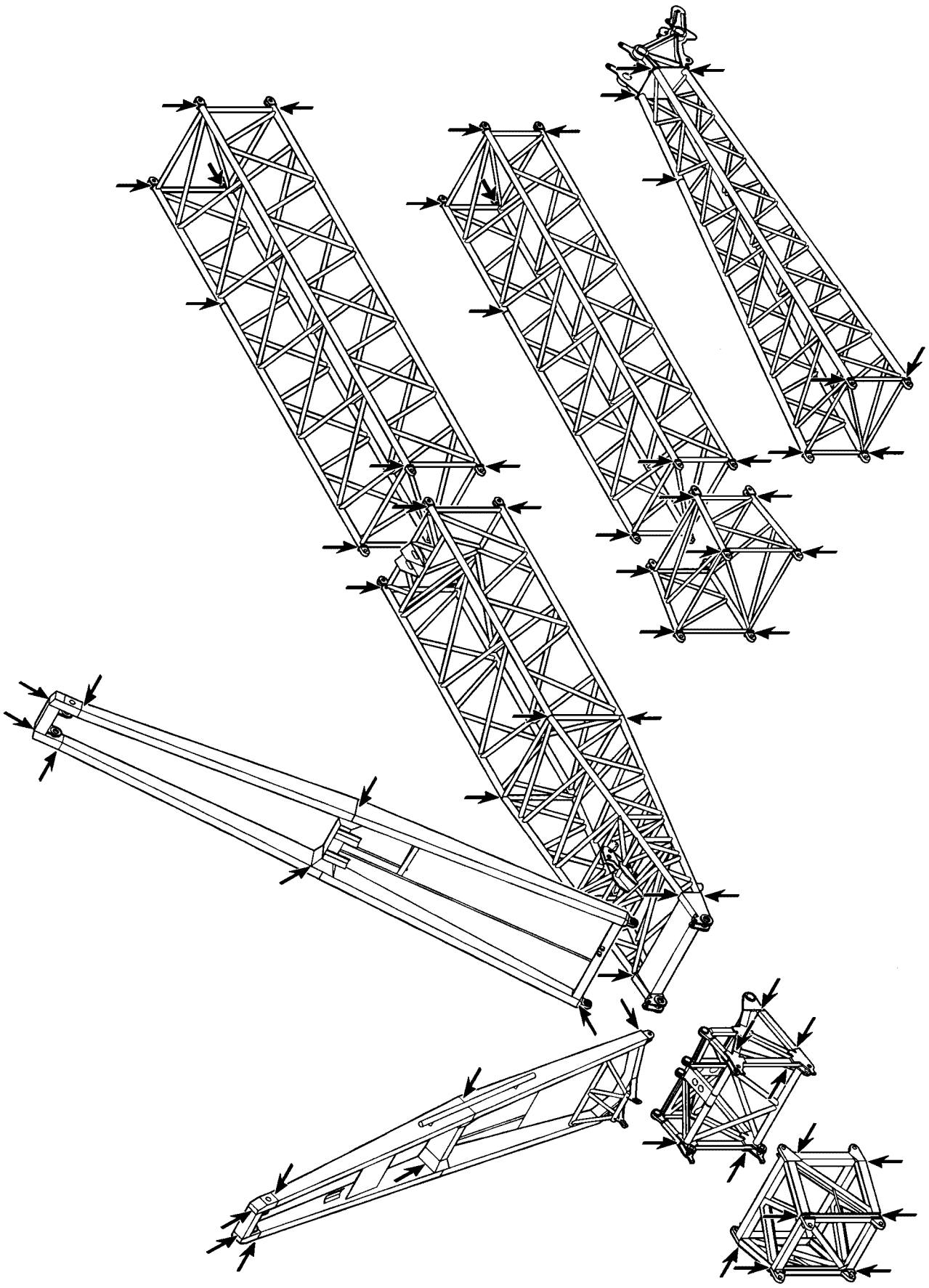

LWE/LR 1600-2-001/18101-07-02/en

Fig.185053: Example for assembly unit with lattice jib

copyright © Liebherr-Werk Ehingen GmbH 2018

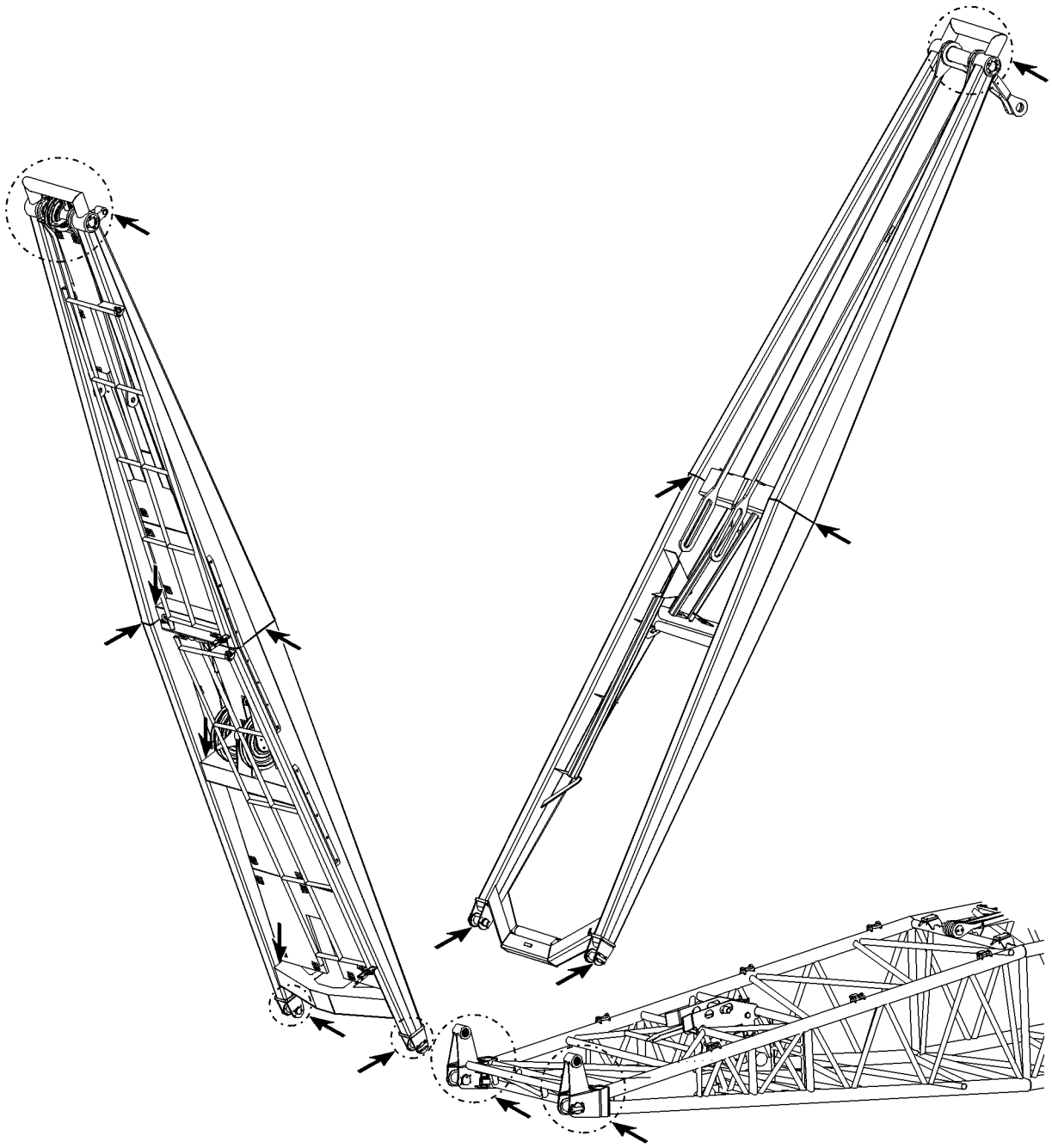

LWE/LR 1600-2-001/18101-07-02/en

Fig.105838: Example for NA frames

copyright © Liebherr-Werk Ehingen GmbH 2018

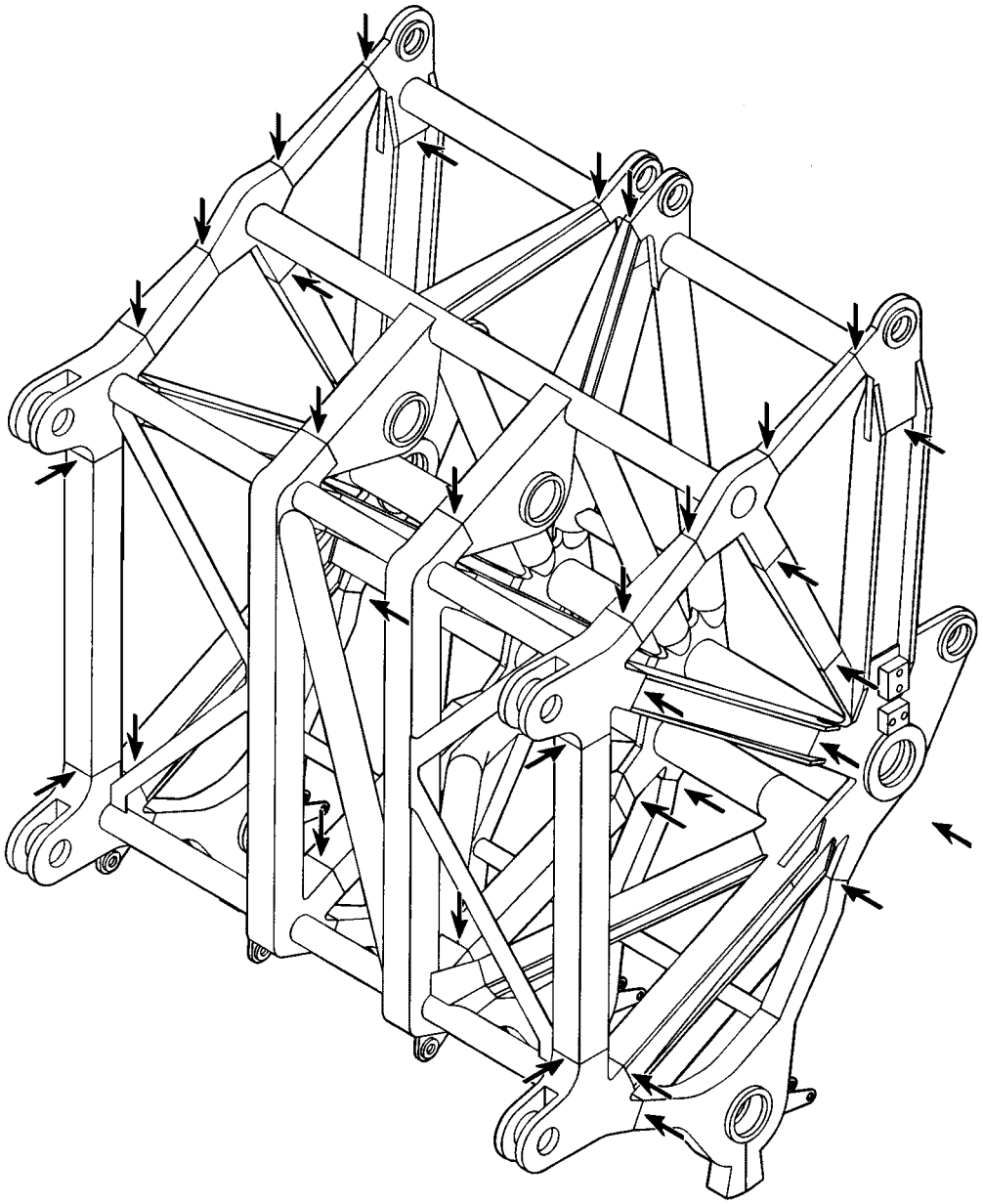

Fig.185054: Example for pulley head

LWE/LR 1600-2-001/18101-07-02/en

copyright © Liebherr-Werk Ehingen GmbH 2018

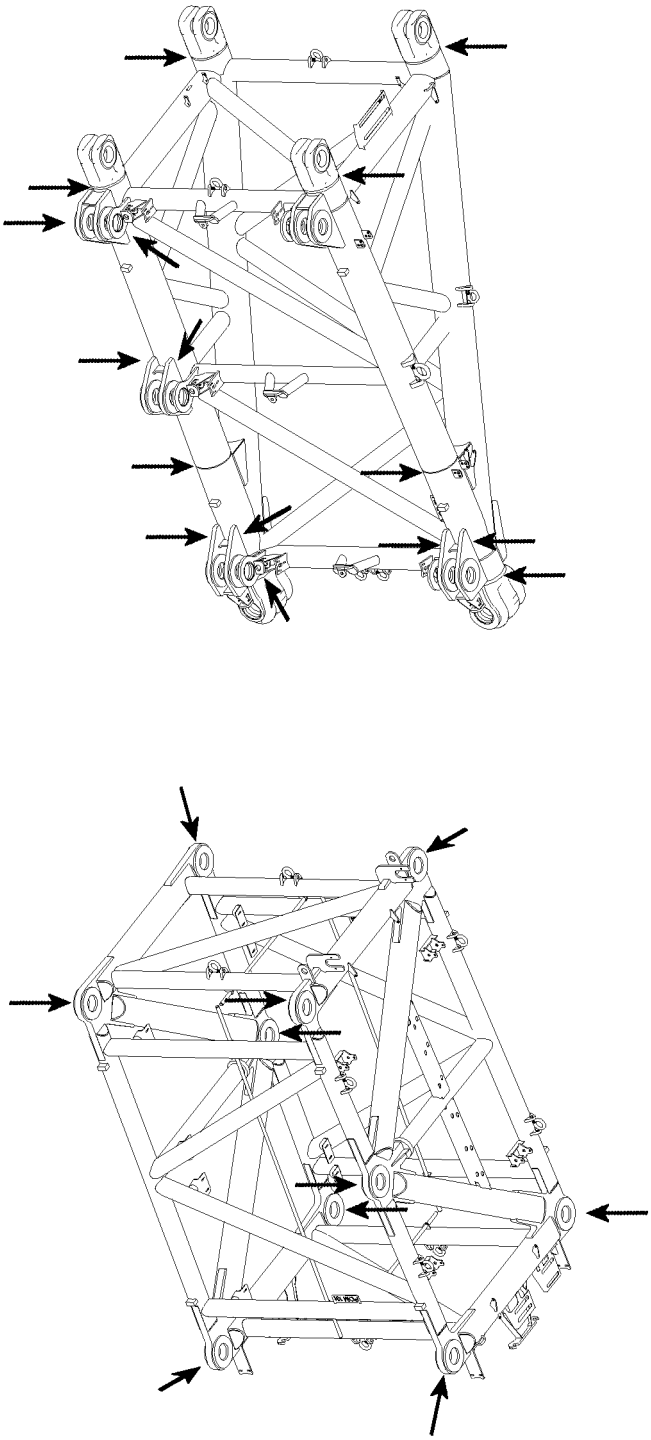

Fig.116609: Example for P-adapter

LWE/LR 1600-2-001/18101-07-02/en

copyright © Liebherr-Werk Ehingen GmbH 2018

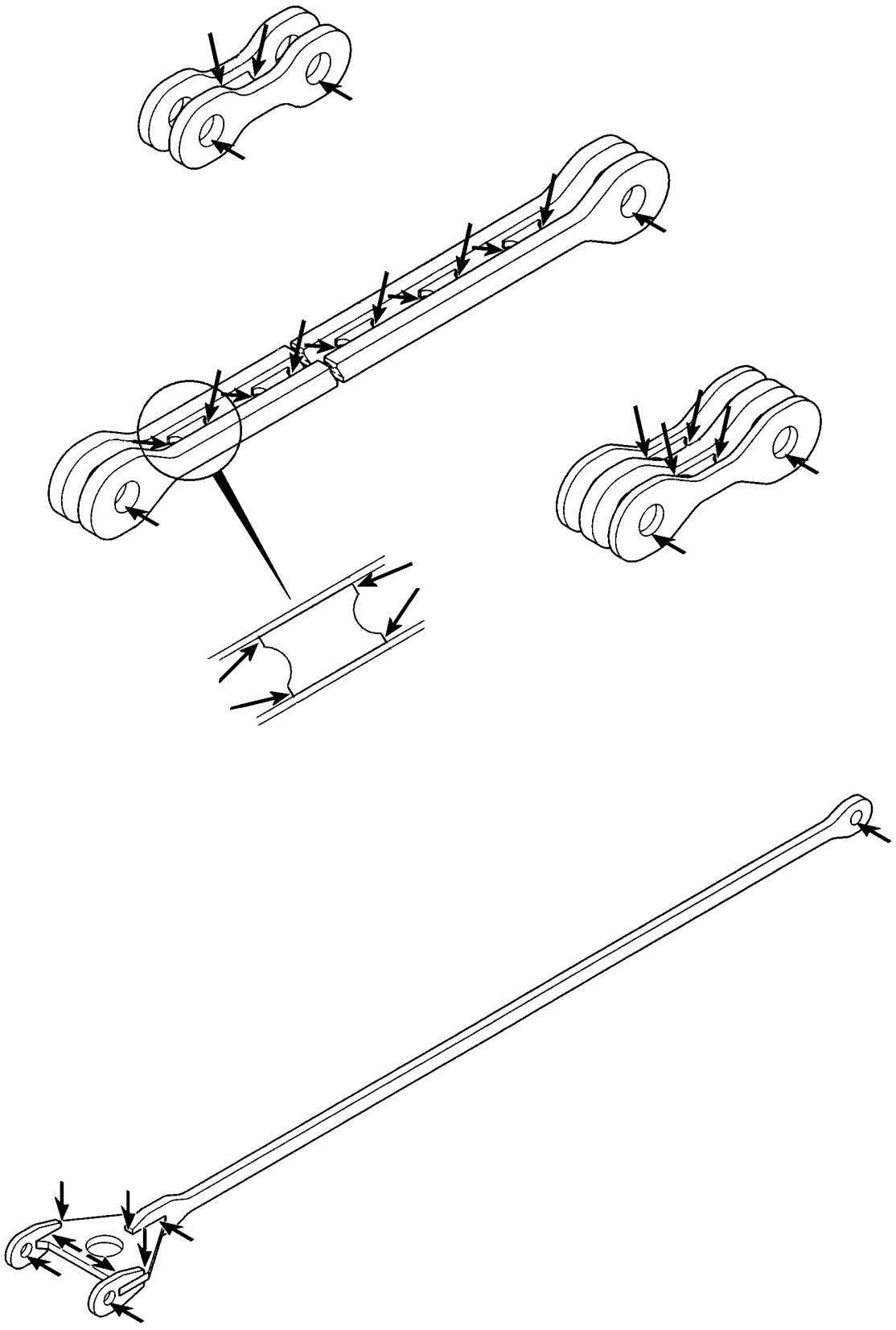

LWE/LR 1600-2-001/18101-07-02/en

Fig.185055: Example for guy rod

copyright © Liebherr-Werk Ehingen GmbH 2018

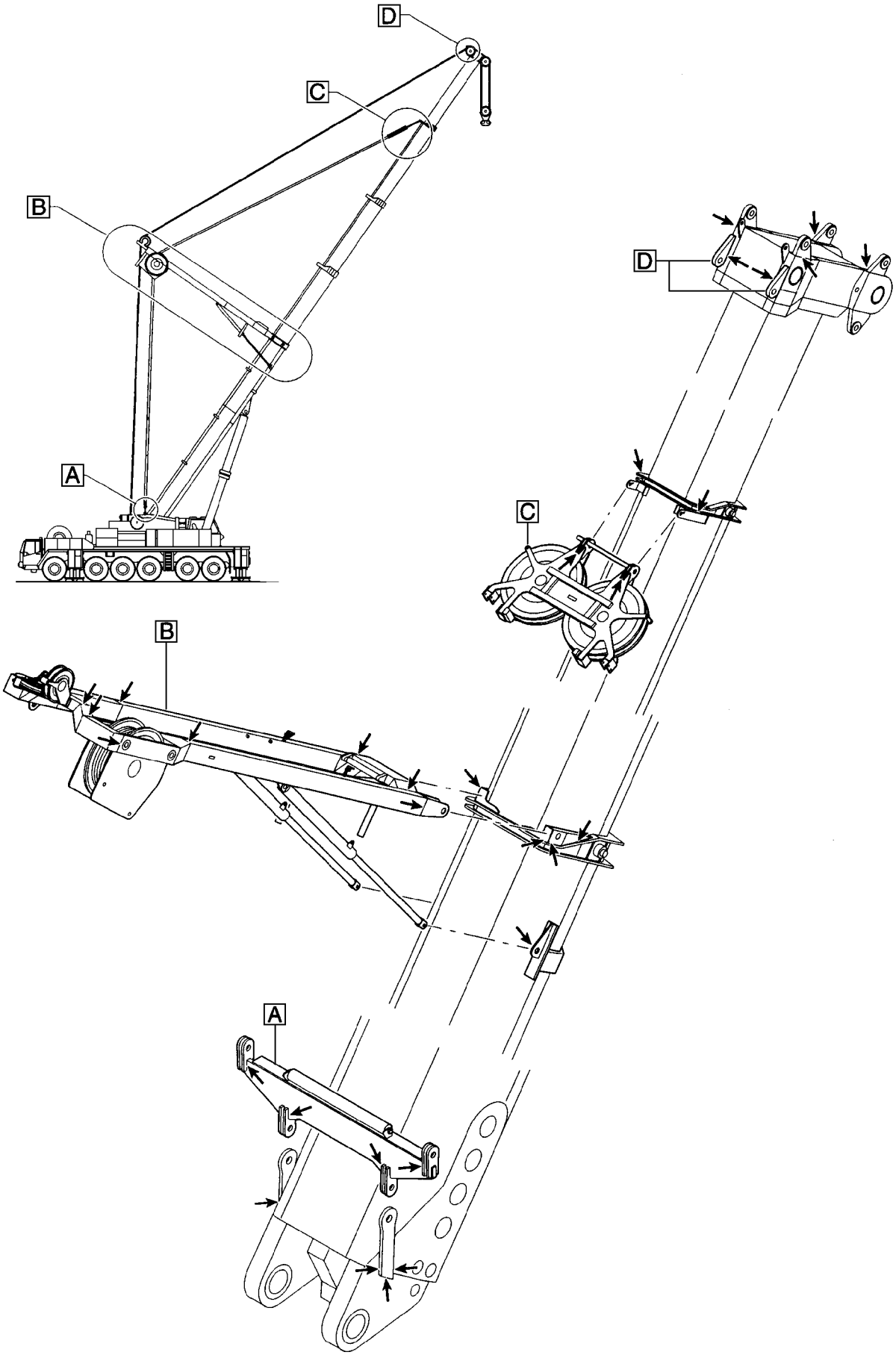

LWE/LR 1600-2-001/18101-07-02/en

Fig.185059: Example for TA-guying

copyright © Liebherr-Werk Ehingen GmbH 2018

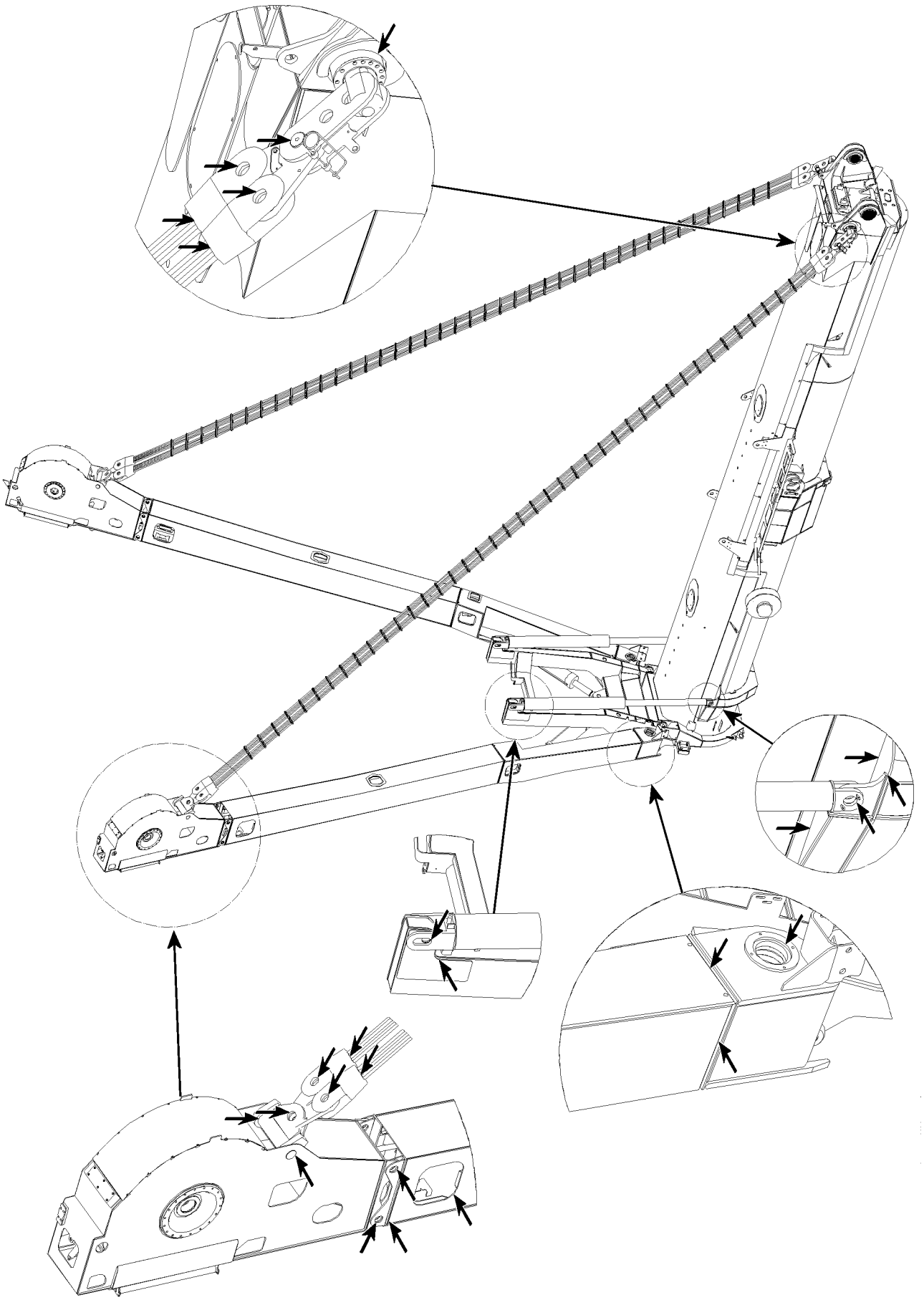

LWE/LR 1600-2-001/18101-07-02/en

Fig.105707: Example for TY-guying

copyright © Liebherr-Werk Ehingen GmbH 2018

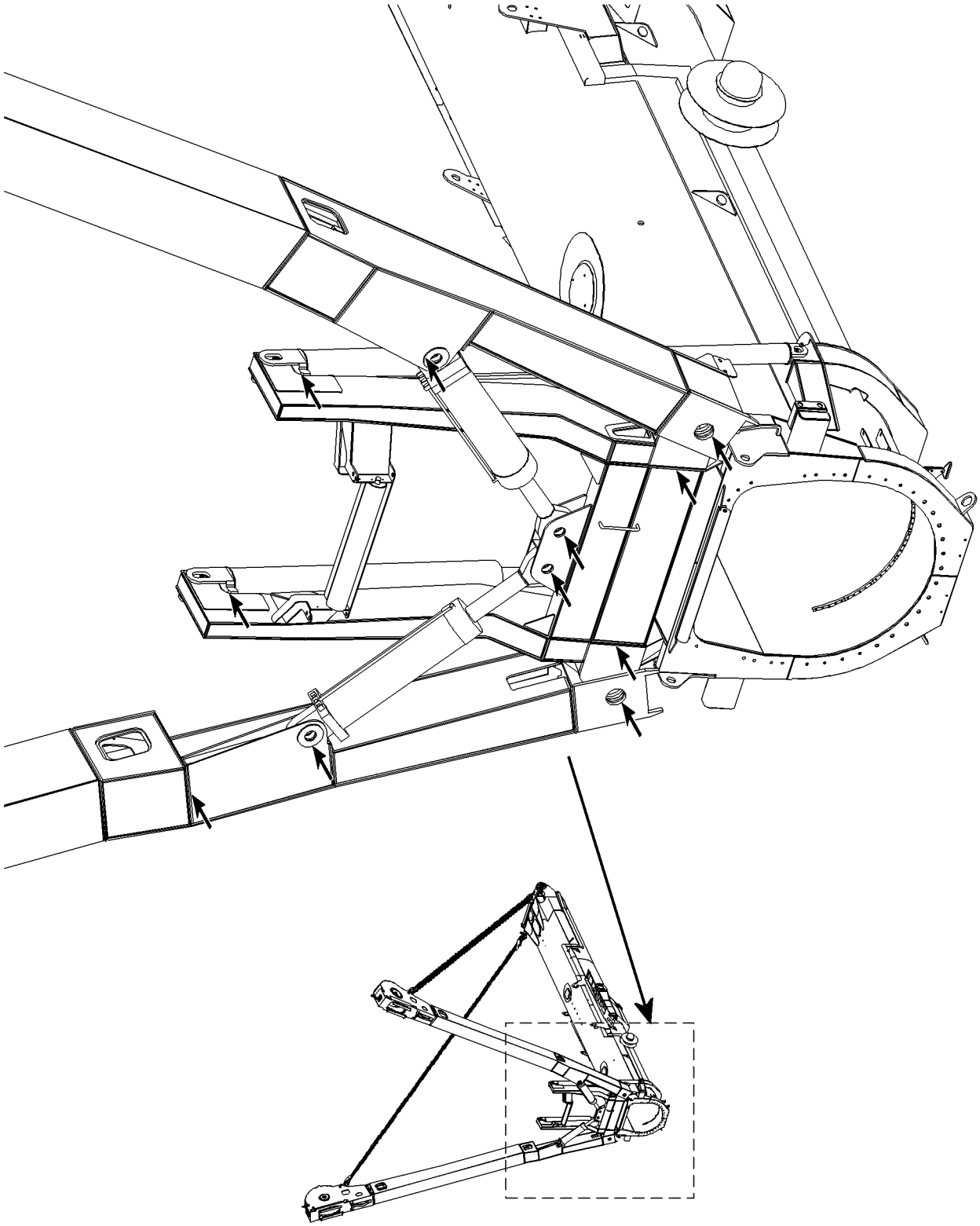

LWE/LR 1600-2-001/18101-07-02/en

Fig.105708: Example for TY-guying

copyright © Liebherr-Werk Ehingen GmbH 2018

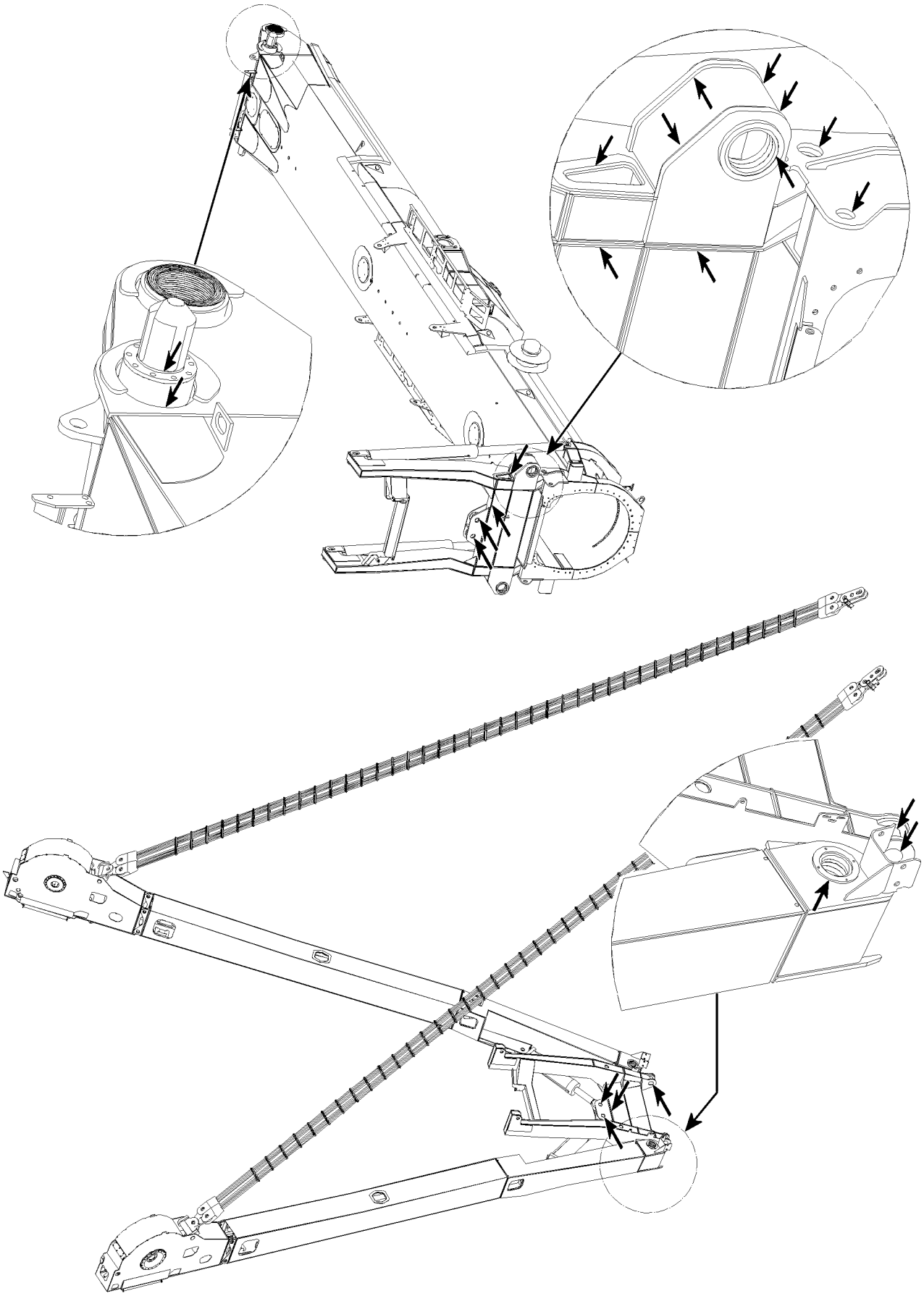

LWE/LR 1600-2-001/18101-07-02/en

Fig.105709: Example for TY-guying

copyright © Liebherr-Werk Ehingen GmbH 2018

2.4 Rigging and fastening points

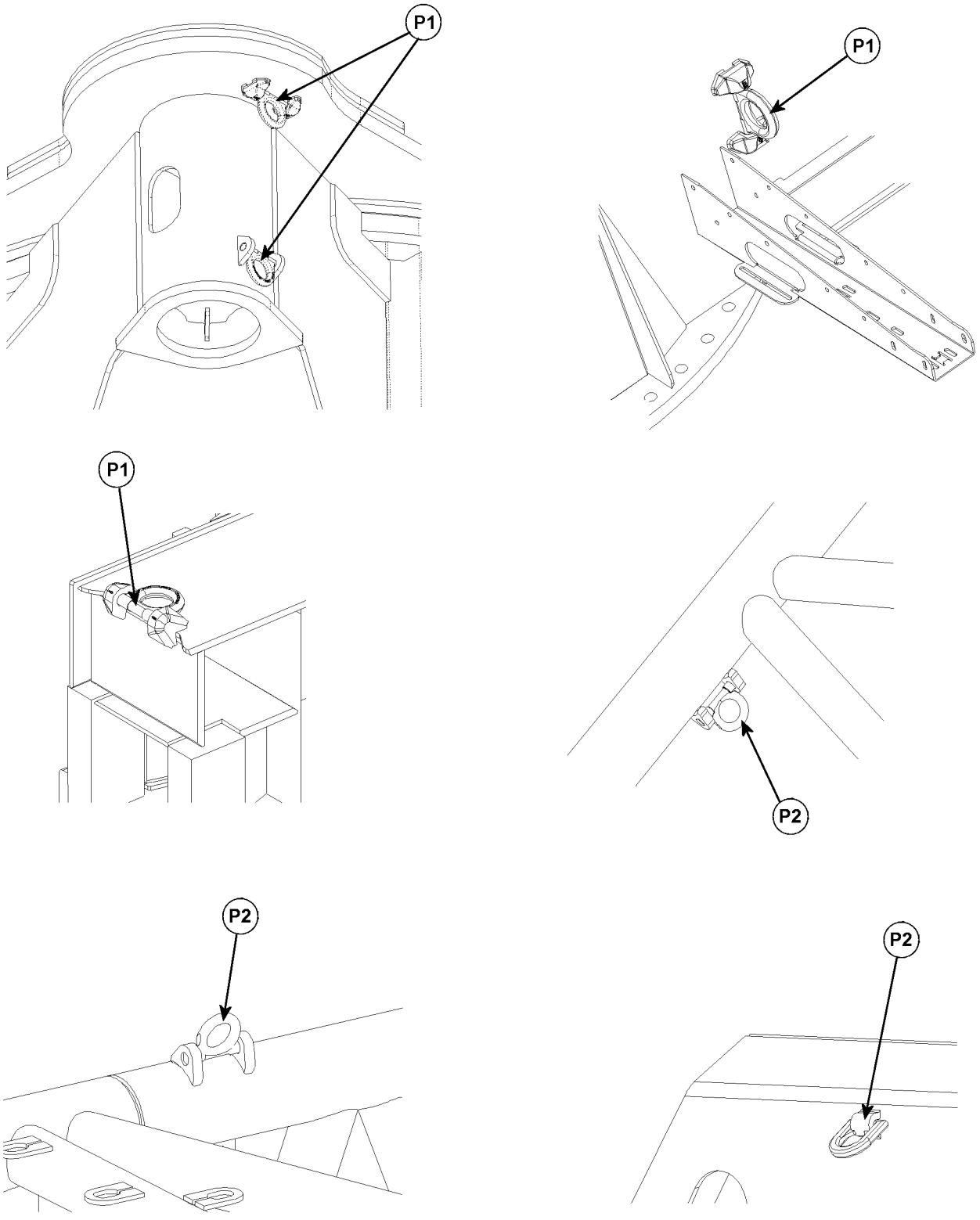

Fig.121160: Examples for rigging and fastening points

P1 Rigging points **P2** Fastening points

LWE/LR 1600-2-001/18101-07-02/en

copyright © Liebherr-Werk Ehingen GmbH 2018

WARNING
Unsafe rigging point or fastening point!
The mobile crane or component can rip free and fall down!

When a rigging point or fastening point is not safe for operation:
▶ Have the rigging point or fastening point replaced by authorized and trained expert personnel.
▶ Avoid damage on the rigging device due to sharp-edged exposure.

Make sure that the following damage does **not** occur:
– Crushing points
– Shearing points
– Catch points
– Impact points

Inspection criteria:
– Completeness of rigging point.
– Distortion of carrying parts.
– Mechanical damage such as severe nicks.
– Changes in diameter due to wear.
– Significant corrosion (pitting)
– Cracks on carrying parts.
– Cracks or other damage on the welding seam.

Check the rigging points **P1** and fastening points **P2** before every start up and at regular intervals.

2.5 Inspecting the lattice sections

Note
▶ The illustration is only an example and is valid for all lattice sections!
▶ Check all diagonal and frame pipe connections!
▶ Check all bores of the fork - finger connections!

LWE/LR 1600-2-001/18101-07-02/en

copyright © Liebherr-Werk Ehingen GmbH 2018

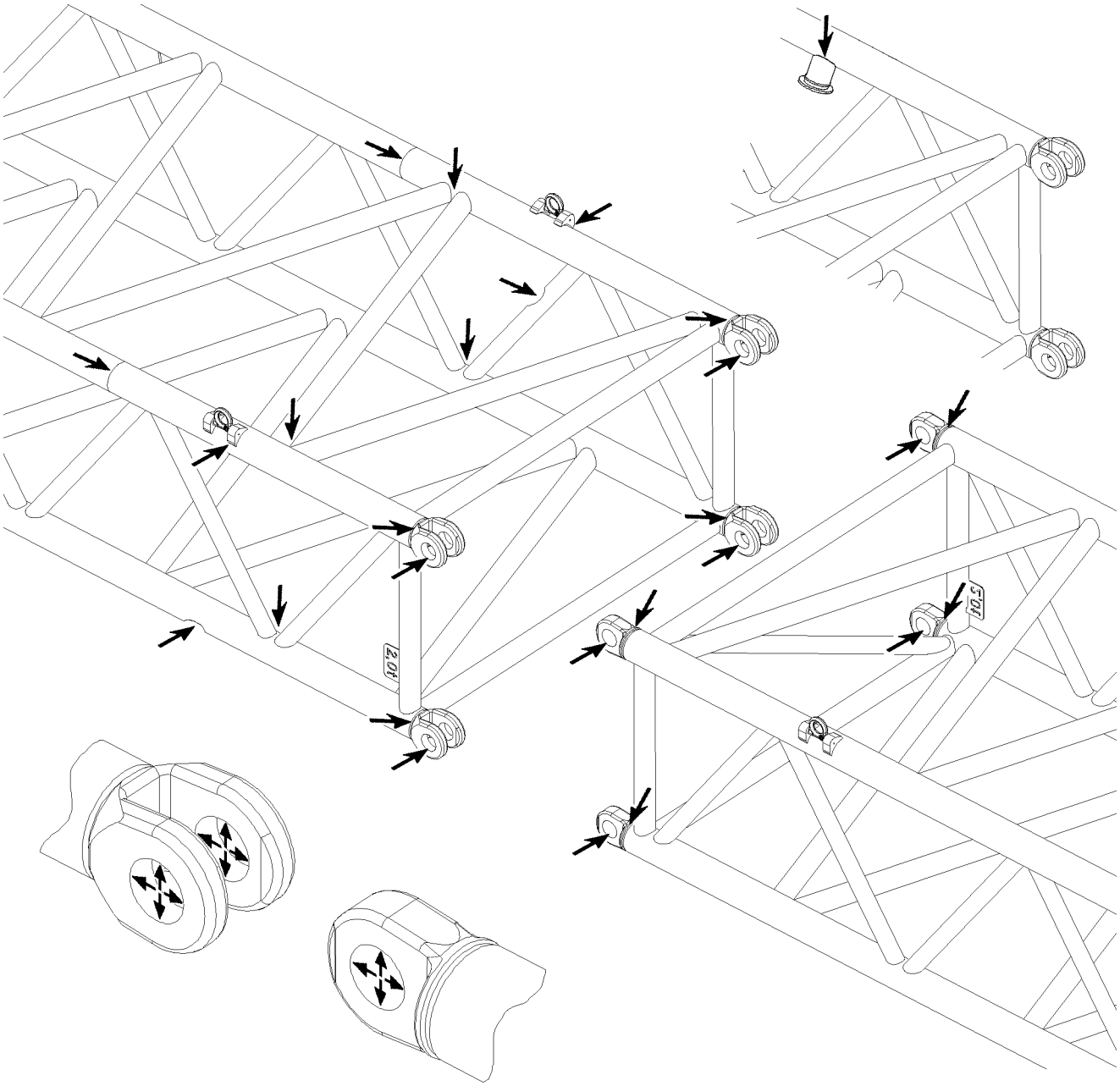

Fig.121023: Example for lattice sections

3 Inspection of locking system of telescopic boom

3.1 For cranes with pneumatic boom locking system

- For inspection of function, see chapter 8.11.
- For inspection of pin wear pattern, see chapter 8.11.
- For inspection of wear, see chapter 8.11.
- For inspection of safety control, see chapter 8.11.

LWE/LR 1600-2-001/18101-07-02/en

copyright © Liebherr-Werk Ehingen GmbH 2018

3.2 For cranes with telescopic boom system Telematik

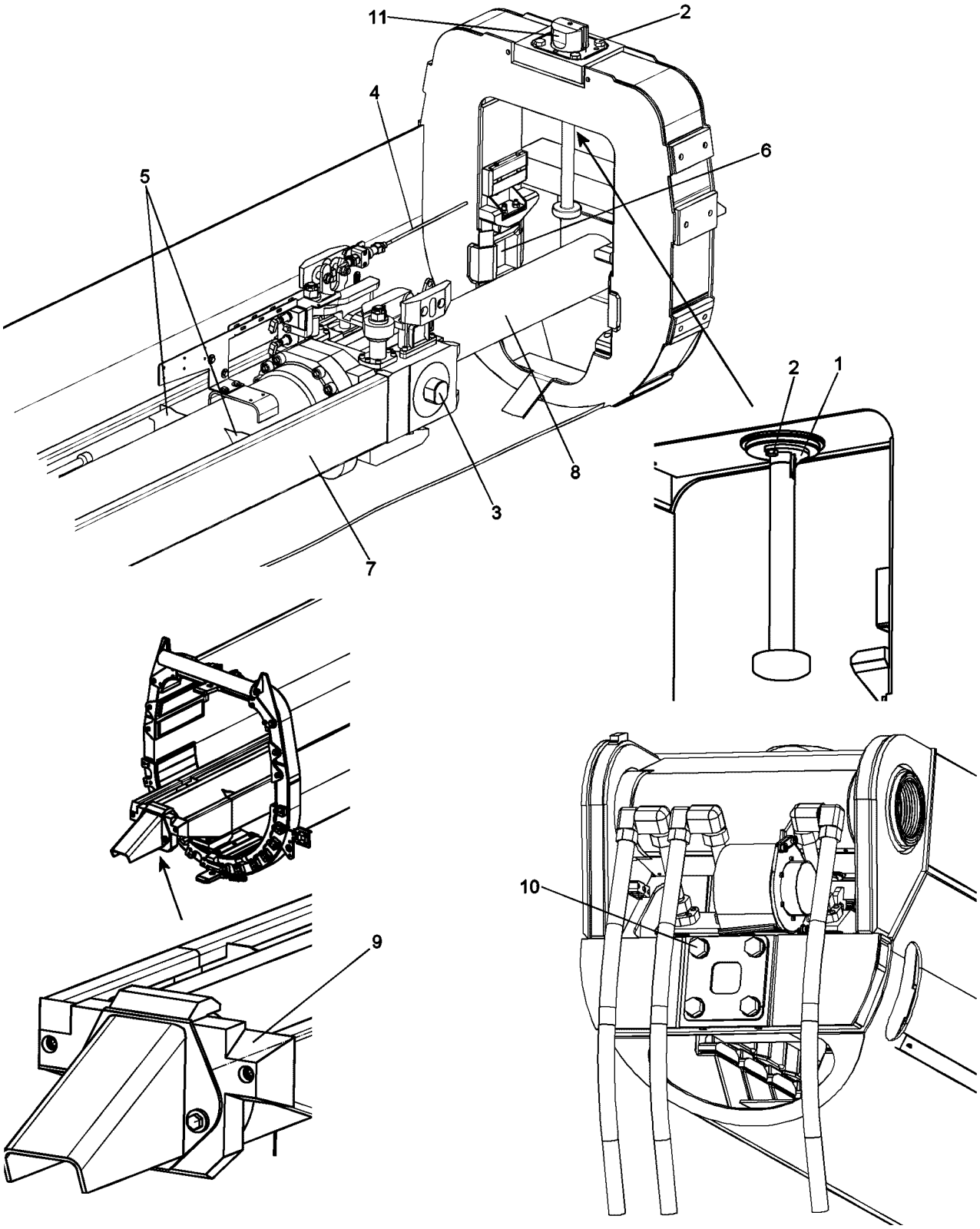

Fig.109286

- Inspection of the pull knob safety **1** and all mounting screws **2** for tight seating
- Inspection of twist guards of cylinder pinning **3** and the telescopic boom pinning **11**
- Inspection of the length sensor rope **4** for damage
- Inspection of the cylinder barrel in the area of all welding seams **5** for crack formation
- Inspection of the locking pockets **6** for damage

LWE/LR 1600-2-001/18101-07-02/en

copyright © Liebherr-Werk Ehingen GmbH 2018

- Grease the guide rail **7**
- In case of leakage: Inspection of the piston rod **8** for grooves
- Inspection of the wear pattern on the cylinder pinning **3** and the telescopic boom pinning **11**
- Inspection of guide rail **7** for distortion of contour
- Inspection of plastic guide **9** on cylinder bottom for damage
- Inspection of all mounting screws **10** on the push out cylinder for tight seating

4 Inspection of safety ropes and anchor points

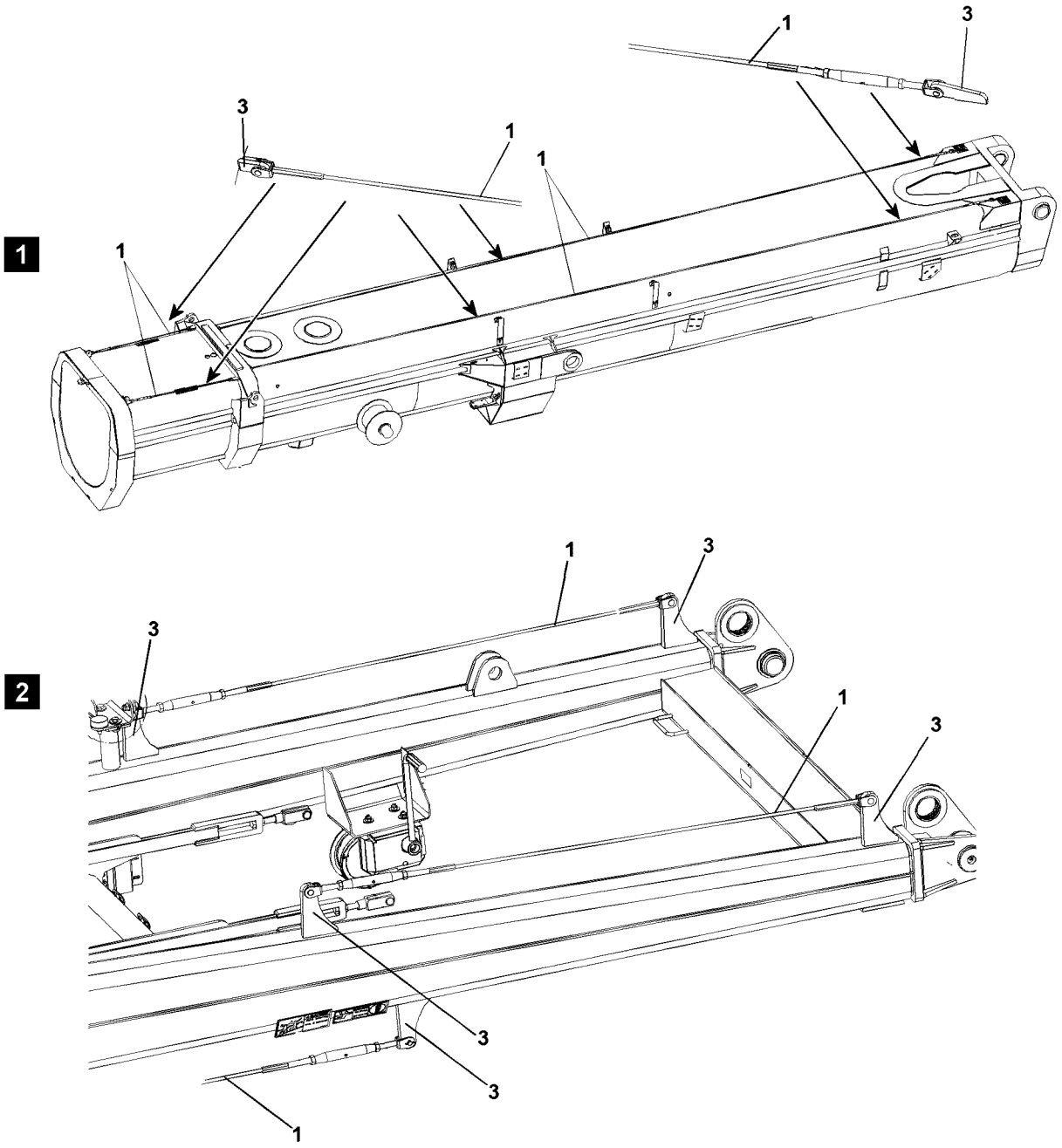

Fig.127130

LWE/LR 1600-2-001/18101-07-02/en

copyright © Liebherr-Werk Ehingen GmbH 2018

WARNING
Danger of falls due to damaged safety ropes or anchor points!
The safety ropes **1** and anchor points **3** must be checked **at least once a year** by **authorized inspectors** for safety and damage!
If any defects are found on the safety ropes **1** or anchor points **3** during the inspections, then the safety ropes **1** or anchor points **3** must be replaced immediately by authorized and trained specialists! If this is not observed, assembly personnel could be killed or fatally injured in a fall!
- ▶ The rope pretension on the safety ropes must be 800 N !
- ▶ Have damaged safety ropes **1** or anchor points **3** replaced immediately by trained expert personnel!

Note
Document the inspections in writing!
- ▶ The scope and results of tests should be documented to permit reproducibility. This documentation forms part of the crane records and should be safely stored during the entire service life of the crane.

4.1 Checking of rope pretension on telescopic booms, illustration 1

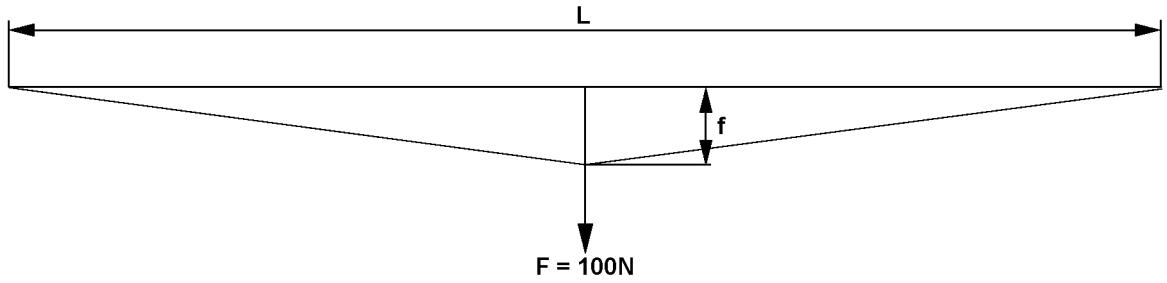

Fig.112738

The rope pretension must be 800 N. This can be checked with the aid of a spring balance, which is pulled centered on the safety rope. If the specified deflection (f) depending on the rope length (L) according to the following charts results for the raised load F = 100 N then the rope pretension of 800 N is set correctly.

Rope pretension is 800 N if:					
Rope length (L)	1.0 m	1.5 m	2.0 m	2.5 m	3.5 m
Deflection (f)	15 mm	25 mm	30 mm	40 mm	55 mm

Rope pretension is 800 N if:					
Rope length (L)	5.5 m	7.5 m	9.5 m	11.5 m	13.5 m
Deflection (f)	85 mm	115 mm	145 mm	180 mm	215 mm

LWE/LR 1600-2-001/18101-07-02/en

copyright © Liebherr-Werk Ehingen GmbH 2018

4.2 Inspection of rope pretension on lattice sections, illustration 2

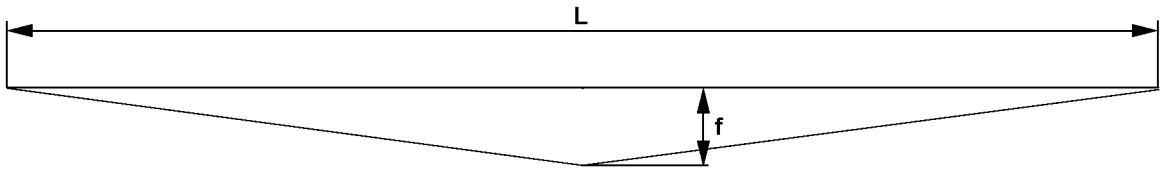

Fig.117747

The rope pretension is 800 N , if a sag (f) according to the chart is present on the safety rope according to the rope length (L).

Rope pretension is 800 N if:					
Rope length (L)	1.0 m	1.5 m	2.0 m	2.5 m	3.5 m
Deflection (f)	0	1 mm	2 mm	3 mm	6 mm

Rope pretension is 800 N if:					
Rope length (L)	5.5 m	7.5 m	9.5 m	11.5 m	13.5 m
Deflection (f)	15 mm	28 mm	45 mm	66 mm	90 mm

5 Inspection of load handling equipment and assembly aids

WARNING
Load handling equipment and / or assembly aids **not** inspected!
Death, severe bodily injuries, property damage.
▶ Inspect load handling equipment and / or assembly aids at least once a year.

The recurring inspection of the load handling equipment and / or assembly aids must be carried out once a year.

The inspections of load handling equipment and / or assembly aids must be recorded.

The welding seams must be subjected to a visual inspection.

Inspect load handling equipment and assembly aids for:
- Damage
- Wear
- Cracks

Replace damaged, worn or ripped load handling equipment and assembly aids immediately.

Repairs on load handling equipment and assembly aids may solely be made in consultation and under the instructions of the Customer Service at **Liebherr-Werk Ehingen GmbH** by authorized and trained expert personnel.

Note
▶ Document the scope of the inspection and the results in writing and comprehensibly.
▶ Save the documentation as a part of the crane records for the entire service life of the crane.

LWE/LR 1600-2-001/18101-07-02/en

copyright © Liebherr-Werk Ehingen GmbH 2018

6 Inspection of fastening equipment

WARNING
Fastening equipment **not** inspected!
Death, severe bodily injuries, property damage.
▶ Inspect the fastening equipment at least once a year.

The recurring inspection of the fastening equipment must be carried out once a year.

The inspections of the fastening equipment must be recorded.

The welding seams must be subjected to a visual inspection.

Inspect the fastening equipment according to the specifications of the corresponding regulations and standards.

Replace damaged, worn or ripped fastening equipment immediately.

Note
▶ Document the scope of the inspection and the results in writing and comprehensibly.
▶ Save the documentation as a part of the crane records for the entire service life of the crane.

7 Inspection of diaphragm reservoir

Note
▶ The national regulations for pressurized container inspection must be observed!

The inspection of the diaphragm reservoir for specified gas pressure must be carried out by an **authorized inspector**, see chapter 7.04 and chapter 7.05.

8 Inspection of relapse cylinders

WARNING
Fatal accidents due to defective relapse cylinders!
Loss of oil or corrosion can damage the relapse cylinders!
Safe crane operation is no longer ensured!
▶ Crane operation with defective relapse cylinders is prohibited!

8.1 Pressure test of relapse cylinders

The relapse cylinders must be inspected annually by an **authorized inspector**. The purpose of the inspections is to avoid accidents by detecting deficiencies early on.

8.2 Checking the gas pressure and oil fill before operation

WARNING
Fatal accidents due to defective relapse cylinders!
Loss of oil or corrosion can damage the relapse cylinders!
Safe crane operation is no longer ensured!
▶ Before every start-up: Carry out a visual inspection for leaks, damage and corrosion on the relapse cylinders.
▶ If any defects are found, the relapse cylinders must be inspected by the cylinder manufacturer!

The gas pressure and the oil fill must be checked by an **authorized inspector** for pressure tanks.

LWE/LR 1600-2-001/18101-07-02/en

copyright © Liebherr-Werk Ehingen GmbH 2018

8.3 Inspection of the safety controls on the relapse cylinders

Inspecting the interlocking system or limit switches on the relapse cylinders and the boom A-frames, see Chapter 8.12.

9 Inspection of rope pulleys

9.1 Checking for damage and cracks

DANGER
Danger of accident in case of damage or cracks!
▶ Replace rope pulley immediately!

Check the entire rope pulley assemblies for damage and cracks once a year.

If rope pulleys are subjected to any impacts (e.g., with buildings) or are otherwise overloaded, they must be visually inspected for damage or cracks immediately.

9.2 Checking the groove diameter

NOTICE
Worn rope pulleys!
The functionality and service life of the rope is reduced. Damage on rope.
▶ Before placing the rope, check the groove diameter of rope pulleys.

Visible wear on rope pulleys:
– Reduced groove diameter
– Negative impressions of the rope profile in the groove

Make sure that the following tools are available:
– Groove caliber

Make sure that the following prerequisites are met:
– All components to be inspected are cleaned.
– The rope does **not** obstruct the inspection of the components

Note
▶ The actual groove diameter **must** be larger than the actual diameter of the rope!

The groove diameter of rope pulleys and winches must be at least 6 % larger than the nominal rope diameter.

Check the rope pulleys with a groove caliber for wear. When wear exists on the rope grooves: Fix the rope pulleys or replace.

10 Inspection of carrier rollers

10.1 Checking visually

DANGER
Damaged carrier rollers!
Breakage and falling components. Death, severe bodily injuries, property damage.
▶ Carry out a visual inspection according to the maintenance intervals.
▶ Replace the carrier roller immediately.

LWE/LR 1600-2-001/18101-07-02/en

copyright © Liebherr-Werk Ehingen GmbH 2018

The visual inspection must be carried out according to the following criteria:
- Wear
- Damage
- Cracks

Visible wear on carrier rollers:
- Negative imprints of the rope profile on the circumference of the carrier rollers
- Lead-in tracks

10.2 Checking the depth of the lead-in tracks

DANGER
Worn carrier rollers!
Breakage and falling components. Damage to ropes. Death, severe bodily injuries, property damage.
▶ Check the depth of the lead-in tracks.
▶ Replace worn carrier rollers immediately.

Make sure that the following prerequisites are met:
- All components to be inspected are cleaned.
- The rope does **not** obstruct the inspection of the components.

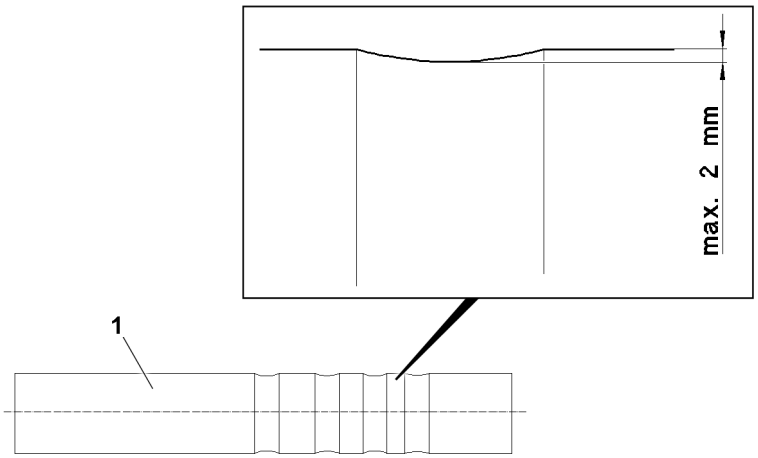

Fig.124864: Permissible depth of the lead-in tracks

1 Carrier roller

The depth of the lead-in tracks may be maximum 2 mm.

10.3 Checking bearings for easy movement

Stiff or blocked carrier rollers wear unevenly and cause serious rope abrasion.

Ineffective carrier rollers can lead to irregular rope tension.

Tasks to check the carrier rollers:
- Check the carrier rollers for proper movement in their bearings.
- When carrier rollers are **not** easily moveable in their bearings: Fix the bearings.

10.4 Checking the tightening torque

The tightening torque of screws must be checked according to maintenance interval.

LWE/LR 1600-2-001/18101-07-02/en

copyright © Liebherr-Werk Ehingen GmbH 2018

11 Inspection of extension conditions of sliding beams

The extension conditions of the sliding beams must be inspected annually by an **authorized inspector**.

Check the extension conditions on every sliding beam:
- Check if the position 0 % of the LICCON display matches the actual condition of the sliding beam.
- Check if the position 100 % of the LICCON display matches the actual condition of the sliding beam.

12 Inspection of the function of the overload protection

Position the longest boom at minimum and maximum radius: Check the load indicator, using the hook block as a test load.

The display reading may not deviate by more than 10 % off the true load value at these two extreme positions.

Measure the indicated radius for the longest boom at its minimum radius and at a boom angle of 45°.

The indicator readings may not deviate more than 10 % off the measured boom radius.

13 Inspecting the pin connections

WARNING
Pin connections **not** inspected!
Death, severe bodily injuries, property damage.
▶ Inspect the pin connections at least once a year.

The recurring inspection of all pin connections must be carried out once a year.

The inspections of the pin connection must be recorded.

Check the pin connections for:
- Properly secured pin connections
- Damage to the pins and / or connector elements
- Damage to the retaining elements

Replace damaged pins immediately.

Immediately replace damaged, bent or broken retaining elements.

Only replace damaged pins with identical pins.

Only replace damaged retaining elements with identical retaining elements.

Note
▶ Document the scope of the inspection and the results in writing and comprehensibly.
▶ Save the documentation as a part of the crane records for the entire service life of the crane.

14 Inspection of slewing ring connection

14.1 Checking the tilt play

The wear of the slewing ring connection is determined by measuring the tilt play with the ring installed.

The permissible tilt play depends on the type of slewing ring connection.

copyright © Liebherr-Werk Ehingen GmbH 2018

WARNING
The tilt play of the slewing ring connection is too large!
If the permissible tilt play is exceeded, then safe crane operation is **no** longer possible.
Death, severe bodily injuries, property damage.

When the permissible tilt play is exceeded:
▶ Replace the slewing ring connection.

The determination of the tilt play must be carried out according to the **test instructions** of **Liebherr-Werk Ehingen GmbH**.

Request the test instructions and permissible tilt play: Contact Liebherr Service.

15 Inspection of the mounting of the load bearing equipment

15.1 Check the mounting screws for tight seating

The mounting screws must be checked for a tight fit during the annual crane inspection.

The mounting screws are pre-stressed at the factory, so that no loosening of the screw connections will occur during normal crane operation.

The screw connection may become overloaded and the mounting screws may be permanently stretched if the crane is overloaded or if the load is pulled free. The mounting screws must be checked immediately for a tight fit after an overload.

Check the tightening torque of the mounting screws of load bearing equipment for a tight fit:
- Slewing ring connection
- Winches
- Slewing gears
- Transmission
- Trailer coupling

If a mounting screw can be tightened, then the mounting screw is loose. Follow the instructions in section „Checking the mounting screws for damage“.

15.2 Checking the mounting screws for damage

Completely unscrew the loose mounting screws and check in detail for damage.

Completely unscrew the adjacent mounting screws and check in detail for damage.

Replace the mounting screw if any of the following damage is present:
- The mounting screw is stretched by more than 2 % (in relation to its original length).
- Cracks, permanent deformation or other damage is visible on the mounting screw.
- The mounting screw is uneven.
- There is pitting.
- The thread is hard to move.

If there is **no** damage, reuse the checked mounting screws (expansion screws) a maximum of two times.

LWE/LR 1600-2-001/18101-07-02/en

copyright © Liebherr-Werk Ehingen GmbH 2018

16 Inspection of the tele extension with eccentric, illustration 1

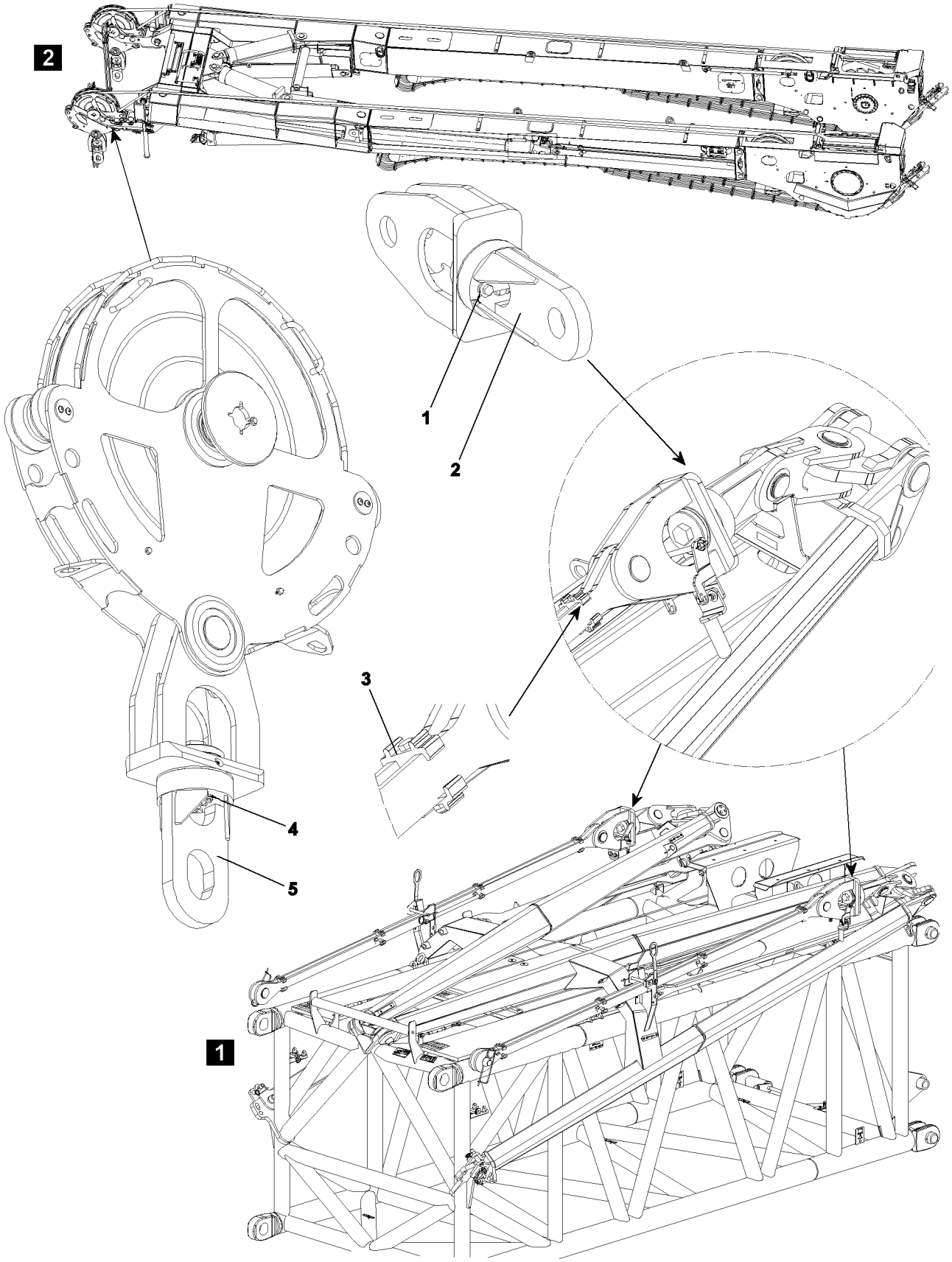

Fig.109096

LWE/LR 1600-2-001/18101-07-02/en

copyright © Liebherr-Werk Ehingen GmbH 2018

- Inspection of twist guard **1** for damage and loose screw connection.
- Inspection of swivel **2** for easy turnability.
- Inspection of all clamps **3** for damage and function.

17 Inspection of change over pulleys, illustration 2

- Inspection of twist guard **4** for damage and loose screw connection.
- Inspection of swivel **5** for easy turnability.

18 Inspection of the oil and fuel tanks

Visually check the oil and fuel tanks at least once a year for leaks and safe mounting.

Repairs may only be carried out by authorized and trained specialists.

Improper repairs; e.g., welding, hard or soft soldering is not permitted, particularly if the Service department at Liebherr-Werk Ehingen GmbH has not been consulted!

LWE/LR 1600-2-001/18101-07-02/en

copyright © Liebherr-Werk Ehingen GmbH 2018

8.03 Inspecting of winches

1	Inspecting the hoist and retracting winches	3
2	Inspection of the auxiliary reeving winch, recovery winch and spare wheel winch	4
3	Monitoring the winches	5

LWE/LR 1600-2-001/18101-07-02/en

copyright © Liebherr-Werk Ehingen GmbH 2018

LWE/LR 1600-2-001/18101-07-02/en

Fig.195219

copyright © Liebherr-Werk Ehingen GmbH 2018

1 Inspecting the hoist and retracting winches

The hoist and retracting winches are designed in sealed planetary gear version. These gears are sized for long service life and the drive shafts and gears are rated for endurance.

Even though the hoist and retracting winches are designed for long life, an external visual inspection is not adequate, since their life can be significantly affected by bad maintenance (insufficient oil), using oil that does not meet specification requirements, defective seals, improper operation or overloading.

The annual inspection must therefore be carried out by an **expert** in accordance with the following specification.

The winches must be inspected by an **authorized inspector** every four years after the initial license.

Within the territorial validity of the BGV D6, after the 10th year in operation, counted from the first day of initial license, when the theoretical utilization time is not over, the winches must be checked annually by an **authorized inspector**.

1.1 Checking the groove diameter

WARNING
Worn winches!
Damage of flanged disks, high rope wear, operational problems. Broken rope, falling load.
▶ Before placing the rope, check the groove diameter of winches.

Visible wear on winches:
– Reduced groove diameter
– Mechanical damage, for example scrub marks or scouring on flanged disks

Make sure that the following tools are available:
– Groove caliber

Make sure that the following prerequisites are met:
– All components to be inspected are cleaned
– The rope does **not** obstruct the inspection of the components

Note
▶ The groove radius may **not** be smaller than the actual diameter of the rope.

The groove diameter of rope pulleys and winches must be at least 6 % larger than the nominal rope diameter.

Check winches with a groove caliber for wear. When wear is present: Fix the winch or replace.

1.2 Inspection intervals

At least once a year, see Crane operating instructions, chapter 7.03.

1.3 Checking the oil level

Check the oil level with the dipstick.

For hoist and retracting winches **without** a dipstick, we recommend that the oil is drained and the amount compared to the specified oil quantity.

1.4 Evaluating oil color

Assume that the oil has been overheated if it is black and / or a burnt oil smell is detected. Change the oil.

LWE/LR 1600-2-001/18101-07-02/en

copyright © Liebherr-Werk Ehingen GmbH 2018

1.5 Checking for solid foreign substances

In general, the oil must be analyzed by a qualified laboratory.

For simple testing, the following procedure can be used:
- Drip the used oil on a specified filter fleece.
- Visual inspection with a magnifying glass may reveal coarse particles.
- If coarse particles are found: Have the components of the oil analyzed by a qualified laboratory.

NOTICE
Danger of property damage!
- ▶ Repairs may only be carried out by authorized and especially trained personnel.
- ▶ Replace damaged parts and change the gear oil.

1.6 Visual inspection for leaks

The gears must be checked for leaks, since oil losses - in addition to polluting the environment - can lead to gear failure.

1.7 Inspecting the gear brakes

Check the brakes each time the gears are inspected.

In order to do so, proceed as follows:
- Attach a load, which creates the maximum rope pull in the uppermost layer of the coil and raise it just off the ground.
- Remove the plug on the brake lifting magnet.
  This means the brake remains applied when activated.
- Activate the winch in the lowering direction.

Note
- ▶ The brake may not slip, in other words, the winch may not turn. If the brake slips, contact the Service department at Liebherr-Werk Ehingen GmbH!
- ▶ Only operate the crane after it has been checked and approved for use by the Service department at Liebherr Werk Ehingen GmbH!

NOTICE
Danger of property damage!
- ▶ Only qualified personnel with specialized knowledge may be used to evaluate gears and brakes!

1.8 Documenting the completed inspection

The results of the annual inspections and maintenance work, including the steps taken, must be documented by the competent or authorized inspector, including attachments from the inspection labs and qualified service companies if applicable.

This documentation must be filed in the crane inspection log under the heading "Periodic inspections".

2 Inspection of the auxiliary reeving winch, recovery winch and spare wheel winch

The inspection of the auxiliary reeving winch, recovery winch and spare wheel winch regarding scope and content is made according to the manufacturer's instructions.
- Inspect the auxiliary reeving winch, recovery winch and spare wheel winch according to the manufacturer's instructions.

LWE/LR 1600-2-001/18101-07-02/en

copyright © Liebherr-Werk Ehingen GmbH 2018

– Request data about the service life of the auxiliary reeving winch, recovery winch and spare wheel winch from the respective manufacturer.

3 Monitoring the winches

3.1 Theoretical service life

The designer of your crane used a theoretical total operating time when designing and sizing the winches. This resulted in the theoretical service life of the equipment.

The winches of your crane are classified according to ISO 4301/1 as follows:

Winches	Classification
Power train group:	M3
Load spectrum:	L1
Load spectrum factor Km:	0.125
Theoretical service life D:	3200 h

Note

▶ The „theoretic service life“ is not equal to the real (true) service life of a winch!

The actual life of the winch is affected by many additional outside factors; for example:
– Overloads caused by unapproved use of the crane.
– Inadequate maintenance: Oil is not changed in a timely manner
– Improper operation:
  • Extreme acceleration or deceleration of the load
  • Load falling into the ropes
– Maintenance errors:
  • Using the wrong type of oil
  • Too much or too little oil
  • Contamination during oil change
– Assembly errors during repair and maintenance
– Undetected leaks
– Incorrectly set safety equipment
– Hidden damage from accidents
– Extreme environmental conditions:
  • Extreme low or high temperatures
  • Corrosive atmosphere
  • Dust and dirt

3.2 Used proportion of the theoretical service life

The crane operator is obligated to carry out an inspection of the crane at least once a year.

At this time, the actually used part of the theoretical service life must also be calculated. If necessary, the crane operator must contract an authorized inspector.

For the determination of the used part of the theoretical service life, the actual operating conditions (load spectrum) and the hoist gear operating hours for each inspection interval are to be determined. The operator is responsible for the documentation in the crane inspection log.

3.2.1 Determining the operating conditions (load spectrum)

The load spectrum of the crane is divided into groups, please refer to ISO 4301/1.

LWE/LR 1600-2-001/18101-07-02/en

copyright © Liebherr-Werk Ehingen GmbH 2018

Select one of the following load spectrums and record it in the crane inspection log for the respective inspection interval based on the actual operating conditions. A more precise determination of the load spectrum is permissible.

Load spectrum class: Light L1

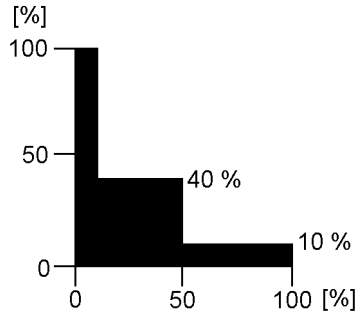

Fig.195234: Graphic illustration Load spectrum L1

Definition:

Power train or parts thereof are subjected to maximum stress only in exceptional cases, but normally only operate at very light loads.

Operating time rates:

10 % of the time at maximum load (dead load and 1/1 working load)
40 % of the time with dead load and 1/3 working load
50 % of the time only with dead load

Factor of load spectrum:

Km = 0.125

Note

▶ Load spectrum L1 with load spectrum factor Km = 0.125 is normally applied to cranes used for assembly operations!

Load spectrum class: Medium L2

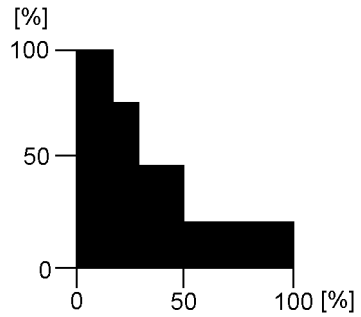

Fig.195235: Graphic illustration Load spectrum L2

Definition:

Power train or parts thereof are subjected to maximum load relatively often, but normally only operate at light load.

Operating time rates:

1/6 of the time at maximum load (dead load and 1/1 working load)
1/6 of the time with dead load and 2/3 working load

LWE/LR 1600-2-001/18101-07-02/en

copyright © Liebherr-Werk Ehingen GmbH 2018

1/6 of the time with dead load and 1/3 working load
50 % of the time only with dead load

Factor of load spectrum:
Km = 0.25

Load spectrum class: Heavy L3

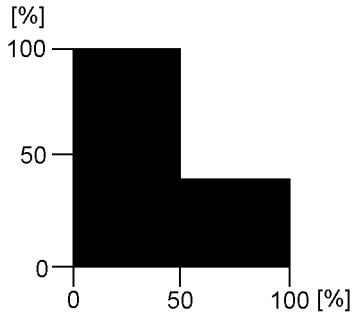

Fig.195236: Graphic illustration Load spectrum L3

Definition:
Power train or parts thereof are frequently subjected to maximum load and normally operate at medium load.

Operating time rates:
50 % of the time at maximum load (dead load and 1/1 working load)
50 % of the time only with dead load

Factor of load spectrum:
Km = 0.5

Load spectrum class: Very heavy L4

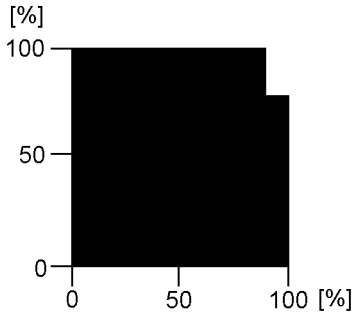

Fig.195237: Graphic illustration Load spectrum L4

Definition:
Power train or parts thereof are regularly subjected to near maximum loads.

Operating time rates:
90 % of the time at maximum load (dead load and 1/1 working load)
10 % of the time only with dead load

Factor of load spectrum:
Km = 1

LWE/LR 1600-2-001/18101-07-02/en

copyright © Liebherr-Werk Ehingen GmbH 2018

3.2.2 Determining the effective operating hours T_i

The effective operating hours calculated as follows must be entered into the crane inspection log for the respective inspection interval.

There are four different scenarios:

1. Operating hour meter installed on every winch.
   If an operating hour meter is installed on every winch in your crane, the effective operating hours T_i can be read directly during each inspection.
2. Operating hour meter installed for the overall crane drive.
   The winch proportion of the total superstructure operating hours must be estimated.
   For cranes used in assembly operations, the operating time for the hoist winches can be estimated generally at 20 % of the total operating hours of the superstructure.
3. One operating hour meter is used for both the crane engine and the crane drive
   The winch proportion of the total crane operating hours must be estimated.
   For cranes used in assembly operations, the operating time for the superstructure can be estimated at 60 % of the total operating hours of the crane. If the hoist winch proportion is estimated at 20 % of the superstructure operating hours (see previous item), then the result in relation to the **total** operating hours of the crane is: 12 %.
4. No operating hour meter is available.
   In this case, the operator must estimate and document the actual operating hours of the winch.
   The approximate percentages stated above normally apply to main hoist winches. For auxiliary hoist winches or boom control winches, the proportion of the total operating hours can be significantly less and should therefore be estimated by the operator.

3.2.3 Determining the used proportion of the theoretical service life

For an inspection interval i (max. 1 year), the actually used proportion S_i of the theoretical Service life is derived from the formula:

$$S_i = \frac{Km_i}{Km} \times T_i$$

Fig.195230

Abbreviation	Explanation
S_i	Used proportion of the theoretical service life.
Km	Load spectrum factor that was used to calculate the winch rates. This factor is provided in the Operating instructions.
Km_i	Load spectrum factor for inspection interval i according to section „Determining the operating conditions“.
T_i	Effective operating hours for inspection interval i according to section „Determining the effective operating hours T_i“.

The actually used proportion is subtracted from the remaining theoretical service life D_i after each inspection interval (see example).

If the remaining theoretical service life is not long enough to cover the next projected operating period, a general overhaul of the winch is required.

If the theoretical service life D has been reached (see chapter on „Theoretical service life“), then the winch may only be operated after conducting a general overhaul.

A general overhaul of the winch is required not later than 10 years after start up.

The general overhaul must be arranged by the operator and carried out by the manufacturer or the manufacturer's authorized representatives and must be documented in the inspection log. After the

LWE/LR 1600-2-001/18101-07-02/en

copyright © Liebherr-Werk Ehingen GmbH 2018

general overhaul, the manufacturer or the manufacturer's authorized representative will define a new theoretical service life D.

When the design life has not been reached after 10 years, continued operation of the winch without a general overhaul is acceptable, when the crane's authorized inspector has confirmed the accuracy of the actual usage calculation by signing the crane inspection log at each authorized inspection interval.

In such a case, the authorized crane inspector must thoroughly inspect the winch. This comprises at least:
- External visual inspection (leaks damage, deformation, etc.).
- Oil check, especially for metal residues.
- Load test at minimum and maximum rope tension and at maximum possible speed in both cases. At least one layer must be spooled up. Pay particular attention to any unusual noises during this load test.

The authorized crane inspector must confirm this inspection in the crane inspection log and must make a statement regarding suitability of the winch for continued operation. The next inspection must take place at the end of the 12th operating year and annually thereafter.

3.3 Example

According to the manufacturer's operating instructions, a crane with a separate operating hour meter for the travel drive and the crane drive is classified as follows:
- Power train group: M3
- Load spectrum: Light L1
- Factor of load spectrum: Km = 0.125
- Theoretical service life: D = 3200 h

Actual usage proportion S of the theoretical service life is calculated using the individual inspection intervals as follows:

3.3.1 First inspection (first year)

The crane was used for assembly work during the past year:

Load spectrum L1, in other words $Km_1 = 0.125$.

The superstructure operating hour meter indicates 800 h. The winch was operated about 20 % of the time; i.e. $T_1 = 160$ h.

The actual usage proportion S of the theoretical service life at the time of the first inspection is therefore:

$$S_1 = \frac{0{,}125}{0{,}125} \text{ x } 160 \text{ h} = 160 \text{ h}$$

Fig.195231

Remaining theoretical service life:

$D_1 = 3200 \text{ h} - 160 \text{ h} = 3040 \text{ h}$

The above values are recorded in the crane inspection log.

3.3.2 Second inspection (second year)

The crane was used at a harbor for unloading work:

Load spectrum L3, in other words $Km_2 = 0.5$.

The superstructure operating hour meter indicates 2000 h ; i.e., during this period:

2000 h – 800 h = 1200 h (800 h were used during the first year of operation)

The winch was operated about 40 % of the time; i.e. $T_2 = 480$ h.

LWE/LR 1600-2-001/18101-07-02/en

copyright © Liebherr-Werk Ehingen GmbH 2018

The actual usage proportion S_2 of the theoretical service life at the time of the second inspection is therefore:

$$S_2 = \frac{0,5}{0,125} \times 480\ h = 1920\ h$$

Fig.195232

Remaining theoretical service life:

D_2 = 3040 h – 1920 h = 1120 h

3.3.3 Third inspection (third year)

The crane was used for assembly work and occasionally at a harbor for unloading work:

Load spectrum L2, in other words Km_3 = 0.25.

The superstructure operating hour meter indicates 3000 h ; i.e., during this period:

3000 h – 2000 h = 1000 h (2000 h were used during the first two years of operation)

The winch was operated about 30 % of the time; i.e. T_3 = 300 h.

The actual usage proportion S_3 of the theoretical service life at the time of the third inspection is therefore:

$$S_3 = \frac{0,25}{0,125} \times 300\ h = 600\ h$$

Fig.195233

Remaining theoretical service life:

D_3 = 1120 h – 600 h = 520 h

3.4 Chart for determining the theoretically remaining service life

Chart 1 includes an example.

The remaining theoretical service life is to be documented in chart 2.

LWE/LR 1600-2-001/18101-07-02/en

copyright © Liebherr-Werk Ehingen GmbH 2018

Fig.121551-en: Chart 1

Chart to determine the remaining theoretical service life of winch No. 1 (Main hoist winch)

Crane type:	LTM 1050		
Fabrication No.:	0010 540 08	S_i =	Used part of theoretical service life since last inspection
Put in service :	12345	D_i =	Remaining theoretical service life
Serial number of winch according to data tag:	0815	D_{i-1} =	Remaining theoretical service life after previous inspection
Last general overhaul performed on:	.....	Km =	Factor of load collective, which was taken for calculation of winch. This factor is to be taken from the Operating Manual
Configuration data of winch (see Operating Manual):			
Drive gear group:	M 3	Km_i =	Factor of load collective in inspection interval i
Load collective:	L 1	T_i =	Effective operating hours in inspection interval i
Factor of load collective Km:	0.125		
Theoretical service life D:	3200 hrs.	(*)	In the following pages, carry over the last line from the previous page.

Inspection interval No. (max. annually) i	Date of initial service data of inspection	Operating conditions since last inspection (load collective)	Factor of load connective Km_i	Total crane operating hours [h]	Operating hours of super-structure [h]	Operating hours of super-structure since last inspection [h]	Operating hours of winch [h]	Operating hours of winch since last inspection T_i [h]	Used part of theoretical service life D: $S_i = \frac{Km_i}{Km} \times T_i$ [h]	Remaining theoretical service life $D_i = D_{i-1} - S_i$ [h]	Name of inspector	Signature	Remarks	Name of expert	Signature
(*) 0	10.06.90	-	-	-	0				0	3200					
1	05.06.91	L1	0,125	-	800	800	-	160 (20 % of 800)	160	3040	Müller				
2	20.05.92	L3	0,5	-	2000	1200	-	480 (40 % of 1200)	1920	1120	Huber				
3	18.05.93	L2	0,25	-	3000	1000	-	300 (30 % of 1000)	600	520	Maier				
4															

C A U T I O N : **Perform general overhaul at least once every 10 years!** In case of deviation, see guidelines in this chapter.

General overhaul last performed on : .....

copyright © Liebherr-Werk Ehingen GmbH 2018

Chart to determine the remaining theoretical service life of winch No. ....

Crane type: .....
Fabrication No.: .....
Put in service: .....
Serial number of winch according to data tag: .....
Last general overhaul performed on: .....
Configuration data of winch (see Operating Manual): .....
Drive gear group: M.....
Load collective: L.....
Factor of load collective Km: .....
Theoretical service life D: .....

S_i = Used part of theoretical service life since last inspection
D_i = Remaining theoretical service life
D_{i-1} = Remaining theoretical service life after previous inspection
Km = Factor of load collective, which was taken for calculation of winch. This factor is to be taken from the Operating Manual
Km_i = Factor of load collective in inspection interval i
T_i = Effective operating hours in inspection interval i

*) In the following pages, carry over the last line from the previous page.

Inspection interval No. (max. annually) i	Date of initial service / data of inspection	Operating conditions since last inspection (load collective)	Factor of load connective Km_i	Total crane operating hours [h]	Operating hours of super-structure [h]	Operating hours of super-structure since last inspection [h]	Operating hours of winch [h]	Operating hours of winch since last inspection T_i [h]	Used part of theoretical service life D: $S_i = \frac{Km_i}{Km} \times T_i$ [h]	Remaining theoretical service life $D_i = D_{i-1} - S_i$ [h]	Name of inspector	Signature	Remarks	Name of expert	Signature
(*)															

C A U T I O N : Perform general overhaul at least once every 10 years! In case of deviation, see guidelines in this chapter.

General overhaul last performed on : .....

Fig. 121552-en: Chart 2

copyright © Liebherr-Werk Ehingen GmbH 2018

LWE/LR 1600-2-001/18101-07-02/en

copyright © Liebherr-Werk Ehingen GmbH 2018

Empty page!

LWE/LR 1600-2-001/18101-07-02/en

copyright © Liebherr-Werk Ehingen GmbH 2018

8.04 Inspection of crane wire ropes

1	Crane ropes	3
2	Importance of inspection	3
3	Personal protective equipment	3
4	Qualification Inspection personnel	3
5	Unscheduled inspection	3
6	Intervals	4
7	Areas	4
8	Documenting inspection results	5
9	Wire ropes and rope end connections	5
10	Degree of severity	7
11	Abbreviations Rope diameter	7
12	Distortions and mechanical damage	8
13	Removal criteria Overview	8
14	Checking for broken strands	9
15	Determining the number of broken wires	9
16	Checking the rope end connection	14
17	Checking of rope diameter	14
18	Corrosion	17
19	Corkscrew-like distortion	19
20	Basket formation	20
21	Protruding, distorted insert or strand	21
22	Loop formation	22
23	Kinking or rope loops pulled closed	23
24	Buckles	24
25	Effects of heat, arcs	25
26	Combined degree of severity	25
27	Flattenings	25
28	Current checklist	28

LWE/LR 1600-2-001/18101-07-02/en

copyright © Liebherr-Werk Ehingen GmbH 2018

LWE/LR 1600-2-001/18101-07-02/en

Fig.195219

copyright © Liebherr-Werk Ehingen GmbH 2018

1 Crane ropes

This chapter applies, for example, for the following crane ropes:
- Hoist ropes
- Control ropes for the boom system
- Control ropes of the telescopic boom with rope mechanism: Pull-out ropes and return ropes
- Guy ropes for boom system

2 Importance of inspection

Rope removal criteria: If severe damage reduces the operational safety, then the rope has reached the removal criteria.

The importance of regular inspections is demonstrated by:
- Evaluation of operational safety of ropes
- Determination of rope removal criteria
- Determination of next inspection

3 Personal protective equipment

WARNING
Wires and lubricant!
Severe injury and skin irritation.
▶ When working with ropes, always wear work gloves.

WARNING
Protective equipment **not** worn!
Severe injuries.
▶ Wear hard hat, safety shoes and safety glasses.

4 Qualification Inspection personnel

Make sure that the following prerequisites are met:
- Inspection personnel are **expert personnel for crane rope inspection**.
- **Expert personnel for crane rope inspection:**
  - Are trained in the inspection of crane ropes according to **DIN ISO 4309** and have practical experience in the evaluation of rope removal criteria.
  - Have practical experience in the evaluation of rope removal criteria according to **DIN ISO 4309**.
- The inspection personnel is assigned (authorized) for the maintenance by the crane operator.

5 Unscheduled inspection

In the following situations the rope must be inspected:
- After unusual strain
- If non-visible damage is suspected
- when a rope or the rope end connection is damaged
- when the rope has been placed again after removal
- when the rope has been out of service for longer than three months

LWE/LR 1600-2-001/18101-07-02/en

copyright © Liebherr-Werk Ehingen GmbH 2018

6 Intervals

Intervals for crane inspection:
- according to determination by **expert personnel for crane rope inspection**
- or **at least once a year**

Note
▶ Shortening the inspection interval: The older a rope is the more frequently will wire breaks occur.

Determining factors for determination of inspection intervals are:
- Legal regulations in the country where the crane is operated
- Climate conditions under which the rope drive is utilized
- Power train group
- Results of previous inspections on current or comparable machine and under comparable operating conditions
- Frequency and type of use of a rope
- Service life of rope

7 Areas

WARNING
Broken wires and distortions on ropes in cross over areas!
Rope performance can be greatly reduced. Rope breakage. Death, severe injuries, property damage.
▶ Inspection rope cross over areas especially diligently.

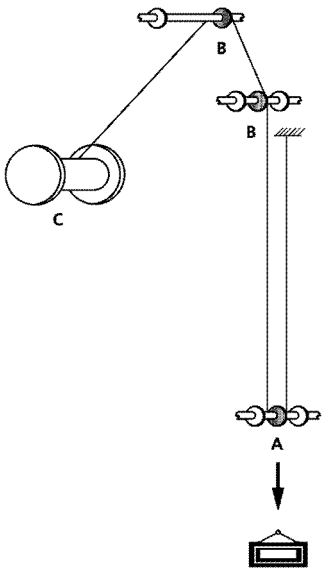

Fig.120969: Important inspection areas for multi layer spooled up ropes

A Rope sections, which run in the area of the load rise into the lower rope pulleys (the load is raised here).

B Rope intake on the first rope pulley in the area of the load rise.

C Rope sections, which are subjected in the cross over areas to the strongest effects (maximum deflection angle).

The rope must be checked over the entire length.

LWE/LR 1600-2-001/18101-07-02/en

copyright © Liebherr-Werk Ehingen GmbH 2018

The following areas must be checked with special diligence:
- Rope end connections
- Safety coils and fixed point on the winch
- Areas of the rope which run through the hook block.
- Areas of the rope that run over the rope pulleys or lay on the rope pulleys.
- Areas of the rope that are spooled on the winch, especially cross over areas.
- Areas of the rope which are laying above the compensation pulleys.
- Areas of the rope which are subjected to abrasion due to external components.
- All areas of the rope that are subjected to temperatures above 60 °C.

8 Documenting inspection results

Note
- ▶ Document the results of the inspections in an inspection checklist.
- ▶ Form for an inspection checklist, see section „Current checklist“.

9 Wire ropes and rope end connections

WARNING
Wire rope with impermissible rope end connection!
The wire rope can fail. The load call fall down.
Death, severe bodily injuries, property damage.
- ▶ Select the permissible rope type for the respective application.
- ▶ Select the permissible rope end connection for the respective rope type.
- ▶ Observe and adhere to the warning display on the lock.

Wire rope application	Rope type
Hoist rope	Rotation-resistant rope
Guy rope or control rope	Non-rotation resistant rope
Auxiliary rope or assembly rope	Non-rotation resistant rope

Rope type depending on the application

The type of rope that is selected determines the corresponding rope end connections.

9.1 Rotation-resistant ropes with rope end connections

Use rotation-resistant ropes as **hoist ropes**.

Rotation-resistant ropes are special ropes that produce extremely little torque and twisting at the rope end connection when they are under strain.

LWE/LR 1600-2-001/18101-07-02/en

copyright © Liebherr-Werk Ehingen GmbH 2018

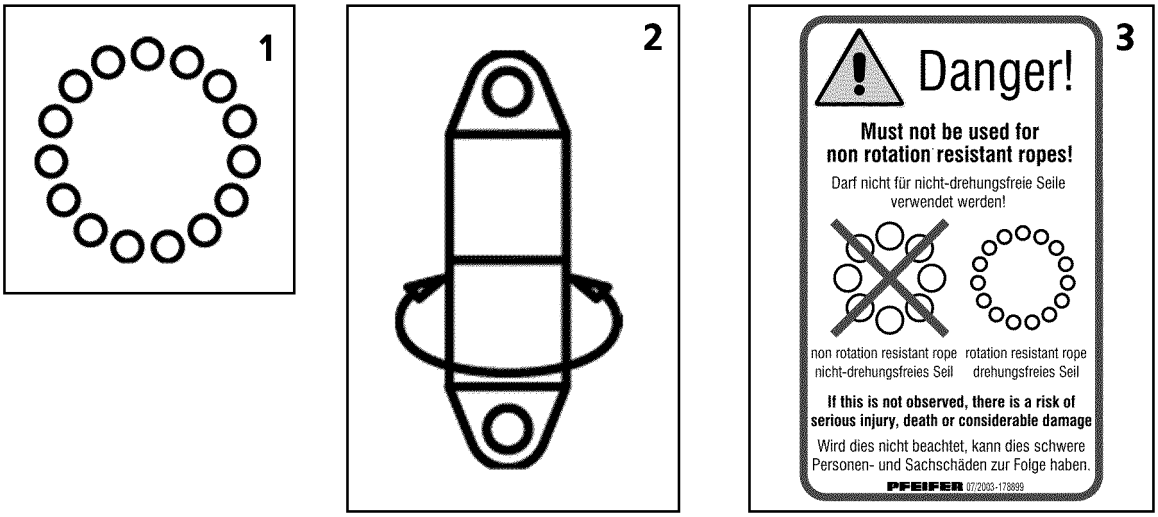

Fig.195653: Symbols for rotation-resistant ropes with rope end connections

1 Rotation-resistant rope symbol
2 Rotating rope end connection symbol
3 Warning display on the PFEIFER lock

Typical rotation-resistant rope structures are wire ropes with 15 to 18 outer strands. Rotation-resistant ropes are symbolically depicted with 15 outer strands (circles), see illustration **1**.

9.1.1 Non-rotating rope end connection

Note
▶ In the case of a rotation-resistant ropes, Liebherr recommends the use of a lock **without** a swivel or a wedge lock. This can reduce the stress on the hoist ropes.

9.1.2 Rotating rope end connection

Note
▶ In the case of rotation-resistant ropes, Liebherr recommends **not** using a lock **with** a swivel and **not** to use a twist compensator / swivel.

To reduce a problematic turning behavior, the following rope end connections can be used in an individual case and after consultation with Liebherr customer service:
– Lock **with** swivel
– Twist compensator / swivel

9.2 Non-twisting ropes with rope end connections

WARNING
Wire rope with impermissible rope end connection!
The wire rope can fail. The load call fall down.
Death, severe bodily injuries, property damage.
▶ Use a lock **without** a swivel or a wedge lock.
▶ **Never** use a lock **with** a swivel with non-twisting rope.
▶ **Never** use a twist compensator / swivel with a non-twisting rope.

Use non-twisting ropes as **guy ropes** or **control ropes**, **auxiliary ropes** or **assembly ropes**.

Non-twisting ropes generate high torque levels on the rope end connection under strain. For this reason, the rope ends must be protected from twisting using an appropriate rope end connection to prevent the wire rope from unscrewing under strain.

LWE/LR 1600-2-001/18101-07-02/en

copyright © Liebherr-Werk Ehingen GmbH 2018

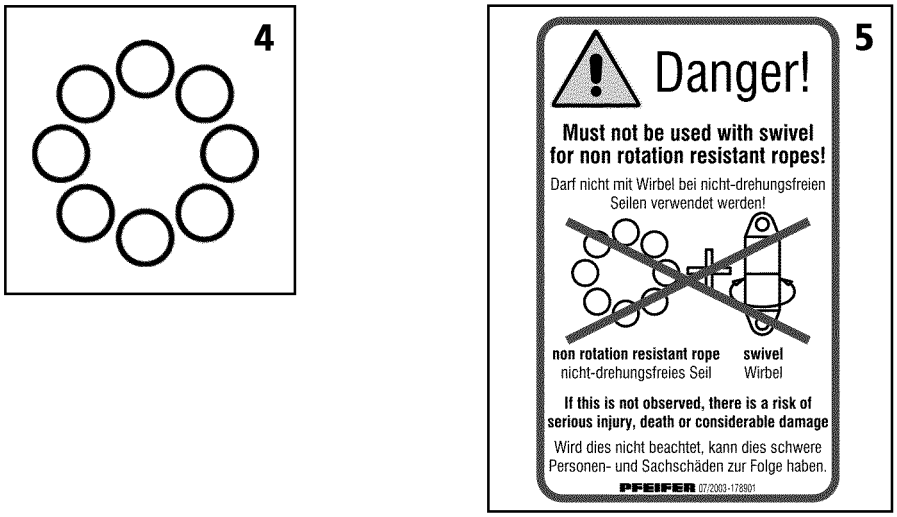

Fig.195654: Symbols for non-twisting ropes with rope end connections

4 Non-twisting rope symbol

5 Warning display on the PFEIFER lock / wedge lock

Typical non-twisting rope structures are wire ropes with eight or ten outer strands. Non-twisting ropes are symbolically depicted with eight outer strands (circles), see illustration **4**.

Only use non-twisting ropes with the following **non-twisting** rope end connections:
- Lock **without** swivel
- Wedge lock

A non-rotating rope end connection is also the mounting of the rope on the fixed point of the winch drum.

10 Degree of severity

The deciding factor for the removal criteria is which removal criteria are resent and to which degree they occur.

When various removal criteria are **not** present to a full degree, then the removal criteria must be evaluated as a total entity. For every individual removal criteria a degree of severity must be determined (percentage value).

For a certain rope section the sum of individual degrees of severity results in a **combined degree of severity**, see section „Combined degree of severity“.

When the combined degree of severity is more than 100 %, then the rope must be taken down.

11 Abbreviations Rope diameter

Abbreviations	Description
Rope nominal diameter **d**	Rope diameter, identification of rope
Reference diameter $\mathbf{d}_{ref}$	Measured rope diameter of a straight rope section, directly after placing the rope
6d	Length of 6-fold rope nominal diameter
30d	Length of 30-fold rope nominal diameter

Abbreviations Rope diameter

copyright © Liebherr-Werk Ehingen GmbH 2018

12 Distortions and mechanical damage

WARNING
Distortions and mechanical damage!
Operational safety significantly disturbed, uneven load distribution within the rope.
▶ Have the manufacturer check if the distorted and damaged area can be severed.

Visible form changes often occur localized or in short rope sections.

When a safe operation of the rope is ensured, a distorted and damaged area can be severed.

13 Removal criteria Overview

The following chart provides an overview between removal criteria and the respective method for inspection. The degree is described, when the removal criteria is reached.

The removal criteria is described in detail in the subsequent sections.

Note

When the rope for parallel operation has reached the removal criteria:
▶ Often, both ropes must be replaced. The new rope has a larger diameter and other elongation characteristics.

Removal criteria	Degree for removal criteria	Inspection method
Broken strands	One strand is broken	Visual check
Broken wires on ropes, which run over rope pulleys and are spooled in multiple layers	Maximum number of broken wires reached, see Section Determining the number of broken wires	Count
Broken wire in the strand valleys	Two or more broken wires in strand valleys, on the contact points of two neighboring strands within an angular length (corresponds approx. to 6d)	Count
Broken wires in the area of the rope end connection	Two or more broken wires, according to decision of **expert personnel for crane rope inspection**	Visual inspection, test with marlin spike
Broken wire nests	On occurrence	Visual check
Reduction rope diameter at even diameter reduction	Maximum reduction of rope diameter reached	Measurement, calculation
Localized increase of rope diameter	Maximum increase of rope diameter reached	Measurement
Significant corrosion	Surface of rope is significantly affected or rust film emerges, according to decision of **expert personnel for crane rope inspection**	Visual check
Corkscrew-like distortion	Maximum permissible distortion reached	Measurement, calculation
Basket formation	On occurrence	Visual check
Wires or bunches of wires protruding from the rope	On occurrence, if more than one wire protrudes from the rope	Visual check

LWE/LR 1600-2-001/18101-07-02/en

copyright © Liebherr-Werk Ehingen GmbH 2018

Removal criteria	Degree for removal criteria	Inspection method
Flattenings	Larger than half of the diameter of the outer strand, according to decision of **expert personnel for crane rope inspection**	Visual check
Loop formation	Loops on several wires	Visual check
Kinking or remaining distortion	On occurrence	Visual check
Buckles or contusions	On occurrence, according to decision of **expert personnel for crane rope inspection**	Visual check
Heat influence, electric voltage	Bluish discoloration, broken or melted wires	Visual check
Damage on rope end connections: Material cracks, deformation, wear, corrosion, traces of slipping between the locking clamp and rope	According to decision of **expert personnel for crane rope inspection**	Visual inspection
Combined degree of severity	Degree of severity 100 % or above, according to decision of **expert personnel for crane rope inspection**	Calculation of individual degrees of severity

Removal criteria Overview

14 Checking for broken strands

A strand consists of several individual wires.

If a complete strand is broken:
▶ Take the rope down.

15 Determining the number of broken wires

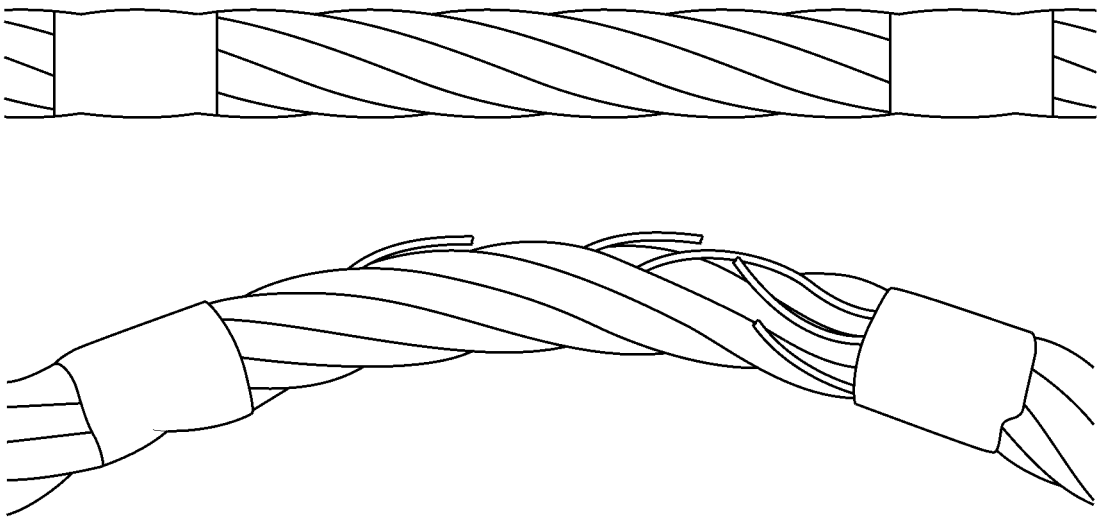

Fig.120980: Determine broken wires by bending

copyright © Liebherr-Werk Ehingen GmbH 2018

By bending the rope, broken wires can be recognized better.

Make sure that the following prerequisites are met:

- The rope is clean.
- Inspection checklist is on hand.

15.1 Scattered occurring broken wires

The following different rope types each have their own chart for the permissible number of broken wires:

- Single layer and parallel roped ropes
- Rotation resistant ropes

The charts in this section are valid exclusively for **scattered occurring broken wires**.

15.1.1 Wire break increase rate

The wire break increase rate is an increase of broken wires, which can skyrocket with increasing use of the rope.

▶ Include the inspection checklists for the previous inspection and use it to draw a conclusion for the wire break rate increase.

15.1.2 Single layer and parallel roped ropes

Rope category number RCN	Total number of load carrying wires in the outer strand layer of rope[1] n	Number of visible outer wire breaks[2]					
		Rope sections, which run over steel pulleys and / or spool up on a single layer spooling drum (coincidental distribution of broken wires)				Rope sections, which spool up on a multi layer drum[3]	
		Class M1 to M4, or class unknown[4]				All classes	
		Lang lay		Even lay		Lang lay and even lay	
		Over a length of 6d[5]	Over a length of 30d[5]	Over a length of 6d[5]	Over a length of 30d[5]	Over a length of 6d[5]	Over a length of 30d[5]
01	n ≤ 50	2	4	1	2	4	8
02	51 ≤ n ≤ 75	3	6	2	3	6	12
03	76 ≤ n ≤ 100	4	8	2	4	8	16
04	101 ≤ n ≤ 120	5	10	2	5	10	20
05	121 ≤ n ≤ 140	6	11	3	6	12	22
06	141 ≤ n ≤ 160	6	13	3	6	12	26
07	161 ≤ n ≤ 180	7	14	4	7	14	28
08	181 ≤ n ≤ 200	8	16	4	8	16	32
09	201 ≤ n ≤ 220	9	18	4	9	18	36
10	221 ≤ n ≤ 240	10	19	5	10	20	38
11	241 ≤ n ≤ 260	10	21	5	10	20	42
12	261 ≤ n ≤ 280	11	22	6	11	22	44

LWE/LR 1600-2-001/18101-07-02/en

copyright © Liebherr-Werk Ehingen GmbH 2018

Rope category number RCN	Total number of load carrying wires in the outer strand layer of rope[1] n	Number of visible outer wire breaks[2]					
		Rope sections, which run over steel pulleys and / or spool up on a single layer spooling drum (coincidental distribution of broken wires)				Rope sections, which spool up on a multi layer drum[3]	
		Class M1 to M4, or class unknown[4]				All classes	
		Lang lay		Even lay		Lang lay and even lay	
		Over a length of 6d[5]	Over a length of 30d[5]	Over a length of 6d[5]	Over a length of 30d[5]	Over a length of 6d[5]	Over a length of 30d[5]
13	281 ≤ n ≤ 300	12	24	6	12	24	48
	n > 300	0.04 x n	0.08 x n	0.02 x n	0.04 x n	0.08 x n	0.16 x n
Note: Ropes with outer strands in the Seale type, number of wires per strand 19 or less (for example 6 × 19 Seale), are classified in this chart as two lines over the line, which would be defined due to the number of load carrying wires in the outer strands.							

*Number of visible broken wires (reached or exceeded) for removal criteria is reached, for **single-layer** and **parallel** roped ropes according to **DIN ISO 4309***

1) For the purpose of this international standard, fill wires are not considered to be load carrying wires and are not included in the value for n.
2) A broken wire has two ends (counted as one wire).
3) The values apply for damage in the cross over areas and the layers of coils due to deflection angles (not for rope sections, which run only over rope pulleys and do not spool up on the winch).
4) For ropes on drive gears of groups M5 to M8 twice the number of broken wires listed can be used.
5) d = Rope nominal diameter

▶ Check the rope over the entire length for visible broken wires.

When visible broken wires are scattered present:
▶ On the point of a broken wire, mark the rope sections on a length of 30d in both directions.
▶ Count visible broken wires in the marked rope sections and record them.
▶ Take the RCN (Rope category number) from the manufacturer's documentation of the rope.

When the make for single layer and parallel roped ropes is **not** listed in the chart:
▶ Determine the total number of load carrying wires in the rope: Add all wires in the strands of the outer layer, do **not** count fill wires.
▶ Compare the number of broken wires of each marked rope section 30d with the number of broken wires in the chart.

When the number of visible broken wires is smaller than listed in the chart:
▶ Within the rope section with the most broken wires: Mark the rope section with the most broken wires on a length of 6d.
▶ Count visible broken wires in the marked rope sections 6d and record them.
▶ Compare the number of broken wires of the marked rope section with the number of broken wires in the chart.

When the number of visible broken wires is equal to or larger than that listed in the chart:
▶ Take the rope down.
▶ Enter the results in the inspection checklist.

LWE/LR 1600-2-001/18101-07-02/en

copyright © Liebherr-Werk Ehingen GmbH 2018

15.1.3 Rotation resistant ropes

Rope category number RCN	Total number of load carrying wires in the outer strands of rope[1] n	Number of visible outer wire breaks[2]			
		Rope sections, which run over steel pulleys and / or spool up on a single layer spooling drum (coincidental distribution of broken wires)		Rope sections, which spool up on a multi layer drum[3]	
		Over a length of 6d[4]	Over a length of 30d[4]	Over a length of 6d[4]	Over a length of 30d[4]
21	4 strands n ≤ 100	2	4	2	4
22	3 or 4 strands n ≥ 100	2	4	4	8
	At least 11 strands in the outer layer				
23-1	71 ≤ n ≤ 100	2	4	4	8
23-2	101 ≤ n ≤ 120	3	5	5	10
23-3	121 ≤ n ≤ 140	3	5	6	11
24	141 ≤ n ≤ 160	3	6	6	13
25	161 ≤ n ≤ 180	4	7	7	14
26	181 ≤ n ≤ 200	4	8	8	16
27	201 ≤ n ≤ 220	4	9	9	18
28	221 ≤ n ≤ 240	5	10	10	19
29	241 ≤ n ≤ 260	5	10	10	21
30	261 ≤ n ≤ 280	6	11	11	22
31	281 ≤ n ≤ 300	6	12	12	24
	n > 300	6	12	12	24
Note: Ropes with outer strands in Seale type, number of wires in each strand 19 or less (for example 18 × 19 Seale - WSC), are classified in this chart as two lines over the line, which would be defined due to the number of load carrying wires in the outer strands.					

*Number of visible broken wires (reached or exceeded) is achieved in the rope removal criteria, for **rotation-resistant** ropes according to **DIN ISO 4309***

1) For the purpose of this international standard, fill wires are not considered to be load carrying wires and are not included in the value for n.
2) A broken wire has two ends (counted as one wire).
3) The values apply for damage in the cross over areas and the layers of coils due to deflection angles (not for rope sections, which run only over rope pulleys and do not spool up on the drum).
4) d = Rope nominal diameter

▶ Check the rope over the entire length for visible broken wires.

When visible broken wires are scattered present:
▶ On the point of a broken wire, mark the rope sections on a length of 30d in both directions.
▶ Count visible broken wires in the marked rope sections and record them.
▶ Take the RCN (Rope category number) from the manufacturer's documentation of the rope.

When the make for rotation-resistant ropes is **not** listed in the chart:
▶ Determine the total number of load carrying wires in the rope: Add all wires in the strands of the outer layer, do **not** count fill wires.

LWE/LR 1600-2-001/18101-07-02/en

copyright © Liebherr-Werk Ehingen GmbH 2018

▶ Compare the number of broken wires of each marked rope section 30d with the number of broken wires in the chart.

When the number of visible broken wires is smaller than listed in the chart:
▶ Within the rope section with the most broken wires: Mark the rope section with the most broken wires on a length of 6d.
▶ Count visible broken wires in the marked rope sections 6d and record them.
▶ Compare the number of broken wires of the marked rope section with the number of broken wires in the chart.

When the number of visible broken wires is equal to or larger than that listed in the chart:
▶ Take the rope down.
▶ Enter the results in the inspection checklist.

15.2 Broken wire in the strand valleys

The broken wires in these areas point to the fact that the condition in the inside of the rope is deteriorating.

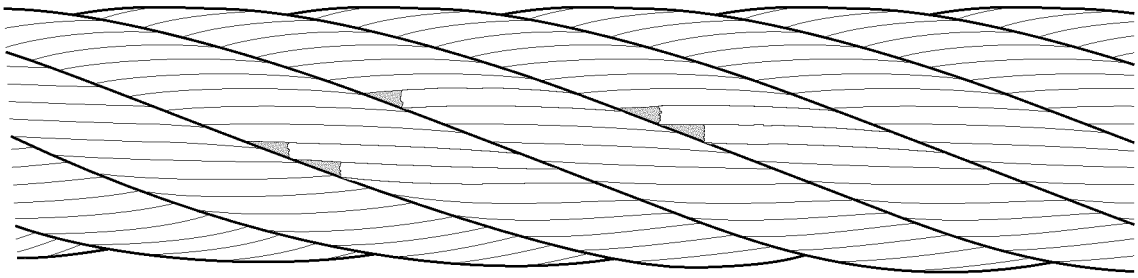

Fig.121005: Broken wire in the strand valleys

When two or more broken wires occur within a 6d long rope section:
▶ Take the rope down.

15.3 Broken wires on rope end connections

▶ Check the area near the rope end connections and carefully check for broken wires.

Loose wires are a sign of broken wires in the rope end connection.

▶ Use a marlin spike to check for loose wires.

When broken wires are near a rope end connection and two or more wires are affected:
▶ Take the rope down.
or

When the remaining rope lengths fulfil the minimum number of remaining coils in all operating positions:
Shorten the rope, see chapter 7.05.50.
▶ Attach the rope end connection.

15.4 Broken wires in rope sections, which are not spooled up on the winch

When the broken wires are concentrated on one or two strands, the removal criteria can be present at fewer broken wires as noted in the chart (rope section in the length of 6d).

▶ Have the rope removal criteria determined by **expert personnel for crane rope inspection**.

LWE/LR 1600-2-001/18101-07-02/en

copyright © Liebherr-Werk Ehingen GmbH 2018

15.5 Broken wire nests

When broken wires are very close to each other or when the broken wires are concentrated on one strand, then the rope must be taken down, even at fewer broken wires than noted in the chart (rope section 6d).

▶ Have the rope removal criteria determined by **expert personnel for crane rope inspection**.

16 Checking the rope end connection

The removal criteria are evaluated by the **expert personnel for crane rope inspection**.

Check for broken wires, see section „Broken wires on rope end connections“.

16.1 Pressed rope end connection

Example of a pressed rope end connection: Locking clamp.

▶ Check the rope end connections for signs of possible slipping between the locking clamp and the wire rope.
▶ Check the rope end connections for material cracks.
▶ Check rope end connections for corrosion, deformation and wear.

16.2 Enlarged rope end connection

Example of an enlarged rope end connection: Locking cast sleeve.

▶ If present: Remove the beam.
▶ Check rope end connections for corrosion, deformation and wear.

If the rope connection is on a flat rope:
▶ Check the cone setting, see chapter 8.04.10.

16.3 Detachable rope end connection

Example of a detachable rope end connection: Wedge lock.

▶ Check that the rope end connections are fit tightly and correctly installed.
▶ Check the wire rope inside and at the outlet of the rope end connection. Check the rope according to the removal criteria in this chapter.

17 Checking of rope diameter

17.1 Even reduction of rope diameter

WARNING
Spooling problems due to reduced rope diameter!
▶ Take the rope down even when the removal criteria according to **DIN ISO 4309** has not yet been reached.

The values in this section do **not** apply for rope sections, which were damaged in cross over areas due to multi layer spooling on a winch.

LWE/LR 1600-2-001/18101-07-02/en

copyright © Liebherr-Werk Ehingen GmbH 2018

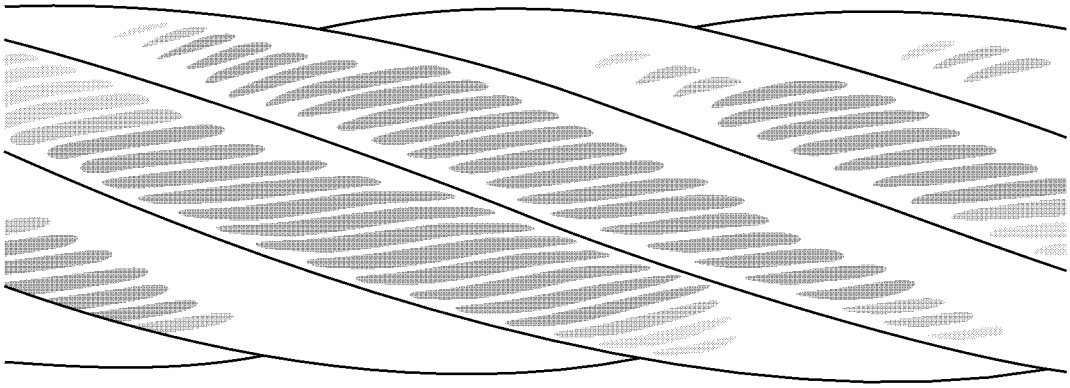

Fig.121001: External abrasion on the rope

The rope diameter changes due to abrasion, settling and external influences.

Abrasion of cover wires of outer strands of rope due to frictional contact. Especially in those areas where ropes are in contact with the rope pulleys during start up or slow down of the load.

Wear is increased by lack of or incorrect lubrication and the effect of dust.

Abrasion reduces the tensile strength of steel ropes because the cross section of the steel is reduced.

Additional possible causes for reduction of rope diameter:
- Wear in the inside of the rope
- Wear of fiber insert
- Breakage of a steel insert
- Broken inner strands

This section is valid solely for the following ropes:
- Ropes, which spool up on single layer winches
- Ropes, which run through a steel rope pulley

$$d_V = \frac{d_{ref} - d_m}{d} \times 100\ \%$$

Fig.121372: Formula Reduction of rope diameter

d_V = even reduction of rope diameter
d_{ref} = rope diameter, which was determined before placement
d_m = measured rope diameter
d = rope nominal diameter: Take value from inspection checklist

The following chart applies exclusively for ropes, which spool up on single layer winches and / or run through a steel rope pulley.

Rope type	Even reduction of diameter d_V (in percentages of rope nominal diameter d)	Classification of degree of severity	
		Description	%
	Less than 6 %	—	0
Single layer rope with fiber insert	6 % and above, but less than 7 %	Light	20
	7 % and above, but less than 8 %	Medium	40
	8 % and above, but less than 9 %	High	60
	9 % and above, but less than 10 %	Very high	80
	10 % and above	**Rope removal criteria**	**100**

copyright © Liebherr-Werk Ehingen GmbH 2018

Rope type	Even reduction of diameter d_v (in percentages of rope nominal diameter d)	Classification of degree of severity	
		Description	%
Single layer rope with steel insert or parallel roped rope	Less than 3.5 %	—	0
	3.5 % and above, but less than 4.5 %	Light	20
	4.5 % and above, but less than 5.5 %	Medium	40
	5.5 % and above, but less than 6.5 %	High	60
	6.5 % and above, but less than 7.5 %	Very high	80
	7.5 % and above	**Rope removal criteria**	**100**
Rotation-resistant rope	Less than 1 %	—	0
	1 % and above, but less than 2 %	Light	20
	2 % and above, but less than 3 %	Medium	40
	3 % and above, but less than 4 %	High	60
	4 % and above, but less than 5 %	Very high	80
	5 % and above	**Rope removal criteria**	**100**

*Degree of severity and removal criteria depending on rope type and even diameter reduction according to **DIN ISO 4309***

The medium value from the smallest and the largest measured diameter results in the value for $\mathbf{d}_m$.

- ▶ Measure rope diameter on several locations and calculate measured diameter $\mathbf{d}_m$.
- ▶ Calculate even reduction $\mathbf{d}_v$ of rope diameter with formula.
- ▶ Read the degree of severity in the chart, depending on the rope type.
- ▶ Document the degree of severity in the inspection checklist.

When the degree of severity has reached 100 %:
- ▶ Take the rope down.

17.2 Localized reduction of rope diameter

Localized reductions of rope diameter point to the fact that a rope insert may have failed, for example.

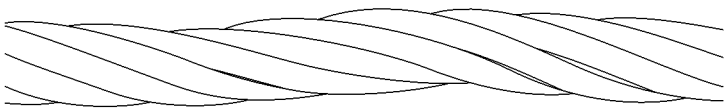

Fig.120983: Localized reduction of rope diameter

- ▶ Check the rope for localized reduction of rope diameter.

When a localized reduction of the rope diameter is found:
- ▶ Take the rope down.

LWE/LR 1600-2-001/18101-07-02/en

copyright © Liebherr-Werk Ehingen GmbH 2018

17.3 Localized increases of rope diameter

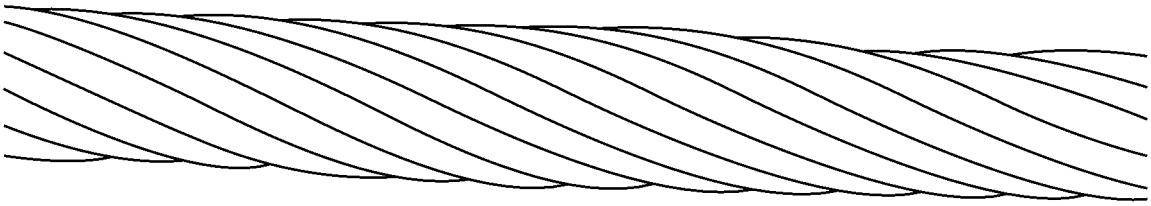

Fig.120992: Localized increase of rope diameter

An increase over a longer area of the rope can be caused by absorption of moisture in the fiber insert or due to corrosion in the inside of the rope.

Rope insert	Maximum increase of rope diameter during operation
Steel	5 %
Fiber	10 %

▶ Check the rope for increases in rope diameter.

When the increases exceed the maximum values:
▶ Take the rope down.

18 Corrosion

Corrosion occurs due to insufficient lubrication, in maritime climates and in an atmosphere polluted by industrial fumes.

External corrosion is indicated by a rough wire surface. A superficial rust film can be wiped off.

Significant corrosion reduces the strength and elasticity of the rope due to the reduction of the rope diameter.

Inner corrosion is hard to detect.

Do **not** use solvents to clean the rope.

Make sure that the following prerequisite is met:
– Rope is cleaned (wiped and brushed).

18.1 External corrosion

The various types of corrosion are classified and noted with the classification for removal criteria in percentages:

LWE/LR 1600-2-001/18101-07-02/en

copyright © Liebherr-Werk Ehingen GmbH 2018

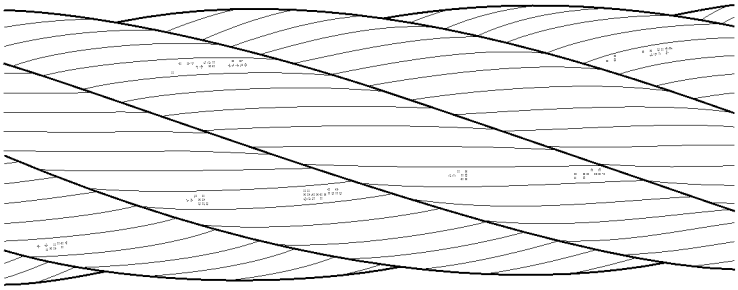

Fig.120984: Surface light corrosion: Classification 0 % of removal criteria

Superficial light corrosion (rust film) can be wiped off.

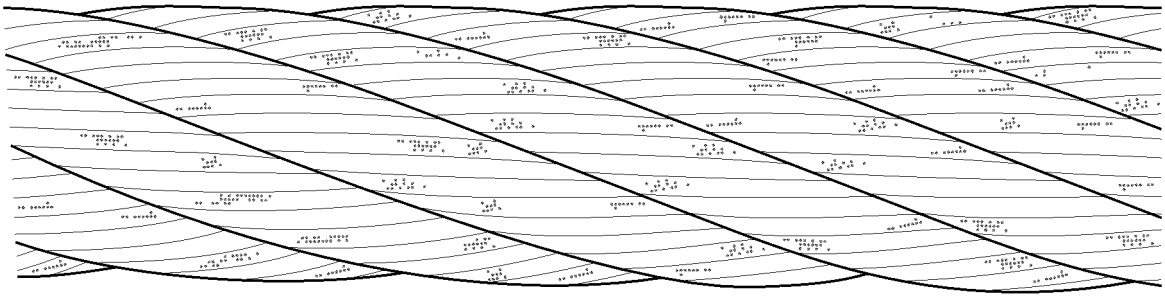

Fig.120985: Surface feels rough: Classification 20 % of removal criteria

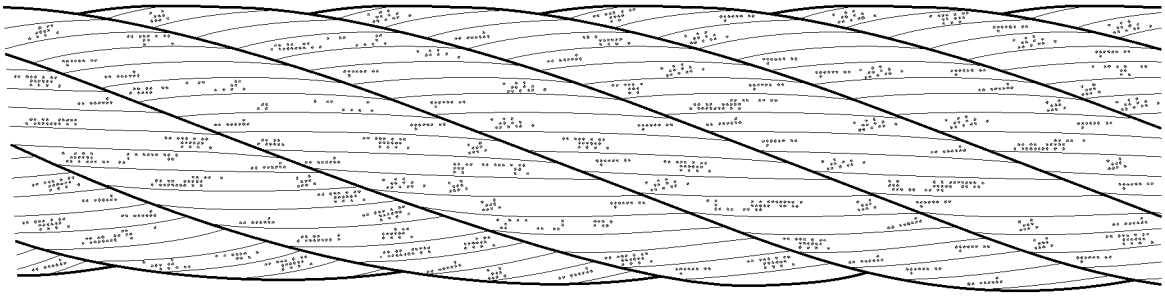

Fig.120986: Surface feels very rough: Classification 60 % of removal criteria

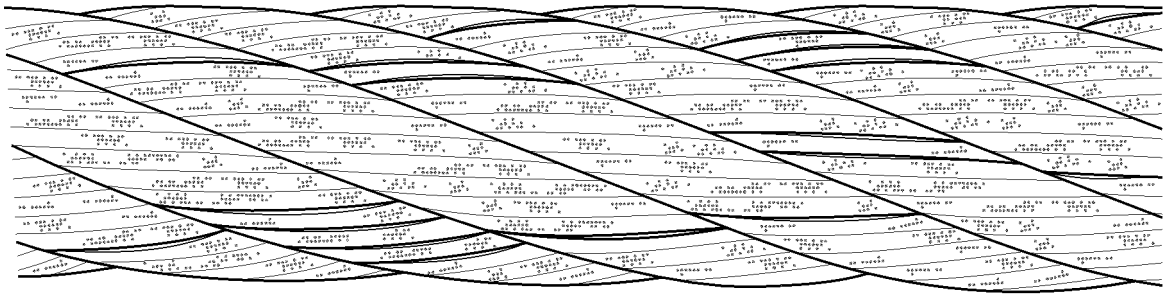

Fig.120987: Surface very decayed, spaces between individual wires can be easily recognized: Classification 100 % of removal criteria

LWE/LR 1600-2-001/18101-07-02/en

copyright © Liebherr-Werk Ehingen GmbH 2018

When 100 % of removal criteria is reached:
▶ Take the rope down.

18.2 Internal corrosion

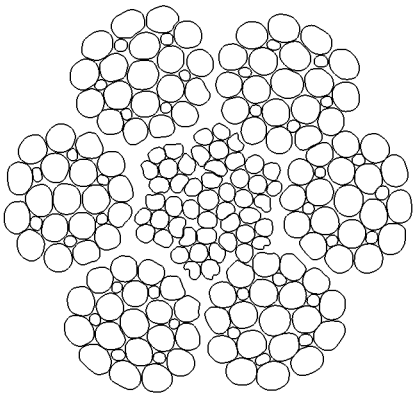

Fig.120982: Corrosion in the inside of the rope

Internal corrosion is present when clearly visible corrosion particles migrate between the valleys of the outer strands: Classification 100 % removal criteria.

When internal corrosion is found:
▶ Have the rope removal criteria evaluated by **expert personnel for crane rope inspection** or place the rope down.

18.3 Friction corrosion

Friction corrosion occurs as a type of brown powder, which migrates from the inside of the rope to the outside: Classification 100 % of removal criteria.

▶ Check the rope diligently for friction corrosion.

If friction corrosion is found:
▶ Have the rope removal criteria evaluated by **expert personnel for crane rope inspection** or place the rope down.

19 Corkscrew-like distortion

Fig.120988: Corkscrew-like distortion

Distortion where the rope is in the form of a corkscrew along its longitudinal axis.

Effects of corkscrew-like distortion:
- Irregular rope drive
- Rope wear
- Broken wire
- Bearing damage on rope pulleys

LWE/LR 1600-2-001/18101-07-02/en

copyright © Liebherr-Werk Ehingen GmbH 2018

If the distortion is very pronounced, then other components can be affected in their function when the affected rope section runs through in crane operation.

▶ Check the entire rope for corkscrew-like distortion.

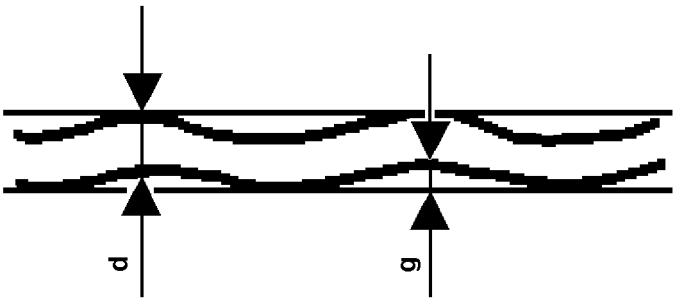

Fig.123988: Example for corkscrew-type distortion

d Rope nominal diameter **g** Distance

Rope section	Conditions for removal criteria, formula
Straight rope section, which does **not** run through or around a rope pulley or spool up on a winch	$g \geq \frac{1}{3} \times d$
Straight rope section, which runs through or around a rope pulley or spools up on a winch	$g \geq \frac{1}{10} \times d$

When corkscrew-like distortion is present:
▶ Determine the rope nominal diameter **d** and distance **g** on the rope.
▶ Check the removal criteria with the formula.

When the removal criteria is reached:
▶ Take the rope down.

20 Basket formation

This distortion occurs due to different layers between the outer strand layers and the inside of the rope.

Causes for basket formation are high angular pull angles during the run over the rope pulleys and run-in rope pulleys. Even load distribution over the entire cross section is not possible.

LWE/LR 1600-2-001/18101-07-02/en

copyright © Liebherr-Werk Ehingen GmbH 2018

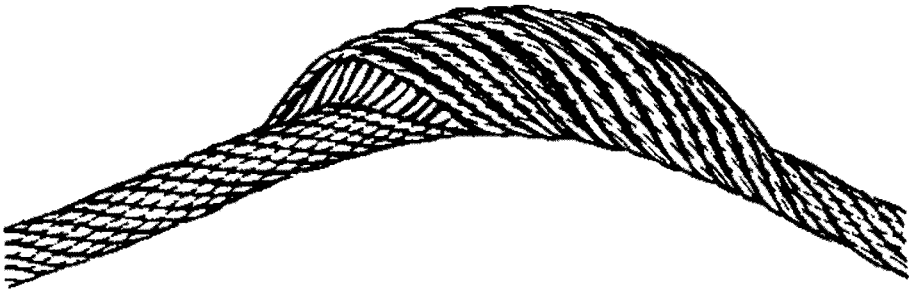

Fig.120989: Basket formation

▶ Check the entire rope for basket formation.

When basket formation is present:
▶ Take the rope down.

21 Protruding, distorted insert or strand

This distortion is a special form of basket formation. The insert or the core of the rope protrudes between the outer strands or an outer strand protrudes from the rope banding.

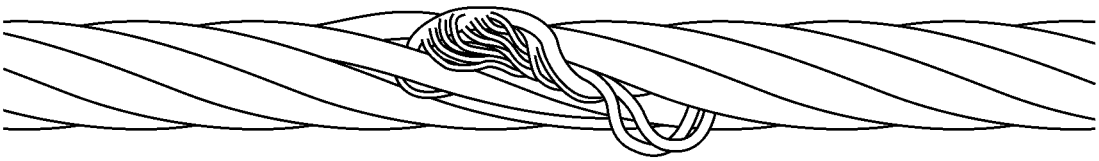

Fig.120990: Protrusion of an insert (rope single layer)

Fig.120991: Distorted or protruding strand

LWE/LR 1600-2-001/18101-07-02/en

copyright © Liebherr-Werk Ehingen GmbH 2018

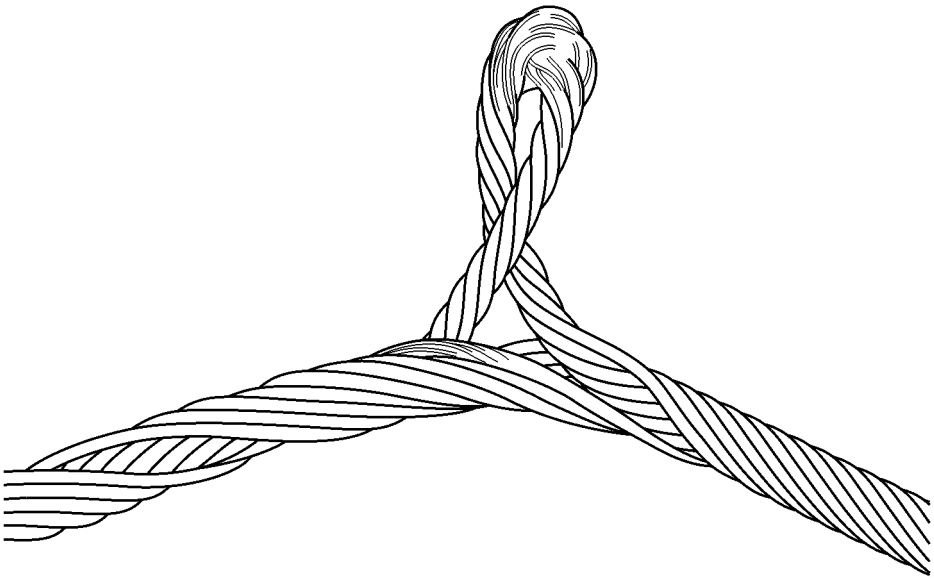

Fig.121373: Protrusion of rope insert on rotation-resistant rope

When the insert or a strand protrudes or is distorted, place the rope down. Have authorized inspector for crane rope inspection check if the rope area with the distortion can be removed.

▶ Check the entire rope for protruding, distorted insert or strand.

When protruding, distorted insert or braid is present:
▶ Take the rope down.
▶ Have **expert personnel for crane rope inspection** check if the rope area with the distortion can be removed.

22 Loop formation

At loop formation individual or several wires protrude from the rope and bulge upward (bird-caging).

These areas are most often on the opposite side of the rope pulley groove.

Make sure that the following prerequisite is met:
– There are **no** broken wire ends present.

If only a core wire of the rope insert protrudes through the outer strands, then the rope does not have to be taken down when:
– The wire can be removed.
– The wire does not disturb other elements of the rope drive.

LWE/LR 1600-2-001/18101-07-02/en

copyright © Liebherr-Werk Ehingen GmbH 2018

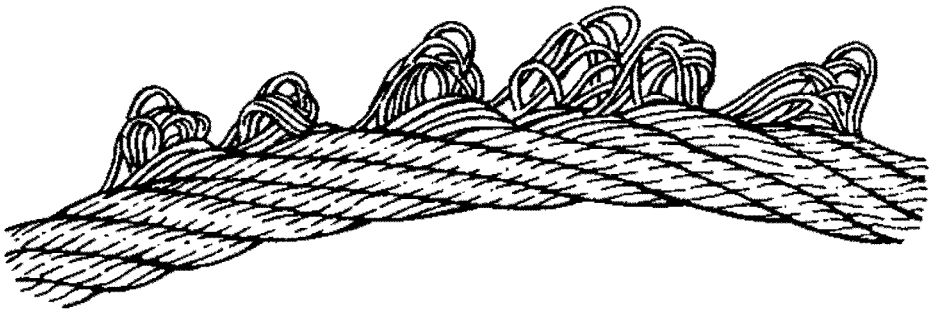

Fig.120993: Emergence of individual wires

▶ Check rope for loop formation.

When solely a core wire protrudes:
▶ Remove the core wire.

When several wires are affected from the loop formation:
▶ Take the rope down.

23 Kinking or rope loops pulled closed

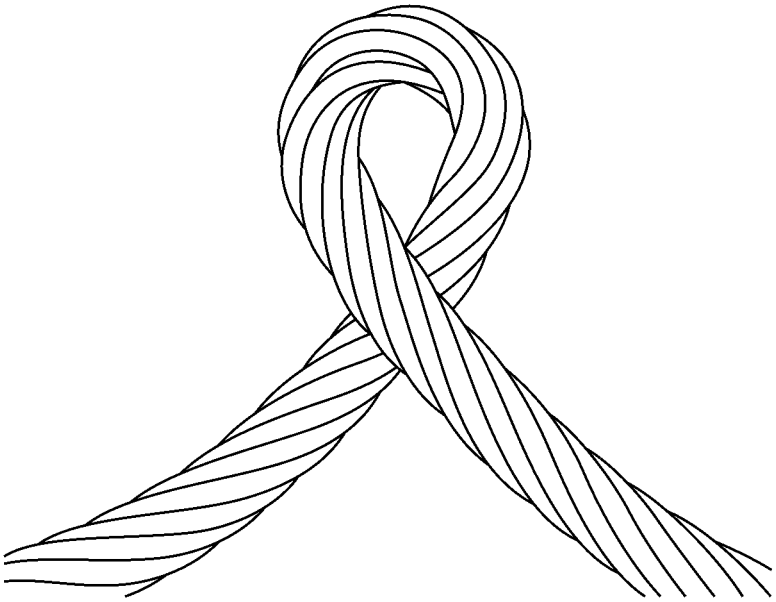

Fig.121007: Kinking or rope loop pulled closed

At this deformation a loop has formed in the rope, without the possibility to rotate around its own axis during a load. The rope is subjected to more wear.

The rope is significantly distorted. The strength remains only in part.

LWE/LR 1600-2-001/18101-07-02/en

copyright © Liebherr-Werk Ehingen GmbH 2018

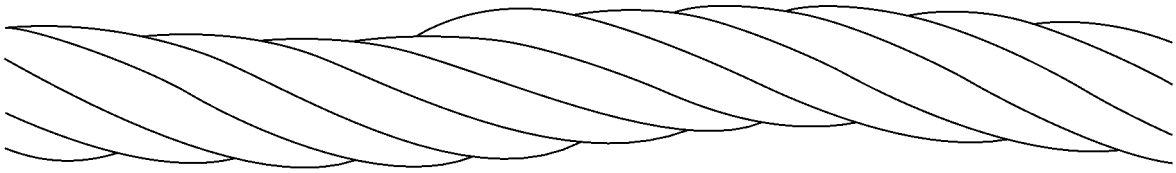

Fig.121002: Positive Kinking

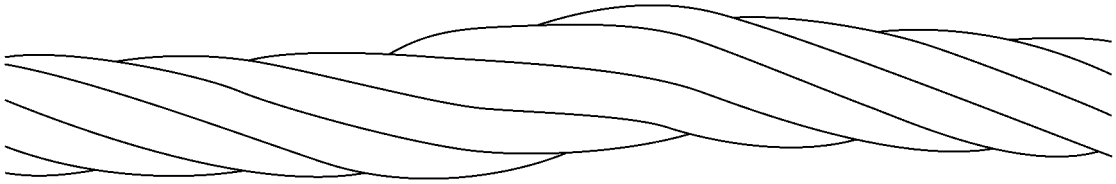

Fig.121003: Negative Kinking

▶ Check the rope for kinking or rope loops pulled closed.

When kinking or rope loops pulled closed occur:
▶ Take the rope down.

24 Buckles

Buckles are angular deformations. The rope was damaged due to external influences. Strong deformations of the rope cause stronger wear.

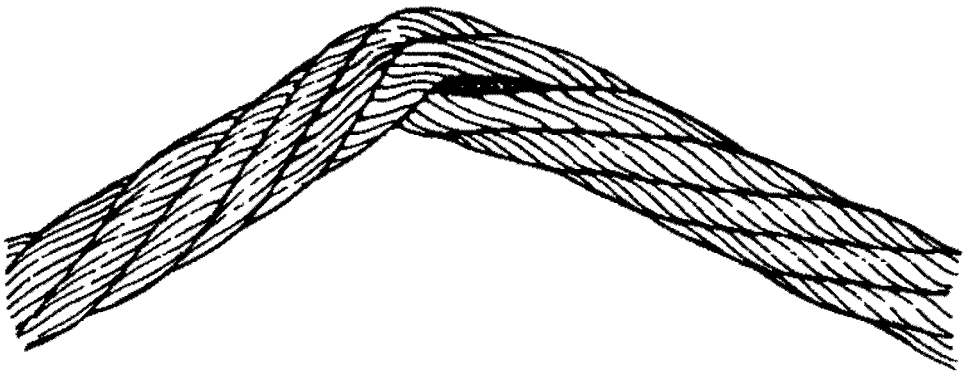

Fig.120999: Severe buckle

A buckle is a serious matter if a fold is visible on the underside of the rope.

When buckles are present:
▶ Have the rope inspected by **expert personnel for crane rope inspection**.

When a distortion and degree of severity permits further operation:
▶ Shorten the inspection interval.

LWE/LR 1600-2-001/18101-07-02/en

copyright © Liebherr-Werk Ehingen GmbH 2018

When the removal criteria is reached:
▶ Take the rope down.

25 Effects of heat, arcs

Damage caused to the rope by welding work, for example.

Exceptional thermal effect is visible through tempering colors, the loss of lubricant and by localized melting of wires.

When thermal effect has occurred on the rope:
▶ Take the rope down.

26 Combined degree of severity

Note
▶ For a method to determine the effect of a combined degree of severity and damage on the rope, see **DIN ISO 4309**.

When the condition of the rope deteriorates, then often a combination of various causes occurs.

To determine the degree of severity, the **expert personnel for crane rope inspection** must:
- take different damage within a rope section into account
- evaluate the entire effect of the damage and the distortions
- decide about the operational safety of the rope
- evaluate if inspection intervals must be adjusted
- decide if the rope must be taken down

When the combined degree of severity is more than 100 %, then the rope must be taken down.

27 Flattenings

Effects of flattenings on the rope:
- Rope sections with flattenings, which move **over the rope pulleys** tend to higher wear and a higher number of broken wires.
- Rope pulleys can be damaged.
- Flattenings on **stationary ropes** (guy ropes boom) promote quicker corrosion, especially in the areas where the outer strands have opened.

Flattened rope sections must be checked in shorter intervals for broken wires and corrosion.

27.1 Shorting the intervals

▶ Check the entire rope for flattenings.

When flattenings are present on stationary ropes:
▶ Shorten the intervals for rope inspection.

When it is **not** possible to shorten the intervals for the rope inspection:
▶ Take the rope down.

27.2 Improper mechanical damage

An improper mechanical damage occurs, for example, when the rope is trapped.

▶ Take the rope down immediately or shorten it, see chapter 7.05.50.

LWE/LR 1600-2-001/18101-07-02/en

copyright © Liebherr-Werk Ehingen GmbH 2018

27.3 Operational transverse pressure

Operational transverse pressure causes flattenings, for example in the incline range of multi layer spooling.

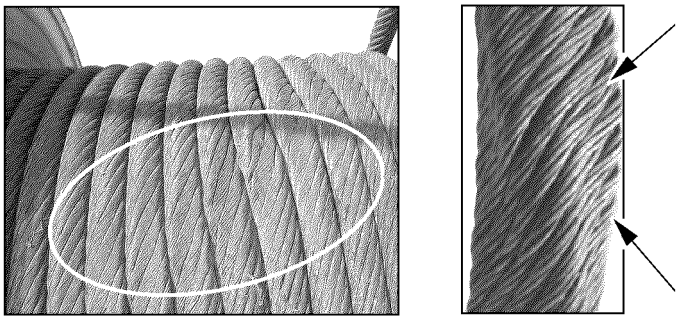

Fig.114002: Flattenings

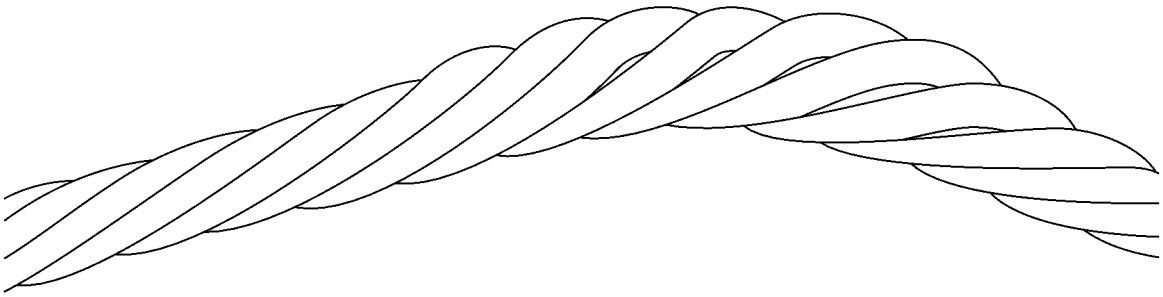

Fig.120996: Flattenings on multi layer spoolings

▶ Check the first rope layer of the winches for crushed areas and distortions.

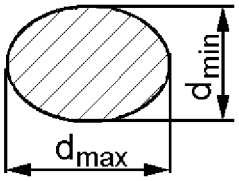

Fig.121006: Largest and smallest diameter on the distortion area

$$V = \frac{d_{max} - d_{min}}{d} \times 100\ \%$$

Fig.121374: Formula to calculate the distortion

V	Rope distortion in percentages	**dmax**	Largest diameter of distortion area
d	Rope nominal diameter	**dmin**	Smallest diameter of distortion area

When distortions are present:
▶ Determine the number of broken wires See section „Determining the number of broken wires“.

LWE/LR 1600-2-001/18101-07-02/en

copyright © Liebherr-Werk Ehingen GmbH 2018

When the number of permissible broken wires is exceeded:
- ▶ Take the rope down.
- ▶ Calculate the distortion **V** with the formula and document it in the inspection checklist.

When distortion **V** is larger than 5 %:
- ▶ Check the rope before every assembly and erection procedure.

When distortion **V** is larger than 10 %:
- ▶ Document the degree of severity of 50 % in the inspection checklist.

When distortion **V** is larger than 20 %:
- ▶ The degree of severity of 100 % is reached: Take the rope down.

LWE/LR 1600-2-001/18101-07-02/en

copyright © Liebherr-Werk Ehingen GmbH 2018

28 Current checklist

Crane and use:

Rope application:		RCN[3]:	Installation date:
Brand name:		Nominal diameter:	Take-down date:
Make[1]:	○ Right hand	○ Left hand	Minimum tensile strength
Direction of lay[1]:	○ Lang's lay	○ Ordinary lay	Permissible number of visible external broken wires
Intermediate layer[1]:	○ IWRC	○ FC ○ WSC	Datum diameter
Wire surface[1]:	○ Bare	○ Galvanized	Permissible diameter reduction: 6d: 30d:
Rope end connections:			

Date	Visible external broken wires						Diameter				Corrosion		Damage, deformation		Combined severity level[2]	Name of expert for the wire rope inspection	Signature
	Number in length of		Position in the rope		Severity level[2]		Measured	Actual reduction to datum diameter	Position in the rope	Severity level[2]	Position in the rope	Severity level[2]	Position in the rope	Severity level[2]			
JJ/MM/TT	6d	30d	6d	30d	6d	30d											

[1] Check where applicable.
[2] State extent of damage; slight or 20%; medium or 40%; high or 60%; very high or 80%; take-down or 100%
[3] RCN = Rope Category Number

LWE/LR 1600-2-001/18101-07-02/en

Fig.121370-en: Form for current checklist

copyright © Liebherr-Werk Ehingen GmbH 2018

LWE/LR 1600-2-001/18101-07-02/en

copyright © Liebherr-Werk Ehingen GmbH 2018

Empty page!

LWE/LR 1600-2-001/18101-07-02/en

copyright © Liebherr-Werk Ehingen GmbH 2018

8.05 Inspection of load hooks

1	Safety guidelines	3
2	Inspection intervals	3
3	Inspecting and monitoring the load hook	3

LWE/LR 1600-2-001/18101-07-02/en

copyright © Liebherr-Werk Ehingen GmbH 2018

LWE/LR 1600-2-001/18101-07-02/en

Fig.195219

copyright © Liebherr-Werk Ehingen GmbH 2018

1 Safety guidelines

DANGER
Death, severe injury, property damage due to welding on load hooks!
- ▶ Do **not** weld load hooks to repair wear.
- ▶ Replace the load hook in case of impermissible wear.
- ▶ Contact Liebherr Service.

Make sure that the following regulation is followed:
- – Do **not** carry out any welding work on load hooks, for example to repair wear.

2 Inspection intervals

By recognizing defects in time, accidents are prevented.

An inspection must be made before operation.

Load hooks must be inspected as needed, but at least once a year by an expert.

The load hook must be inspected very 4 years by an expert.

3 Inspecting and monitoring the load hook

Any defects found must be remedied and documented.

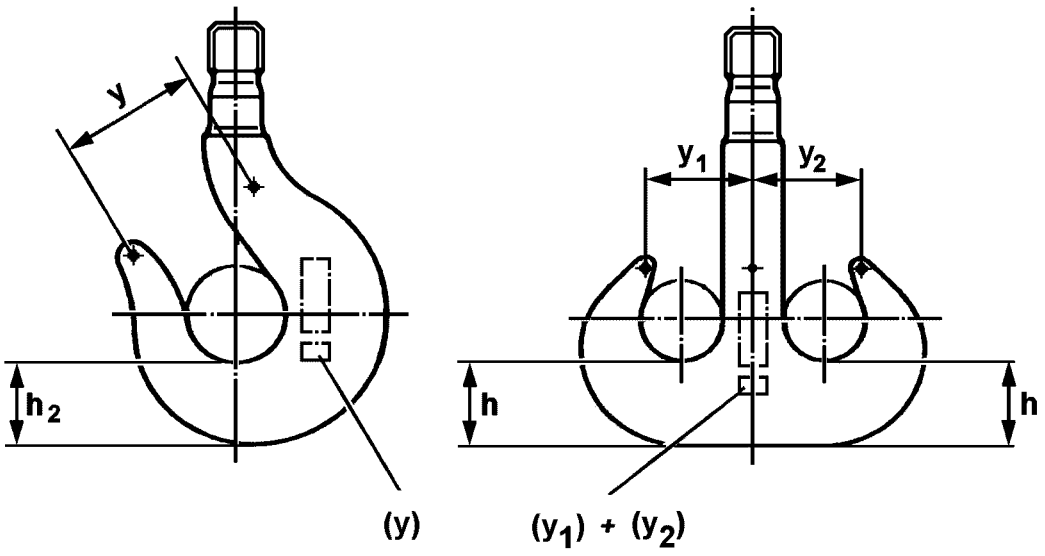

Fig.121531: Description of measured distances of load hooks

copyright © Liebherr-Werk Ehingen GmbH 2018

3.1 Checking the load hook for distortion

DANGER
Death, severe injury, property damage due to expansion of hook jaw!
- ▶ Replace the load hook in case of impermissible expansion.
- ▶ Contact Liebherr Service.

The initial dimension **(y)** for the single hook is marked on the load hook.

The initial dimension **(y_1)** and the initial dimension **(y_2)** for the double hook is marked on the load hook.

The expansion of the hook jaw may not exceed more than 10 % in reference to the initial dimension **(y)** or the initial dimension **(y_1)** and the initial dimension **(y_2)**.

- ▶ Measure dimension **y** or dimension **y_1** and dimension **y_2** from center punch to center punch.
- ▶ Check for dimensional accuracy within the permissible tolerance.

3.2 Checking the load hook for surface cracks

DANGER
Death, severe injury, property damage due to surface cracks and damage on the load hook!
- ▶ Replace the load hook in case of surface cracks and damage.
- ▶ Contact Liebherr Service.

When distortions are found on the hook jaw:
- ▶ Check the load hook for surface cracks with a suitable procedure.
- ▶ Check the load hook for damage

3.3 Checking the load hook for wear

DANGER
Death, severe injury, property damage due to wear on the hook base!
- ▶ Replace the load hook in case of impermissible wear.
- ▶ Contact Liebherr Service.

The wear on the hook base may be no more than 5 % of the initial nominal dimension **h_2** for single hooks or initial nominal dimension **h** for double hooks.

The initial nominal dimensions **h_2** for single hooks and **h** for double hooks are listed in the chart.

Hook Number	Single hook h_2 [mm]	Double hook h [mm]
4	67	—
5	75	—
6	85	75
8	95	85
10	106	95
12	118	106
16	132	118
20	150	132
25	170	150
32	—	170

LWE/LR 1600-2-001/18101-07-02/en

copyright © Liebherr-Werk Ehingen GmbH 2018

Hook Number	Single hook h_2 [mm]	Double hook h [mm]
40	—	190
50	—	212
63	—	236
80	—	265
100	—	300
125	—	335
160	—	375
200	—	425
250	—	475
320	—	545

Initial nominal dimensions $\mathbf{h_2}$ for single hooks and **h** for double hooks

- ▶ Measure dimension $\mathbf{h_2}$ for single hooks or dimension **h** for double hooks.
- ▶ Check for dimensional accuracy within the permissible tolerance.

3.4 Checking load hooks for corrosion and wear

DANGER
Death, severe injury, property damage due to corrosion and wear on the thread!
- ▶ Replace load hooks which are **not** dimensionally accurate.

When wear or impermissible axial play on the hook nut is present:
- ▶ Replace the hook nut.
- ▶ Contact Liebherr Service.

To check the threads regarding corrosion and wear, the hook nut must be unscrewed from the hook shaft.

- ▶ Check the load hook thread and hook nut for corrosion and wear.

When reconditioning work is required to remove corrosion notches:
- ▶ Carry out a test for dimensional accuracy.

LWE/LR 1600-2-001/18101-07-02/en

copyright © Liebherr-Werk Ehingen GmbH 2018

Empty page!

LWE/LR 1600-2-001/18101-07-02/en

copyright © Liebherr-Werk Ehingen GmbH 2018

8.06 Inspection of hydraulic hose lines

1	Safety guidelines	3
2	Inspection intervals	3
3	Checking the end of the service life	3
4	Inspecting the hydraulic hose lines for damage	4
5	Inspecting the hydraulic hose lines for leaks	5
6	Documenting the inspection	5
7	Replacing hydraulic hose lines	5

LWE/LR 1600-2-001/18101-07-02/en

copyright © Liebherr-Werk Ehingen GmbH 2018

LWE/LR 1600-2-001/18101-07-02/en

Fig.195219

copyright © Liebherr-Werk Ehingen GmbH 2018

1 Safety guidelines

WARNING
Damaged and leaky hydraulic hose lines!
Fire, accidents, death, severe injury, property damage.

If leaky areas are found:
▶ Have these leaky areas inspected immediately by authorized and trained expert personnel and remedied.

If damage is found:
▶ Have the hydraulic hose lines replaced exclusively by authorized and trained expert personnel.

If it is determined that the service life is over:
▶ Have the hydraulic hose lines replaced exclusively by authorized and trained expert personnel.

Make sure that the following prerequisite is met:
– A **competent person for hydraulic hose lines** inspects the hydraulic hose lines.

A **competent person for hydraulic hose lines** has the following knowledge:
– Knowledge and experience in hydraulic and mechanics
– Knowledge of all requirements regarding valid standards:
  • ISO 8331
  • ISO 2230
  • ISO 1402
  • ISO/TR
  • EN 853 to EN 857
  • National regulations
– **or:** Knowledge of all requirements regarding the valid German standards, for example:
  • DIN 20066:202-10
  • BGR 237 Feb 2008, BG-Regulation

2 Inspection intervals

The inspection of hydraulic hose lines must be carried out in the following intervals:
– when the crane is **up to 10 years** old, at least one inspection every twelve months
– when the crane is **older than 10 years**, at least one inspection every six months

3 Checking the end of the service life

Hydraulic hose lines have a limited service life.

When hydraulic hose lines are properly stored, installed and used, then the manufacturer guarantees a service life of at least 10 years.

The life expectancy of hydraulic hose lines can deviate significantly from the noted service life of hydraulic hose lines.

Note
Special case: Active rear axle steering!
▶ The life expectancy of hydraulic hose lines is six years, including a storage period of maximum two years.

The life expectancy of a hydraulic hose line depends on various factors:
– Environmental influences, for example: Temperature, humidity, corrosive air
– Use

LWE/LR 1600-2-001/18101-07-02/en

copyright © Liebherr-Werk Ehingen GmbH 2018

- Working cycles
- Number of bending cycles
- Friction
- Fluid

The following factors reduce the life expectancy significantly:
- Heat
- Repeated bending under pressure

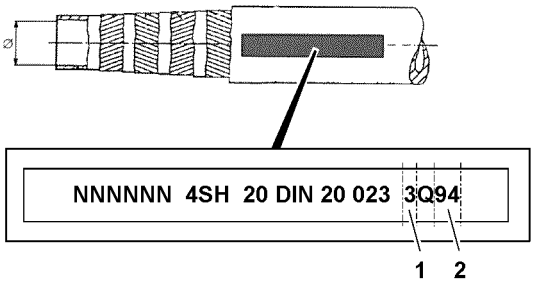

Fig.120159: Example for identification of hydraulic hose lines

The manufacturing date is marked on the fixtures or fittings.

▶ Read the quarter **1** of manufacture.
▶ Read the year **2** of manufacture.

When the life expectancy of a hydraulic hose line has been exceeded, then a **competent person** can decide **not** to replace the hydraulic hose line. Document the decisions, see section „Documenting the inspection“.

When the end of the service life is determined:
▶ Have the hydraulic hose lines replaced exclusively by authorized and trained expert personnel.

4 Inspecting the hydraulic hose lines for damage

Hydraulic hose lines must be replaced when one of the following damage is present:
– Damage on outer surface, such as chafe marks, cuts and cracks
– Brittleness due to aging of outer layer (cracks)
– Distortion, such as splitting of hose layers, bubbles, crushed areas, kinks, rotational stress
– Leakages
– Damage or distortion of hose fixtures or hose fitting (seal is endangered)
– Movement between hose and hose line, hose working itself loose from the fixture or the fitting
– Requirements for installation **not** observed
– Corrosion of fixture or fitting (solidness or function of fitting is endangered)

When the hydraulic hose line is **not** completely accessible:
▶ Remove the hydraulic hose line.

When the hydraulic hose line is protected with a protective hose:
▶ Check the hose protection for abrasion Abrasion on a hose protective hose can indicate abrasion on the hydraulic hose line.
▶ Check hydraulic hose lines for distortion in pressureless and pressurized status and during bending.

When the hydraulic hose line is slightly damaged, then a **competent person** can decide **not** to replace the hydraulic hose line. Document the decisions, see section „Documenting the inspection“.

If damage is found:
▶ Have the hydraulic hose lines replaced exclusively by authorized and trained expert personnel.

LWE/LR 1600-2-001/18101-07-02/en

copyright © Liebherr-Werk Ehingen GmbH 2018

5 Inspecting the hydraulic hose lines for leaks

▶ Check the crane for escaped hydraulic oil.
▶ Check the crane for leaks by visually checking the ground under the crane.

When the hydraulic system leaks:
▶ Have these leaks inspected immediately by authorized and trained expert personnel and remedied.
or
Contact Liebherr Service.

6 Documenting the inspection

Make sure that the following prerequisite is met:
– A **competent person for hydraulic hose lines** documents noticeable observations.

The following data about hydraulic hose lines is documented:
– Installation location
– Condition
– Date
– Time

▶ Document noticeable observations comprehensibly.

When the life expectancy of a hydraulic hose line has been exceeded of if the hydraulic hose line is slightly damaged, then a **competent person** can decide **not** to replace the hydraulic hose line.

When the hydraulic hose line is **not** replaced:
▶ Document decisions and replacements comprehensibly.
▶ Document the date for the next inspection comprehensibly.

7 Replacing hydraulic hose lines

To ensure maximum safety, sealing and service life, the following guidelines apply for replacement of hydraulic hose lines.

WARNING
Impermissible spare parts!
Death, severe injury, property damage.
▶ Do **not** use repaired or used hydraulic hose lines.
▶ Use exclusively Original Liebherr spare parts.
▶ Use exclusively hydraulic hose lines according to manufacturer's specification (including fixtures, rubber piece goods and manufacturing process).

NOTICE
Routing of hydraulic hose lines changed!
Abrasion. Incorrect bending radius. Stress. Shortened service life.
▶ Keep the routing of hydraulic hose lines.
▶ Inspect the hydraulic hose lines according to intervals.

▶ Adhere to the hose bending radii according to the manufacturer's specifications.
▶ Ensure the routing of hydraulic hose lines according to manufacturer's specifications (pressureless and pressurized condition).
▶ Ensure the distance between lines and structures.

If necessary:
▶ Check moving parts in the area of hydraulic hose lines.

LWE/LR 1600-2-001/18101-07-02/en

copyright © Liebherr-Werk Ehingen GmbH 2018

When the hydraulic hose line is installed in straight direction:

- ▶ Ensure a sag of the hose.
- ▶ Avoid mechanical tension and twisting of the hose during installation.
- ▶ Fasten the hydraulic hose line according to manufacturer's specification.
- ▶ Do not cross hydraulic hose lines for high pressure and low pressure.
- ▶ Keep hydraulic hose lines away from hot components.

When hydraulic hose lines are in a surrounding with high temperatures:

- ▶ Install protective insulation according to manufacturer's specifications.

LWE/LR 1600-2-001/18101-07-02/en

copyright © Liebherr-Werk Ehingen GmbH 2018

8.12 Inspection of safety controls on the relapse supports

1 S-boom relapse retainer 3

LWE/LR 1600-2-001/18101-07-02/en

copyright © Liebherr-Werk Ehingen GmbH 2018

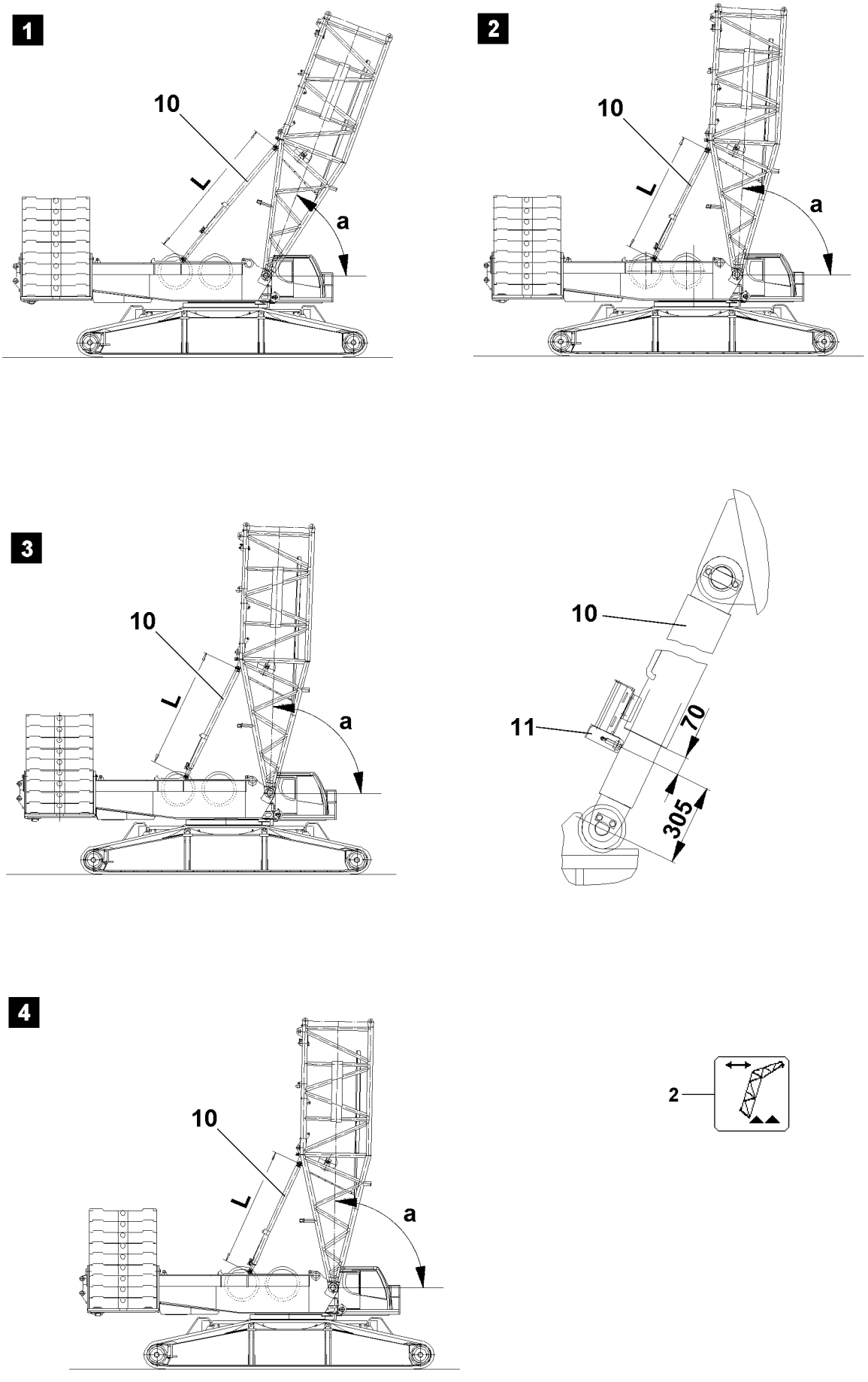

LWE/LR 1600-2-001/18101-07-02/en

Fig.105322

copyright © Liebherr-Werk Ehingen GmbH 2018

1 S-boom relapse retainer

Two hydraulic cylinders prevent the boom from falling backward.

They are controlled on high or low pressure, depending on the operating mode or boom length.

In steepest boom position, the luffing up movement is turned off by the actuated limit switches in the cylinders **10**

1.1 Checking limit switch initiators for function

Cover limit switch initiators **11** on the S-relapse cylinder **10** individually with a metal plate.
- The S-boom „luffing up“ movement must turn off.
- The icon **2** must appear on the LICCON monitor.

	Angle a	**Cylinder length L**
Figure **1**, cylinder extended	69,7°	5486 mm
Figure **2**, steepest position	87°	4595 mm
Figure **3**, electric shut off	88°	4541 mm
Figure **4**, block position	89°	4486 mm

LWE/LR 1600-2-001/18101-07-02/en

copyright © Liebherr-Werk Ehingen GmbH 2018

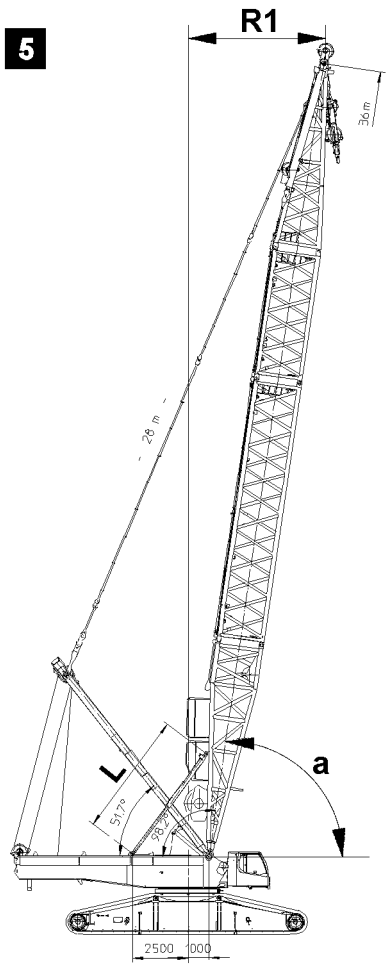

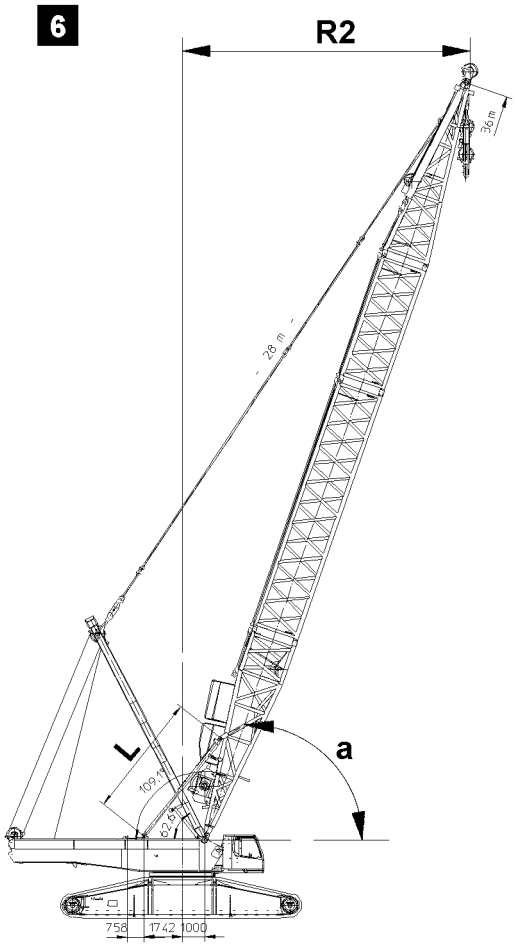

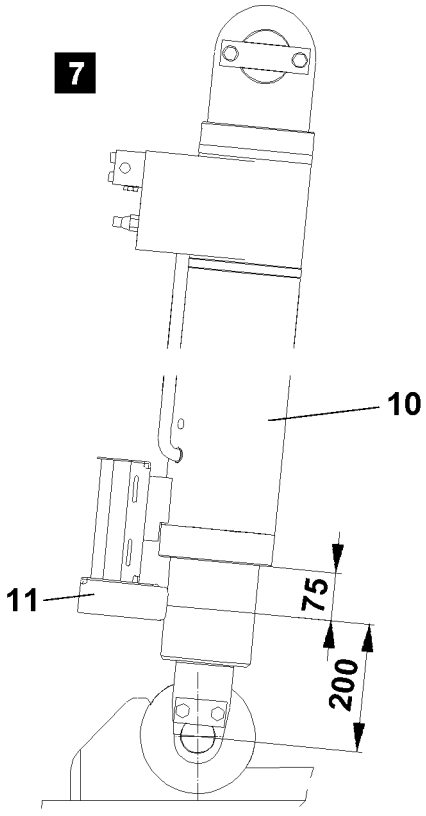

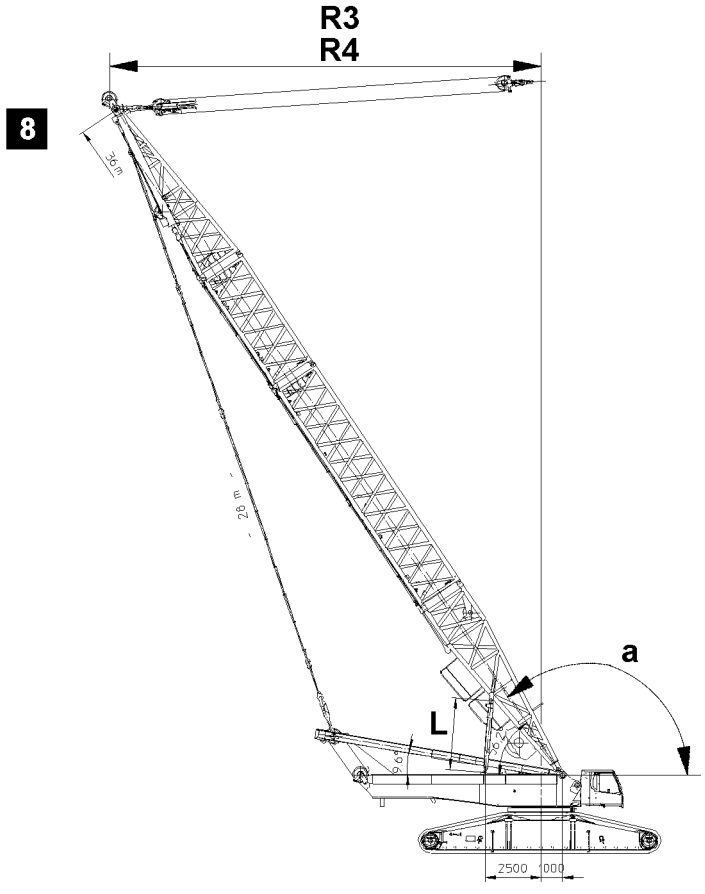

Fig.105323

LWE/LR 1600-2-001/18101-07-02/en

copyright © Liebherr-Werk Ehingen GmbH 2018

2 Derrick relapse retainer

Two hydraulic cylinders prevent the derrick from falling backward.

– If the limit switches on the cylinders are actuated, the winch 4„spool up“ movement is shut off.

2.1 Checking limit switch initiators for function

Cover limit switch initiators **11** on the D-relapse cylinder **10** individually with a metal plate.

– The D-boom „luffing up“ movement must turn off.

2.2 Illustration

	Radius R	D 36 m	D 30 m	Angle a	Cylinder length L
Figure **5**, cylinder extended	R 1	6,3 m	5,4 m	81,8°	5645 mm
Figure **6**, installing position	R 2	13,1 m	11,1 m	70,9°	5645 mm
Figure **7**, electric shut off	R 3	19,0 m	15,7 m	122,8°	3307 mm
Figure **8**, block position	R 4	19,5 m	16,2 m	123,8°	3245 mm

LWE/LR 1600-2-001/18101-07-02/en

copyright © Liebherr-Werk Ehingen GmbH 2018

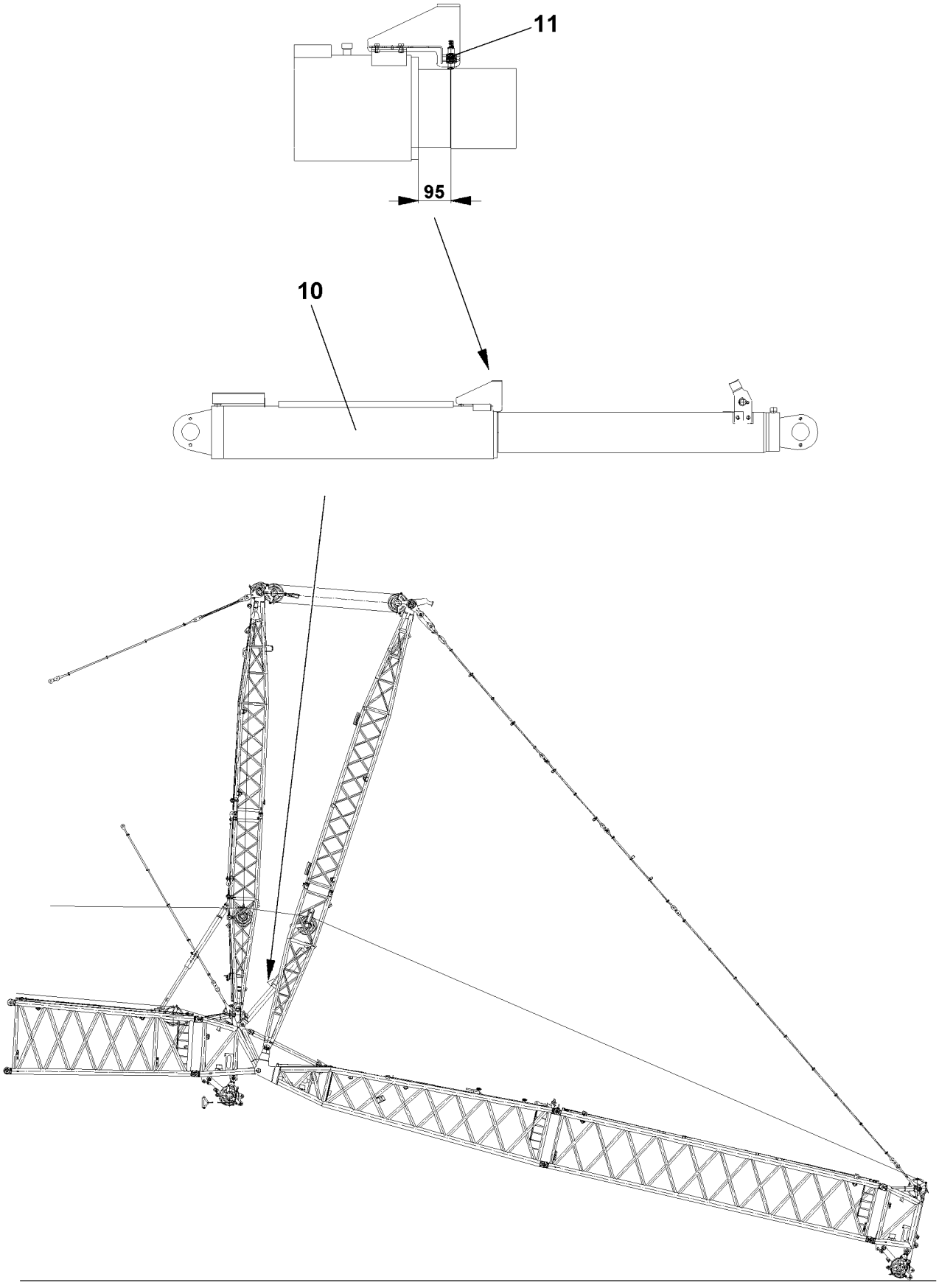

LWE/LR 1600-2-001/18101-07-02/en

Fig.105324

copyright © Liebherr-Werk Ehingen GmbH 2018

3 W-lattice jib

3.1 Checking limit switch initiators for function

Cover limit switch initiators **11** on the W-relapse cylinder **10** individually with a metal plate.

- The W-control winch „spool up“ movement must turn off.

3.2 Checking limit switch initiators on switch point „steepest position“

Before erecting the boom, check the function of the limit switch initiators **11** in installed condition. Pull up both SA-brackets to the specified dimension (see illustration) until the switch contact opens.

- The W-control winch „spool up“ movement must turn off.
- The icon must appear on the LICCON monitor.

After successful check, reset the SA-brackets to set-up condition.

LWE/LR 1600-2-001/18101-07-02/en

copyright © Liebherr-Werk Ehingen GmbH 2018

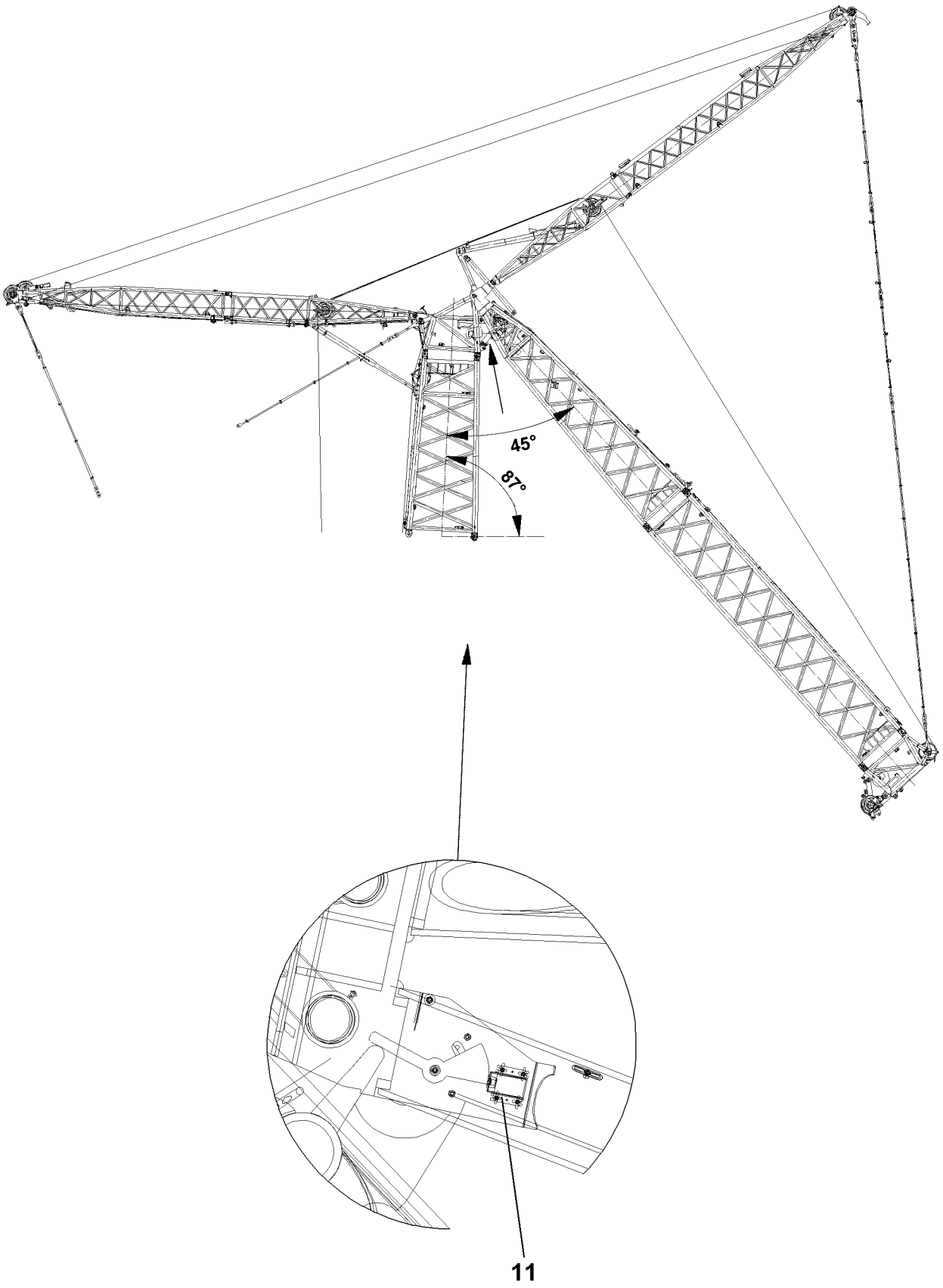

LWE/LR 1600-2-001/18101-07-02/en

Fig.105325

copyright © Liebherr-Werk Ehingen GmbH 2018

3.3 W-lattice jib „bottom“

3.3.1 Checking limit switch initiators for function

Cover the limit switch initiators **11** individually with a metal plate.

- The W-control winch „reel off“ movement must turn off.
- Switch position „luffing jib bottom“, approx. 45°.
  Limit switch initiators **11**, see illustration.

LWE/LR 1600-2-001/18101-07-02/en

copyright © Liebherr-Werk Ehingen GmbH 2018

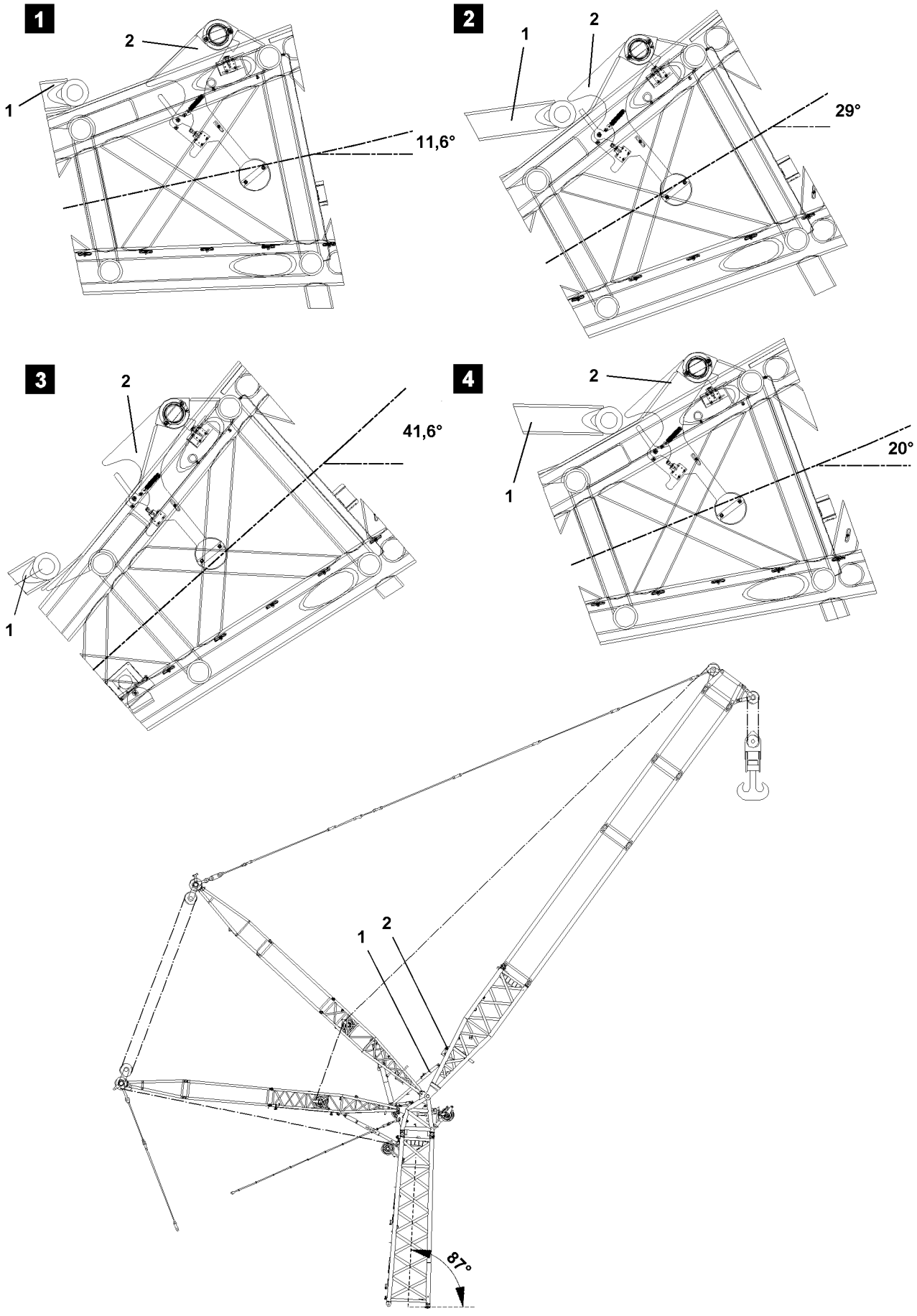

Fig.102346

LWE/LR 1600-2-001/18101-07-02/en

copyright © Liebherr-Werk Ehingen GmbH 2018

3.4 Function check of limit switch initiators on the mechanical relapse retainer

1 Mechanical relapse support
Oscillating safety **2** for mechanical relapse support

In addition to the relapse cylinders, the lattice jib is also secured by a mechanical relapse support **1**, which engages in steepest lattice jib position into the flap of the oscillating safety **2**. The luffing up movement is turned off by the actuated limit switches on the oscillating safety.

WARNING
Danger of tipping over if the oscillating safety is hard to move!
If the oscillating safety **2** is hard to move, the mechanical relapse retainer will no longer function. The W-lattice jib can tip backwards uncontrolled and cause the crane to topple over!
- ▶ Crane operation with hard to move oscillation safety **2** is prohibited!
- ▶ Before erection, the pendulum of the mechanical relapse retainer must be checked for easy movement over the complete swing range of the pendulum.

Depending on the lattice jib position (boom position = 87°), the flap on the oscillation safety is swung out by the weight of the pendulum:
- 16,4° the flap can be pushed closed , see illustration **1**
- 29° the flap can be pushed open, see illustration **2**
- 45° the flap is swung out, see illustration **3**
- 5,0° the flap is swung in , see illustration **4**

LWE/LR 1600-2-001/18101-07-02/en

copyright © Liebherr-Werk Ehingen GmbH 2018

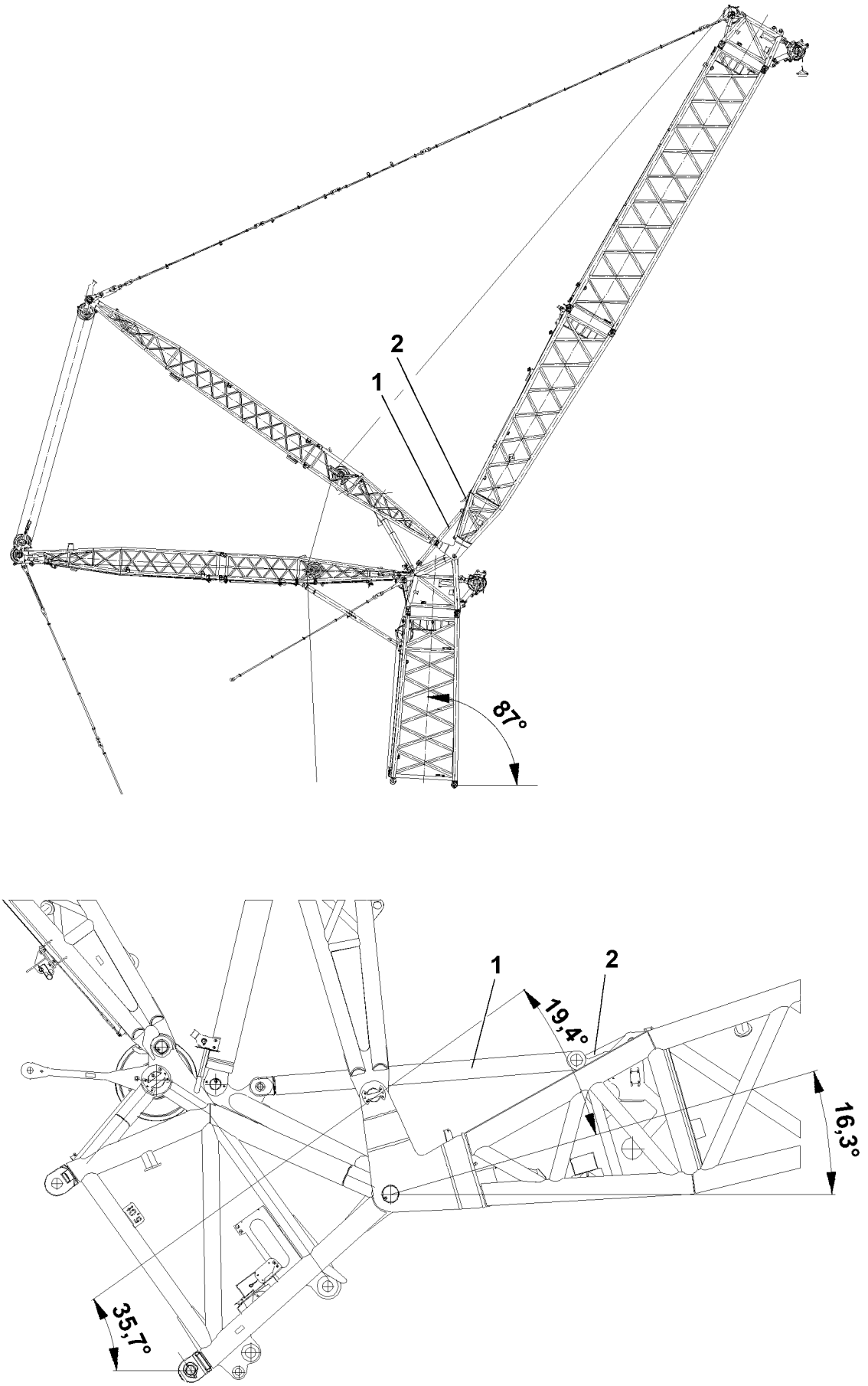

Fig.105380

LWE/LR 1600-2-001/18101-07-02/en

copyright © Liebherr-Werk Ehingen GmbH 2018

3.5 Flap of oscillating safety 2 on collision with mechanical relapse support 1

WARNING
Risk of collision!
If the angle between the boom and the lattice jib is smaller than or equal to 19,4°, the mechanical relapse support **1** will collide with the flap on the oscillating safety **2**. The lattice jib can tip backwards uncontrolled and cause the crane to topple over!

- ▶ Never fall below an angle of 19.4° when luffing up!
- ▶ Check visually!

LWE/LR 1600-2-001/18101-07-02/en

copyright © Liebherr-Werk Ehingen GmbH 2018

Empty page!

LWE/LR 1600-2-001/18101-07-02/en

copyright © Liebherr-Werk Ehingen GmbH 2018

8.14 Inspection of accumulator pressure in relapse cylinder

1 Checking jib stop cylinder pressure 3

LWE/LR 1600-2-001/18101-07-02/en

copyright © Liebherr-Werk Ehingen GmbH 2018

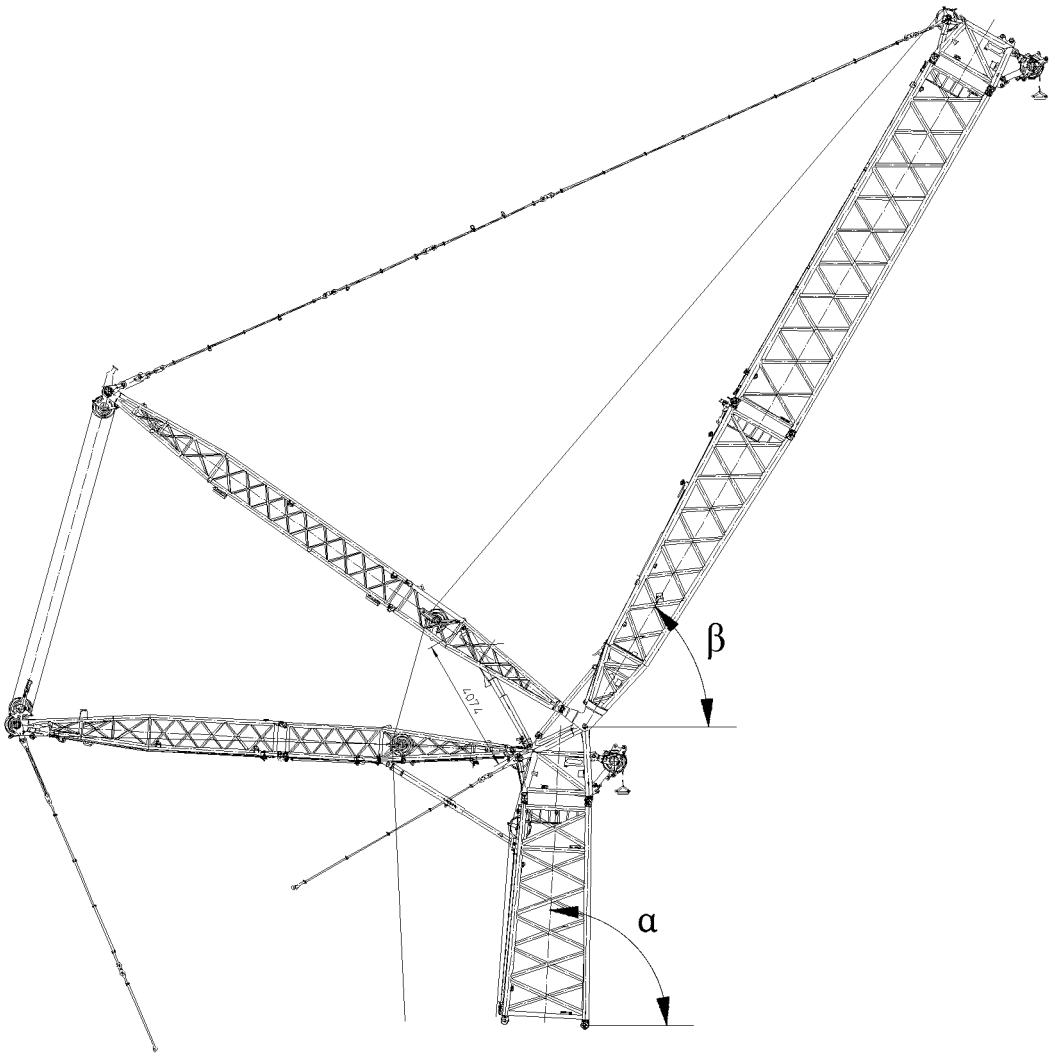

LWE/LR 1600-2-001/18101-07-02/en

Fig.105350

copyright © Liebherr-Werk Ehingen GmbH 2018

1 Checking jib stop cylinder pressure

The jib stop cylinder pressure must be checked using the LICCON operation display before and after crane operation, „see diagnosis“.

The actual pressure displayed on the LICCON operation display must correspond with the target pressure in the table.

Note

- ▶ The specified target pressure depends on the outside temperature.
- ▶ The maximum permitted difference between the target pressure and the actual pressure is +/- 10 bar.

The jib stop cylinder pressure is checked as follows:

- Checking cylinder pressure with „jib stop extended to maximum limit“
- Checking cylinder pressure with „jib stop in test position“

1.1 Checking cylinder pressure with „jib stop extended to maximum limit“

- Set main boom and lattice jib to angles specified in table.
- Compare target pressure in table with actual pressure in LICCON operation display.

„Extend jib stop to maximum limit“								
Boom angle α	Lattice jib angle β	Cylinder length	Stroke	Target pressure				
				-40° C	-20° C	0° C	20° C	40° C
87°	42,9°	4600 mm	1100 mm	119,3 bar	129,5 bar	139,8 bar	150,0 bar	160,2 bar

1.2 Testing cylinder pressure with „jib stop in test position“

- Set main boom and lattice jib to angles specified in table.
- Compare target pressure in table with actual pressure in LICCON operation display.

„Jib stop in test position“								
Boom angle (α)	Lattice jib angle (β)	Cylinder length	Stroke	Target pressure				
		mm	mm	-40° C	-20° C	0° C	20° C	40° C
87°	60°	4074 mm	574 mm	172,5 bar	187,4 bar	202,1 bar	216,9 bar	231,8 bar

LWE/LR 1600-2-001/18101-07-02/en

copyright © Liebherr-Werk Ehingen GmbH 2018

Empty page!

LWE/LR 1600-2-001/18101-07-02/en

copyright © Liebherr-Werk Ehingen GmbH 2018

8.15 Inspection of guy rods

1	Safety guidelines	3
2	Inspection intervals	3
3	Checking the guy rods	3

LWE/LR 1600-2-001/18101-07-02/en

copyright © Liebherr-Werk Ehingen GmbH 2018

LWE/LR 1600-2-001/18101-07-02/en

Fig.195219

copyright © Liebherr-Werk Ehingen GmbH 2018

1 Safety guidelines

WARNING
Damaged guy rods!
Accident. Death, severe injury, property damage.
▶ Crane operation with damaged guy rods **1** is prohibited.
▶ Replace damaged guy rods **1**.

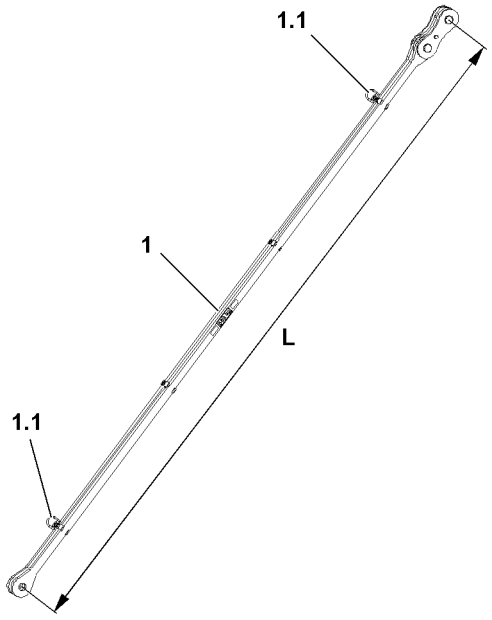

Fig.123845: Guy rod

Make sure that the following prerequisites are met:
– **Authorized and trained expert personnel** checks the guy rods **1**.
– A checklist for documentation of the inspection is on hand

2 Inspection intervals

The inspection of the guy rods **1** must be carried out in the following intervals:
– One inspection of the guy rods every 12 months by an expert.
– One inspection of the guy rods every four years by an authorized inspector.

After a load rip-off or overload of the crane:
– immediate inspection of guy rods by an expert

3 Checking the guy rods

3.1 Inspection

Note
▶ All inspections of the guy rods **1** must be documented.

The guy rods must be inspected in removed condition.

copyright © Liebherr-Werk Ehingen GmbH 2018

WARNING
The guy rods **1** can be ripped off!
If a damaged guy rod **1** is used further, it can rip off in crane operation.
Death, severe injury, property damage.
- ▶ Crane operation with damaged guy rods is prohibited.
- ▶ Repairs on guy rods **1** (for example: through welding) are prohibited.
- ▶ Replace damaged guy rods immediately.
- ▶ If one of the following stated damage is found, then the guy rods **1** may no longer be used.

3.2 Cracks and dents

- ▶ Check the guy rods **1** thoroughly through a visual inspection for cracks and dents.

Problem remedy
Damage to guy rods is not clearly evidenced through a visual inspection?
- ▶ Check the respective areas of the guy rods thoroughly, for example with a magnetic particle test.

- ▶ If damage is found: Replace the guy rods **1** immediately.

3.3 Elongation

Note
- ▶ The initial dimension **L** of the guy rods **1** refers to the bore spacing of the pin bores.
- ▶ The initial dimension **L** of the guy rods **1** is listed in the separate rod plan.

- ▶ Check the elongation of the guy rods **1** by measuring the guy rods.

WARNING
The guy rods can be ripped off!
The permissible elongation of the guy rods **1** may be a maximum of 0.2 %, for example 14 mm , at an initial dimension **L** of 7000 mm.
Death, severe injury, property damage.
- ▶ If the maximum permissible elongation is reached or exceeded: Replace the guy rods **1** immediately.

- ▶ If an elongation of the guy rods of more / equal to 0.2 % of the initial dimension **L** is proven: Replace the guy rods **1** immediately.

3.4 Wear

- ▶ Check the bores, pins and pin retainers for signs of wear.
- ▶ If respective wear is present in the stated areas: Replace the guy rods **1** immediately.

3.5 Ductile deformation

- ▶ If a guy rod **1** shows any ductile deformation: Replace the guy rod **1** immediately.

3.6 Paint / coating

- ▶ The guy rods **1** must be checked for paint damage or corrosion.
- ▶ If damage is present on the paint finish / coating: Repair the paint / coating of the guy rods **1** expertly.

NOTICE
Danger of property damage!
- ▶ Never store guy rods **1** in or near aggressive media, for example: Seawater.

- ▶ Always store the guy rods **1** properly and outside of aggressive media.

LWE/LR 1600-2-001/18101-07-02/en

copyright © Liebherr-Werk Ehingen GmbH 2018

3.7 Fastening points

- ▶ Check the fastening points **1.1** of the guy rods **1** for damage.
- ▶ Replace damaged fastening points **1.1**.

LWE/LR 1600-2-001/18101-07-02/en

copyright © Liebherr-Werk Ehingen GmbH 2018

Empty page!

LWE/LR 1600-2-001/18101-07-02/en

copyright © Liebherr-Werk Ehingen GmbH 2018

8.17 Inspection of ladders

1	Safety instructions	3
2	Inspection intervals	3
3	Inspecting the ladders	3
4	Inspection sheet and check list	3

LWE/LR 1600-2-001/18101-07-02/en

copyright © Liebherr-Werk Ehingen GmbH 2018

LWE/LR 1600-2-001/18101-07-02/en

Fig.195219

copyright © Liebherr-Werk Ehingen GmbH 2018

1 Safety instructions

WARNING
Damaged ladders!
Accident. Death, severe injury, property damage.

If damage is found:
▶ Have ladders repaired by authorized and trained expert personnel.

If it is determined that the ladder cannot be repaired:
▶ Scrap the ladder immediately.

Make sure that the following prerequisite is met:
– **Authorized and trained expert personnel** inspects the ladders.

The authorized and trained expert personnel has the following expertise:
– Knowledge, experience and abilities in repairing ladders
– Is familiar with the necessary prerequisites as determined by the contractor for the inspection of ladders
– Has the knowledge about the type, scope and intervals for the required inspections as determined by the contractor

2 Inspection intervals

The inspection of ladders must be carried out in the following intervals:
– The contractor determines the **required** intervals
– But there must be at least one inspection every **12 months**

Intervals depend on:
– Operating conditions
– Frequency of use
– Operational demands during use
– Frequency and severity of defects found during previous inspections

3 Inspecting the ladders

Make sure that the following prerequisites are met:
– Ladder inspection sheets are on hand. For blank form, see section „Inspection form for the inspection of ladders and steps“.
– Check lists are on hand. For a blank form, see section „Check list for the inspection of ladders and steps“.

▶ For every ladder and every step: Enter the data in the ladder inspection form.
or
Get the ladder inspection form for ladders or steps.
▶ Check the ladders and steps according to the check list and document the results.
▶ Collect the ladder inspection forms and check lists in the crane documentation.

4 Inspection sheet and check list

A sample inspection form and check list for the inspection of ladders and steps are shown below.

LWE/LR 1600-2-001/18101-07-02/en

copyright © Liebherr-Werk Ehingen GmbH 2018

4.1 Inspection form for the inspection of ladders and steps

Ladder inspection form		
Inventory no. of the ladder / step		
Location / installation location		
Ladder type		Multi-purpose ladder
		Stepladder
		Leaning ladder
		Leaning ladder with transition
		Vertical ladder
		Vertical ladder with transition aid
		Platform ladder
		Step
		Other
Ladder material		Aluminum
		Plastic
		Steel
		Stainless steel
Number of rungs / steps		
Ladder length / ladder shortened to		
Manufacturer / dealer		
Article / type number		
Date of purchase		
Date of selection		
Name of authorized inspector		
Next inspection		

Inspection form for the inspection of ladders and steps

LWE/LR 1600-2-001/18101-07-02/en

Fig.151627-en

4.2 Check list for the inspection of ladders and steps

Ensure the recording of the systematic inspection of ladders and steps:
- Summarize the following checklist for an inspection book.

copyright © Liebherr-Werk Ehingen GmbH 2018

Inspection criteria	1. Inspection		2. Inspection		3. Inspection		4. Inspection		5. Inspection	
	Yes	No	Yes	No	Yes	No	Yes	No	Yes	No
1. Operating instructions (decal on the ladder) Present and legible	☐	☐	☐	☐	☐	☐	☐	☐	☐	☐
2. Beams and rungs / stringers and steps										
Loose connections	☐	☐	☐	☐	☐	☐	☐	☐	☐	☐
Damage, cracks, breaks, wear	☐	☐	☐	☐	☐	☐	☐	☐	☐	☐
Dents, kinks	☐	☐	☐	☐	☐	☐	☐	☐	☐	☐
Exposed fibers of glass-fiber reinforced plastic	☐	☐	☐	☐	☐	☐	☐	☐	☐	☐
Paint / glaze significantly damaged (if applicable)	☐	☐	☐	☐	☐	☐	☐	☐	☐	☐
Tie rod loose or damaged (if applicable)	☐	☐	☐	☐	☐	☐	☐	☐	☐	☐
Platform loose or damaged (if applicable)	☐	☐	☐	☐	☐	☐	☐	☐	☐	☐
3. Ladder locks (if applicable)										
Belts, chains, bracing damaged	☐	☐	☐	☐	☐	☐	☐	☐	☐	☐
Hinge spreader damaged	☐	☐	☐	☐	☐	☐	☐	☐	☐	☐
4. Fixtures										
Hinges, articulations, locks damaged or loose	☐	☐	☐	☐	☐	☐	☐	☐	☐	☐
Sliding parts are well lubricated	☐	☐	☐	☐	☐	☐	☐	☐	☐	☐
Locking elements do not engage	☐	☐	☐	☐	☐	☐	☐	☐	☐	☐
5. Feet and accessories										
Feet, tips, caps missing or damaged	☐	☐	☐	☐	☐	☐	☐	☐	☐	☐
Cross beam, feet extension defective	☐	☐	☐	☐	☐	☐	☐	☐	☐	☐
6. Other defects	☐	☐	☐	☐	☐	☐	☐	☐	☐	☐
Result of the inspection										
The ladder is OK and can be used	☐	☐	☐	☐	☐	☐	☐	☐	☐	☐
The ladder may only be used after it is repaired	☐	☐	☐	☐	☐	☐	☐	☐	☐	☐
The ladder must be replaced	☐	☐	☐	☐	☐	☐	☐	☐	☐	☐
DATE, SIGNATURE										
Sent for repair to: DATE, SIGNATURE										
Repair / ladder replaced: DATE, SIGNATURE										

Fig. 149994-en

copyright © Liebherr-Werk Ehingen GmbH 2018

LWE/LR 1600-2-001/18101-07-02/en

copyright © Liebherr-Werk Ehingen GmbH 2018

8.90 Inspection chart for cranes

1 Inspection chart for recurring inspections of Liebherr cranes 3

LWE/LR 1600-2-001/18101-07-02/en

copyright © Liebherr-Werk Ehingen GmbH 2018

LWE/LR 1600-2-001/18101-07-02/en

Fig.195219

copyright © Liebherr-Werk Ehingen GmbH 2018

1 Inspection chart for recurring inspections of Liebherr cranes

The following is a checklist to assist the inspector during the periodic inspections of Liebherr mobile and crawler cranes.

Company:	**Inspector:**
Crane manufacturer: Liebherr	**Crane type:**
Serial number:	**Stock number:**
Year of construction:	**Date:**
Inspector's signature for No. 1 to 22:	

1. inspection category: Crane document						
Component to be inspected	**A**	**B**	**C**	**D**	**E**	**Comments**
Crane inspection log						
Operating and installation instructions						
Crane control log						
Load chart manual						
Job planner						

2. inspection category: Signs / identification						
Component to be inspected	**A**	**B**	**C**	**D**	**E**	**Comments**
Factory tag						
Load data						
Operating instruction label						
Prohibition and command signs						
Other safety signs						

3. inspection category: Travel gear[1]						
Component to be inspected	**A**	**B**	**C**	**D**	**E**	**Comments**
Frame[2]						
Supports[3]						
Axles						
Wheels						
Tires						
Bearings						
Transmission						
Universal drive shaft						
Leaf springs / springs						
Shock absorbers						

LWE/LR 1600-2-001/18101-07-02/en

copyright © Liebherr-Werk Ehingen GmbH 2018

3. inspection category: Travel gear[1]						
Component to be inspected	**A**	**B**	**C**	**D**	**E**	**Comments**
Steering						
Brakes						
Hydraulic axle suspension						

4. inspection category: Chassis[1]						
Component to be inspected	**A**	**B**	**C**	**D**	**E**	**Comments**
Coverings						
Accessible surfaces						
Counterweight holders[2]						
Towing devices						
Accesses, ladders						
Holding devices, handles						
Platforms, railings						
Retainer for hook block[2]						
Boom support[2]						

5. inspection category: Chassis - driver's cab[1]						
Component to be inspected	**A**	**B**	**C**	**D**	**E**	**Comments**
Doors						
Windows / windshields						
Window wipers						
Mirrors						
Seat						
Heater						
Ventilation						
Sound absorber						
Trip recorder						
First aid kit						
Spare bulbs						
Hazard warning triangle						
Safety vest						

6. inspection category: Chassis - drive[1]						
Component to be inspected	**A**	**B**	**C**	**D**	**E**	**Comments**
Combustion engine						
Exhaust system						
Fuel tank						

LWE/LR 1600-2-001/18101-07-02/en

copyright © Liebherr-Werk Ehingen GmbH 2018

6. inspection category: Chassis - drive[1]						
Component to be inspected	**A**	**B**	**C**	**D**	**E**	**Comments**
Urea container						
Fuel container						
Filters						
Sound absorber						
Engine mount						
Oil levels						
Fuel lines						
Urea lines						
Fuel lines						

7. inspection category: Chassis - hydraulics[1]						
Component to be inspected	**A**	**B**	**C**	**D**	**E**	**Comments**
Oil container						
Filter with maintenance indicator						
Pumps						
Motors						
Valves						
Lines						
Hoses						
Cylinder						
Pressure limiting valves						

8. inspection category: Chassis - compressed air system[1]						
Component to be inspected	**A**	**B**	**C**	**D**	**E**	**Comments**
Compressor						
Filters						
Air tanks						
Valves						
Lines						
Hoses						
Cylinder						

9th inspection category: Chassis - electrical system[1]						
Component to be inspected	**A**	**B**	**C**	**D**	**E**	**Comments**
Motors						
Generators						
Battery						

LWE/LR 1600-2-001/18101-07-02/en

copyright © Liebherr-Werk Ehingen GmbH 2018

9th inspection category: Chassis - electrical system[1]						
Component to be inspected	**A**	**B**	**C**	**D**	**E**	**Comments**
Switches / buttons						
Lines						
Fuses						
Resistors						
Lighting						
Brake lights						
Blinkers						
Tail lights						
Working lights						
Signaling systems						
Indicator lights						
Battery switch						
Limit switches: Transmission, steering, drive train						
Support pressure indicator[2]						

10th inspection category: Chassis - control systems[1]						
Component to be inspected	**A**	**B**	**C**	**D**	**E**	**Comments**
Engine regulation						
Transmission						
Couplings						
Circuits						
Brakes						
Steering						
Control displays						
Engine shut off line						
Control of supports[2]						
Axle suspension						
Crane leveling						
Rear axle steering						

11th inspection category: Superstructure						
Component to be inspected	**A**	**B**	**C**	**D**	**E**	**Comments**
Frame						
Coverings						
Treads						
Bearings						

LWE/LR 1600-2-001/18101-07-02/en

copyright © Liebherr-Werk Ehingen GmbH 2018

11th inspection category: Superstructure						
Component to be inspected	**A**	**B**	**C**	**D**	**E**	**Comments**
Counterweights						
Relapse retainer						
Slewing ring connection: Tilt play						
Slewing ring connection: Mounting screws						
Slewing ring connection: Gears						
Slewing gear: Mounting screws						
Slewing gear: Gears						

12th inspection category: Superstructure - crane operator's cab						
Component to be inspected	**A**	**B**	**C**	**D**	**E**	**Comments**
Doors						
Windows / windshields						
Window wipers						
Mirrors						
Seat						
Heater						
Ventilation						
Muffler						
Joystick for working functions						
Gear shifts						
Safety: Crushing / shear locations						

13th inspection category: Superstructure - Retaining and protection devices						
Component to be inspected	**A**	**B**	**C**	**D**	**E**	**Comments**
Accesses, ladders						
Handles						
Coverings						
Covers						
Hatches						
Treads						

14th inspection category: Superstructure - drive train						
Component to be inspected	**A**	**B**	**C**	**D**	**E**	**Comments**
Combustion engine						
Exhaust system						
Fuel tank						
Urea container						

LWE/LR 1600-2-001/18101-07-02/en

copyright © Liebherr-Werk Ehingen GmbH 2018

14th inspection category: Superstructure - drive train						
Component to be inspected	**A**	**B**	**C**	**D**	**E**	**Comments**
Fuel container						
Filters						
Sound absorber						
Engine mount						
Fuel lines						
Urea lines						
Fuel lines						

15. inspection category: Superstructure - hydraulic system						
Component to be inspected	**A**	**B**	**C**	**D**	**E**	**Comments**
Oil container						
Filters						
Pumps						
Motors						
Valves						
Lines						
Hoses						
Cylinder						
Pressure limiting valves						
Lowering brake valves						
Brake control: Hoist gear						
Brake control: Slewing gear						

16th inspection category: Superstructure - electrical system						
Component to be inspected	**A**	**B**	**C**	**D**	**E**	**Comments**
Motors						
Generators						
Batteries						
Switches / buttons						
Lines						
Fuses						
Resistors						
Lighting						
Signal lights						

LWE/LR 1600-2-001/18101-07-02/en

copyright © Liebherr-Werk Ehingen GmbH 2018

17. inspection category: Superstructure - control systems						
Component to be inspected	**A**	**B**	**C**	**D**	**E**	**Comments**
Engine regulation						
Transmission						
Flexible couplings						
Circuits						
Engine shut off line						
Control displays						

18. inspection category: Superstructure - rope drives						
Component to be inspected	**A**	**B**	**C**	**D**	**E**	**Comments**
Winch 1[3]						
Winch 2[3]						
Winch 3[3]						
Winch 4[3]						
Winch 5[3]						
Winch 6[3]						
Assembly winches [3]						
Rope pulleys						
Rope end connection						
Rope for winch 1						
Rope for winch 2						
Rope for winch 3						
Rope for winch 4						
Rope for winch 5						
Rope for winch 6						
Rope for assembly winches						
Guy ropes						

19th inspection category: Superstructure - hook						
Component to be inspected	**A**	**B**	**C**	**D**	**E**	**Comments**
Pulleys						
Rope guards on pulleys						
Axle support						
Load hook						
Load hook mounting						
Hook retention						

LWE/LR 1600-2-001/18101-07-02/en

copyright © Liebherr-Werk Ehingen GmbH 2018

20th inspection category: Superstructure - safety and switch systems						
Component to be inspected	**A**	**B**	**C**	**D**	**E**	**Comments**
Hoist emergency limit switch I						
Hoist emergency limit switch II						
Lowering emergency limit switch I						
Lowering emergency limit switch II						
Boom emergency limit switch I						
Boom emergency limit switch II						
Luffing jib: Boom limit switch I						
Luffing jib: Boom limit switch II						
Load torque limiter						
Angle display: Boom						
Angle display: Luffing jib						
Angle display: Slewing gear						
Safety devices: Control						
Working range limitation						
Pressure sensors						
Speed sensor						
Wind sensor						
Sliding beam monitoring						
Support pressure indicator						
Incline display						
Length indicator: Radius, boom length						
Emergency off system						
Engine stop						

21th inspection category: Boom						
Component to be inspected	**A**	**B**	**C**	**D**	**E**	**Comments**
Weld structure						
Rope pulleys						
Change over pulleys feed mechanism						
Luffing cylinder						
Telescoping cylinder						
Boom extension ropes						
Boom retraction ropes						
Boom bearings						
Boom pinning						
Guy rods						
Guy ropes						

LWE/LR 1600-2-001/18101-07-02/en

copyright © Liebherr-Werk Ehingen GmbH 2018

21th inspection category: Boom						
Component to be inspected	**A**	**B**	**C**	**D**	**E**	**Comments**
Control ropes						
Guide ropes						
Safety ropes						
Relapse cylinders						
Pin connections						

22. inspection category: Equipment						
Component to be inspected	**A**	**B**	**C**	**D**	**E**	**Comments**
Weld structure						
Rope pulleys						
Relapse cylinder						
Relapse support						
Oscillation guard						
A-frame bearings						
Pinning of components						
Guy rods with pinning						
Rods with guide rail on A-frame 2 and A-frame 3						
All limit switches with switch mechanism						
Pin connections						

Inspection chart for periodic inspections of Liebherr mobile and crawler cranes

Inspection criteria:

A = Present / complete
B = Condition / maintenance
C = Function
D = Repair / replace
E = Re-inspection required

Evaluation:

Satisfactory = x
Unsatisfactory = -
Not required = 0

Comments:

[1] Inspection of the crane carrier vehicle road worthiness is also fulfilled if it has already been certified by the road traffic department certification authority. For cranes that are not certified for use on public roads, an expert or authorized inspector must conduct the required tests to validate the vehicle's road worthiness.

[2] These inspections must be carried out by an authorized inspector even if it has passed the road traffic department test and is certified.

[3] Inspection of the winches with respect to the actually used proportion of their design life.

LWE/LR 1600-2-001/18101-07-02/en

copyright © Liebherr-Werk Ehingen GmbH 2018

Empty page!

LWE/LR 1600-2-001/18101-07-02/en

copyright © Liebherr-Werk Ehingen GmbH 2018

90 Appendix

LWE/LR 1600-2-001/18101-07-02/en

copyright © Liebherr-Werk Ehingen GmbH 2018

LWE/LR 1600-2-001/18101-07-02/en

copyright © Liebherr-Werk Ehingen GmbH 2018

90.01 Preface to the appendix

1 Foreword 3

LWE/LR 1600-2-001/18101-07-02/en

copyright © Liebherr-Werk Ehingen GmbH 2018

LWE/LR 1600-2-001/18101-07-02/en

Fig.195219

copyright © Liebherr-Werk Ehingen GmbH 2018

1 Foreword

This crane may only be used in a flawless technical condition and according to its mission as well as with constant awareness of safety and dangers. Any problems, which could affect safety, must be fixed immediately.

Note

- ▶ Modifications on the crane may only be made with written approval by Liebherr-Werk Ehingen GmbH.

1.1 Change to the operating instructions

Changes to the operating instructions are received in the form of chapters. The chapter to be replaced must be removed from the operating instructions and replaced with the new chapter in the same location.

When you receive a change to the operating instructions:

- ▶ Remove the chapter to be replaced from the operating instructions.
- ▶ File the new chapter in the same location in the operating instructions.
- ▶ Destroy the replaced chapter.
- ▶ Fill out the change confirmation form in chapter 90.05 of the operating instructions.

1.2 Update to the operating instructions

Updates to the operating instructions, which you receive in the circular as Customer information, must be filed in the operating instructions in chapter 90.05.

Fig.113870: Customer information decal

When you receive an update to the operating instructions:

- ▶ Attach the decals **1**, which are enclosed in the customer information to the footer of the respective chapter. See the following example.

Note

Example: Update to the operating instructions!

If there is an update that concerns the operating instructions, chapter 2.04:

- ▶ Attach the decal **1** in the footer of chapter 2.04.

- ▶ File the update in chapter 90.05 of the operating instructions.
- ▶ Fill out the update confirmation form in chapter 90.05 of the operating instructions.

LWE/LR 1600-2-001/18101-07-02/en

copyright © Liebherr-Werk Ehingen GmbH 2018

Empty page!

LWE/LR 1600-2-001/18101-07-02/en

copyright © Liebherr-Werk Ehingen GmbH 2018

90.05 Update confirmation

1	Change confirmation form	3
2	Update confirmation	3
3	Customer information	4

LWE/LR 1600-2-001/18101-07-02/en

copyright © Liebherr-Werk Ehingen GmbH 2018

LWE/LR 1600-2-001/18101-07-02/en

Fig.195219

copyright © Liebherr-Werk Ehingen GmbH 2018

1 Change confirmation form

Chapter	Change	Completed	
		on	by

2 Update confirmation

Chapter	Update	Completed	
		on	by

LWE/LR 1600-2-001/18101-07-02/en

copyright © Liebherr-Werk Ehingen GmbH 2018

3 Customer information

LWE/LR 1600-2-001/18101-07-02/en

copyright © Liebherr-Werk Ehingen GmbH 2018

Index

3

30m derrick **5.36.10 - 12**, **5.36.10 - 15**
36m derrick **5.36.10 - 13**, **5.36.10 - 14**, **5.36.10 - 16**
36m derrick with suspended ballast guide **5.36.10 - 18**
3-point support **2.04.10 - 23**

A

Abbreviations Rope diameter **8.04 - 7**
Accelerating, changing the load **2.04 - 23**
Access for unauthorized personnel prohibited (position 12) **2.05 - 7**
Accessing the lattice sections or booms **2.04 - 15**
Access prohibited (position 66) **2.05 - 8**
Access to the area is prohibited (position 64) **2.05 - 7**
Acoustical / optical warning **4.04 - 17**
Acoustic signal „Horn“ **4.02 - 93**, **4.02 - 173**
Acoustic signal „Short horn“ **4.02 - 93**, **4.02 - 173**
Acoustic warning on monitor 0 **4.02 - 93**
Acoustic warning on monitor 1 **4.02 - 173**
Activating / deactivating individual winches **4.02 - 181**
Activating crawler operation **4.10 - 29**
Activating the bypass at assembly and disassembly **5.01 - 26**
Activating the bypass at crawler assembly and crawler disassembly **5.01 - 25**
Activating the creeper gear **4.10 - 29**
Activating „parallel travel“ **4.10 - 37**
Active stand-by operation / alarm **4.02 - 211**
Actual load **4.02 - 5**
Actuating the main current circuit **4.03 - 5**
Actuation of winch and / or crane movements during assembly / disassembly **5.01 - 27**
Adapting the consoles to the crane driver **4.03 - 17**
Adapting the input value hook block weight **4.02 - 57**
Adding the engine-independent auxiliary heater in programming mode **6.02 - 18**
Adding the engine-independent auxiliary heater manually **6.02 - 17**
Adding the operating mode „Assembly“ **5.38 - 13**
Adding „Power Plus“ **4.05 - 9**
Additional controls for certain crawler cranes **5.01 - 5**
Additional controls for cranes on tires on the front and supported on the rear **5.01 - 5**
Additional controls for cranes supported on the front and on tires on the rear **5.01 - 5**
Additional controls for cranes with a derrick boom **5.01 - 5**
Additional controls for cranes with crane support **5.01 - 4**
Additional controls for cranes with luffing auxiliary boom / accessories **5.01 - 5**
Additional controls for freestanding crane operation (on tires) **5.01 - 5**
Additional notes **0.01 - 2**
Additional risks **2.04 - 74**
Adjusting the arm rests **4.03 - 17**
Adjusting the consoles **4.03 - 15**
Adjusting the control parameters **4.03 - 39**
Adjusting the crane operator's seat **4.03 - 15**
Adjusting the derrick ballast **4.03 - 39**
Adjusting the mechanical auxiliary support **3.04 - 5**
Adjusting the parallel control of winch 1 and winch 2 **4.05 - 15**
Adjusting the pin pulling device on the adapter upward **5.35 - 19**
Adjusting the recirculating air / fresh air **6.02 - 5**
Adjusting the settings manually in the „Climate control settings“ menu **6.02 - 15**
Adjusting the „lower“ / „upper“ air distribution **6.02 - 7**
Adjustment of reeving **4.03 - 43**
Adjustment procedure **5.35 - 39**
Adjust pin pulling device on the adapter upward **5.35 - 19**
Advance warning LMB / advance warning engine monitoring **4.02 - 89**
After engine start: Checking the instruments on the LICCON monitor **4.03 - 31**
After replacement of components **7.01 - 6**
Aids for work at a height **2.04 - 13**
Air dryer of the compressed air system of the crane superstructure **7.05 - 35**
Air filter **7.05 - 5**
Airplane warning light **4.03 - 3**
Alarm functions **4.02 - 73**, **4.02 - 153**
Aligning the ballast trailer **5.35 - 21**
Aligning the crane **2.04 - 39**, **4.04 - 3**
Aligning the hook blocks horizontally **4.05 - 15**
Aligning the suspended ballast pallet horizontally **5.36.10 - 38**
Aligning the wheel sets into parallel travel position **5.35 - 49**
Aligning the wheel sets in towing position **5.35 - 41**, **5.35 - 105**
Aligning wheel sets into circular travel position **5.35 - 45**, **5.35 - 109**
Ambient temperature **0.01 - 8**
Ambient temperatures below -20°C **2.08 - 3**
Angle adjustment on the fixed lattice jib with mechanical adjustment **5.01 - 35**
Angle sensors **4.04 - 15**
Angular pulling **4.08 - 11**
Applying and releasing the slewing gear brake manually **4.05 - 27**
Applying the slewing gear brake with the pedal **4.05 - 29**
Areas **7.05.50 - 11**, **8.04 - 4**
Areas in the winch - pulley head assignment screen **4.02 - 39**
Arrangement of intermediate sections and guy rods on the booms / boom systems **5.03 - 2**

LWE/LR 1600-2-001/18101-07-02/en

copyright © Liebherr-Werk Ehingen GmbH 2018

Arrangement of the guy rods **5.03 - 4**
Arrangement of the intermediate sections **5.03 - 4**
Assemble SA-frame **3.05 - 5**
Assemble the catwalks **5.38 - 7**
Assemble the S-intermediate sections **5.38 - 17**
Assembling **5.36.10 - 19**
Assembling / disassembling **5.01 - 21**
Assembling / disassembling of booms **5.01 - 28**
Assembling / disassembling of boom systems for supporting on ascending terrain (assembly / disassembly schematic) **5.01 - 59**
Assembling / disassembling of boom systems for supporting on descending terrain (assembly / disassembly schematic) **5.01 - 62**
Assembling / disassembling of electrical lines **5.01 - 23**
Assembling / disassembling of hydraulic lines **5.01 - 24**
Assembling / disassembling of lattice sections for lattice mast cranes **5.01 - 49**
Assembling / disassembling the crane component **2.08 - 6**
Assembling / disassembling the lattice sections on telescopic cranes with a luffing lattice jib **5.01 - 37**
Assembling / disassembling the lattice sections on telescopic cranes with an auxiliary boom, with an auxiliary crane **5.01 - 41**
Assembling / disassembling the lattice sections on telescopic cranes with an auxiliary boom, without an auxiliary crane **5.01 - 45**
Assembling / disassembling the roller set **5.14 - 5**
Assembling / disassembling the turntable **3.01 - 17**
Assembling of lattice sections **5.01 - 49**
Assembling pedestals and ladder **2.06 - 11**
Assembling SD/SLD/SL(X)D-boom combination(s) with substructure **5.39 - 38**
Assembling SWF-boom **5.17 - 5**
Assembling the 36t boom nose on the SW-end section **5.10 - 5**
Assembling the adapter **5.35 - 15**
Assembling the auxiliary guying **5.03 - 5**
Assembling the auxiliary jib **5.13 - 4**
Assembling the ballast trailer **5.35 - 9**
Assembling the ballast trailer guide **5.35 - 11**
Assembling the ballast trailer guying **5.35 - 27**
Assembling the boom **5.38 - 13**, **5.39 - 13**
Assembling the boom nose **5.10 - 7**
Assembling the boom systems on descending terrain **5.01 - 62**
Assembling the boom systems with the substructure **5.39 - 43**
Assembling the catwalks **5.39 - 11**
Assembling the components for the suspended ballast guide **5.36.10 - 22**
Assembling the consoles for ballast centering **5.36.10 - 34**
Assembling the counterweight brackets on the turntable **4.07 - 8**
Assembling the crawler carrier **3.01 - 13**, **3.01 - 35**
Assembling the cross beam without wheels **2.04.10 - 16**
Assembling the cross beam with wheels **2.04.10 - 16**
Assembling the D-auxiliary rods for the suspended ballast **5.36.10 - 30**
Assembling the D-boom **5.05 - 9**
Assembling the D-guy rods **5.05 - 21**, **5.36.10 - 29**
Assembling the double cone pins horizontally **5.01 - 12**
Assembling the double cone pins vertically **5.01 - 12**
Assembling the end section **5.36.10 - 22**
Assembling the F-assembly unit **5.17 - 9**
Assembling the F-auxiliary jib **5.13 - 13**
Assembling the first crawler carrier **3.01 - 33**
Assembling the fixed lattice jib on the TF-adapter **5.01 - 32**
Assembling the guy rods on the suspended ballast guide **5.36.10 - 27**
Assembling the guy rods WA-frame 2 **5.07 - 15**, **5.08 - 9**
Assembling the intermediate section „flying“ on the S-pivot section **5.38 - 25**
Assembling the ladder **2.04.10 - 14**
Assembling the lattice sections on a luffing lattice jib **5.01 - 37**
Assembling the lattice sections on an auxiliary boom with an auxiliary crane **5.01 - 41**
Assembling the lattice sections on an auxiliary boom without an auxiliary crane **5.01 - 45**
Assembling the of boom systems on ascending terrain **5.01 - 59**
Assembling the pivot section **5.36.10 - 22**
Assembling the platform ladder **2.04.10 - 16**
Assembling the railing on the D-pivot section **5.05 - 11**
Assembling the railing on the S-pivot section and the derrick pivot section **2.06 - 15**
Assembling the railings **2.06 - 9**, **2.06 - 11**
Assembling the roller set **5.14 - 5**
Assembling the S/SL boom **5.38 - 5**
Assembling the S-guy rods **5.39 - 47**
Assembling the S-intermediate sections in flying mode on the flying assembly intermediate section **5.39 - 37**
Assembling the S-intermediate sections in „flying mode“ on the S-pivot section **5.39 - 27**
Assembling the S-intermediate sections on the S-pivot section **5.39 - 21**
Assembling the SL/S-boom in „Flying mode“ (guying on S-pivot section) **5.39 - 25**
Assembling the SL2DF/SL4DF-/SL10DF-boom combination with supporting base **5.13 - 11**
Assembling the SLD / SD-boom **5.39 - 6**
Assembling the suspended ballast guide * **5.36.10 - 20**
Assembling the suspended ballast guide on the turntable frame **5.36.10 - 23**
Assembling the suspended ballast pallet **5.36.10 - 31**
Assembling the transport unit **5.36.10 - 75**

LWE/LR 1600-2-001/18101-07-02/en

copyright © Liebherr-Werk Ehingen GmbH 2018

Assembling the W-boom system **5.07 - 5**
Assembling the W-guy rods **5.07 - 21**
Assembling the W-lattice jib **5.07 - 19**
Assembling the W-lattice sections **5.07 - 19**
Assembling the W-transport unit 1 **5.07 - 9**
Assembling the W-transport unit 2 **5.07 - 9**
Assembling the W-transport unit 3 **5.07 - 9**
Assembling the W-transport units **5.07 - 9**, **5.08 - 9**
Assembling the WV-boom system **5.08 - 5**
Assembling the WV-lattice jib **5.08 - 9**
Assembling winch 1 **3.07 - 5**
Assembly / disassembly of the crawler carriers with SA-frame **3.01 - 27**
Assembly / disassembly of the crawler carriers with the auxiliary crane **3.01 - 11**
Assembly and disassembly of winch 1 **3.07 - 17**
Assembly conditions **3.06 - 1**
Assembly conditions for operation on crawlers **3.06 - 3**
Assembly D-boom **5.05 - 5**
Assembly drawings **5.01 - 23**
Assembly of crawler carriers with the auxiliary crane **3.01 - 11**
Assembly of the crawler carrier with SA-frame **3.01 - 27**
Assembly of the second crawler carrier **3.01 - 37**
Assembly operation **4.02 - 95**
Assembly rope **1.03 - 7**
Assembly winch, illustration 2 **7.05 - 31**
Assigning winch(es) **4.02 - 49**
Attaching the mechanical auxiliary support **3.04 - 3**
Attachment points **5.17 - 3**, **5.38 - 3**
Attachment points D-pivot section **5.05 - 3**
Attachment points SA-frame **3.05 - 3**
AUTO heating mode **6.02 - 13**
Auxiliary equipment **1.02 - 5**, **2.08 - 3**
Auxiliary guying **5.01 - 7**, **5.03 - 5**
Auxiliary jib „HS“ **5.42 - 3**

B

Ballasting **5.35 - 29**
Ballasting the ballast trailer down **5.35 - 89**
Ballasting the suspended ballast pallet **5.36.10 - 38**
Ballast pallet suspended ballast **1.03 - 25**
Ballast plate for central ballast / counterweight / derrick ballast **1.03 - 14**
Ballast trailer **1.03 - 23**
Ballast trailer lifted off **5.35 - 63**, **5.35 - 65**
Ballast trailer on the ground **5.35 - 63**, **5.35 - 65**
Ballast trailer tires **5.35 - 113**, **5.35 - 113**
Ballast trailer tires and disk wheels **5.35 - 113**
Ballast trailer with wheel drive **1.03 - 24**
Ball locking pin **5.01 - 19**
Basic principles and procedure **8.01 - 4**
Basket formation **7.05.50 - 8**, **8.04 - 20**
Batteries **7.01 - 14**
Battery maintenance **7.05 - 35**
Before starting to work **2.04 - 64**
Bleeding the central lubrication system **7.04 - 9**, **7.05 - 25**
Bleeding the heating system **6.02 - 22**
Block position of the relapse cylinders when setting down the load **5.01 - 6**
Block position relapse cylinders **5.35 - 57**
Boom component overview **1.01 - 5**
Boom components **5.03 - 2**
Boom length **4.02 - 69**
Boom limitation **4.02 - 73**
Boom nose **1.03 - 18**, **5.10 - 1**
Boom systems **1.02 - 4**, **5.03 - 1**
Boom systems / boom combinations **1.02 - 4**
Braking a slewing movement **4.05 - 27**
Breaking away fixed loads **4.08 - 13**
Brief description **4.08 - 16**
Bringing the cross beam into the operating position **2.04.10 - 15**
Bringing the cross beam into the transport position **2.04.10 - 15**
Bringing the guy rods on the ballast trailer into operating position **5.35 - 13**
Bringing the guy rods on the ballast trailer into transport position **5.35 - 91**
Bringing the leaning ladder into the transport position **2.04.10 - 19**
Bringing the pulley retainers into operating position **5.05 - 19**
Bringing the pull test brackets into operating position **5.05 - 17**
Bringing the railings on the counterweight brackets into the operating position **4.07 - 7**
Bringing the railings on the counterweight brackets into the transport position **4.07 - 22**
Bringing the stepladder into the transport position **2.04.10 - 20**
Bring the pulley retainer into transport position **5.05 - 39**
Bring the pull test brackets into transport position **5.05 - 41**
Broken strands **7.05.50 - 5**
Broken wire **7.05.50 - 5**
Broken wire in the strand valleys **8.04 - 13**
Broken wire nests **8.04 - 14**
Broken wires in rope sections, which are not spooled up on the winch **8.04 - 13**
Broken wires on rope end connections **8.04 - 13**
Buckles **7.05.50 - 10**, **8.04 - 24**
Bypassing at assembly / disassembly **5.01 - 26**
Bypassing at assembly and disassembly **5.01 - 27**
Bypassing at crawler assembly / disassembly **5.01 - 25**
Bypassing the hoist top shut-off **5.01 - 10**
Bypassing the LICCON overload protection **5.01 - 9**
Bypassing the overload protection **4.04 - 21**, **5.01 - 8**
Bypassing the PAT overload protection **5.01 - 9**
Bypassing the safety devices **4.04 - 21**
Bypassing the „Hoist top“ shut off **4.04 - 21**
Bypassing „Luffing up at overload“ **4.04 - 25**

LWE/LR 1600-2-001/18101-07-02/en

copyright © Liebherr-Werk Ehingen GmbH 2018

Bypass „Hoist top“ **4.02 - 97**

C

Calculation example **4.10 - 12**
Calculation examples **2.04 - 34**
Calculation of required length of transfers in uphill / downhill slopes **4.10 - 11**
California Proposition 65 **2.04 - 3**
Calling up the „Test system“ after an error screen **7.15 - 15**
Calling up the „Test system“ from the operating screen **7.15 - 15**
Calling up the „Test system“ program **7.15 - 15**
Camera monitoring **1.02 - 3**, **4.01 - 11**
Carrying out an intermediate lubrication **7.05 - 23**
Carrying out crane movements **4.05 - 5**
Carry out error diagnostics **7.15 - 17**
Case 1 **5.35 - 57**
Case 2 **5.35 - 59**
Case 3 **5.35 - 59**
CE marking **0.01 - 5**
Center of gravity display **4.10 - 6**
Central ballast **3.03 - 1**
Central ballast * **1.02 - 2**
Central ballast combinations **3.03 - 3**
Central ballast platform **1.03 - 13**
Central lubrication system **5.35 - 115**, **7.04 - 9**, **7.05 - 19**
Change confirmation form **90.05 - 3**
Change to the operating instructions **90.01 - 3**
Changing maximum winch speed **4.02 - 179**
Changing minimum and maximum support force limits **4.02 - 195**
Changing the maximum rotation speed of slewing gear **4.02 - 179**
Changing the oil **5.35 - 115**, **7.05 - 3**, **7.05 - 9**, **7.05 - 33**
Changing the set up configuration and hoist rope reeving **4.03 - 37**
Changing the travel direction **4.10 - 33**
Chart for determining the theoretically remaining service life **8.03 - 10**
Check bearings for easy movement **7.05.50 - 4**
Check for wear and distortion **7.05.50 - 11**
Checking and accepting the changed set up configuration and hoist rope reeving **4.03 - 37**
Checking bearings for easy movement **8.01 - 86**
Checking cylinder pressure with „jib stop extended to maximum limit“ **8.14 - 3**
Checking for broken strands **8.04 - 9**
Checking for corrosion **7.05.50 - 12**
Checking for damage and cracks **8.01 - 85**
Checking for flattenings **7.05.50 - 13**
Checking for mechanical damage **7.05.50 - 4**
Checking for solid foreign substances **8.03 - 4**
Checking jib stop cylinder pressure **8.14 - 3**
Checking limit switch initiators for function **8.12 - 3**, **8.12 - 5**, **8.12 - 7**, **8.12 - 9**
Checking limit switch initiators on switch point „steepest position“ **8.12 - 7**
Checking load hooks for corrosion and wear **8.05 - 5**
Checking of rope diameter **8.04 - 14**
Checking of rope pretension on telescopic booms, illustration 1 **8.01 - 82**
Checking the airplane warning light **5.07 - 23**, **5.13 - 23**, **5.39 - 44**, **5.42 - 12**
Checking the battery voltage **4.03 - 13**
Checking the central lubrication system **4.03 - 9**
Checking the control rope for distortions **7.05.50 - 13**
Checking the coolant level **4.03 - 9**
Checking the depth of the lead-in tracks **8.01 - 86**
Checking the end of the service life **8.06 - 3**
Checking the fuel level **4.03 - 13**
Checking the function of the central lubrication system **7.05 - 23**
Checking the function of the hoist limit switch **5.10 - 11**
Checking the function of the safety devices **5.05 - 23**, **5.08 - 9**, **5.38 - 31**, **5.42 - 12**
Checking the function of the safety equipment **5.07 - 23**, **5.13 - 21**, **5.39 - 43**
Checking the gas pressure and oil fill before operation **8.01 - 84**
Checking the groove diameter **8.01 - 85**, **8.03 - 3**
Checking the guy rods **8.15 - 3**
Checking the hoist limit switch on the pulley head **5.07 - 25**, **5.13 - 23**, **5.39 - 44**, **5.42 - 12**
Checking the horn **4.03 - 23**
Checking the hydraulic hoses within area of responsibility of the German employer's liability insurance associations **7.05 - 14**
Checking the labeling **5.01 - 2**
Checking the length sensor value on the ballast trailer **5.35 - 83**
Checking the limit switch **5.07 - 25**
Checking the limit switch flap W-lattice jib „Steepest position“, relapse cylinder **5.07 - 25**
Checking the limit switch S-boom „steepest position“ **5.07 - 27**, **5.13 - 23**, **5.39 - 44**
Checking the limit switch SL-boom „steepest position“ **5.42 - 12**
Checking the limit switch W-lattice jib „Lowest position“, relapse cylinder **5.07 - 25**
Checking the limit switch W-lattice jib „Steepest position“, relapse cylinder **5.07 - 25**
Checking the load hook for distortion **8.05 - 4**
Checking the load hook for surface cracks **8.05 - 4**
Checking the load hook for wear **8.05 - 4**
Checking the lubrication **7.05.50 - 11**
Checking the mounting screws for damage **8.01 - 88**
Checking the oil levels and filters **4.03 - 7**
Checking the oscillation guard **5.07 - 25**
Checking the position **7.05.50 - 12**
Checking the retaining elements **5.01 - 13**
Checking the rope drive for spooling problems **7.05.50 - 12**
Checking the rope end connection **8.04 - 14**

LWE/LR 1600-2-001/18101-07-02/en

copyright © Liebherr-Werk Ehingen GmbH 2018

Checking the ropes **7.05.50 - 10**
Checking the safety devices **4.04 - 3**
Checking the safety measures **2.04 - 40**
Checking the settings. **5.17 - 21**
Checking the shut off of minimum rope coils **4.04 - 9**
Checking the steel structures **5.01 - 2**
Checking the tightening torque **8.01 - 86**
Checking the tilt play **8.01 - 87**
Checking the vent / breather filter **7.05 - 11**
Checking the window cleaning fluid **4.03 - 11**
Checking the wind speed sensor **5.07 - 23**, **5.13 - 23**, **5.38 - 33**, **5.39 - 44**, **5.42 - 12**
Checking visually **8.01 - 85**
Check list for the inspection of ladders and steps **8.17 - 4**
Checks before starting to work with the crane **4.08 - 4**
Checks before start up **4.03 - 7**
Checks via the LICCON computer system **4.03 - 13**
Check the airplane warning light **5.38 - 33**
Check the hoist limit switch on the pulley head **5.38 - 33**
Check the limit switch S-boom „steepest position“ **5.38 - 33**
Check the mounting screws for tight seating **8.01 - 88**
Circular travel **5.35 - 45**, **5.35 - 111**
Cleaning the filter strainer **7.05 - 7**
Climate control system operation **6.02 - 10**
Climbing up / climbing down the counterweight bracket **4.07 - 7**
Closing the boom **5.38 - 19**
Closing the end section **5.01 - 29**
Closing the fixed lattice jib **5.01 - 34**
Closing the side window pane **2.04 - 22**
Combinations of boom heads / end sections with roller sets **5.14 - 4**
Combined degree of severity **8.04 - 25**
Command and prohibition signs **2.05 - 7**
Command sign **2.05 - 7**
Comparison **4.02 - 5**
Compensating for ground unevenness **5.35 - 59**
Complete guide for ballast trailer **1.03 - 24**
Complete guide with adapter, for ballast trailer **1.03 - 25**
Component description and general notes **5.35 - 3**
Component overview **3.07 - 3**, **4.07 - 3**, **5.13 - 3**, **5.17 - 3**, **5.39 - 3**
Component overview crawler travel gear **1.01 - 3**, **3.01 - 3**
Component overview derrick ballast **1.01 - 6**
Component overview D-pivot section **5.05 - 3**
Component overview of auxiliary jib „HS“ **5.42 - 3**
Component overview of suspended ballast **5.36.10 - 3**
Component overview SA-frame **3.05 - 3**
Component overview S-pivot section **5.38 - 3**
Component overview turntable **1.01 - 4**
Component overview W-boom system **5.07 - 3**
Components, weights **5.35 - 3**
Components and attachment points **5.05 - 3**
Components of the system **7.04 - 9**
Confirm the selection **4.02 - 51**
Connection schematic for emergency operation, illustration 2 **6.05 - 37**
Connect the guy rods SA-frame with the guy rod’s S-pivot section **5.38 - 17**
Control measures **5.01 - 3**
Control panel, left **4.01 - 25**
Control panel, right **4.01 - 27**
Control release **4.04 - 11**
Control ropes **1.03 - 7**
Conversion chart **0.01 - 9**
Conversion chart for wind force **2.04 - 47**
Corkscrew-like distortion **7.05.50 - 8**, **8.04 - 19**
Corrective steering **5.35 - 51**
Corrective steering the wheel sets **5.35 - 43**
Corrosion **7.05.50 - 6**, **8.04 - 17**
Cotter pin **5.01 - 15**
Counter-rotating the tracks to the left **4.10 - 39**
Counter-rotating the tracks to the right **4.10 - 39**
Counterweight **1.02 - 3**, **4.07 - 1**, **4.07 - 3**
Counterweight and / or ballast **2.04 - 66**
Counterweight bracket **4.07 - 4**
Counterweight plate **4.07 - 3**, **4.07 - 4**
Counterweight platform **1.03 - 13**
Cracks and dents **8.15 - 4**
Crane **1.03 - 5**, **2.04 - 73**, **7.01 - 12**
Crane and crane components **2.04 - 23**
Crane cab **1.02 - 3**
Crane cab with incline adjustment **2.04 - 21**
Crane chassis **7.06 - 3**
Crane control **1.02 - 3**
Crane documentation **0.01 - 2**
Crane drive **1.02 - 3**
Crane engine **4.02 - 207**, **7.05 - 3**
Crane geometry and load information **4.02 - 59**
Crane incline **4.02 - 101**
Crane in operation **2.04 - 4**
Crane movement - Telescoping **4.08 - 5**
Crane on floating body **2.25 - 1**
Crane operation in case of thunderstorms **2.04 - 44**
Crane operation in Support program **4.02 - 185**
Crane operation with a load **2.04 - 65**
Crane operation with derrick ballast **5.35 - 67**, **5.36.10 - 44**
Crane operator **4.04 - 17**
Crane operator's cab heater / engine preheating / air conditioning system **6.02 - 1**
Crane operator responsibilities **2.04 - 24**
Crane out of service **2.04 - 5**
Crane rope pretension **4.08 - 15**
Crane ropes **7.05.50 - 4**, **8.04 - 3**
Crane speeds **1.03 - 6**
Crane superstructure **1.02 - 2**, **7.06 - 5**
Crane superstructure in the 0° position or 180° position **2.04 - 17**

LWE/LR 1600-2-001/18101-07-02/en

copyright © Liebherr-Werk Ehingen GmbH 2018

Crane superstructure turned **2.04 - 19**
Crane surface pressure **1.03 - 6**
Cranes with cam limit switch **5.01 - 3**
Cranes with lattice mast boom **2.08 - 5**, **2.08 - 7**
Cranes with telescopic boom **2.08 - 6**, **2.08 - 7**
Cranes with winch speed sensor **5.01 - 3**
Crane transport on floating devices **2.25 - 4**
Crawler carrier **1.03 - 8**
Crawler carrier assembly **3.01 - 1**
Crawler center section **1.03 - 10**
Crawler operation with derrick ballast **5.36.10 - 56**
Crawler travel gear **1.02 - 2**, **1.02 - 2**
Creeper gear or very slow movement **2.04 - 55**
Cross beams for platform ladder **2.04.10 - 15**
Current checklist **8.04 - 28**
Current load **4.02 - 63**
Customer information **90.05 - 4**
Cylinders **7.01 - 13**

D

Damage on rope **7.05.50 - 5**
Danger of burning hands (position 29) **2.05 - 3**
Danger of crushing **4.08 - 14**
Danger of falling **4.08 - 14**
Dangers on the crane **2.04 - 3**
Danger zone of crane **2.04 - 4**
Data logger **0.01 - 1**
D-boom **5.05 - 1**
Deactivating the bypass at crawler assembly and crawler disassembly **5.01 - 25**
Decrease crane utilization **2.08 - 7**
Defined ballast trailer operation **5.35 - 63**
Definition of assembly conditions **3.06 - 3**
Definition of directional data for crawler cranes **0.01 - 9**
Definition of directional data for mobile cranes **0.01 - 9**
Definition of „Checking“ **7.01 - 3**
Degree of severity **8.04 - 7**
D-end section 8.5m **1.03 - 21**
Derrick ballast, weight and utilization **4.02 - 145**
Derrick ballast - ballast trailer **5.35 - 1**
Derrick ballast radii and standing levels **5.36.10 - 7**
Derrick ballast radii and standing levels - narrow track crane **5.36.10 - 14**
Derrick ballast radii and standing levels - standard crane **5.36.10 - 11**
Derrick ballast - suspended ballast **5.36.10 - 1**
Derrick ballast without suspended ballast guide **5.36.10 - 11**
Derrick ballast with suspended ballast guide **5.36.10 - 13**
Derrick boom angle **4.02 - 143**
Derrick relapse retainer **8.12 - 5**
Descending from lattice sections or booms **2.04 - 15**
Description of intervals and tasks **7.01 - 3**
Description using the example LR 1600-2, SL3F **4.08 - 16**
Destined use **0.01 - 6**, **2.25 - 3**
Detachable rope end connection **8.04 - 14**
Detent pin **5.01 - 17**
Determination of forces in operating mode with derrick ballast **5.35 - 73**, **5.36.10 - 46**
Determining the effective operating hours Ti **8.03 - 8**
Determining the number of broken wires **8.04 - 9**
Determining the operating conditions (load spectrum) **8.03 - 5**
Determining the used proportion of the theoretical service life **8.03 - 8**
Diaphragm reservoirs **7.05 - 13**
Did an alarm function occur? **7.15 - 9**
Diesel engine **1.02 - 2**
Diesel particle filter * **7.05 - 5**
Difference force monitoring of ballast guying **5.35 - 85**
Differential force monitoring for derrick ballast-guying **5.36.10 - 54**
Dimensions **5.35 - 3**
Dimensions and weights **3.01 - 3**, **3.07 - 3**
Dimensions and weights of the crane components **1.03 - 7**
D-intermediate section 12m, 2420.20 **1.03 - 21**
D-intermediate section 6m, 2420.16 **1.03 - 21**
Disassemble SA-frame **3.05 - 13**
Disassemble the S-booms **5.38 - 49**
Disassembling of boom systems on ascending terrain **5.01 - 60**
Disassembling of boom systems on descending terrain **5.01 - 63**
Disassembling of lattice sections **5.01 - 51**
Disassembling the 36t boom nose **5.10 - 15**
Disassembling the adapter on the turntable **5.35 - 99**
Disassembling the assembly support **3.01 - 25**, **3.01 - 49**
Disassembling the assembly supports **3.01 - 51**
Disassembling the auxiliary jib **5.13 - 33**
Disassembling the ballast trailer guide **5.35 - 101**
Disassembling the ballast trailer guying **5.35 - 91**
Disassembling the components for the suspended ballast guide **5.36.10 - 73**
Disassembling the counterweight **4.07 - 15**
Disassembling the crawler carriers **3.01 - 25**
Disassembling the D-auxiliary rods for the suspended ballast **5.36.10 - 69**
Disassembling the D-boom **5.05 - 35**
Disassembling the D-guy rods **5.05 - 43**, **5.36.10 - 70**
Disassembling the D-lattice components **5.05 - 45**
Disassembling the end section **5.36.10 - 73**
Disassembling the F-assembly unit **5.13 - 45**, **5.17 - 31**
Disassembling the first crawler carrier **3.01 - 43**, **3.01 - 45**
Disassembling the guy rods and folding in the folding platforms **5.39 - 65**
Disassembling the guy rods on the suspended ballast guide **5.36.10 - 67**

LWE/LR 1600-2-001/18101-07-02/en

copyright © Liebherr-Werk Ehingen GmbH 2018

Disassembling the lattice sections on a luffing lattice jib **5.01 - 39**
Disassembling the lattice sections on an auxiliary boom with an auxiliary crane **5.01 - 43**
Disassembling the lattice sections on an auxiliary boom without an auxiliary crane **5.01 - 47**
Disassembling the pedestal **2.06 - 9**
Disassembling the pivot section **5.36.10 - 74**
Disassembling the railing on the D-pivot section **5.05 - 47**
Disassembling the roller set **5.14 - 7**
Disassembling the S/SL boom **5.38 - 43**
Disassembling the S-boom **5.39 - 67**
Disassembling the second crawler carrier **3.01 - 47**
Disassembling the SLD / SD-boom **5.39 - 57**
Disassembling the suspended ballast guide * **5.36.10 - 67**
Disassembling the suspended ballast guide on the turntable frame **5.36.10 - 71**
Disassembling the suspended ballast pallet **5.36.10 - 61**
Disassembling the SWF-booms **5.17 - 23**
Disassembling the WA-frame 2 guy rods **5.07 - 49**, **5.08 - 27**
Disassembling the W-boom system **5.07 - 37**
Disassembling the W-guy rods **5.07 - 45**
Disassembling the W-lattice jib **5.07 - 45**
Disassembling the W-lattice section **5.07 - 45**
Disassembling the W-transport units **5.07 - 53**, **5.08 - 27**
Disassembling the WV-boom system **5.08 - 19**
Disassembling the WV-lattice jib **5.08 - 27**
Disassembling W-transport unit 1 **5.07 - 55**
Disassembling W-transport unit 2 **5.07 - 55**
Disassembling W-transport unit 3 **5.07 - 55**
Disassembly **3.02 - 11**, **5.05 - 33**, **5.36.10 - 57**
Disassembly of crawler carrier with the auxiliary crane **3.01 - 19**
Disassembly of the crawler carrier with SA-frame **3.01 - 39**
Disconnecting the connections of the central lubrication system to winch 1 **3.07 - 15**
Disconnecting the connections to winch 1 **3.07 - 15**
Disconnecting the electrical connections **5.07 - 43**, **5.08 - 27**, **5.13 - 43**, **5.42 - 27**
Disconnecting the electrical connections on the boom **5.39 - 63**
Disconnecting the electrical connections to winch 1 **3.07 - 15**
Disconnecting the electric connection to the crawler travel gears **3.01 - 43**
Disconnecting the hydraulic and electrical connections to the crawler travel gear **3.01 - 21**
Disconnecting the hydraulic connection on the boom **5.39 - 63**
Disconnecting the hydraulic connections **6.05 - 13**, **6.05 - 17**, **6.05 - 23**, **6.05 - 27**, **6.05 - 31**, **6.05 - 35**
Disconnecting the hydraulic connections to winch 1 **3.07 - 15**
Disconnecting the hydraulic connection to the crawler travel gears **3.01 - 43**
Disconnect the electrical connections **3.05 - 13**, **5.17 - 31**, **5.38 - 47**
Disconnect the hydraulic connections. **3.05 - 13**
Disengage / engage the coupling control on the pump distributor gear **4.03 - 25**
Disengage the coupling control **4.03 - 25**
Dismantling the platform ladder **2.04.10 - 18**
Display area of load chart values **4.02 - 19**
Display current support forces **4.02 - 193**
Displays in the crane operation program **4.02 - 199**
Disposal **7.01 - 14**
Distortions and mechanical damage **8.04 - 8**
Distribution of surface pressure **4.10 - 6**
Documentation of rope condition **7.05.50 - 11**
Documenting inspection results **8.04 - 5**
Documenting the completed inspection **8.03 - 4**
Documenting the inspection **8.06 - 5**
Documenting the inspections in writing **2.06 - 19**
D-pivot section 9.5m **1.03 - 20**
Draining the fuel pre-filter **7.05 - 7**
Drive **1.02 - 2**
Driver's cab and crane cab **7.01 - 11**
Driving / swinging in the specified direction **2.04 - 57**
Driving from the crane cab **4.10 - 1**
Driving the crawler **4.10 - 31**, **5.36.10 - 56**
Driving the crawler crane **4.10 - 21**
Driving the crawler forward and backward **4.10 - 35**
Driving uphill / downhill **4.10 - 11**
Driving with a load and / or Derrick ballast **4.10 - 8**
Driving with an extremely reduced load **2.04 - 63**
Driving with a reduced load **2.04 - 63**
Driving with a trailer **2.04 - 63**
Driving without a load and without derrick ballast **4.10 - 9**
Driving with the ballast trailer **5.35 - 55**
Ductile deformation **8.15 - 4**
Dynamic utilization bar **4.02 - 65**

E

Effects of heat, arcs **7.05.50 - 10**, **8.04 - 25**
Electrical connections **3.01 - 17**, **3.01 - 21**
Electrical system **1.02 - 4**
Electrical system - Lighting **7.05 - 35**
Elongation **8.15 - 4**
Emergency crane cab exit **2.04 - 7**
Emergency equipment **4.01 - 3**
Emergency exit **2.04 - 6**
Emergency exit - driver's cab **2.04 - 6**
Emergency exit through front window **2.04 - 7**
Emergency exit through the roof window **2.04 - 7**
Emergency exit with EMERGENCY hammer * **2.04 - 8**
EMERGENCY OFF switch * **4.04 - 11**
Emergency operation **6.05 - 3**

LWE/LR 1600-2-001/18101-07-02/en

copyright © Liebherr-Werk Ehingen GmbH 2018

Emergency operation - circular travel **5.35 - 109**
Emergency operation of ballast trailer **5.35 - 103**
Emergency operation of slewing gear(s) with assembly plate Variation 1 (V1) **6.05 - 15**
Emergency operation of winch 4 (W IV) on the LR1600/2 and LR1600/2-W **6.05 - 33**
Emergency operation of winch 4 on the LR1600/2 and LR1600/2-W **6.05 - 11**, **6.05 - 19**
Emergency operation of winches, individual operation **6.05 - 21**
Emergency operation of winches, parallel operation winch 1II2 **6.05 - 23**
Emergency operation slewing gear(s) with assembly plate(s) Variation 2 (V2) **6.05 - 29**
Emergency operation - towing **5.35 - 105**
Emergency operation winch 4 (WIV) **6.05 - 33**
Emergency operation winches **6.05 - 11**
Emergency operation with a defective CPU **5.35 - 103**
Emergency operation with assembly plate(s) Variation 2 (V2) **6.05 - 19**
Emergency operation with assembly plate Variation 1 (V1) **6.05 - 9**
Emergency stop (quick stop) **2.04 - 55**
Emergency take down **6.05 - 1**
Endangering air traffic **2.04 - 5**
Ending a load lift **4.04 - 5**
Ending crane operation **2.04 - 70**
Ending emergency operation **6.05 - 37**
Ending operation, no longer follow my instructions **2.04 - 55**
End section **5.36.10 - 5**
Engaging the auxiliary heater **6.02 - 18**
Engaging the coupling control **4.03 - 27**
Engine coolant **7.05 - 5**
Engine monitoring **4.03 - 31**
Engine monitoring icons **4.02 - 207**
Engine oil **7.05 - 3**
Engine preheating **2.08 - 4**
Engine type D 846 A7 **1.02 - 3**
Engine type D 856 A7 SCR **1.02 - 3**
Enlarged rope end connection **8.04 - 14**
Enter the hook block weight **4.02 - 55**
Equipment **5.01 - 2**
Equipment and spare parts **0.01 - 8**
Equipment in the cab **4.01 - 3**
Erecting / taking down **5.01 - 65**
Erecting / taking down for crawler cranes **5.01 - 66**
Erecting / taking down for mobile cranes **5.01 - 65**
Erecting / taking down the boom **5.10 - 11**
Erecting the D-boom **5.05 - 27**
Erecting the erection racks **5.36.10 - 32**
Erecting the SA-frame **5.02 - 5**
Erecting the SL-boom **5.42 - 15**
Erecting the SLF-boom **5.13 - 25**
Erecting the SWF-booms **5.17 - 11**
Erection **5.42 - 19**
Erection procedure **5.02 - 5**, **5.05 - 31**, **5.13 - 29**, **5.39 - 55**, **5.42 - 15**
Erect the S-boom **5.38 - 35**
Error diagnostics by phone **7.15 - 17**
Error diagnostics without the help of Liebherr Service **7.15 - 17**
Error diagnostics with the help of Liebherr Service **7.15 - 17**
Error messages **4.02 - 5**
Establishing the connections of the central lubrication system to winch 1 **3.07 - 11**
Establishing the connection to the turntable **3.07 - 11**
Establishing the electrical connection between the boom nose and the SW-end section **5.10 - 9**
Establishing the electrical connection from the adapter to the turntable **5.35 - 15**
Establishing the electrical connection from the ballast trailer to the adapter **5.35 - 17**
Establishing the electrical connections to winch 1. **3.07 - 11**
Establishing the electrical connection to the crawler travel gears **3.01 - 37**
Establishing the electrical connection to the hoist limit switch **5.10 - 9**
Establishing the electrical connection to the pressure test bracket **5.10 - 9**
Establishing the electric and hydraulic connections on the S-pivot section **5.39 - 16**
Establishing the hydraulic and electrical connections to the crawler travel gear **3.01 - 17**
Establishing the hydraulic connection from the adapter to the turntable **5.35 - 15**
Establishing the hydraulic connection from the ballast trailer to the adapter **5.35 - 17**
Establishing the hydraulic connections **5.39 - 17**, **6.05 - 7**
Establishing the hydraulic connections to the winch **6.05 - 11**, **6.05 - 21**
Establishing the hydraulic connections to the winches **6.05 - 25**
Establishing the hydraulic connections to winch 1 **3.07 - 11**
Establishing the hydraulic connections to winch 4 (WIV) **6.05 - 33**
Establishing the hydraulic connection to the crawler travel gears **3.01 - 37**
Establishing the hydraulic connection to the slewing gears **6.05 - 15**, **6.05 - 29**
Establishing the hydraulic connection to the turntable **3.02 - 9**
Establish the hydraulic connections. **3.05 - 11**
EU Declaration of Conformity **0.01 - 5**
Evaluating oil color **8.03 - 3**
Even reduction of rope diameter **8.04 - 14**
Example **8.03 - 9**
Example for crane on crawler with derrick boom, suspended ballast and long (main) boom system **2.04 - 36**

LWE/LR 1600-2-001/18101-07-02/en

copyright © Liebherr-Werk Ehingen GmbH 2018

Example for crane on crawler with derrick boom, suspended ballast and short (main) boom system **2.04 - 36**
Example for crane on supports **2.04 - 37**
Example for test points **8.01 - 7**
Examples for the load bearing capacity of the ground **2.04 - 34**
Examples of possible defects in hose lines **7.05 - 14**
Exceeding the LICCON overload protection for assembly **5.39 - 15**
Exhaust emissions **2.04 - 3**
Exhaust system **7.01 - 11**
Extendable step for cranes on tires **2.04 - 16**
Extendable step for LTR 1060 and LTR 1100 **2.04 - 20**
Extendable step for LTR 1220 **2.04 - 21**
Extendable step for LTR cranes **2.04 - 19**
Extendible step **2.04 - 16**
Extending the boom **2.04 - 61**
Extending the D-relapse cylinder **5.05 - 29**
Extending the S-relapse cylinder **5.38 - 37**, **5.42 - 17**
Extending the S-relapse cylinders **5.39 - 53**
Extending the support cylinders **5.35 - 93**
Extension ladder **2.04.10 - 21**
External corrosion **8.04 - 17**

F

F1-assembly maximum force **4.02 - 133**
Failure of sensor / limit switch **4.02 - 81**
Failure of the overload protection **4.04 - 4**
Fall arrest equipment on the crane chassis **2.06 - 5**
Fall arrest equipment on the crane superstructure **2.06 - 11**
Fall arrest equipment o the pivot sections and lattice mast boom **2.06 - 15**
Fall protection equipment on the crane **2.06 - 1**
Fan / blower adjustment **6.02 - 9**
F-assembly conditions **5.17 - 9**
F-assembly unit **1.03 - 19**
F-assembly unit, see illustration 1 **5.13 - 3**, **5.17 - 3**
Fastening **2.04 - 24**
Fastening device **2.04 - 73**
Fastening points **4.07 - 4**, **5.13 - 3**, **5.36.10 - 4**, **5.39 - 3**, **8.15 - 5**
Fastening points LI-intermediate sections 2420.10Z, 12m **5.39 - 5**
Fastening points S-intermediate sections 2825.20, 12m FLM for flying assembly **5.39 - 5**
Fastening points S-intermediate sections 2825.20, 6m **5.39 - 4**
Fastening points S-intermediate sections 2825.25, 12m **5.39 - 4**
Fastening points S-intermediate sections 2825.25, 3m **5.39 - 3**
Fastening points SL-reducer **5.39 - 6**
Fastening points S-pivot section **5.39 - 3**
Fastening points W-transport units **5.07 - 3**
Fastening positions for assembly / disassembly of the lattice jib **5.01 - 29**
Fastening the load **4.08 - 7**
Fast mode (Rapid gear) **4.02 - 97**
F-connector head **1.03 - 17**
F-connector head on the boom end **5.13 - 9**
F-end section **1.03 - 20**
F-end section, see illustration 2 **5.13 - 3**, **5.17 - 3**
Filling the grease container **7.04 - 9**
Filling the grease container of the central lubrication system **7.05 - 25**
Filling the grease lines **7.04 - 9**
Filling the lubrication lines **7.05 - 25**
Filling the windshield washer system **4.03 - 21**
Fill quantities, lubrication chart **7.06 - 1**
F-intermediate section 12m, 1916.06 **1.03 - 20**
F-intermediate section 6m, 1916.06 **1.03 - 19**
F-intermediate sections 6m and 12m, see illustration 3 **5.13 - 3**, **5.17 - 3**
First aid measures after rescue **2.04 - 16**
First inspection (first year) **8.03 - 9**
Flap of oscillating safety 2 on collision with mechanical relapse support 1 **8.12 - 13**
Flattening **7.05.50 - 7**
Flattenings **8.04 - 25**
Floating device **2.25 - 3**
Floating device, not supported **2.25 - 4**
Floating device, supported **2.25 - 4**
Flying assembling / disassembling of lattice sections **5.01 - 53**
Flying assembling of lattice sections **5.01 - 53**
Flying assembly of F-auxiliary jib (12m) **5.13 - 17**, **5.17 - 9**
Flying assembly of the SD/SLD/SL(X)D-boom (guying on flying assembly intermediate section) **5.39 - 27**
Flying disassembling of lattice sections **5.01 - 55**
Flying installation of the S-intermediate sections **5.38 - 23**
Folding cross beam **2.04.10 - 15**
Folding the consoles into the transport position **5.36.10 - 73**
Folding the consoles into working position **5.36.10 - 24**
Force distribution when driving on pressure distributor plates **4.10 - 25**
Force F1 (test point 1) between guying SA-frame - derrick end section **5.35 - 73**
Force F1 (test point 1) guying of SA-frame - derrick end section **5.36.10 - 46**
Force F4/F5 (test point 4/5) guying derrick ballast - derrick end section **5.35 - 73**
Force F4/F5 (test point 4/5) in the guying derrick ballast - derrick end section **5.36.10 - 47**
For cranes with pneumatic boom locking system **8.01 - 79**
For cranes with telescopic boom system Telematik **8.01 - 80**
Foreword **90.01 - 3**
Frame / crawler center section **1.02 - 2**

LWE/LR 1600-2-001/18101-07-02/en

copyright © Liebherr-Werk Ehingen GmbH 2018

Friction corrosion **8.04 - 19**
Fuel pre-filter **7.05 - 7**
Functional selection on the assembly plate **6.05 - 9**
Function check before lifting the derrick ballast **5.36.10 - 41**
Function check of limit switch initiators on the mechanical relapse retainer **8.12 - 11**
Function key line **4.02 - 163**, **4.02 - 199**, **4.02 - 207**
Function key line in the set up program **4.02 - 25**

G

Gear oil **7.04 - 3**
General checks **4.03 - 11**
General controls before crane operation **5.01 - 4**
General danger notes **6.05 - 5**
General information **8.01 - 3**
General information line **4.02 - 17**
General technical safety instructions for operation with a ballast trailer **2.15 - 1**
Getting the control rope with assembly rope **5.07 - 13**
Ground connection **1.01 - 7**
Grounding **2.04 - 41**
Grounding the crane **2.04 - 41**
Grounding the load **2.04 - 42**
Guiding crane structures, lattice sections or crane components **5.01 - 23**
Guiding the load **4.08 - 13**
Guying the pivot section in flying mode with the derrick boom **5.01 - 57**
Guying the pivot section in flying mode with the SA-frame **5.01 - 55**
Guy rods **5.01 - 7**
Guy ropes **1.03 - 7**

H

Handling of assembly plates **6.05 - 7**
Handling of hook blocks **5.19 - 5**
Hand signals **2.04 - 54**
Hand signals for guidance **2.04 - 54**
Hard hat **2.04 - 12**
Have the hydraulic, electric or engine failed? **7.15 - 7**
Hearing protection **2.04 - 13**
Heated crane components **2.04 - 4**, **2.04 - 24**
Heating the crane cab **6.02 - 3**
Height dependant wind speed **2.04 - 48**
Height rescue system **2.04 - 11**
High pressure cleaner **7.01 - 9**
Hinged ladders **2.04.10 - 19**
Hoist gear, hoist rope **2.04 - 67**
Hoist gear 1 to 6, illustration 1 **7.05 - 29**
Hoist limit switch „Hoist top“ **4.04 - 7**
Hoist ropes **1.03 - 7**
Hoist top limit switch HES1 **4.02 - 83**
Hoist top limit switch HES2 and HES3 **4.02 - 85**
Hoist winch assembly **3.07 - 1**
Holding the luffing lattice jib **5.01 - 32**
Hook block overview **5.19 - 5**
Hook blocks **5.19 - 1**
Horizontal movements **2.04 - 57**
HS-auxiliary jib **5.42 - 1**
HSDBW/B // HSLDB/BW // HSL2DBW/B-boom combinations **1.01 - 24**
HSDWBW/B // HSDWVB/BW-boom combinations **1.01 - 26**
HSL2DFB/BW // HSL4DFB/BW-boom combinations **1.01 - 28**
Hydraulic aggregate on the crawler **5.30 - 5**
Hydraulic aggregate on wheels **5.30 - 4**
Hydraulically adjustable auxiliary boom **2.04 - 67**
Hydraulic assembly cylinder **1.02 - 5**
Hydraulic assembly support **1.02 - 5**
Hydraulic connections **3.01 - 17**, **3.01 - 21**
Hydraulic hose lines **5.35 - 113**, **7.05 - 13**
Hydraulic oil, diesel fuel, operating fluids **2.04 - 4**
Hydraulic oil level **5.30 - 3**
Hydraulic safety valves **4.04 - 11**
Hydraulic system **7.05 - 11**
Hydraulic tank **7.05 - 11**

I

Identifications on auxiliary weights **2.05.10 - 5**
Identifications on auxiliary weights at delivery **2.05.10 - 5**
Identifications on auxiliary weights for reorder **2.05.10 - 6**
Identifications on single hook or double hook **2.05.10 - 4**
Identifications on the hook block or load hook **2.05.10 - 3**
Illustration **8.12 - 5**
Impact protection **5.01 - 13**
Importance of inspection **8.04 - 3**
Improper mechanical damage **8.04 - 25**
Increased corrosion **2.25 - 5**
Increase the hook block weight **2.08 - 6**
Increasing and decreasing the engine rpm with the button **4.05 - 7**
Increasing the engine rpm via the pedal **4.05 - 7**
Increasing the hook block weight **4.08 - 18**
Increasing the reeving number **4.08 - 18**
Indicator lights of the central lubrication system **7.05 - 21**
Indicator lights on the BKE „363“ **4.01 - 13**
Input window hook block weight **4.02 - 53**
Inserting the retaining pins **5.36.10 - 61**
Inspecting and monitoring the load hook **8.05 - 3**
Inspecting of winches **8.03 - 1**
Inspecting the gear brakes **8.03 - 4**
Inspecting the hoist and retracting winches **8.03 - 3**
Inspecting the hydraulic hose lines for damage **8.06 - 4**
Inspecting the hydraulic hose lines for leaks **8.06 - 5**
Inspecting the ladders **8.17 - 3**
Inspecting the lattice sections **8.01 - 78**
Inspecting the pin connections **8.01 - 87**

LWE/LR 1600-2-001/18101-07-02/en

copyright © Liebherr-Werk Ehingen GmbH 2018

Inspecting tires and disk wheels **2.15 - 4**
Inspection **8.15 - 3**
Inspection before start up **2.04 - 71**
Inspection chart for cranes **8.90 - 1**
Inspection chart for recurring inspections of Liebherr cranes **8.90 - 3**
Inspection form for the inspection of ladders and steps **8.17 - 4**
Inspection intervals **8.03 - 3**, **8.05 - 3**, **8.06 - 3**, **8.15 - 3**, **8.17 - 3**
Inspection of accumulator pressure in relapse cylinder **8.14 - 1**
Inspection of carrier rollers **8.01 - 85**
Inspection of carrying crane structures, especially steel structures **8.01 - 4**
Inspection of change over pulleys, illustration 2 **8.01 - 90**
Inspection of crane wire ropes **8.04 - 1**
Inspection of diaphragm reservoir **8.01 - 84**
Inspection of extension conditions of sliding beams **8.01 - 87**
Inspection of fastening equipment **8.01 - 84**
Inspection of guy rods **8.15 - 1**
Inspection of hydraulic hose lines **8.06 - 1**
Inspection of ladders **8.17 - 1**
Inspection of load handling equipment and assembly aids **8.01 - 83**
Inspection of load hooks **8.05 - 1**
Inspection of locking system of telescopic boom **8.01 - 79**
Inspection of relapse cylinders **8.01 - 84**
Inspection of retaining ropes and anchor points **2.06 - 19**
Inspection of rope pretension on lattice sections, illustration 2 **8.01 - 83**
Inspection of rope pulleys **8.01 - 85**
Inspection of safety controls on the relapse supports **8.12 - 1**
Inspection of safety ropes and anchor points **8.01 - 81**
Inspection of slewing ring connection **8.01 - 87**
Inspection of the auxiliary reeving winch, recovery winch and spare wheel winch **8.03 - 4**
Inspection of the function of the overload protection **8.01 - 87**
Inspection of the mounting of the load bearing equipment **8.01 - 88**
Inspection of the oil and fuel tanks **8.01 - 90**
Inspection of the safety controls on the relapse cylinders **8.01 - 85**
Inspection of the tele extension with eccentric, illustration 1 **8.01 - 89**
Inspection sheet and check list **8.17 - 3**
Installations in the cab **4.01 - 3**
Installing / removing the pulley cart **5.61 - 5**
Installing a double hook block for parallel operation **5.19 - 17**
Installing a double hook block for single operation **5.19 - 7**
Installing the adapter for the ballast trailer on the turntable **5.05 - 25**
Installing the adapter on the turntable **5.35 - 15**
Installing the assembly supports **3.01 - 5**, **3.01 - 7**
Installing the auxiliary jib „HS“ **5.42 - 5**
Installing the auxiliary jib „HS“ on the SL-boom **5.42 - 5**
Installing the auxiliary jib „HS“ on the SW-end section **5.42 - 9**
Installing the auxiliary weights **5.19 - 9**, **5.19 - 19**, **5.19 - 29**
Installing the battery **7.05 - 37**
Installing the block connector **5.19 - 17**
Installing the central ballast **3.03 - 5**
Installing the console **3.03 - 5**
Installing the counterweight **4.07 - 6**
Installing the D-lattice sections on the D-pivot section **5.05 - 15**
Installing the fall arrest equipment on the crane operator's cab **2.06 - 9**
Installing the front and rear pedestals **2.06 - 5**
Installing the hook block **5.19 - 7**, **5.19 - 17**
Installing the mechanical auxiliary support **3.04 - 3**
Installing the pedestal **2.06 - 9**
Installing the pulley block on cross brace **5.19 - 7**
Installing the pulley blocks on the cross brace **5.19 - 17**
Installing the pulley cart **5.61 - 5**
Installing the single blocks **5.19 - 29**
Installing the steps **2.06 - 7**
Installing the turntable **3.02 - 7**
Install the S-guy rods **5.38 - 21**, **5.38 - 27**
Install the S-intermediate section on the S-pivot section **5.38 - 17**
Instrument panel **4.01 - 19**
Intended use **2.04 - 70**, **2.04 - 72**, **2.04.10 - 2**
Interfaces **4.01 - 5**
Interior equipment **4.01 - 5**
Intermediate sections **5.36.10 - 6**
Internal corrosion **8.04 - 19**
Interrupting crane operation **2.04 - 67**
Intervals **7.05.50 - 11**, **8.04 - 4**
Is a sensor or limit switch defective? **7.15 - 21**
Is the CPU defective? **7.15 - 19**
Is the electrical connection of a cable drum interrupted? **7.15 - 19**
Is the LICCON monitor defective? **7.15 - 19**
Is the power supply defective? **7.15 - 19**

J

Job planning **2.03 - 1**

K

Key button „Ballast trailer lifted off“ **5.35 - 61**
Kinking, rope loops (grommets) pulled closed **7.05.50 - 9**
Kinking or rope loops pulled closed **8.04 - 23**

LWE/LR 1600-2-001/18101-07-02/en

copyright © Liebherr-Werk Ehingen GmbH 2018

L

Labeling of the load carriers **2.05.10 - 1**
Ladder access **2.04.10 - 22**
Ladder categories **2.04.10 - 2**
Ladder inspection **2.04.10 - 12**
Ladders **2.04.10 - 1**, **7.01 - 11**
Ladder safeguards **2.04.10 - 22**
Latch **5.01 - 18**
Lattice mast boom **7.05.50 - 3**
Lattice sections **2.04 - 23**
LD/SLD/SD-boom combination **5.39 - 1**
Lead and lead compounds **2.04 - 3**
Leaning ladder **2.04.10 - 27**
Leaning ladder with transition **2.04.10 - 29**
Legal prerequisites **2.04 - 71**
LICCON computer system **4.01 - 9**, **4.02 - 1**, **4.05 - 3**
LICCON computer system after engine start **4.03 - 35**
LICCON computer system boot up **4.02 - 7**
LICCON computer system in stand-by mode **4.02 - 209**
LICCON computer system shows an error message? **7.15 - 11**
LICCON job planner **2.04 - 35**
LICCON Monitor 0 **4.02 - 9**
LICCON Monitor 1 **4.02 - 9**
LICCON overload protection **5.35 - 69**, **5.36.10 - 45**
LICCON Overload protection (LMB) **4.02 - 5**
Liebherr Service **7.01 - 7**
Lifting, illustration 1 **4.03 - 45**
Lifting / lowering a load **4.05 - 13**
Lifting / lowering a load with even speed **2.04 - 56**
Lifting / lowering the derrick ballast using the instrument panel **5.36.10 - 43**
Lifting / lowering the derrick ballast using the radio remote control BTT-E **5.36.10 - 44**
Lifting above ground level, illustration 2A **4.03 - 45**
Lifting a load with two cranes **2.04 - 51**
Lifting and lowering the ballast trailer with the pull cylinders **5.35 - 31**
Lifting and lowering the derrick ballast using the pull cylinders **5.36.10 - 42**
Lifting below ground, illustration 3 **4.03 - 45**
Lifting of personnel **2.04 - 70**
Lifting slowly **2.04 - 56**
Lifting the ballast trailer **5.35 - 31**
Lifting the ballast trailer with the support cylinders **5.35 - 41**, **5.35 - 45**, **5.35 - 47**, **5.35 - 53**, **5.35 - 105**, **5.35 - 109**
Lifting the boom **2.04 - 60**
Lifting the boom and lower the load at the same time **2.04 - 62**
Lifting the crawler center section **3.01 - 9**
Lifting the derrick ballast **5.36.10 - 43**
Lifting the load **4.08 - 11**
Lifting the SL-boom off the ground **5.42 - 11**
Lifting winch 1 from the flatbed trailer **3.07 - 7**
Lifting with auxiliary winch **2.04 - 60**
Lifting with main winch **2.04 - 60**
Lift the crawler track **3.01 - 23**
Lift the turntable from transport vehicle **3.02 - 5**
Light and / or heavy work **2.04.10 - 23**
LI-intermediate section 12m **1.03 - 17**
LI-intermediate section 6m **1.03 - 17**
Limit sign auxiliary boom / accessory **4.02 - 77**
Limit signs main boom **4.02 - 73**
Limit switch **4.04 - 13**
Limit switch D-boom, relapse cylinder **5.05 - 23**
Limit switch „Winch spooled out“ **4.04 - 9**
Linch pin **5.01 - 16**
LMB STOP / Engine monitoring STOP **4.02 - 91**
Load bearing crane structures **2.08 - 7**
Load burdens on the ground on cranes on crawlers **2.04 - 33**
Load burdens on the ground on cranes on supports **2.04 - 33**
Load display **4.03 - 45**
Load handling equipment **1.03 - 6**
Loading the preassembled lattice jib **5.01 - 35**
Load min / max **4.02 - 169**
Loads on the ground due to crane operation **2.04 - 33**
Load spectrum class: Heavy L3 **8.03 - 7**
Load spectrum class: Light L1 **8.03 - 6**
Load spectrum class: Medium L2 **8.03 - 6**
Load spectrum class: Very heavy L4 **8.03 - 7**
Load take-on with two auxiliary cranes **3.02 - 5**
Load take up on high rise, illustration 2B **4.03 - 45**
Load take-up with an auxiliary crane **3.02 - 3**
Load weighing **4.03 - 43**
Load weighing and load display **4.03 - 41**
Localized increase of rope diameter **7.05.50 - 6**
Localized increases of rope diameter **8.04 - 17**
Localized reduction of rope diameter **8.04 - 16**
Locking the engine rpm **4.05 - 7**
Loop formation **7.05.50 - 9**, **8.04 - 22**
Lowering slowly **2.04 - 57**
Lowering the ballast trailer **5.35 - 31**
Lowering the ballast trailer with the support cylinders **5.35 - 41**, **5.35 - 45**, **5.35 - 49**, **5.35 - 53**, **5.35 - 107**, **5.35 - 111**
Lowering the boom **2.04 - 61**
Lowering the boom and lift the load at the same time **2.04 - 62**
Lowering the crawler center section to the support **3.01 - 49**
Lowering the crawler track **3.01 - 17**
Lowering the derrick ballast **5.36.10 - 43**
Lowering the hook block **5.19 - 3**
Lowering the hook block if slack rope forms **5.19 - 3**
Lowering the load while stationary **2.04 - 57**
Lubricate the slewing ring connection **7.05 - 17**
Lubricating the gear ring and the slewing gear pinion **7.05 - 17**
Lubricating the pin bores on the lattice sections and guy rods **7.05.50 - 3**
Lubricating the rope **7.05.50 - 14**

LWE/LR 1600-2-001/18101-07-02/en

copyright © Liebherr-Werk Ehingen GmbH 2018

Lubrication and fill quantities **5.35 - 115**
Luff down W-lattice jib **5.17 - 27**
Luffing the boom **4.05 - 23**
Luffing the boom
down **5.10 - 15**, **5.19 - 3**, **5.38 - 45**, **5.39 - 61**, **5.42 - 25**
Luffing the boom in S/SL/SLF/SL2DB/SDB/SDWV(B/BW) operating mode **4.05 - 23**
Luffing the D-boom down **5.05 - 35**
Luffing the derrick, for all D-operating modes **4.05 - 25**
Luffing the lattice jib during SDWV(B/BW) operation **4.05 - 25**
Luffing the lattice jib during SW/SDW/(B/BW) operation **4.05 - 25**
Luffing the main boom in operating mode SDW (B/BW) **4.05 - 23**
Luffing the main boom in operating mode SW **4.05 - 23**
Luffing the SLF-boom down **5.13 - 37**
Luffing the W-lattice jib down **5.07 - 41**
Luffing the WV-lattice jib down **5.08 - 23**

M

Machine related movements **2.04 - 60**
Maintenance **2.08 - 7**, **5.35 - 113**
Maintenance and inspection schedule **7.02 - 3**, **7.02.50 - 3**, **7.03 - 2**, **7.03.50 - 3**
Maintenance and service - General **7.01 - 1**
Maintenance instructions - Crane boom **7.05.50 - 1**
Maintenance instructions - Crane chassis **7.04 - 1**
Maintenance instructions - Crane superstructure **7.05 - 1**
Maintenance intervals **7.01 - 3**
Maintenance intervals - Ballast trailer **7.02.50 - 1**
Maintenance intervals - Crane boom **7.03.50 - 1**
Maintenance intervals - Crane superstructure **7.03 - 1**
Maintenance intervals - Crawler chassis **7.02 - 1**
Maintenance intervals for the ballast trailer **5.35 - 111**
Maintenance of hose lines **7.05 - 15**
Making adjustments semi-automatically in the „Climate control settings“ menu **6.02 - 15**
Manual heating mode **6.02 - 12**
Manual operation for assembly **5.35 - 53**
Manual rope winches **5.01 - 6**
Manufacturer **0.01 - 1**
Maximum load **4.02 - 61**
Maximum load according to load chart and reeving **4.02 - 5**
Maximum permissible ground unevenness **5.35 - 59**
Measurement of wind speed **2.04 - 46**
Measures for defective components **7.15 - 19**
Measures in clear problem cases **7.15 - 7**
Mechanical auxiliary support **1.02 - 5**, **1.03 - 12**, **3.04 - 1**
Menu „Climate control settings“ **6.02 - 3**
Minimum rope coils **5.01 - 3**
Mixing battery acid **7.05 - 36**
Mobile cranes **2.04 - 23**
Monitored auxiliary functions for crane operation **4.02 - 99**
Monitoring mode / control mode **4.02 - 189**
Monitoring of maximum load on the LICCON monitor 0 **5.35 - 77**, **5.36.10 - 50**
Monitoring of minimum force F1 **5.35 - 75**, **5.36.10 - 48**
Monitoring of relapse cylinders **4.02 - 113**
Monitoring of test point 1-operational maximum force (= F1max operation) **5.35 - 77**, **5.36.10 - 50**
Monitoring the winches **8.03 - 5**
Monitors and displays **4.01 - 9**
Movement on the crane **2.04 - 6**
Move the selector arrow to the left **4.02 - 47**
Move the selector arrow to the right **4.02 - 47**
Move the winch selector „down“ **4.02 - 51**
Move the winch selector „up“ **4.02 - 51**
Moving away from me **2.04 - 58**
Moving both track chains **2.04 - 58**
Moving one track chain **2.04 - 59**
Moving the assembly support out **3.01 - 47**
Moving the cab to the horizontal position **4.03 - 19**
Moving toward me **2.04 - 58**
Multi-purpose ladder with height adjustment **2.04.10 - 21**

N

Narrow track crane **5.36.10 - 29**, **5.36.10 - 69**
Narrow track crane: Standing levels at D36m with guide B2 **5.36.10 - 11**
Narrow track crane: Standing levels at D36m without guide **5.36.10 - 10**
Negative longitudinal incline (illustration 4 to 6) **4.10 - 17**
Noise emission **1.03 - 6**
Non-destined use **0.01 - 7**, **2.25 - 3**
Non-rotating rope end connection **8.04 - 6**
Non-twisting ropes with rope end connections **8.04 - 6**
Notes to change the wheel sets **5.35 - 37**
Notice sign for hydraulic oil tank (position 62) **2.05 - 12**
Notice sign for refuelling (position 49) **2.05 - 12**
Notice signs **2.05 - 11**

O

Obligations of the crane operator **2.04 - 25**
Oil change **7.04 - 7**, **7.05 - 29**, **7.05 - 31**
Oil change on the miter gear **7.04 - 5**
Oil change on the planetary gear **7.04 - 5**
Opening the end section **5.01 - 31**
Opening the roof window **4.03 - 23**
Operating and monitoring instruments **4.01 - 3**

LWE/LR 1600-2-001/18101-07-02/en

copyright © Liebherr-Werk Ehingen GmbH 2018

Operating and monitoring instruments on the crane superstructure **4.01 - 1**
Operating buttons on the BKE „370“ **4.01 - 14**
Operating buttons on the BKE „385“ **4.01 - 16**
Operating conditions **2.25 - 3**
Operating console **4.01 - 13**
Operating elements crane operator's seat **4.01 - 29**
Operating elements for the crawler operation **4.10 - 27**
Operating elements Master switch (MS) 3 **4.01 - 29**
Operating elements of the LICCON computer system on monitor 0 **4.02 - 11**
Operating elements of the LICCON computer system on monitor 1 **4.02 - 129**
Operating elements on control platform **4.01 - 23**
Operating elements on the control panels **4.01 - 25**, **5.35 - 7**
Operating elements on the operating and control unit (BKE) **4.01 - 13**
Operating errors in the set up program **4.02 - 35**
Operating fluids and lubricants **7.01 - 14**, **7.07 - 1**
Operating mode preselection on the LICCON computer system **4.02 - 7**
Operating modes with derrick boom **4.02 - 133**
Operating modes without derrick boom **4.02 - 133**
Operating the assembly winch **4.05 - 21**
Operating the engine-independent auxiliary heater **6.02 - 16**
Operating the touch display **6.02 - 4**
Operating the window washer system **4.03 - 21**
Operating the window wiper / window washer system **4.03 - 21**
Operating the window wipers **4.03 - 21**
Operating units in the cab **4.01 - 7**
Operating winch 1 - hoist winch **4.05 - 13**
Operating winch 2 - hoist winch **4.05 - 13**
Operating winch 6 - hoist winch **4.05 - 19**
Operating winch 6 in individual operation winch 1 + 2 **4.05 - 19**
Operating winch 6 in parallel operation of winch 1 and winch 2 **4.05 - 19**
Operational transverse pressure **8.04 - 26**
Optimizing measures for travel route **4.10 - 5**
Optional equipment and functions **0.01 - 9**
Other operating elements **4.02 - 125**
Overflow container, illustration 3 **7.05 - 29**
Overlapping of working ranges of several cranes **2.04 - 53**
Overload monitoring in operating mode with derrick ballast **5.35 - 77**, **5.36.10 - 50**
Overload protection of LICCON computer system **4.04 - 3**
Overview components pulley cart **5.61 - 3**
Overview of boom nose components **5.10 - 3**
Overview of central lubrication system **7.05 - 19**
Overview of displays and component groups for error diagnostics **7.15 - 5**
Overview of the retaining elements **5.01 - 14**
Overview WV-lattice jib **5.08 - 3**

P

Paint / coating **8.15 - 4**
Parallel operation: Lifting / lowering a load **4.05 - 17**
Parallel travel **5.35 - 47**
Pedal carrier **4.01 - 31**, **4.10 - 27**
Pedestals on the crane chassis **2.06 - 5**
Periodic crane inspections **8.01 - 1**
Permissible counterweight assemblies **4.07 - 5**
Permissible turntable ballast - ballast combinations **3.06 - 3**
Personal protective equipment **2.04 - 8**, **2.06 - 3**, **7.05.50 - 4**, **8.04 - 3**
Personnel **7.01 - 4**
Personnel and qualification **2.04 - 72**
Picking up and lowering overhead loads **4.08 - 18**
Picking up the fastening equipment **4.08 - 15**
Pin connections **5.01 - 10**
Pin intake gear winch 4 on turntable **3.05 - 9**
Pinning **3.02 - 9**
Pinning and unpinning the pin with pin pulling cylinder 2 **5.30 - 6**
Pinning and unpinning the pin with pin pulling cylinder 3 **5.30 - 7**
Pinning or unpinning pins **5.30 - 6**, **5.30 - 7**
Pinning procedure **5.35 - 21**
Pinning the ballast trailer on the adapter **5.35 - 17**
Pinning the collar pin **5.01 - 11**
Pinning the D-pivot section on the SA-frame **5.05 - 13**
Pinning the pulley block on the pull test brackets **5.05 - 19**
Pinning the Quick Connection **3.02 - 9**
Pinning the relapse supports **5.07 - 17**, **5.08 - 9**
Pinning the S-intermediate section on the S-pivot section above **5.38 - 17**
Pinning the S-pivot section on the turntable **5.38 - 15**, **5.39 - 15**
Pinning the strut on the ballast trailer **5.35 - 93**
Pinning the suspended ballast guide on the turntable **5.36.10 - 25**
Pinning the suspended ballast pallet on the D-guy rods **5.36.10 - 36**
Pinning the suspended ballast pallet on the suspended ballast guide * **5.36.10 - 35**
Pinning the upper pulley block on the S-pivot section **5.39 - 19**
Pinning the upper pulley block with the lower pulley block **5.05 - 37**
Pinning the W-transport units together **5.07 - 11**
Pinning winch 1 with the turntable **3.07 - 9**
Pin pulling device **1.02 - 5**, **5.30 - 1**, **5.30 - 3**, **5.30 - 4**
Pin pulling device on the adapter **5.35 - 19**
Pin roller bearings. **3.05 - 7**
Pin the SA-frame on the turntable **3.05 - 5**
Pivot section **5.36.10 - 6**
Place the pulley block into the transport retainer on the D-pivot section **5.05 - 45**
Place the pulley block on the ground **5.05 - 39**

LWE/LR 1600-2-001/18101-07-02/en

copyright © Liebherr-Werk Ehingen GmbH 2018

Placing a shorter crane rope **4.08 - 15**
Placing the ballast plates, fastening points: Bitt **5.36.10 - 40**
Placing the ballast plates, fastening system: „Twistlock“ **5.36.10 - 39**
Placing the boom down **5.42 - 25**
Placing the central ballast **3.03 - 7**
Placing the counterweight plates **4.07 - 9**
Placing the counterweight plates, fastening points: Bitt **4.07 - 12**
Placing the counterweight plates, fastening system: „Twistlock“ **4.07 - 11**
Placing the hoist rope or the control rope **5.01 - 2**
Placing the SA-frame onto the turntable **5.02 - 11**
Placing the turntable on the crawler center section **3.02 - 7**
Placing the WV-lattice jib down **5.08 - 21**, **5.08 - 25**
Planetary gear and miter gear **7.04 - 5**
Planning Crane operation **2.03 - 3**
Platform ladder **2.04.10 - 16**, **2.04.10 - 31**
Pneumatic springs **5.01 - 6**
Positive longitudinal incline (illustration 1 to 3) **4.10 - 15**
Possible engine monitoring advance warning, warning and STOP events **4.02 - 203**
Possible weighing errors **4.03 - 43**
Power supply for the crane * **4.03 - 3**
Pre-assembling the ballast trailer **5.35 - 11**
Preface **0.01 - 1**
Preface to the appendix **90.01 - 1**
Preheating the hydraulic oil **2.08 - 4**
Preheating time **2.08 - 4**
Preparatory work **5.30 - 6**, **5.30 - 7**
Prepare intake gear winch 4 for transport **3.05 - 15**
Preparing the crawler carrier for assembly **3.01 - 13**, **3.01 - 33**
Preparing the crawler carrier for disassembly **3.01 - 23**, **3.01 - 43**
Preparing the hook block for crane operation **5.19 - 11**, **5.19 - 21**, **5.19 - 31**
Preparing the hook block for removal **5.19 - 13**, **5.19 - 23**, **5.19 - 33**
Preparing the roller bearings for transport **3.05 - 17**
Prerequisites **2.04 - 72**
Prerequisites for crane equipment and accessories **2.04 - 71**
Prerequisites for crane operation **4.04 - 3**
Prerequisites for driving / moving crawler cranes (crawler operation) **4.10 - 3**
Prerequisites for driving on uphill / downhill slopes with boom angle adjustment **4.10 - 15**
Prerequisites for driving on uphill / downhill slopes without boom angle adjustment **4.10 - 19**
Prerequisites for driving under observation of the boom position **4.10 - 12**
Prerequisites for driving with a load and / or derrick ballast **4.10 - 8**
Prerequisites for driving without a load and without derrick ballast **4.10 - 10**
Prerequisites for emergency operation **6.05 - 7**
Prerequisites for lifting of personnel **2.04 - 70**
Prerequisites for operation with lifting cage (cherry picker) **2.04 - 71**
Presettings **5.35 - 69**, **5.36.10 - 45**
Pressed rope end connection **8.04 - 14**
Pressure filters in the crane hydraulic **7.05 - 13**
Pressure monitoring in extension cylinder **5.35 - 55**
Pressure monitoring in the relapse cylinders **4.04 - 11**
Pressure test of relapse cylinders **8.01 - 84**
Pretensioning the hoist rope with pretensioning ballast with two hook operation **4.08 - 18**
Preventing fires **7.01 - 5**
Priority acoustic signal **4.02 - 93**, **4.02 - 173**
Procedure **5.35 - 55**, **6.05 - 37**
Procedure for fogged windows **6.02 - 15**
Procedure in case of error messages with LEC **7.15 - 13**
Procedure in case of problems **7.15 - 1**
Procedure in case of slack rope **5.19 - 3**
Procedure to follow in case of a problem **4.04 - 4**, **7.15 - 3**, **7.15 - 3**
Product description **1.02 - 1**
Programming the auxiliary heater **6.02 - 20**
Prohibition sign **2.05 - 7**
Protecting against burns **7.01 - 5**
Protecting from scalding **7.01 - 6**
Protecting the crane against corrosion **7.01 - 12**
Protecting the crane against corrosion for shutdown **7.01 - 13**
Protecting the crane against corrosion for storage **7.01 - 13**
Protective gloves **2.04 - 13**
Protruding, distorted inlay, braiding **7.05.50 - 9**
Protruding, distorted insert or strand **8.04 - 21**
PSAgA, rescue equipment and tools **2.04 - 73**
Pull cylinder on block **5.35 - 73**, **5.36.10 - 47**
Pulley head height **4.02 - 71**
Pulling the pulley block to the D-end section and placing it down **5.05 - 15**
Pump distributor gear **7.05 - 9**
Pushing out the middle ladder section **2.04.10 - 22**
Pushing out the upper ladder section **2.04.10 - 22**
Pushing the extension ladder together **2.04.10 - 22**

Q

Qualification Inspection personnel **8.04 - 3**
Qualification Maintenance personnel **7.05.50 - 5**

R

Radii **5.35 - 5**
Radius **4.02 - 67**
Ram work or pulling sheet piles **4.08 - 14**
Read the operating instructions (position 35) **2.05 - 11**
Recharging the battery **7.05 - 36**

copyright © Liebherr-Werk Ehingen GmbH 2018

Reduce rope pull **2.08 - 6**
Reducing rope unwinding **4.08 - 15**
Reduction of rope diameter **7.05.50 - 5**
Reeving in the hook block **5.13 - 29**, **5.38 - 39**, **5.39 - 55**, **5.42 - 19**
Reeving out the hook block **5.39 - 62**
Reeving out the W-control rope **5.07 - 51**
Reeving out the W-control rope on the roller sets **5.07 - 51**
Reeving out the W-control rope on the WA-frame 2 **5.07 - 51**
Reeving the W-control rope in **5.07 - 13**, **5.07 - 13**, **5.08 - 9**
Regulating the engine rpm **4.05 - 7**
Relapse cylinder **5.35 - 57**
Relapse cylinders **5.01 - 6**
Releasing the counterweight **4.07 - 16**
Releasing the electrical connection from the adapter to the turntable **5.35 - 97**
Releasing the electrical connection from the ballast trailer to the adapter **5.35 - 97**
Releasing the engine rpm lock **4.05 - 7**
Releasing the hydraulic connection from the adapter to the turntable **5.35 - 97**
Releasing the hydraulic connections from the ballast trailer to the adapter **5.35 - 97**
Remarks **4.02 - 193**
Remedying temporary errors during system start **7.15 - 11**
Remote diagnostics **7.15 - 17**
Removal criteria Overview **8.04 - 8**
Remove the SA-frame from the turntable **3.05 - 19**
Removing and recharging the battery **7.05 - 36**
Removing broken wires **7.05.50 - 14**
Removing the 36t boom nose on the SW-end section **5.10 - 17**
Removing the auxiliary jib „HS“ **5.42 - 23**, **5.42 - 29**
Removing the auxiliary weights **5.19 - 13**, **5.19 - 23**, **5.19 - 33**
Removing the ballast plates **5.36.10 - 59**
Removing the ballast plates, fastening points: Bitt **5.36.10 - 60**
Removing the ballast plates, fastening system: „Twistlock“ **5.36.10 - 59**
Removing the ballast trailer **5.35 - 87**
Removing the battery **7.05 - 36**
Removing the block connector **5.19 - 27**
Removing the catwalks for transport **2.06 - 13**
Removing the central ballast **3.03 - 9**
Removing the central ballast plates **3.03 - 9**
Removing the console **3.03 - 11**
Removing the consoles for ballast centering **5.36.10 - 64**
Removing the counterweight brackets on the turntable **4.07 - 21**
Removing the counterweight plates **4.07 - 18**
Removing the counterweight plates, fastening points: Bitt **4.07 - 20**
Removing the counterweight plates, fastening system: „Twistlock“ **4.07 - 18**
Removing the end section on the conical leaning ladder **2.04.10 - 24**
Removing the front and rear pedestals **2.06 - 5**
Removing the hook block **5.19 - 13**, **5.19 - 23**
Removing the pulley block on cross brace **5.19 - 15**
Removing the pulley blocks on the cross brace **5.19 - 27**
Removing the pulley cart **5.61 - 5**
Removing the single blocks **5.19 - 33**
Removing the transport unit **5.36.10 - 20**
Removing the turntable **3.02 - 11**
Removing winch 1 **3.07 - 13**
Renewing the pretension of hoist ropes **7.05.50 - 16**
Repair welding **8.01 - 6**
Replacing damaged crane components **7.01 - 6**
Replacing hydraulic hose lines **8.06 - 5**
Replacing retaining ropes subjected by a fall **2.06 - 17**
Replacing the granular cartridge **7.05 - 35**
Replacing the hose lines **7.05 - 15**
Rescue **2.04 - 73**
Rescuing the assembly personnel **2.04 - 16**
Resetting the auxiliary heater programming **6.02 - 22**
Respiratory protection **2.04 - 13**
Restoring hoist rope pretension **4.08 - 16**
Resuming crane operation **2.04 - 69**
Retaining clips **5.01 - 20**
Retaining elements **5.01 - 13**
Retaining ropes on the lattice sections **2.06 - 17**
Retaining the engine monitoring screen **4.02 - 205**
Retracting the boom **2.04 - 61**
Retracting the support cylinders **5.35 - 25**
Retract the D-relapse cylinder **5.05 - 43**
Retrofitting old ladders **2.04.10 - 3**
Return filter **7.05 - 11**
Rigging and fastening points **8.01 - 77**
Rigging the guy rods on lattice booms on placed down boom system **5.01 - 66**
Roller cart **1.03 - 19**, **5.61 - 1**
Roller set **5.14 - 1**
Roller set 300t **1.03 - 18**
Roller set 320t **1.03 - 18**
Rope pulleys **5.01 - 2**
Rope pulleys and guide pulleys **7.05.50 - 4**
Rope pulleys and hydraulic cylinders **2.08 - 8**
Ropes **5.01 - 2**
Rotating parts **7.01 - 6**
Rotating rope end connection **8.04 - 6**
Rotation resistant ropes **8.04 - 12**
Rotation-resistant ropes with rope end connections **8.04 - 5**

S

S // SL // SL(HS) // SL9-boom combinations **1.01 - 8**
S/SL-boom **5.38 - 1**
Safe and problem-free operation **7.05.50 - 4**

LWE/LR 1600-2-001/18101-07-02/en

copyright © Liebherr-Werk Ehingen GmbH 2018

Safety and warning display **0.01 - 1**
Safety equipment **0.01 - 8**, **1.02 - 3**, **4.04 - 1**
Safety goggles **2.04 - 13**
Safety guidelines for travel operation **5.35 - 57**
Safety guidelines in case of external power supply **2.04 - 41**
Safety harness with height safety equipment **2.04 - 9**
Safety instructions **2.04.10 - 2**, **8.17 - 3**
Safety locking pin **5.01 - 15**
Safety shoes **2.04 - 13**
Safety signs **2.04.10 - 3**
SA-frame **5.02 - 1**, **5.02 - 3**
SA-frame assembly **3.05 - 1**
SA-frame with winch 4 **1.03 - 12**
S-boom relapse retainer **8.12 - 3**
Scattered occurring broken wires **8.04 - 10**
SD // SL2D // SL4D with end section **5.39 - 30**
SD // SLD // SL2D // SL4D **5.39 - 31**
SDBW/B // SLDB/BW // SL2DBW/B-boom combinations **1.01 - 12**
SDWBW/B // SDWVB/BW-boom combinations **1.01 - 16**
Second inspection (second year) **8.03 - 9**
Securing against falls **7.01 - 4**
Securing against start up **7.01 - 4**
Securing bracket **2.04 - 22**
Securing personnel on shut off crane **2.04 - 72**
Securing persons to prevent them from falling **2.04 - 14**
Securing the counterweight **4.07 - 13**
Selecting a pulley head **4.02 - 47**
Selecting a pulley head and assigning it to winches **4.02 - 45**
Selecting the location **2.04 - 26**
Selecting the set up configuration with short code **4.03 - 37**
Selecting the travel speed **4.10 - 29**
Separating the WA-frame 2 **5.07 - 53**
Servicing the central lubrication system **7.05 - 23**
Servo oil pressure monitoring in the winches **4.04 - 11**
Setting down the boom **5.38 - 45**
Setting down the suspended ballast pallet **5.36.10 - 58**
Setting mode **4.02 - 191**
Setting the ballast trailer radii **5.35 - 33**
Setting the hoist rope reeving **4.03 - 37**
Setting the lubrication and break periods. **7.05 - 23**
Setting the operating mode and set up configuration **4.02 - 15**
Setting the operating mode and set up configuration via the 4-digit short code **4.02 - 15**
Setting the operating mode and set up configuration via the function keys **4.02 - 15**
Setting the relapse retainer **5.13 - 27**
Setting the set up configuration with the function keys **4.03 - 37**
Setting the suspended ballast pallet in the assembly position **5.36.10 - 31**
Setting the wheel sets **5.35 - 53**
Setting up parallel operation **4.05 - 15**
Setting winch 1 into the turntable **3.07 - 9**
Set up program areas **4.02 - 17**
Shortening the rope **7.05.50 - 16**
Shorting the intervals **8.04 - 25**
Showing the horizontal distance **2.04 - 59**
Showing the vertical distance **2.04 - 56**
Signs on the crane **2.05 - 1**
Single hook blocks **5.19 - 29**
Single layer and parallel roped ropes **8.04 - 10**
Single strand height safety equipment **2.04 - 11**
S-intermediate section 12m **1.03 - 15**
S-intermediate section 3m **1.03 - 15**
S-intermediate section 6m **1.03 - 15**
SL10D // SL11D – target boom lengths 102m to 117m **5.39 - 32**
SL10D // SL11D – target boom lengths 126m, 129m, 138m, 141m, 150m, 153m **5.39 - 33**
SL10DFB/B2 // SL11DB/B2- boom combinations **1.01 - 20**
SL13D, SL14D – target boom lengths 102m to 111m **5.39 - 34**
SL13D, SL14D – target boom lengths 114m to 117m **5.39 - 35**
SL13D, SL14D – target boom lengths 120m to 156m **5.39 - 36**
SL13DFB/B2 // SL14DB/B2-boom combinations **1.01 - 22**
SL2DFB/BW // SL4DFB/BW // SL5DFBW/B-boom combinations **1.01 - 18**
SLD-boom with SW-end section **5.39 - 29**
Slewing gear **1.02 - 3**, **5.35 - 113**, **7.05 - 33**
Slewing range **4.02 - 107**
Slewing range (position 41) **2.05 - 5**
Slewing ring connection **7.05 - 17**
SLF // SL3F // SL8F3-boom combinations **1.01 - 10**
SLF-assembly conditions **5.13 - 9**
SLF-boom combination **5.13 - 1**
Slip-resistant mats **7.01 - 11**
Slopes and excavations **2.04 - 30**
SL-reducer 6.75m **1.03 - 16**
Sound insulation mats **7.01 - 11**
Special case - F-end section is pinned with F-pivot section (12m F-jib) **5.13 - 9**
Special functions **4.02 - 95**
Specified service fluids and lubricants for Liebherr cranes **7.07 - 3**
Spinning out by turning out the hook block **7.05.50 - 15**
Spinning out with single strand reeving **7.05.50 - 15**
S-pivot section 10m **1.03 - 14**
S-pivot section before assembly of winch VI **5.38 - 11**
S-pivot section before installation of both winches **5.38 - 11**, **5.39 - 12**
S-pivot section before installation of winch 5 **5.39 - 12**

LWE/LR 1600-2-001/18101-07-02/en

copyright © Liebherr-Werk Ehingen GmbH 2018

S-pivot section before installation of winch 6 **5.39 - 12**
S-pivot section before installation of winch V **5.38 - 9**
S-pivot section without winches **5.38 - 9**, **5.39 - 11**
Split pin **5.01 - 14**
Spooling op loose hoist rope **5.19 - 3**
Spooling the hoist rope up **5.39 - 62**, **5.42 - 27**
Spooling the winches out **6.05 - 25**
Spooling the winches up **6.05 - 27**
Spooling the winch out **6.05 - 13**, **6.05 - 21**, **6.05 - 35**
Spooling the winch up **6.05 - 13**, **6.05 - 23**, **6.05 - 35**
Spooling up the hoist rope **5.38 - 47**
Spring retainer **5.01 - 17**
Stability and tipping safety for ballast trailer not assembled on the turntable **5.35 - 5**
Standard crane **5.36.10 - 27**, **5.36.10 - 67**
Standing levels at D30m without guide **5.36.10 - 8**
Standing levels at D36m with guide B2 **5.36.10 - 9**
Standing levels of the suspended ballast **5.36.10 - 18**
Standing levels of the suspended ballast, reference placement surface of the crawler **5.36.10 - 15**, **5.36.10 - 17**
Starting / stopping the program **4.02 - 183**
Starting and stopping the engine **4.03 - 25**
Starting LICCON computer system in stand-by mode **4.02 - 209**
Starting operation, follow my instructions **2.04 - 54**
Starting out in strong side wind **4.05 - 29**
Starting the engine **4.03 - 29**
Starting the input window hook block weight **4.02 - 53**
Starting the program **4.02 - 175**, **4.02 - 183**, **4.02 - 197**, **4.02 - 201**
Starting the winch - pulley head assignment screen **4.02 - 39**
Starting to drive **2.04 - 62**
Start prevention **4.02 - 211**
Start the emergency operation aggregate **6.05 - 9**, **6.05 - 19**
Start up and shut down of crane **4.03 - 1**
Stationary stability **2.04.10 - 3**
Steering ability **4.10 - 7**
Steering and corrective steering of the wheel sets **5.35 - 51**
Steering programs **5.35 - 35**
Steering the crane **4.10 - 39**
Steering the tracks to the left **4.10 - 39**
Steering the tracks to the right **4.10 - 39**
Stepladder **2.04.10 - 26**
Steps during crane operation **2.06 - 7**
Steps during crane standstill **2.06 - 7**
Steps on the crane chassis **2.06 - 7**
Stop (normal stop) **2.04 - 54**
Stopping the mobile crane **2.04 - 63**
Stopping the program **4.02 - 183**
Stopping the pull cylinder on the derrick ballast **5.35 - 31**, **5.36.10 - 43**
Stopping the slewing movement in strong side wind **4.05 - 29**
Suitable distribution of surface pressure **4.10 - 7**
Supplied cross beam **2.04.10 - 14**
Supplied fall arrest system **2.04 - 8**
Support **2.04 - 37**
Support force display **4.02 - 109**
Support force monitoring * **4.02 - 189**
Supporting the ballast trailer **5.35 - 93**
Supporting the crane **2.04 - 38**, **2.08 - 5**
Supporting the crane with variable support **2.04 - 38**
Supporting the crawler center section **3.01 - 5**, **3.01 - 49**
Supporting the SL11-boom from a length of more than 123m **5.39 - 41**
Supporting the SL13-boom from a length of more than 117m **5.39 - 41**
Supporting the SL14-boom from a length of more than 117m **5.39 - 42**
Supporting the SL2/SL4 boom from a length of more than 120m **5.39 - 40**
Supporting the SL-boom from a length of more than 114m **5.39 - 39**
Support plates **2.04 - 37**
Support the SL10-boom from a length of more than 123m **5.39 - 40**
Surface pressures and force distribution when driving the crane **4.10 - 23**
Surface pressures in case of wind load on boom **4.10 - 23**
Suspended ballast guide * **5.36.10 - 3**, **5.36.10 - 4**
Suspended ballast guide B2, end section **1.03 - 26**
Suspended ballast guide B2, intermediate section **1.03 - 26**
Suspended ballast guide B2, pivot section **1.03 - 25**
Suspended ballast pallet **5.36.10 - 4**, **5.36.10 - 6**
SW // SWF-boom combinations **1.01 - 14**
SW/SDW boom combination **5.07 - 1**
SW-end section **1.03 - 16**
SW-end section and roller set components **5.14 - 3**
SW-end section fastening points **5.39 - 6**
SWF-boom combination **5.17 - 1**
Swing guard rails on the S-pivot section into operating position **5.38 - 7**
Swinging the folding brackets into operating position **5.05 - 25**
Swinging the railing on the S-pivot section into the operating position **5.39 - 11**
Switch for crawler operation **4.10 - 27**
Switching back to the crane operation program **4.02 - 181**
Switching the slewing gear to freewheeling **4.05 - 31**
Symbols from 2018 **2.04.10 - 9**
Symbols until the end of 2017 **2.04.10 - 4**

T

Take down procedure **5.02 - 11**
Taking an oil sample **7.01 - 8**
Taking care of the crane **7.01 - 8**
Taking down the erection racks **5.36.10 - 65**

LWE/LR 1600-2-001/18101-07-02/en

copyright © Liebherr-Werk Ehingen GmbH 2018

Taking down the W-lattice jib **5.07 - 39**, **5.07 - 43**
Taking on a load **4.08 - 7**
Taking on a load with cross beam **4.08 - 9**
Taking over the previously selected set up configuration and hoist rope reeving **4.03 - 35**
Taking over the settings into the crane operating screen **4.02 - 51**
Taking the lattice jib down into the roller cart **5.01 - 29**
Taking the S-boom down **5.39 - 61**
Taking the SLF-boom down **5.13 - 37**, **5.13 - 41**
Taking the SWF-booms down **5.17 - 25**, **5.17 - 29**
Technical data **1.03 - 1**
Technical safety instructions **2.04 - 1**, **7.01 - 3**
Technical safety instructions for assembly and disassembly **5.01 - 1**
Telescopic boom **4.08 - 15**
Telescopic boom distortion because of sunshine on one side **4.08 - 4**
Telescoping the ballast trailer guide in **5.35 - 33**
Telescoping the ballast trailer guide out **5.35 - 33**
Temperature operating limits **7.05.50 - 5**
Tensioning **7.04 - 13**
Tensioning procedure **7.04 - 13**
Tensioning the crawler chain **7.04 - 13**
Terminology **1.01 - 1**
Terms and abbreviations **2.04 - 72**
Test brackets (KMD = force test box) **4.04 - 15**
Testing cylinder pressure with „jib stop in test position“ **8.14 - 3**
Test point 1 = F1 **4.02 - 131**
Test point 1 = F1 / icon description **4.02 - 135**
Test point 2 = F2 and test point 3 = F3 **4.02 - 141**
The Control parameter program **4.02 - 175**
The Crane operation program on monitor 0 **4.02 - 59**
The Crane operation program on monitor 1 **4.02 - 131**
The engine does not start? **7.15 - 7**
The Engine monitoring program **4.02 - 201**
The function key line in the Crane operation program **4.02 - 121**
Theoretical service life **8.03 - 5**
The set up program **4.02 - 15**
The Support program **4.02 - 183**
The winch - pulley head assignment screen **4.02 - 39**
The Working range limitation program * **4.02 - 197**
Third inspection (third year) **8.03 - 10**
Tilting the cab upward **4.03 - 19**
Tilting the crane cab **4.03 - 19**
Tilt play of roller ring connection **7.05 - 17**
Tires foamed with special foam **2.15 - 6**
Tire size **7.01 - 7**
Tires with air inflation **2.15 - 5**
Towing **5.35 - 41**, **5.35 - 107**
Traffic endangerment and environmental damage **2.04 - 5**
Transfer (between two cranes or two hooks) **2.04 - 59**
Transport **2.04 - 22**
Transporting the hook block **4.08 - 9**
Transport unit **5.36.10 - 5**
Transport weights of components (position 36) **2.05 - 11**
Transport weights of components (position 39) **2.05 - 12**
Travel brake **7.04 - 7**
Travel gear **7.04 - 3**
Travel gears / hydraulic motors / track rollers **4.10 - 5**
Travel operation **2.04 - 62**
Travel power **1.02 - 2**
Travel route **4.10 - 4**
Troubleshooting on the central lubrication system **7.04 - 11**, **7.05 - 27**
Turning / driving in reverse **2.04 - 63**
Turning an extremely rotation-resistant hoist rope out **7.05.50 - 15**
Turning the assembly key button on **5.05 - 9**
Turning the auxiliary heater off **6.02 - 18**
Turning the crane superstructure **4.05 - 31**
Turning the engine off **4.03 - 33**, **4.03 - 33**
Turning the engine off in the event of danger **4.03 - 33**
Turning the heater and climate control system on **4.03 - 19**
Turning the heater on **6.02 - 11**
Turning the hydraulic oil preheating on **2.08 - 4**
Turning the main current circuit off **4.03 - 5**
Turning the power supply of the main current circuit on / off **4.03 - 5**
Turning the rapid gear on **4.10 - 29**
Turning the turntable into assembly position **5.05 - 9**, **5.38 - 13**
Turning the turntable into the assembly position **5.39 - 13**
Turning the turntable to the left **6.05 - 15**, **6.05 - 29**
Turning the turntable to the right **6.05 - 17**, **6.05 - 31**
Turning the „Power Plus“ off **4.05 - 9**
Turntable assembly **3.02 - 1**
Turntable frame **1.02 - 2**
Turntable with a Quick Connection with SA-frame **1.03 - 11**
Turntable with crawler center section without SA-frame without Quick Connection **1.03 - 10**
Turntable with crawler center section without SA-frame with Quick Connection **1.03 - 9**
Turntable with crawler center section with SA-frame without Quick Connection **1.03 - 9**
Turntable with crawler center section with SA-frame with Quick Connection **1.03 - 8**
Turntable with Quick Connection * **3.02 - 3**
Turntable with Quick connection without SA-frame **1.03 - 11**
Two strand height safety equipment **2.04 - 11**
Types of ladders **2.04.10 - 26**

U

Undefined ballast trailer operation **5.35 - 65**

LWE/LR 1600-2-001/18101-07-02/en

copyright © Liebherr-Werk Ehingen GmbH 2018

Unpinning procedure **5.35 - 95**
Unpinning the ballast trailer on the adapter **5.35 - 95**
Unpinning the guy rods **5.35 - 91**
Unpinning the lattice components **5.01 - 59**
Unpinning the relapse supports **5.07 - 47**, **5.08 - 27**
Unpinning the retaining pin **5.36.10 - 38**
Unpinning the S-pivot section on the turntable **5.39 - 73**
Unpinning the suspended ballast guide on the turntable **5.36.10 - 71**
Unpinning the suspended ballast pallet on the D-guy rods **5.36.10 - 63**
Unpinning the suspended ballast pallet on the suspended ballast guide * **5.36.10 - 62**
Unpinning winch 1 on the turntable **3.07 - 17**
Unpin the SA-frame on the turntable **3.05 - 19**
Unpin the S-pivot section **5.38 - 53**
Unreeving the hook block **5.38 - 47**, **5.42 - 27**
Unreeving the W-control ropes **5.08 - 27**
Unscheduled inspection **8.04 - 3**
Update confirmation **90.05 - 1**, **90.05 - 3**
Update to the operating instructions **90.01 - 3**
Used proportion of the theoretical service life **8.03 - 5**
User guidelines **2.04.10 - 12**
User interface **4.02 - 41**, **4.02 - 53**, **4.02 - 177**, **4.02 - 197**
Using a hinged ladder as a leaning ladder **2.04.10 - 19**
Using a hinged ladder as a stepladder **2.04.10 - 20**
Using suitable operating fluids **7.01 - 6**
Utilization conditions **5.35 - 81**, **5.36.10 - 52**

V

Vertical ladder with transition aid **2.04.10 - 30**
Vertical movements **2.04 - 56**
Vibrations **1.03 - 6**
Vibration sensor **4.05 - 11**
Vibration sensor winch 1 **4.05 - 11**
Vibration sensor winch 2 or slewing gear **4.05 - 11**
Visual check for damage **4.08 - 4**
Visual inspection for leaks **8.03 - 4**
Visual inspections **4.03 - 7**

W

WA-frame 1 and WA-frame 2, end sections (transport unit 2) **1.03 - 22**
WA-frame 2, pivot section (transport unit 3) **1.03 - 22**
Waiting for the boot up phase **4.03 - 35**
Walking on lattice sections or booms **2.04 - 15**
Walking on the telescopic boom **2.04 - 15**
Warning apparel **2.04 - 13**
Warning of crushing danger (position 14) **2.05 - 3**
Warning of fatal electric shock (position 33) **2.05 - 4**
Warning of high voltage (position 40) **2.05 - 5**
Warning of rotating parts (position 31) **2.05 - 4**
Warning of suspended load (position 11) **2.05 - 3**
Warning signs **2.05 - 3**
Warranted maximum sound output level (position 80) **2.05 - 13**
Warranty and coverage **7.01 - 7**
Washing the crane **7.01 - 8**
W-connector head **1.03 - 23**
W-connector head components **5.14 - 3**
Wear **8.15 - 4**
Weights **5.01 - 7**
Welding work on the load **2.04 - 74**
Which data is required by Liebherr Service? **7.15 - 5**
While working with the crane **2.04 - 64**
Winch **7.05 - 29**
Winch 1 **1.02 - 4**, **1.03 - 12**
Winch 2 **1.02 - 4**, **1.03 - 13**
Winch 3 **1.02 - 4**
Winch 4 **1.02 - 4**
Winch 5 **1.02 - 4**
Winch 6 **1.02 - 4**
Winch and master switch assignment to operating modes **4.05 - 3**
Winch component overview **1.01 - 6**
Winch display **4.02 - 115**, **4.02 - 157**
Winch displays **4.02 - 155**
Winches **1.02 - 4**, **4.02 - 179**
Winches 3 to 6 **4.02 - 155**
Wind influences **2.04 - 45**
Wind influences during crane operation **2.04 - 50**
Wind influences during erection and takedown **2.04 - 49**
Wind influences for „Crane out of operation“ **2.04 - 51**
Wind speed **4.02 - 103**
Wind speed, wind gust speed and wind direction **2.04 - 46**
Wind speed charts for a variable support **2.04 - 46**
Wind warning device **4.04 - 7**
Winter operation **2.08 - 3**
Wire break increase rate **8.04 - 10**
Wire ropes and rope end connections **8.04 - 5**
W-lattice jib **8.12 - 7**
W-lattice jib „bottom“ **8.12 - 9**
Working in low temperatures **2.08 - 1**
Working in the vicinity of electricity transmission lines **4.08 - 14**
Working in the vicinity of transmitters **2.04 - 43**
Working on lattice sections or booms **2.04 - 15**
Working on the crane superstructure or boom **2.04 - 25**
Working on the telescopic boom head and / or auxiliary boom **2.04 - 14**
Working with a high rope pull **4.08 - 15**
Working with a load **4.08 - 1**
Work station - Crane operator's cab **4.03 - 15**
W-pivot section 10.75m with pivot section WA-frame 1 (transport unit 1) **1.03 - 22**
WV-lattice jib **5.08 - 1**

LWE/LR 1600-2-001/18101-07-02/en

copyright © Liebherr-Werk Ehingen GmbH 2018

”
„Closing“ the D-boom **5.05 - 17**
„Open“ the D-boom and place it down **5.05 - 43**
„Power Plus“ **4.05 - 9**

LWE/LR 1600-2-001/18101-07-02/en

copyright © Liebherr-Werk Ehingen GmbH 2018