LIEBHERR

Mobile crane with lattice mast

LG 1750

LG 1750-006

Operating instructions

BAL-No.: 15409-01-02

Pages: 2059

Works-Number	
Date	

ORIGINAL OPERATING MANUAL

The operating manual is part of the crane!

It must always be available within reach!

The traffic regulations and those for crane operation must be observed!

Liebherr-Werk Ehingen GmbH
Postfach 1361
D-89582 Ehingen / Donau
✆: +49 (0) 7391 502–0
Fax: +49 (0) 7391 502–3399
✉: info.lwe@liebherr.com
www.liebherr.com

Foreword

General

This crane was built according to the state of technology and recognized safety technical regulations. Despite that, dangers to body and life for the user and / or third persons or damage to the crane and / or other material assets can occur.
This crane may only be used:

– in impeccable technical condition.
– for destined use.
– by trained personnel, which acts in a safety and danger conscious way.
– when no safety relevant problems are present.
– when no modifications were made on the crane.

Any problems, which could affect safety must be fixed immediately.
Modifications on the crane may only be made with written approval by Liebherr-Werk Ehingen GmbH.

Data recording device

This crane is equipped with a data recording device. Among others, the following data is recorded:

– Date and time of day
– Entered configuration of the crane
– Actual load
– Percentage of utilization of the crane
– Working radius
– Main boom angle, luffing jib angle
– Total telescopic boom length, length of each telescopic section
– Every actuation of bypass devices

The recorded data can be read with a respective software.

Safety and warning notes

Safety and warning notes are directed to all persons who work with the crane.
The terms **DANGER**, **WARNING**, **CAUTION** and **NOTICE** used in the crane documentation are intended to point out certain rules of conduct to all persons working with the crane.

Warning signs	Signal word	Explanation
	DANGER	Designates a dangerous situation which will lead to death or serious injury if it is not prevented [1)] .
	WARNING	Designates a dangerous situation which could lead to death or serious injury if it is not prevented [1)] .
	CAUTION	Designates a dangerous situation which could lead to slight or medium injury if it is not prevented [1)] .
	NOTICE	Designates a dangerous situation, which can lead to property damage if it is not prevented.

1) This could also result in property damage.

Additional notes

The term **Note** is used in these operating instructions to indicate useful information and tips to all persons working with the crane.

Sign	Signal word	Explanation
	Note	Designates useful information and tips.

Crane documentation

The crane documentation is comprised of:
- all supplied documents on paper and in digital form.
- all supplied programs and applications.
- all subsequently supplied information, updates and addenda for the crane documentation.

The crane documentation:
- makes it possible for you to operate the crane safely.
- supports you to utilize the permissible application possibilities of the crane.
- provides you with information about the functionality of important components and systems.

Note
Terminology in the crane documentation.
Certain expressions are used in the crane documentation.
▶ In order to avoid misunderstandings, the same expressions should always be used.

Translations from the German version of the crane documentation: The crane documentation has been translated to be best of one's knowledge. Liebherr-Werk Ehingen GmbH assumes no liability for translation errors. The German version of the crane documentation is solely applicable for factual accuracy. If you find any errors or if any misunderstandings arise when reading the crane documentation, please contact Liebherr-Werk Ehingen GmbH immediately.

WARNING
Danger of accident due to incorrect operation of the crane!
Incorrect operation of the crane can lead to accidents!
Personnel can be killed or seriously injured!
This could result in property damage!
- ▶ Only authorized and trained expert personnel are permitted to work on the crane.
- ▶ The crane documentation is part of the crane and must be accessible on the crane.
- ▶ The crane documentation and on-site regulations and specifications (such as accident prevention regulations) must be observed.

Using the crane documentation:
- – **makes it easier** to become familiar with the crane.
- – **avoids** problems due to improper operation.

Observing the crane documentation:
- – **increases** reliability in use.
- – **extends** the service life of the crane.
- – **minimizes** repair costs and downtime.

Place the crane documentation accessible in the driver's cab or in the crane cab.

WARNING
Outdated version of crane documentation!
If subsequently supplied information, updates and addenda to the crane documentation are not observed and added, there is a danger of accidents!
Personnel can be killed or seriously injured!
This could result in property damage!
- ▶ Observe and add all subsequently supplied information, updates and addenda for the crane documentation.
- ▶ Make sure that all affected persons always know and understand the latest version of the crane documentation.

WARNING
Crane documentation is not understood!
If parts of the crane documentation are not understood and the tasks are carried out on or with the crane, then there is a danger of accidents!
Personnel can be killed or seriously injured!
This could result in property damage!
- ▶ In case of questions regarding the crane documentation, before carrying out the respective task, contact Liebherr Service.

This documentation may not be reproduced or duplicated, distributed or used for purposes of competition, neither in part nor in excerpts. All rights are expressly reserved in accordance with copyright laws.
All accident prevention guidelines, operating instructions, etc. are based on destined use of the crane.

blank page!

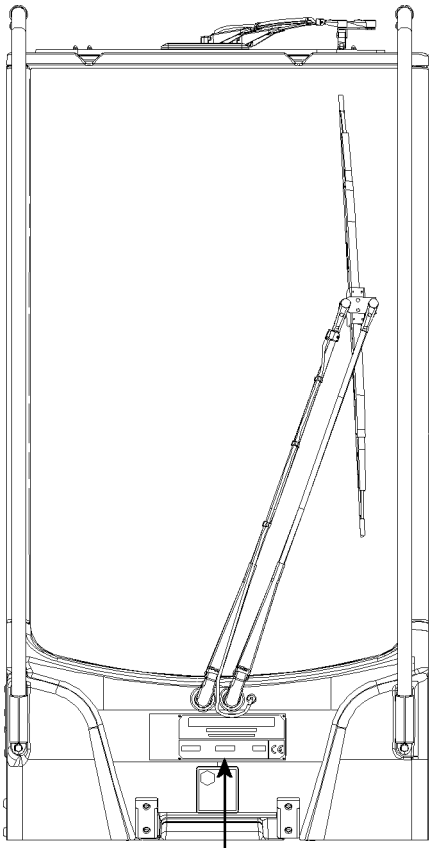

1

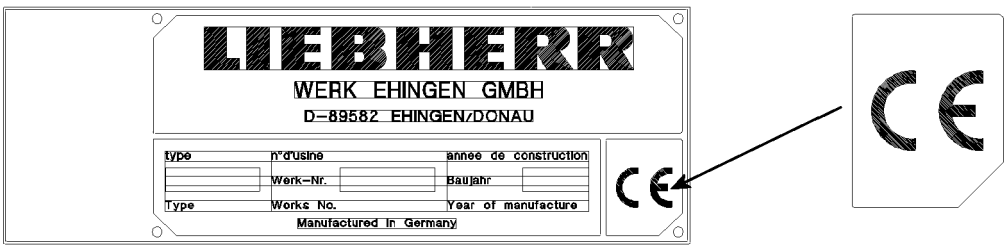
LIEBHERR
WERK EHINGEN GMBH
D-89582 EHINGEN/DONAU
type
n°d'usine
annee de construction
Werk-Nr.
Baujahr
Type
Works No.
Year of manufacture
Manufactured in Germany
CE

2

LIEBHERR
WERK EHINGEN GMBH
D-89582 EHINGEN/DONAU
type
n°d'usine
annee de construction
Werk-Nr.
Baujahr
Type
Works No.
Year of manufacture
Manufactured in Germany

B110001

CE marking

The CE marking is a mark according to EU laws:

– Cranes with CE-marking according to the European machinery directive 2006/42/EC and the EN 13000! Data tag Crane with CE-marking, see illustration **1**.
– Cranes which are operated outside the respective area of application do not require a CE marking. Data tag Crane without CE marking, see illustration **2**.
– It is prohibited to market and operate cranes without CE marking, which do not meet the product-specific regulations valid in Europe, when a CE marking is specified for the country.
– It is prohibited to operate cranes with a tipping load utilization of 85 % which are programmed according to ASME B30.5 within the European Union or in countries which permit a lower stationary stability utilization (for example ISO 4305)! The national regulations apply. These cranes may not have a CE marking!

Destined use

The destined use of the crane consists solely in vertical lifting and lowering of free and non-adhered loads, whose weight and center of gravity are known.
To do so, a hook or hook block approved by Liebherr must be reeved on the hoist rope and it may only be operated within the permissible crane configurations.
Driving with the crane, with or without an attached load is only permissible if a corresponding driving or load chart is available. The set up configurations intended for it and the safety conditions must be observed according to the corresponding crane documentation.
Any other use or any other exceeding utilization is **not** destined use.
Destined use also includes the adherence of the required safety guidelines, conditions, prerequisites, set up conditions and working steps in the crane documentation (for example: Operating instructions, load charts, erection and take down charts, job planner).
The manufacturer is **not** liable for damages, which are caused by non-destined use or improper use of the crane. Any associated risk it is carried solely by the owner, the operator and the user of the crane.

Non-destined use

Non -destined use is:

– Working outside the permissible set up configurations according to the load chart.
– Working outside the permissible boom radii and slewing ranges according to the load chart.
– Selecting load values, which do not correspond to the actual set up configuration.
– Selection of a set up configuration via code or via manual entry, which does not correspond to the actual set up configuration.
– Working with bypassed / deactivated safety devices, for example bypassed load moment limitation or with bypassed hoist limit switch.
– Increasing the radius of the lifted load after a LMB shut off, for example by diagonally pulling the load.
– Using the support pressure display as a safety function against tipping over.
– Use of equipment parts which are not approved for the crane.
– Using the crane at sports and recreational events, especially for "Bungee" jumps and / or "Dinner in the sky".
– Driving on a public road in non-permissible driving condition (axle load, dimension).
– Driving with the equipment in place in a non-permissible driving condition.
– Pushing, pulling or lifting loads with the leveling regulation, the sliding beams or the support cylinders.
– Pushing, pulling or lifting loads by actuating the slewing gear, the luffing gear or the telescoping gear.
– Ripping stuck objects loose with the crane.
– Utilizing the crane for a longer period of time for material handling tasks.
– Releasing the crane suddenly (grapple or dumping operation).
– Utilizing the crane when the weight of the load, which is suspended on the crane is changed, for example by filling a container suspended on the load hook, except:
  • The load moment limiter was checked before for function with a known load.
  • The crane cab is occupied.
  • The crane is operational.
  • The container size is selected in such a way that an overload of the crane with full load is eliminated within the valid used load chart.

The crane may **not** be used for:

– Attaching a stuck load for which the weight and center of gravity are not known and which is released first, for example with a cutting torch.
– Letting persons drive along outside the driver's cab.
– Transporting personnel in the crane cab while driving.
– Transporting personnel with the lifting equipment and on the load.
– Transporting of persons with work baskets (cherry pickers), if the national regulations of the responsible work safety organization are not observed.
– Transporting loads on the chassis.
– Two hook operation without auxiliary equipment.
– Extended material handling operation.
– Crane operation on a barge if the conditions are not determined and the written release by **Liebherr Werk Ehingen GmbH** is not present.

The crane documentation must be read and used by all persons who are involved in use, operation, assembly and maintenance of the crane.

Safety equipment

Special attention must be paid to the safety equipment built into the crane. The safety equipment must constantly be checked for functionality. The crane may not be operated if the safety equipment is not working or not working correctly.

Note
Your motto must always be:
▶ **Safety first!**

The crane has been built in accordance with the applicable crane operation and driving regulations and has been approved by the relevant authorities.

Equipment and spare parts

WARNING
Danger to life if original equipment parts are **not** used!
If the crane is operated with equipment parts, which are **not** original, then the crane can fail and cause fatal accidents!
Crane components can be damaged!
▶ Operate the crane only with original equipment parts!
▶ Crane operation with equipment parts, which do **not** belong to the crane is prohibited!
▶ If there is any doubt about the origin of equipment parts, contact Liebherr Service!

WARNING
The crane permit and the manufacturer's warranty will become void!
If any original installed parts are modified, manipulated or replaced (e.g. removal of parts, installation of non-original Liebherr parts), both the crane permit and the manufacturer's warranty will become void.
▶ Leave installed original parts unchanged!
▶ Do not remove installed original parts!
▶ Use only original Liebherr spare parts!
▶ If there is any doubt about the origin of spare parts, contact Liebherr Service!

For ordering equipment and spare parts, always keep the crane number handy and provide it.

Definition of directional data for mobile cranes

Driving forwards: Driving with the driver's cab on the front.
Driving in reverse: Driving with the taillights of the crane chassis on the front.
Front, **rear**, **right**, **left** in the **driver's cab** refer to the crane chassis. The driver's cab is always in the front.
Front, **rear**, **right**, **left** in the **crane operator's cab** refer to the superstructure. Front is always in direction of the placed down boom.

Definition of directional data for crawler cranes

Driving forwards: Driving forward from the view of the crane operator seated in the crane cab. Turntable in 0° or 180° position.
Driving in reverse: Driving backward from the view of the crane operator seated in the crane cab. Turntable in 0° or 180° position.
Front, **rear**, **right**, **left** always orient themselves on the **crawler track** from the position of the chain tension devices. The chain tension devices on the crawler track are always on the front.
Front, **rear**, **right**, **left** refer to the direction of view of the crane operator seated in the **crane cab**. Front is always in direction of the placed down boom.

Optional equipment and functions

The equipment marked with * and the functions are optionally available and are **not** part of the standard crane (optional equipment).

Conversion chart

Note
▶ If the crane is used in countries where US-units are customary, you can use the conversion factors in this chart for conversion of metric measuring units into US-units!

	Unit of Measure	Multiply by	To optain
Length	millimeter (mm)	0.03937	inch (in)
	millimeter (mm)	0.00328084	foot (ft)
	meter (m)	39.37	inch (in)
	meter (m)	3.28084	foot (ft)
	meter (m)	1.09361	yard (yd)
	kilometer (km)	0.62137	mile (mi)
Area	square centimeter (cm^2)	0.155	square inch (in^2)
	square meter (m^2)	10.7639	square foot (ft^2)
	square meter (m^2)	1.196	square yard (yd^2)
	square kilometer (km^2)	0.3861	square mile (mi^2)
Volume	cubic centimeter (cm^3)	0.06102	cubic inch (in^3)
	cubic meter (m^3)	35.3147	cubic foot (ft^3)
	cubic meter (m^3)	1.308	cubic yard (yd^3)
	liter (L)	61.024	cubic inch (in^3)
	liter (L)	0.035	cubic foot (ft^3)
	liter (L)	0.264	gallon (U.S.) (gal)
Weight	gram (g)	0.03527	ounce (oz)
	kilogram (kg)	2.20462	pound (lb)
	metric ton (t)	2204.62262	pound (lb)
	metric ton (t)	1.102	short tons (U.S.)
Mass divided by length	kilogram per meter (kg/m)	0.055998	pound per inch (lb/in)
	kilogram per meter (kg/m)	0.67197	pound per foot (lb/ft)
Force	newton (N)	0.2248	pound-force (lbf)
	kilonewton (kN)	224.809	pound-force (lbf)
	kilonewton (kN)	0.2248	kip (1 kip = 1000 lbf)
Torque	newton meter (N·m)	8.85075	pound-force inch (lbf·in)
	newton meter (N·m)	0.73756	pound-force foot (lbf·in)
Power	horsepower (metric)	0.73549	kilowatt (kW)
	horsepower (metric)	0.98632	horsepower (U.K.)
	kilowatt (kW)	1.34102	horsepower (U.K.)
Pressure	kilopascal (kPa)	0.01	bar (bar)
	kilopascal (kPa)	0.1450377	pound-force per square inch (psi)
	bar (bar)	14.50377	pound-force per square inch (psi)
	newton per square centimeter (N/cm^2)	1.450377	pound-force per square inch (psi)
	newton per square meter (N/m^2)	0.0001450377	pound-force per square inch (psi)
Speed	meter per second (m/s)	39.37	inch per second (in/s)
	meter per second (m/s)	3.28084	foot per second (ft/s)
	kilometer per hour (km/h)	0.62137	mile per hour (mi/h)

	Unit of Measure	Multiply by	To optain
	liter per minute (l/min)	0.26417	gallon per minute (gal/min)
Temperature	degree Celsius (°C)	([°C] · 1.8) + 32	degree Fahrenheit (°F)
	kelvin (K)	([K] · 1.8) - 459.67	degree Fahrenheit (°F)

Conversion chart version 1

Contents

1 Description of crane 27

1.01 Terminology 28

1 Crane components 29

1.02 Product description 39

1 Crane chassis 41

2 Crane superstructure 42

3 Boom systems 44

4 Auxiliary equipment 44

1.03 Technical data 46

1 Dimensions and weights crane chassis 47

2 Dimensions and weights Crane superstructure 51

3 Dimensions and weights equipment 57

4 Lifting equipment 77

5 Ground pressure 77

6 Workplace-related emission values 77

7 Vibrations 78

8 Speeds 78

9 Ropes 79

2 Safety 81

2.01 Traffic regulations 82

1 Traffic regulations 83

2.01.10 General traffic regulations 85

1 General traffic regulations 87

2.01.20 National traffic regulations 89

1 National traffic regulations 91

2.02 Break-in instructions 92

1 Break-in instructions 93

2.03 Job planning 94

1 Planning crane operation 95

2.04 General safety technical guidelines 96

1 General 97

2 Emergency exit 105

3 Checking the rigging and fastening points 109

4 Personal protective equipment 111

5 Use of single-stranded height safety equipment, illustration 1 117

6 Use of double-stranded height safety equipment, illustration 2 117

7 Securing the assembly personnel against falling 117

8 Rescuing the assembly personnel 119

9 Documentation 119

10 Identification 119

11 Requirements for the crane operator 119

12 Selecting the location, illustrations 1 to 3 125

13 Slopes and excavations, illustrations 4 and 5 128

14 Permissible ground pressures 128

15 Supporting 133

16 Checking the safety measures 134

17 Endangering air traffic 134

18 Grounding 134

19 Consideration of wind conditions 135

20 Working in the vicinity of transmitters 145

21 Dangers when working together with several cranes 147

22 Hand signals for guidance 148

23 Crane operation with a load 156

24 Lifting of personnel 159

25 Crane operation in case of thunderstorms 160

26 Safety notes for external power feed (100 V AC to 400 V AC) 160

27 Welding work on the load 161

28 Interruption of crane operation. 162

29 Resumption of crane operation 163

30 Ending crane operation 163

31 Turning / driving in reverse 164

32 Parking the vehicle 164

33 Safety guidelines for ladders 167

2.05 Signs on the crane 174

1 Signs 175

2.06 Antifall guards on the crane 198

1 Personal protective equipment 199

2 Fall protection equipment on the crane chassis 201

3 Fall protection equipment on the turntable 221

4 Fall protection equipment on the boom pivot sections and lattice sections 233

5 Fall protection equipment on suspended ballast guide frames 245

2.07 Access to the crane 246

1 Ascent and descent on the chassis 247

2 Walking and stepping surfaces 257

2.20 Wind influences for crane operation 260

1 Wind influences for crane operation 261

3 Crane chassis operation 273

3.01 Operating and control instruments on the crane chassis 274

1 General control elements 277

2 Control elements DTCO trip recorder* 281

3 Operating elements camera monitoring* 283

4 Keyboard 285

5 Display unit 289

6 Support control unit 297

7 Remote control panel 301

8 Grounding the mobile crane 303

3.02 Before starting to travel 304

1 General checks before starting to drive 305

2 Work station - Driver's cab 313

3.03 Axle suspension system 322

1 Crane vehicle axles suspended 323

2 Crane vehicle axles blocked 323

3 Level regulation 325

3.04 Travel operation 330

1 Driving conditions of the crane 331

2 Starting and stopping the engine 335

3 Driving the crane vehicle 345
4 Differential locks 383
5 Steering 389
6 Towing 399
3.05 Crane at the job site 400
1 General 401
2 Crane support 405
3 Support control unit 419
4 The “Support” program 433
5 Before leaving the jobsite 441
3.06 Assembly conditions 442
1 Assembly conditions 443
3.07 Assembly hoist winches 446
1 Component overview 447
2 Dimensions and weights 447
3 Assembling winch 1 449
4 Removing winch 1 457
5 Assembly and disassembly of winch 1 461
3.08 Turntable assembly 462
1 Transport weights and fastening points on the turntable 463
2 Installing the turntable 467
3 Removing the turntable 477
3.10 Assembly of SA frame 482
1 Component overview SA-frame 483
2 Attachment points SA-frame 483
3 Assembling SA-frame 485
4 Disassembling SA-frame 493
3.80 Transport of crane and crane components 502
1 Transporting the crane 503

4 Operation of crane superstructure 511
4.01 Operating and control instruments on the crane superstructure 512
1 Operating and control instruments 513
2 Equipment in the cab 513

3 Operating units in the cab 515
4 Operating elements switch cabinet 549
4.02 LICCON computer system 550
1 General 551
2 LICCON computer system boot up 555
3 Operating elements of the LICCON computer system on monitor 0 559
4 The set up program 563
5 The Crane operation program on monitor 0 593
6 Operating elements of the LICCON computer system on monitor 1 663
7 The Crane operation program on monitor 1 665
8 The Support program 703
9 The Working range limitation program* 717
10 The Control parameter program 721
11 The Engine monitoring program 729
4.03 Crane start up and taking the crane out of service 736
1 Checks before start up 737
2 Moving the crane operator's cab 743
3 Operating the access ladder 745
4 Work station - Crane operator's cab 751
5 Starting and stopping the engine 759
6 LICCON computer system after engine start 769
7 Adjusting the winches 773
8 Load weighing and load display 777
4.04 Safety equipment 782
1 General 783
2 Quick test Crane geometry 783
3 Quick test Overload protection 783
4 LICCON computer system 784
5 Safety devices on the crane 789
4.05 Crane operation 802
1 LICCON computer system 803
2 Winch and master switch assignment to operating modes 803
3 Carrying out crane movements 805
4.06 Rope reeving 834

1 Wire ropes and rope end connections 835
2 Reeving the hook block in and out 837
3 Securing and removing the load hook* 845
4 Attaching / removing the hoist limit switch weight 849
5 Assembling / disassembling the wedge lock 853
6 Rope reeving 853
4.07 Counterweight 854
1 Components 855
2 Counterweight combinations 857
3 Permissible counterweight assemblies 865
4 Installing the counterweight 867
5 Removing the counterweight 881
4.08 Working with a load 894
1 Safety technical instructions for working with a load 895
2 Checks before starting to work with the crane 896
3 Crane movement - Telescoping 897
4 Taking on a load 899
5 Crane operation 905
4.12 Two hook operation 907
1 General 909
4.15 Reeving plans 914
1 Reeving plans 915
4.20 Procedure for shut off of crane movements 916
1 General 917
2 Instructions for resuming crane movements for cranes with CE mark 921
3 Instructions for resuming crane movements for cranes without CE mark 969

5 Equipment 1017

5.01 Safety technical notes for assembly and disassembly 1018
1 Checking the retaining elements 1019
2 Rope pulleys 1019
3 Checking the ropes 1019
4 Control measures 1020
5 Dangerous conditions without shut off 1022

6 Transporting components 1023

7 Pneumatic springs for assembly support of components 1023

8 Manual rope winches for assembly support of components 1023

9 Weights 1024

10 Guy rods 1024

11 Auxiliary guying 1025

12 Bypassing the overload protection 1025

13 Bypassing the hoist top shut off 1027

14 Assembly / disassembly 1029

15 Erection / take down 1060

5.02 SA-frame 1062

1 SA-frame 1063

5.03 Boom systems 1068

1 Boom components 1069

2 Arrangement of intermediate sections on the boom 1069

3 Auxiliary guying 1073

5.05 D-boom 1076

1 Components and fastening points 1077

2 Assembly 1079

3 Disassembly 1107

5.07 SW/SDW boom combination 1120

1 Component overview W-boom system 1121

2 Weights W-transport units 1121

3 Fastening points components W-system 1121

4 Assembling the W-boom system 1123

5 Operating the crane 1159

6 Disassembling the W-boom system 1161

7 W-lattice jib in operating mode S6D2WB (only for LG 1750) 1183

5.08 WV-lattice jib 1184

1 WV-lattice jib 1185

2 Assembling the WV-boom system 1189

3 Operating the crane 1201

4 Disassembling the WV-boom system 1203

5 WV-lattice jib in operating mode S6D2WVB (only for LG 1750) 1213

5.10 Boom nose lattice boom 1214

1 Installing the boom nose 60 t on the boom 1215

2 Boom nose 60 t on S-end section 1219

3 Boom nose 60 t on the L- / W-end section 1221

4 Boom nose 60 t on the SW-adapter 1223

5 Lifting the boom off the ground 1225

6 Establishing the electrical connections 1225

7 Checking the function of the safety devices 1226

8 Erecting the boom 1229

9 Operating the crane 1235

10 Disassembling the 60 t boom nose 1237

5.13 SLF-Boom combination 1246

1 Component overview 1247

2 Assembling the F-jib 1249

3 Operating the crane 1271

4 Disassembling the F-jib 1273

5.17 Sliding beam disassembly / assembly 1286

1 General 1287

2 Remote control panel 1289

3 Removal of support beams 1293

4 Installation of support beams 1299

5.19 Hook blocks 1304

1 Minimum required hook block weight 1305

2 Procedure in case of slack rope 1308

3 Hook block overview 1311

4 Installing a double hook block for single operation 1313

5 Installing a double hook block for parallel operation 1323

6 Single hook blocks 1335

5.30 Pin pulling device 1342

1 Pin pulling device 1343

5.36 Derrick ballast - Suspended ballast 1346

1 Description and component overview 1347

2 Permissible ballast assemblies 1349

3 Assembly 1351

4 Crane operation with derrick ballast 1391
5 Disassembly 1409
5.38 S/SL-boom 1428
1 Component overview S-/SL-boom 1429
2 Fastening points S-/SL-components 1429
3 Assembling the S/SL boom 1431
4 Operating the crane 1475
5 Disassembling the S/SL boom 1477
5.39 LD/SLD/SD-boom combination 1494
1 Component overview S-pivot section 1495
2 Fastening points 1495
3 Assembling the SLD/SD-boom 1497
4 Operating the crane 1571
5 Disassembling the SLD/SD-boom 1573
5.42 HS auxiliary jib 1586
1 Auxiliary jib “HS” 1587
2 Assembly 1591
3 Erecting the boom 1599
4 Operating the crane 1601
5 Disassembly 1607
5.43 SLK boom 1612
1 Components 1613
2 Assembly 1619
3 Crane operation 1641
4 Disassembly 1643
5.61 Pulley cart 1656
1 Components of pulley cart 1657
2 Installing / removing the roller cart from W-boom head 1659
3 Installing / removing the pulley cart on the adapter for the auxiliary jib 1661

6 Additional equipment 1665

6.01 Heater / engine pre-heating 1666
1 Heating the driver's cab 1667
2 Heating the crane operator's cab 1683

6.05 Emergency take-down 1690

1 Emergency operation 1691

2 Emergency operation with assembly plate Variation 1 (V1) 1697

3 Emergency operation of slewing gear(s) with assembly plate Variation 1 (V1) 1703

4 Emergency operation with assembly plate(s) Variation 2 (V2) 1707

5 Emergency operation slewing gear(s) with assembly plate(s) Variation 2 (V2) 1717

6 Emergency operation of winch 4 (W IV) on the LR1600/2 and LR1600/2-W 1721

7 Ending emergency operation 1725

7 Service and maintenance 1727

7.01 Maintenance and service - General 1728

1 Liebherr Service 1729

2 General specifications 1729

3 Cleaning and care of the crane 1730

4 Measures for work interruption or transport 1731

5 Maintenance work on gear components 1731

6 Maintenance work on the crane superstructure or boom 1732

7 Maintenance and inspection guidelines 1733

7.02 Maintenance intervals - Crane chassis 1737

1 Crane chassis maintenance and inspection schedule 1739

7.03 Maintanance intervals - Crane superstructure 1747

1 Crane superstructure maintenance and inspection schedule 1749

7.04 Maintenance guidelines - Crane chassis 1758

1 Diesel engine 1759

2 Fuel system 1765

3 Urea system* 1769

4 Automatic transmission with torque converter coupling 1771

5 Distributor gear 1781

6 Hydraulic system 1785

7 Compressed air and brake system air dryer 1795

8 Tires / wheels 1795

9 Axles 1797

10 Wheel alignment 1799

11 Tilting the driver's cab 1801

12 Electrical system - Lighting 1801

7.05 Maintenance guidelines - Crane superstructure 1802

1 Carrying out maintenance work 1803

2 Diesel engine 1805

3 Urea system* 1811

4 Pump distributor gear 1813

5 Hydraulic system 1815

6 Slewing ring connection 1821

7 Central lubrication system 1823

8 Hoist gear 1 to 6 1831

9 Assembly winch 1833

10 Slewing gear 1835

11 Air dryer of the compressed air system of the crane superstructure 1837

12 Electrical system - Lighting 1837

7.06 Fill quantities, lubrication schedule 1840

1 Fill quantities 1841

2 Lubrication schedule 1841

7.07 Service fluids and lubricants 1842

1 Specified service items and lubricants for Liebherr cranes 1843

7.15 Procedure in case of problems 1851

1 Procedure to follow in case of a problem 1853

2 Measures in clear problem cases 1857

3 Carrying out an error diagnostics 1867

4 Measures for defective components 1869

8 Inspections of cranes 1871

8.01 Periodic crane inspections 1872

1 General 1873

2 Inspection of carrying crane structures, especially steel structures 1874

3 Inspection of tires and disk wheels 1947

4 Inspecting the hoist and retracting winches 1949

5 Inspecting load hooks 1961

6 Inspection of the rope feed mechanism in the telescopic boom 1961

7 Inspection of locking system of telescopic boom 1963

8 Inspection of retaining ropes and anchor points 1965
9 Inspection of membrane accumulator 1967
10 Inspection of relapse cylinders 1968
11 Inspection of the safety controls on the relapse cylinders 1968
12 Inspection of rope pulleys 1968
13 Inspecting the function of the overload protection 1969
14 Inspecting the roller slewing ring connection 1969
15 Inspection of the mounting of the load bearing equipment 1969
16 Inspection of the tele extension with eccentric, illustration 1 1971
17 Inspection of change over pulleys, illustration 2 1971
18 Inspection of the oil and fuel reservoirs 1971
19 Inspection of the auxiliary reeving winch, recovery winch and spare gear winch 1971
20 Appendix 1972
8.04 Inspection of crane wire ropes 1982
1 Introduction 1983
2 Wire rope 1983
3 Operating behavior of steel ropes 1989
4 Condition of equipment that is functionally associated with the rope 1990
5 Rope inspection log 1990
6 Rope storage and marking 1990
7 Wire ropes and rope end connections 1990
8 Twisting caused by stretching in rotation-resistant ropes and its remedy 1995
9 Appendix 1 1999
10 Appendix 2 2001
11 Appendix 3 2003
12 Appendix 4 2003
8.07 Inspection of pneumatic brake system for drum brakes 2006
1 General 2007
2 Visual inspection 2007
3 Operation and performance test 2007
4 Internal inspection of the wheel brakes 2008
8.12 Inspection of safety switching on the relapse supports 2010
1 S-boom relapse retainer 2011

2 Derrick relapse retainer 2013
3 W-lattice jib 2015
8.14 Inspection of accumulator pressure in relapse cylinder 2022
1 Checking jib stop cylinder pressure 2023
8.15 Inspection and maintenance of guy rods 2024
1 General 2025
2 Repeat inspection of guy rods 2025

9 General notes 2027
9.02 Supplementary service work 2028
1 Checks before start up 2029
2 Repair and maintenance tasks 2029
3 Important service tasks 2029
4 Maintenance notes for replacement parts 2030
5 Recommendations for travel operation 2030
6 Disposal of fuels and lubricants 2030
7 Tires 2030

90 Appendix 2039
90.01 Foreword to appendix 2040
1 Preface 2043
90.05 Update confirmation 2044
1 Update confirmation 2045
2 Customer information 2045

Index 2047

1 Description of crane

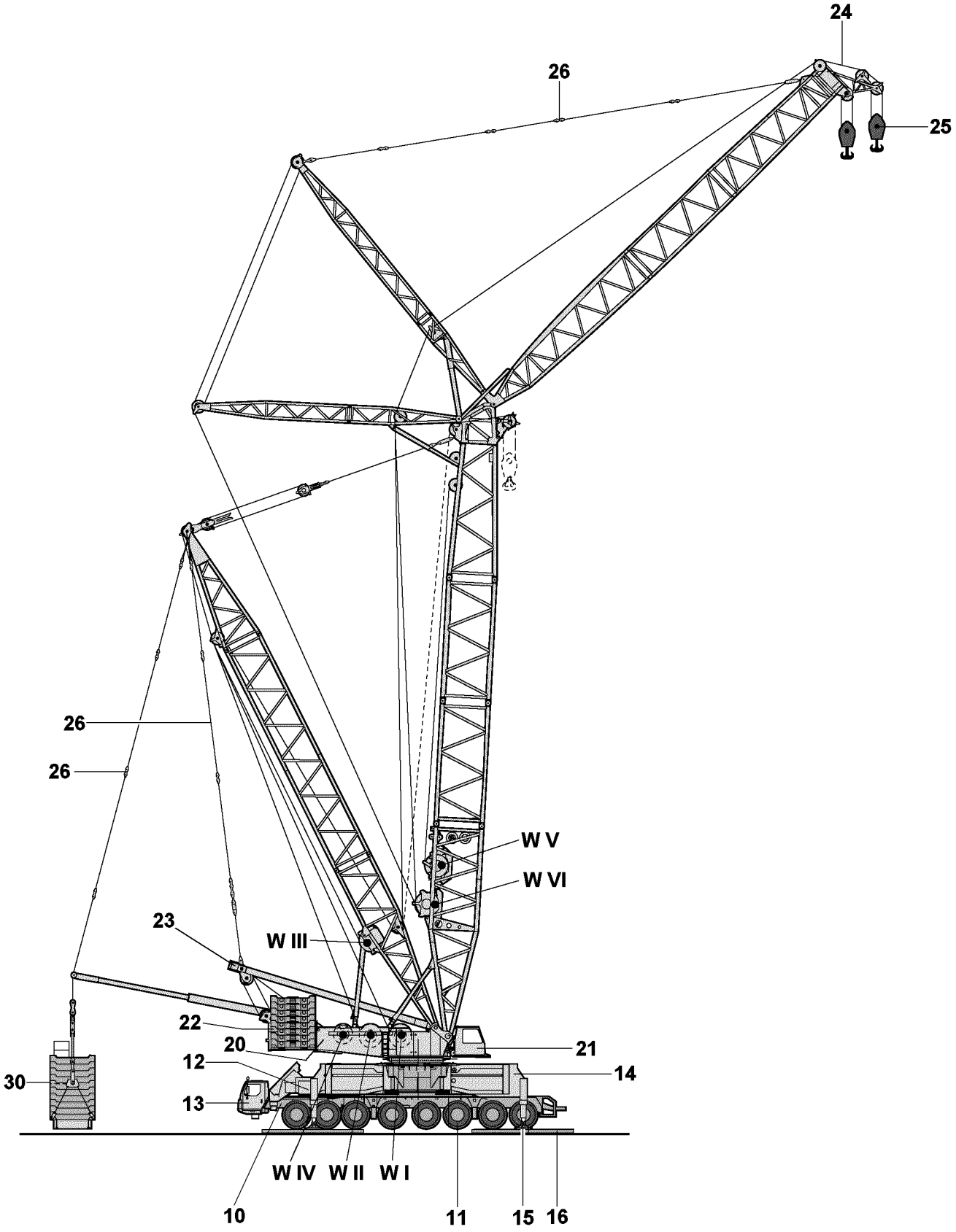
24
26
25
26
26
W V
W VI
23
W III
22
20
21
12
14
30
13
W IV
W II
W I
10
11
15
16

B198528

1 Crane components

1.1 Crane chassis

10 8-axle chassis
11 Tires - axles 1 to 8
12 Engine
13 Driver's cab
14 Sliding beams with support cylinders
15 Support plates
16 Base plates

1.2 Turntable

20 Crane engine
21 Crane operator's cab
22 Counterweight
23 SA-frame
24 Hoist rope
25 Hook block
26 Guy rods
30 Suspended ballast
W I Winch 1
W II Winch 2
W III Winch 3
W IV Winch 4
W V Winch 5
W VI Winch 6

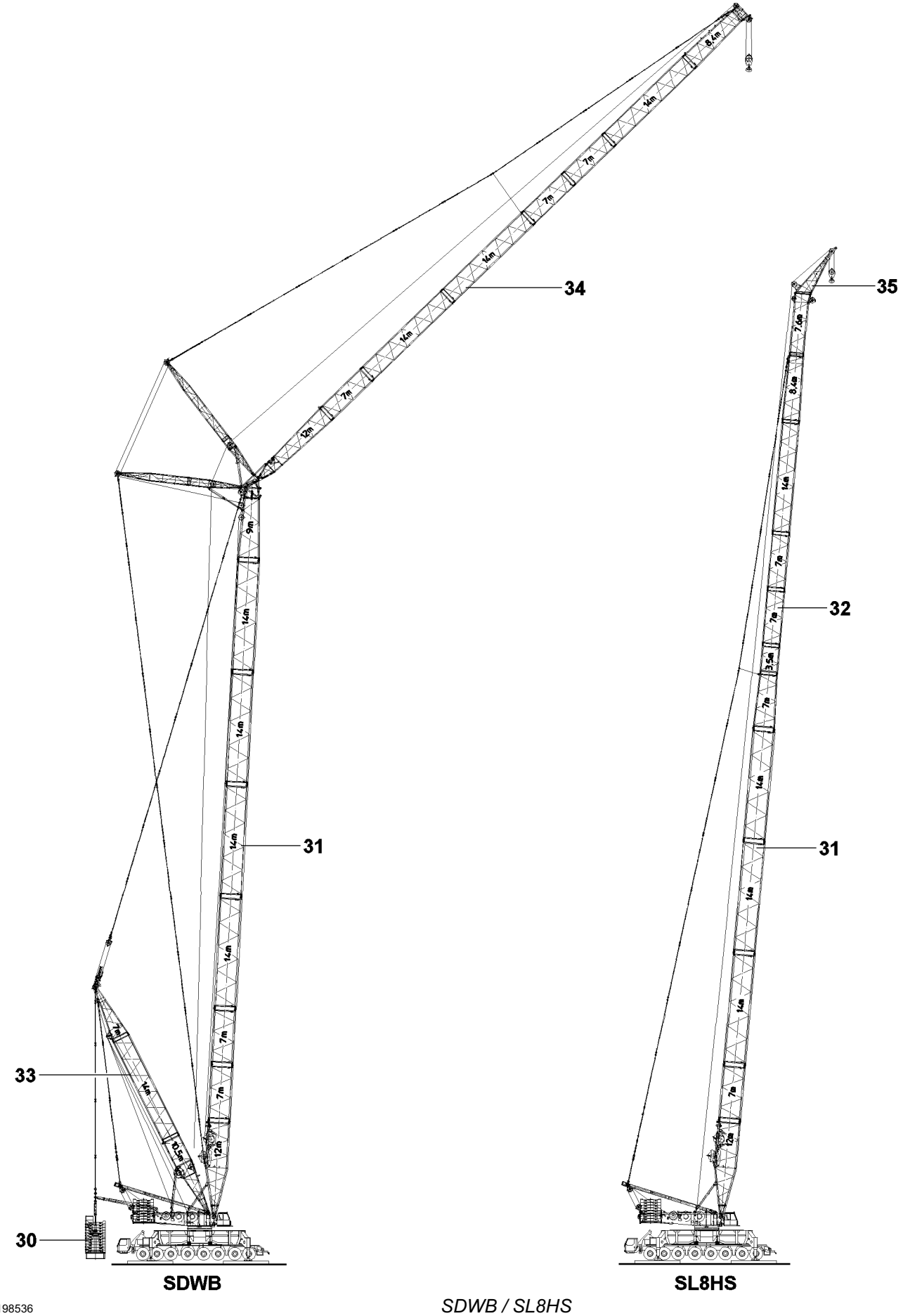

B198536

SDWB / SL8HS

1.3 Lattice mast boom - brief descriptions

30 Suspended ballast	• B
31 Main boom	• S (heavy duty version) • L (light version)
32 Main boom	• L (light version)

33 Derrick boom	• D (alone as assembly device or in connection for example, with SLD, SD)
	• Various variations are possible, for example:
	  • **D** 31.5 m
	  • **D2** 42.0 m

34 Luffing lattice jib	• W (heavy duty version)
35 Auxiliary jib	• HS (Auxiliary boom with its own load table)

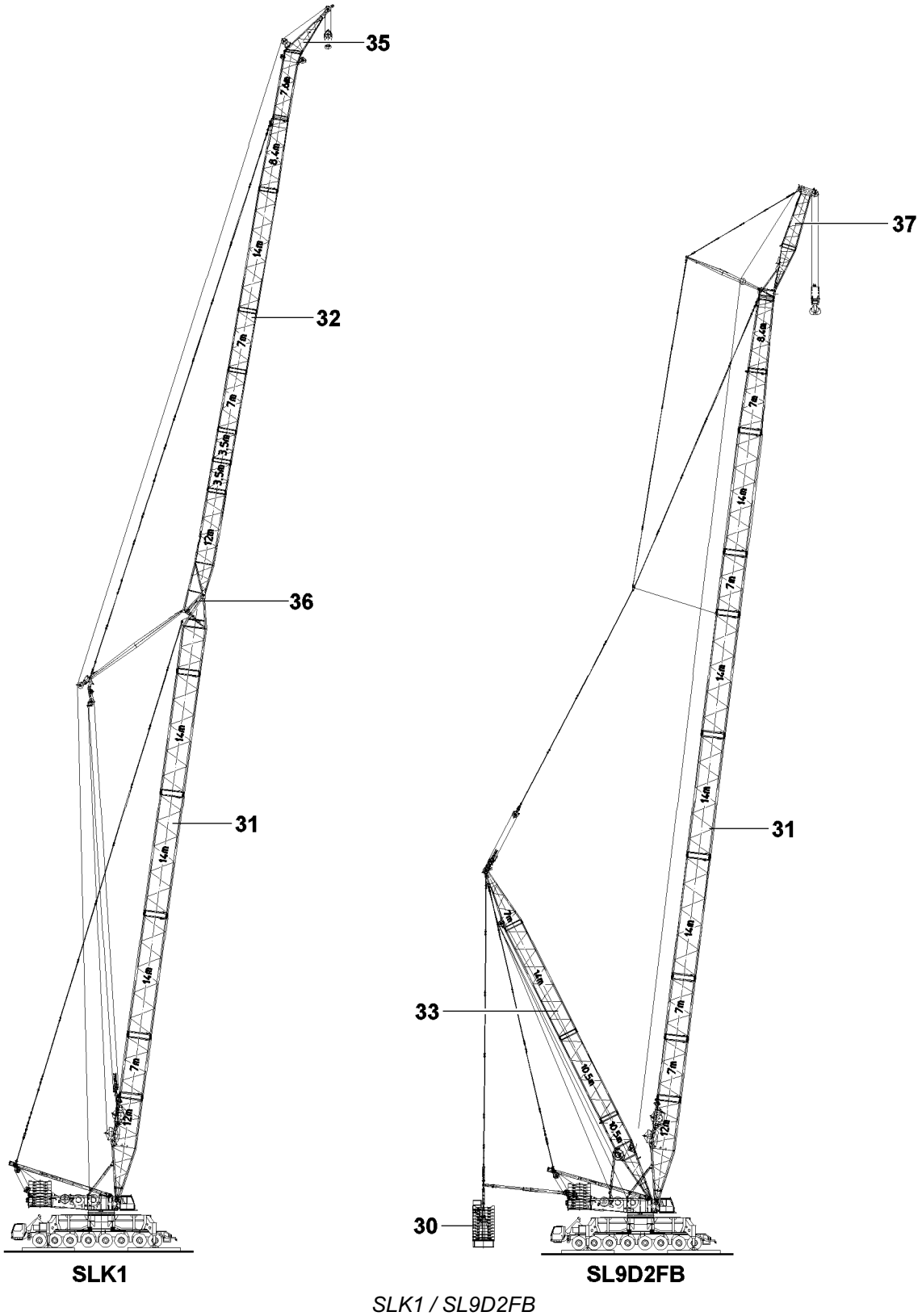

B198543

SLK1 / SL9D2FB

1.4 Lattice mast boom - brief descriptions

30 Suspended ballast	• B
31 Main boom	• S (heavy duty version) • L (light version)
32 Main boom	• L (light version)

33 Derrick boom	• D (alone as assembly device or in connection for example, with SLD, SD)
	• Various variations are possible, for example:
	  • **D** 31.5 m
	  • **D2** 42.0 m

35 Auxiliary jib	• HS (Auxiliary boom with its own load table)
36 Kinking boom	• K
37 Fixed lattice jib	• F

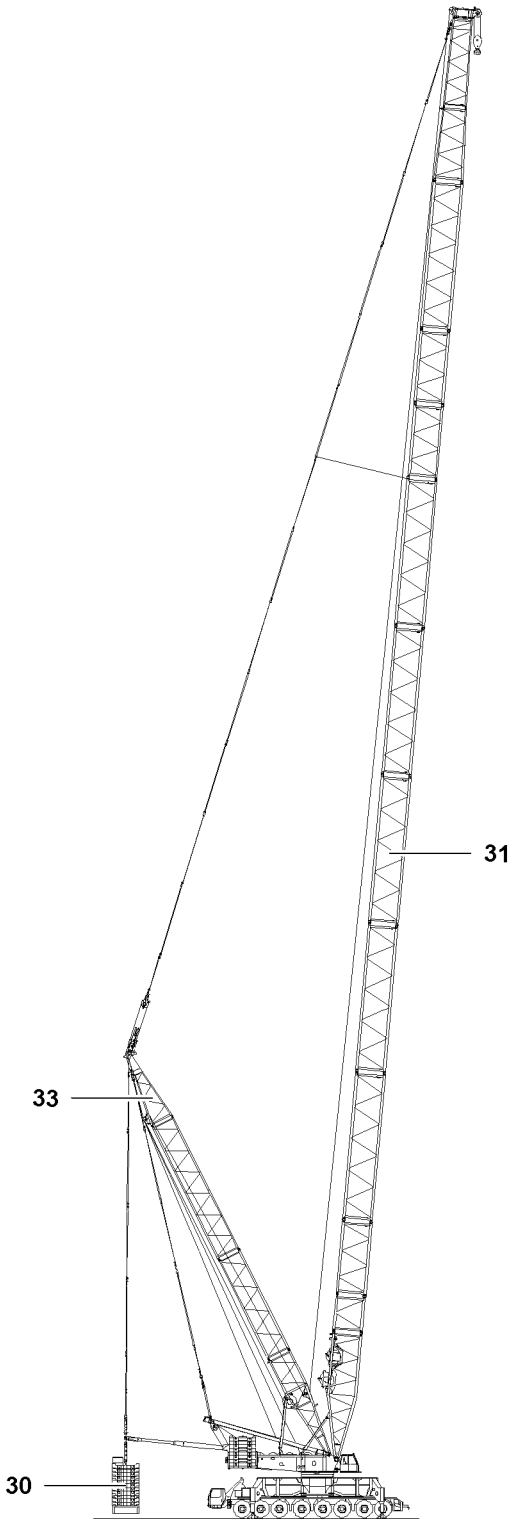

B116593

SL13D2B

1.5 Lattice mast boom - brief descriptions

30 Suspended ballast	• B
31 Main boom	• S (heavy duty version) • L (light version)
33 Derrick boom	• D (alone as assembly device or in connection for example, with SLD, SD) • **D2** 42.0 m

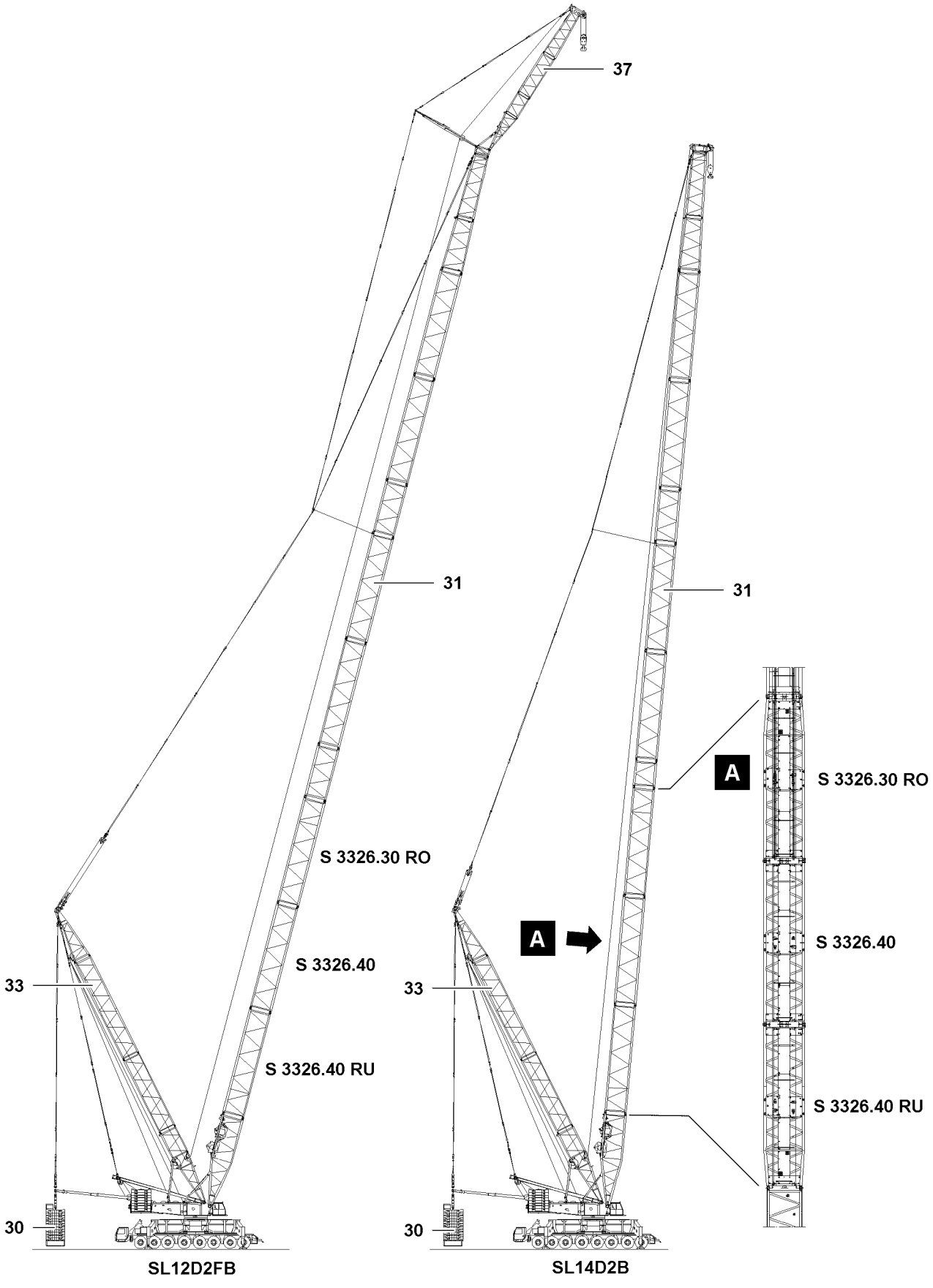

B116592

SL12D2FB / SL14D2B

1.6 Lattice mast boom - brief descriptions

30 Suspended ballast	• B
31 Main boom	• S (heavy duty version) • L (light version)
33 Derrick boom	• D (alone as assembly device or in connection for example, with SLD, SD) • **D2** 42.0 m
37 Fixed lattice jib	• F

1.7 Boom combinations

Combination	Description
S	Lattice mast - main boom, heavy duty version. Various variations are possible, for example: S2, S3.
SL	Lattice mast - main boom, supplemented on top with light boom sections. Various variations are possible, for example: SL2, SL3.
SL8HS	Lattice mast - main boom, supplemented on top with light boom sections and auxiliary jib.
SLK1	Lattice mast - main boom with kinked boom, supplemented on top with light boom sections. Various variants are possible.
SD	Lattice mast - main boom with derrick guying.
SDB	Lattice mast - main boom with derrick guying and suspended ballast. Various variants are possible, for example S2DB, SD2, SD2B.
SLD	Lattice mast - main boom with derrick guying, on top light boom sections.
SLDB	Lattice mast - main boom with derrick guying and suspended ballast, light boom sections on top.
SL9D2F	Lattice mast - main boom with derrick guying, light boom sections and on top and fixed lattice jib.
SL9D2FB	Lattice mast - main boom with derrick guying and suspended ballast, light boom sections and on top and fixed lattice jib.
SL12D2FB	Lattice mast - main boom with derrick guying and suspended ballast, bottom reinforced lattice sections (S 3326.40 RU, S 3326.40, S 3326.30 RO), in the center heavy lattice sections, top light boom sections and fixed lattice jib.
SL13D2B	Lattice mast - main boom with derrick guying and suspended ballast, light boom sections on top.
SL14D2B	Lattice mast - main boom with derrick guying and suspended ballast, bottom reinforced lattice sections (S 3326.40 RU, S 3326.40, S 3326.30 RO), in the center heavy lattice sections, top light boom sections.
SW	Lattice mast - main boom with luffing lattice jib, heavy duty version.

Combination	Description
SDW	Lattice mast - main boom with derrick guying and luffing lattice jib, heavy duty version.
SDWB	Lattice mast - main boom with derrick guying, suspended ballasting and lattice jib, heavy duty version.

blank page!

B195219

1 Crane chassis

1.1 Frame

In-house manufactured, weight-optimized, distortion-resistant box structure made from high-strength, close-grained structural steel.

1.2 Supports

Four folded-out hydraulic swing beams, with hydraulic support cylinders.

1.3 Diesel engine

– Number of cylinders: 8
– Make: LIEBHERR
– Water cooled

Note

▶ Depending on one of the respective crane configurations, one of the following engine types is installed on the crane, see also separate Diesel engine operating instructions!

1.3.1 Engine type D 9508 A7

Performance: 500 KW at 1900 rpm
Maximum torque: 3000 Nm at 1500 rpm

1.3.2 Engine type D 9508 A7 SCR

Performance: 505 KW at 1900 rpm
Maximum torque: 3000 Nm at 1500 rpm

1.4 Transmission

Automatic transmission system with torque converter transmission, manufactured by ZF, Type TC-TRONIC HD with 12 forward gears and 2 reverse gears, distributor gear with lockable longitudinal differential.

1.5 Axles

All 8 axles suspended and steerable.
Axles 1, 2, 4 and 6 are planetary axles, axle 4 with longitudinal differential, axle 4 and axle 6 with cross differential.

1.6 Suspension

All axles are hydro-pneumatically suspended with automatic level control.
Axle pressure compensation exists between axles 1 and 2, 3 and 4, 5 and 6, 7 and 8.
Hydraulically lockable suspension.

1.7 Tires

Tire size: 505/95 R 25

1.8 Steering

ZF semi-integral power steering, dual circuit system with hydraulic servo and auxiliary reserve pump, powered by the axle, acting on mechanically interconnected axles 1 to 4.
For on-road driving, the axles 5 to 8 are steered electro-hydraulically, depending on the speed, and from 30 km/h , axle 5 and axle 6 are affixed to straight forward driving.
Axles 7 and 8, depending on speed up to 60 km/h, are steered actively depending on the steering deflection of the front axle and set to straight forward driving above 60 km/h, whereby axle 7 is additionally blocked.
Steering in correspondence with EC-guideline 70/311/EEC.

1.9 Brakes

Service brake: All-wheel power-assisted compressed air brake, dual-circuit brake system.
Auxiliary brakes: Exhaust flap retention strap, retarder, in the TC-TRONIC transmission, Telma eddy current brake (optional).
Hand brake: Spring-loaded brake acting on all wheels of axle 3 to axle 6 and axle 8.
Brakes conform to EU Council Directive 71/320/EEC.

1.10 Driver's cab

Spacious cab made of steel, corrosion-resistant through cataphoretic paint, elastically suspended and hydraulically cushioned.
Sound and heat insulating interior panelling according to EC-guideline, safety glass, operating and control instruments, luxury equipment.

1.11 Electrical system

Modern data bus technology, 24 V DC, 2 batteries, each with 170 Ah.
Lighting system according to German StVZO (Federal Motor Vehicle Safety Standards).

2 Crane superstructure

2.1 Frame

In-house manufactured, weight-optimized and distortion-resistant welded structure made from high-strength, close-grained structural steel. A 3-row roller slewing ring is used as the connecting element to the crane chassis, with quick connection, providing unlimited rotation.
Quick-connect for easy separation from crane superstructure and crane chassis.

2.2 Disassembly device SA-frame

For disassembly of SA-frame, winch 4 and complete reeving.

2.3 Diesel engine

- Number of cylinders: 8
- Make: LIEBHERR
- Water cooled

Note

▶ Depending on one of the respective crane configurations, one of the following engine types is installed on the crane, see also separate Diesel engine operating instructions!

2.3.1 Engine type D 9508 A7

Performance: 400 KW at 1800 rpm
Maximum torque: 2546 Nm at 1500 rpm

2.3.2 Engine type D 9508 A7 SCR

Performance: 450 KW at 1800 rpm
Maximum torque: 2671 Nm at 1500 rpm

2.4 Crane drive

Diesel-hydraulic via pump distributor gear with 6 axial piston pumps with power regulation, closed oil circuits.

2.5 Control

Servo control with electronic synchronous run device via 3 4-way joysticks and 2 2-way control lever. Stepless regulation of crane movements by adjusting the hydraulic pumps and additionally by changing the diesel engine speed.

2.6 Hoist gear 2

Winch 2 as hoist gear, hydraulically driven rope drum via axial piston motor and planetary gear with spring-loaded hydraulic vented retaining brake.
Wear-free brakes with vertical process via closed oil circuits.

2.7 Intake gear (winch 4)

Winch 4 as intake gear, hydraulically driven rope drum via axial piston motor and planetary gear with spring-loaded hydraulic vented retaining brake.
Wear-free brakes with vertical process via closed oil circuits.

2.8 Slewing gear

1 slewing gear (2 as option), hydraulically driven via axial piston adjusting motor and planetary gear with spring-loaded hydraulic vented retaining brake. Wear-free brakes via closed oil-circuit.

2.9 Crane operator's cab

Wide area cab in sheet-steel construction, swingable to the side and tiltable to the rear, with operating and control instruments and engine-independent hot water heating (air conditioning as option)
Crane operator's cab and sliding doors are manufactured in weight-optimized fibre compound design.

2.10 Safety systems

LICCON overload system, with testing system, hoist limitation, electronic incline display (inclinometer), safety valves against pipe and hose bursts, wind gauge.

2.11 Counterweight

170 t, consisting of 2 brackets each with 10 t and counterweight plates with a total of 150 t.

2.12 Electrical system

Modern data bus technology, 24 V DC, 2 batteries, each with 170 Ah.

3 Boom systems

3.1 SL-main boom

SL 28 m to 133 m (SL 112 m to 133 m only with derrick), system 2826.30 / 2826.20 / 2421.10 pivot section 12 m, intermediate sections 7 m and 14 m, reducer section 7 m, end adapter 8.4 m, 400 t - end section 0.6 m, anti relapse cylinder.
For certain crane operating modes, additional reinforced lattice sections are required:

– S 3326.40 RU
– S 3326.40
– S 3326.30 RO

3.2 S-main boom

S 21 m to 140 m (S 91 m to 140 m only with derrick), system 2826.30 / 2826.20 / 2826.10 pivot section 12 m, intermediate sections 7 m and 14 m, end section 9 m, pulley set 400 t, (600 t as option), anti relapse cylinder.

3.3 D-derrick boom

D 31.5 m, system 2421.10 pivot section 10.5 m, intermediate section 14 m, end section 7 m, pulley block, anti relapse cylinder.

3.4 W-luffing lattice jib

W 28 m to 105 m, system 2421.10, 2421.8 pivot section 12 m, intermediate sections 7 m and 14 m, end adapter 8.4 m, 400 t – end section 0.6 m, anti relapse device, A-frame 1 and 2.

3.5 B-suspended ballast

Suspended ballast pallet with equalization cylinder and hydraulic telescopeable guide for maximum 400 t derrick ballast with maximum 20 m counter boom projection.

4 Auxiliary equipment

4.1 Hoist gear 1

Winch 1 as hoist gear

4.2 Hoist gear 3

Winch 3, adjustment main boom / D-operation

4.3 Hoist gear 5

Winch 5, adjustment luffing lattice jib

4.4 Hoist gear 6

Winch 6 as additional hoist gear

4.5 Mechanical auxiliary support

For erection of long boom combinations

4.6 Counterweight

Additionally, six counterweight plates, each with 12.5 t in total 245 t

4.7 Derrick ballast

Suspended ballast B, ballast plates for a total 400 t derrick ballast

4.8 Turntable extension

Extension of turntable by 2.5 m Increasing counterweight by 5 t in total 250 t

4.9 Mobile pin pulling device

For assembly / disassembly of the boom intermediate sections

4.10 Boom noses

Boom nose 60 t, for installing on SL-, W-head
Boom nose 60 t, for installing on S-head, boom nose 120 t

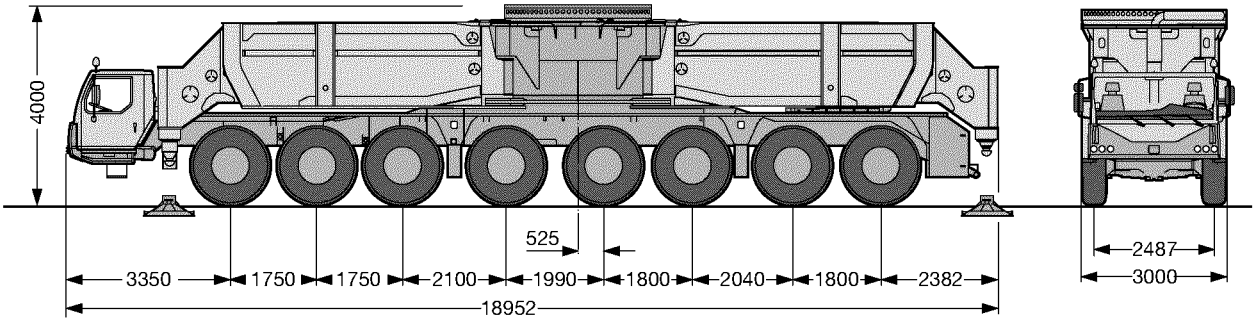
4000
525
3350
1750
1750
2100
1990
1800
2040
1800
2382
18952
2487
3000

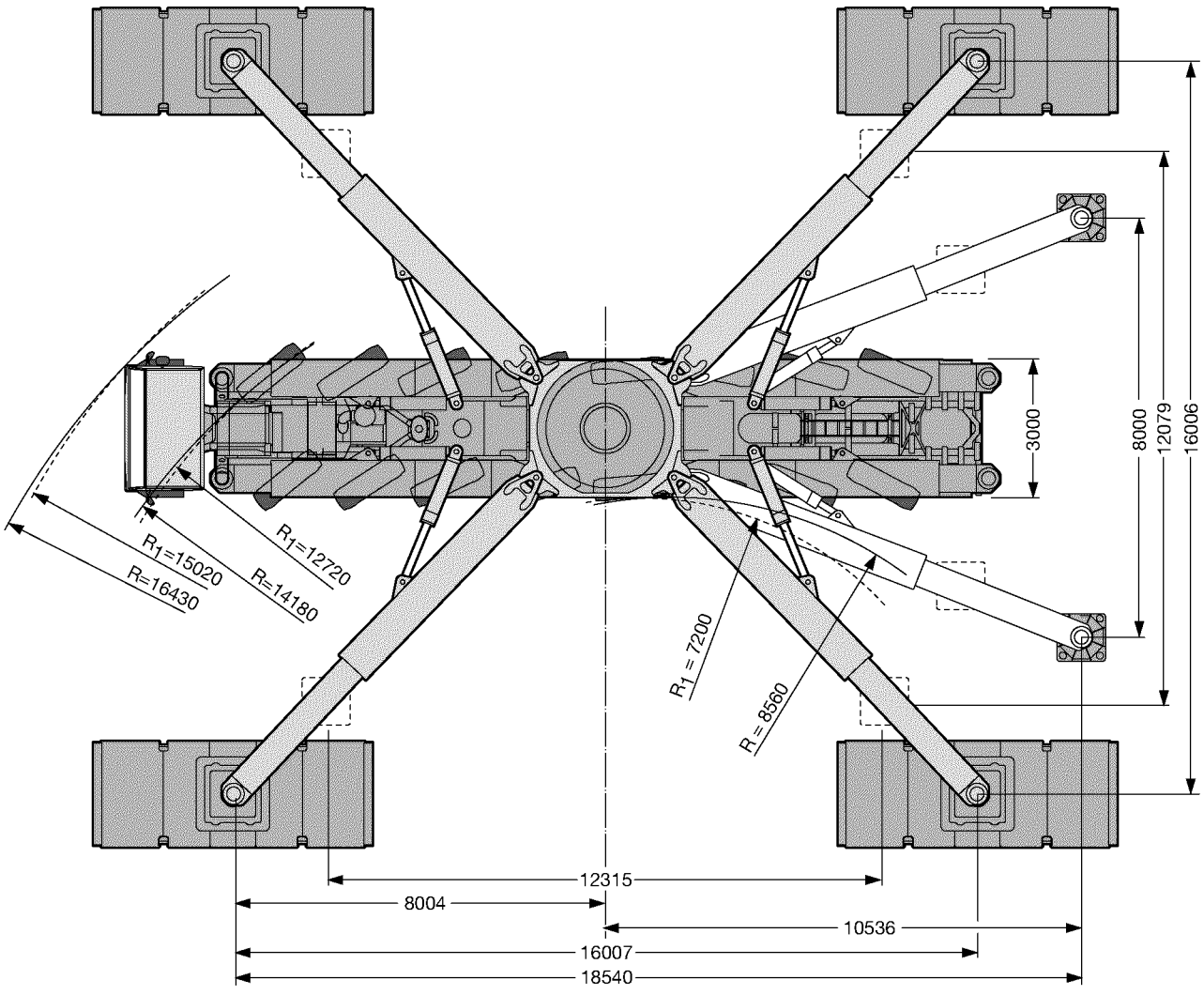
R1=15020
R=16430
R1=12720
R=14180
R1 = 7200
R = 8560
3000
8000
12079
16006
12315
8004
10536
16007
18540

B198530

1 Dimensions and weights crane chassis

Dimensions, see drawings.

1.1 Suspension path and incline

Suspension path crane vehicle	Side incline
+150 mm /-150 mm	+9°/-9°

1.2 Tires

Tire size	Wheel weight	Tire pressure when driving on public roads	Tire pressure when driving with equipment
505/95 R 25	467 kg	9 bar	10 bar

1.3 Axle loads

1.3.1 Axle loads with folding beams

Note

▶ For travel condition of the crane with folding beams, see Crane operating instructions, chapter 3.04!

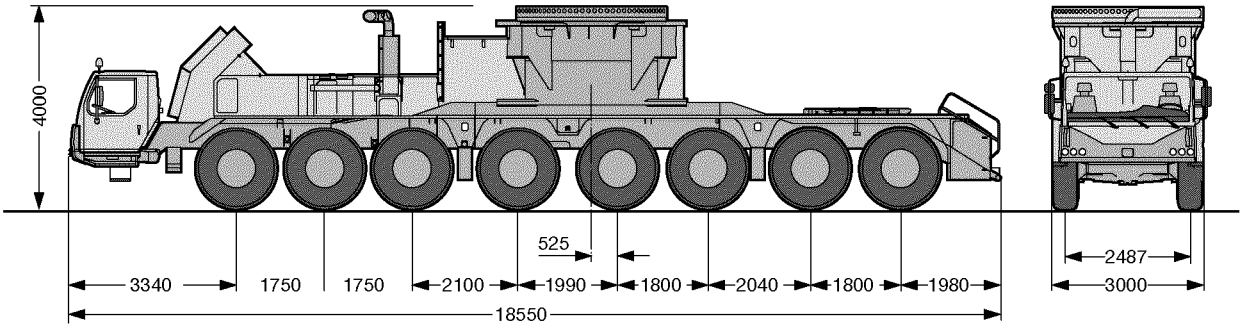
4000
525
3340
1750
1750
2100
1990
1800
2040
1800
1980
18550
2487
3000

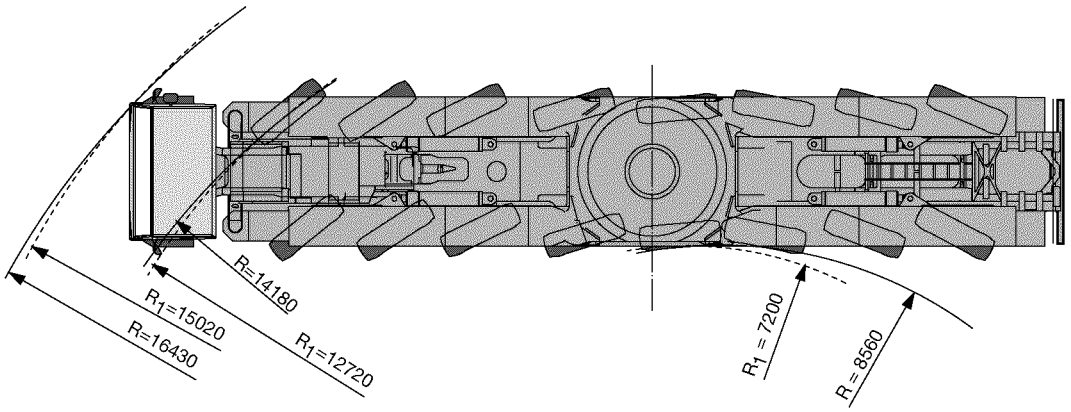
R=14180
R1=15020
R=16430
R1=12720
R1 = 7200
R = 8560

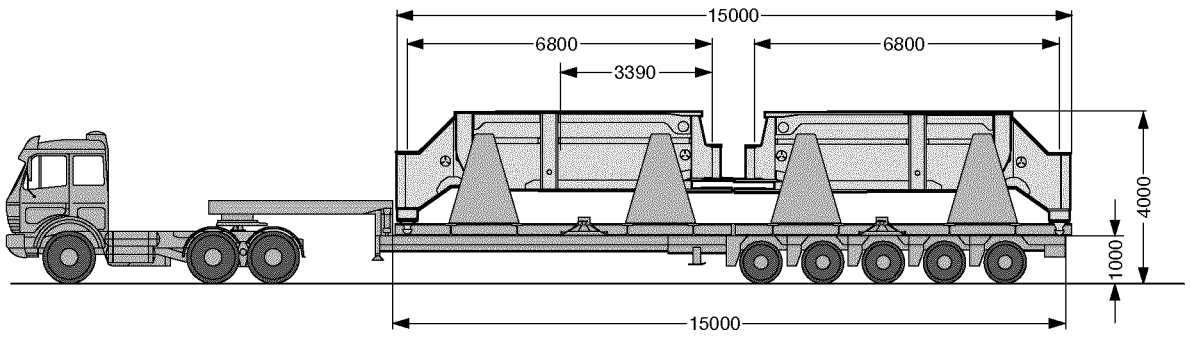
15000
6800
6800
3390
4000
1000
15000

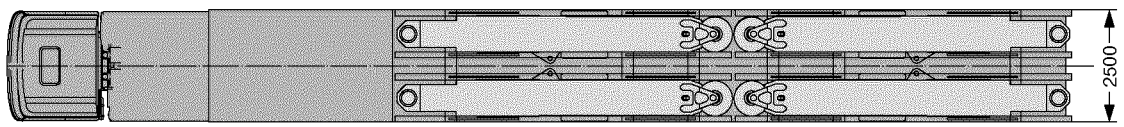
2500

B198531

1.3.2 Axle loads without folding beams

Note

▶ For travel condition of the crane without folding beams, see Crane operating instructions, chapter 3.04!

1.4 Weights of folding beams

Component				
Total weight	Folding beam			
	1	2	3	4
48 t	12 t	12 t	12 t	12 t

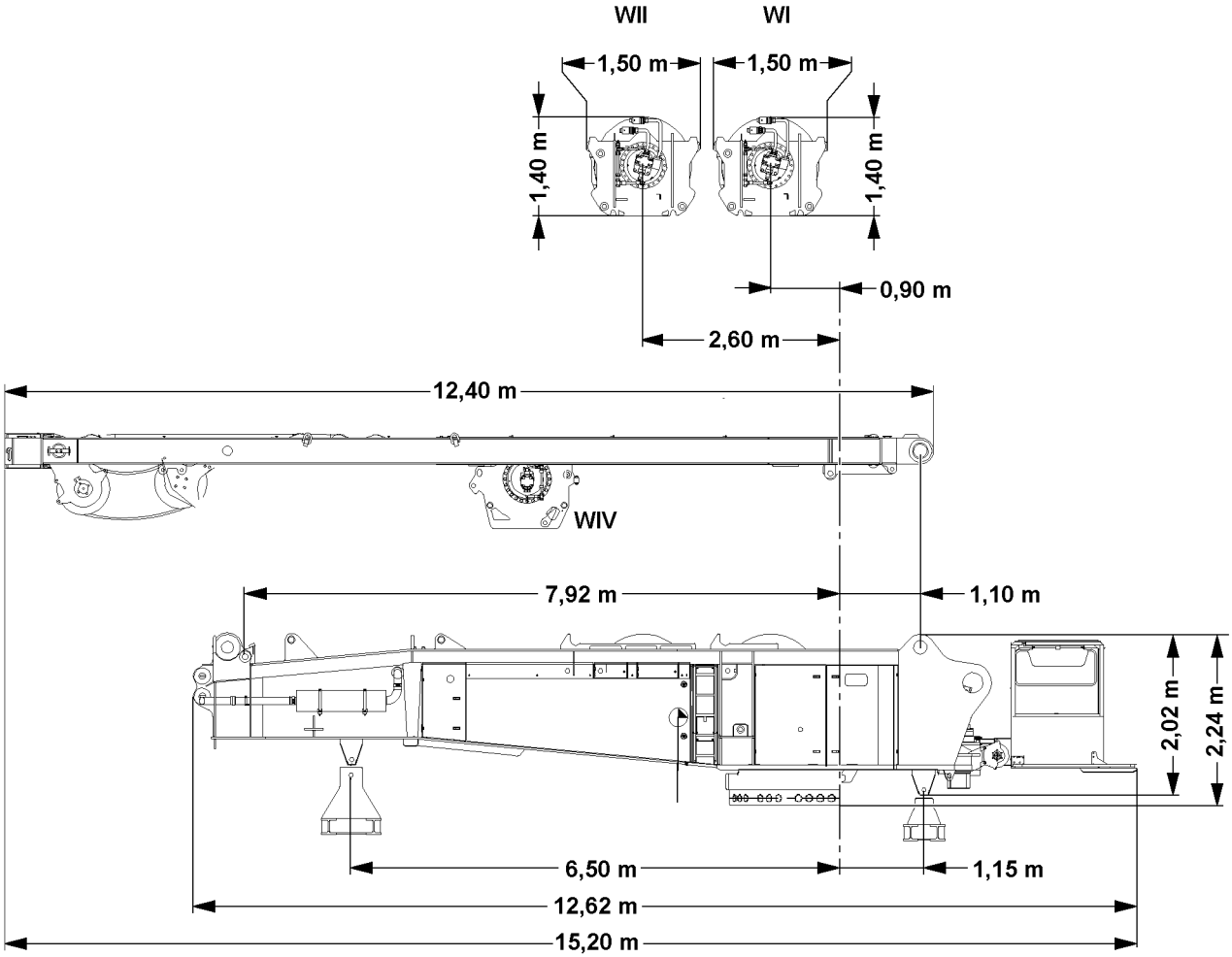
WII
WI
1,50 m
1,50 m
1,40 m
1,40 m
0,90 m
2,60 m
12,40 m
WIV
7,92 m
1,10 m
2,02 m
2,24 m
6,50 m
1,15 m
12,62 m
15,20 m

B108789

2 Dimensions and weights Crane superstructure

2.1 Crane superstructure

For the weight data of assembly connections the following is valid:
- Including two slewing gears.
- Without winch 1 **WI** and winch 2 **WII**.
- SA-bracket with winch 4 **WIV** including rope and pulley set.

Version	Weight		Width
	Without SA-bracket	With SA-bracket	
Without Quick Connection	36.0 t	54.0 t	3.00 m
With Quick Connection	37.0 t	55.0 t	3.00 m

2.2 Winch 1

Component	Weight	Width
Winch 1 **WI** including rope	8.8 t	1.80 m

2.3 Winch 2

Component	Weight	Width
Winch 2 **WII** including rope	8.8 t	1.80 m

2.4 SA-frame

Component	Weight	Width
SA-bracket with winch 4 **WIV** including rope and pulley set	17.8 t	2.30 m

5

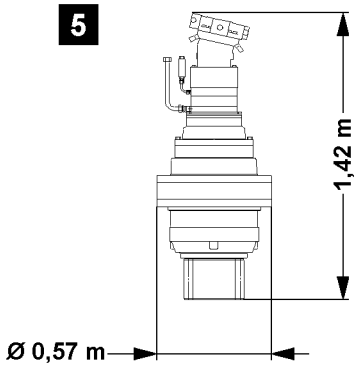

6

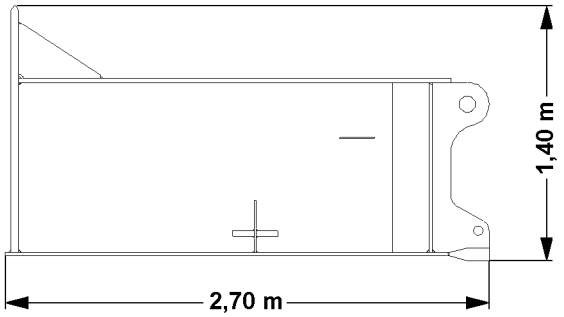

9

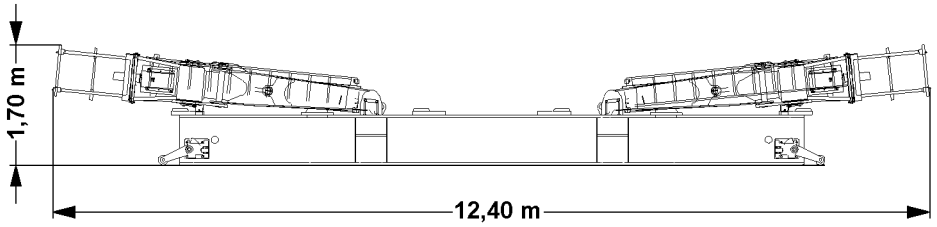

10

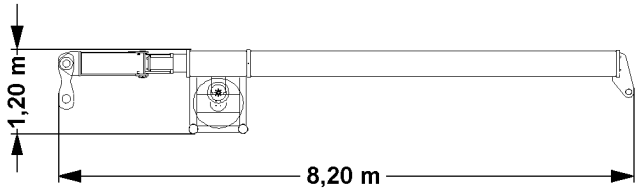

B111698

2.5 Slewing gear

See illustration **5**.

Component	Weight	Diameter
Slewing gear	0.9 t	0.57 m

2.6 Turntable extension*

See illustration **6**.

Component	Weight	Width
Turntable extension	5.0 t	3.00 m

2.7 Ballast pallet suspended ballast*

See illustration **9**.

Component	Weight	Width
Ballast pallet suspended ballast	14.0 t	2.50 m

2.8 Guide frame ballast pallet*

See illustration **10**.

Component	Weight	Width
Guide frame ballast pallet	8.6 t	3.00 m

15

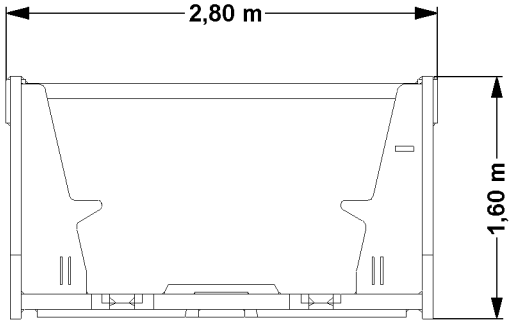

16

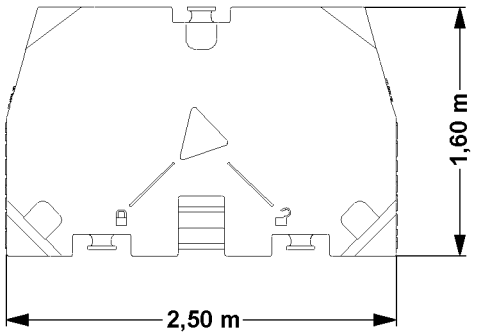

17

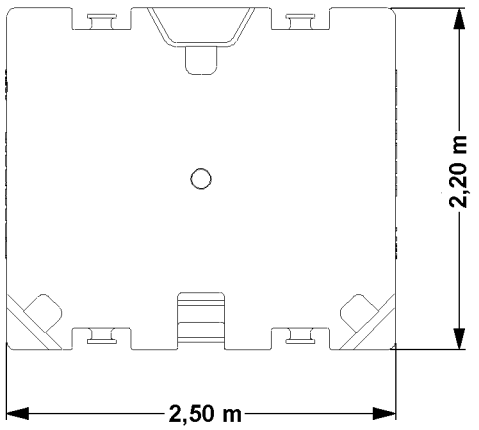

B111699

2.9 Console counterweight

See illustration **15**.

Component	Weight	Width
Console counterweight for turn-table ballast	8.6 t	3.00 m

2.10 Ballast / counterweight

Variation 1 and Variation 2 can be used as:
– Counterweight turntable
– Derrick ballast

Note
▶ Twist lock*: For comfortable installation of ballast / counterweight!

2.10.1 Variation 1

See illustration **16**, shown with Twist lock.

Component	Weight	Height	
		without Twist lock	with Twist lock
Counterweight 7.5 t	7.5 t	0.35 m	0.37 m
Counterweight 10.0 t	10.0 t	0.45 m	0.47 m

2.10.2 Variation 2

See illustration **17**, shown without Twist lock.

Component	Weight	Height	
		without Twist lock	with Twist lock
Counterweight 6.25 t	6.25 t	0.30 m	-
Counterweight 12.5 t	12.5 t	0.45 m	0.47 m
Counterweight 25.0 t	25.0 t	0.74 m	-

18

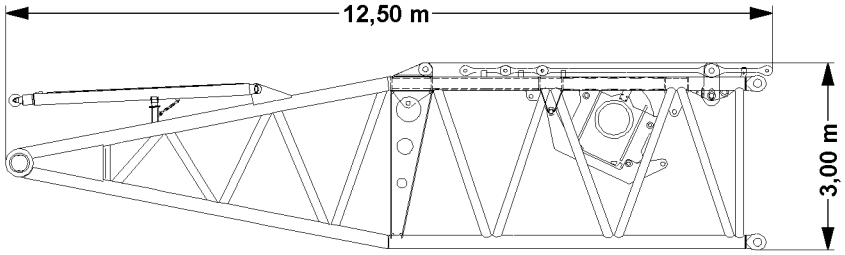

19

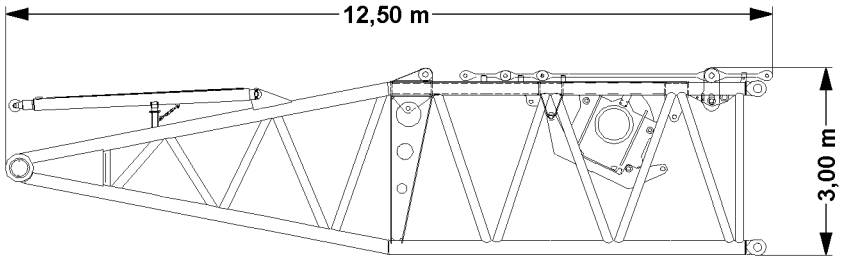

20

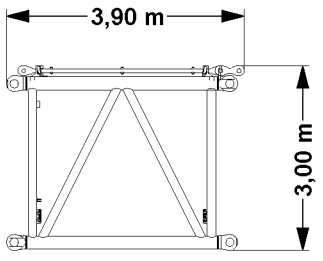

B108771

3 Dimensions and weights equipment

3.1 S-pivot section 12 m, 2826.20

See illustration **18**.

Component	Weight	Width
S-pivot section complete	32.9 t	3.00 m
S-pivot section	14.4 t	
S-relapse cylinder	1.3 t	
Winch 5 with rope	9.5 t	
Winch 6 with rope	6.4 t	
S- and W- guy rods	1.3 t	

3.2 S-pivot section 12 m, 2826.30

See illustration **19**.

Component	Weight	Width
S-pivot section complete	33.7 t	3.00 m
S-pivot section	15.2 t	
S-relapse cylinder	1.3 t	
Winch 5 with rope	9.5 t	
Winch 6 with rope	6.4 t	
S- and W- guy rods	1.3 t	

3.3 S-intermediate section 3.5 m, 2826.30

See illustration **20**.

Component	Weight	Width
S-intermediate section complete	4.2 t	3.00 m
S-intermediate section	3.5 t	
S- and WA-bracket 2 guy rods	0.7 t	

21

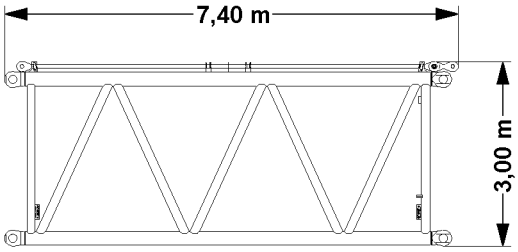

22

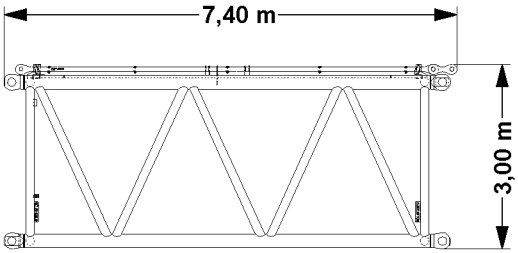

23

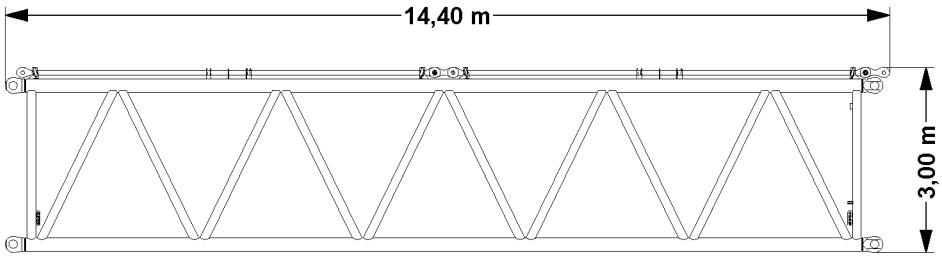

24

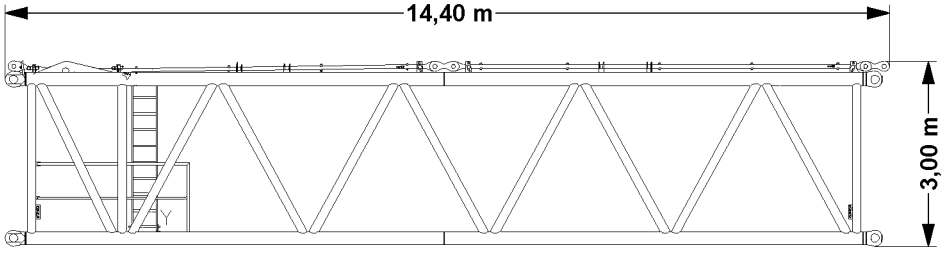

B108772

3.4 S-intermediate section 7.0 m, 2826.20

See illustration **21**.

Component	Weight	Width
S-intermediate section complete	6.9 t	3.00 m
S-intermediate section	5.6 t	
S- and WA-bracket 2 guy rods	1.3 t	

3.5 S-intermediate section 7.0 m, 2825.30

See illustration **22**.

Component	Weight	Width
S-intermediate section complete	7.5 t	3.00 m
S-intermediate section	6.2 t	
S- and WA-bracket 2 guy rods	1.3 t	

3.6 S-intermediate section 14.0 m, 2826.20

See illustration **23**.

Component	Weight	Width
S-intermediate section complete	12.5 t	3.00 m
S-intermediate section	10.0 t	
S- and WA-bracket 2 guy rods	2.5 t	

3.7 S-intermediate section 14.0 m, 2826.20 reinforced

See illustration **24**.

Note

▶ Reinforced version for flying assembly!

Component	Weight	Width
S-intermediate section complete	12.8 t	3.00 m
S-intermediate section	10.3 t	
S- and WA-bracket 2 guy rods	2.5 t	

25

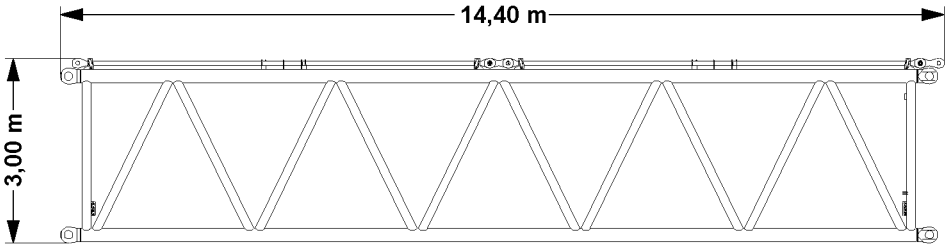

26

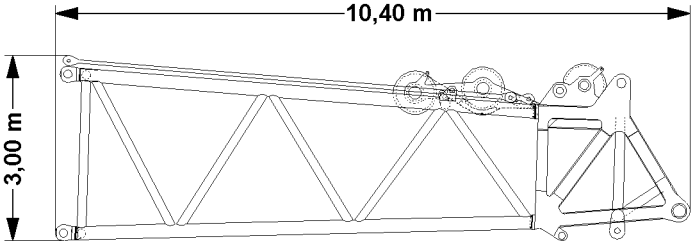

27

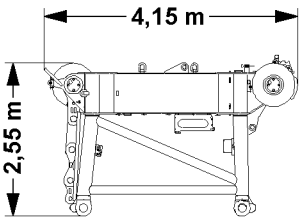

28

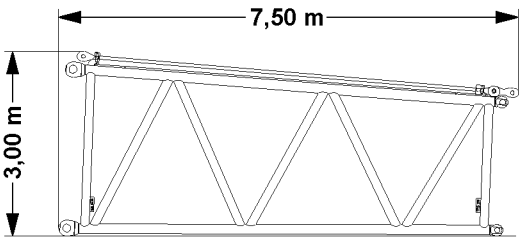

B108773

3.8 S-intermediate section 14.0 m, 2826.30

See illustration **25**.

Component	Weight	Width
S-intermediate section complete	13.8 t	3.00 m
S-intermediate section	11.3 t	
S- and WA-bracket 2 guy rods	2.5 t	

3.9 S-end section

See illustration **26**.

Component	Weight	Width
S-end section	11.5 t	3.00 m

3.10 S-end section 750 t

See illustration **27**.

Component	Weight	Width
S-end section	8.5 t	3.00 m

3.11 SL-reducer section 7.0 m

See illustration **28**.

Component	Weight	Width
SL-reducer section complete	4.5 t	3.00 m
SL-reducer section	3.8 t	
Guy rods	0.7 t	

29

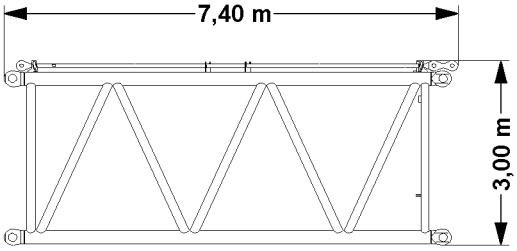

30

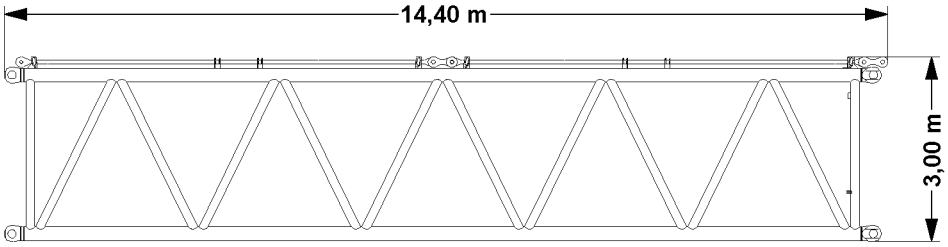

31

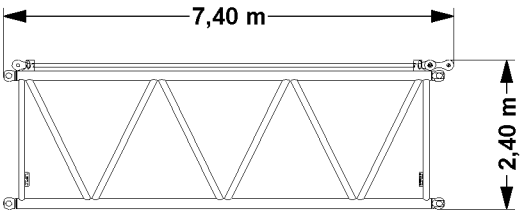

32

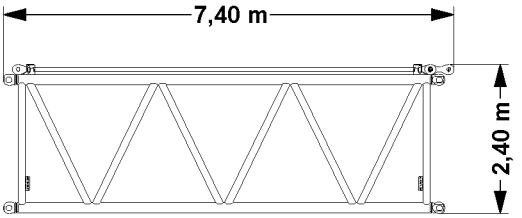

B108774

3.12 LA-intermediate section 7.0 m, 2826.10

See illustration **29**.

Component	Weight	Width
LA-intermediate section complete	4.6 t	3.00 m
LA-intermediate section	3.9 t	
Guy rods	0.7 t	

3.13 LA-intermediate section 14.0 m, 2826.10

See illustration **30**.

Component	Weight	Width
LA-intermediate section complete	8.1 t	3.00 m
LA-intermediate section	6.8 t	
Guy rods	1.3 t	

3.14 LI-intermediate section 7.0 m, 2421.8

See illustration **31**.

Component	Weight	Width
LI-intermediate section complete	3.2 t	2.60 m
LI-intermediate section	2.5 t	
Guy rods	0.7 t	

3.15 LI-intermediate section 7.0 m, 2421.10

See illustration **32**.

Component	Weight	Width
LI-intermediate section complete	3.9 t	2.60 m
LI-intermediate section	3.2 t	
Guy rods	0.7 t	

33

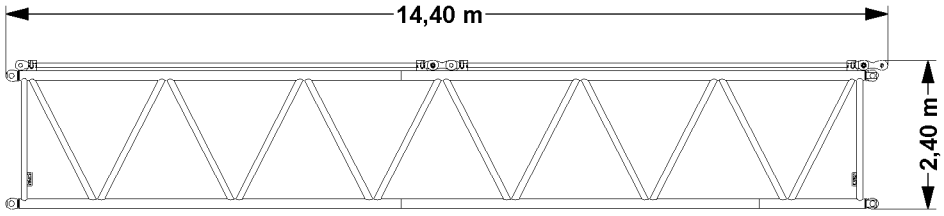

34

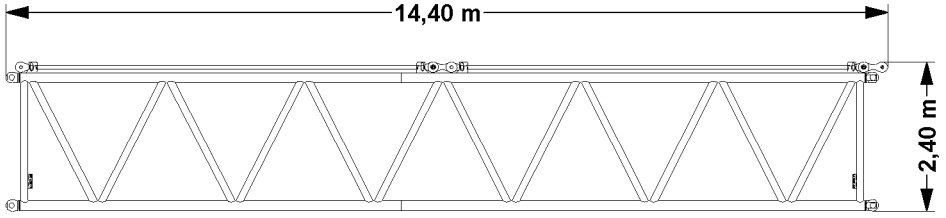

35

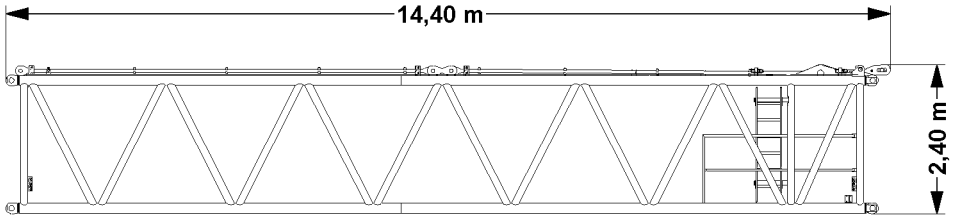

36

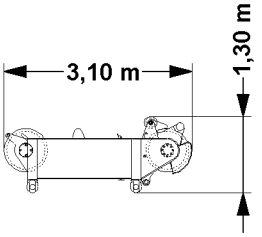

B108775

3.16 LI-intermediate section 14.0 m, 2421.8

See illustration **33**.

Component	Weight	Width
LI-intermediate section complete	5.7 t	2.60 m
LI-intermediate section	4.4 t	
Guy rods	1.3 t	

3.17 LI-intermediate section 14.0 m, 2421.10

See illustration **34**.

Component	Weight	Width
LI-intermediate section complete	7.0 t	2.60 m
LI-intermediate section	5.7 t	
Guy rods	1.3 t	

3.18 LI-intermediate section 14.0 m, 2421.10 reinforced

See illustration **35**.

Note
▶ Reinforced version for flying assembly!

Component	Weight	Width
LI-intermediate section complete	7.7 t	2.60 m
LI-intermediate section	6.3 t	
Guy rods	1.4 t	

3.19 L-end section 400 t

See illustration **36**.

Component	Weight	Width
L-end section	3.5 t	2.30 m
L-end section for boom nose 120 t	3.6 t	2.30 m

37

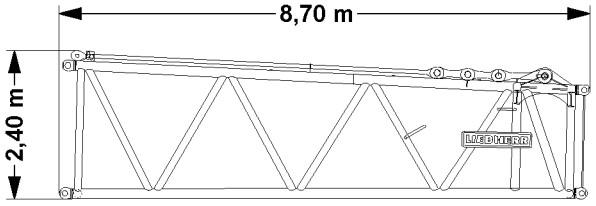

38

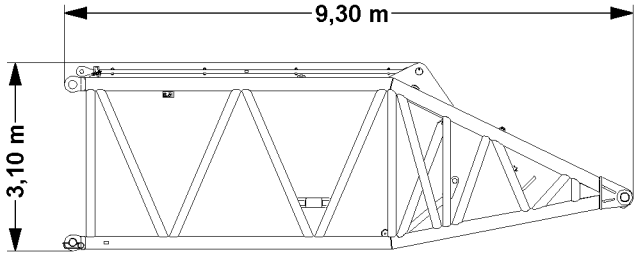

39

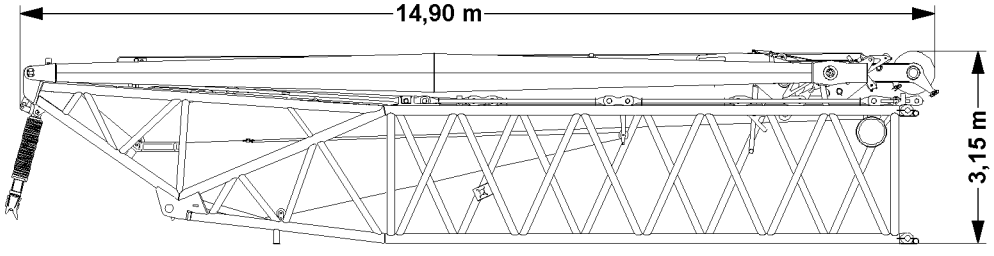

B108785

3.20 L-adapter 8.4 m

See illustration **37**.

Component	Weight	Width
L-adapter complete	5.4 t	2.60 m
L-adapter	4.7 t	
Guy rods	0.7 t	

3.21 K-adapter 9.0 m

See illustration **38**.

Component	Weight	Width
K-adapter complete	8.8 t	3.00 m
K-adapter	8.3 t	
Guy rods	0.5 t	

3.22 K-assembly unit

See illustration **39**.

Component	Weight	Width
K-assembly unit complete	15.7 t	3.00 m
K-pivot section	9.0 t	
KA-bracket	5.3 t	
Guy rods with traverse	1.4 t	

40

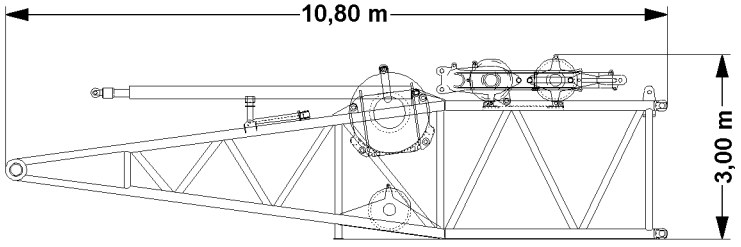

41

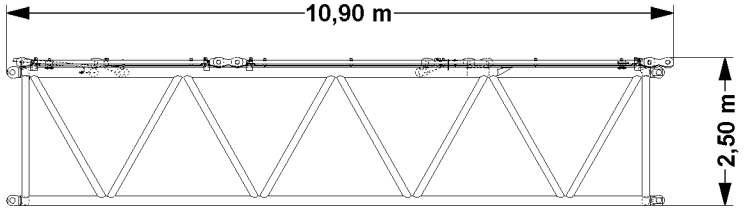

42

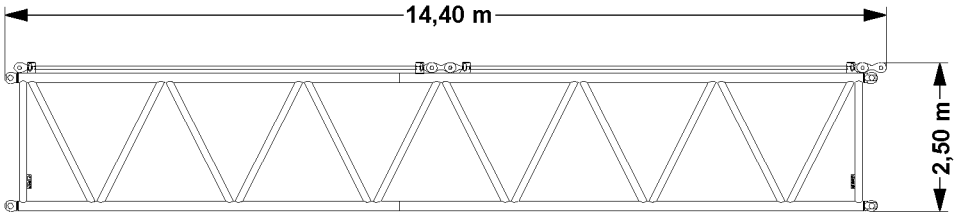

43

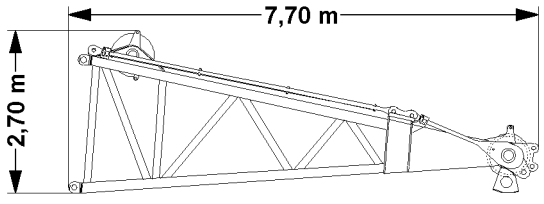

B108786

3.23 D-pivot section 10.5 m

See illustration **40**.

Component	Weight	Width
D-pivot section, complete	21.2 t	2.80 m
D-pivot section	5.7 t	
D-relapse retainer	1.5 t	
Winch III with rope	8.8 t	
Pulley blocks	4.5 t	
Guy rods	0.7 t	

3.24 D-intermediate section 10.5 m

See illustration **41**.

Component	Weight	Width
D-intermediate section complete	7.0 t	2.60 m
D-intermediate section	5.7 t	
Guy rods	1.3 t	

3.25 D-intermediate section 14.0 m

See illustration **42**.

Component	Weight	Width
D-intermediate section complete	8.7 t	2.60 m
D-intermediate section	6.9 t	
Guy rods	1.8 t	

3.26 D-end section 7.0 m

See illustration **43**.

Component	Weight	Width
D-end section complete	8.7 t	2.60 m
D-end section	6.9 t	
B- and SA- guy rods	1.8 t	

44

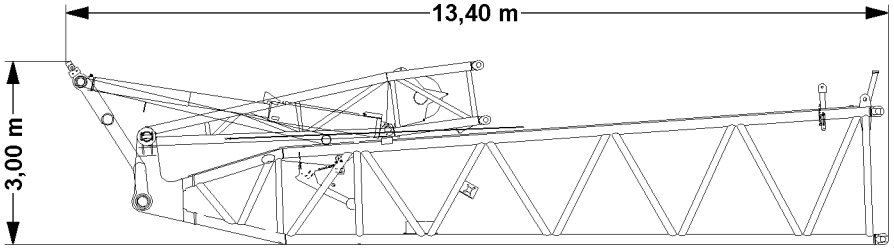

45

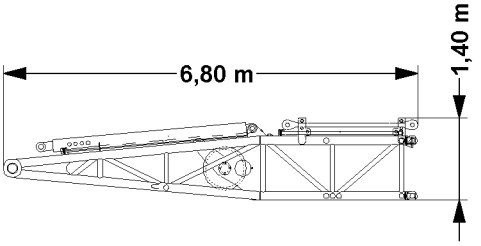

46

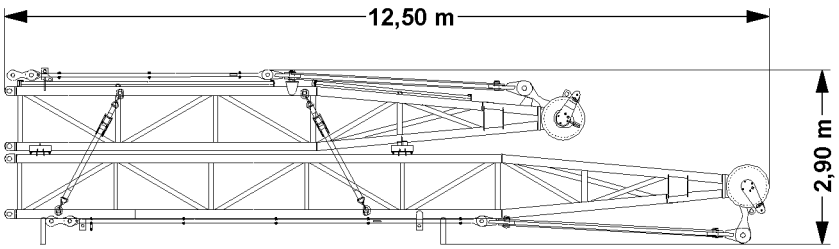

47

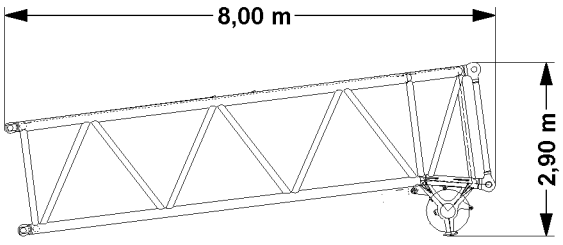

B108787

3.27 W-pivot section 12 m with WA-bracket 1 pivot section

See illustration **44** - Transport unit.

Component	Weight	Width
W-pivot section 12 m with WA-bracket 1 pivot section complete	10.6 t	2.80 m

3.28 WA-frame 2, pivot section

See illustration **45**.

Component	Weight	Width
WA-frame 2, pivot section	3.5 t	2.80 m

3.29 WA-frame 1 and WA-frame 2 end sections

See illustration **46** - Transport unit.

Component	Weight	Width
WA-frame 1 and WA-frame 2 end sections	9.6 t	2.70 m

3.30 Adapter for boom nose 100 t

See illustration **47**.

Component	Weight	Width
Adapter for boom nose 100 t	3.5 t	2.40 m

48

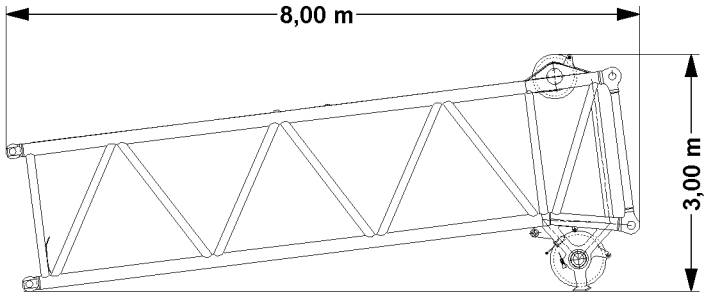

49

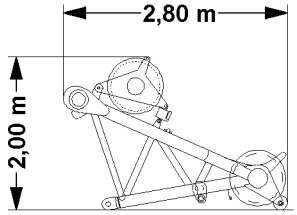

50

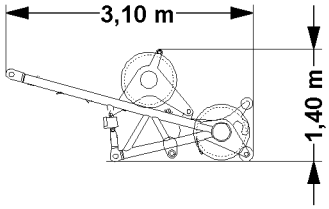

51

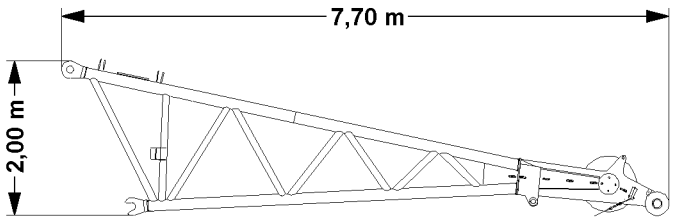

52

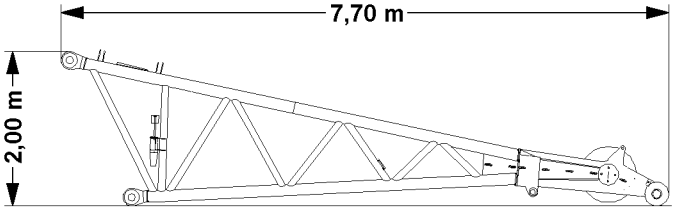

B108788

3.31 Adapter for boom nose 120 t

See illustration **48**.

Component	Weight	Width
Adapter for boom nose 120 t	3.7 t	2.40 m

3.32 Boom nose 60 t for S-end section

See illustration **49**.

Component	Weight	Width
Boom nose 60 t for S-end section	1.1 t	2.20 m

3.33 Boom nose 60 t for L-end section / L-adapter

See illustration **50**.

Component	Weight	Width
Boom nose 60 t for L-end section / L-adapter	0.8 t	0.80 m

3.34 Boom nose 100 t for L-end section / L-adapter

See illustration **51**.

Component	Weight	Width
Boom nose 100 t for L-end section / L-adapter	2.4 t	2.30 m

3.35 Boom nose 120 t for L-end section / L-adapter

See illustration **52**.

Component	Weight	Width
Boom nose 120 t for L-end section / L-adapter	2.4 t	2.30 m

53

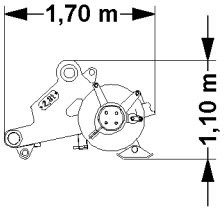

54

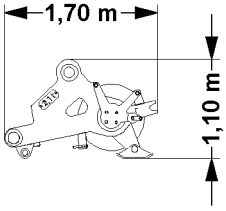

55

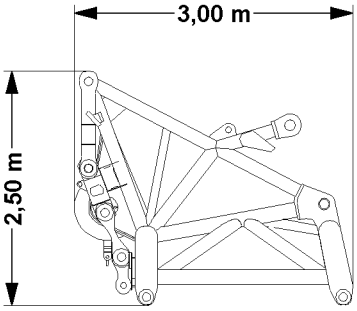

56

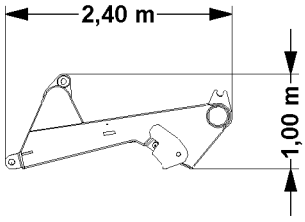

57

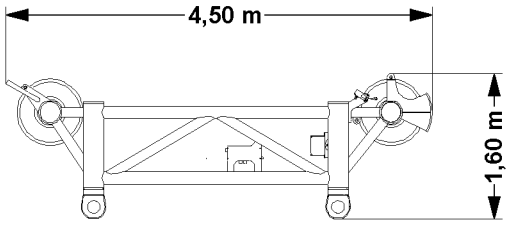

58

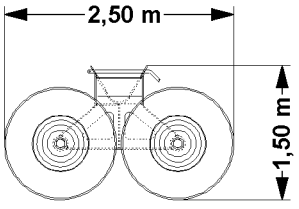

B108790

3.36 Pulley set 400 t

See illustration **53**.

Component	Weight	Width
Pulley set 400 t S-end section	2.1 t	1.70 m

3.37 Pulley set 600 t

See illustration **54**.

Component	Weight	Width
Pulley set 600 t S-end section	2.8 t	2.60 m

3.38 W-adapter for pulley sets 400 t and 600 t

See illustration **55** and illustration **56**

Component	Weight	Width
W-adapter complete	5.9 t	2.50 m
W-adapter part 1 illustration **55**	4.6 t	2.50 m
W-adapter part 2 illustration **56**	1.3 t	2.20 m

3.39 Assembly head 47 t

See illustration **57**.

Component	Weight	Width
Assembly head 47 t	2.3 t	3.00 m

3.40 Pulley cart

See illustration **58**.

Component	Weight	Width
Pulley cart	1.9 t	3.40 m

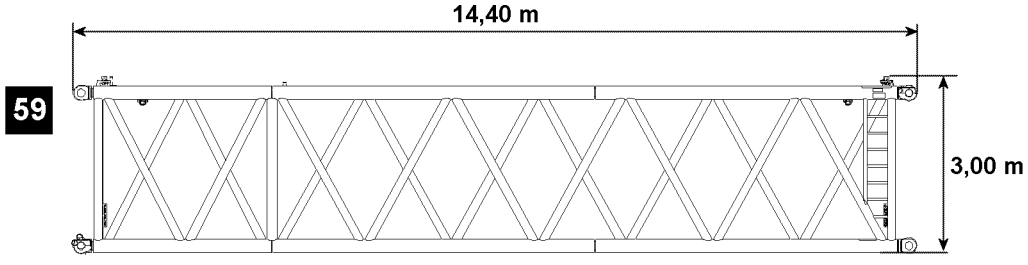

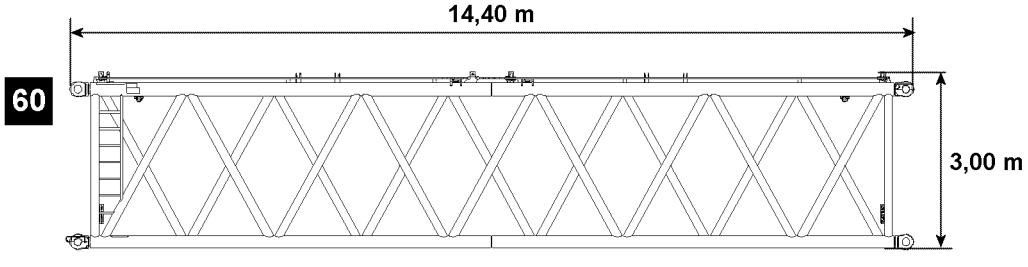

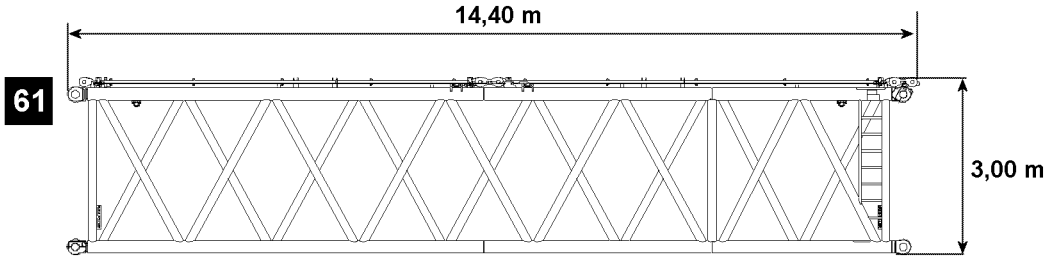

B116337

3.41 S-intermediate section 14.0 m, S 3326.40 RU 15.8 t

See illustration **59**.

Component	Weight	Width
S-intermediate section complete	15.8 t	3.50 m

3.42 S-intermediate section 14.0 m, S 3326.40 15.3 t

See illustration **60**.

Component	Weight	Width
S-intermediate section complete	15.3 t	3.50 m

3.43 S-intermediate section 14.0 m, S 3326.30 RO 13.5 t

See illustration **61**.

Component	Weight	Width
S-intermediate section complete	13.5 t	3.50 m
S-intermediate section	12.1 t	
S- guy rods	1.4 t	

4 Lifting equipment

Note

▶ For lifting equipment, see load chart manual.

5 Ground pressure

5.1 support pressure

	Max. support pressure per support	
	Support base 12 m x 12 m	Support base 16 m x 16 m
At nominal load	5000 kN	3730 kN
Without load, boom on minimum boom radius	2350 kN	2300 kN

6 Workplace-related emission values

Sound pressure level at nominal engine rpm	Stationary noise L_{pAeq}	
	Left ear	Right ear
Driver's cab, driver's side	73 db(A)	74 db(A)
Driver's cab, passenger side	75 db(A)	
Crane operator's cab	70 db(A)	

7 Vibrations

Vibrations transferred to the operator	Value
Total vibration value to which the upper body parts are exposed	not more than 2.5 m/s^2
Effective value of weighted acceleration to which the entire body is exposed	not more than 0.5 m/s^2

8 Speeds

8.1 Driving speeds with 505/95 R 25 tires

Speed	Gear							
	1	2	3	4	5	6	7	8
On road gear	6.3 km/h	8.0 km/h	10.4 km/h	13.3 km/h	16.8 km/h	21.6 km/h	28.6 km/h	36.6 km/h

Speed	Gear						Maximum gradient
	9	10	11	12	R1	R2	
On road gear	47.4 km/h	60.7 km/h	76.9 km/h	80.0 km/h	6.8 km/h	8.7 km/h	33 %

8.2 Crane speeds winches

Drives	Infinitely variable
Hoist gear 1	0 m/min to 130 m/min for single strand
Hoist gear 2	0 m/min to 130 m/min for single strand
Hoist gear 3	0 m/min to 130 m/min for single strand
Hoist gear 4	0 m/min to 70 m/min for single strand (2-fold)
Hoist gear 5	0 m/min to 130 m/min for single strand
Hoist gear 6	0 m/min to 130 m/min for single strand

8.3 Crane speed slewing gear

Drives	RPM
Slewing gear	0 rpm to 1.5 rpm

8.4 Crane speeds, luffing the main boom

Drives	Infinitely variable
Luffing	Approx. 4 min , 0° to 87° boom position at 49 m boom length

9 Ropes

9.1 Hoist ropes

Component	Rope diameter
Winch 1	28 mm
Winch 2	28 mm
Winch 6	28 mm

9.2 Control ropes

Component	Rope diameter
Winch 3	28 mm
Winch 4	28 mm
Winch 5	28 mm

9.3 Guy ropes

Component	Rope diameter
Auxiliary guying	32 mm

9.4 Assembly rope

Component	Rope diameter
Assembly winch	8 mm

2 Safety

1

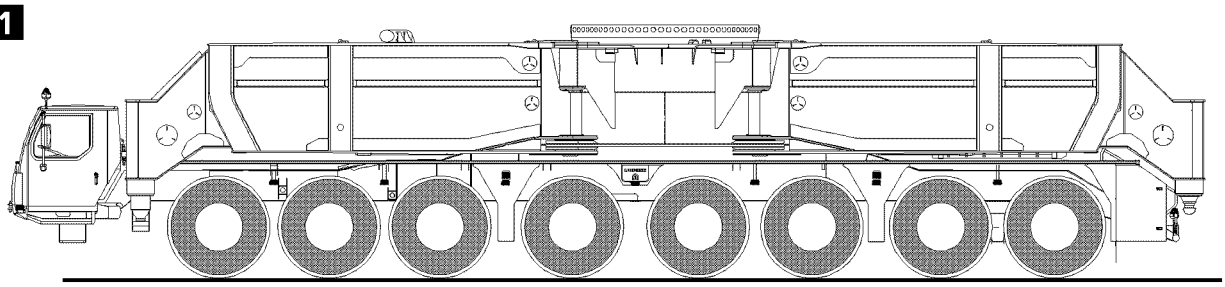

2

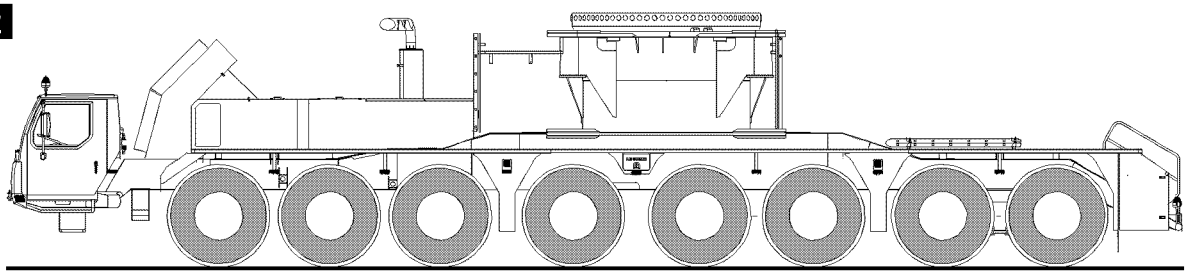

B108147

1 Traffic regulations

The crane is approved for road travel when used in accordance with regional traffic regulations.
The crane must be brought in compliance with the relevant local traffic regulations before it is driven on public streets, roads and other places.
The weights, axle loads and dimensions specified in the permits must be maintained and may not be exceeded by additionally loading the crane.
The technically feasible axle loads may be different from those permitted by local road traffic regulations.
In countries with EEC regulations, axle loads exceeding 12 t are not allowed to be driven on the roads.
If the crane operator drives on the road with an axle load that exceeds 12 t, he is personally responsible.

DANGER
Exceeding the axle load and total weight increases the risk of accident!
Any increase in axle load and total weight reduces braking performance in direct proportion to the excess weight.
Brake lining wear and risk of overheating the brake increases. This condition exceeds the specifications of the steering mechanism, service and parking brakes and retarder!
The service life of all components affected by the increased axle load (such as: brakes, tires, rims and axles, as well as the entire drive, suspension and steering assemblies) is reduced.
▶ Do not exceed the specified axle load or total weight under any circumstances!

1.1 National traffic regulations

Be sure to comply with all valid **national traffic regulations** when driving the crane!
When driving on public roads within the scope of validity of the StVZO (Federal Motor Vehicle Safety Standards), the relevant regulations and conditions of of the guideline 2 § 70 if the StVZO (VkkB 1980 pg. 433 H) must be followed as follows:

1.1.1 Driving condition 96 t, illustration 1

– The boom, the turntable, all counterweights and the hook block must be removed from the crane chassis.
– The plates of the support cylinders of the folding beams must be removed.
– The folding beams must be folded onto the crane chassis and mechanically secured there.
– The hydraulic locking mechanisms for all axles must be clear and the hydro-pneumatic suspension must be adjusted in such a way that the manufacturer values for road driving and the permissible axle loads are complied with.
– The “road driving” steering program must be selected.
– The differential locks must be switched off.

1.1.2 Driving condition 48 t, illustration 2

– The conditions of driving condition 96 t must be met.
– In addition, all four folding beams must be removed from the crane chassis.

The configurations in which the permissible axle loads and the permissible overall weight are complied with were defined by the officially recognized vehicle traffic expert during assessment in accordance with §21 of the StVZO. Equipment parts may neither be removed nor added to this specified configuration.
The notes in the operating instructions for setting up the vehicle for driving on public roads must be followed.
At least 4 chocks of nominal size 66 in accordance with DIN 76051 Part 1 (November 92) must be carried along.
Warning paint or warning signs must be according to the “guidelines for indication of excessively wide and long vehicles as well as protruding loads” in the case of 04.01.1983 (VkBl. 1983 page 23) due to the excessive width on the left and right front and rear side of the vehicle.
On the rear of the vehicle, a sign with the lettering “Caution! This vehicle makes wide turns” must be attached.
At least one guide is required to give the vehicle driver the required signs for safe travel. If the transport is secured by an escort vehicle which is equipped according to the “Fact sheet regarding the equipment of company-owned escort vehicles with variable message sign system”, then the guide is not required.

blank page!

B195219

1 General traffic regulations

1.1 General safety instructions

The crane vehicle is approved for road travel when used in accordance with regional traffic regulations.

WARNING
Non-observance of general Safety instructions!
If the general safety instructions are not observed, there is a danger of accident!
- ▶ The crane cab may **not** be occupied by passengers while driving the crane!
- ▶ Make sure that the crane vehicle is brought to the respective permissible status as prescribed by the traffic regulations before driving on public roads, paths and squares!
- ▶ Make sure that the weights, axle loads and dimensions are observed as stated in the permit!
- ▶ Make sure that the weights, axle loads and dimensions as stated in the permit are **not** exceeded by added loads!

1.2 Axle loads

Axle loads must be differentiated between:
- – the permissible axle loads according to traffic regulations.
- – the axle loads which are technically possible.

WARNING
Exceeding the axle load and total weight increases the risk of accident!
Any increase in axle load and total weight reduces braking performance in direct proportion to the excess weight!
The wear on brake linings is increased and there is an increased danger of overheating the brakes.
This condition exceeds the specifications of the steering system, service and parking brakes and retarder and they therefore **no longer** meet the regulations!
It shortens the life of all components subjected to the increased axle load, such as brakes, tires, disk wheels and axles, as well as the entire drive, suspension and steering components!
- ▶ Do not exceed the specified axle load or total weight!
- ▶ In countries with EEC regulations, axle loads exceeding 12 t are **not** allowed to be driven on the roads!
- ▶ If the driver drives on-road with more than 12 t, then he bears the responsibility for the consequences!

Note
Driving with reduced axle loads!
For reduced axle loads the operating parameters of the crane change!
When the crane vehicle is driven for short distances without matching the axle loads, the driving behavior can change, depending on the road conditions!
- ▶ If the axle load is reduced due to easier driving permits, then the minimum permissible axle loads and total weights according to the permits part I and part II must be observed!
- ▶ When the crane vehicle is driven for longer distances with reduced axle loads, the pretension pressures of the axle suspension and tire air pressure must be matched accordingly!

1.3 Hook block

WARNING
Danger of accident due to limited visibility!
- ▶ Make sure that the visibility of the driver is **not** limited by the hook block when driving the crane vehicle on public roads!

Carry the hook block along only when the following prerequisites are met:
- ▶ Make sure that the hook block is permitted for the respective driving condition of the crane vehicle, see Crane operating instructions, chapter 3.04!
- ▶ Make sure that the hook block has been reeved a maximum of four times!
- ▶ Make sure that the hook block is hooked and tightened with the intended eyehook on the fastening points, see Crane operating instructions, chapter 3.02!

1.4 Boom nose*

WARNING
Danger of accident due to limited visibility!
- ▶ Make sure that the visibility of the driver is **not** limited by the boom nose* when driving the crane vehicle on public roads!

Carry the boom nose* along only when the following prerequisites are met:
- ▶ Make sure that the boom nose* is permitted for the respective driving condition of the crane vehicle, see Crane operating instructions, chapter 3.04!
- ▶ Make sure that the boom nose* is swung from working position into transport position to avoid restricting the visibility!
- ▶ Make sure that the boom nose* is secured in transport position with pin and spring retainer!

blank page!

B195219

1 National traffic regulations

1.1 Statutory regulations

Be sure to comply with all valid **national traffic regulations** when driving the crane!
In addition, the following regulations must be observed when driving on public roads:

- Any working floodlights that are present must be turned off.
- The telescopic boom must be moved into the telescope position defined during vehicle acceptance, where it must be mechanically secured to prevent movement or twisting.
- Any auxiliary equipment that is present (such as a folding jib, a hook block, additional ballast, a rope winch or the like) must be properly secured on the intended locations as specified in the document assigned to the relevant vehicle or removed and transported separately.
- The sliding or swing beams must be mechanically secured in the intended position when driving on public roads.
- The existing support plates must be pushed into the intended position within the contour of the vehicle, where they must be mechanically locked and secured.
- The moveable crane parts (for example: load hook, rope guides, ropes, brackets) must be secured to prevent them from swinging back and forth and loosing them.
- For driving on public roads, the „driving status 1“ (suspended) for the axle suspension must be actuated and the vehicle must be aligned via the level regulation.
- No persons may be in the crane operator's cab while driving on public roads.
- The “road driving” steering program must be selected.
- The differential locks must be turned off.
- The turntable must be set into the position determined at vehicle acceptance and mechanically secured to prevent turning.
- The vehicle must be set to chassis operation.
- The crane cab is set in transport position, see Crane operating instructions, chapter 3.02.

The notes in the Crane operating instructions for set up of the vehicle for driving on public roads must be observed, see Crane operating instructions, chapter 3.02 and chapter 3.04.
At least 4 chocks of nominal size 66 in accordance with DIN 76051 Part 1 must be carried along.
Depending on the set up configuration, the part of the boom head or boom that protrudes at the front must be marked at both sides with red and white hatching. If it is dark it must also be marked with lights shining to the left and right sides (type approved side marker lights).
Warning paint or warning signs are to be attached according to the “guidelines for indication of excessively wide and long vehicles as well as protruding loads” due to excessive width on the outer left and right front and rear side of the vehicle.

1.2 Driving configurations of the crane

When driving with the crane, the respective valid **Driving configurations of the crane** must be observed, see Crane operating instructions, chapter 3.04.

B195219

1 Break-in instructions

NOTICE
Risk of damaging while driving the crane.
▶ It is absolutely essential to break-in the crane!

Please observe the following specifications:

1.) Continuously monitor temperature and oil pressure indicators while driving!
Stop immediately if there are any fault indications!
- Carry out the following maintenance work after the first 50 km and 100 km:
- Do not over-tighten the wheel nuts (maximum permissible torque= 600 Nm).
  Make sure that wheel nuts are tight.
- Check engine water and oil levels.
- Check automatic or manual transmission and load transmission oil levels.
- Visually inspect engine, gearbox and axles for any leakage or loose components.
- Check that drive shaft is properly seated.
- Check that there are no other loose chassis components.
- Visually inspect tire condition and inflation.

1.1 Breaking in the brake linings

To achieve optimum braking performance, all new brake pads must be broken in by activating the brakes.

WARNING
Risk of accident due to overloaded braking system!
The risk of accident increases when new brake pads are subjected to one or more braking operations over extended periods of time or if the vehicle is forced to a stop by hard braking from maximum speed several times.
▶ Hard braking and continuous braking are not permitted!

For drum brakes, the following applies in addition:
Activate the brakes by pumping them at low to medium speed. Hard braking is not permitted. The break-in distance generally depends on the vehicle capabilities, but a break-in distance of at least 500 km is advisable. The brake drum temperature must not exceed 200 °C during this phase. The temperature rise resulting from each individual braking action should not exceed 15% of the maximum value.

B195219

1 Planning crane operation

In addition to a perfectly working crane and a well-trained crew, **crane operation planning** is an important principle of safe crane operation.

DANGER
Missing information increases the risk of accidents!
Crane operation may not be possible or improvisation can result if a crane operator does not have all the required data.
▶ A crane operator must have exact data before starting any work!

The crane operator must obtain or receive the necessary information in a timely fashion before driving to the work site. In particular:
– type of crane operation
– work site (travel distance)
– route
– height and width clearance measurements
– electrical transmission lines (including voltages)
– space restrictions at the work site
– movement restrictions caused by buildings
– weight and dimensions of the load(s) to be hoisted
– required hoisting height and boom projection
– ground bearing capacity at the work site

Based on the above information, the crane operator must assemble the equipment required to operate the crane:
– hook block / load hook
– auxiliary boom
– separate lifting accessories
– counterweight
– underlay materials for support pads

B195219

1 General

Note

▶ The illustrations in this chapter are only examples. The illustrations may differ depending on the crane model.

1.1 Danger zone of crane

The danger zone of the crane is made up of the areas which are accessed during crane operation by the load or by movements of the crane or the crane components.

WARNING

Do not stay in danger zone!

Personnel within the danger zone cane be hit by falling loads or components!

Personnel in the danger zone can be caught by moving crane components or loads!

Fatal or severe injuries can be the result!

▶ Warn any personnel within the danger zone with the warning device of the crane!

▶ After the warning is issued, wait and ensure that no personnel remains within the danger zone!

▶ If required, block off the danger zone with a safety distance!

1.2 Danger of crushing when closing the windows

WARNING

Danger of crushing!

Never close the windows carelessly or uncontrolled. Significant crushing injuries can occur!

▶ During closing, watch the windows as it moves up!

▶ Make sure that no personnel or objects are wedged in!

1.3 Exhaust systems and other crane components with high temperatures

WARNING

Danger of burns!

You can get severely burnt on the surfaces of hot components!

This applies especially to exhaust systems, the engines and the respective gears in the crane chassis and in the crane superstructure!

▶ Let the components cool off before touching them!

▶ Proceed with special caution near heated crane components!

1.4 Movement on the crane

WARNING

Danger of slipping and falling!

The traction of steps, walkways and hand rails changes due to effects of the weather, such as wetness, snow, frost and dirt!

Personnel can be severely injured or killed!

The crane can be damaged!

▶ Step on the walkways and steps by taking the present conditions into account!

▶ Step or place a load only on the approved walkways and steps!

▶ Observed the signage!

▶ Replace damaged safety signs (warning signs) immediately!

1.5 Traffic endangerment and environmental damage

WARNING
Danger of slipping and skidding!
If the roadway becomes contaminated due to technical defects, open tank covers or leaking hydraulic oil, then this would pose a severe traffic endangerment!
Fatal accidents can result!
▶ Remove oil immediately and thoroughly!

blank page!

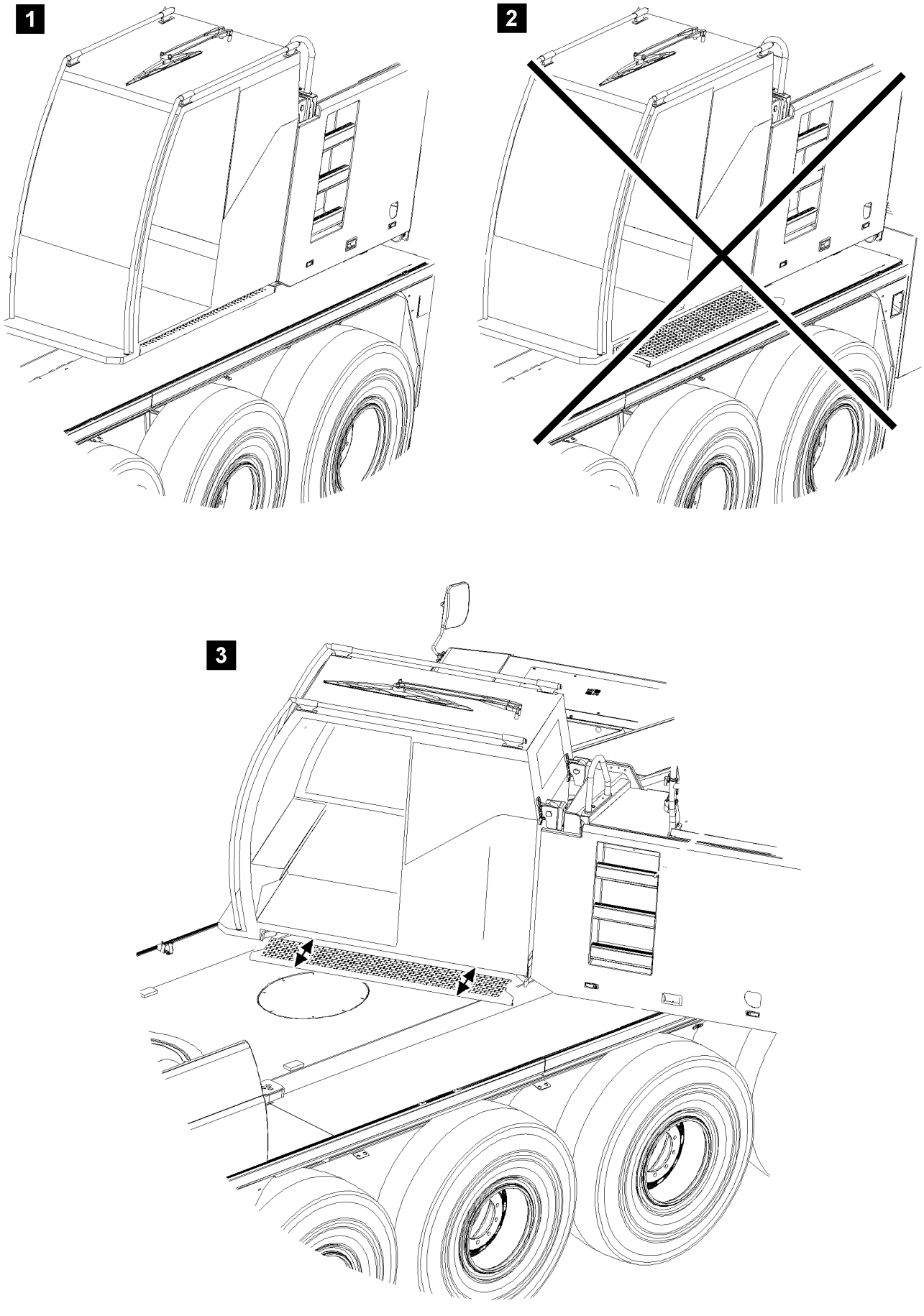

B109287

1.6 Crane cab with retracted / extended step

1.6.1 Entering / exiting of crane superstructure alignment length axis crane chassis

See illustration **1**.

Before entering the crane cab or existing from the crane cab, the following prerequisites must be met:

– The crane superstructure is aligned in length axis of the crane chassis.
– The step under the crane cab is retracted.
– The crane cab with incline adjustment is in 0° position.
– All folding ladders are folded into the ascent and descent position.

Note

▶ When all folding ladders are folded into the ascent and descent position, then a safe descent is possible from every position. See Crane operating instructions, chapter 2.07.

WARNING

Danger of falling!

If the crane superstructure is aligned in length axis of the crane chassis and the step is **not** moved out, then there is a danger of falling when entering / exiting! See illustration **2**.

Personnel can be severely injured or killed!

▶ Set up a suitable access, such as a ladder or pedestal, to ensure safe entry into the crane cab!
▶ When exiting the crane cab in position crane superstructure in length axis crane chassis, always move the step in completely!

1.6.2 Entering / exiting a swung crane superstructure

See illustration **3**.

Before entering the crane cab or existing from the crane cab, the following prerequisites must be met:

– The crane superstructure is swung to the point where a safe access to walkable surfaces of the crane chassis is ensured.
– For the crane cab with incline adjustment, the crane is in 0° position.
– All folding ladders are folded into the ascent and descent position.

Note

▶ Use extendable step!
▶ The extended step allows comfortable entry into the crane cab as well as safe exit from the crane to the crane chassis!
▶ When all folding ladders are folded into the ascent and descent position, then a safe descent is possible from every position. See Crane operating instructions, chapter 2.07.

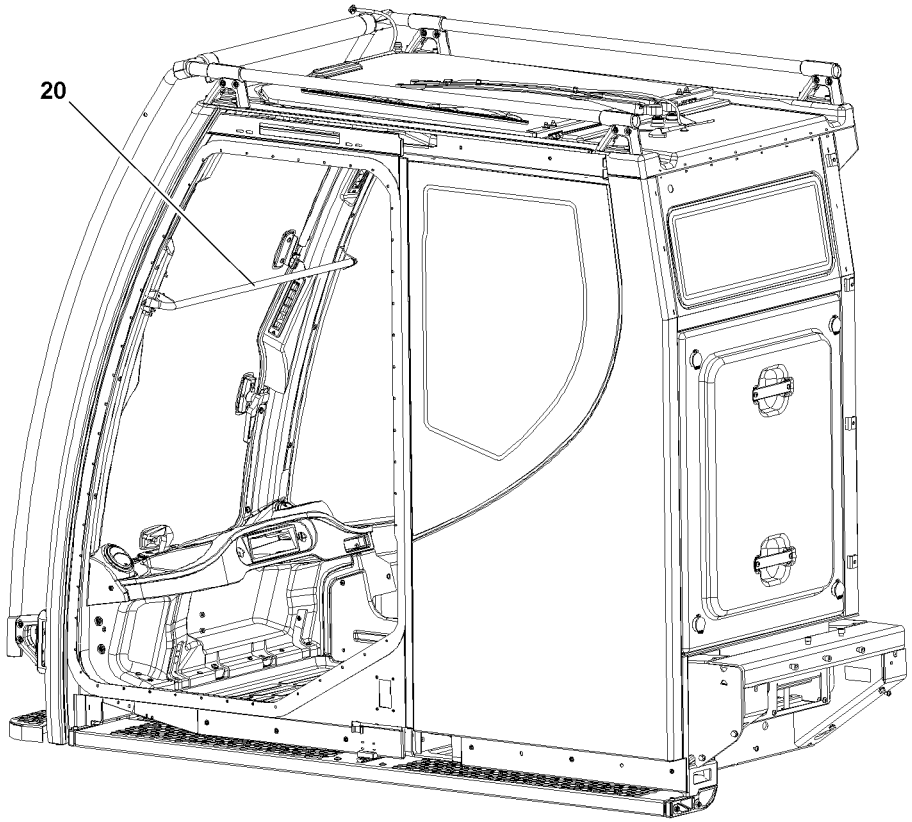

B114885

1.7 Crane cab with incline adjustment

WARNING
Danger of falling!
If the crane cab cannot be swung from an inclined position (for example 20° position) to the 0° position, for example due to a problem, then utmost caution must be used when entering / exiting the crane cab!
There is a danger of falling. Personnel can be severely injured or killed!
- ▶ For safety reasons, we recommend to take advantage of outside help!
- ▶ If necessary, have pedestals or other suitable entry aids set up to ensure safe exit from the crane cab!

WARNING
Danger of accident!
If the door of the crane cab is opened in inclined position, then the door can move back suddenly!
Hands can be crushed or injured!
- ▶ When the crane cab is in inclined position, open the door carefully!

1.8 Safety bar

Note
- ▶ The safety bar **20** is installed to protect the crane operator from a danger of falling when the front windshield is open.
- ▶ Do not use the safety bar **20** as a handle.

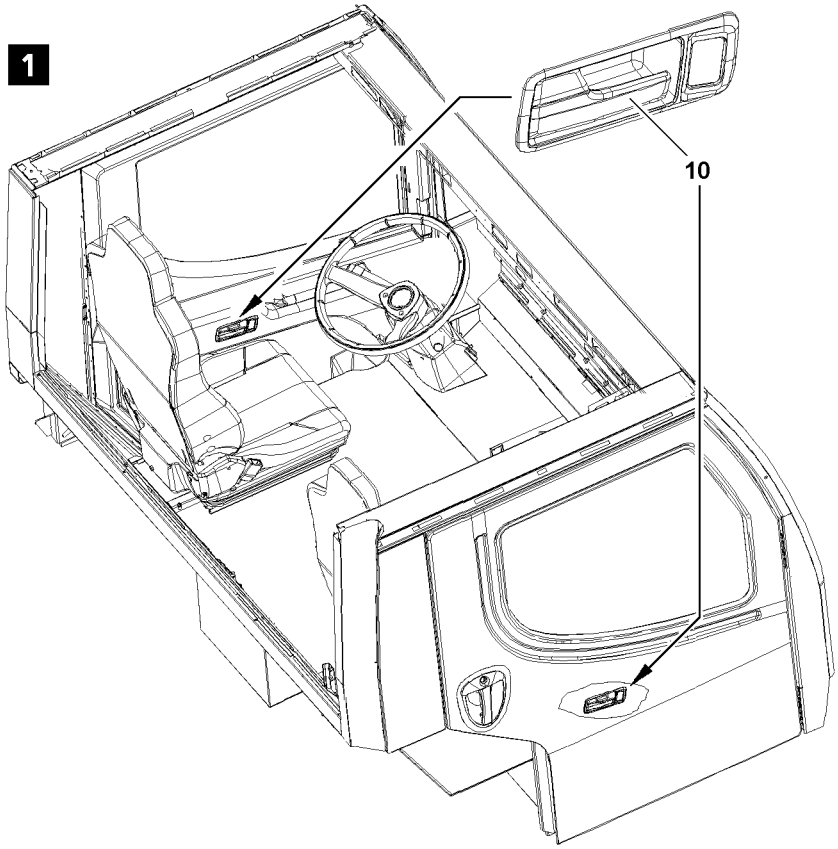

B112864

2 Emergency exit

2.1 Emergency exit - driver's cab

The driver's cab can be exited through the “left driver's door” or the “right passenger door”, see illustration **1**.

Note

▶ Exit the driver's cab through the “left driver's door” or the “right passenger door”, see illustration **1**: Pull and open the door handle **10** on the “left driver's door” or the “right passenger door”.

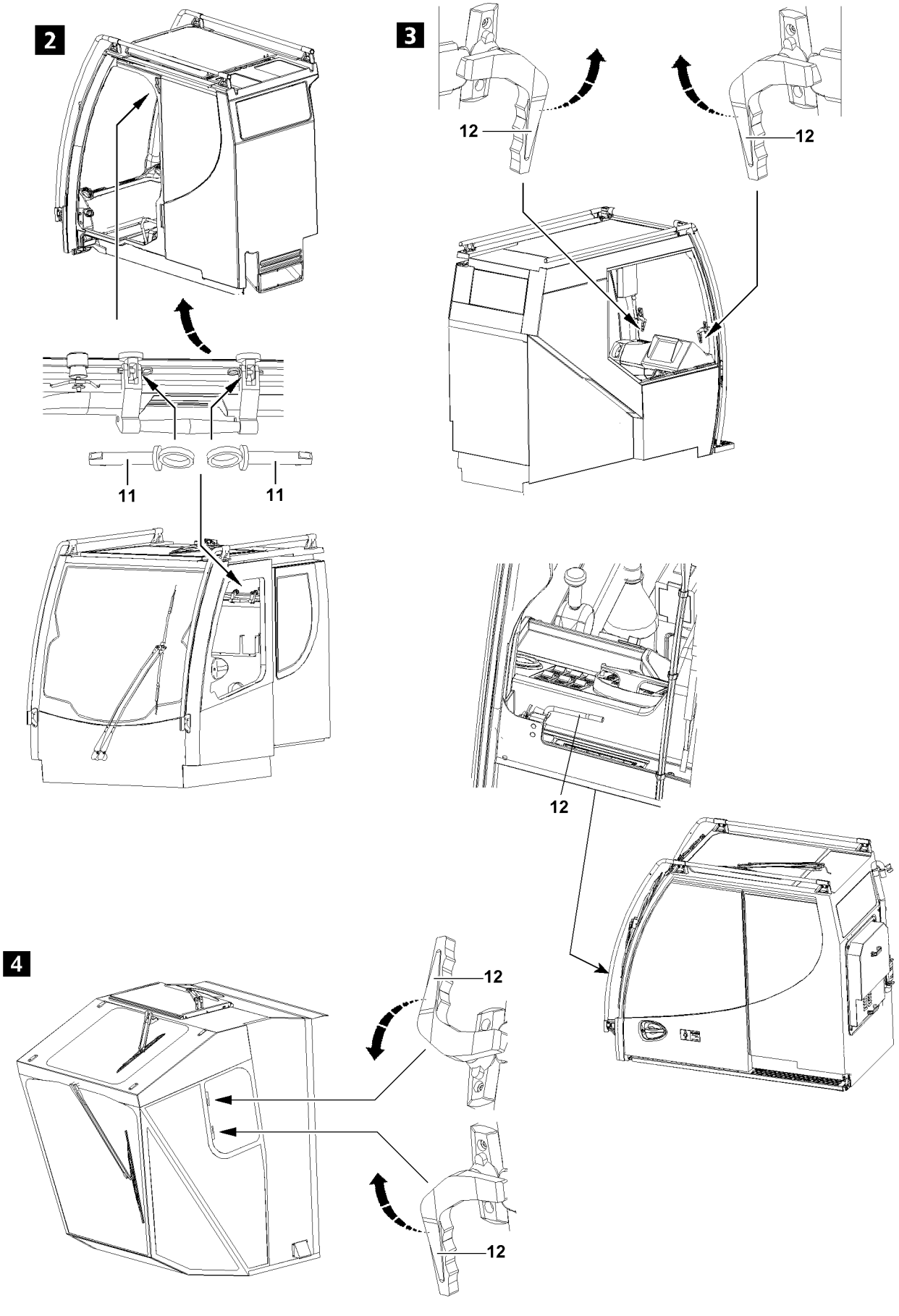

B112865

2.2 Emergency exist crane cab

WARNING
Danger of falling!
If it is not possible to safely leave the crane cab through the door or to reset the crane cab from inclined position to horizontal position, then the crane operator can fall from the crane cab during the emergency exit and be severely injured!

- ▶ Be especially careful when exiting at emergency exit!
- ▶ If the crane cab cannot be exited safely, use outside aid!

In case of an emergency, if it is not possible to leave the crane cab through the door, the crane cab can be exited through one of the following openings, depending on the model:

- **Roof window**, see illustration **2**: Pull the pins **11** on the left and right and open the roof window upward.
- **Rear window**, see illustration **2**: Pull the pins **11** on the left and right and open the rear window upward.
- **Front window**, see illustration **3**: Unlock the left and right handles **12** and open the front window.
- **Side window**, see illustration **4**: Unlock the top and bottom handles **12** and open the side window.

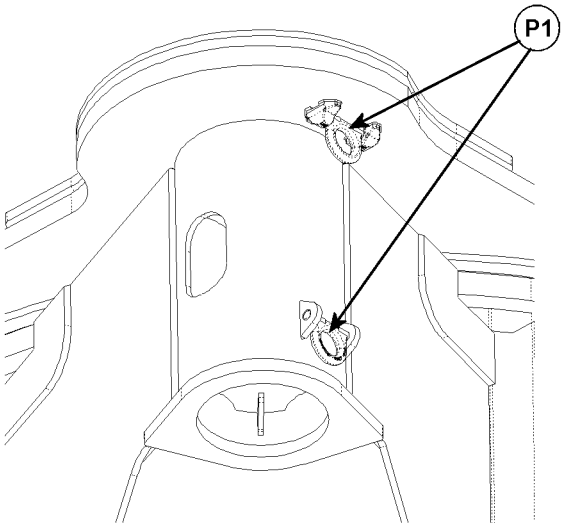

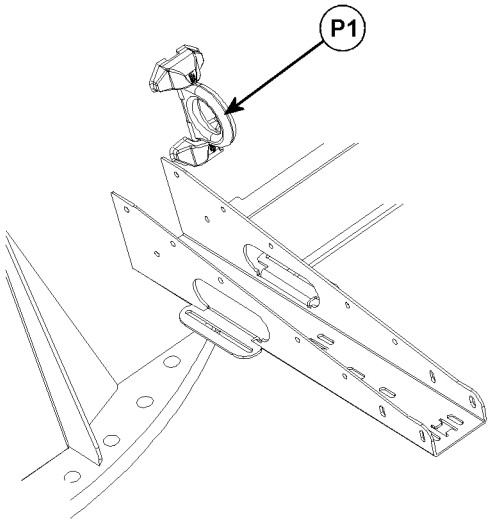

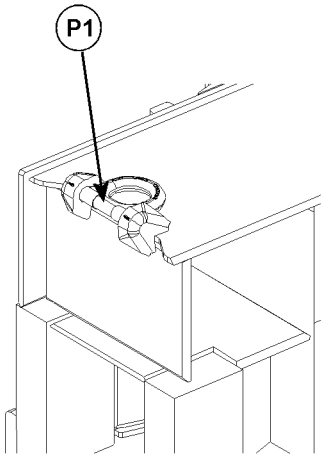

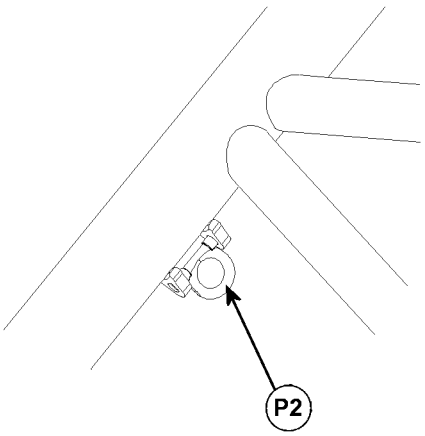

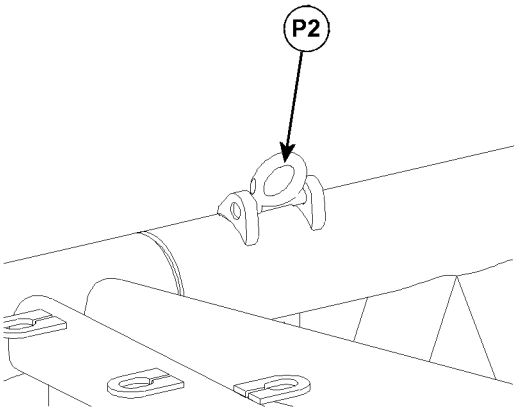

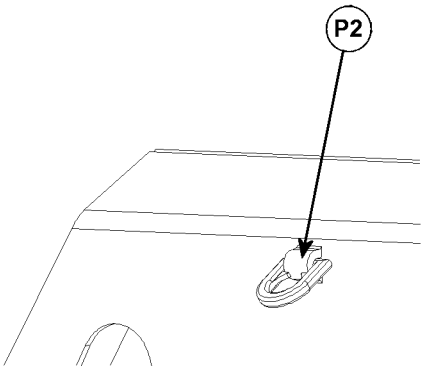

B111681

3 Checking the rigging and fastening points

The rigging and fastening points are marked as follows:
P1: Rigging points.
P2: Fastening points

Before every operation and at regular intervals, check the rigging points **P1** and the fastening points **P2** for cracks of the welding seam, significant corrosion, wear and distortion.
The inspection criteria are:

- Completeness of rigging points **P1** and fastening points **P2**.
- Distortion of carrying parts.
- Mechanical damage such as severe nicks.
- Changes in diameter due to wear.
- Significant corrosion (pitting).
- Cracks on carrying parts.
- Cracks or other damage on the welding seam.

WARNING
Danger of accident!
When using rigging and fastening points which are not operationally safe, severe personal and property damage can occur!

- ▶ Have rigging and fastening points, which are not operationally safe replaced with new rigging and fastening points by authorized and trained expert personnel!
- ▶ When hooking and unhooking the rigging and fastening equipment, handle carefully to avoid crushing, sheering, catch and impact points!
- ▶ Eliminate damage of rigging and fastening equipment due to sharp edged stress loads!

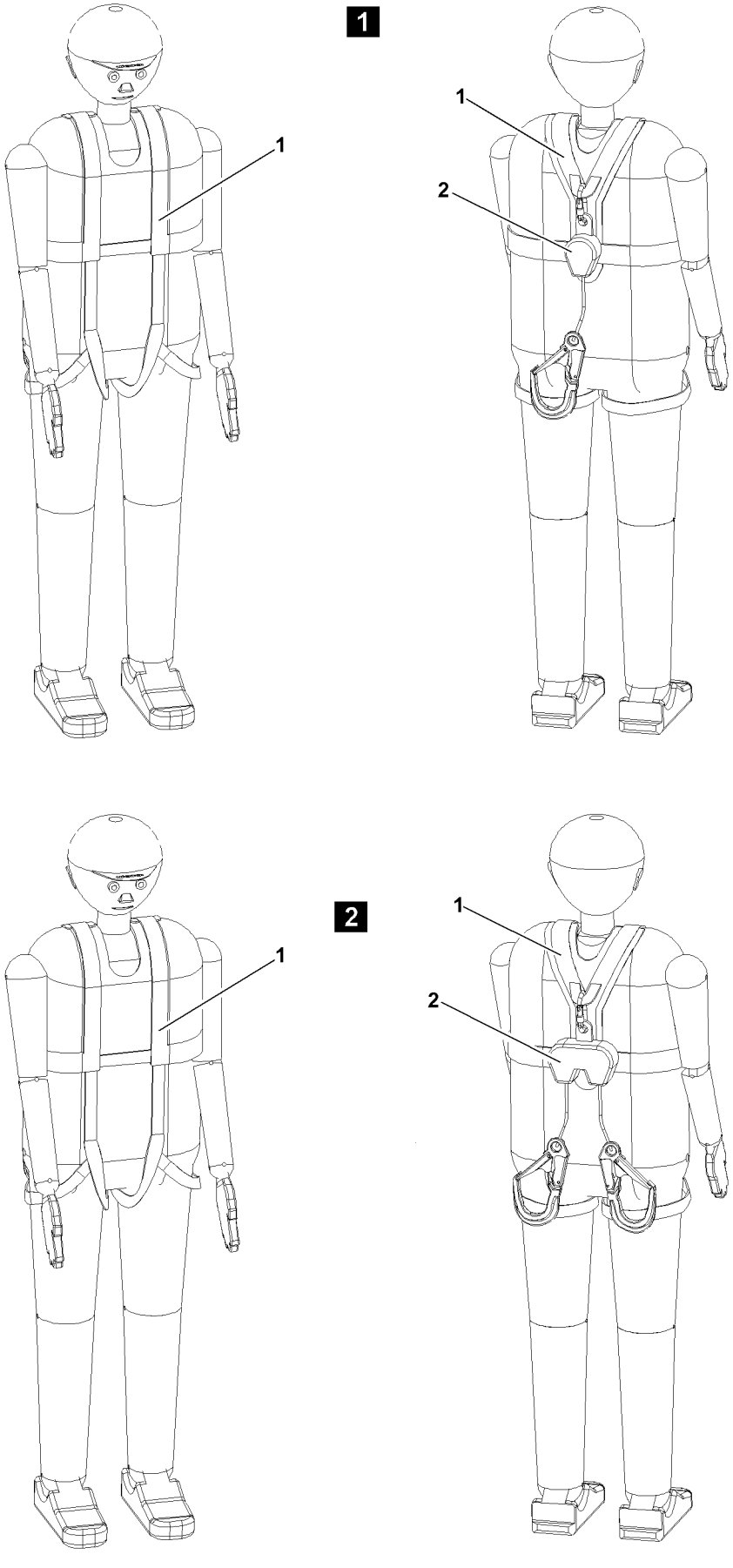

B111691

4 Personal protective equipment

WARNING
Danger of falling!
If personal protective equipment is not worn during assembly or maintenance work, then the assembly personnel can be killed or severely injured!
- ▶ Observe and adhere the operating instructions and maintenance instructions of the manufacturer for the personal protective equipment!
- ▶ Ensure through regular inspections that the product identification is not damaged!
- ▶ The crane operator must make personal protective equipment available for the assembly personnel!
- ▶ The crane operator must ensure that the personal protective equipment is worn by the assembly personnel!
- ▶ The assembly personnel is obligated to carry the personal protective equipment and to wear it!
- ▶ Check personal protective equipment before use for damage and completeness!
- ▶ Replace defective or damaged personal protective equipment with functioning protective equipment!

WARNING
Impermissible fall arrest system!
If a fall arrest system is used, which was not obtained via Liebherr-Werk Ehingen GmbH, there is a danger of falling! Another fall arrest system is **NOT** designed for the crane structure!
Personnel can be severely injured or killed!
- ▶ Utilize exclusively fall arrest systems from Liebherr-Werk Ehingen GmbH!

The personal protective equipment includes the following equipment:
- – Supplied fall arrest systems (safety harness **1** and height safety equipment **2**).
- – Head protection with chin strap: Protection from falling parts at assembly and disassembly. Hitting the head at assembly and disassembly of lattice mast equipment.
- – Non-slid and slip resistance safety gloves
  As a rule, when working with ropes, penetration safe safety gloves must be used.
- – Safety shoes: Protection from falling parts at assembly and disassembly.
- – Warning apparel.

WARNING
Danger of fatal injury!
Even personal protective equipment does not provide 100 % protection!
A helmet can protect against small falling objects, but not against falling loads!
Personnel can be killed or seriously injured!
- ▶ Always remain alert!
- ▶ Always be safety conscious!
- ▶ Standing under suspended loads is prohibited!

WARNING
Danger of accident!
If the following measures are not carried out, personnel can be killed or severely injured!
- ▶ A plan for rescue actions, taking all possible emergencies into account, must be on hand!
- ▶ The following points can endanger the safe function of the personal protective equipment: For example extreme temperatures, routing of connecting devices, routing over or around sharp edges, chemical influences, electrical effects, cuts, abrasion, climatic influences or swing movements during falls!
- ▶ For that reason, safety preparations must be made!

WARNING
Important for the safety of the user!

- If the personal protective equipment is sold to another country, then the purchaser must make the manufacturer's operating instructions as well as the inspection and maintenance documents available in the language of the user country!

blank page!

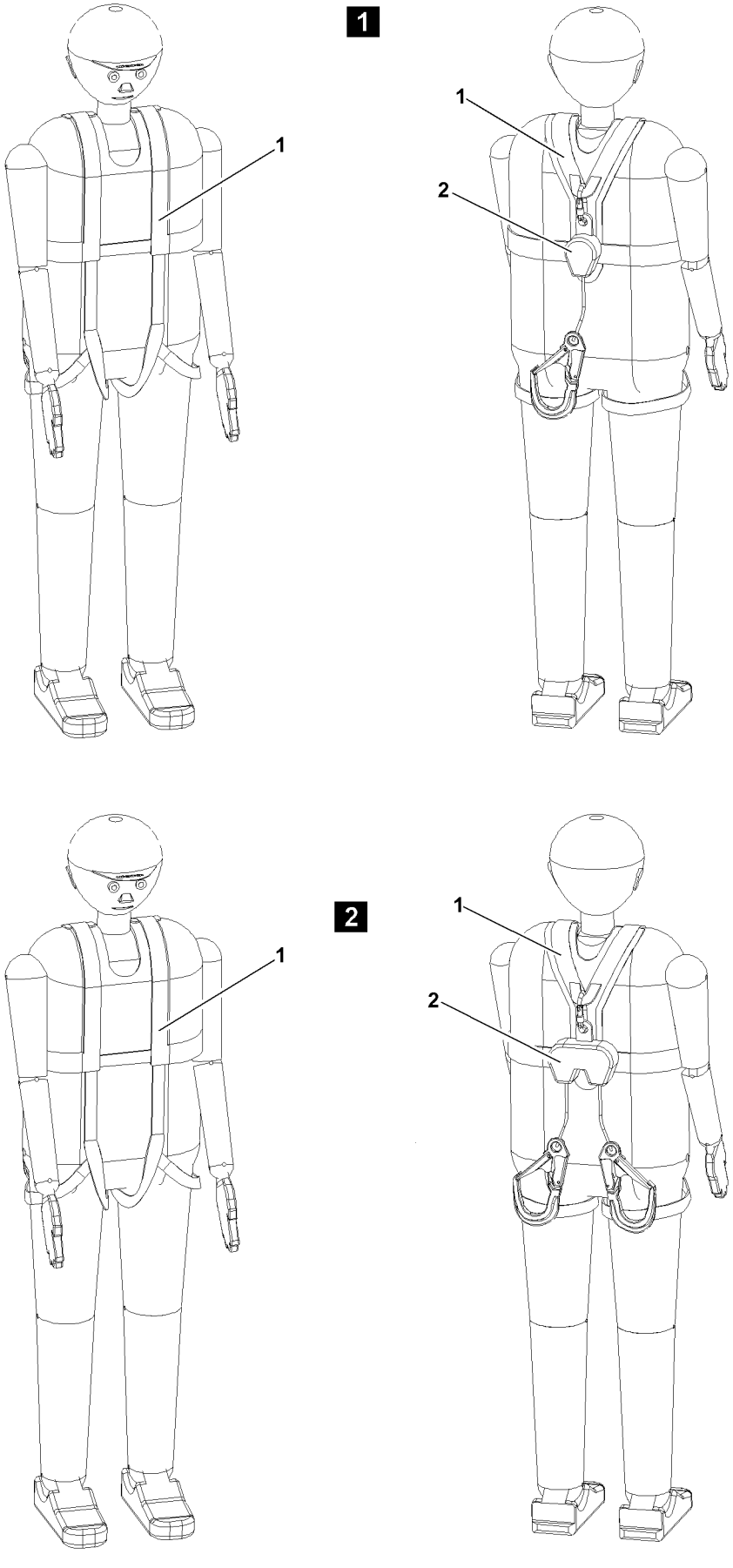

B111691

4.1 Supplied fall arrest system (safety harness and height safety equipment)

The supplied fall arrest system, consisting of safety harness **1** and height safety equipment **2** must be worn where no other fall protection equipment, such as railings, can be installed for technical reasons. In these cases, marked fastening and hook points for the fall arrest systems are provided on the components.

Note

- For cranes, which do not include the fall arrest system and the height rescue system as part of the scope of delivery can purchase the fall arrest system, consisting of safety harness **1** and height safety equipment **2** as well as the height rescue system at the Liebherr-Werk Ehingen GmbH.

Part of the category “Aids for working aloft” are, for example:

– Lifting platforms
– Scaffolding
– Auxiliary cranes

WARNING

Danger of falling!

If the fall arrest system is not worn during assembly or maintenance work, then the assembly personnel can fall down and be killed or severely injured!

- All work aloft, where there is a danger of falling must be carried out with suitable aids!
- If fall protection equipment is available, then the fall protection equipment must be used, see Crane operating instructions, chapter 2.06!
- If aids are not available and work cannot be carried out from the ground, then the assembly personnel must secure themselves with the supplied fall arrest system to prevent falling!
- The supplied fall arrest system must be fastened on the fastening and hook points as well as on the safety ropes. For safety points, see Crane operating instructions, chapter 2.06!
- The assembly personnel must be instructed in practice on how to wear the supplied fall arrest system (safety harness **1** and height safety equipment **2**)! Annual practice instructions and drills must be carried out!
- The supplied fall arrest system must be kept available!
- The fall arrest system consists of a safety harness **1**, approved according to **EN 361** and a height safety equipment **2**, approved according to **EN 360** (for horizontal application and sharp edges)!
- The supplied fall arrest system may not be changed in its configuration! Extending or shortening the fall arrest rope is prohibited!
- The fall absorber is integrated in the height safety device **2**. The utilization of an additional fall absorber is prohibited!
- The supplied fall arrest system is effective from a height of 2.5 m!
- The fall space must be free of obstacles!
- The intended safety points designed for this purpose on the crane must be used!
- The operating instructions of the manufacturer for the supplied fall arrest systems (safety harnesses **1** and height safety equipment **2**) must be observed and adhered to!
- Only step on the aids, ladders and catwalks with clean shoes!
- Keep aids, ladders and catwalks free of heavy dirt, snow and ice!
- The safety harness **1** and the height safety equipment **2** must be inspected annually by authorized and trained expert personnel and the results must be documented in the inspection log book!
- After every fall, the safety harness **1** and the height safety equipment **2** must be removed and inspected by an authorized and trained expert and the results must be documented in the inspection log book!
- The results must be documented in the inspection log book!

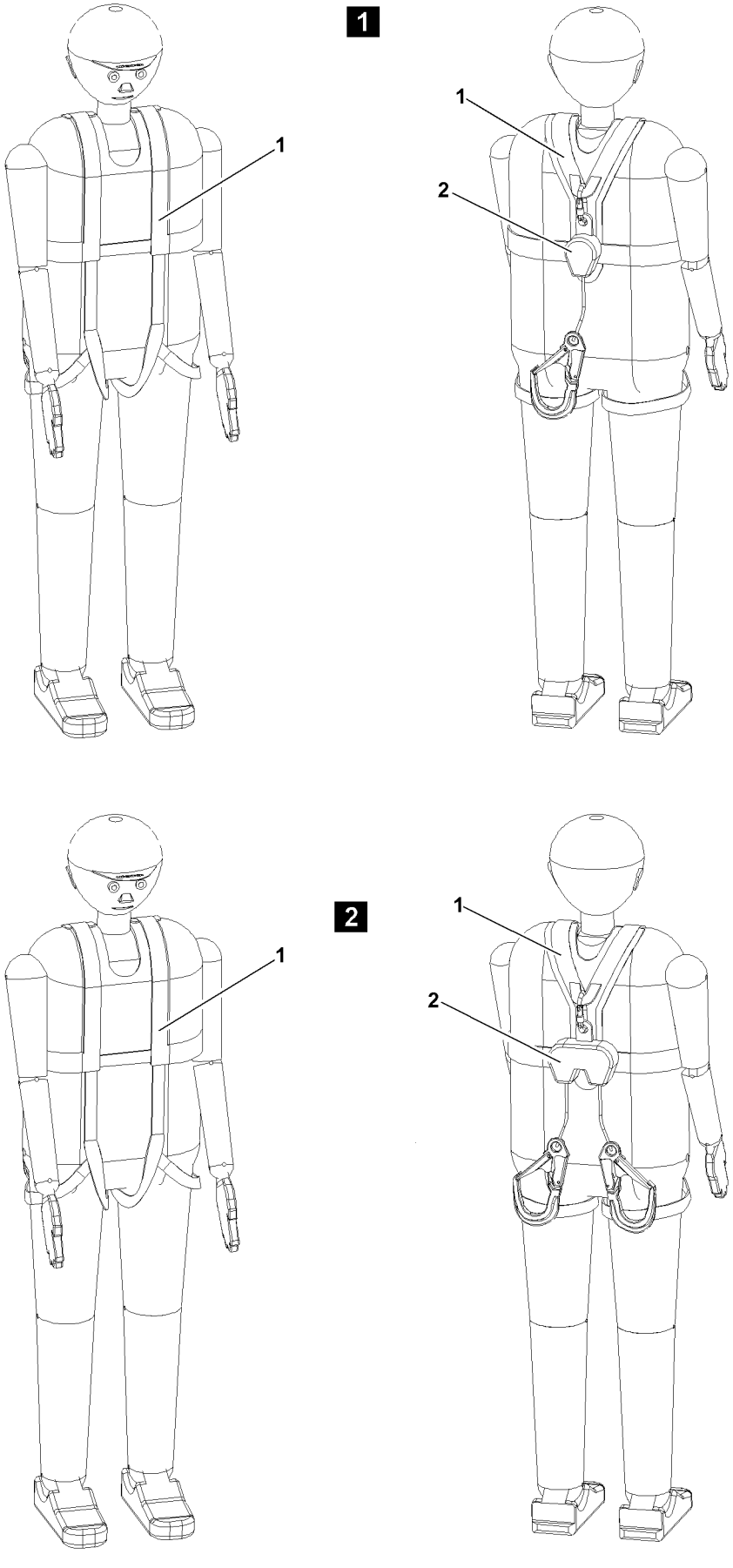

B111691

5 Use of single-stranded height safety equipment, illustration 1

Height safety equipment with a belt strap is intended for all cranes which have no catwalks with safety ropes. Use the supplied height safety equipment with extendable belt strap and snap hook (**EN 362 Class A**) with link.

6 Use of double-stranded height safety equipment, illustration 2

Height safety equipment with two belt straps are intended for cranes with catwalks, which are equipped with two ropes as fastening device on the left and right hand side of the catwalk. For example lattice sections, lattice booms, possibly telescopic booms or assembly units. Use the supplied height safety equipment with two extendable belt straps and snap hooks (**EN 362 Class A**) with links.

WARNING
Danger of falling!
▶ If two safety ropes are installed on the booms, lattice sections and other components, then the height safety equipment with two belt straps must always be used and one belt strap per safety rope must be hooked!

7 Securing the assembly personnel against falling

Make sure that the assembly personnel is wearing the supplied fall arrest systems (safety harnesses and height safety equipment) correctly.
A 3-point support is ensured when:
– two legs are standing safely and one hand has a safe hold.
– two hands have a safe hold and one leg is standing safely.

WARNING
Danger of falling in case of missing 3-point support!
▶ When accessing a ladder, do not hold any objects in your hands!

7.1 Working on the telescopic boom head

Reeve the hoist rope in or out on the pulley head:
– When working on a ladder, always use the supplied ladder with hook device. For fastening and hook points, see Crane operating instructions, chapter 2.06.
– When ascending, the assembly personnel must ensure a 3-point support.
– When working on the ladder, the assembly personnel must hook themselves with the snap hooks of the fall arrest system on the fastening points and secure themselves against falling.

7.2 Working on the auxiliary boom

Assembling or disassembling the auxiliary boom:
– When working on a ladder, always use the supplied ladder with hook device. For fastening and hook points, see Crane operating instructions, chapter 2.06.
– When ascending, the assembly personnel must ensure a 3-point support.
– When working on the ladder, the assembly personnel must hook themselves with the snap hooks of the fall arrest system on the fastening points and secure themselves against falling.

7.3 Walking on the telescopic boom

WARNING
Danger of falling!
The assembly personnel can fall down by slipping on the telescopic boom and be killed or severely injured!
- ▶ The telescopic boom may only be accessed if the assembly personnel is protected with suitable safety measures to prevent them from falling!
- ▶ If safety ropes are present on the telescopic boom, then the assembly personnel must hook themselves with the supplied fall arrest system on the safety ropes of the telescopic boom on the left and right with both snap hooks and secure themselves against falling!
- ▶ Without safety measures, it is **strictly** prohibited to step on the telescopic boom!

Assembly of the hoist rope or the TY-guying:
– During assembly, the assembly personnel must hook themselves on the fastening devices on the left and right with both snap hooks of the fall arrest system and secure themselves against falling.

7.4 Access to lattice sections or booms

Climbing the ladder:
– When ascending, the assembly personnel must ensure a 3-point support.

Changing from ladder to catwalk:
– Before changing over, the assembly personnel must hook at least one snap hook of the fall arrest system on a safety rope and secure themselves against falling.

7.5 Walking on lattice sections or booms

Walking on catwalks:
– When walking on catwalks, the assembly personnel must hook themselves on the safety ropes on the left and right with both snap hooks of the fall arrest system and secure themselves against falling.
– When changing the fall arrest system over to a new lattice section, the assembly personnel must be hooked with at least one snap hook of the fall arrest system one safety device.

7.6 Working on lattice sections or booms

Pinning, unpinning the lattice sections of pull rods:
– During pinning, unpinning of lattice sections or pull rods, the assembly personnel must hook themselves on the safety ropes on the left and right with both snap hooks of the fall arrest system and secure themselves against falling.

Attaching the lattice sections:
– When attaching the lattice sections, the assembly personnel must hook themselves on the safety ropes on the left and right with both snap hooks of the fall arrest system and secure themselves against falling.

7.7 Descending from lattice sections or booms

Stepping on the ladder:
– Before stepping on the ladder, the assembly personnel must hook at least one snap hook of the fall arrest system on a safety rope and secure themselves against falling.
– When stepping on the ladder, the assembly personnel must ensure a 3-point support.
– The snap hook of the fall arrest system may only be unhooked after standing safely on the ladder (3-point support).

Climbing down the ladder:
– When descending, the assembly personnel must ensure a 3-point support.

8 Rescuing the assembly personnel

The height rescue system, consisting of the rappelling rescue device, is an evacuation and rescue device. With the height rescue system, one or more persons can rappel down in an oscillating procedure from a higher to a lower location with limited speed. In addition, one person can be pulled up by a helper from a lower to a higher location.

WARNING
Danger of falling!
- ▶ The assembly personnel must be instructed and trained properly in the correct handling of the height rescue system! Annual practice instructions and drills must be carried out!
- ▶ The supplied height rescue system must be kept available!
- ▶ The operating instructions of the manufacturer for the height rescue system must be observed and adhered to!
- ▶ The height rescue system must be inspected annually by authorized and trained expert personnel and documented in the inspection log book!

8.1 First aid measures after rescue

WARNING
Danger of fatal injury!
- ▶ After the rescue, the patient must be positioned with the upper body raised (in seated or squatting position)!
- ▶ Immediate flat position or even shock position can be fatal!

9 Documentation

Note
- ▶ The documentation of the fall arrest systems (safety harnesses and height safety equipment) and the height rescue system must be carried out according to the operating instructions of the respective manufacturer.
- ▶ The crane operator, who employs the user, is responsible for the creation of documentation and entry of the required data.

10 Identification

Every personal protective equipment or other equipment must be marked clearly and permanently in the language of the user country.
If the identification is no longer legible, then the personal protective equipment must be handed to an expert for inspection.

11 Requirements for the crane operator

11.1 General

The crane operator's primary responsibility is to use and operate the crane in a manner that is safe for both himself and others.
The following important safety guidelines will help you achieve this.
Many crane accidents are caused by incorrect crane operation.

WARNING
Danger due to operating error!
▶ In your interest and in the interest of others, make sure that you know your crane. Also learn to recognize all dangers connected with the work to be carried out.

The main **operating errors**, which are made again and again while operating or driving a crane, are as follows:

- Not paying careful attention while working, for example:
  - Slewing too quickly
  - Stopping the load too quickly
  - Angular pulling
  - Slack rope formation
- Overloading
- Driving too fast with a load or equipment on an uneven roadway
- Attaching the load incorrectly
- Unsuitable operation; especially angular pulling, breaking away stuck loads
- Wind action on suspended loads
- Mistakes when driving on a road, for example:
  - Overspeeding the engine when driving downhill
  - Driving with turned on differential lock
- Crashing into bridges, roofs or high voltage wires due to insufficient headroom
- Inadequate support; support base, support under the support plates
- Mistakes during assembly or disassembly of booms

In many cases, crane damage is caused by improper maintenance:

- Insufficient oil, grease or antifreeze
- Contamination
- Broken cable wires, defective tires, worn parts
- Emergency limit switch or load torque limiter (LMB) not operating properly
- Brake and clutch failure
- Hydraulic defects; for example cracked hoses
- Loose bolts

11.2 Working on the crane superstructure or boom

WARNING
Danger of falling!
When working on the crane superstructure or boom, personnel must be secured with appropriate safety measures to prevent them from falling! If this is not observed, working personnel can fall and be killed or severely injured!

▶ For all work on the crane where there is a danger of falling, suitable safety measures must be taken!
▶ The crane superstructure or boom may not be accessed without suitable aids!
▶ Suitable aids are, for example: Lifting platforms, scaffoldings, ladders, assembly platforms, auxiliary crane.
▶ If railing are present on the crane superstructure, then they must be swung into operating position and secured for all work, see Crane operating instructions, chapter 2.06!
▶ Only step on such aids with clean shoes!
▶ Keep aids clean and free of snow and ice!
▶ If the work cannot be carried out with such aids nor from the ground, then the assembly personnel must secure themselves with approved fall arrest systems to avoid falling, see section “Personal protective equipment”!
▶ It is prohibited to step on the driver's cab or crane cab roof and specially marked surfaces, see Crane operating instructions, chapter 2.05!

11.3 Obligations of the crane operator

1.) Before starting to work, the crane operator must check the brake function and the emergency shut off devices. He must monitor the condition of the crane for obvious defects. On wireless controlled cranes, he must check the assignment of control unit and crane.
2.) The crane operator must cease crane operation in case of problems endangering the safety.
3.) The crane operator must report all defects on the crane to the appropriate supervisor, also to his replacement in case of crane change.
4.) The crane operator must make sure that:
   - All control devices are set to neutral or idle position before release of the energy supply to the drive components.
   - The control devices are set to neutral or idle position and the energy supply is shut off before leaving the control platform.
   - When taking down the control unit for wireless control, the control unit is secured to prevent unauthorized operation.
5.) The crane operator must ensure that cranes subjected to wind are not operated past the limits which were set by the crane manufacturer, and that the boom is taken down at least when the critical wind speeds for the crane are reached and at the end of the work.
6.) The crane operator must monitor the load at all crane movements or the load tackle devices when moving the crane without a load, if they could cause a dangerous situation. If observation is not possible, then the crane operator may move the crane only with the aid of a guide.
7.) The crane operator must give warning signs when necessary.
8.) The crane operator may not move loads over personnel.
9.) Any loads attached by hand may only be moved by the crane operator after he received a clear sign from the person who attached the load, the guide or any other responsible party which was assigned to that task by the contractor. If signals must be used to communicate with the crane operator, then these signals must be agreed upon before use between the responsible party and the crane operator. If the crane operator determines that the loads are not properly attached, then he may not move these loads.
10.) As long as a load is suspended on the crane, the crane operator must keep the control devices within reach. This does not apply for towing of vehicles with towing cranes.
11.) The crane operator may not run up to end positions operationally, if they are limited by the emergency limit switches.
12.) After a load moment limiter was triggered, the crane operator may not take on an overload by pulling in / raising the boom.
13.) The crane operator may **not** bypass the overload protection to increase the hoisting power of the crane.

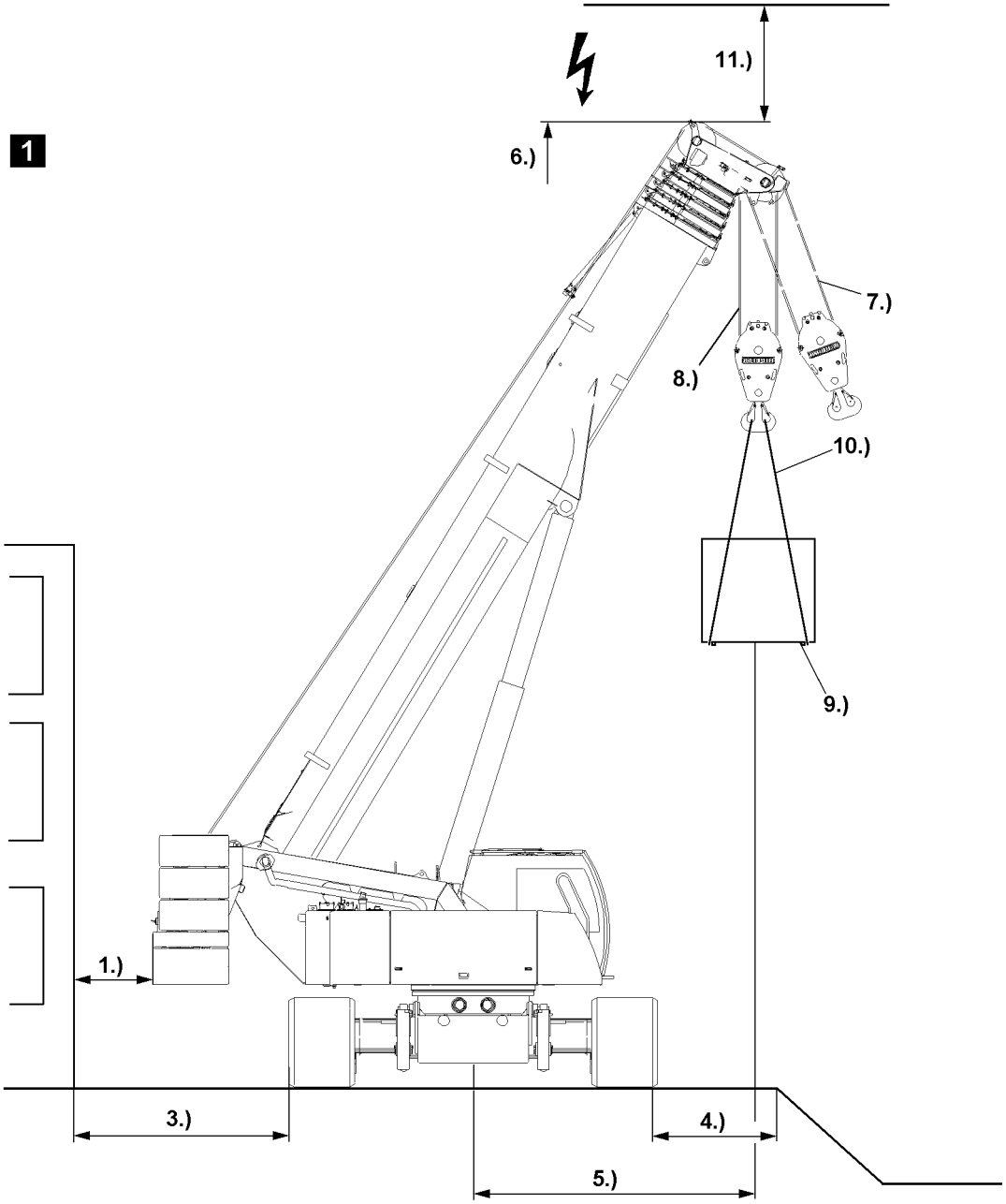

B104101 *Example for crawler crane with telescopic boom*

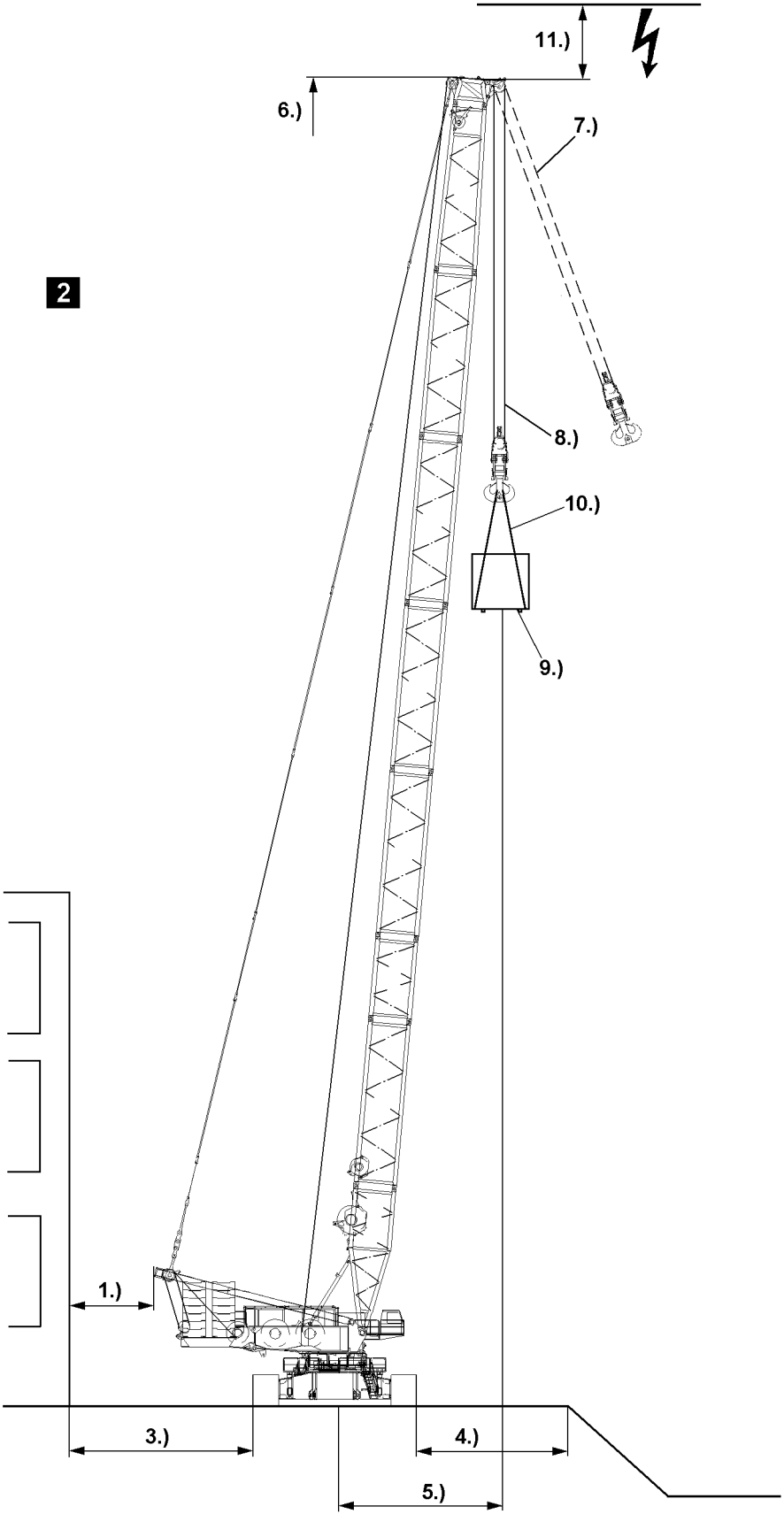

B104102 *Example for crawler crane with lattice mast boom*

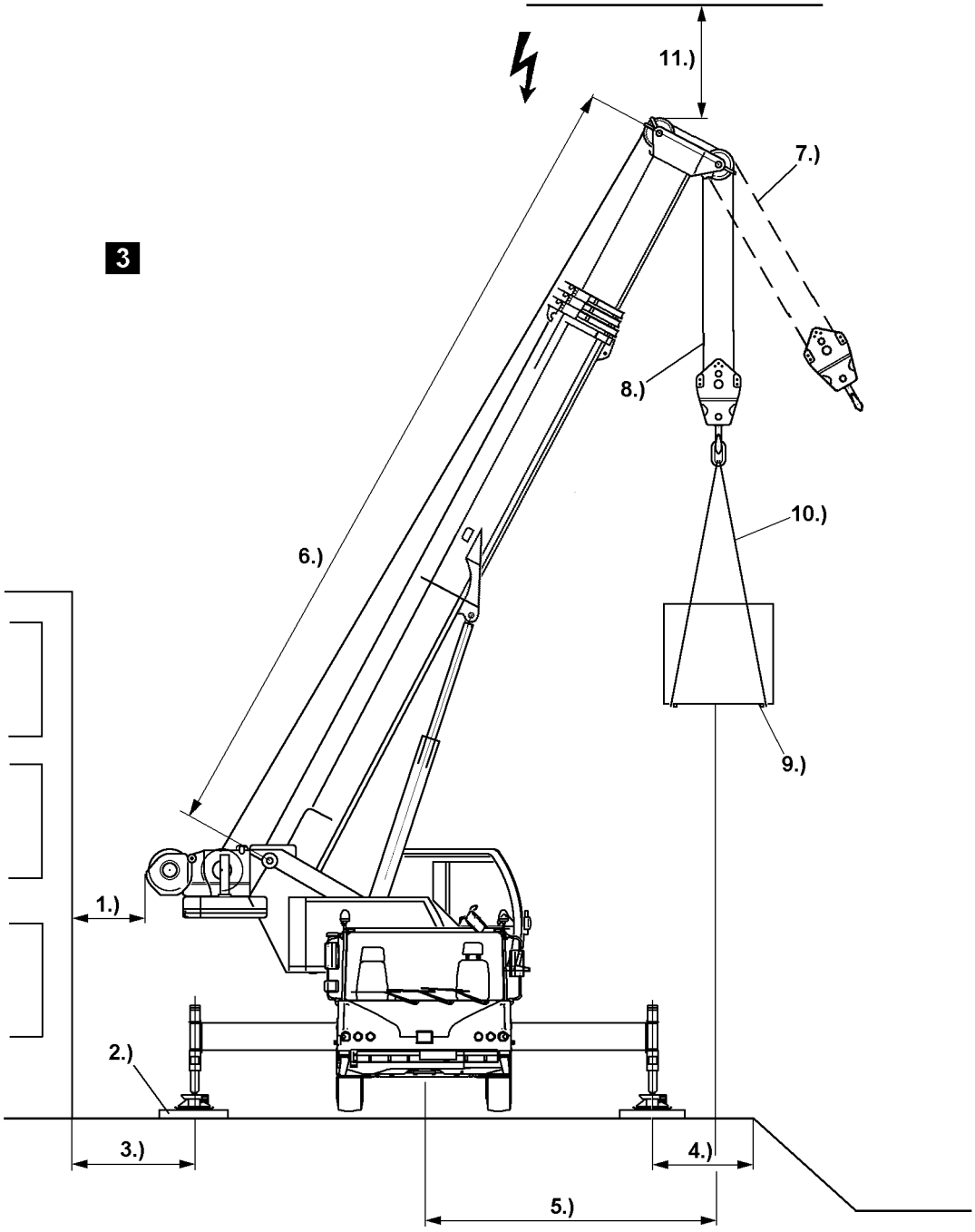

B104103 *Example for mobile cranes*

12 Selecting the location, illustrations 1 to 3

It is very important to choose an appropriate location for crane operation in order to minimize accident risks.

DANGER
Risk of accidents due to ground with **insufficient** load bearing capacity!
If the crane is supported or driven on ground with **insufficient** load bearing capacity, then the crane can topple over and kill personnel!

- ▶ Only support or drive the crane on ground with the required load-bearing capacity!
- ▶ Act responsibly when planning and selecting the crane location and route.
- ▶ Note the following points!

When selecting the location for the crane, observe the following:

1.) Select the placement location in such a way that crane movements can be carried out without collision and that the supports can be extended to the support base specified in the load charts.
Make sure that no personnel is injured or killed!
Always keep a safety distance of 0.5 m. If this is not possible, block the danger zone off.
2.) On mobile cranes:
Support the crane correctly and support the support plates according to the load bearing capacity of the ground on the placement location.
3.) Keep a safety distance to basements or similar.
4.) Keep a safety distance to slopes or similar.
5.) Keep the radius to as low as possible.
6.) Select the correct boom length to the load case.
7.) Angular pull is prohibited!
8.) Select the correct reeving of the hoist rope to the load case.
9.) Bear in mind the weight and the wind exposure surface of the load.
10.) Select tackle according to the weight of the load, the type of attachment and the incline angle.
11.) Keep sufficient distance to electrical overhead wiring.

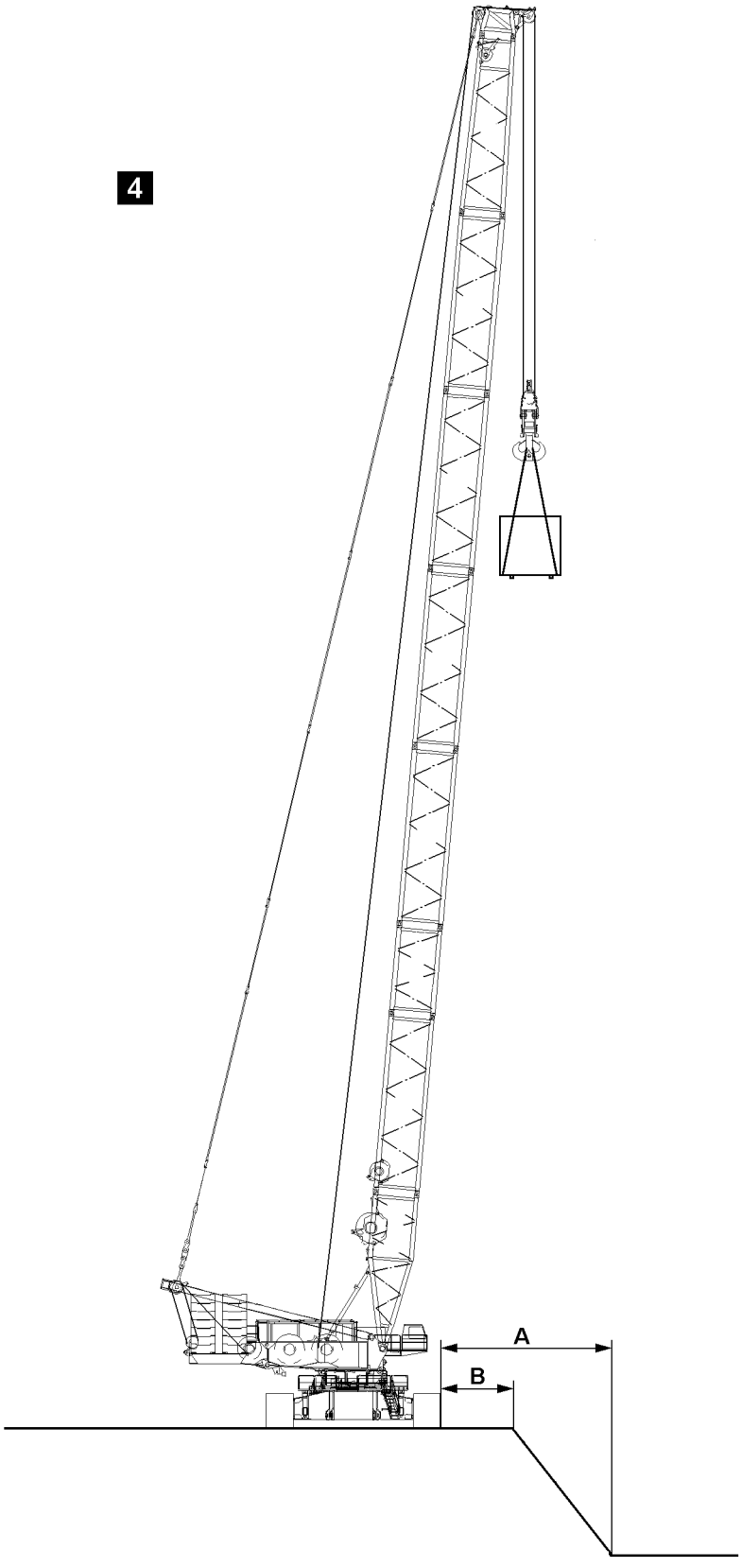

B108387

Example for crawler cranes

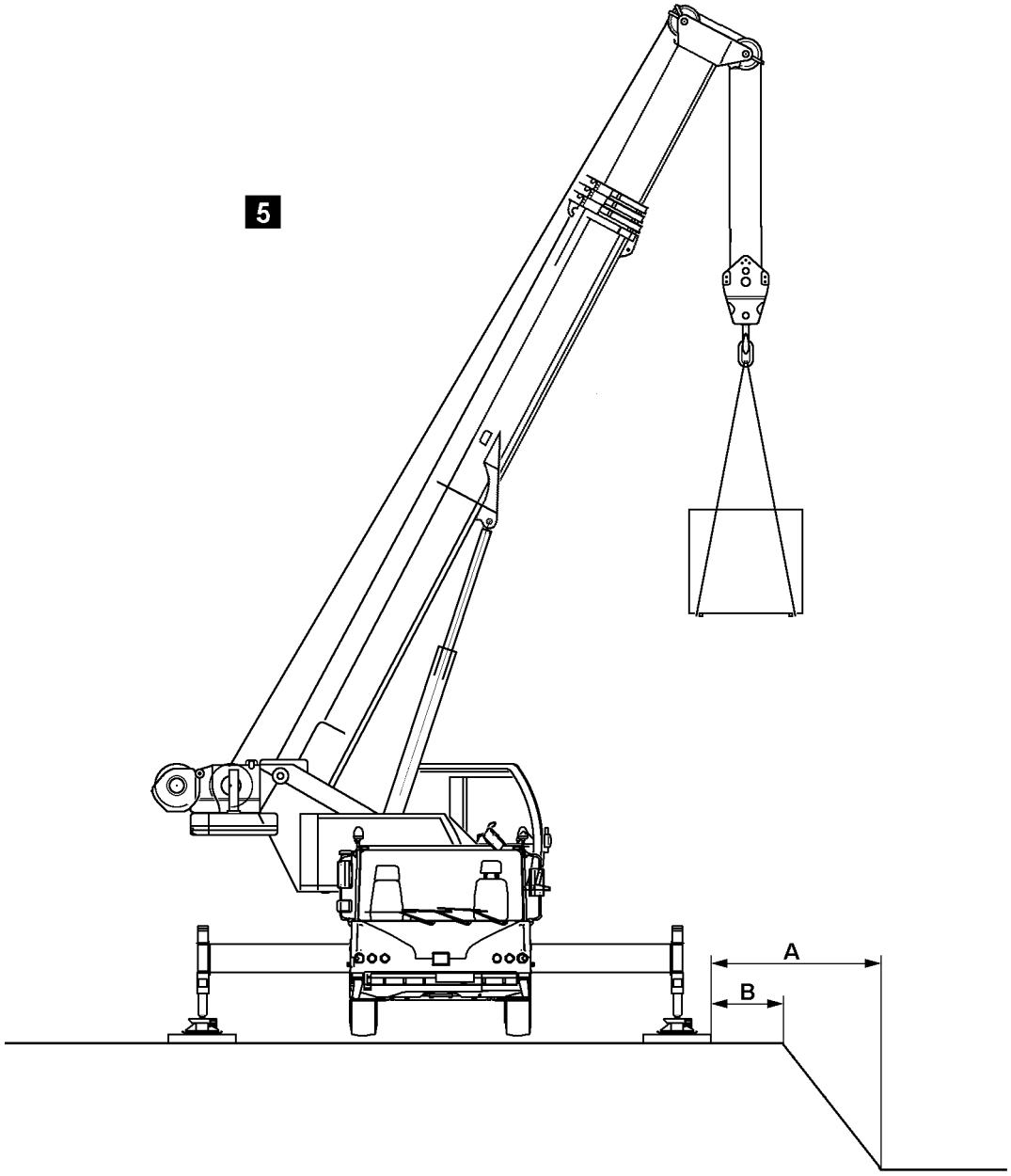

B108388

Example for mobile cranes

13 Slopes and excavations, illustrations 4 and 5

The crane may not be set up too close to slopes or excavations. Maintain adequate safety distance **A** and safety distance **B** in accordance with the type of soil.

WARNING
The crane can topple over!
The edge of the slope or excavation can break in if safety distance **A** or safety distance **B** is too small.
If the edge of the slope or excavation breaks in, the crane can topple over and kill personnel!
▶ Always maintain the required safety distance **A** and safety distance **B**!

Abbreviation	Term
A	Distance to bottom of excavation
B	Distance to excavation

14 Permissible ground pressures

Permissible ground pressures		
Soil type		[N/cm^2]
1.	Organic ground:	
	Peat, sludge, muck	0
2.	Uncompacted fill:	
	Construction debris	0 to 10
3.	Non-cohesive ground:	
	Sand, gravel, rocks and mix	20
4.	Cohesive soil:	
	a) Clayed silt, mixed with topsoil	12
	b) Silt, consisting of poor clay and coarse clay	13
	c) Plastic clay, consisting of potter's clay and fill	
	Solid	9
	Semi-solid	14
	Solid	20
	d) Mixed granular ground, clay to sand, gravel and rocky areas	
	Solid	15
	Semi-solid	22
	Solid	33
5.	Rock in evenly solid condition:	

Permissible ground pressures		
Soil type		[N/cm^2]
a)	Brittle, with traces of decomposition	150
b)	Not brittle	400

If there is any doubt about the load bearing capability of the ground at the site, soil tests should be carried out by specialists using, for example, a penetrometer.

14.1 Permitted ground pressure for crawler cranes

In crane operation, significant forces are transferred to the ground. The ground must be able to safely withstand the pressure. If the crawler area is inadequate, then the crawlers must be supported from below according to the load bearing capacity of the ground.

WARNING
The crane can topple over!
If the crane is not properly supported, the crane can topple over and fatally injure personnel!
▶ The foundation support must be large enough for the ground conditions and constructed from solid materials, such as wood or steel plates!

14.2 Permitted ground pressure for mobile cranes

When the crane is supported, the support cylinders transmit significant forces to the ground.
In any case, the ground must be able to safely withstand this pressure. If the support pad area is inadequate, the support pads must be supported from below according to the load bearing capacity of the ground.
The required support area can be calculated from the load bearing capability of the ground and the crane support force.

Note
▶ Consider that the support force, due to the counterweight, can be higher without a load than with a load.

WARNING
The crane can topple over!
If the crane is not properly supported, the crane can topple over and fatally injure personnel!
▶ Only strong materials may be used for the support pad bases; for example properly dimensioned wooden timbers!
▶ In order to ensure that pressure is evenly distributed over the base surface, the support plates must be positioned in the center of the support base!

Note
▶ The following are general calculation examples. The values are used only to explain the calculation steps. The crane specific values are in chapter 1.03 of the crane operating instructions.

Example: Calculation of specific support pressure	
Maximum support force according to crane operating instructions, chapter 1.03 for example: 720 kN	720000 N
Surface of square support plate with 550 mm side length according to chapter 1.03, for example: 302500 mm^2	3025 cm^2
80 % as carrying surface of support plate: 302500 mm^2 x 0.8 = 242000 mm^2	2420 cm^2
Specific support pressure = Support force / surface support plate	720000 N / 2420 cm^2 = 297.52 N/cm^2
Specific support pressure:	**298 N/cm^2**

The value of the specific support pressure is far higher than the permissible ground pressure for all types of granular soil. If this crane is utilized on bedrock, type of ground gravel, permissible ground pressure 20 N/cm^2 , then the support surface must be increased.

Example: Calculation of required support surface	
Maximum support force according to crane operating instructions, chapter 1.03 for example: 720 kN	720000 N
Permissible ground pressure, for example: 20 N/cm^2	20 N/cm^2
Required support surface = Support force / permissible ground pressure	720000 N / 20 N/cm^2 = 36000 cm^2
Required support surface:	36000 cm^2 = **3.6 m^2**

The surface of the support for each support plate must be at least **3.6 m^2** .

Note

▶ The corresponding support forces can be determined with the crane job planer.

14.3 LICCON job planer

The calculation of support forces and ground pressures of tracks with the LICCON job planner are based on idealized assumptions.
Side deformations of the boom system due to wind, inclined position and elastic compliancy of the steel structure are not taken into account in the LICCON job planner.
These influences can lead to an increase of support forces or increase of ground pressures of the tracks.

blank page!

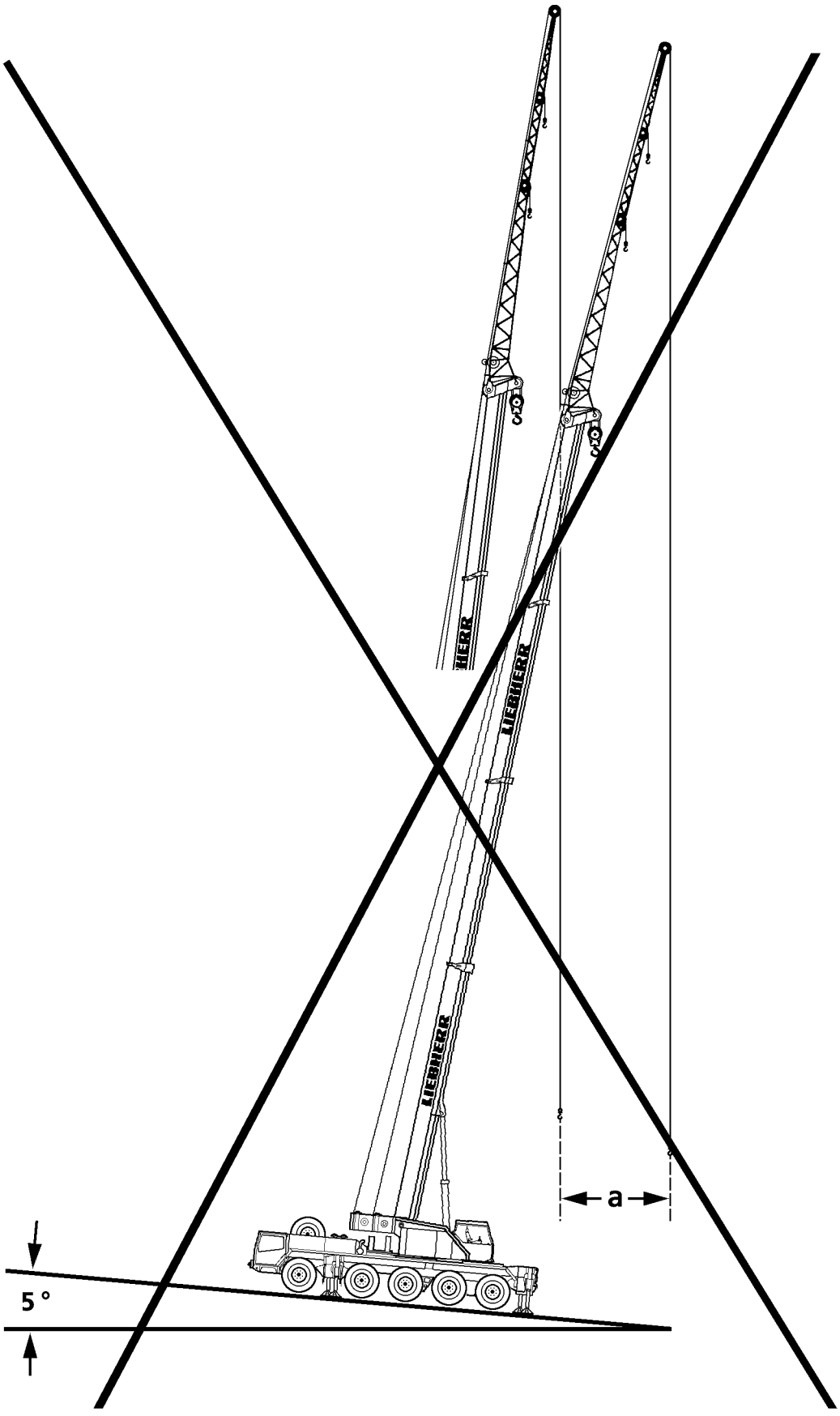

B180001

General example

15 Supporting

DANGER
The crane can topple over!
When actuating the supports with attached load and / or at loaded derrick ballast guying, the incline and the force conditions of the entire boom system change!
There is **no** shut off by the LICCON overload system!
The crane can topple over!
Personnel can be severely injured or killed!
- ▶ When a load is suspended, it is prohibited to actuate the support!
- ▶ When the derrick ballast guying is loaded, it is prohibited to actuate the support!

It is absolutely essential that the crane be supported exactly in accordance with the load charts to ensure safe crane operation.
The match of the sliding beams placement surfaces must be observed to ensure proper force transfer between the sliding beams.
The crane may only be supported in these extension conditions.

WARNING
Danger of tipping over!
If only the load side sliding beams are extended, the crane can tip over when turning or setting down the load!
- ▶ Move all 4 sliding beams and support cylinders out according to the data in the load chart!
- ▶ In intermediate positions between the support bases supporting is prohibited!
- ▶ Pin the sliding beams to support base according to the load chart!
- ▶ Fully insert and secure the pins!

WARNING
Risk of toppling the crane due to incorrect extension of the sliding beams!
The load suspended on the hook causes tension and deformation of the hoist rope and telescopic boom. The same applies for operation with lattice jib and guy ropes. If the load is dropped from the fastening ropes or if the fastening or hoist rope breaks in this situation, a sudden relief occurs. The boom snaps back quickly. This can cause the crane to topple over.
Despite previous assumption, it might become necessary to swing the load to the opposite side. This can cause the crane to topple over.
The telescopic boom or counterweight momentum may cause the crane to topple when slewing from the longitudinal vehicle position.
- ▶ Move all 4 sliding beams and support cylinders out according to the data in the load chart!

15.1 Aligning the crane

In addition to the proper foundation for the supports, the horizontal alignment of the crane is of utmost importance for safe crane operation.

DANGER
The crane can topple over due to the incline position!
If the crane is positioned at an incline and if the boom is turned towards the slope, then the boom radius is increased as a result!
It is possible that the slewing gear can no longer hold the crane superstructure and, in extreme cases, the crane can topple over!
Personnel can be severely injured or killed!
- ▶ Align the crane horizontally before starting crane operation!

If the horizontal alignment of the crane has to be readjusted:
- ▶ Set the load down on the ground before readjusting the crane!

Example: At a boom length of 50 m, a side incline of the crane by only 5° at a radius of 10 m causes an increase of the radius of a = 4 m.

16 Checking the safety measures

- The placement location has been selected in such a way that the crane can be operated with the least possible boom radius.
- The load bearing capacity of the ground is adequate.
- There is sufficient distance to excavations and slopes.
- There are no live transmission wires within the working range of the crane.
- There are no obstacles that will hinder required crane movements.
- The crane is horizontally aligned.
- On mobile cranes:
  - The axle suspension is blocked.
  - All four sliding beams and support cylinders have been extended according to the support base given in the load chart.
  - The sliding beams have been secured with pins to prevent them from moving.
  - The support plates are pinned and secured in the operating position.
  - The axles are relieved, which means the tires do not touch the ground.

17 Endangering air traffic

When working with cranes, heights are reached which could endanger air traffic. This applies especially to areas near airports.

WARNING
Endangering air traffic!
If no protective measures are taken, this can result in endangerment to air traffic!
- ▶ Get the approval from agency responsible for air traffic!
- ▶ Assemble the airplane warning light on the boom head and turn it on!
- ▶ If the airplane warning lights is operated for a longer period of time, with the engine turned off, then the battery can be discharged and as the result the airplane warning light turns off. To prevent the battery from discharging, an external electrical power supply must be established!

18 Grounding

18.1 Grounding the crane

WARNING
Danger of fatal injury due to electrical shock!
There is a risk of electrical shock, if the crane is not properly grounded.
- ▶ Properly ground the crane!
- ▶ Make sure that there is a potential equalization between the crane and the ground!

The crane must be grounded before operation:
- Near transmitters (radio and TV transmitters, radio stations, etc.).
- Near high frequency switching stations.
- In case of severe possibility of thunderstorms or potential thunderstorms.

The crane can become electrostatically charged, especially if the crane is equipped with synthetic support mats or if the support mats are placed on insulating materials (such as wooden planks).

18.2 Grounding the load

WARNING
Danger of fatal injury due to electrical shock!
There is a risk of electrical shock, if the load is not properly grounded!
- ▶ Properly ground the load!
- ▶ Make sure that there is a potential equalization between the load and the ground!

The load must be grounded before operation:
- – Near transmitters (radio and TV transmitters, radio stations, etc.).
- – Near high frequency switching stations.
- – In case of severe possibility of thunderstorms or potential thunderstorms.

The load can become electrostatically charged, even if the crane is grounded. This applies in particular if a hook block with pulleys made of synthetic material and non-conductive fastening equipment (for example plastic or manila ropes) are used.

19 Consideration of wind conditions

Note
- ▶ The wind speeds are valid for a 360° wind direction for a 3-second wind gust at the highest point of the crane!

WARNING
Disregard of permissible wind speeds!
If the permissible wind speeds are disregarded, the crane can topple over! Personnel can be severely injured or killed!
- ▶ It is prohibited to erect the crane to measure the wind speed!
- ▶ Observe the permissible wind speeds depending on the assembly / crane conditions and act accordingly, see following chart!

Assembly / crane conditions	**Reference for permissible wind speed**
Erection and take down of various boom configurations	Wind speed charts
Crane operation	Load chart manual
When the permissible wind speed according to the load charts is exceeded in crane operation, then **crane operation is prohibited!**	Wind speed charts
Interruption of crane operation when crane remains equipped	Wind speed charts
Crane out of operation, when crane remains equipped	Wind speed charts

WARNING
Increase of support force and exceedance of permissible ground pressure!
The wind load on the crane boom has **not** been taken into account for the planning of crane operation with the LICCON job planner!
As a result, the actual values of the support forces and the ground pressure can be significantly higher than the values determined with the LICCON job planner!
The wind striking the crane and the load, the elastic distortion of the crane structure, incline position as well as wind exposure surface (A_W) per ton of hoist load larger than 1.2 m^2/t can significantly increase the support force!
The ground pressure is increased!
▶ Do not exceed the permissible ground pressure!

Note
▶ The determining factor for all crane work in the actual wind speed at the job site of the crane!
▶ The current wind speed can be checked at the nearest weather bureau!
▶ Be aware that the wind speed on the boom jib is higher than near the ground!
▶ Always observe the national valid regulations!

19.1 Wind speed, wind gust speed and wind direction

The depiction of the wind is made by statement of wind speed (wind force), wind gust speed and wind direction.
High above the ground, the wind is less influenced by the surface condition of the ground. In the lower layers of the atmosphere, the wind speed is reduced by the ground friction. One differentiates between roughness of terrain, influence of obstacles and influence of terrain contours. Vegetation, buildings etc have great influence on the wind speed, wind gust speed and wind direction.
The site selection is thus especially important for wind measurement.
The wind speed, wind gust speed and wind direction are subject to significant time and local fluctuations. For that reason it is important to have reliable information regarding the expected wind speed, wind gust speed and wind direction during a load lift and to carry out exact wind measurements.
For mobile cranes, always assume a wind load of 360°. The determining factor is the “3 second gust speed” on the highest point of the boom.

19.2 Measurement of wind speed

The anemometer installed on the crane boom measures the wind speed on the tip of the boom and shows the current wind speed in the crane cab.
The function of the anemometer must be checked every time before erection of the boom by manually actuating the shell start for easy movement and proper function.
Before lifting a load, especially with large wind exposure surface, the wind speed and the wind direction expected during the lift must be known. Information can be obtained for example at the local weather bureau. The determining factor is the “3 second gust speed” on the highest point of the boom.

WARNING
Overload of crane!
The acoustic wind warning is only issued if the standard wind exposure surface in the load chart is exceeded (wind surface per ton load: 1 m², resistance coefficient: 1.2) given wind speed!
If the permissible wind speed must be reduced for loads due to large wind exposure surfaces, no acoustic wind warning is issued!
There is no shut off of crane movement!
▶ The wind exposure surface and the wind resistance coefficient for the load to be lifted must be known!
▶ The maximum permissible wind speed specified in the load chart must be reduced for large wind exposure surfaces as described in the load chart manual chapter „Wind influences during crane operation“!

For safe determination of wind speed, the crane must be turned before application by 360°. The highest measured value while doing so must be compared with the “maximum permissible wind speed” for the load according to the load chart. Thus the possibility that the result of the measurement is distorted due to nearby buildings, cranes or components is eliminated.
In gusty wind conditions, the probability of sudden high wind speed increases. In gusty wind conditions no large surface loads may be lifted.

Note

- If in doubt and in case of questions for further information and / or training in the area of “Wind influences in crane operation” please contact the Customer Service at Liebherr-Werk Ehingen GmbH!

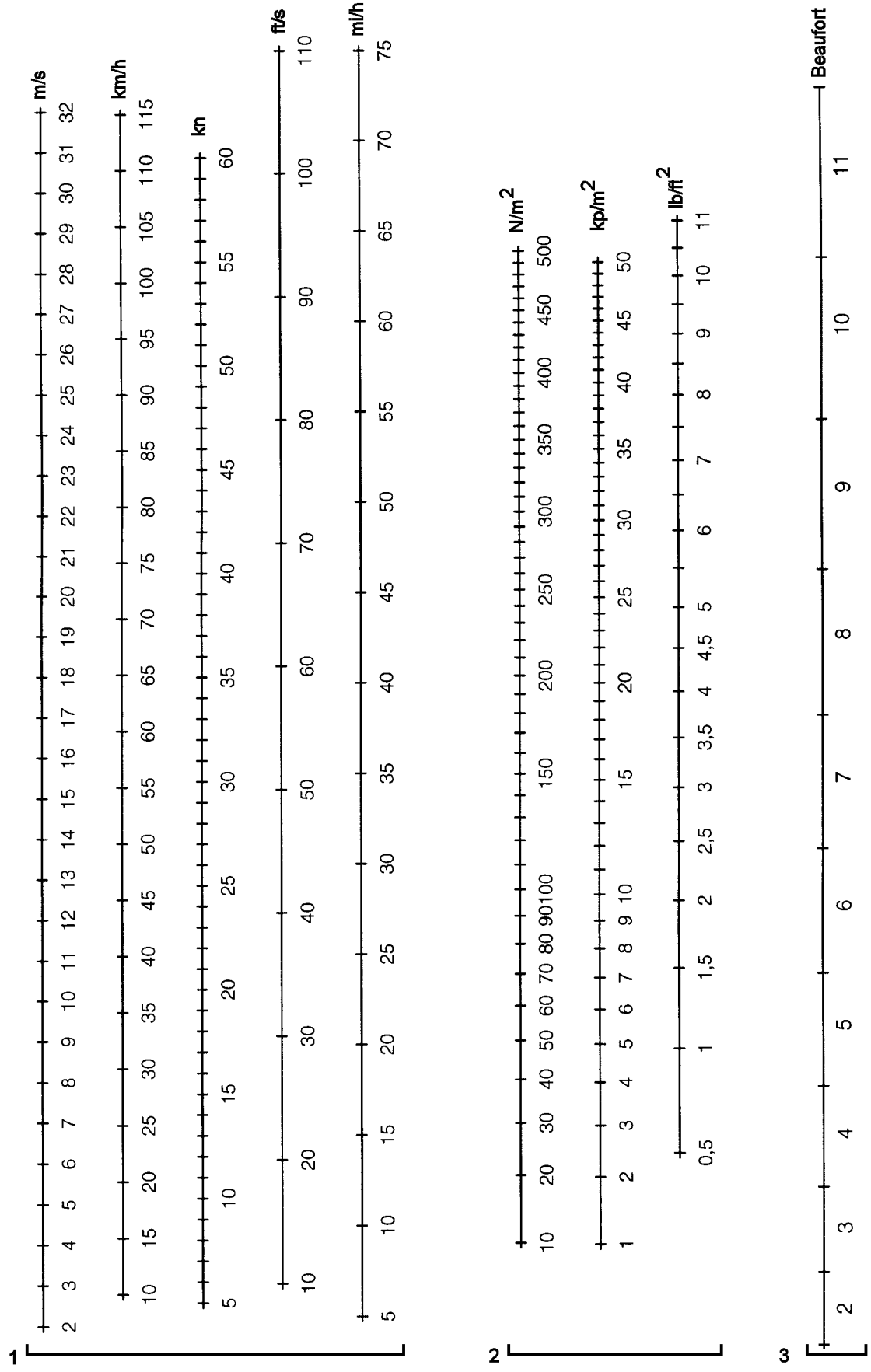

B106876

1 Wind speeds 2 Dynamic pressure 3 Wind velocity

19.3 Conversion chart for wind speed and dynamic pressure

Note

▶ The wind scales for the following conversion charts are in the adjacent graphic!

Wind speed					Dynamic pressure		
[m/s]	[km/h]	[kn]	[ft/s]	[mi/h]	[N/m^2]	[kp/m^2]	[lb/ft^2]
2	7.2	3.9	6.6	4.5	2.5	0.25	0.05
4	14.4	7.8	13.1	8.9	9.8	1.00	0.20
6	21.6	11.7	19.7	13.4	22.1	2.25	0.46
8	28.8	15.6	26.2	17.9	39.2	4.00	0.82
10	36.0	19.4	32.8	22.4	61.3	6.25	1.28
12	43.2	23.3	39.4	26.8	88.3	9.00	1.84
14	50.4	27.2	45.9	31.3	120.2	12.25	2.51
16	57.6	31.1	52.5	35.8	157.0	16.00	3.28
18	64.8	35.0	59.1	40.3	198.7	20.25	4.15
20	72.0	38.9	65.6	44.7	245.3	25.00	5.12
22	79.2	42.8	72.2	49.2	296.8	30.25	6.20
24	86.4	46.7	78.7	53.7	353.2	36.00	7.37
26	93.6	50.5	85.3	58.2	414.5	42.25	8.65
28	100.8	54.4	91.9	62.6	480.7	49.00	10.04
30	108.0	58.3	98.4	67.1	551.8	56.25	11.52
32	115.2	62.2	105.0	71.6	627.8	64.00	13.11

19.4 Conversion chart for wind force

Note

▶ The influence of the wind onto the surrounding is described clearly in the Beaufort wind chart below to provide an orientation for the crane operator!

Wind force		Wind speed		Effect of the wind
Beaufort	Description	[m/s]	[km/h]	Inland
0	Calm	0 to 0.2	1	Calm, smoke rises vertically
1	Slight air movement (draft)	0.3 to 1.5	1 to 5	Wind direction is shown only by observing the trail of smoke, not by the wind sock
2	Light breeze	1.6 to 3.3	6 to 11	Wind can be felt on the face, the leaves rustle, wind sock moves slightly
3	Gentle breeze	3.4 to 5.4	12 to 19	Leaves and small twigs in constant motion Wind extends a flag

Wind force		Wind speed		Effect of the wind
Beaufort	Description	[m/s]	[km/h]	Inland
4	Moderate breeze	5.5 to 7.9	20 to 28	Swirls up dust and loose paper, moves twigs and thin branches
5	Fresh breeze	8.0 to 10.7	29 to 38	Small deciduous trees begin to sway, whitecaps form at sea
6	Strong breeze	10.8 to 13.8	39 to 49	Thicker branches move; telephone lines begin to whistle, umbrellas are difficult to use
7	Near gale	13.9 to 17.1	50 to 61	Entire trees swaying; difficult to walk into wind
8	Gale force wind	17.2 to 20.7	62 to 74	Breaks branches off trees, impedes walking in open areas considerably
9	Gale	20.8 to 24.4	75 to 88	Minor damage to property (chimney caps and roofing tile are blown off)
10	Severe storm	24.5 to 28.4	89 to 102	Trees are uprooted, significant damage to property
11	Violent storm	28.5 to 32.6	103 to 117	Extensive, widespread storm damage
12	Hurricane	32.7 and more	118 and more	Major destruction

19.5 Height dependent wind speeds according to EN 13000:2010

Note

- The maximum permissible wind speed (v_{max}) and the maximum permissible wind speed according to the load chart (v_{max_TAB}) always refers to the 3 second wind gust speed, which is present in the maximum hoist height.
- Instead of the 3 second wind gust speed, weather information services often report a wind speed (v_m), which is averaged within a time period of 10 minutes (so-called 10 minute average). It refers to the wind force on the Beaufort scale, normally to the medium value of the wind speed, which is determined within a time from of 10 minutes at a height of 10 m above ground or above sea level.
- The determining factor for the calculation of the 3 second wind gust speed in maximum height is significantly higher than the medium value of the wind speed, which is determined over a time of 10 minutes at a height of 10 m above ground!
- The following chart shows the 3 second wind gust speed depending on the medium wind speed according to the Beaufort Scale and the height!

3 second wind gust speed depending on the medium wind speed according to the Beaufort Scale and the height

Beaufort number	3	4	5[a]	5	6	7[a]	7	8	9	10
v_m [m/s[b]]	5.4	7.9	**10.1**	10.7	13.8	**14.3**	17.1	20.7	24.4	28.4
z [m]	v(z) [m/s]									
10	7.6	11.1	**14.1**	15.0	19.3	**20.0**	23.9	29.0	34.2	39.8
20	8.1	11.9	**15.2**	16.1	20.7	**21.5**	25.7	31.1	36.6	42.7

Beaufort number	**3**	**4**	**5[a]**	**5**	**6**	**7[a]**	**7**	**8**	**9**	**10**
30	8.5	12.4	**15.8**	16.8	21.6	**22.4**	26.8	32.4	38.2	44.5
40	8.7	12.8	**16.3**	17.3	22.3	**23.1**	27.6	33.4	39.4	45.8
50	8.9	13.1	**16.7**	17.7	22.8	**23.6**	28.3	34.2	40.3	46.9
60	9.1	13.3	**17.0**	18.0	23.3	**24.1**	28.8	34.9	41.1	47.9
70	9.3	13.5	**17.3**	18.3	23.6	**24.5**	29.3	35.5	41.8	48.7
80	9.4	13.7	**17.6**	18.6	24.0	**24.8**	29.7	36.0	42.4	49.4
90	9.5	13.9	**17.8**	18.8	24.3	**25.1**	30.1	36.4	42.9	50.0
100	9.6	14.1	**18.0**	19.1	24.6	**25.4**	30.4	36.9	43.4	50.6
110	9.7	14.2	**18.2**	19.2	24.8	**25.7**	30.8	37.2	43.9	51.1
120	9.8	14.3	**18.3**	19.4	25.1	**25.9**	31.1	37.6	44.3	51.6
130	9.9	14.5	**18.5**	19.6	25.3	**26.2**	31.3	37.9	44.7	52.0
140	10.0	14.6	**18.7**	19.8	25.5	**26.4**	31.6	38.2	45.1	52.5
150	10.0	14.7	**18.8**	19.9	25.7	**26.6**	31.8	38.5	45.4	52.9
160	10.1	14.8	**18.9**	20.1	25.9	**26.8**	32.1	38.8	45.7	53.2
170	10.2	14.9	**19.1**	20.2	26.0	**27.0**	32.3	39.1	46.0	53.6
180	10.3	15.0	**19.2**	20.3	26.2	**27.1**	32.5	39.3	46.3	53.9
190	10.3	15.1	**19.3**	20.4	26.4	**27.3**	32.7	39.5	46.6	54.2
200	10.4	15.2	**19.4**	20.6	26.5	**27.4**	32.8	39.8	46.9	54.6

[a] Wind stages for the crane in operation:

1 light	v_m = 10.1 m/s	at z = 10 m	v(z) = 14.1 m/s	q(z) = 125 N/m^2
2 normal	v_m = 14.3 m/s	at z = 10 m	v(z) = 20.0 m/s	q(z) = 250 N/m^2

[b] Upper limit of Beaufort scale

Sign [Unit]	**Definition**
v_m [m/s]	Wind speed determined over 10 minutes at a height of 10 m (Upper limit of Beaufort Scale)
z [m]	Height above level ground
v(z) [m/s]	Speed effective at height z, decisive for the calculation of a 3 second gust
q(z) [N/m^2]	At a height z effective quasi-static back pressure, determined from v(z)

19.6 Wind influences during erection and take down

WARNING
The crane can topple over!
If a boom or a boom system is erected or taken down and the expected wind speeds are larger than the maximum permissible wind speeds according to the wind speed chart, then the crane can topple over and fatally injure personnel!
- ▶ If wind speeds are expected which are larger than the maximum permissible wind speeds for erection, then erection of the boom or erection of the boom system is prohibited!
- ▶ If wind speeds are expected, which are larger than the maximum permissible wind speeds for take down, then the boom or the boom system must be taken down immediately!

19.7 Wind influences in crane operation

WARNING
The crane can topple over!
Unforeseeable factors, such as sudden gusts of wind onto the crane and the load cannot be considered exactly in advance!
- ▶ Carry out a professional job planning with authorized and trained expert personnel!
- ▶ The authorized and trained expert personnel must have sufficient knowledge in the area of “Wind influences in crane operation”!

Note
- ▶ Calculation examples are included in the load charts. If you need further information, contact Liebherr-Werk Ehingen GmbH.

Depending on crane application, for example:
1.) Lifting of large surfaced loads.
2.) Working with long boom combinations.
3.) Erection and take down of boom combinations.

The crane operator must check with appropriate information sources about the expected wind speeds, at:
1.) The start of crane operation.
2.) Interruption of crane operation.
3.) Resumption of crane operation.

WARNING
The crane can topple over!
If the crane is operated at wind speeds which are larger than the maximum permissible wind speeds according to the load chart, then the crane can topple over and kill personnel!
- ▶ If wind speeds are expected which are larger than the maximum permissible wind speeds for the equipped crane, then the attachments and the boom must be taken down!
- ▶ If wind speeds are expected which are larger than the maximum permissible winds speeds for crane operation, then it is prohibited to lift a load!

19.8 Wind influences when the “Crane is not in service”

WARNING
The crane can topple over!
If the crane is taken out of service in configured condition and the expected wind speeds are larger than the maximum permissible wind speeds according to the wind chart, then the crane can topple over and fatally injure personnel!

- ▶ If wind speeds are expected which are larger than the maximum permissible wind speeds for “Taking the crane out of service”, then the attachments and the boom must be taken down!
- ▶ Always take the boom down for safety reasons if weather conditions are unclear, see Erection and take down charts!

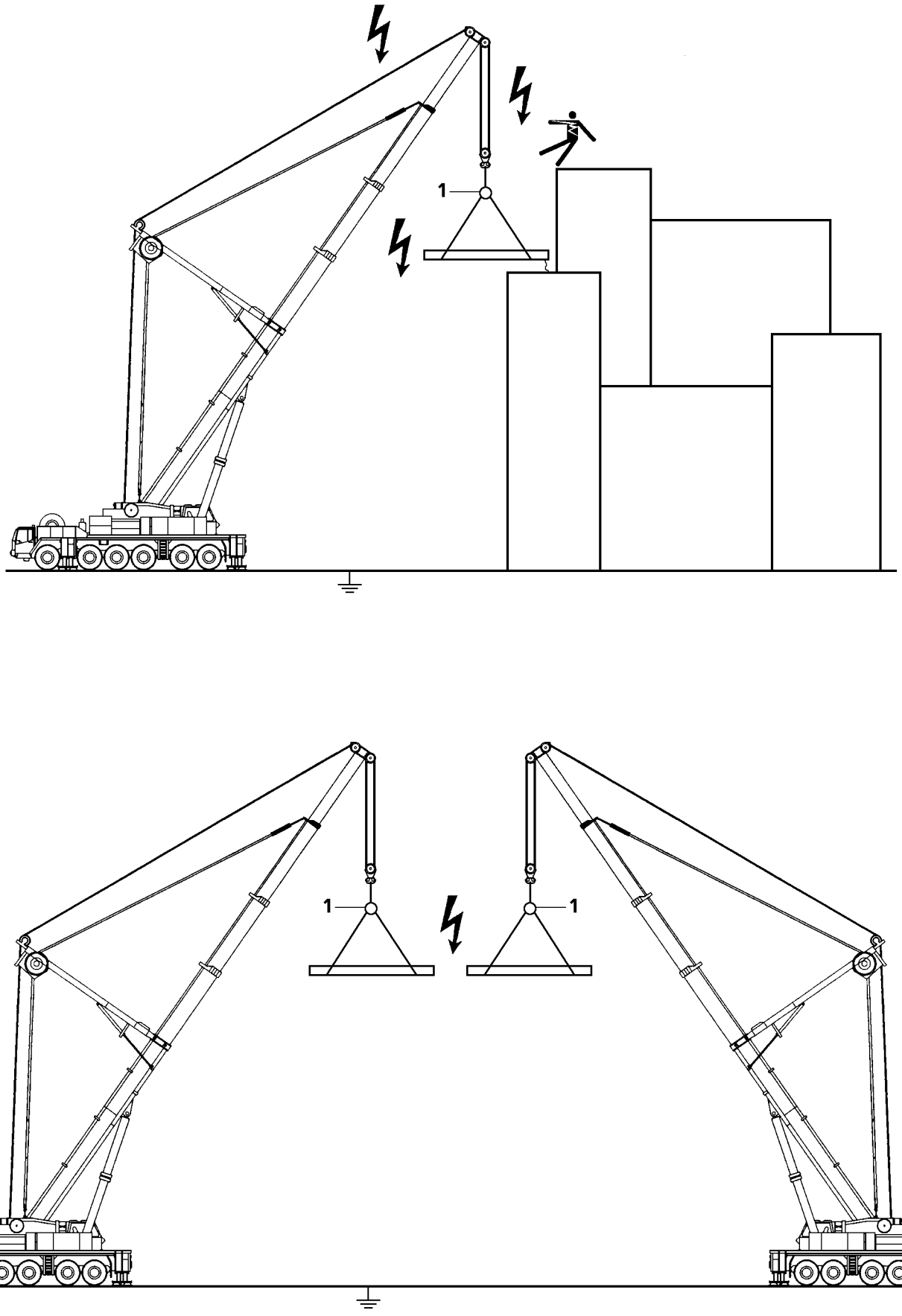

B189640

General example

20 Working in the vicinity of transmitters

Strong electromagnetic fields are likely to be present if the construction site is close to a transmitter. These electromagnetic fields can pose direct or indirect danger to persons or objects, for example:

– Effect on human organs due to temperature increase.
– Combustion and ignition caused by temperature increases.
– Sparks or arcing.

DANGER
Risk due to electromagnetic fields!

▶ Before operating a crane in the vicinity of transmitters, be sure to consult with Liebherr-Werk Ehingen GmbH!
▶ Also consult a high frequency specialist!

High frequency (HF) radiation from a transmitter requires supplementary work safety protection and special environmental specifications for crane operators and personnel:

1.) Each crane must be “fully” grounded. Check visually or with a simple continuity tester to ensure that ladder, crane cab and rope pulleys are grounded.
2.) All personnel working on the crane or with large metal objects must protect themselves from burns by wearing non-conductive synthetic gloves and suitable clothing while working.
3.) There is no need to panic if you feel your hand warm up. Always work under the assumption that the respective workpiece, structural steel member or support is “hot”.
4.) The temperature of objects affected by high frequency radiation depends on their “size”. Cranes, carriers and coverings, for example, are “hotter”.
5.) Contact with other crane loads is not permitted when operating the crane (arcing). Since defects caused by burns considerably reduce rope carrying capacity, any such occurrences must be reported immediately to the foreman so that the ropes can be inspected.
6.) An insulator **1** is required at all times between the crane load hook and fastening equipment. It is strictly prohibited to remove this insulator **1**.
7.) Do not touch the ropes above the insulator **1**.
8.) Loads that are attached to the crane may not be touched by any unprotected parts of the body after the load has been lifted or set down.
9.) Do not work with a bare upper torso or in short pants, this is prohibited.
10.) To minimize absorption of high-frequency radiation, larger loads should be transported horizontally if possible.
11.) Loads must be grounded, or additional insulation used (rubber material between the object and gloves) when manual work is required.
12.) Use a suitable measuring instrument to check the “temperature” of the workpiece.
For example, if 500 V can be measured on a tool at a distance of 1 cm - 2 cm, then the tool may not be touched with bare hands.
The greater the distance, the higher is the voltage on the object:
At 10 cm distance, approx. 600 V are present, at 30 cm distance approx. 2000 V are present.
13.) When refueling the crane, it must be ensured that no sparks are created within a radius of 6 m, neither by handling larger metallic parts nor by other work.
14.) To avoid secondary accidents, use personal protective equipment when working on components that are high off the ground.
15.) Any accidents and unexpected events must immediately be reported to the local construction supervisor and the safety engineer.

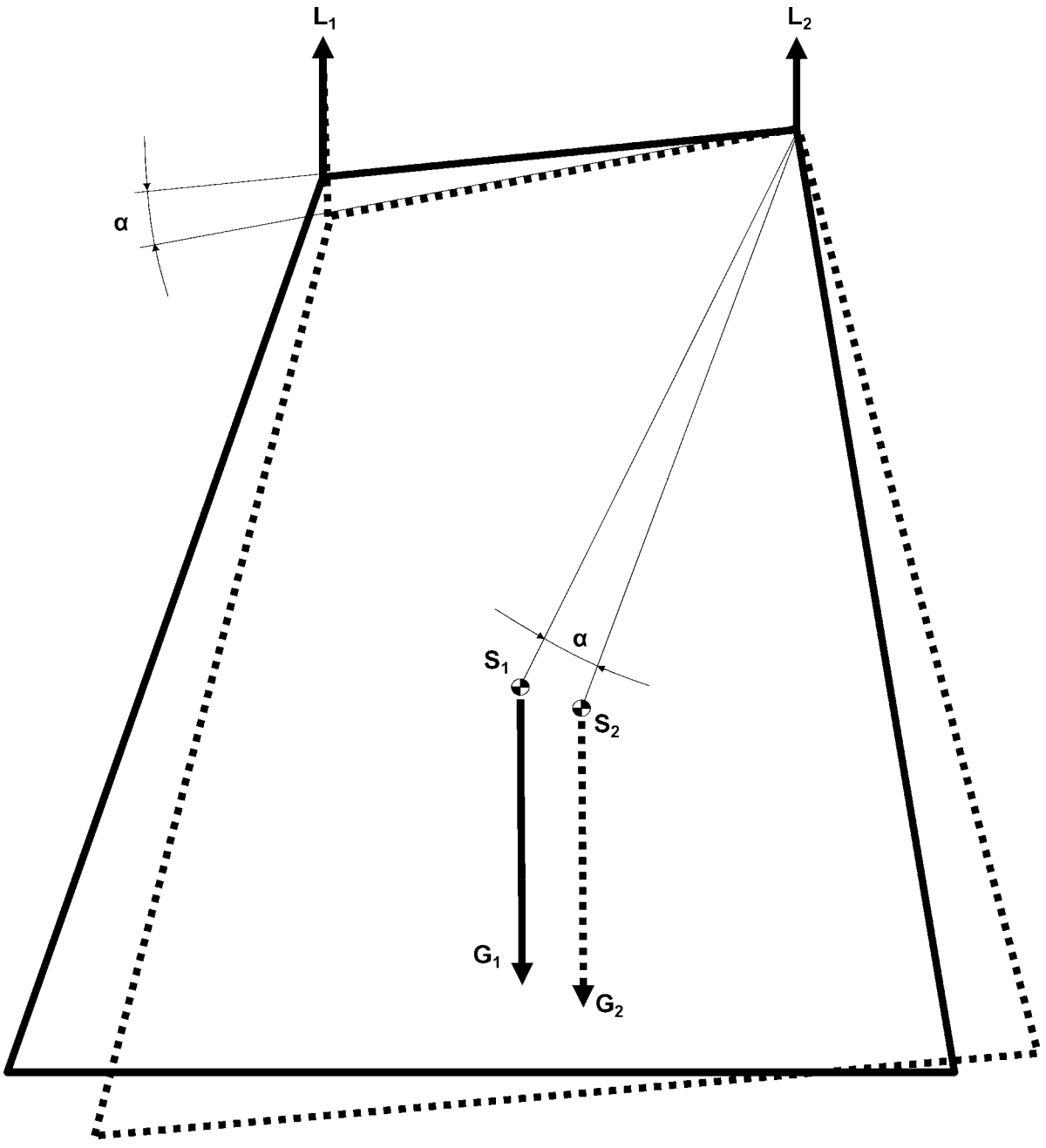

B111731

L_1 = Load on crane 1
L_2 = Load on crane 2
α = Angle of incline position
S_1 = Center of gravity of load
S_2 = Center of gravity of load at incline position

21 Dangers when working together with several cranes

21.1 Joint lifting of a load with two cranes

Before lifting a load jointly with two cranes, the operator of the cranes or a representative of the operator must determine the work sequence and assign a responsible supervisory person for the operation. The responsible supervisory person must monitor the operation.

Note

- ▶ The total weight and the center of gravity of the load must be known exactly!
- ▶ Carry out the job planning in detail and with care!

When the operational conditions or the work to be carried out require:

- ▶ Set up an assembly plan and operating instructions for the operation!

WARNING

Danger of tipping and overload of load carrying components!

If the load is not lifted or lowered exactly evenly by both cranes, then the center of gravity changes. One of the two cranes can be overloaded and topple over!

Personnel can be killed or seriously injured!

- ▶ Observe the national valid standards, regulations and accident prevention guidelines!
- ▶ Determine the utilization degree of the cranes in operation, depending on the complexity of the load lift!
- ▶ Plan for sufficient safety reserves!
- ▶ Utilize the load values given in the load chart manual for the used crane configuration to no more than the utilization degree of maximum 80 %!

In drawing is shown how the center of gravity for the load changes if the load is lifted or lowered unevenly. Already a slight incline of the load can cause the crane to be overloaded!
If the load on crane 1 **(L_1)** is lowered, the load on crane 2 **(L_2)** increases. As a result, crane 2 can be overloaded as a result of the load reduction of crane 1, without any action of its own!

21.2 Working ranges of several cranes overlap

WARNING

Risk of collision!

If the working ranges of several cranes overlap, there is a danger of collision!

Personnel can be injured or killed!

Significant property damage can result!

- ▶ The contractor or his representative must determine the work sequence in detail in advance!
- ▶ The contractor or his representative must ensure flawless communication between crane operators!
- ▶ The crane operators must ensure through calm operating mode, that no collisions occur due to uncontrolled movements! The crane operators must have been trained and instructed accordingly.

If the communication between the crane operators is not ensured by sound or visual connection, then suitable measures must be taken, such as using radio communication, guides or similar.

Note

- ▶ If guides are used, then the signals must be agreed upon between them and the crane operators, see section “Hand signals for guidance”!

22 Hand signals for guidance

For all crane movements, the crane operator must always keep the load as well as the crane hook or load lifting equipment when the crane is not loaded, in his field of vision.

WARNING
Danger of accident if standing under suspended loads!
- ▶ Always keep loads in sight!
- ▶ Standing under suspended loads is prohibited!

If this is not possible, the crane operator may only operate the crane if he is signed by an assigned guide.
The operator may be guided by hand signals or a two-way radio. It must be ensured that there are no misunderstandings.

WARNING
Danger of accident caused by misunderstood hand signals!
- ▶ Hand signals must be mutually agreed upon and clearly executed!
- ▶ In any case, **national regulations** must be observed!

22.1 General hand signals

22.1.1 Start operation

(follow my instructions)

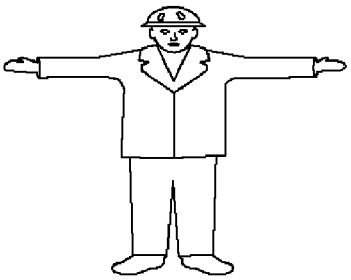

B111700

Both arms stretched out horizontally with hands open and palms directed to the front.

22.1.2 Stop

(normal stop)

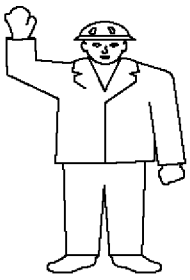

B111701

Lift one arm overhead with open hand and palm directed to the front.

22.1.3 Emergency stop

(quick stop)

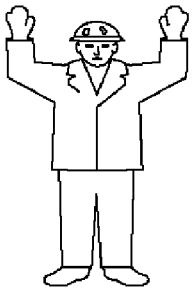

B111702

Lift both arms overhead with open hands and palms directed to the front.

22.1.4 End operation

(no longer follow my instructions)

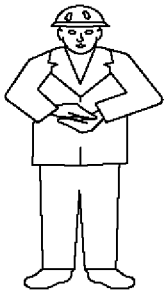

B111703

Fold hands together at chest height in front of body.

22.1.5 Inching gear or very slow movement

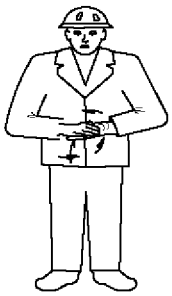

B111704

Rub palms together in circular motion. After this sign, all other applicable hand signals apply.

22.2 Vertical movements

22.2.1 Show the vertical distance

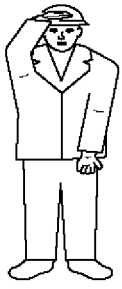

B111705

Both arms stretched out in front of the body one on top of the other, with opposing palms.

22.2.2 Lift / lower a load with even speed

B111706

Lift one arm overhead with closed hand and index finger pointing upward, with small horizontal circular movements with forearm.

22.2.3 Lift slowly

B111707

Give lift signal with one hand, the other palm is not moving and positioned over the hand, which gives the signal.

22.2.4 Lower the load while stationary

B111708

Point one arm away from the body, downward, with hand closed and index finger pointing down. Make small circular movements with forearm.

22.2.5 Lower slowly

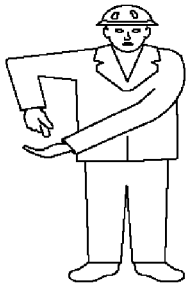

B111709

Give lowering signal with one hand, do not move the other palm and hold it under the hand, pointing to the hand which gives the signal.

22.3 Horizontal movements

22.3.1 Move / swing in given direction

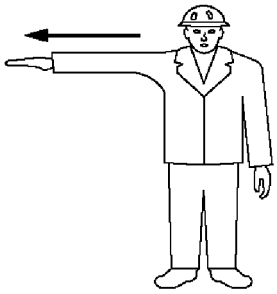

B111710

Hold stretched out arm horizontally into the desired direction, with the hand open and the palm pointing down.

22.3.2 Move away from me

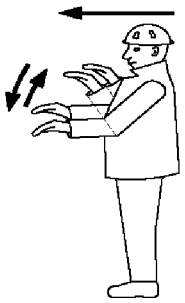

B1117111

Stretch out both arms simultaneously with forearms in front, with both hands open and the palms pointing down. Move the forearms repeatedly between the horizontal and vertical position up and down.

22.3.3 Move toward me

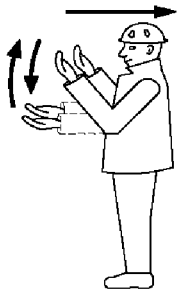

B1117112

Stretch out both arms simultaneously with forearms vertically, with both hands open and the palms pointing to the rear. Move the forearms repeatedly up and down.

22.3.4 Move both track chains

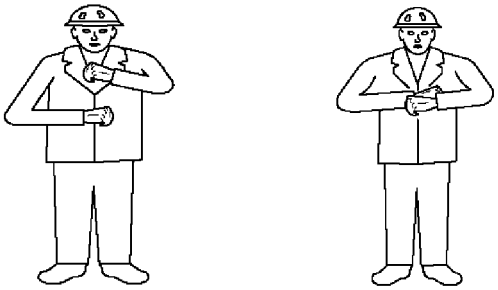

B1117113

Turn both fists around each other in front of the body in direction of the movement (forward or reverse).

22.3.5 Move one track chain

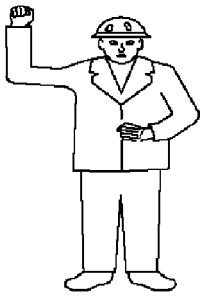

B1117114

Lift one fist to show blockage of chain on one side. Turn the other fist vertically in front of the body to signal movement of the opposite chain.

22.3.6 Show the horizontal distance

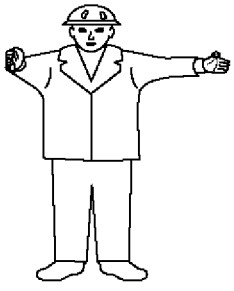

B1117115

Keep both arms stretched out horizontally in front of the body with the palms opposite each other.

22.3.7 Transfer (between two cranes or two hooks)

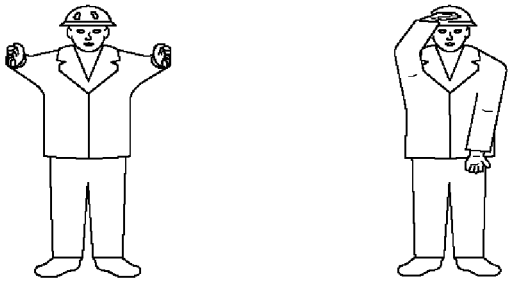

B1117117

Hold both arms stretched out to the front, parallel and horizontally and turn by 90° in direction of the transfer.

WARNING
Danger of toppling the crane!
- ▶ Make sure that the load carrying capacity of the individual crane or hook is sufficient even if the transfer of the load is suddenly asymmetric!

22.4 Machine related movements

22.4.1 Lift with main winch

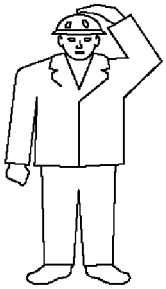

B1117119

Place on hand on your head and hold the other arm on the side of the body.
After this signal all other hand signals apply only for the main winch.

Note
- ▶ If two or more main winches are present, then the signaller can show the number of the crane by pointing to it or signal with one finger.

22.4.2 Lift with auxiliary winch

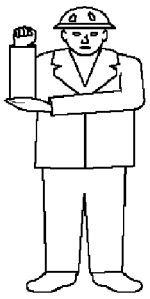

B111720

Hold one forearm vertically with closed hand and touch the elbow of this arm with the other hand. After this signal all other hand signals apply only for the auxiliary winch.

22.4.3 Lift the boom

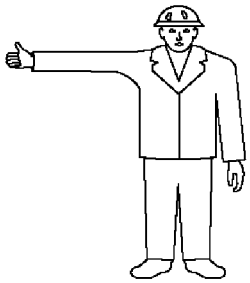

B111721

Hold one arm horizontally with thumb directed upward.

22.4.4 Lower the boom

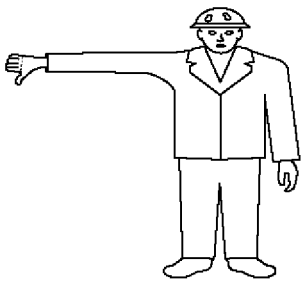

B111722

Hold one arm horizontally with thumb directed downward.

22.4.5 Extend the boom

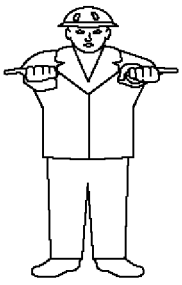

B111723

Hold both hands (with closed fists) stretched out to the front, with both thumbs directed away from each other.

22.4.6 Retract the boom

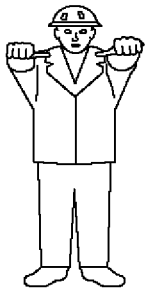

B111724

Hold both hands (with closed fists) stretched out to the front, with both thumbs directed toward each other.

22.4.7 Lift the boom and lower the load at the same time

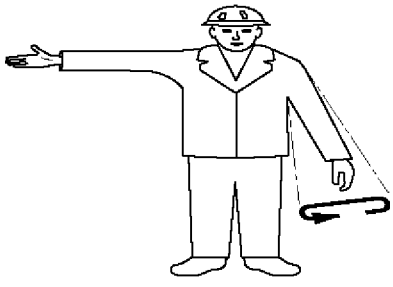

B111725

Hold one arm stretched out horizontally with thumb directed upward and stretch the other arm downward and away from the body, make small flat circles with the forearm.

22.4.8 Lower the boom and lift the load at the same time

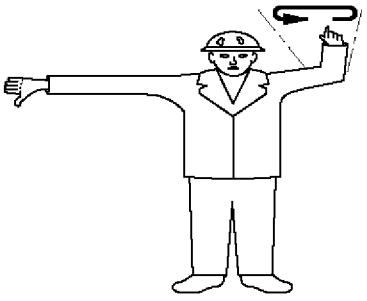

B111726

Hold one arm stretched out with thumb pointing down, stretch the other forearm upward and make small flat circles.

23 Crane operation with a load

WARNING
The crane can topple over!
If the crane is in condition which is **not** operationally safe, the crane can topple over or crane components can fall down!
Personnel can be severely injured or killed!
- ▶ Before starting to work, the crane operator must ensure that the crane is in operationally safe condition!
- ▶ If safe crane operation cannot be ensured by the crane operator, then crane operation is prohibited until an operationally safe condition for the crane is established!
- ▶ Safety devices, for example: Load moment limiter, hoist limit switch, brakes must be fully functioning, otherwise crane operation is prohibited!

Make sure that the following prerequisites are met:
- The load moment limiter must be set according to the current crane configuration.
- The loads given in the load chart may not be exceeded.
- The crane may never be subjected with a load which exceeds those specified in the load charts.
- The weight, center of gravity and dimensions of the load to be lifted must be known.
- Load carriers, lifting equipment and tackle must be in accordance with specified requirements.

Note
- ▶ Make sure that the weight of the hook block and the weight of the fastening equipment is subtracted from the load given in the load chart, see the following chart!

Example:		
Maximum permissible load according to chart		30.000 t
Weight of the hook block	350 kg	- 0.350 t
Weight of the fastening rope	50 kg	- 0.050 t
Actual load capacity of the crane		= **29.600 t**

The weight of the load to be lifted, in this example, may not exceed **29.6 t.**

23.1 Counterweight or ballast

The counterweight or ballast required depends on the weight of the load to be lifted and the radius required for crane operation. The deciding factor for the selection of the counterweight or ballast is the data in the corresponding load chart.

WARNING
The crane can topple over!
If the counterweight or ballast is not installed according to the load chart, then the crane can topple over and fatally injure personnel!
- ▶ Install the counterweight or ballast as specified on the respective load chart!

23.2 Hoist gear, hoist rope

The lifting capability of the crane depends on the pull force of the hoist gear and the number of possible hoist rope reevings. When using a single strand, the crane can only lift a load that is pulled by the hoist gear.
If the load to be lifted is heavier than the pull force if the hoist gear, then the hoist rope must be reeved as needed according to the principle of a pulley between the pulley head on the boom and the hook block.
When reeving, carefully observe the load chart specifications and the operating instructions.

WARNING
Hoist rope failure!
If the maximum pull force of the hoist gear is exceeded, the hoist rope can break or the hoist gear can be damaged!
The load can fall and kill personnel!
▶ Observe the maximum tensile force of the hoist gear!

23.3 Crane operation

DANGER
Not-observation of the following guidelines increases the risk of accident!
▶ Observe the following points.

High accident risk exists if:

1.) The load torque limiter is not set in accordance with the current crane configuration and is therefore not able to provide proper protection.
2.) The load torque limiter is defective or taken out of operation.
3.) The hoist limit switches are defective or not functioning.
4.) On crawler cranes:
The angle sensor and the force test brackets are not functioning.
5.) On mobile cranes:
The sliding beams of the hydraulic supports are not extended to the dimensions specified in the load chart.
6.) On crawler cranes:
The crawlers are not supported with stable base material sufficiently large for the ground conditions.
7.) On mobile cranes:
The support plates are not supported with stable base materials sufficiently large for the ground conditions.
8.) If the load is pulled at an angle.
Angular pulling to the side is particularly dangerous, because the boom has only minimal lateral resistance momentum.
Angular pull is prohibited.
9.) Load attached during disassembly is too heavy and is freely suspended on the crane after release.
10.) The load hook is used to break away stuck loads.
Even if the weight of a stuck load does not exceed the permissible load capacity, the crane can topple over backwards if the load is suddenly released due to the tension of the boom, which can cause it to jerk back violently.
11.) When working when the wind is excessively strong.
Observe the data given in the load chart.
12.) The crane is not aligned horizontally and the load is swung toward the slope.
13.) If improper crane movements cause the suspended load to swing like a pendulum.
14.) The loads and radii specified in the load charts are exceeded.
15.) When working in the vicinity of electricity transmission lines:
- The electricity transmission lines were not turned off by expert electricians
- **or** the danger zone was not covered or blocked off.

WARNING
Danger of current transfer!
If electricity transmission lines are not shut off nor covered nor blocked off, then there is an increased danger due to current transfer!
▶ Adhere to a safety distance of at least 6 m!
If a current transfer occurs, despite having taken all necessary precautions, proceed as follows:
▶ Remain calm!
▶ Do not leave the crane cab!
▶ Warn people outside: Stay in place and do not touch the crane!
▶ Move the crane out from the danger zone!

24 Lifting of personnel

24.1 Destined use

– The destined use of the crane is **lifting of loads**!
– **Lifting of personnel** is **not** considered to be destined use of the crane!

Note

▶ These instructions do **not** apply for work platforms, which are attached on the crane boom and are used to lift personnel. This subject is governed by international standards for mobile aerial work platforms!

WARNING

Non-designated use of the crane!

Personnel can be severely injured or killed!

▶ The crane is **not** intended to lift personnel!
▶ The crane may **not** be used for recreational purposes and exhibitions, such as lifting personnel for shows, bungee jumping or Dinner in the sky!
▶ The crane may **not** be used for lifting of devices with personnel on them or under the device, such as lifting of tents!
▶ Exception: If lifting of personnel for special work situations is the least dangerous possibility to carry out the work, then personnel may be lifted or brought into a suspended position when using lift cages (cherry pickers)!

24.2 Prerequisites for lifting of personnel

Make sure that the following prerequisites are met:

– Lifting personnel with cranes is permissible by national and local laws in the country where this crane application is carried out.

DANGER

Lifting of personnel!

Accidents which occur when lifting personnel often result in severe injuries or even death!

▶ This exceptional application is within the scope of responsibility of the user and is only permitted if the requirements and instructions in the next sections are observed and adhered to!
▶ The company, the supervisor, the crane operator and auxiliary personnel must proceed especially carefully and safety conscious!
▶ Before the lifting procedure, a meeting must be held with all associated personnel!
▶ The following warning notes and safety regulations must be strictly observed!

24.2.1 Legal prerequisites

Make sure that the following prerequisites are met:

– Special arrangements were made for the use of the lifting cage (cherry picker) according to the requirements of national laws!
– If required by national laws: The use of the crane to lift personnel was reported to the state agency for occupational health and safety. The lifting procedure may possibly require a special permit!
– Before the implementation of the lifting procedure with the aid of a work-specific risk analysis for the possibility of rescuing personnel in emergencies was defined!
– To rescue personnel in emergencies, precautionary measures must be present on the crane, if they are required by national laws!
– The measures for safe operation near power lines, depending on the conditions on the job site and the national laws / national regulations were observed and adhered to!

24.2.2 Prerequisites for crane equipment and accessories

Make sure that the following prerequisites are met:

– Before lifting personnel, the crane was inspected. No damage was found!
– The lifting cage (cherry picker) is utilized according to national laws and / or standards and according to intended purpose!
– Before lifting personnel, the lifting cage (cherry picker) was carefully inspected. No damage was found!
– Every emergency rescue device was inspected and its operational readiness was determined, if required by national laws!
– Any hooks in use must be equipped with a latch, which prevents the hook mouth to open. According to national laws, the latch must be manually closable or lockable or must automatically close via a spring!

24.2.3 Inspection before operation

Make sure that the following inspections are made before use of the lifting cage (cherry picker):

– On every new construction site and after every modification or repair: To ensure the operating safety of the lifting cage (cherry picker) and the lifting equipment, a test with 125 % of the nominal load carrying capacity of the lifting cage (cherry picker) without personnel must be carried out! During the test, the lifting cage (cherry picker) may only be lifted just above the ground!
– A test lift with loaded lifting cage (cherry picker) without personnel must be carried out! The weight in the lifting cage (cherry picker) for the test lift must be at least as large as the weight of the personnel and the weight with the work equipment carried along! For this test lift, the course of all planned movements of the lifting procedure must be simulated!
– This test lift must be carried out for every location on a construction site, where personnel must be carried!

24.2.4 Prerequisites for operation with lifting cage (cherry picker)

Make sure that the following prerequisites are met for operation with lifting cage (cherry picker):

– The personnel and technical prerequisites for safe use and operation of the emergency control of the crane are present!
– The emergency control for emergency rescue of the person in the lifting cage is functioning!
– The rope pull is limited to 50 % of the maximum rope pull!
– The crane is utilized with 50 % of its maximum load capacity of the valid load chart!

25 Crane operation in case of thunderstorms

In weather conditions, which can include lightning:

– Stop work on the crane.
– If possible, place the load down.
– If possible, telescope the boom in or put it down and bring it into a safe condition.

If this is not possible, the crane cab must remain occupied by the crane operator to keep the crane and the load always under control.

WARNING
Danger of accidents due to lightning strikes!
▶ Make sure that there are no persons near the immediate area of the crane.

26 Safety notes for external power feed (100 V AC to 400 V AC)

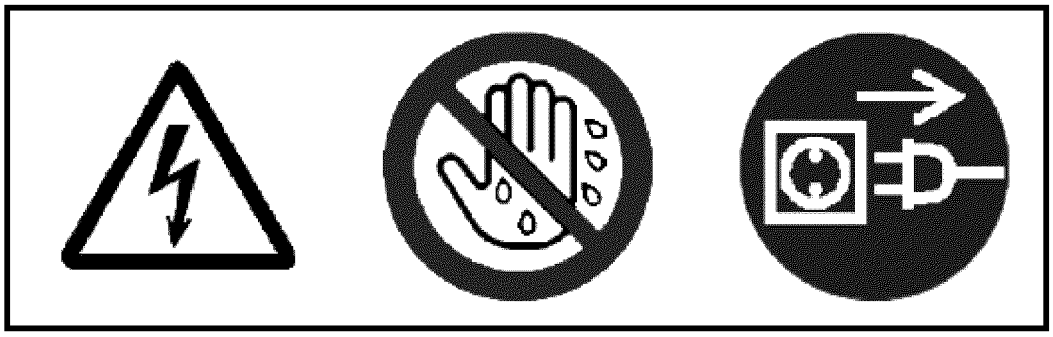

B197720

A potential hazard exists when supplying a crane with an external power supply from a low voltage distribution system (100 V AC to 400 V AC).
In particular, the following conditions pose an electrical hazard: touching a crane with open grounds (caused by the mechanical stress on flexible supply cables or the service connection), loose terminal connections, high wire or contact resistance, mixed up conductors, defective or missing protective equipment (fault interrupters) in combination with a body contact on the crane.

WARNING
Danger of fatal injury if the body conducts current!
Water and / or defective devices can cause hazardous stray voltages when touched. The person touching the crane is subject to lethal currents.
▶ The external supply cable must be in good working order!

Make sure that the external flexible supply cable is in good working order.
Where applicable, we recommend the use of a power isolating transformer.

27 Welding work on the load

Note
▶ The load must also be grounded.

In case of welding work on the load, the screw clamp of the welding unit must be attached on the work piece to avoid current flow via hoist rope, crane superstructure or crane chassis.

28 Interruption of crane operation.

28.1 Interrupting crane operation

WARNING
Crane is not supervised!
Situations during interruption of crane operation may occur which could cause the crane to become unsafe if left unsupervised!
The crane can topple over, personnel can be severely injured or killed!
▶ Always keep the crane under control!
If the crane can **not** be constantly kept under control:
▶ Take the equipment and the boom down!
If the crane is in equipped status:
▶ Do not leave the crane!
If wind conditions are present, which are above the permissible values of the wind speed chart:
▶ Do not leave the crane!
If crane operation with a set up crane is interrupted:
▶ Make sure measures are initiated in time by trained, qualified personnel to bring the crane into a safe condition if anything happens!
If an erroneous function of a crane movement is recognized during crane operation (change of cylinder stroke):
▶ The boom must be placed down completely, check the cylinder for internal and external leaks!

WARNING
Set up crane is not supervised!
If the set up crane is left during interruption of crane operation, situations may occur which could cause the crane to become unsafe!
The crane can topple over, personnel can be severely injured or killed!
If the construction site has limited space:
▶ The decision not to take the boom down while the crane is unsupervised can only be made by an authorized and qualified crane operator, who is familiar with the construction site!
▶ Make sure that no danger can occur for the crane and its surroundings should something unforeseen happen!
▶ Make sure for the duration of the interruption of crane operation, that the predicted wind speeds do not exceed the permissible values for the respective set up configuration, see wind speed chart!
If the predicted wind speeds are above the permissible values:
▶ Place the boom and the equipment completely down on the ground in time before the permissible wind speeds occur, telescope the telescopic boom in and luff down to 0°!
▶ To telescope the telescopic boom in / position the boom and the auxiliary boom, see Crane operating instructions and the wind speed chart!
▶ The boom on the crane may only be placed down if the predicted wind speeds according to the wind speed charts are less than the maximum permissible wind speeds during assembly and disassembly!
▶ Place the load completely on the ground and unhook from the crane hook!
▶ Lift the hook block into the highest position!
▶ Remove the fastening ropes from the hook!
▶ Make sure that all measures were taken to keep the crane in a safe condition if something happens!

▶ Make sure that access to the crane and operation for unauthorized personnel is excluded: Lock the driver's cab and the crane!

Incidents which could occur (for example):
– The ground giving way due to severe rain.
– Melting ice under the supports.
– Bad weather and thunderstorms, wind.
– Storm and wind.
– Lightning.
– Flooding.
– Landslides.
– Washouts.
– On mobile cranes:
  Slippage of support cylinders (leakage, temperature changes).
– On cranes with telescopic boom:
  Slippage of luffing cylinders (leakage, temperature changes).
– Vandalism.

Make sure that the following prerequisites are met:
– There is no load on the hook.
– The fastening ropes on the hook were removed.
– The hook block is in the highest position.
– The driver's cab and the crane cab are locked.
– The predicted wind speeds during the time frame of the interruption of crane operation are within the permissible range.
– The crane poses no traffic obstacle.

29 Resumption of crane operation

29.1 Resuming crane operation

When resuming crane operation, the crane operator is required to check the condition of the crane and the safety devices.

WARNING
Danger of accident!
▶ If the crane operator leaves the cab, even for a short time, the operating mode setting must be checked and reset, if necessary, before resuming crane operation.

▶ Check operating mode settings and reset, if necessary.

30 Ending crane operation

30.1 Ending crane operation

Before the crane operator may leave the crane, the following prerequisites must be met:
▶ Place the load fully on the ground and unhook from the crane hook.
▶ On cranes with telescopic boom:
  Telescope the telescopic boom all the way in and place the boom down.
▶ On cranes with lattice mast boom:
  Put down lattice mast boom and disassemble if necessary.
▶ Bring the control lever (master switch) to 0-position.

- ▶ Apply the parking brake on the crane chassis.
- ▶ Turn the engine off and pull the ignition key.
- ▶ Lock the crane cab.
- ▶ Secure the crane to prevent unauthorized use.
- ▶ On mobile cranes:
  Make sure that the driver's cab is not occupied. Lock the driver's cab. Secure the crane to prevent it from rolling off unintentionally, see section “Parking the vehicle”.

31 Turning / driving in reverse

WARNING
Danger of accidents when turning or driving in reverse!
When turning or driving in reverse, personnel can be overlooked or killed!
Objects can be severely damaged!
- ▶ When turning or driving in reverse, the driver must act in such a way that he does not endanger other traffic participants!
- ▶ The driver may drive only in reverse or move back when it is ensured that persons or equipment are not endangered! If this cannot be ensured, then he must use a guide.
- ▶ An acoustical back up warning device will never replace the guide!
- ▶ Make sure that there are no persons or objects behind the vehicle when driving in reverse!
- ▶ Make sure that no personnel is injured or killed!
- ▶ Make sure that no objects are damaged!
- ▶ Driving in reverse is only permissible at slow driving speed (maneuvering speed)!
- ▶ Adhere to the national regulations!

32 Parking the vehicle

Note
- ▶ The “Parking the vehicle” section is only to be observed for mobile cranes!

WARNING
Danger of accidents if the vehicle rolls off!
If the following points are disregarded by the crane driver, then personnel can be fatally injured.
- ▶ It is prohibited to park the vehicle at a slope or an incline of more than 18 %.
- ▶ The parking brake must always be applied when parking the vehicle.
- ▶ The ground on which the vehicle is parked must be level and have adequate load-bearing capacity.

Make sure that the following prerequisites are met:
– The vehicle is standing on level ground with sufficient load bearing capacity.
– The parking brake is applied.

WARNING
The vehicle can roll off uncontrollably!
Under the following conditions, the vehicle must be secured against rolling away by using the specified number of wheel chocks or wedges, in addition to the parking brake:
- ▶ The vehicle is parked on a slope or an incline!
- ▶ The vehicle is defective, particularly if the brake system is defective!

- If all the specified wheel chocks are not placed directly behind the corresponding wheel, the vehicle may roll off uncontrollably and personnel can be fatally injured.
- All specified wheel chocks must be placed in such a way that they act against the downdrift force!
- Place all specified wheel chocks tightly directly under the wheel!
- Place all specified wheel chocks tightly so that they have an immediate braking action and keep the vehicle in parking position!

1

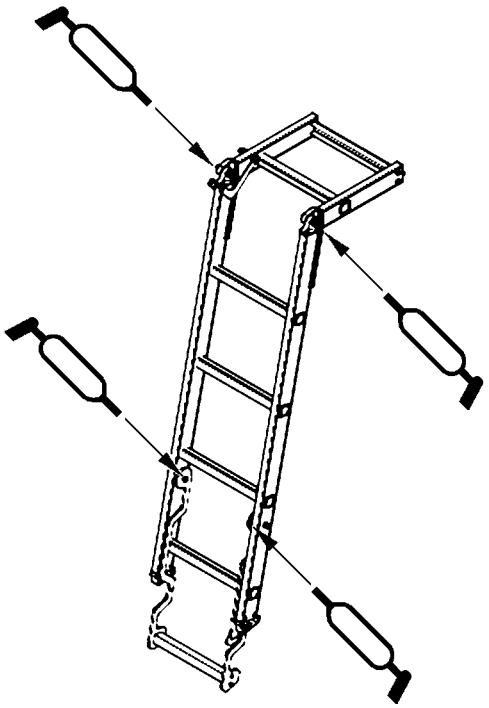

2

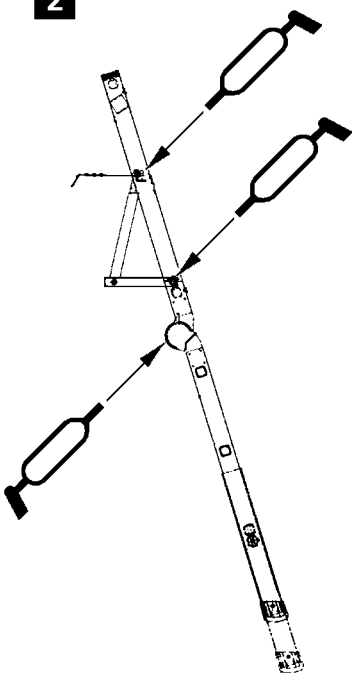

B109766

33 Safety guidelines for ladders

33.1 General

The ladders have been built according to the present level of technology and recognized safety technical regulations. Despite that, during their use dangers to life and physical condition of the user and / or third parties can occur. The ladders may only be used in a flawless technical condition and according to their missions as well as with constant awareness of safety and dangers. Changes on the structure may only be made with written approval of the manufacturer.
The ladders are exclusively designated for the entry and exit of personnel.
Any other use is not as intended.
The manufacturer is **not** liable for damages, which are caused by unintended use or improper usage.

WARNING
Danger of falling!
If the following safety guidelines are not observed, personnel can fall down and be killed or severely injured!
- ▶ Observe and adhere to the installation and safety guidelines for ladders!
- ▶ Observe and adhere to the safety signs on the ladders!
- ▶ Install and secure the ladders properly!
- ▶ Do not use damaged ladders and replace them immediately!
- ▶ Repairs on ladders may only be carried out by authorized expert workshops!

Before using the ladders, make sure that the following prerequisites are met:
- – The ladders are hung and secured in the intended locations.
- – The ladders are complete and not damaged (visual inspection).
- – The legs of the ladders are not worn.
- – Check the screws for tight seating and connection.
- – The ladder may be subjected to a load of no more than one person or a maximum of 150 kg.

Before starting to drive / before transport, ensure that the following prerequisite is met:
- – The ladders are tightly locked and secured in the intended transport retainers.

33.2 Maintenance

Note
- ▶ Grease joints and pivot points on the ladders regularly and check them for easy movement, see illustration **1** and illustration **2**!
- ▶ Remove any dirt on the ladders!
- ▶ The ribbing on the rungs must be clear!
- ▶ Repairs and maintenance work on the ladder must be made by expert personnel.

1

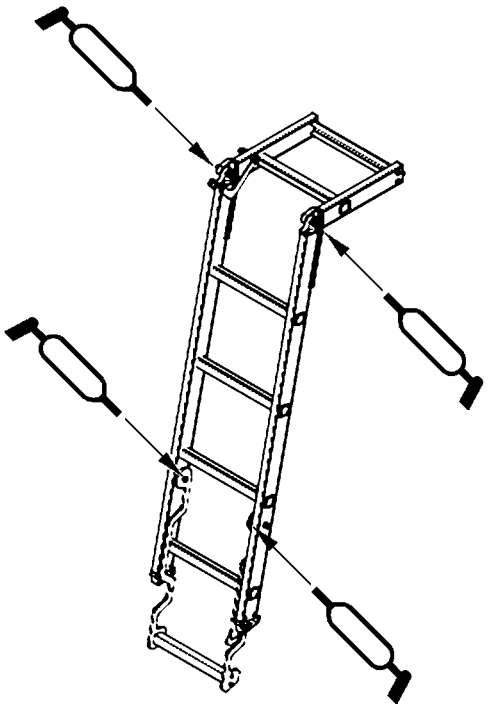

2

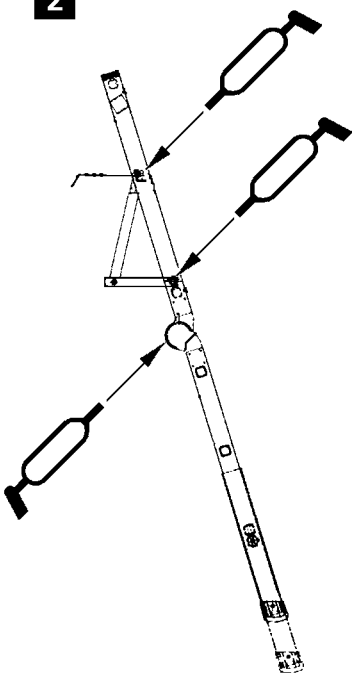

B109766

33.3 Safety signs on the ladders

Note

- ▶ All safety signs on the ladders must be complete and always legible!
- ▶ The operating instructions of the manufacturer must be observed and adhered to.

Sign	Explanation
	Read the operating instructions.
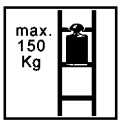	Maximum load.
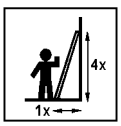	Correct set up angle.
	Set up on level ground.
	Avoid leaning out to the side.
	Eliminate any contaminants on the ground.
	Set up on solid ground.

Sign	Explanation
	Ladder overhang over the set up point.
	It is not permitted to step off to the side from the ladder.
	Only one person on every accessible bracket.
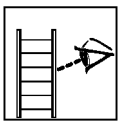	Visual inspection of the ladder before use.
	Do not use the ladder as a bypass.
	Do not stand on the top step.
	Check the legs of the ladder.
	When transporting the ladder, be aware of any danger due to overhead wires.
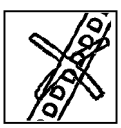	Pay attention to correct set up direction.

Sign	Explanation
	Face the ladder when climbing up or down the ladder.
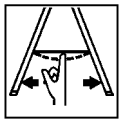	Before use, pay attention that the stepladder opens completely.
	Make sure the upper end of the ladder is placed correctly.
	Make sure that the safety strut engages.
	Maximum number of users on the ladder.
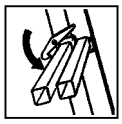	Before use, make sure it is safely engaged.
	Correct access.
	When climbing the ladder, wear suitable shoes.
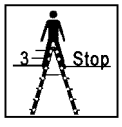	Stepladders: Access the ladder, without railing, to no more than the third step from the top.

Sign	Explanation
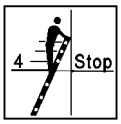	Leaning ladders: Access to no more than the fourth step from the top.
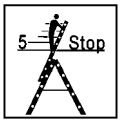	Universal ladders: Access to no more than the fifth step from the top.
	Access the ladder only when sober.
	Eliminate damaged ladders immediately.
	Total weight of the ladder.
	Illustration of ladder type with maximum length.
	Secure the upper / lower end of the ladder.
	When folding together, make sure that fingers are not pinched.
	Any modifications on the ladder are impermissible.

Sign	Explanation
	Objects, which are to be transported when accessing a ladder should not be heavy and easy to handle.
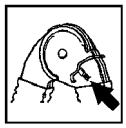	Make sure that the linkages engage safely.
	Tighten the base extension (4 Nm to 5 Nm).
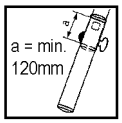	Adhere to a minimum overlap of the base extension of 120 mm .
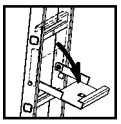	Fold the safety bridge open.
	The ladder must be hung on the vehicle.

B195219

1 Signs

1.1 7725039 - Warning of high voltage

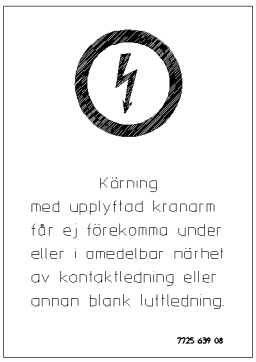

B116269

Note
▶ Only for certain countries!

1.2 772564008 – Swing range

B116270

Note
▶ Only for certain countries!

1.3 772580408 – Limitation of maximum travel speed

B106035

Note
▶ Only for certain countries!

1.4 Notice sign regarding vehicle height

	Notice sign regarding vehicle height
970610408	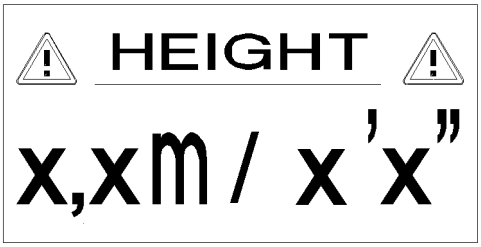
970629508	
970596108	
970608708	
979459108	

Note
▶ Only for certain countries.
▶ Vehicle height x.x m (x.x ft)

1.5 9412158 – Read operating instructions

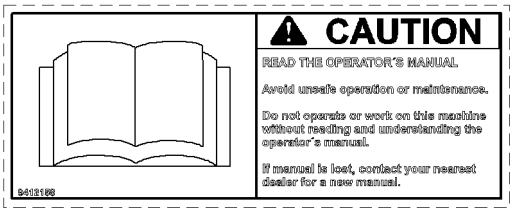

B106048

WARNING
Danger of accident due to non-observance of operating instructions!
If the operating instructions are not read or understood, then this can lead to unsafe operation and improper maintenance!
Accidents with bodily injuries and property damage can result!
- ▶ The crane may only be operated if the contents of the operating instructions have been read and understood!
- ▶ Replace lost or incomplete operating instructions immediately!

1.6 97004046 – Safety harness, maximum two persons

B115119

DANGER
Danger of accidents due to overloaded safety ropes!
If safety ropes are used by more than two persons, then the safety ropes can be overloaded and fail in case of an accident!
Personnel can be severely injured or killed!
- ▶ Safety ropes are designed to secure a maximum of two persons against falling, one on the right and one on the left!

1.7 97027147 – Overloading of combi box is prohibited

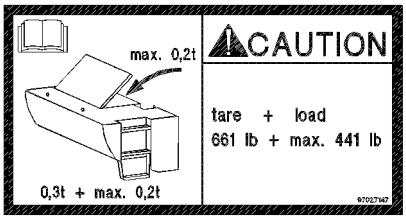

B113829

WARNING
Danger of overload!
If the combi box is subjected to a load of more than 0.2 t, the combi box can be damaged!
- ▶ The own weight of the combi box is 0.3 t and may be loaded with a maximum payload of 0.2 t!
- ▶ Do not subject the combi box to a weight of more than 0.2 t!

1.8 97036733 – Fastening point

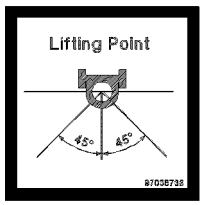

B116268

Note
▶ Notice sign for fastening points

1.9 Suspended load fastening point

	Suspended load fastening point
97038434	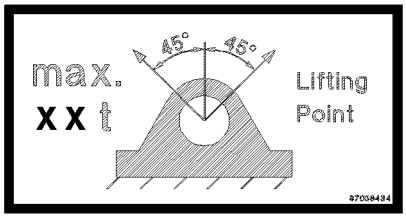
97037482	
97039068	

Note
▶ Observe the maximum permissible suspended load.

1.10 Suspended load fastening point

	Suspended load fastening point
97037221	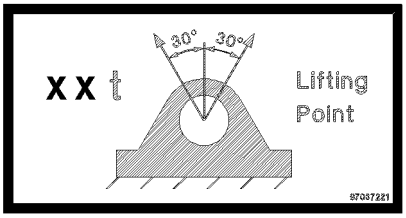
97037219	
97037223	

Note
▶ Observe the maximum permissible suspended load.

1.11 97036735 – Fastening point for lattice section

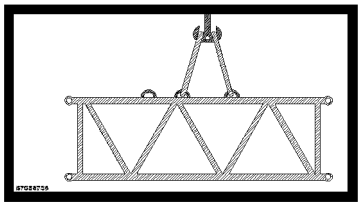

B116266

Note
▶ Notice sign for fastening points for lattice sections

1.12 97036736 – Fastening point for lattice sections

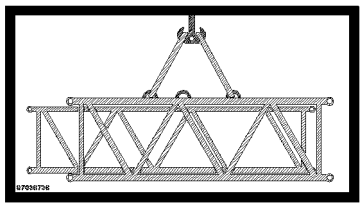

B116267

Note
▶ Notice sign for fastening points for lattice sections

1.13 97038442 – Fastening point for lattice section

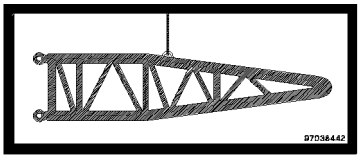

B116288

Note
▶ Notice sign for fastening point for lattice section

1.14 97038452 – Fastening point for lattice sections

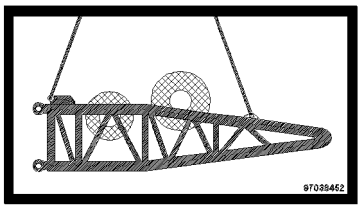

B116289

Note
▶ Notice sign for fastening points for lattice sections

1.15 97038454 – Fastening point for lattice sections

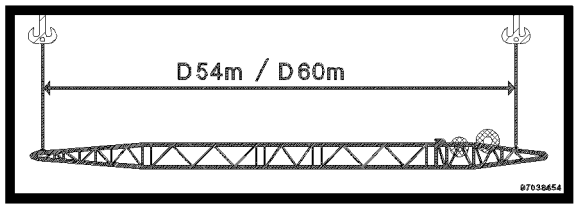

B116290

Note
▶ Notice sign for fastening points for lattice sections

1.16 97037871 – Fastening points for lattice sections

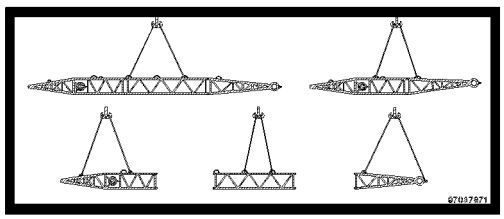

B116292

Note
▶ Notice sign for fastening points for lattice sections

1.17 97003109 – Access of step ladder

B109032

WARNING
Danger of falling!
If the step ladder is accessed before it is completely folded out, the assembly personnel can fall and be fatally injured!
▶ Before stepping on the step ladder, fold the lowest step out!

1.18 97003110 – Fold the step ladder in and out

B109033

WARNING
Danger of falling!
When folding the step ladder in or out or when driving the crane, no persons may remain on the step ladder or within the entire danger zone! Persons can fall from the step ladder or be killed as the step ladder folds in or out!
▶ Fold the step ladder in and out only if there are no persons within the danger zone!

1.19 97006167 – Identification of support base

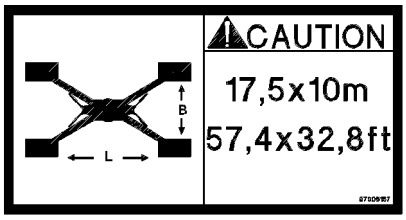

B116285

Note
▶ The support beams are swung out / extended to a support base of 17.50 m x 10.0 m; (57.4 ft x 32.8 ft).

1.20 97006167 – Identification of support base

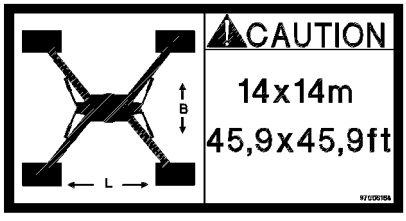

B116286

Note

▶ The support beams are swung out / extended to a support base of 14.0 m x 14.0 m; (45.9 ft x 45.9 ft).

1.21 97008514 – Warning of head injuries

B110550

WARNING

Head injuries!

Due to falling parts, personnel can be killed or severely injured!

Hitting the head can cause injuries!

▶ Protect your head with a hard hat!

▶ Always remain aware of your surroundings and behave in a safe manner!

1.22 97009799 – Data logger

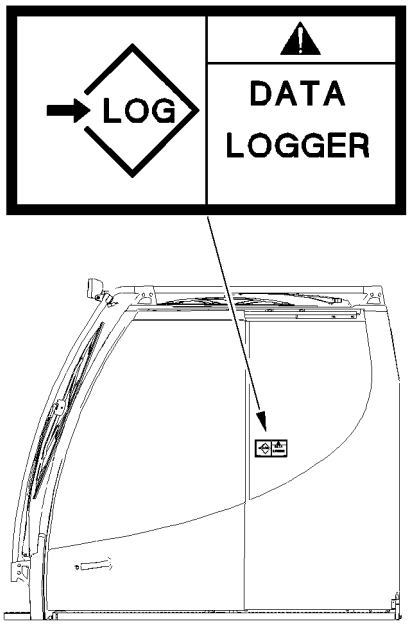

B116261

Note

▶ Notice sign for data logger

1.23 97012949 – Maximum load

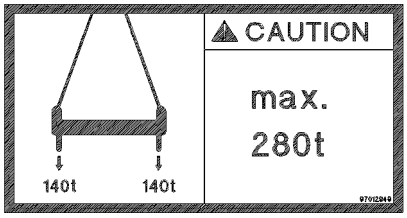

B116263

CAUTION
Property damage due to overload!
If the cross bar is subjected to a higher load than permissible, damage can occur!
▶ Do not overload the cross bar!

1.24 97012095 – Maximum load

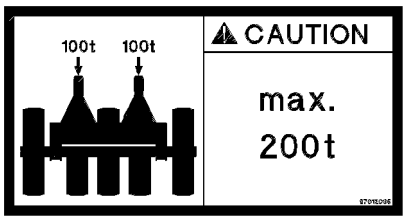

B116265

CAUTION
Property damage due to overload!
If the pulley cart is subjected to a higher load than permissible, damage can occur!
▶ Do not overload the pulley cart!

1.25 97011689 – Warning of crushing danger

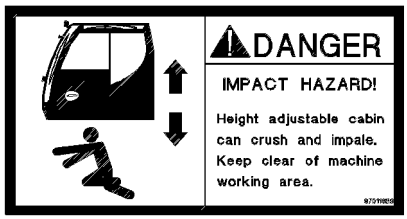

B111047

DANGER
Danger of fatal injury!
▶ It is prohibited to remain within the danger zone of the cab!
▶ Keep away from the movement range of the cab!

1.26 97011690 – Overload of cab is prohibited

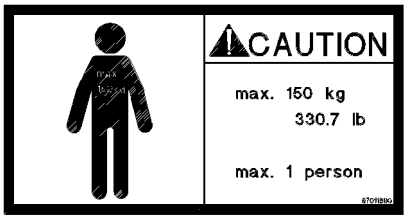

B111048

WARNING
Danger of overload!
If the cab is subjected to a load of more than 150 kg then the cab or the telescoping arm can be damaged!
- ▶ Only one person at a time may remain in the cab!
- ▶ Do not subject the cab to a weight of more than 150 kg!

1.27 97016304 – Notice sign for refueling

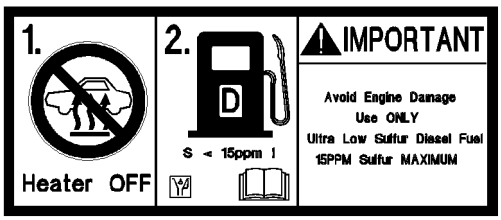

B113766

WARNING
Danger of fire and explosion!
- ▶ Turn the auxiliary heater* off approx. 3 min before refueling the fuel tank!
- ▶ Before refueling the fuel tank, turn the engine off!

NOTICE
Property damage to the engine!
If incorrect fuel is added, the engine can be severely damaged.
- ▶ Refuel with fuel according to the Engine manufacturer's operating instructions!

1.28 97016392 - Crushing danger for feet

B112474

WARNING
Crushing danger for feet!
Feet can be caught or crushed.
▶ Keep feet away!

1.29 97012737 – Danger of accident

B111748

WARNING
Danger of accident
▶ For driving, the windshield must be closed!

1.30 97023034 – Disassembly

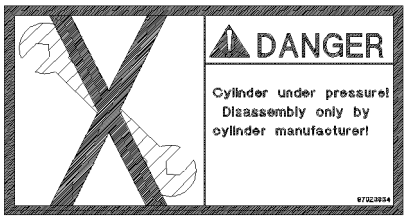

B116264

DANGER
Mortal danger due to repair!
Cylinder is pressurized!
Disassembly of the cylinder can result in death or serious injuries!
▶ The cylinder may only be removed by the manufacturer!

1.31 97036733 – Access via 3-point support

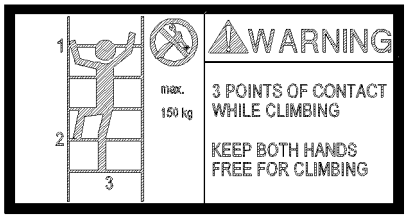

B115172

DANGER
Access via 3-point support!
While climbing up and down via a ladder, the assembly personnel can fall down and be injured severely!
- ▶ When climbing up and down, a 3-point support must be ensured!
- ▶ Use ladders only up to a weight of 150 Kg!
- ▶ When climbing up and down, hands must be free!

A 3-point support is ensured when:
– Two legs are standing safely and one hand has a safe hold.
– Two hands have a safe hold and one leg is standing safely.

1.32 97003112 – Maximum suspended load

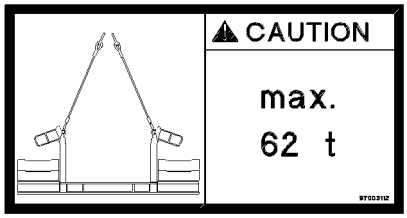

B116282

WARNING
Maximum suspended load!
If the maximum suspended load of 62 t is exceeded, the load can fall down and kill personnel!
- ▶ Observe the maximum permissible suspended load!

1.33 97036917 – Maximum suspended load

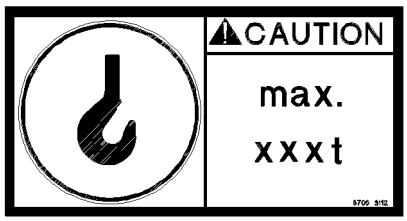

B116262

WARNING
Maximum suspended load!
If the maximum suspended load is exceeded, the load can fall down and kill personnel!
- ▶ Observe the maximum permissible suspended load!

1.34 97037383 – Notice sign for urea

B115173

CAUTION
Property damage due to incorrect service items!
When refilling urea and the urea is not used which is specified by the engine manufacturer then damage can occur!
▶ Refill **exclusively** urea!
▶ See engine manufacturer's operating instructions!

1.35 97037952 – Warning of fatal electric shock

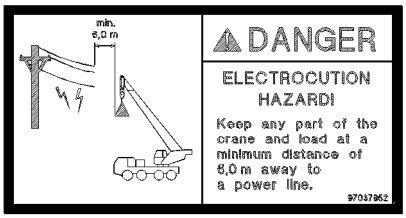

B116280

DANGER
Danger of fatal injury due to electrical shock!
If the boom or the hoist rope is under electric current, then death or severe injuries can occur if anyone touches the crane, the vehicle or the load!
▶ Keep a minimum distance of 6 m to current carrying parts!

1.36 97041305 – Warning of overload of components

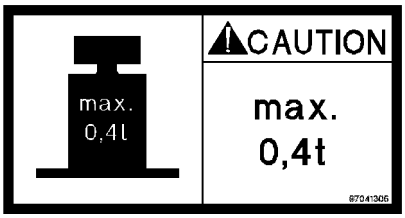

B116792

DANGER
Danger of falling due to overload!
If a component, wuch as a sliding beam pedestal, is subjected to a weight of more than 0.4 t, then the sliding beam pedestal can break!
Personnel can fall down and be severely injured or killed!
▶ Subject the components (sliding beam pedestal) to no more than maximum 0.4 t.

1.37 Warranted maximum sound power level

	Notice sign for Warranted maximum sound power level
975809508	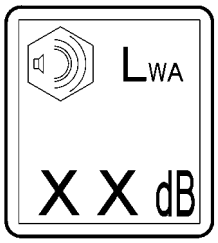
971693308	
971693408	
971693508	
971693608	

1.38 977055908 – Fastening point for swingable sliding beam

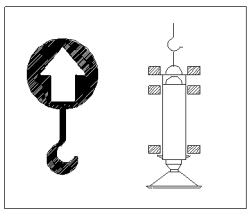

B106894

1.39 971494208 – Limitation of maximum travel speed

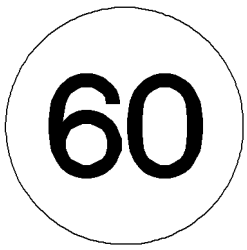

B106034

Note
▶ Only for certain countries!

1.40 971539808 – Warning notice for unpinning the auxiliary boom on the pulley head

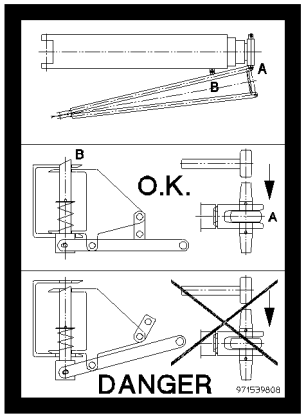

B106040

DANGER
Danger of fatal injury!
If the auxiliary boom is not locked correctly to the pivot section, it can fall down.
Personnel can be severely injured or killed!
▶ Unpinning the auxiliary boom on the pulley head is prohibited!

1.41 971539908 – Warning notice for unlocking the auxiliary boom

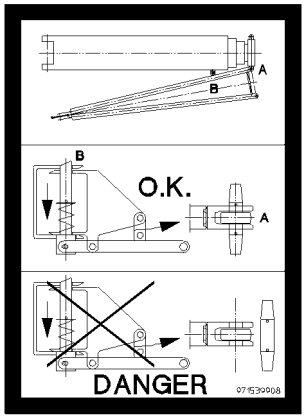

B106041

DANGER
Danger of fatal injury!
If the auxiliary boom is not locked correctly to the pulley head, it can fall down.
Personnel can be severely injured or killed!
▶ Unpinning the auxiliary boom on the pivot section is prohibited!

1.42 978673908 - Warning of suspended load

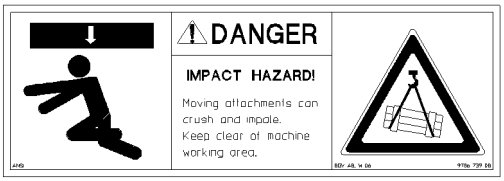

B106026

DANGER
Danger of fatal injury under suspended load!
- ▶ Standing under suspended loads is prohibited!
- ▶ Keep away from the working range of the machine!

1.43 978674008 - Access for unauthorized personnel prohibited

B106037

DANGER
Danger of fatal injury!
If the crane or the working area is accessed by unauthorized personnel, life threatening injuries can occur as a result!
- ▶ It is prohibited for unauthorized personnel to enter the crane or the working area!

1.44 978674108 – Warning of crushing danger

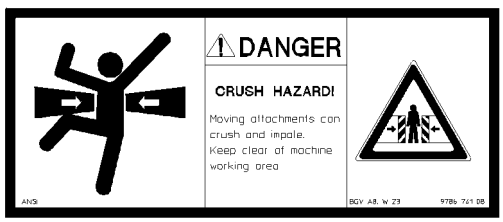

B106027

DANGER
Mortal danger when remaining in areas with crushing danger!
- ▶ It is prohibited for anyone to remain in areas, where there is a crushing danger!
- ▶ Keep away from the working range of the machine!

1.45 978674308 – Radio remote control

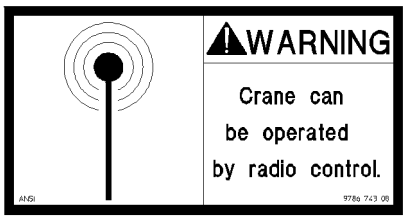

B106047

WARNING
Danger of injury due to crane operation with radio remote control!
- ▶ The crane can be operating with radio remote control!
- ▶ During crane operation, it is prohibited for anyone to remain in the danger zone!

1.46 978674408 – Danger of burning hands

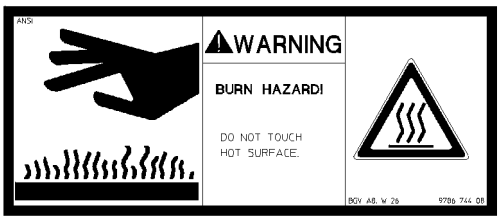

B106028

WARNING
Danger of burns when touching hot surfaces!
- ▶ Do not touch hot surfaces!

1.47 978674508 – Warning of rotating parts

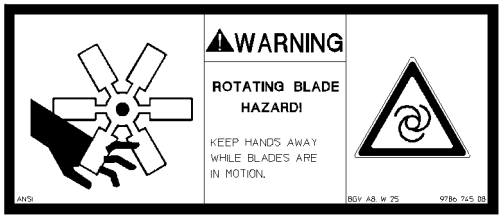

B106029

WARNING
Rotating parts!
The rotating fan blade can cause finger and hand injuries.
- ▶ Keep your hands away from the rotating fan blade!

1.48 978674608 - Crushing danger for hands!

B106030

WARNING
Danger of injuries for hands!
Hands can be caught, trapped or crushed within the danger zone.
▶ Keep hands away from the danger zone!

1.49 978674808 – Personal protective equipment

B106036

DANGER
Danger of falling!
▶ Use a personal protective equipment!

1.50 978674908 - Walking on the area is prohibited

B106038

WARNING
Danger of accident!
If the prohibited area is accessed, accidents can occur!
Personnel can be severely injured or killed!
▶ Do not access the prohibited area!

1.51 978675008 – Access prohibited

B106039

WARNING
Danger of falling!
If the crane is accessed by unauthorized personnel, life threatening injuries can occur!
▶ Do not climb on the crane!

1.52 978687408 – Rigging point

B112475

WARNING
Rigging point!
▶ Use the rigging point **only** for rigging!
▶ Lifting on the rigging point is prohibited!

1.53 97036734 – Rigging point

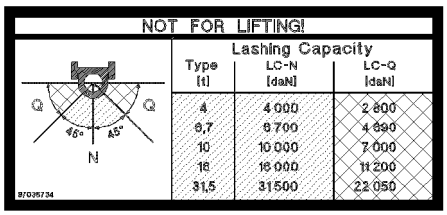

B116287

WARNING
Rigging point!
▶ Use the rigging point **only** for rigging!
▶ Lifting on the rigging point is **prohibited**!

1.54 978867108 – Warning of fatal electric shock

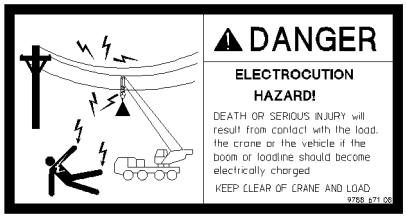

B106814

DANGER
Danger of fatal injury due to electrical shock!
If the boom or the hoist rope is under electric current, then death or severe injuries can occur if anyone touches the crane, the vehicle or the load!
▶ Keep away from the crane and the load!

1.55 979383308 – Notice sign for oil change

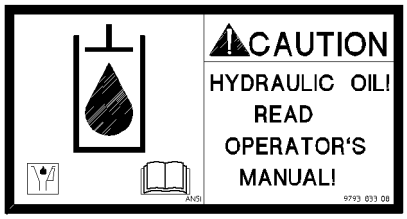

B113827

CAUTION
Property damage through oil change!
If the oil specified in the operating instructions is not used during the oil change, it can lead to damage!
▶ See Crane operating instructions, chapter 7.07!

1.56 979561108 - Counterweight

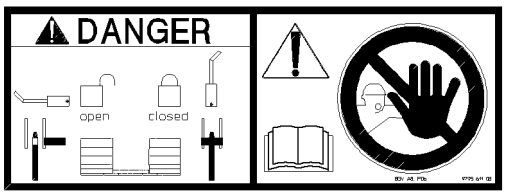

B109026

WARNING
Counterweight can fall down!
If the auxiliary crane is removed on the counterweight before the counterweight is locked on both sides with the turntable, then the counterweight will fall down and can fatally injure assembly personnel!
▶ Do not remove the auxiliary crane until the counterweight is locked and secured on both sides with the turntable! See Crane operating instructions, chapter 4.07.

1.57 973974408 - Permissible transport weights of the components

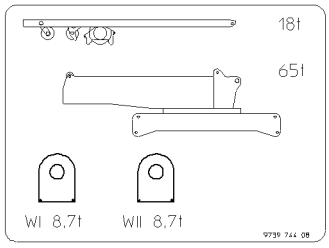

B112440

1.58 973974608 - Permissible transport weights of the components

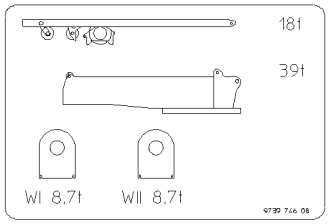

B112441

1.59 97011336 - Permissible transport weights of the components

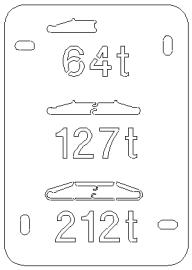

B116271

1.60 Identification of sliding beam

	Identification of sliding beam
978675108	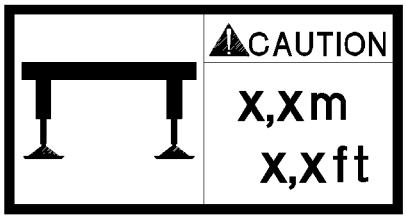
978675208	
978772808	
978772908	
978809308	

	Identification of sliding beam
978809408	
978809508	
978818408	
978818508	
978875908	
978902608	
978903108	
97029203	
978903208	
979126008	
979126108	
979210508	
979210608	
979210608	
979210708	
979309108	
979309208	
97019140	
97003224	
979410808	

Note

▶ Extend the sliding beams to a support width of X.X m (X.X ft).

1.61 Identification Track width retracted

	Track width retracted
97009840	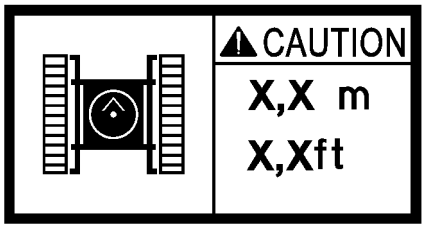
97009841	
97017044	
97017045	
97017046	

Note
▶ Track width retracted to x.xx m (x.x ft)

1.62 976624808 – Fasten the load

B116283

WARNING
Fastening the load is prohibited!
If the load is lifted on this point, the load can fall down and kill personnel!
▶ Lifting the load on unmarked locations is prohibited!

1.63 Notice Weight sliding beam

	Weight of sliding beams
979932008	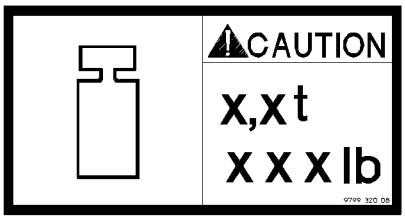
979932108	
979932708	
979932808	

Note
▶ Pay attention to the weight of the sliding beams!

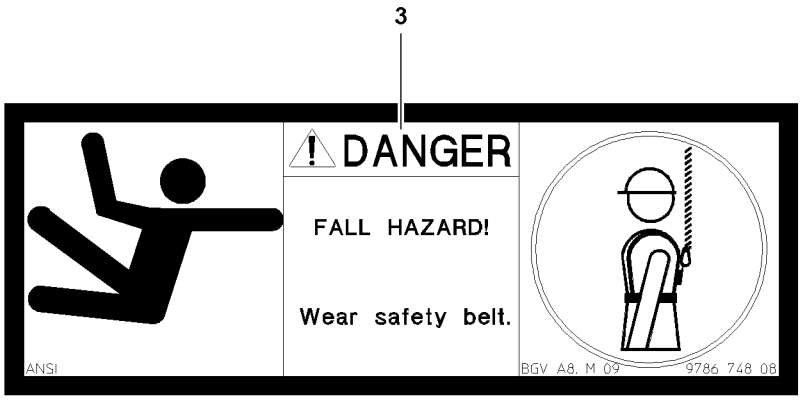
3
DANGER
FALL HAZARD!
Wear safety belt.
ANSI
BGV A8, M 09
9786 748 08

B112104

1 Personal protective equipment

WARNING
Danger of falling!
During assembly / disassembly, inspection and maintenance work, personnel must be secured with appropriate aids to prevent them from falling!
If this is not observed, assembly personnel could fall and suffer life-threatening or fatal injuries!

- The assembly personnel must always move carefully and anticipatory on the crane, the crane components or lattice sections!
- All work aloft, where there is a danger of falling must be carried out with suitable aids!
- If fall protection equipment is available, then it must be used!
- If aids are not available and work cannot be carried out from the ground, then the assembly personnel must secure themselves with the permissible fall arrest system to prevent falling, see Crane operating instructions, chapter 2.04!
- The fall arrest system must be attached on the fastening and hook points as well as on the safety ropes!
- Only step on the aids, ladders and catwalks with clean shoes!
- Keep aids, ladders and catwalks free of heavy dirt, snow and ice!

Note

- The sign **3** marks the fastening points, where assembly personnel must hook in the fall arrest system to secure themselves against falling!

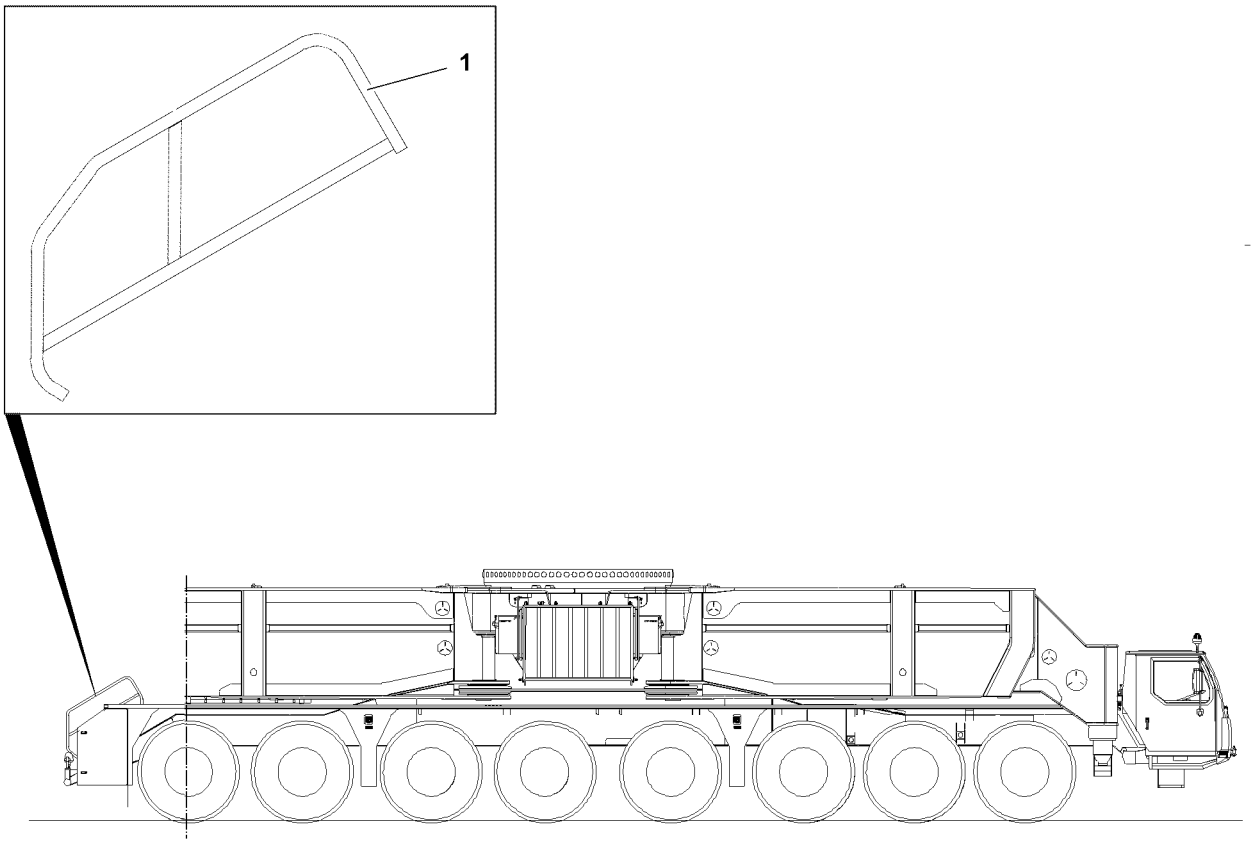

B117191

2 Fall protection equipment on the crane chassis

WARNING
Danger of falling!
During assembly / disassembly, inspection and maintenance work, personnel must be secured with appropriate aids to prevent them from falling!
If this is not observed, assembly personnel could fall and suffer life-threatening or fatal injuries!
- ▶ For assembly / disassembly work, maintenance work and inspections, swing all railings and platforms into position and secure!
- ▶ Only step on the aids, ladders and catwalks with clean shoes!
- ▶ Keep aids, ladders and catwalks free of heavy dirt, snow and ice!
- ▶ Replace damaged ladders and platforms immediately!
- ▶ Assemble all ladders and platforms to be stable and safely accessible!

2.1 Railing

2.1.1 Swinging the railings into operating position

WARNING
Danger of falling!
When working aloft, there is a risk of falling for the assembly personnel!
Personnel can be severely injured or killed!
- ▶ Even at assembly of safety devices, there is a risk of falling!
- ▶ For all work aloft, wear a fall arrest system and click it with the snap hook on the fastening points or safety ropes!
- ▶ Replace damaged ladders and platforms immediately!
- ▶ Keep aids, ladders and platforms free of heavy dirt, snow and ice!
- ▶ Assemble all ladders and platforms to be stable and safely accessible!

- ▶ Swing and secure the railings **1** on the crane chassis during all assembly and disassembly work into operating position, see illustration.

2.1.2 Swinging the railings into transport position

Note
- ▶ After assembly / disassembly work and for transport, the railings must be assembled and secured in transport position!

- ▶ Swing and secure the railings **1** on the crane chassis during all assembly and disassembly work and for transport into operating position, see illustration.

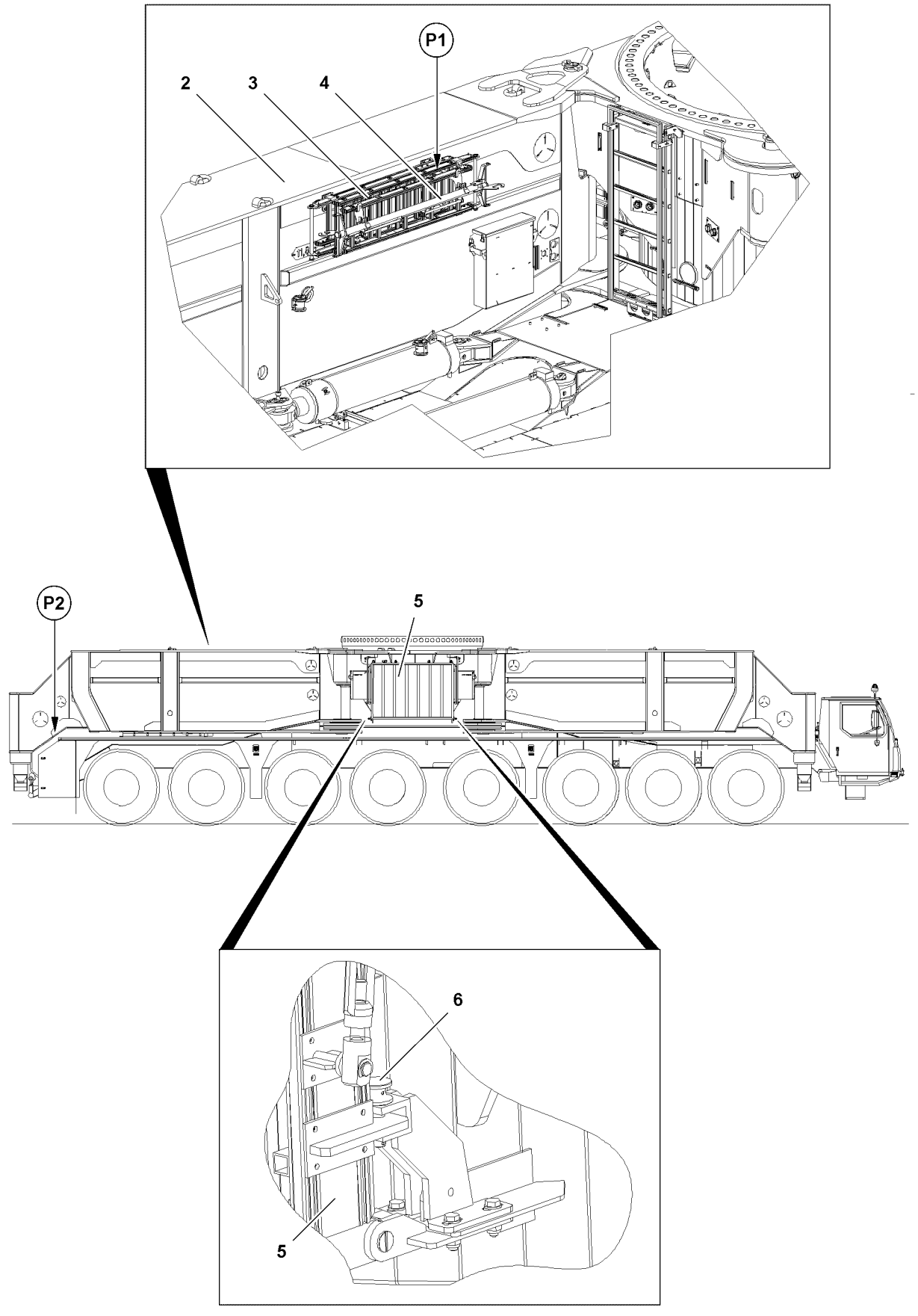

B117142

2.2 Platforms

WARNING
Danger of falling!
When working aloft, there is a risk of falling for the assembly personnel!
Personnel can be severely injured or killed!
- ▶ Even at assembly of safety devices, there is a risk of falling!
- ▶ For all work aloft, wear a fall arrest system and click it with the snap hook on the fastening points or safety ropes!
- ▶ Replace damaged ladders and platforms immediately!
- ▶ Keep aids, ladders and platforms free of heavy dirt, snow and ice!
- ▶ Assemble all ladders and platforms to be stable and safely accessible!

NOTICE
Property damage!
Damage of ladders and platforms when in contact to the ground and simultaneous driving!
- ▶ Make sure that the ladder has at least 200 mm distance to the ground when in operating position!

Make sure that the following prerequisites are met:
- – The vehicle is standing on a level surface.
- – The vehicle is at the level setting for on-road driving.

2.2.1 Folding the platforms into operating position

Note
- ▶ The assembly procedure is described on the example of a platform.
- ▶ Ladder **3** and ladder support **4** are in transport position on the inside of folding beam **2**.

- ▶ Remove the ladder **3** and ladder support **4** from the transport receptacle at point **P1**.
- ▶ Release and unpin the pins **6** on both sides.
- ▶ Insert the pins **6** on both sides in park position and secure.

Result:
- – The platform **5** is released.

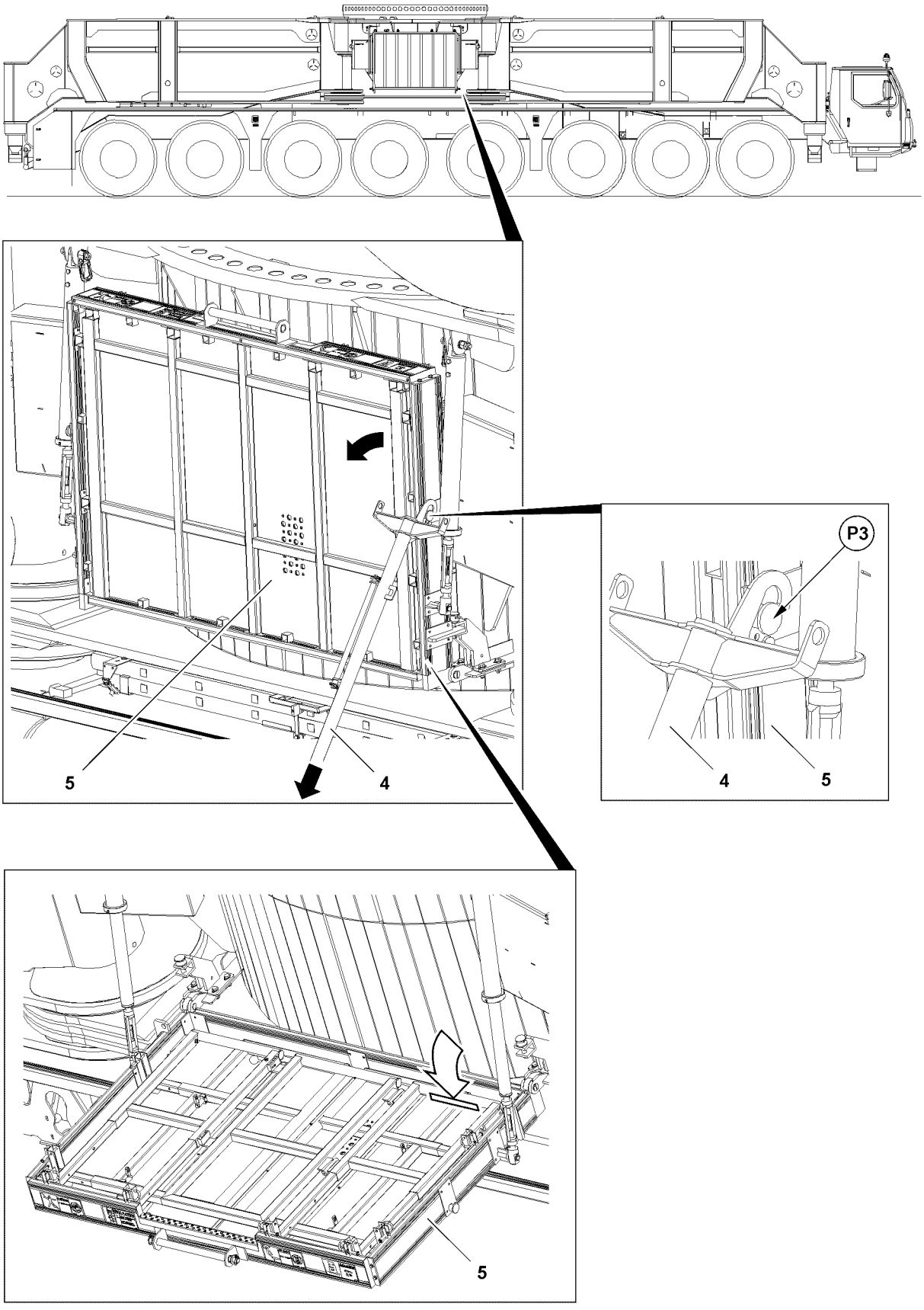

B117143

▶ Hang the ladder support **4** on the platform **5** at point **P3**.

WARNING
Danger of injury due to the platform!
The assembly procedure can cause severe injuries!
▶ Make sure that there are no persons within the danger zone!

▶ Fold the platform **5** all the way down by pulling the ladder support **4**.
▶ Unhook the ladder support **4** on the platform **5**.

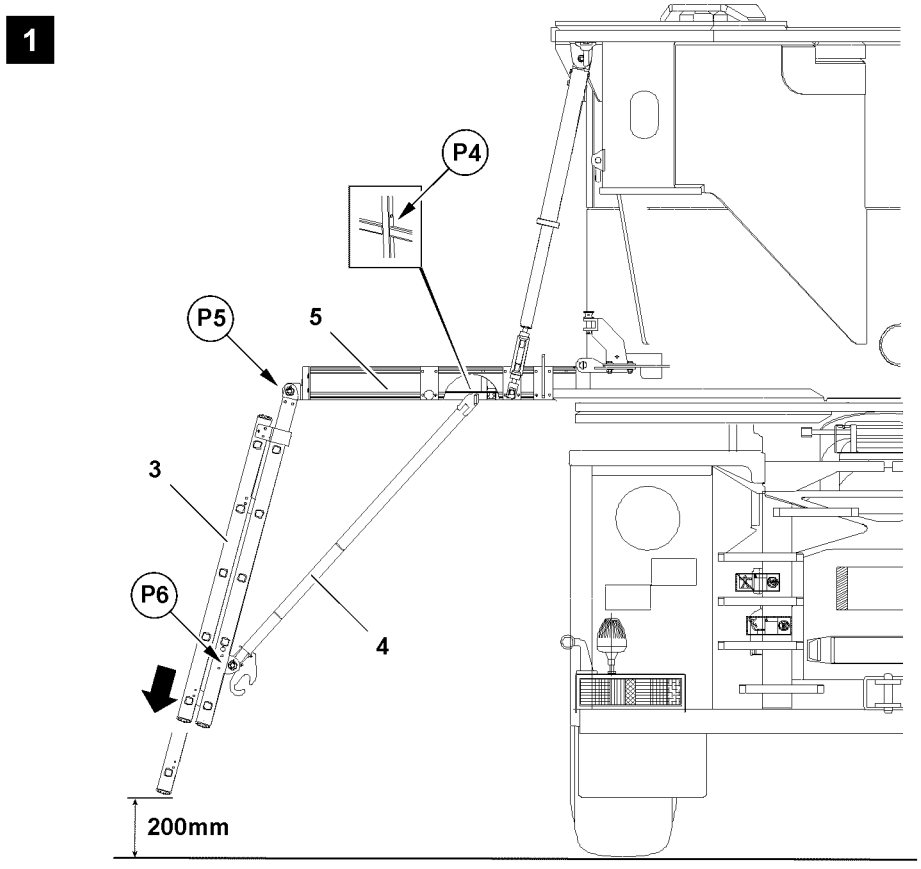

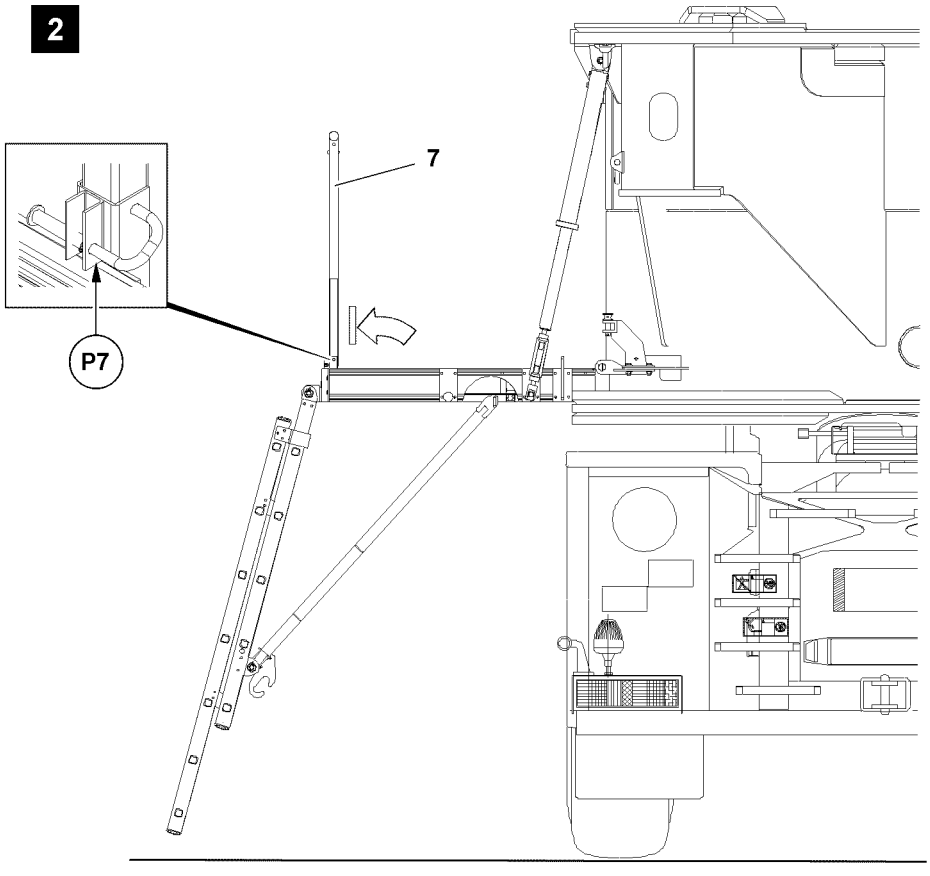

B117144

- ▶ Turn the ladder support **4**, see illustration **1**.
- ▶ Pin and secure the ladder support **4** on the platform **5** at point **P4**.
- ▶ Pin and secure the ladder **3** on the platform **5** at point **P5**.
- ▶ Pin and secure the ladder **3** with the ladder support **4** at point **P6**.
- ▶ Pull the ladder **3** out and lock in operating position.

Result:

– The ladder can be accessed.

WARNING
Danger of falling!
Assembly personnel can fall and be severely injured or killed!

- ▶ Wear the supplied fall arrest system and hook on the intended fastening points!

- ▶ From the ladder **3** fold the railing **7** open completely, see illustration **2**.
- ▶ Pin and secure the railing **7** on the four points **P7**.

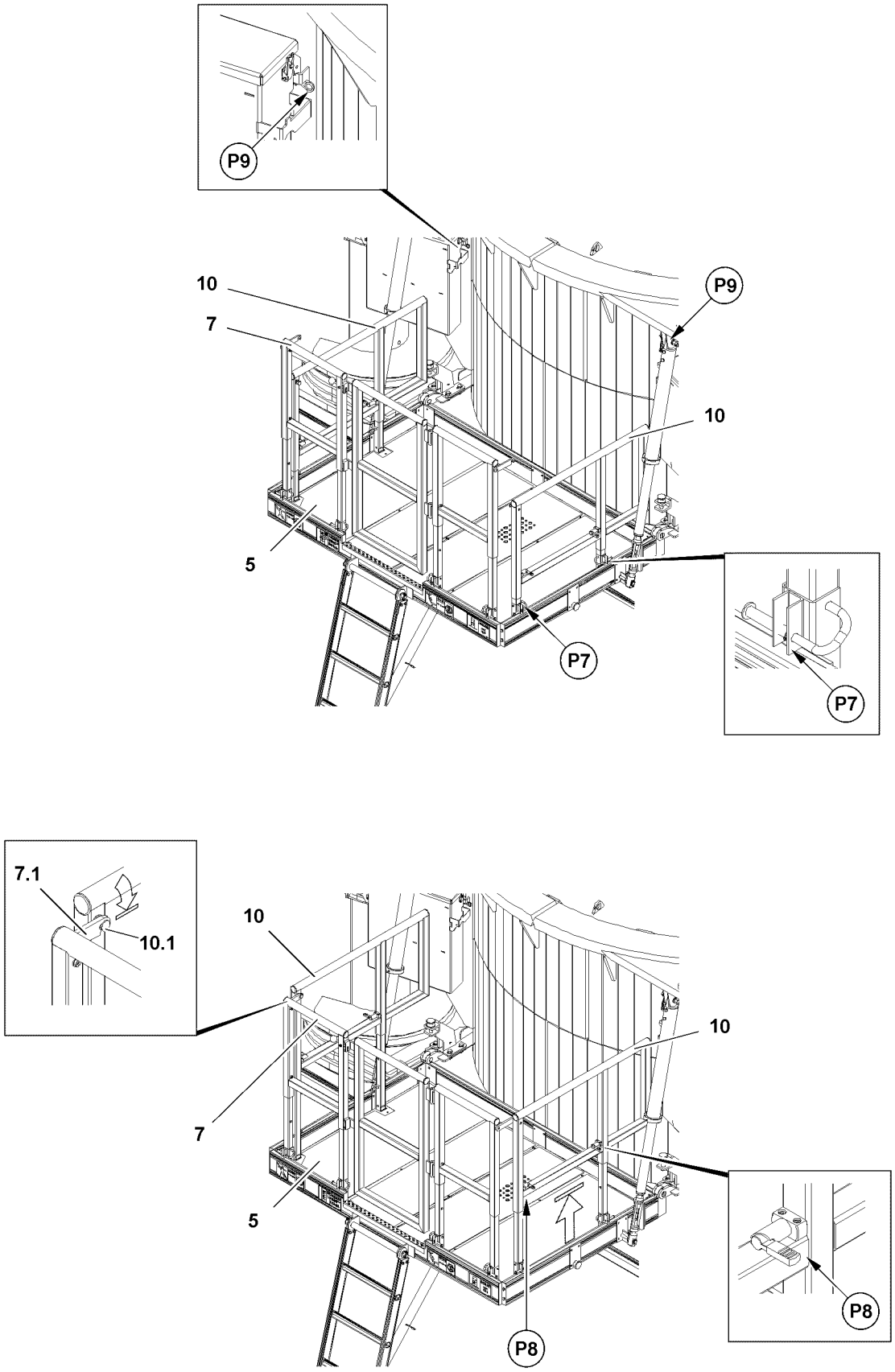

B117145

NOTICE
Property damage!
Damage of platforms if load is too high!
▶ Make sure that the platforms are not subjected to a load of more than maximum 300 kg!

▶ Step on the platform **5** and hook the supplied fall arrest system on point **P9**.
▶ Fold the side railing **10** up.
▶ Pin and secure on points **P7**.
▶ Release the bajonet latch **P8**.
▶ Telescope the side railing **10** out.
▶ Pin and secure the bajonet latch **P8**.
▶ Connect the side railing **10** with the latch **7.1** and pin **10.1** on the railing **7**.

Result:
– The platform is operational.

▶ Repeat the procedure for the second platform.

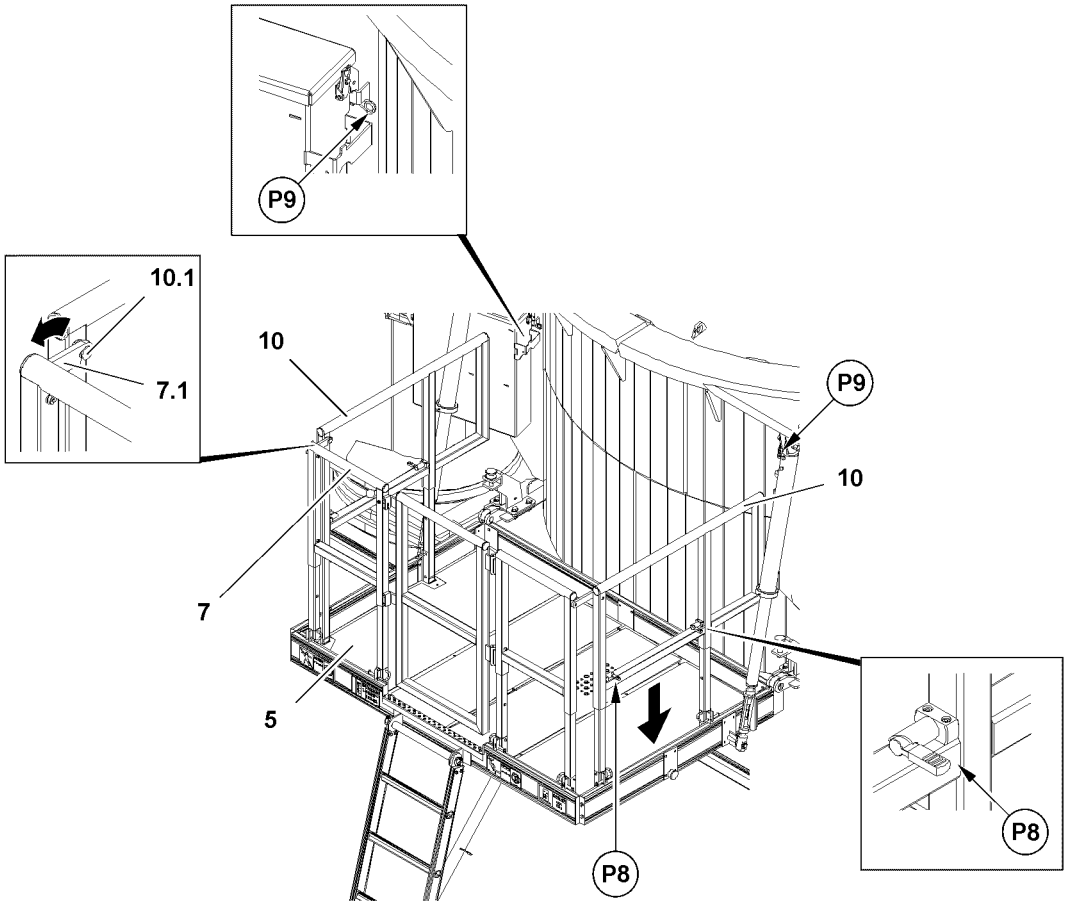

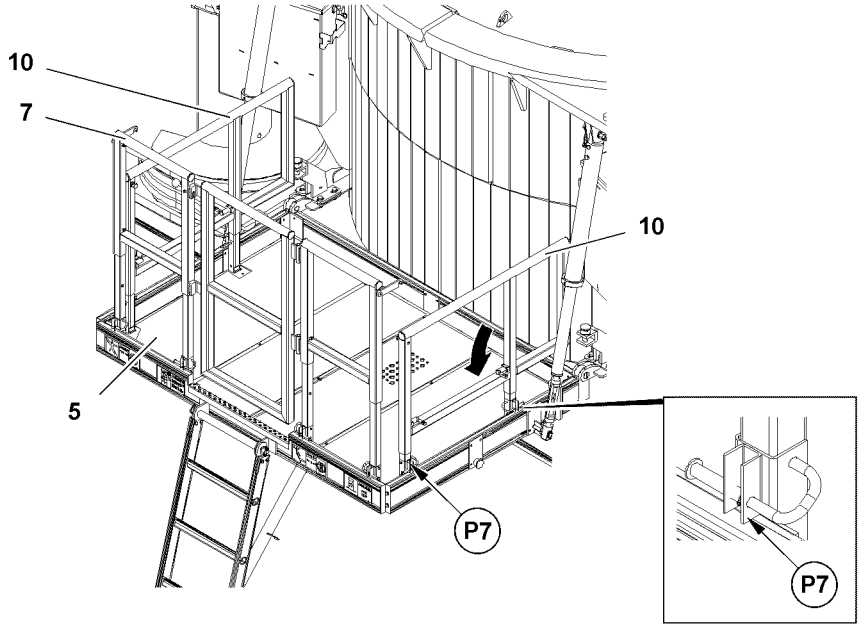

B117146

2.2.2 Folding the platforms into transport position

Note

- After assembly / disassembly work and for transport, the railings, ladders and platforms must be assembled and secured in transport position!
- The disassembly procedure is described on the example of a platform.

WARNING

Danger of falling!

When working aloft, there is a risk of falling for the assembly personnel!

Personnel can be severely injured or killed!

- Even at assembly of safety devices, there is a risk of falling!
- For all work aloft, wear a fall arrest system and click it with the snap hook on the fastening points or safety ropes!
- Replace damaged ladders and platforms immediately!
- Keep aids, ladders and platforms free of heavy dirt, snow and ice!
- Assemble all ladders and platforms to be stable and safely accessible!

- Step on the platform **5** and hook the supplied fall arrest system on point **P9**.
- Unhook the retaining latch **7.1** on the side railing **10**.

WARNING

Danger of accident!

When telescoping in and folding the railing down, body parts can be caught!

- Telescope in and fold the railing down carefully!

- Release the bajonet latch **P8** on points **P8**.
- Telescope the side railing **10** in.
- Pin and secure the side railing **10** with the bajonet latch **P8** in end position.
- Release the pins on points **P7** and fold the side railing **10** down.
- Repeat the procedure for the second side railing.
- Unhook the supplied fall arrest system on point **P9** and climb off the platform.

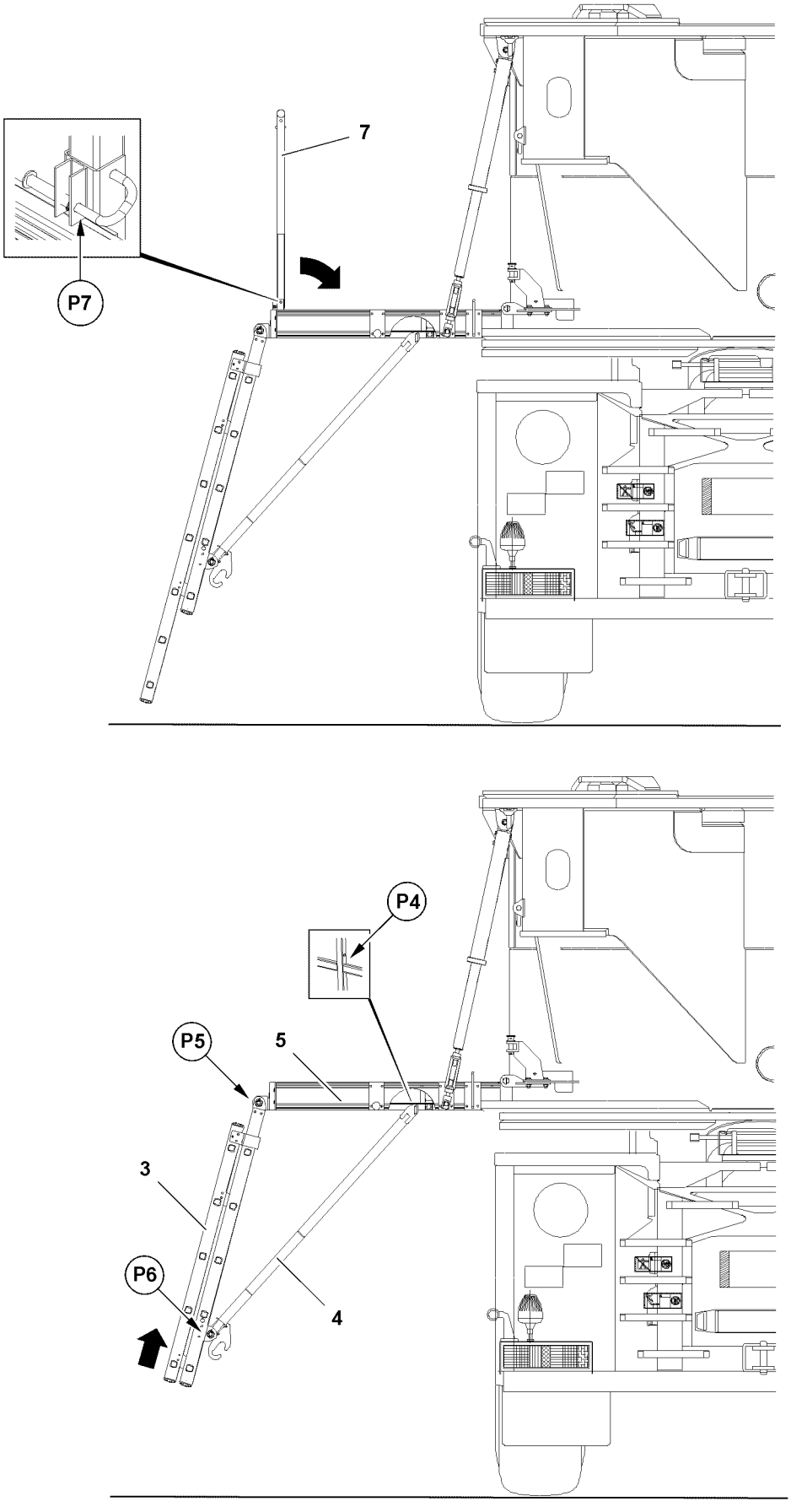

B117181

- ▶ Release the pins on points **P7** and fold the railing **7** down.
- ▶ Push the ladder **3** in completely and secure it.

WARNING
Danger of accident!
The ladder support **4** and ladder **3** can swing uncontrolled during the disassembly procedure!
- ▶ Make sure that there are no persons within the danger zone!

- ▶ Unpin the ladder support **4** on point **P6**.
- ▶ Unpin the ladder **3** on the platform **5** at point **P5** and place down.
- ▶ Unpin the ladder support **4** on the platform **5** at point **P4** and place down.

Result:
– The platform can be folded in transport position.

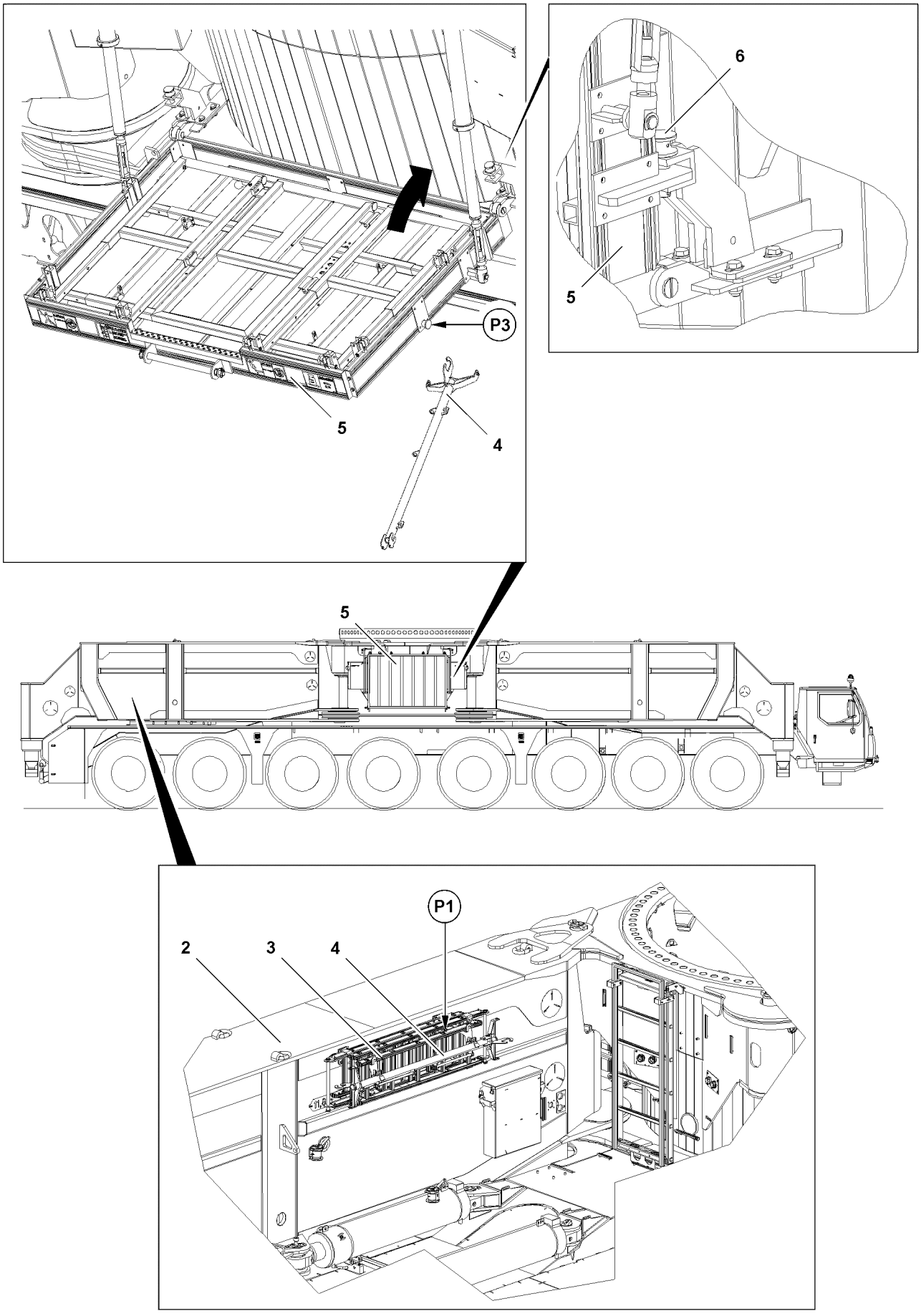

B117321

- ▶ Turn the ladder support **4** and hook at point **P3**.

WARNING
Danger of injury!
Any objects remaining on the platform can fall down during the folding procedure!
- ▶ Make sure that no persons or objects are on the platform!

- ▶ Fold the platform **5** with the ladder support **4** up.
- ▶ Remove the ladder support **4**.
- ▶ Pin the platform **5** on both sides with pins **6** and secure.

WARNING
Danger of falling!
When working aloft, there is a risk of falling for the assembly personnel!
Personnel can be severely injured or killed!
- ▶ Even at assembly of safety devices, there is a risk of falling!
- ▶ For all work aloft, wear the supplied fall arrest system and click it with the snap hook on the fastening points or safety ropes!
- ▶ Replace damaged ladders and platforms immediately!
- ▶ Keep aids, ladders and platforms free of heavy dirt, snow and ice!
- ▶ Assemble all ladders and platforms to be stable and safely accessible!

- ▶ Hang the ladder **3** and ladder support **4** in transport receptacle on the folding beam **2** at point **P1** and secure.
- ▶ Repeat the procedure for the second platform.

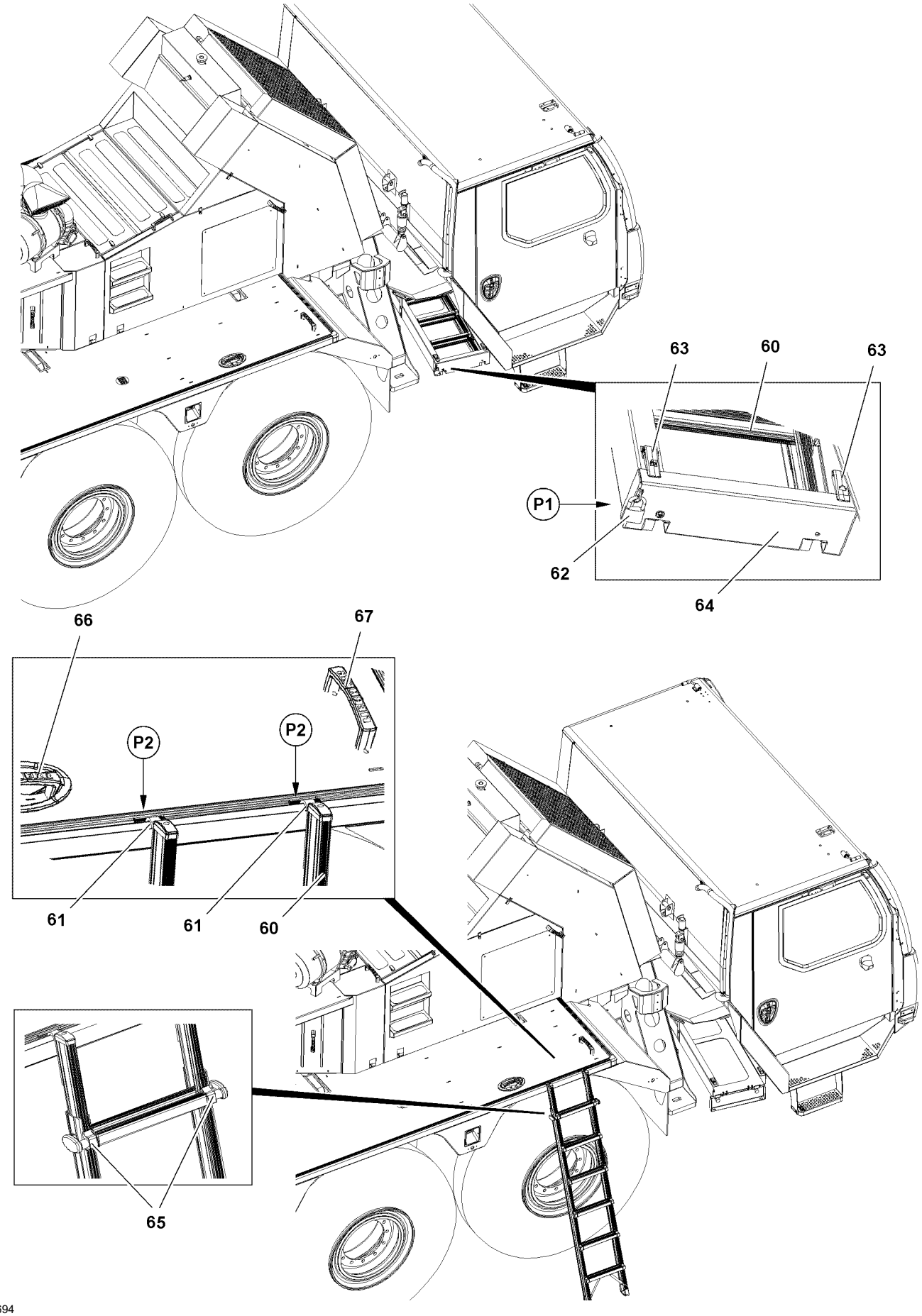
63
60
63
P1
62
64
66
67
P2
P2
61
61
60
65
B115694

2.3 Bringing the hook ladder into operating position

Make sure that the following prerequisites are met:
– The mobile crane is leveled for on-road driving.
– The ground is level and of sufficient load bearing capacity.

CAUTION
Danger of crushing!
During assembly and disassembly of the hook ladder **60** fingers and hands can be crushed!
▶ Do not reach with your hands into the danger zone!
▶ Install the hook ladder **60** only from the ground!

▶ Remove the padlock **62** at point **P1**.
▶ Open the turnbuckles **63** and swing the cover **64** down.
▶ Remove hook ladder **60** from the receptacle.
▶ Make sure that both retainers **65** are engaged on the hook ladder **60**.
▶ Hook the hook ladder **60** with the hook **61** in the receptacles on the border strip on points **P2**.

WARNING
Danger of falling!
While climbing up and down via a ladder, the assembly personnel can fall down and be injured severely!
▶ When ascending and descending, the assembly personnel must ensure a 3-point support!
▶ When ascending and descending, use rungs and ladder beams as handles!
▶ The assembly personnel must step into the rungs sufficiently deep!
▶ When changing from the hook ladder to the walking surface, the assembly personnel must secure themselves with the attached handle **66** and handle **67** to prevent falling!
▶ When changing from the walking surface to the hook ladder, the assembly personnel must secure themselves with the attached handle **66** and handle **67** to prevent falling!

A 3-point support is ensured when:
– Two legs are standing safely and one hand has a safe hold.
– Two hands have a safe hold and one leg is standing safely.

▶ Adding service fluids, see Crane operating instructions, chapter 7.04.

2.4 Bringing the hook ladder into transport position

CAUTION
Danger of crushing!
During assembly and disassembly of the hook ladder **60** fingers and hands can be crushed!
▶ Do not reach with your hands into the danger zone!
▶ Remove the hook ladder only from the ground!

▶ Unhook the hook ladder **60** from the receptacles on the border strip at points **P2**.
▶ Slide the hook ladder **60** with the hooks **61** downward into the receptacle.
▶ Swing the cover **64** up and secure with the turnbuckles **63**.
▶ Lock the hook ladder **60** with the padlock **62** at point **P1**.

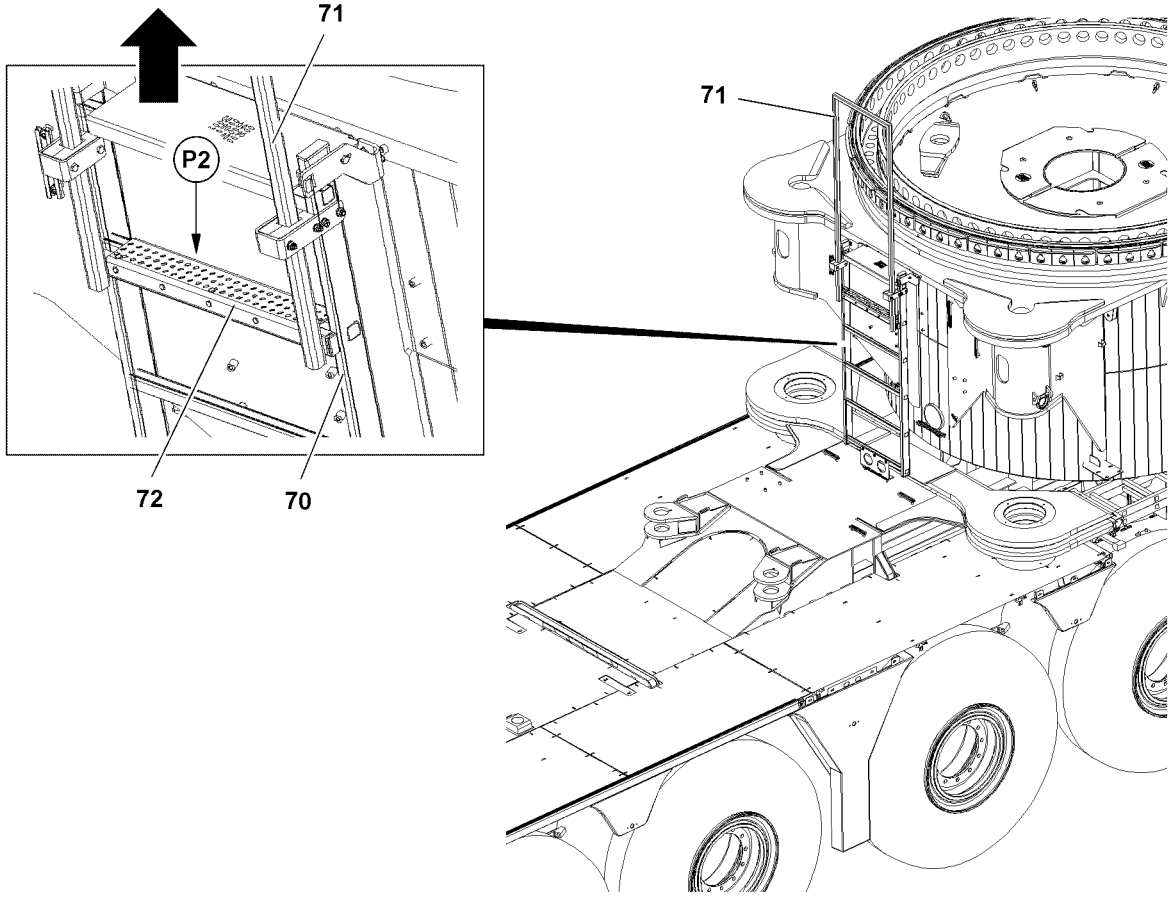

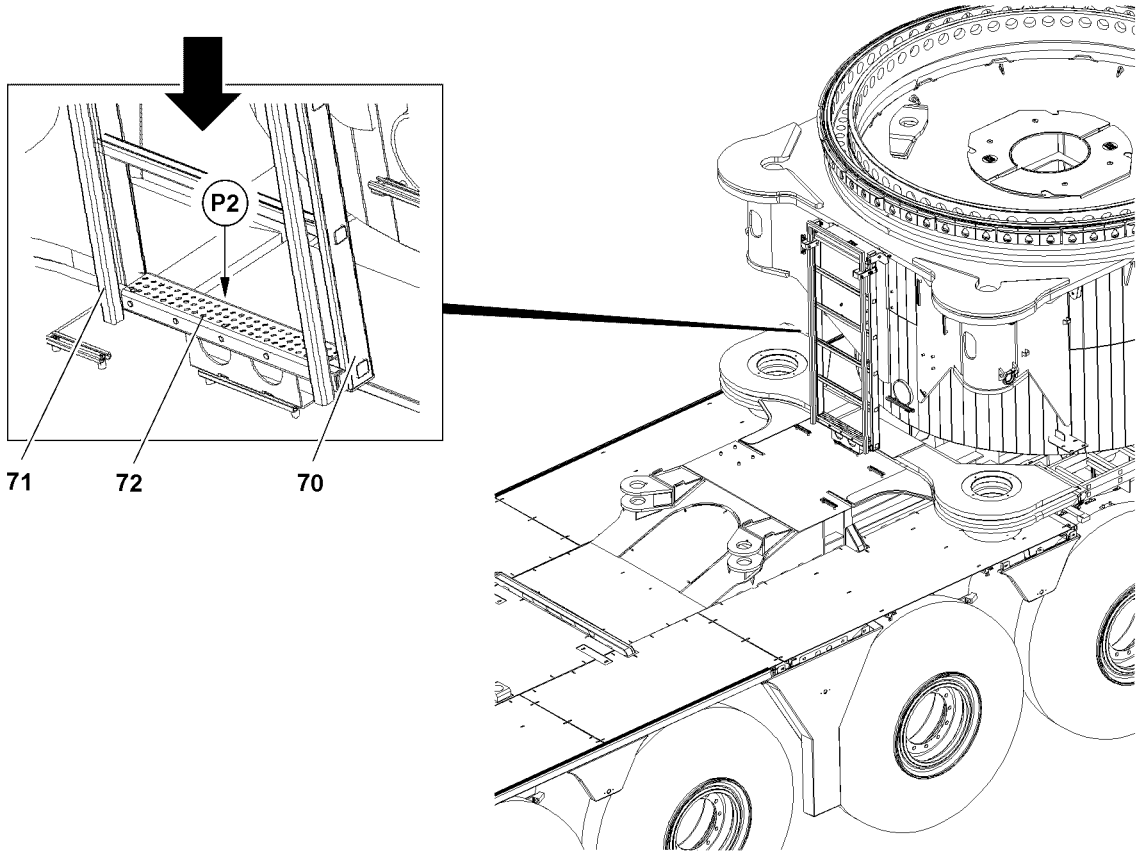

B115695

2.5 Bringing the ladder on the pot into operating position

CAUTION
Danger of crushing!
During assembly and disassembly of the ladder **70** fingers and hands can be crushed!
▶ Do not reach with your hands into the danger zone!

▶ Move the retaining bar **71** out and up.
▶ Affix the retaining bar **71** with the step **72** on the uppermost rung of the ladder **70** at point **P1**.

WARNING
Danger of falling!
While climbing up and down via a ladder, the assembly personnel can fall down and be injured severely!
▶ When ascending and descending, the assembly personnel must ensure a 3-point support!
▶ When ascending and descending, use rungs and ladder beams as handles!
▶ The assembly personnel must step into the rungs sufficiently deep!
▶ When changing from the hook ladder to the walking surface, the assembly personnel must secure themselves on the retaining bar **71** to prevent falling!
▶ When changing from the walking surface to the hook ladder, the assembly personnel must secure themselves on the retaining bar **71** to prevent falling!

A 3-point support is ensured when:
– Two legs are standing safely and one hand has a safe hold.
– Two hands have a safe hold and one leg is standing safely.

▶ Carry out the assembly or disassembly work.

2.6 Bringing the ladder on the pot into transport position

CAUTION
Danger of crushing!
During assembly and disassembly of the ladder **70** fingers and hands can be crushed!
▶ Do not reach with your hands into the danger zone!

WARNING
Falling retaining bar!
The retaining bar **71** can fall down due to its own weight when moving it in!
Personnel can be severely injured!
Fingers and hands can be crushed!
▶ Hold the retaining bar **71** when moving it in!

▶ Move the retaining bar **71** in and downward.
▶ Affix the retaining bar **71** with the step **72** on the lowest rung of the ladder **70** at point **P2**.

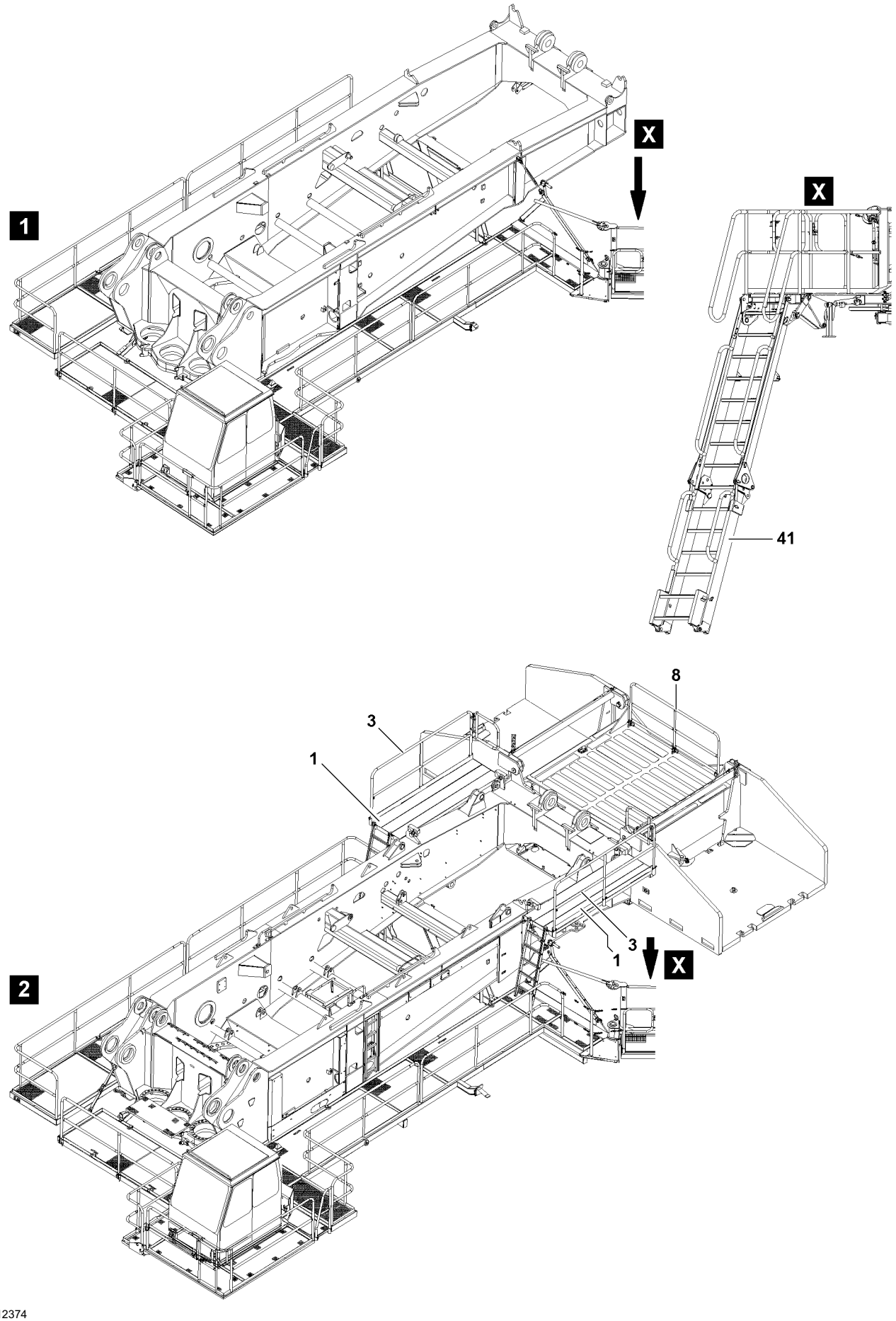
1
X
X
41
2
8
3
1
3
1
X
B112374

3 Fall protection equipment on the turntable

WARNING
Danger of falling!
During assembly / disassembly, inspection and maintenance work, personnel must be secured with appropriate aids to prevent them from falling!
If this is not observed, assembly personnel could fall and suffer life-threatening or fatal injuries!
- ▶ For assembly / disassembly work, maintenance work and inspections, swing all railings and platforms into position and secure!
- ▶ Only step on the aids, ladders and catwalks with clean shoes!
- ▶ Keep aids, ladders and catwalks free of heavy dirt, snow and ice!
- ▶ Replace damaged ladders and platforms immediately!
- ▶ Assemble all ladders and platforms to be stable and safely accessible!

Note
- ▶ For description of the ladder **41**, see Crane operating instructions, chapter 4.03!

3.1 Turntable without extension, illustration 1

3.2 Turntable with extension*, illustration 2

Note
- ▶ On the extension, additional catwalks **1**, railings **3** and railings **8** must be assembled!

- ▶ Assemble additional catwalks **1**, railings **3** and railings **8**, see section “Assembling catwalks and railings on extension”.

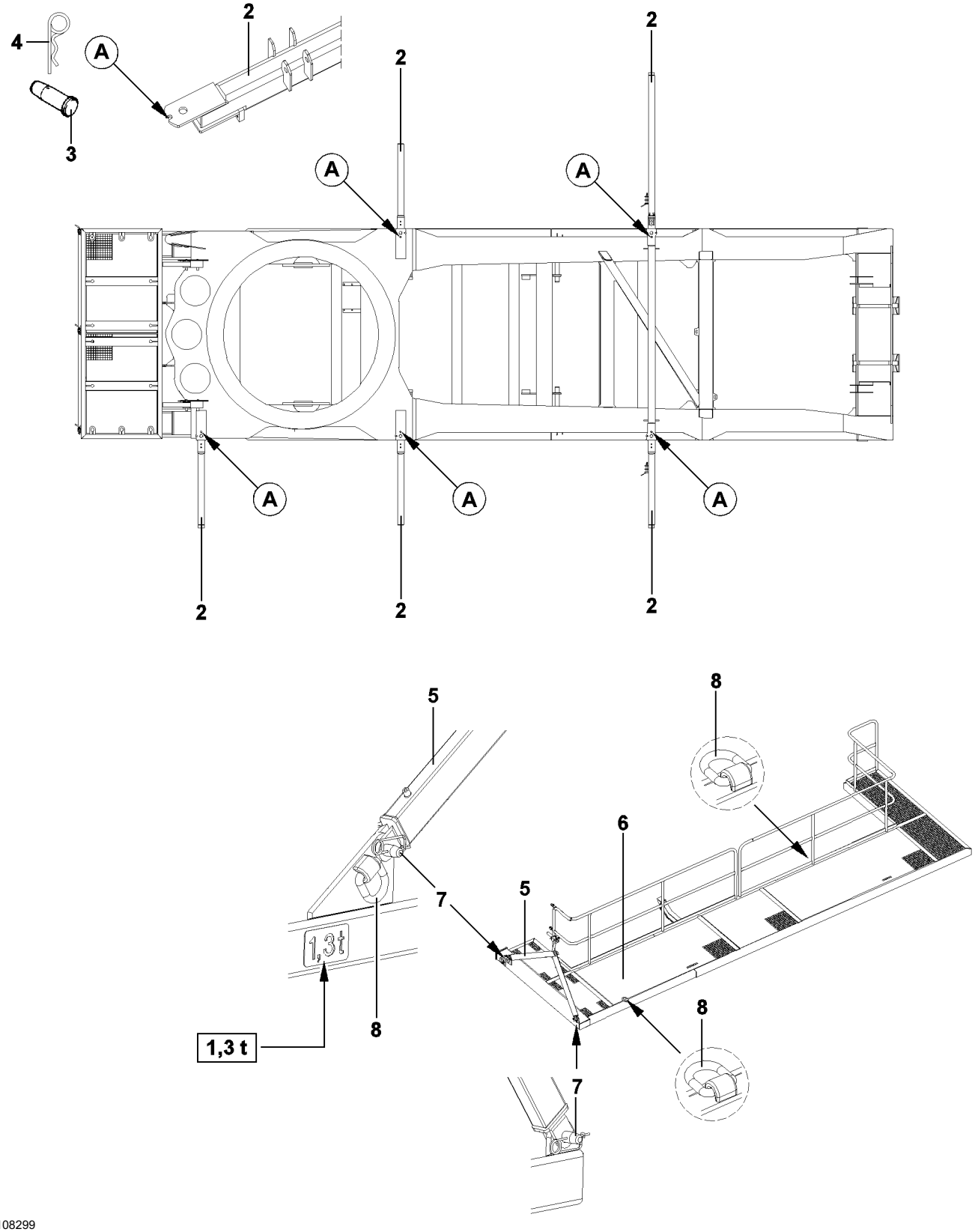
4
2
A
3
2
2
A
A
A
A
A
2
2
2
5
8
6
7
5
1,3t
8
1,3 t
8
7
B108299

3.3 Assembling catwalks onto the turntable

Make sure that the following prerequisite is met:

– The crane cab is swung into operating position.

WARNING

Danger of fatal injury due to falling catwalk!

The catwalk can fall down due to improper attachment or as the result of an assembly / disassembly error!

▶ During the assembly / disassembly process, remaining under the catwalk is prohibited!

▶ Swing out all support **2** on the turntable and pin with the pins **3** onto the points **A** and secure with cotter pins **4**.

▶ Pin support **5** on catwalk **6** with the pins **7** and secure with spring retainers.

▶ Hang the catwalk **6** onto the fastening points **8** properly onto an auxiliary crane.

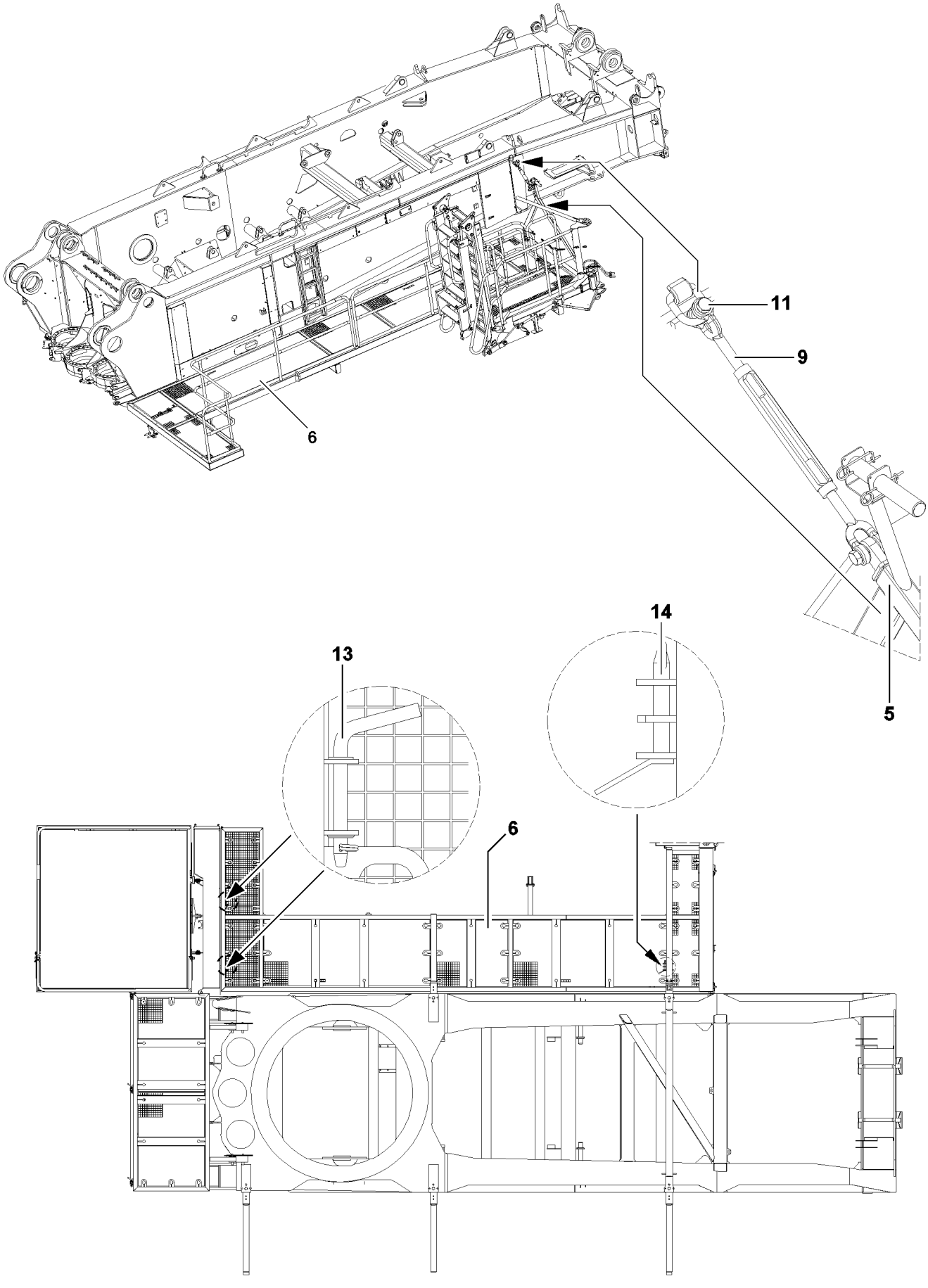

B112375

3.4 Assembling left catwalk

Note

▶ Bolt and secure catwalk **6** initially on the lug **10** “left” onto the turntable!

▶ Bolt and secure retainer **9** on lug **10** with screw **11**.

▶ Assemble the catwalk **6** “left” onto the turntable.

▶ Pin and secure the catwalk **6** with the pins **13** and pins **14** on the turntable.

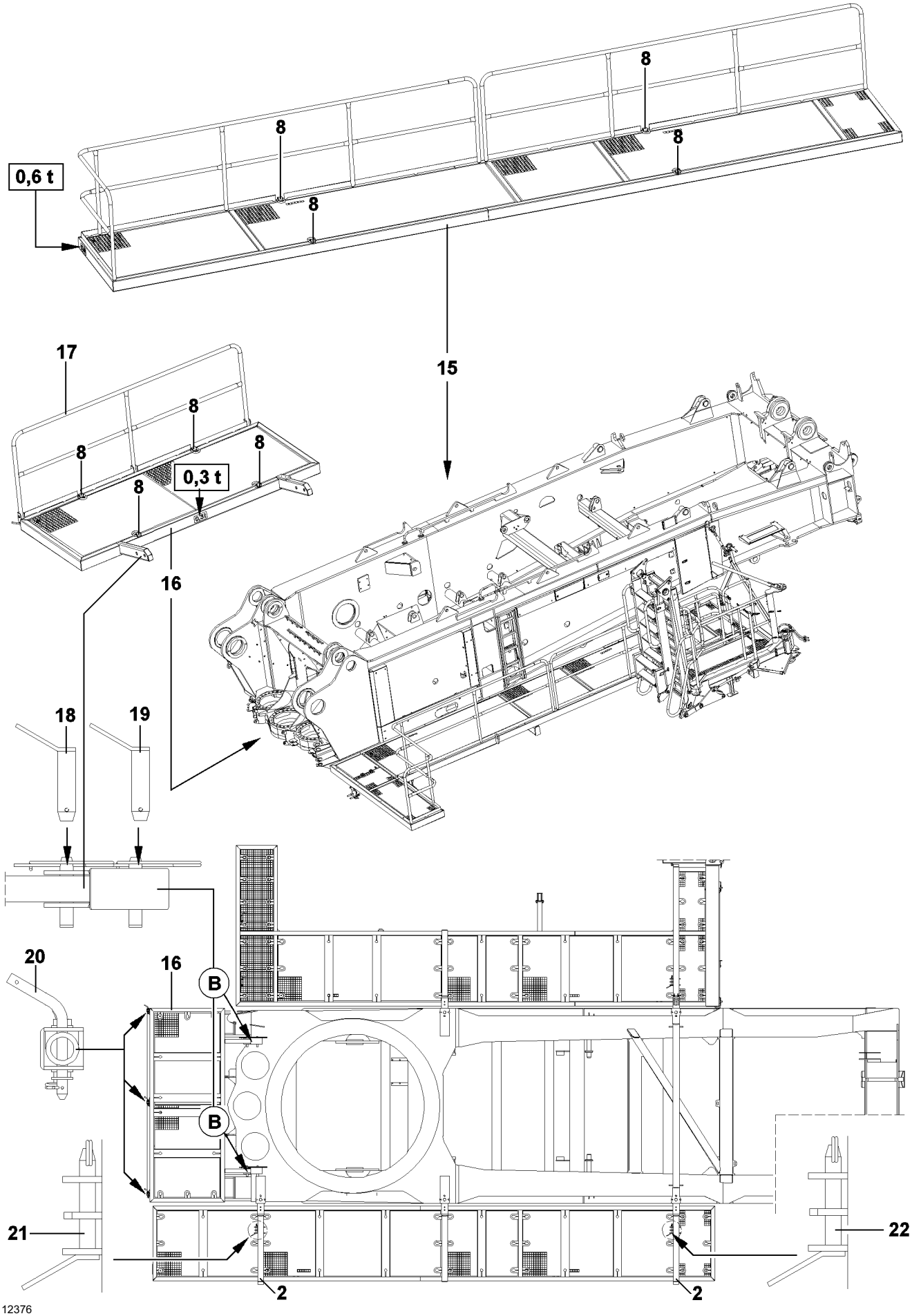
0,6 t
8
8
8
8
17
15
8
8
8
8
0,3 t
16
18
19
20
16
B
B
21
22
2
2
B112376

3.5 Assembling the catwalk on the right and front

- ▶ Hang the catwalk **15** onto the fastening points **8** properly onto an auxiliary crane.
- ▶ Assemble the catwalk **15** properly to the “right” on the turntable.
- ▶ Pin and secure catwalk **15** with pins **21** and pins **22** onto the supports **2**.
- ▶ Hang the catwalk **16** onto the fastening points **8** properly onto an auxiliary crane.
- ▶ Assemble the catwalk **16** properly onto the “front” on the turntable.
- ▶ Pin in and secure all pins **18** and pins **19** on both sides on the points **B**.
- ▶ Swing railings **17** on catwalk **16** in operating position and pin and secure all pins **20**.

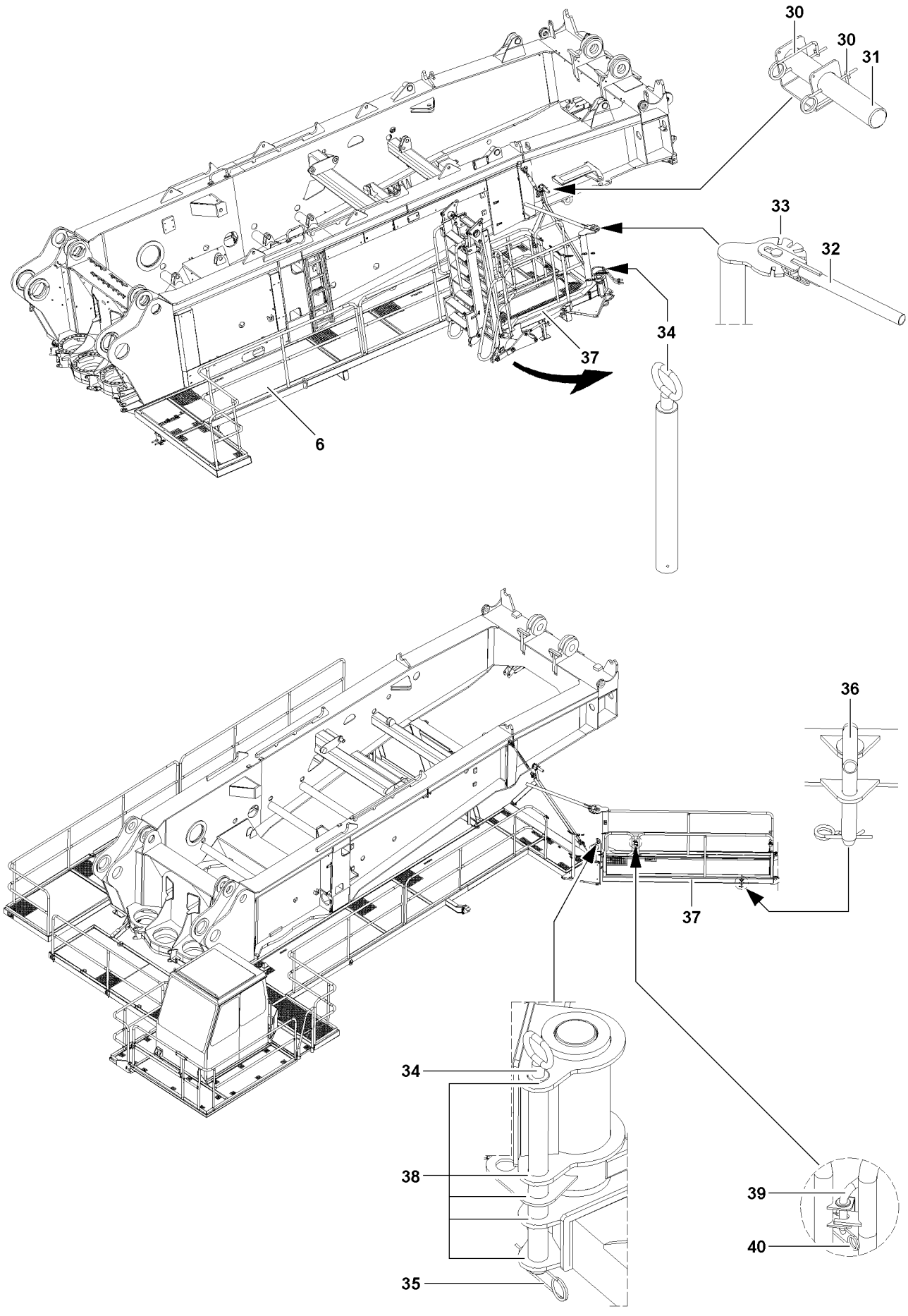

B112377

3.6 Swinging the catwalk into operating position

Make sure that the following prerequisites are met:

– The crane is supported and horizontally aligned.
– The catwalk **6** is properly assembled with a catwalk **37** that can be swung on the turntable.

WARNING

The catwalk **37** can swing out unintentionally!

If the following is not observed, the catwalk **37** can unintentionally swing out and injure personnel!

- ▶ It is prohibited to remain in the swing range and folding area of the catwalk!
- ▶ The crane must be supported and horizontally aligned!
- ▶ The catwalk **37** must be swung out carefully with lever **32**!
- ▶ The pin **36** may only be unpinned when the lever **32** is securely engaged in the gear **33** and is held securely by a second person!
- ▶ Before the catwalk **6** is disassembled, the catwalk **37** must be swung back into transport position and pinned and secured on pin **34** and pin **36** on the catwalk **6**!

- ▶ Remove the spring retainers **30** with the pipe **31** and engage lever **32** into the gear **33**.
- ▶ Release and unpin the pin **34**.
- ▶ Release and unpin the pin **36**.
- ▶ Swing the catwalk **37** with the lever **32** into operating position until all bores **38** align.
- ▶ Insert the pin **34** and secure with spring retainer **35**.
- ▶ Swing the railings into position, pin with pins **39** and secure with spring retainers **40**.
- ▶ Hook all chain locks on the railings.

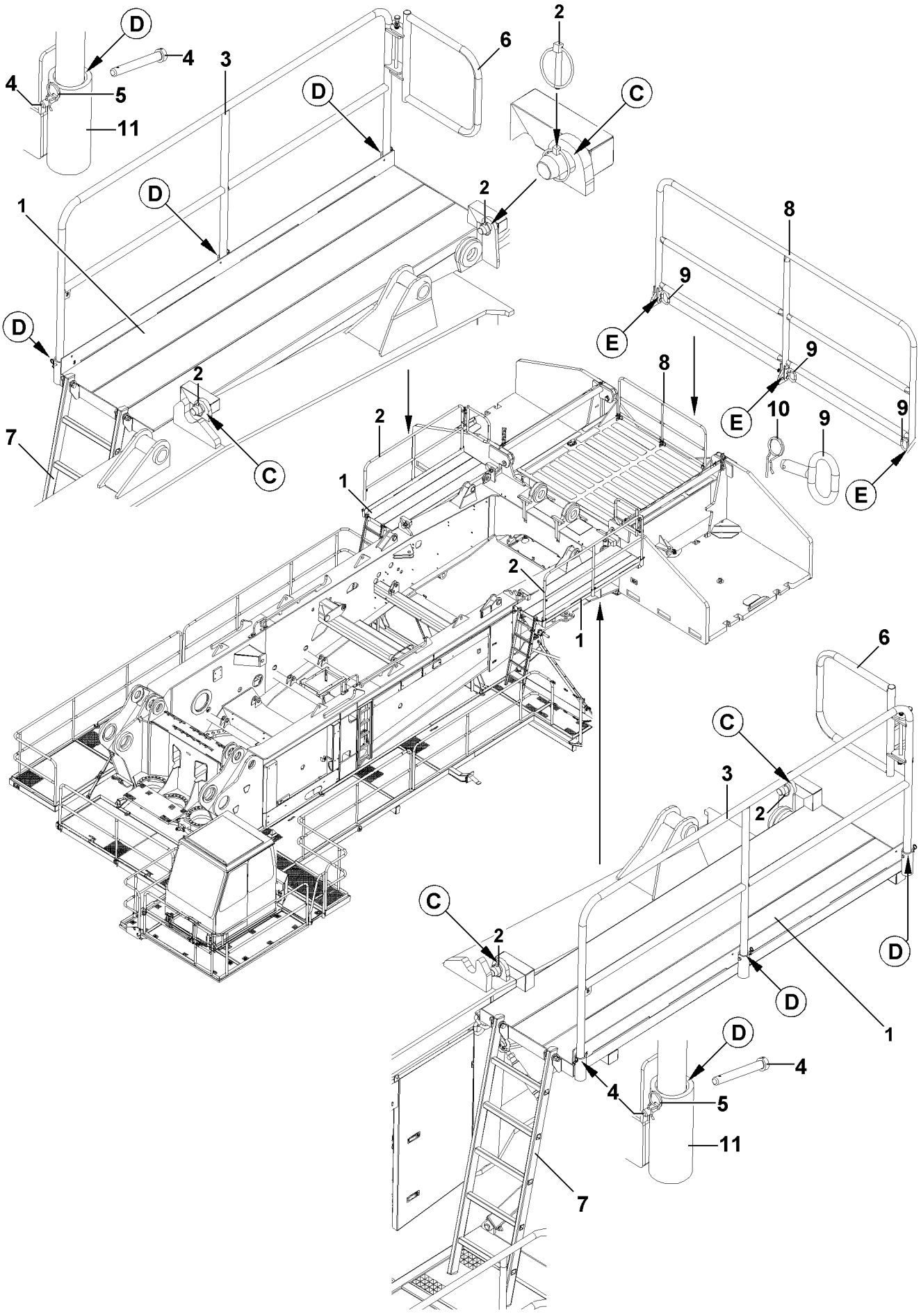

B108300

3.7 Assembling the catwalks and railings on the extension*

- Swing the catwalks **1** with the auxiliary crane on both sides to the pin points **C** on the rear onto the turntable, pin and secure with the locking pins **2**.
- Lower the catwalks **1** with the auxiliary crane until the rubber cushion touches on the turntable frame.
- Insert the railings **3** on both sides on points **D** into the retainer **11**.
- Pin the railings **3** with pins **4** and secure with cotter pins **5**.
- Fold the bracket **6** on the railings **3** into position.
- Fold the ladder **7** on the catwalks **1** on both sides downward into position.
- Release and unpin all pins **9** on points **E** from the railings **8**.
- Swing the railings **8** upward into position.
- Pin all pins **9** on points **E** and secure with cotter pins **10**.

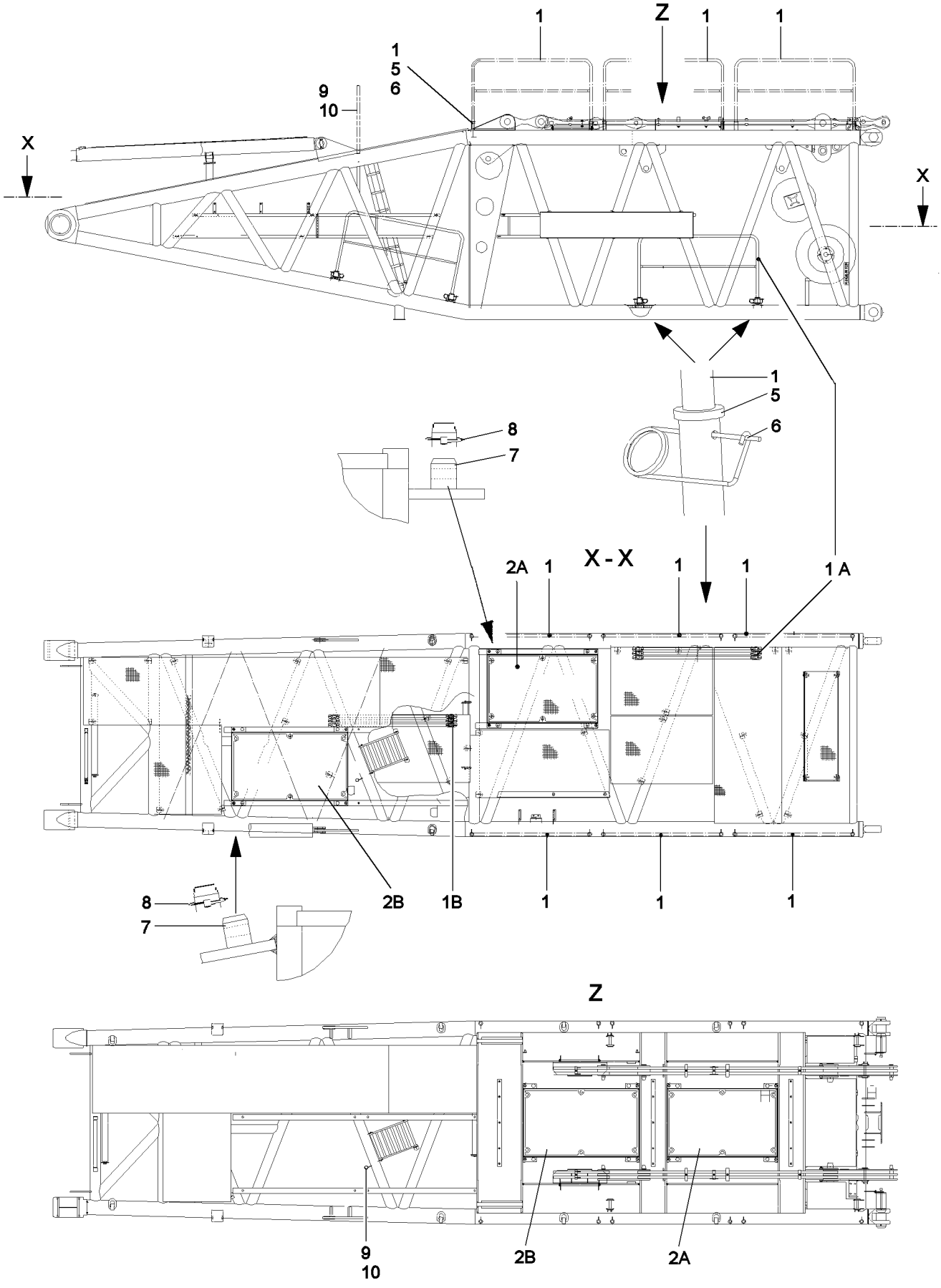

B108139

4 Fall protection equipment on the boom pivot sections and lattice sections

4.1 Assembling the railings and grating

4.1.1 Assembling the railing on the S-pivot section

WARNING
Danger of falling!
During assembly / disassembly, inspection and maintenance work, personnel must be secured with appropriate aids to prevent them from falling!
If this is not observed, assembly personnel could fall and suffer life-threatening or fatal injuries!
- ▶ For assembly / disassembly work, maintenance work and inspections on the S-pivot section, assemble all railings **1** and secure!
- ▶ Only step on S-pivot section with “clean shoes”!

- ▶ Push the railings **1** into the holders **5** on the S-pivot section and secure with spring retainers **6**.
- ▶ Pull the grip handle **9** upward and secure with spring retainer **10**.

Note
- ▶ After assembly / disassembly work and for transport, the railings must be assembled and secured in transport position!
- ▶ Push all railings **1** into the holders **5** on the S-pivot section and secure with spring retainers **6**.
- ▶ Slide in the grip handle **9** and secure with spring retainer **10**!

4.1.2 Assembling the grates

Note
- ▶ If both winches, winch 5 and winch 6, or only one winch is **not** installed in the S-pivot section or in transport position, then the openings must be closed with grates **2A** and grates **2B**!
- ▶ If one or both winches are installed, the above disassembled grates must be placed and secured in the receptacle **2A** and receptacle **2B**!

- ▶ Place the grates into the centering pins **7** and secure with safety locking pins **8**.

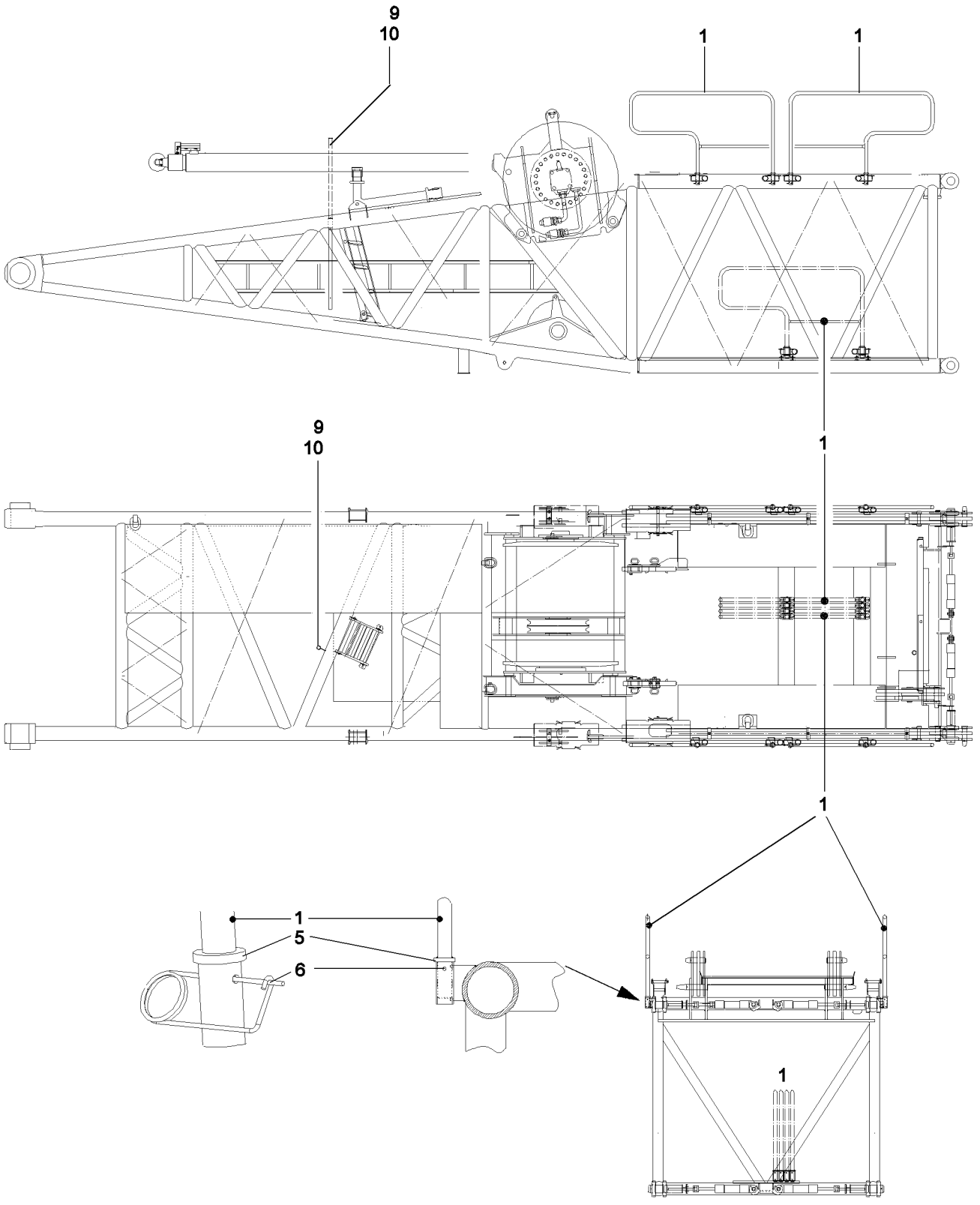

B108273

4.1.3 Assembling the railing on the D-pivot section

- ▶ Push the railings **1** into the holders **5** on the D-pivot section and secure with spring retainers **6**.
- ▶ Pull the grip handle **9** upward and secure with spring retainer **10**.

Note

- ▶ After assembly / disassembly work and for transport, the railings must be assembled and secured in transport position!
- ▶ Push all railings **1** into the holders **5** on the D-pivot section and secure with spring retainers **6**.
- ▶ Slide in the grip handle **9** and secure with spring retainer **10**!

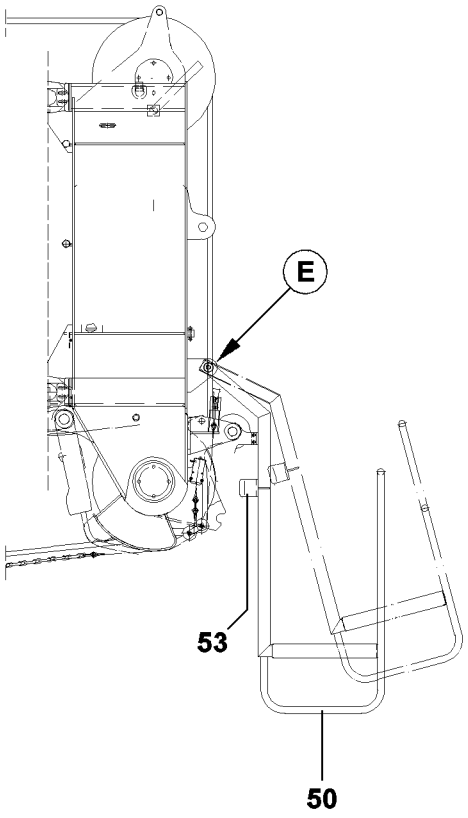

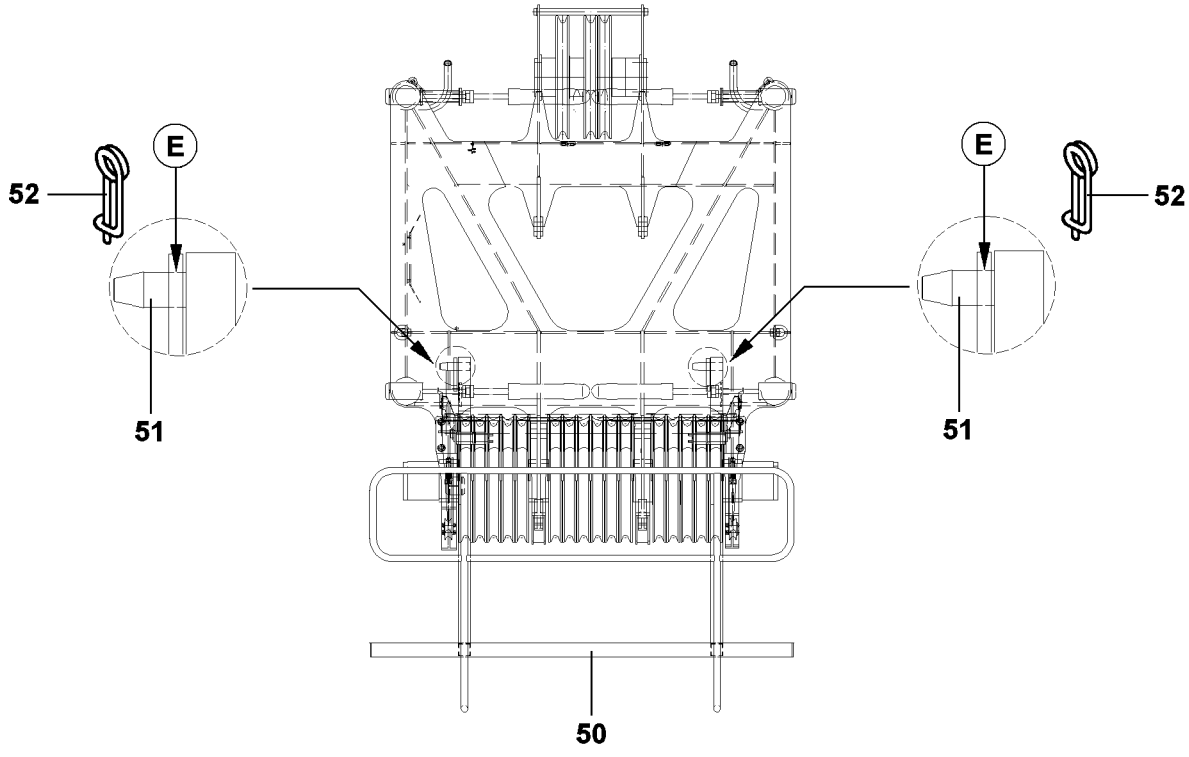

B198730

4.1.4 Assembling the platform on the pulley head

- ▶ Tilt the platform **50** and insert pins **51** on both sides into the bores **E** and secure with spring retainers **52**.
- ▶ Lower the platform **50** and affix on the side with the catches **53**.

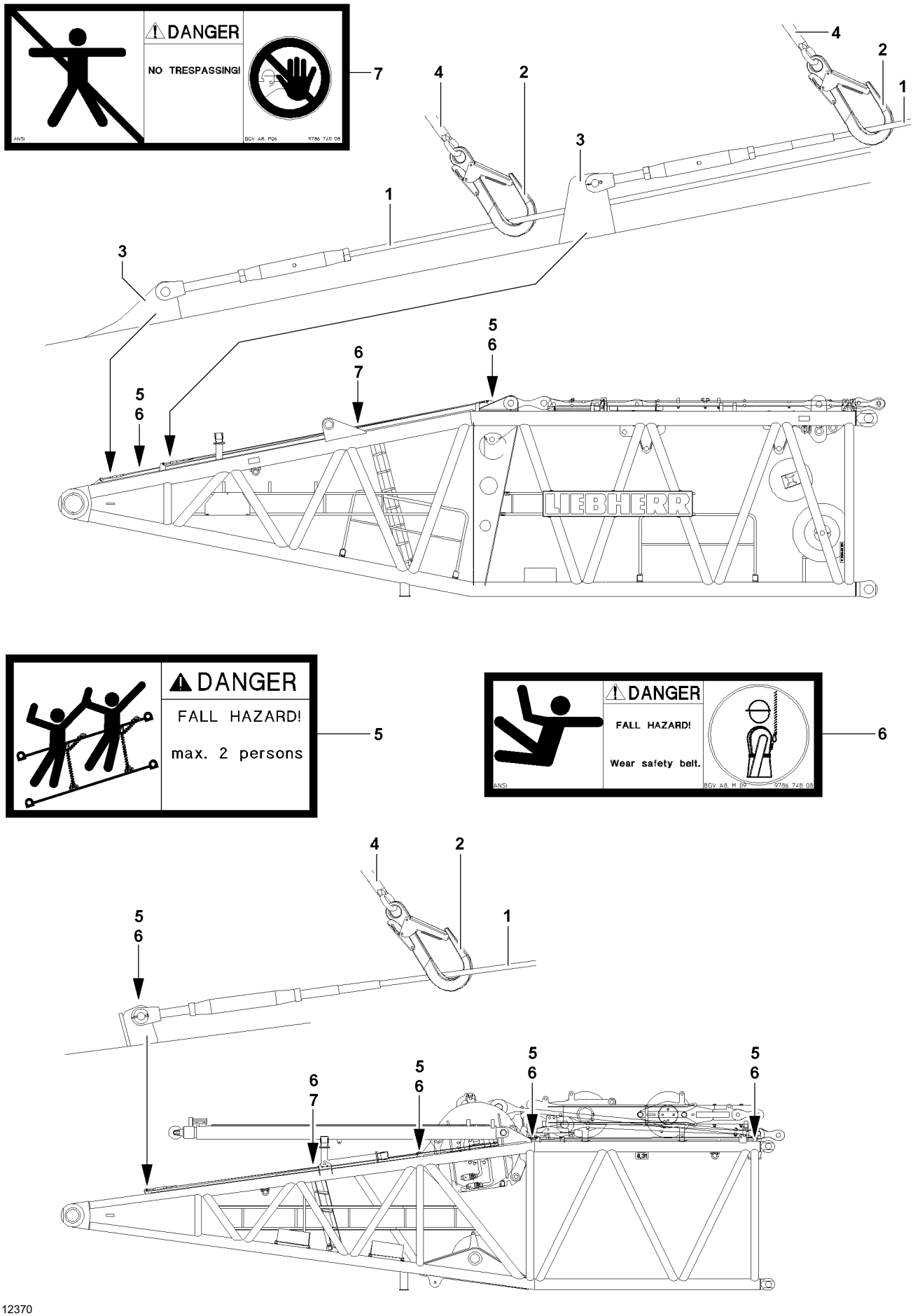
DANGER
NO TRESPASSING!
DANGER
FALL HAZARD!
max. 2 persons
DANGER
FALL HAZARD!
Wear safety belt.
LIEBHERR
1
2
3
4
5
6
7

B112370

4.2 Safety ropes

4.2.1 Safety ropes on the S- and D-pivot section

On the lattice sections, on the upper left and right hand side, are safety ropes **1** installed as fall protection equipment.

NOTICE
Danger of damage!
By hanging loads or other objects on the safety ropes, they can be damaged and fail in case of an emergency!
- ▶ Never hang loads or objects on the safety ropes **1**!

WARNING
Danger of falling!
During assembly / disassembly, inspection and maintenance work, personnel must be secured with appropriate aids to prevent them from falling!
If this is not observed, assembly personnel could fall and suffer life-threatening or fatal injuries!
- ▶ All work aloft, where there is a danger of falling must be carried out with suitable aids!
- ▶ If the work cannot be carried out with such aids nor from the ground, then the assembly personnel must secure themselves with the fall arrest system **4** to avoid falling, see Crane operating instructions chapter 2.04!
- ▶ The assembly personnel must hook themselves for all assembly / disassembly work as well as maintenance and inspection work on the lattice mast boom with the fall arrest system **4** on the safety ropes **1** on the left and right hand side with both snap hooks **2** and secure themselves to prevent them from falling! (For example: Fall arrester with self-actuating blocking function and an automatic tension and pull in device for the connectors)!
- ▶ The connector must be set to a length as short as possible so that is it impossible to hit the ground in case of a fall!
- ▶ Fall absorbers may not be used, because they stretch too much in case of a fall!
- ▶ On the safety ropes **1** on the left and right hand side, no more than **maximum two persons** may hook themselves with the snap hooks **2** and secure themselves to prevent falls, see sign **5**!
- ▶ Changing the snap hooks **2** over is only permissible on the connecting points from lattice section to lattice section!
- ▶ When changing the snap hook **2** from lattice section to lattice section, one snap hook **2** must always be hooked on one safety rope **1**!
- ▶ Never release both snap hooks **2** simultaneously from the safety ropes **1**!
- ▶ Before any assembly / disassembly work, maintenance and inspection work it must be ensured that all obstacles below the work place have been removed and that there is sufficient clearance in case of a fall!
- ▶ During all assembly / disassembly work, maintenance work and inspections, travel or crane operation is prohibited!

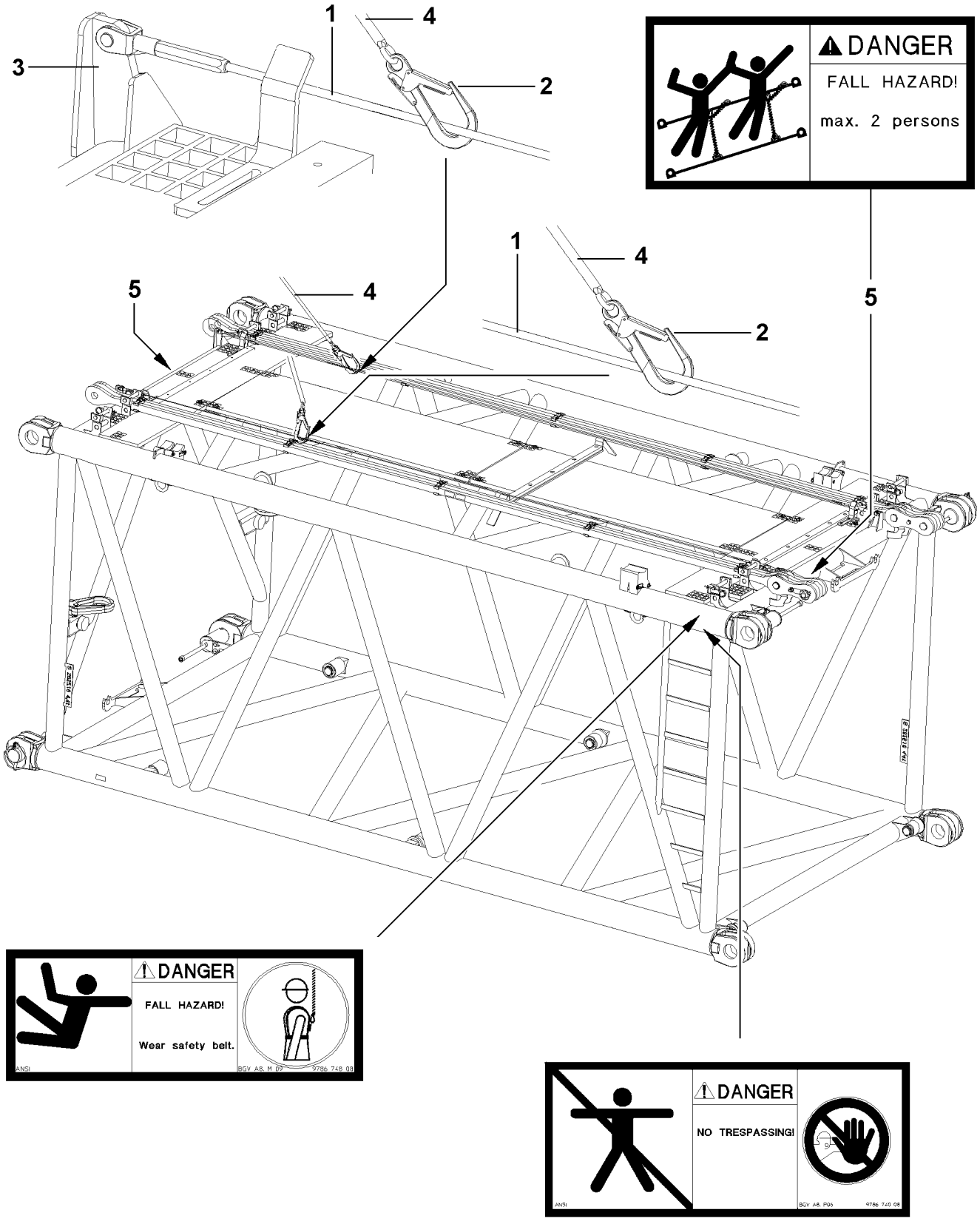
1
4
3
2
DANGER
FALL HAZARD!
max. 2 persons
1
4
5
4
5
2
DANGER
FALL HAZARD!
Wear safety belt.
ANSI
BGV A8, M 09
9786 748 08
DANGER
NO TRESPASSING!
ANSI
BGV A8, P06
9786 740 08

B107341

4.2.2 Safety ropes on the lattice sections

On the lattice sections, on the upper left and right hand side, are safety ropes **1** installed as fall protection equipment.

NOTICE
Danger of damage!
By hanging loads or other objects on the safety ropes, they can be damaged and fail in case of an emergency!
- ▶ Never hang loads or objects on the safety ropes **1**!

WARNING
Danger of falling!
During assembly / disassembly, inspection and maintenance work, personnel must be secured with appropriate aids to prevent them from falling!
If this is not observed, assembly personnel could fall and suffer life-threatening or fatal injuries!
- ▶ All work aloft, where there is a danger of falling must be carried out with suitable aids!
- ▶ If the work cannot be carried out with such aids nor from the ground, then the assembly personnel must secure themselves with the fall arrest system **4** to avoid falling, see Crane operating instructions chapter 2.04!
- ▶ The assembly personnel must hook themselves for all assembly / disassembly work as well as maintenance and inspection work on the lattice mast boom with the fall arrest system **4** on the safety ropes **1** on the left and right hand side with both snap hooks **2** and secure themselves to prevent them from falling! (For example: Fall arrester with self-actuating blocking function and an automatic tension and pull in device for the connectors)!
- ▶ The connector must be set to a length as short as possible so that is it impossible to hit the ground in case of a fall!
- ▶ Fall absorbers may not be used, because they stretch too much in case of a fall!
- ▶ On the safety ropes **1** on the left and right hand side, no more than **maximum two persons** may hook themselves with the snap hooks **2** and secure themselves to prevent falls, see sign **5**!
- ▶ Changing the snap hooks **2** over is only permissible on the connecting points from lattice section to lattice section!
- ▶ When changing the snap hook **2** from lattice section to lattice section, one snap hook **2** must always be hooked on one safety rope **1**!
- ▶ Never release both snap hooks **2** simultaneously from the safety ropes **1**!
- ▶ Before any assembly / disassembly work, maintenance and inspection work it must be ensured that all obstacles below the work place have been removed and that there is sufficient clearance in case of a fall!
- ▶ During all assembly / disassembly work, maintenance work and inspections, travel or crane operation is prohibited!

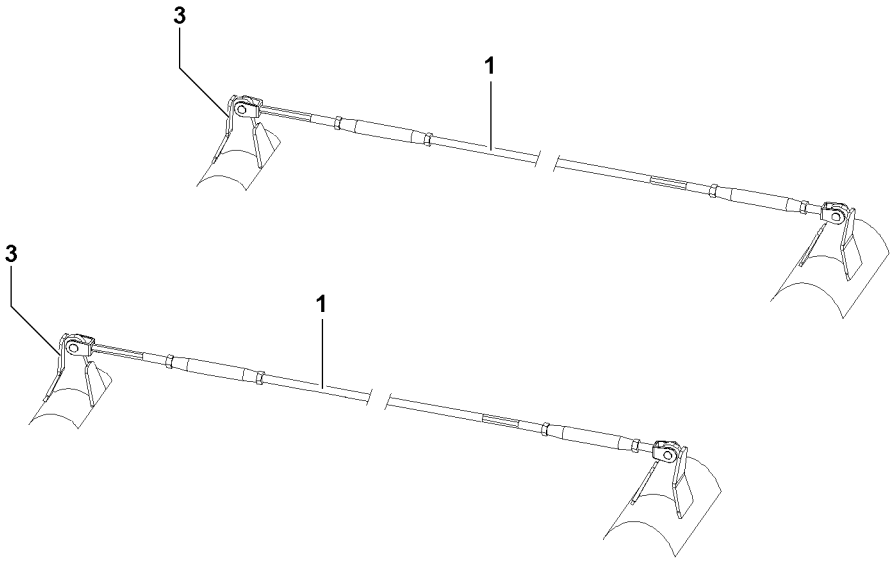

B112371

4.3 Inspection and replacement of safety ropes

4.3.1 Inspection of safety ropes and anchor points

WARNING
Danger of falls due to damaged safety ropes or anchor points!
The safety ropes **1** and anchor points **3** must be checked **at least once a year** by **expert personnel** for safety and damage!
If any defects are found on the safety ropes **1** or anchor points **3** during the inspections, then the safety ropes **1** or anchor points **3** must be replaced immediately by **expert personnel**! If this is not observed, assembly personnel could be killed or fatally injured in a fall!
▶ Have damaged safety ropes **1** or anchor points **3** replaced immediately by **expert personnel**!

4.3.2 Documenting the inspections in writing

Note
▶ The scope and results of tests must be documented to permit reproducibility!
▶ This documentation for test scope and test results forms part of the crane records and is to be safely stored during the entire service life of the crane!

4.3.3 Replacing safety ropes subjected by a fall

WARNING
Danger of accidents due to fall subjected safety ropes!
If fall subjected safety ropes **1** are not replaced after a fall, then the safety ropes can fail in case of another fall!
Assembly personnel can be killed or severely injured!
▶ **Expert personnel** must immediately replace any safety ropes **1** which were subjected in a fall and inspect the respective anchor points **3** for damage!
▶ If the anchor points **3** are damaged, then they must be replaced immediately by **expert personnel**!

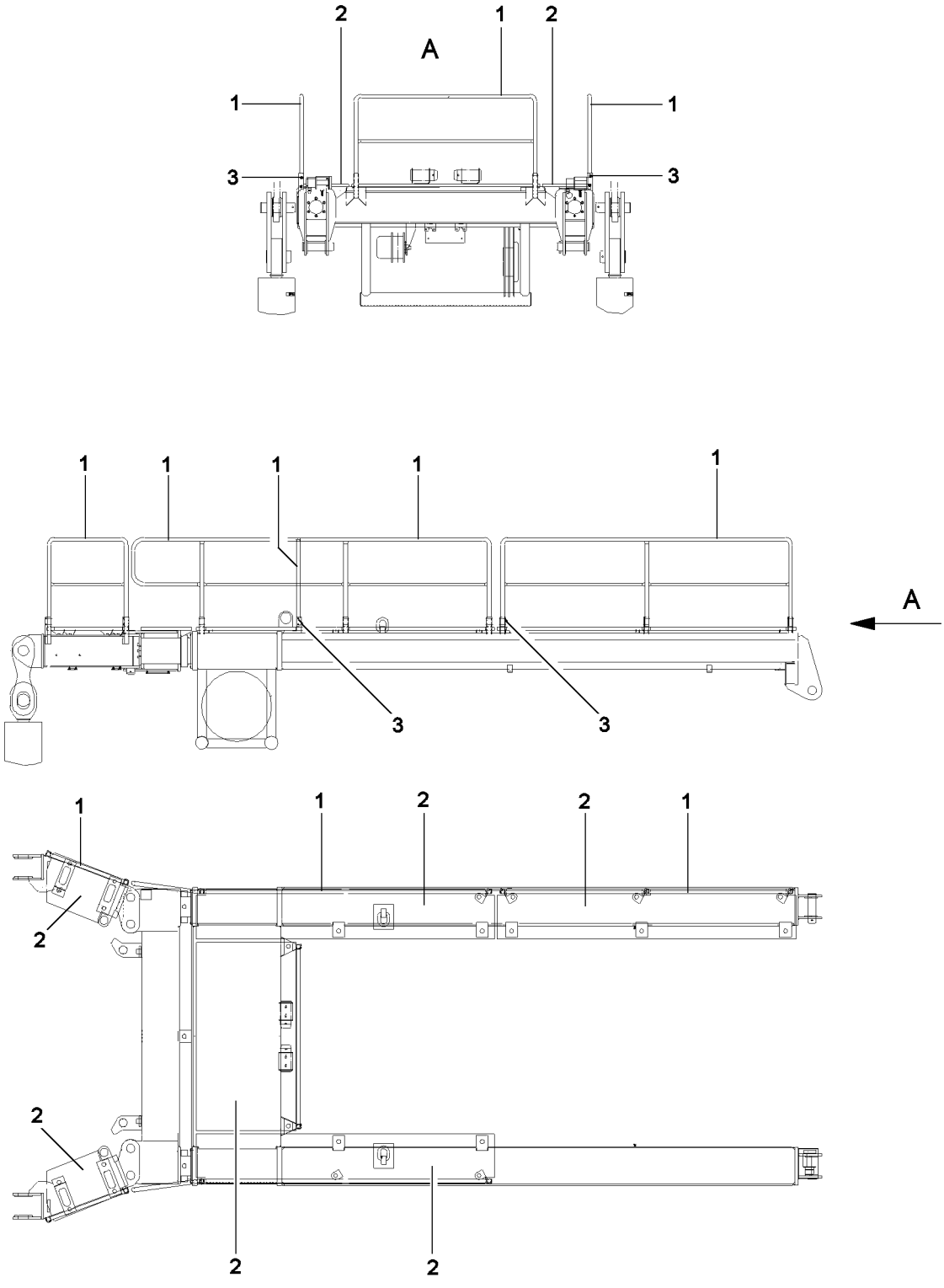

B108274

5 Fall protection equipment on suspended ballast guide frames

WARNING
Danger of falling!
During assembly / disassembly, inspection and maintenance work, personnel must be secured with appropriate aids to prevent them from falling!
If this is not observed, assembly personnel could fall and suffer life-threatening or fatal injuries!
- ▶ For assembly / disassembly work, maintenance work and inspections, assemble all railings **1**, ladders **3** and catwalks **2** properly, swing in position and secure!
- ▶ Only step on the aids, ladders and catwalks **2** with clean shoes!
- ▶ Keep aids, ladders and catwalks **2** free of heavy dirt, snow and ice!
- ▶ Replace damaged catwalks and railings immediately!

Note
- ▶ Before assembly of the guide frame on the turntable, position and secure railings **1** in operating position!

NOTICE
Damage to the railings **1**!
If the railings **1** are not brought and secured into operating position before assembly of the guide frame to the turntable, they can be severely damaged!
- ▶ Bring the railings **1** into operating position and secure them before assembly of the guide frame on the turntable!
- ▶ Remove the spring retainers **3** on the railings **1**!
- ▶ Swing the railings **1** upward into operating position and secure with spring retainers **3**!

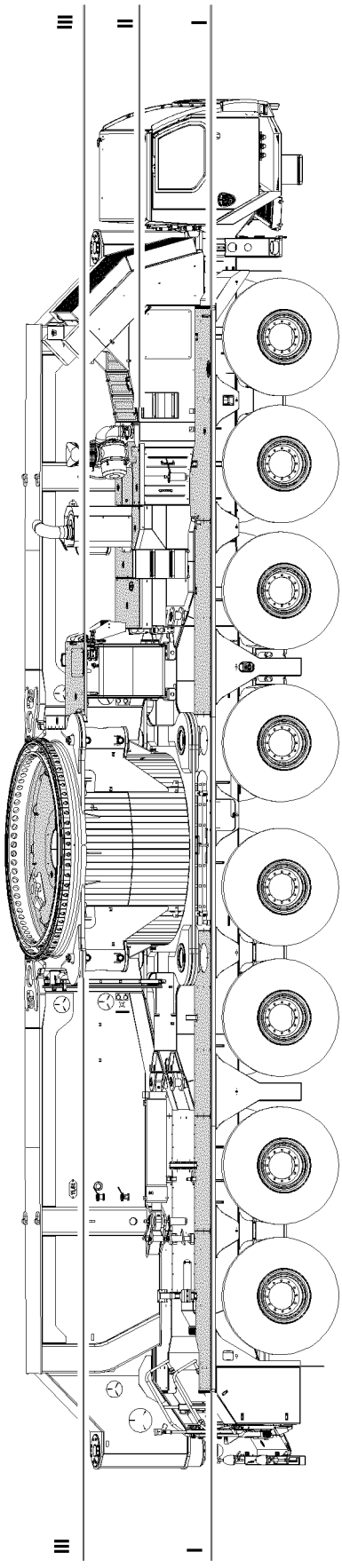

B115687

1 Ascent and descent on the chassis

WARNING
Danger of falling!
If the following guidelines are not observed, assembly personnel can fall down and be killed or severely injured!
- ▶ Ladders, walking and stepping surfaces are free of objects and obstacles!
- ▶ Step on ladders, walking and stepping surfaces only with sufficiently clear height!
- ▶ Step on ladders, walking and stepping surfaces only with clean shoes!
- ▶ Keep ladders, walking and stepping surfaces free of heavy dirt, snow and ice!
- ▶ During the folding and / or swing procedure of folding ladders, no personnel or objects may remain on the ladder or within the danger zone!
- ▶ Ladders, walking and stepping surfaces may not be subjected to a load of more than maximum 150 kg!
- ▶ Do not use handles as rigging points!
- ▶ Subject the handles with no more than maximum 100 kg!
- ▶ Do not step on damaged ladders, walking and stepping surfaces and replace them immediately!

WARNING
Danger of falling!
Assembly personnel can also fall down when walking on walking and stepping surfaces!
Personnel can be severely injured or killed!
- ▶ Keep clear from the outer edges of the walking and stepping surfaces.
- ▶ If possible, always walk on the walking and stepping surfaces in the center.
- ▶ Step on the walking and stepping surfaces always anticipatorily and with utmost caution.
- ▶ When walking on the walking and stepping surfaces, pay attention to any possible obstacles!

Note
- ▶ The walking surfaces of the chassis are split into three levels, see illustration!

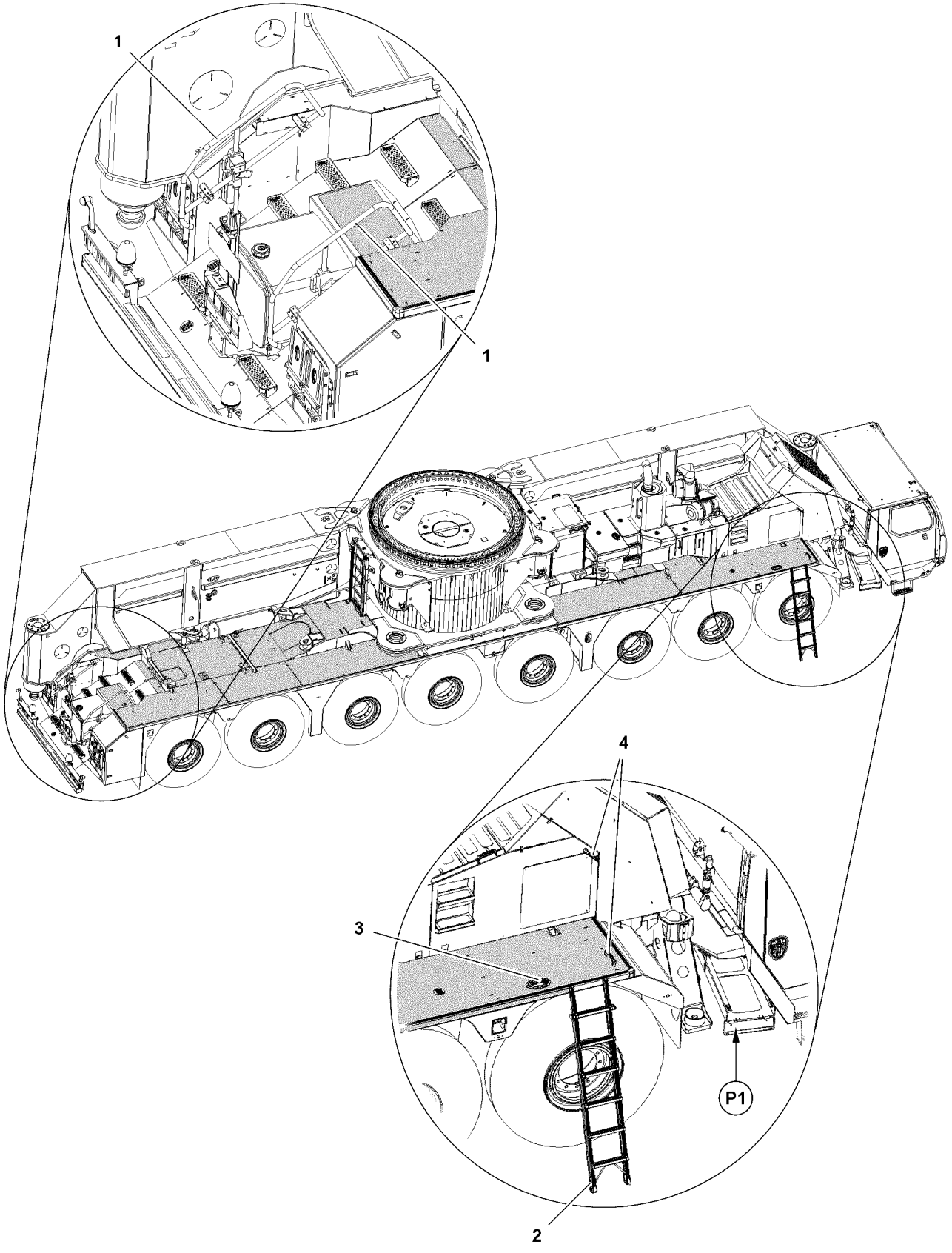

B115688

1.1 Ascent and descent on level I

1.1.1 Ascent and descent on the rear of the vehicle

Ascent / descent on the walking surface of level I via the permanently integrated access on the rear of the vehicle, see illustration.

WARNING
Danger of falling!
While climbing up and down via a the rear of the vehicle, the assembly personnel can fall down and be injured severely!
- ▶ When ascending and descending, the assembly personnel must ensure a 3-point support!
- ▶ The assembly personnel must step into the steps sufficiently deep!
- ▶ Make sure that the railings **1** are in operating position!

- ▶ Fold the railings **1** into operating position, see Crane operating instructions, chapter 2.06!
- ▶ Ascend on level I or descend from level I.

1.1.2 Ascending and descending via the hook ladder

Ascent / descent on the walking surface of level I via a hook ladder **2** on the right side of the vehicle, see illustration.

WARNING
Danger of falling!
While climbing up, changing over or climbing down via a hook ladder, assembly personnel can fall down!
Personnel can be severely injured or killed!
- ▶ When ascending and descending, the assembly personnel must ensure a 3-point support!
- ▶ When ascending and descending, use rungs and ladder beams as handles!
- ▶ The assembly personnel must step into the rungs sufficiently deep!
- ▶ When changing from the hook ladder to the walking surface, the assembly personnel must secure themselves with the handle **3** and handle **4** to prevent falling!
- ▶ When changing from the walking surface to the hook ladder, the assembly personnel must secure themselves with the handle **3** and handle **4** to prevent falling!

- ▶ Take the hook ladder **2** at point **P1** from transport position, see Crane operating instructions, chapter 2.06.
- ▶ Bring the hook ladder **2** into ascent / descent position and pay attention to proper retention, see Crane operating instructions, chapter 2.06.
- ▶ Ascend on level I or descend from level I.

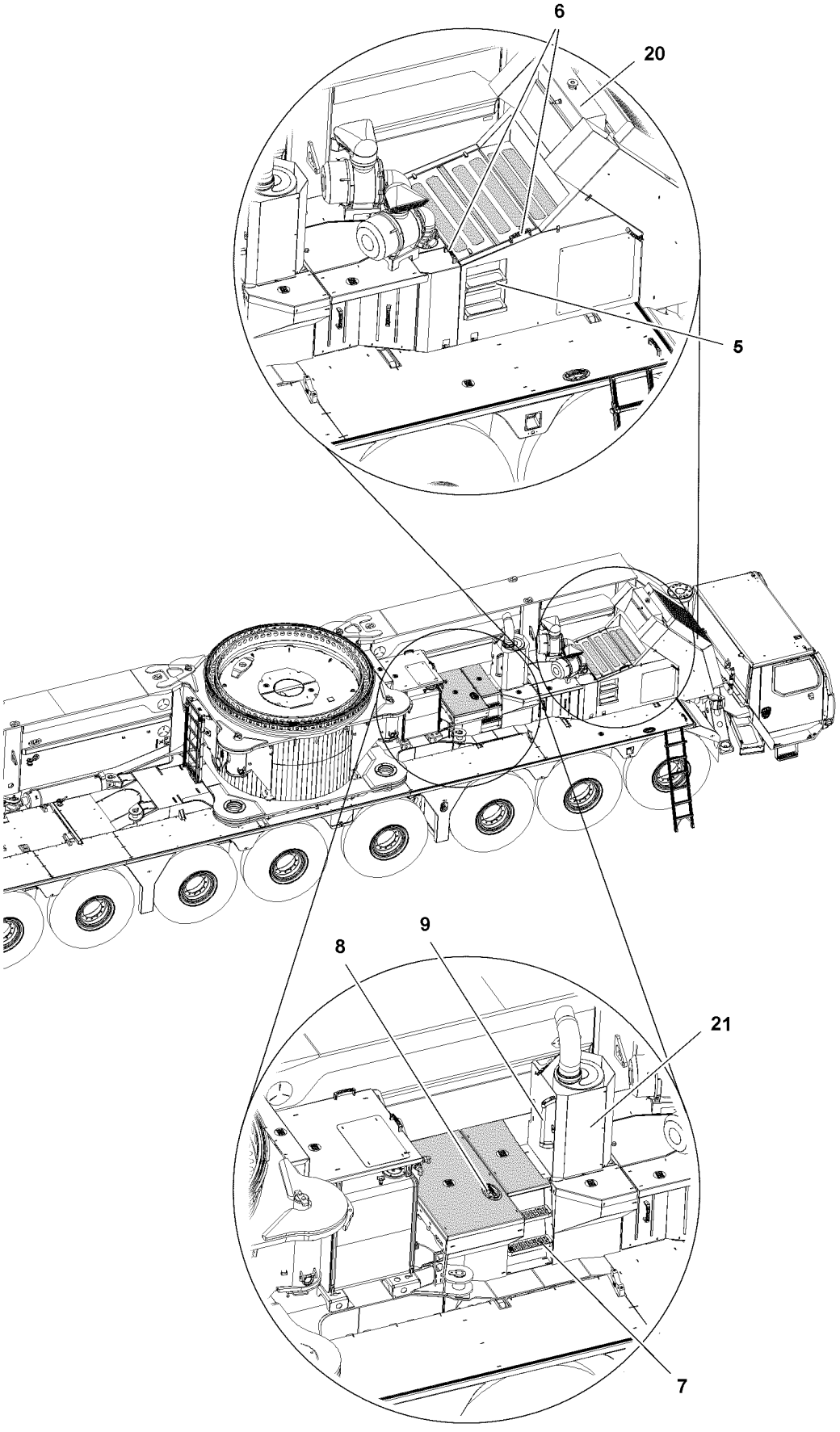

B115689

1.2 Ascent and descent on level II

WARNING
Danger of burns and falling!
- ▶ Step on the engine cover only when the engine is cold and if the walking and stepping surfaces are slip resistant!
- ▶ Ascent to the engine cover is only required for disassembly or assembly purposes or for maintenance work!

1.2.1 Ascending and descending via the front steps

Ascent / descent from the walking surface of level I to the walking surface of level II via the permanently integrated steps **5**, see illustration.

WARNING
Danger of falling!
During ascent and descent via the permanently integrated steps **5** assembly personnel can fall down!
Personnel can be severely injured or killed!
- ▶ When ascending and descending, the assembly personnel must ensure a 3-point support!
- ▶ The assembly personnel must step into the steps sufficiently deep!
- ▶ When changing from the walking surface of level I to the walking surface of level II, the assembly personnel must secure themselves with the handles **6** to prevent falling!
- ▶ When changing from the walking surface of level II to the walking surface of level I, the assembly personnel must secure themselves with the handles **6** to prevent falling!

WARNING
Danger of burns!
Personnel can suffer severe burns when coming in contact with hot crane components!
- ▶ Near hot crane components always proceed with utmost caution!
- ▶ Let the coolant expansion tank **20** cool off before touching it!

- ▶ Ascend on level II or descend from level II.

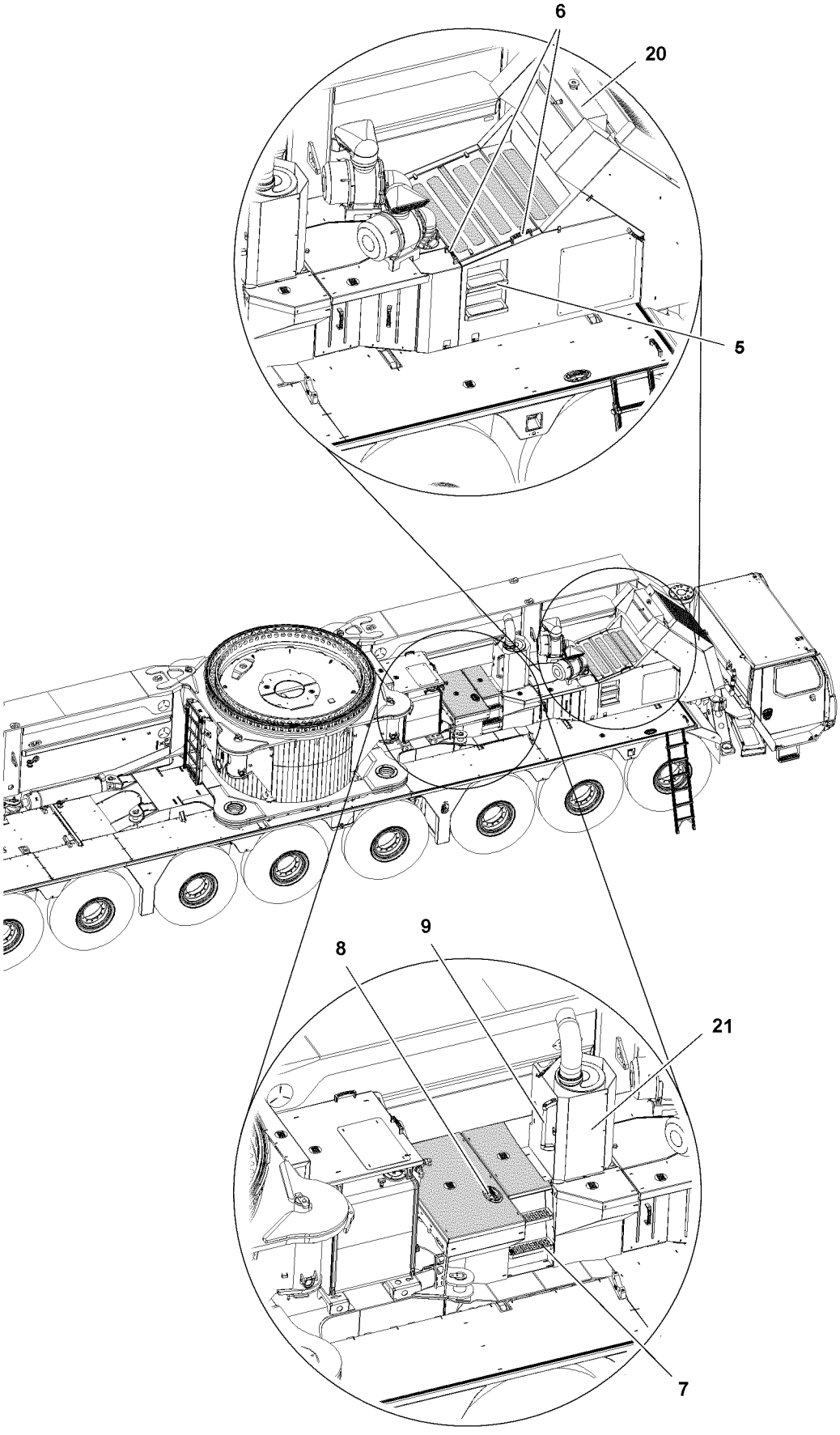

B115689

1.2.2 Ascending and descending via the center steps

Ascent / descent from the walking surface of level I to the walking surface of level II via the permanently integrated steps **7**, see illustration.

WARNING
Danger of falling!
During ascent and descent via the permanently integrated steps assembly personnel can fall down!
Personnel can be severely injured or killed!
- ▶ When ascending and descending, the assembly personnel must ensure a 3-point support!
- ▶ The assembly personnel must step into the steps sufficiently deep!
- ▶ When changing from the walking surface of level I to the walking surface of level II, the assembly personnel must secure themselves with the handle **8** and handle **9** to prevent falling!
- ▶ When changing from the walking surface of level II to the walking surface of level I, the assembly personnel must secure themselves with the handle **8** and handle **9** to prevent falling!

WARNING
Danger of burns!
Personnel can suffer severe burns when coming in contact with hot crane components!
- ▶ Near hot crane components always proceed with utmost caution!
- ▶ Let the exhaust pot **21** cool off before touching it!
- ▶ Moving along the side of the exhaust pot **21** is not permissible!

- ▶ Ascend on level II or descend from level II.

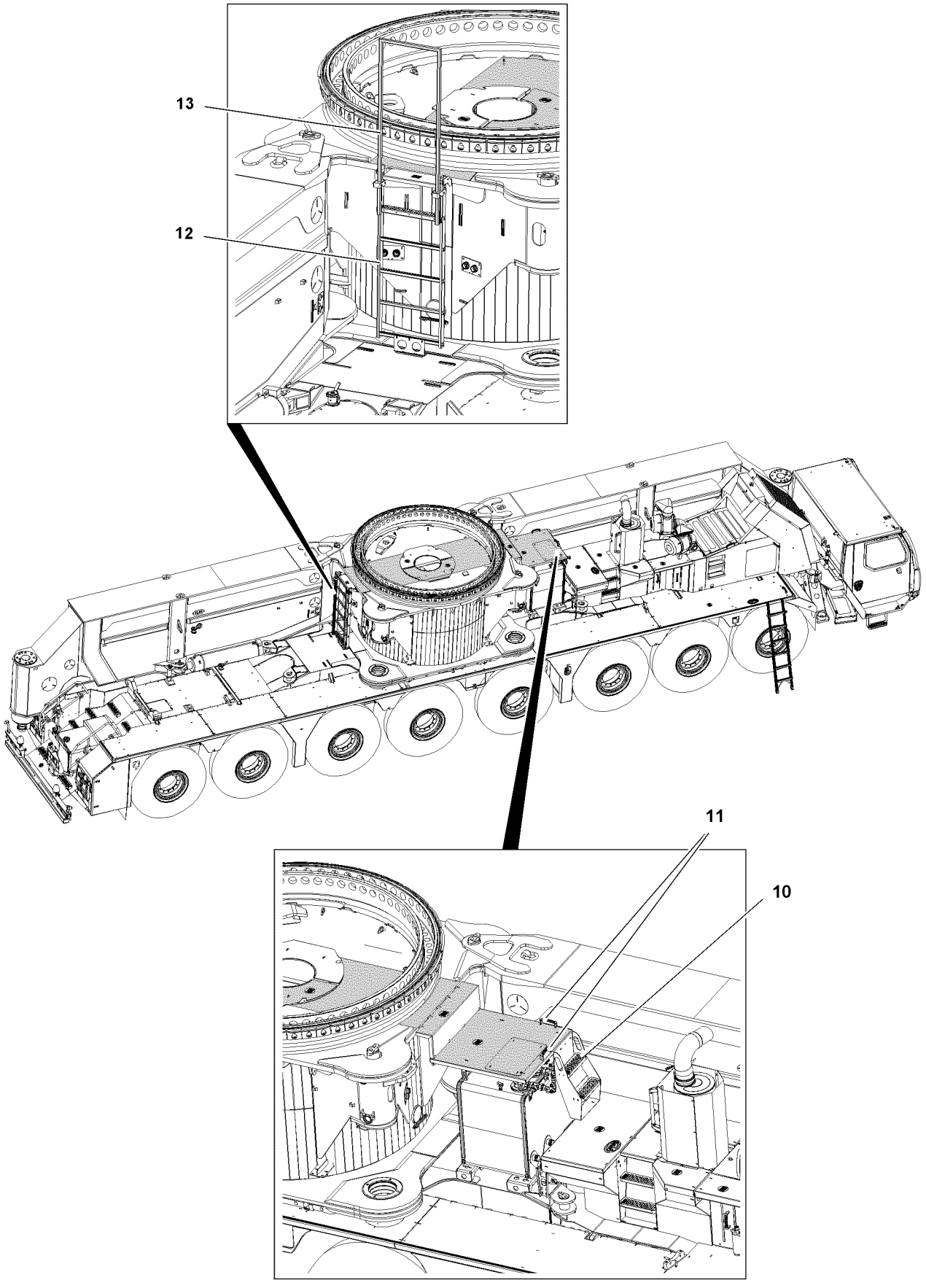

B115690

1.3 Ascent and descent on level III

WARNING
Danger of falling!
When crossing over the “pot” assembly personnel can fall down.
Personnel can be severely injured or killed!
- ▶ Make sure that you cross the pot only on the surfaces designated as walking surfaces!
- ▶ Climbing on the “pot” is only permissible for disassembly and assembly purposes!

1.3.1 Ascend and descend via steps

Ascent / descent from the walking surface of level II to the walking surface of level III via the permanently integrated steps **10**, see illustration.

WARNING
Danger of falling!
During ascent and descent via the permanently integrated steps **10** assembly personnel can fall down!
Personnel can be severely injured or killed!
- ▶ When ascending and descending, the assembly personnel must ensure a 3-point support!
- ▶ The assembly personnel must step into the steps sufficiently deep!
- ▶ When changing from the walking surface of level I to the walking surface of level II, the assembly personnel must secure themselves with the handles **11** to prevent falling!
- ▶ When changing from the walking surface of level II to the walking surface of level I, the assembly personnel must secure themselves with the handles **11** to prevent falling!

- ▶ Ascend on level III or descend from level III.

1.3.2 Ascend and descend via the permanently installed ladder

Ascent / descent on the walking surface of level III via the permanently installed ladder **12** on the “pot”, see illustration.

WARNING
Danger of falling!
During ascent and descent via the permanently installed ladder **12** assembly personnel can fall down!
Personnel can be severely injured or killed!
- ▶ When ascending and descending, the assembly personnel must ensure a 3-point support.
- ▶ When ascending and descending, use rungs and ladder beams as handles.
- ▶ The assembly personnel must step into the rungs sufficiently deep.
- ▶ When changing from the ladder to the walking surface, the assembly personnel must secure themselves with the grab bar **13** to prevent falling.
- ▶ When changing from the walking surface to the ladder, the assembly personnel must secure themselves with the grab bar **13** to prevent falling.

- ▶ Set the grab bar **13** to ascent and descent position, see Crane operating instructions, chapter 2.06.
- ▶ Ascend on level III or descend from level III.

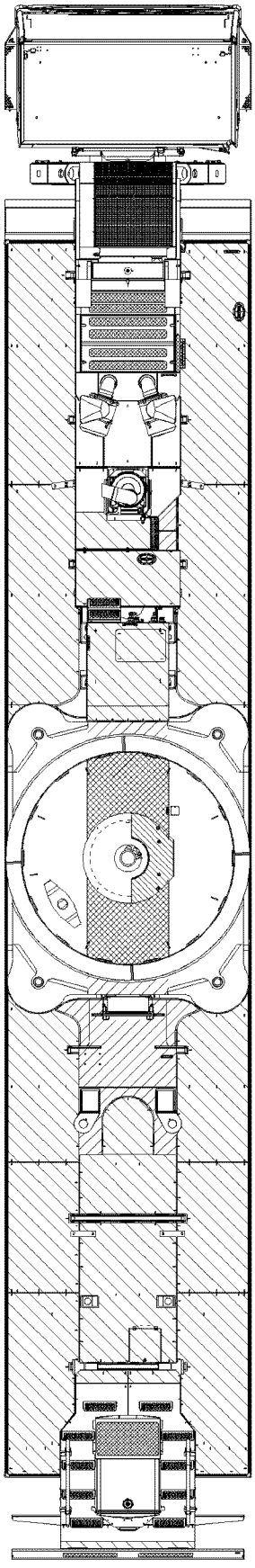

B115691

2 Walking and stepping surfaces

WARNING
Danger of falling!
If the following notes are not observed, assembly personnel can fall down!
Personnel can be severely injured or killed!

- ▶ Ladders, walking and stepping surfaces are free of objects and obstacles.
- ▶ Step on ladders, walking and stepping surfaces only with sufficiently clear height.
- ▶ Step on ladders, walking and stepping surfaces only with clean shoes.
- ▶ Keep ladders, walking and stepping surfaces free of heavy dirt, snow and ice.
- ▶ Step on the walking and stepping surfaces always anticipatorily and with utmost caution.
- ▶ When walking on the walking and stepping surfaces, pay attention to any possible obstacles.
- ▶ Step on the engine covering only when the engine is cold.
- ▶ Used only by persons, do not exceed the maximum point load of 1500 N on the walking and stepping surfaces.
- ▶ It is prohibited to step on the driver's cab.

2.1 Accessible walking and stepping surfaces

Note

- ▶ The accessible walking and stepping surfaces are marked with the following cross hatches.

Surface	
X	Slip resistant mat
Y	Sanding
Z	Aluminum wart-sheet

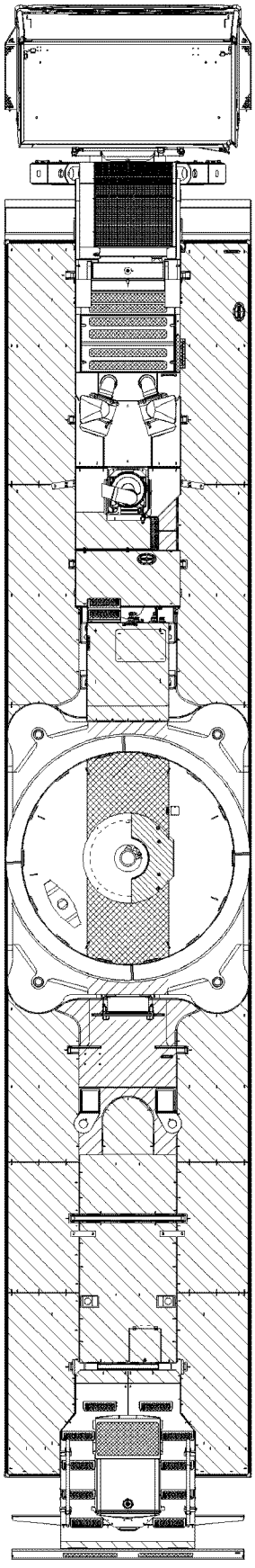

B115691

2.2 Non-accessible walking and stepping surfaces

WARNING
Danger of falling!
If the walking and stepping surfaces are accessed, which are **not** approved for access, personnel can slip and fall down!
Personnel can be severely injured or killed!
When accessing the walking and stepping surfaces, which are **not** approved for access, crane components can be damaged!
- ▶ Access to walking and stepping surfaces, which are **not** approved for access is prohibited!
- ▶ Stepping on surfaces or crane components with inclines of more than 20° is prohibited!

Note
- ▶ Walking and stepping surfaces which are **not** approved for access are not marked with cross hatches.

Surface	
W	Non-accessible walking and stepping surfaces

B195219

1 Wind influences for crane operation

1.1 Terminology

For better understanding, the following most important terms for wind influences during crane operation are listed.

Note

- ▶ Make yourself familiar with the terms. For the determination and calculations of the permissible wind speed, you have to know the influence factors!
- ▶ Contact Liebherr-Werk Ehingen GmbH, if you need additional information for wind influences during crane operation!

		Description	Definition
A_P	[m^2]	Projection surface	Applicable for the calculation of the wind exposure surface, vertically to the surface directed to the flow.
c_W		Wind resistance coefficient	Value for the flow resistance of wind flowing around a body.
A_W	[m^2]	Area exposed to wind	Area exposed to wind = Projection area x Wind resistance coefficient $A_W = A_P \times c_W$
m_T	[t]	Load	Respective chart value from load chart.
m_H	[t]	Hoist load	Weight to be lifted (mass) (including fastening equipment, hook block and possible the hoist rope part, which was not yet considered in the calculation). The hoist load may not reach more than the maximum chart value of the load chart.
m_N	[t]	Load capacity	Weight (mass) of the component to be lifted (without fastening equipment and hook block).
v(z)	[m/s]	3-second wind gust speed	Medium value of wind speed created over a time frame of 3 seconds at a height of z above the ground.
v_{max}	[m/s]	Maximum permissible wind speed	Maximum permissible 3 second wind gust speed at maximum lifting height.
v_{max_TAB}	[m/s]	Maximum permissible wind speed (load charts)	Maximum permissible 3 second wind gust speed in maximum lifting heights, which are specified for the load chart values in the load chart.
p	[N/m^2]	Dynamic pressure	Pressure load on a body due to wind flow. Dynamic pressure = density /2 x (3-second wind gust speed)^2 $p = \rho/2 \times (v(z))^2$

		Description	Definition
			(ρ= Density of air = 1.25 kg/m^3)
F_W	[N]	Wind load	Force effect on a body due to wind flow. $F_W = A_W \times p$

1.2 Influence of wind on the LICCON overload protection

The wind can put an additional strain or relief on the crane system, especially in operating modes with long boom systems and steep boom position. This can falsify the load display. The LICCON overload protection can possibly turn off too early or too late.

1.2.1 Wind from rear

If wind is coming from the rear, the boom system is additionally stressed. The load display is too high. The shut off of the LICCON overload protection is already triggered for a hoist load, which is smaller than the maximum load.

1.2.2 Wind from the front

If wind is coming from the front, the boom system is additionally relieved. The load display is too low. The shut off of the LICCON overload protection is triggered only for a hoist load, which is larger than the maximum load.

DANGER
Danger of tipping and overload of load carrying components!
The wind from the front does not reduce the load of the hook, hoist rope, hoist rope pulleys and hoist winch. If wind is coming from the front, these components can be overloaded by lifting a load until the shut off of the LICCON overload protection!
If there is less wind from the front, then the entire crane can be overloaded if it had been stressed before until shut off of the LICCON overload protection.
- ▶ The crane driver must know the weight of the hoist load and may not exceed the maximum load capacity!

1.2.3 Wind from the side

If wind is coming from the side, the boom system is stressed on the side. The load display is almost the same as for crane operation without wind influences.

DANGER
Danger of tipping and overload of load carrying components!
For crane operation, if the wind speed is higher than the maximum permissible wind speed, then the crane can be overloaded unnoticed if wind is coming from the side!
- ▶ Before crane operation, determine the maximum permissible wind speed and carry out the wind surface calculation if necessary!

1.3 Permissible wind speed and wind surface calculation

DANGER
Danger of tipping and overload of load carrying components!
- ▶ Before starting to work, the crane operator must check with the respective weather bureau to obtain the wind speeds for the duration of operation. If impermissible wind speeds are expected, then it is prohibited to lift a hoist load!
- ▶ The 3 second wind gust speed v(z) in the maximum hoist height may not exceed the maximum permissible wind speed (v_{max}) and the maximum permissible wind speed according to the load chart (v_{max_TAB}) at any point in time!

Note

- The maximum permissible wind speed (v_{max}) and the maximum permissible wind speed according to the load chart (v_{max_TAB}) always refers to the 3 second wind gust speed, which is present in the maximum hoist height.
- Instead of the 3 second wind gust speed, weather information services often report a wind speed, which is averaged within a time period of 10 minutes (socalled 10 minute average). It refers to the wind force on the Beaufort scale, normally to the medium value of the wind speed, which is determined within a time from of 10 minutes at a height of 10 m above ground or above sea level.
- The determining factor for the calculation of the 3 second wind gust speed in maximum height is significantly higher than the medium value of the wind speed, which is determined over a time of 10 minutes at a height of 10 m above ground!

Crane operation is generally permissible up to the maximum wind speed (v_{max_TAB}) specified in the respective load chart for the current boom length.
Prerequisite for that is:

– The wind exposure surface (A_W) of the hoist load is not more than 1.2 m^2/t

DANGER

Danger of tipping and overload of load carrying components!

- The maximum permissible wind speed according to the load chart (v_{max_TAB}) may not be exceeded, even if the wind exposure surfaces (A_W) of the hoist load is smaller than 1.2 m^2/t!
- If the wind exposure surface (A_W) of the hoist load is more than 1.2 m^2/t, then the maximum permissible wind speed (v_{max}) must be redetermined for the load case!

1.3.1 Determination of maximum permissible wind speed

The maximum permissible wind speed can be determined with the following methods:

1.) Calculation with formula
2.) Determination with wind force diagrams

1.3.2 Calculation of maximum permissible wind speed with formula

$$V_{max} = V_{max\_TAB} \times \sqrt{\frac{1{,}2\,\frac{m^2}{t} \times m_H}{A_W}}$$

B111606

Formula for the calculation of the maximum permissible wind speed

The following data is required for the calculation:

– Maximum permissible wind speed according to load chart (v_{max_TAB})
– Hoist load (m_H)
– Projection surface of hoist load (A_P)
– Wind resistance coefficient (c_W)

Description of procedure:

1.) Calculation of wind exposure surface ($A_W = A_P \times c_W$)
2.) Check if the wind exposure surface A_W exceeds the limit value of 1.2 m^2/t
3.) Calculation of maximum permissible wind speed (v_{max})

Example for the calculation of the maximum permissible wind speed

Data for calculation of load case:
v_{max_TAB} = 9.0 m/s
m_H = 50.0 t
A_P = 70.0 m^2
c_W = 1.4

Step 1: Calculation of wind exposure surface

$A_W = A_P \times c_W$
A_W = 70.0 m^2 x 1.4
A_W = 98.0 m^2
Result: The wind exposure surface A_W is: **98.0 m^2**

Step 2: Check if the wind exposure surface A_W exceeds the limit value of 1.2 m^2/t

The wind exposure surface per ton of hoist load is: 98.0 m^2 / 50 t = **1.96 m^2/t**
Result: The wind exposure surface per ton of hoist load exceeds the limit value of 1.2 m^2/t.
The maximum permissible wind speed must be recalculated!

Step 3: Calculation of maximum permissible wind speed

$$V_{max} = V_{max\_TAB} \times \sqrt{\frac{1{,}2\,\frac{m^2}{t} \times m_H}{A_W}}$$

$$V_{max} = 9\,m/s \times \sqrt{\frac{1{,}2\,\frac{m^2}{t} \times 50t}{98\,m^2}}$$

$$\underline{\underline{V_{max} = 7{,}04\,m/s}}$$

B111607

Result: The maximum permissible wind speed is: **7.04 m/s**

1.3.3 Determination of maximum permissible wind speed with wind force diagrams

Depending on the maximum permissible wind speed according to the load chart (v_{max_TAB}) the maximum permissible wind speed (v_{max}) for the load case can be determined with the following wind force diagrams.
Listing of wind force diagrams:

- **Diagram 7.0 m/s** : Wind force diagram for load charts with a maximum permissible wind speed (v_{max_TAB}) of 7.0 m/s
- **Diagram 8.6 m/s** : Wind force diagram for load charts with a maximum permissible wind speed (v_{max_TAB}) of 8.6 m/s
- **Diagram 9.0 m/s** : Wind force diagram for load charts with a maximum permissible wind speed (v_{max_TAB}) of 9.0 m/s
- **Diagram 9.9 m/s** : Wind force diagram for load charts with a maximum permissible wind speed (v_{max_TAB}) of 9.9 m/s
- **Diagram 11.1 m/s** : Wind force diagram for load charts with a maximum permissible wind speed (v_{max_TAB}) of 11.1 m/s
- **Diagram 12.8 m/s** : Wind force diagram for load charts with a maximum permissible wind speed (v_{max_TAB}) of 12.8 m/s
- **Diagram 14.3 m/s** : Wind force diagram for load charts with a maximum permissible wind speed (v_{max_TAB}) of 14.3 m/s

WARNING
Risk of accidents when using incorrect wind force diagram!
▶ The maximum permissible wind speed according to the load chart (v_{max_TAB}) must match the maximum permissible wind speed of the wind force diagram!

The following data is required for the determination:
– Maximum permissible wind speed according to load chart (v_{max_TAB})
– Hoist load (m_H)
– Projection surface of hoist load (A_P)
– Wind resistance coefficient (c_W)

Description of procedure:
1.) Calculation of wind exposure surface ($A_W = A_P \times c_W$)
2.) Check if the wind exposure surface A_W exceeds the limit value of 1.2 m^2/t
3.) Determination of maximum permissible wind speed (v_{max}) from the respective wind force diagram

Example for the determination of the maximum permissible wind speed

Data for calculation of load case:
v_{max_TAB} = 9.0 m/s
m_H = 50.0 t
A_P = 70.0 m^2
c_W = 1.4

Step 1: Calculation of wind exposure surface

$A_W = A_P \times c_W$
A_W = 70.0 m^2 x 1.4
A_W = 98.0 m^2
Result: The wind exposure surface A_W is: **98.0 m^2**

Step 2: Check if the wind exposure surface A_W exceeds the limit value of 1.2 m^2/t

The wind exposure surface per ton of hoist load is: 98.0 m^2 / 50 t = **1.96 m^2/t**
Result: The wind exposure surface per ton of hoist load exceeds the limit value of 1.2 m^2/t.
The maximum permissible wind speed must be redetermined!

Step 3: Determination of maximum permissible wind speed v_{max} from the respective wind force diagram

Determination of maximum permissible wind speed (v_{max}) from the respective wind force diagram for load charts with a maximum permissible wind speed (v_{max_TAB}) of 9 m/s.
Diagram 9.0 m/s :
Result: The maximum permissible wind speed is: **7.04 m/s** .

1.3.4 Wind force diagrams

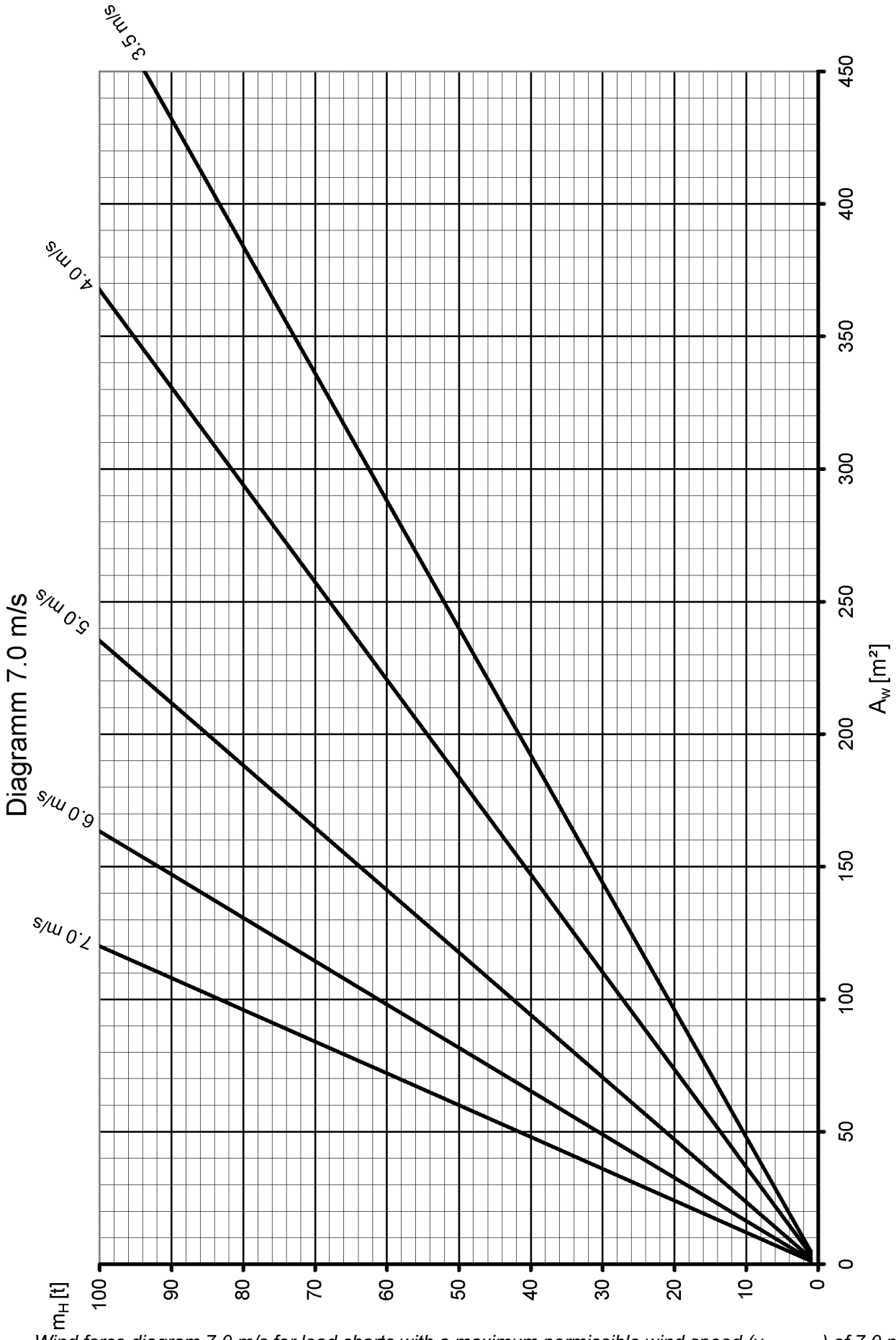

B111598 *Wind force diagram 7.0 m/s for load charts with a maximum permissible wind speed (v_{max_TAB}) of 7.0 m/s*

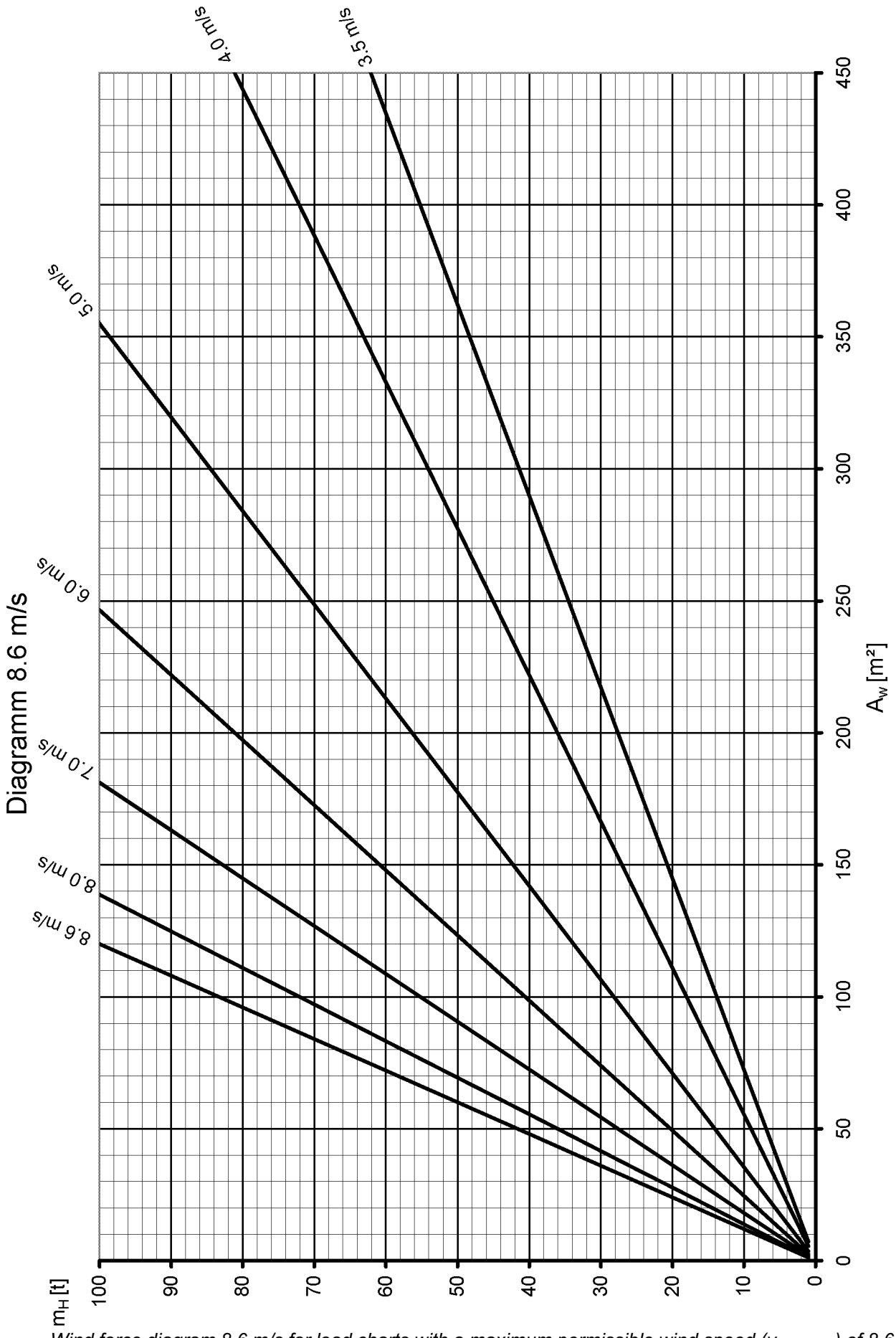

B111599 *Wind force diagram 8.6 m/s for load charts with a maximum permissible wind speed (v_{max_TAB}) of 8.6 m/s*

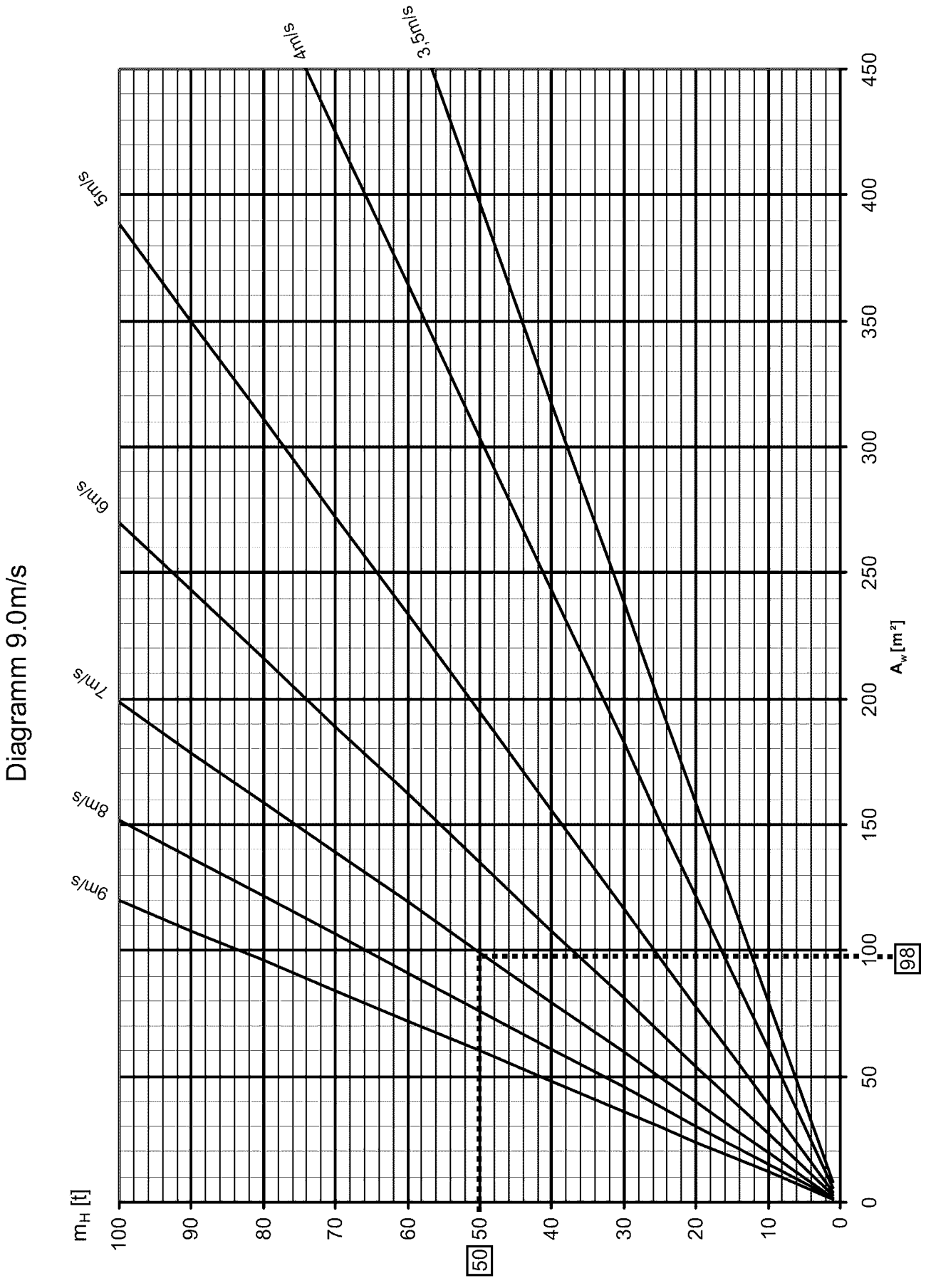

B111604 *Wind force diagram 9.0 m/s for load charts with a maximum permissible wind speed (v_{max_TAB}) of 9.0 m/s*

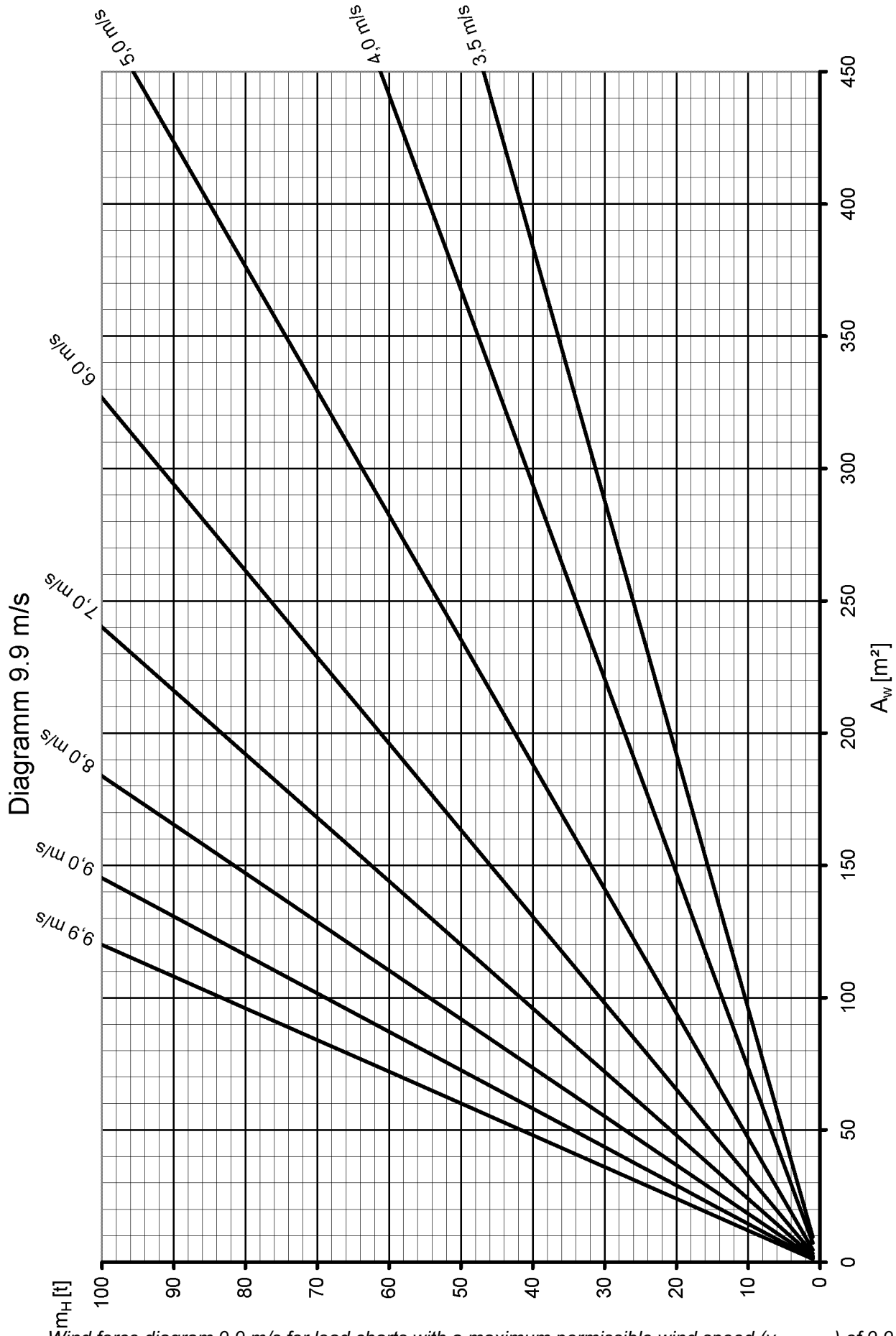

B111608 *Wind force diagram 9.9 m/s for load charts with a maximum permissible wind speed (v_{max_TAB}) of 9.9 m/s*

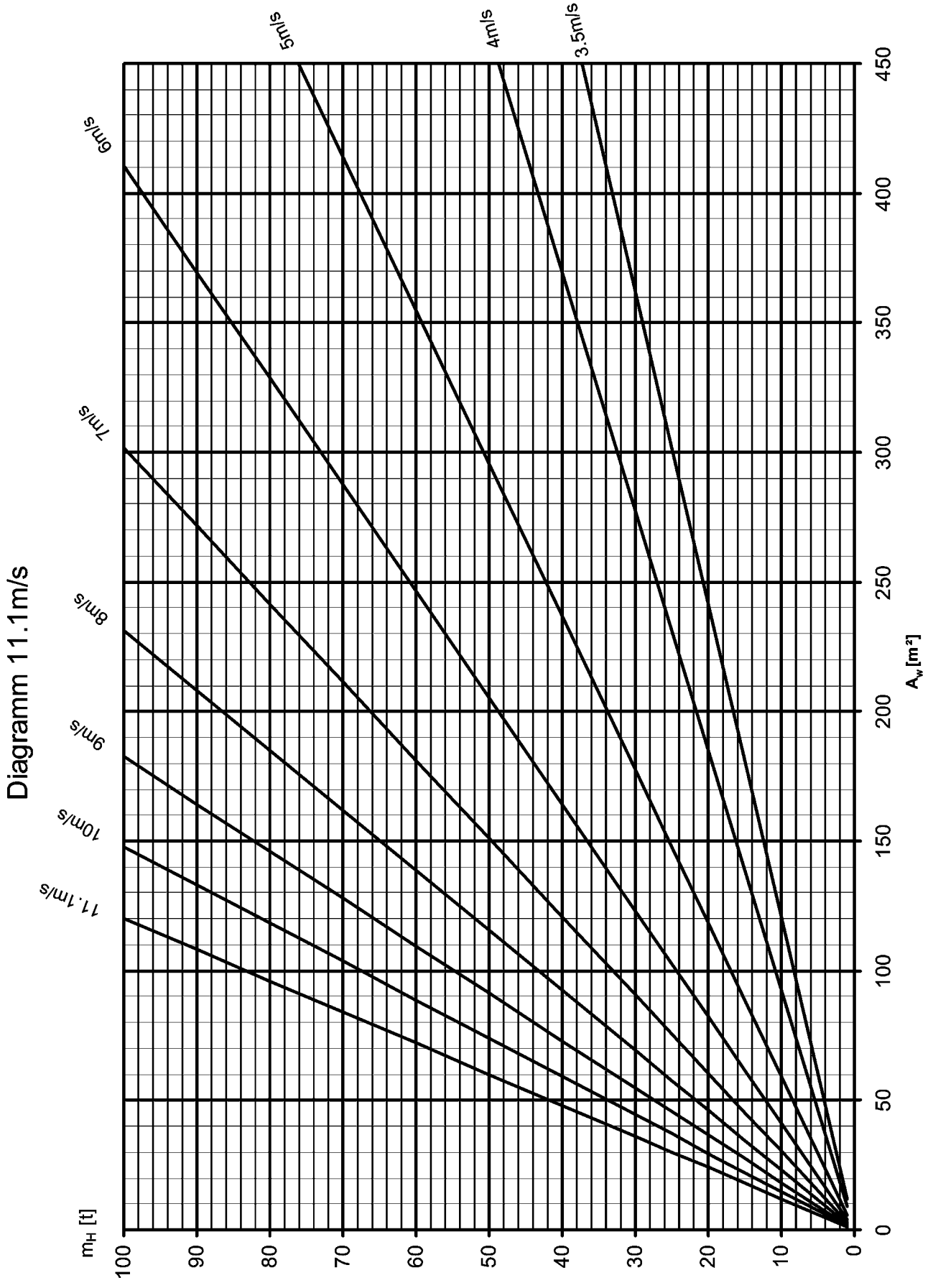

B111601 *Wind force diagram 11.1 m/s for load charts with a maximum permissible wind speed (v_{max_TAB}) of 11.1 m/s*

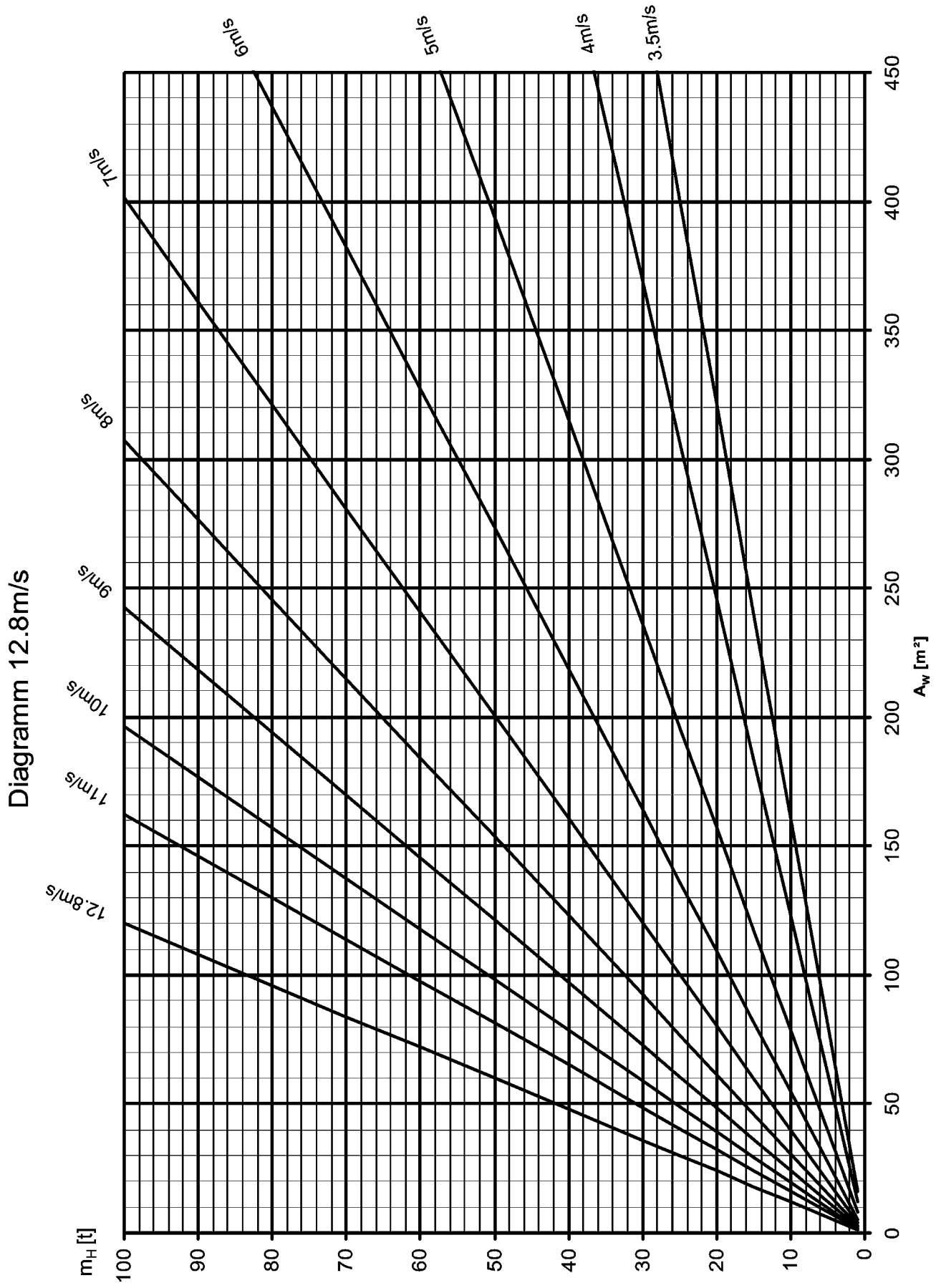

B111602 *Wind force diagram 12.8 m/s for load charts with a maximum permissible wind speed (v_{max_TAB}) of 12.8 m/s*

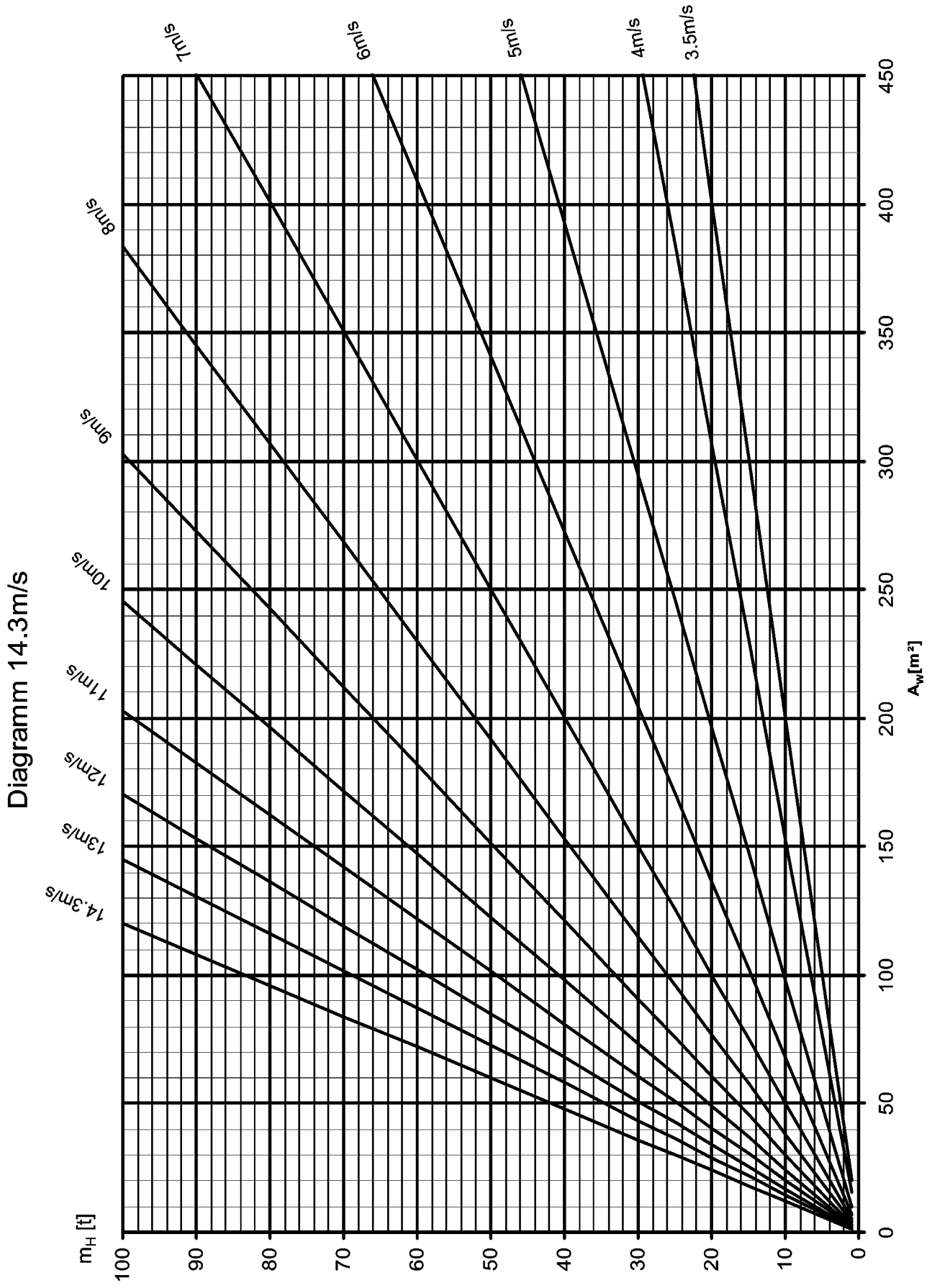

B111603 *Wind force diagram 14.3 m/s for load charts with a maximum permissible wind speed (v_{max}_TAB) of 14.3 m/s*

3 Crane chassis operation

blank page!

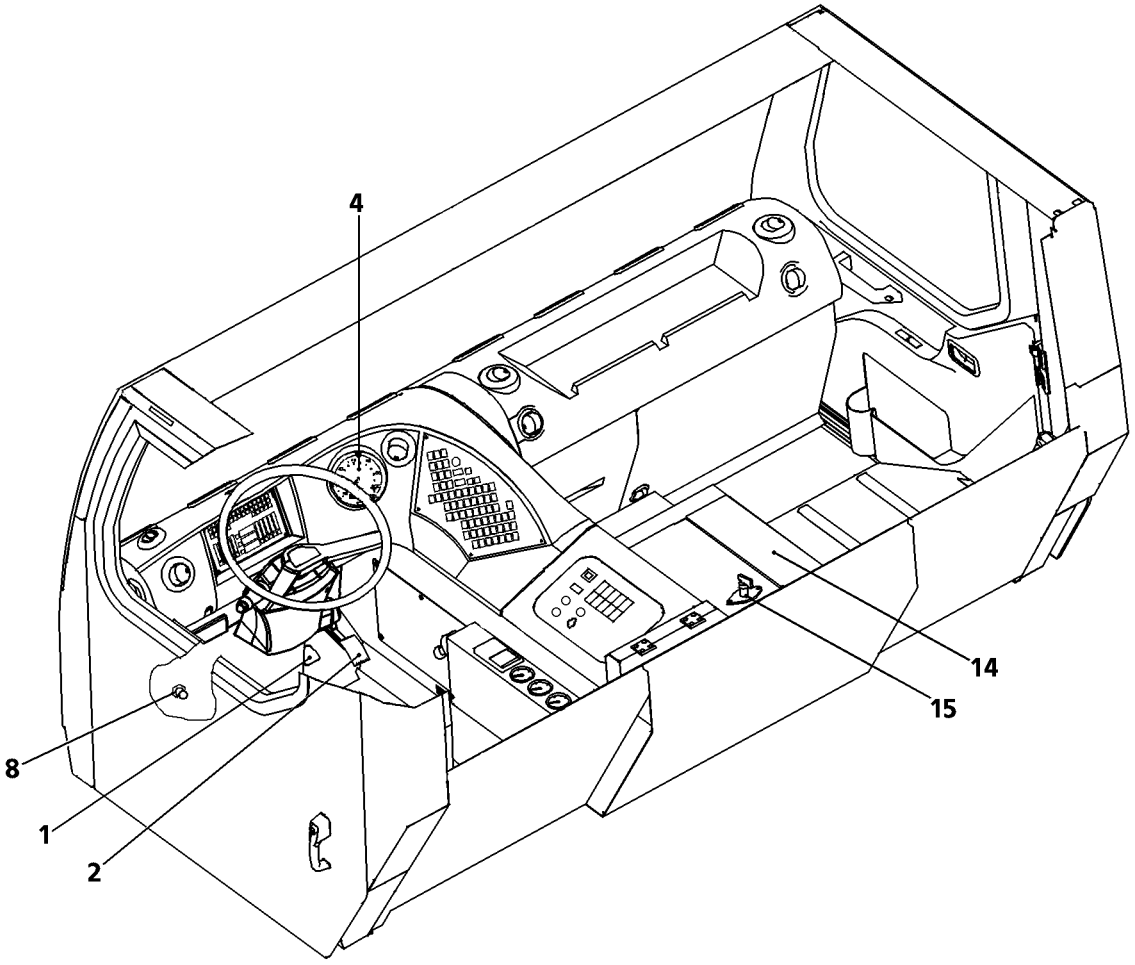

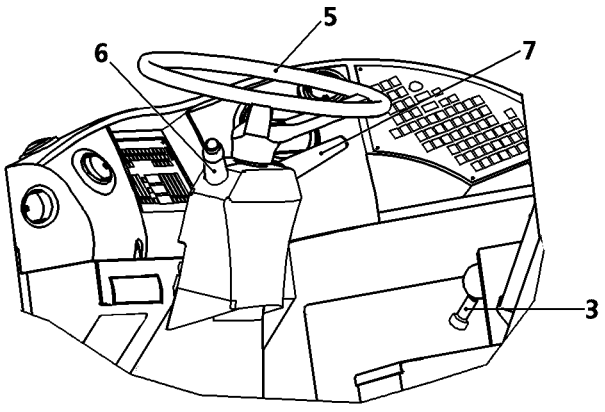

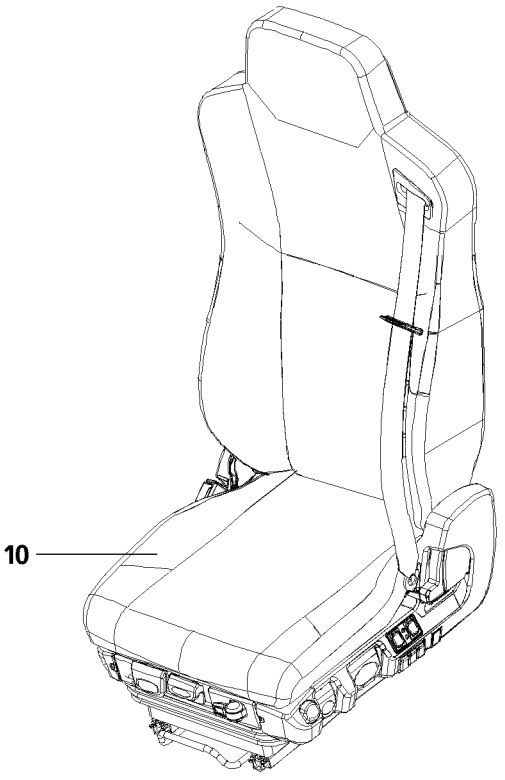

B116600

1 General control elements

1	Service brake	
2	Engine regulation	
3	Parking brake	
4	Tachograph	• Speedometer • Odometer • Clock
5	Steering wheel	
6	Left steering column switch	• Switch from low beam to high beam • Operate the headlight flasher • Operate the blinker (left / right) • Operate the windshield wiper (0, intermittent, I, II) • Operate the windshield washer system • Operate the horn
7	Right steering column switch	• Retarder: Switch position 0, 1 Switch position 2 to 5 (with eddy current brake*) • Tempomat • Temposet • Manual throttle • Shift 1 gear up or down with manual transmission
8	Foot button	• Pneumatic release for steering wheel incline and height adjustment
10	Driver’s seat	• **Note:** For a description of “Adjusting the driver's seat”, see Crane operating instructions, chapter 3.02.
14	Battery box	
15	Battery master switch	

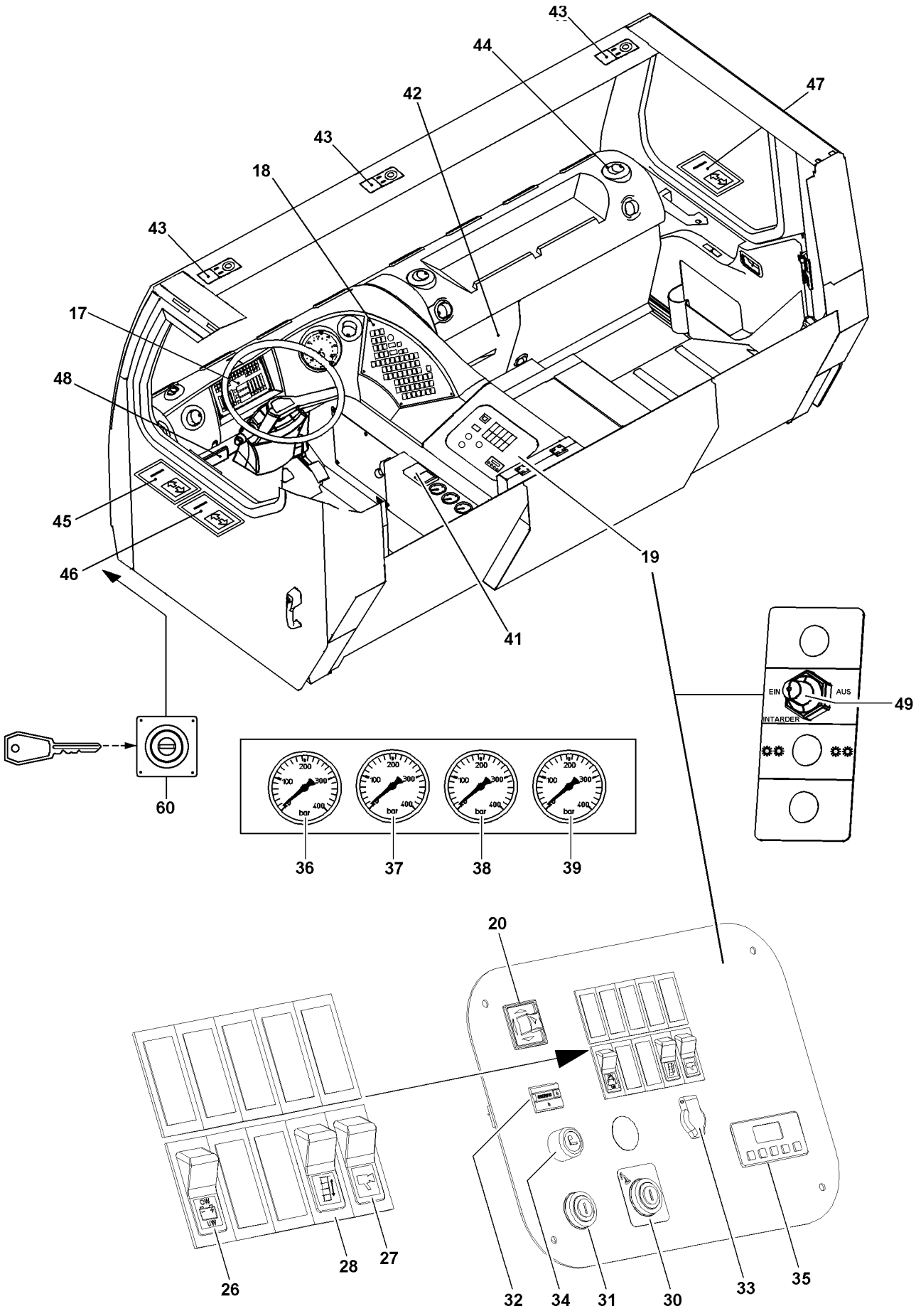
43
44
42
47
43
18
43
17
48
45
46
19
41
49
EIN
AUS
60
36
37
38
39
20
26
28
27
32
34
31
30
33
35

B112378

17	Display unit	
18	Keyboard	• **The function control on the button lights up:** Function has been selected and carried out. • **The function control on the button blinks:** Function has been selected but not carried out. • **Acoustic signal (beep) sounds when button is pressed:** Impermissible function has been selected.
19	Center console	
20	Switch, button	• Switch: Switch between right / left outside mirror • Button: Electric mirror adjustment

26	Switch*	• Change over battery charger
		  • Chassis (UW)
		  • Superstructure (OW)

27	Switch*	• Camera cleaning

28	Switch	• Access ladder
		  • Access ladder UP
		  • Access ladder DOWN

30	Ignition switch engine crane superstructure	**Position:** • P = Ignition key can be pulled off • 0 = Ignition key can be pulled off • I = Ignition on • II = Start the engine
31	Ignition switch engine crane chassis	**Position:** • P = Ignition key can be pulled off • 0 = Ignition key can be pulled off • I = Ignition on • II = Start the engine
32	Operating hour meter	
33	Integrated socket 24 V	
34	Cigarette lighter	
35	Timer*	• Auxiliary heater / engine preheating
36	Axle pressure indicator	• Axles 1 and 2, left side • Axles 1 to 4, left side, with axle pressure compensation
37	Axle pressure indicator	• Axles 1 and 2, right side • Axles 1 to 4, right side, with axle pressure compensation
38	Axle pressure indicator	• Axles 7 to 8, left side • Axles 5 to 8, left side with axle pressure compensation
39	Axle pressure indicator	• Axles 7 to 8, right side • Axles 5 to 8, right side with axle pressure compensation
41	Ashtray	
42	Reservoir	• Windshield washer fluid
43	Interior lighting	
44	Outlet nozzles	• For heat / ventilation / Climate control system*
45	Switch	• Left power window
46	Switch	• Right power window
47	Switch	• Right power window
48	Trip recorder	
49	Switch	• Turn intarder off **Note:** The switch **49** is under the center console.
60	EMERGENCY OFF switch*	

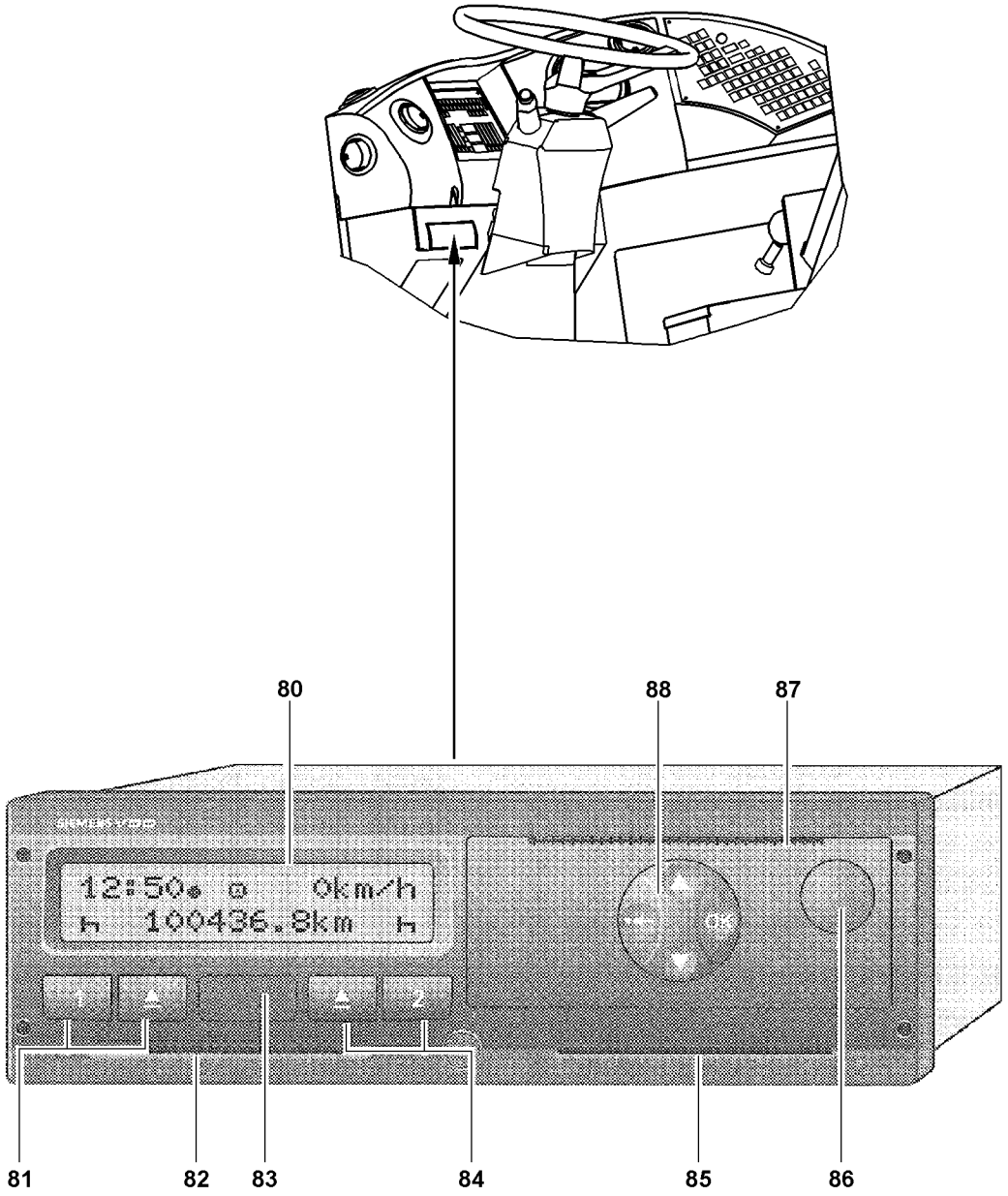

B104055

2 Control elements DTCO trip recorder*

80 Display
81 Keypad, driver-1
- Activity button for driver-1
- Discharge button card slot-1

82 Card slot-1
83 Download interface / calibrate interface
84 Keypad, driver-2
- Activity button for driver-2
- Discharge button card slot-2

85 Card slot-2
86 Release button printer drawer
87 Tear-off edge
88 Menu keys

Note

▶ For detailed description of the DTCO trip recorder, refer to the supplied manufacturer's operating instructions.

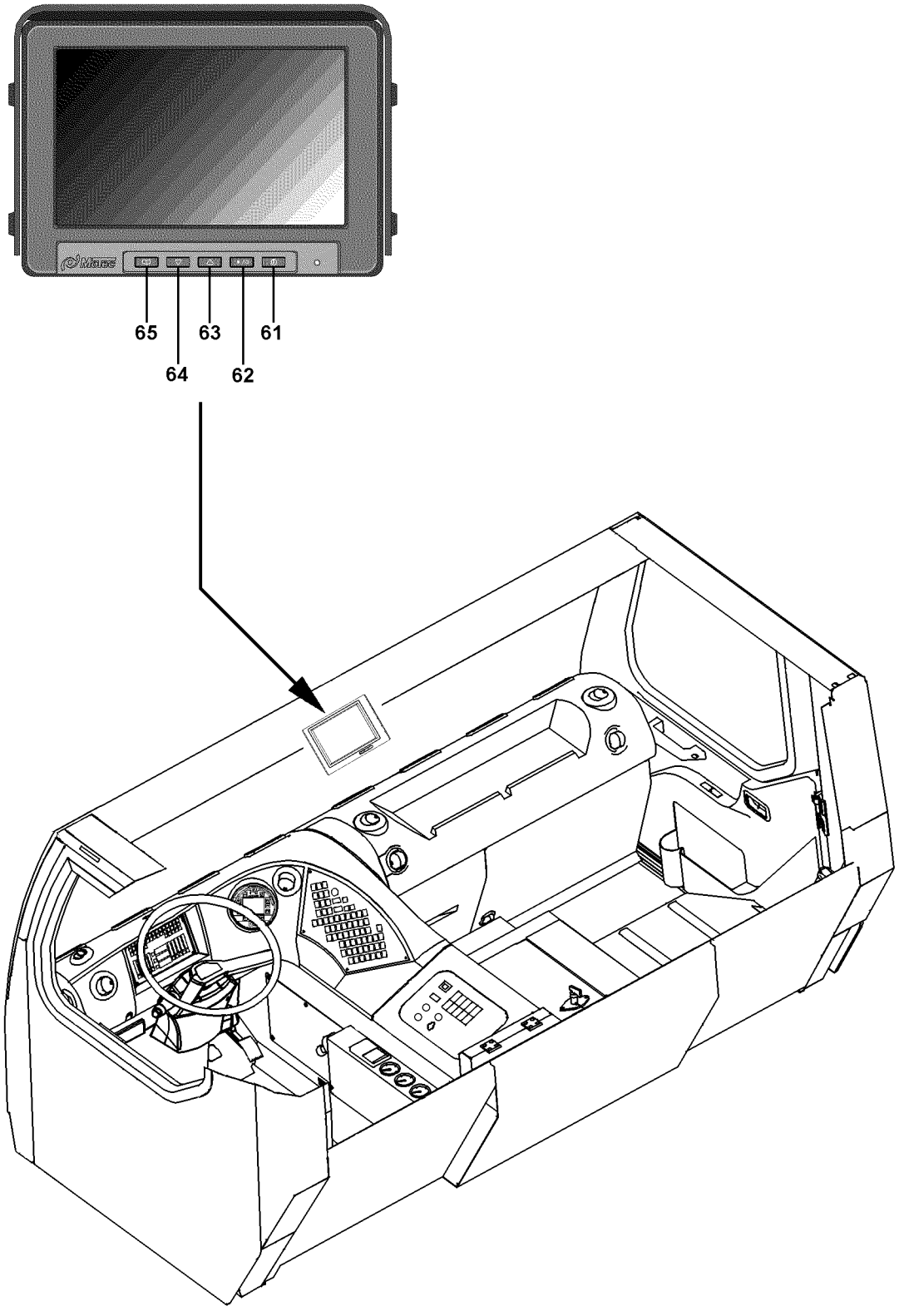

B107909

3 Operating elements camera monitoring*

61 Button	• Monitor On / Off
62 Button “Change between day / night”	• Press the “Change between day / night” button to match the brightness of the display to the time of day.
63 Button “Plus”	• By pressing the “Plus” button, the value of a setting is increased.
64 Button “Minus”	• By pressing the “Minus” button, the value of a setting is reduced.
65 Button menu	• By pressing the “Menu” button, menus for various adjustments are called up and changed over, in the following order: – Color: Adjustment of color saturation – Brightness: Brightness adjustment – Contrast: Contrast adjustment – Volume: Volume adjustment – Language: Language adjustment (English, French, German, Spanish, Italian, Portuguese) – Standard: Reset to default settings

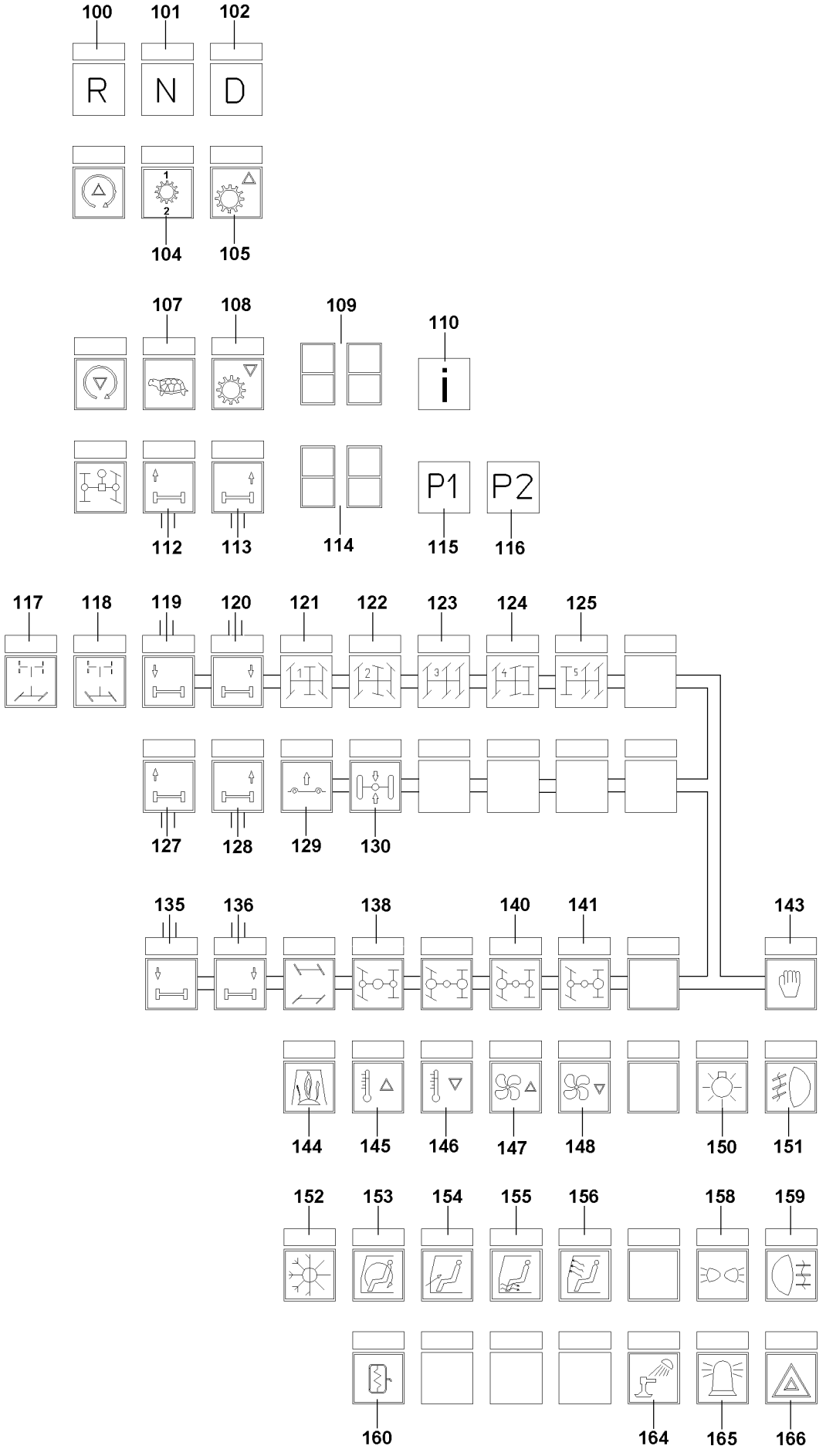
100
101
102
R
N
D
1
2
104
105
107
108
109
110
i
112
113
114
P1
P2
115
116
117
118
119
120
121
122
123
124
125
1
2
3
4
5
127
128
129
130
135
136
138
140
141
143
144
145
146
147
148
150
151
152
153
154
155
156
158
159
160
164
165
166

B116601

4 Keyboard

100 Travel range switch	• Reverse “R”
101 Travel range switch	• Neutral “N”
102 Travel range switch	• Drive forward “D”
104 Button	• Shift, automatic / manual shift mode **Function indicator light does not light up:** Automatic shift mode **Function indicator light lights up:** Manual shift mode
105 Button	• Shift up 1 gear in manual shift mode
107 Button	• Enable maneuvering mode **Function indicator light lights up:** Maneuvering mode is added **Function indicator light does not light up:** Maneuvering mode is turned off **Function control blinks:** Error **Function control blinks rapidly:** Distributor gear switched to freewheel, button **50** pressed.
108 Button	• Shift down 1 gear in manual shift mode
109 Display	• Function code
110 Button	• Analog display of engine oil **Note:** When pressing the button **110**, the display **221** shows how much engine oil must be added or drained. • Analog display of active system errors or service note **Note:** When pressing the button **110**, the active system error or service note is shown on the display **225**.
112 2-hand button	• Vehicle level, raise left front
113 2-hand button	• Vehicle level, raise right front
114 Display	• Heater stage, brightness stage
115 Button	• Display and keyboard brightness adjustment
116 Button	• Diagnostics
117 Button	• Independent rear axle steering, steering deflection to the right
118 Button	• Independent rear axle steering, steering deflection to the left
119 2-hand button	• Vehicle level, lower left front
120 2-hand button	• Vehicle level, lower right front
121 2-hand button	• Add “On road driving” steering program
122 2-hand button	• Add “All-wheel steering” steering program
123 2-hand button	• Add “Crabwalk steering” steering program
124 2-hand button	• Add “Reduced sheer out dimension” steering program
125 2-hand button	• Add “Independent steering” steering program
127 2-hand button	• Vehicle level, raise left rear
128 2-hand button	• Vehicle level, raise right rear
129 2-hand button	• Automatic level regulation for on road driving
130 2-hand button	• Blocking the axle suspension
135 2-hand button	• Vehicle level, lower left rear
136 2-hand button	• Vehicle level, lower right rear

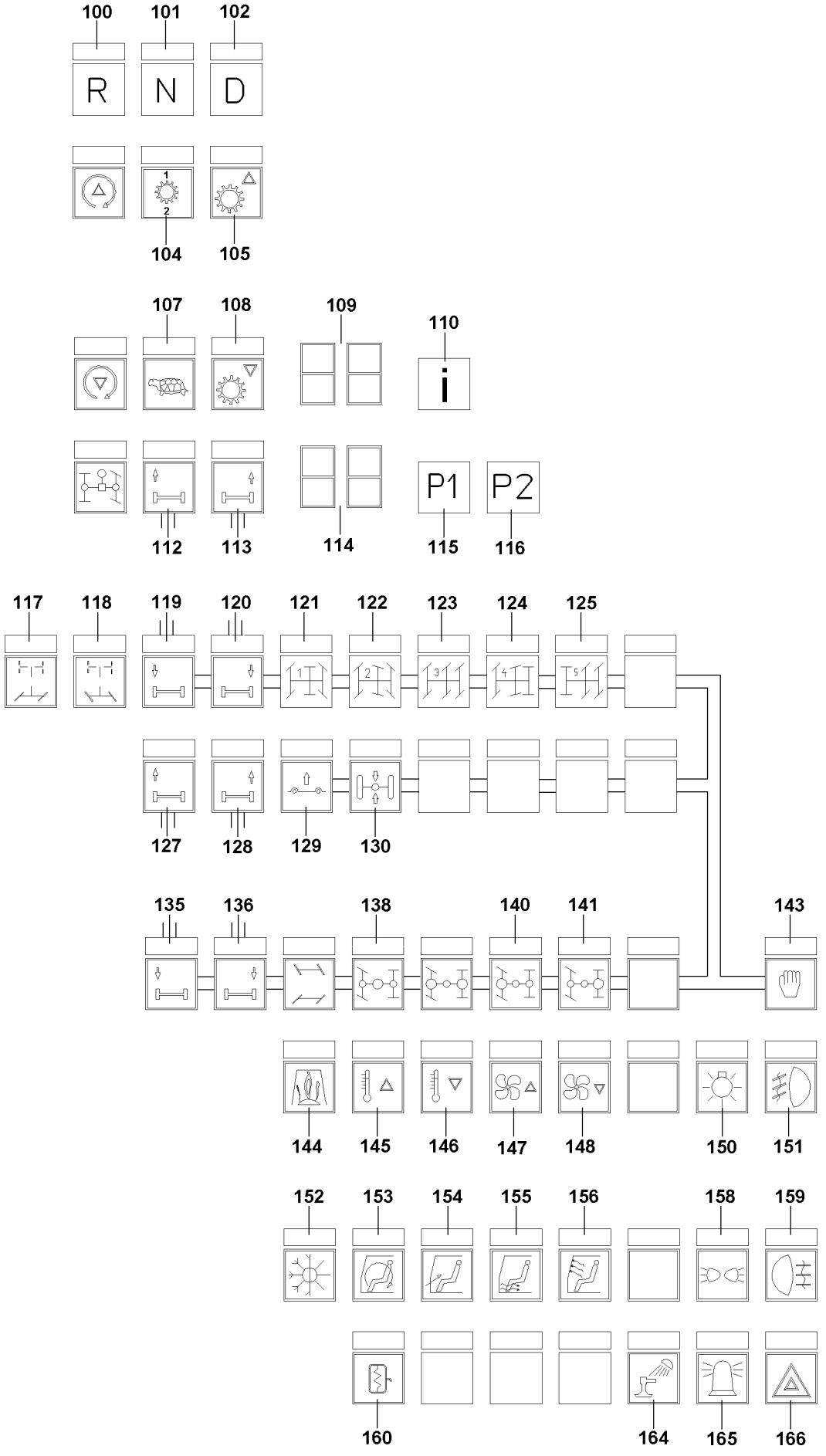
100
101
102
R
N
D
1
2
104
105
107
108
109
110
i
112
113
114
P1
P2
115
116
117
118
119
120
121
122
123
124
125
1
2
3
4
5
127
128
129
130
135
136
138
140
141
143
144
145
146
147
148
150
151
152
153
154
155
156
158
159
160
164
165
166

B116601

138	2-hand button	• Longitudinal differential lock in transfer gear
140	2-hand button	• Addition of longitudinal differential lock axle 2 + axle 4
141	2-hand button	• Add transverse differential lock axle 4 + axle 6.
143	2-hand button	• Confirmation for 2-hand operation **Note:** The “2-hand button” must be operated for: Vehicle level regulation Enabling steering programs Enabling differential locks Blocking the axle suspension
144	Button*	• Turn the auxiliary heater on / off
145	Button	• Driver's cab heat warmer
146	Button	• Driver's cab heat cooler
147	Button	• Fan speed (blower), faster
148	Button	• Fan speed (blower), slower
150	Button	• Headlight
151	Button*	• Fog lights
152	Button*	• Climate control system
153	Button	• Recirculating air
154	Button	• Fresh air
155	Button	• Air supply floorboard area
156	Button	• Air supply front windshield
158	Button	• Parking lights
159	Button	• Rear fog light
160	Button*	• Outside mirror heater
164	Button	• Sliding beam illumination, turn on / off manually
165	Button	• Rotating beacons
166	Button	• Hazard warning system

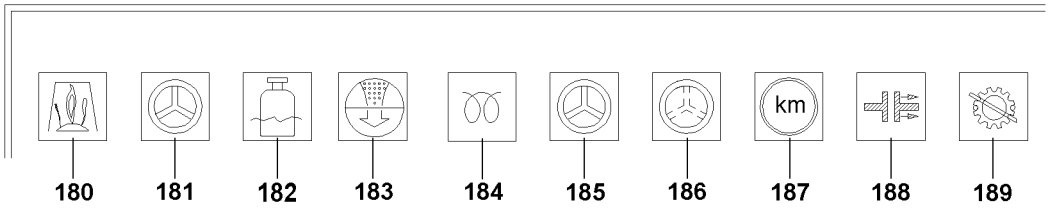
km
180
181
182
183
184
185
186
187
188
189

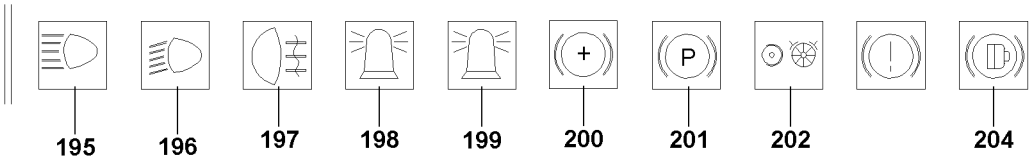
+
P
195
196
197
198
199
200
201
202
204

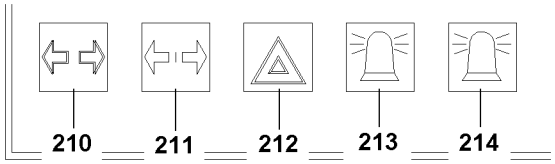
210
211
212
213
214

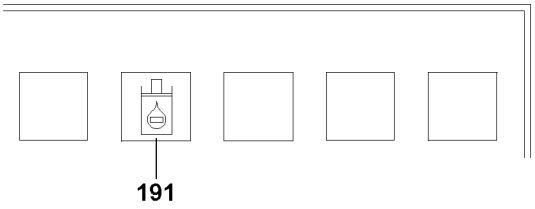
191

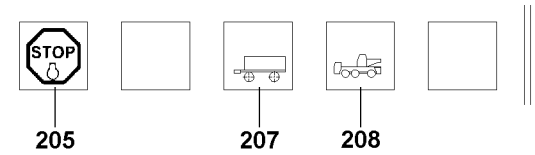
STOP
205
207
208

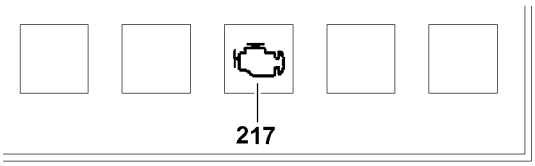
217

B116595

5 Display unit

180 Indicator light*	• Auxiliary heater **Blinks:** In case of a problem
181 Indicator light	• Steering **Lights up:** Steering operational **Blinks fast:** Error in steering system, with error code display **Blinks slowly:** LSB bus connection defective
182 Warning light	• Engine coolant level too low
183 Indicator light	• Air filter is dirty
184 Indicator light	• Diesel engine preglow system
185 Warning light	• Steering circuit (engine driven)
186 Warning light	• Steering circuit (wheel driven)
187 Warning light	• Speed limiter
188 Indicator light	• Torque converter clutch open **Lights up:** Torque converter clutch open **Off:** Torque converter clutch closed **Blinks:** CAN bus connection defective or oil temperature in the torque converter clutch is too high
189 Warning light	• Transmission error
191 Indicator light*	• Automatic brake force reduction
195 Indicator light	• High beam
196 Indicator light	• Low beam
197 Indicator light	• Rear fog light
198 Indicator light*	• Rotating beacon
199 Indicator light*	• Rotating beacon
200 Indicator light	• Engine brake active
201 Indicator light	• Parking brake applied
202 Indicator light	• Eddy current brake active
204 Warning light	• Brake pads worn
205 Warning light	• Request engine stop **Note:** If a warning occurrence is present, the warning light **205** lights up or blinks. If required: Turn the engine off! Pay attention to system errors and remedy the cause of errors immediately.

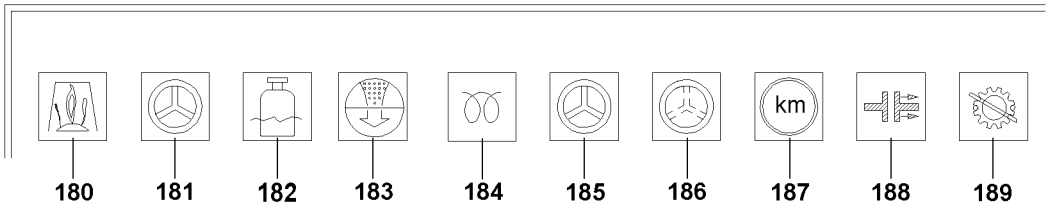
km
180
181
182
183
184
185
186
187
188
189

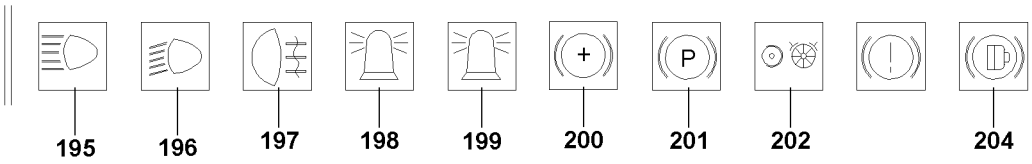
+
P
195
196
197
198
199
200
201
202
204

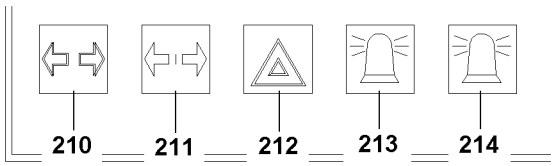
210
211
212
213
214

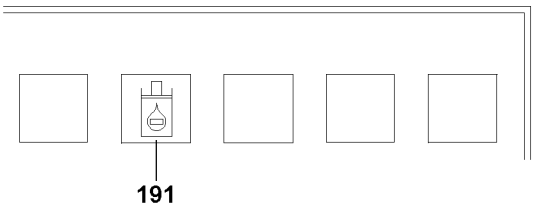
191

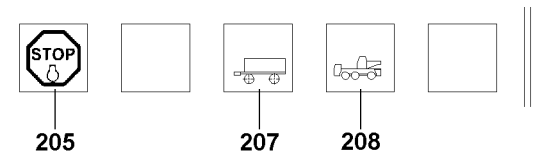
STOP
205
207
208

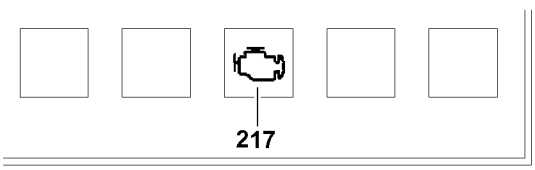
217

B116595

207	Indicator light*	• ABS on trailer ABS Antilock Brake System **Lights up:** ABS error **Blinks:** Communication error between ABS vehicle electronics At a driving speed in trailer mode of more than approx. 10 km/h, this warning light must turn off.
208	Indicator light	• CAN bus error
210	Display	• Driving direction vehicle left / right
211	Display*	• Driving direction of trailer left / right
212	Warning light	• Hazard warning system
213	Indicator light	• Rotating beacon
214	Indicator light	• Rotating beacon
217	Indicator light	• Exhaust aftertreatment (only for Diesel engine with exhaust aftertreatment system SCR) • **Lights up yellow:** Advance warning: Exhaust aftertreatment • **Blinks yellow:** Warning: Exhaust aftertreatment is no longer ensured.

WARNING

Insufficient Urea in the Urea reservoir or faulty function in the SCR-exhaust aftertreatment system!

Due to insufficient Urea level or faulty function in the SCR-system, a reduction in engine power can be activated by the engine control or a start block of the engine can be triggered!

The crane can significantly obstruct traffic!

Crane and travel operation can be limited!

- ▶ Add missing Urea in the Urea reservoir in time!
- ▶ Remedy faulty function in the SCR-system immediately!
- ▶ Observe the national / regional regulations valid on the job site!

Note

- ▶ The type and scope of a power reduction of the engine depends on the respectively valid national / regional regulations. The engine can possible not be started any longer (start block).

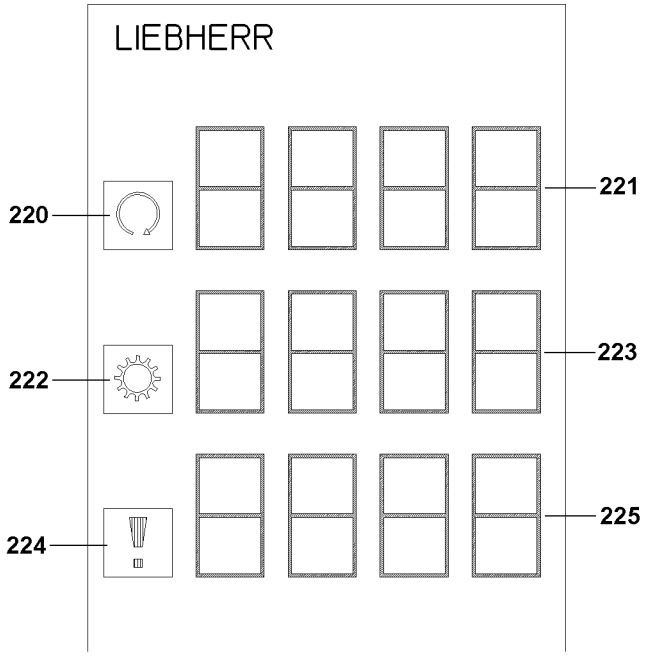
LIEBHERR
220
221
222
223
224
225

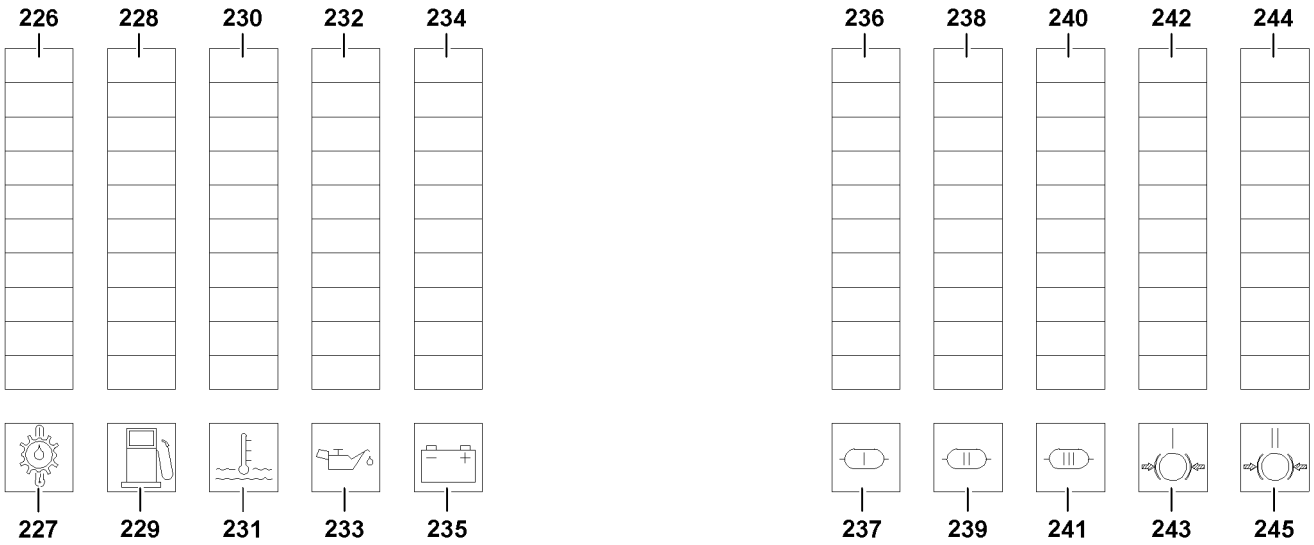
226
228
230
232
234
236
238
240
242
244
227
229
231
233
235
237
239
241
243
245

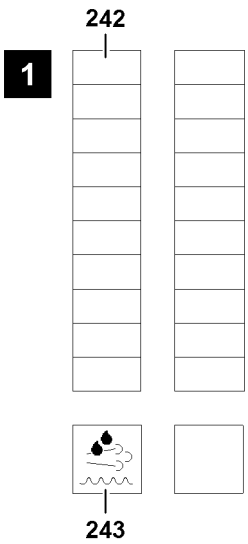
242
1
243

B116594

220 Indicator light	• Tempomat or Temposet active
221 Display	• Engine rpm **or** • Analog display of engine oil **Note:** When pressing the button **110**, the display **225** shows how much engine oil must be added or drained. Example: If -1.0 is shown, then 1 l of engine oil must be drained. If +1.5 is shown, then 1.5 l of engine oil must be added.
222 Display	• Transmission in neutral “N”
223 Display	• Gear indicator **Note:** Brief display of Tempomat and Temposet speed settings
224 Warning light	• **Blinks:** Active system error or service note Pressing the “i-key” **110** causes the system error or service note to appear on the display **225**. • **Lights up:** Active operating error Operating error appears automatically on display **225**.
225 Display	• LICCON Error Code (LEC) with pressed “i-key”.
226 Bar chart	• Gear oil temperature, 50 °C to 140 °C
227 Warning light	• Gear oil temperature too high
228 Bar chart	• Fuel reserve, 0 % to 100 %
229 Warning light	• Fuel reserve less than 10%
230 Bar chart	• Coolant temperature engine, 30 °C to 120 °C
231 Warning light	• Engine coolant temperature or charge air temperature too high or engine error
232 Bar chart	• Engine oil pressure, 0 bar to 10 bar
233 Warning light	• Oil pressure too low / oil temperature too high
234 Bar chart	• Battery voltage, 21 V to 30 V
235 Warning light	• Charge monitoring
236 Bar chart	• Compressed air supply in brake circuit I 0 bar to 10 bar
237 Warning light	• Compressed air supply in brake circuit I less than 5.5 bar
238 Bar chart	• Compressed air supply in brake circuit II 0 bar to 10 bar
239 Warning light	• Compressed air supply in brake circuit II less than 5.5 bar
240 Bar chart	• Compressed air supply in brake circuit III 0 bar to 10 bar
241 Warning light	• Compressed air supply in brake circuit III less than 5.5 bar

Note

▶ The bar graphs (bar graph **242** and bar graph **244**) for the brake pressures and the warning lights (warning light **243** and warning light **245**) for the respective brake pressure sensors are only available for engines, which are **not** equipped with an SCR exhaust aftertreatment system!

242 Bar chart*	• Current brake pressure with actuated brake circuit I, 0 bar to 10 bar
243 Warning light*	• **Blinks:** Brake pressure sensor in circuit I defective
244 Bar chart*	• Current brake pressure with actuated brake circuit II, 0 bar to 10 bar
245 Warning light*	• **Blinks:** Brake pressure sensor in circuit II defective

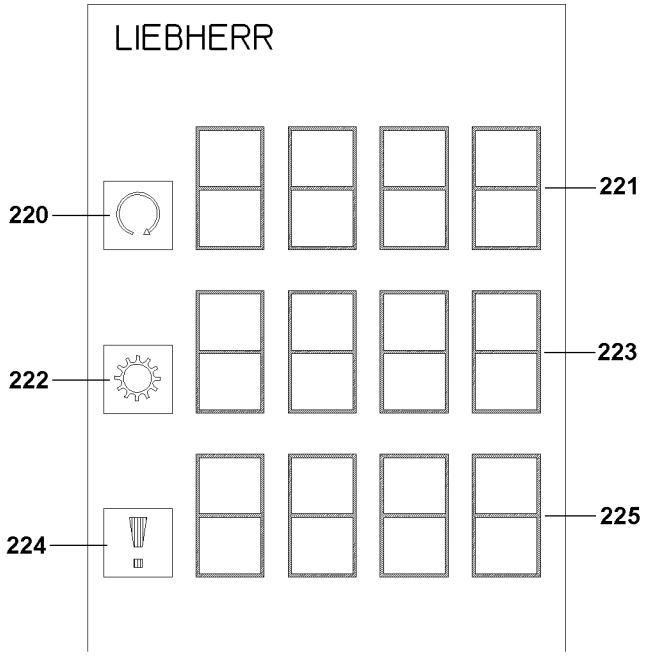
LIEBHERR
220
221
222
223
224
225

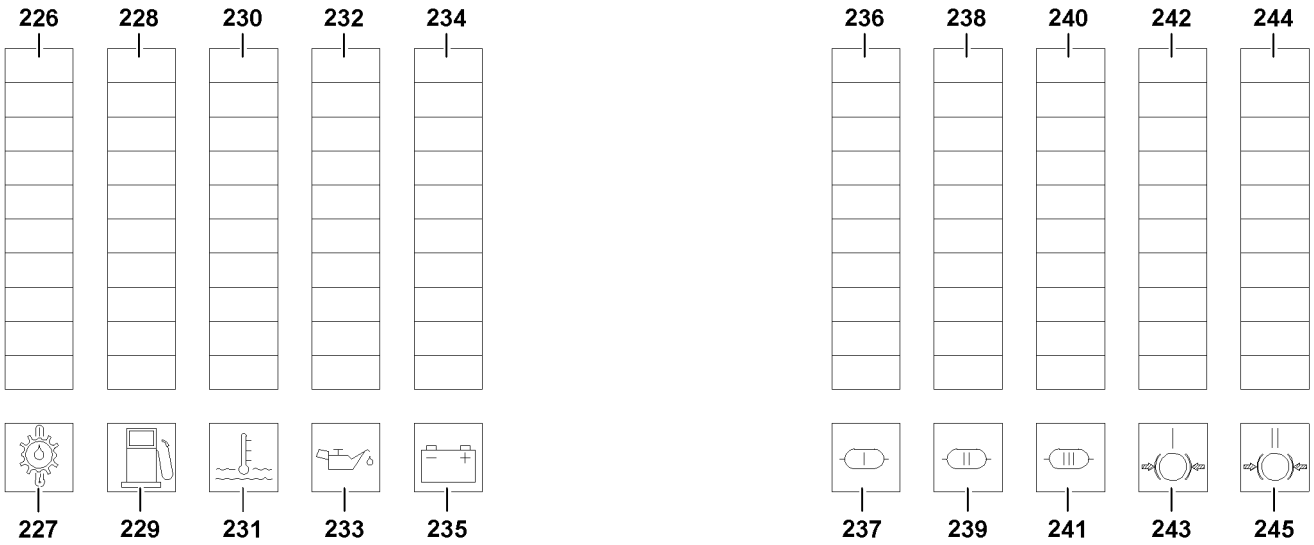
226
228
230
232
234
236
238
240
242
244
227
229
231
233
235
237
239
241
243
245

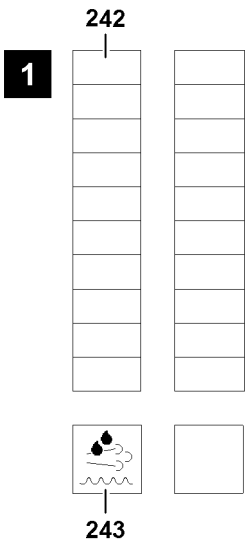
242
1
243

B116594

Note

▶ The bar graph **242** for the urea reserve and the warning light **243** urea are only available on engines, which are equipped with a SCR exhaust aftertreatment system!

242 Bar chart*	• Urea reserve, 0 % to 100 %

243 Indicator light*	• See illustration **1**.
	• Urea tank
	  • Indicator light off: Urea available
	  • Indicator light on statically: Urea is getting low or faulty function of the exhaust aftertreatment
	  • The indicator light blinks: Urea almost empty or faulty function of the exhaust aftertreatment

WARNING

Insufficient Urea in the Urea reservoir or faulty function in the SCR-exhaust aftertreatment system!

Due to insufficient Urea level or faulty function in the SCR-system, a reduction in engine power can be activated by the engine control or a start block of the engine can be triggered!

The crane can significantly obstruct traffic!

Crane and travel operation can be limited!

▶ Add missing Urea in the Urea reservoir in time!

▶ Remedy faulty function in the SCR-system immediately!

▶ Observe the national / regional regulations valid on the job site!

Note

▶ The type and scope of a power reduction of the engine depends on the respectively valid national / regional regulations. The engine can possible not be started any longer (start block).

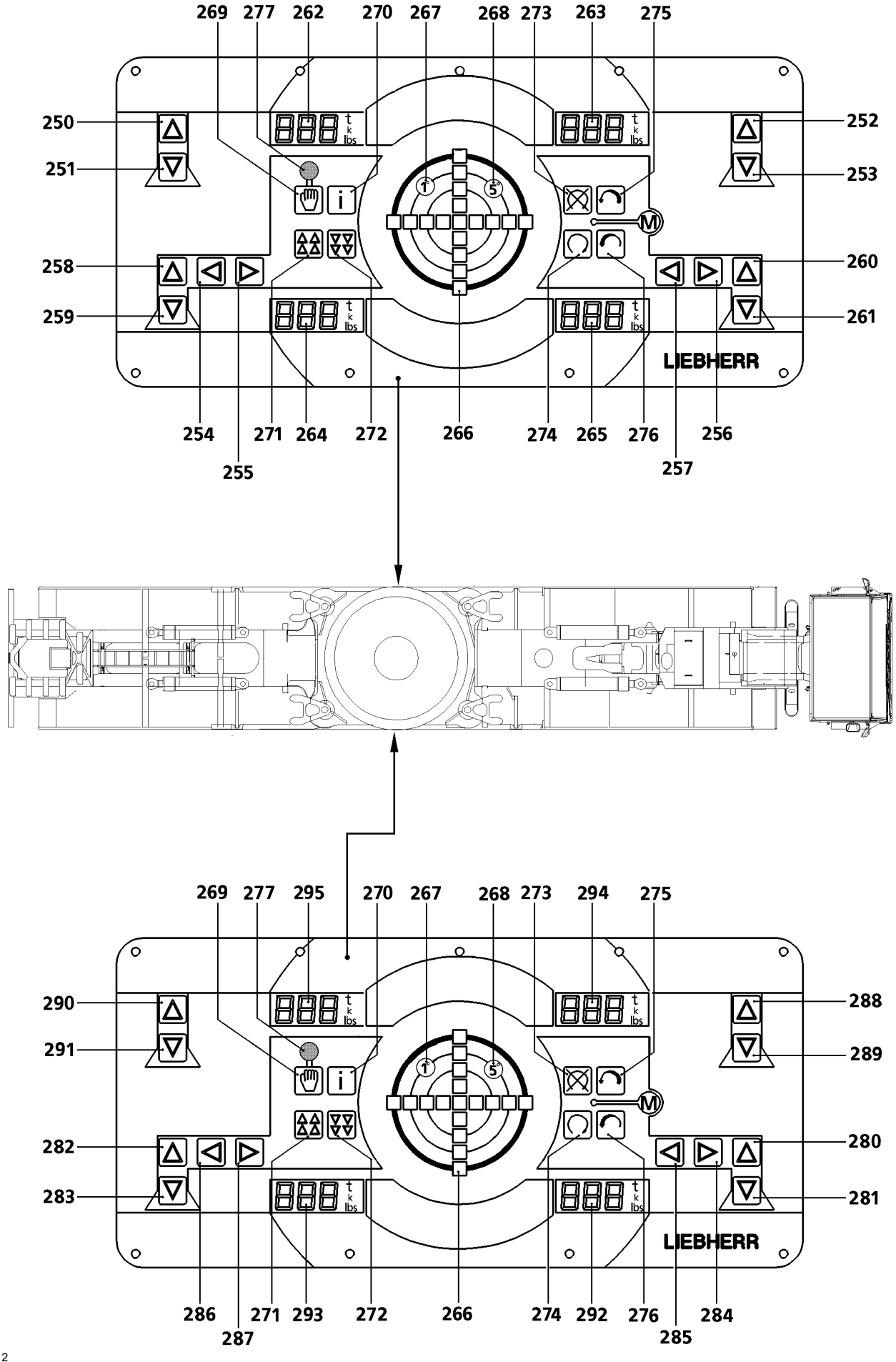
269
277
262
270
267
268
273
263
275
250
251
252
253
258
259
260
261
LIEBHERR
254
255
271
264
272
266
274
265
276
256
257
269
277
295
270
267
268
273
294
275
290
291
288
289
282
283
280
281
LIEBHERR
286
287
271
293
272
266
274
292
276
284
285

B196112

6 Support control unit

6.1 Left support control unit

250	Button	• Retract right front support cylinder
251	Button	• Extend right front support cylinder
252	Button	• Retract right rear support cylinder
253	Button	• Extend right rear support cylinder
254	Button	• Extend left front sliding beam
255	Button	• Retract left front sliding beam
256	Button	• Extend left rear sliding beam
257	Button	• Retract left rear sliding beam
258	Button	• Retract left front support cylinder
259	Button	• Extend left front support cylinder
260	Button	• Retract left rear support cylinder
261	Button	• Extend left rear support cylinder
262	Display	• Right front support force display
263	Display	• Right rear support force display
264	Display	• Left front support force display
265	Display	• Left rear support force display
266	Display	• Incline indicator
267	LED 1°	
268	LED 5°	
269	Button	• Support control unit release **Note:** Before the support cylinders or the sliding beams can be moved, first the support control unit release **269** must be operated.
271	Button	• Retract all support cylinders and align horizontally
272	Button	• Extend all support cylinders and align horizontally
273	Button	• Engine off
274	Button	• Engine on
275	Button	• Reduce engine rpm
276	Button	• Increase engine rpm
277	LED	• Lights up when support control unit is released

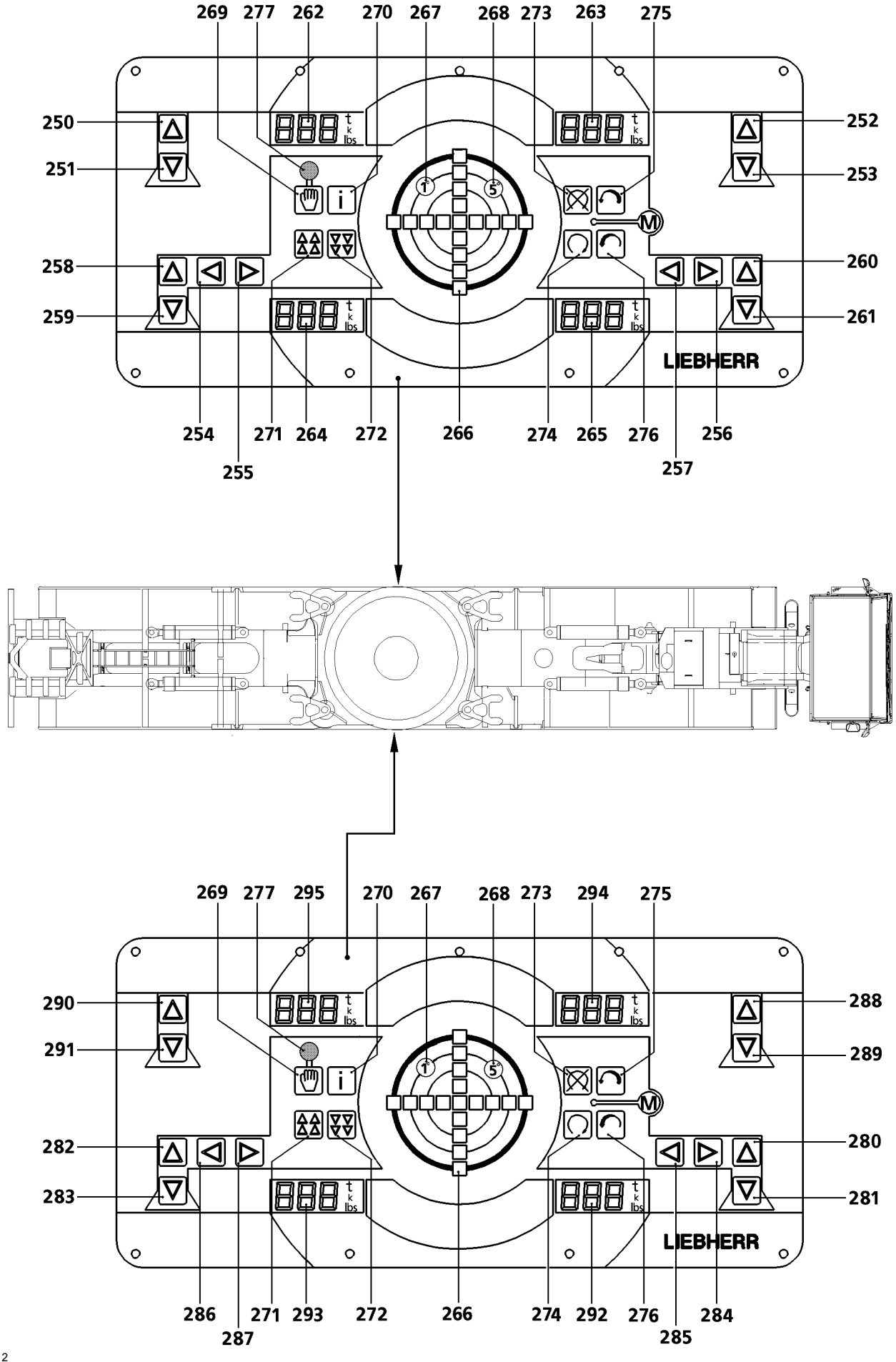
269
277
262
270
267
268
273
263
275
250
251
252
253
258
259
260
261
LIEBHERR
254
255
271
264
272
266
274
265
276
256
257
269
277
295
270
267
268
273
294
275
290
291
288
289
282
283
280
281
LIEBHERR
286
287
271
293
272
266
274
292
276
284
285

B196112

6.2 Right support control unit

266	Display	• Incline indicator
267	LED 1°	
268	LED 5°	
269	Button	• Support control unit release **Note:** Before the support cylinders or the sliding beams can be moved, first the support control unit release **269** must be operated.
271	Button	• Retract all support cylinders and align horizontally
272	Button	• Extend all support cylinders and align horizontally
273	Button	• Engine off
274	Button	• Engine on
275	Button	• Reduce engine rpm
276	Button	• Increase engine rpm
277	LED	• Lights up when support control unit is released
280	Button	• Retract right front support cylinder
281	Button	• Extend right front support cylinder
282	Button	• Retract right rear support cylinder
283	Button	• Extend right rear support cylinder
284	Button	• Extend right front sliding beam
285	Button	• Retract right front sliding beam
286	Button	• Extend right rear sliding beam
287	Button	• Retract right rear sliding beam
288	Button	• Retract left front support cylinder
289	Button	• Extend left front support cylinder
290	Button	• Retract left rear support cylinder
291	Button	• Extend left rear support cylinder
292	Display	• Right front support force display
293	Display	• Right rear support force display
294	Display	• Left front support force display
295	Display	• Left rear support force display

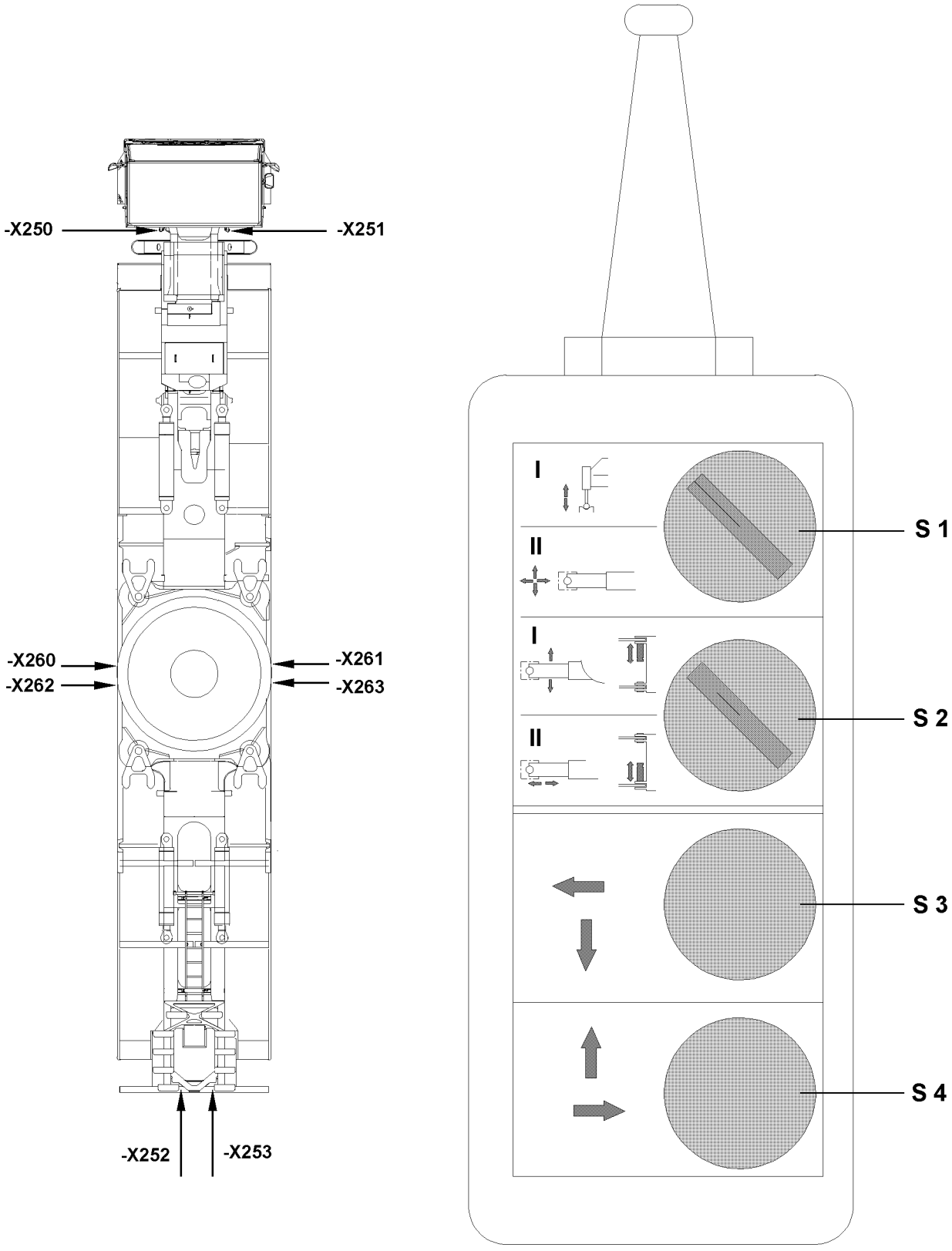

B196250

7 Remote control panel

Note

▶ Operate remote control panel, see Crane operating instructions, chapter 3.05!

7.1 Remote control panel connected on sockets -X250 to -X253

S1 Switch	• Position I: Select support cylinder function • Position II: Select sliding beam / support beam function
S2 Switch	• Position I: Select support beam swing in / swing out function • Position II: Select retract / extend sliding beam function
S3 Button	• Extend sliding beam / swing out support beam / extend support cylinder • Position II: Select retract / extend sliding beam function
S4 Button	• Retract sliding beam / swing in support beam / extend support cylinder • Position II: Select retract / extend sliding beam function

7.2 Remote control panel connected on sockets -X260 to -X263

S1 Switch	• Position I: No function • Position II: Function pinning free
S2 Switch	• Position I: Select pin / unpin support beam “on top” function • Position II: Select pin / unpin support beam “on the bottom” function
S3 Button	• Unpin support beam on top / on the bottom
S4 Button	• Pin support beam on top / on the bottom

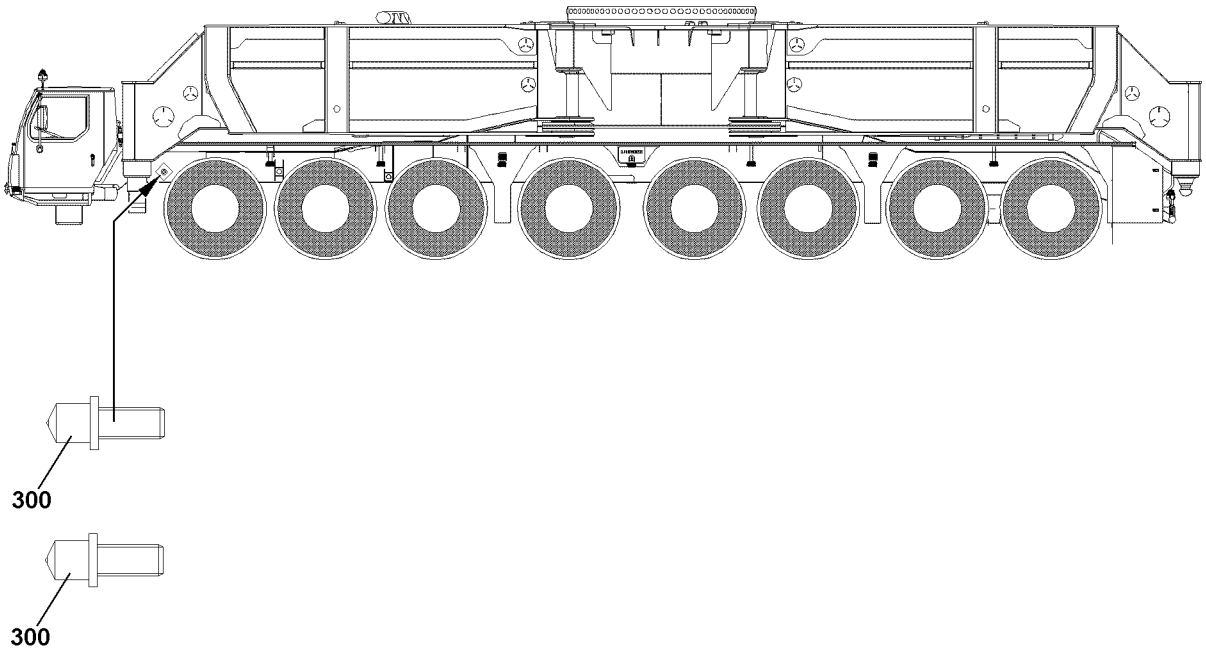

B108311

8 Grounding the mobile crane

Note

- ▶ To be able to ground the mobile crane, the pins **300** for the ground connection are installed!
- ▶ To ground the mobile crane, see Crane operating instructions, chapter 2.04!

300 Pin • Ground connection

B195219

1 General checks before starting to drive

Before every operation, various checks must be performed on the crane.

WARNING
Operating safety of the crane!
Defects on components, missing quantities or dirty filters affect the operating safety of the crane!
- ▶ If a defect on a component is found during the check, the defect must be remedied before operating the crane.
- ▶ If an item is low or lacking during an inspection, then it must be refilled or brought to normal status before operating the crane.
- ▶ If the inspection shows a very dirty filter, then it must be replaced before operating the crane.

WARNING
Heated crane components!
When the engine is running, crane components can heat up significantly!
This applies especially to exhaust systems, the engines, the coolant circuits and the respective gears in the crane chassis and in the crane superstructure!
Touching heated crane components can cause severe injuries!
- ▶ Carry out the checks before starting the crane, when the crane components are cold!
- ▶ Let already heated components cool off before checking!
- ▶ Proceed with special caution near heated crane components!

Note
- ▶ For detailed description of fill quantities, service items and lubricants, see Crane operating instructions, chapter 7.06 and chapter 7.07 and the separately supplied drawings!

1.1 Checking the coolant level

WARNING
Danger of burns due to hot coolant!
If the coolant reservoir is opened when the engine is at operating temperature, explosive hot steam or hot coolant can emerge and cause severe skin burns!
Personnel can be severely injured!
- ▶ The cooling system is under pressure.
- ▶ Never open the cap on the coolant reservoir as long as the engine is warm.
- ▶ To protect from skin burns caused by hot steam or hot coolant, place a large rag over the cover of the coolant reservoir when opening it.

- ▶ Check the coolant level.
- ▶ When the coolant level is too low:
  Add coolant, see Crane operating instructions, chapter 7.04.

1.2 Checking the oil level and filters

Note
- ▶ The oil level and filter check is described in the Crane operating instructions, chapter 7.04!

- ▶ Check the oil level in the vehicle engine.
- ▶ Check the oil level on the automatic transmission and the distributor gear.
- ▶ Check the oil level in the hydraulic reservoir for steering, support and axle suspension.
- ▶ Check the filter on the hydraulic oil tank.

1.3 Checking the fuel reserve

WARNING
Danger of fire and explosion!
- ▶ Turn the auxiliary heater* off approx. 3 min before refueling the fuel tank!
- ▶ Before refueling the fuel tank, turn the engine off!

Note
If the fuel tank has been run dry, then the fuel system must be bled.
- ▶ Do not run the fuel tank dry.

- ▶ Check the fuel supply on the display unit in the driver's cab.

1.4 Checking the urea reserve*

Note
- ▶ Check the urea reserve*, only for Diesel engines with exhaust aftertreatment system SCR (Selective Catalytic Reduction).

- ▶ Check the urea reserve on the bar graph in the display unit, see Crane operating instructions, chapter 3.01.

1.5 Checking the window cleaning fluid

NOTICE
Frozen window cleaning fluid!
If the window cleaning fluid is not frost resistant, then the windshield washer system can freeze during the cold time of the year!
Failure of the windshield washer system is the result!
The windshield washer system can be damaged!
- ▶ Change the window cleaning fluid in time to a frost resistant type!

- ▶ Before the start of the cold season:
  Empty the container for the window cleaning fluid and refill it with a commercially available, frost resistant window cleaning fluid.

1.6 Checking the tires

While doing this, also check the spare tire*.

Note
- ▶ See Crane operating instructions, chapter 8.01.

blank page!

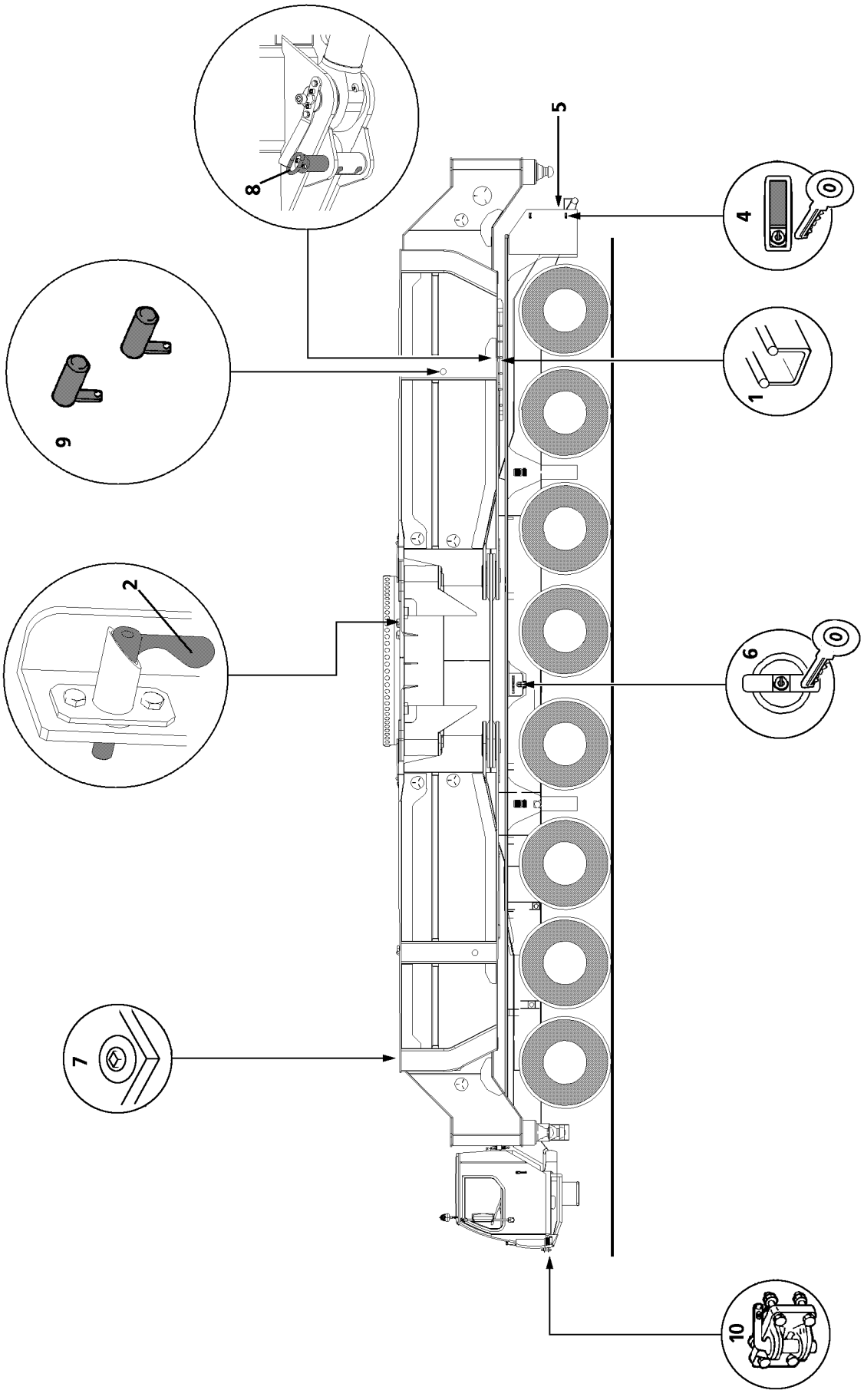

B196115

1.7 Checking the general transport condition

Note
Transport on public highways:
- ▶ For transport on public highways, observe the crane driving conditions to ensure that the maximum axle load does not exceed 12 t, see Crane operating instructions, chapter 3.04.

DANGER
Danger of accident due to improper transport condition!
- ▶ Locks, cotter pins and retaining pins must be installed and secured in such a way that they do not loosen up by themselves during travel and thereby cause damage.
- ▶ The safety measures, locking measures and checks described below must be performed!

Make sure that the following prerequisites for transporting the mobile crane are met:
- The folding ladders are placed on the vehicle frame and secured in the retainers **1**.
- The two platforms are folded up on the left and right and are secured with the locks **2**.
- All four support plates are disassembled.
- All four support cylinders are retracted all the way.
- The two folding beams on the front are swung in and secured in the calottes.
- the two folding beams behind are swung in and pinned and secured with the two pins **8** against unintended swinging out, and pinned and secured with the two locking pins **9** against unintended extending,
- The two pins **8** and the two locking pins **9** have been checked for proper seating.
- The pin in the front trailer coupling **10** is pinned and secured.
- The four chocks **5** are secured in the retainers.
- The switch boxes **6** for the left and right support control units are closed.
- The engine panels **7** are closed.
- All toolbox cabinet doors and panels **4** on the chassis are closed.
- All locking pins used for crane operation are checked for completeness and secured for transport.
- The axle blocking is turned off.

Perform the following checks before leaving the jobsite:
- ▶ Check if all four support plates have been removed.
- ▶ Check if all four support cylinders are fully retracted.
- ▶ Check if the folding beams are fully swung in, retracted, pinned and secured.
- ▶ Check if the axle suspension is set to the correct height for on-road driving. See Crane operating instructions, chapter 3.03.
- ▶ Check if the steering program “On-road driving” is activated.
- ▶ Check if the chocks **5** are in their retainers.
- ▶ Check if the ladders are secured in the operating position.
- ▶ Check if the platforms are secured in transport position.
- ▶ Check if the spare wheel* has been properly secured.
- ▶ Check if all locks on tool boxes and cabinet doors are locked.
- ▶ Check if all locking pins used for crane operation are present and secured for transport.

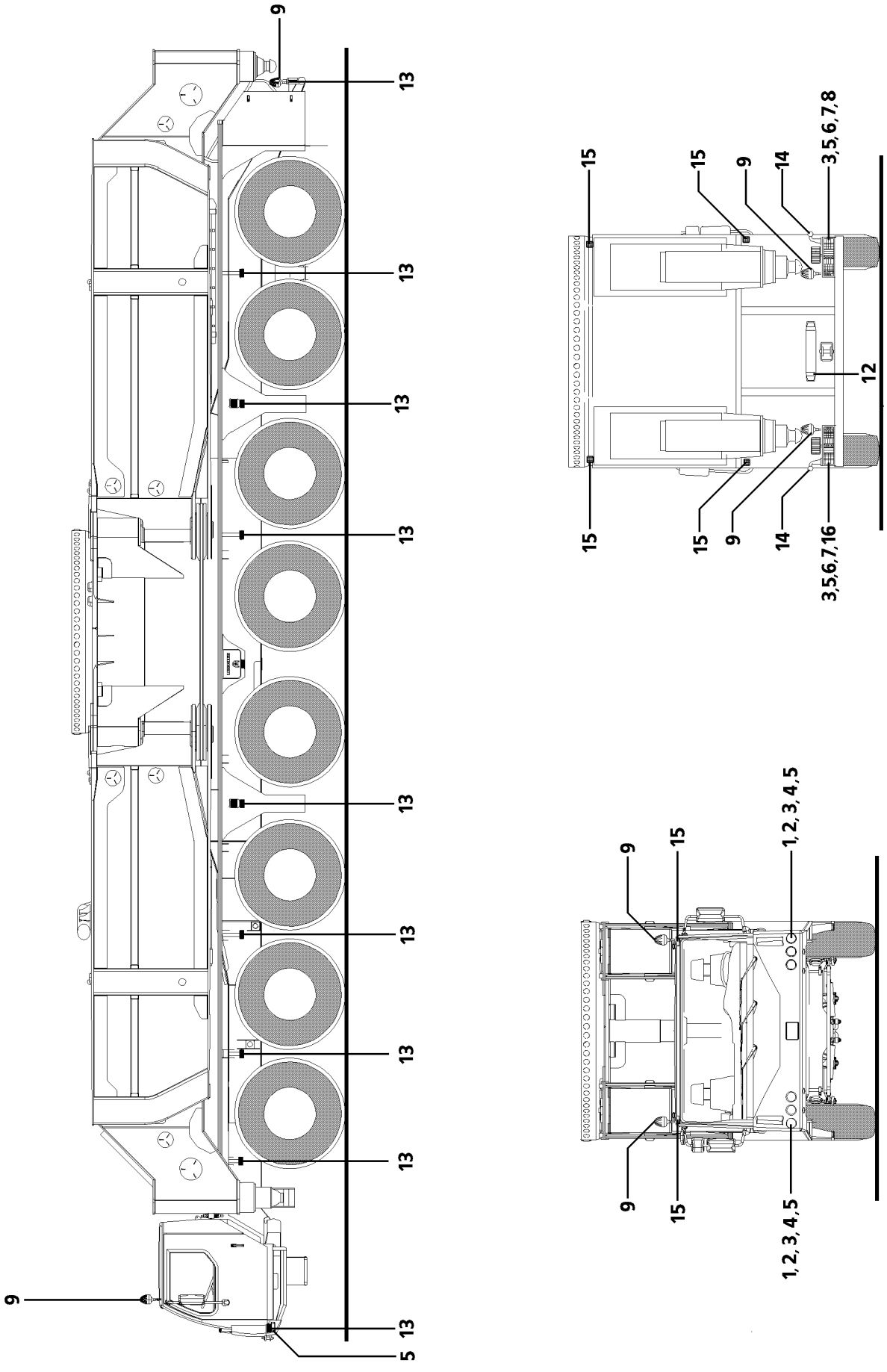
9
13
13
13
13
13
13
13
13
13
9
5
15
15
9
14
3,5,6,7,8
12
15
15
9
14
3,5,6,7,16
9
15
1,2,3,4,5
9
15
1,2,3,4,5

B196116

1.8 Checking the lights

Make sure that the battery master switch and the ignition are turned on.

DANGER
Danger of accident if lights are defective!
▶ Have any defective lights repaired by an expert before starting to travel!

Lighting of the crane:
– Low beam **1**
– High beam **2**
– Front and rear parking lights **3**
– Fog lights* **4**
– Turn signals **5**
– Tail light **6**
– Brake lights **7**
– Back up light **8**
– Rotating beacons **9**
– License plate illumination **12**
– Side marking lights **13**
– Course holding light **14**
– Outline lights **15**
– Rear fog light **16**

▶ Check all lights before starting to travel.

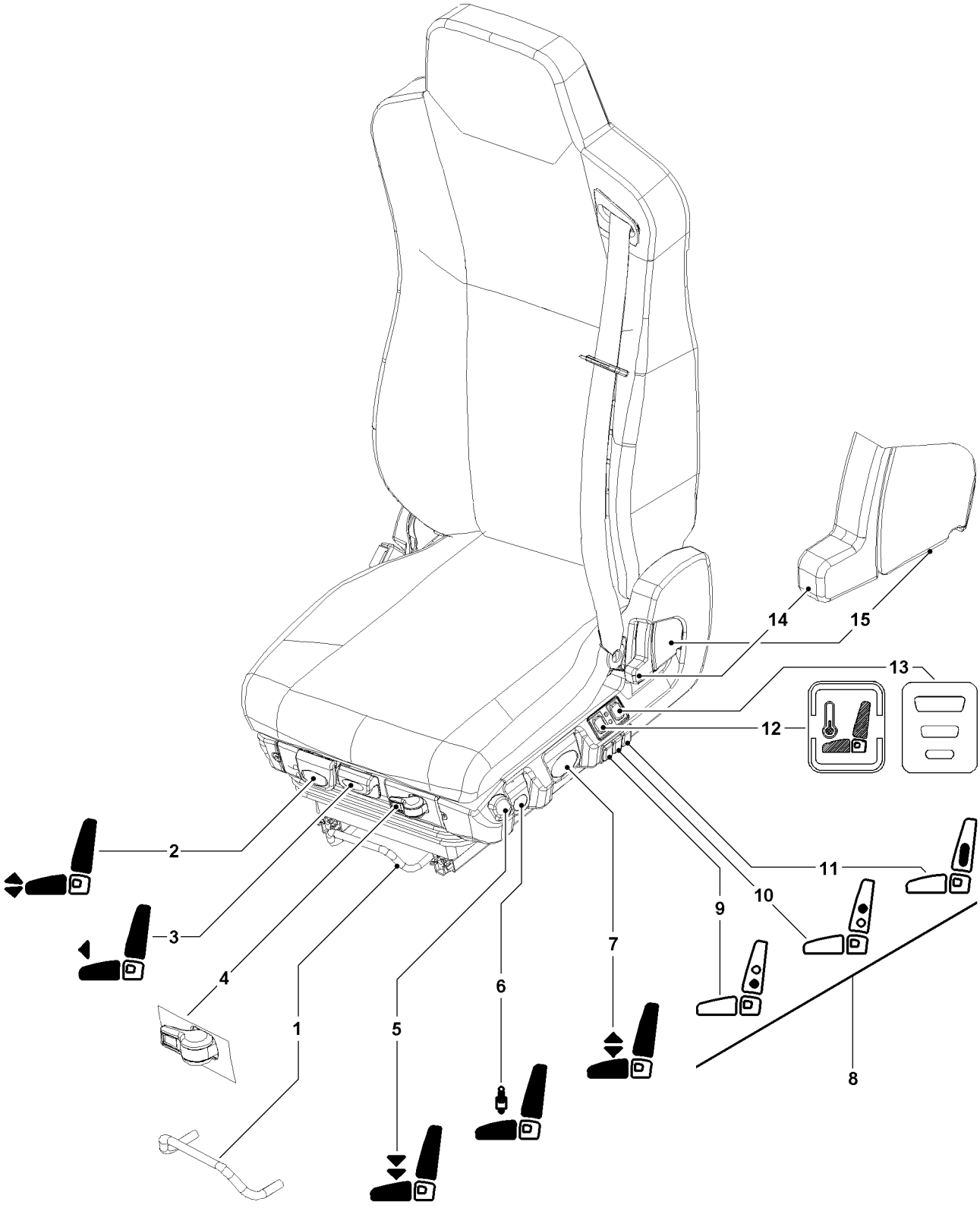

B103209

2 Work station - Driver's cab

WARNING
Danger of accidents due to incorrect adjustment of driver's seat, mirrors or steering wheel!
- ▶ Adjust the driver's seat, mirrors and steering wheel **before starting to travel**.
- ▶ Never adjust or readjust the driver's seat, the mirror or the steering wheel while driving.

2.1 Adjusting the driver's seat

The pneumatically suspended driver's seat can be adjusted to suit any body size.
If desired, the driver's seat can be equipped with IPS* (Integrated Pneumatic System). IPS* provides additional side lumbar support.

1 Horizontal adjustment	• Pull up the lever and position the seat. • Let the lever latch back in position.
2 Incline adjustment	• Pull up the lever and adjust the seat incline by inflating or releasing the front of the seat cushion.
3 Seat cushion adjustment	• Pull up the lever and slide the seat cushion forward / backward.
4 Horizontal suspension	• Lever to right: Horizontal suspension unlocked. • Lever to left: Horizontal suspension blocked.
5 Lowering	• Push the lever down: The seat is lowered. • Pull the lever up: The seat moves to the set height.
6 Damper adjustment	• Use the damper setting to optimally adjust the vibration characteristic of the seat to any road surface and driver. • Lever up: Minimum damper force. • Lever down: Maximum damper force.
7 Height adjustment	• Pull or push the lever to set the desired seat height.
8 Integrated pneumatic system (IPS)*	• The “Integrated Pneumatic System” (IPS) allows the optimum adjustment of the rear support contour to the body shape, see positions **9**, **10** and **11**.
9 Lower lumbar area support*	• Press button to inflate or vent the air chamber in the “lower lumbar area support”.
10 Upper lumbar area support*	• Press button to inflate or vent the air chamber in the “upper lumbar area support”.
11 Side support*	• Press button to inflate or vent the air chamber in the “side support”.

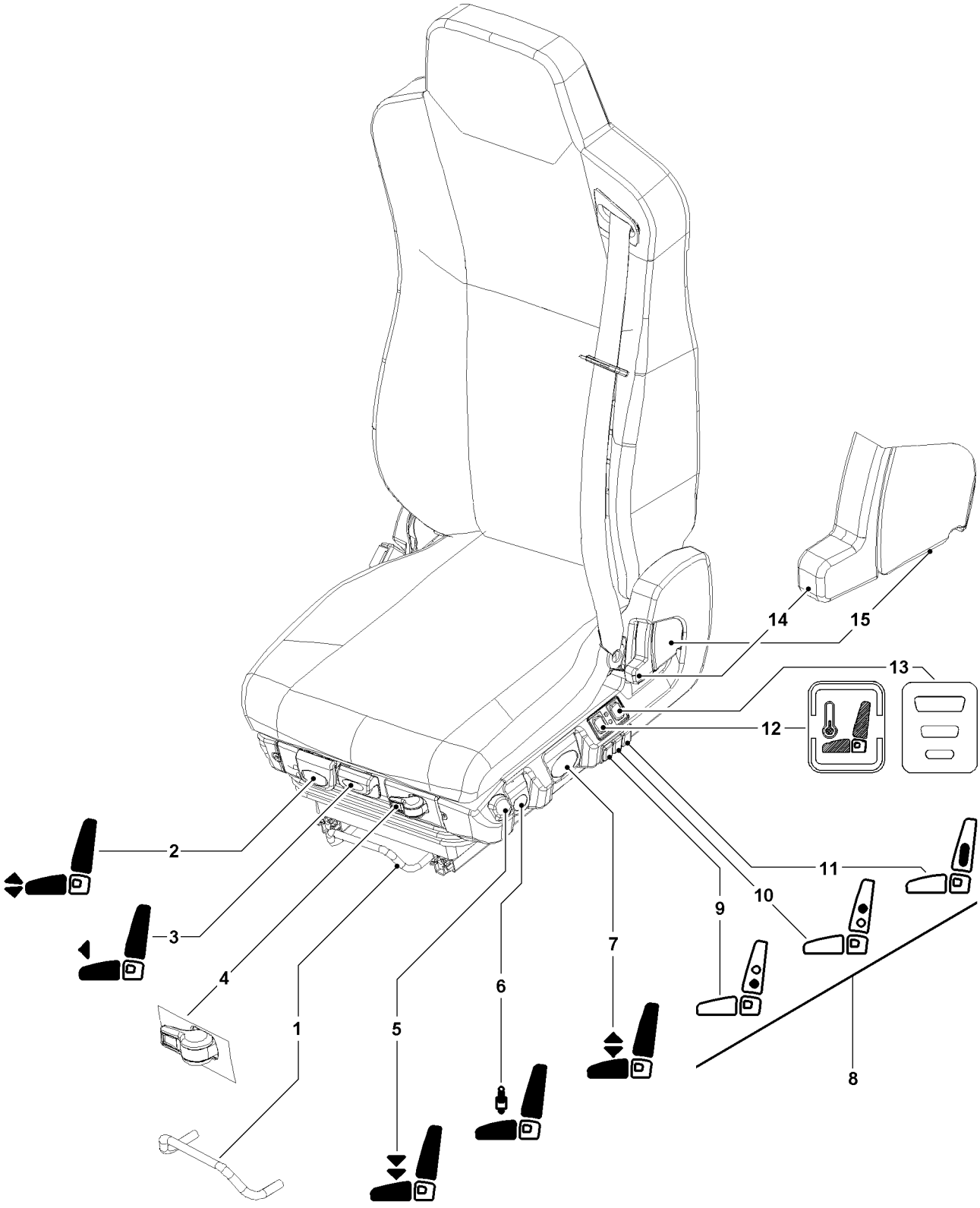

B103209

12	Seat heater / seat climate control*	• **Switch position up:** Seat cushion and arm rest heater is turned on. Thermostatically regulated seat cushion and armrest heater. • **Switch position neutral (center position):** No function, switch position “OFF”. • **Switch position down:** Seat cushion and arm rest climate control turned on.
13	Fan*	• Press the button to set the fan stage **Note:** The fan is only available in conjunction with the seat heater / climate control*.
14	Shoulder adjustment	• Pull up the lever and use your body weight to move the upper half of the backrest to the desired position.
15	Backrest adjustment	• Pull up the lever and use your body weight to move the backrest to the desired position.

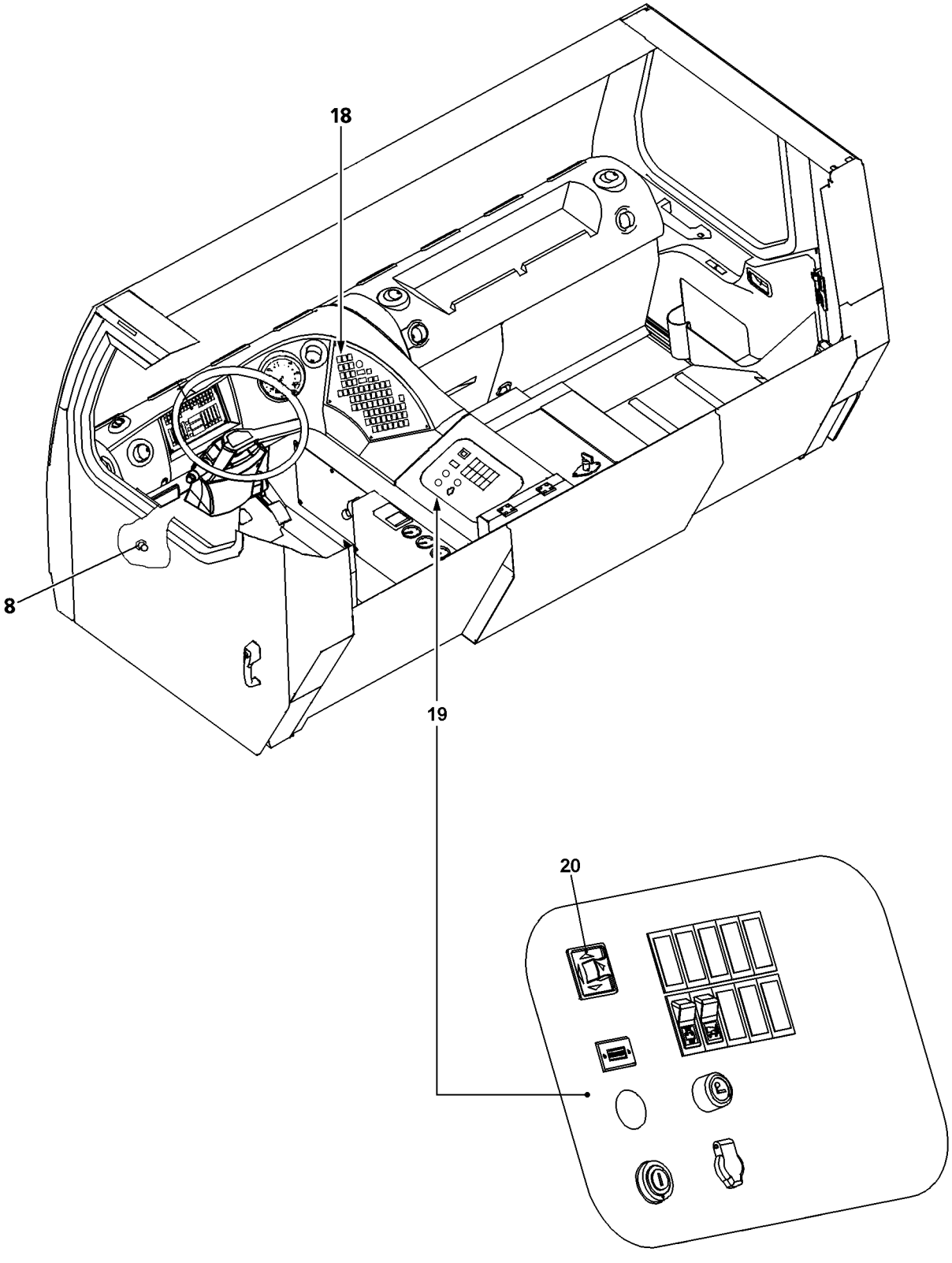

B194744

2.2 Adjusting the mirrors

Clean outside mirrors before starting to travel and adjust to suit the driver's field of view.
The switch **20** on the center bracket **19** can be used to switch between the left and right outside mirrors.

▶ Actuate the switch **20**.

Result:

– The mirror is adjusted accordingly.

2.3 Adjusting the steering wheel

The steering wheel is unlocked pneumatically.

▶ Press the button **8**.

Result:

– The steering wheel lock is released.
– The incline and height of the steering wheel can be adjusted accordingly.

2.4 Turning the heater / ventilation on

The driver's cab can be heated or ventilated to the desired temperature.
For a detailed description see Crane operating instructions, chapter 6.01.

▶ To adjust the heater or ventilation, use the keypad **18**.

2.5 Fastening the seatbelt

WARNING
Seatbelt not worn!
If the seatbelt is not worn while driving, then occupants can be killed or severely injured during an accident, driving maneuver or braking procedure!

▶ When starting to drive and for the duration of travel, all occupants must be belted.

▶ All occupants must wear the seat belt.

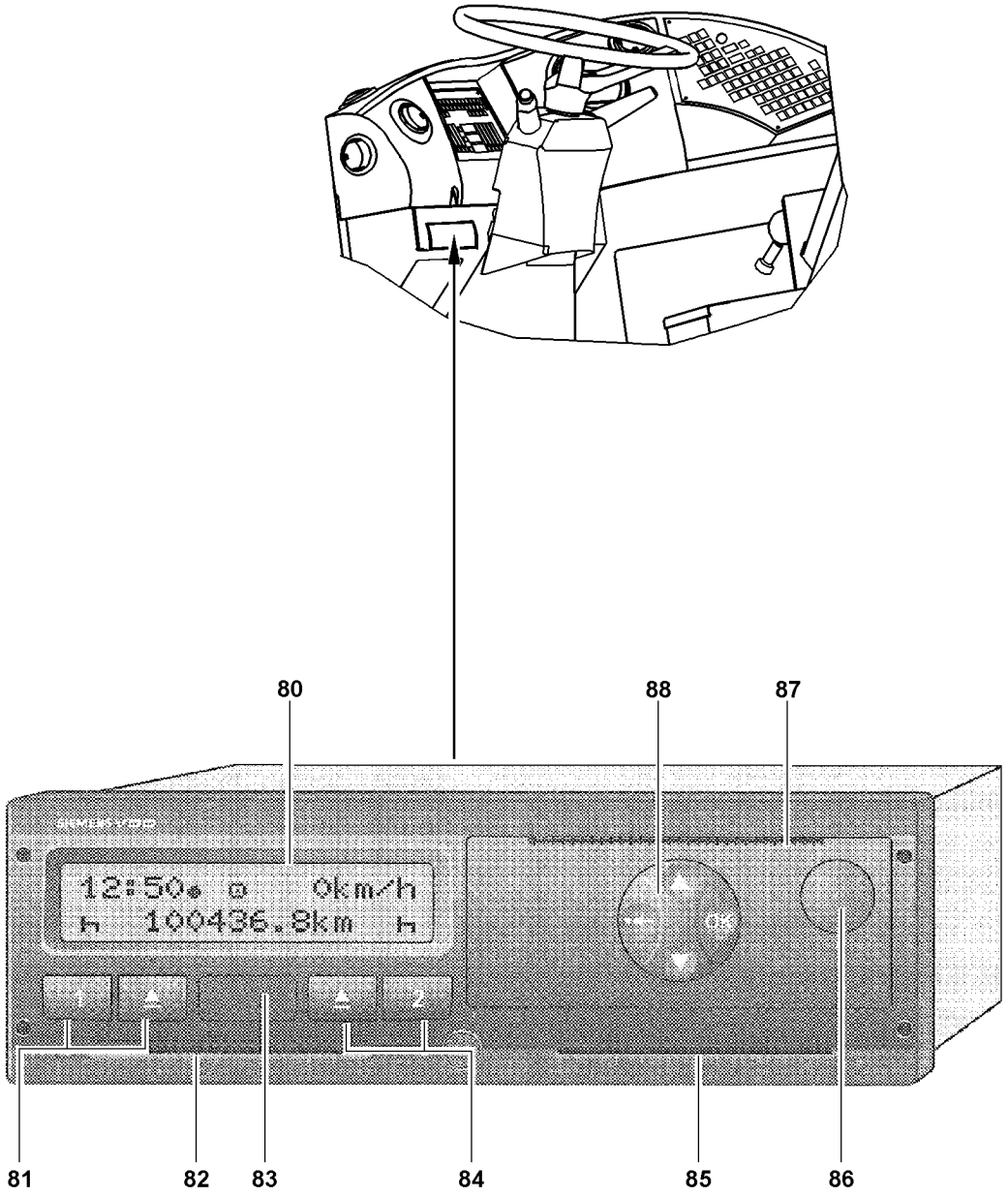

B104055

2.6 DTCO trip recorder*

Note
Data loss on DTCO trip recorder!
If the buffer battery is not replaced within two years by a service location of the manufacturer (Siemens-VDO), then a power failure can lead to a loss of all data! In this case, the trip recorder is defective and the maximum driving speed can be limited.
- ▶ Make sure to have the buffer battery replaced in time.
- ▶ For detailed description of the DTCO trip recorder, refer to the supplied manufacturer's operating instructions.

2.6.1 Initial calibration

Note
Calibration of the DTCO trip recorder
- ▶ After delivery of the crane, the calibration of the DTCO trip recorder should be carried out by one of the manufacturer's service locations (Siemens-VDO).

2.6.2 Company / driver card

The company / driver card(s) must be requested by the crane operator / driver at the respective authority in the member state.

Company card

The company card identifies a company.

Note
- ▶ After the initial calibration, the company must register with the company card on the DTCO trip recorder.
- ▶ The main memory data of the DTCO trip recorder must be downloaded and secured every 3 months with the company card in the specified intervals!

Driver card

The driver card is personal and in possession of the driver. The activities of the driver (steering and resting times) are saved on the driver card. Before starting to travel, the driver card must be inserted in the card slot **82** or card slot **85**.

Note
- ▶ The data of the driver card(s) must be secured in the specified intervals!

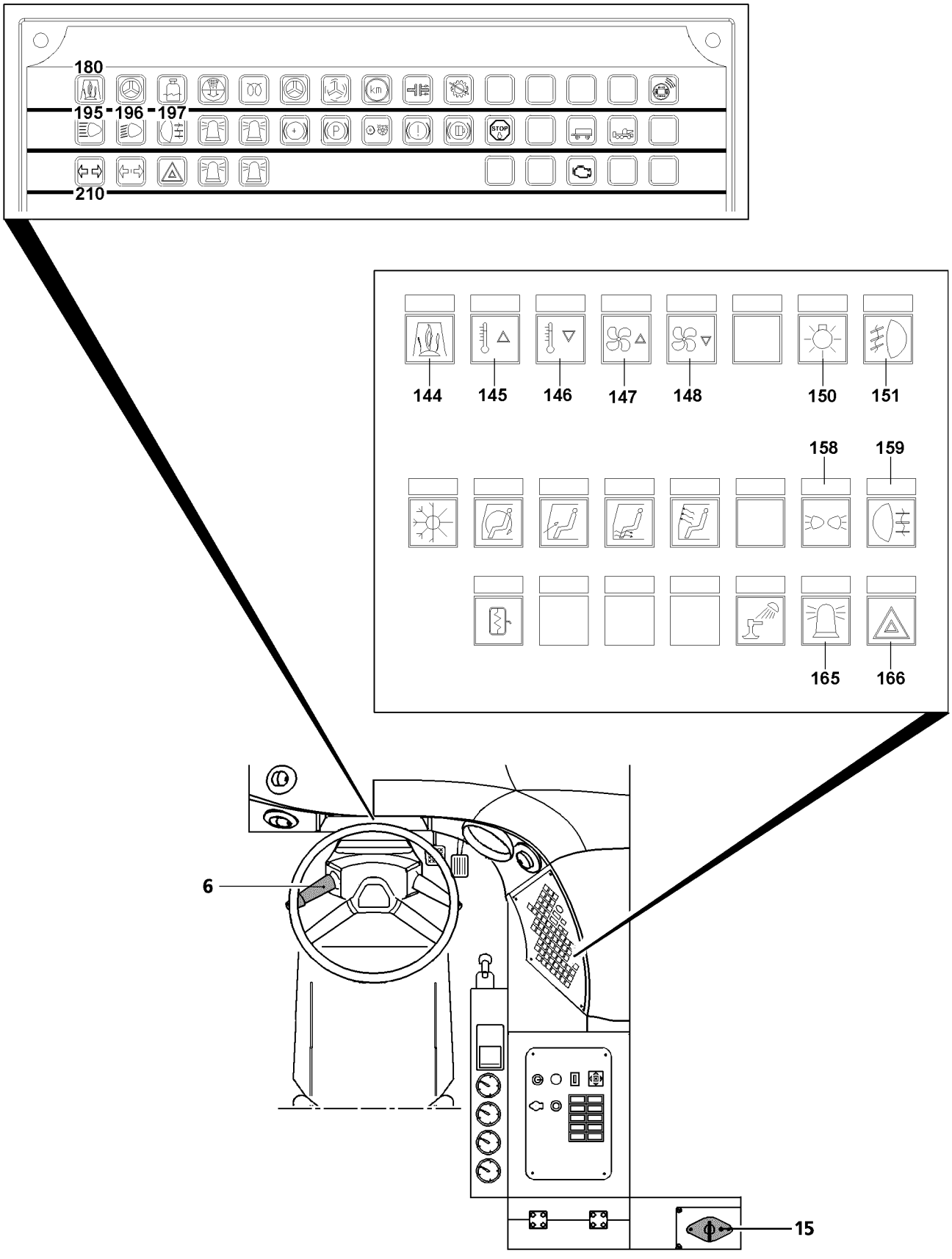
180
195
196
197
210
144
145
146
147
148
150
151
158
159
165
166
6
15

B114007

2.7 Checking the important operating instruments

DANGER
Danger of fatal injury due to defective operating instruments!
▶ Arrange to have any defective functions repaired by an expert before starting to travel.

Make sure that the battery master switch **15** is turned on. Otherwise the controls cannot be checked. For some checks, the ignition must also be turned on.

2.7.1 Checks with the ignition turned off

- ▶ Hazard warning system: Press button **166** with function control and check.
- ▶ Rotating beacons: Press button **165** with function control and check.
- ▶ Parking lights: Press button **158** with function control and check.

2.7.2 Check with ignition switched on (ignition switch at position “1”)

- ▶ Headlight: Press the button **150** with function control, check indicator light **195** and indicator light **196**.
- ▶ Fog lights* (only with head light or parking light turned on): Press button **151** with function control and check.
- ▶ Rear fog light* (only with head light or parking light turned on): Press button **159** with function control and check indicator light **197**.
- ▶ Heater: To increase temperature, press button **145** with function control and check.
- ▶ Heater: To reduce temperature, press button **146** with function control and check.
- ▶ Auxiliary heater*: Press button **144** with function control and check indicator light **180**.
- ▶ Fan: Press button **147** and button **148** with function control and check.
- ▶ Windshield wiper / washer system: Check steering column switch **6** with windshield washer system reservoir.
- ▶ Check the horn **6**.
- ▶ Turn signals: Operate steering column switch **6** with indicator light **210** and check.

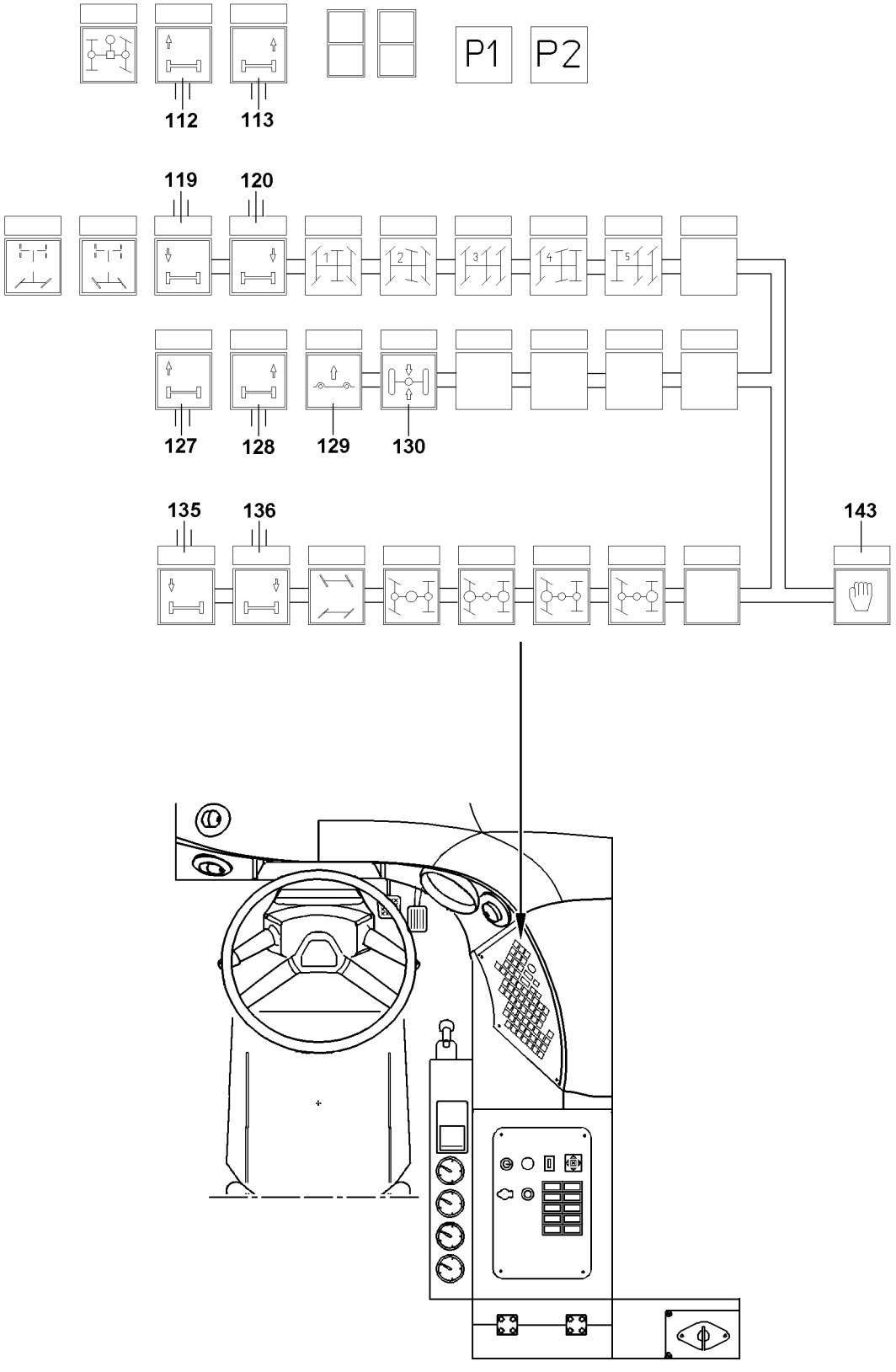

B107919

1 Crane vehicle axles suspended

The crane vehicle axles must be suspended in the following situations to equalize uneven ground conditions and level differences:
– For driving on public roads, see Crane operating instructions, chapter 3.04.
– For off road driving, see Crane operating instructions, chapter 3.04.

The side stability of the vehicle when cornering is ensured by the axle suspension.

1.1 Turning the axle suspension on

NOTICE
Risk of damage to axle suspension!
If the axle suspension is turned on without the wheels being in contact with the ground, then the axle suspension can be damaged if the axles drop down!
▶ Do not turn axle suspension off until all wheels are in contact with the ground!

DANGER
Risk of injury when operating the axle suspension!
▶ Ensure that no persons are present within the crane danger zone!

▶ Press button **143** and button **130**.

Result:
– Function control on button **130** does not light up.
– All axles are suspended in this position.
– The level of the crane can be regulated.

2 Crane vehicle axles blocked

The crane vehicle axles must be blocked in the following situations to avoid tipping the crane over or damage to the axle suspension:
– “For driving with the equipment in place”, see Crane operating instructions, chapter 15.01.
– For supporting the crane, see Crane operating instructions, chapter 3.05.

2.1 Blocking the axle suspension

DANGER
Risk of injury when operating the axle suspension!
▶ Ensure that no persons are present within the crane danger zone!

▶ Press button **143** and button **130**.

Result:
– The function indicator on the button **130** lights up.
– All axles are blocked in the current position.
– The level of the crane can be regulated manually.

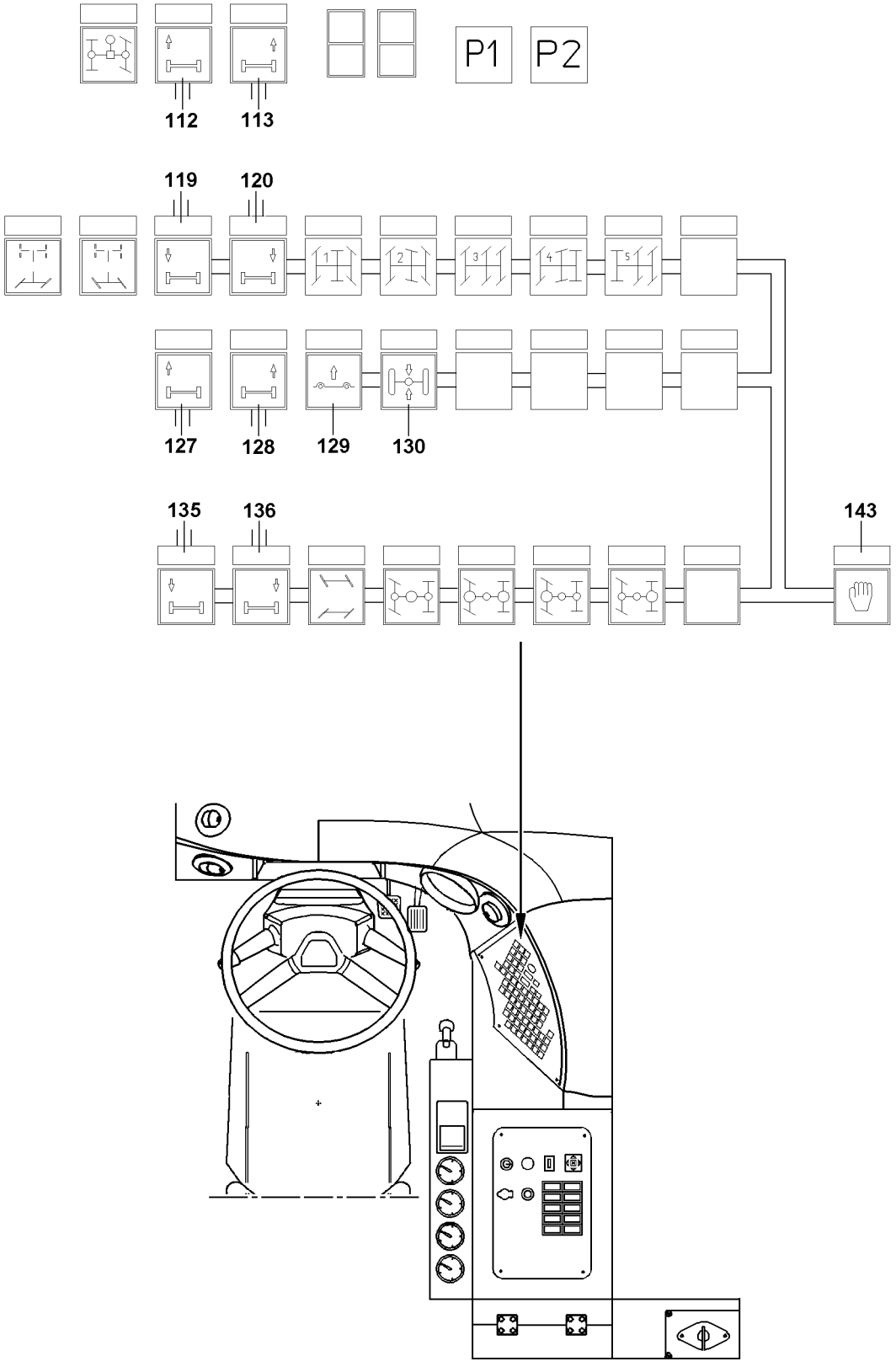

B107919

3 Level regulation

Note

▶ To improve the fording ability, the crane vehicle can be raised and to reduce the overall height, it can be lowered. On slopes, the crane vehicle can be inclinded. For the suspension path and the side incline angle, refer to the Crane operating instructions, chapter 1.03.

The level can be regulated manually or automatically.
Make sure that the following prerequisites are met:
– the vehicle is on a level surface,
– the crane engine is running,
– the transmission is in neutral position “N”.

NOTICE
Danger of damage!
▶ Do not level the vehicle, unless the vehicle is at a standstill!
▶ Carry out the level regulation on a level and load-bearing surface.
▶ Never raise or lower the vehicle fully when driving on an uneven road surface.

The function control on the button **129** must light up during the level regulation procedure.
– If the function control does not light up, stop the procedure immediately!
– Arrange to have the problem remedied by an expert.

When the level regulation procedure is complete, the function control must turn off when releasing the button **129**.

Note

▶ If the function control does not turn off when releasing the button **129**, have the problem remedied by an expert.

3.1 Level regulation from the driver's cab

3.1.1 Automatic level regulation

Button **143** and button **129** operate the automatic level regulation. The crane is automatically moved to a level position (driving height for road driving) by the level switches attached to the suspension cylinders.
Ensure that the following prerequisite is met:
– the axle suspension is turned on.

▶ Press button **143** and button **129** simultaneously until the function control on the button **129** blinks.

Result:
– The function control on the button **129** lights during automatic level regulation and blinks when the end position is reached.
– The function controls for manual level control (button **112**, button **113**, button **119**, button **120**, button **127**, button **128**, button **135** and button **136**) blink when the corresponding suspension cylinders have reached the level position for on road driving.

Note

▶ After releasing button **143** and button **129**, the function controls on button **112**, button **113**, button **119**, button **120**, button **127**, button **128**, button **135** and button **136** turns off.
▶ The function control on button **129** continues to light up and turns off when driving.

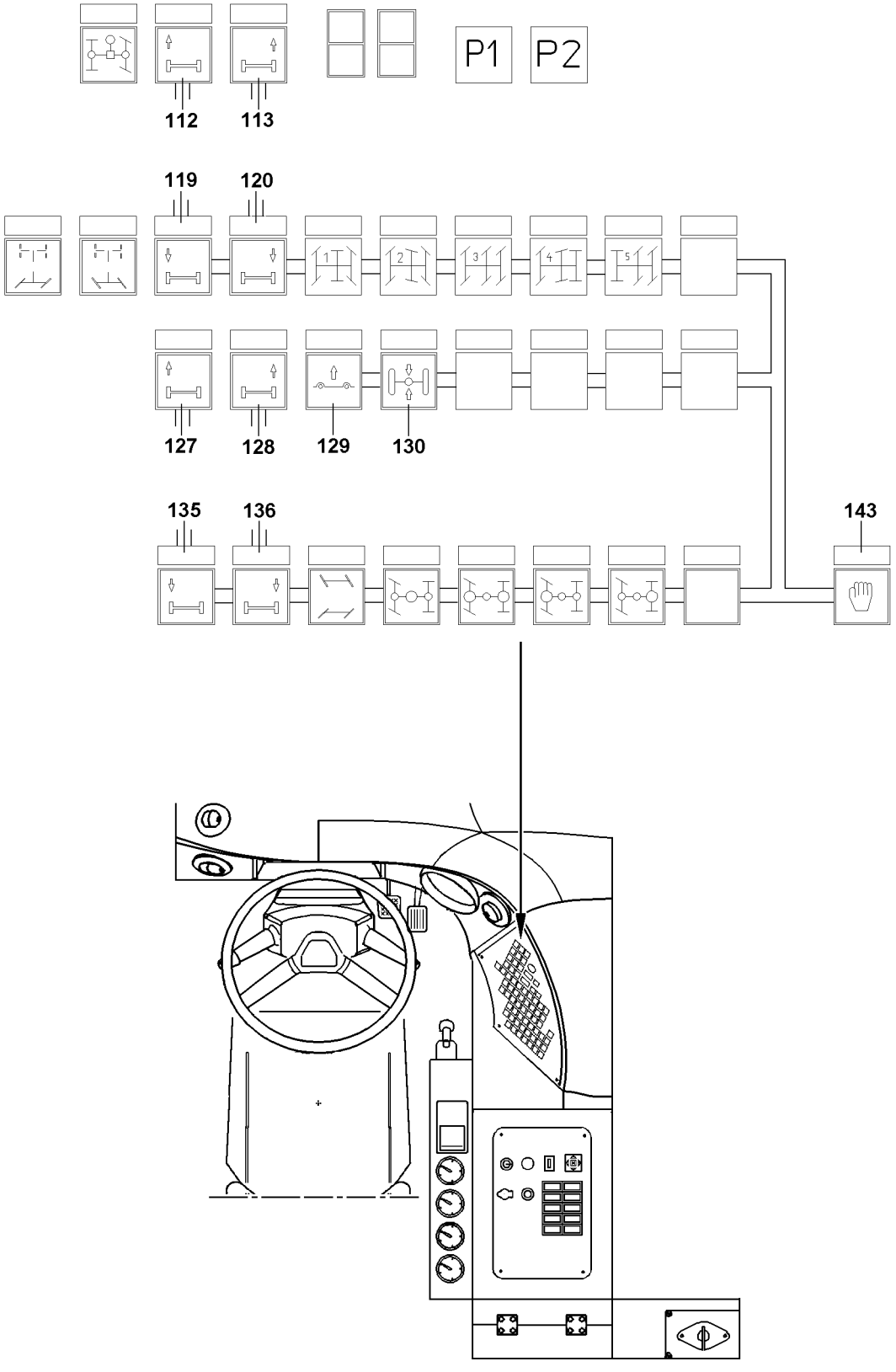

B107919

3.1.2 Manual level regulation

The level position is adjusted manually by pressing the 2-hand button **143** for manual level regulation. The suspension cylinders are filled or emptied.

WARNING
Risk of accident!
Manual level regulation in public traffic is only permitted in order to adapt the crane to special situations, such as lowering the crane to reduce the height in order to drive under a bridge.
▶ Carry out the level regulation only in special situations and when the vehicle is at a standstill!

Note
▶ The crane vehicle can only be levelled manually when the axle suspension is turned on.

Raising the vehicle

▶ Press and hold down button **143** and then press button **112**.
Result:
– The left front vehicle level is raised.

▶ Press and hold down button **143** and then press button **113**.
Result:
– The right front vehicle level is raised.

▶ Press and hold down button **143** and then press button **127**.
Result:
– The left rear vehicle level is raised.

▶ Press and hold down button **143** and then press button **128**.
Result:
– The right rear vehicle level is raised.

Raising the entire vehicle

▶ Press and hold down button **143** and then press button **112**, button **113**, button **127**, button **128**.
Result:
– The vehicle level is fully raised.

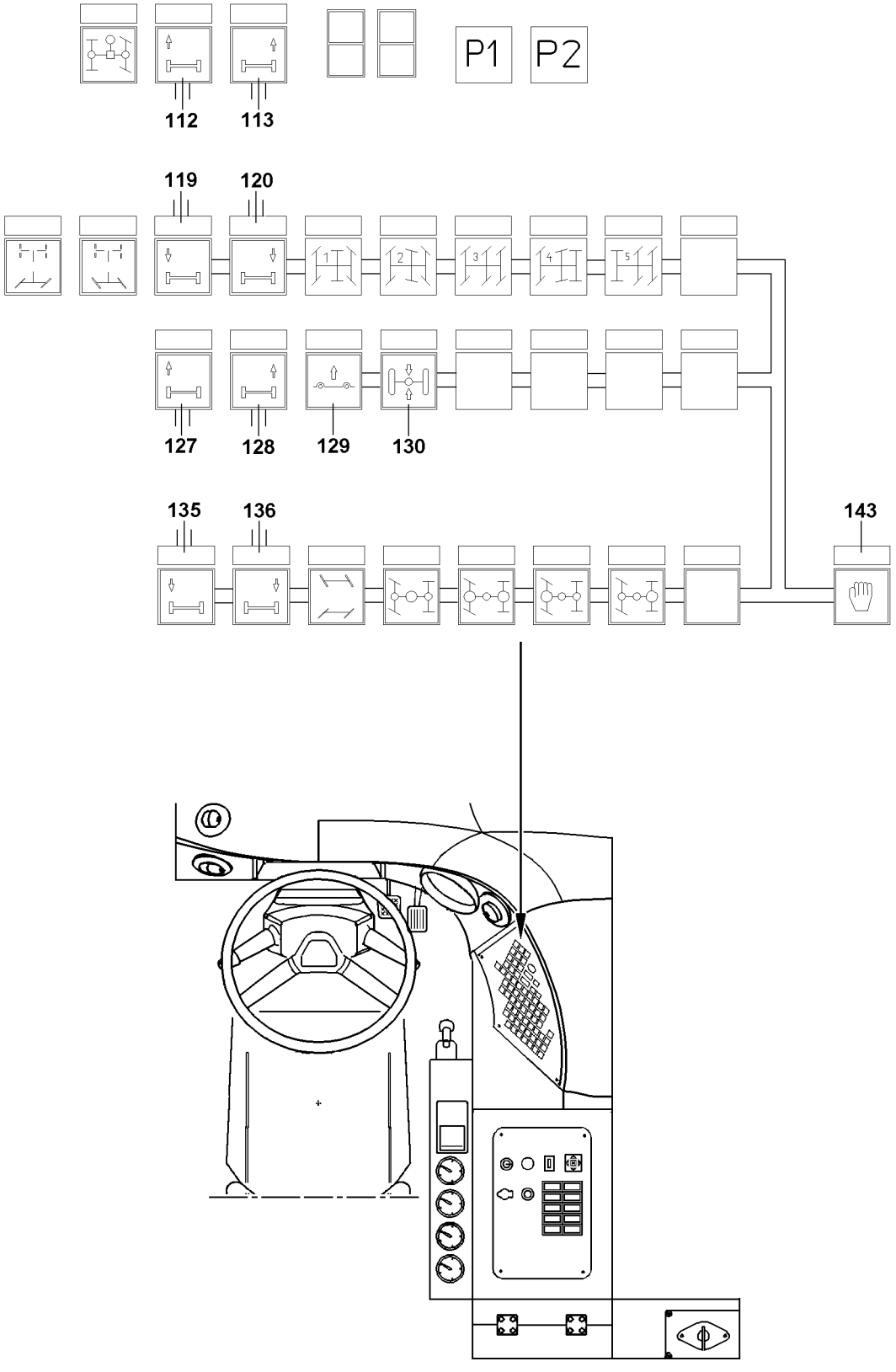

B107919

Lowering the vehicle

▶ Press and hold down button **143** and then press button **119**.

Result:

– The left front vehicle level is lowered.

▶ Press and hold down button **143** and then press button **120**.

Result:

– The right front vehicle level is lowered.

▶ Press and hold down button **143** and then press button **135**.

Result:

– The left rear vehicle level is lowered.

▶ Press and hold down button **143** and then press button **136**.

Result:

– The right rear vehicle level is lowered.

Lowering the entire vehicle

▶ Press and hold down button **143** and then press button **119**, button **120**, button **135**, button **136**.

Result:

– The vehicle level is fully lowered.

1

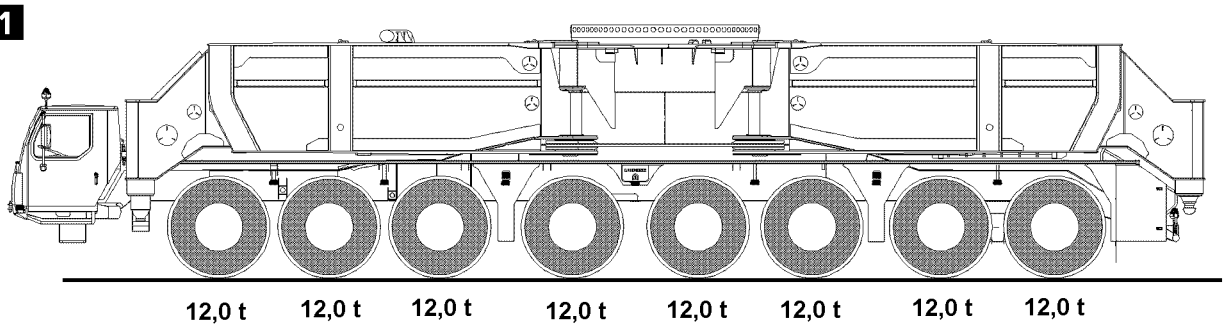
12,0 t
12,0 t
12,0 t
12,0 t
12,0 t
12,0 t
12,0 t
12,0 t

2

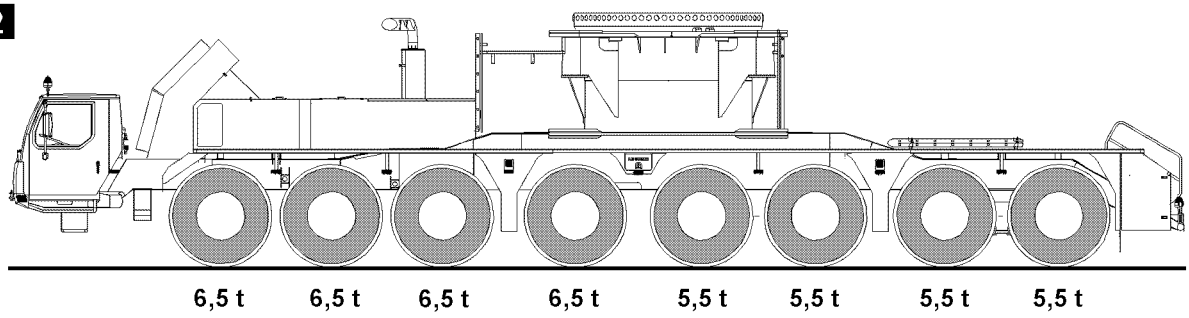
6,5 t
6,5 t
6,5 t
6,5 t
5,5 t
5,5 t
5,5 t
5,5 t

B196118

1 Driving conditions of the crane

Before the crane may be driven on public roads, the two sliding beams must be extended on the rear by 300 mm and secured with two retaining pins, see Crane operating instructions, chapter 3.02.

Note

- ▶ The pins for Quick connection may not remain on the vehicle during “On-road driving”, otherwise the permissible total weight will be exceeded!
- ▶ The boxes on the pot and on the folding beams serve only as intermediate storage during assembly and disassembly work!

Note

Driving on public highways!

- ▶ Observe **national regulations** at all times!

1.1 Axle loads up to 12 t

Before the crane can be driven on public highways and motorways, in order to comply with the axle load limit of 12 t per axle, the travel condition must be established as shown in the illustration and the chart.

Make sure that the following prerequisites are met:

– Both sliding beams on the rear are extended 300 mm and pinned.
– The axle suspension system has been set to “Suspended”.
– The vehicle is at the level setting for on-road driving.

1.1.1 Driving condition 1, illustration 1

Set up condition								
With:	4 folding beams							
Without:	Support plates							
Total weight	**Axle load**							
	1	2	3	4	5	6	7	8
96.0 t	12 t	12 t	12 t	12 t	12 t	12 t	12 t	12 t

1

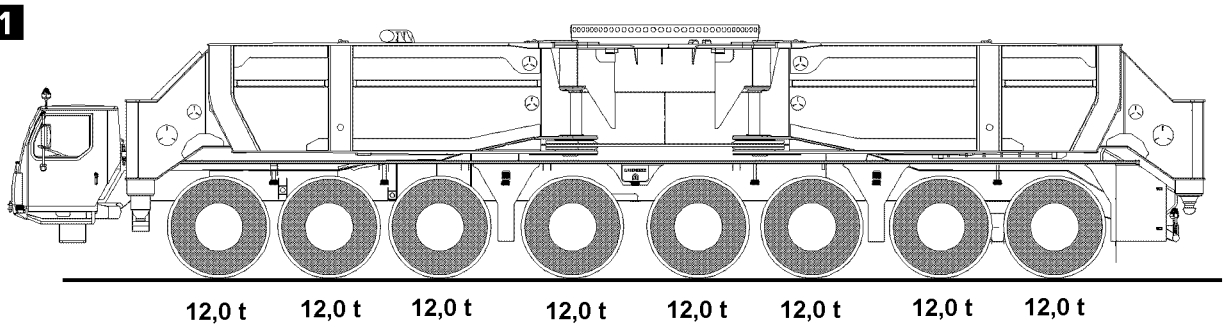
12,0 t
12,0 t
12,0 t
12,0 t
12,0 t
12,0 t
12,0 t
12,0 t

2

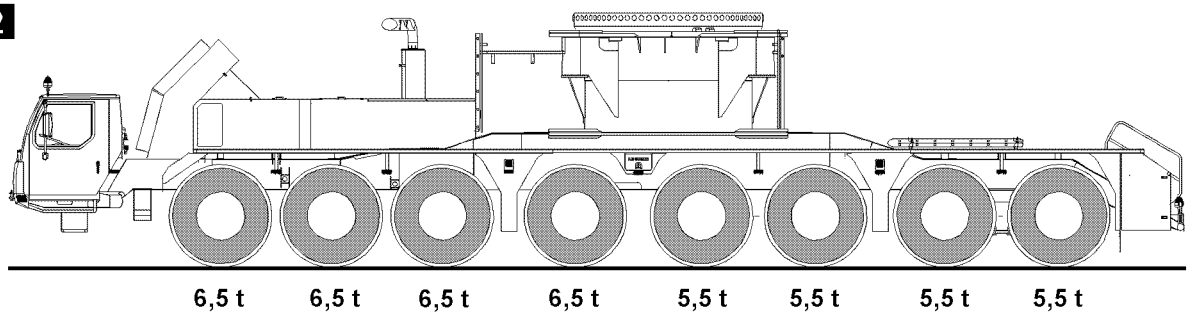
6,5 t
6,5 t
6,5 t
6,5 t
5,5 t
5,5 t
5,5 t
5,5 t

B196118

1.1.2 Driving condition 2, illustration 2

Set up condition								
Without:	4 folding beams							
Total weight	**Axle load**							
	1	2	3	4	5	6	7	8
48.0 t	6.5 t	6.5 t	6.5 t	6.5 t	5.5 t	5.5 t	5.5 t	5.5 t

1.2 Axle loads above 12 t

DANGER
Increased danger of accidents!
The braking distance is longer due to the higher overall weight!
Wear on brake linings is greater and there is an increased danger of brake overheating!
The steering system, service brake, parking brake and retarder no longer meet the regulations!
The service life of all components affected by the increased axle load such as: Brakes, tires, wheel rims, axles as well as the entire drive, suspension and steering components are reduced!
▶ Check the affected parts more frequently!

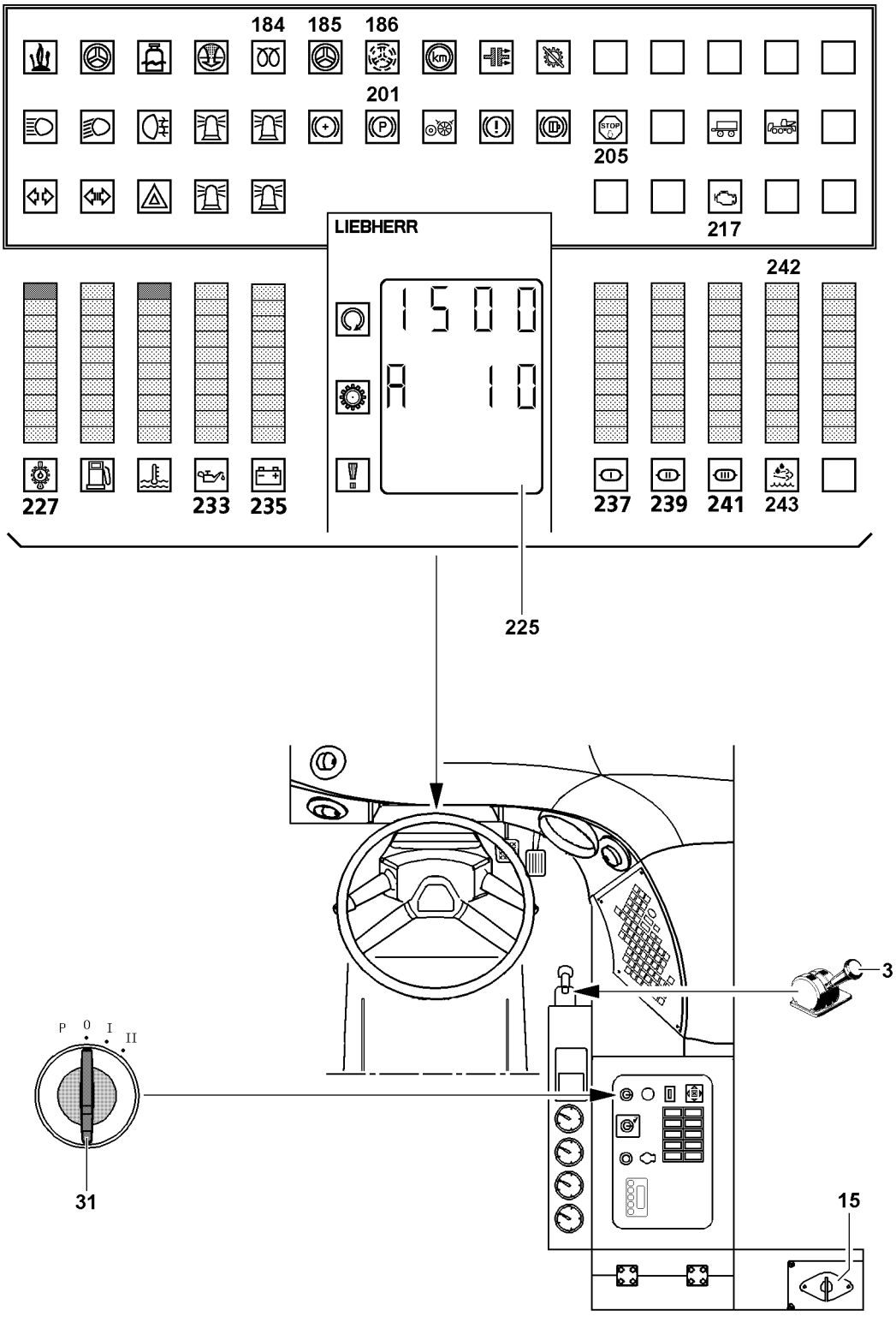
184
185
186
201
205
217
242
LIEBHERR
1500
A 10
227
233
235
237
239
241
243
225
3
P 0 I II
31
15

B116604

2 Starting and stopping the engine

The engine can only be subjected to a full load after the operating temperature has been reached.

2.1 Starting the engine

Make sure that the following prerequisites are met:
- The battery master switch **15** is turned on.
- The parking brake **3** is applied.
- The transmission is in neutral position “N”.

▶ Turn the ignition switch **31** to position “I”.

Result:
- The indicator light **184** blinks.
- The charge indicator light **235** lights up.
- The engine is ready to start.

▶ Turn the ignition switch **31** to position “II” and start the engine.

Troubleshooting

The engine does not start after a maximum of 10 seconds?

▶ Wait for 1 minute. The starter can be operated three times for 10 seconds per attempt with a one minute break in between.

Note

Functionality of the battery in the cold season.

The starting capacity of the battery is considerably reduced in cold temperatures: For example, at a temperature of -10 °C, it has only 66 % of its normal capacity.

▶ Once the engine has been turned off, store the batteries in a heated room, if possible.

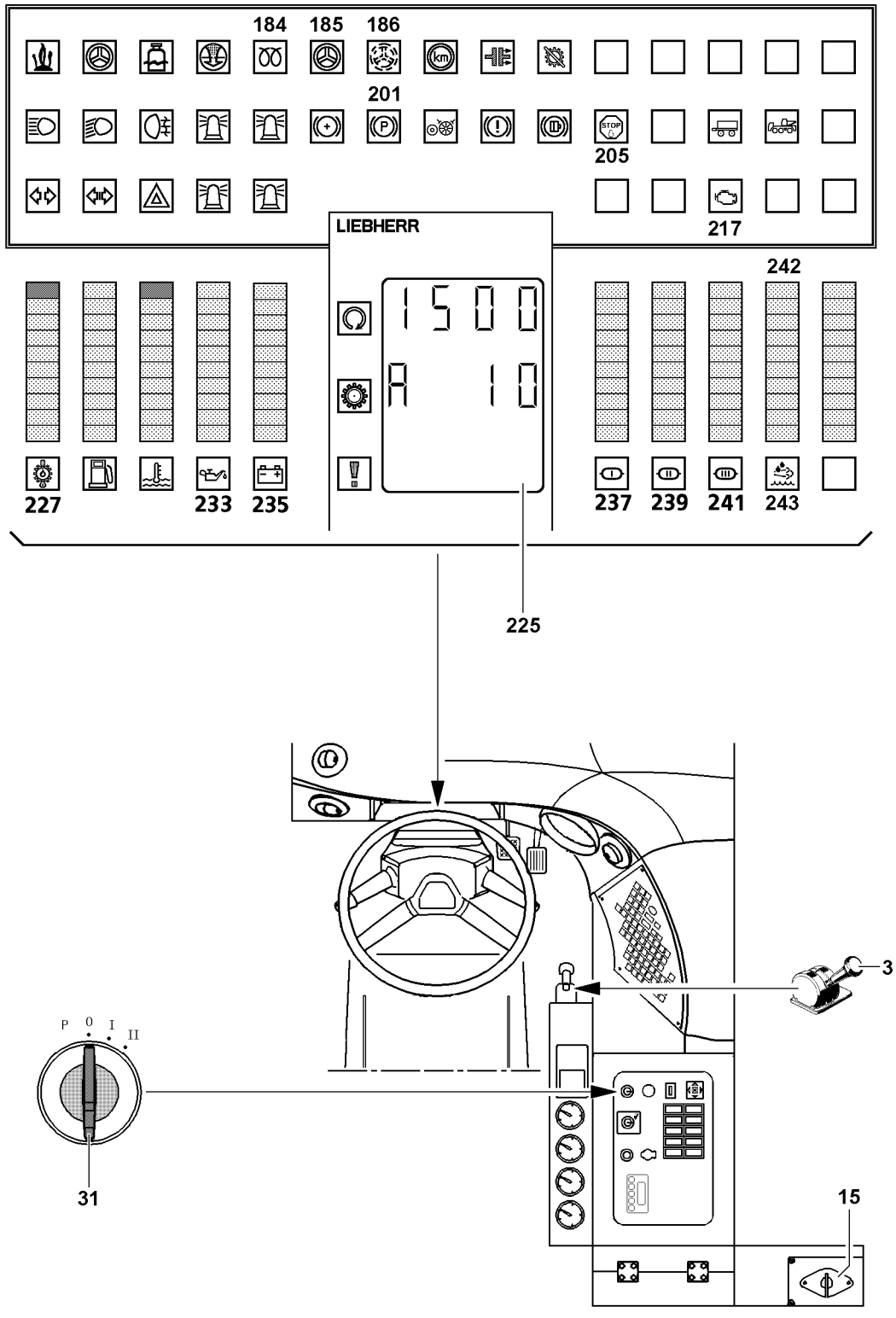
184
185
186
201
205
217
242
LIEBHERR
1500
A 10
227
233
235
237
239
241
243
225
P
0
I
II
31
3
15

B116604

2.2 With flame start system at coolant temperature of less than 20 °C

To improve the cold start process and the warm-up phase, the engine is equipped with a flame start system. The flame start system turns on automatically at a coolant temperatures **below** 20 °C.
The flame start system turns off automatically if:

– The engine is not started when it is ready.
– The engine is started while the indicator light **184** lights up.
– The coolant temperature reaches 20 °C while the engine is running.

Note
Functionality of the battery in the cold season!
The starting capacity of the battery is considerably reduced in cold temperatures: For example, at a temperature of -10 °C, it has only 66 % of its normal capacity!

▶ Once the engine has been turned off, store batteries in a heated room, if possible!

▶ Turn the ignition switch **31** to position “I”.

Result:

– The indicator light **184** lights up first and then starts to blink after a short time.
– The charge indicator light **235** lights up.
– The engine is ready to start.

▶ Turn the ignition switch **31** to position “II” and start the engine.

Troubleshooting
Is the indicator light **184** blinking **quickly**?
The flame start control unit has identified a problem on the flame start system. An interruption in the flame glow plug heating coil, missing supply voltage on terminal 30 or a defective fuse of the flame start control unit will be identified as a problem.

▶ Remedy the problem.

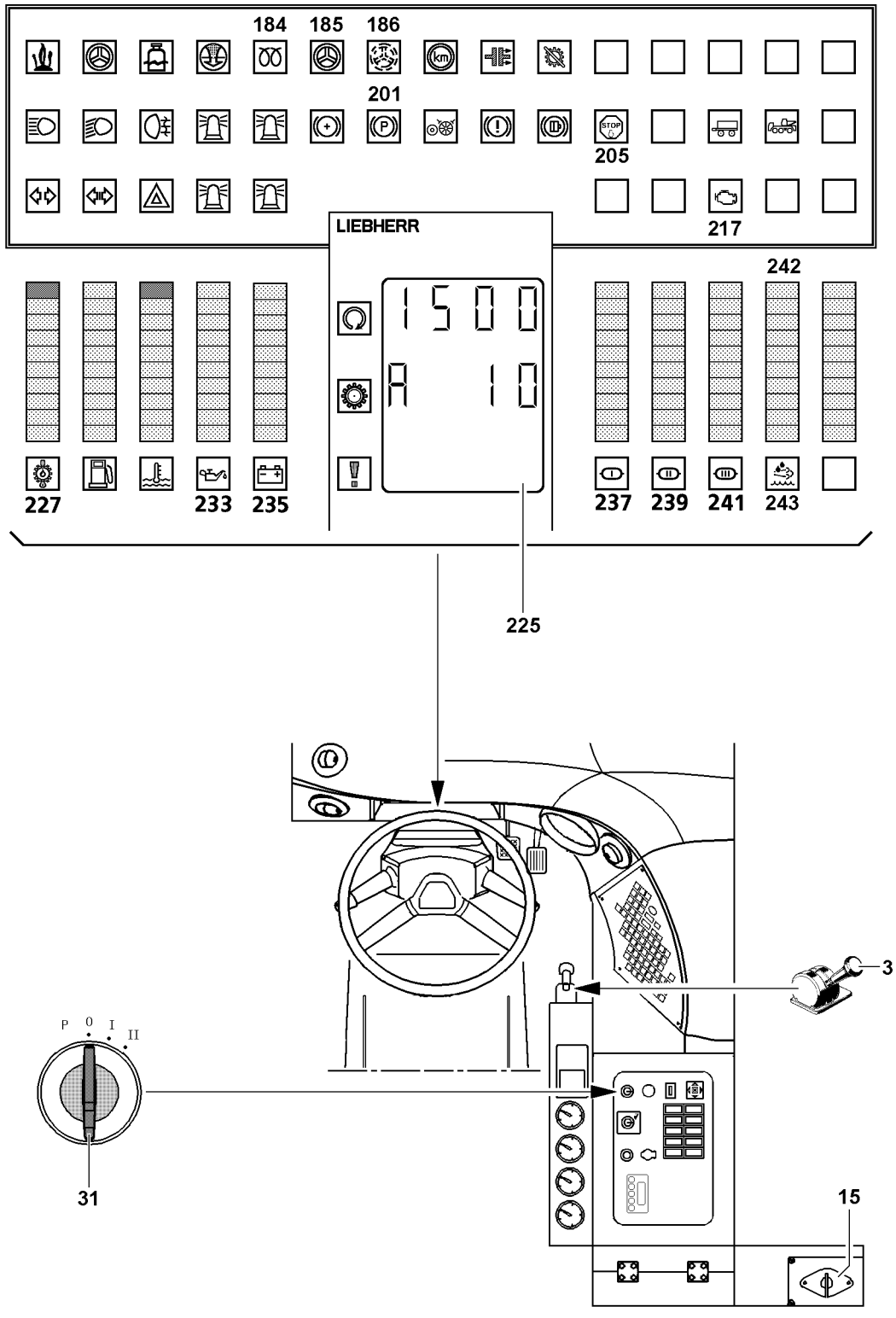
184
185
186
201
205
217
242
LIEBHERR
1500
A 10
227
233
235
237
239
241
243
225
3
P 0 I II
31
15

B116604

2.3 Checking the instruments after starting the engine

The following indicator lights must turn off when the engine is running:

▶ Check the indicator light for the engine oil pressure **233**.

Troubleshooting

Does the engine oil pressure indicator light **233** still light up or is no oil pressure displayed?
There is a danger of engine damage.

▶ Turn the engine off immediately!

▶ Check the preheat indicator light **184**.

▶ Check the charge indicator light **235**.

▶ Check the indicator light for the gear oil temperature **227**.

Note

▶ The warning light **185** turns off after engine start!

▶ Check the warning light **185**.

Note

▶ The warning light **186** turns off from a certain driving speed of the crane.

▶ Check the warning light **186**.

▶ Check the indicator light for air pressure circuit I **237**.

▶ Check the indicator light for air pressure circuit II **239**.

▶ Check the indicator light for air pressure circuit III **241**.

▶ Check the indicator light severe engine problem **205**.

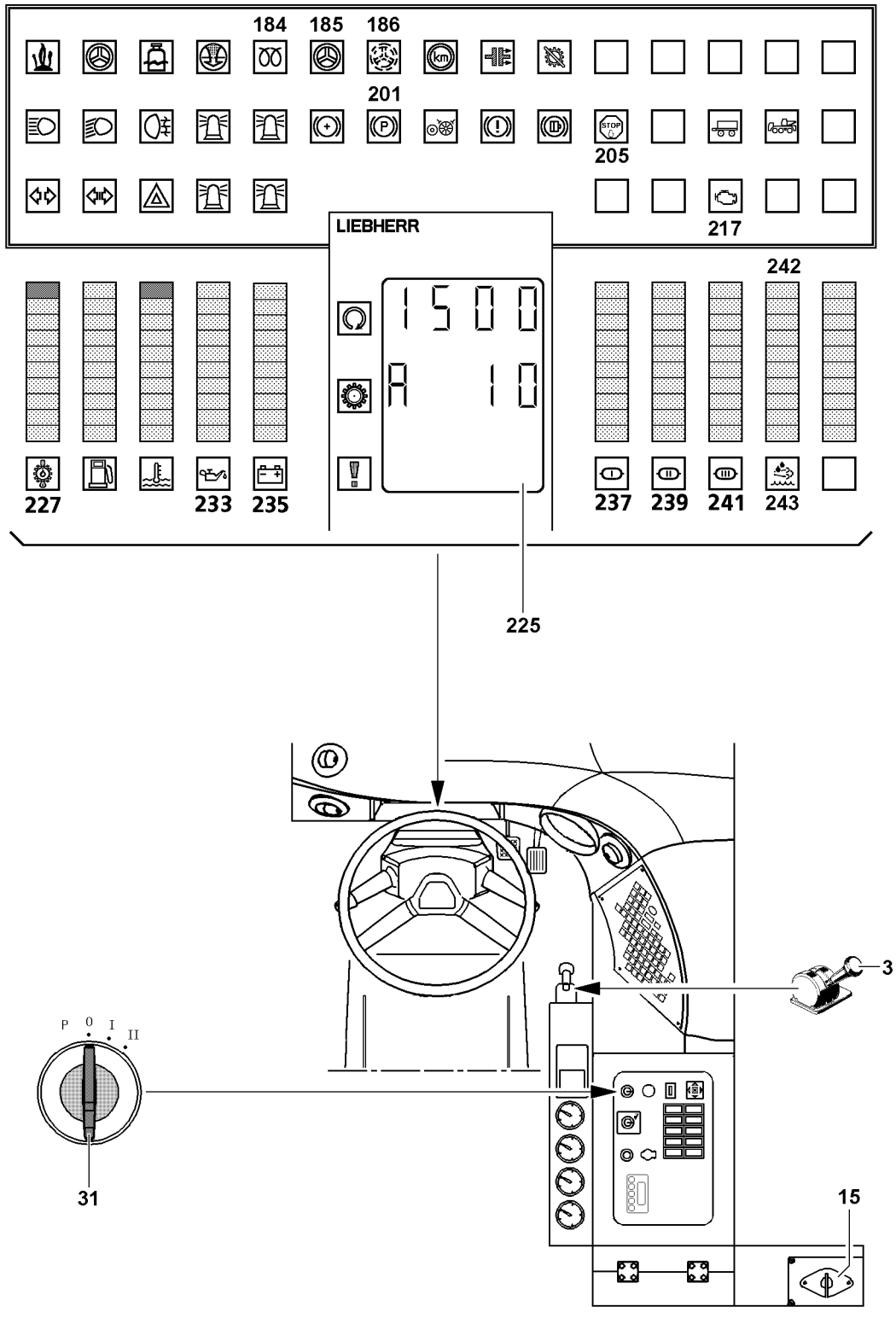
184
185
186
201
205
217
242
LIEBHERR
1500
A 10
227
233
235
237
239
241
243
225
3
P
0
I
II
31
15

B116604

▶

Troubleshooting

The indicator light severe engine problem **205** lights up?

▶ Turn the engine off immediately and remedy the problem!

Note

▶ Check the indicator lights urea* **243** or indicator light exhaust aftertreatment* **217** , only for Diesel engines with exhaust aftertreatment system SCR (Selective Catalytic Reduction).

▶ Check the indicator light urea* **243**.

Troubleshooting

The indicator light urea* **243** lights up yellow?

Urea is getting low.

▶ Refill Urea.

Troubleshooting

indicator light urea* **243** blinks yellow?

Urea almost empty.

▶ Refill urea immediately.

▶ Check the indicator light exhaust aftertreatment* **217**.

Troubleshooting

The indicator light exhaust aftertreatment* **217** lights up **or** blinks yellow?

Advance warning exhaust aftertreatment **or** exhaust aftertreatment no longer ensured.

▶ Check exhaust aftertreatment!

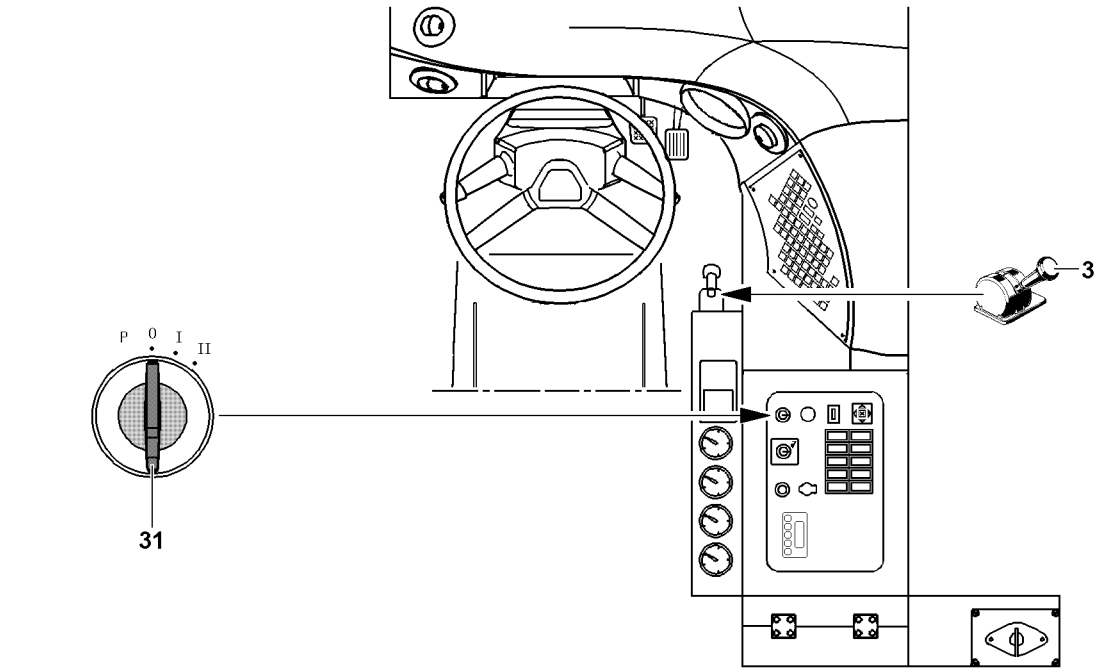

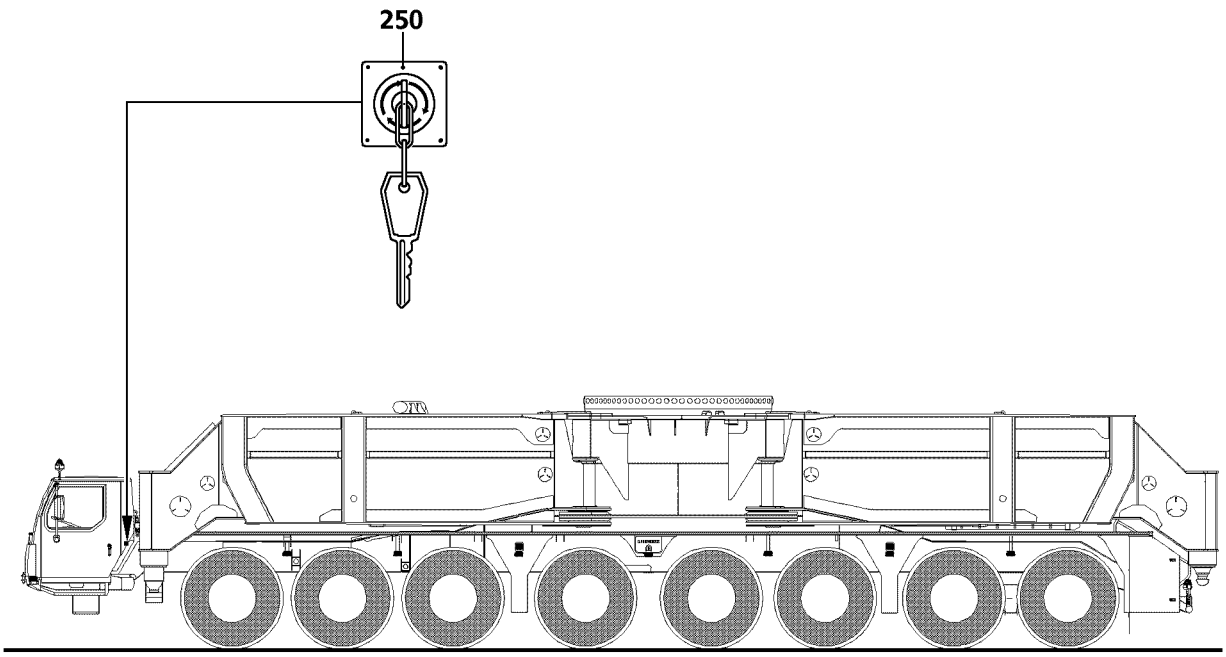

B116605

2.4 Turning the engine off

NOTICE
Danger of damaging the engine!
In the event of dropping or sharply fluctuating engine oil pressure, reduced performance and speed without a throttle change, the appearance of large amounts of smoke, increasing coolant temperature or suddenly occurring abnormal engine noises the engine can be severely damaged!
▶ Turn the engine off immediately!

See also section “Stopping the vehicle (Parking)”.
Make sure that the following prerequisites are met:
– The parking brake **3** is applied.
– The transmission is in neutral position “N”.

2.4.1 Turning the engine off in the driver's cab

▶ Turn the ignition switch **31** back to the stop.
▶ Pull the ignition switch **31** off and store it.

2.4.2 Turning off the engine in case of danger

In the event of danger, the engine can be turned off immediately by pressing the emergency stop switch* **250**.

WARNING
Operation of the emergency stop switch* **250**!
▶ Only use the emergency stop switch* **250** in the event of a clear emergency.
▶ Use of the emergency stop switch* **250** for normal operation is not permitted.

▶ Press the emergency stop switch* **250**.
Result:
– The engine is turned off immediately.

▶ To turn the emergency stop switch* **250** off again after activation:
Unlock the emergency stop switch* **250** with the corresponding key.

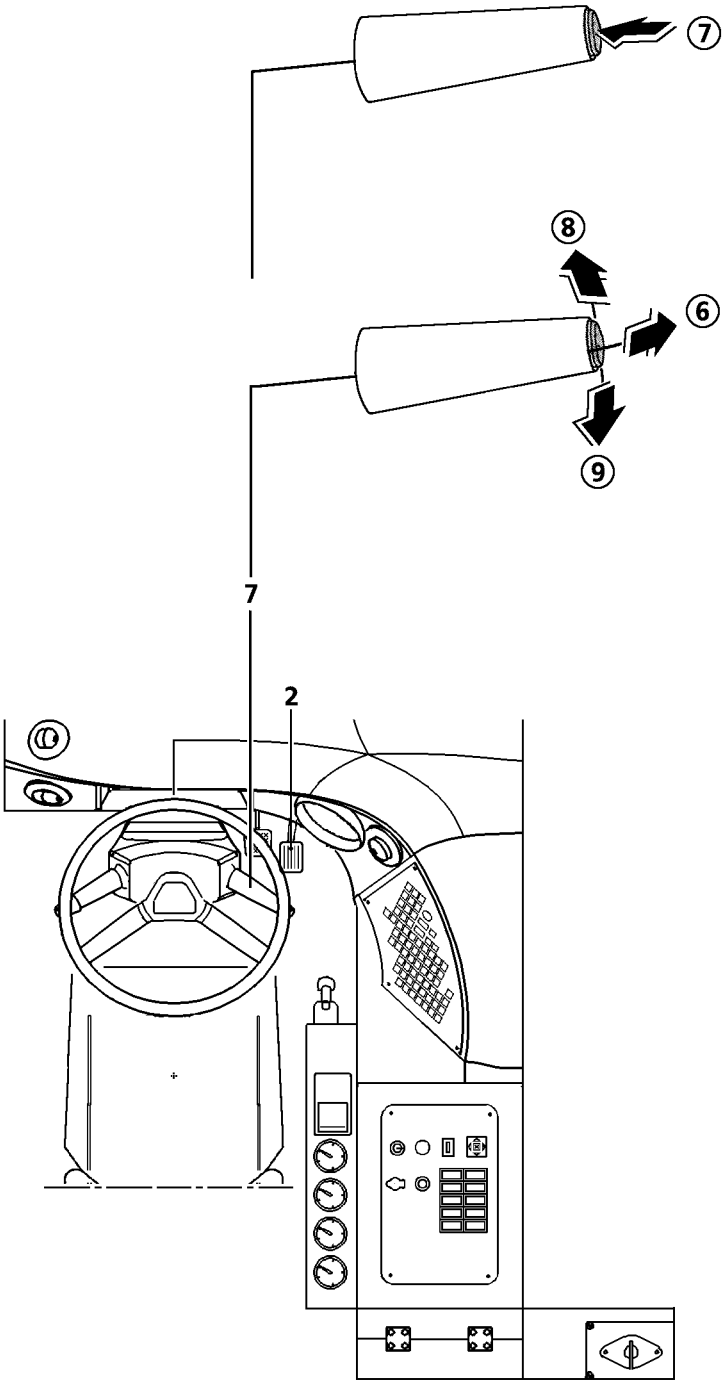

B108369

3 Driving the crane vehicle

3.1 Changing the idling speed

The idling speed increase will be automatically reduced after preselecting the travel range switch “D” or “R”.

3.1.1 Changing the idling speed with the steering column switch

If required, the idling speed can be changed with the steering column switch **7** when the vehicle is at a standstill and the transmission is in neutral position “N”.
After the engine is started, the idling speed will be automatically regulated, depending on the coolant temperature.

▶ Hold the steering column switch **7** in position **8**.

Result:

– The idling speed increases cyclically by approx. 50 rpm.

▶ Tap the steering column switch **7** in position **8**.

Result:

– The idling speed increases by approx. 50 rpm.

▶ Release the steering column switch **7**.

Result:

– The engine runs at the attained rpm.

▶ Hold the steering column switch **7** in position **9**.

Result:

– The idling speed reduces cyclically by approx. 50 rpm.

▶ Tap the steering column switch **7** in position **9**.

Result:

– The idling speed reduces by approx. 50 rpm.

▶ Release the steering column switch **7**.

Result:

– The engine runs at the attained rpm.

▶ Tap the steering column switch **7** in position **6**.

Result:

– The idling speed increase is turned off.

3.1.2 Changing the idling speed with engine regulation

▶ Set the idling speed with the engine regulation **2**.

▶ Press button **7**.

Result:

– Engine runs at the set rpm.

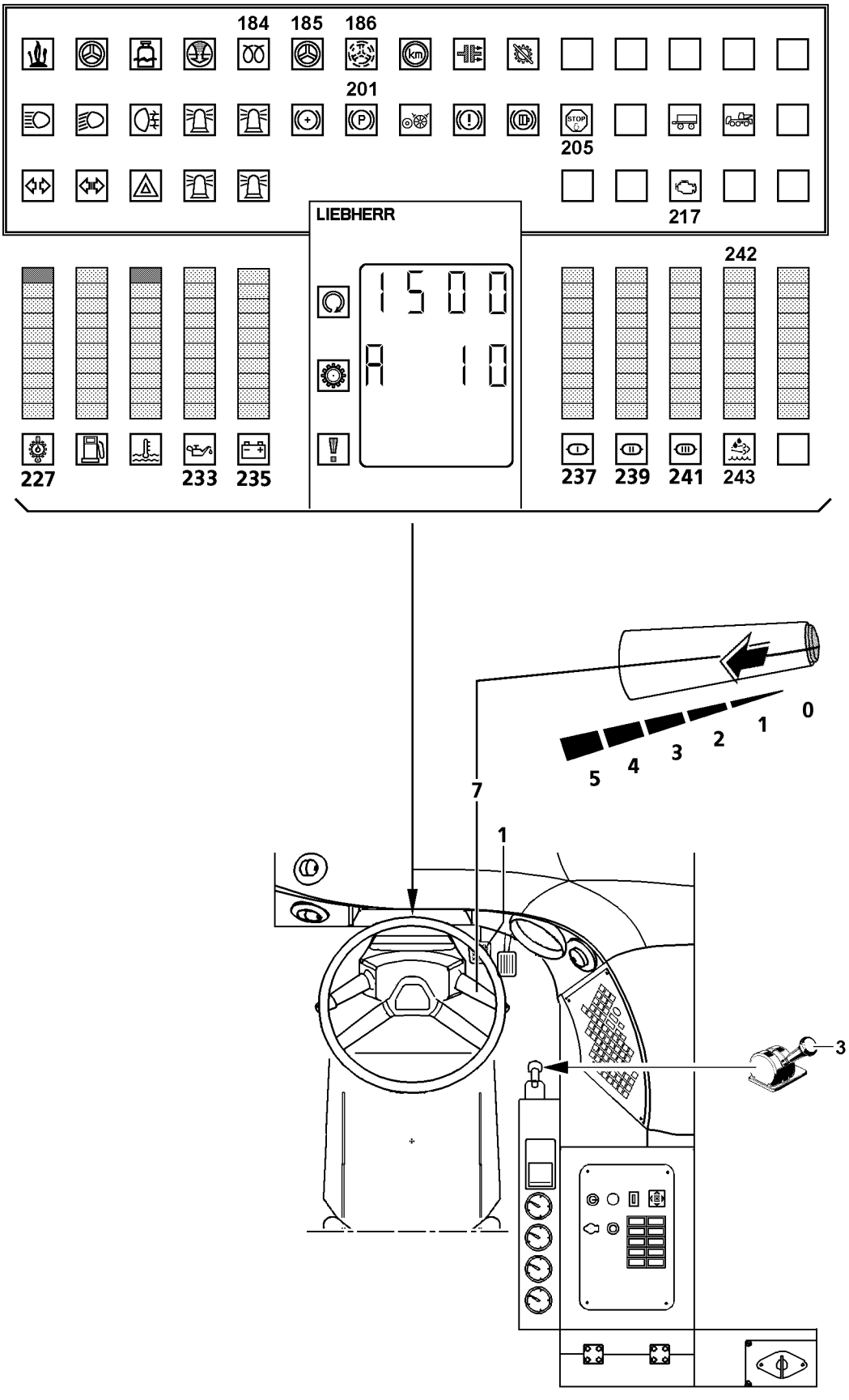
184
185
186
201
205
217
LIEBHERR
1500
A 10
242
227
233
235
237
239
241
243
0
1
2
3
4
5
7
1
3

B116606

3.2 Parking brake

3.2.1 Applying

WARNING
The vehicle can roll off uncontrollably!
If the manual lever **3** is not correctly engaged when the parking brake is applied, then the vehicle can roll off uncontrollably and fatally injure personnel!
▶ Make sure that the hand lever **3** is correctly engaged.
▶ The hand lever **3** may not be permitted to be pushed forward (without being pulled out first)!

▶ Pull the hand lever **3** back until it engages.

Result:
– The parking brake is applied.
– The indicator light **201** lights up.

3.2.2 Releasing

Ensure that the required brake release pressure is present in brake circuit III.

WARNING
The vehicle can roll off uncontrollably!
When the parking brake is released, the crane can start to move immediately and fatally injure personnel!
▶ When the parking brake is released, brake the crane with the service brake or accelerate using the throttle!

▶ Pull the hand lever **3** out to the stop in the lever's longitudinal direction and push forward.

Result:
– The parking brake is released.
– The indicator light **201** turns off.

Troubleshooting
The parking brake does not release, even though the manual lever **3** has been pushed forward?
The required brake release pressure is not present in brake circuit III. The warning light **241** lights up.
▶ Pull the hand lever **3** back again.
▶ Fill brake circuit III until the warning light **241** turns off.

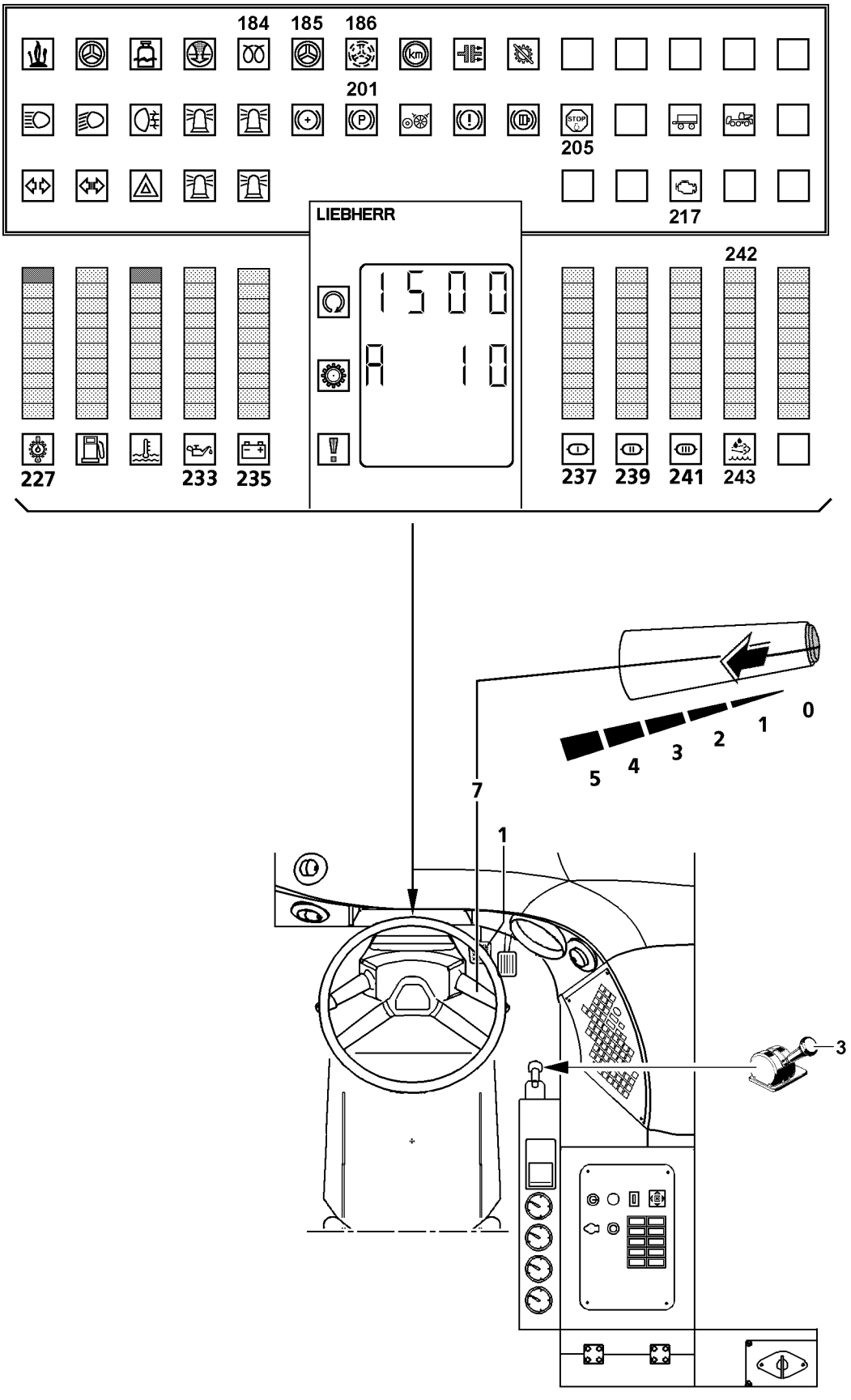
184
185
186
201
205
217
LIEBHERR
1500
A 10
242
227
233
235
237
239
241
243
0
1
2
3
4
5
7
1
3

B116606

3.3 Service brake

DANGER
Danger of fatal injury due to defective service brake!
▶ Carry out a brake test immediately after starting to drive!

▶ Depress the pedal **1** and check the service brake.

Result:
– The displays on bar graph **242** and on bar graph **244** must move proportional to the pedal path of the service brake.

3.4 Retarder

The retarder consists of the engine brake, the hydraulic intarder and the eddy current brake.

3.4.1 Operating conditions

The retarder can only be operated with the engine turned on. If the retarder is being actuated, it is not possible to accelerate.
Sensible use of the retarder with foresighted driving methods reduces wear on the service brake and thereby reduces operating costs.

DANGER
The utmost caution should be used when operating the retarder!
▶ Switch through the individual stages one by one while constantly observing the vehicle's handling characteristics!

On long downhill slopes

On long downhill slopes, select a shift that leaves further shift stages available for additional braking procedures, which may be required.
If the braking effect is not sufficient, slow down the vehicle with the service brake and shift down.

On snow, ice and dirty road surfaces

DANGER
Danger of fatal injury!
▶ In the event that the wheels lock when operating the retarder, select a lower shift stage!

Careful use of the retarder will ensure safe and sure deceleration even under bad road surface conditions.

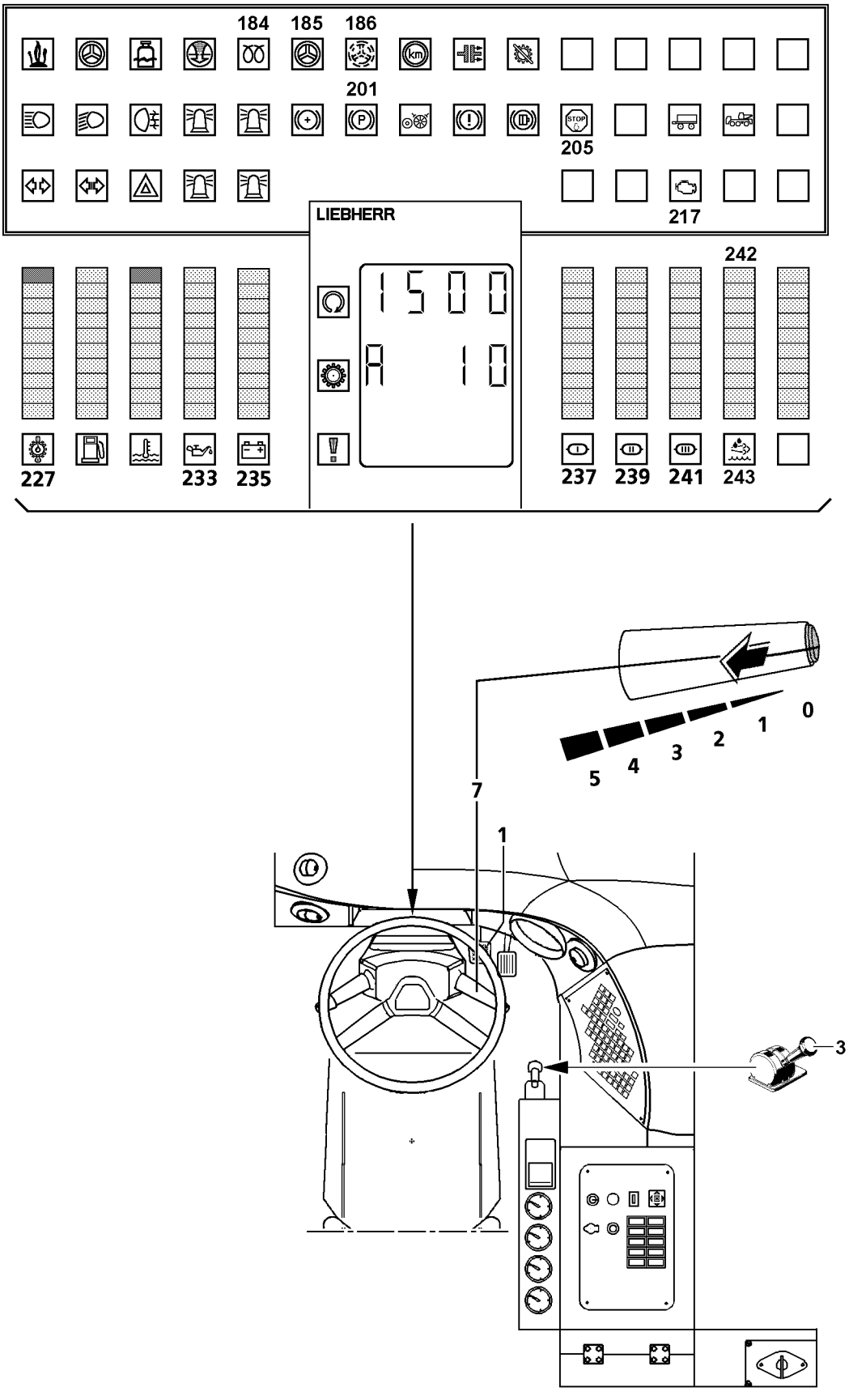
184
185
186
201
205
217
242
LIEBHERR
1500
A 10
227
233
235
237
239
241
243
0
1
2
3
4
5
7
1
3

B116606

3.4.2 Operating the retarder

The retarder is operated using the 6-stage steering column switch **7**. Five switch settings are available.
Change the steering column switch **7** stage by stage and not jerkily in order to avoid any overbraking.

▶ Actuate the steering column switch **7**.

Result:

– In switch position 1, the intarder is active. The last travelled speed is retained.
– In switch settings 2 to 5, the intarder, the engine brake and the eddy current brake are active.

▶ If the road surface is wet:
Engage briefly in each shift position to avoid locking the wheels.

WARNING
Danger of overheating!
▶ As soon as the vehicle is stationary or no more deceleration is required, turn off the retarder!

The steering column switch **7** may be reset with one pull without pauses between the stages.

▶ Reset the steering column switch **7** to stage 0.

Result:

– The retarder is turned off.

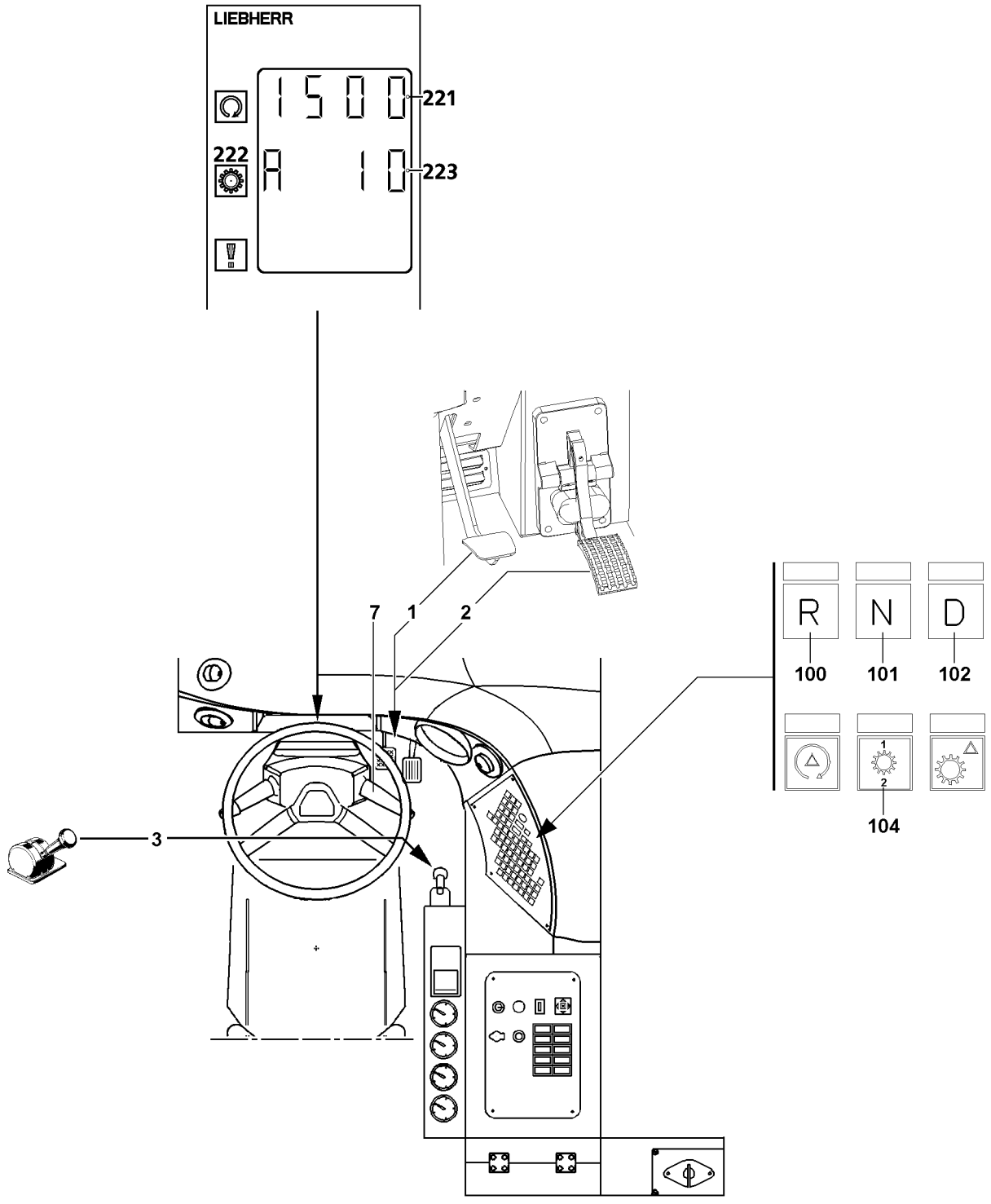

B116676

3.5 Automatic transmission

3.5.1 General

The automatic transmission can be used in automatic or in manual shift mode. The transmission has 12 forward gears and 2 reverse gears. The current gear positions will be indicated on the display **223**.

3.5.2 Switching between automatic and manual shift mode

When the ignition is turned on, the automatic mode is activated automatically. In the neutral “N” and reverse “R” travel range, the manual mode is always activated.

▶ Press button **104** to change between automatic and manual shift mode.

Result:

– The indicator light on button **104** does **not light up**: Automatic mode
– The indicator light on button **104 lights up**: Manual shift mode

3.5.3 Starting to drive

DANGER
Danger of fatal injury due to rolling crane!
When the parking brake **3** is released, the vehicle starts to roll immediately.

▶ When the parking brake **3** is released, brake the crane with the service brake **1** or accelerate using the throttle **2**!

The starting gear is automatically set by the transmission according to the preceding travel resistance. It can be manually corrected upwards as far as 4th gear or downwards as far as 1st gear. To do so, change to manual shift mode. Thereafter it is possible to change immediately back to automatic mode.
In starting mode, the dry clutch is open in case of non-activated throttle. The dry clutch will close if the throttle is lightly opened. The vehicle obtains a propulsive thrust from the converter which becomes greater, the lower the selected starting gear is.
Make sure that the following prerequisites are met:

– The crane is at a standstill.
– The transmission is in neutral position “N”.
– The parking brake **3** has been applied.

▶ Apply the service brake **1** gently.
▶ Select the travel range using button R **100** for reverse or button D **102** for forward.
▶ If necessary:
Correct the starting gear.
▶ Release the service brake **1**.
▶ Activate the engine regulation **2** gently.

Result:

– The dry clutch closes. This is indicated by a slight jerk.

▶ Release the parking brake **3** and activate engine regulation **2** as required.

Result:

– The vehicle begins to roll.

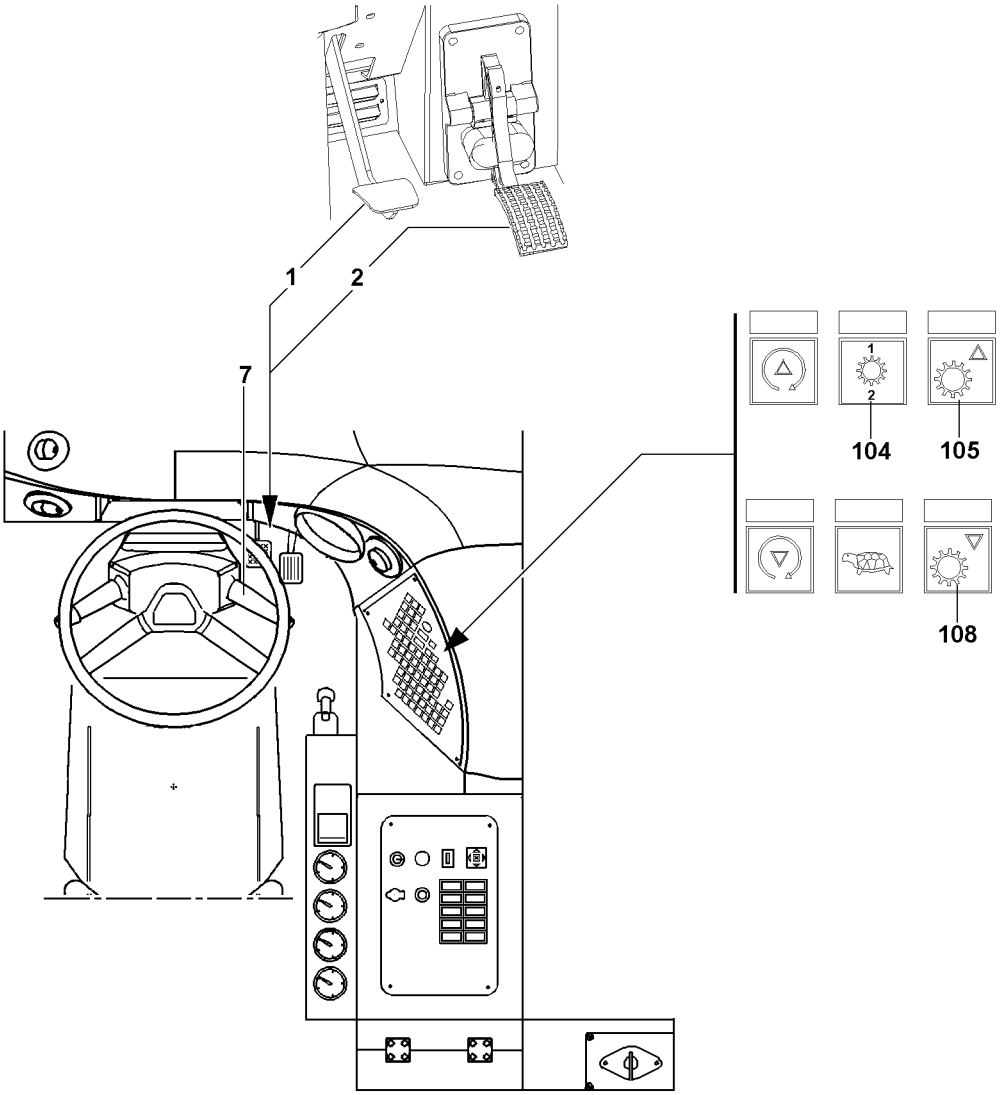

B105640

3.5.4 Uphill or downhill driving

If the engine regulation **2** is brought back to the 0 position due to the traffic situation on ascending and descending gradients, the transmission initially switches back to the starting gear. Shortly before the vehicle comes to a stop in this gear, the dry clutch is released and the tractive power or brake force is interrupted. This can result in the vehicle suddenly rolling back or accelerating. Operating the engine regulation **2** again will not immediately provide tractive power, since the dry clutch must be closed first.

- ▶ On uphill slopes:
  Apply the service brake **1** after releasing the dry clutch.
- ▶ On a descending gradient, expect a reduction in braking effort when opening the dry clutch:
  Apply the service brake **1** more firmly.

3.5.5 Driving downhill with an ascending gradient following on shortly afterwards

In the event of driving downhill with an ascending gradient following on shortly afterwards, the automatic transmission does not immediately recognize that the vehicle is located on an ascending gradient.

▶ Press the button **104**.

Result:

– The manual shift mode is engaged.

▶ Shift down using the steering column switch **7**.

or

- ■ Shift down using button **108**.

▶ Select the gear according to the slope.

▶ Press the button **104**.

Result:

– The automatic mode will be engaged.

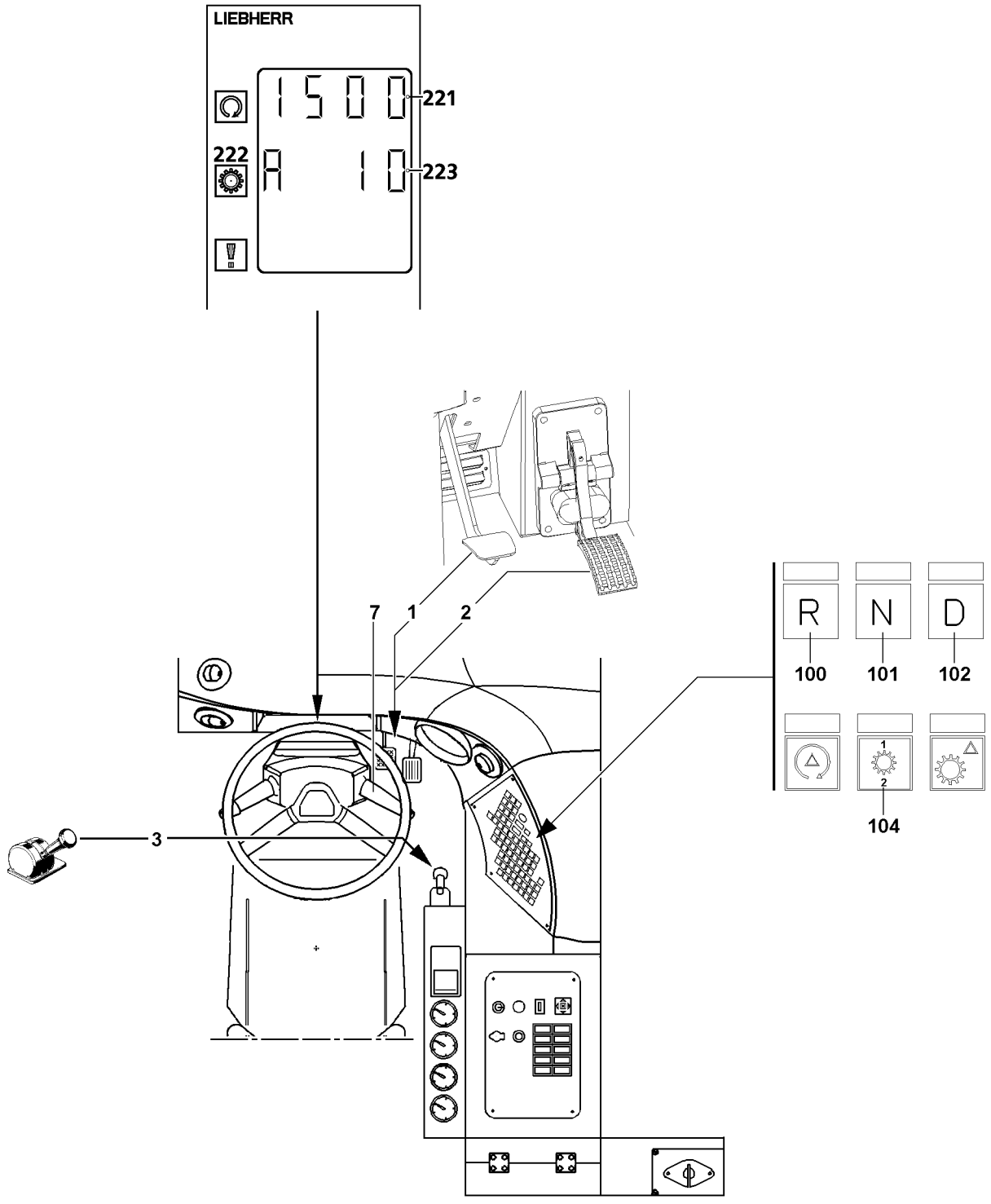

B116676

3.5.6 Selecting the driving direction

Make sure that the vehicle is at a standstill.

Reverse driving direction “R”

This setting is used to move the vehicle backwards.

▶ Press the button **100**.

Result:

– The indicator light on button **100** lights up.

Neutral position “N”

This setting is used to start the engine and for idling operation.
Use the neutral position also if the vehicle is not occupied and the engine is running.

DANGER
Danger of fatal injury due to rolling crane!

▶ In the event that the driver is required to leave the crane while the engine is running, ensure that the parking brake is applied correctly and that the wheels are chocked!

▶ Press the button **101**.

Result:

– The indicator light on button **101** lights up.
– The indicator light **222** lights up.

Driving direction forward “D”

This driving range is selected for general driving in a forward direction.

▶ Press the button **102**.

Result:

– The indicator light on button **102** lights up.

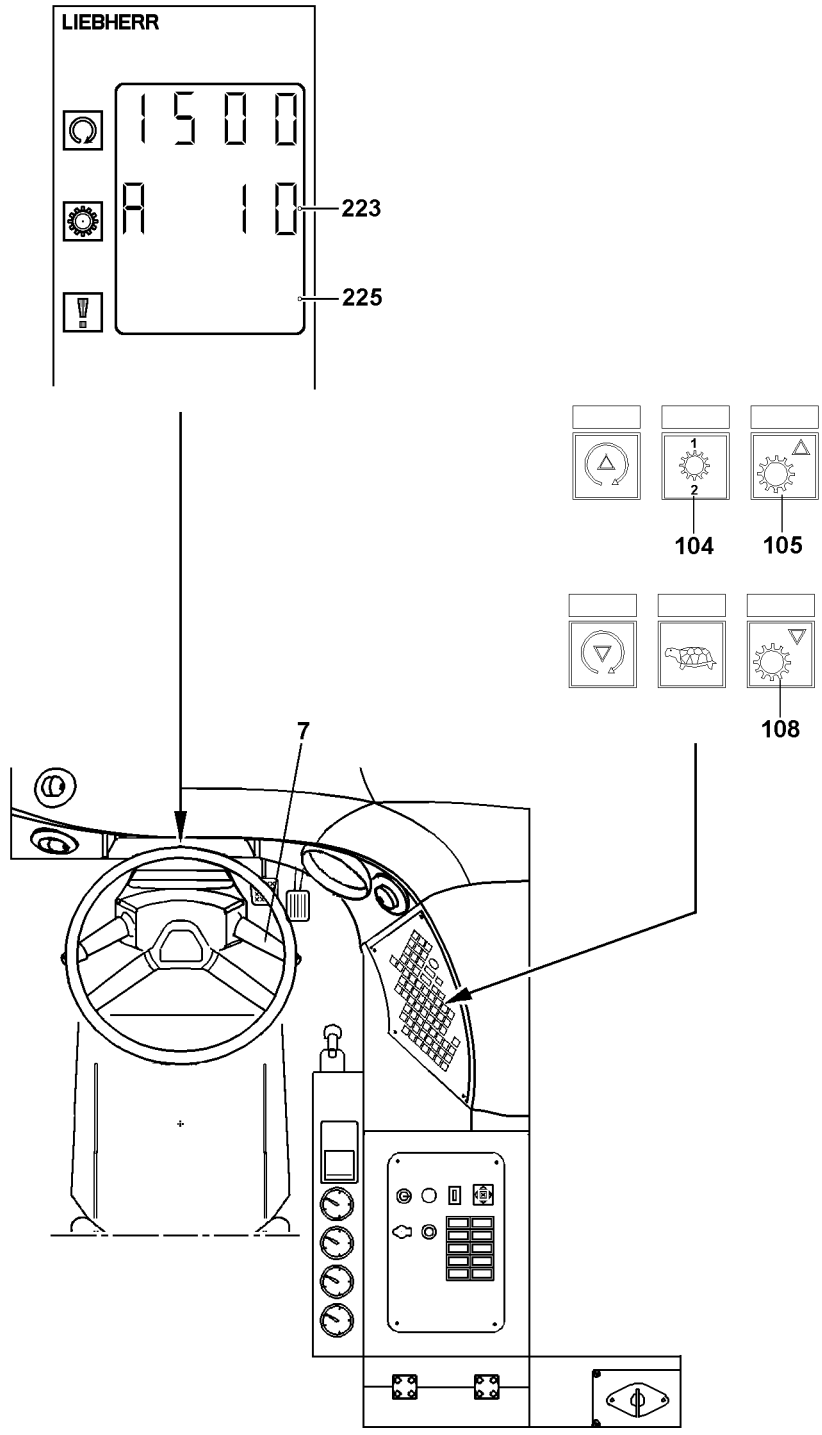

B108372

3.5.7 Automatic mode

In automatic mode, the driver operates only the engine regulation or the brake. Gear shifts are carried out automatically by the system depending on driving condition and usage. Depending on the preset driving direction, the transmission automatically selects a starting gear. It can be manually adjusted to the driving conditions.

Apply the service brake before switching from neutral “N” to a travel range. If this is not done, an acoustic warning signal sounds and an operating instruction appears on the display unit **225**.

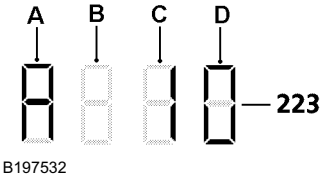

B197532

The display **223** contains the following information:

– Automatic mode: **A**
– Not assigned: **B**
– Gear engaged: **C**
– Gear engaged: **D**

3.5.8 Manual shift mode

In manual mode the gears are selected by the driver using the steering column switch **7** or the button **105** and the button **108**.

Apply the service brake before switching from neutral “N” to a travel range. If this is not done, an acoustic warning signal sounds and an operating instruction appears on the display unit **225**.

In manual shift operation, it is not possible to drive with the Tempomat or Temposet.

If an attempt is made to shift up in the 12th forward gear or an attempt is made to shift down in the 1st forward gear or the 1st reverse gear, an acoustic signal is heard and an operating instruction appears on the display unit **225**.

In the event that an attempt is made to shift down further than the gear permitted by the transmission, an acoustic signal will sound and a notice will appear on the display unit **225**.

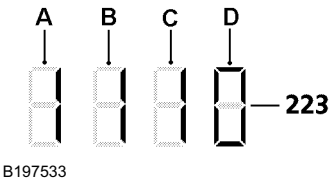

B197533

The display **223** contains the following information:

– Gear selected: **A**
– Gear selected: **B**
– Gear engaged: **C**
– Gear engaged: **D**

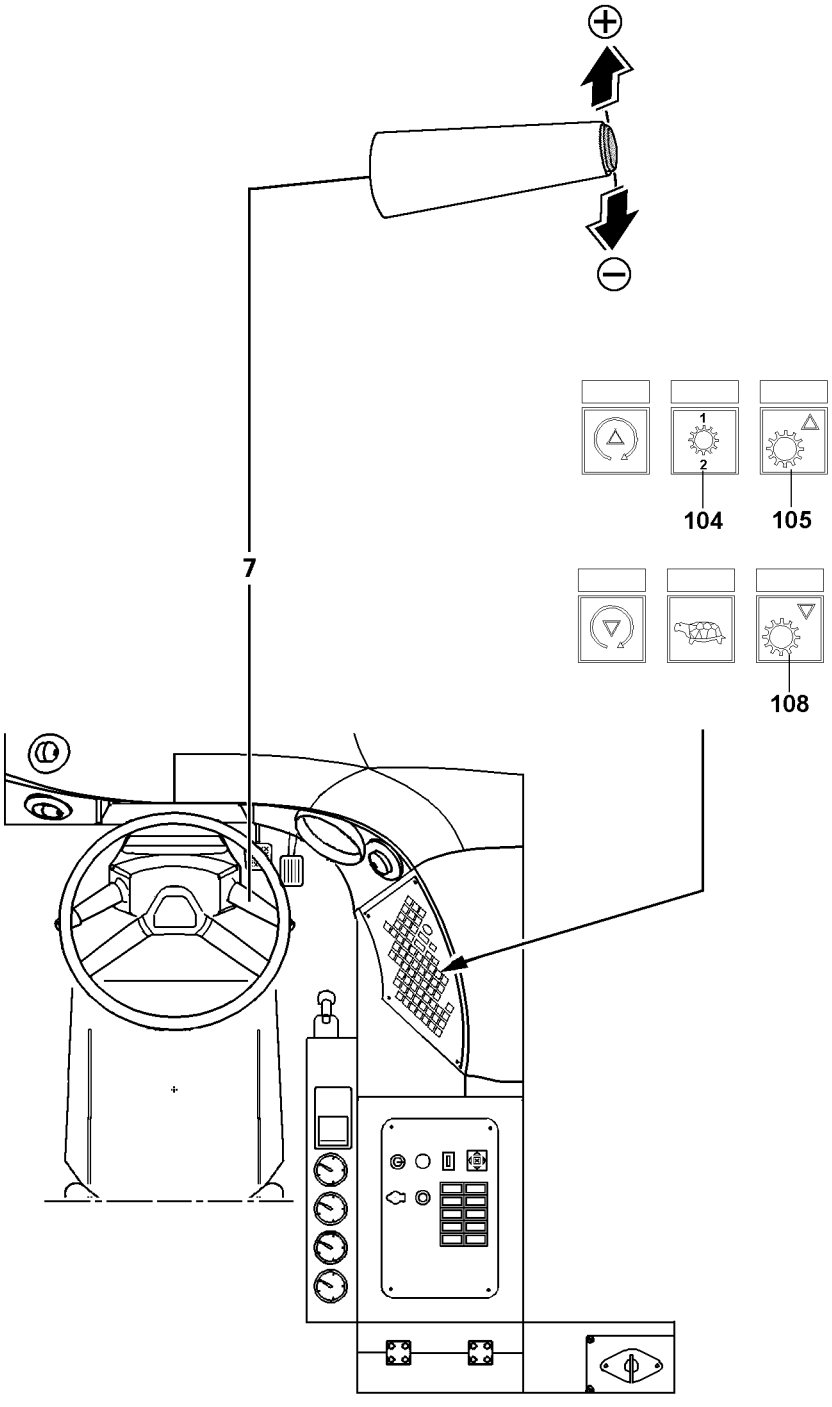

B105642

Selecting the gear with the steering column switch

The steering column switch can be used to shift through one or more gears simultaneously. The steering column switch returns to the initial setting after each operation.

Shifting up

▶ Push the hand lever **7** briefly upward.

Result:

– Shift up by one gear.

▶ Push the hand lever **7** up and hold.

Result:

– The gears are shifted up cyclically in 1/2 second intervals.

Shifting down

▶ Push the hand lever **7** briefly downward.

Result:

– Shift down by one gear.

▶ Push the hand lever **7** downward and hold.

Result:

– The gears are shifted down cyclically in 1/2 second intervals.

Selecting the gear with the buttons

With button **105** and button **108**, can be one or more gears shifted up or down simultaneously.

Shifting up

▶ Press the button **105** briefly.

Result:

– Shift up by one gear.

▶ Press and hold button **105**.

Result:

– The gears are shifted up cyclically in 1/2 second intervals.

Shifting down

▶ Press the button **108** briefly.

Result:

– Shift down by one gear.

▶ Press and hold button **108**.

Result:

– The gears are shifted down cyclically in 1/2 second intervals.

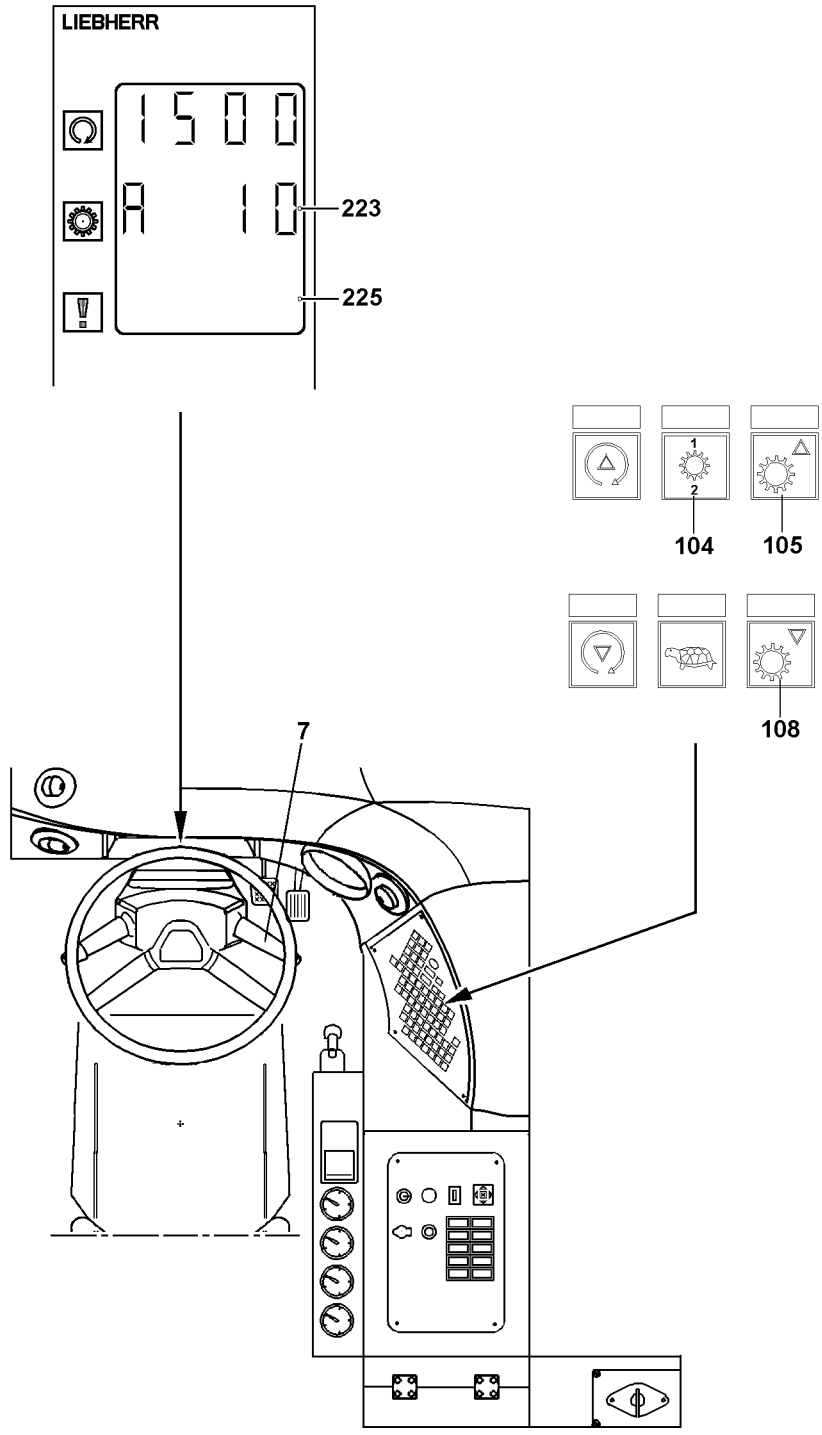

B108372

3.5.9 Warning display

Transmission error

The transmission carries out a self-check as soon as the ignition is turned on. If there is a transmission error, the error message “CH” will appear on the display **223** either immediately or soon after the ignition has been turned on.

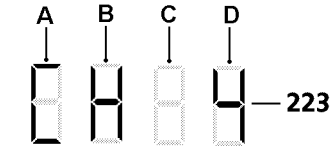

B197535

The display **223** contains the following information:
– Transmission error: **A**
– Transmission error: **B**
– Gear engaged: **C**
– Gear engaged: **D**

▶ Turn the engine off and remedy the transmission error.

Loss of air pressure

In the event of loss of air pressure, the transmission may no longer be able to shift.
This is shown via the display **223** “AL”.
The engine will stall if the clutch does not open due to insufficient air pressure when stopping.

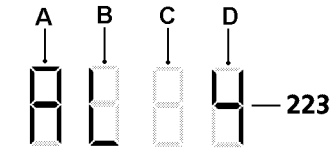

B197536

The display **223** contains the following information:
– Loss of air pressure: **A**
– Loss of air pressure: **B**
– Gear engaged: **C**
– Gear engaged: **D**

▶ Start to drive only if there is sufficient air pressure.

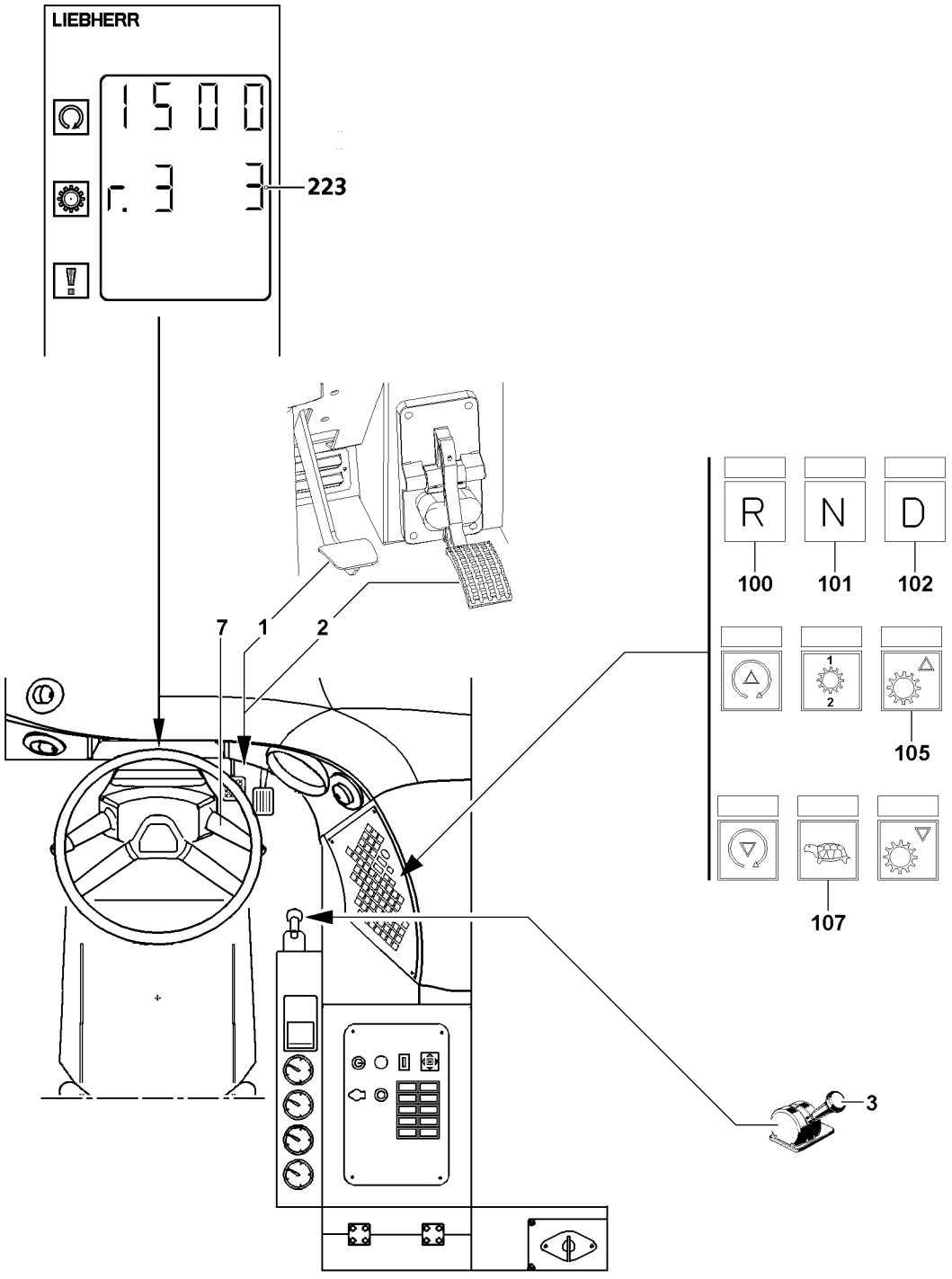

B116607

3.6 Maneuvering mode

The maneuvering mode is only designed for the following driving situations:
– Slow driving (maneuvering) in restricted spaces.
– Slow parking in and out.
– Driving mode with the equipment in place.
– Starting to drive on uphill gradients.

NOTICE
Damage to transmission!
If the maneuvering mode is added when the vehicle is stuck, the transmission can be damaged!
▶ Maneuvering mode with a stuck crane vehicle is prohibited!
▶ Only select the maneuvering mode when absolutely necessary!

3.6.1 Enabling the maneuvering mode

When the maneuvering mode is selected, the 3rd gear is automatically placed. The gears V4, V2 and V1 and R1 or R2 can be manually selected as required.
In maneuvering mode, the dry clutch closes independently of the accelerator pedal position after the relevant gear has been placed.
Make sure that the following prerequisites are met:
– The crane is at a standstill.
– The transmission is in neutral position “N”.
– The parking brake **3** has been applied.

▶ Apply the service brake **1** gently and hold down.
▶ Actuate the button **100** for reverse driving or the button **102** for forward driving.
▶ Press the button **107**.

Result:
– The maneuvering mode is added.
– The transmission automatically selects 3rd gear and the clutch engages. This is indicated by a slight jerk.

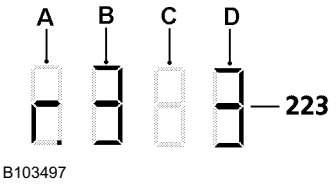

B103497

The display **223** contains the following information:
– Maneuvering mode: **A**
– Gear selected: **B**
– Not assigned: **C**
– Gear engaged: **D**

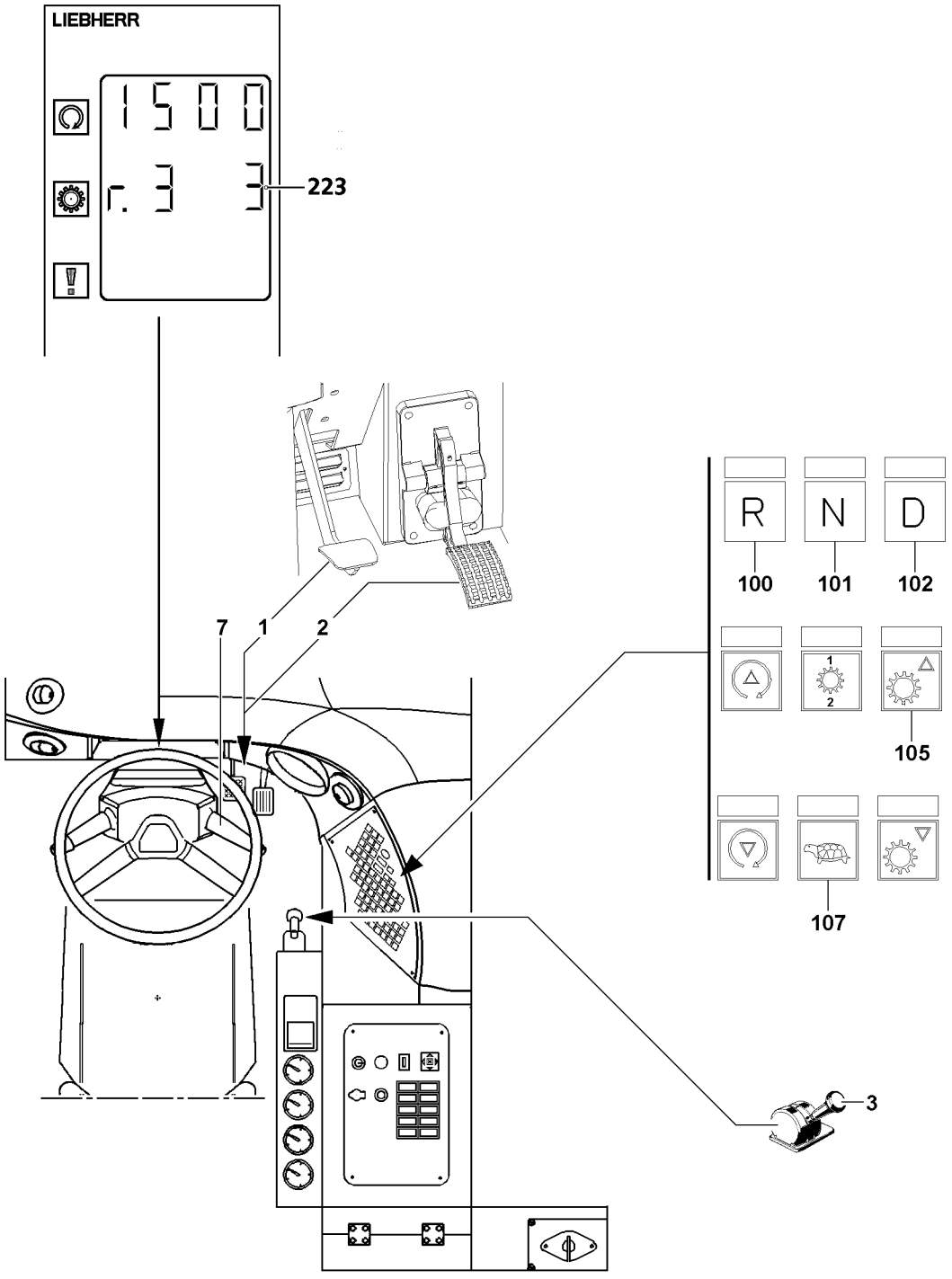

B116607

- ▶ Release the parking brake **3**.
- ▶ Release the service brake **1**.

Result:

– The vehicle begins to move.
The lower the gear, the higher the acceleration.

- ▶ If the vehicle is to be driven at higher speeds and under conditions of higher driving resistances (loose subsoil and / or an ascending gradient):
Activate the engine regulation **2**.
- ▶ If necessary:
Actuate the steering column switch **7** or button **105** or button **108** and place another gear.

Note

Driving in torque converter mode!

Driving in torque converter mode creates heat which is discharged through the converter oil!

- ▶ When driving under conditions of high driving resistance such as on loose subsoil and / or steep ascending gradients, monitor the temperature of the torque converter oil!

- ▶ If the temperature of the torque converter oil is too high:
Let the torque converter oil cool off with the gear in neutral position and at increased engine rpm.

3.6.2 Turning off

- ▶ Press the button **107**.

Result:

– The maneuvering mode is turned off.

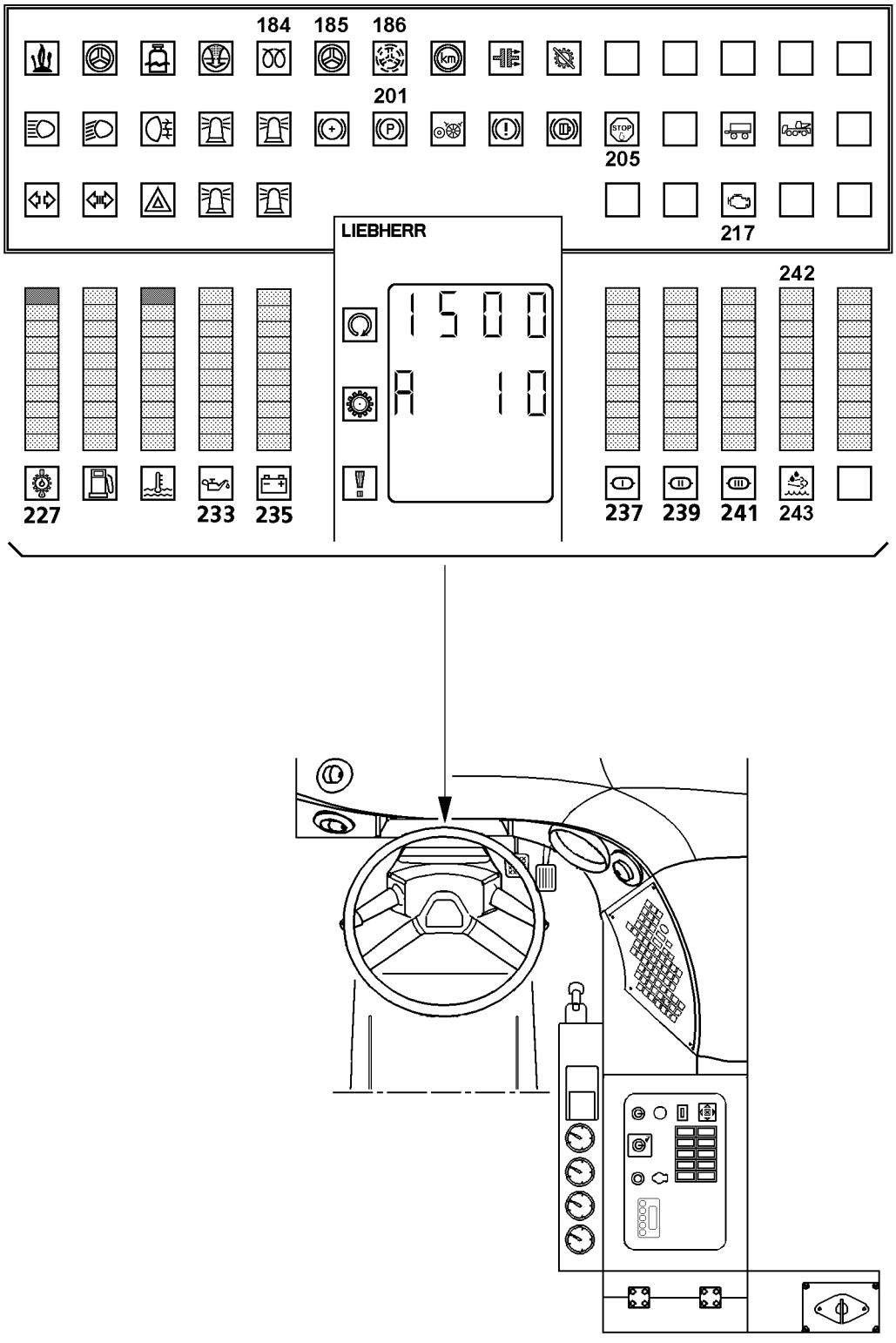
184
185
186
201
205
217
242
LIEBHERR
1500
A 10
227
233
235
237
239
241
243

B116677

3.7 Important indicator instruments while driving

3.7.1 Checking the steering circuit

At a driving speed of approximately 10 km/h the warning light **186** turns off.

▶ Check the warning light **186**.

Troubleshooting

Are warning light **185** and warning light **186** blinking?

A sensor error is present.

▶ Remedy the cause of the error.

Troubleshooting

The warning light **186** does not turn off?

The steering circuit is not functioning.

▶ Immediately bring the crane to a standstill and remedy the cause of the problem.

3.7.2 Checking the engine oil pressure

Engine oil pressure display on bar graph **232** from 0 bar to 10 bar.

▶ Check the warning light **233** and the bar graph **232**.

Troubleshooting

Does the oil pressure drop while driving and not increase even when increasing the rpm?

The engine is not lubricated if there is insufficient or no oil pressure. This causes engine damage.

▶ Bring the crane to a standstill immediately and turn the engine off.

3.7.3 Checking compressed air supply I, II and III

The warning lights **237, 239, 241** do not light up.

▶ Check the warning lights **237, 239, 241**.

Troubleshooting

All or one of the warning lights **237, 239, 241** light up?

The brake system is not operational.

▶ Immediately bring the crane to a standstill and remedy the cause of the problem.

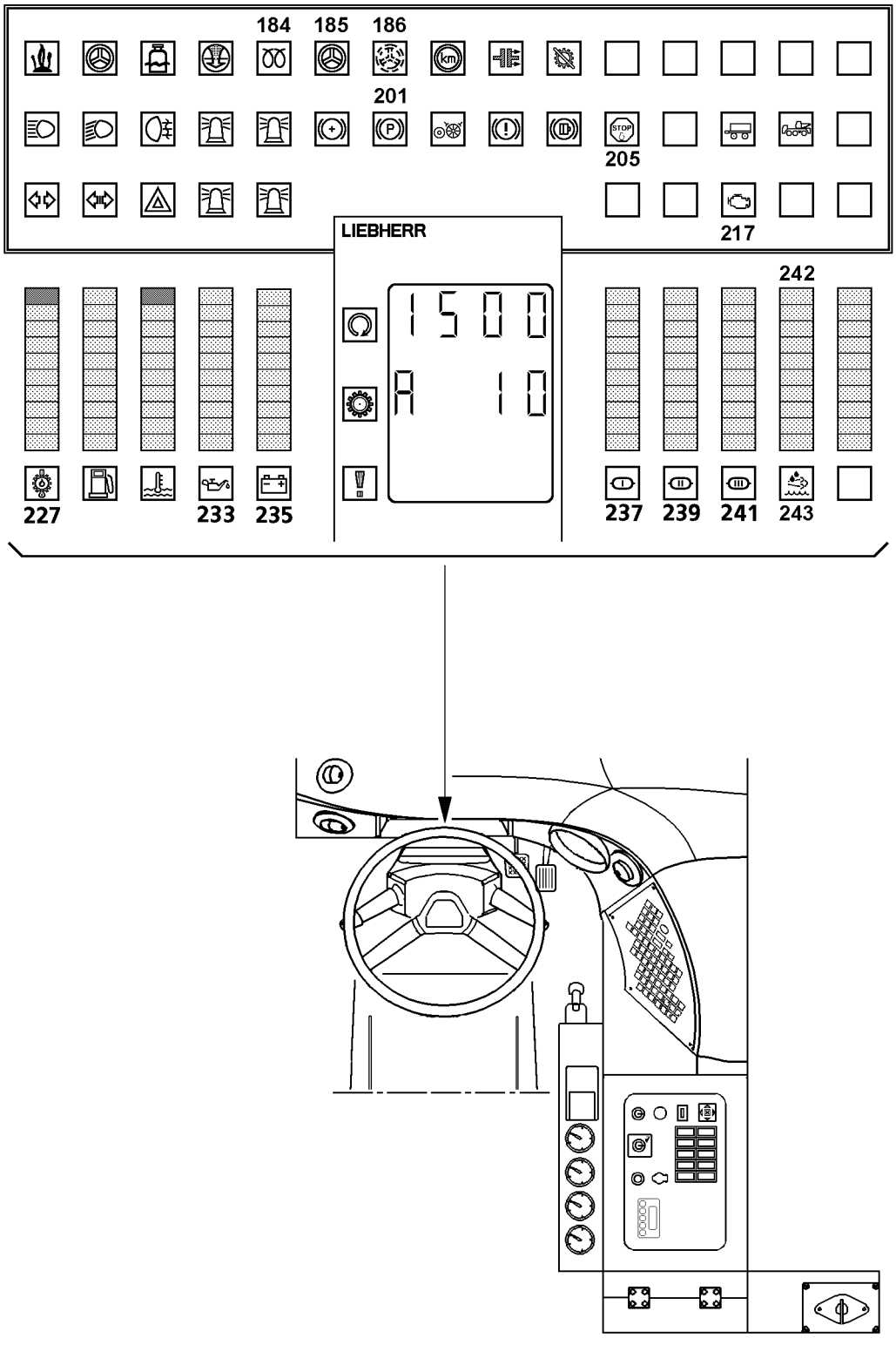
184
185
186
201
205
217
242
LIEBHERR
1500
A 10
227
233
235
237
239
241
243

B116677

3.7.4 Checking the fuel reserve

Do not drive until the fuel tank is empty, otherwise the fuel system will have to be bled.

Fuel quantity displayed on bar graph **228** in percent (%), 0 to 100 %
If the fuel reserve is below 10 % (approx. 34 l) the yellow indicator light **229** lights up.

- ▶ Check the indicator light **229**.
- ▶ If the yellow indicator light **229** lights up:
  Add fuel to the fuel tank.

Troubleshooting
The indicator light **229** blinks.
A sensor error is present.

- ▶ Remedy the error.

3.7.5 Checking the urea reserve

Display of the urea quantity on bar graph **242** in percent (%), 0 to 100 %
If the urea quantity is too low, the yellow indicator light **243** lights up.

- ▶ Check the indicator light **243**.

Troubleshooting
When the indicator light **243** lights up yellow:
Urea reserve is getting low.

- ▶ Add urea.

Troubleshooting
When the indicator light **243** blinks:
Urea reserve is almost empty.

- ▶ Add urea.

3.7.6 Checking the coolant temperature

Display of coolant temperature on bar graph **230** from 30 °C to 120 °C.

- ▶ Check the warning light **231** and the bar graph **230**.
- ▶ If the coolant temperature is too high while driving:
  First try to reduce the temperature to the permissible range of between 85 °C and 90 °C first by load reduction and engine rpm increase.

Troubleshooting
Does the warning light **231** light up while driving?
Excessive coolant temperature causes excessive engine temperature. This causes engine damage.

- ▶ Bring the crane to a standstill immediately and turn the engine off.

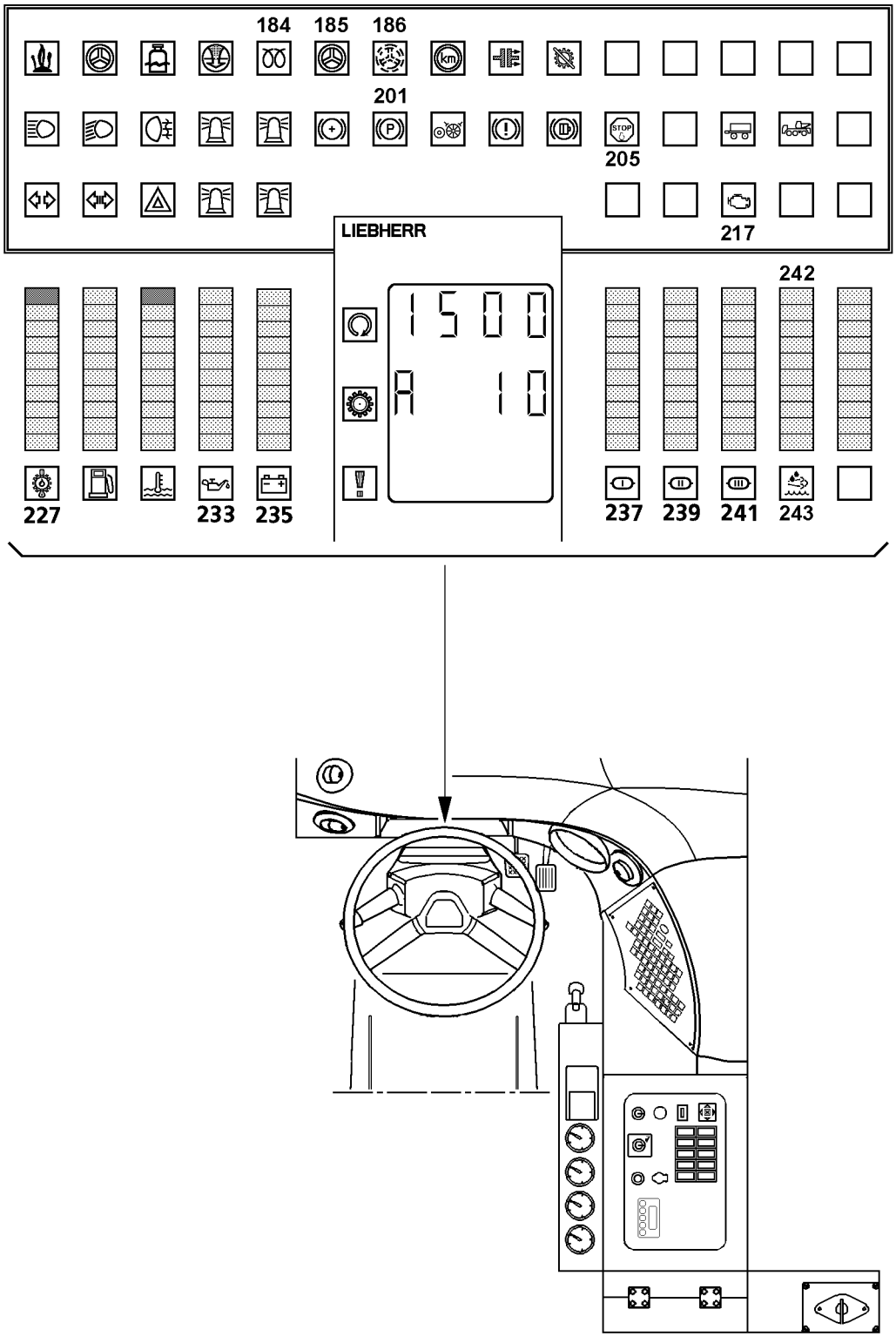
184
185
186
201
205
217
242
LIEBHERR
1500
A 10
227
233
235
237
239
241
243

B116677

3.7.7 Checking the gear oil temperature

Display of gear oil temperature on bar graph **226** from 50 °C to 140 °C.
The temperature display on bar graph **226** must be within the approved range for normal driving mode.

▶ Check the warning light **227** and bar graph **226**.

Troubleshooting
Does the warning light **227** blink?
A sensor error is present.

▶ Remedy the error.

Troubleshooting
Does the warning light **227** light up while driving?

▶ Bring the crane to a standstill immediately and turn the engine off.

Troubleshooting
Does the display on bar graph **226** reach the red zone?

▶ Immediately bring the crane to a standstill.
▶ Shift the transmission into neutral position “N”.
▶ Allow engine to run at approx. 1500 rpm.
▶ If the oil temperature does **not** drop into the approved temperature range within a short time: Turn the engine off completely.

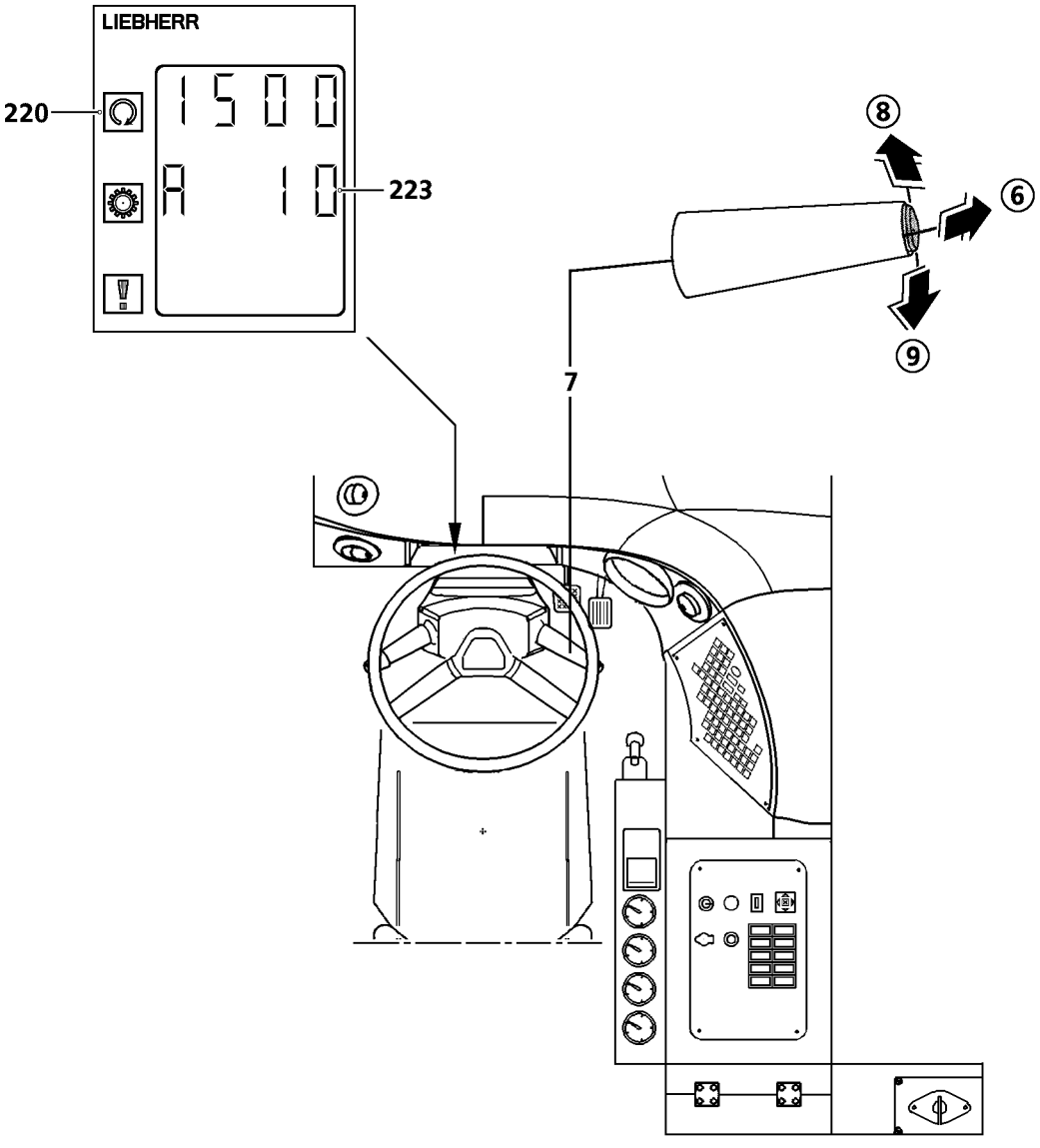

B108374

3.8 Tempomat

A driving speed of more than 20 km/h can be stored using the Tempomat. The Tempomat is operated with the steering column switch **7**. When the Tempomat is activated, the indicator light **220** lights up and the speed setting will be indicated for a brief period on the display **223**.

Use the Tempomat only when traffic conditions permit a steady speed. It may not be possible to maintain the speed on ascending or descending gradients.

Take the foot off the gas pedal when the Tempomat is turned on.

DANGER

Danger of skidding on slippery road surfaces!

▶ Do not use Tempomat on slippery road surfaces!

Make sure that the following prerequisites are met:

– The automatic mode is turned on.
– The driving speed is greater than 20 km/h.
– The service brake and the retarder are not activated.

3.8.1 Saving the Tempomat speed

Ensure that Tempomat is not activated.

▶ Accelerate the vehicle to the desired speed.

▶ Operate the steering column switch **7** in direction **8** or direction **9**.

Result:

– The stored speed will be briefly indicated on the display **223**.
– The indicator light **220** lights up.

3.8.2 Displaying the current Tempomat speed

Ensure that Tempomat is activated. The indicator light **220** lights up.

▶ Operate the steering column switch **7** in direction **8** or direction **9**.

Result:

– The stored speed will be briefly indicated on the display **223**.

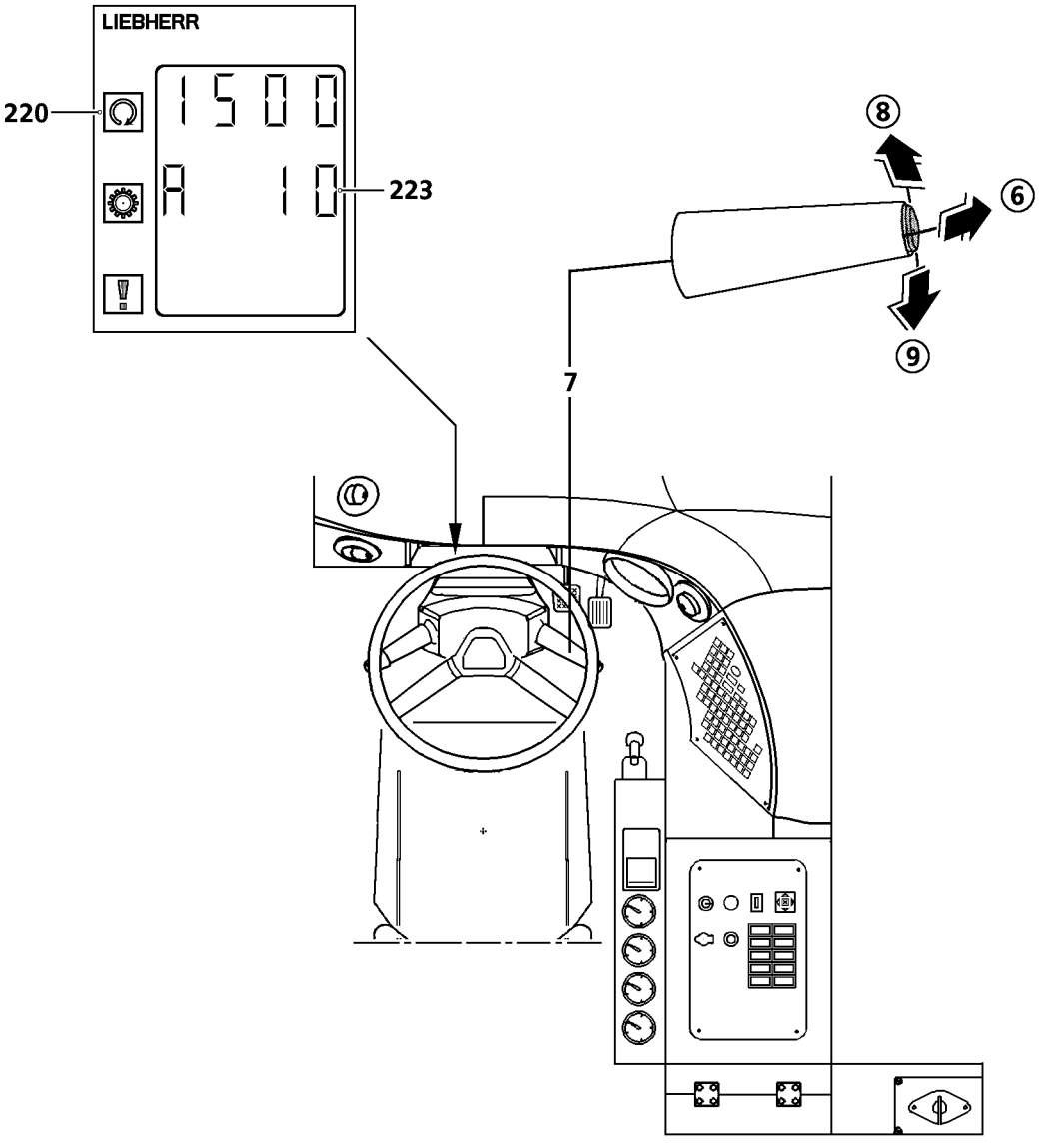

B108374

3.8.3 Changing the current Tempomat speed

▶ Operate the steering column switch **7** in direction **8 and** again within 10 seconds in direction **8**.

Result:

– The speed is increased by 2 km/h.

▶ Hold the steering column switch **7** in position **8**.

Result:

– The speed is continuously increased by 2 km/h.

▶ Operate the steering column switch **7** in direction **9 and** again within 10 seconds in direction **9**.

Result:

– The speed is reduced by 2 km/h.

▶ Hold the steering column switch **7** in position **9**.

Result:

– The speed is continuously reduced by 2 km/h.

3.8.4 Turning the Tempomat off

▶ Accelerate the engine regulation for more than 10 sec.

If the engine regulation is used to accelerate for less than 10 sec., the crane will brake back to the speed stored in the Tempomat when the engine regulation is released.
The stored speed is deleted when the ignition switch is turned back to position “0”.

▶ Move the steering column switch **7** in direction **6**.

▶ Apply the service brake or retarder.

▶ The speed drops below 10 km/h.

3.8.5 Reusing the old Tempomat speed

If the Tempomat has been turned off but the ignition switch has not been turned back to “0”, the previous driving speed can be resumed.

▶ Move the steering column switch **7** in direction **9**.

Result:

– The speed will blink on the display **223**.

▶ Move the steering column switch **7** again in direction **9 within 2 seconds**.

Result:

– The displayed speed will be resumed.

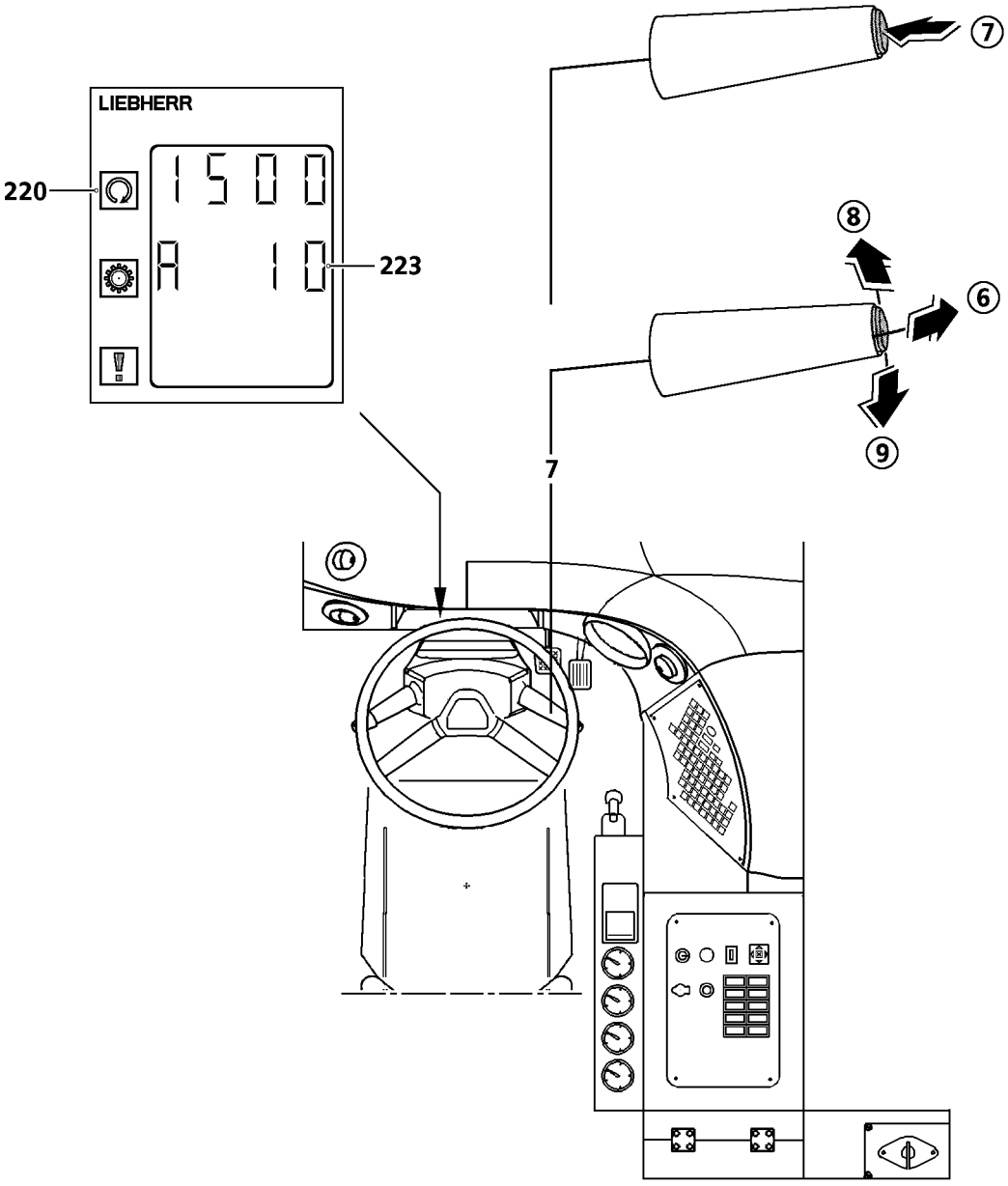

B108375

3.9 Temposet

With the Temposet, the driving speed can be limited from a speed of 10 km/h. The Temposet is operated with the steering column switch **7**. When the Temposet is activated, the indicator light **220** lights up and the speed setting will be indicated for a brief period on the display **223**.
Make sure that the following prerequisites are met:
– The automatic mode is turned on.
– The driving speed is greater than 10 km/h.

3.9.1 Saving the Temposet speed

Ensure that Temposet is not activated.
▶ Accelerate the vehicle to the desired speed.
▶ Press the button **7**.
Result:
– The stored speed will be briefly indicated on the display **223**.
– The indicator light **220** lights up.

3.9.2 Displaying the current Temposet speed

Ensure that Temposet is activated. The indicator light **220** lights up.
▶ Press the button **7**.
Result:
– The stored speed will be briefly indicated on the display **223**.

3.9.3 Changing the current Temposet speed

▶ Press the button **7** and move the steering column switch **7** in direction **8**. Within 10 seconds, push it in direction **8** again.
Result:
– The speed is increased by 2 km/h.

▶ Press the button **7** and hold the steering column switch **7** in position **8**.
Result:
– The speed is continuously increased by 2 km/h.

▶ Press the button **7** and move the steering column switch **7** in direction **9**. Within 10 seconds, push it in direction **9** again.
Result:
– The speed is reduced by 2 km/h.

▶ Press the button **7** and hold the steering column switch **7** in position **9**.
Result:
– The speed is continuously reduced by 2 km/h.

3.9.4 Turning the Temposet off

The Temposet speed is deleted at ignition starter switch position “0” and the vehicle-specific speed is activated.
▶ Push the steering column switch **7** for more than 3 seconds in direction **6**.

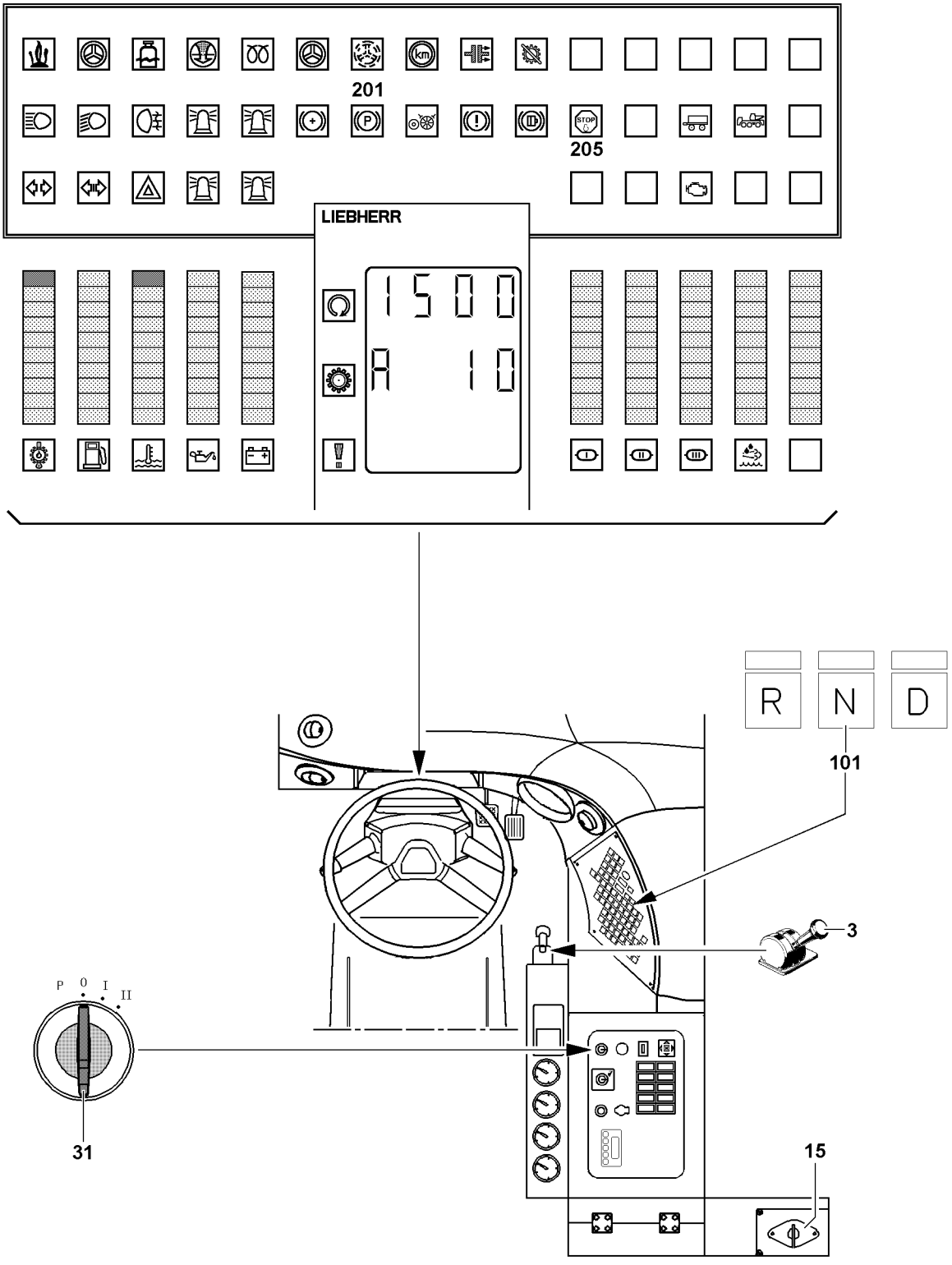

B116608

3.10 Ending driving

NOTICE
Inadequate lubrication will damage the automatic transmission!
Do not let the vehicle roll out in neutral position, this eliminates the engine braking action and the gear lubrication is insufficient!
The automatic transmission can be severely damaged!
▶ Do not shift the vehicle to neutral until it is at a standstill!

3.10.1 Stopping

▶ Slow down the crane until it comes to a standstill.
▶ The selected driving range can remain turned on.

For longer stops (more than 1 minute), use the button **101** to shift the transmission into neutral position “N”. This will reduce clutch wear and increase the service life of the clutch.
▶ Use the service or parking brake to ensure that the crane does not roll away.

3.10.2 Interrupting driving while the engine is running

▶ Slow down the crane until it comes to a standstill.
▶ Press the button **101** and shift the transmission into neutral “N”.
▶ Apply the parking brake **3**.
Result:
– The indicator light **201** lights up.

3.10.3 Parking the vehicle when the engine is running

▶ Slow down the crane until it comes to a standstill.
▶ Press the button **101** and shift the transmission into neutral “N”.
▶ Apply the parking brake **3**.
Result:
– The indicator light **201** lights up.

▶ If the crane has been operated at full engine output or if the coolant temperature is above 95 °C: Allow the engine to run without load at idling speed for 1 to 2 minutes.
▶ If special functions (parking light, rotating beacons, hazard warning lights, auxiliary heater*) are turned on:
Turn the special functions off.
▶ Turn off the ignition **31** and pull out the ignition key.
▶ Turn off the battery master switch **15** and remove the trip cam.
▶ Lock the driver's cab.
▶ Secure the vehicle with chocks against uncontrolled rolling away.

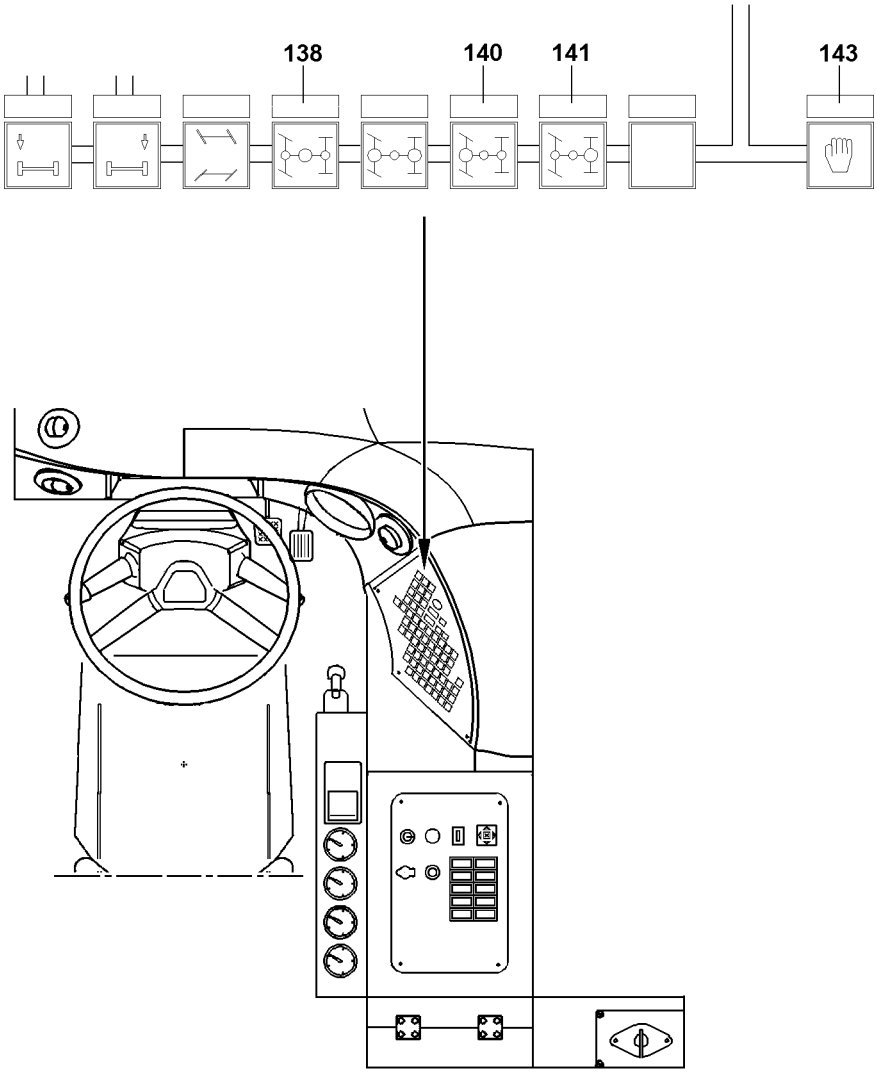

B116678

4 Differential locks

This vehicle is equipped with differential locks, which can be added for off road driving, on unpaved roadways and in wintery conditions.
With the differential locks enabled, a speed restriction of up to 40 km/h is active.
The differential locks may only be added when the vehicle is at a standstill and in the following sequence:

1.) Longitudinal differential lock in distributor gear.
2.) Longitudinal differential lock axle 2 and axle 4.
3.) Transversal differential lock axle 4 and axle 6.

NOTICE
Danger of damage to drive axles!

- ▶ Turn the differential locks on and off only when the vehicle is at a standstill!
- ▶ **Never** turn the differential locks on when the drive wheels are turning!
- ▶ Drive carefully, do not start jerkily, do not drive at full throttle!
- ▶ Drive only straight away and not around corners!
- ▶ Only enable cross differential locks, if the corresponding steering axles are set in **straight-ahead position**!
- ▶ Drive with differential locks only on difficult terrain (such as sand, slush, loose or slippery subsoil etc.)!

4.1 Engaging the longitudinal differential lock in the distributor gear

Make sure that the following prerequisites are met:

– The vehicle is at a standstill.
– The transmission is in neutral position “N”.

▶ Press button **138** and button **143**.

Result:

– The function control on the button **138** lights up.
– The longitudinal differential lock in transfer gearbox is engaged.

Troubleshooting
The function control on the button **138** blinks.
The gears of the differential are in a tooth-on-tooth position.

▶ Place the gear and start to drive carefully.

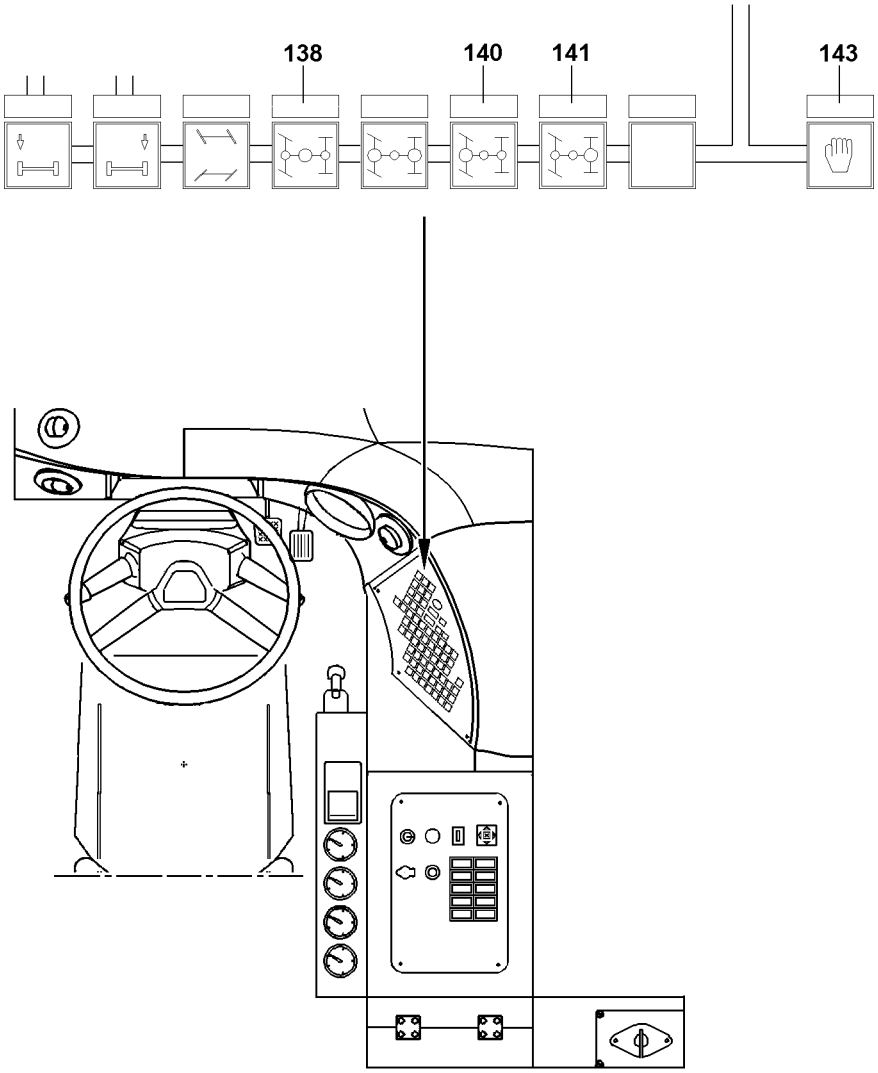

B116678

4.2 Engaging the longitudinal differential lock axle 2 and axle 4

Make sure that the following prerequisites are met:
- The vehicle is at a standstill.
- The transmission is in neutral position “N”.
- The longitudinal differential lock in the distributor gear is engaged.

▶ Press button **140** and button **143**.

Result:
- The function control on the button **140** lights up.
- The longitudinal differential lock axle 2 and axle 4 is engaged.

Troubleshooting

The function control on the button **140** blinks.

The gears of the differential are in a tooth-on-tooth position.

▶ Place the gear and start to drive carefully.

4.3 Adding the transverse differential lock for axle 4 and axle 6

Make sure that the following prerequisites are met:
- The vehicle is at a standstill.
- The transmission is in neutral position “N”.
- The longitudinal differential lock axle 2 and axle 4 is engaged.

▶ Press button **141** and button **143**.

Result:
- The function control on the button **141** lights up.
- The transverse differential lock for axle 4 and axle 6 is engaged.

Troubleshooting

The function control on the button **141** blinks.

The gears of the differential are in a tooth-on-tooth position.

▶ Place the gear and start to drive carefully.

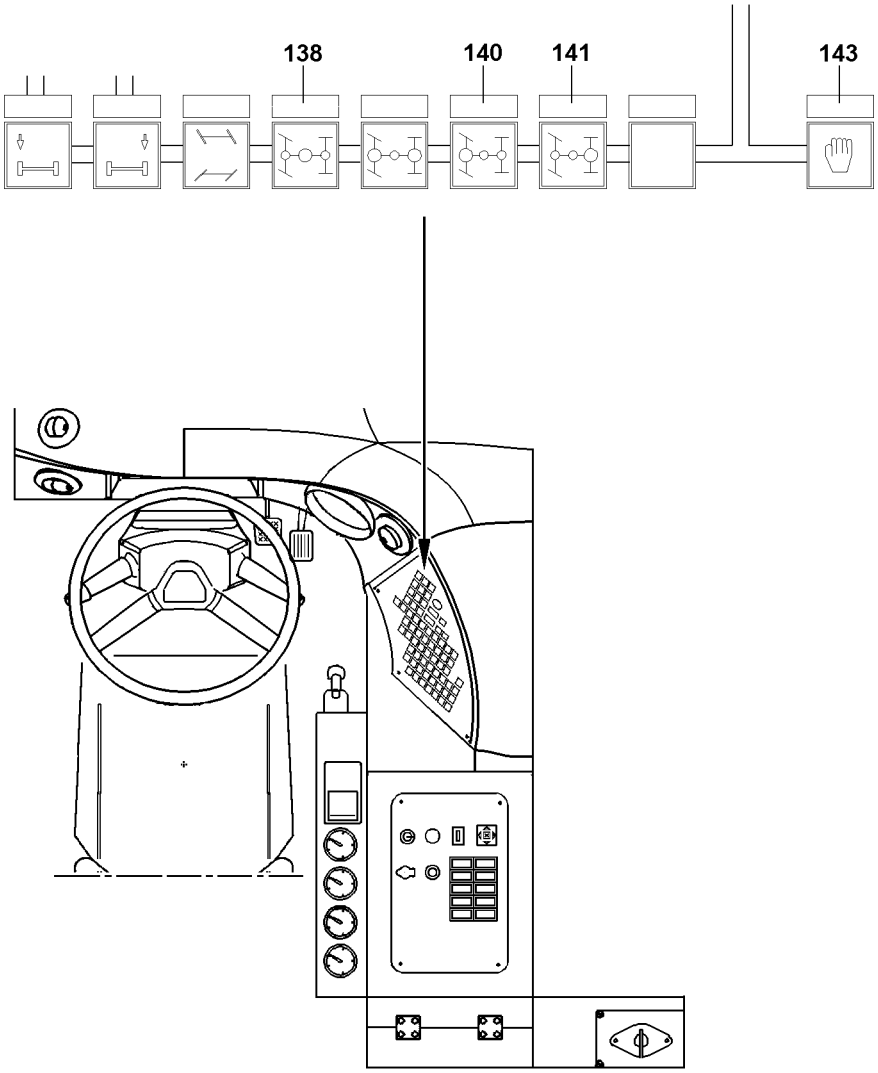

B116678

4.4 Turning the differential locks off

NOTICE
Danger of damage to drive axles as well as the entire drive train!
Considerable damage can be caused by driving on solid subsoil with a good grip when a differential lock is on!
▶ Turn the differential locks off again as soon as possible!

Make sure that the following prerequisites are met:
– The vehicle is at a standstill.
– The transmission is in neutral position “N”.

Turning off the longitudinal differential locks automatically turns off any transverse differential locks that are active.
▶ Press button **138** and button **143**.
Result:
– The function controls on button **138**, button **140** and button **141** turn off.
– All differential locks are turned off.

▶ Press button **141** and button **143**.
Result:
– The function control on the button **141** turns off.
– The transverse differential lock for axle 4 and axle 6 is turned off.

▶ Press button **140** and button **143**.
Result:
– The function control on the button **140** turns off.
– The longitudinal differential lock axle 2 and axle 4 is turned off.

1

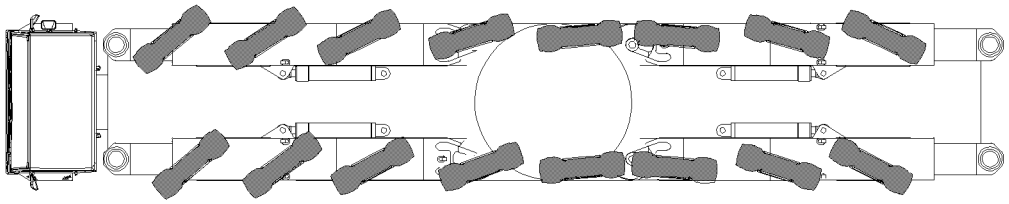

2

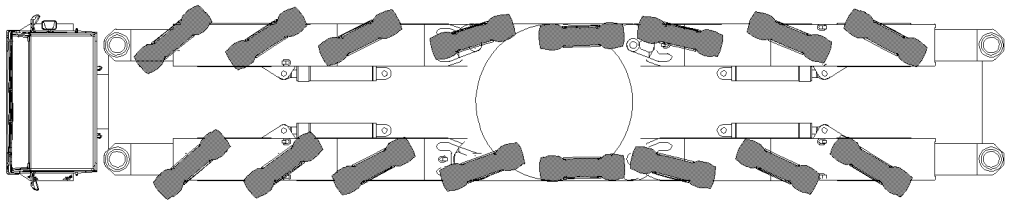

3

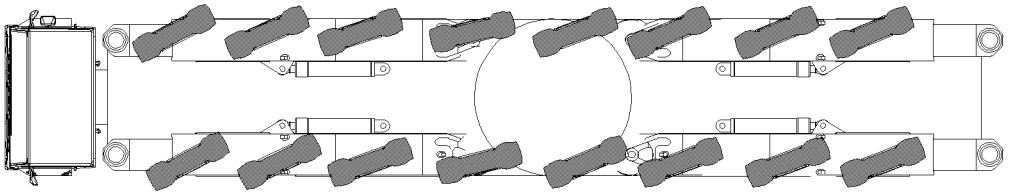

4

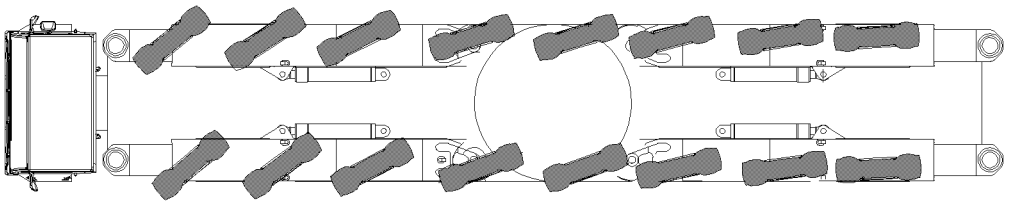

5

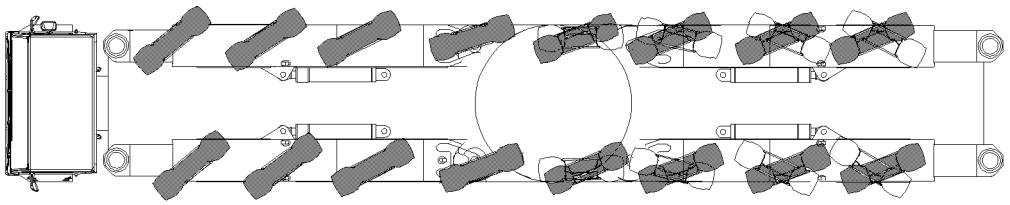

B105491

5 Steering

There are 5 operating modes for steering the crane:

1.) On-road driving, illustration **1**
2.) All-wheel steering, illustration **2**
3.) Crab steering, illustration **3**
4.) Reduced sheer out rate, illustration **4**
5.) Independent steering, illustration **5**

Note
On public roads!
▶ Only drive in “On road driving” mode on public roads!

5.1 General

WARNING
Danger of crushing!
If any persons are within the danger zone of the crane when starting the crane or when placing a gear, personnel can be severely injured or killed!
▶ Make sure that there are no persons between the wheels when starting the crane!
▶ Make sure that there are no persons between the wheels when placing a gear!

Approval to shift between the individual operating modes is checked each time by the system. If a shift change is not permitted, an acoustic signal will sound and an operating error message (LEC) will be shown on the display unit **225**.
A shift change in operating mode is only possible up to a speed of 18 km/h. The operating mode can only be activated if the wheels are in a position which permits a direct transition to the selected operating mode.
When the power supply is turned on, the operating mode which was last selected is activated.
If the steering deflection of the wheels correspond to the selected operating mode, then the selected operating mode is activated.
If the steering deflection of the wheels does not correspond to the last selected operating mode, then the function check on the button for the last selected operating mode will blink. Operating mode “Independent steering” will be set. This means that the respective operating mode can be selected indirectly.
From a temperature of -20 °C operate steering several times before driving off to allow the oil in the steering cylinders to get warm.

Note
Steering at standstill!
To ensure steering of the electrically steered rear axles at a speed of less than 5 km/h, a hydro accumulator is actuated and charged with pressurized fluid every time the engine is started and subsequently periodically after every steering request!
This can cause that slightly larger steering powers must be exerted for a short time for steering!
▶ This procedure has no influence on the safety of the steering system, the steering system continues to be fully functioning!

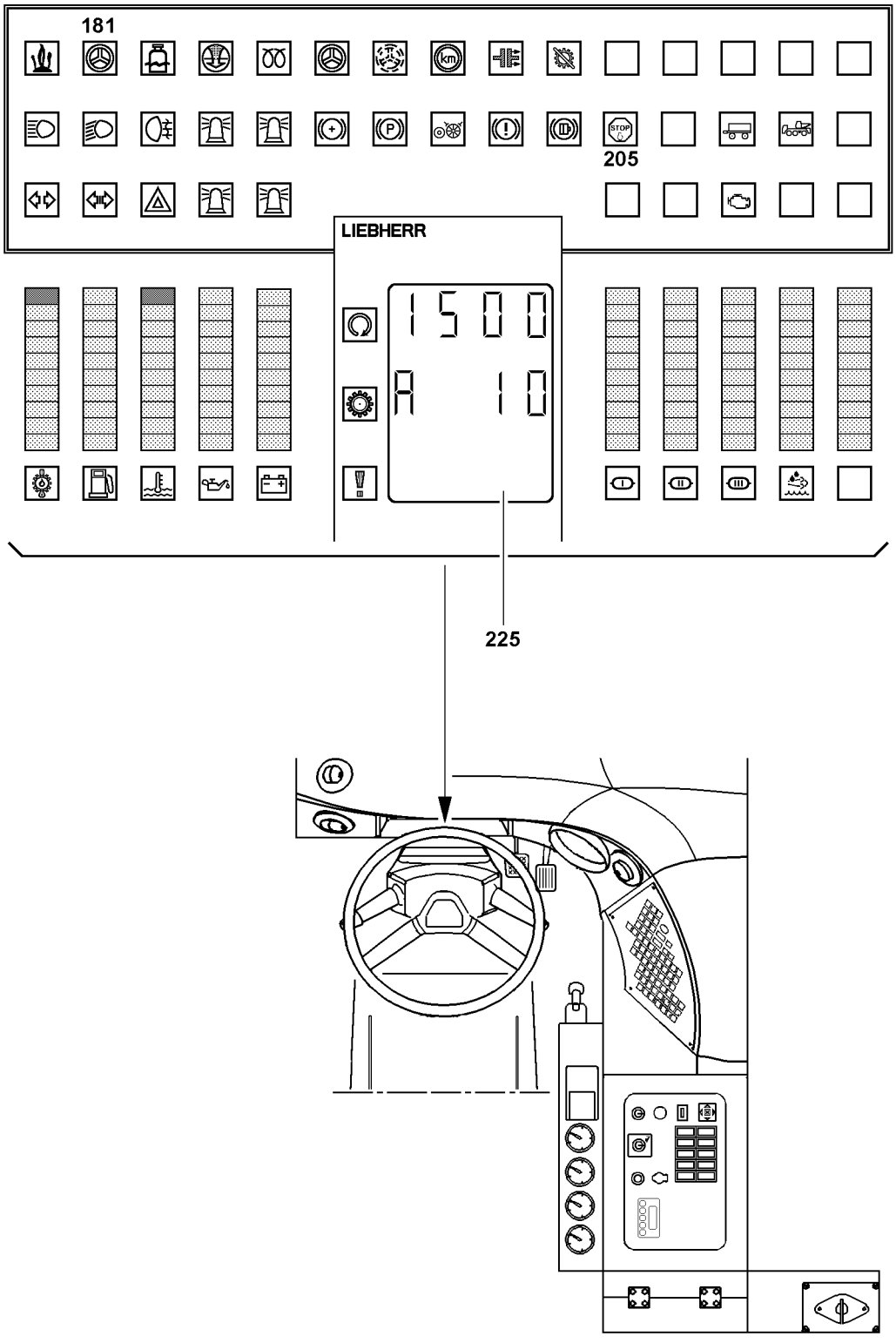

B116679

5.1.1 Limiting the speed in the event of defects in the active rear axle steering

If an error occurs in the steering, the maximum driving speed is limited to 40 km/h unless a restriction of less than 40 km/h is already in effect and the vehicle is not moving at a speed of up to 40 km/h.
If an error occurs while driving and the speed is greater than 40 km/h, the maximum speed is reduced to the current driving speed. This means that the driver will be able to continue to drive at the current speed until the speed is reduced. However, he can no longer accelerate. If a speed of 40 km/h or less is reached the limit remains at 40 km/h. This is designed to ensure that the vehicle does not suddenly lose power and therefore is suddenly slowed down.

5.1.2 Function controls

▶ The function control on the button lights up.

Result:

– Operating mode is activated.

▶ The function control on button does not light up.

Result:

– Operating mode is not activated.

▶ The function control on the button blinks slowly.

Result:

– Operating mode has been selected, but has not yet been accepted by the control.
– The function control will continue to blink until it is possible to transfer to the operating mode.

Troubleshooting

The function control on the button for the active operating mode lights up, but the function control on the button for the selected operating mode blinks slowly?
The selected operating mode does not correspond to the active operating mode because the control has not (yet) approved the change.

▶ Move the wheels into a position that will permit a change.
▶ Or select operating mode indirectly.

Troubleshooting

The function control on the button blinks fast?
There is a defect in the steering system. The operation of the button will be suppressed and an acoustic signal or an error message will be indicated on the display unit **225** if necessary.

▶ Remedy the error.

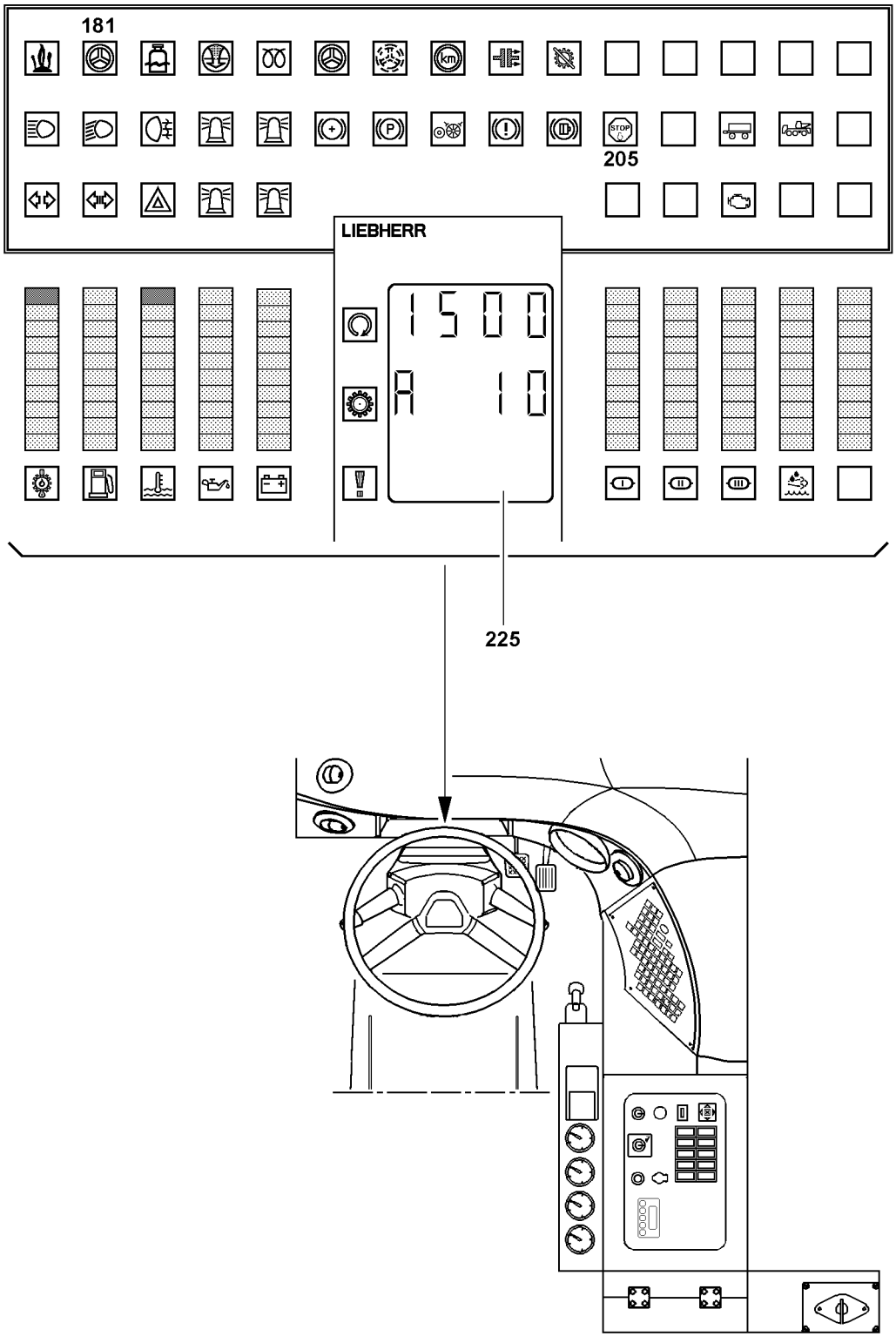

B116679

5.1.3 Indicator lights

The indicator light **181** shows the condition of the steering:

– The indicator light **181** lights up: Steering ok.
– The indicator light **181** blinks fast: Error in steering system with error code.
– The indicator light **181** blinks slowly: Error in the LSB bus connection.

DANGER

Danger of accident!

A defect in the steering will be indicated by the blinking indicator light **181** and fast blinking on all 5 buttons for the steering operating modes!

In addition, a signal sounds every 3 s!

The rear steering axles center and move automatically back to the 0° position!

If the vehicle is cornering at this time, this action will only take place when the crane changes direction!

The turning radius of the crane will be greater due to the 0° position of the rear steering axles!

▶ Changing operating modes is no longer possible!
▶ Ensure that only a short distance is travelled at a reduced speed and bring the vehicle to a stop as quickly as possible!
▶ Have problems remedied immediately by authorized, trained expert personnel!

▶ Set the ignition to “ON”.

Result:

– A bulb test will be carried out on the display unit and the keyboard.
– The indicator light **181** “Steering” will be off for a short period.

Note

▶ If no defect in the “Active rear axle steering” is signalled at the keyboard or display unit, then the crane may be driven!

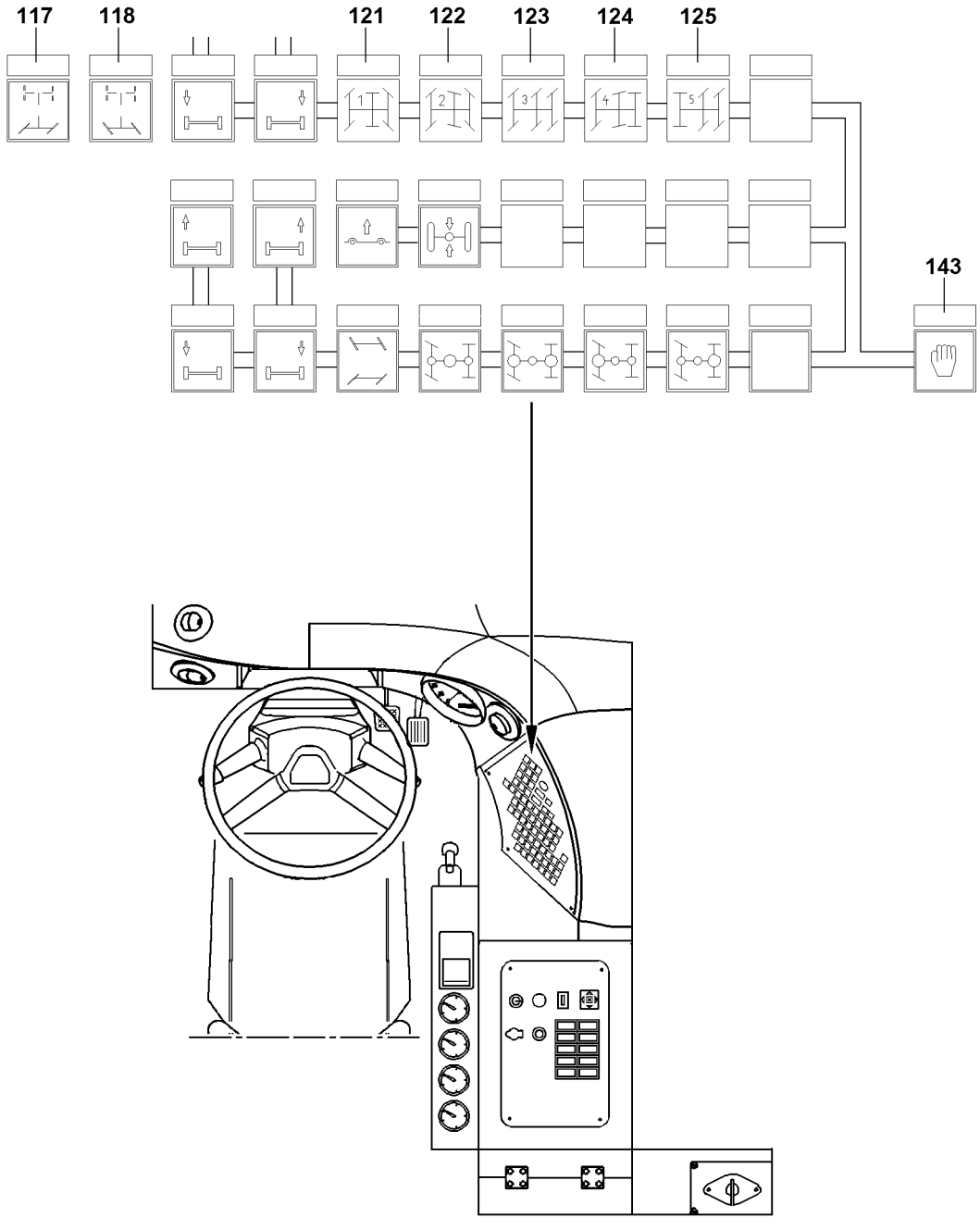

B116680

5.2 Changing between operating modes

5.2.1 Direct selection

Select the desired operating mode using the button **143** and the operating mode button. Turn the steering wheel until the wheels of the front axles go through the 0° position. The wheels of the rear axle will be automatically aligned. When the desired operating mode has been obtained, the indicator light on the operating mode button lights up continuously.

5.2.2 Indirect selection using the operating mode “Independent steering”

The operating mode can also be changed without changing the current steering effort of the wheels on the front axle. To do this, first select the operating mode “Independent steering”. When the “Independent steering” operating mode has been accepted, the button **143** and the desired operating mode button must both be pressed until the wheels of the rear axles have achieved their specified position. When the desired operating mode has been obtained, the indicator light on the operating mode button lights up continuously.

5.3 On-road driving

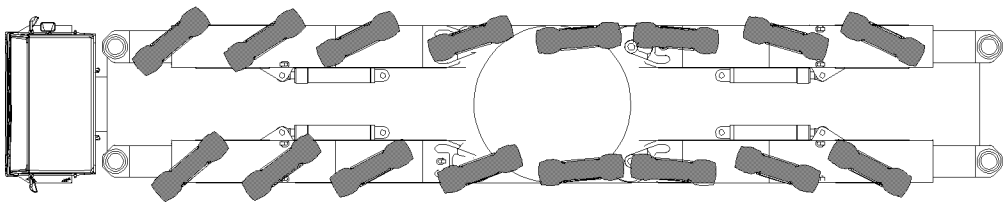

B108377

The “on-road driving” operating mode is the default setting. In this mode, the rear steering axles are steered depending on the steering deflection of the front axles. The steering angle reduces as the vehicle accelerates. Steering axles 3 and 4 are moved back to the 0º position when the speed reaches 30 km/h. Steering axle 5 is moved back to the 0º position when the speed reaches 60 km/h.

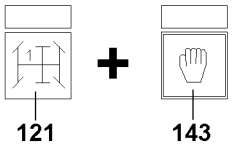

B197512

▶ Press button **143** and button **121**.

5.4 All wheel steering

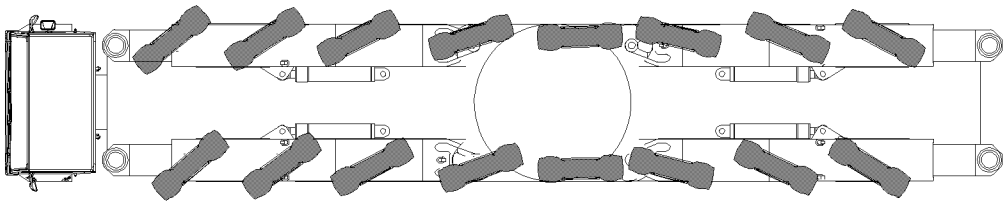

B108378

In the “All-wheel steering” operating mode, the rear steering axles are steered dependent on the steering effort of the front axles so that the vehicle attains as small a turn as possible.
The maximum driving speed is limited to 20 km/h.

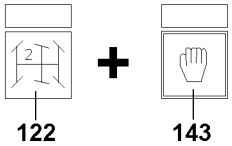

B197514

▶ Press button **143** and button **122**.

5.5 Crab steering

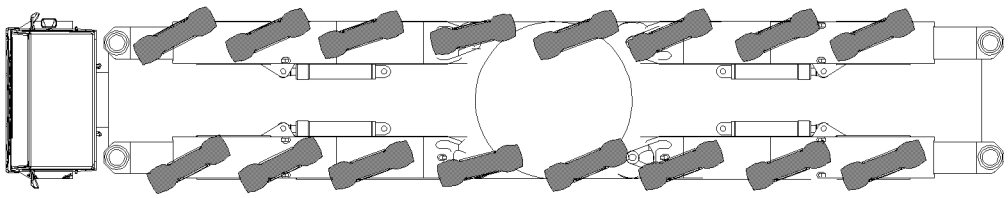
B108379

In the “Crab steering” operating mode, the rear steering axles are steered in the same direction as the front axles. The maximum steering effort of the rear steering axles is restricted by the maximum steering effort of the first rear steering axle.
The maximum driving speed is limited to 20 km/h.
The wheels could grind if the front axles are locked harder than the maximum possible angle of the rear steering axles. This is also dependent on weight distribution of the crane.

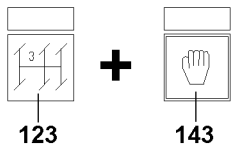

B197516

▶ Press button **143** and button **123**.

5.6 Reduced sheer out rate

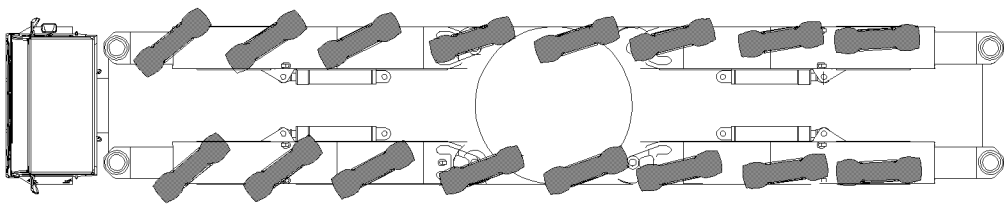
B108380

In the “Reduced sheer out rate” operating mode, the rear steering axles are locked depending on the front axles so that the sheer out rate of the rear of the vehicle is reduced to a minimum. This operating mode would typically be selected when driving away from the edge of a group of houses.
The maximum driving speed is limited to 20 km/h.
Only restricted turns are possible in this operating mode.

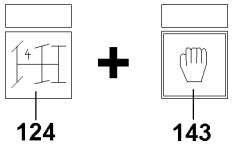

B197518

▶ Press button **143** and button **124**.

5.7 Independent steering

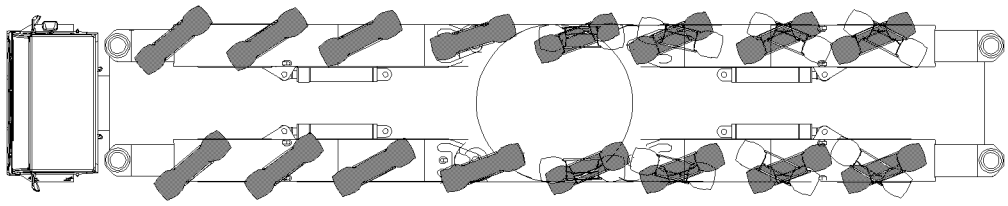
B108389

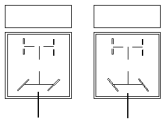

B197523

In the “Independent steering” operating mode, the rear steering axles are steered independent of the steering effort of the front axles using the key **117** and the key **118**. The rear steering axles lock in parallel if the front axles and the rear steering axles all lock in the same direction. For locks in the opposite direction, the steering axles are proportioned as for cornering. The “Independent steering” operating mode can be enabled in all wheel positions.
The maximum driving speed is limited to 20 km/h.

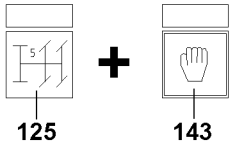

B197520

▶ Press button **143** and button **125**.

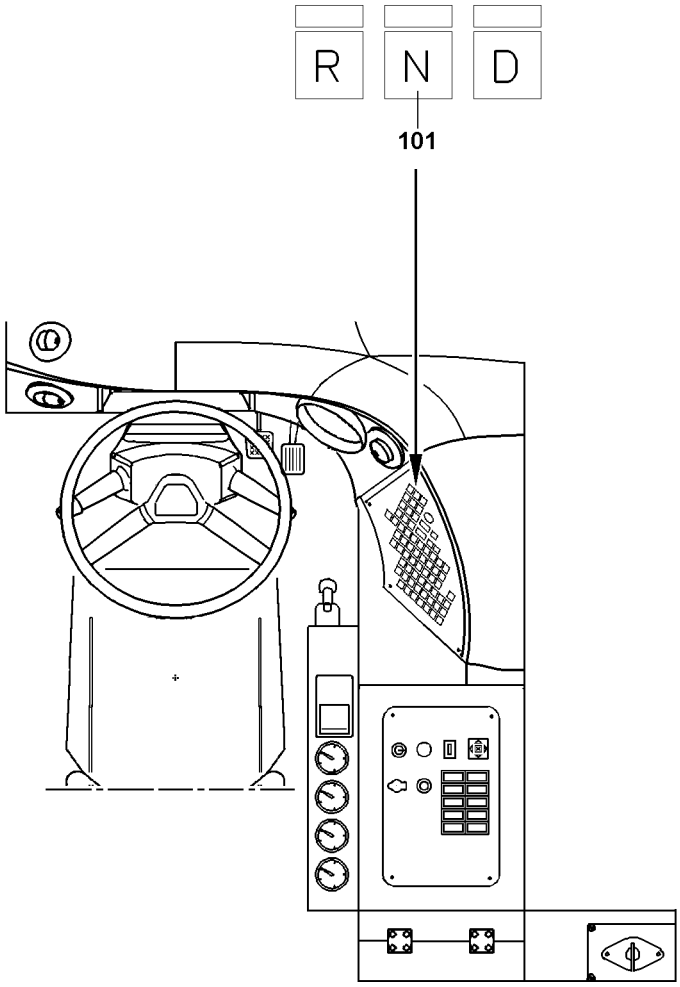

B107390

6 Towing

6.1 General towing regulations

The following towing regulations must be adhered to:

– For the towing procedure, release the parking brake or the brake system will be damaged.
– When towing, the speed must always remain below 20 km/h.
– Use the maneuvering coupling to tow the vehicle.
– Only tow with a tow bar.
– Turn on the hazard warning system and the headlight.

6.2 Towing with a defective engine and / or transmission

If the engine cannot be started, a compressed air supply must be established from the towing vehicle to the mobile crane. A hose coupling is attached at the front under the bumper to supply compressed air to the mobile crane to be towed.
Connect this connection for the external supply via a hose line with the towing vehicle.

DANGER
Danger of accident!

▶ The supply pressure of the compressed air brake system of the mobile crane to be towed must be at least 6 bar!
▶ With the engine turned off, the vehicle can only be steered from a speed of 5 km/h to 10 km/h!

▶ Shift the transmission with the travel range switch **101** to neutral position “N”.

6.3 Towing with an intact engine

6.3.1 Towing in case of damage on the distributor gear

▶ Disconnect the gear shafts from the distributor gear to the drive axles on the drive axles and tie them up.
▶ Shift the transmission with the travel range switch **101** to neutral position “N”.
▶ Allow the engine to run at idling speed.

6.3.2 Towing in case of damage to the drive axles

Only authorized and specially trained personnel can carry out towing arrangements in case of damage to the drive axles.

▶ Assign specially trained personnel to carry out this work.

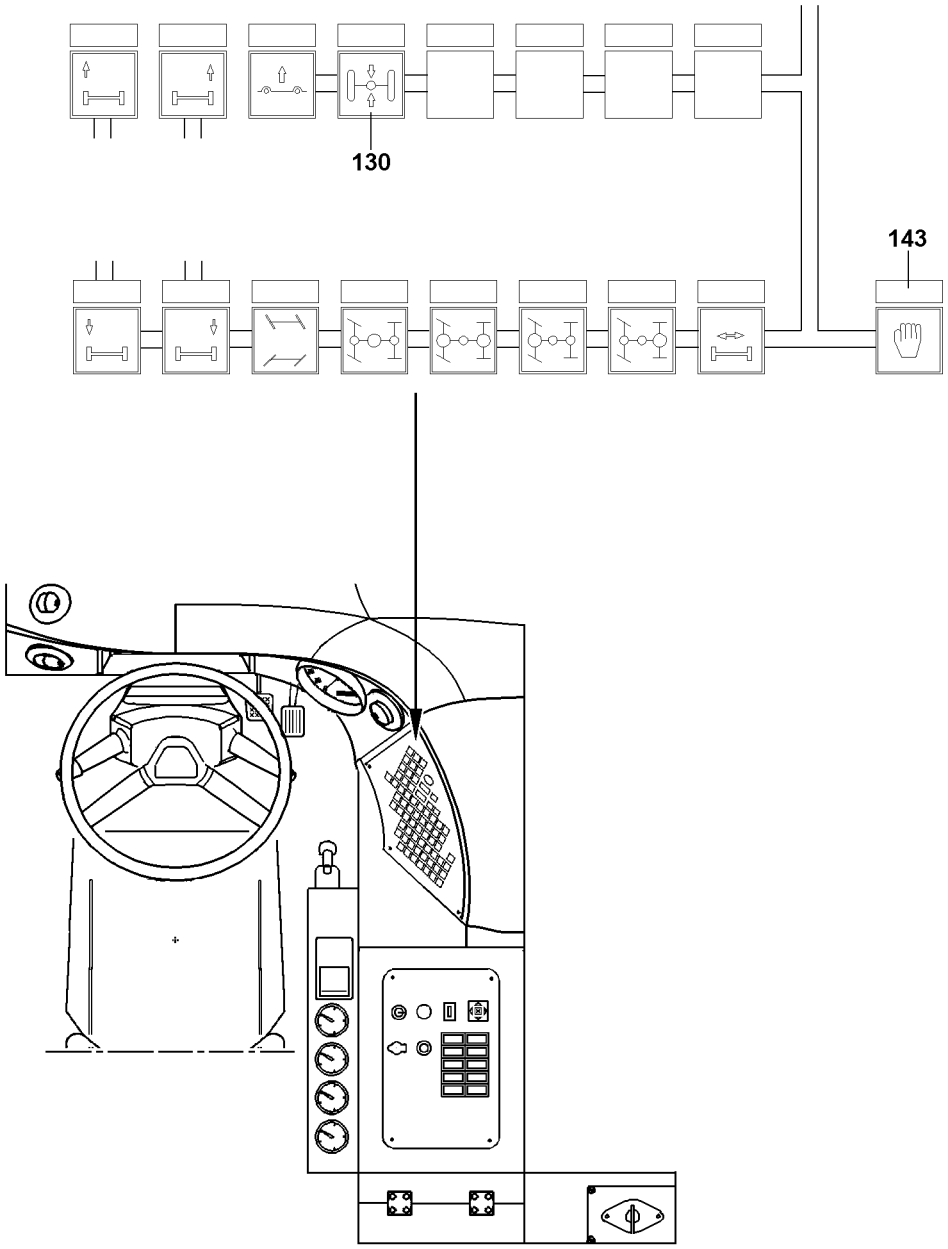

B108394

1 General

1.1 Selecting the operating location

Note

▶ Chapter 2.04, “Technical safety instructions” must be observed and complied with.

▶ Select the operating location for the crane in such a way that the supports can be extended to the support base specified in the load charts and the crane can be aligned horizontally.

1.2 Changing from travel mode to crane operation

Make sure that the following prerequisites are met:
– the crane is on a level and load-bearing surface,
– the parking brake is applied,
– the gear box is in neutral position “N”,
– the engine is running.

1.2.1 Blocking the axle suspension

The axle suspension must be blocked before the crane is supported.

▶ Press button **130** and button **143**.

Result:
– Function control on the button **130** lights up.
– The axle suspension is blocked.

▶ Extend the support cylinders and sliding beams.

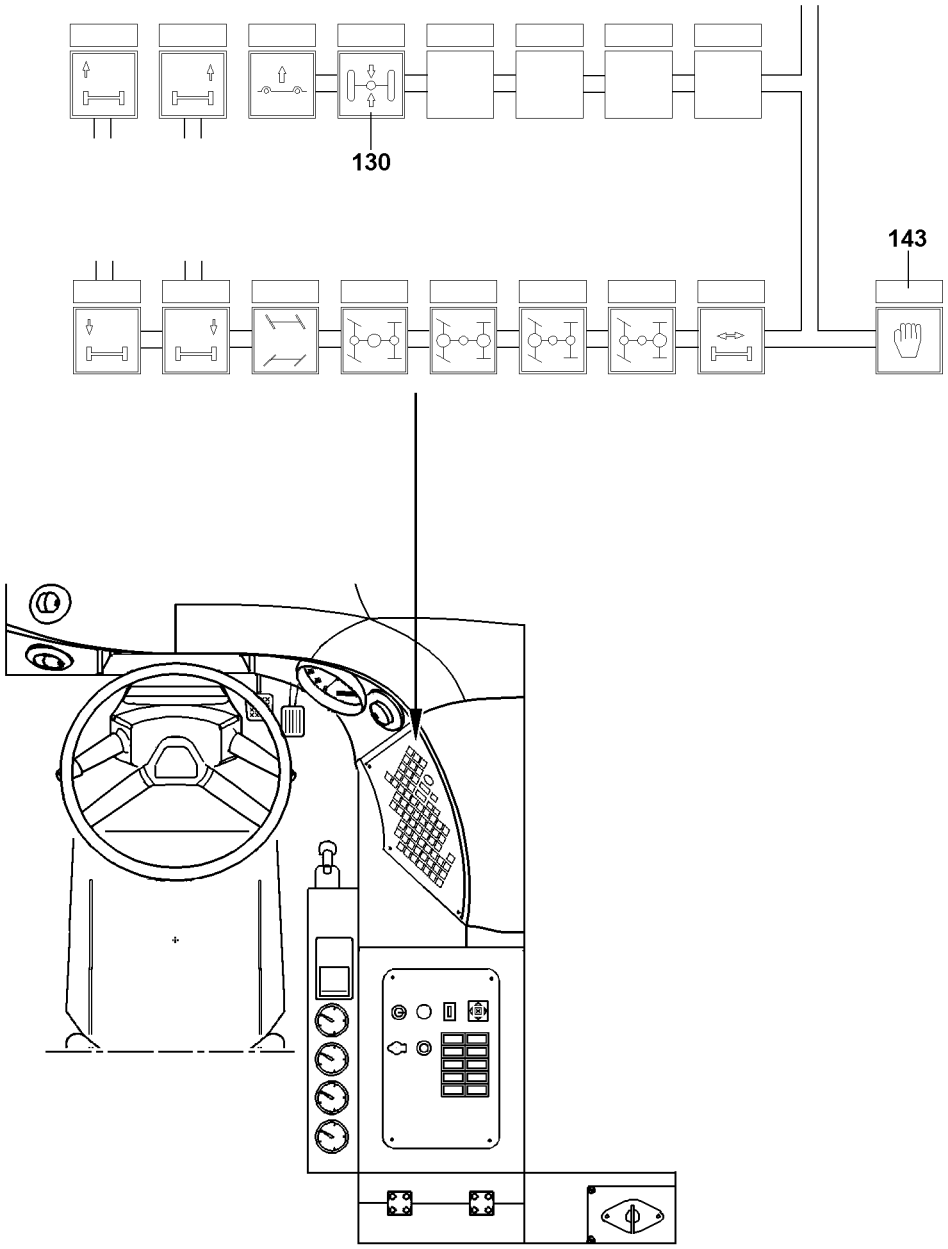

B108394

1.3 Changing from crane operation to travel mode

Make sure that the following prerequisites are met:
- the crane is supported and level,
- the wheels are not in contact with the ground,
- the axle suspension is blocked,
- the gear box is in neutral position “N”.

1.3.1 Turning the axle blocking off

WARNING
Risk of damage to axle suspension!
If the axle block is turned off without the wheels being in contact with the ground, then the axle suspension can be damaged if the axles drop down.
▶ Do not turn axle blocking off until all wheels are in contact with the ground.

▶ Retract support cylinders until all wheels are in contact with the ground.
▶ Press button **130** and button **143**.

Result:
- The function control on the button **130** turns off.
- The axle suspension is active.

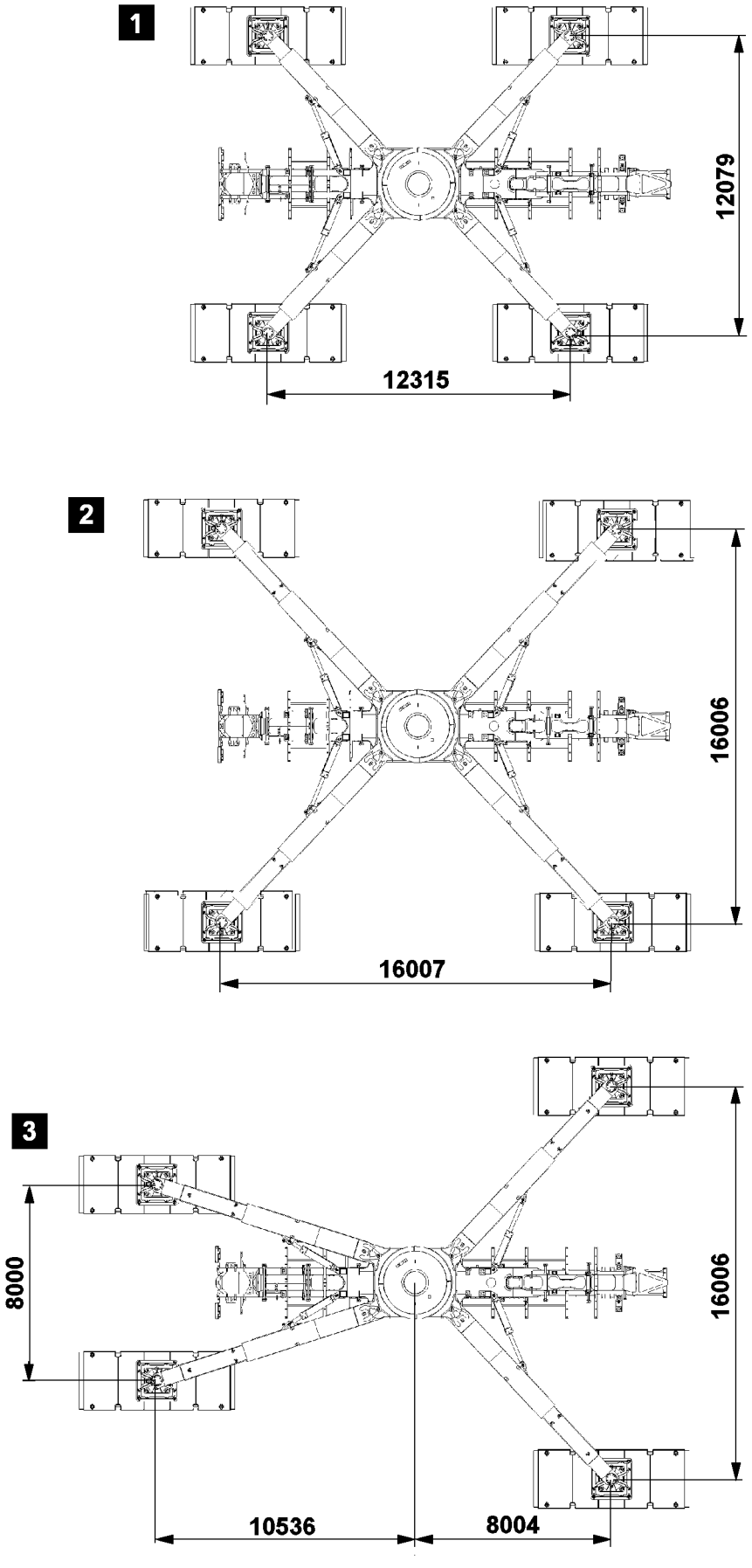

B198599

2 Crane support

2.1 General

The hydraulic crane support consists of:
– Center section with receptacles for support beams
– 4 folded-out support beams with support and slewing cylinders
– Support plates
– Base plates

Support base	
Reduced (illustration 1)	12.315 m x 12.079 m
Wide (illustration 2)	16.007 m x 16.006 m

WARNING
The crane can topple over!
The support base “illustration 3” is prohibited for crane operation!
This support base “illustration 3” may only be used for raising and lowering long booms!
If this is not observed, the crane can topple over!
▶ Use support base “illustration 3” for raising and lowering long booms!!

▶ Use support base “illustration 1” or “illustration 2” for crane operation.

Note
▶ Bring support beams behind after erecting on the required support width of 16 m, see crane operating instructions chapter 3.06.

▶

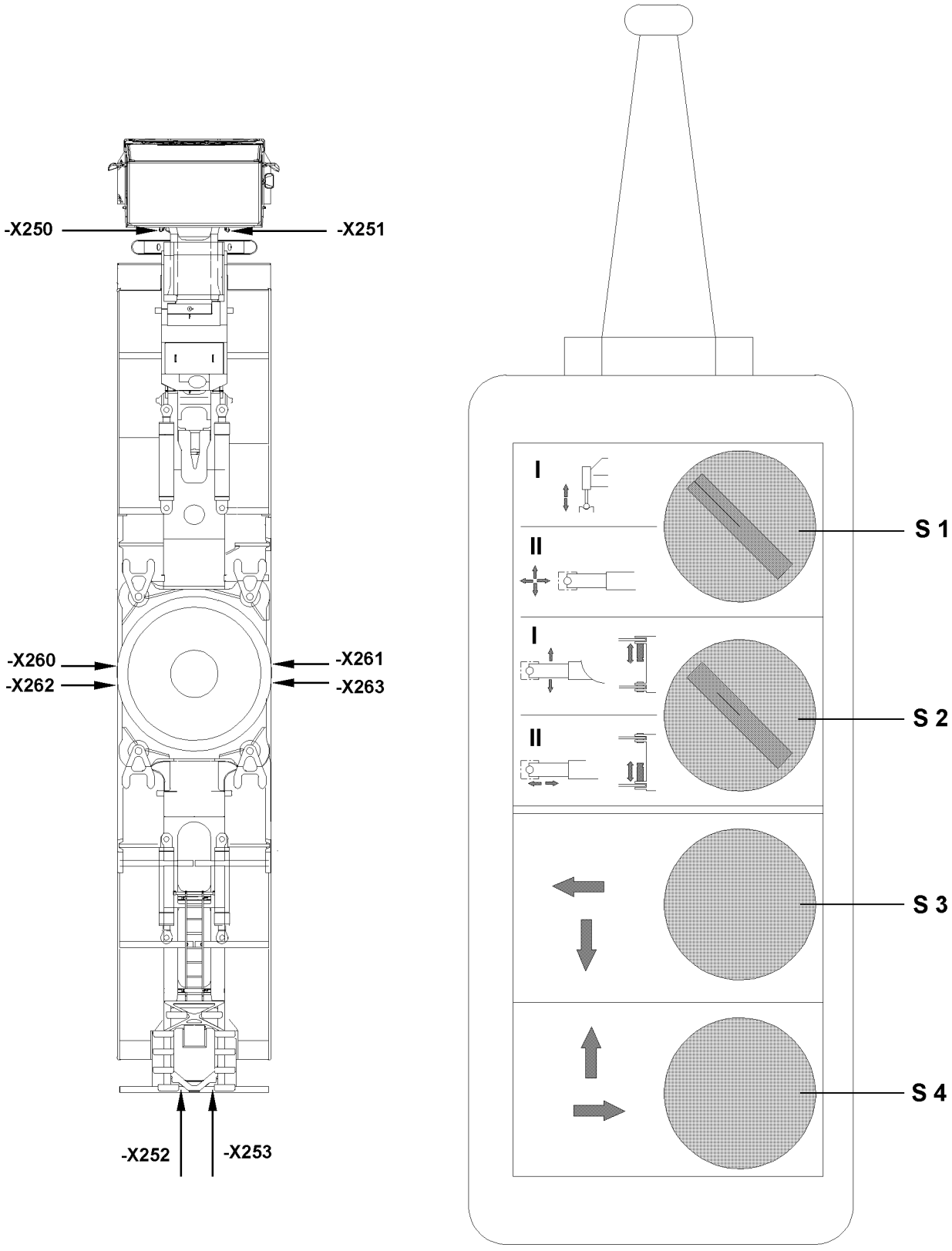

B196250

2.2 Operating remote control panel

Note

- ▶ Swinging the support beams out or in to approx. 10° is only possible with the remote control panel. After the remote control panel has been connected to a socket, the support control units on the left and right on the vehicle frame are no longer active. The pressure supply is set to approx. 10 bar.
- ▶ Only one support beam can be actuated respectively with the remote control panel. During support, it can only be fixed, extended and slewed. Lifting the crane with the remote control panel is not possible.

2.2.1 Extend / retract the support cylinders

Ensure that the following prerequisite is met:

– the remote control panel is plugged in a socket **-X250** up to socket **-X253**.

▶ Set switch **S1** to position 1.

▶ Actuate the switch **S3**.

Result:

– Support cylinder extends.

▶ Actuate the switch **S4**.

Result:

– Support cylinder retracts.

2.2.2 Swing the support beam out / in

Ensure that the following prerequisite is met:

– the remote control panel is plugged in a socket **-X250** up to socket **-X253**.

▶ Set switch **S1** to position 2.

▶ Set switch **S2** to position 1.

▶ Actuate the switch **S3**.

Result:

– Support beam swings in.

▶ Actuate the switch **S4**.

Result:

– Support beam swings out.

2.2.3 Extend / retract sliding beam

Ensure that the following prerequisite is met:

– the remote control panel is plugged in a socket **-X250** up to socket **-X253**.

▶ Set switch **S1** to position 2.

▶ Set switch **S2** to position 2.

▶ Actuate the switch **S3**.

Result:

– Sliding beam extends.

▶ Actuate the switch **S4**.

Result:

– Sliding beam retracts.

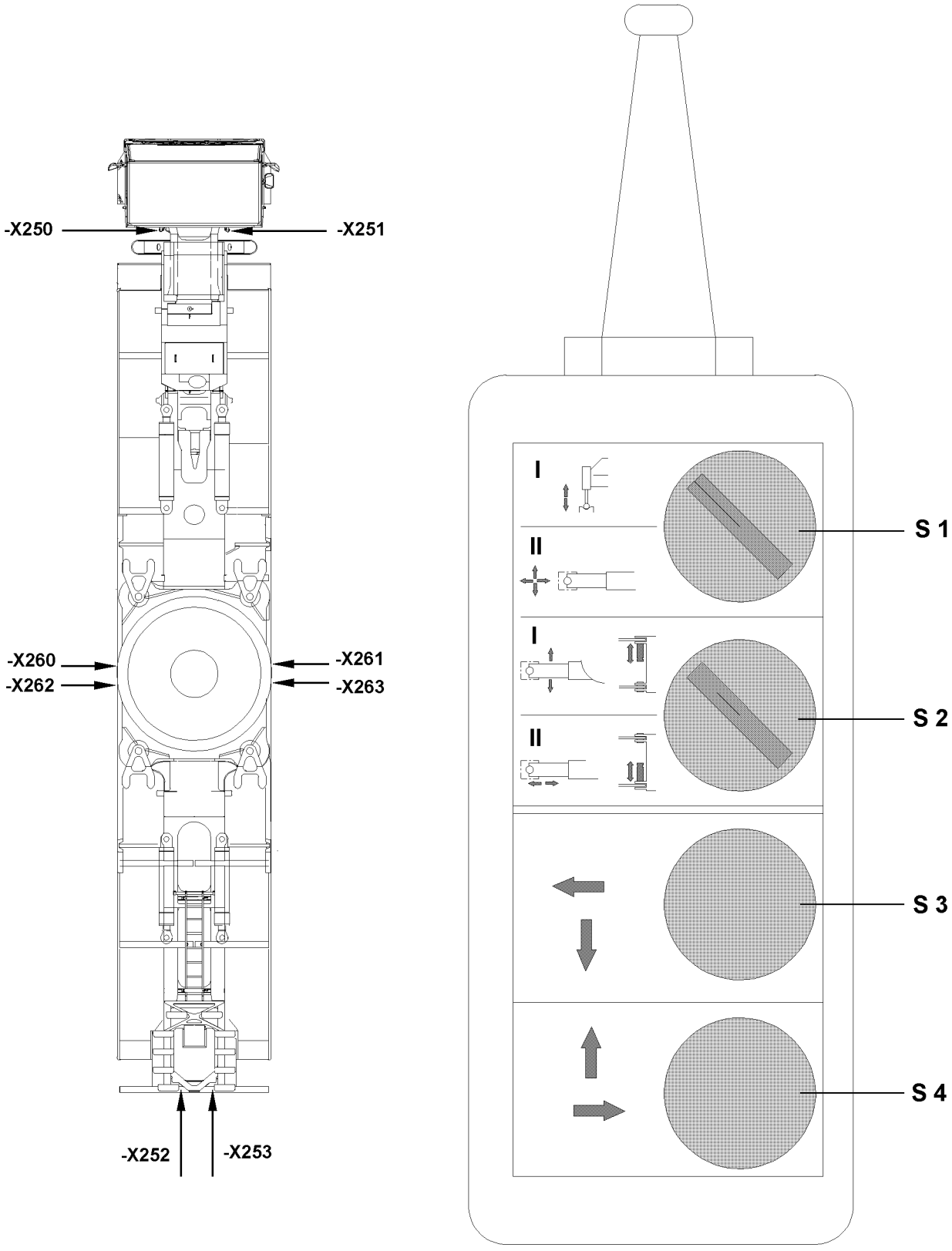

B196250

2.2.4 Pin / unpin the support beams ON TOP

Ensure that the following prerequisite is met:
– the remote control panel is plugged in a socket **-X260** up to socket **-X263**.

▶ Set switch **S1** to position 2.
▶ Set switch **S2** to position 1.
▶ Actuate the switch **S3**.

Result:
– Support beam is pinned on top.

▶ Actuate the switch **S4**.

Result:
– Support beam is unpinned on top.

2.2.5 Pin / unpin the support beams on the bottom

Ensure that the following prerequisite is met:
– the remote control panel is plugged in a socket **-X260** up to socket **-X263**.

▶ Set switch **S2** to position 2.
▶ Actuate the switch **S3**.

Result:
– Support beam is unpinned on bottom.

▶ Actuate the switch **S4**.

Result:
– Support beam is pinned on bottom.

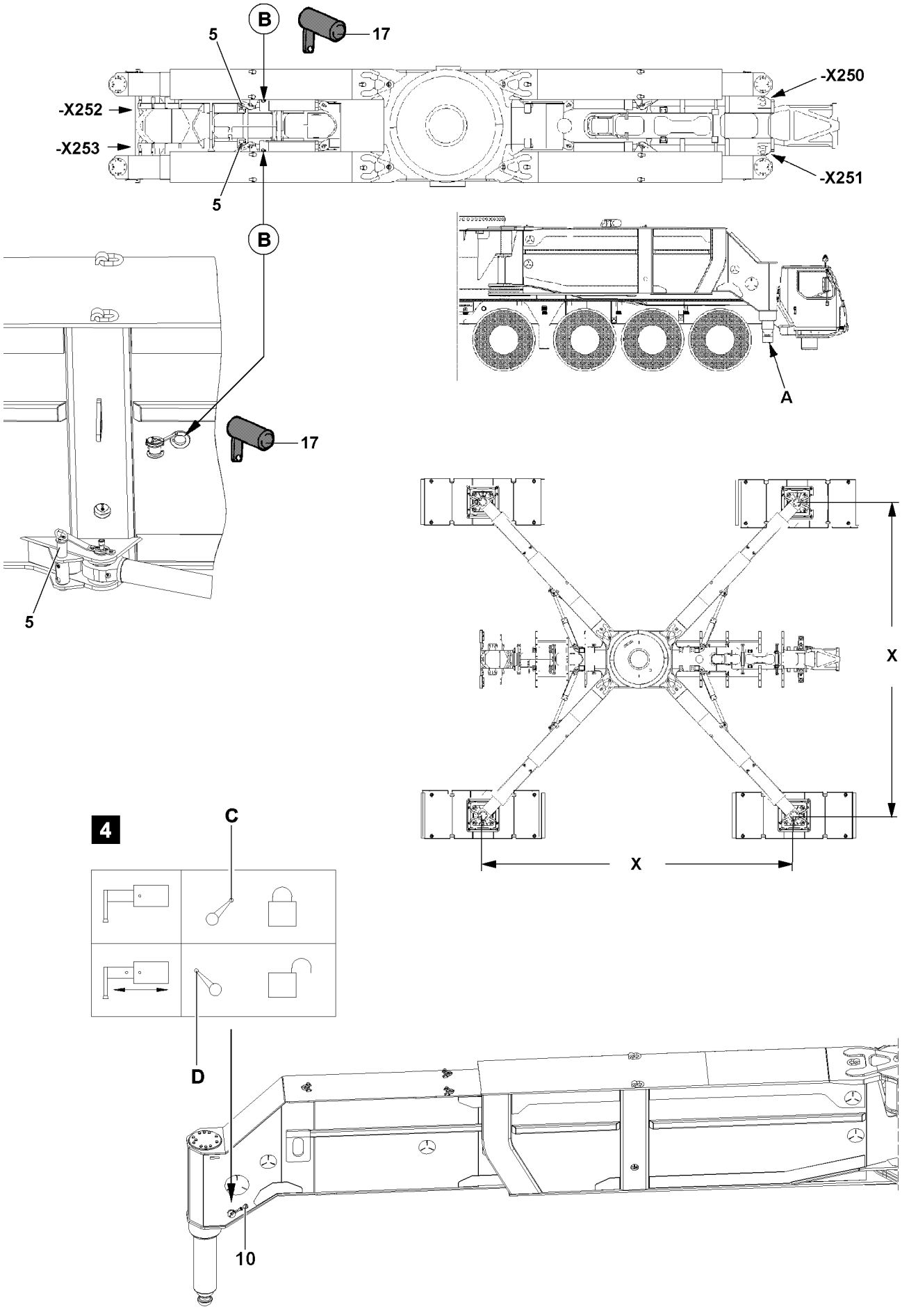

B108399

2.3 Swing the support beam out

WARNING
Risk of accident!
- ▶ No persons or objects may be found in the danger zone!
- ▶ The operator must monitor the swinging out / swinging in of the support beams!

Note
- ▶ The slewing cylinders **3** have a stop position damping and therefore travel very slowly shortly before the stop position.
- ▶ Observe colored markings on the bottom chord of the support beam!
- ▶ If the slewing area is greater than 10°, then activation of the sliding beams sliding out / sliding in takes place and support cylinder extending / retracting at the support control unit on the vehicle.

Ensure that the following prerequisite is met:
– the support beams are in transport position,
– the support beams are pinned in transport position with the pins **17** on the points **B** and pinned with the pins **5**.

2.3.1 Swing out support beam forward

- ▶ Plug in remote control panel forward left at socket **-X250** or right at socket **-X251**.
- ▶ Retract support cylinder until it is found outside the calotte **A**.
- ▶ Swing out support beam with the remote control panel onto the corresponding support base.

2.3.2 Swing out support beam to the rear

- ▶ Plug in remote control panel left rear at socket **-X252** or right at socket **-X253**.
- ▶ Release and unpin both pins **5**.
- ▶ Swing out support beam with the remote control panel onto the corresponding support base.

2.3.3 Extending sliding beams

WARNING
Risk of accident!
- ▶ No persons or objects may be found in the danger zone!
- ▶ The operator must monitor the extension / retraction of the sliding beams!
- ▶ The sliding beam must be secured again manually with the levers **10** against extending / retracting!
- ▶ Set all four levers **10** to position **C**, and pin sliding beams, see illustration **4**!
- ▶ Do not support in intermediate positions!

- ▶ Secure both pins **17** at the points **B**, unpin and place into transport retainer.
- ▶ Set all levers **10** to position **D**, see illustration **4**.

Result:
– All sliding beams are unpinned.

- ▶ Extend the sliding beam to the corresponding support base.
- ▶ Set all levers **10** to position **C**, see illustration **4**.

Result:
– All sliding beams are repinned and secured.

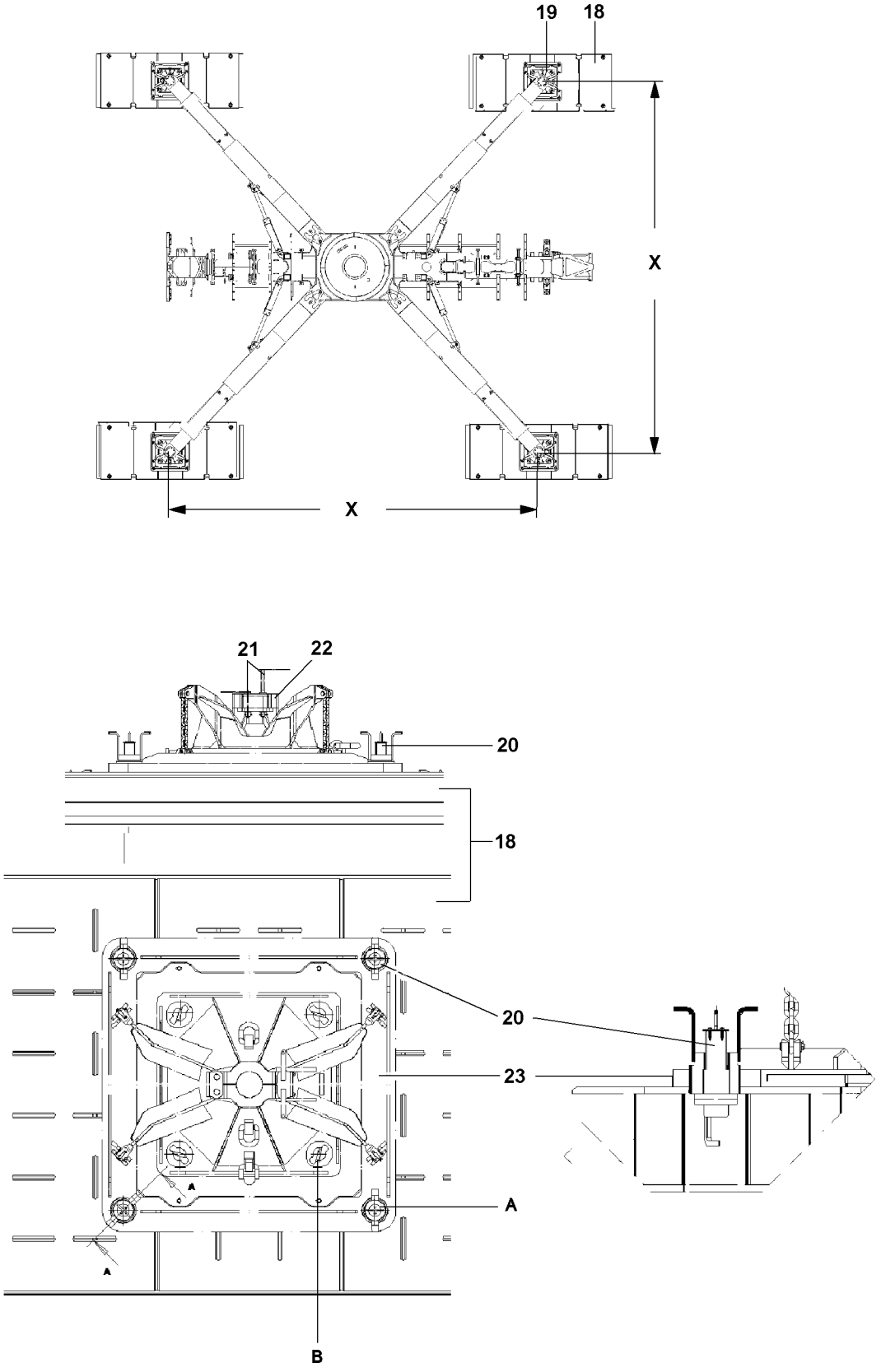

B196253

2.3.4 Support pads

The support pads **19** can be used without and with the base plates **18**. By using the base plates **18**, the support surface is increased and the support pressure is reduced.

Type of plates	Weight
Support pad	1.2 t
Support pad with base plate	8.0 t

The support pads **19** consist of a revolving steel frame **23** and a welded on steel plate. A plastic plate is screwed thereon. In this way, a support plate can glide 120 mm to each side.
The steel frame **23** is layed on the base plate and locked with 4 socket pins **20**. The support plate has 3 eyes, two are symmetrical and one arranged off center for vertical transport.

CAUTION
Damage to the support plates!
If the support plates **19** for support without the base plates **18** is used, the subsoil must be correspondingly load bearing, so that the power is transferred over the dimensions of the support plates **19** onto the subsoil.
If the subsoil is deformed, the frame or glide plate is bent.
▶ During support with support plates **19** observe a correspondingly load-bearing subsoil!

Installing the support pads on the support cylinder

WARNING
Risk of accident!
▶ Ensure that no persons or objects are within the danger zone when extending / retracting the support cylinder!

▶ If the base plates **18** are used:
Place the base plates **18** on the subsoil with an auxiliary crane.

DANGER
The crane can topple over!
If the support pads **19** and the base plates **18** are not centered under the support cylinders, then the crane can sink in and topple over!
▶ Place the support pads **19** and base plates **18** in the center under the support cylinders!
▶ Place the support plates **19** in such a way on the base plates **18** that the bores of the support plates **19** and the base plates **18** align!
▶ During crane operation, the support plates **10** may **not** be pinned with the base plates **11**!

▶ Place the support pads **19** in the center on the base plates **18**.
▶ Attach steel frame **23** on the base plates **18** with pins **20** and secure.
▶ Place the base plates **18** on the necessary support base with an auxiliary crane.

or

If no base plates **18** are used:
■ Place the support pads **19** on the ground.
▶ Release and unpin the pin **21**.
▶ Open the clamps **22**.
▶ Retract support cylinder into the support plates **19**.
▶ Close the clamps **22**.
▶ Pin the clamps **22**: Pin in and secure pin **21**.

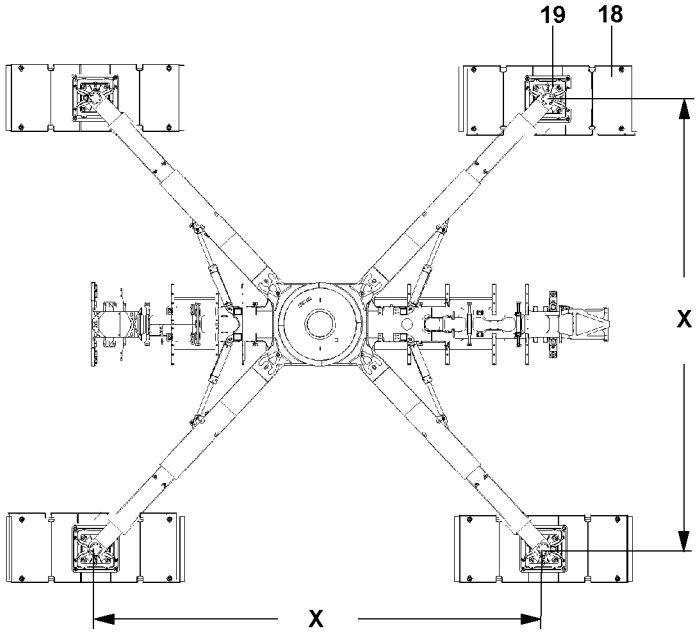

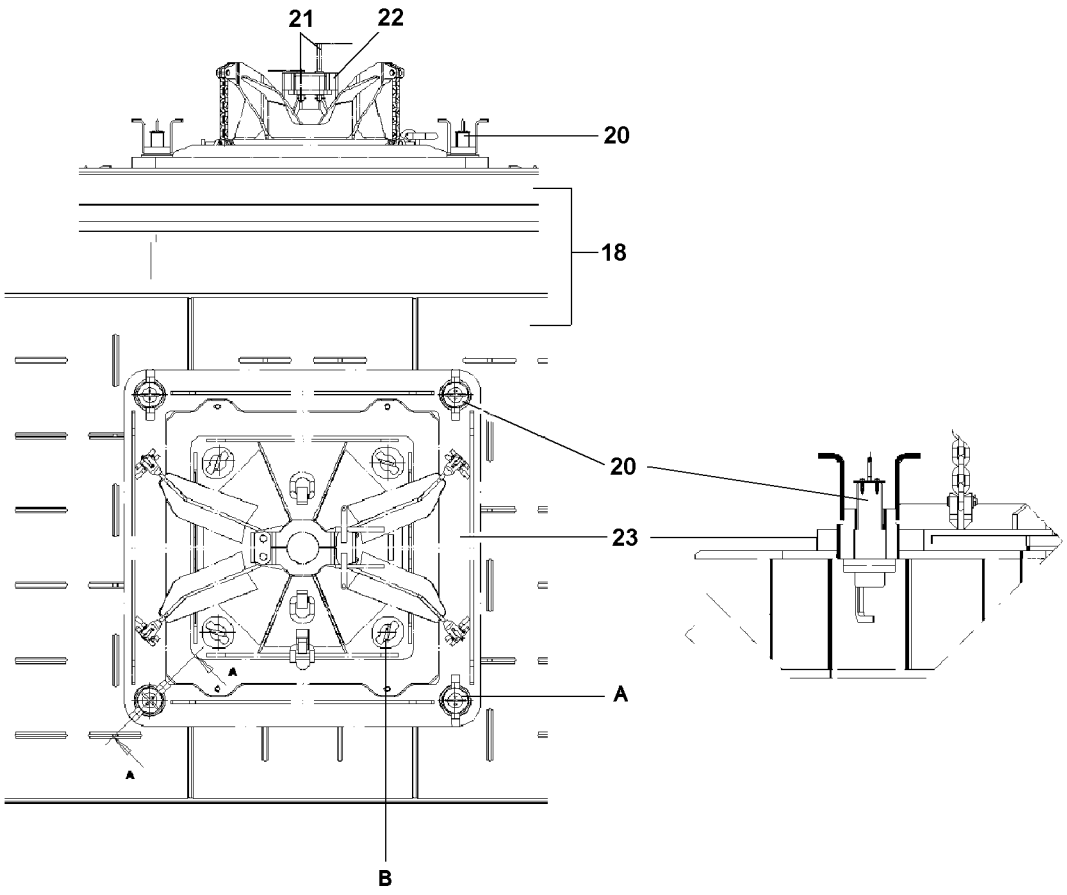

B196253

Driving with base plates

DANGER
The crane can topple over!
The support pads **19** must be pinned while “driving in equipped condition”, absolutely securely with the base plates! Thereby, the crane can support itself in case it tips.
- ▶ Before “driving in equipped condition” pin the support pads with the base plates!
- ▶ During crane operation, the support plates **19** may **not** be pinned with the base plates **18**!

- ▶ Pin all support plates **19** with all base plates **18**: Unpin pins **20** on the steel frame **A** and pin in support pad **B**, turn by 90° and lock.

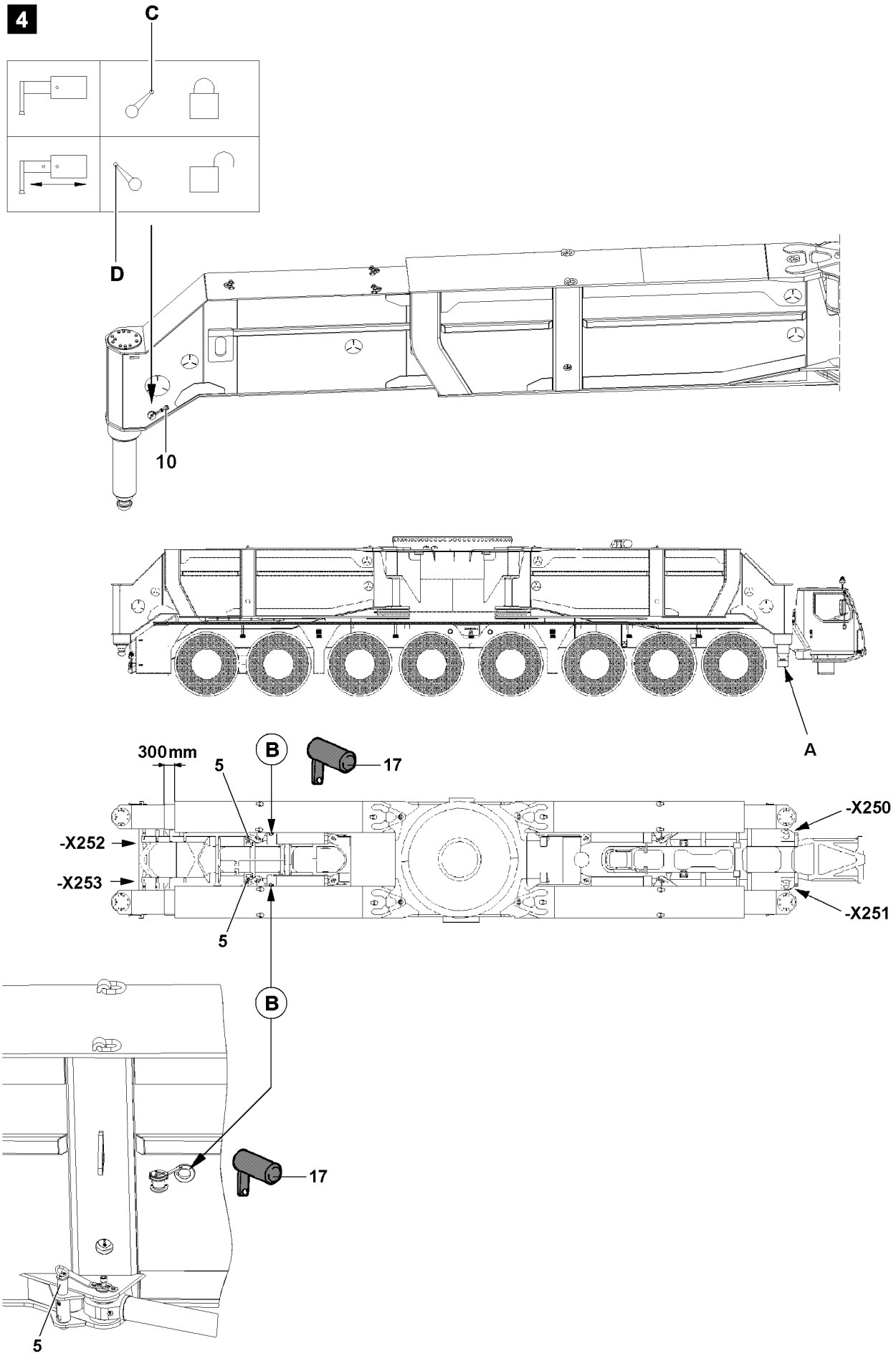
4
C
D
10
A
300 mm
5
B
17
-X250
-X252
-X253
-X251
5
B
17
5
B108400

2.4 Swing in the support beam

WARNING
Risk of accident!
- ▶ No persons or objects may be found in the danger zone!
- ▶ The operator must monitor the swinging out / swinging in of the support beams!

2.4.1 Swing in support beam forward into transport position

- ▶ Plug in remote control panel forward left at socket **-X250** or right at socket **-X251**.
- ▶ Set both levers **10** to the sliding beams forward into position **D**, see illustration **4**.

Result:
– Both sliding beams forward are unpinned.

- ▶ Completely retract sliding beams forward individually, see section “operating remote control panel”.
- ▶ Completely swing in sliding beams forward individually, see section “operating remote control panel”.
- ▶ Secure support beams forward, see also extend support cylinder into the calotte **A**.
- ▶ Set both levers **10** to the sliding beams forward into position **C**, see illustration **4**.

Result:
– Both sliding beams are pinned and secured forward.

2.4.2 Swing in support beam rear into transport position

- ▶ Plug in remote control panel left rear at socket **-X252** or right at socket **-X253**.
- ▶ Set both levers **10** to the sliding beams backward into position **D**, see illustration **4**.

Result:
– Both sliding beams backward are unpinned.

- ▶ Completely retract sliding beams backward individually, see section “operating remote control panel”.
- ▶ Completely swing in sliding beams backward individually, see section “operating remote control panel”.

WARNING
Risk of accident!
The support beams backward on both sides must be secured with pins **5** to prevent them from swinging out.
Before the crane may be driven on public roadways, the two sliding beams must be extended backward 300 mm into “transport position”.
The sliding beams behind must be securely secured on both sides into “transport position” with the pins **17** against extracting.
- ▶ Pin in the pins **5** at both sides and secure sliding beams against swinging out.
- ▶ Pin in the pins **17** on both sides and secure sliding beams against extending.

- ▶ Pin in both pins **5** and secure.
- ▶ Extend support beams backward 300 mm into “transport position”.
- ▶ Pin in and secure both pins **17** inside at the points **B**.

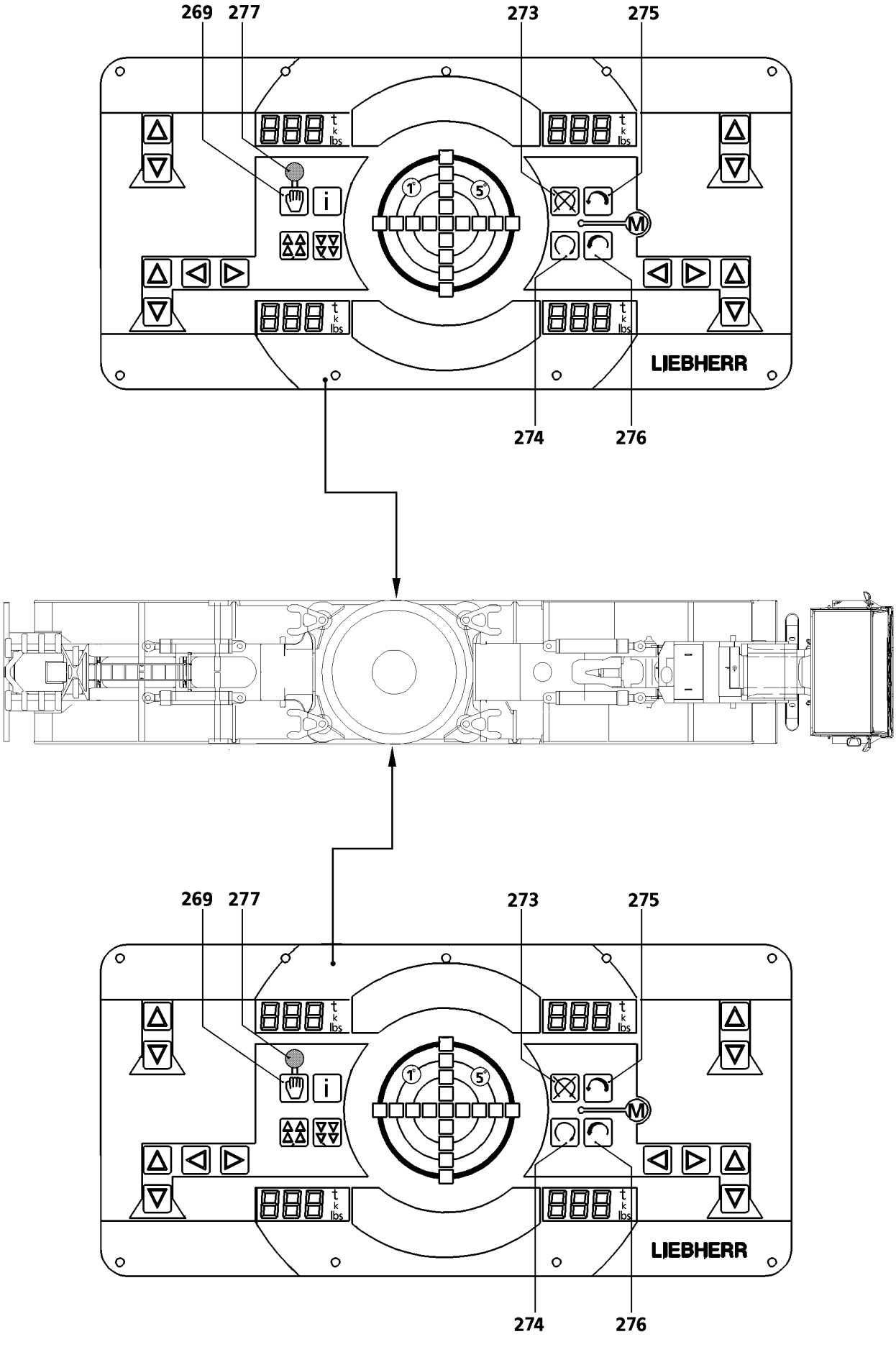
269
277
273
275
LIEBHERR
274
276
269
277
273
275
LIEBHERR
274
276

B108395

3 Support control unit

3.1 General

The crane may be supported by support control units on the chassis as well as from the cab of the crane.
A support control unit (switch box) with buttons is attached to both sides of the vehicle for operating the support.

DANGER
Risk of fatal injury!
If the crane is not supported with the support base according to the load chart, or if the incorrect load chart is entered into the LICCON overload system, then the crane can topple over and fatally injure personnel!

- ▶ Set the corresponding load chart for the respective support base in the LICCON overload protection!
- ▶ Support the crane with the support base according to the load chart!
- ▶ The support pads must be supported in accordance with specifications!

– The support beams are swung out with the remote control panel onto the corresponding support base.
– The remote control panel is unplugged.

▶ Turn the ignition on.
▶ Press support control unit release **269**.

Result:
– All buttons and the green LED **277** “support control unit release” illuminate.
– The support control unit is activated.
– The release goes off if no other key is pressed for 120 s or if the support control unit release **269** is pressed again.
– Deactivation of the support control unit is indicated by the button flashing and the green LED **277** going off.

▶ The engine can be started using the button **274** or turned off using the button **273**. The engine RPM can be varied during the supporting procedure using the button **276** and the button **275**.

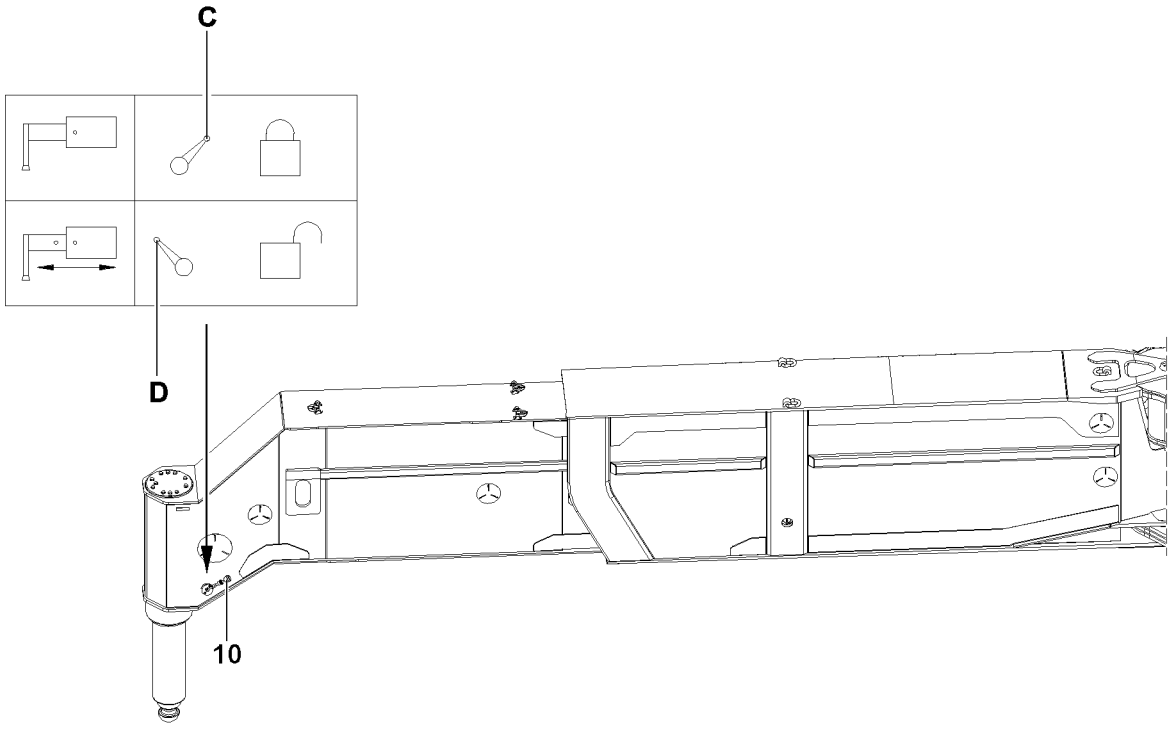

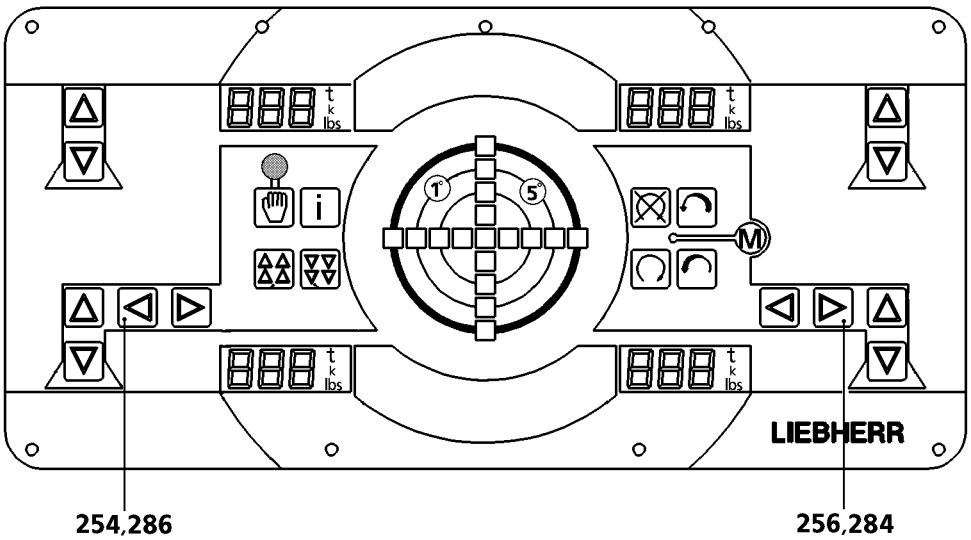

B108396

3.2 Extend sliding beam with support control unit

The sliding beams on the left side of the vehicle can only be operated using the support control unit attached at this side.
The sliding beams on the right side of the vehicle can only be operated using the support control unit attached at this side.

DANGER
Danger of fatal injury when extending and retracting the sliding beams!
- ▶ The operator must monitor the extending and retracting of the sliding beams.
- ▶ Ensure that there are no persons or objects in the danger zone when the sliding beams are being extended and retracted.

▶ Set all four levers **10** on the sliding beam into position **D**.

Result:
– All sliding beams are unpinned.

Extend sliding beams to the support foundation specified in the load chart.
- ▶ Left support control unit: Press button **254** and button **256**.
- ▶ Right support control unit: Press button **284** and button **286**.

DANGER
The crane can topple over!
The crane may topple over if the following conditions are not met.
- ▶ The sliding beams must be pinned to prevent movement of the bearing surfaces after positioning!
- ▶ Lock all lever **10** into position **D**!
- ▶ Do not support in intermediate positions!

▶ Set all 4 levers **10** into position **D**.

Result:
– All 4 sliding beams are pinned and secured against extending / retracting.

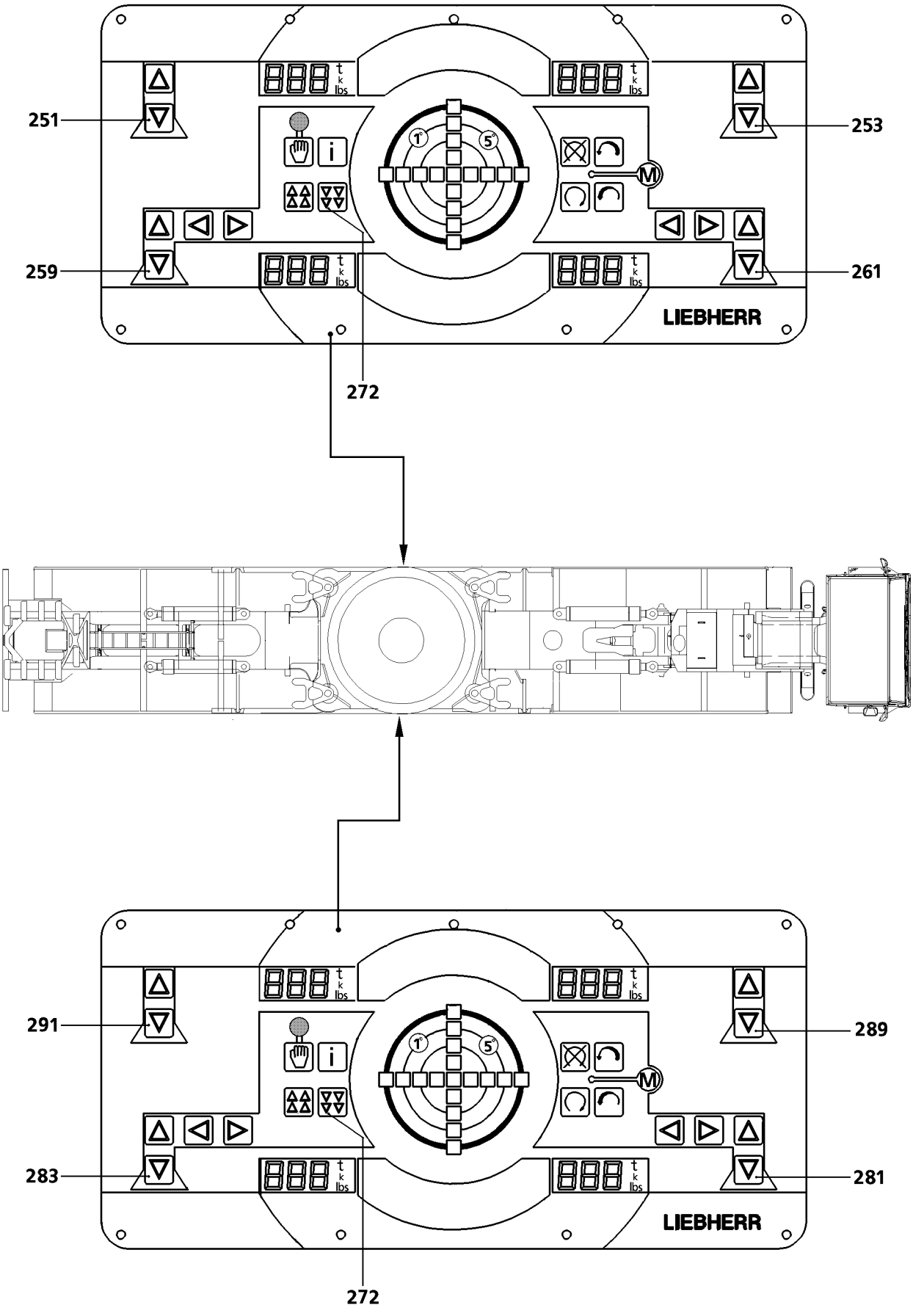

B108397

3.3 Extending support cylinders with support control unit

DANGER
Danger of accident when supporting!
- ▶ Ensure that there are no persons or objects present in the danger zone when the support cylinders are being extended and retracted.
- ▶ Raise the crane until the wheels are no longer touching the ground.
- ▶ Do not extend the support cylinders all the way during crane operation (up to stop position)! Retract fully extended support cylinders again by at least 10 mm.

Ensure that the crane has been lifted so that the wheels are no longer touching the ground.

3.3.1 Supporting manually

Supporting the crane

Extend individual support cylinders evenly by pressing the relevant buttons and support the crane.
The support cylinders initially move at minimum speed and accelerate to maximum speed after 2.5 s.
- ▶ Left support control unit: Press button **251**, button **253**, button **259** and button **261**.
- ▶ Right support control unit: Press button **281**, button **283**, button **289** and button **291**.

Aligning the crane horizontally

DANGER
Danger of accidents due to toppling of the crane!
If the crane is not aligned horizontally, it may tip over.
- ▶ Ensure that crane is level.
- ▶ The maximum permitted deviation from the horizontal position is 0.5 % (0.3 °).

- ▶ Extend and retract individual support cylinders until the innermost light emitting diode (LED) lights up.

Result:
– The crane is horizontal.

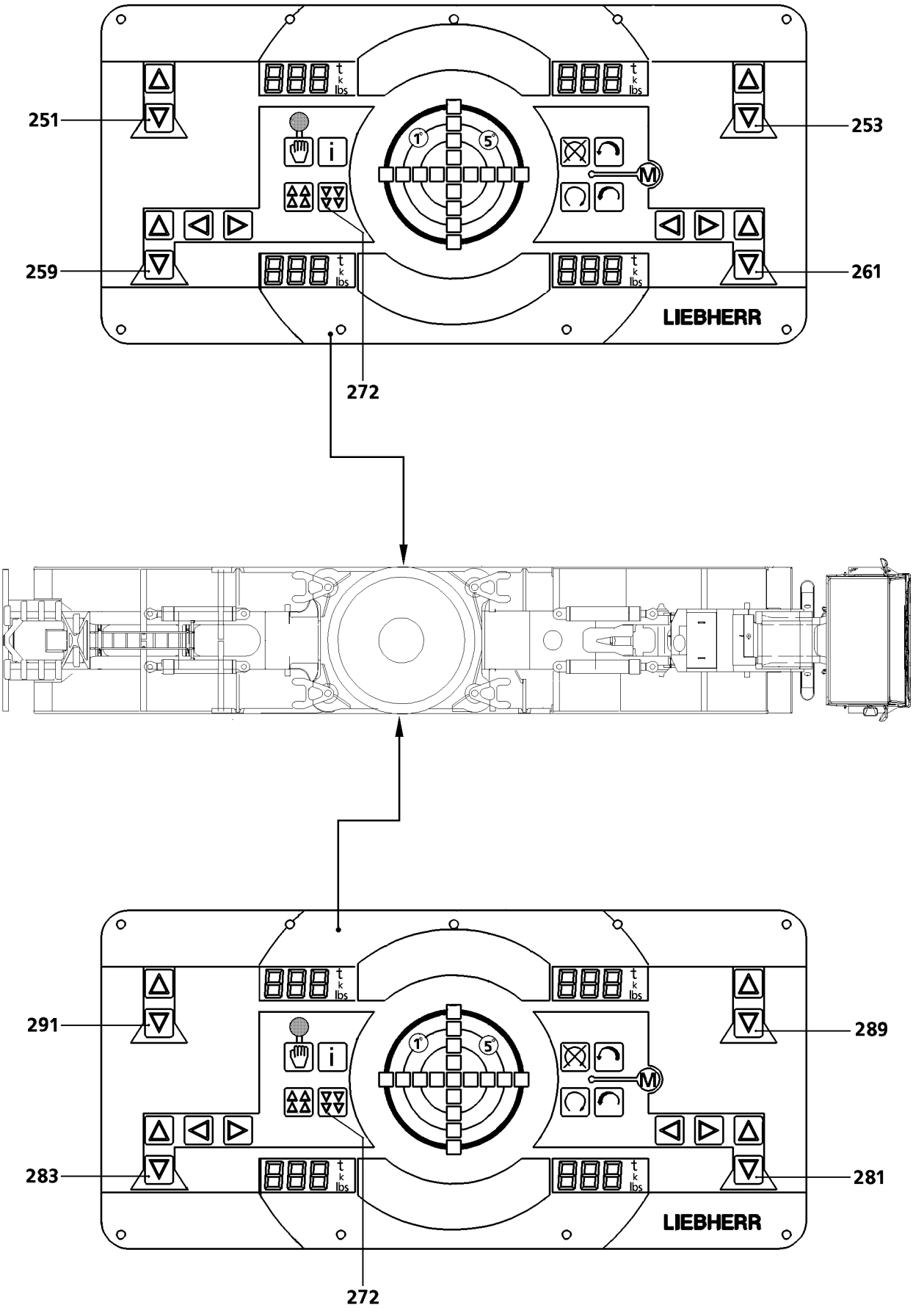

B108397

3.3.2 Supporting automatically

DANGER
Risk of accident!
When the automatic support is operated the crane is levelled automatically.
▶ Ensure that the alignment is within the permitted tolerance and that all four support pads are touching the ground.

As long as the chassis is leaning (5° range) the support cylinders are actuated at approximately three-quarter speed. The speed is reduced to 50% when the 1° range is reached.
▶ Press button **272**.

Result:
– All support cylinders are extended.
– The crane is aligned horizontally.

3.3.3 Checking the supports

In order to minimize the accident risk, the extension conditions and the following safety regulations must be adhered to.

DANGER
Danger of fatal injury if crane falls over!
The load suspended on the hook causes tension and deformation of the hoist rope and boom (also applies to auxiliary boom and guy ropes, if operated). If the load drops from the tackle ropes in this situation, or if the tackle or hoist rope breaks, a sudden relief occurs. The boom snaps back quickly. If only the sliding beams at the load side are extended, the crane could topple over.
Another situation may occur when it becomes necessary to slew the load to the opposite side. If only the sliding beams on the load side are extended, the crane could topple over.
When rotating out of the longitudinal vehicle direction, the boom or counterweight momentum could tip over the crane unless all four sliding beams are extended.
▶ Always extend all 4 sliding support beams, i.e. also on the side opposite the load.

▶ Check the extension conditions.
▶ Make sure that all four sliding support beams have been extended.

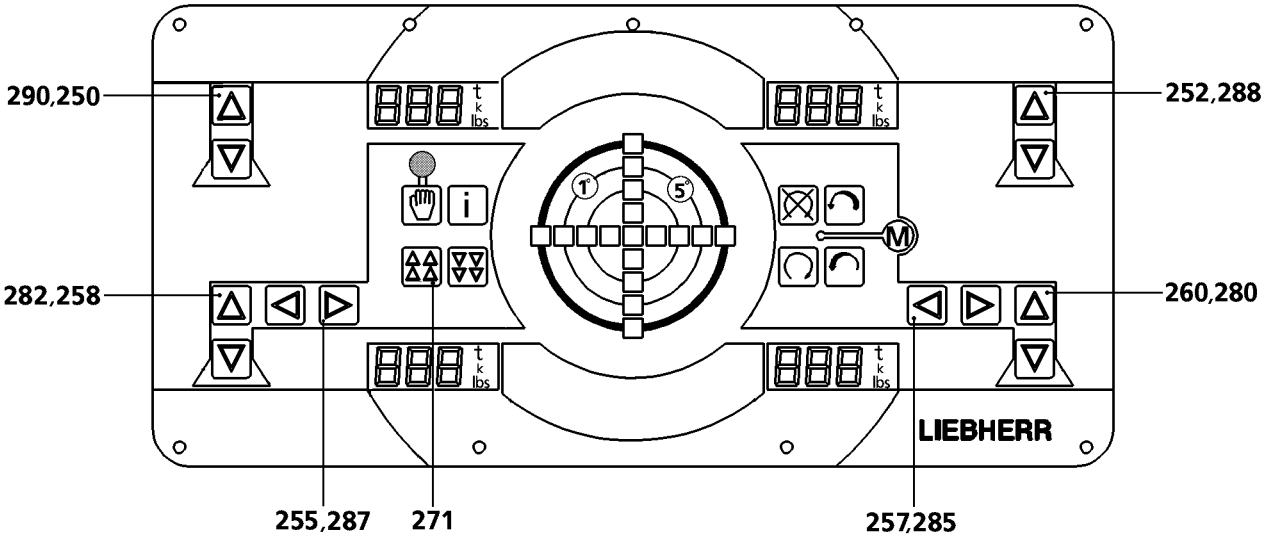
290,250
252,288
282,258
260,280
255,287
271
257,285
LIEBHERR

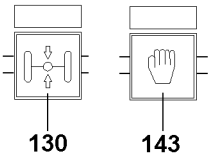
130
143

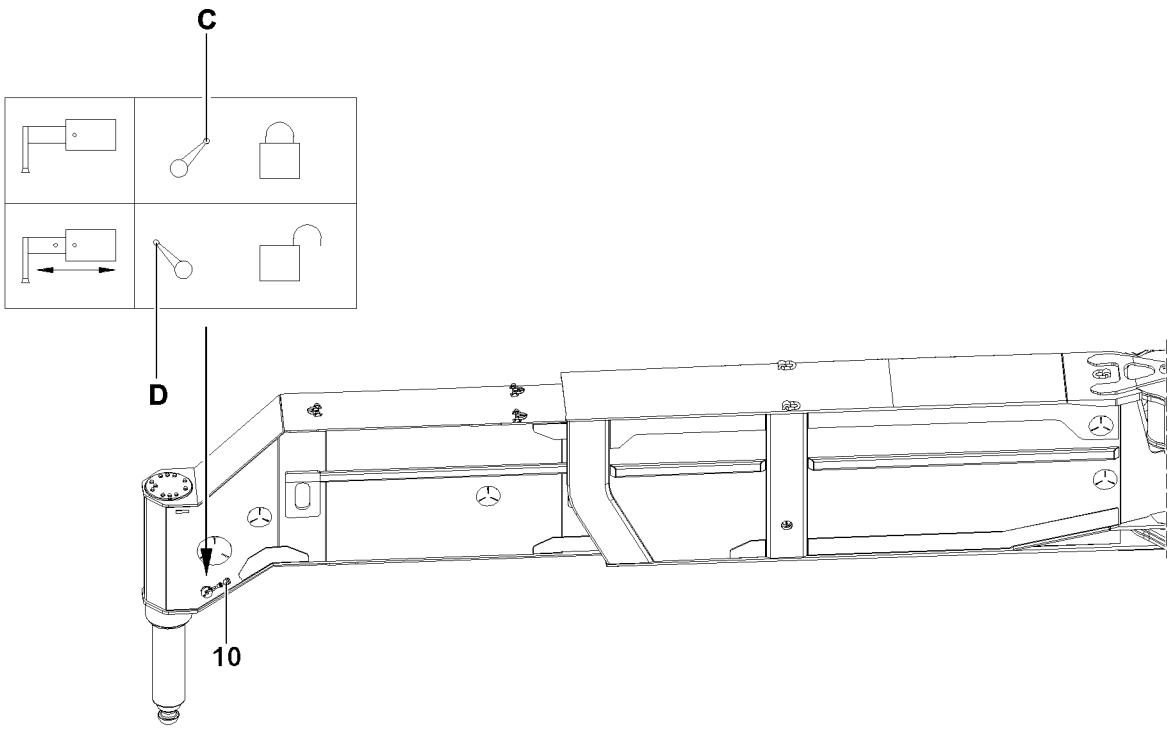
C
D
10

B108398

3.4 Retracting support cylinders with support control unit

DANGER
Danger of injury when extending and retracting the support cylinders!
▶ Ensure that there are no persons or objects in the danger zone.

▶ Start the engine.

Evenly retract the support cylinders by pressing the relevant buttons until the wheels are touching the ground.
▶ Left support control unit: Press button **250**, button **252**, button **258** and button **260**.
▶ Right support control unit: Press button **280**, button **282**, button **288** and button **290**.

or

If all support cylinders are to be retracted together:
■ Press button **271** until all wheels are in contact with the ground.

WARNING
Risk of damage to axle suspension!
If the axle block is turned off without the wheels being in contact with the ground, then the axle suspension can be damaged if the axles drop down.
▶ Do not turn axle blocking off until all wheels are in contact with the ground.

▶ Press button **130** and button **143** and turn off axle locking.
▶ Retract all four support cylinders all the way.

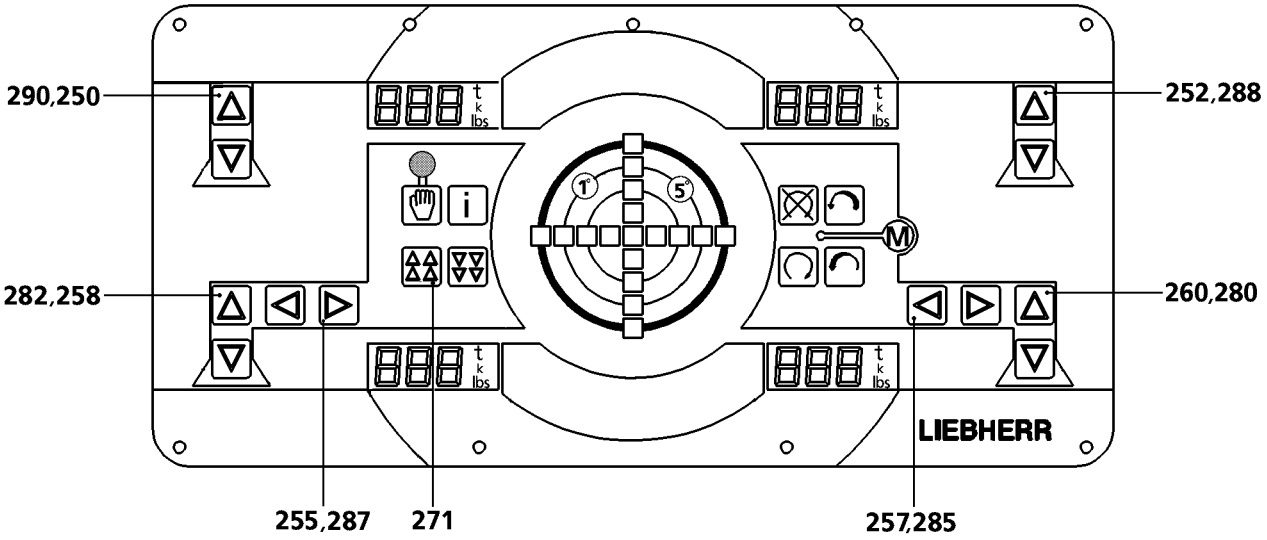
290,250
252,288
282,258
260,280
255,287
271
257,285
LIEBHERR

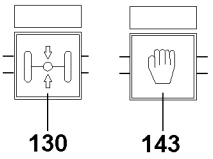
130
143

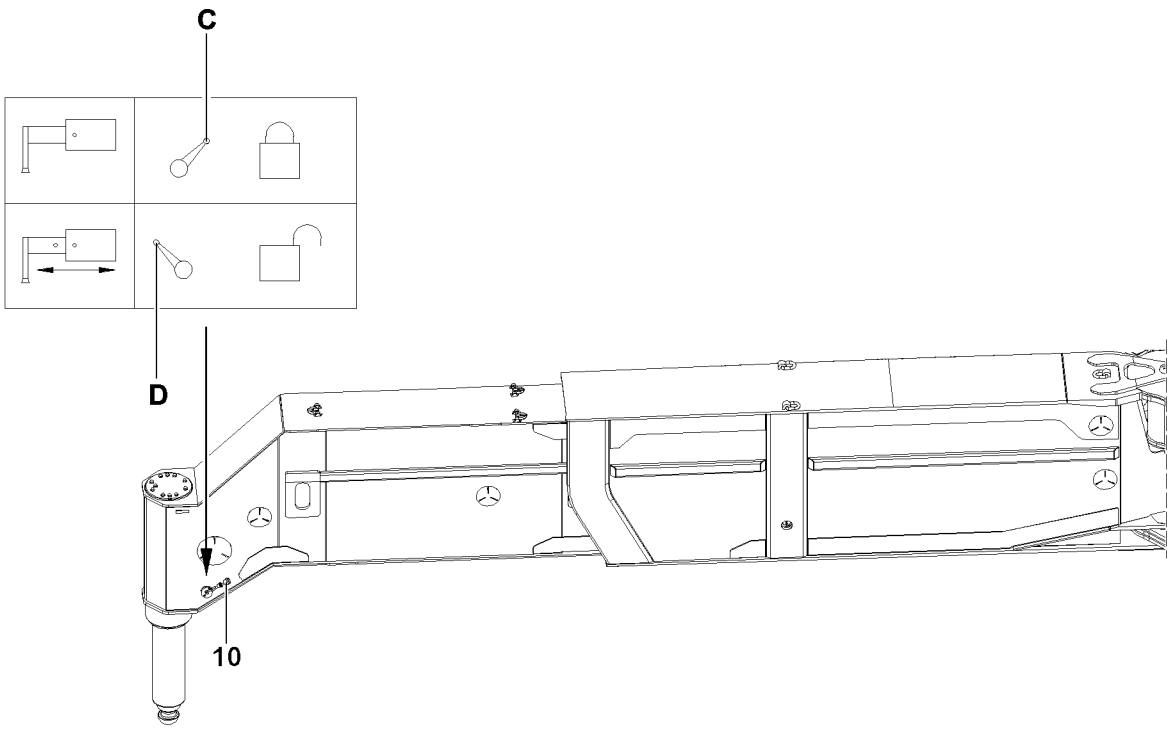
C
D
10

B108398

3.5 Retracting sliding beams with support control unit

The sliding beams on the left side of the vehicle can only be operated using the left support control unit.
The sliding beams on the right side of the vehicle can only be operated using the right support control unit.

DANGER
Danger of injury when extending and retracting the sliding beams.
- ▶ Only operate the sliding beams that you can see.
- ▶ Ensure that there are no persons or objects in the danger zone.

▶ Set all four levers **10** on the sliding beam into position **D**.

Result:
– All sliding beams are unpinned.

▶ Left support control unit: Press button **255** and button **257**.

Result:
– The sliding beams at the left side of the vehicle are retracted individually.

▶ Right support control unit: Press button **285** and button **287**.

Result:
– The sliding beams at the right side of the vehicle are retracted individually.

▶ Set all 4 levers **10** into position **D**.

Result:
– All 4 sliding beams are pinned and secured against extending.

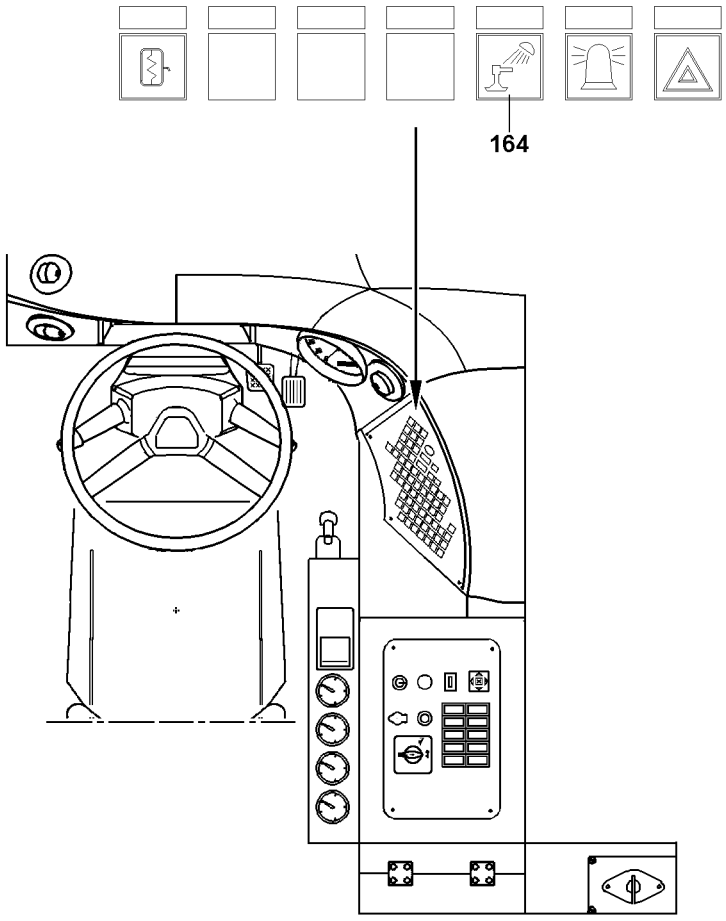

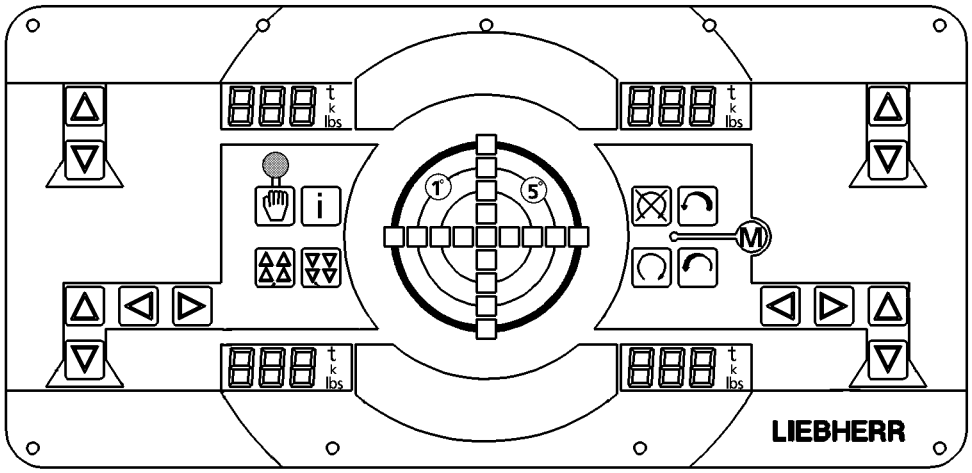

B198130

3.6 Turning the sliding beam illumination on

At a speed of more than 3 km/h, the sliding beam illumination is blocked.
The sliding beam illumination is also turned off and blocked if the engine is turned off. However, the “automatic sliding beam illumination active / inactive” status is noted.

3.6.1 Manual

Make sure that the following prerequisites are met:
– the engine is ON,
– the vehicle is stationary.

▶ Press key **164** on the keyboard.

Result:
– Sliding beam illumination is turned off or on.

3.6.2 Automatic

Make sure that the following prerequisites are met:
– the vehicle is in support mode (transmission in neutral “N” and key pressed on the support control unit),
– the engine is ON,
– the vehicle is stationary.

▶ Press any key on the support control unit.

Result:
– The sliding beam illumination is turned on.

Troubleshooting
Can sliding beam illumination not be turned on automatically?
If sliding beam illumination has been automatically turned on and then turned off in the chassis using the key **164** on the keyboard, automatic sliding beam illumination has been deactivated.
▶ Turn sliding beam illumination on again using the key **164** on the keyboard. The automatic sliding beam illumination is active again.

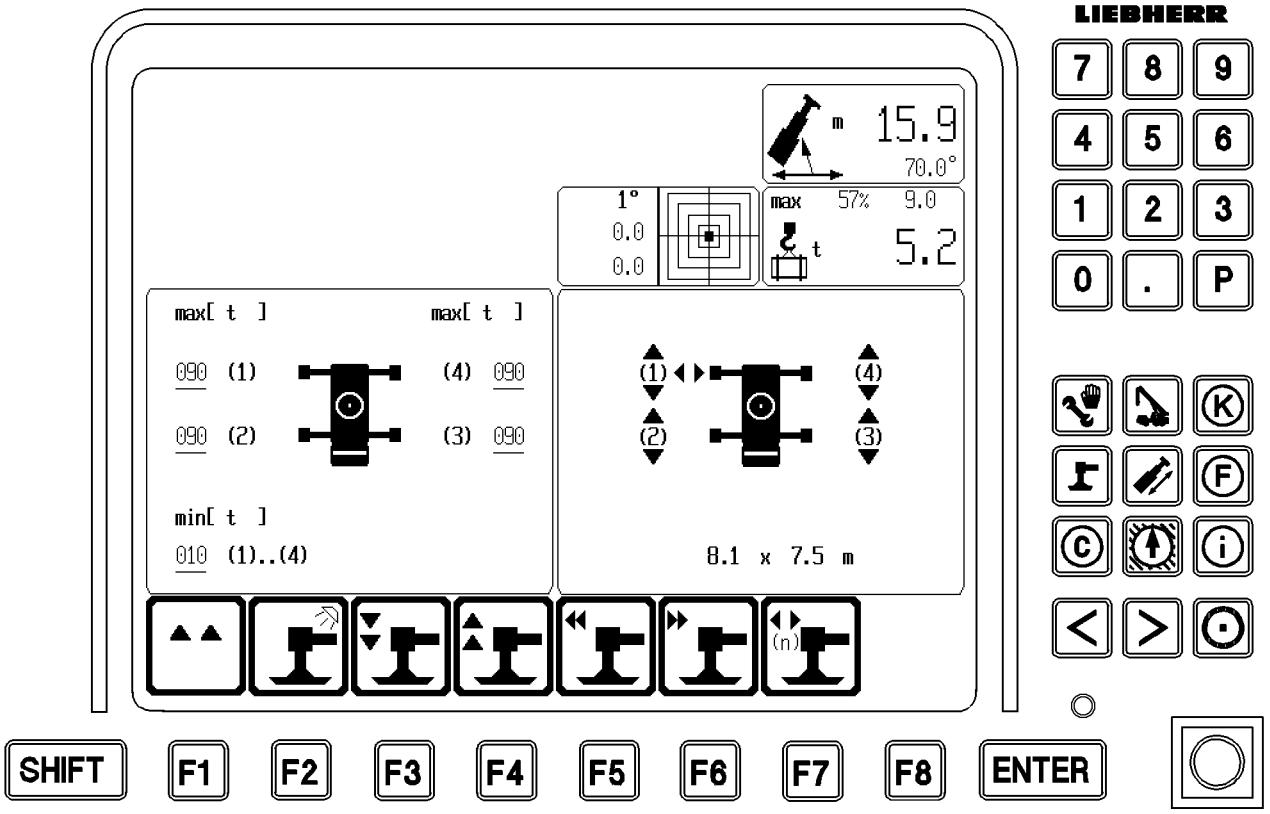
LIEBHERR
m 15.9
70.0°
1°
0.0
0.0
max 57% 9.0
t 5.2
max[t]
max[t]
090 (1)
(4) 090
090 (2)
(3) 090
min[t]
010 (1)..(4)
8.1 x 7.5 m
7 8 9
4 5 6
1 2 3
0 . P
SHIFT
F1
F2
F3
F4
F5
F6
F7
F8
ENTER

B103091

4 The “Support” program

4.1 General

The supports are operated from the crane cabin using the LICCON monitor. Also refer to chapter 4.02, paragraph “Support program”.
The “Support program” may also be used to work and operate the crane. Support procedures, which must be repeated at short intervals do not require switching back to the “Operation program”.

DANGER
Risk of fatal injury!
If the crane is not supported with the support base according to the load chart, or if the incorrect load chart is entered into the LICCON overload system, then the crane can topple over and fatally injure personnel!
- ▶ Set the corresponding load chart for the respective support base in the LICCON overload protection!
- ▶ Support the crane with the support base according to the load chart!
- ▶ The support pads must be supported in accordance with specifications!

DANGER
Danger of injury if hazard warnings are ignored!
An increased accident hazard exists, if the following hazard warnings are not observed!
- ▶ All regulations and hazard warnings listed in paragraph “support control unit” must be observed!
- ▶ The operator must monitor the extending and retracting of the sliding beams.
- ▶ A guide is required to assist when extending and retracting the supports without any visual contact with the support cylinders or sliding beam.
- ▶ Exercise caution to make sure no persons or objects are in the danger zone when extending and retracting the sliding beams.
- ▶ The crane must be aligned horizontally.
- ▶ All 4 sliding beams and support cylinders must be extended, the ones on the side opposite the load as well.

Make sure that the following prerequisites are met:
- – the crane is on a level and load-bearing surface,
- – the telescopic boom is telescoped in all the way and placed into the boom receptacle,
- – the parking brake in the driver's cab is applied,
- – the support pads are in the operating position and secured,
- – the retaining pins **A** of the four sliding beams are unpinned,
- – the rotary switch **34** has been moved to crane operation,
- – the axle suspension is blocked,
- – the engine is running.

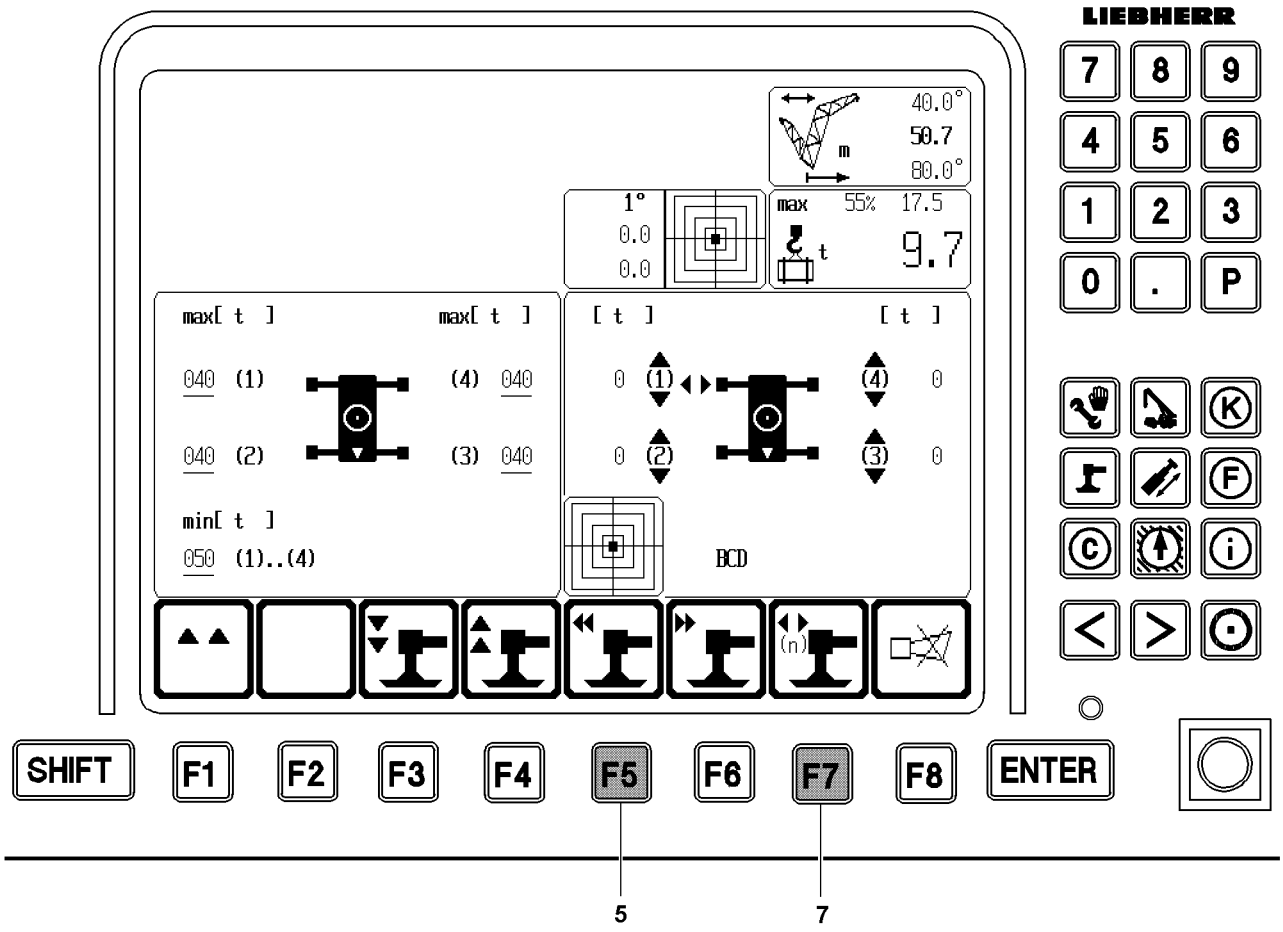
LIEBHERR
7 8 9
4 5 6
1 2 3
0 . P
40.0°
50.7
80.0°
m
1°
0.0
0.0
max 55% 17.5
t
9.7
max[t]
max[t]
040 (1)
(4) 040
040 (2)
(3) 040
min[t]
050 (1)..(4)
[t]
[t]
0 (1)
(4) 0
0 (2)
(3) 0
BCD
SHIFT
F1
F2
F3
F4
F5
F6
F7
F8
ENTER
5
7

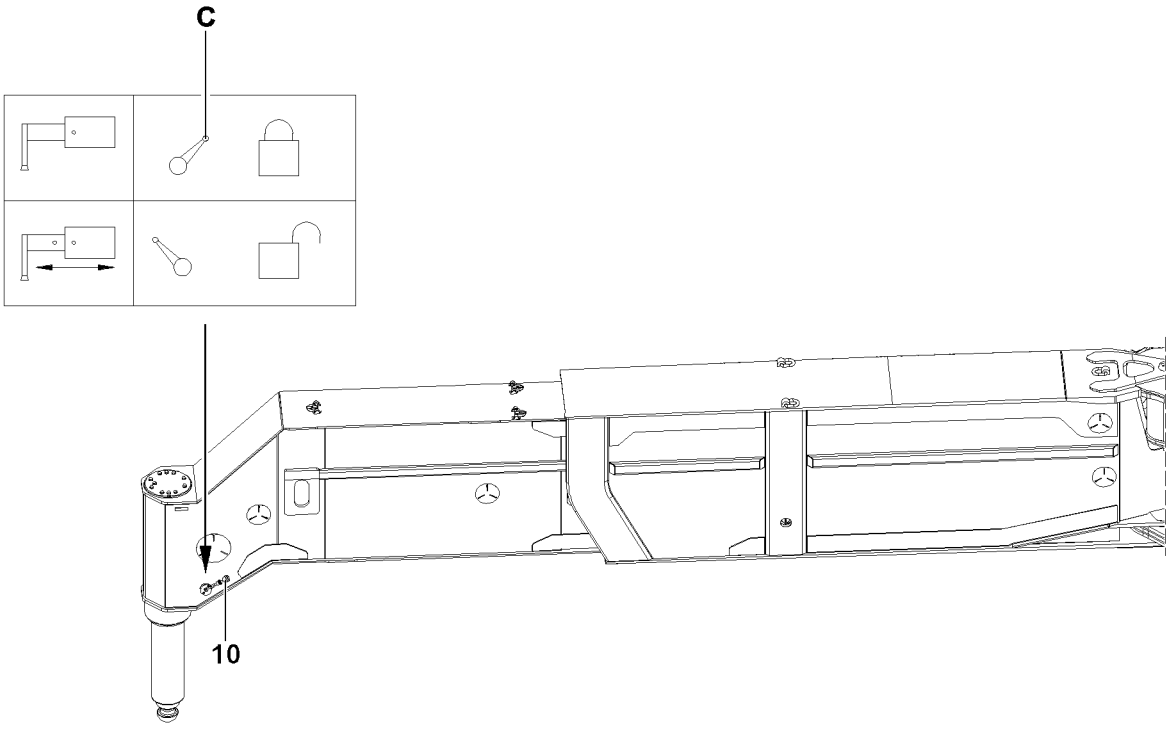
C
10

B108403

4.2 Extending sliding beams from the crane cab

DANGER
Danger of fatal injury if crane falls over!
▶ Always extend all 4 sliding support beams, i.e. also on the side opposite the load.

Only one sliding beam may be extended at a time.
▶ Press function key F7 **7** and select the desired sliding beam.

Result:
– Selector (double arrow) appears on the selected sliding beam.

Note
▶ When the sliding beam extends, the inner beam is first completely extended before the outer sliding beam is extended.

▶ Press function key F5 **5** and extend the sliding beam to the required support base.
▶ Extend all 4 sliding beams to the required support bases.

DANGER
Danger of accidents due to toppling of the crane!
The crane may topple over if the following conditions are not met.
▶ The sliding beams must be pinned to prevent movement of the bearing surfaces after positioning!
▶ Do not support in intermediate positions!

▶ Set all four levers **10** on the sliding beam into position **C**.

Result:
– All 4 sliding beams are pinned and secured against adjusting.

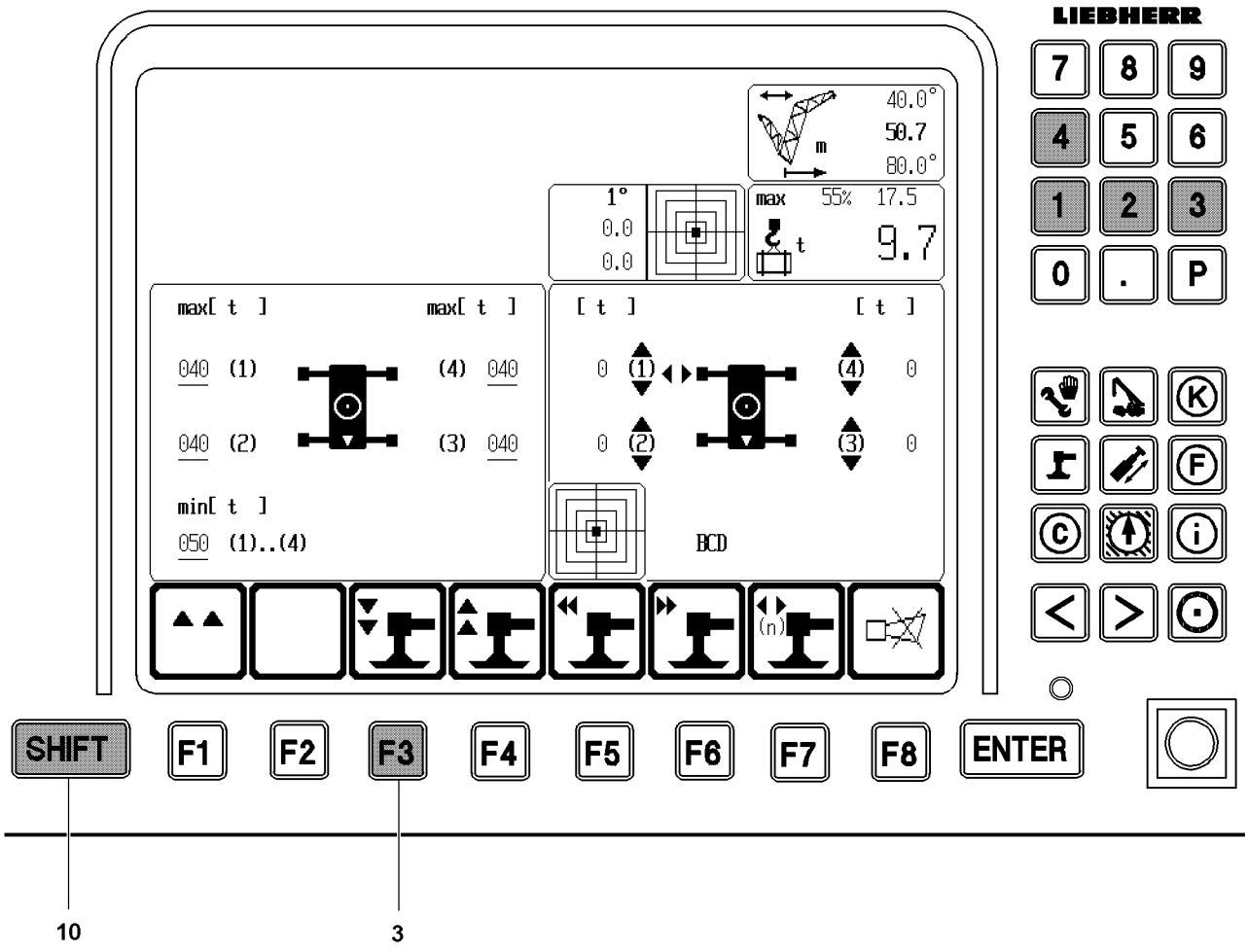
LIEBHERR
7
8
9
4
5
6
1
2
3
0
.
P
40.0°
50.7
80.0°
m
1°
0.0
0.0
max
55%
17.5
t
9.7
max[t]
max[t]
040 (1)
(4) 040
040 (2)
(3) 040
min[t]
050 (1)..(4)
[t]
[t]
0 (1)
(4) 0
0 (2)
(3) 0
BCD
(n)
K
F
C
i
SHIFT
F1
F2
F3
F4
F5
F6
F7
F8
ENTER
10
3

B108404

4.3 Extending support cylinders from the crane cab

DANGER
Danger of accident when supporting!
- ▶ Ensure that there are no persons or objects present in the danger zone when the support cylinders are being extended and retracted.
- ▶ Raise the crane until the wheels are no longer touching the ground.
- ▶ Do not extend the support cylinders all the way during crane operation (up to stop position)! Retract fully extended support cylinders again by at least 10 mm.

4.3.1 Supporting manually

Up to 4 support cylinders may be extended at the same time.

▶ Select or deselect the appropriate support cylinder using the numeric keypad **1 - 4**.

Result:
– Selector(s) appear or disappear on the selected support cylinders.

▶ Press function key F3 **3**.

Result:
– All pre-selected support cylinders are extended.

4.3.2 Aligning the crane horizontally

DANGER
Danger of accident if crane topples over!
If the crane is not aligned horizontally, it may tip over.
- ▶ Ensure that crane is level.
- ▶ The maximum permitted deviation from the horizontal position is 0.5 % (0.3 °).

▶ Extend and retract individual support cylinders until the point (small square) is in the centre of the graphic spirit level.

Result:
– The crane is horizontal.

4.3.3 Supporting automatically

DANGER
Risk of accident!
When the automatic support is operated the crane is levelled automatically.
- ▶ Ensure that the alignment is within the permitted tolerance and that all four support pads are touching the ground.

▶ Press the SHIFT key **10** and function key F3 **3**.

Result:
– All support cylinders are extended.
– The crane is aligned horizontally.

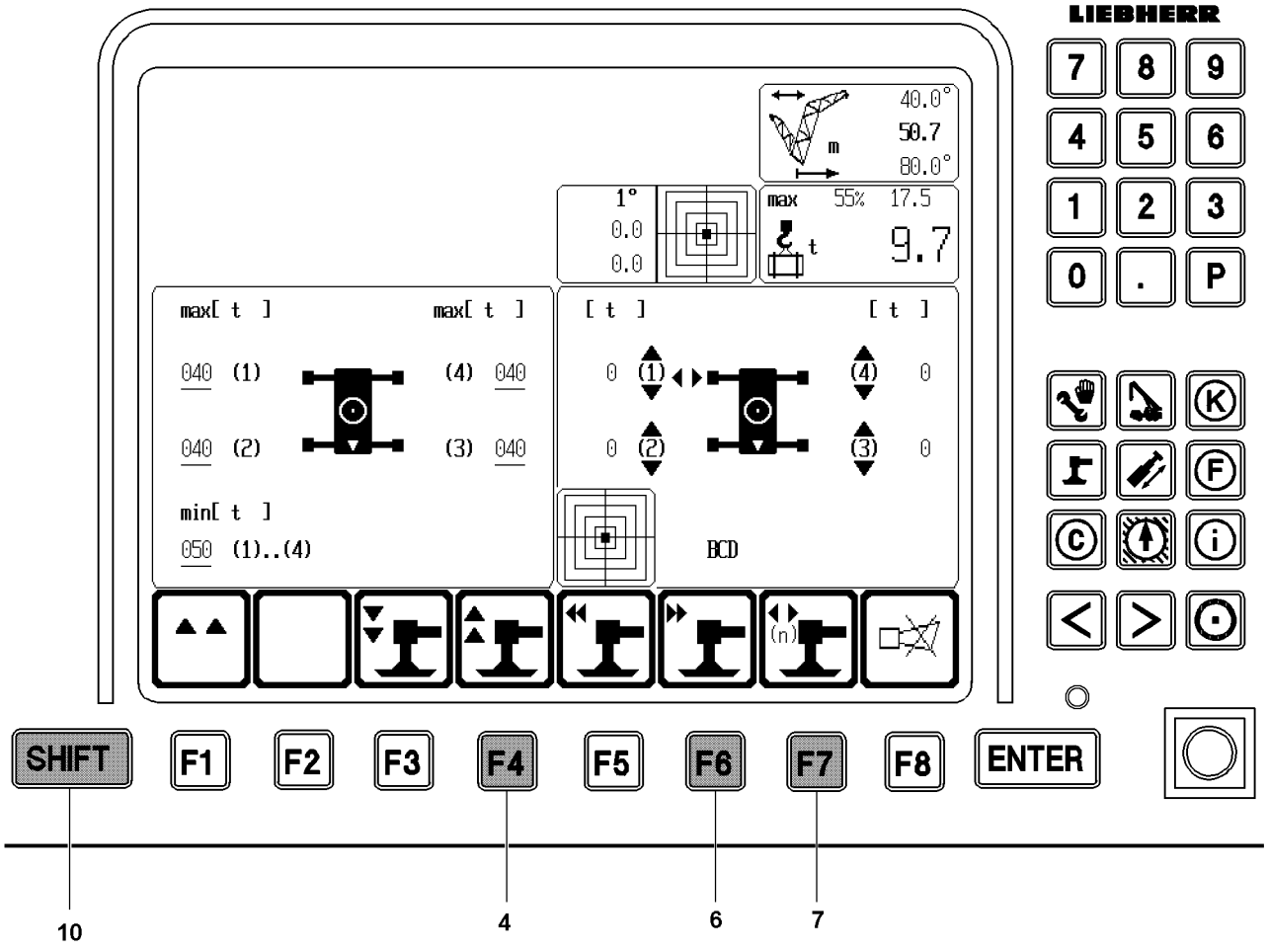
LIEBHERR
7 8 9
4 5 6
1 2 3
0 . P
K
F
C
SHIFT
F1
F2
F3
F4
F5
F6
F7
F8
ENTER
10
4
6
7

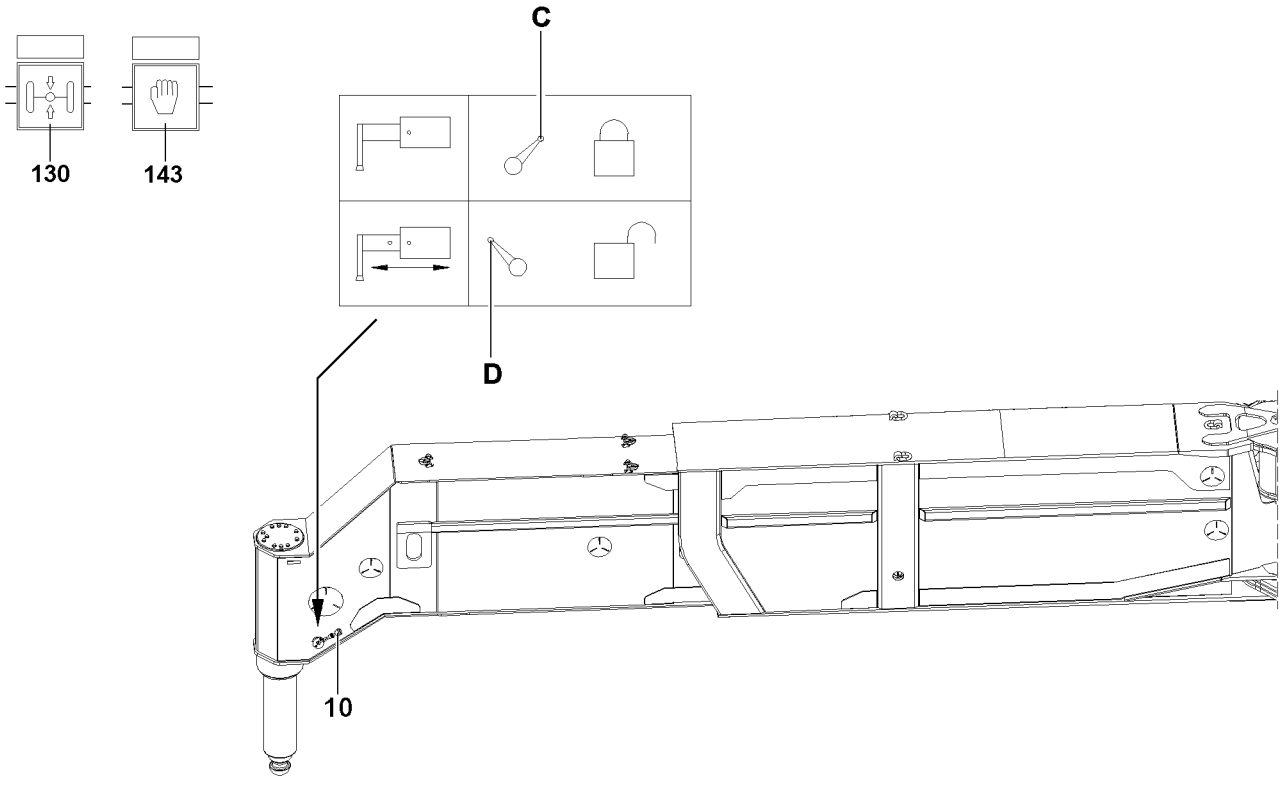
130
143
C
D
10

B108405

4.4 Retracting support cylinders from crane cab

Up to 4 support cylinders may be retracted at the same time.

▶ Select or deselect the relevant support cylinders using the numeric keypad **1 - 4**.

Result:

– Selector(s) appear or disappear on the selected support cylinders.

▶ Operate function key F4 **4** and retract the preselected support cylinders until the wheels of the crane contact the ground.

or

■ Press the SHIFT key **10** and function key F4 **4** and retract preselected support cylinders until the wheels of the crane contact the ground.

WARNING

Risk of damage to axle suspension!

If the axle block is turned off without the wheels being in contact with the ground, then the axle suspension can be damaged if the axles drop down.

▶ Do not turn axle blocking off until all wheels are in contact with the ground.

▶ Press button **130** and button **143** and turn off axle locking.

▶ Retract all four support cylinders all the way.

4.5 Retracting sliding beams from the crane cab

Only one sliding beam may be retracted at a time.

▶ Set all levers **10** on the sliding beam into position **D**.

Result:

– All sliding beams are unpinned.

▶ Press function key F7 **7** and select the desired sliding beam.

Result:

– Selector (double arrow) appears on the selected sliding beam.

▶ Press function key F6 **6** and completely retract the sliding beam.

▶ Completely retract the 4 sliding beams.

▶ Set all levers **10** on the sliding beam into position **C**.

Result:

– All sliding beams are pinned.

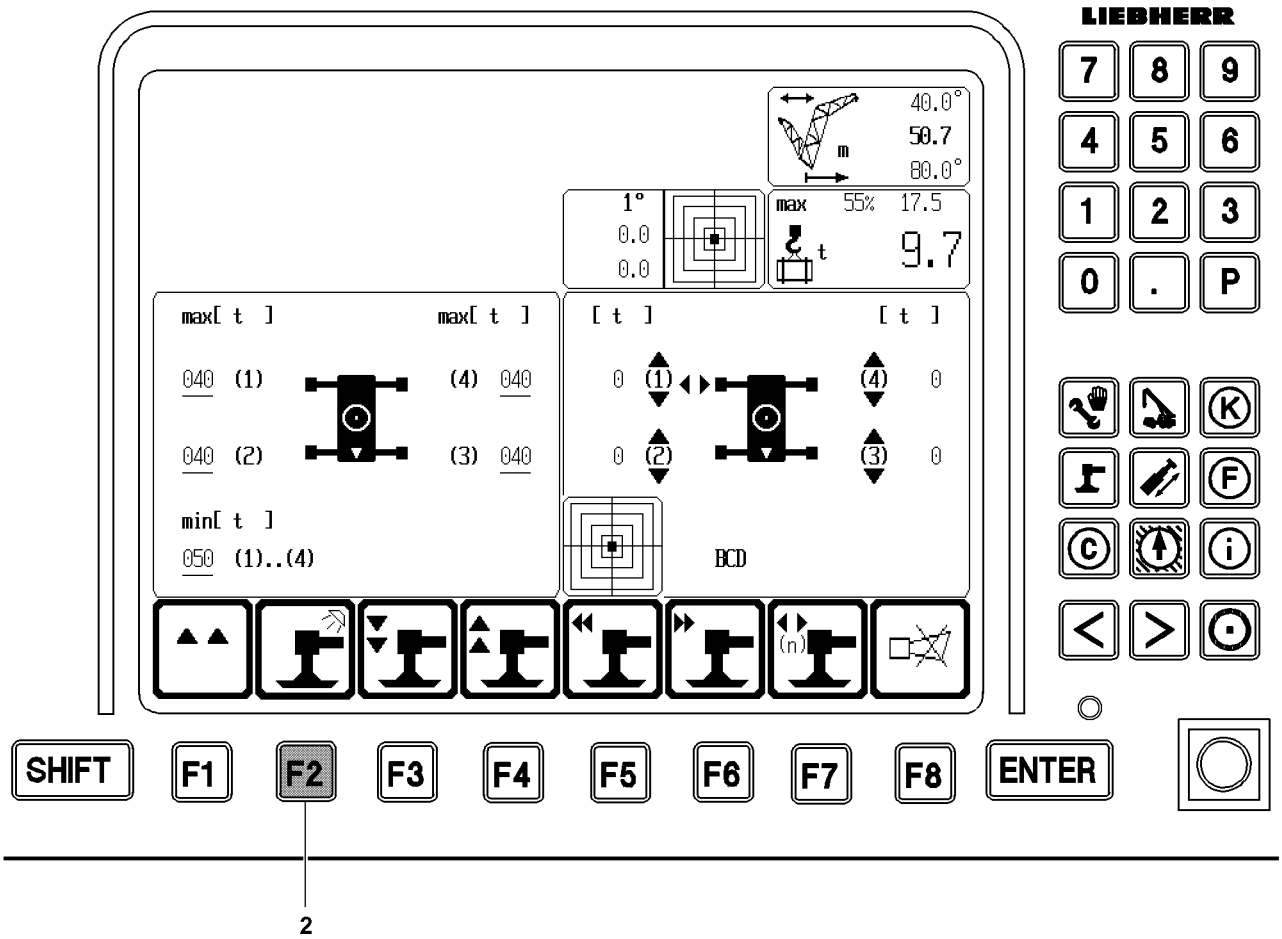
LIEBHERR
7
8
9
4
5
6
1
2
3
0
.
P
40.0°
50.7
80.0°
m
1°
0.0
0.0
max
55%
17.5
t
9.7
max[t]
max[t]
040 (1)
(4) 040
040 (2)
(3) 040
min[t]
050 (1)..(4)
[t]
[t]
0 (1)
(4) 0
0 (2)
(3) 0
BCD
(n)
SHIFT
F1
F2
F3
F4
F5
F6
F7
F8
ENTER
2

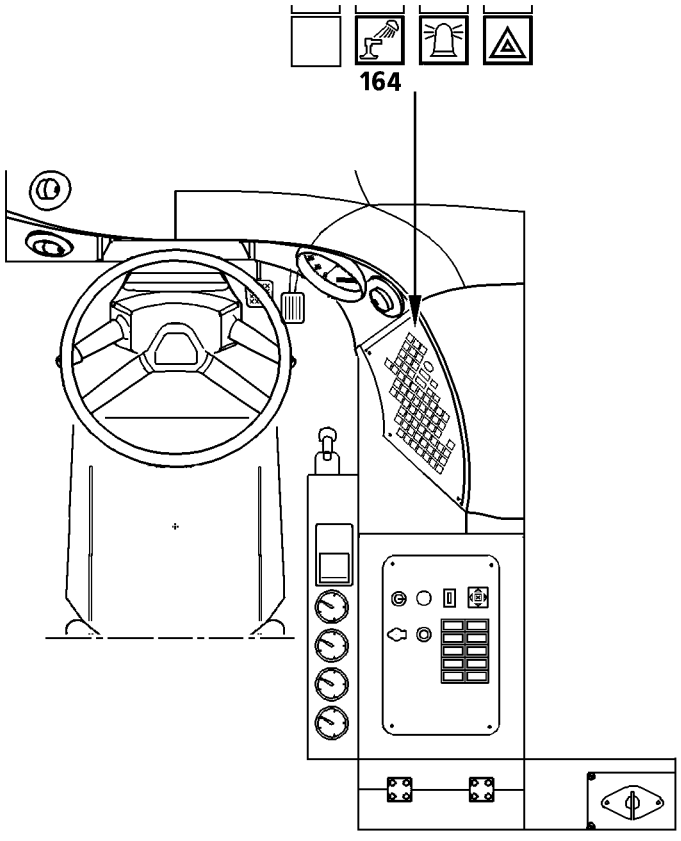
164

B108406

4.6 Turning the sliding beam illumination on

At a speed of more than 3 km/h, the sliding beam illumination is blocked.
The sliding beam illumination is also turned off and blocked if the engine is turned off. However, the “automatic sliding beam illumination active / inactive” status is noted.

4.6.1 Manual

Make sure that the following prerequisites are met:
– the engine is ON,
– the vehicle is stationary.

▶ Press function key F2 **2**.

Result:
– Sliding beam illumination is turned off or on.

4.6.2 Automatic

Make sure that the following prerequisites are met:
– the engine is ON,
– the vehicle is stationary.

▶ Press any support function.

Result: The sliding beam illumination is turned on.

Troubleshooting
Can sliding beam illumination not be turned on automatically?
If the sliding beam illumination has been automatically turned on and then turned off using function key F2 **2** or is turned off with the key **164**, the automatic turning on of the sliding beam illumination is deactivated.
▶ Turn sliding beam illumination on again using the function key F2 **2** or the key **164**. The automatic sliding beam illumination is active again.

5 Before leaving the jobsite

5.1 Checks to be performed

After a longer period of time on the construction site, all the checks described in chapter 3.02 must be carried out before starting to drive.

WARNING
Risk of accident due to improper transport condition!
Improper transport conditions can result in property damage to the crane and endanger others on the road.
▶ Check that the crane is secured in the correct transport condition before driving off.

▶ Ensure proper transport condition.

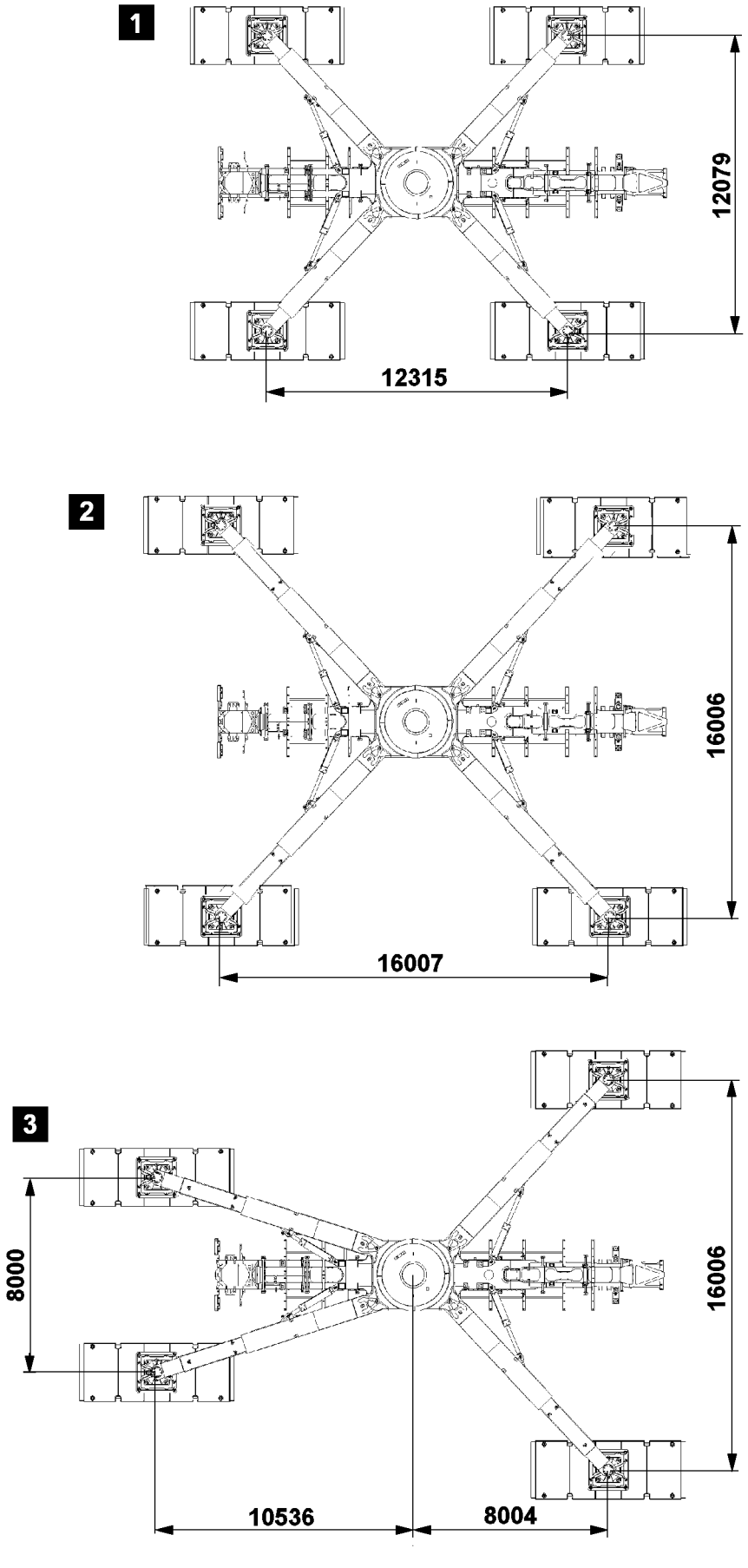

B198599

1 Assembly conditions

1.1 General

Make sure that the following prerequisites are met:
– the SA-frame is place down,
– winch 1, winch 2 and winch 4 are assembled.

WARNING
The crane can topple over!
This support base “illustration 3” is prohibited for crane operation and may only be used for raising and lowering long booms!
Before raising and lowering long booms, the support beams must be set “behind” onto a support width of 8 m.
After erecting the support beam must be set “behind” upon the required support base for the crane operation, see “illustration 2”.
If this is not observed, the crane can topple over!
▶ Use support base “illustration 3” exclusively for raising and lowering long booms!

▶ Use support base “illustration 1” or “illustration 2” for crane operation.

1.2 Permissible turntable ballast for 360°

WARNING
The crane can topple over!
If any other counterweight combination than the one noted in the charts is turned, the crane can topple over!
▶ Turn with permissible turntable ballast, see following charts.

Support base, illustration 1	Turntable	Maximum ballast
12.315 m x 12.079 m	without extension	245 t
	with extension	150 t

Support base, illustration 2	Turntable	Maximum ballast
16.007 m x 16.006 m	without extension	245 t
	with extension	250 t

Support base, illustration 3	Turntable	Maximum ballast
	without extension	245 t
	with extension	125 t

▶

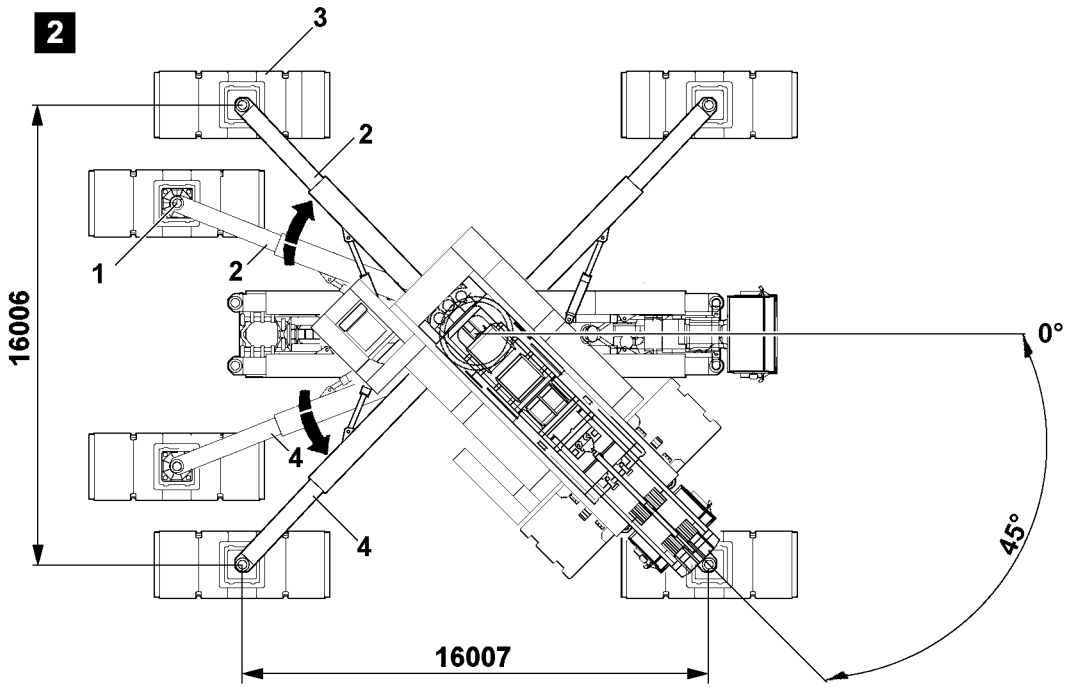

B108407

1.3 Set support beam behind on support base for crane operation

WARNING
The crane can topple over!
Support beam **2** and support beam **4** “behind” must be set according to the erection of long booms upon the required support base for the crane operation, see “illustration 2”.
The turntable with a maximum turntable ballast may be turned at most 45° until the stand over a support beam “forward”, see “illustration 2”.
If the turntable is turned more than 45°, the crane can topple!
▶ Maintain permissible turntable ballast and turn turntable a maximum 45°!

Make sure that the following prerequisites are met:
– the turntable is in the 0° position,
– the main boom and auxiliary boom are luffed up into steepest position.

▶ Turn turntable a maximum 45°, until the counterweight is found over the opposite-lying support beam, see illustration **2**.
▶ Retract support cylinders **1**, that are opposite to the counterweight as far in as the support beam **2** is unloaded.
▶ Swing out support beam **2** corresponding support base in the load chart.
▶ Observe that the support plate **3** remain close over the load-bearing ground.
▶ Extend retracted support cylinder **1** and level crane.
▶ Turn the turntable into 0° position.
▶ Swing out the support beam **4** as support beam **2** corresponding to the support base in the load table.

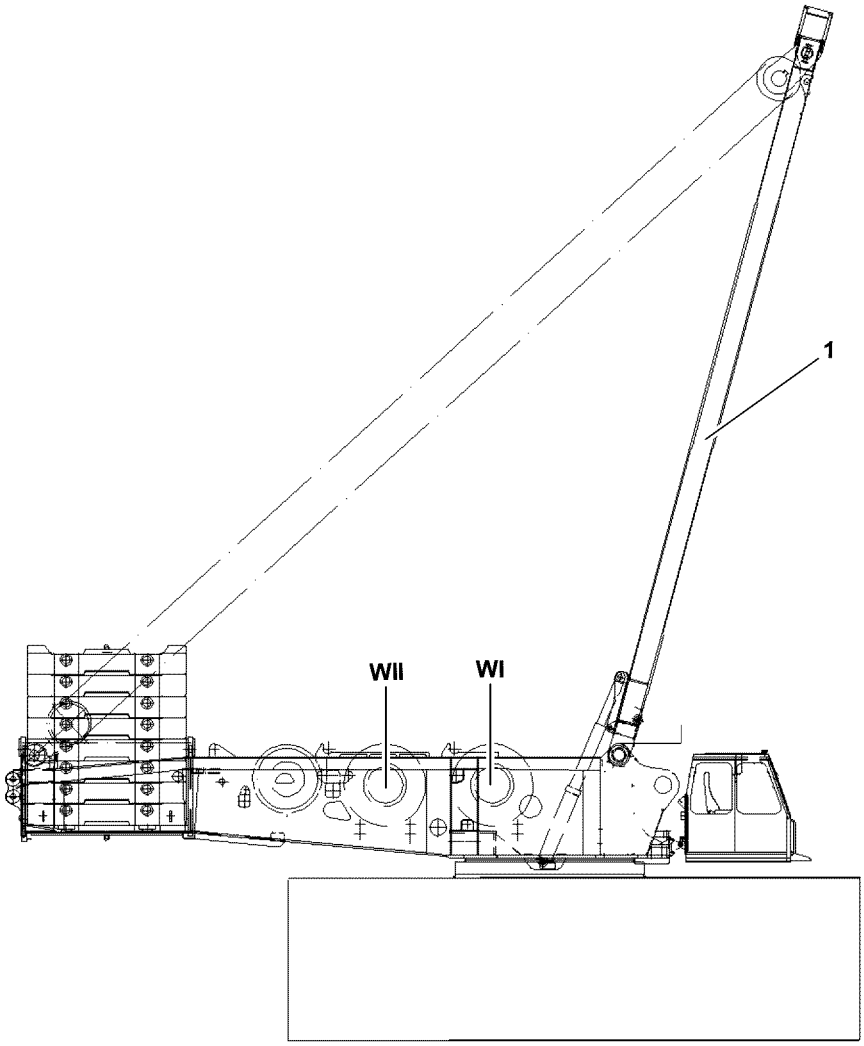

B110974

1 Component overview

1 SA-frame
WI Winch 1
WII Winch 2

2 Dimensions and weights

Note
▶ See Crane operating instructions, chapter 1.03!

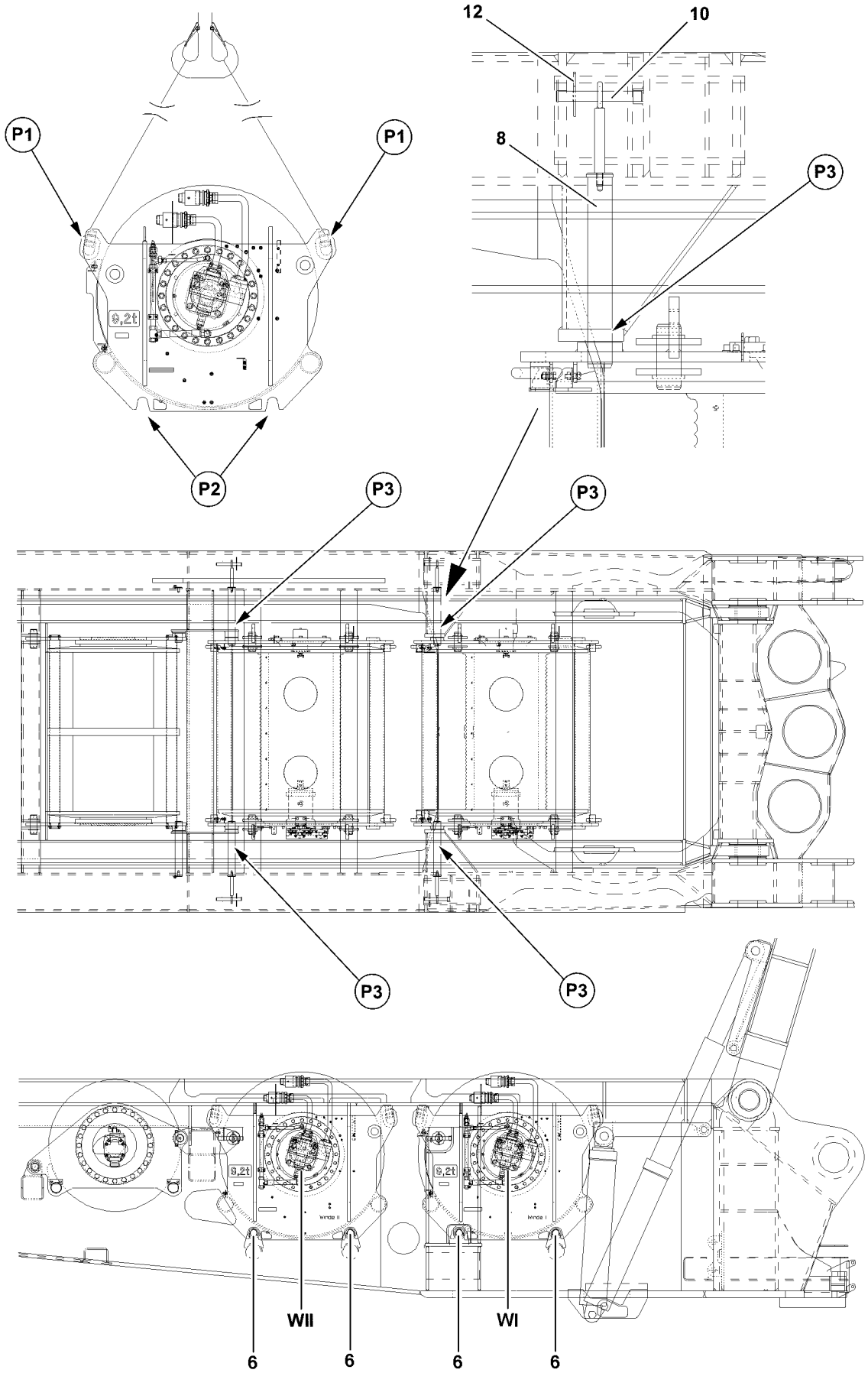

B110973

3 Assembling winch 1

WARNING
Risk of falling!
During assembly / disassembly work, personnel must be secured with appropriate fall arresters to prevent them from falling. If this is not observed, assembly personnel can fall and suffer life-threatening or fatal injuries!

- ▶ Any assembly work, where there is a danger of falling must be carried out with suitable aids (for example lifting platform, scaffolding, ladder, auxiliary crane)!
- ▶ If the work cannot be carried out with such aids nor from the ground, then the assembly personnel must secure themselves with approved fall arrest systems to avoid falling, see Crane operating instructions, Chapter 2.04!
- ▶ Approved fall arrest systems must be hung into the respective fastening points on the crane, see Crane operating instructions, chapter 2.06!
- ▶ If railings are present on the components, then they must be brought into the corresponding position and secured for assembly / disassembly work!
- ▶ Step on aids and fall arresters only with clean shoes!
- ▶ Keep aids and fall arresters clean and free from snow and ice!
- ▶ During all assembly and disassembly work, maintenance work and inspections, travel and crane operation is prohibited!

WARNING
Components not pinned and secured!
If a component is released from the auxiliary crane before having been pinned and secured, the component will fall down! Personnel can be severely injured or killed!

- ▶ Do not disengage the auxiliary crane until the corresponding component is pinned and secured!

WARNING
Danger of impact / crushing!
When installing / removing counterweight components with the auxiliary crane, crane components can start to swing back and forth!
When lifting / lowering and positioning crane components, there is an increased danger of impacts / crushing!
Personnel can be caught and severely injured or killed!

- ▶ Make sure that personnel cannot be caught by components!
- ▶ When working in danger zones: Use aids to protect limbs!
- ▶ Guide components with suitable aids to minimize oscillation!

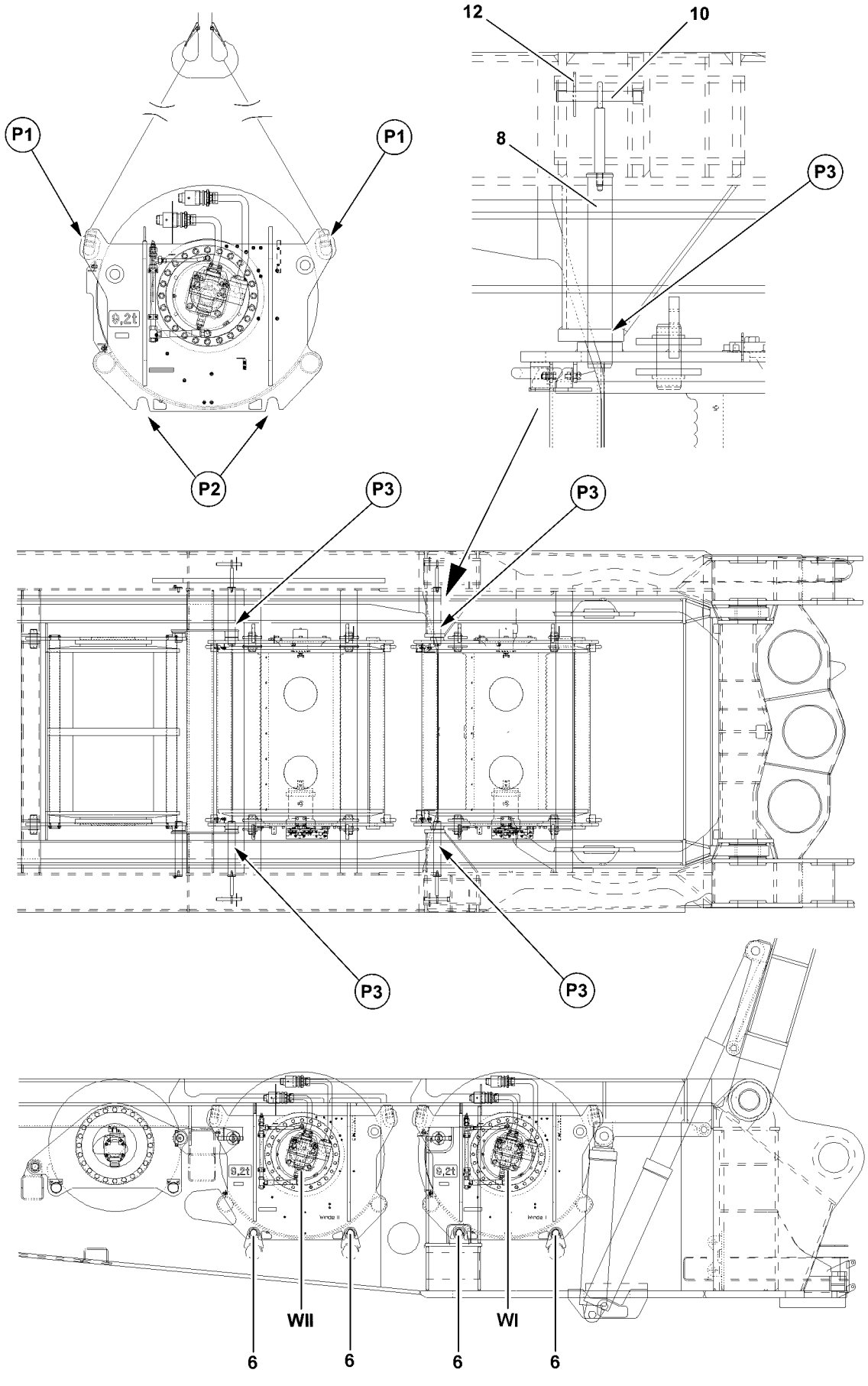

B110973

3.1 Lifting winch 1 from the flatbed trailer

Make sure that the following prerequisites are met:
- The installation of the turntable is completed.
- The crane is aligned in horizontal direction.
- An auxiliary crane with sufficient load carrying capacity is available.

WARNING
Danger of accident due to incorrect attachment!
Life-threatening situations can arise if the winch 1 is incorrectly or improperly attached!
Personnel can be severely injured or killed!
- ▶ Winch 1 must be attached on the intended receptacle point, point **P1**!
- ▶ Make sure that the tackle is correctly attached on winch 1 and that it is secured sufficiently to prevent it from loosening up!

- ▶ Attach the tackle on the receptacle points, point **P1**.
- ▶ Bring the tackle to “tension”.
- ▶ Release and remove the transport retainers on the flatbed trailer.

WARNING
Falling components!
When lifting winch 1 from the flatbed trailer, components or winch 1 can fall down!
Personnel can be severely injured or killed!
- ▶ Make sure that there are no persons within the danger zone!

- ▶ Lift winch 1 with the auxiliary crane from the flatbed trailer.

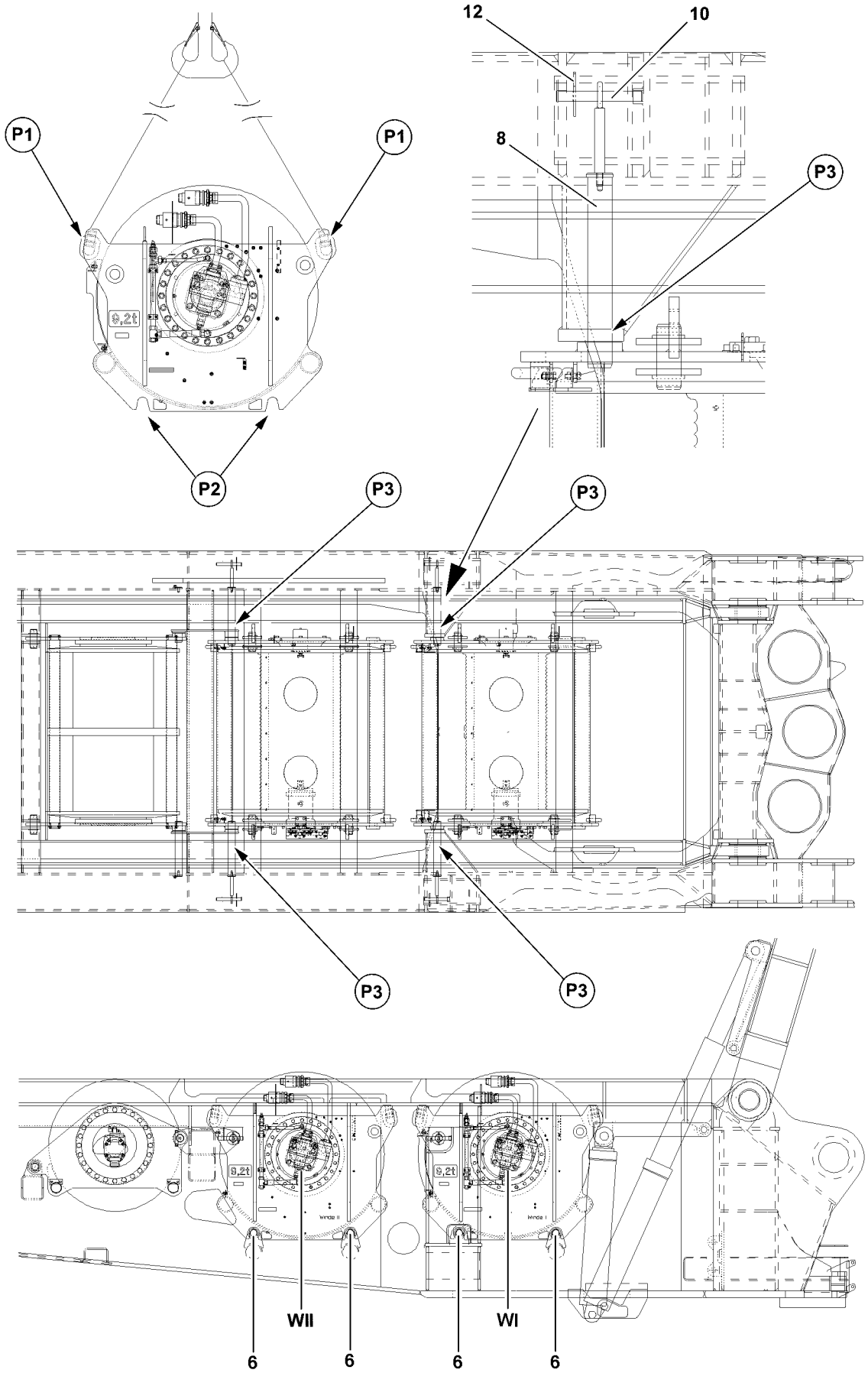

B110973

3.2 Setting winch 1 into the turntable

Make sure that the following prerequisites are met:
– The SA-frame is aligned / placed down to the point where the assembly area of winch 1 is easily accessible.
– The pin bores are clear.

WARNING
Danger of accident when swinging in and lowering winch 1!
When swinging in and lowering winch 1 on the turntable, limbs can be crushed or even severed!
Personnel can be severely injured or killed!
▶ Make sure that there are no persons within the danger zone!
▶ Do not reach with your hands into the danger zone!

NOTICE
Property damage!
If the following note is not observed, damage can result to the crane or winch 1!
▶ When moving winch 1in with the SA-frame, it must be ensured that winch 1 does not hit against the SA-frame!

Note
▶ Check to ensure that the alignment of winch 1 or the receptacles, point **P2** to the pins **6** on the turntable is exact!
▶ Before lowering, bring winch 1 into position that the receptacles, point **P2** are above the pins **6** on the turntable!

▶ Move winch 1 in with the auxiliary crane between the SA-frame.
▶ Lower winch 1 slowly.
▶ When winch 1 is aligned:
Set winch 1 carefully on the pins **6** on the turntable.

3.3 Pinning winch 1 with the turntable

Make sure that the following prerequisites are met:
– Winch 1 is seated on the pins **6**.
– The tackle between winch 1 and the auxiliary crane is “tensioned”.

▶ Insert the pins **8**, point **P3**.

WARNING
The pins can loosen up by themselves!
▶ Secure the pins **8** immediately after pinning with pins **10** and cotter pins **12**!

When all pins **8** are completely pinned:
▶ Insert pin **8** with pin **10** and secure with cotter pin **12**.
▶ Remove the tackle on winch 1.

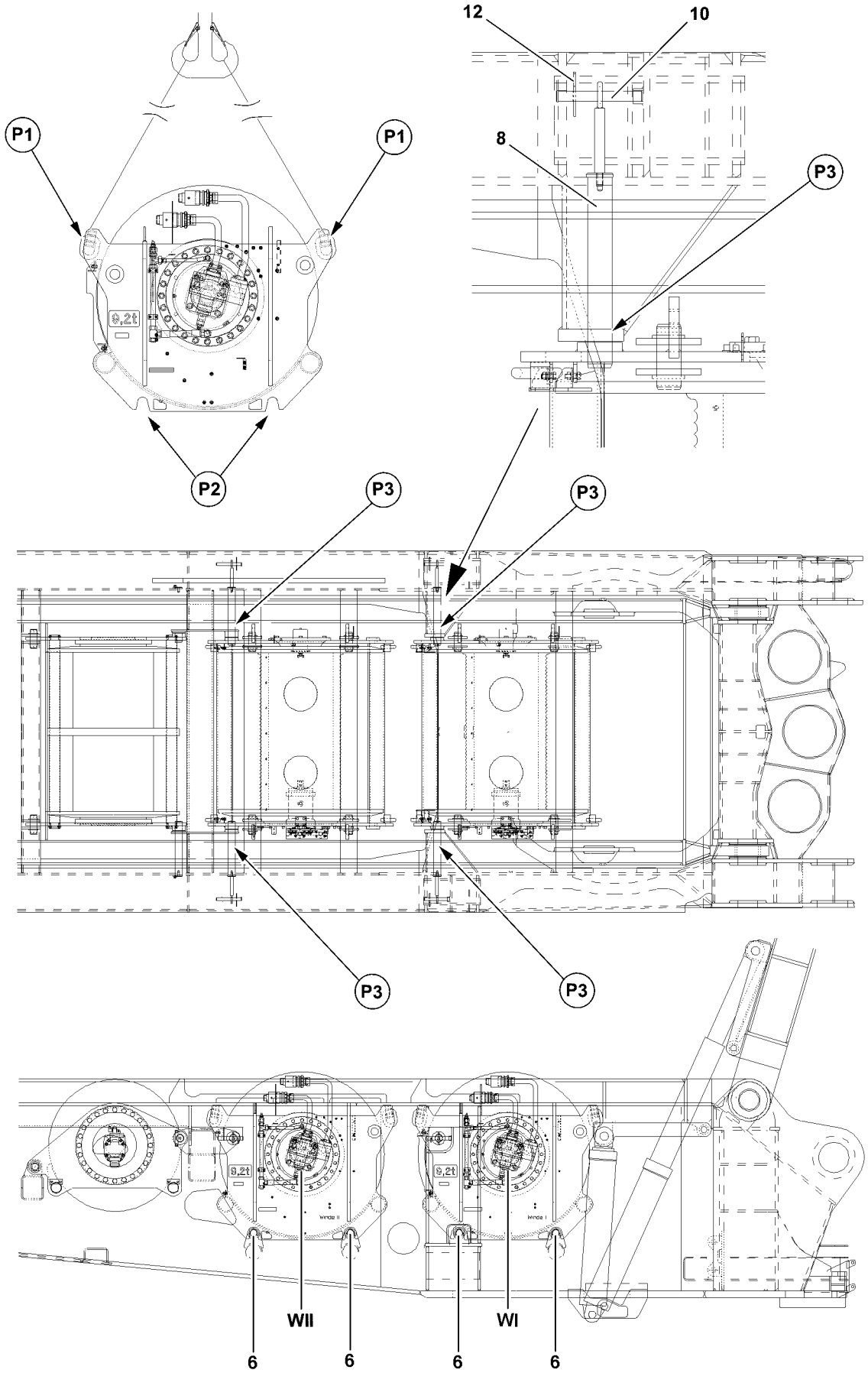

B110973

3.4 Establishing the connection to the turntable

Make sure that the following prerequisite is met:

– The winch is properly installed, pinned and secured.

3.4.1 Establishing the hydraulic connections to winch 1

The hydraulic connections of winch 1 are made with quick couplings.

When connecting hydraulic lines with quick couplings, make sure that the coupling procedure is carried out correctly.

WARNING

Pressure in the hydraulic lines!

If the pressure supply is not interrupted before connecting / releasing the hydraulic lines, the hydraulic oil can escape with high pressure!

Personnel can be severely injured or killed!

▶ Release the pressure in the hydraulic system before connecting / disconnecting: Interrupt the pressure supply and wait for a short time!

WARNING

Loss of pressure or leakage!

Incorrectly coupled or self-loosening quick-release couplings (particularly return lines) can result in serious accidents due to component failure!

▶ Check that the quick-release couplings have been properly connected before using the crane!

▶ Assemble coupling components (sleeve and connector) and screw together using hand-tightened nut.

▶ Tighten hydraulic coupling by hand. Rotate hand-tightened nut until it reaches a tangible, fixed stop position.

▶ Establish the hydraulic connection to winch 1.

3.4.2 Establishing the electrical connections to winch 1

▶ Establish the electrical connections to winch 1, see electric wiring diagram.

3.4.3 Establishing the connections of the central lubrication system to winch 1

▶ Establish the connections of the central lubrication system to winch 1.

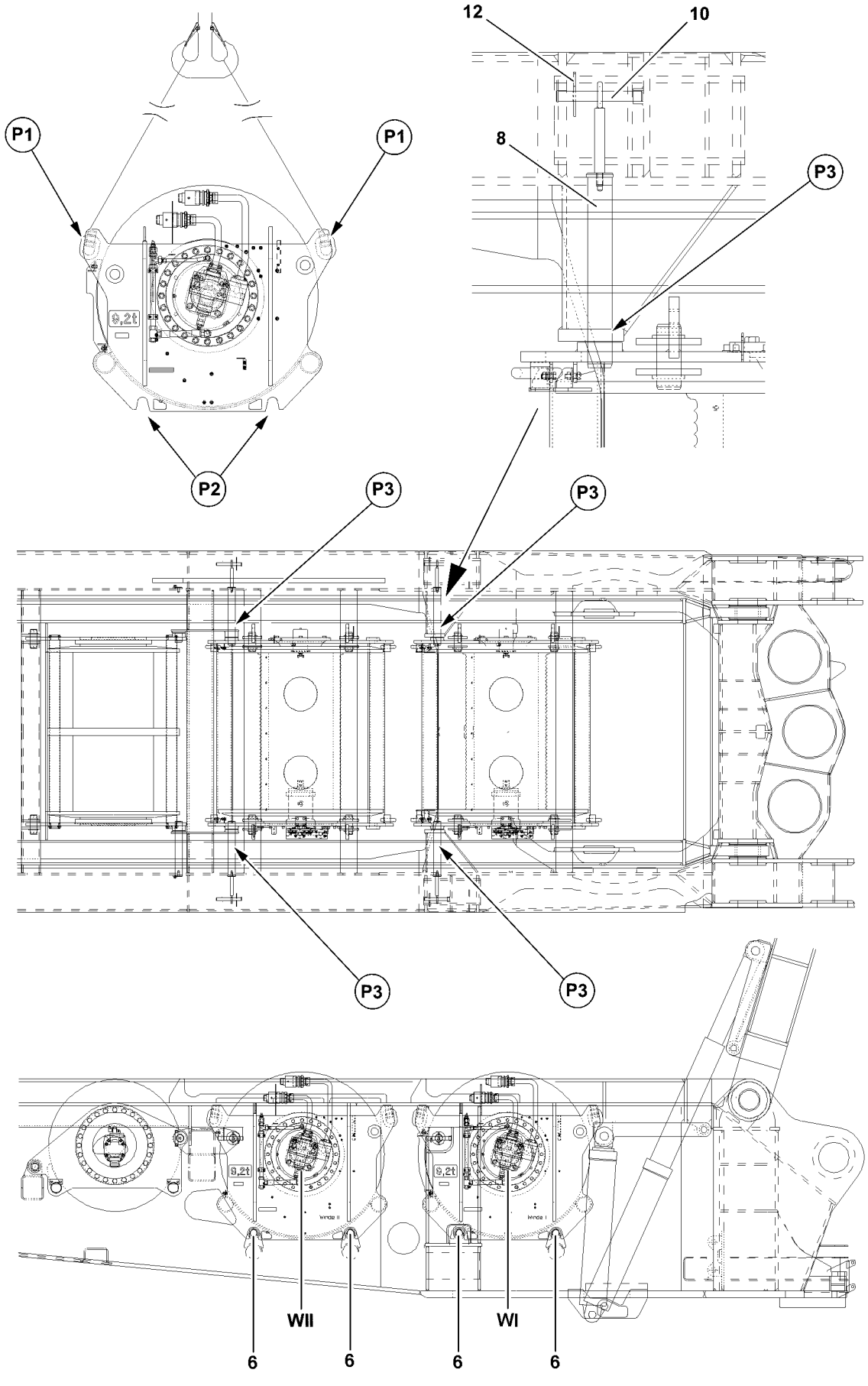

B110973

4 Removing winch 1

WARNING
Risk of falling!
During assembly / disassembly work, personnel must be secured with appropriate fall arresters to prevent them from falling. If this is not observed, assembly personnel can fall and suffer life-threatening or fatal injuries!

- ▶ Any assembly work, where there is a danger of falling must be carried out with suitable aids (for example lifting platform, scaffolding, ladder, auxiliary crane)!
- ▶ If the work cannot be carried out with such aids nor from the ground, then the assembly personnel must secure themselves with approved fall arrest systems to avoid falling, see Crane operating instructions, Chapter 2.04!
- ▶ Approved fall arrest systems must be hung into the respective fastening points on the crane, see Crane operating instructions, chapter 2.06!
- ▶ If railings are present on the components, then they must be brought into the corresponding position and secured for assembly / disassembly work!
- ▶ Step on aids and fall arresters only with clean shoes!
- ▶ Keep aids and fall arresters clean and free from snow and ice!
- ▶ During all assembly and disassembly work, maintenance work and inspections, travel and crane operation is prohibited!

WARNING
Components not pinned and secured!
If a component is released from the auxiliary crane before having been pinned and secured, the component will fall down! Personnel can be severely injured or killed!

- ▶ Do not disengage the auxiliary crane until the corresponding component is pinned and secured!

WARNING
Danger of impact / crushing!
When installing / removing counterweight components with the auxiliary crane, crane components can start to swing back and forth!
When lifting / lowering and positioning crane components, there is an increased danger of impacts / crushing!
Personnel can be caught and severely injured or killed!

- ▶ Make sure that personnel cannot be caught by components!
- ▶ When working in danger zones: Use aids to protect limbs!
- ▶ Guide components with suitable aids to minimize oscillation!

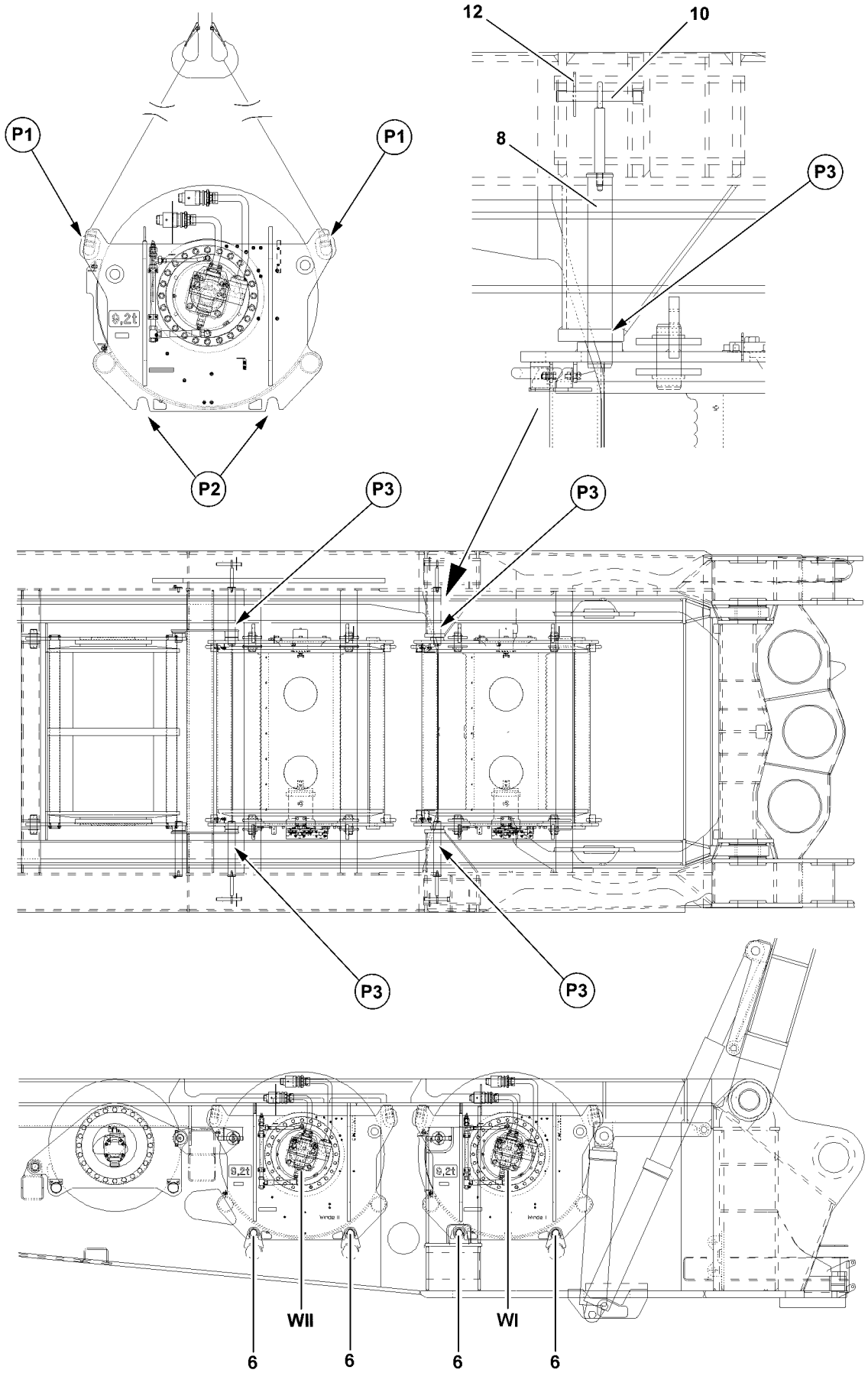

B110973

4.1 Disconnecting the connections to winch 1

Make sure that the following prerequisite is met:

– The hoist rope is completely spooled up.

4.1.1 Disconnecting the hydraulic connections to winch 1

When releasing hydraulic lines with quick-release couplings, make sure that the uncoupling procedure is carried out correctly.

WARNING

Pressure in the hydraulic lines!

If the pressure supply is not interrupted before connecting / releasing the hydraulic lines, the hydraulic oil can escape with high pressure!

Personnel can be severely injured or killed!

▶ Release the pressure in the hydraulic system before connecting / disconnecting: Interrupt the pressure supply and wait for a short time!

▶ Release the hydraulic coupling by hand.

▶ Disconnect the hydraulic connection to winch 1.

4.1.2 Disconnecting the electrical connections to winch 1

▶ Disconnect the electrical connections to winch 1.

4.1.3 Disconnectig the connections of the central lubrication system to winch 1

▶ Disconnect the connections to winch 1.

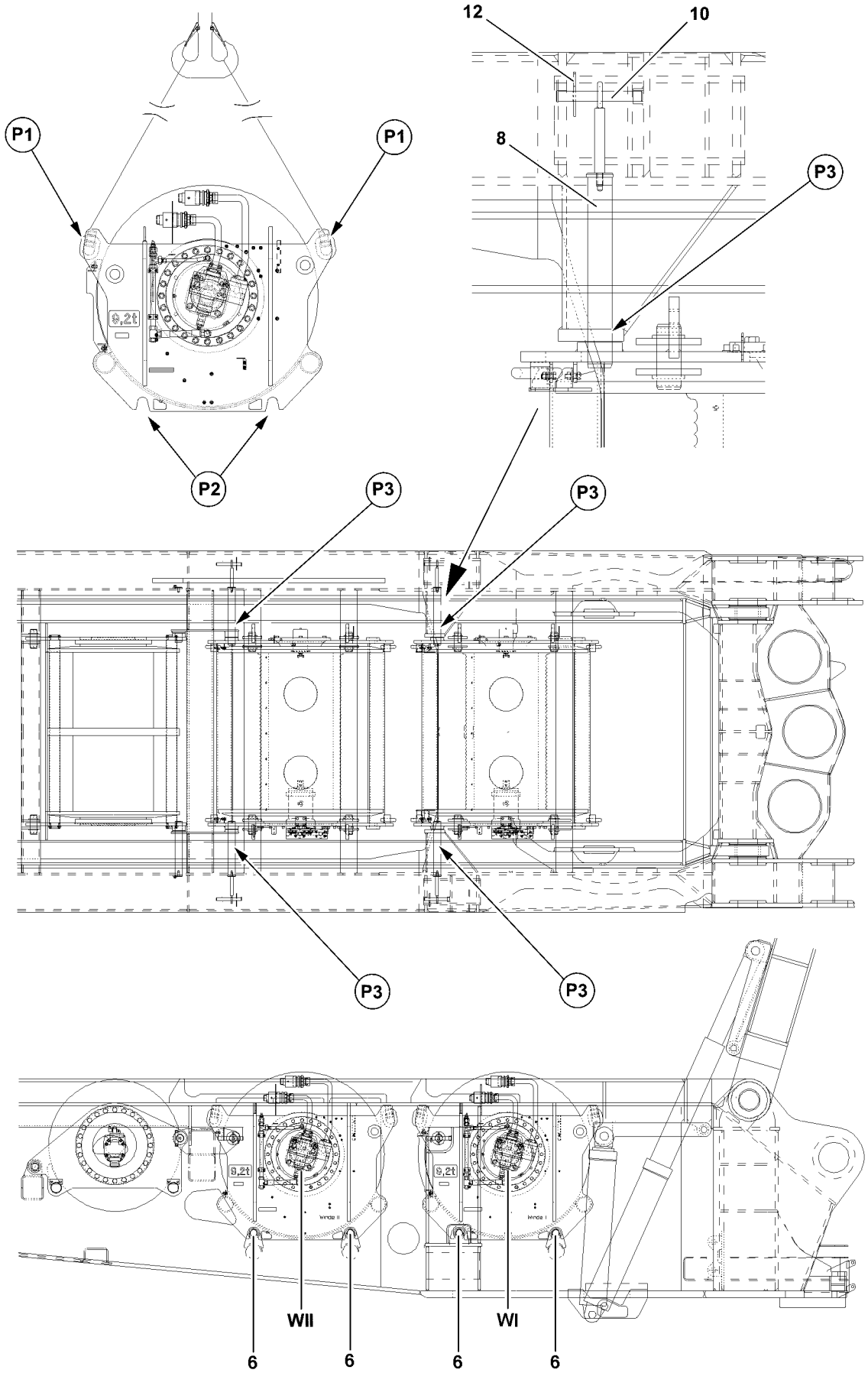

B110973

4.2 Unpinning winch 1 on the turntable

Make sure that the following prerequisites are met:
- The hydraulic connections are disconnected.
- The electrical connections are disconnected.
- The connections of the central lubrication system are disconnected.
- The SA-frame is aligned / placed down to the point where the assembly area of winch 1 is easily accessible.
- An auxiliary crane with sufficient load carrying capacity is available.
- The tackle is attached on the receptacle points, point **P1** of winch 1.

▶ Bring the tackle to “tension”.
▶ Release the pin **10**:
▶ Release the pin **8**.
▶ Unpin the pin **8**.

NOTICE
Damage to the connector parts!
By lifting winch 1, the connector lines can be damaged!
▶ Make sure that all hydraulic and electrical connections are disconnected!
▶ Make sure that the connections to the central lubrication system as disconnected!
▶ Make sure that all pins are removed!

NOTICE
Property damage!
If the following note is not observed, damage can result to the crane or winch 1!
▶ When moving winch 1 out with the SA-frame, it must be ensured that winch 1 does not hit against the SA-frame!

When the pins **8** are unpinned:
▶ Lift winch 1 carefully with the auxiliary crane.

WARNING
Falling components!
When lifting winch 1 from the turntable, components or winch 1 can fall down!
Personnel can be severely injured or killed!
▶ Make sure that there are no persons within the danger zone!

▶ Move winch 1 out
▶ When winch 1 is moved out:
Set winch 1 on the flatbed trailer.
▶ Remove the auxiliary crane.

5 Assembly and disassembly of winch 1

The assembly or disassembly of winch 1 is to be carried out according to the assembly or disassembly of winch 1.

1

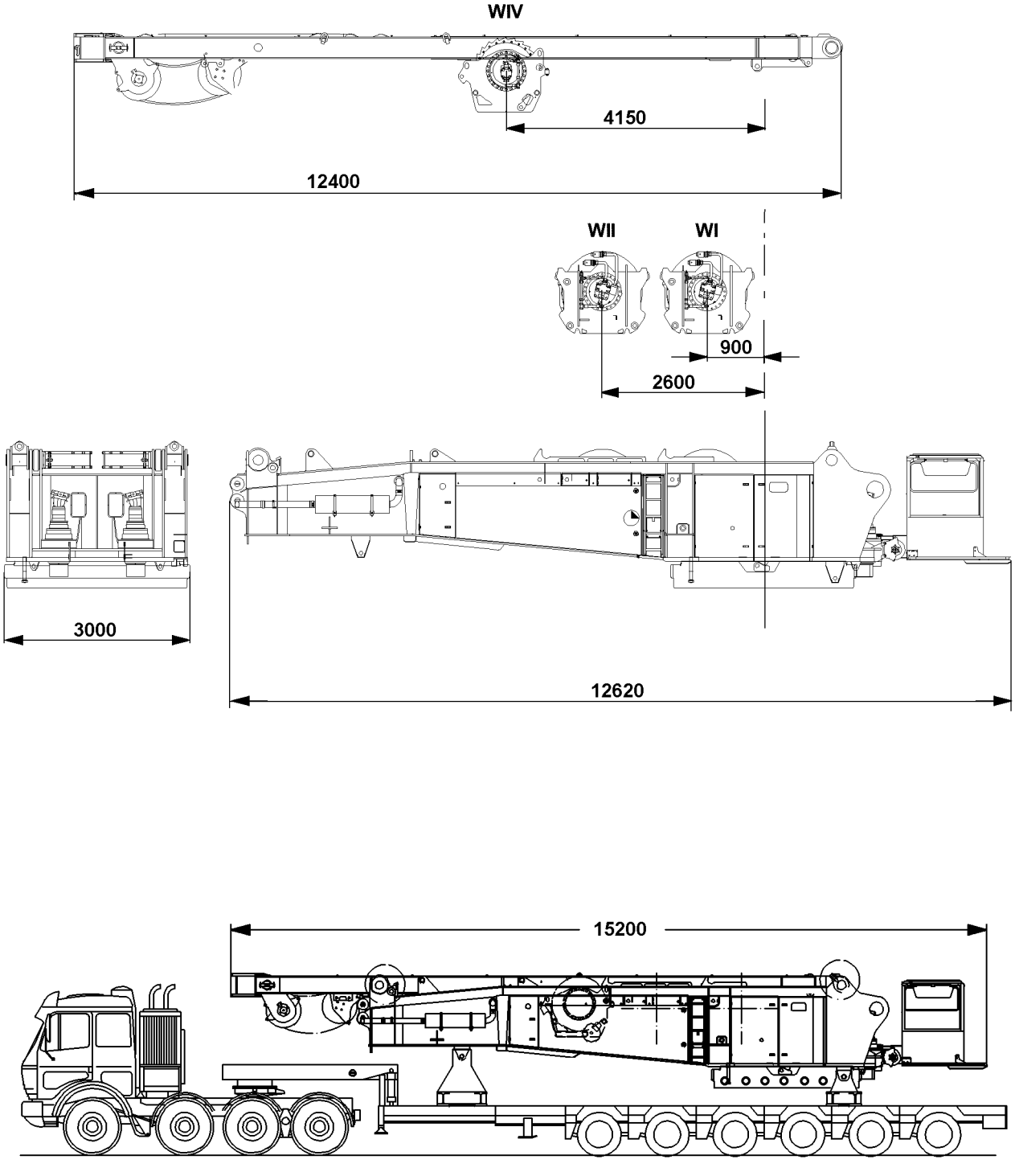

B111154

1 Transport weights and fastening points on the turntable

1.1 Transport weights turntable

Installed are:

– Assembly winch with rope
– Upper section of the roller ring connection with Quick Connection
– 1 to 3 slewing gears, depending on the attachment

State	Turntable with pedestal	Winch 1 including rope	Winch 2 including rope	SA-frame with winch 4
I	Weight approx. 37.0 t	—	—	—
II	Weight approx. 54.0 t	—	—	X
III	Weight approx. 63.0 t	—	X	X
IV	Weight approx. 72.0 t	X	X	X

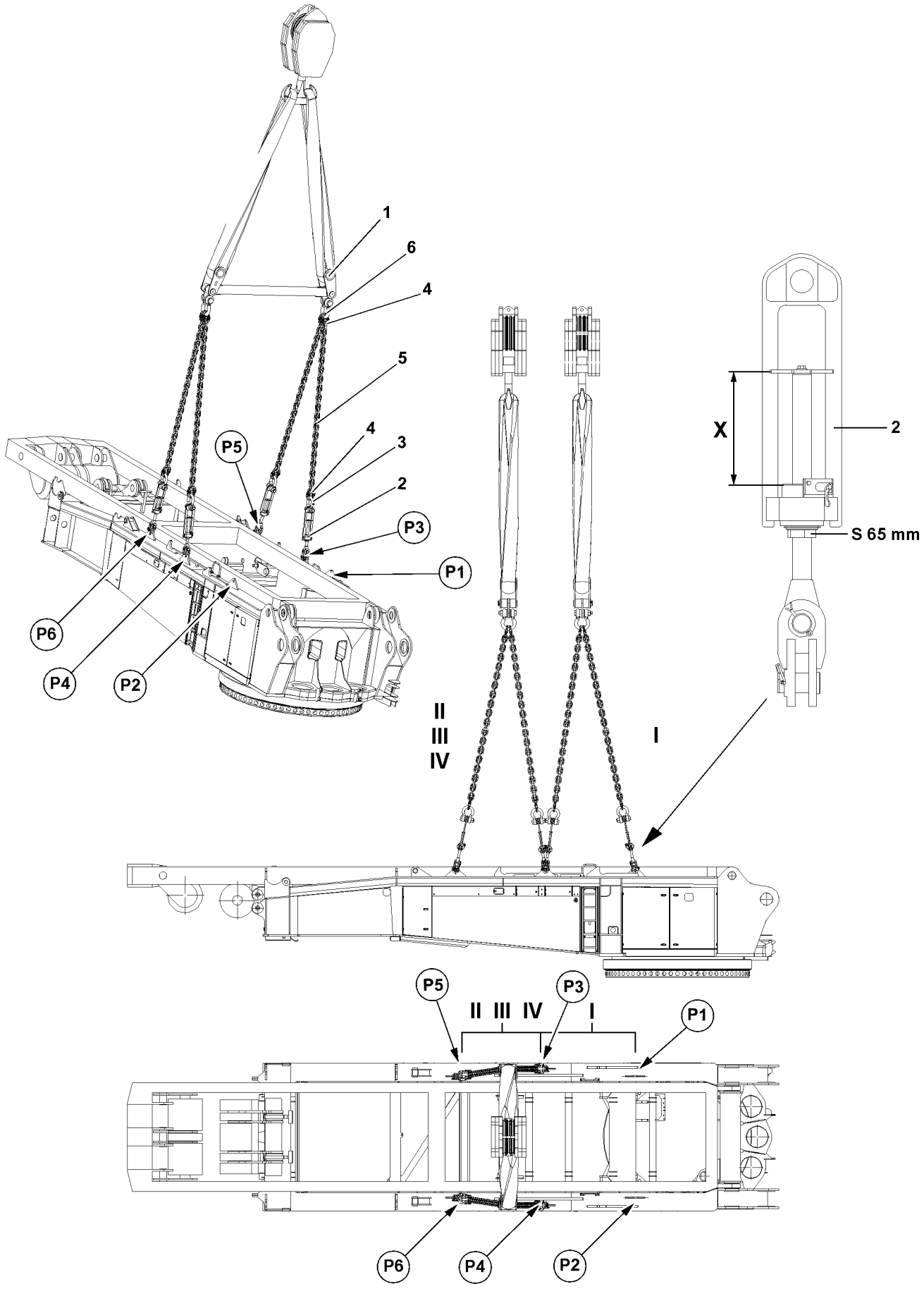
1
6
4
5
4
3
2
P5
P3
P1
P6
P4
P2
X
2
S 65 mm
II
III
IV
I
P5
P3
II III IV
I
P1
P6
P4
P2

B111155

1.2 Fastening points on the turntable

1.2.1 Components of lifting device

1 Cross beam
2 Tension device
3 Shackle
4 Connector link
5 Fastening chain
6 Shackle

1.2.2 Adjustments on tensioning devices

WARNING
Danger of accident due to incorrect attachment!
Life-threatening situations can arise if the turntable is incorrectly or improperly attached!
Personnel can be severely injured or killed!
- ▶ Set the tensioning devices according to the data in the chart!
- ▶ Attach the turntable according to the data in the chart on the intended fastening points!
- ▶ Make sure that the tackle is correctly attached on the turntable and that it is secured sufficiently to prevent it from loosening up!

State	P1	P2	P3	P4	P5	P6
I	205 mm	95 mm	255 mm	145 mm	—	—
II	—	—	315 mm	245 mm	135 mm	75 mm
III	—	—	315 mm	240 mm	115 mm	50 mm
IV	—	—	370 mm	305 mm	80 mm	20 mm

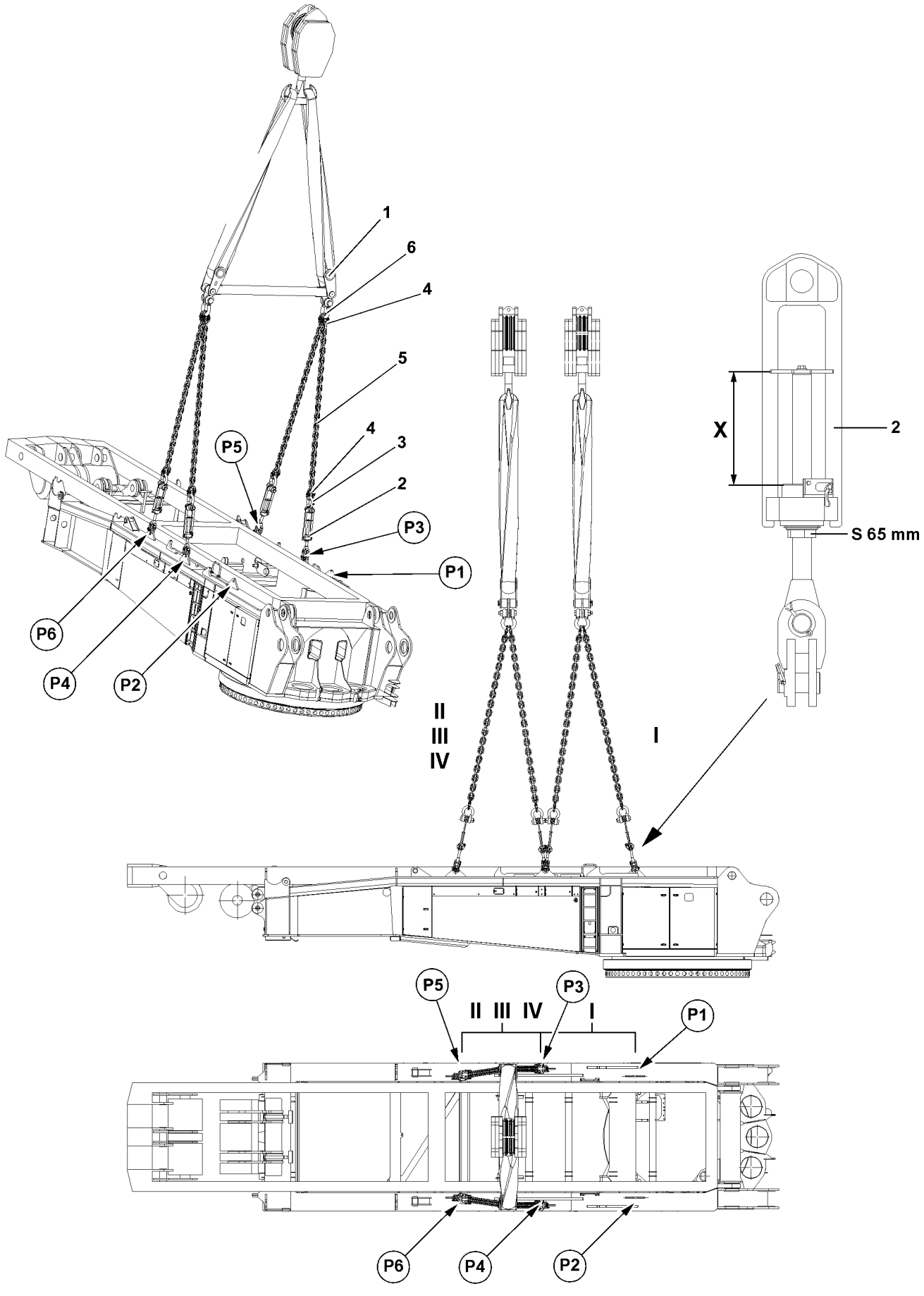
1
6
4
5
4
3
2
P5
P3
P1
P6
P4
P2
X
2
S 65 mm
II
III
IV
I
P5
P3
II III IV
I
P1
P6
P4
P2

B111155

2 Installing the turntable

WARNING
Risk of falling!
During assembly / disassembly work, personnel must be secured with appropriate fall arresters to prevent them from falling. If this is not observed, assembly personnel can fall and suffer life-threatening or fatal injuries!
- ▶ Any assembly work, where there is a danger of falling must be carried out with suitable aids (for example lifting platform, scaffolding, ladder, auxiliary crane)!
- ▶ If the work cannot be carried out with such aids nor from the ground, then the assembly personnel must secure themselves with approved fall arrest systems to avoid falling, see Crane operating instructions, Chapter 2.04!
- ▶ Approved fall arrest systems must be hung into the respective fastening points on the crane, see Crane operating instructions, chapter 2.06!
- ▶ If railings are present on the components, then they must be brought into the corresponding position and secured for assembly / disassembly work!
- ▶ Step on aids and fall arresters only with clean shoes!
- ▶ Keep aids and fall arresters clean and free from snow and ice!
- ▶ During all assembly and disassembly work, maintenance work and inspections, travel and crane operation is prohibited!

WARNING
Components not pinned and secured!
If a component is released from the auxiliary crane before having been pinned and secured, the component will fall down! Personnel can be severely injured or killed!
- ▶ Do not disengage the auxiliary crane until the corresponding component is pinned and secured!

WARNING
Danger of impact / crushing!
When installing / removing counterweight components with the auxiliary crane, crane components can start to swing back and forth!
When lifting / lowering and positioning crane components, there is an increased danger of impacts / crushing!
Personnel can be caught and severely injured or killed!
- ▶ Make sure that personnel cannot be caught by components!
- ▶ When working in danger zones: Use aids to protect limbs!
- ▶ Guide components with suitable aids to minimize oscillation!

2

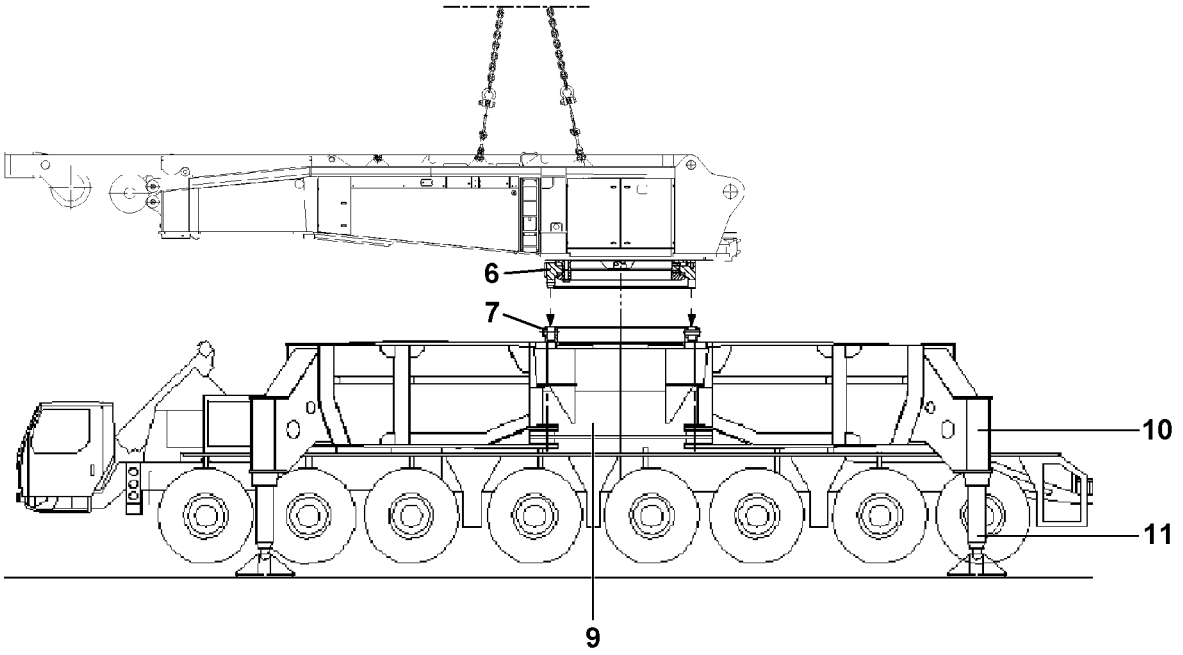

3

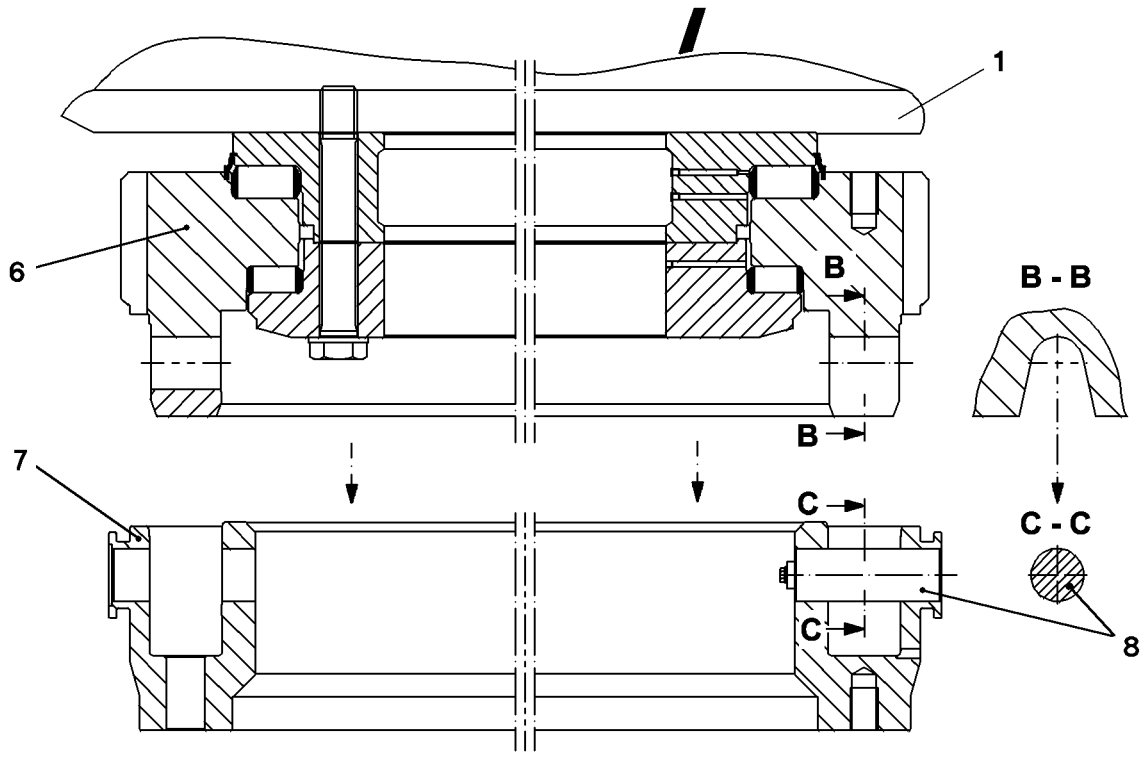

B198589

2.1 Lifting the turntable from the flatbed trailer

Make sure that the following prerequisites are met:

– An auxiliary crane with sufficient load carrying capacity is available.
– The placement location must be level and have adequate load-bearing capacity.
– The crane chassis is horizontally aligned.
– The turntable and the tensioning devices are attached and set on the fastening points according to the data in the chart, see section “Adjustments on the tensioning devices”.

▶ Attach the tackle on the receptacle points.
▶ Bring the fastening chains to “tension” with the auxiliary crane.
▶ Release and remove the transport retainers on the turntable.

WARNING
Falling components!
When lifting the turntable from the flatbed trailer, components or the turntable can fall down!
Personnel can be severely injured or killed!
▶ Make sure that there are no persons within the danger zone!

▶ Lift the turntable with the auxiliary crane from the flatbed trailer.

2.2 Cleaning the roller ring connection

NOTICE
Damage to the roller ring connection!
If the roller ring connection is dirty, then it can be damaged!
▶ Clean the components thoroughly before installation!

▶ Clean the placement and contact surfaces on the upper **6** and lower section **7** of the roller ring connection before installation.
▶ Clean the pin bores on the upper and lower section of the roller ring connection before installation.

2

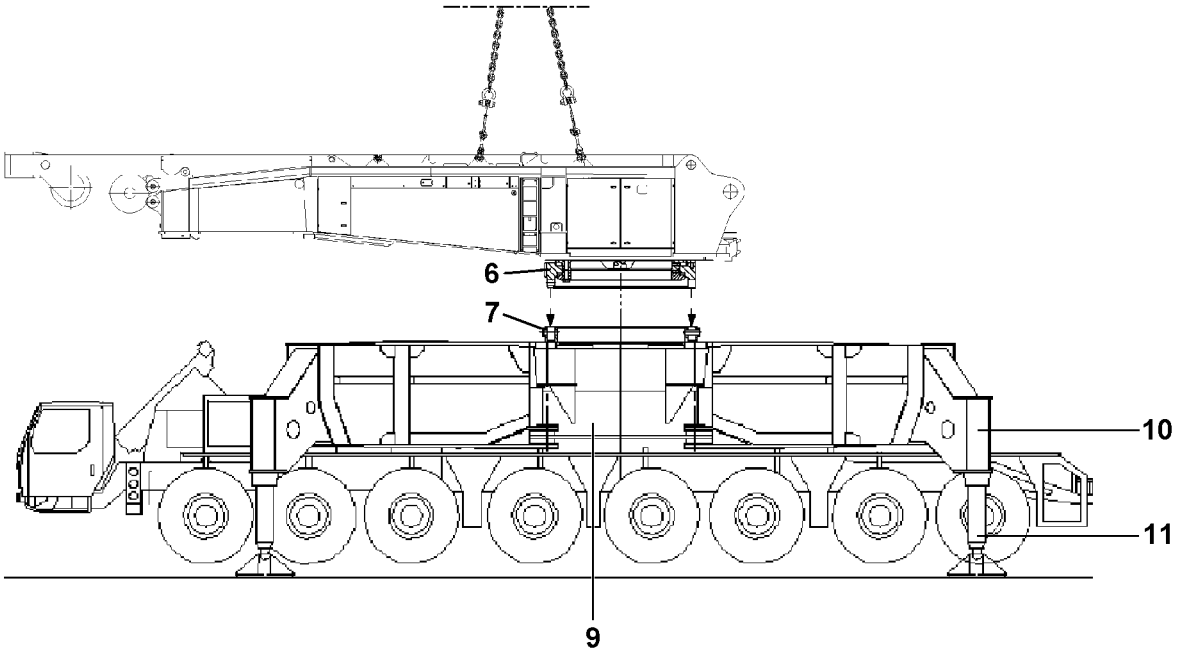

3

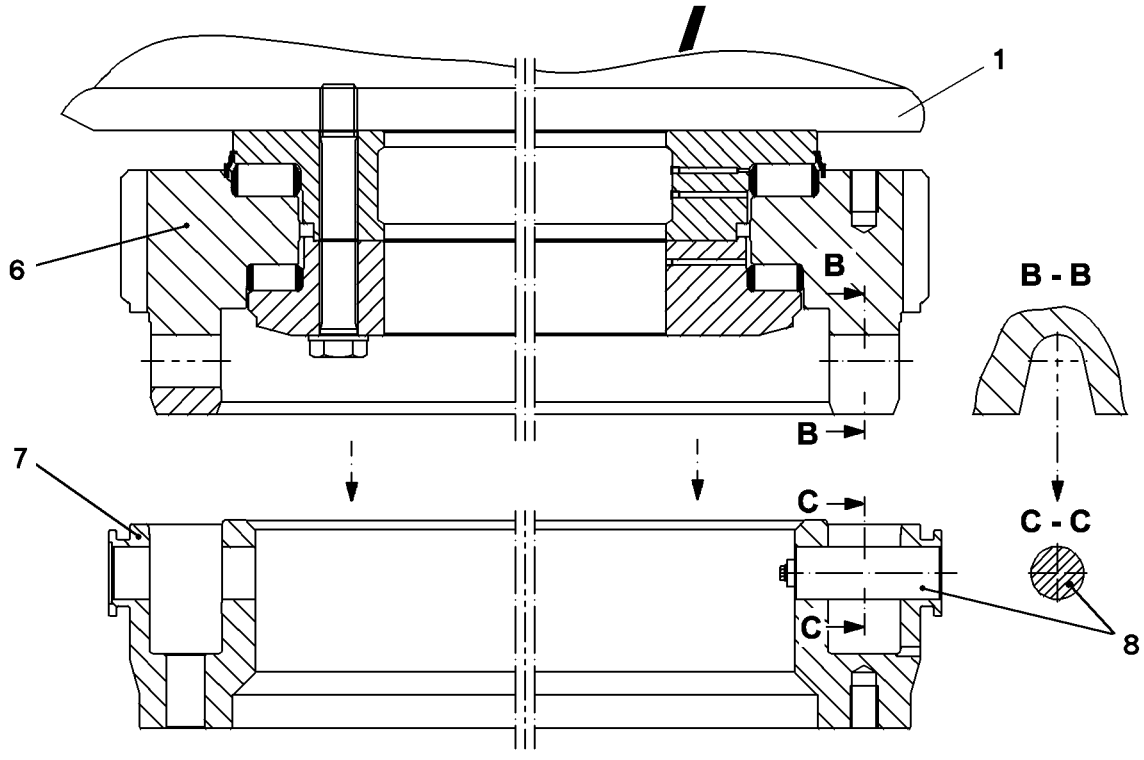

B198589

2.3 Placing the turntable on the crawler center section

WARNING
The crane can topple over!
When setting the turntable on the crane chassis, the hydraulic supports can sink into the ground due to the increased weight, this can cause the crane to topple over!
Personnel can be severely injured or killed!
- ▶ Make sure that the ground is level and of sufficient load bearing capacity!
- ▶ If necessary, support the support plates with suitable materials!

Make sure that the following prerequisites are met:
- – The hydraulic supports **10** on the crane chassis **9** are swung out, pinned and secured.
- – The support cylinders **11** are extended.
- – The crane chassis **9** is aligned in horizontal direction.
- – The upper **6** and lower section **7** of the roller ring connection have been cleaned.
- – The two centering pins **8** are installed and secured on the lower section **7** of the roller ring connection.
- – The centering pins **8** are greased with water repellent grease.

WARNING
Danger of accident when swinging in and lowering the turntable!
When swinging in and lowering the turntable on the crane chassis, limbs can be crushed or even severed!
Personnel can be severely injured or killed!
- ▶ Make sure that there are no persons within the danger zone!
- ▶ Do not reach with your hands into the danger zone!

- ▶ Swing the turntable with the auxiliary crane in over the crane chassis.

Note
- ▶ Pay attention to the alignment of the turntable or the receptacles **B-B** to the centering pins **8**!
- ▶ Before lowering the turntable, bring it into position in such a way that the receptacles **B-B** are positioned over the centering pins **8** on the lower section **7**!

- ▶ Slowly lower the turntable.
- ▶ When the turntable is aligned:
  Carefully place the turntable onto the crane chassis.
- ▶ Lower the turntable completely to the stop on the lower section **7**.

4

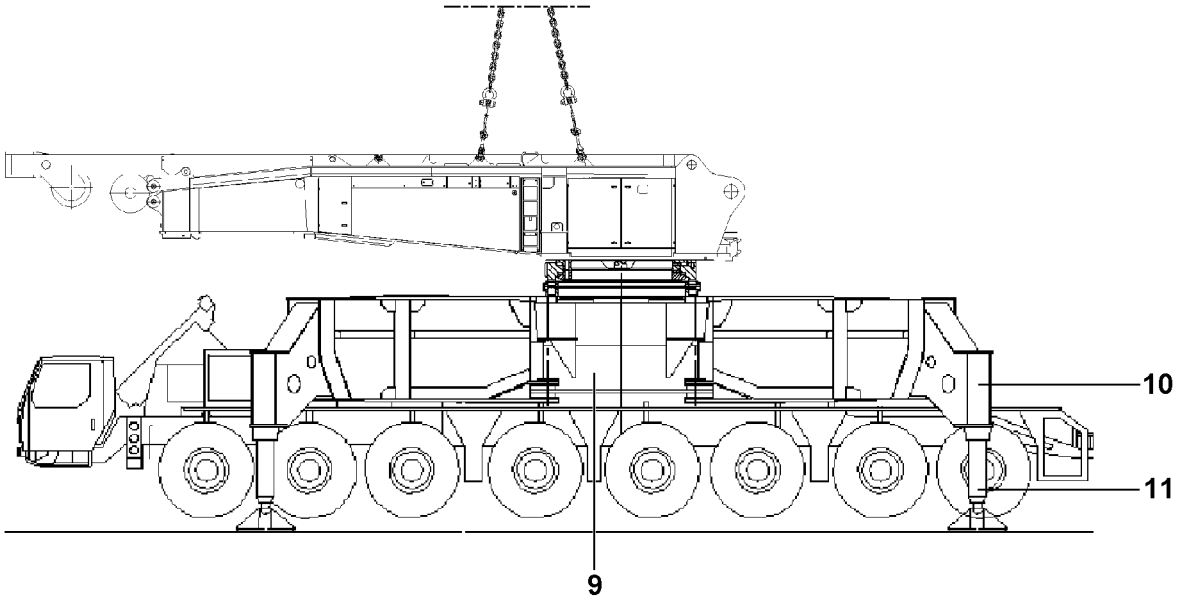

5

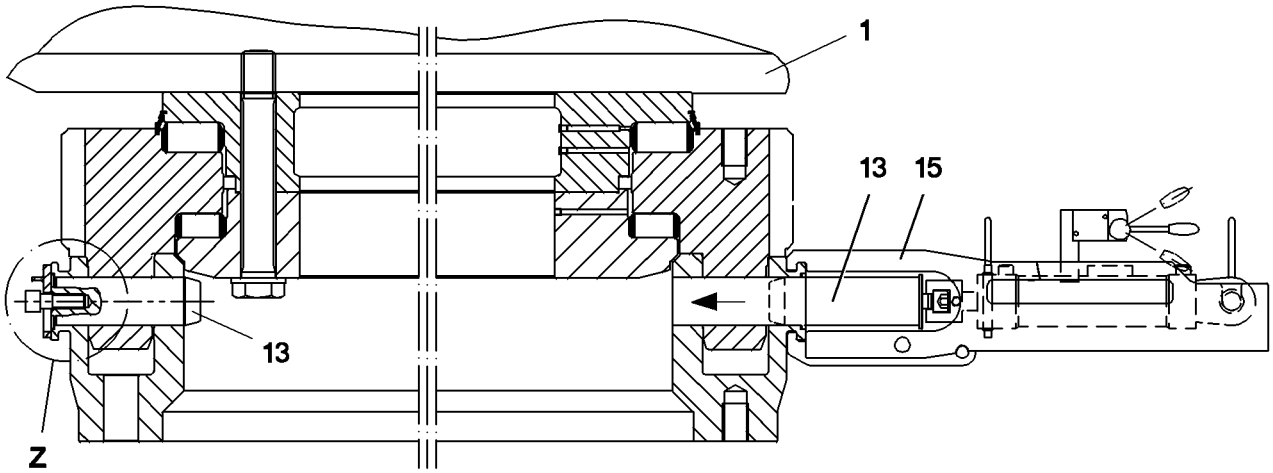

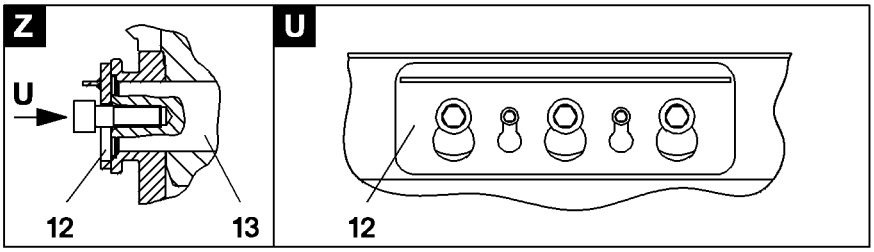

B198590

2.4 Pinning the turntable with the quick connection

Make sure that the following prerequisites are met:

– The turntable **1** is seated on the crane chassis **9**.
– The fastening chains between the turntable and the auxiliary crane are “tensioned”.
– The pin holes are clear on the circumference of the roller ring connection.

▶ Grease the connector pins **13** with water repellent grease.
▶ Insert the connector pins by hand completely.

Note

▶ If the connector pins **13** move with difficulty, use a pin pulling device **15**, see illustration **5**!

WARNING

The connector pins can loosen up by themselves!

▶ Secure connector pins **13** immediately after pinning with circlips **12**!

▶ When all connector pins are completely pinned:
Attach the circlips **12** and secure the connector pins **13**, see illustration **U**.
▶ Remove the tackle on the turntable.

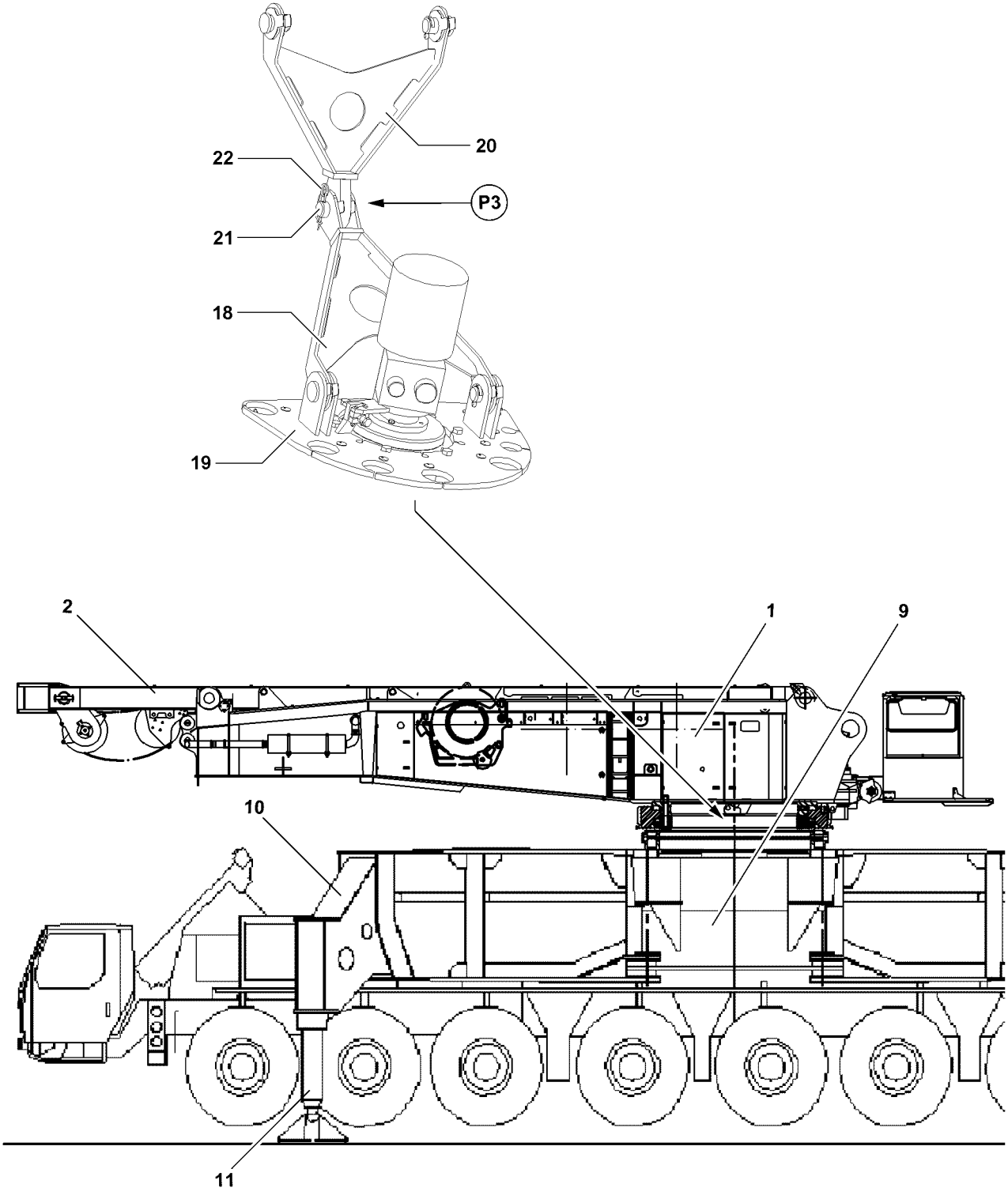

B111156

2.5 Establishing the connection to the turntable

Make sure that the following prerequisites are met:

– The upper and lower section of the quick connection are pinned and secured.
– The bar **18** is pinned with the actuator **19**.
– The bar **20** is pinned with the turntable.

2.5.1 Pinning the bar on the rotary connection

▶ Pin the bar **18** on the bar **20**.
▶ Insert the pin **21** on point **P3** and secure with spring retainer **22**.

2.5.2 Establishing the hydraulic connections to the turntable

The hydraulic connections on the turntable are established on the rotary connection.

When connecting hydraulic lines with quick couplings, make sure that the coupling procedure is carried out correctly.

WARNING
Pressure in the hydraulic lines!
If the pressure supply is not interrupted before connecting / releasing the hydraulic lines, the hydraulic oil can escape with high pressure!
Personnel can be severely injured or killed!
▶ Release the pressure in the hydraulic system before connecting / disconnecting: Interrupt the pressure supply and wait for a short time!

WARNING
Loss of pressure or leakage!
Incorrectly coupled or self-loosening quick-release couplings (particularly return lines) can result in serious accidents due to component failure!
▶ Check that the quick-release couplings have been properly connected before using the crane!

▶ Assemble coupling components (sleeve and connector) and screw together using hand-tightened nut.
▶ Tighten hydraulic coupling by hand. Rotate hand-tightened nut until it reaches a tangible, fixed stop position.
▶ Create the hydraulic connection with the turntable.

2.5.3 Establishing the electrical connections to the turntable

▶ Establish the electrical connections to the turntable on the rotary connections, see separate electric wiring diagram.

4

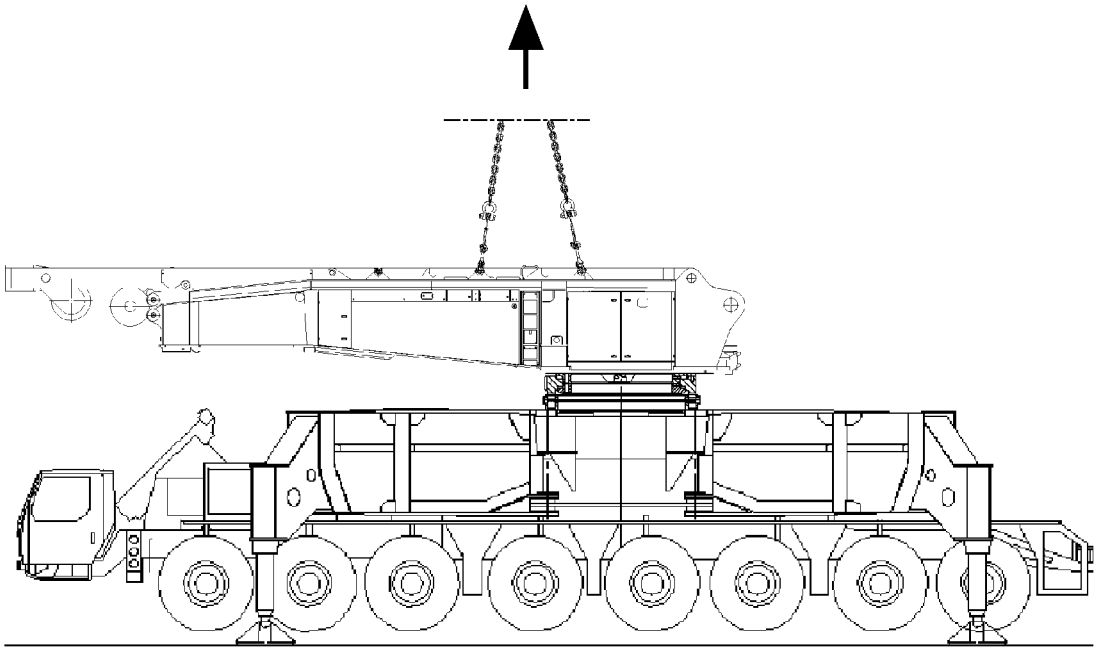

5

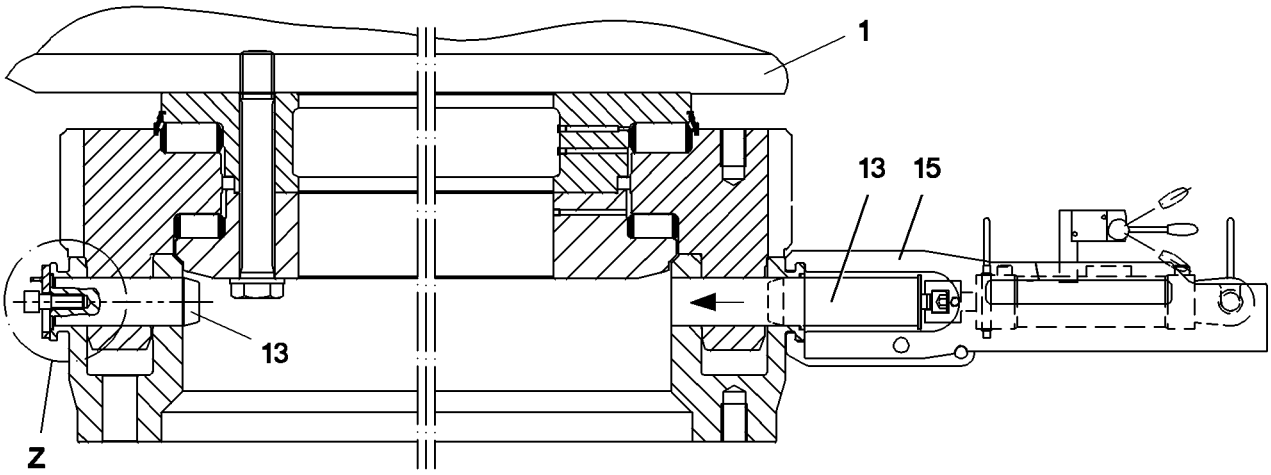

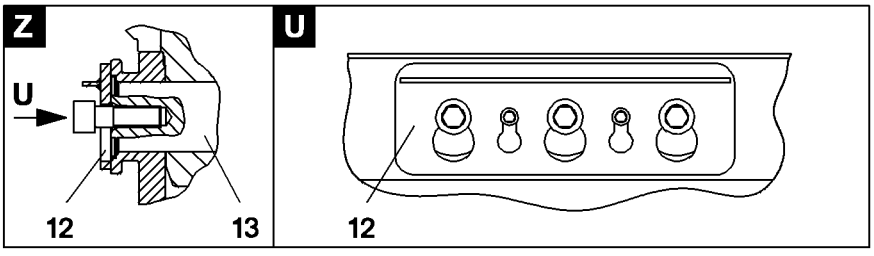

B198591

3 Removing the turntable

WARNING
Risk of falling!
During assembly / disassembly work, personnel must be secured with appropriate fall arresters to prevent them from falling. If this is not observed, assembly personnel can fall and suffer life-threatening or fatal injuries!

- ▶ Any assembly work, where there is a danger of falling must be carried out with suitable aids (for example lifting platform, scaffolding, ladder, auxiliary crane)!
- ▶ If the work cannot be carried out with such aids nor from the ground, then the assembly personnel must secure themselves with approved fall arrest systems to avoid falling, see Crane operating instructions, Chapter 2.04!
- ▶ Approved fall arrest systems must be hung into the respective fastening points on the crane, see Crane operating instructions, chapter 2.06!
- ▶ If railings are present on the components, then they must be brought into the corresponding position and secured for assembly / disassembly work!
- ▶ Step on aids and fall arresters only with clean shoes!
- ▶ Keep aids and fall arresters clean and free from snow and ice!
- ▶ During all assembly and disassembly work, maintenance work and inspections, travel and crane operation is prohibited!

WARNING
Components not pinned and secured!
If a component is released from the auxiliary crane before having been pinned and secured, the component will fall down! Personnel can be severely injured or killed!

- ▶ Do not disengage the auxiliary crane until the corresponding component is pinned and secured!

WARNING
Danger of impact / crushing!
When installing / removing counterweight components with the auxiliary crane, crane components can start to swing back and forth!
When lifting / lowering and positioning crane components, there is an increased danger of impacts / crushing!
Personnel can be caught and severely injured or killed!

- ▶ Make sure that personnel cannot be caught by components!
- ▶ When working in danger zones: Use aids to protect limbs!
- ▶ Guide components with suitable aids to minimize oscillation!

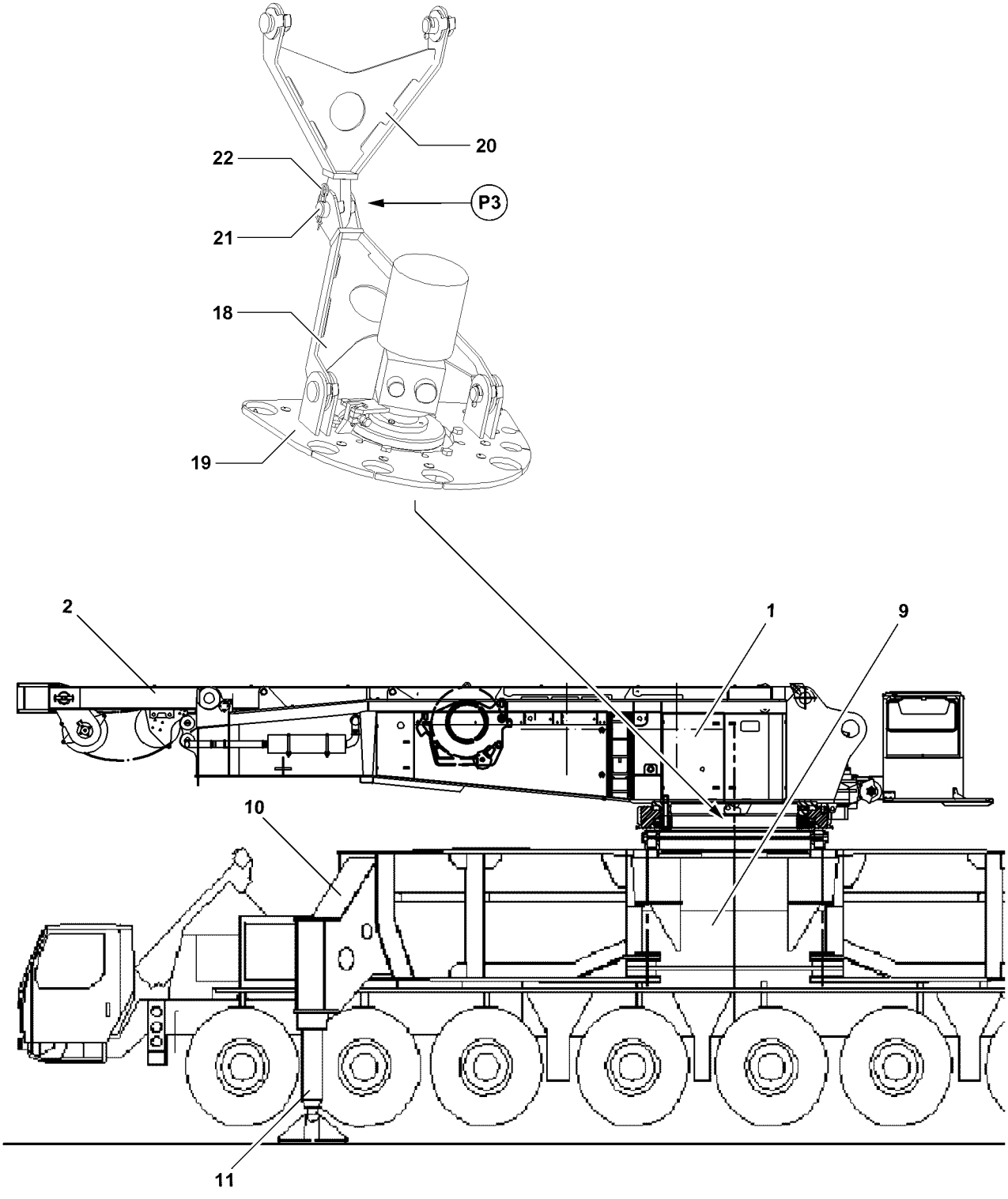

B111156

3.1 Disconnecting the connections to the turntable

Make sure that the following prerequisites are met:
- The counterweight and boom systems are disassembled.
- The hydraulic supports **10** on the crane chassis **9** are swung out, pinned and secured.
- The support cylinders **11** are extended.
- The crane chassis **9** is aligned in horizontal direction.
- The SA-frame **2** is placed on the turntable **1**.

3.1.1 Disconnecting the hydraulic connections to the turntable

When releasing hydraulic lines with quick-release couplings, make sure that the uncoupling procedure is carried out correctly.

WARNING
Pressure in the hydraulic lines!
If the pressure supply is not interrupted before connecting / releasing the hydraulic lines, the hydraulic oil can escape with high pressure!
Personnel can be severely injured or killed!
- ▶ Release the pressure in the hydraulic system before connecting / disconnecting: Interrupt the pressure supply and wait for a short time!

- ▶ Release the hydraulic coupling by hand.
- ▶ Disconnect the hydraulic connection to the turntable on the rotary connection.

3.1.2 Disconnecting the electrical connections to the turntable

- ▶ Disconnect the electrical connection to the turntable on the rotary connection.

3.1.3 Unpinning the bar on the rotary connection

- ▶ Remove spring retainer **22** on point **P3**.
- ▶ Unpin the pin **21** on point **P3**.
- ▶ Disconnect the bar **18** on the bar **20**.

4

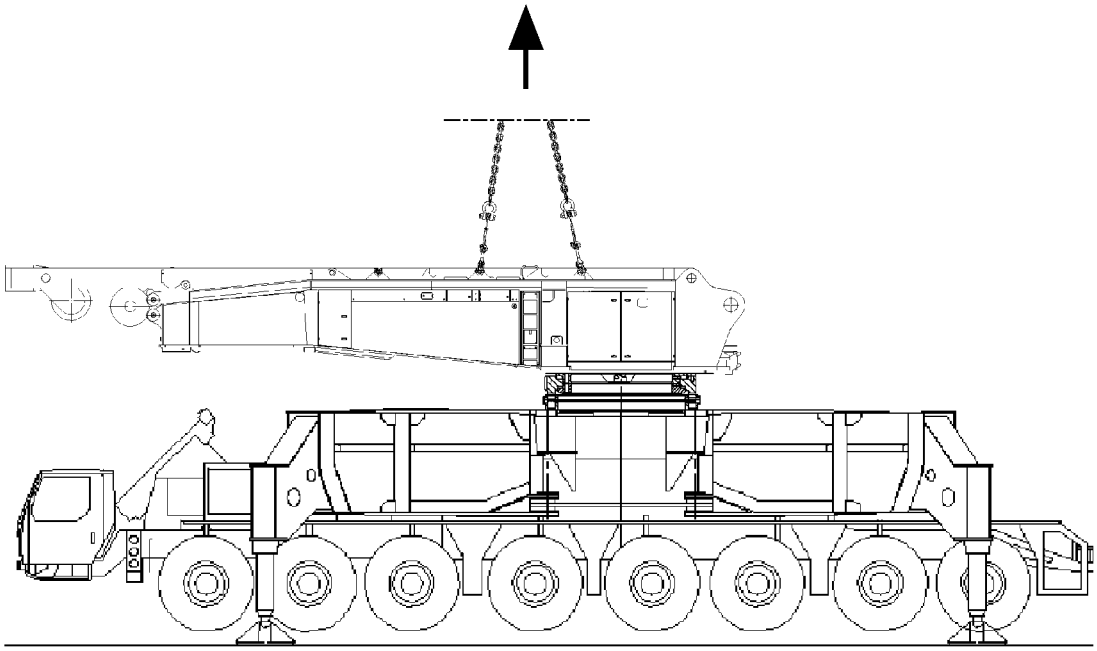

5

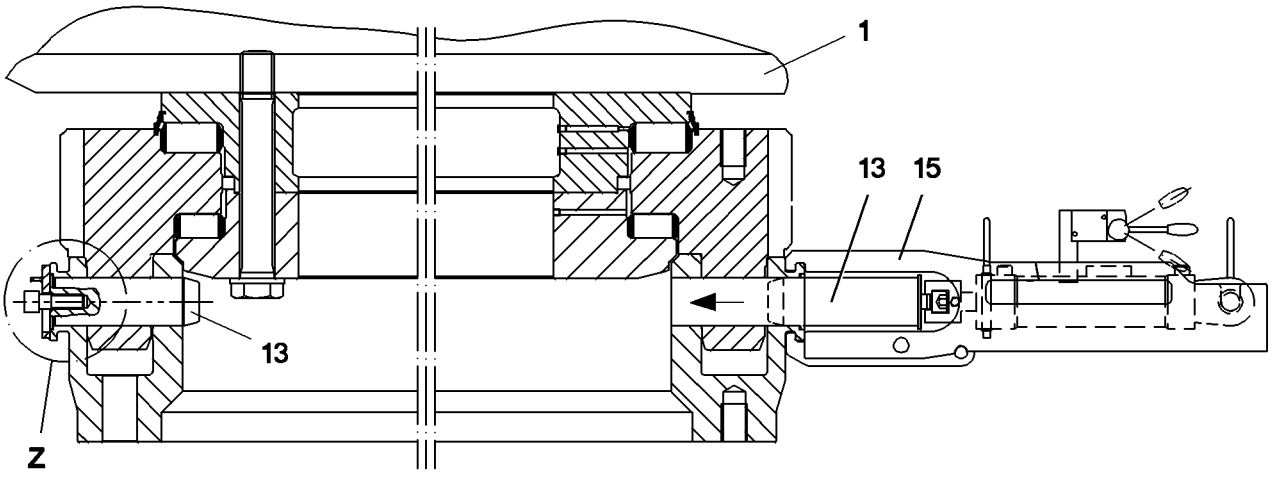

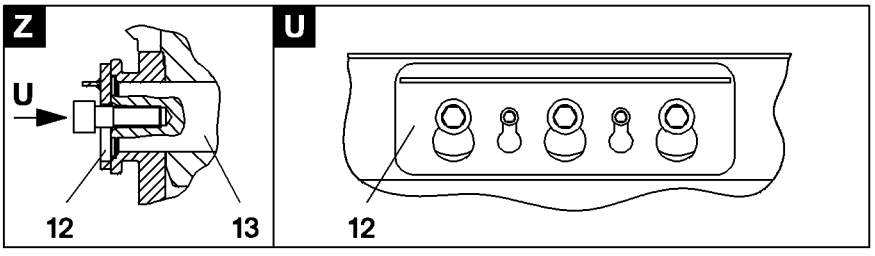

B198591

3.2 Disconnecting the turntable with the quick connection

WARNING
Danger of accident due to incorrect attachment!
Life-threatening situations can arise if the turntable is incorrectly or improperly attached!
Personnel can be severely injured or killed!
- ▶ Set the tensioning devices according to the data in the chart!
- ▶ The turntable and the tensioning devices are attached and set on the fastening points according to the data in the chart, see section “Adjustments on the tensioning devices”.
- ▶ Make sure that the tackle is correctly attached on the turntable and that it is secured sufficiently to prevent it from loosening up!

Make sure that the following prerequisites are met:
– The hydraulic connections on the rotary connection are disconnected.
– The fastening equipment is attached to the receptacle receptacle points of the turntable.

- ▶ Bring the fastening chains to “tension” with the auxiliary crane.
- ▶ Release and remove the retaining bars **12**, illustration **U**.
- ▶ Unpin the connector pins **13** all the way by hand.

Note
- ▶ If the connector pins **13** are hard to move, use a pin pulling device **15**!

NOTICE
Damage to the connector parts!
By lifting the turntable, the connection lines and the quick connection can be damaged!
- ▶ Make sure that all hydraulic and electrical connections are disconnected!
- ▶ Make sure that all connector pins of the quick connection have been removed!

- ▶ When all connector pins are removed:
  Carefully lift the turntable with the auxiliary crane.

WARNING
Falling components!
When lifting the turntable from the crane chassis, components or the turntable can fall down!
Personnel can be severely injured or killed!
- ▶ Make sure that there are no persons within the danger zone!

- ▶ When the turntable is lifted completely off the crane chassis:
  Set the turntable on the flatbed trailer.
- ▶ Remove the auxiliary crane.

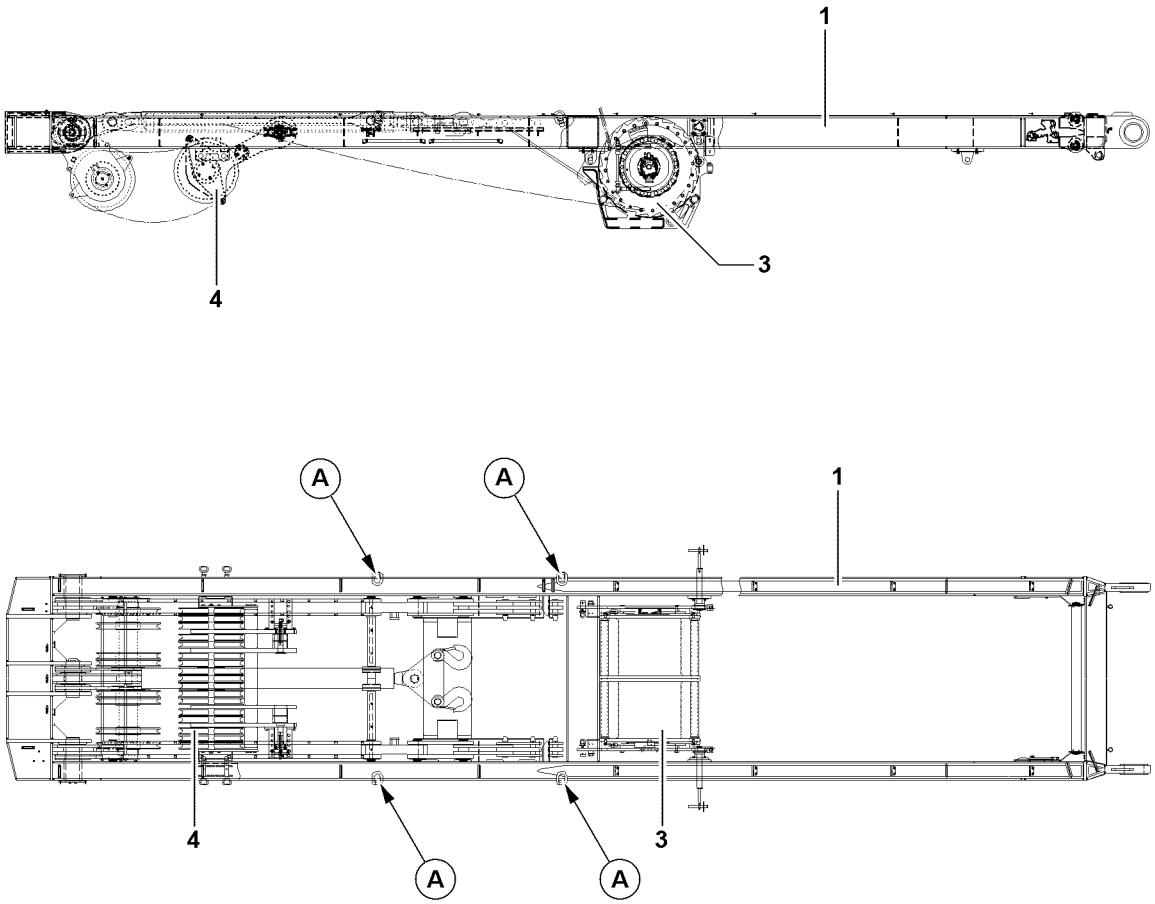

B107469

1 Component overview SA-frame

Position	Component	Weight
1	SA-frame	
3	Intake gear winch 4	
4	Roller bearings	
	SA-frame complete	17.8 t

2 Attachment points SA-frame

WARNING
Danger of accident due to incorrect attachment!
Life-threatening situations can arise due to improper or incorrect attachment of the corresponding components!
▶ The corresponding components must be attached on the intended points **A**!

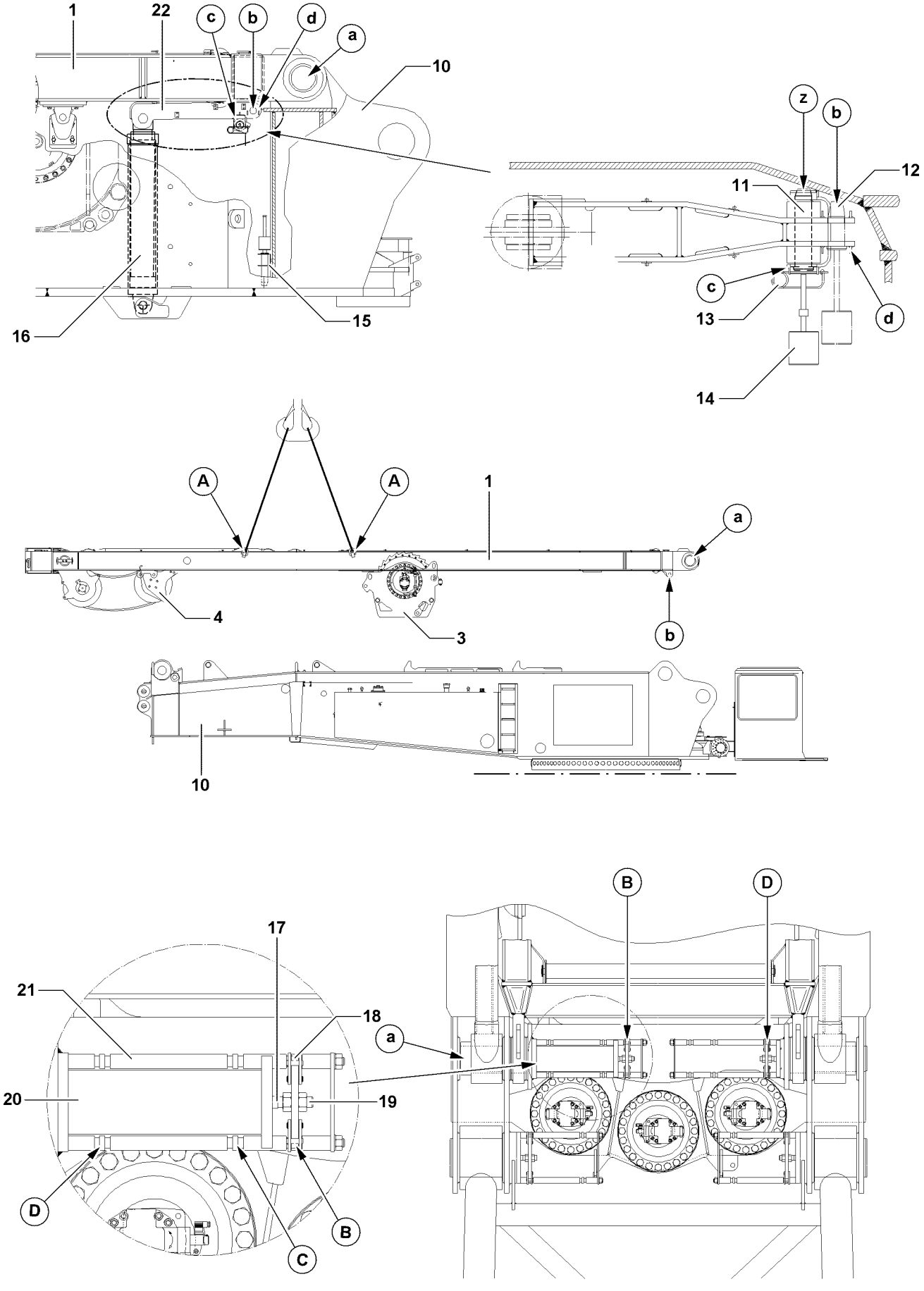
1
22
c
b
d
a
10
16
15
z
b
12
11
c
13
d
14
A
A
1
a
4
3
b
10
B
D
17
21
18
a
20
19
D
B
C

B108271

3 Assembling SA-frame

Note
- ▶ Guarantee equally long attachment equipment such that the SA-frame can be horizontally positioned over the turntable!

Note
- ▶ Control of radio remote control, see chapter 5.08 of the crane operating instructions!

3.1 Pinning the SA-frame on the turntable

NOTICE
Collision of components!
If the SA-frame is positioned with the auxiliary crane on the turntable, roller bearings and hoist gear can collide with the turntable. Components can be damaged!
- ▶ Make sure that the roller bearing **4** does not collide with the turntable **10**!
- ▶ Make sure that the intake gear winch 4 **3** does not collide with the turntable **10**!

Make sure that the following prerequisites are met:
- – pins **20** are unpinned on both sides at position **a**,
- – pins **12** are unpinned on both sides at position **b**,
- – securing hooks **18** are hung on both sides on the guide at the point **B**.

- ▶ Attach SA-frame **1** with auxiliary crane on the attachment points **A**.
- ▶ Position SA-frame **1** with auxiliary auxiliary crane on the turntable **10** so that pinning points **a** and pinning points **b** align.
- ▶ Pin in the pins **20**: Activate radio remote control.
- ▶ Fold up securing hooks **18** at the point **B**.

Note
- ▶ Likewise, if the derrick boom is assembled, the pins **20** must be secured at the points **C** with the securing hooks **18**!
- ▶ For derrick boom assembly, see chapter 5.05 of the crane operating instructions!

- ▶ Retract cylinder: Activate remote control operation, until securing hooks **18** can be hung on point **D**.

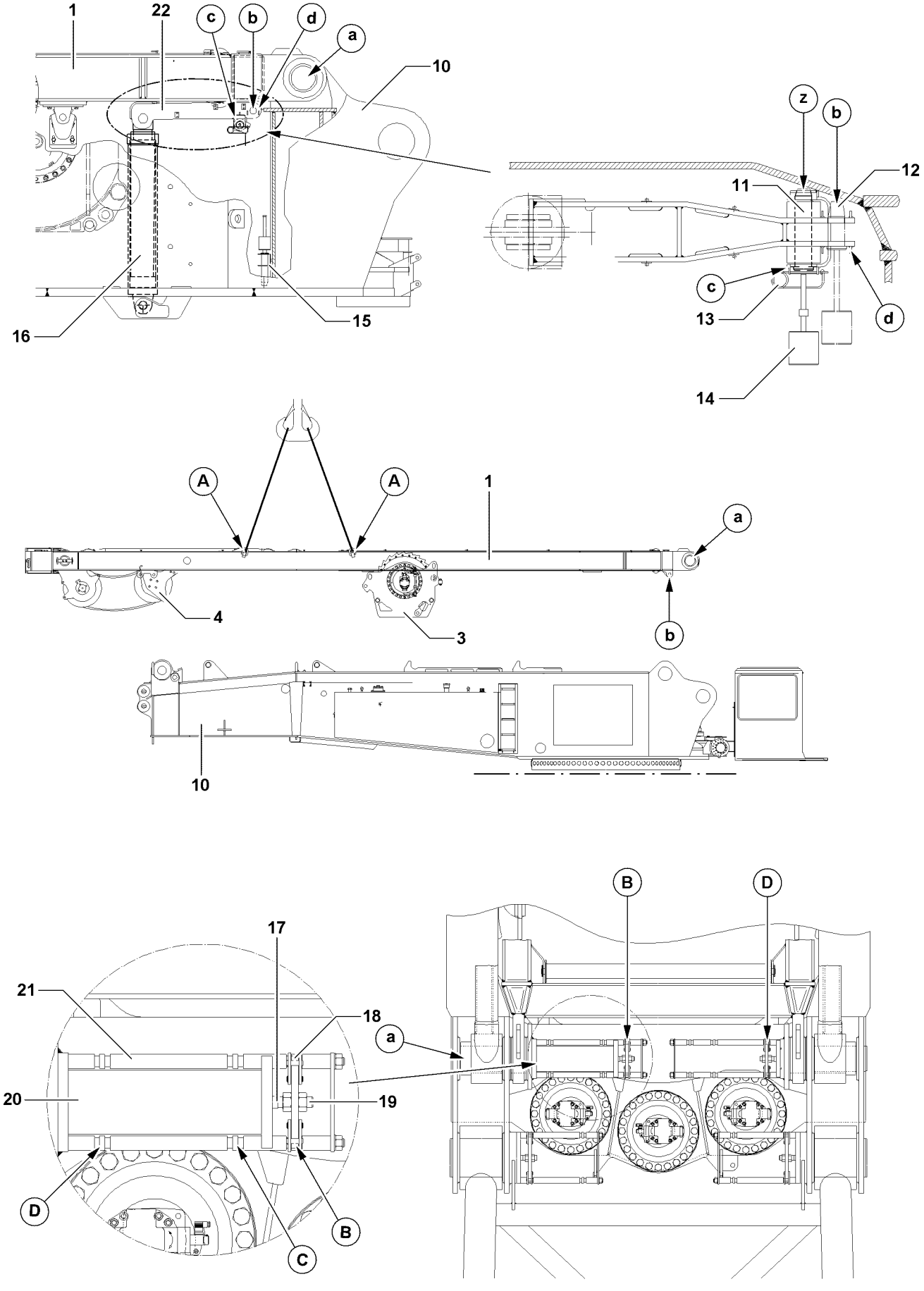
1
22
c
b
d
a
10
16
15
z
b
12
11
c
13
d
14
A
A
1
a
4
3
b
10
B
D
17
21
18
a
20
19
D
B
C

B108271

WARNING
Unsecured pin!
If the pins **20** are not secured, the pins can loosen. Personnel can be severely injured or killed!
▶ Secure pin **20** with securing hooks **18**!

▶ Hang securing hooks **18** on the point **D**.

Result:
– The pin **20** is secured.

▶ Pin in and secure pins **20** on both sides.
▶ Pin in the pins **12** on both sides with pin device **14** at position **b**.
▶ Remove spring retainer **13** on point **c**.
▶ Secure pins **12** on both sides with spring retainer **13** in position **d**.
▶ Unpin pins **11** with pin device **14**.
▶ Insert pins **11** with pin device **14** in receptacle **15**.
▶ Lay down SA-frame **1** completely with auxiliary crane.
▶ Separate and remove SA-frame **1** from tackle and auxiliary crane.

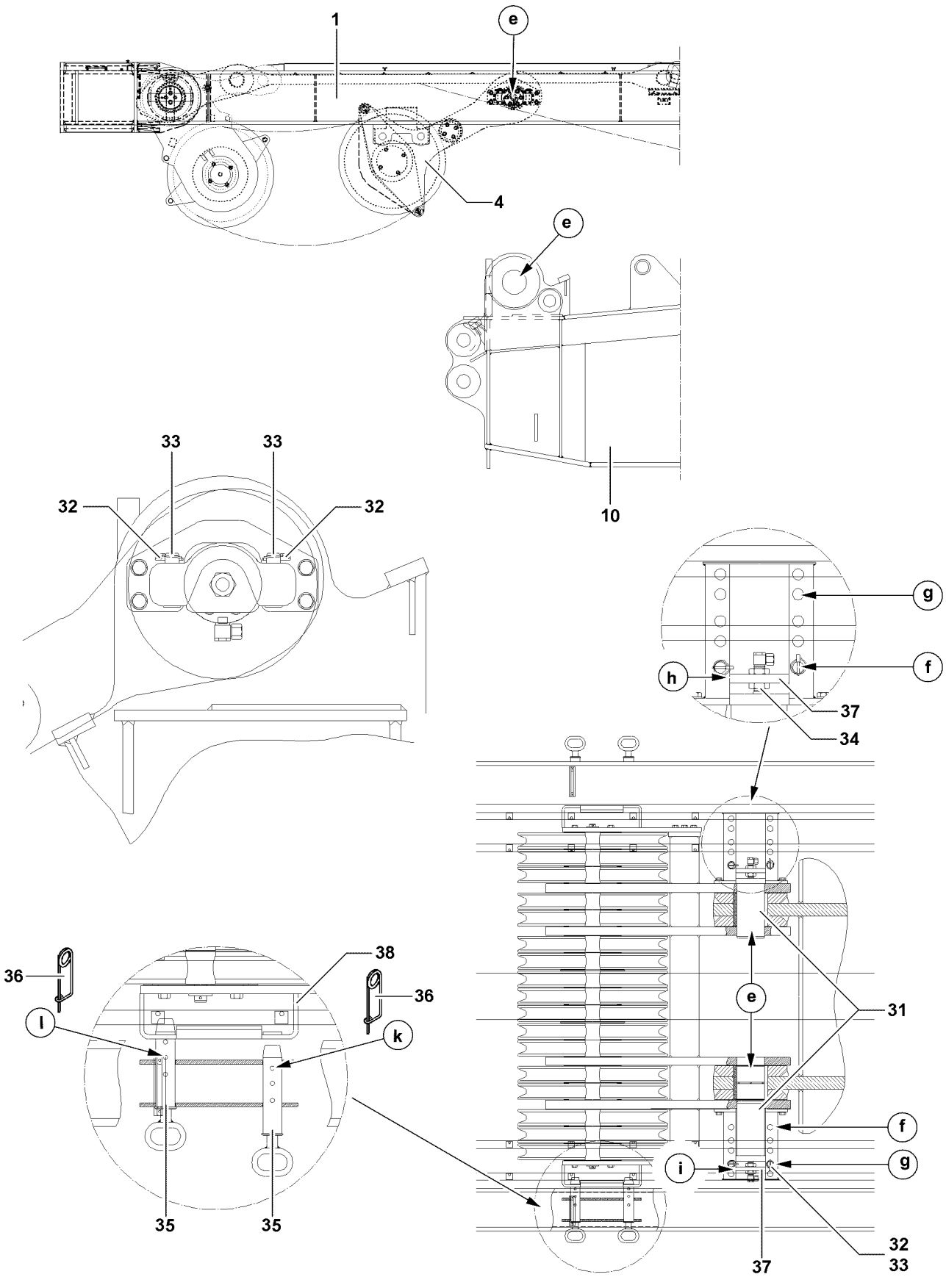

B107471

3.2 Pin roller bearings.

Ensure that the following prerequisites are met:
- align pinning points **e**,
- pins **31** are unpinned on both sides,
- retaining pins **33** are pinned on both sides on the point **g** and secured with linch pins **32**.

▶ Pin in the pins **31**: Activate radio remote control.
▶ Unpin the linch pin **32** on both sides and unpin the pins **33**.
▶ Retract cylinder **34**: Activate radio remote control until metal **37** stands at position **h** and retaining pins **33** can be pinned at point **f**.
▶ Pin in the pins **33** on both sides and secure with spring retainers **32**.
▶ Secure the pin **31**: Pin in the retaining pins **33** on both sides at the point **f** and secure with linchpins **32**.
▶ Hang roller bearing **4** on the auxiliary crane and and lightly lift until the socket pins **35** may be unpinned.
▶ Remove spring retainer **36** on point **l**.
▶ Unpin socket pins **35** on metal **38**, so that roller bearing **4** is separated from SA-frame **1**.
▶ Secure socket pins **35** on the point **k** with spring retainer **36**.
▶ Lower pulley set **4** with auxiliary crane, until pulley set **4** hangs completely in the rope reeving.
▶ Remove the auxiliary crane.

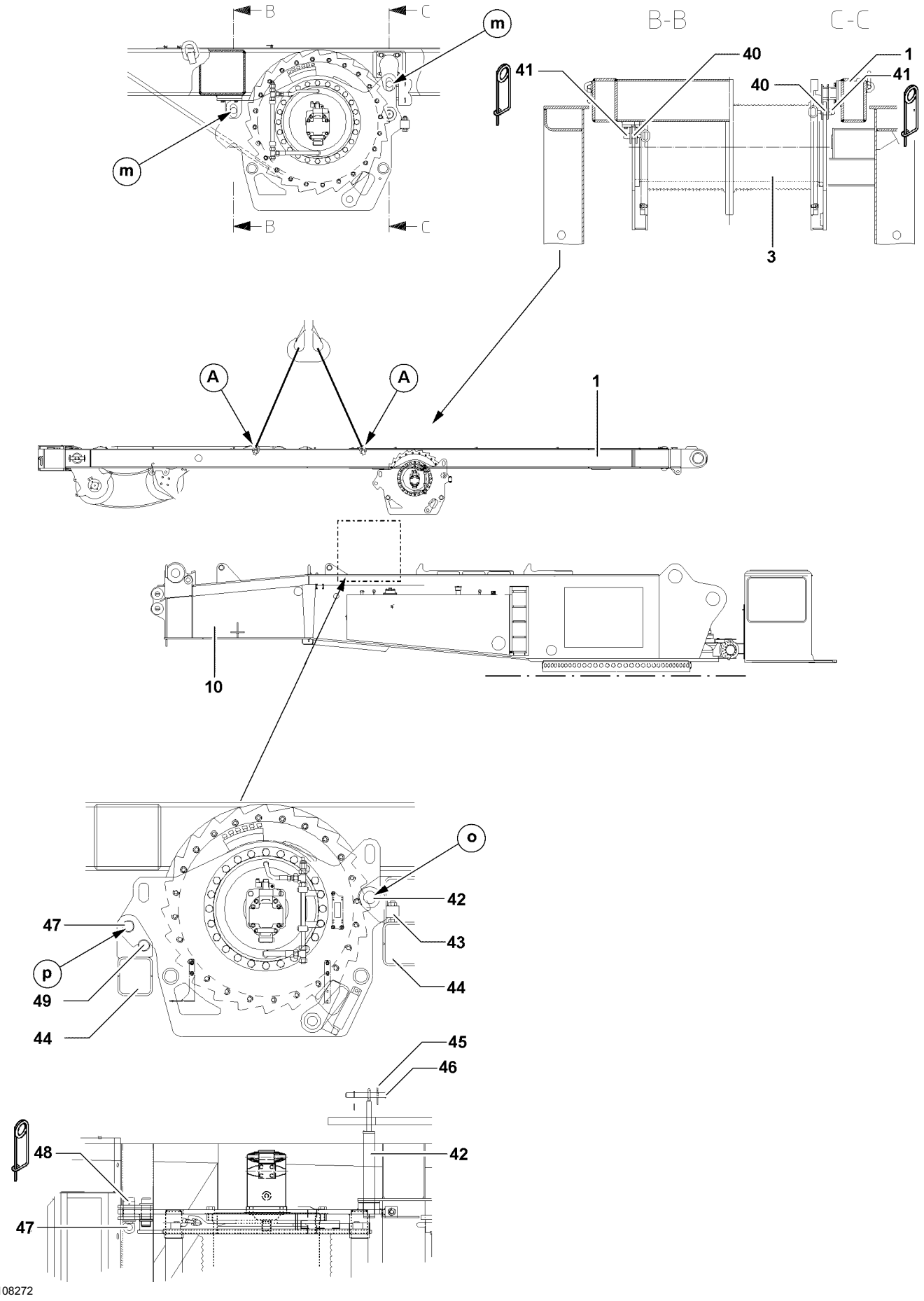
B
C
m
m
B
C
B-B
C-C
41
40
1
40
41
3
A
A
1
10
o
42
47
43
p
49
44
44
45
46
48
42
47
B108272

3.3 Pin intake gear winch 4 on turntable

Make sure that the following prerequisites are met:
- align pin points **o** between intake gear winch 4 **3** and turntable **10**,
- align pin points **p** between intake gear winch 4 **3** and turntable **10**,
- intake gear winch 4 **3** lies with pins **49** and stop **43** on turntable frame **44** up.

▶ Pin in the socket pins **42** at the pin points **o** and secure with retaining pins **46**.
▶ Secure the retaining pins **46** on both sides with cotter pins **45**.
▶ Secure socket pins **47** at the pin points **p** and pin with retaining pins **48**.
▶ Separate intake gear winch 4 **3** from SA-frame **1**: Remove pin points **m** on both sides spring retainer **41** and unpin stick pins **40**.

3.4 Establishing the electrical connections

Note
▶ For production of the electrical connections on the SA-frame, the separate electrical diagram is to be employed!

▶ Establish electric connections between turntable and SA-frame.
▶ Establish electrical connections between turntable and intake gear winch 4.

3.5 Establish the hydraulic connections

When hydraulic lines are connected and disconnected with quick-release couplings, make sure that the coupling procedure is carried out correctly.

DANGER
Risk of accident due to loss of pressure or leakage!
Incorrectly coupled or self-loosening quick-release couplings (particularly return lines) as well as self-loosening of quick-release couplings can result in serious injury due to component failure!
▶ Check that the quick-release couplings have been properly connected before using the crane!

Note
▶ To connect or loosen the hydraulic lines with quick couplers, see chapter 5.01 of the crane operating instructions!

▶ Release the pressure in the hydraulic system before connecting and disconnecting. Turn the engine off and wait for short time.
▶ Assembling coupling components (sleeve and connector) by using hand-tightened nut.
▶ Combine coupling components.

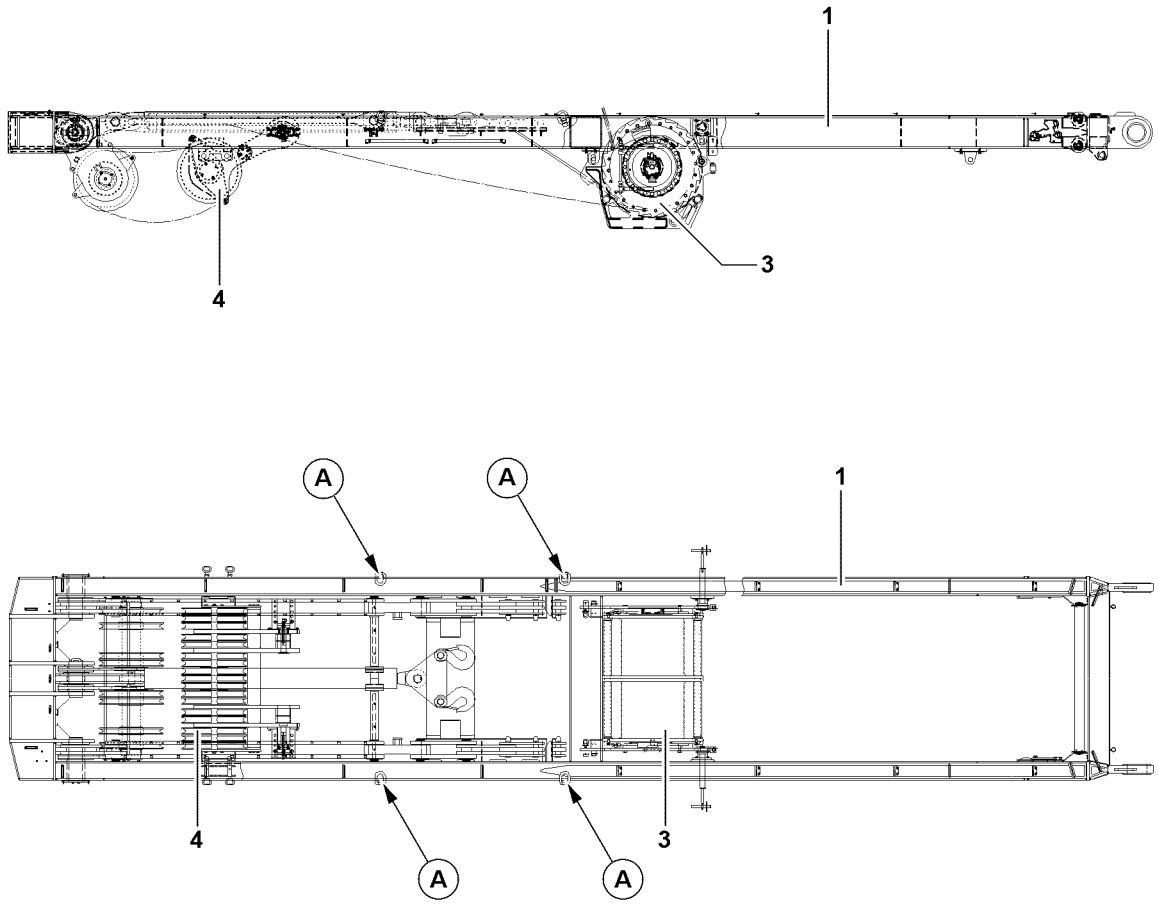

B107469

4 Disassembling SA-frame

Note
▶ Guarantee equally long tackle such that the SA-frame can be horizontally lifted from the turntable!

Note
▶ Control of radio remote control, see chapter 5.08 of the crane operating instructions!

Ensure that the following prerequisite is met:
– roller bearings are found in transport position: SA-frame is found in the 0° position.

4.1 Disconnect the electrical connections

▶ Separate and properly store electrical connections between turntable and SA-frame.
▶ Separate and properly store electrical connections between turntable and winch 4.

4.2 Disconnect the hydraulic connections

When hydraulic lines are connected and disconnected with quick-release couplings, make sure that the coupling procedure is carried out correctly.

Note
▶ To connect or loosen the hydraulic lines with quick couplers, see chapter 5.01 of the crane operating instructions!

▶ Release the pressure in the hydraulic system before connecting and disconnecting. Turn the engine off and wait for short time.
▶ Loosen coupling components (sleeve and connector) by using hand-tightened nut.
▶ Separate coupling components.
▶ Properly store hydraulic hoses on the the SA-frame on the turntable.
▶ Fitting the coupling components with protective caps against contamination and damage.

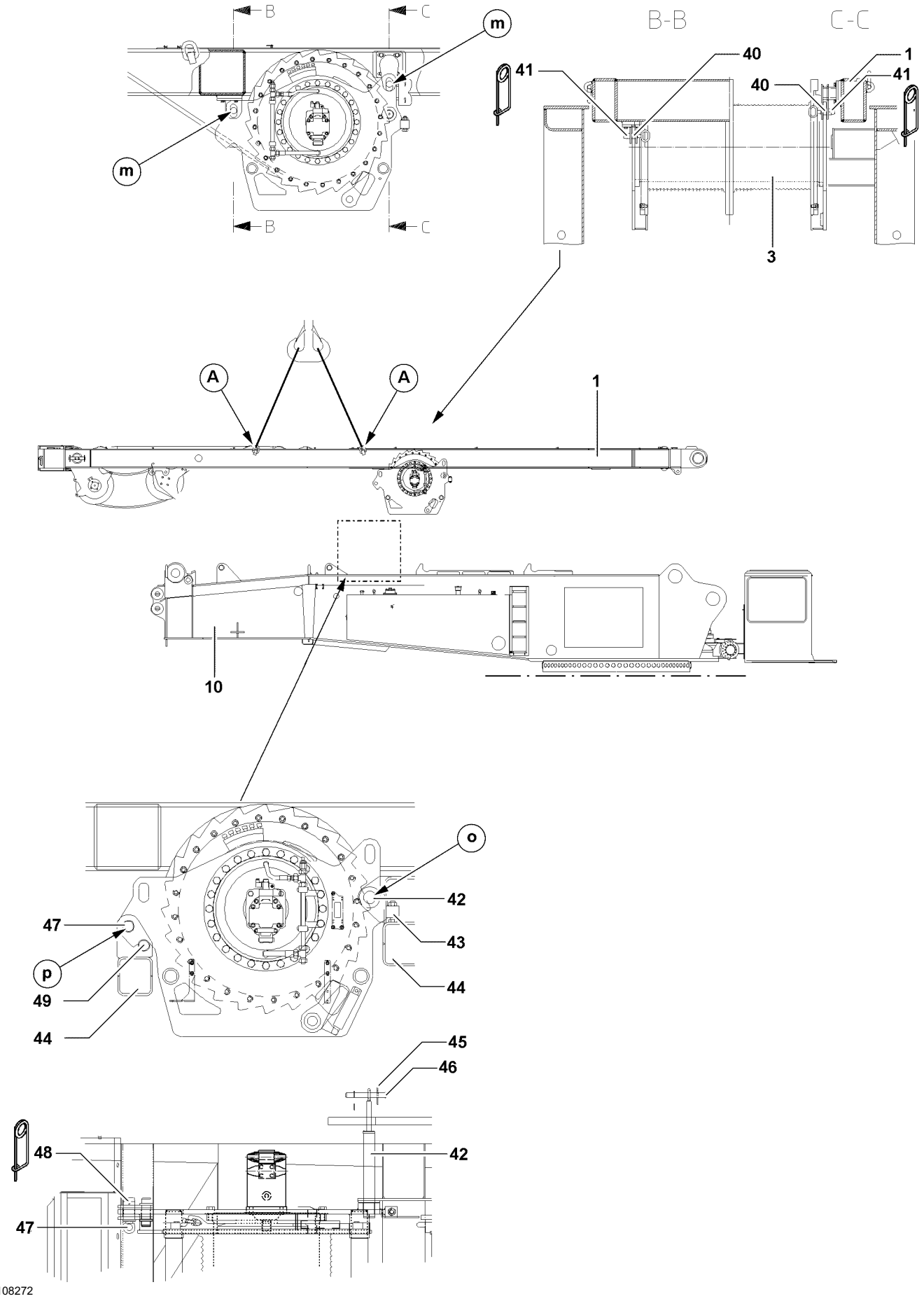
B
C
m
m
B
C
B-B
C-C
41
40
1
41
40
3
A
A
1
10
o
42
47
43
p
49
44
44
45
46
48
42
47
B108272

4.3 Prepare intake gear winch 4 for transport

Ensure that the following prerequisite is met:

– align pin points **m** between intake gear winch 4 **3** and SA-frame **1**.

▶ Secure socket pins **40** at the pin points **m** and pin with retaining pins **41**.

▶ Separate intake gear winch 4 **3** from turntable **10**:

▶ Remove cotter pins **45** on both sides at the pin points **o** and unpin retaining pins **46**.

▶ Unpin the pins **42** on both sides.

▶ Remove spring retainers **48** on both sides on the pin points **p** and unpin socket pins **47**.

Result:

– Intake gear winch 4 **3** is separated from SA-frame **1**.

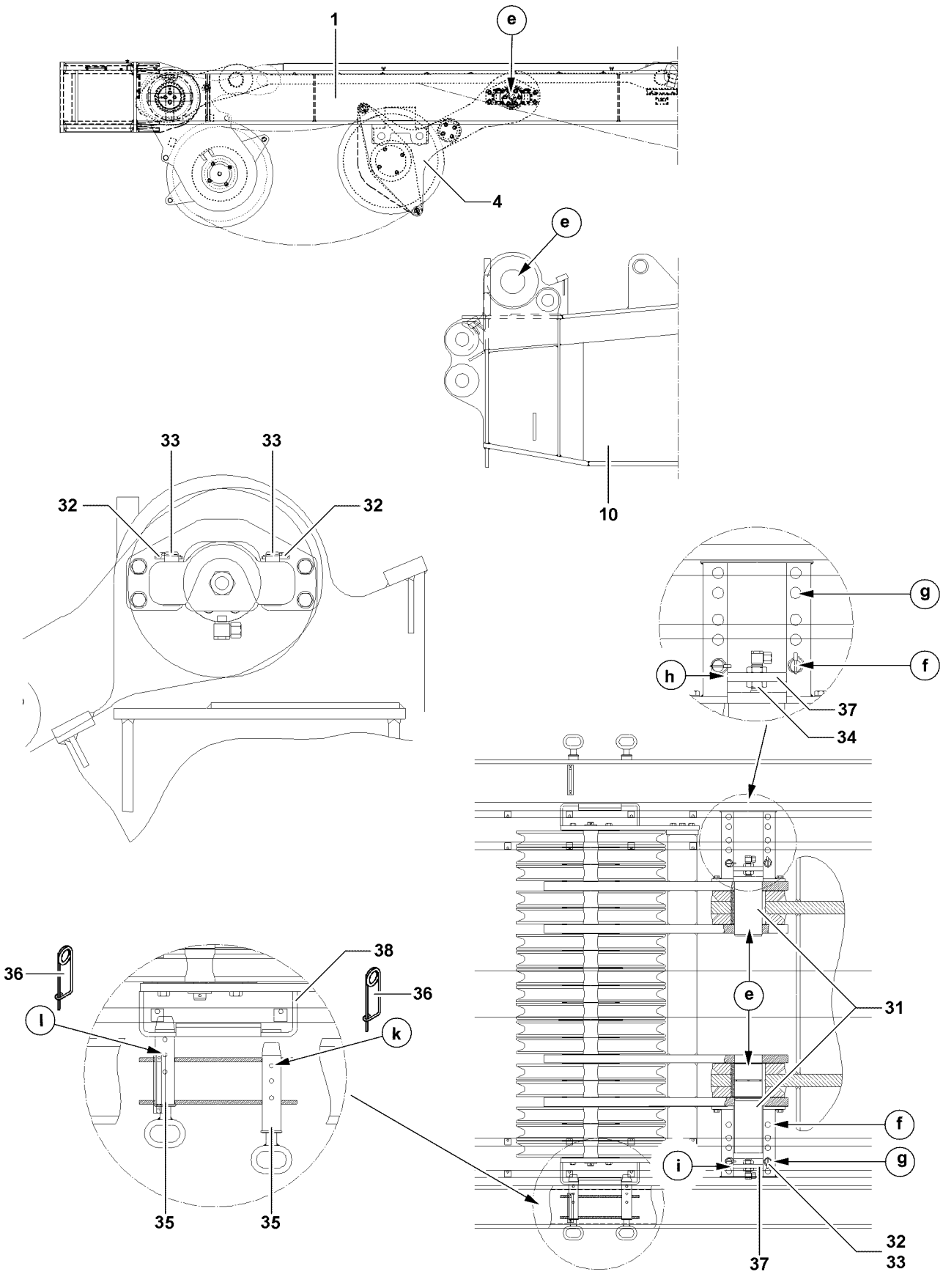

B107471

4.4 Preparing the roller bearings for transport

Ensure that the following prerequisites are met:

– align pinning points **k**,
– pins **35** are unpinned on both sides,
– retaining pins **33** are pinned on both sides on the point **f** and secured with linch pins **32**.

▶ Hang roller bearing **4** on the auxiliary crane and and lightly lift until the socket pins **35** may be unpinned.
▶ Remove spring retainer **36** on point **k**.
▶ Unpin socket pins **35** on metal **38**, so that roller bearing **4** is connected with SA-frame **1**.
▶ Unpin the linch pin **32** on both sides and unpin the pins **33**.
▶ Extend cylinder **34**: Activate radio remote control until metal **37** stands at position **i** and retaining pins **33** can be pinned at point **g**.
▶ Pin in the pins **33** on both sides and secure with spring retainers **32**.
▶ Unpin the pins **31**: Activate radio remote control.
▶ Remove auxiliary crane and tackle.

Result:

– The roller bearing **4** is connected with the SA-frame **1**.

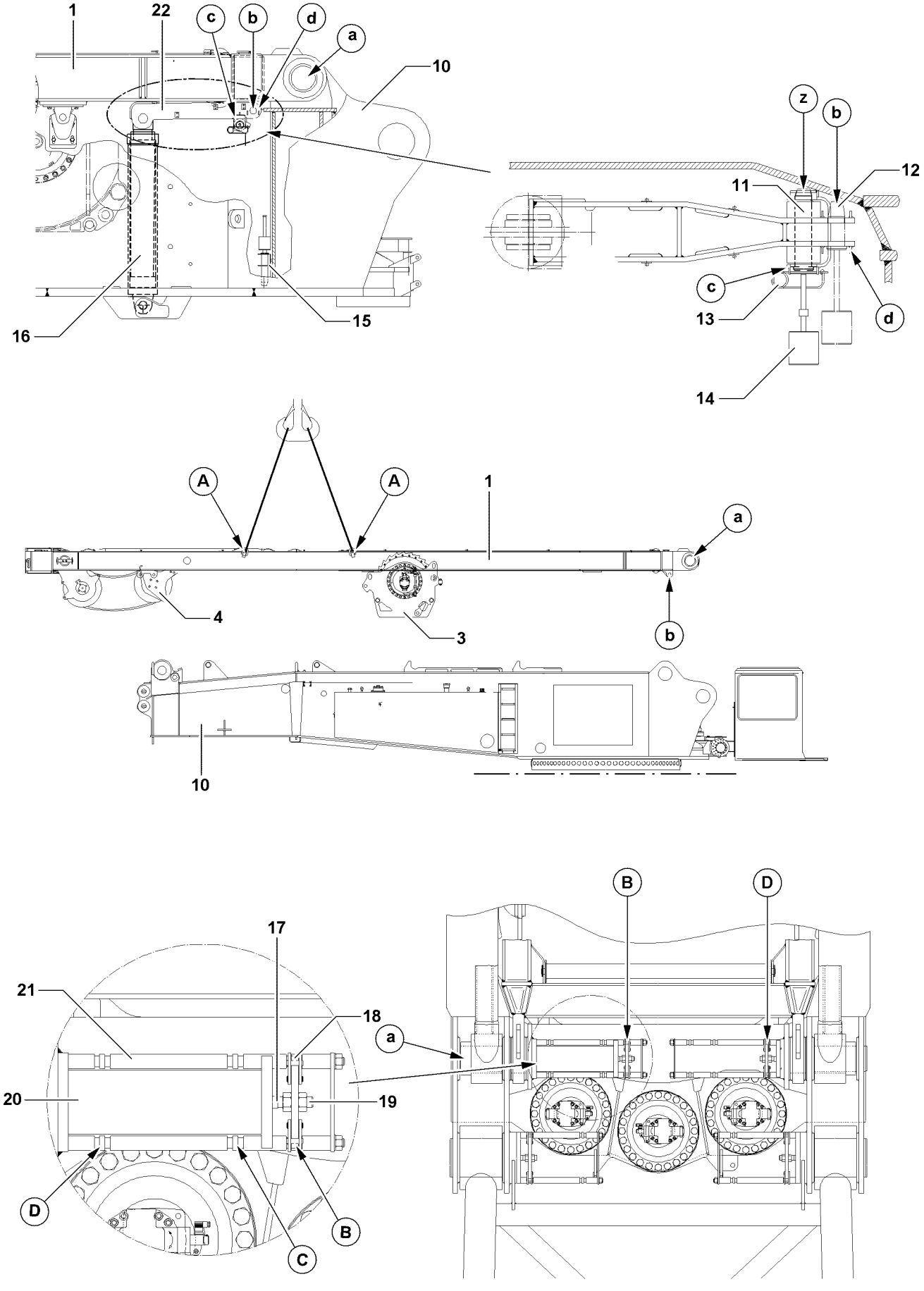
1
22
c
b
d
a
10
z
b
12
11
c
13
d
14
16
15
A
A
1
a
4
3
b
10
B
D
17
21
18
a
20
19
D
B
C

B108271

4.5 Unpin the SA-frame on the turntable

NOTICE
Collision of components!
If the SA-frame is lifted with the auxiliary crane on the turntable, roller bearings and hoist gear can collide with the turntable. Components can be damaged!
▶ Make sure that the roller bearing **4** does not collide with the turntable **10**!
▶ Make sure that the intake gear winch 4 **3** does not collide with the turntable **10**!

Ensure that the following prerequisite is met:
– securing hooks **18** are hung on both sides on the guide at the point **D**,

▶ attach and secure SA-frame **1** with auxiliary crane on the attachment points **A**.
▶ Pin in the pins **11** with pin device **14** in position **z**.
▶ Remove spring retainer **13** in position **c**.
▶ Pin in the pins **11** and secure spring retainer **13** in position **c**.
▶ Unpin pins **12** on both sides with pin device **14** in position **b** and insert in receptacle **15**.

Result:
– Erection cylinder **16** is separated from SA-frame **1** and secured on flap **22**.

DANGER
Unpinned derrick boom!
If the SA-frame is unpinned, as long as the derrick boom is still assembled, the derrick boom topples! Personnel can be severely injured or killed!
▶ Disassemble derrick boom before disassembly of the SA-frame!

Note
▶ For derrick boom assembly, see chapter 5.05 of the crane operating instructions!

▶ Fold up securing hooks **18** at the point **D**.
▶ Extend cylinder: Activate remote control operation, until securing hooks **18** can be hung on point **B**.
▶ Unpin the pins **20**: Actuate radio remote control.
▶ Hang in the securing hooks **18** on both sides on the point **B**.

Result:
– The pin **20** is secured.

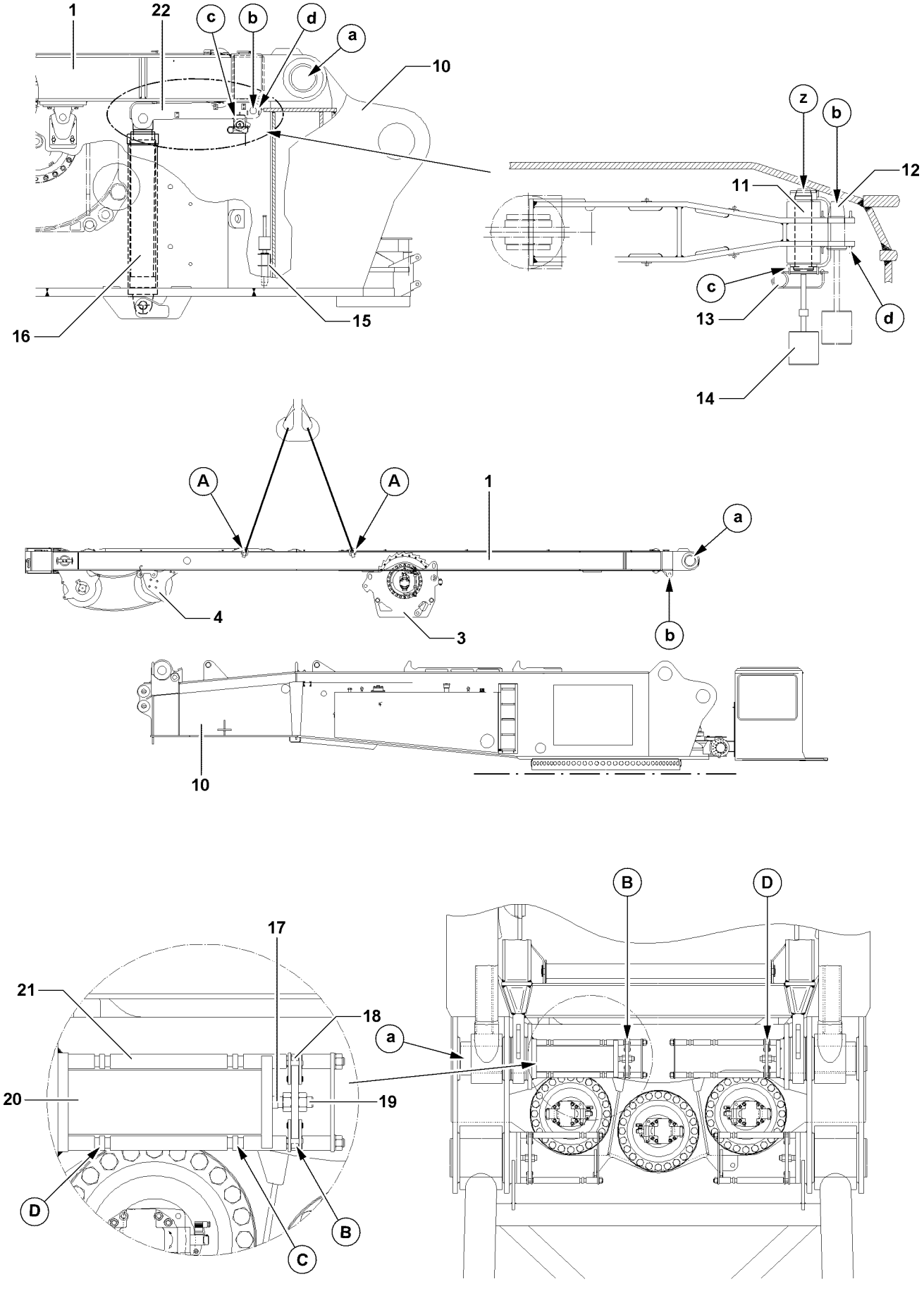
1
22
c
b
d
a
10
z
b
12
11
c
13
d
14
16
15
A
A
1
a
4
3
b
10
B
D
17
21
18
a
20
19
D
B
C

B108271

4.6 Remove the SA-frame from the turntable

Note

▶ Guarantee equally long tackle such that the SA-frame can be horizontally lifted from the turntable!

NOTICE

Collision of components!

If the SA-frame is lifted with the auxiliary crane on the turntable, roller bearings and hoist gear can collide with the turntable. Components can be damaged!

▶ Make sure that the roller bearing **4** does not collide with the turntable **10**!

▶ Make sure that the intake gear winch 4 **3** does not collide with the turntable **10**!

▶ Attach SA-frame **1** with auxiliary crane on the attachment points.

▶ Carefully lift and remove SA-frame **1**.

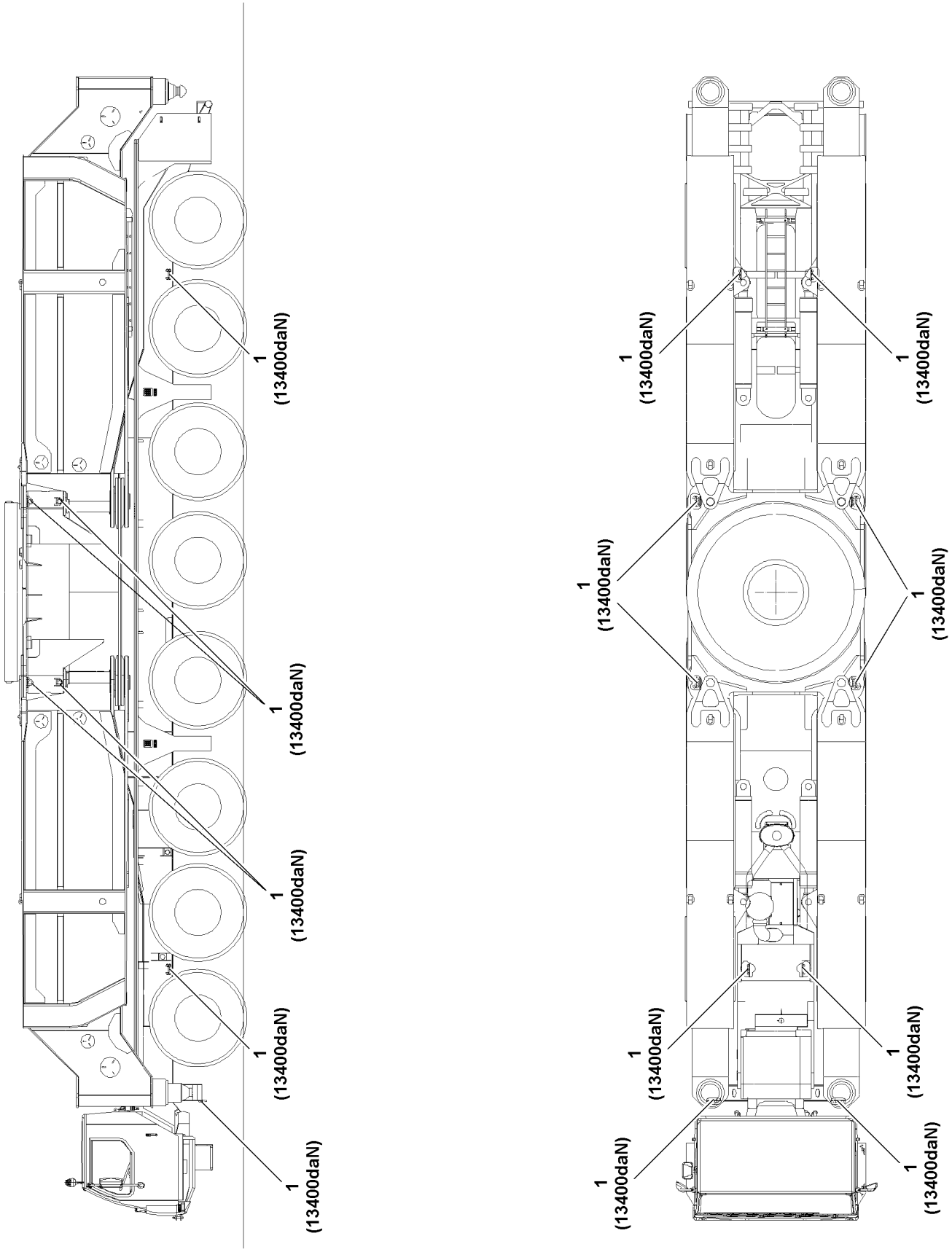
1 (13400daN)
1 (13400daN)
1 (13400daN)
1 (13400daN)
1 (13400daN)
1 (13400daN)
1 (13400daN)
1 (13400daN)
1 (13400daN)
1 (13400daN)
1 (13400daN)
1 (13400daN)

B115441

1 Transporting the crane

1.1 Checking the rigging points

Before every operation and at regular intervals, check the rigging points for cracks of the welding seam, significant corrosion, wear and distortion.
The inspection criteria are:

– Completeness of rigging point.
– Distortion of carrying parts.
– Mechanical damage such as severe nicks.
– Changes in diameter due to wear.
– Significant corrosion (pitting).
– Cracks on carrying parts.
– Cracks or other damage on the welding seam.

WARNING
Danger of accident!
When using rigging points which are not operationally safe, severe personnel damage and property damage can occur!

▶ Have rigging points which are not operationally safe replaced with new rigging points by authorized and trained expert personnel!
▶ When hooking and unhooking the rigging (such as rigging chain), handle carefully to avoid crushing, sheering, catch and impact points!
▶ Eliminate damage of rigging due to sharp edged stress!

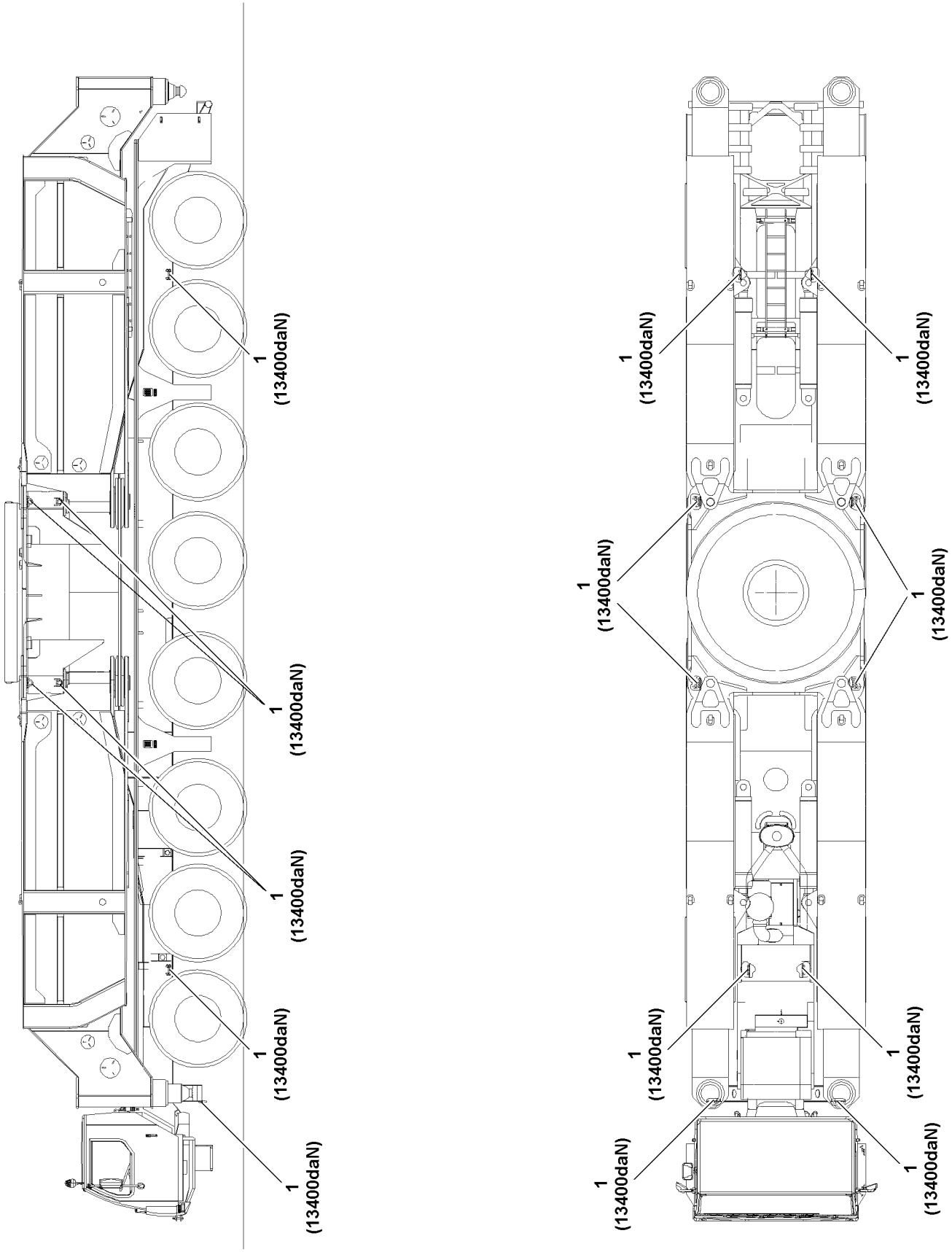
1 (13400daN)
1 (13400daN)
1 (13400daN)
1 (13400daN)
1 (13400daN)
1 (13400daN)
1 (13400daN)
1 (13400daN)
1 (13400daN)
1 (13400daN)
1 (13400daN)
1 (13400daN)

B115441

1.2 Transporting the crane safely

Observe the following notes for safe crane transport:

– For transport, use a suitable transport vehicle.
– Clean the wheels before transport to obtain the greatest possible friction value to the transport surface.
– When driving on the transport vehicle, check the easy movement of the vehicle with the aid of a guide to avoid hitting too hard.
– The transport location must be horizontal and level.
– Apply the parking brake. See Crane operating instructions, chapter 3.04.
– Lower the crane with the levelling regulation (“axle suspension system”) to obtain a center of gravity as low as possible. See Crane operating instructions, chapter 3.03.
– Place wedges under the wheels. See Crane operating instructions, chapter 2.04.
– Close the driver's cab as well as all cover doors.

NOTICE

Damage to crane!

The rigging eyehooks **1** may only be used to rig the crane!

The rigging eyehooks **1** may **not** be used to lift the crane and **not** to lift loads!

▶ Use the rigging eyehooks **1** only to rig the crane.

– Secure the vehicle on the rigging eyehooks **1** (13400 daN maximum nominal load) according to the illustration, permissible load and valid regulations for loading and load retention.
  Use suitable rigging devices with sufficient capacity.

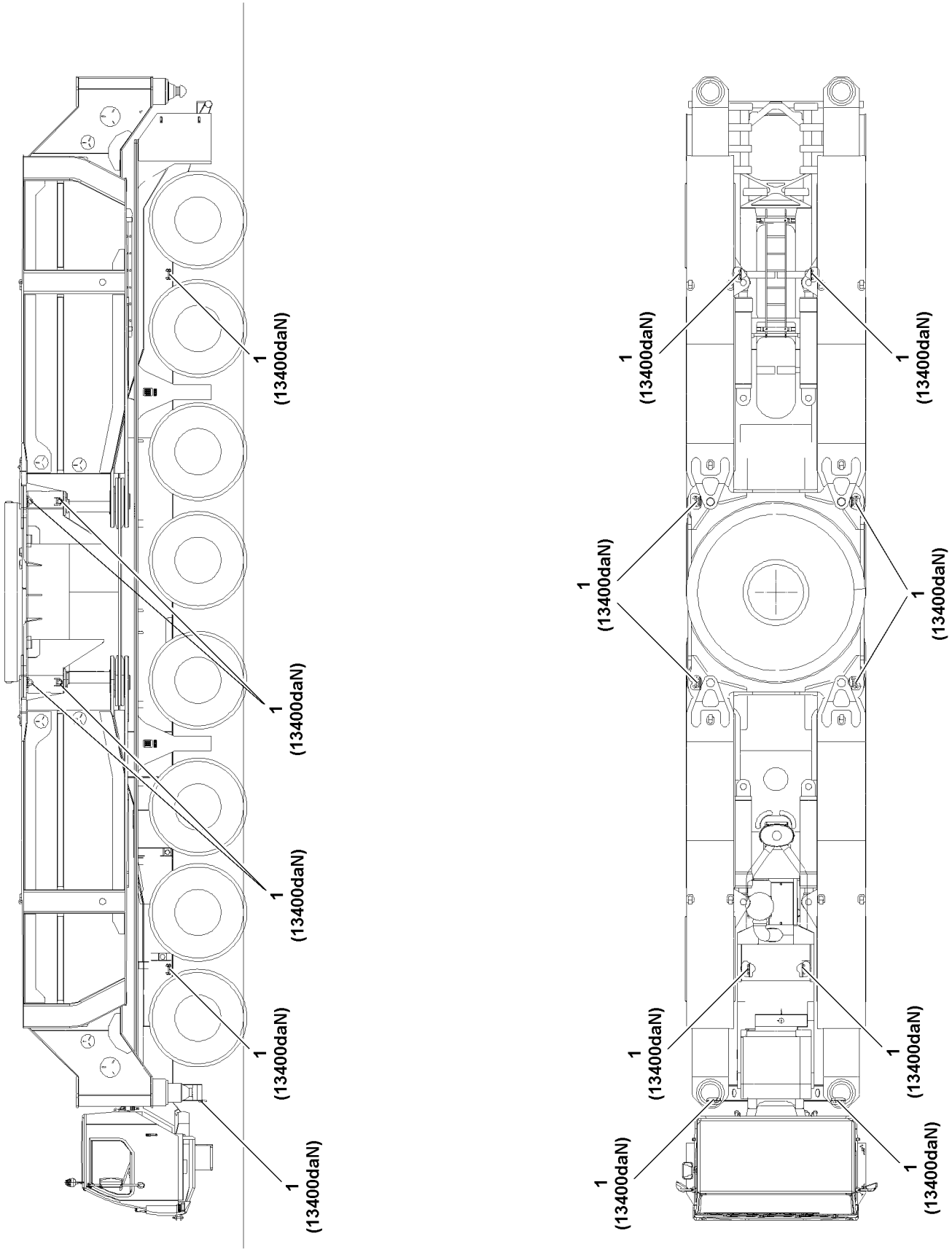
1 (13400daN)
1 (13400daN)
1 (13400daN)
1 (13400daN)
1 (13400daN)
1 (13400daN)
1 (13400daN)
1 (13400daN)
1 (13400daN)
1 (13400daN)
1 (13400daN)
1 (13400daN)

B115441

1.3 Driving the crane on the transport vehicle

Make sure that the following prerequisites are met:
– The support beams are properly locked in transport position with the crane chassis.
– A guide is available.

NOTICE
Damage to vehicle!
▶ Have the guide check that the vehicle does not collide with the transport vehicle or hits it!

▶ Drive the crane carefully on the transport vehicle.
▶ Drive the crane carefully to the transport location.
▶ Apply the parking brake. See Crane operating instructions, chapter 3.04.
▶ Lower vehicle. See Crane operating instructions, chapter 3.03.

Result:
– By lowering the vehicle, a center of gravity as low as possible can be reached for the vehicle.

▶ Turn the engine off and pull the ignition key.
▶ Place wedges under vehicle, see Crane operating instructions, chapter 2.04.
▶ Close the driver's cab and all cover doors and hand the ignition key to an authorized person.

1.4 Securing the crane

DANGER
The vehicle can roll off uncontrollably!
If the vehicle is not correctly secured on the transport location, the vehicle can roll off uncontrolled or even topple over!
Personnel can be killed or injured!
▶ Secure the crane to prevent it from rolling off or falling over!
▶ Place the wedges carried along on the crane!
▶ Use tension belts or tension chains according to the illustration, permissible load and the valid regulations for loading and load retention.
▶ Attach tension belts or tension chains on the rigging eyehooks **1** according to the illustration!
▶ Retain the angle and radii according to the illustration!

▶ Secure the crane with tension belts or tension chains on the rigging eyehooks **1**.
▶ Attach the tension belts or tension chains on the transport vehicle.

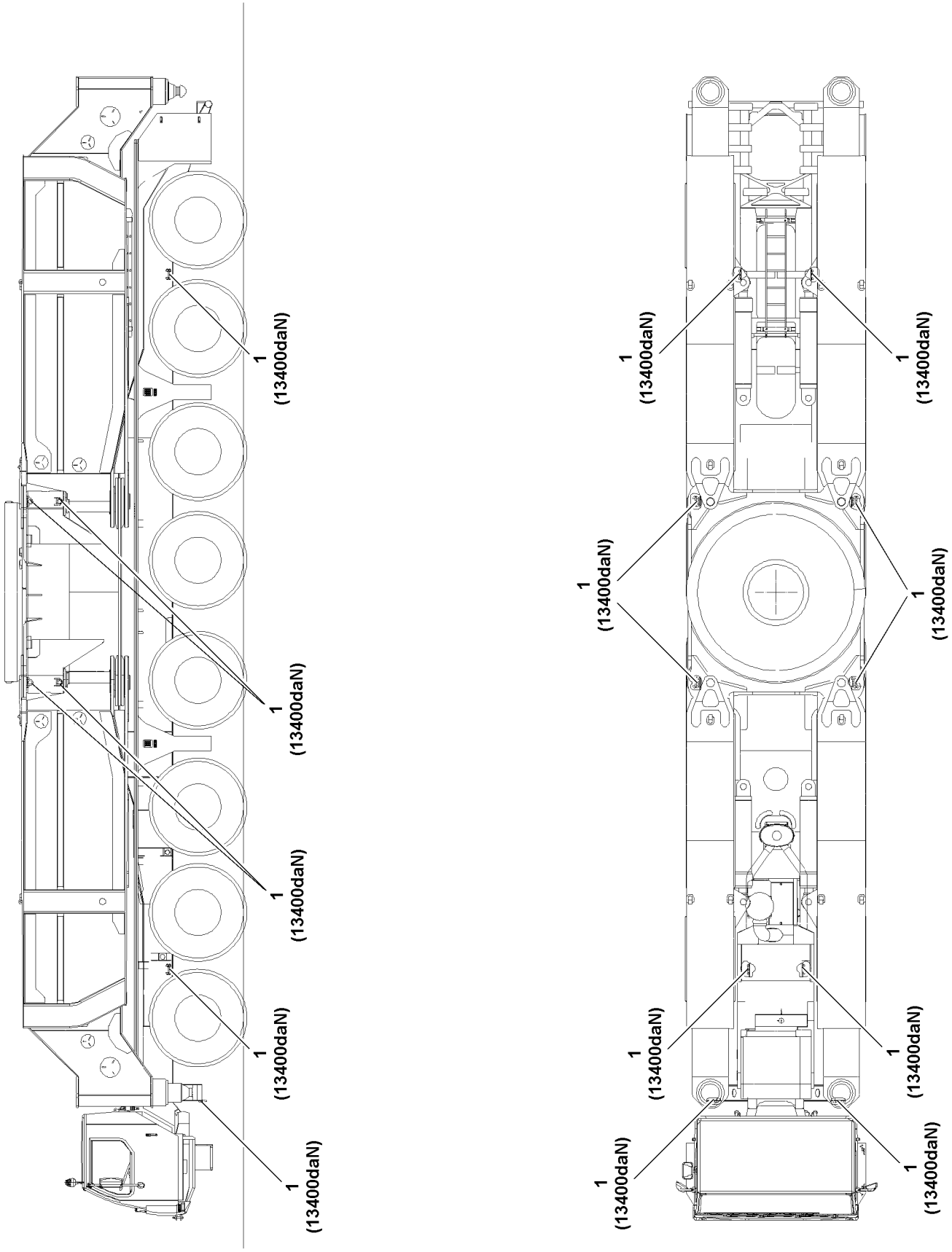
1 (13400daN)
1 (13400daN)
1 (13400daN)
1 (13400daN)
1 (13400daN)
1 (13400daN)
1 (13400daN)
1 (13400daN)
1 (13400daN)
1 (13400daN)
1 (13400daN)
1 (13400daN)

B115441

1.5 Unloading the crane safely

Make sure that the following prerequisites are met:
– The support beams are properly locked in transport position with the crane chassis.
– A guide is available.

▶ Remove all transport retainers.
▶ Level the vehicle for on road driving. See Crane operating instructions, chapter 3.03.
▶ Release the parking brake. See Crane operating instructions, chapter 3.04.

NOTICE
Damage to vehicle!
▶ Have the guide check that the vehicle does not collide with the transport vehicle or hits it!

▶ Carefully drive the crane from the transport vehicle.

4 Operation of crane superstructure

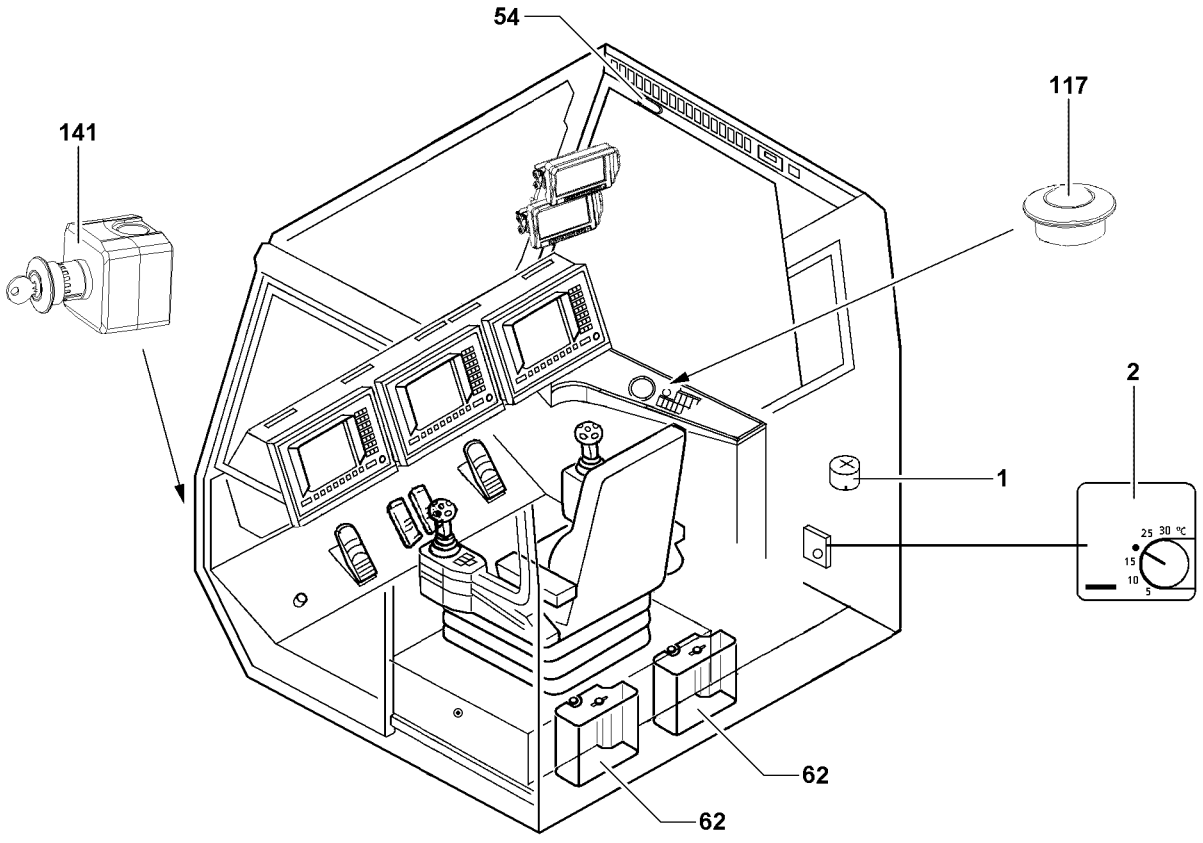

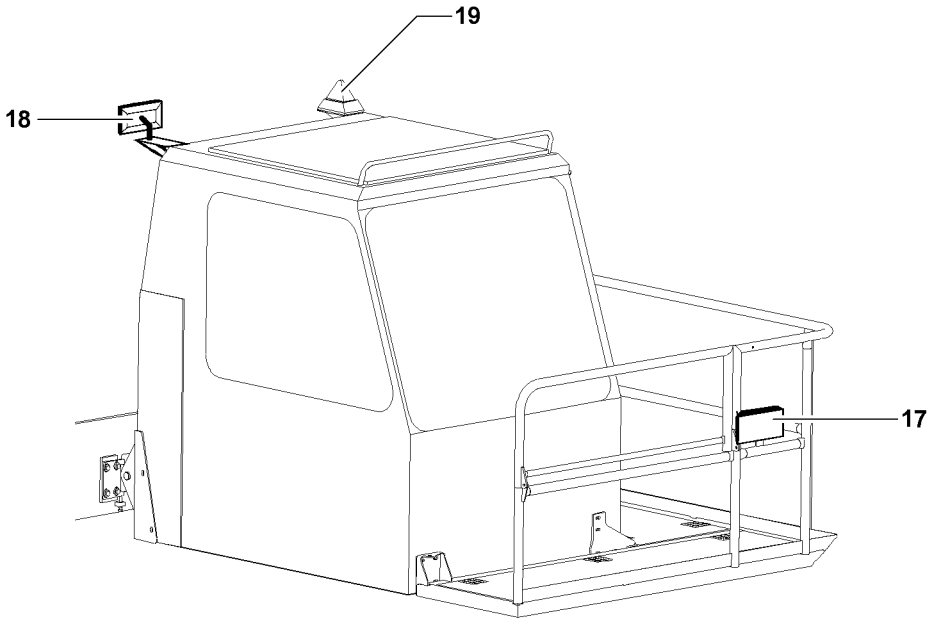

B108901

1 Operating and control instruments

This chapter describes the elements in the cab and is divided into:
– General equipment in the cab
– Operating units in the cab

2 Equipment in the cab

2.1 Installations in the cab

17 Working floodlight, front
18 Working floodlight, rear
19 Flashing beacon
62 Reservoir for window cleaning fluid

2.2 Emergency equipment

117 Palm button • EMERGENCY OFF
141 Palm button • EMERGENCY OFF

2.3 Interior equipment

1 Pressure gauge • Erection cylinder with A-frame
2 Thermostat • Auxiliary heater
54 Cab lighting

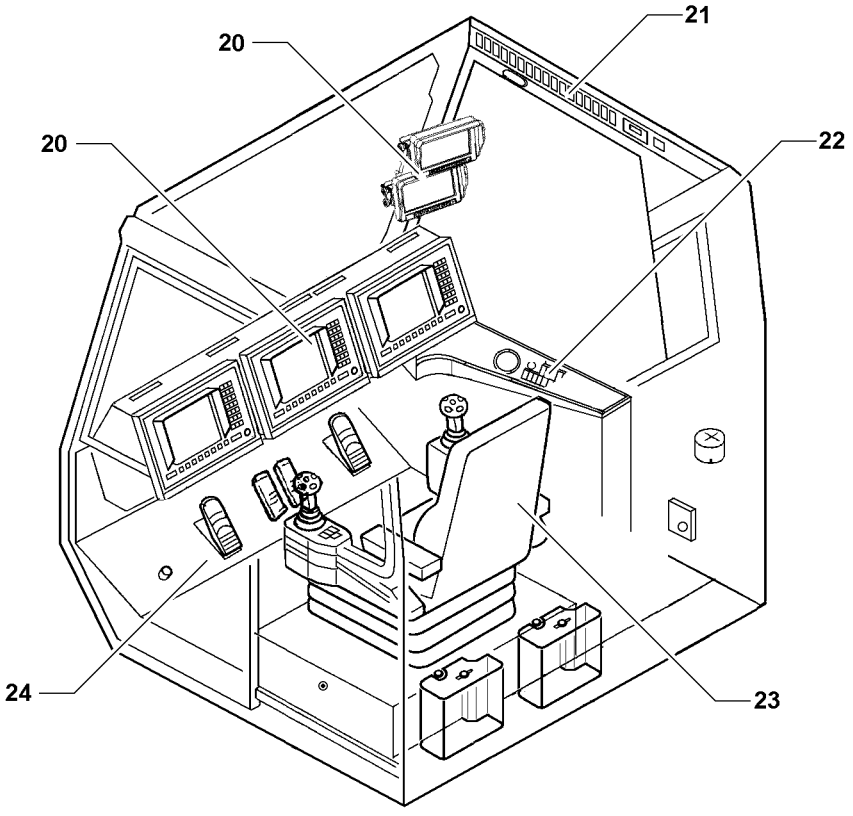

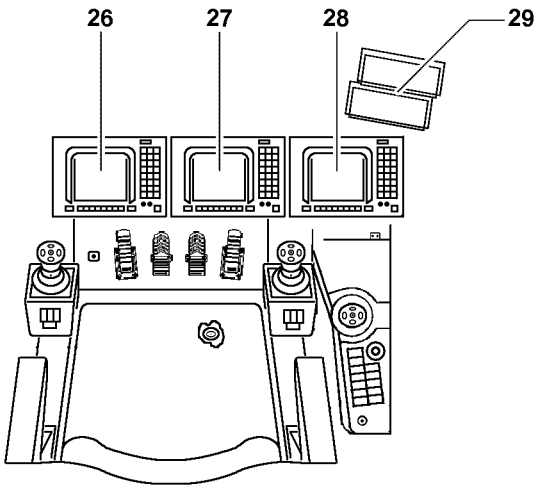

B107975

3 Operating units in the cab

The following operating units are in the cab:

20 Monitors and displays
21 Roof console
22 Instrument panel
23 Control panel
24 Pedal carrier

3.1 Monitors and displays

3.1.1 LICCON computer system

26 LICCON monitor 1 • User interface for operation with “Derrick” boom
27 LICCON monitor 0 • User interface for entry of equipment configurations and for crane operation
28 LICCON monitor 2* • User interface for “LICCON job planner”

3.1.2 Camera monitoring

29 Monitors camera monitor

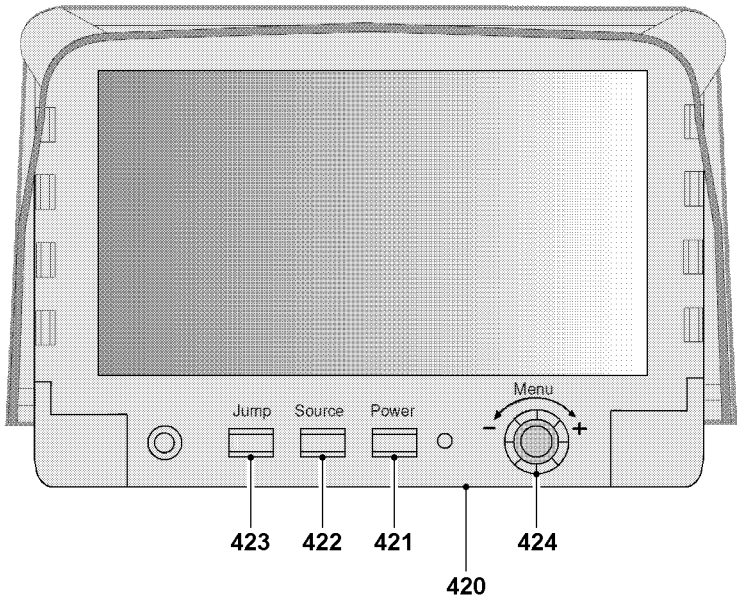

B107376

Monitor with rotary selection switch

420 TFT monitor

421 Button “Power”
- Monitor On / Off

422 Button “Source”
- By pressing the “Source” button in turned on condition, the view on the monitor is changed

423 Button “Jump”
- By pressing the “Jump” button, the preset camera inputs can be selected

424 Selection knob / pressure switch
- The selection menu on the monitor is activated by pressing the selection knob / pressure switch

  Note:
  If no adjustments are made after activation of selection on the monitor, then the selection turns off by itself after several seconds.
- When the selection menu is activated, a menu point can be selected by turning the selection knob / pressure switch. The selected menu point is highlighted in “yellow”. Press the selection knob / pressure switch to change the color from “yellow” to “red”. This selects the desired function.

Selection menu
- **Screen adjustments**

  Note:
  The following adjustments can be made in the menu “Screen adjustments”.
  - Brightness
  - Contrast
  - Color
  - Hue
  - Automatic brightness control
  - Direction display
  - Back
- **OSD settings**

  Note:
  The following adjustments can be made in the menu “OSD adjustments”.
  - Display
  - Distance display
  - Back
- **Camera adjustments**

  Note:
  The following adjustments can be made in the menu “Camera adjustments”.
  - Reflection
  - Changeover
  - Video outlet
  - Back
- **Reset**
  - The display is reset to default settings
- **Output**
  - OSD selection is ended

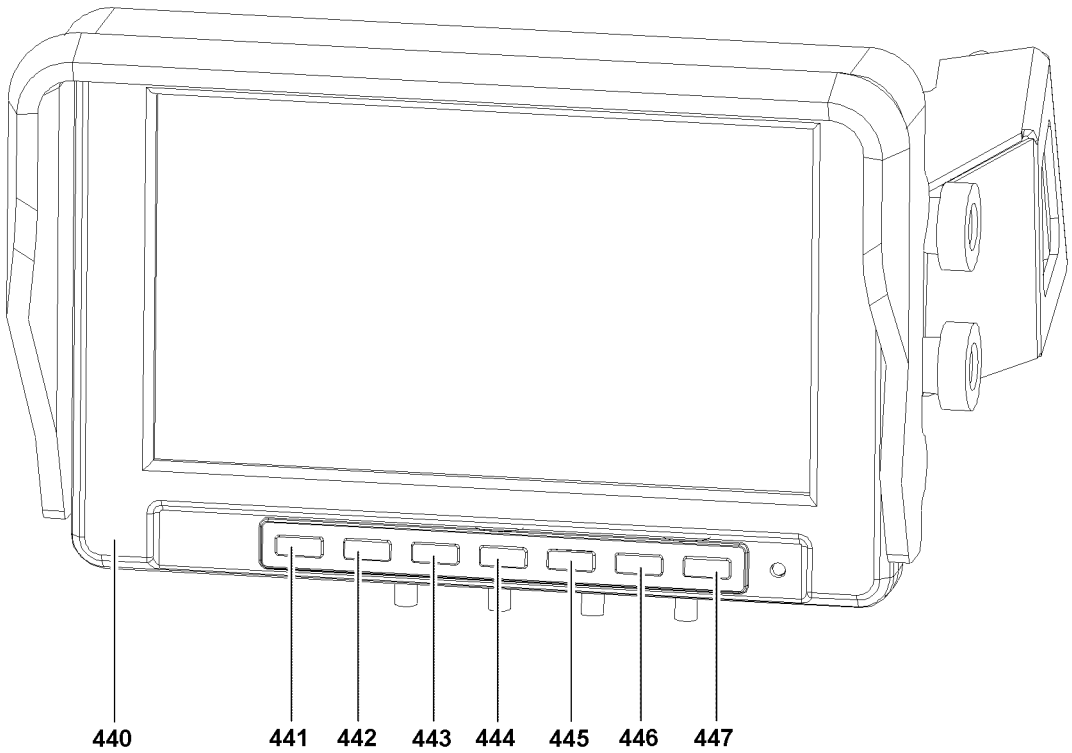

B107366

Monitor with keypad

440	TFT monitor	
441	Button “MODE”	• By pressing the button “MODE” the system changes between the individual display modes: – Single display mode. – Split display mode – Tripled or quadrupled display mode
442	“Camera selection” button	• By pressing the button “Camera selection” the system changes between the cameras: – Single display mode: Change between camera 1 and camera 2 – Split display mode: Change between cameras 1/2, 2/3, 3/4 and camera 4/1 – Tripled or quadrupled display mode: This button has no function.
443	Menu button	• By pressing the “Menu” button, menus for various adjustments are called up and changed over, in the following order: – Color: Adjustment of color saturation – Brightness: Brightness adjustment – Contrast: Contrast adjustment – Standard: Reset to default settings – Volume: Volume adjustment – Language: Language adjustment (English, French, German, Spanish, Italian, Portuguese, Polish) – Reflection: Reflection of camera view Return to the main menu with “Enter”. End menu with “End”.
444	“Minus” button	• By pressing the “Minus” key, the value of a setting is reduced.
445	“Plus” button	• By pressing the “Plus” key, the value of a setting is increased.
446	Button “Change between day / night”	• Press the button “Change over day / night” to match the brightness of the display to the time of day.
447	Button	• Monitor On / Off

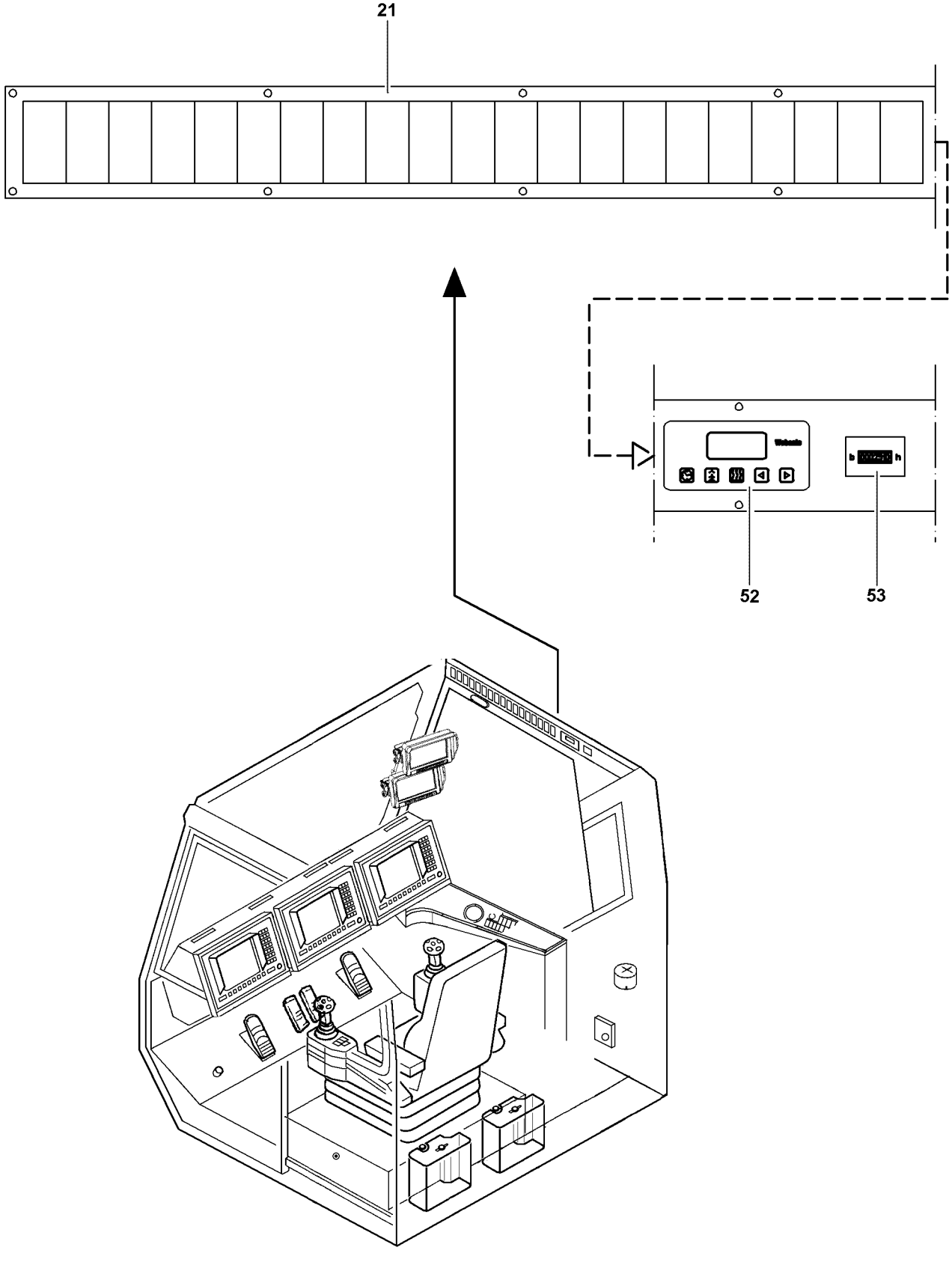

B107599

3.2 Roof console

Note

- The indicator lights as well as the operating buttons of the roof console are described in detail in the following sections.
- The number of operating buttons in the roof console depends on the respective crane equipment and can differ from crane to crane!

21 Roof console
- Housing with indicator lights and operating buttons

52 Operating section auxiliary heater
- Shown are:
  Time and day of the week
  Fault in auxiliary heater
  Air temperature
  Preselection of heating operation of auxiliary heater with three preselection times (every preselection time can be programmed in advance of up to seven days)

53 Operating hour meter

3.2.1 Indicator lights on the roof console

Position	Indicator light	LED condition	Description
33		Red: Blinks once after engine start	Control of function, operational readiness
		Green: Blinks once after engine start	
		Red: Off	Pump on, lubrication active
		Green: Lights up during the lubrication time	
		Red: Blinks	Error monitoring time, lubrication time
		Green: Blinks	
		Red: Blinks fast	Error CPU / memory
	Central lubrication system	Green: Off	

Position	Indicator light	LED condition	Description
49	Auxiliary heater	Lights up	Auxiliary heater in operation
51	Climate control system	Lights up	Air conditioning system is in operation

3.2.2 Operating buttons on the roof console

Note

▶ With the LEDs in the operating buttons, the operating conditions and problems can be recognized quickly and reliably by the crane operator.

Position	Control element	Function	LED	Description
30	Shut off LMB bell	Off		By pressing the button
		On		By pressing the button
32	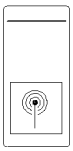 Radio remote control LR-operation	Off		By actuating the switch
		On		By actuating the switch
34	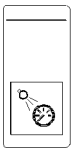 Instrument panel illumination, reading light		**Note:**	The reading lights can be turned on and off with a separate switch on the reading light.
		On		By actuating the switch
		Off		By actuating the switch
35	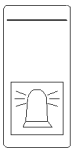 Airplane warning	Off		By actuating the switch
		On		By actuating the switch

Position	Control element	Function	LED	Description
37	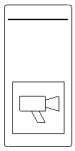 Camera illumination			There are two different illumination areas: 0: Camera illumination “Off” 1: Illumination winches “On” 2: Illumination of winches remains active and the illumination to the rear is “On” Every time the switch is actuated, the illumination stage changes. “Illumination to the rear” can only be turned on in connection with “Illumination winches” .
39	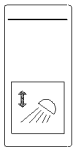 Swing the floodlight pivot section			There are two swing directions: 0: Swing the floodlight “Out” 1: Swing the floodlight “Down” 2: Swing the floodlight “Up” As long as the button is pressed, the floodlight swings.
40	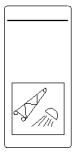	Off		By actuating the switch
	Floodlight pivot section	On		By actuating the switch
41	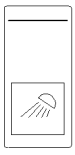	Off		By actuating the switch
	Working floodlight pedestal cab	On		By actuating the switch
42	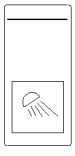	Off		By actuating the switch

Position	Control element	Function	LED	Description
	Working light roof cab rear	On		By actuating the switch
43	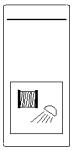	Off		By actuating the switch
	Floodlight turntable Mirror heater	On		By actuating the switch
46	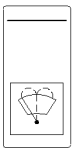	On		Clean the window: By pressing and holding the button “Front” or “Roof” . The windshield wipers are activated at the same time.
	Windshield washer system “Front”		**Note** :	After releasing the switch “Front” or “Roof” , three additional wipe movements are carried out before the wiper blades return to their original position.
44	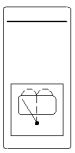	Off		By releasing the button “Front” or “Roof”
	Windshield washer system “Roof”			
47				There are two different wipe stages: 0: Wiper “Off” 1: Wiper “On” : Intermittent operation 2: Continuous operation Every time the switch “Front” or “Roof” is actuated, the wipe stages change incrementally.
	Windshield wiper “Front”			
45				
	Windshield wiper “Roof”			
		On		By actuating the switch “Front” or “Roof”

Position	Control element	Function	LED	Description
		Off		By actuating the switch “Front” or “Roof”
48	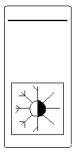	Off		By actuating the switch
	Climate control system	On		By actuating the switch

3.2.3 Alternative operating buttons in LG-operation

Note

▶ Depending on the version, either a folding ladder or a sliding ladder is installed as an access ladder!

Position	Control element	Function	LED	Description
31	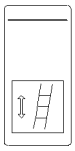		**Note:**	Only folding ladder: The movement of the ladder when it folds in and out stops by itself when the respective end position is reached!
	Ladder	Up / down		By pressing the button
		Stop		By pressing the button
31	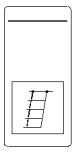		**Note:**	Only sliding ladder: The movement of the ladder when moving in and out stops by itself when the ladder is moved in or out completely.
	Ladder	Up / down		By pressing the button
		Stop		By pressing the button
32	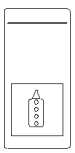	Off		By actuating the switch
	Radio remote control	On		By actuating the switch
38	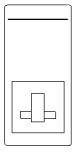		**Note:**	As long as the button is pressed, the locking pin moves out / in until the end position is reached.
	Turntable lock			There are two locking positions: 1: Insert the locking pin on the chassis 2: Remove the locking pin on the chassis

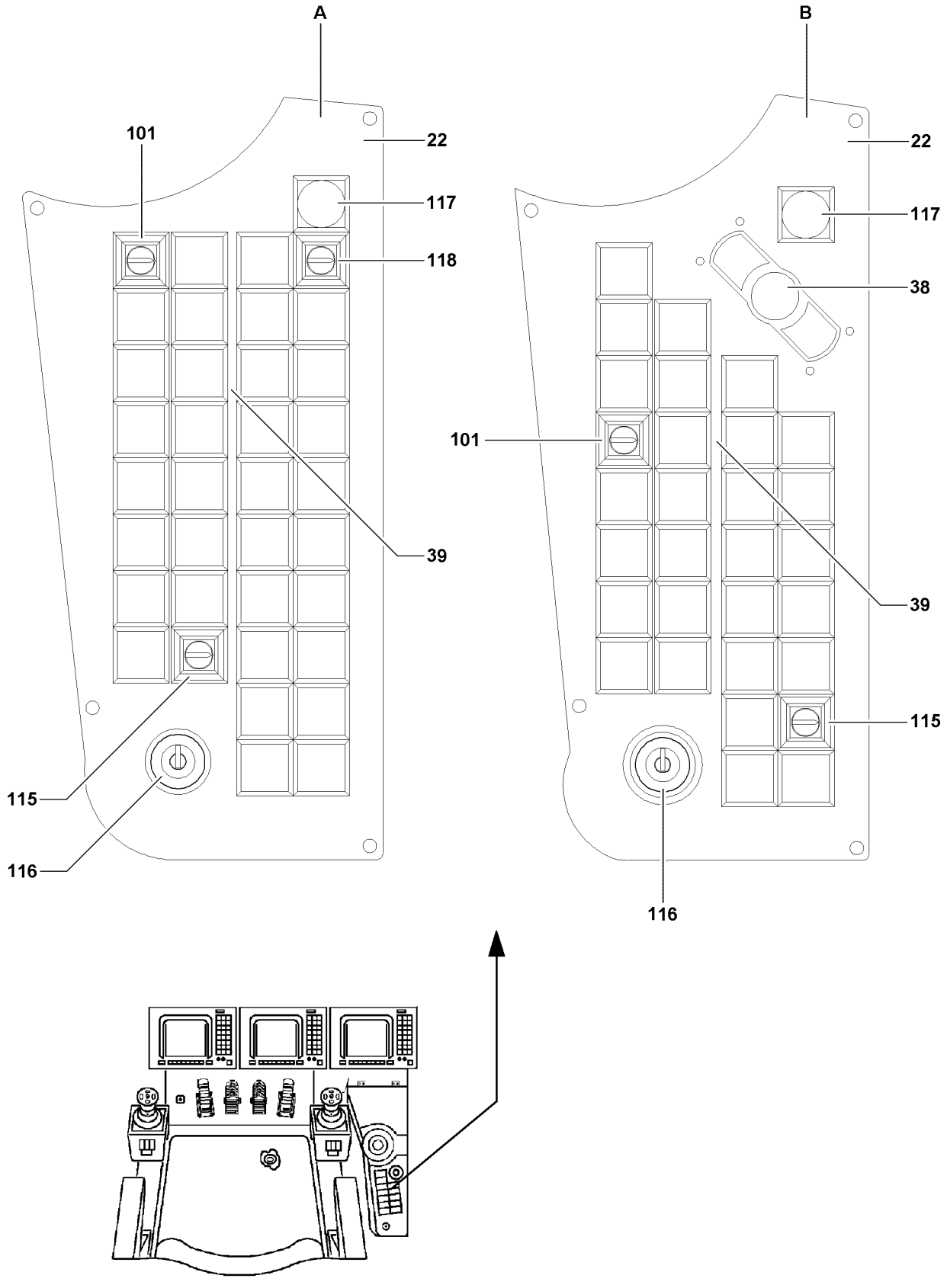

B111003

3.3 Instrument panel

Note

- The instrument panel **22** is available in two versions.
- Version **A** and version **B** differ in the arrangement of the operating buttons and additional operating elements.
- The number of operating buttons on the instrument panel **22** depends on the respective crane equipment and can differ from crane to crane!

The instrument panel **22** consists of the following elements:

38 Micro module (Mouse)
39 Keypad
116 Ignition key switch
117 EMERGENCY OFF button

- Operation LICCON job planner
- Indicator lights and operating buttons

3.3.1 Indicator lights and operating buttons

Position	Control element	Function	LED	Description
100	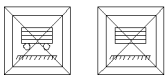 *(BT) or (B)* Button with warning light “Derrick ballast lifted off”		***Note:***	*Derrick ballast: Ballast on ballast trailer (BT) or suspended ballast (B)!*
			Blinks	Briefly pressing the key button **101** activates the operating mode “Derrick ballast lifted off” (self retention). The derrick ballast icon on LICCON monitor 1 is represented suspended.
		Off	Off	Pressing the button momentarily deactivates the operating mode “Derrick ballast lifted off:” Ballast trailer symbol is shown on LICCON monitor 1 on the ground.
101	Key button “Derrick ballast lifted off”		**DANGER!**	**The crane can topple over!** **If the derrick ballast lifts off the ground during towing, the turntable can turn to the side. Personnel can be severely injured or killed!** **Activate “Derrick ballast lifted off” after lift off of the ballast trailer! Carry out constant visual inspection! See Crane operating instructions, chapter 5.11 or 5.35 or 5.36!**

Position	Control element	Function	LED	Description
102	Button BT Manual steering correction to the left		Lights up	Operating mode manual steering correction: When pressing and holding the button, the ballast trailer wheels turn to the left to drive on tight construction sites.
103	Button BT Manual steering correction to the right		Lights up	Operating mode manual steering correction: When pressing and holding the button, the ballast trailer wheels turn to the right to drive on tight construction sites.
104	Button BT towing		Blinks	Pressing and holding the button sets the ballast trailer wheels in travel position
			Lights up	Ballast trailer wheels in travel position
106	Button BT turning position		Blinks	Press and hold the button to turn the ballast trailer wheels in turning position
			Lights up	Ballast trailer wheels in turning position
107	Button BT Parallel position		Blinks	Turn ballast trailer wheels into parallel position (crab walk)
			Lights up	Ballast trailer wheels in parallel position
108	Button Block ballast cylinder **A**	On Off		Pressing and holding the button blocks cylinder A on the derrick ballast Releasing the button releases **cylinder A** on the derrick ballast
109	Button Block ballast cylinder **B**	On Off		Pressing and holding the button blocks cylinder B on the derrick ballast Releasing the button releases **cylinder B** on the derrick ballast
110	Button derrick ballast down	On Off		Pressing and holding the button lowers the derrick ballast Releasing the button interrupts the movement

Position	Control element	Function	LED	Description
111		On		Pressing and holding the button lifts the derrick ballast
	Button derrick ballast up	Off		Releasing the button interrupts the movement
112		On		Pressing and holding the button telescopes the derrick ballast out
	Button telescope derrick ballast in	Off		Releasing the button interrupts the movement
113		On		Pressing and holding the button telescopes the derrick ballast in
	Button telescope derrick ballast out	Off		Releasing the button interrupts the movement
114		Off		Pressing the button deactivates the self retention of operating mode crawler assembly, key button 115
	Button Crawler assembly off			
115			**DANGER!**	**In operating mode crawler assembly there is no overload shut off for the assembly cylinder as well as for the crane. Personnel can be severely injured or killed!**
	Key button crawler assembly		**Prerequisite:**	The set up key **D** is pressed: The assembly icon on the LICCON monitor blinks.
		On	Button 114 lights up	Briefly pressing the key button activates the operating mode crawler assembly with hydraulic cylinder (self retention).
119		On	Lights up	Radio remote control “On”
	Indicator light radio remote control	Off	Off	Radio remote control “Off”
118		Off		Position 0 (horizontal): Radio remote control pinning “Off” .
	Key button radio remote control pinning	On		Position 1 (vertical): Radio remote control pinning “On” .
120		On		Pressing and holding the button spools the assembly winch up

Position	Control element	Function	LED	Description
	Button Spool the assembly winch up	Off		Releasing the button interrupts the movement
121	Button Spool assembly winch out	On Off		Pressing and holding the button spools the assembly winch out Releasing the button interrupts the movement
123	Switch Pressure supply auxiliary user		**Note** :	For all functions, which are actuated with the hydraulic manual control levers, the pressure supply must be changed over.
		On		Pressing the button establishes the pressure supply to the auxiliary users: - Erection cylinder SA-frame - Support cylinder assembly - Crawler assembly cylinder in SA-frame
		Off		Pressing the button interrupts the pressure supply to the auxiliary users
124	Button BT support front down	On Off		By pressing and holding the button the support cylinder ballast trailer front moves out Releasing the button interrupts the movement
125	Button BT support front up	On Off		By pressing and holding the button the support cylinder ballast trailer front moves in Releasing the button interrupts the movement
126	Button BT support rear down	On Off		By pressing and holding the button the support cylinder ballast trailer rear moves out Releasing the button interrupts the movement
127	Button BT support rear up			By pressing and holding the button the support cylinder ballast trailer rear moves in
128	Warning light support moved in		Lights up	Shows when the support ballast trailer is moved in

Position	Control element	Function	LED	Description
129	Warning light suspended ballast on the ground		Lights up	Shows when the suspended ballast is on the ground
130	Switch Test system BT		**Note:**	Can only be turned on with “Engine off” .
		On	Lights up	Actuating the switch switches from LICCON monitor 1 to Test system control ballast trailer
131	Warning light		Lights up	Control ballast trailer does not run or One of the pressure sensors or length sensor for the ballast trailer is defective or missing, see Crane operating instructions, chapter 5.11 or 5.35.
134	Indicator light engine preheating		Lights up	Shows that the engine is preheated
135	Switch Fuel preheating	On	Lights up	Actuating the switch activates fuel preheating
		Off	Off	Actuating the switch deactivates fuel preheating
135	Button Starting aid engine			Starting aid for engine: Additional pressurized air support when starting in high altitudes
136	Charge indicator light		Lights up	When the engine is running: Erroneous function charge regulator Before / at engine start: Shows that the battery is not being charged.

Note

- The indicator lights (indicator light **142** Urea and indicator light **143** SCR-exhaust aftertreatment) are only available on engines which are equipped with a SCR-exhaust aftertreatment system!
- If a warning occurrence is present, the indicator lights light up or blink and a signal sounds!

WARNING
Insufficient Urea in the Urea reservoir or faulty function in the SCR-exhaust aftertreatment system!
Due to insufficient Urea level or faulty function in the SCR-system, a reduction in engine power can be activated by the engine control or a start block of the engine can be triggered!
The crane operation can be limited!
- ▶ Add missing Urea in the Urea reservoir in time!
- ▶ Remedy faulty function in the SCR-system immediately!
- ▶ Observe the national / regional regulations valid on the job site!

Note
- ▶ The type and scope of a power reduction of the engine depends on the respectively valid national / regional regulations. The engine can possible not be started any longer (start block).

Position	Indicator light	Function	LED	Description
142	Urea		Off	Urea available
			Statically on	Urea is getting low or faulty function of the exhaust aftertreatment **Note:** Add urea or remedy the faulty function of the exhaust aftertreatment.
			Blinks	Urea almost empty or faulty function of the exhaust aftertreatment **Note:** Add urea or remedy the faulty function of the exhaust aftertreatment.
143	Exhaust aftertreatment		Off	Exhaust aftertreatment OK
			Blinks	Advance warning: Exhaust aftertreatment
			Statically on	Exhaust aftertreatment is no longer ensured.

3.3.2 Alternative operating buttons in LG-operation

Note
- ▶ Depending on the version, either a folding ladder or a sliding ladder is installed as an access ladder!

Position	Control element	Function	LED	Description
31			**Note:**	Only folding ladder: The movement of the ladder when it folds in and out stops by itself when the respective end position is reached!
	Button ladder	Up / down		By pressing the button
		Stop		By pressing the button
31			**Note:**	Only sliding ladder: The movement of the ladder when moving in and out stops by itself when the ladder is moved in or out completely.
	Button ladder	Up / down		By pressing the button
		Stop		By pressing the button
119			Lights up	Shows that the radio remote control is activated
	Indicator light radio remote control		Off	Shows that the radio remote control is deactivated
118		Off		Pressing the key button deactivates the radio remote control for pinning: Position 0 (horizontal)
	Key button radio remote control pinning	On		Pressing the key button activates the radio remote control for pinning: Position 1 (vertical)

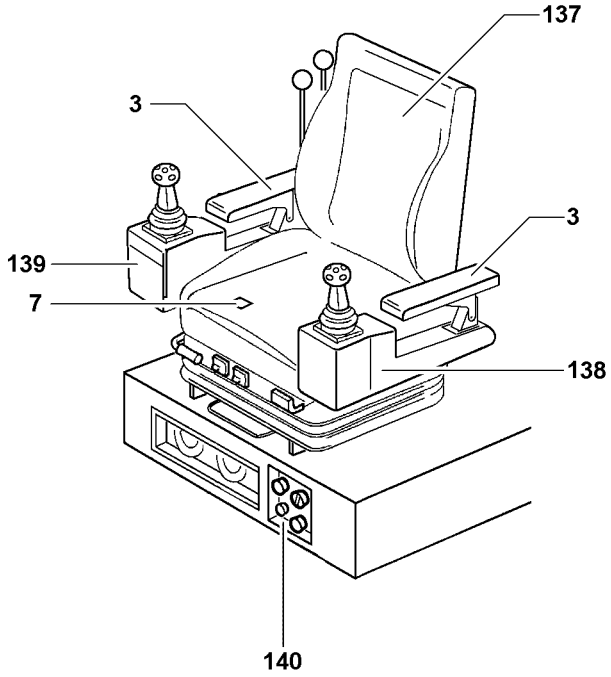

B107827

3.4 Operating elements on control platform

The control platform consists of the following elements:

3 Armrests
7 Seat contact button
137 Crane operator's seat
138 Control panel, left
139 Control panel, right
140 Climate control system / cab heater

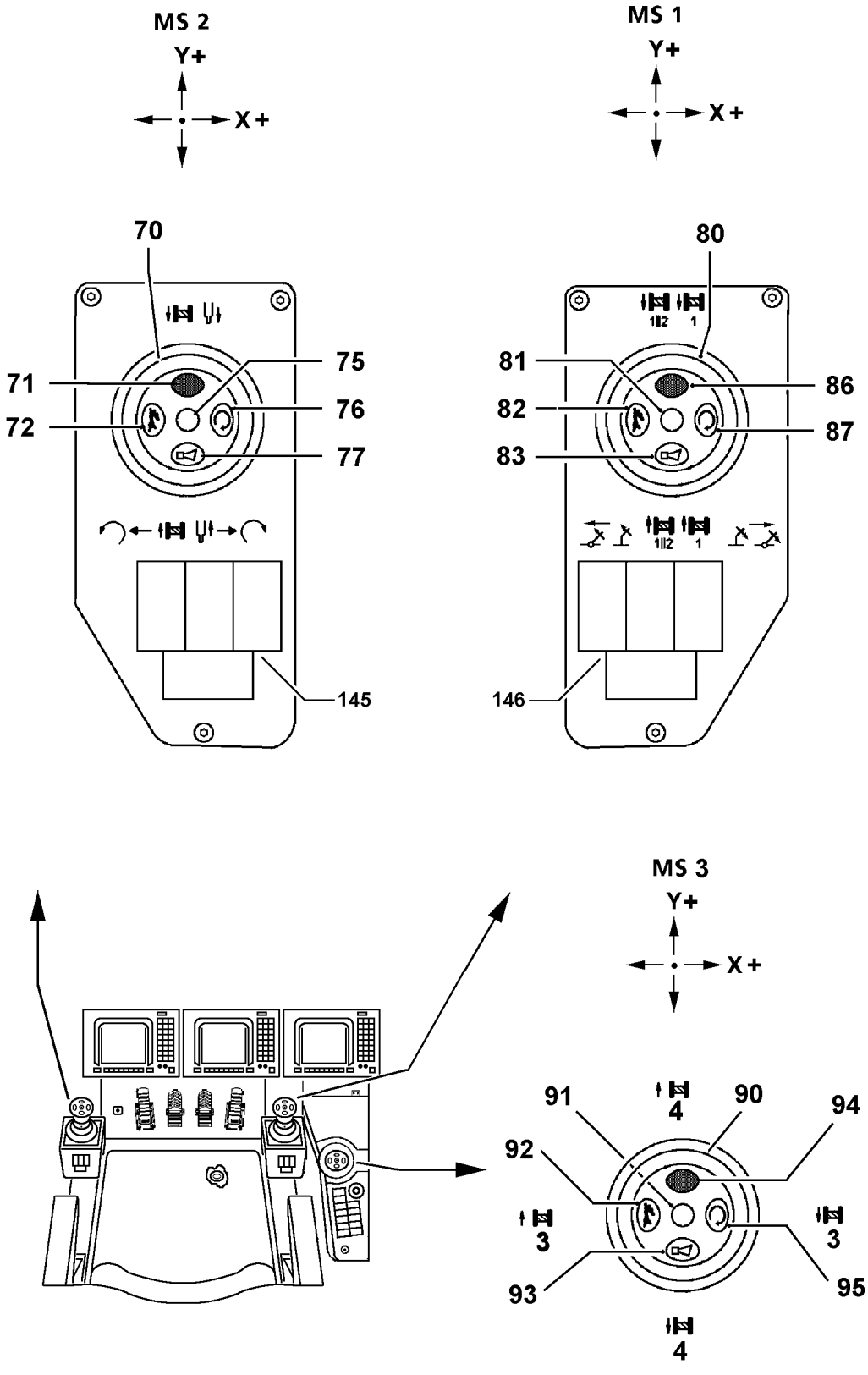
MS 2
Y+
X+
70
71
72
75
76
77
145
MS 1
Y+
X+
80
81
82
83
86
87
146
MS 3
Y+
X+
91
4
90
94
92
3
3
93
95
4

B107829

3.4.1 Operating elements on control panels

Control panel, left

Master switch assignment MS 2:

70 Master switch left (MS 2)	• **Note:** For assignment of master switch to operating modes, see Crane operating instructions, chapter 4.05!
71 Button	• Bypass of seat contact button. **Or** if the seat contact button is actuated: Addition of the vibration sensor **75**
72 Button	• Power Plus addition, crane operation
75 Vibration sensor	• Turn sensor: Slewing gear and winch 2, winch 5, winch 6.
76 Button	• Engine rpm lock **Note:** By pressing the button **76** the engine rpm is locked in the current state.
77 Button	• Horn

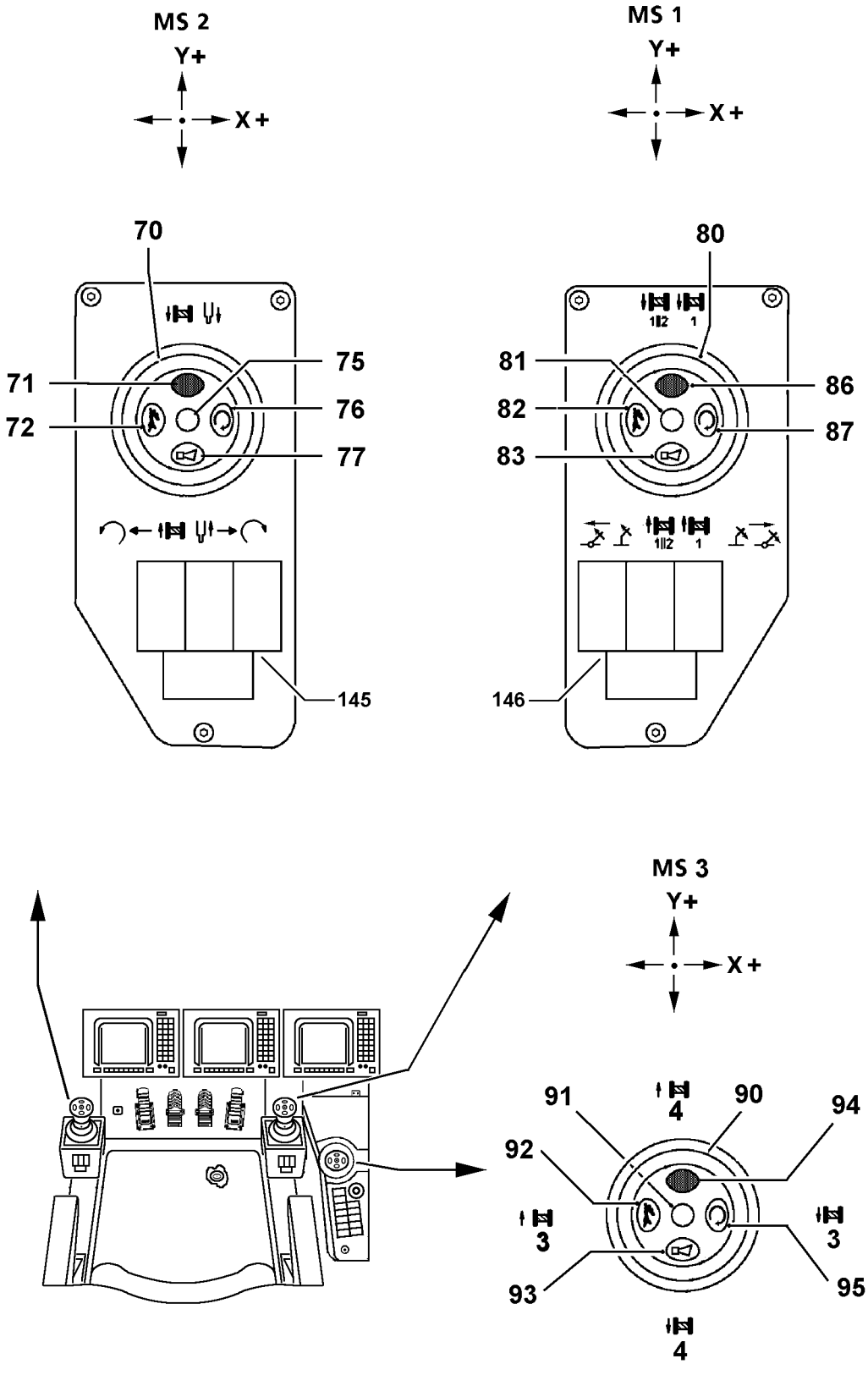
MS 2
Y+
X+
70
71
72
75
76
77
145
MS 1
Y+
X+
80
81
82
83
86
87
146
MS 3
Y+
X+
91
4
90
94
92
3
3
93
95
4

B107829

Instruments **145** control console:

Position	Button / switch	Function	LED	Description
73	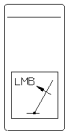		**DANGER!**	**The exceedance of the overload protection may only be carried out if the overload has been caused by luffing down at freely suspended load and the crane operator is absolutely certain that he can leave the overload range by luffing up!**
	Button “Luffing in with suspended load”	On		Pressing the button releases “Luffing in with suspended load” .
74	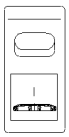		**Note:**	After crawler operation, you must switch back to crane operation.
	Switch Crawler operation		**DANGER!**	Damage of crane support! **If the crawler travel gear is turned on when using the crane support, the support will be severely damaged when actuating the pedals for the crawler travel gears! The crane can topple over! Personnel can be severely injured or killed!** When working with crane support: Turn crawler operation off!
		On		Releasing and actuating the switch activates the operating mode “Crawler operation” .
		Off		By actuating the switch: Position 0
78		On		Actuating the switch activates the operating mode “Rapid gear”
	Switch Crawler rapid gear	Off		By actuating the switch: Position 0
79	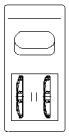	On		Actuating the switch activates the operating mode “Parallel driving” : The left and right tracks move at the same speed.
	Switch Crawler parallel travel	Off		By actuating the switch: Position 0

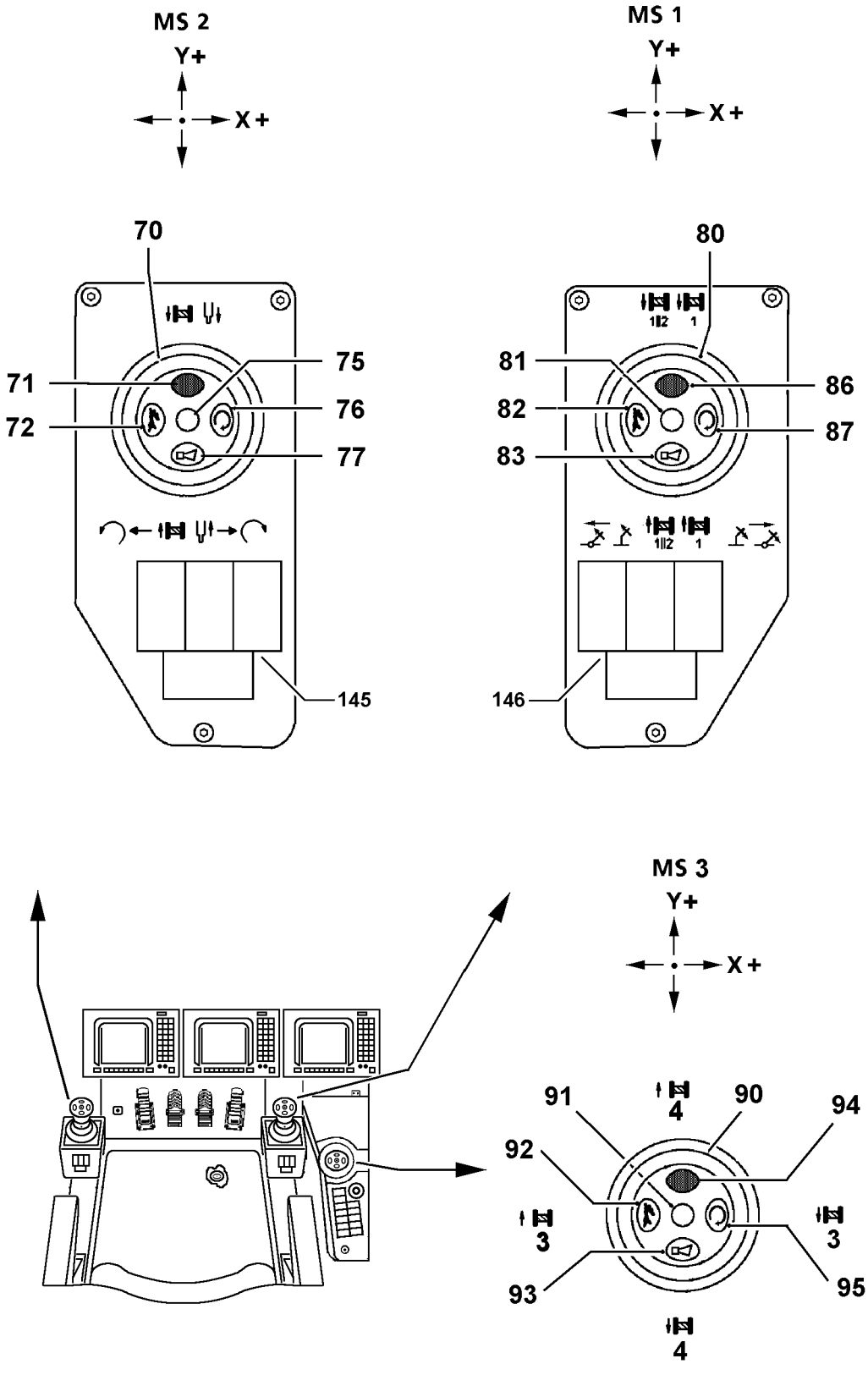
MS 2
Y+
X+
70
71
72
75
76
77
145
MS 1
Y+
X+
80
81
82
83
86
87
146
MS 3
Y+
X+
91
4
90
94
92
3
3
93
95
4

B107829

Control panel, right

Master switch assignment MS1:

80 Master switch right (MS1)	• **Note:** For assignment of master switch to operating modes, see Crane operating instructions, chapter 4.05!
81 Vibration sensor	• Turn sensor: Slewing gear and winch 3, winch 4, winch 5
82 Button	• Power Plus addition, crane operation
83 Button	• Horn
86 Button	• Bypass of seat contact button. **Or** if the seat contact button is actuated: Addition of the vibration sensor **81**
87 Button	• Engine rpm lock **Note:** By pressing the button **87** the engine rpm is locked in the current state.

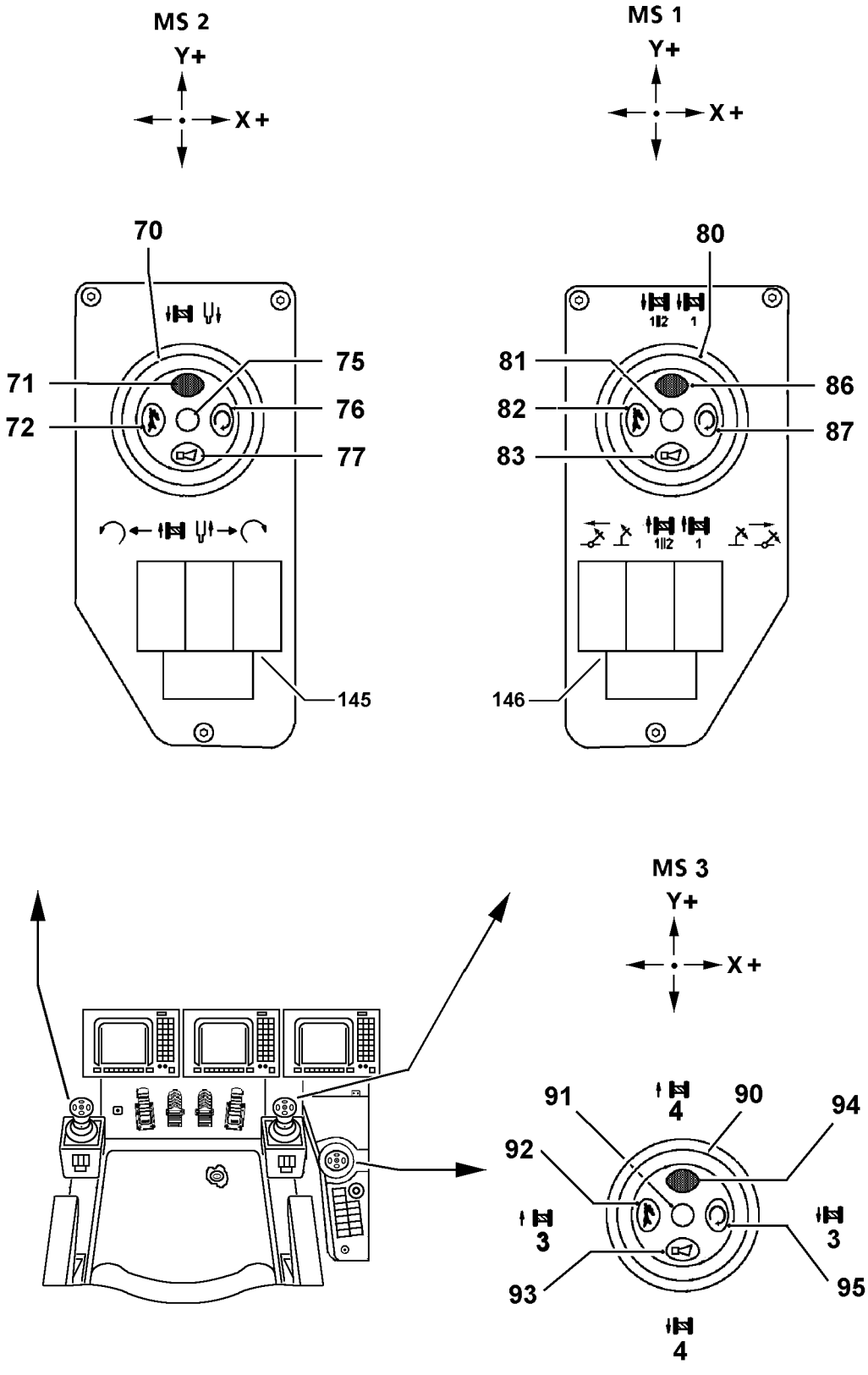
MS 2
Y+
X+
70
71
72
75
76
77
145
MS 1
Y+
X+
80
81
82
83
86
87
146
MS 3
Y+
X+
91
4
90
94
92
3
3
93
95
4

B107829

Instruments **146** control console:

Position	Button / switch	Function	LED	Description
84	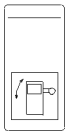	Off		By releasing the button: Position 0 (center)
	Button Tilt cab	Up		By pressing the button the cab tilts up: Position 2 (front)
		Down		By pressing the button the cab tilts down: Position 1 (rear)
85	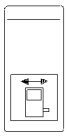	Off		By releasing the button: Position 0 (center)
	Button Swing the cab	Transport		Pressing the button swings the cab into working position: Position 2 (front)
		Work		Pressing the button swings the cab into working position: Position 1 (rear)
88	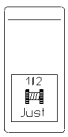		**Note:**	Adjust only with parallel hook blocks, parallel control Winch 1 II 2.
	Button Adjusting the parallel control	On		Pressing the button activates the “Adjustment of the parallel control” of winch 1 and winch 2
		Off		By releasing the button
89	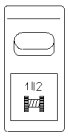	On		Actuating the switch activates the “Parallel operation” of winch 1 and winch 2
	Switch Parallel operation	Off		By actuating the switch

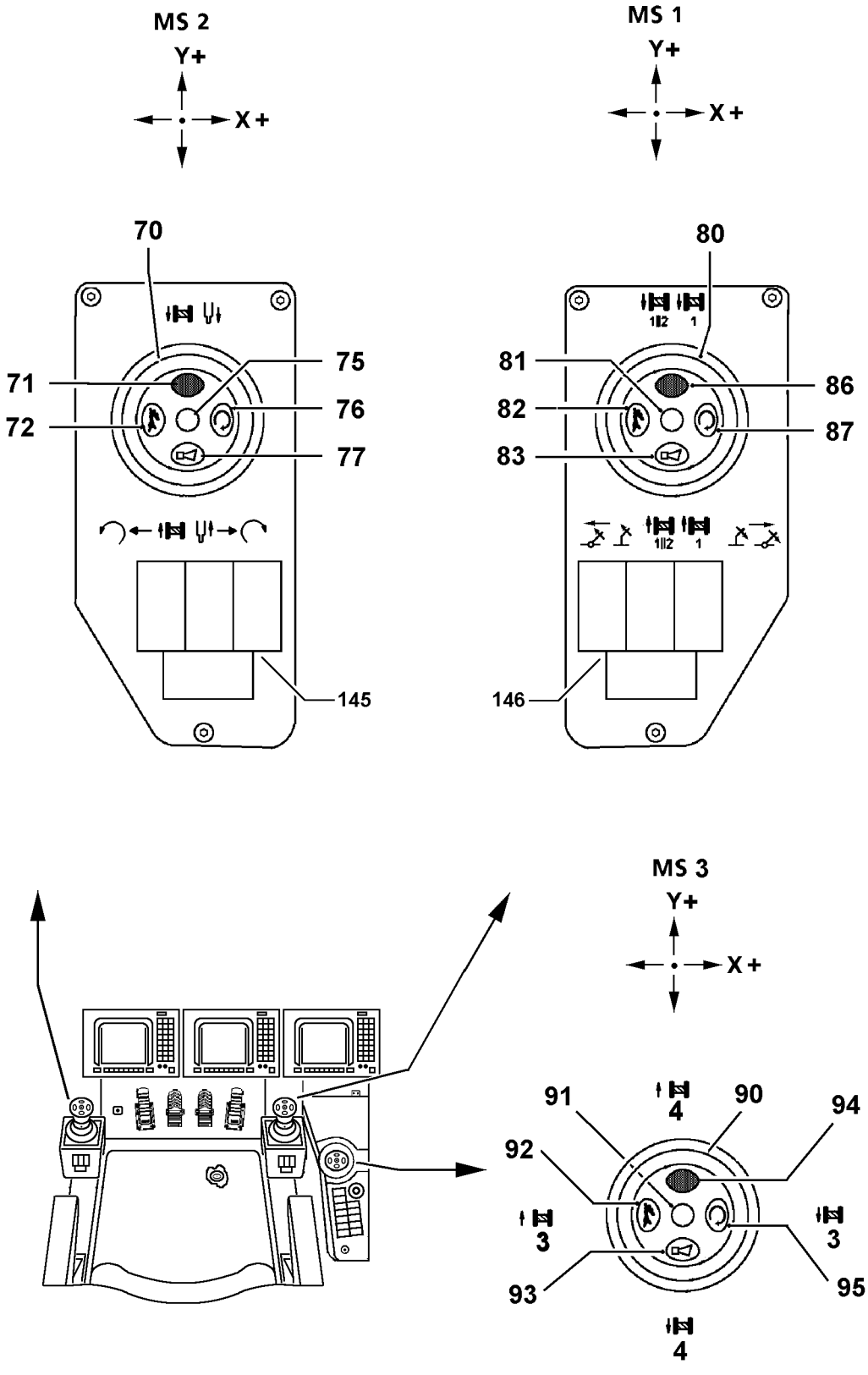
MS 2
Y+
X+
70
71
72
75
76
77
145
MS 1
Y+
X+
80
81
82
83
86
87
146
MS 3
Y+
X+
91
4
90
94
92
3
3
93
95
4

B107829

3.4.2 Operating elements Master switch (MS) 3

90 Master switch (MS3)	• **Note:** For assignment of master switch to operating modes, see Crane operating instructions, chapter 4.05!
91 Vibration sensor	• Turn sensor and winches
92 Button	• Power Plus addition, crane operation
93 Button	• Horn
94 Button	• Bypass of seat contact button. **Or** if the seat contact button is actuated: Addition of the vibration sensor **91**
95 Button	• Engine rpm lock **Note:** By pressing the button **95** the engine rpm is locked in the current state.

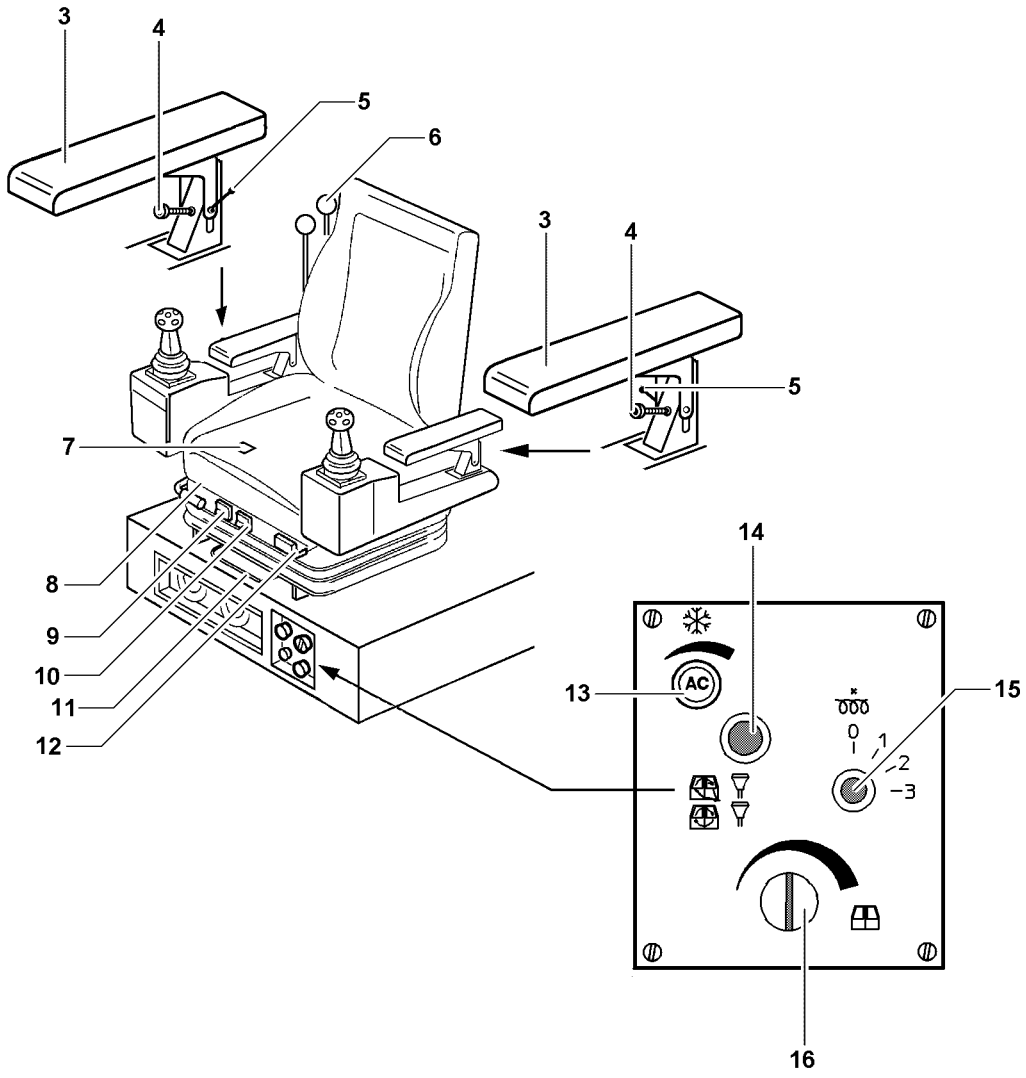

B107828

3.4.3 Operating elements crane operator's seat

3	Armrest	
4	Set screw	• Adjustment of armrest incline
5	Locking lever	• Armrest height adjustment
6	Manual control lever	• Control Crawler travel gears left and right **Note:** The crawler travel gears can also be controlled via the manual control levers. To do so, they must be inserted into the foot rocker **58** or foot rocker **59**.
7	Seat contact button	
8	Hand lever	• Adjustment of seat cushion incline
9	Button	• Lumbar support in lower part of backrest
10	Button	• Lumbar support in upper part of backrest
11	Hand lever	• Lock for horizontal seat adjustment
12	Hand lever	• Lock for backrest incline
13	Regulator knob	• Climate control system
14	Switch	• Switching between fresh air / recirculated air, air quantity
15	Rotary switch	• Three stage blower
16	Regulator knob	• Temperature Cab heater

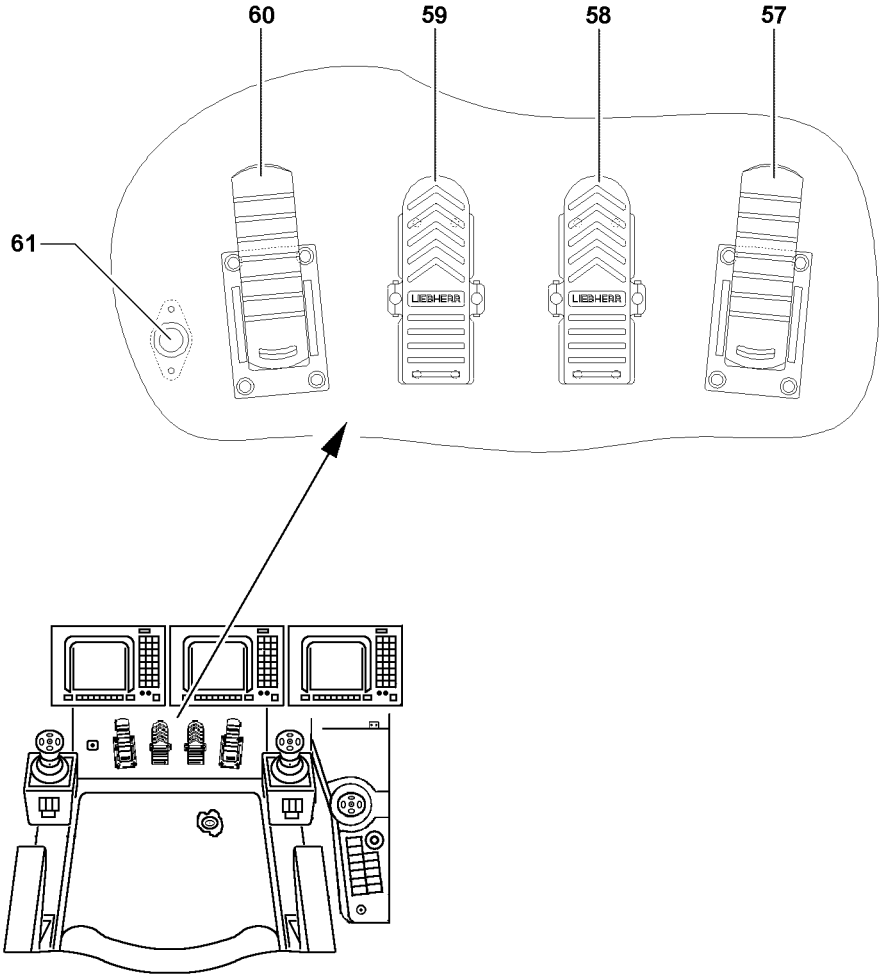
60
59
58
57
61
LIEBHERR
LIEBHERR

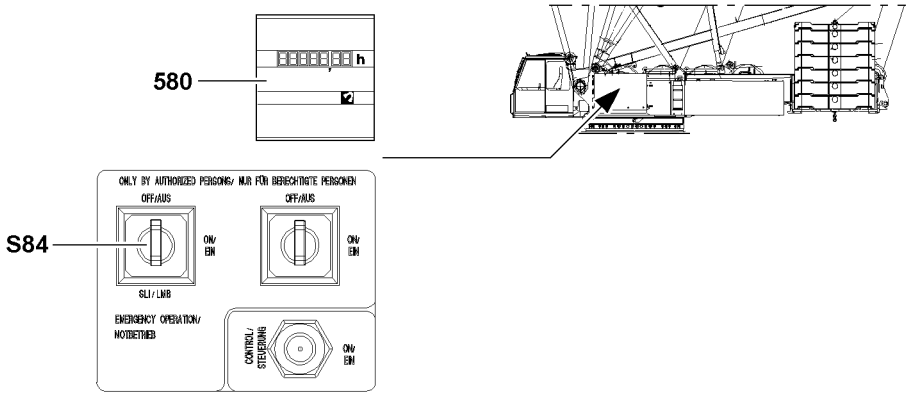
580
h
ONLY BY AUTHORIZED PERSONS/ NUR FÜR BERECHTIGTE PERSONEN
OFF/AUS
ON/
EIN
OFF/AUS
ON/
EIN
S84
SLI / LMB
EMERGENCY OPERATION/
NOTBETRIEB
CONTROL/
STEUERUNG
ON/
EIN

B113290

3.4.4 Pedal carrier

57	Pedal	• Engine regulation
58	Master switch foot rocker (MS 5)	• Move the crawler forward or backward on the right hand side **Note:** Only for LR-operation.
59	Master switch foot rocker (MS 4)	• Move the crawler forward or backward on the left hand side **Note:** Only for LR-operation.
60	Pedal	• Slewing gear brake
61	Foot button	• Coasting slewing gear

4 Operating elements switch cabinet

580	Operating hour meter	• Recording of crawler operating hours
S84	Key button	• LMB emergency operation

B199898

1 General

Note

- ▶ The monitor illustrations in this chapter are only examples!
- ▶ The numerical values in the individual icons and charts do not have to necessarily match the crane exactly!
- ▶ Numbers and letters can be replaced by place holders!
- ▶ In addition, many of the illustrations show the maximum configuration of the LICCON monitor with icons!
- ▶ In normal crane operation, an identical display will **not** appear on the LICCON monitor!

The LICCON computer system is a computer system for controlling and monitoring mobile and crawler cranes. In addition to the overload protection (Load moment limitation = **LMB**) there are a number of application programs that can be used for controlling and monitoring the crane movements. Currently the LICCON computer system includes the following application programs:

- Set up program
- Crane operation program
  - Crane operation program on monitor 0
  - Crane operation program on monitor 1
- Support* program
- Working range limitation* program
- Control parameter program
- Engine monitoring program

The electrical and electronic components are linked via data bus transmission technology (Liebherr System Bus = LSB).

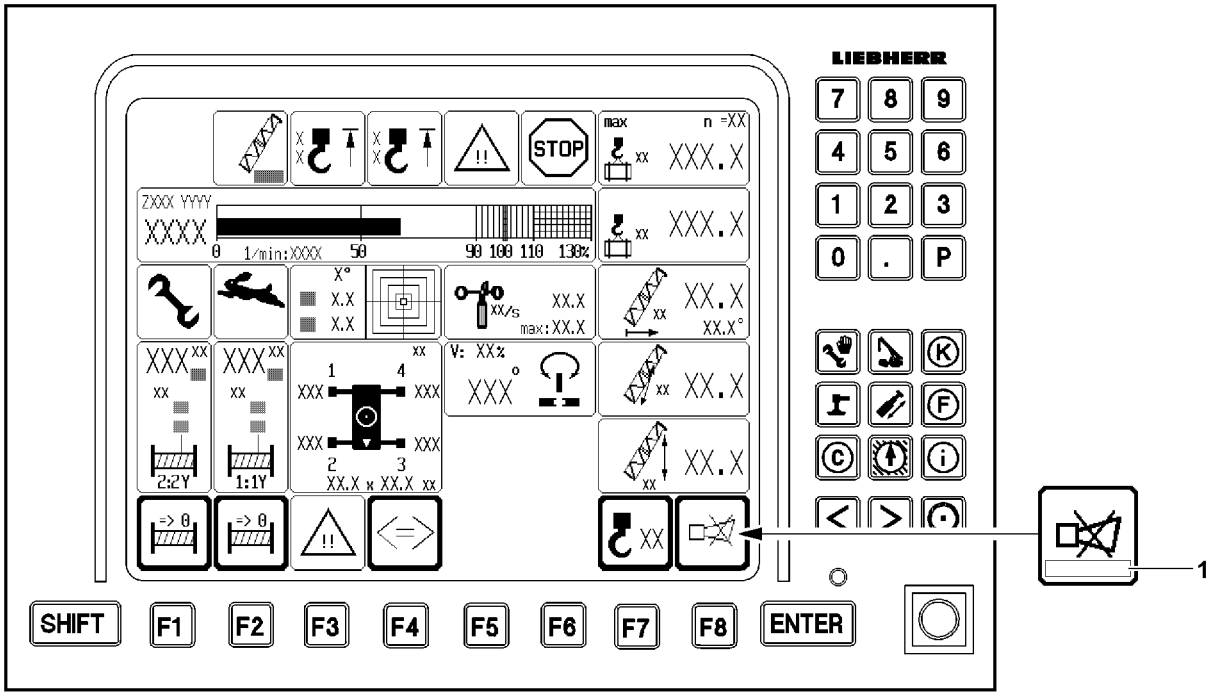

B111937

1.1 Overload protection (LMB)

The overload protection is implemented in microprocessor CPU 0 of base assembly 0. The LICCON computer system works on the principle of comparing the current / actual load with the “maximum permissible load according to the load chart and reeving”.

1.1.1 Actual load

The current load is determined by recording variable values.
The **load on the crane** results from the load momentum and the boom momentum together. It exerts a force in the boom guying, which is measured by force test sensors.
The **boom momentum** is calculated from angle sensor information (boom angle) and the crane data (boom weights) for the set operating mode.
The **radius** is calculated with data from the angle sensors (boom angle) and the geometric data for the set operating mode. This also takes into account the boom flexation due to its own weight and the weight of the load.
The actual load is calculated from the total load, the boom momentum and the boom radius.

1.1.2 Maximum load according to load chart and reeving

Crane data such as load charts, boom weights and geometry data are stored in the central data memory of the LICCON computer system.
The “Maximum load according to the load chart and reeving” is constantly determined for the set crane configuration, for the set reeving and for the calculated radius, based on the load charts.

1.1.3 Comparison

The actual load and the “Maximum load according to the loading chart and reeving” are compared. When they approach the specified limit, an advance warning is issued. If the specified limit is exceeded, a LMB STOP is triggered due to overload. When a LMB STOP is triggered, load moment increasing crane movements are shut off.

1.2 Error messages

The LICCON computer system monitors the crane permanently for operating / system errors.
If errors occur, error messages **1** are issued. Error messages appear in the horn icon of LICCON monitor 0.

Note

- Always pay attention to error messages **1**!
- For procedure in case of error messages, see Diagnostics manual and the respective chapter in the Crane operating instructions!

1

LICCON
LIEBHERR
COMPUTED
CONTROLLING
=> DATA LINE CHECK PASSED -- O.K. !!
SYSTEM CHECK .....

2

LICCON
LIEBHERR
COMPUTED
CONTROLLING
=> DATA LINE CHECK PASSED -- O.K. !!
SYSTEM CHECK .....PASSED -- O.K. !!

3

LICCON
LIEBHERR
COMPUTED
CONTROLLING
LIEBHERR-WERK EHINGEN

B199899

2 LICCON computer system boot up

After it is turned on, the LICCON computer system performs a self test.
First the connections from the microprocessor CPU (ZE 0) to the monitor are checked. If no error is found during the test, the monitor shows this image:

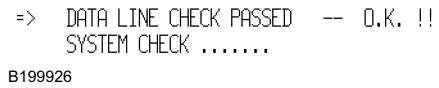

B199926

If the test finds no connection problems, there is a system test of all the microprocessor CPUs (ZE). The incremental sequence of the self test can be monitored on the 7 segment displays of the CPUs. If no errors are found during the system test, the monitor shows this image:

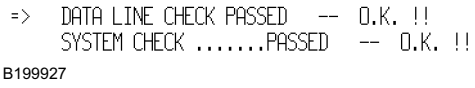

B199927

Shortly after that, this general initialisation screen appears on the monitor:

B199928

Note
Errors during LICCON computer system boot up!
If an advance warning, warning or STOP event occurs in the engine monitoring while the LICCON computer system boots up, it switches automatically to the engine monitoring program!
▶ Refer to section “Engine monitoring program” for additional information!

2.1 Operating mode preselection on the LICCON computer system

WARNING
Danger of accident due to deviating equipment set up configuration!
If the equipment set up configuration and the operating mode of the crane set on the LICCON computer system **does not** match, then the crane can be overloaded unnoticed and topple over!
Personnel can be severely injured or killed!
▶ In the operating mode preselection, only the operating mode may be selected which actually corresponds to the equipment set up configuration of the crane!

When the starting procedure is completed successfully after a successful self test of the LICCON computer system, the following appears on:
– **LICCON Monitor 0** for approx. 3 seconds the operating mode preselection screen.
– **LICCON Monitor 1** the title screen with the words: **“LIEBHERR-WERK EHINGEN”**

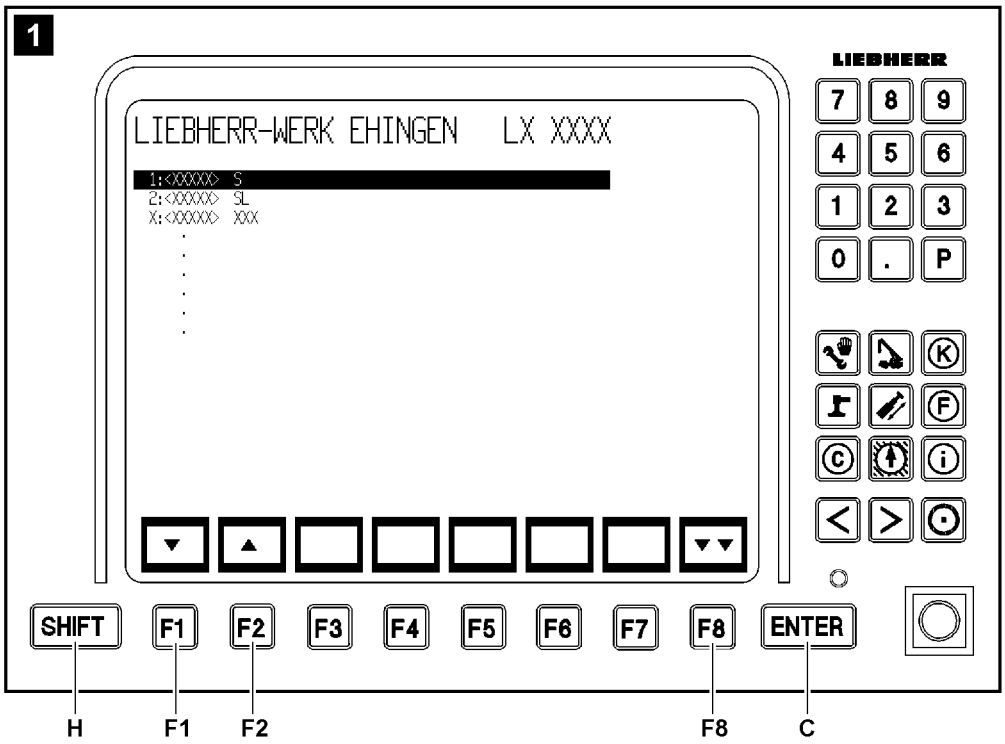
1
LIEBHERR
LIEBHERR-WERK EHINGEN LX XXXX
1:<XXXXX> S
2:<XXXXX> SL
X:<XXXXX> XXX
7 8 9
4 5 6
1 2 3
0 . P
SHIFT F1 F2 F3 F4 F5 F6 F7 F8 ENTER
H F1 F2 F8 C

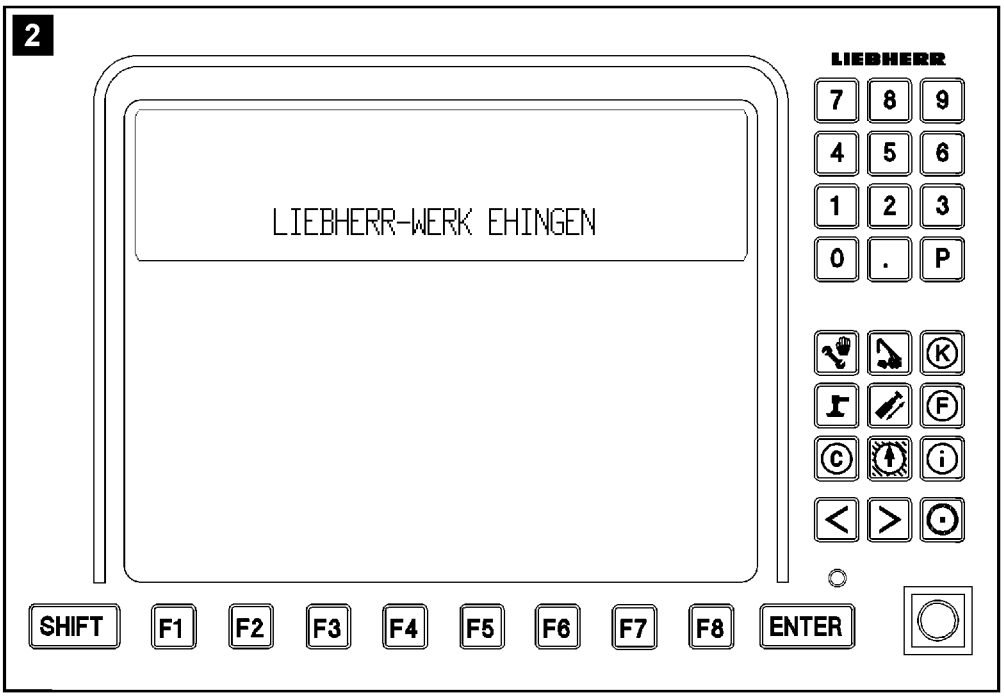
2
LIEBHERR
LIEBHERR-WERK EHINGEN
7 8 9
4 5 6
1 2 3
0 . P
SHIFT F1 F2 F3 F4 F5 F6 F7 F8 ENTER

B111918

2.1.1 LICCON Monitor 0

After successful starting procedure, the operating mode preselection screen appears on the **LICCON monitor 0** for approximately three seconds, see illustration **1**.

Note

- The operating mode preselection screen is skipped if the crane only has one level! For example: The crane has only one S-boom (only S-operation possible)! In this case, the system changes directly into the set up screen for the only possible level!
- If the memory loses its data (for example as a result of a cold start) the previous operating mode is “rejected” and the first operating mode in the operating mode selection menu is activated! In this case, the corresponding set up screen appears!

The function key **F1** or the function key **F2** is pressed within three seconds when the operating mode preselection screen appears.

Result:

– The operating mode preselection screen is retained until the settings are confirmed by pressing the function key **F8** or the ENTER key **C**.

Note

- If neither the function key **F1** nor the function key **F2** are pressed within three seconds, then the last active operating mode remains set. The corresponding set up screen appears automatically!

To select the required operating mode group for crane operation, press the function key **F1** (cursor down) or function key **F2** (cursor up).

Note

- The selected operating mode group is highlighted in black in the operating mode preselection screen on the monitor!

Press the function key **F8** or the ENTER key **C**.

Result:

– The set operating mode group is taken over into the LICCON computer system and the set up program appears with the corresponding set up screen.

2.1.2 LICCON Monitor 1

After successful starting procedure, the title screen with the words appears on the **LICCON monitor 1**: **“LIEBHERR-WERK EHINGEN”** , see illustration **2**.

Note

- Depending on the set up configuration of the crane, it is possible that a note for an operating mode appears!

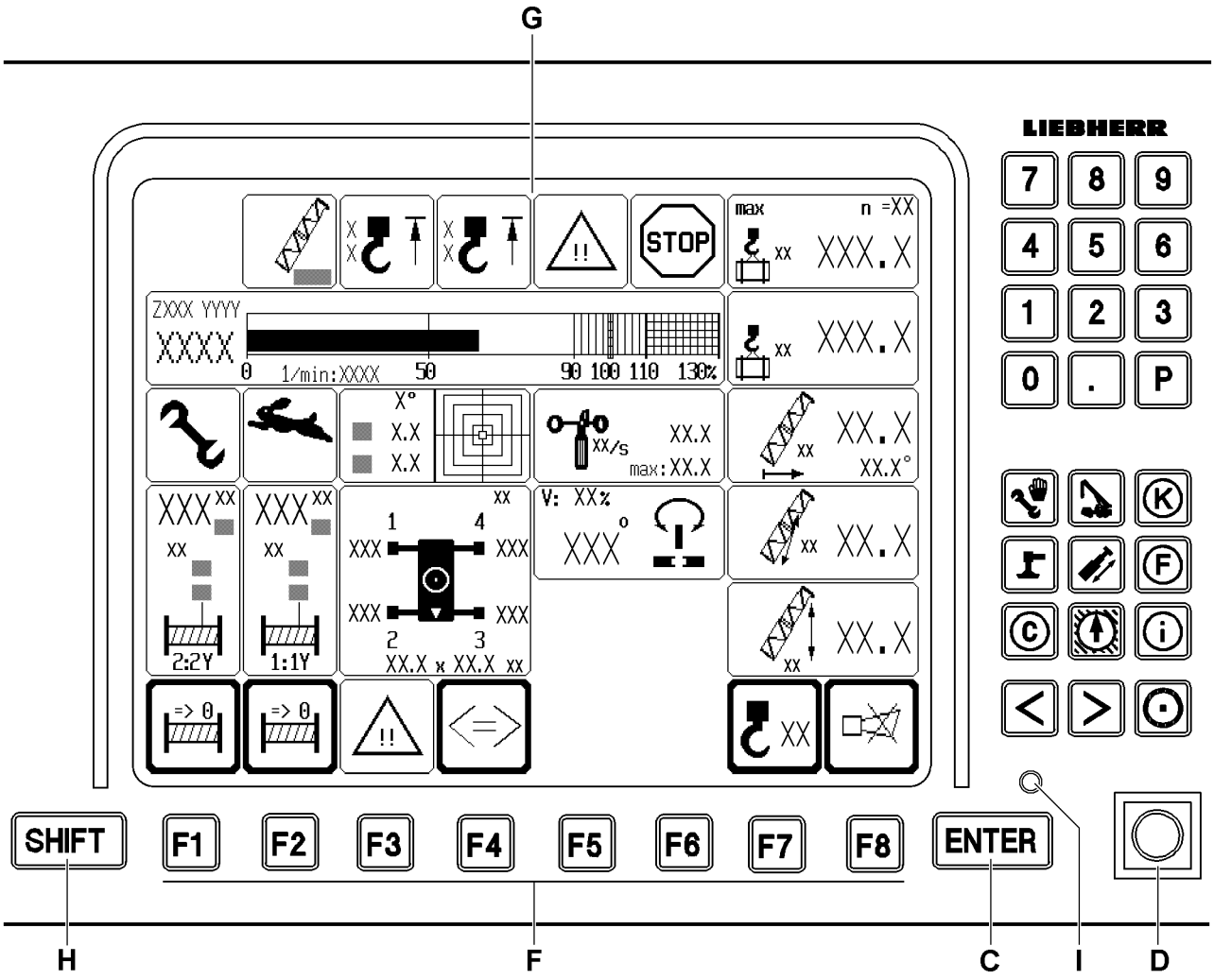
G
LIEBHERR
7 8 9
4 5 6
1 2 3
0 . P
STOP
max n =XX
ZXXX YYYY
XXXX
0 1/min:XXXX 50 90 100 110 130%
XXX.X
XX.X
XX.X°
V: XX%
XXX°
2:2Y
1:1Y
XX.X x XX.X xx
=> 0
SHIFT
F1
F2
F3
F4
F5
F6
F7
F8
ENTER
H
F
C
I
D

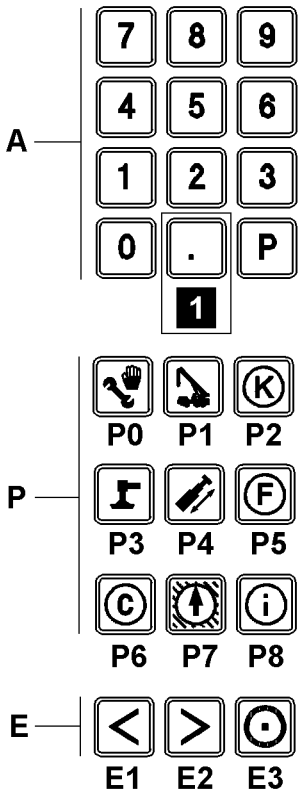
A
7 8 9
4 5 6
1 2 3
0 . P
1
P
P0 P1 P2
P3 P4 P5
P6 P7 P8
E
E1 E2 E3

B111900

3 Operating elements of the LICCON computer system on monitor 0

The functions of the individual monitor operating elements are program-dependent and can differ, depending on the LICCON program which is currently running. This will be described in more detail in the description of the individual LICCON programs.

A	Keypad	
P	Program keys	• Selection of the individual LICCON programs
P0	Set up	• SHIFT **H** and program key **P0**: Engine monitoring
P1	Crane operation	
P2	Crane acceptance	• Correction coefficients (program blocked - for LIEBHERR service personnel only)
P3	Crane support	
P4	—	• Program key not assigned!
P5	Input window hook block weight	
P6	Control parameter	
P7	Working range limitation	
P8	Test system	• **Note:** Description Test system, see Diagnostics manual!
C	Input key ENTER	• Confirmation of changes
D	Set up key	• Zero position (not actuated): Normal operation • Touching: Function “Exceedance of shut off limits of LICCON overload protection” is released and / or the hoist limit switch is bypassed.

Note
Double function set up key!
If the crane has **no** CE-mark, when actuating the set up key **D**, the release for the “Emergency operation LICCON overload protection” is automatically engaged!

▶ Take into account, when actuating the set up key **D**, that the “Emergency operation LICCON overload protection” is automatically released!

Note

▶ By actuating the set up key **D**, all erection / take down procedures can be carried out within the erection / take down charts, for which no load charts are available!

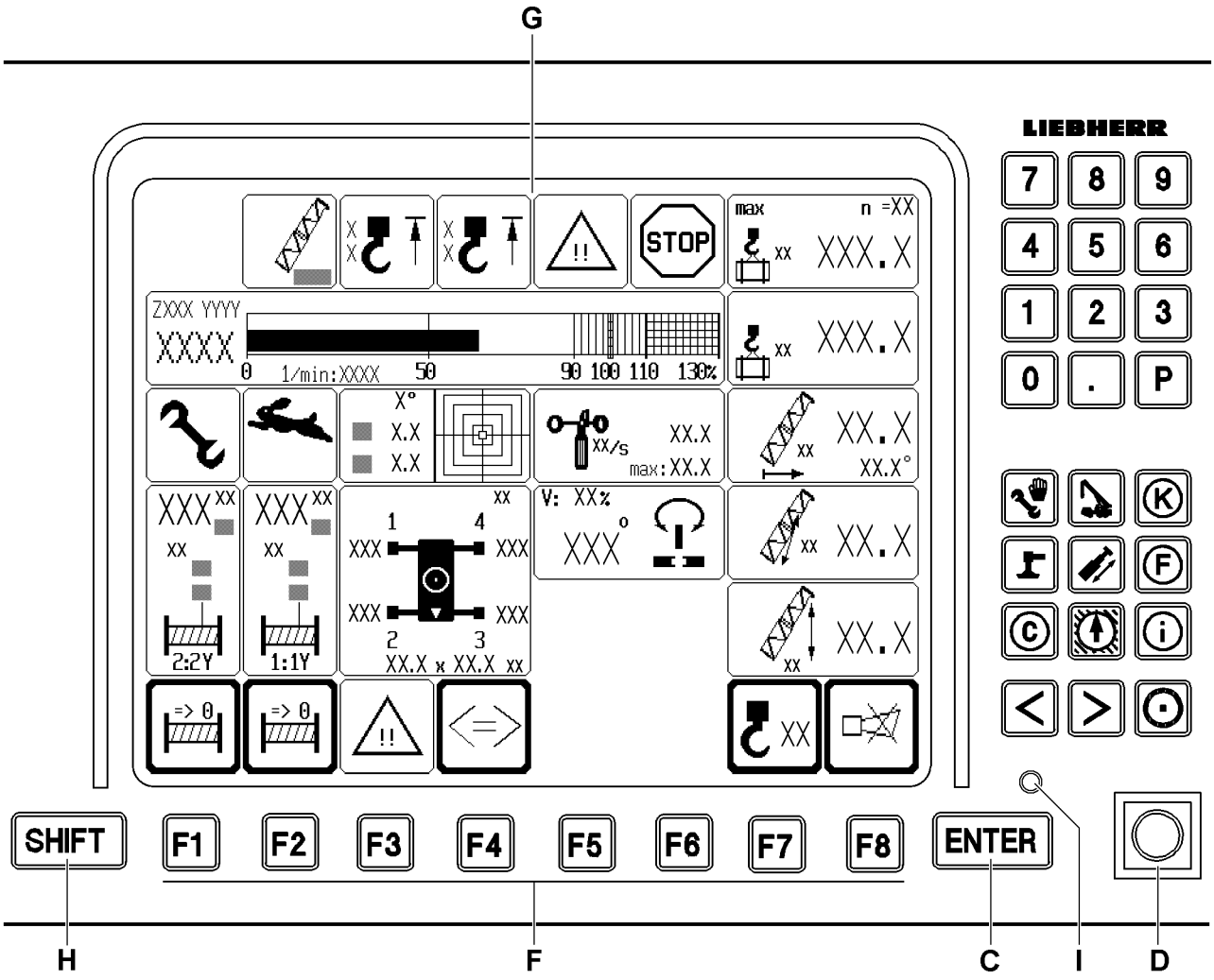
G
LIEBHERR
7 8 9
4 5 6
1 2 3
0 . P
STOP
max n =XX
ZXXX YYYY
XXXX
0 1/min:XXXX 50 90 100 110 130%
XXX.X
XX.X
XX.X°
V: XX%
XXX°
2:2Y
1:1Y
XX.X x XX.X xx
=> 0
SHIFT
F1
F2
F3
F4
F5
F6
F7
F8
ENTER
H
F
C
I
D

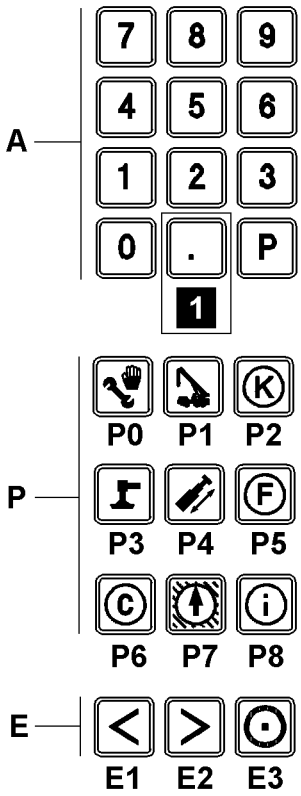
A
7 8 9
4 5 6
1 2 3
0 . P
1
P
P0 P1 P2
P3 P4 P5
P6 P7 P8
E
E1 E2 E3

B111900

E	Special function keys	• Monitor brightness adjustment • Key combination **E3** and **E1**: Turn background illumination on / off • Key combination **E3** and **E2**: Brightness adjustment in three stages • **Note:** Additional functions of the special function keys are program-dependent and are further explained in the descriptions of the individual LICCON programs!
F	Function keys	• The function keys should always be viewed in conjunction with the function key icon line displayed on the monitor.
G	Display	• Display of the individual programs (example: Crane operation program).
H	SHIFT key	• Second-level key assignments, for example “Supervisory function”.
I	LED display	• Monitor supply voltage present

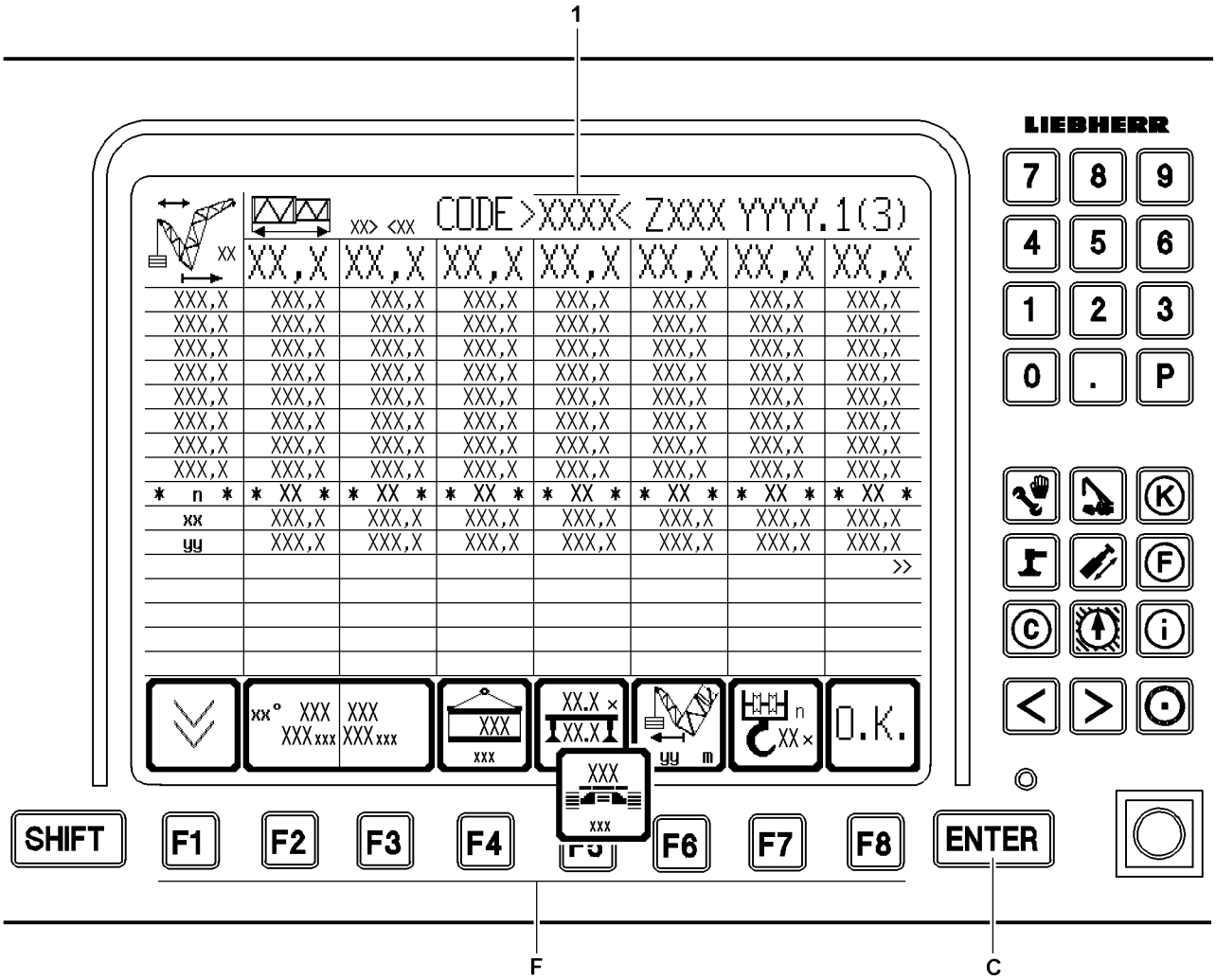
1
LIEBHERR
CODE >XXXX< ZXXX YYYY.1(3)
XX,X
XXX,X
* n *
* XX *
xx
yy
>>
O.K.
7 8 9
4 5 6
1 2 3
0 . P
SHIFT
F1
F2
F3
F4
F5
F6
F7
F8
ENTER
F
C

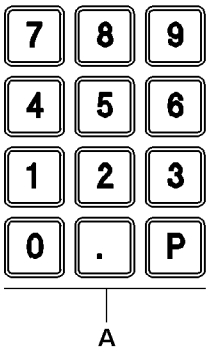
7 8 9
4 5 6
1 2 3
0 . P
A

B111919

4 The set up program

After the LICCON computer system boots up correctly, it changes automatically into the set up program.

Note

▶ All entries and settings, which are to be made by the crane operator in the set up program can only be carried out on **LICCON monitor 0**!

Note

Adjustment and display of set up configuration and reeving!

▶ Normally, the most recently run set up configuration and the reeving used at that time will be automatically set and displayed!

▶ If the computer system is started for the first time after set up of the crane, then the first valid set up configuration appears in the set up screen (first valid operating mode and reeving number “0”)!

▶ After a new start of the computer system, due to a “Cold start” (for example: battery or CPU change), the first valid configuration appears in the set up screen (first valid operating mode and reeving number “0”)!

Using the set up program, the crane operator can set to the current operating mode, the current configuration status of the crane and the reeving number of the hoist rope.
In addition, in the set up program he can also see all the load charts programmed into the LICCON computer system.

4.1 Setting the operating mode and set up configuration

The crane operator can select the operating mode and the set up configuration with the function keys **F** or by entering a 4-digit short code **1**.

4.1.1 Setting the operating mode and set up configuration via the function keys

The function keys **F** are explained in the section “Function key line” in this chapter.

▶ Select the respective function keys **F**.

▶ Press the ENTER key **C** to confirm and accept the settings.

Result:

– The data of the selected load chart can be viewed.

4.1.2 Setting the operating mode and set up configuration via the 4-digit short code

▶ Enter a 4-digit short code **1** with the keypad **A** on the **LICCON monitor 0**.

▶ Press the ENTER key **C** to confirm and accept the settings.

Result:

– The data of the selected load chart can be viewed.

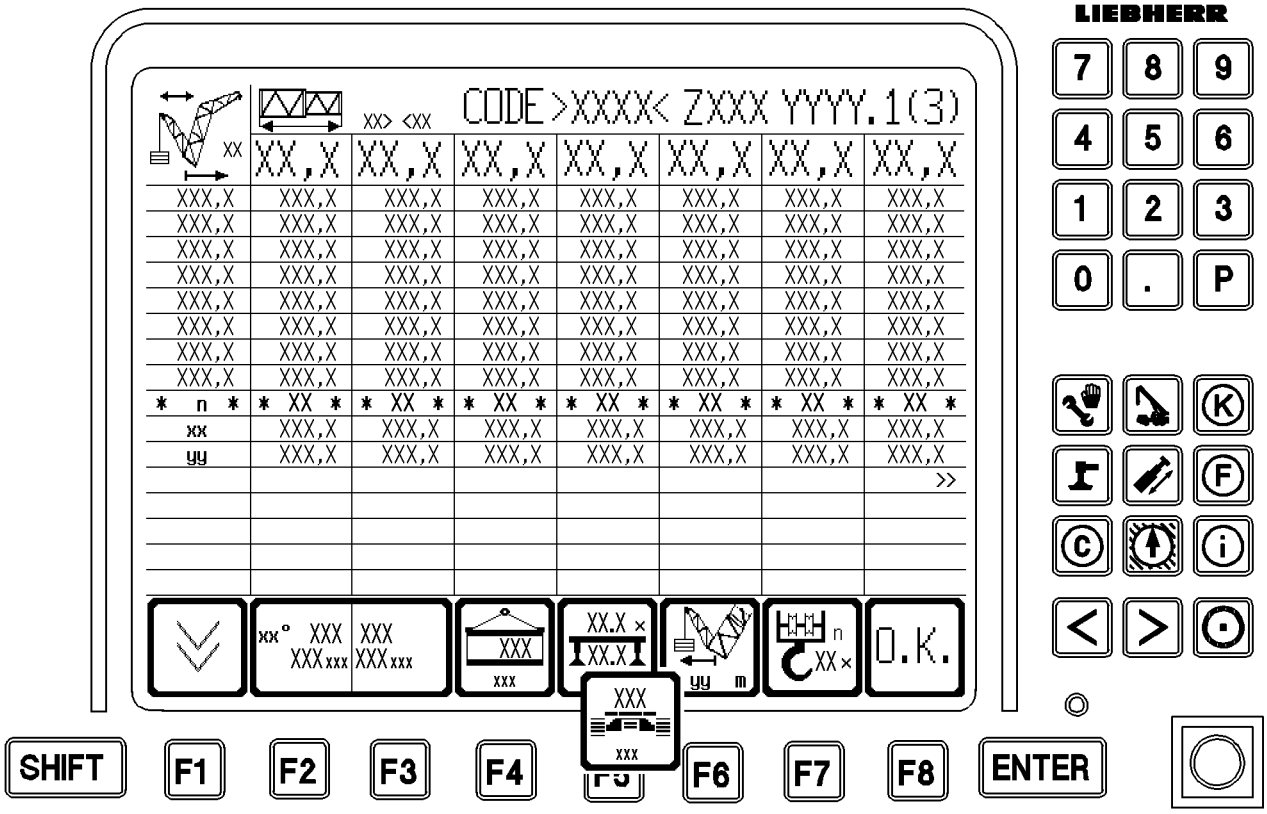
LIEBHERR
CODE>XXXX< ZXXX YYYY.1(3)
XX> <XX
7 8 9
4 5 6
1 2 3
0 . P
K
F
C
O.K.
SHIFT
F1
F2
F3
F4
F5
F6
F7
F8
ENTER

CODE>XXXX< ZXXX YYYY.1(3)
XX> <XX

1

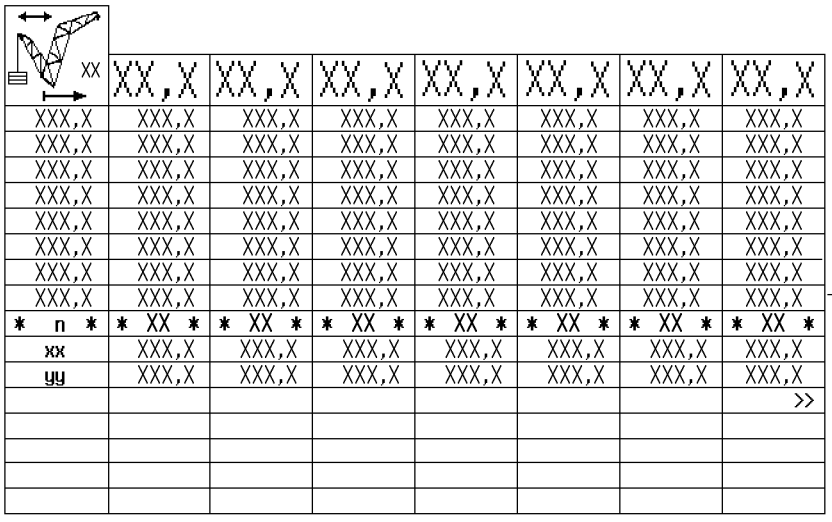

2

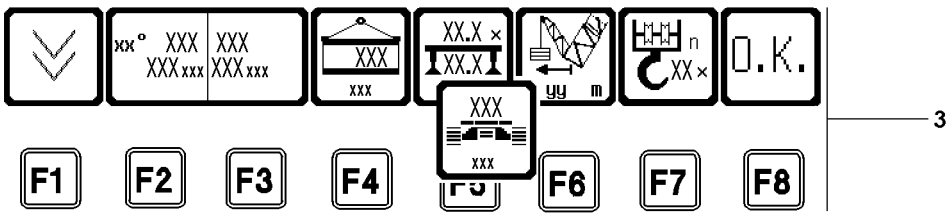
O.K.
F1
F2
F3
F4
F5
F6
F7
F8

3

B111296

4.2 Set up program areas

Note

- The monitor illustrations in this chapter are only examples!
- The numerical values in the individual icons and charts do not have to necessarily match the crane exactly!
- Numbers and letters can be replaced by place holders!
- The programmed load charts for the crane are binding!

The monitor is divided into three areas in the set up program:

1 General information line
2 Display area of load chart values
3 Function key line with assigned icons

4.2.1 General information line

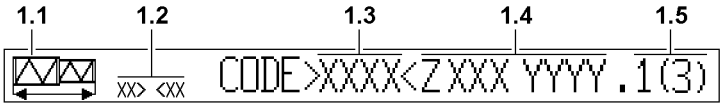

B111920

1.1 Main boom length icon	• The icon is identical for all operating modes.
1.2 Measuring unit	• For the programmed length units (LE) and weight units (GE)
1.3 4-digit short code	• It is located next to the text “CODE” inside angled brackets • Each short code uniquely identifies a crane configuration. The valid set up configuration and their associated short code numbers for the crane can be found in the load chart manual of the crane.
1.4 Organization number	• For internal Liebherr load chart administration
1.5 Page number	• Relates to the currently displayed part of the load chart • Separated from the organization number with “.” • The total number of pages in this load chart is in parentheses.

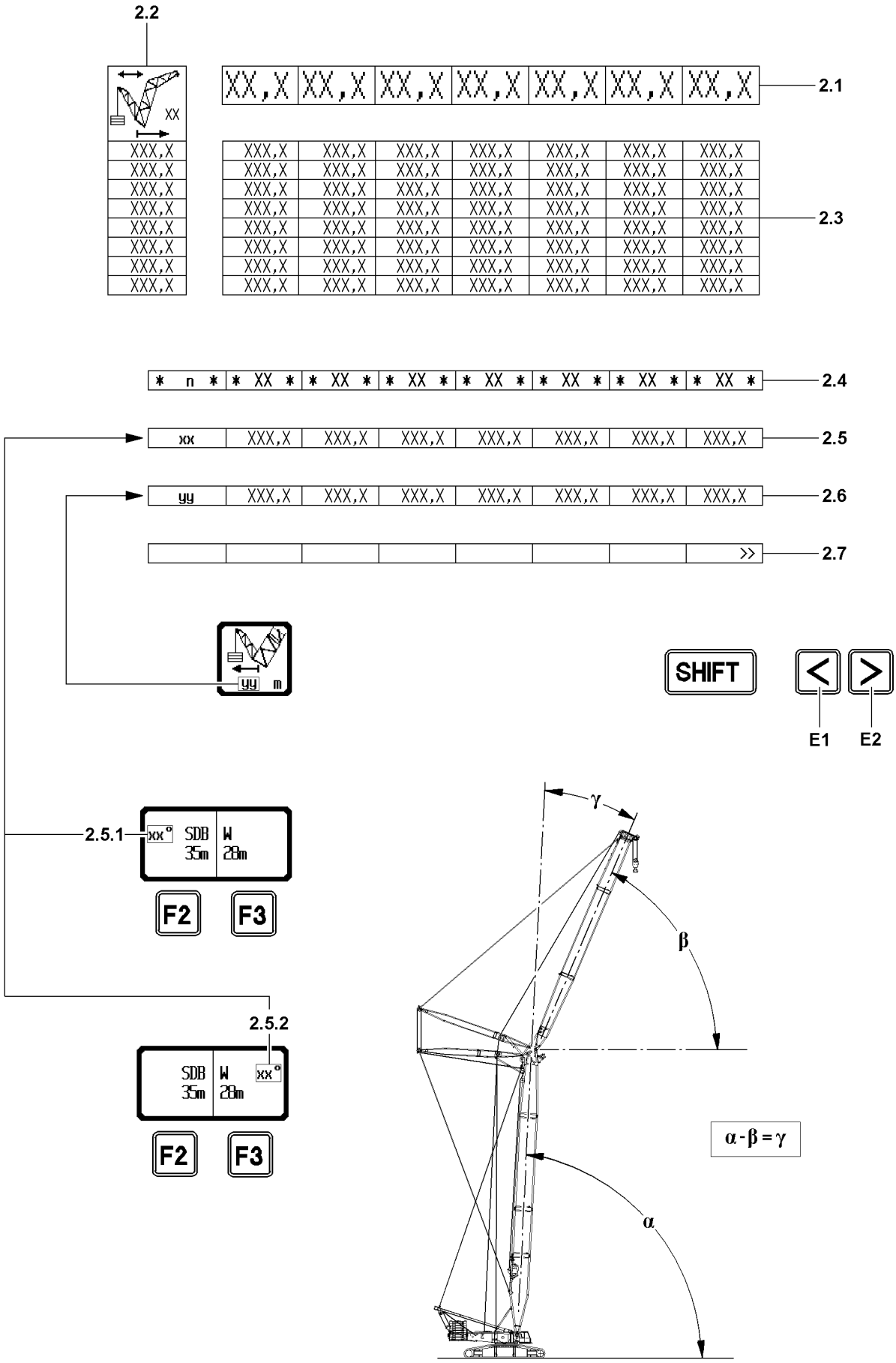
2.2
XX
XX,X XX,X XX,X XX,X XX,X XX,X XX,X
2.1
XXX,X
2.3
* n * * XX * * XX * * XX * * XX * * XX * * XX * * XX *
2.4
xx XXX,X XXX,X XXX,X XXX,X XXX,X XXX,X XXX,X
2.5
yy XXX,X XXX,X XXX,X XXX,X XXX,X XXX,X XXX,X
2.6
>>
2.7
yy m
SHIFT
E1
E2
2.5.1
xx° SDB 35m W 28m
F2
F3
2.5.2
SDB 35m W 28m xx°
F2
F3
γ
β
α
α - β = γ

B111297

4.2.2 Display area of load chart values

2.1 Main boom lengths
- In [m] or [ft]
- Maximum of 7 columns per display page

Note
View “Boom radius” icon **2.2**!
- ▶ Depending on the operating mode of the crane, the view changes from the “Boom radius” icon **2.2**!
- ▶ In the illustration, the “Boom radius” icon **2.2** shows an operating mode with (luffing) auxiliary boom / accessory, derrick boom and derrick ballast!

2.2 “Boom radius” icon
- In [m] or [ft]
- Maximum 10 lines of radius values
- Vertical axis of load value field

2.3 Load value field
- Columns under the main boom lengths and in the lines to the right of radius values
- Load values depending on boom length and radius

2.4 Reeving number of hoist rope
- * n *
  n = Reeving number of the hoist rope between the boom head and hook block, in order to be able to lift the maximum load in the corresponding load chart column in single winch operation
- Enter and confirm the reeving on the LICCON monitor 0, according to the reeving on the boom head.

NOTICE
Special equipment necessary!
- ▶ If a load value in the column exceeds that of a load that can be lifted with the maximum possible reeving, then there is an exclamation mark beside the reeving number (“!”). This exclamation mark indicates that special equipment is needed to lift this load!

Note
Parallel operation of hoist winches!
- ▶ For parallel operation of hoist winches (1**II** 2), when reeving in the hoist rope, enter the total reeving of winch 1 and winch 2 on the LICCON computer system!
- ▶ **Example**: Winch 1 and winch 2 are each reeved 7ways, the total reeving is therefore n = 14!
- ▶ The total reeving **must** always show an even number value in parallel operation!

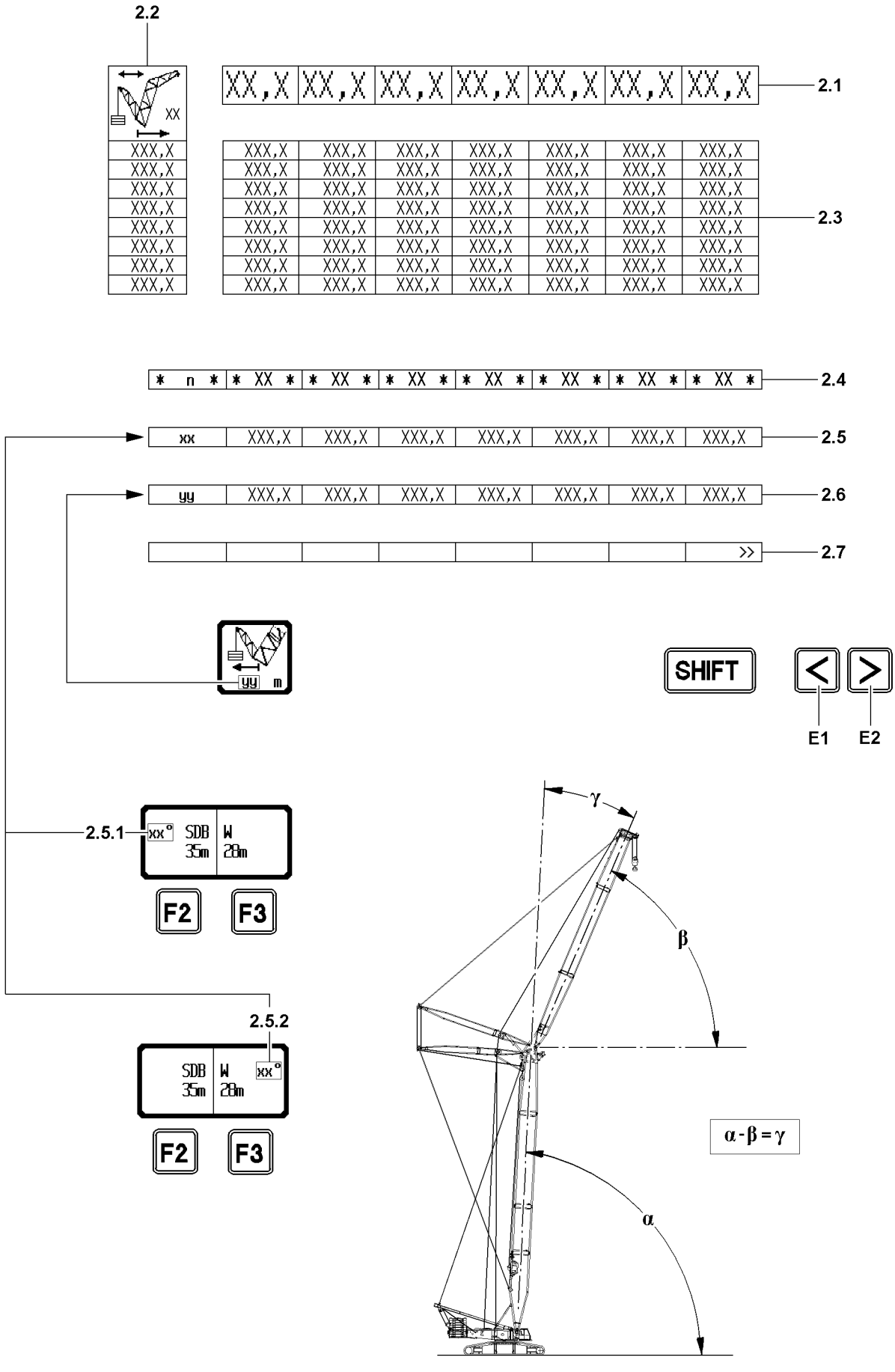
2.2
XX
XX,X
2.1
XXX,X
2.3
* n * * XX * * XX * * XX * * XX * * XX * * XX * * XX * * XX *
2.4
xx
2.5
yy
2.6
>>
2.7
yy m
SHIFT
E1
E2
2.5.1
xx° SDB W
35m 28m
F2
F3
2.5.2
SDB W xx°
35m 28m
F2
F3
γ
β
α
α - β = γ

B111297

2.5 Boom angle
- Line **xx**
- In [°]
- **Note:**
  Appears **only** in operating modes with luffing auxiliary boom / accessory!

2.5.1 Main geometry
- Appears "**xx°** " in main geometry status icon (for example: **"xx°** SDB") means **"xx°"** = main boom angle **α** in [°].
- In the line **xx** the main boom angles are listed, which must be set in order to be able to lift the load values in the corresponding load chart column.

2.5.2 Auxiliary geometry
- Appears "**xx°** " in auxiliary geometry icon (for example: **"W" "xx°"**) then means **"xx°"** = relative angle auxiliary boom / accessory **γ** in [°].
- In the load chart columns, the relative angles auxiliary boom / accessory, which must be set to be able to lift the load values in the corresponding load chart column are listed next to each other.

Note
- ▶ Main boom angle **α**: The angle of the main boom to the placement surface of the crane!
- ▶ Angle auxiliary boom / accessory **β**: The angle of the auxiliary boom / accessory to the placement surface of the crane!
- ▶ Relative angle auxiliary boom / accessory **γ**: The angle of the auxiliary boom / accessory is determined relative to the main boom!

2.6 Derrick ballast radius
- Line **yy**
- In [m] or [ft]
- **Note:**
  Appears **only** in operating modes with derrick ballast!
- In the line **yy** the derrick ballast radii are listed, which must be set in order to be able to lift the load values in the corresponding load chart column.

2.7 Line for special displays
- If a load chart consists of more than seven columns, it cannot be fully displayed because of the size of the monitor. In that case, marking arrows in the first or the seventh field in this line indicate that there are additional chart columns to the left or right of the displayed chart. They can be shown by pressing the key **E1** or the key **E2**.
- **Note:**
  Using the key combination **SHIFT** and **E1** or **SHIFT** and **E2**, you can, where possible, scroll left or right by 7 load chart columns (corresponds to 1 page)!

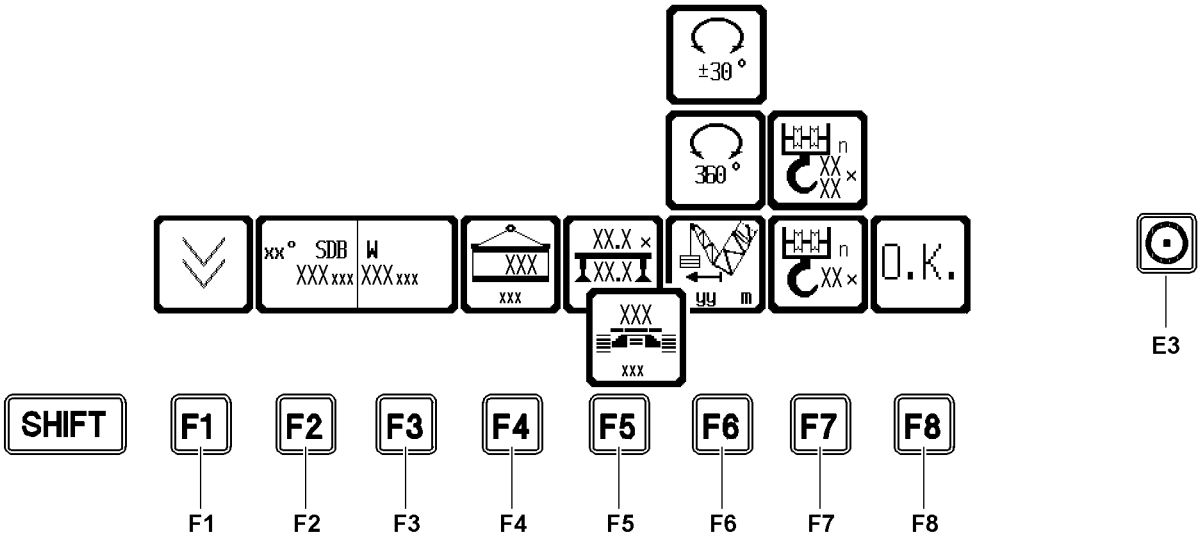
±30°
360°
n
XX
XX
xx° SDB W
XXX xxx XXX xxx
XXX
xxx
XX.X
XX.X
yy m
n
XX
O.K.
XXX
xxx
E3
SHIFT
F1
F2
F3
F4
F5
F6
F7
F8
F1
F2
F3
F4
F5
F6
F7
F8

B111298

4.2.3 Function key line in the set up program

The function key line consists of function keys **F1** to **F8** and the function key icon bar above it. The function keys correspond to the various function key icons above them.
Various functions are indicated by the function key icons, or they may refer to changes of:

– Operating mode and
– set up configuration.

Not all function keys have to be assigned icons on the LICCON monitor. This depends on the program selection.
Pressing a function key changes the appearance of the icon above, its meaning, or its textual content.

F1 Vertical paging	• Depending on the size of the monitor, up to 10 load chart lines can be displayed at once. If a chart consists of more than 10 lines, then the display is spread over several pages. When pressing a key, the next page of the load chart will be displayed, and the number of the current page in the “general information line” will be counted up by 1. When the last page is reached, page 1 will appear again after pressing the function key **F1**.
F2 Main boom geometry	• Adjustment possibility of different main boom operating modes and main boom lengths of the crane (if available). The types are described by abbreviations (for example: **SDB** = heavy main boom, derrick boom and suspended ballast) and length data in the icon.
SHIFT and **F2**	• Previous main boom geometry (if available)

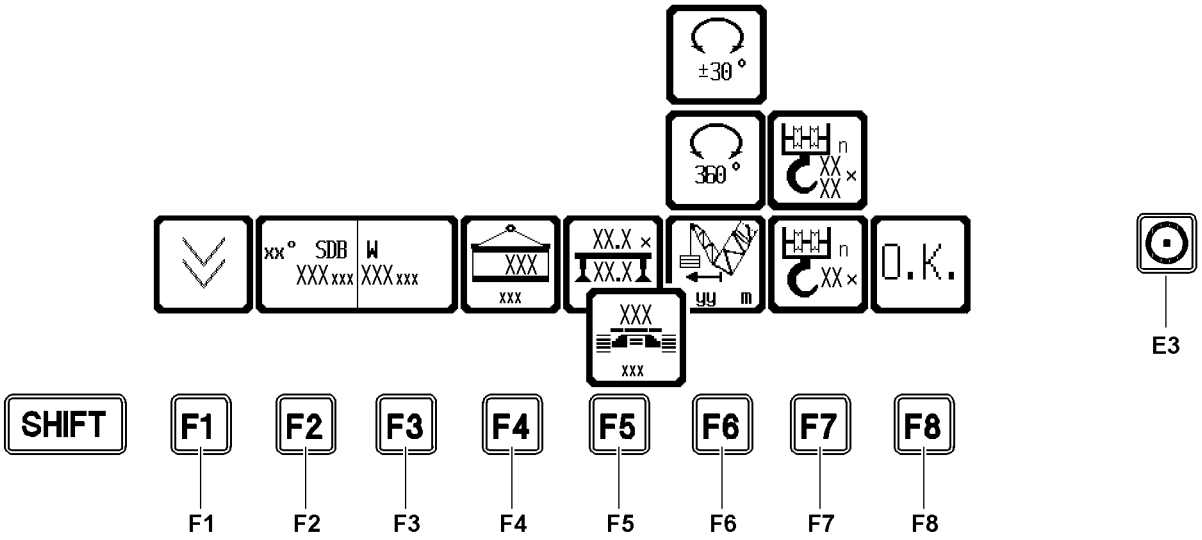
±30°
360°
n
XX
XX
xx° SDB W
XXX xxx XXX xxx
XXX
xxx
XX.X
XX.X
yy m
n
XX
O.K.
XXX
xxx
E3
SHIFT
F1
F2
F3
F4
F5
F6
F7
F8
F1
F2
F3
F4
F5
F6
F7
F8

B111298

F3 Boom geometry auxiliary boom / accessory

- Adjustment possibility of different auxiliary boom operating modes and auxiliary boom lengths of the crane (if available). The types are described by abbreviations (for example: **W** = luffing lattice jib) and length data in the icon. Possibly additional angle data is noted in the icon.
- **Note:**
  Pressing the function key **F2** and / or the function key **F3** removes all data (operating mode, set up configuration) from the monitor and sets the short code in the general information line to “CODE >????<”!
- **Operating mode data:**
  - Boom length icon in the general information line
  - Length units and weight units
  - Load chart organization number
  - Boom radius icon
  - Boom length data
- **Set up dependent data:**
  - Numbering of current page number and total number of pages in load chart
  - Radius values in length units
  - Load values in weight units

SHIFT and **F3**

- Previous auxiliary boom geometry (if available)

F4 Counterweight

- Adjustment possibility for current counterweight, which must be on the turntable in order to obtain the values in the current chart. When pressing a key, the following icon appears with additional text in the counterweight icon.
- Example:
  “110 t ” = total counterweight of 110 t

F5 Crane chassis

- Adjustment possibility “Set up configuration crane chassis” (for example: crawler, support, central ballast).
- In operating modes, where there are various crane chassis versions (for example: Ballast on crawler travel gear), this can be set with the function key **F5**.

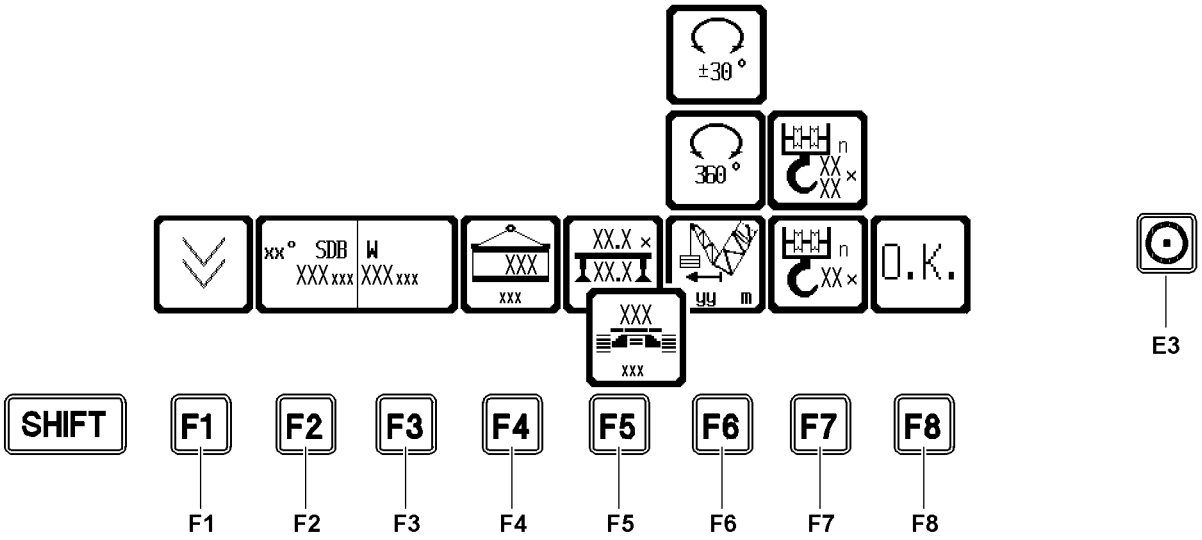
±30°
360°
n
XX
XX
xx° SDB W
XXX xxx XXX xxx
XXX
xxx
XX.X
XX.X
yy m
n
XX
O.K.
XXX
xxx
E3
SHIFT
F1
F2
F3
F4
F5
F6
F7
F8
F1
F2
F3
F4
F5
F6
F7
F8

B111298

Note

- For crane operating modes without derrick ballast, the slewing range icon crane superstructure appears at **F6**!
- For crane operating modes with derrick ballast, the derrick ballast radius icon appears at **F6**!

F6 Slewing range crane superstructure	• "Slewing range icon 360°" • **or** • "Slewing range icon to the side (±30°)" • **Note:** For the limited slewing range to the side (±30°) there is a separate load chart with higher load capacities! When turning away from this angle range, the load moment limiter (LMB) switches automatically to the load chart for slewing range 360°!

Note

- If the current load can only be lifted with a limited slewing range to the side (±30°), then the rotation speed is reduced toward the limit of the slewing range up to "zero". An overload of the crane is thereby avoided by turning the crane superstructure, see section "Automatic slewing range change"!

or

F6 Derrick ballast radius	• Set the set up configuration derrick ballast radius **yy** in [m] or [ft]

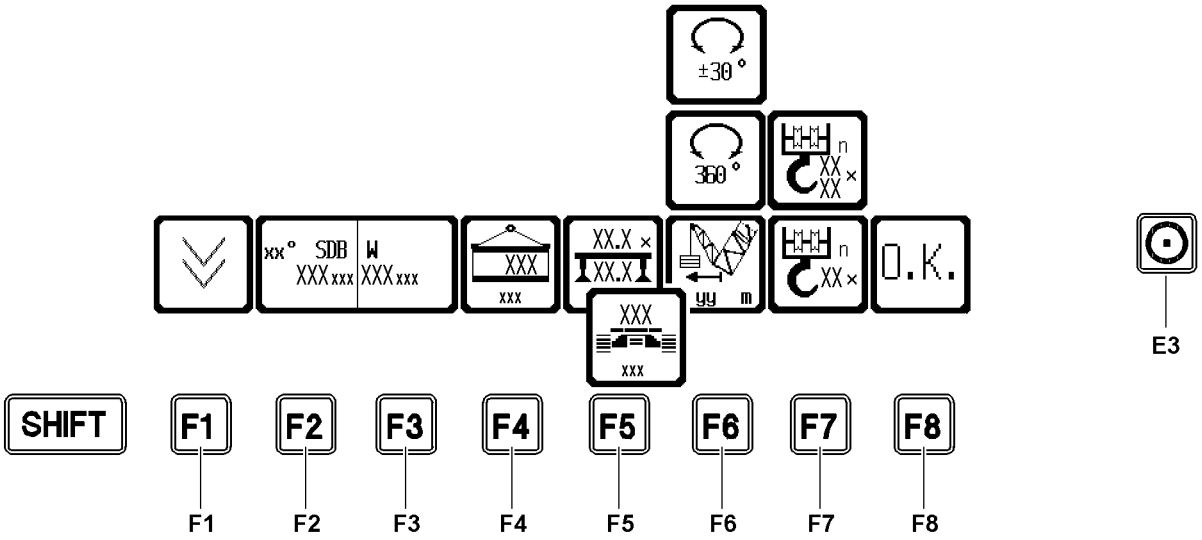
±30°
360°
n
XX
XX
xx° SDB W
XXX xxx XXX xxx
XXX
xxx
XX.X
XX.X
yy m
n
XX
O.K.
XXX
xxx
E3
SHIFT
F1
F2
F3
F4
F5
F6
F7
F8
F1
F2
F3
F4
F5
F6
F7
F8

B111298

F7 Hoist rope reeving	• Adjustment possibility for the **number of hoist rope strands on the boom** to obtain a certain load carrying capacity. • Press the key: Reeving number on boom is increased by 1.
SHIFT and **F7**	• Press the key: Reeving number on boom is reduced by 1.

Note

- ▶ The displayed number of hoist rope strands (reeving) in the icon will be increased with every keystroke by one counter, up to a fixed maximum value (depending on operating mode)! If the maximum value is exceeded, the counter starts again at the minimum value!
- ▶ If the set value is still within the minimum and maximum values when switching to another operating mode, it remains valid! Otherwise it will be set to the minimum value for the new operating mode!
- ▶ After a “Cold start” (for example loss of data in the memory), the display of the hoist rope reeving is at “0”!

Note

Parallel operation of hoist winches!

- ▶ For parallel operation of hoist winches (1**II** 2), when reeving in the hoist rope, enter the total reeving of winch 1 and winch 2 on the LICCON computer system!
- ▶ **Example**: Winch 1 and winch 2 are each reeved 7ways, the total reeving is therefore n = 14!
- ▶ The total reeving **must** always show an even number value in parallel operation!

E3 and **F7**	• Adjustment possibility for the **number of hoist rope strands on the boom nose** to obtain a certain load carrying capacity. • Press the key: Reeving number on boom nose* (upper number in “Hoist rope reeving” icon) is increased by 1.
SHIFT and **E3** and **F7**	• Press the key: Reeving number on boom nose* (upper number in “Reeving” icon) is reduced by 1.

Note

Display reeving boom nose!

- ▶ The reeving for the boom nose is only shown if the boom nose is assembled!
- ▶ If the boom nose is installed during operation, then the reeving of the boom nose must be correctly entered in the set up program!

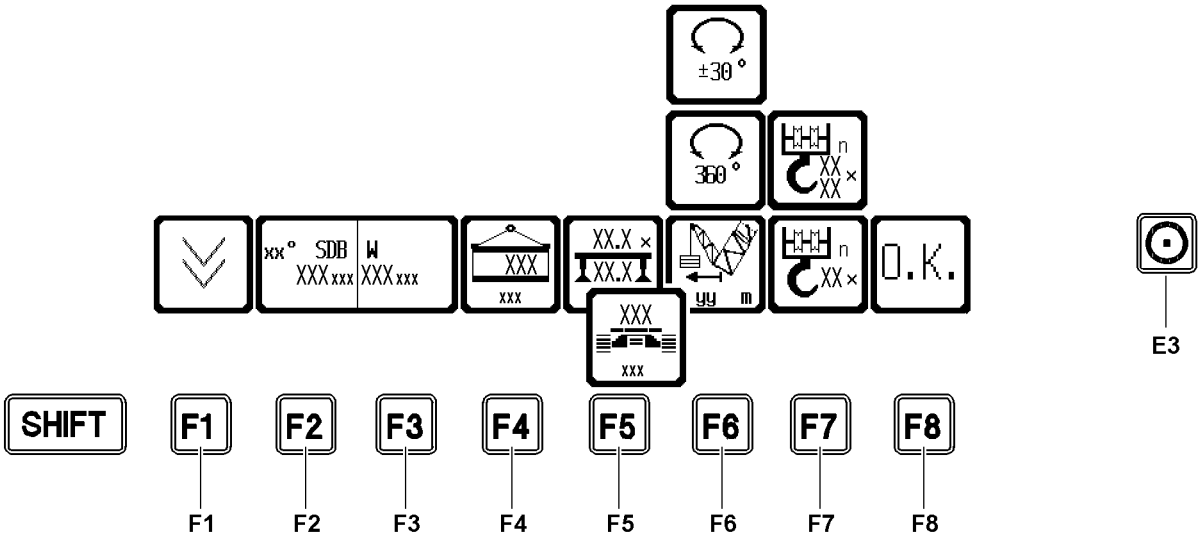
±30°
360°
n
XX
XX
xx° SDB W
XXX xxx XXX xxx
XXX
xxx
XX.X
XX.X
yy m
n
XX
O.K.
XXX
xxx
E3
SHIFT
F1
F2
F3
F4
F5
F6
F7
F8
F1
F2
F3
F4
F5
F6
F7
F8

B111298

F8 Confirmation key

- For confirmation of selected set up configuration
- **Prerequisites:**
  - The entry of the set up configuration must be completed all the way. A valid short code is shown and in the chart field are load values.
  - The external conditions for this set up configuration, if stipulated, must be met.
  - The crane may not be utilized by more than 20 % in the previous set up configuration or the load suspended on the hook may not be heavier then 0.5 t. Switching to the crane operation program can otherwise only be done with the program key **P1**. In that case, the newly entered set up configuration is not accepted.

Note

▶ Make sure that the selected set up configuration (short code) and the hoist rope reevings are taken over after switching into the operating screen!

Note

Display of operating errors from the set up program!

▶ Operating errors created in the set up program are displayed in the icon above the function key **F8** and are saved in the error stack for about 5 seconds!

▶ If the function key **F8** is pressed within 5 seconds, the program will switch automatically to the error determination screen in the test system and the error will be displayed documentarily!

▶ The operating error will not be saved!

▶ Operating errors are always placed on top in the error stack, see Diagnostics manual!

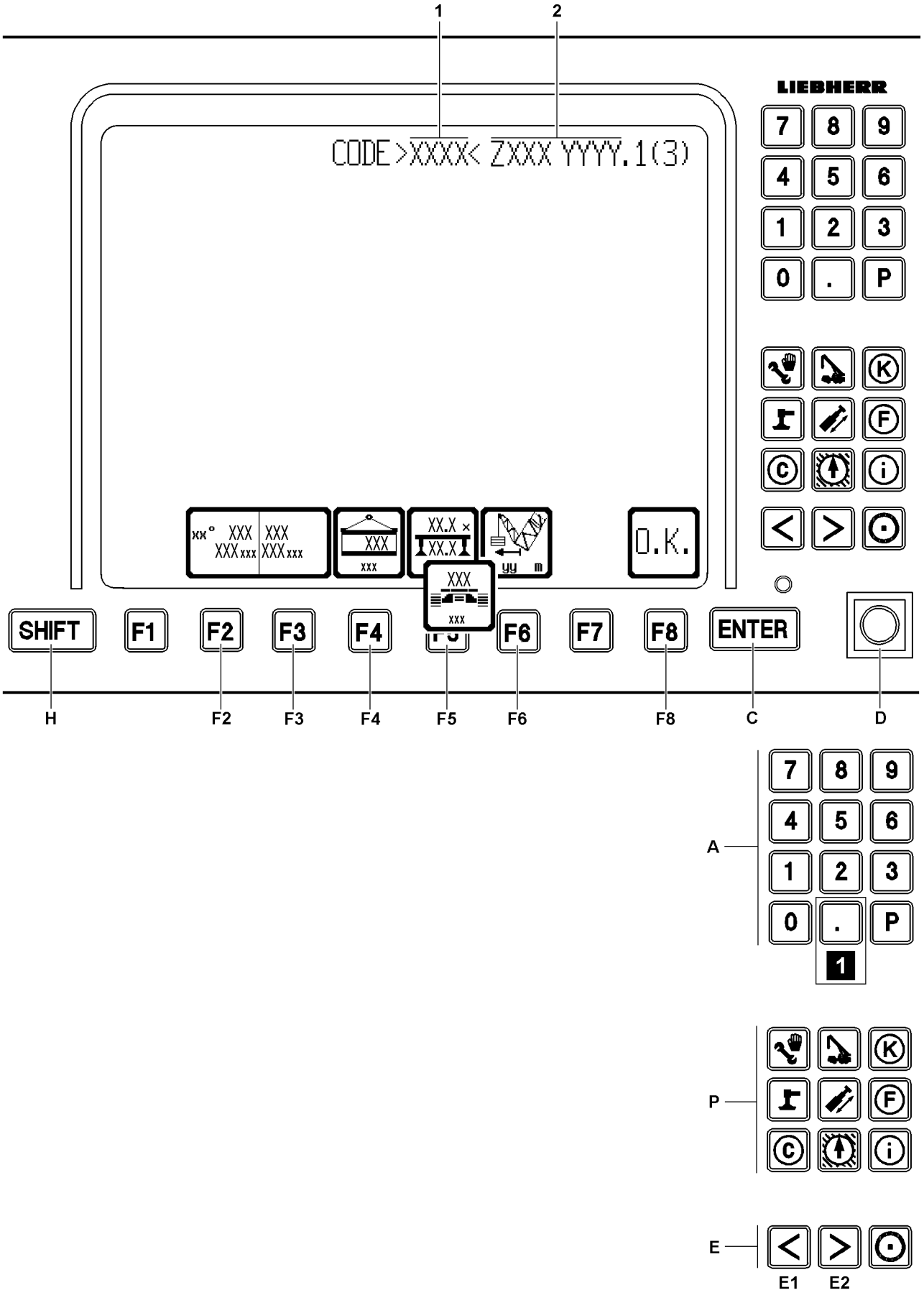
1
2
CODE>XXXX< ZXXX YYYY.1(3)
LIEBHERR
7 8 9
4 5 6
1 2 3
0 . P
K
F
C
i
O.K.
SHIFT
F1
F2
F3
F4
F5
F6
F7
F8
ENTER
H
F2
F3
F4
F5
F6
F8
C
D
A
P
E
E1
E2

B111922

4.2.4 Operating errors in the set up program

A Keypad
- Pressing the keypad deletes all operating mode and set up dependent data from the monitor.
- The keys **0** to **9** on the keypad can be used to enter the short code directly into the LICCON monitor.
- The key **P** and the key "**.** " (illustration **1**) have no function in the set up program.

P Program keys
- Selection of individual programs. The settings in the set up program are discarded and the set up configuration and reeving, which were last confirmed with the function key **F8** (OK) are continued to be used.
  A program currently running **cannot** be called again using its program key.

C Input key ENTER
- Confirmation of input both for short codes **1** as well as for any change in the set up configuration via the function keys.
- **ENTER** after entering the short code, the short code **1** is searched for in all stored load charts. If the matching load chart has been programmed, it will be displayed in full. Otherwise there is an error message in the form of "????" in the second part of the organization number **2** and the acoustic signal "Horn" sounds.
- **ENTER** after a changing the operating mode using the function key **F2** and the function key **F3** searches for this operating mode. If successful, sets its first set up configuration and displays the load chart and its short code **1**. In the event of an error, the short code **1** remains on "CODE ????", the organization number **2** is displayed as "ZXXX????" and the acoustic signal "Horn" sounds.
- **ENTER** after a change in the set up configuration with the function keys **F4** and **F5** as well as the function key **F6** this load chart (if the chart exists) displays with short code **1** on the monitor. In the event of error, the short code **1** remains on "CODE ????" and the acoustic signal "Horn" sounds.

Note
Use of place holders
▶ The Short code **1** and the Organization number **2** are shown in this chapter with place holders (for example XXXX or ZXXX) instead of real numbers and letters!

D Set up key
- Has no function in the set up program

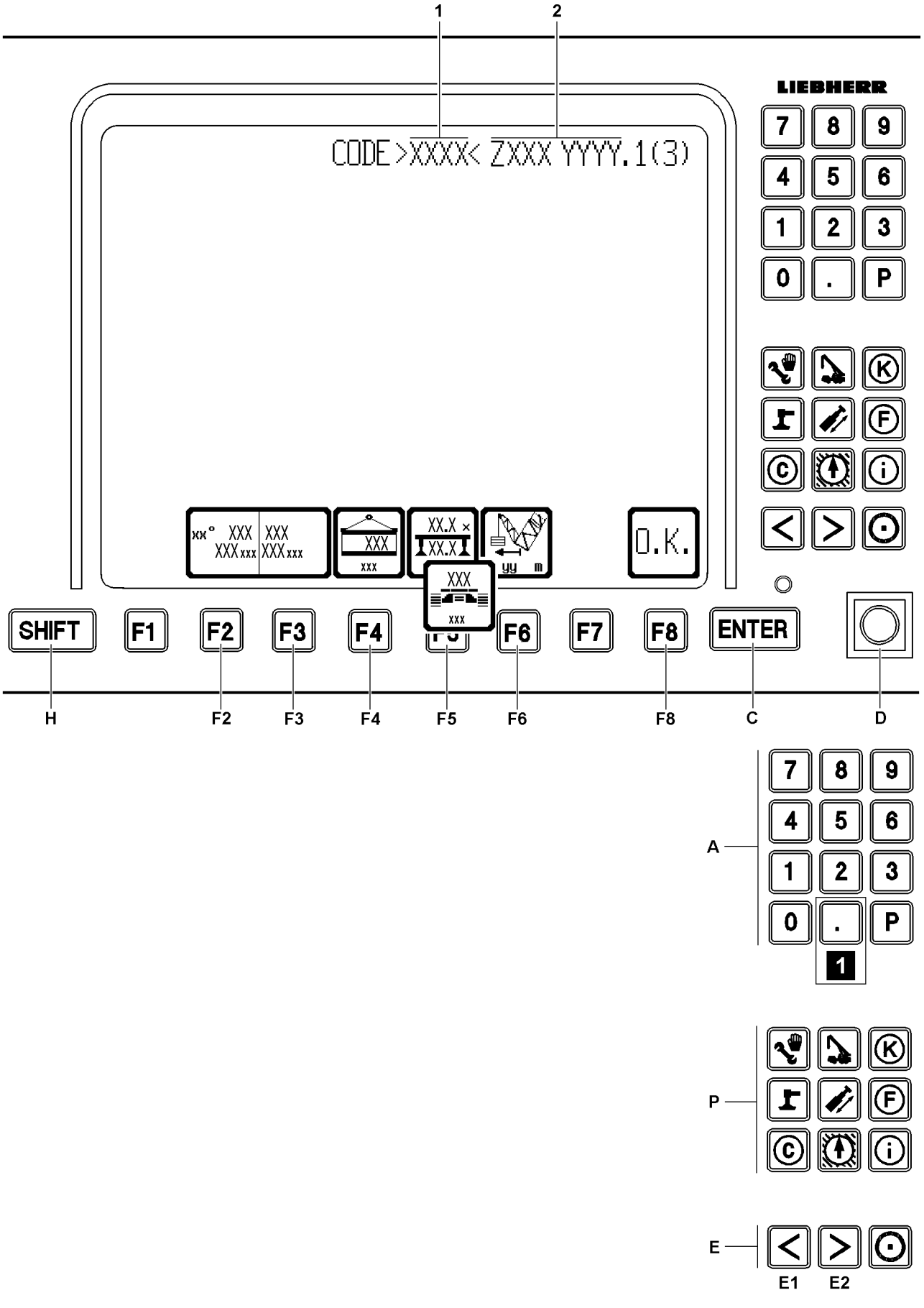
1
2
CODE>XXXX< ZXXX YYYY.1(3)
LIEBHERR
7 8 9
4 5 6
1 2 3
0 . P
K
F
C
i
O.K.
SHIFT
F1
F2
F3
F4
F5
F6
F7
F8
ENTER
H
F2
F3
F4
F5
F6
F8
C
D
A
P
E
E1
E2

B111922

E Horizontal paging

- **Note:**
  The key **E1** and key **E2** only have a function if this is indicated in the “Line for special displays”!
- If a load chart consists of more than 7 columns, the first display of the configuration state only shows columns 1 to 7.
- Pay attention to the double arrow on the right (>>) and / or on the left (<<) edge of the line of the load chart! It points to additional columns in the respective direction!
- Press the key **E1** to display the next left chart column.
- Press the key **E2** to display the next right chart column.
- **Note:**
  Using the key combination **SHIFT** and **E1** or **SHIFT** and **E2**, you can, where possible, scroll left or right by 7 load chart columns (corresponds to 1 page)!

H SHIFT key

- For example Supervisory function
- By pressing and holding down the **SHIFT** key and then pressing one of the function keys, which must correspond to the corresponding function, the previous main boom geometry, the auxiliary boom geometry and the previous reeving are reset.
- **Note:**
  See section “The function key line” in the set up program!

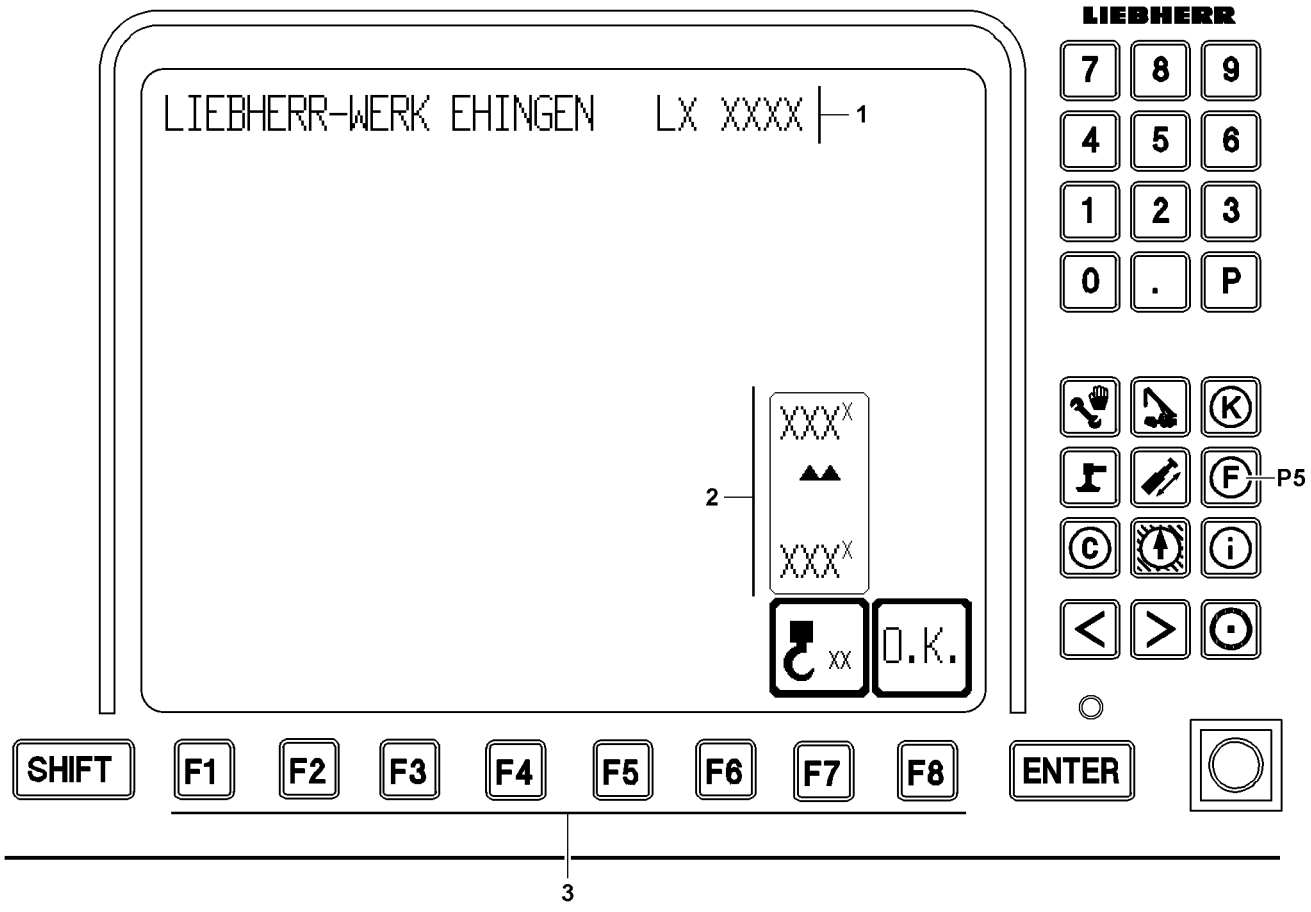
LIEBHERR
LIEBHERR-WERK EHINGEN LX XXXX
1
7 8 9
4 5 6
1 2 3
0 . P
XXX
XXX
2
xx
O.K.
P5
SHIFT
F1
F2
F3
F4
F5
F6
F7
F8
ENTER
3

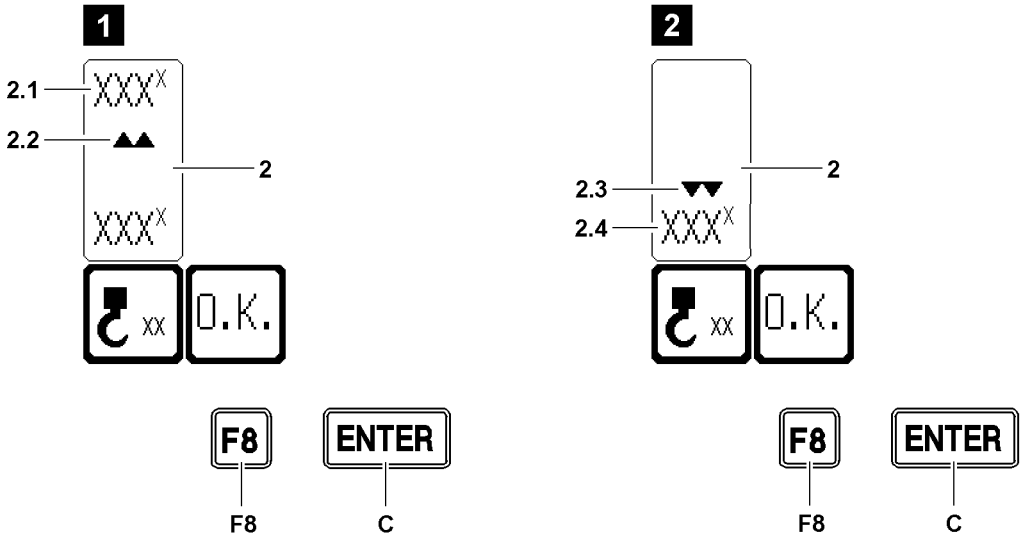
1
2.1
2.2
XXX
2
XXX
xx
O.K.
F8
ENTER
F8
C
2
2.3
2.4
2
XXX
xx
O.K.
F8
ENTER
F8
C

B111891

4.3 Input window hook block weight

After the selected set up configuration was confirmed in the set up program with the function key **F8**, the set up parameters are taken over by the LICCON computer system. Then the input window hook block weight **2** appears automatically.

WARNING
Deviation from specifications of erection and take down charts!
In case of a deviation from the specifications of the erection and take down charts, the crane can be overloaded and topple over!
Personnel can be severely injured or killed!
- ▶ The entered value must be taken from the erection and take down charts, depending on the selected set up configuration!
- ▶ If the actual weight of the hook block exceeds the permissible hook block weight, then the hook block must be carried along for erection / take down of the boom!
- ▶ The entered hook block weight is recorded with the data logger!

4.3.1 Starting the input window hook block weight

In the input window hook block weight **2**, the crane operator must determine a hook block weight corresponding on the operating mode for erection / take down of the boom systems according to the erection / take down charts.

▶ Press the function key **F8** in the set up configuration screen.

or

■ Press the program key **P5**.

Result:

– The input window hook block weight **2** appears.

4.3.2 User interface

1 Crane type identification
2 Input window hook block weight
2.1 Input field for the hook block weight
2.2 Double arrow pointing up
2.3 Double arrow pointing down
2.4 Current input value of hook block weight
3 Function key line

- Input field is active, illustration **1**
- Current input value is active, illustration **2**

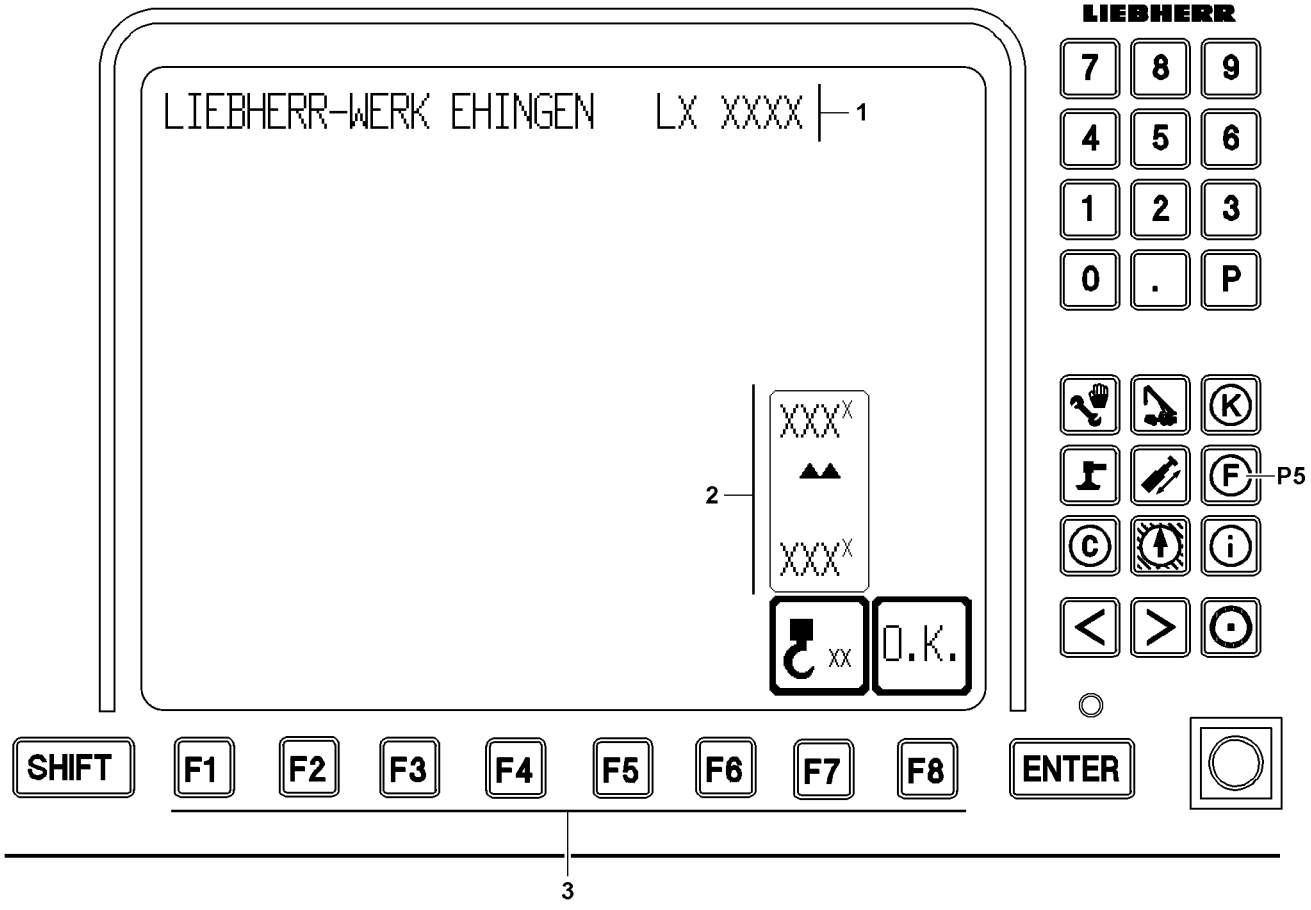
LIEBHERR
LIEBHERR-WERK EHINGEN LX XXXX
1
7 8 9
4 5 6
1 2 3
0 . P
XXX
XXX
2
xx
O.K.
P5
SHIFT
F1
F2
F3
F4
F5
F6
F7
F8
ENTER
3

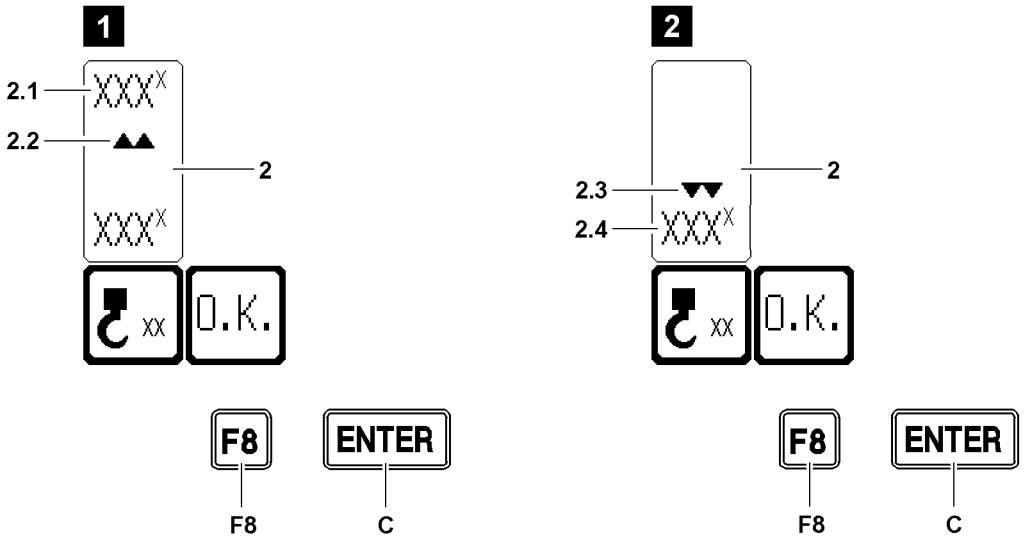
1
2.1
2.2
XXX
2
XXX
xx
O.K.
F8
ENTER
F8
C
2
2.3
2.4
2
XXX
xx
O.K.
F8
ENTER
F8
C

B111891

4.3.3 Enter the hook block weight

To be able to erect / take down a boom system, a valid hook block weight must first be entered in the input window hook block weight on the LICCON computer system and confirmed.
Take the weight of the hook block must be taken according to the selected set up configuration from the erection and take down charts.
Make sure that the following prerequisite is met:

– A valid set up configuration is entered and confirmed.

▶ Double arrow up **2.2** is shown:
Enter the hook block weight via the keypad.

▶ When the entered hook block weight is shown in the input field hook block weight **2.1**:
Press the ENTER **C** key.

Result:

– The hook block weight is taken over as current input value hook block weight **2.4**, illustration **2**.
– The input field hook block weight **2.1** is faded out.
– Double arrow down **2.3** is shown.

▶ When the entered hook block weight has been accepted:
Press the function key **F8** (OK).

Result:

– The entered hook block weight is accepted into the LICCON computer system.
– The crane operating screen appears.

Troubleshooting

When luffing the boom up / down **with the hook block**, the maximum load according to the load chart and reeving is exceeded and an LML stop is triggered?

▶ Place the hook block down and carry it along.

Troubleshooting

When erecting / taking down the boom **with the hook block**, a higher value than the actual weight on the hook block is shown in the “Current load” icon (crane operating screen)?

▶ For further procedure, see section “Adapt the input value hook block weight”.

Troubleshooting

When erecting / taking down the boom **without the hook block** (load weighting), a value of more than 0 t is shown in the “Current load” icon (crane operating screen)?

▶ For further procedure, see section “Adapt the input value hook block weight”.

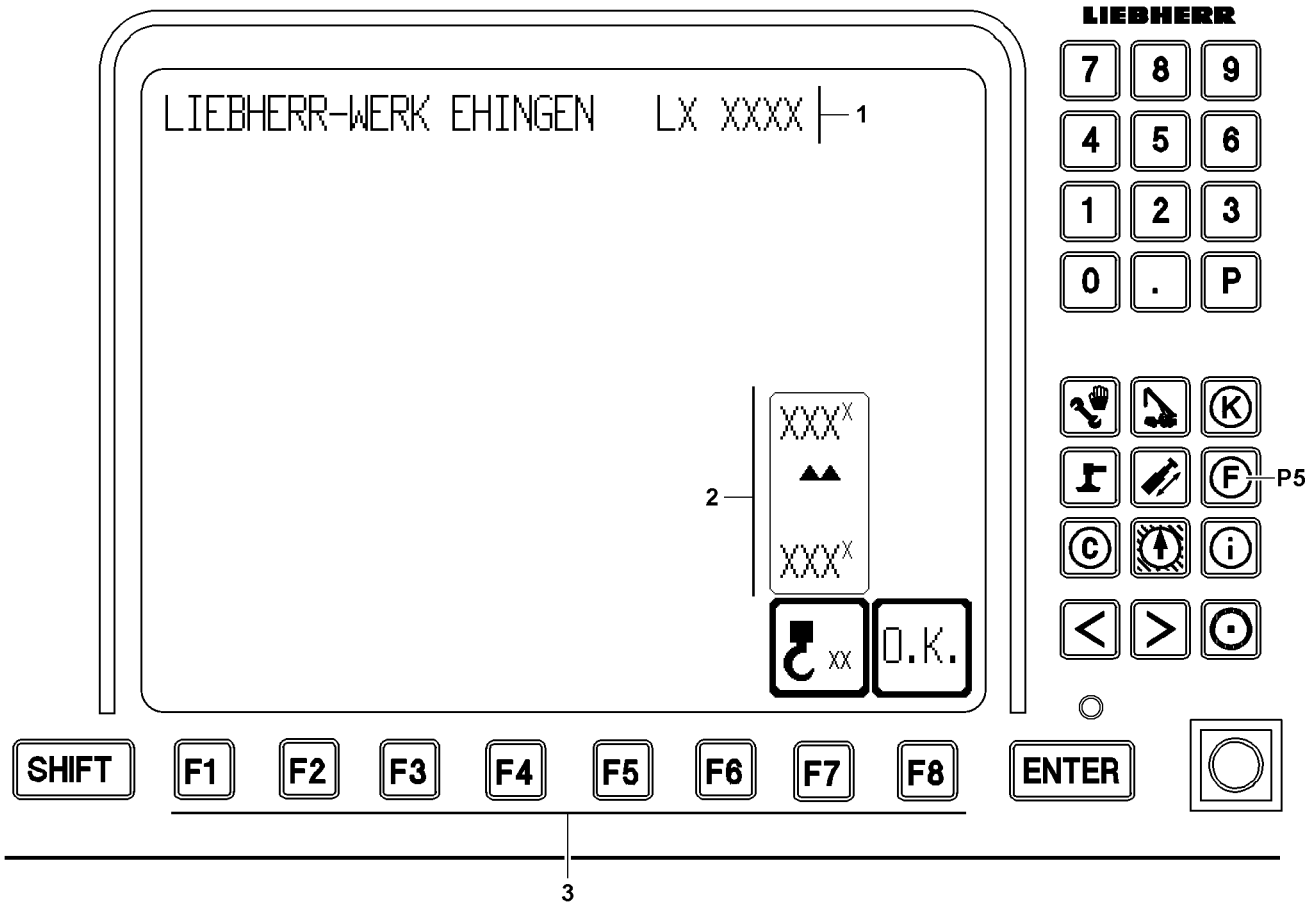
LIEBHERR
LIEBHERR-WERK EHINGEN LX XXXX
1
7 8 9
4 5 6
1 2 3
0 . P
XXX
XXX
2
xx
O.K.
P5
SHIFT
F1
F2
F3
F4
F5
F6
F7
F8
ENTER
3

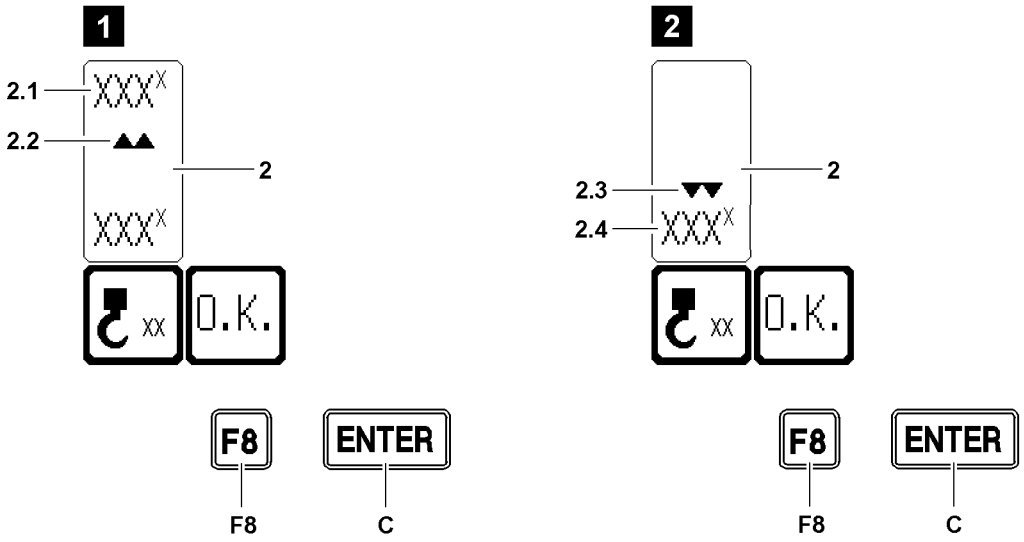
1
2.1
2.2
XXX
2
XXX
xx
O.K.
F8
ENTER
F8
C
2
2.3
2.4
2
XXX
xx
O.K.
F8
ENTER
F8
C

B111891

4.3.4 Adapting the input value hook block weight

It may be possible that the crane movement is shut off due to overload when trying to erect / take down the boom.
The reason for the shut off may be a weighing error.

Note
Weighing error!
- ▶ A weighing error is a combination of environmental influences, manufacturing and sensor tolerances!
- ▶ This combination can cause an increased display value in the “Current load” icon (crane operating screen)!

A weighing error can be compensated for by adapting the input value hook block weight.

WARNING
All-inclusive adaptation of the hook block weight!
If the input value hook block weight is adapted and no weighing error was determined, then the crane can be overloaded and topple over!
Personnel can be severely injured or killed!
- ▶ Before adapting the input value hook block weight, an existing weighing error must have been found!
- ▶ Only the determined weighing error may be added to the permissible hook block weight!

If a weighing error is suspected, then the crane operator must ensure, before carrying out additional steps, that:
- – A valid set up configuration has been entered on the LICCON computer system!
- – The assembled boom system matches the entered set up configuration of the crane!
- – The boom system is assembled according to the rod plans!
- – All attachment parts on the boom have been removed!
- – No guy rods are on the boom!
- – The boom is free of snow and ice!
- – The wind influence onto the boom is not too great!
- – The weighing error is plausible and comprehensible!

If it is ensured that the above listed prerequisites are adhered to, then the determined weighing error may be added to the permissible hook block weight and entered in the hook block weight icon.
- ▶ Enter the adapted hook block weight, see section “Entering the hook block weight”.

Troubleshooting
The adapted value of the hook block weight is **not** taken over into the LICCON computer system, even though the weighing error is plausible and comprehensible?
- ▶ For erection of the boom system, carry the hook block along.

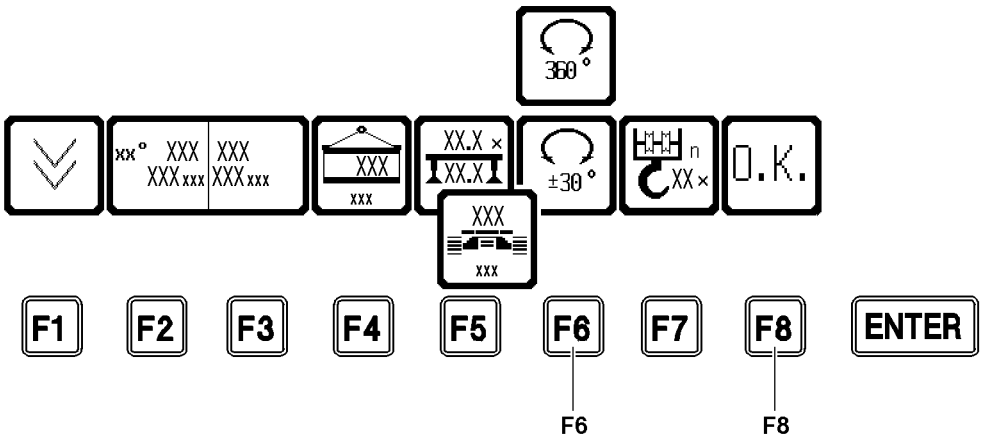
360°
xx° XXX XXX
XXXxxx XXXxxx
XXX
xxx
XX.X ×
XX.X
±30°
n
XX×
O.K.
XXX
xxx
F1
F2
F3
F4
F5
F6
F7
F8
ENTER
F6
F8

B111299

4.4 Automatic slewing range change

Note
▶ Applies only for cranes with the respective load charts!

There are set up configurations, which have different load charts for different slewing ranges of the crane superstructure. For example: Crane with crane support, support base 16 m x 12 m, **SL8HS**. On this support base there are load charts to the side (±30°), which permit higher loads.
When turning away from this angle range, the load moment limiter (LMB) switches automatically to the load chart for slewing range 360°.

4.4.1 Activation of slewing range change

Note
▶ The activation of the slewing range change is only possible in load charts to the side (±30°)!
▶ If the 360° load chart is selected, there is no slewing range change! Within the entire 360° slewing range, only the load for the 360° load chart can be lifted!

NOTICE
Shut off of slewing movement!
If the current load can only be lifted with a limited slewing range to the side (±30°), then the rotation speed is reduced toward the limit of the slewing range up to “zero” and shut off!
▶ Turning the crane superstructure outside the slewing range to the side (±30°) is not possible under these circumstances with the current load!

▶ Select load charts to the side (±30°) and actuate with the function key **F8**.

Result:
– The slewing range change is active.
  If there is a load chart for the slewing range 360° for the current load, then the load moment limiter (LMB) switches automatically to the load chart for the slewing range 360° when turning out of the angle range to the side (±30°).

Note
Coasting slewing gear!
▶ When the slewing range change is set and the foot button “Coasting slewing gear” is actuated, then the load from the load chart for the slewing range 360° is valid!

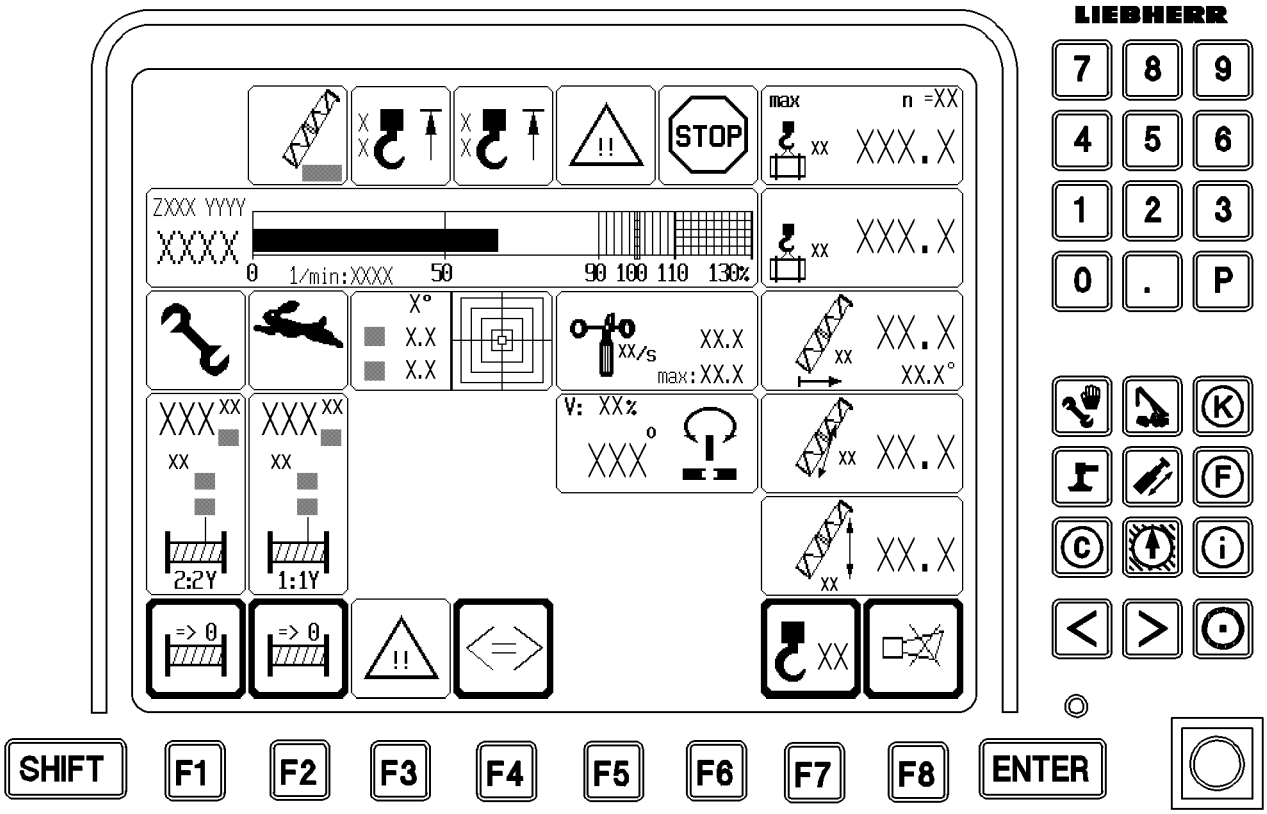
LIEBHERR
7 8 9
4 5 6
1 2 3
0 . P
STOP
max n =XX
ZXXX YYYY
XXXX
0 1/min:XXXX 50 90 100 110 130%
X°
X.X
X.X
XX/s XX.X
max:XX.X
V: XX%
XXX°
XXX.X
XX.X°
2:2Y
1:1Y
SHIFT F1 F2 F3 F4 F5 F6 F7 F8 ENTER

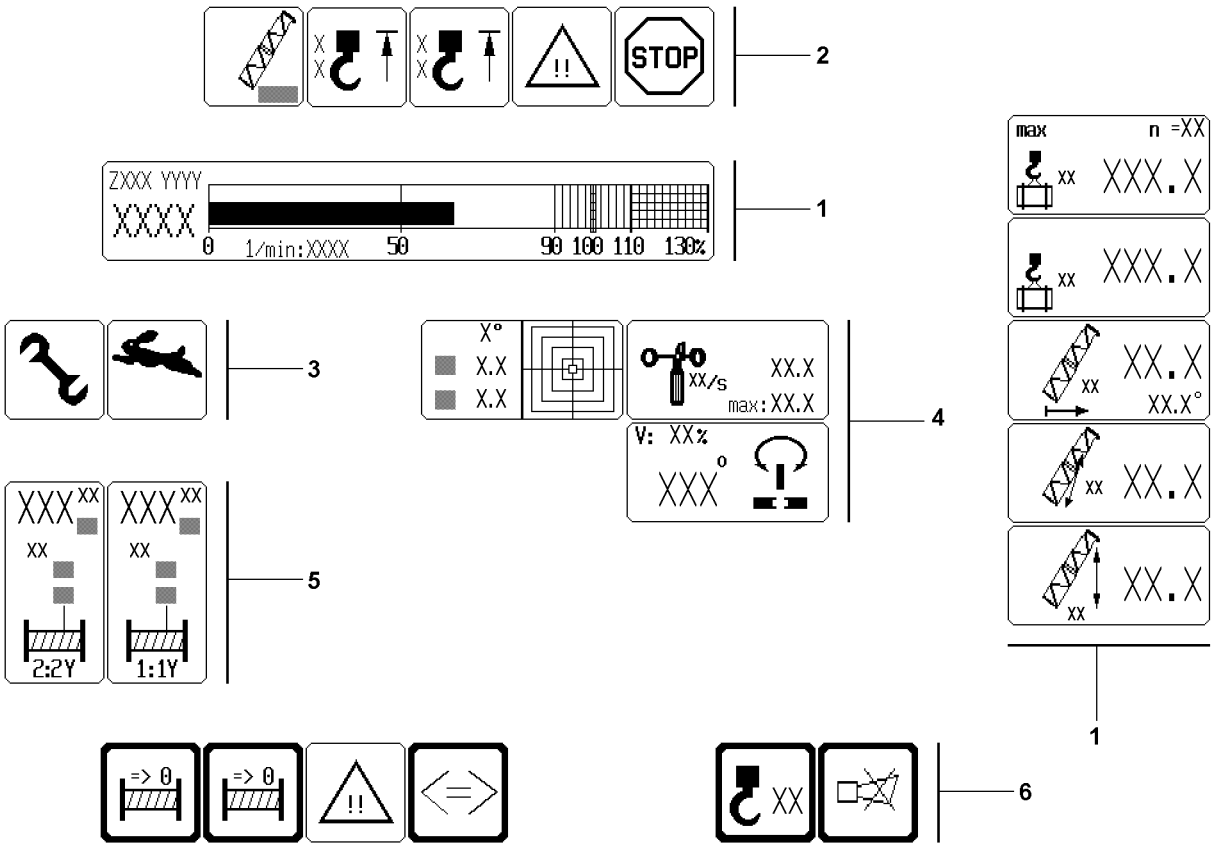
2
1
3
4
5
6
1
STOP
ZXXX YYYY
XXXX
0 1/min:XXXX 50 90 100 110 130%
max:XX.X
V: XX%
XXX°
XXX.X
XX.X°
2:2Y
1:1Y

B111892

5 The Crane operation program on monitor 0

The LICCON program Crane operation assists the crane operator by displaying the data needed for operating the crane clearly on **monitor 0**. An acoustic signal accompanies all critical displays. Depending on the equipment, a range of other icons may also be turned on as additional displays, either as required by the crane operator, or automatically in the event of a problem.
It also alerts the crane operator to imminent overload conditions. In the event of overload and many error conditions, which could be hazardous during crane operation, the system shuts off.

The LICCON monitor is divided into six areas in the crane operation program:

1 Crane geometry and load information
2 Alarm functions
3 Special functions
4 Monitored auxiliary functions
5 Winch display
- Winch 1 and winch 2

6 Function key line

Note
- ▶ The monitor illustrations in this chapter are only examples!
- ▶ The numerical values in the individual icons and charts do not have to necessarily match the crane exactly!
- ▶ The configuration of the LICCON monitor with icons is only descriptive!
- ▶ An identical icon display will **not** appear during crane operation!

5.1 Crane geometry and load information

Note
- ▶ The crane illustrations in this section are only examples and are generalized!
- ▶ They may differ from the crane type and equipment!

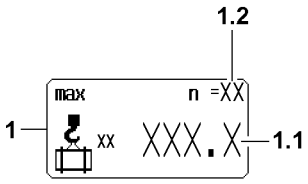

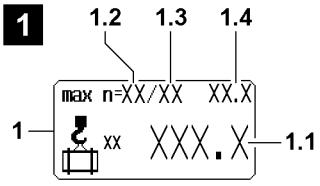

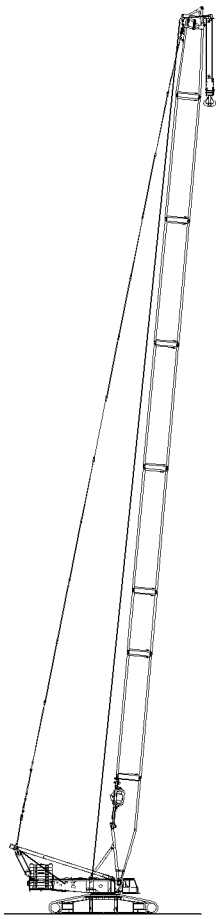

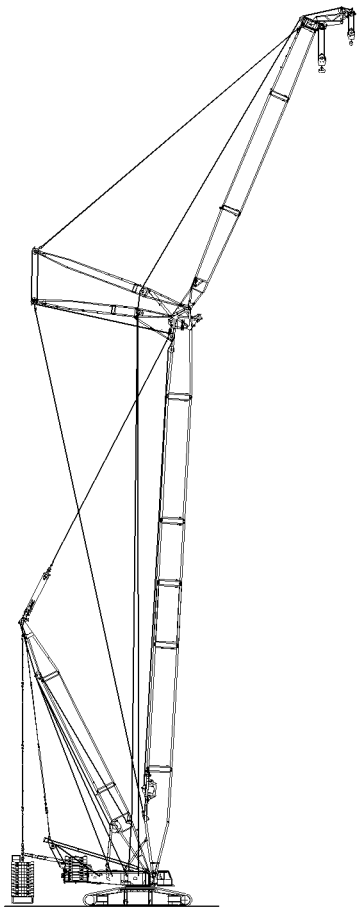

B111931

5.1.1 Maximum load

According to the set up configuration, the following changes:

– The illustration of the icon.
– The position of values in the icon, see sample illustration **1**!

1 “Maximum load” icon
- In [t] or [lbs]

1.1 Maximum load on the boom
- In [t] or [lbs]
- The load capacity depends on:
  - The selected operating mode
  - The selected set up configuration (load chart)
  - The boom radius
  - The various boom angles
  - The derrick ballast radius*
  - The currently pulled derrick ballast*
  - The reeving of the hoist rope on the boom
- **Note:**
  The maximum load on the boom (also: Maximum load according to the load chart and the reeving on the boom) is the load, which the crane can lift in its current operating condition with the maximum utilized ballast / counterweight!
- **Note:**
  “? ? ? . ?” is shown when no load chart value can be accessed!
  An error message is issued, see Diagnostics manual!
  - Example:
    The crane is not in the range of the load chart!
    or
    The value cannot be calculated / determined!

1.2 Reeving number hoist rope on boom
- n = reeving number of hoist rope on the pulley head selected via the load chart. The reeving number has been set first in the set up program.

1.3 Reeving number of hoist rope on the boom nose*
- n = reeving number of hoist rope on the installed boom nose*. The reeving number has been set first in the set up program.

1.4 Maximum load carrying capacity of the installed boom nose*
- In [t] or [lbs]
- **Note:**
  The “Maximum load carrying capacity” of the boom nose* depends on the set reeving of the boom nose*!
- **Note:**
  The maximum load carrying capacities on the boom (1.1) and on the boom nose* (1.4) are monitored simultaneously!
  If the load on one position is exceeded, then an LMB stop is issued!

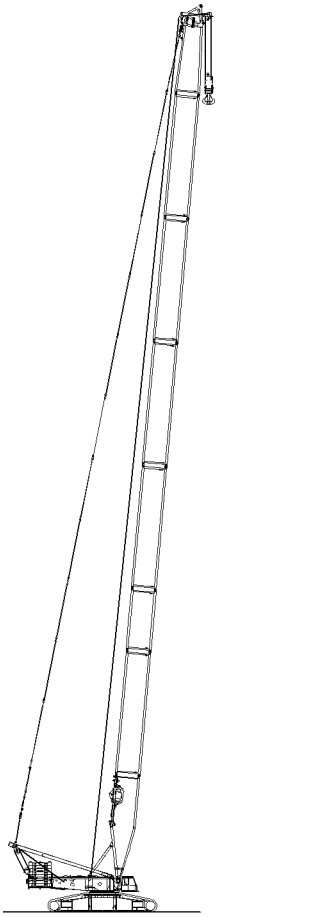

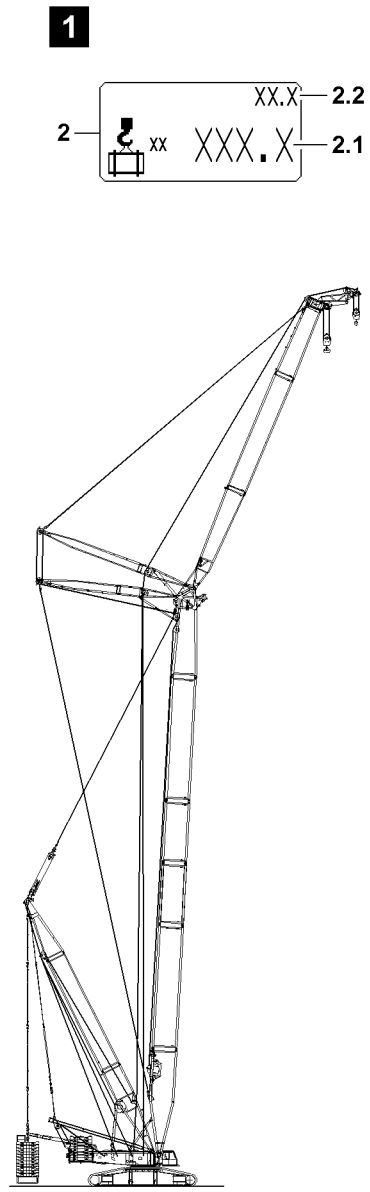

B111932

5.1.2 Current load

According to the set up configuration, the following changes:

– The illustration of the icon.
– The position of values in the icon, see sample illustration **1**!

2	“Current load” icon	• In [t] or [lbs]
2.1	Current load on the boom	• Actual load display = current load in [t] or [lbs] on the selected boom. • Display of the calculated total load including the weights of the carrying equipment, the lifting equipment (hook block) and / or the fastening equipment, but **without** the nominal weight of the hoist rope. • **Note:** “? ? ? . ?” is shown if the value cannot be calculated / determined! An error message is issued, see Diagnostics manual!
2.2	Current load on the boom nose*	• Actual load display = current load in [t] or [lbs] on the boom nose*. • Display of the calculated total load on the boom nose*, including the weights of the carrying equipment, the lifting equipment (hook block) and / or the fastening equipment, **including** the hoist rope. • **Note:** “? ? ? . ?” is shown if the value cannot be calculated / determined! An error message is issued, see Diagnostics manual!

WARNING
Tolerances at actual load display!
Due to tolerances, there may be a deviation in the actual load display in the “Current load” icon **2**!
The current load display in the “Current load” icon **2** is no calibrated weighing device!
▶ Always observe the actual weight of the load in connection with the load charts and the set up configuration!

Note
Net load display in the “Current load” icon **2**!
▶ By using the function “Tare” (see description of function key **F7** in section “Function key icon line”) the display can be changed over to display the net load! In the icon appears additionally the word “Net”!

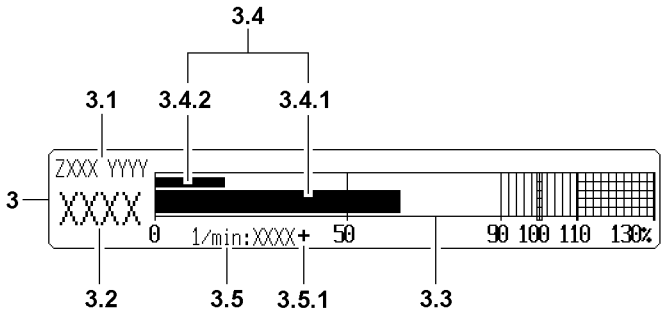
3.4
3.1
3.4.2
3.4.1
3
ZXXX YYYY
XXXX
0
1/min:XXXX+
50
90 100 110 130%
3.2
3.5
3.5.1
3.3

B111933

5.1.3 Dynamic utilization bar

3	"Dynamic utilization bar" icon	• In percent [%]
3.1	Organization number	• For internal Liebherr load chart administration
3.2	Short code	• Identifies the selected set up configuration
3.3	Utilization scale	• Marking from a utilization of 90 %: **Advance warning** • Marking at a utilization of 100 %: **STOP shut off**
3.4	Utilization bar	
3.4.1	Utilization bar of crane	• According to load chart and reeving • **Note:** The utilization bar is the measurement for the current utilization of the crane!

$$\text{Utilization of crane according to load chart and reeving} = \frac{\text{Current load on the boom head}}{\text{Maximum load according to load chart and reeving}}$$

3.4.2	Utilization bar boom nose*	• **Note:** Maximum load carrying capacity of the boom nose*: Load which can be lifted by the boom nose* alone! Prerequisite: Sufficiently high load capacity on the boom head!

$$\text{Utilization of the boom nose*} = \frac{\text{Current load carrying capacity of the boom nose*}}{\text{Maximum load carrying capacity of the boom nose*}}$$

3.5	Engine speed	• In [rpm] or [n/min] • **Note:** "????" is displayed in case of an error in rpm value for approximately 5 seconds! Then the nominal rpm for the diesel engine is set for the output regulation of the drives! The set nominal rpm is shown blinking! An error message is issued!
3.5.1	Engine rpm lock	• The engine rpm can be locked on the master switch. If the engine rpm has been locked, the icon "+" appears behind the rpm display.

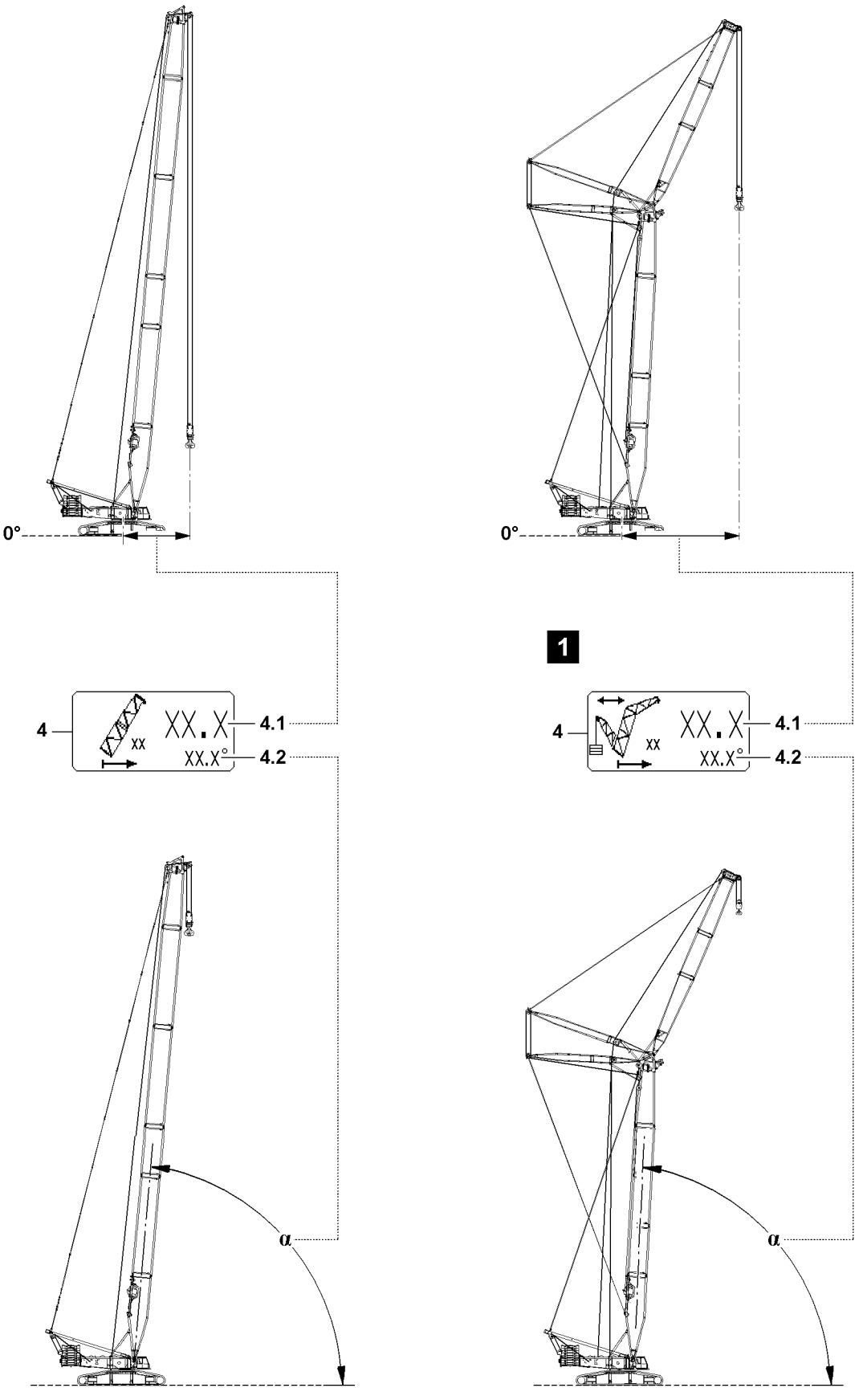

B112633

5.1.4 Radius

According to the set up configuration, the following changes:

– The illustration of the icon.
– The position of values in the icon, see sample illustration **1**!

4 “Boom radius” icon

4.1 Radius
- In [m] or [ft]
  Denotes the horizontal distance of the load hook from the center of rotation of the crane superstructure, measured on the ground! This also takes into account the boom flexation due to its own weight and the suspended weight of the load!
- **Note:**
  “? ? ? . ?” is shown if the value cannot be calculated / determined!
  An error message is issued, see Diagnostics manual!

4.2 Main boom angle
- In [°]
- Displayed is the medium value of the angle sensor in the main boom pivot section and the angle sensor in the main boom pulley head.
- **Note:**
  “? ? ? . ?” is shown if the value cannot be calculated / determined!
  An error message is issued, see Diagnostics manual!

Note

▶ Main boom angle **α**: The angle of the main boom to the placement surface of the crane!

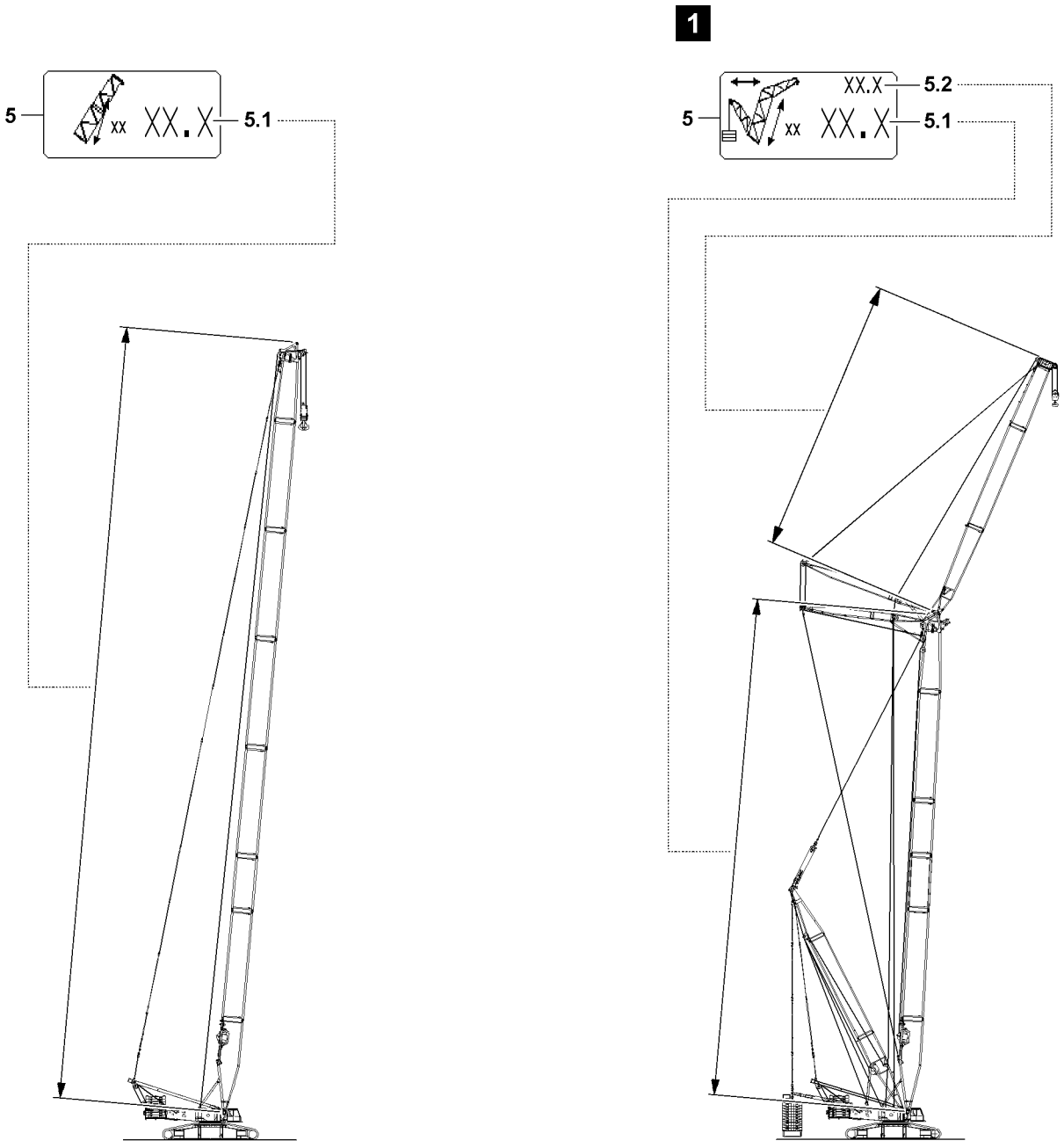

B112638

5.1.5 Boom length

According to the set up configuration, the following changes:

– The illustration of the icon.
– The position of values in the icon, see sample illustration **1**!

5 “Boom length” icon
5.1 Length of main boom • In [m] or [ft]
5.2 Length of auxiliary boom / accessory • In [m] or [ft]

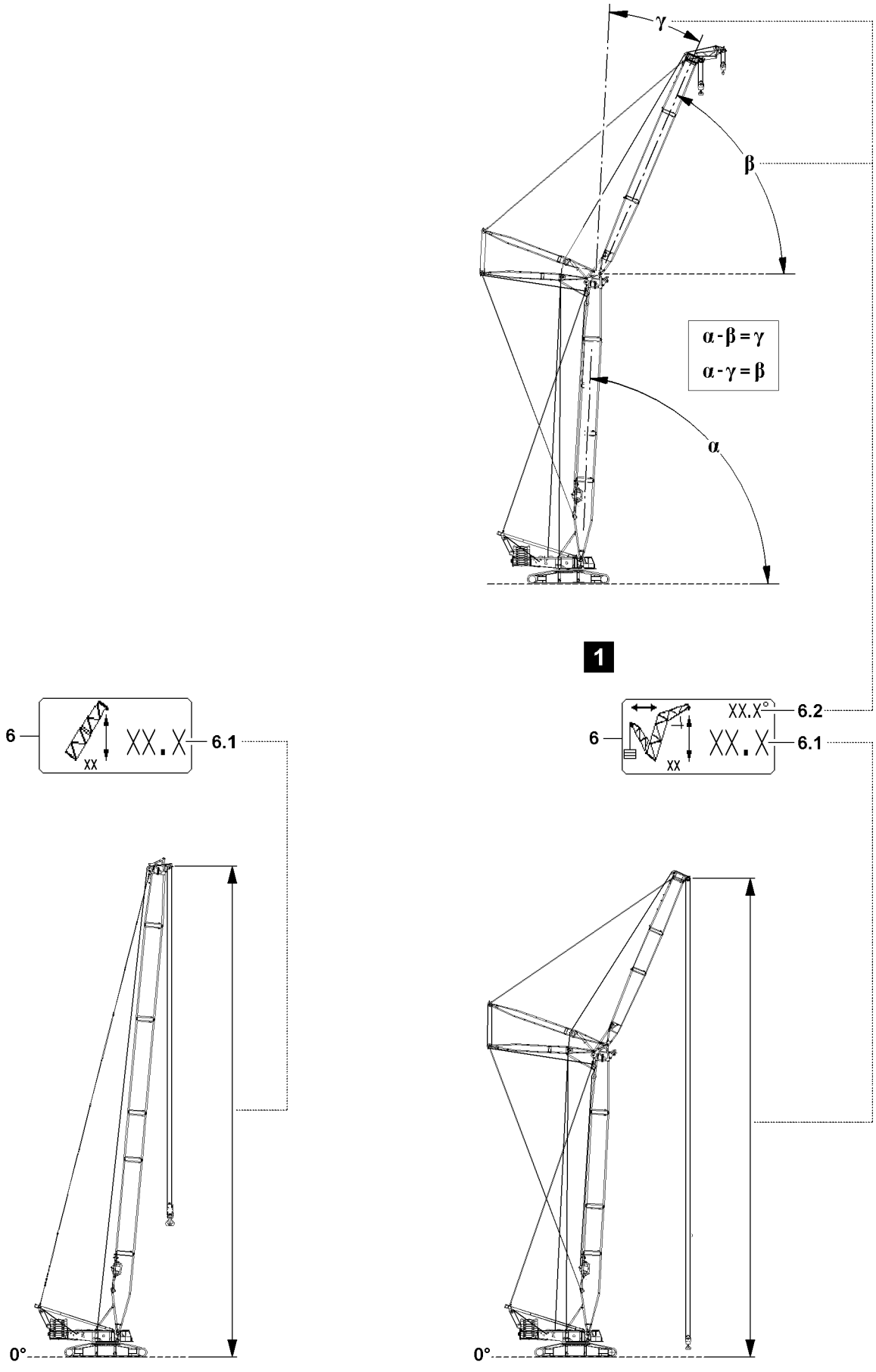

B112639

5.1.6 Pulley head height

Note

- ▶ Main boom angle **α**: The angle of the main boom to the placement surface of the crane!
- ▶ Angle auxiliary boom / accessory **β**: The angle of the auxiliary boom / accessory to the placement surface of the crane!
- ▶ Relative angle auxiliary boom / accessory **γ**: The angle of the auxiliary boom / accessory is determined relative to the main boom!

According to the set up configuration, the following changes:

– The illustration of the icon.
– The position of values in the icon, see sample illustration **1**!

6 “Pulley head height” icon

6.1	Pulley head height	• In [m] or [ft] • Marks the vertical distance from the placement surface of the crane to the selected pulley head axle. The displayed maximum load is valid for the selected pulley head axle. • **Note:** “? ? ? . ?” is shown if the value cannot be calculated / determined! An error message is issued, see Diagnostics manual!
6.2	Angle auxiliary boom / accessory	• In [°] • **Note:** “? ? ? . ?” is shown if the value cannot be calculated / determined! An error message is issued, see Diagnostics manual!

Note

- ▶ Depending on the set up configuration and the load chart, a differentiation is made between an absolute angle display or a relative angle display!

β	Absolute angle auxiliary boom / accessory	• The angle of the auxiliary boom / accessory to the horizontal (placement surface of the crane) in [°] • Display absolute angle: For operating modes with load chart for a fixed defined main boom angle!

or

γ	Relative angle auxiliary boom / accessory	• Angle between the main boom and the auxiliary boom / accessory in [°] • Display relative angle: For operating modes with load chart for a fixed defined angle auxiliary boom / accessory!

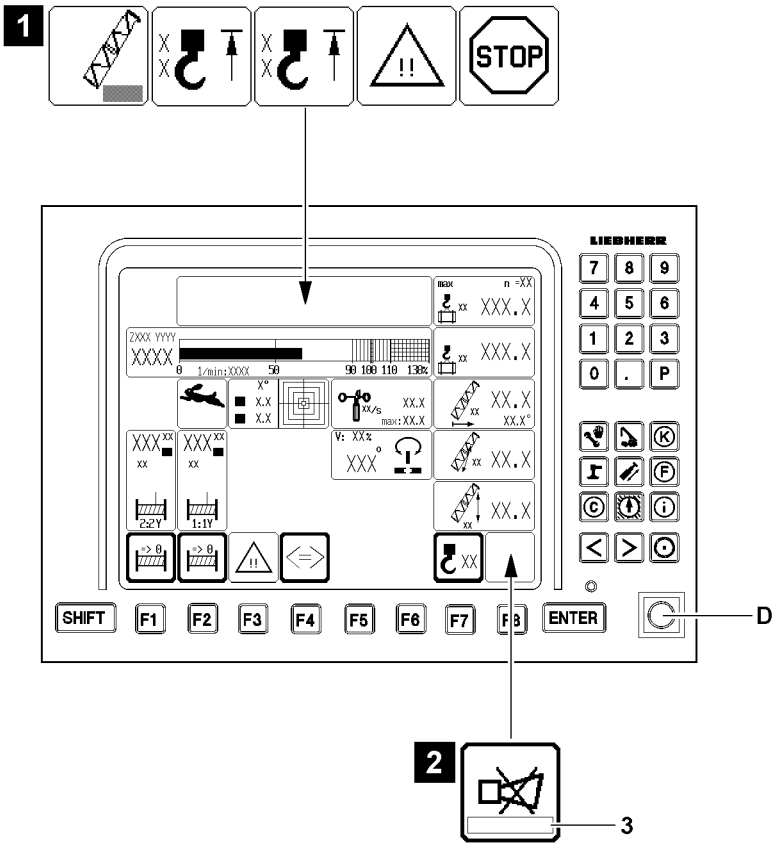
1
STOP
LIEBHERR
SHIFT
F1
F2
F3
F4
F5
F6
F7
F8
ENTER
D
2
3

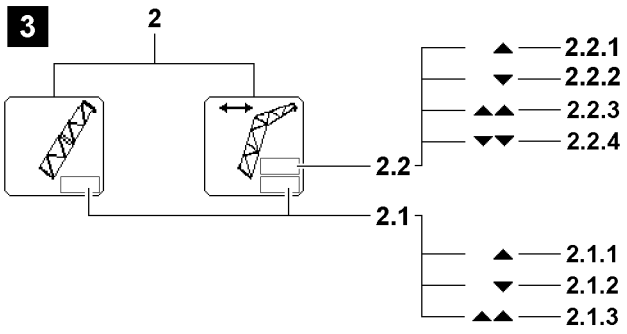
3
2
2.2.1
2.2.2
2.2.3
2.2.4
2.2
2.1
2.1.1
2.1.2
2.1.3

B111930

5.2 Alarm functions

NOTICE
Triggered alarm function!
If an alarm function is triggered (for example a advance warning occurrence or LMB Stop), the cause must be determined!
- ▶ Always pay attention to triggered alarm functions!
- ▶ Alarm functions can flash over the monitor!

The limit ranges of the crane movements are monitored. When the limit ranges are reached, the crane operator is warned by the alarm functions.
The alarm functions are shown by the LICCON monitor:
- – Optically with icons, see illustration **1**.
- – Acoustically by a warning sound “Horn”, see illustration **2**.

In case of a failure of the relevant sensors / limit switches, special error messages **3** are added.

5.2.1 Boom limitation

See illustration **3**.

Limit signs main boom

Note
- ▶ The icon “Boom limitation” **2** can change in different operating modes, but it is shown always at the same position in the LICCON monitor!
- ▶ The field **2.1** “on the bottom” refers to the main boom!
- ▶ The field **2.2** “on the top” refers to the auxiliary boom / accessory!

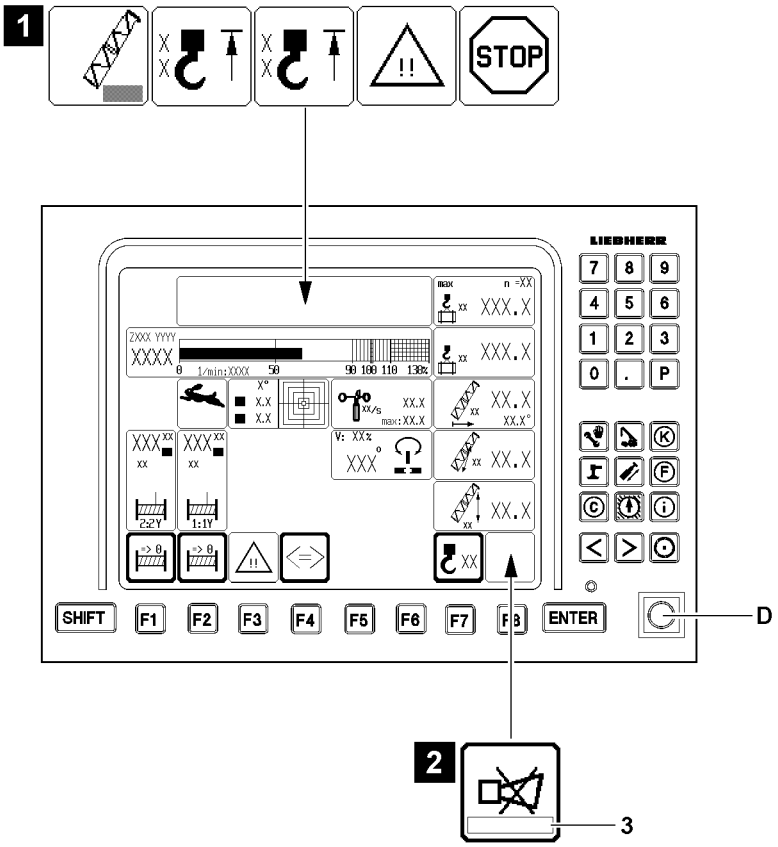
1
STOP
LIEBHERR
SHIFT
F1
F2
F3
F4
F5
F6
F7
F8
ENTER
D
2
3

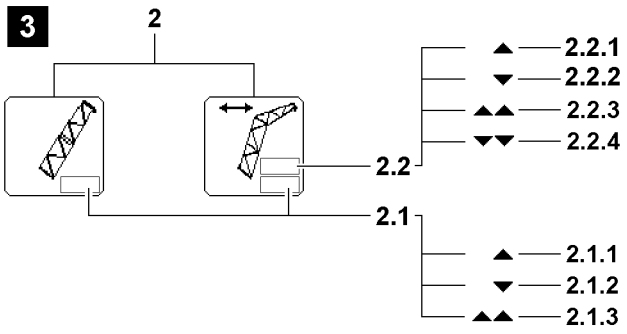
3
2
2.2.1
2.2.2
2.2.3
2.2.4
2.2
2.1
2.1.1
2.1.2
2.1.3

B111930

2.1 “Boom limitation Main boom” icon

- The luffing range of the main boom is limited both upwards and downwards.
- This icon appears if an end position determined by the load chart is reached when luffing the boom or when luffing the boom is disabled by a proximity switch.
- Exclamation marks show when an associated sensor is defective.

Position	Icon	Description
2.1.1	▲	The shut off “Luffing up the main boom” is made by running against the upper load chart limit **or** Utilization larger than **95 %** and falling load carrying capacity when luffing up the main boom. **Note:** Luffing down the main boom is still possible!
2.1.2	▼	The shut off “Luffing down the main boom” is made by running against the lower load chart limit. **Note:** Luffing up the main boom is still possible!

WARNING
Alarm function deactivated!
When the set up key **D** is actuated, there is no shut off of crane movement via position **2.1.1** and position **2.1.2**!
▶ Observe the Crane operating instructions, chapter 4.20!

Position	Icon	Description
2.1.3	▲▲	The shut off “Luffing up the main boom” is triggered by running against the block limit switch of the main boom relapse cylinders (RFP) on the left / right (boom steep) **or** due to an error in one block limit switch of the main boom relapse cylinders. **Note:** Luffing down the main boom is still possible!

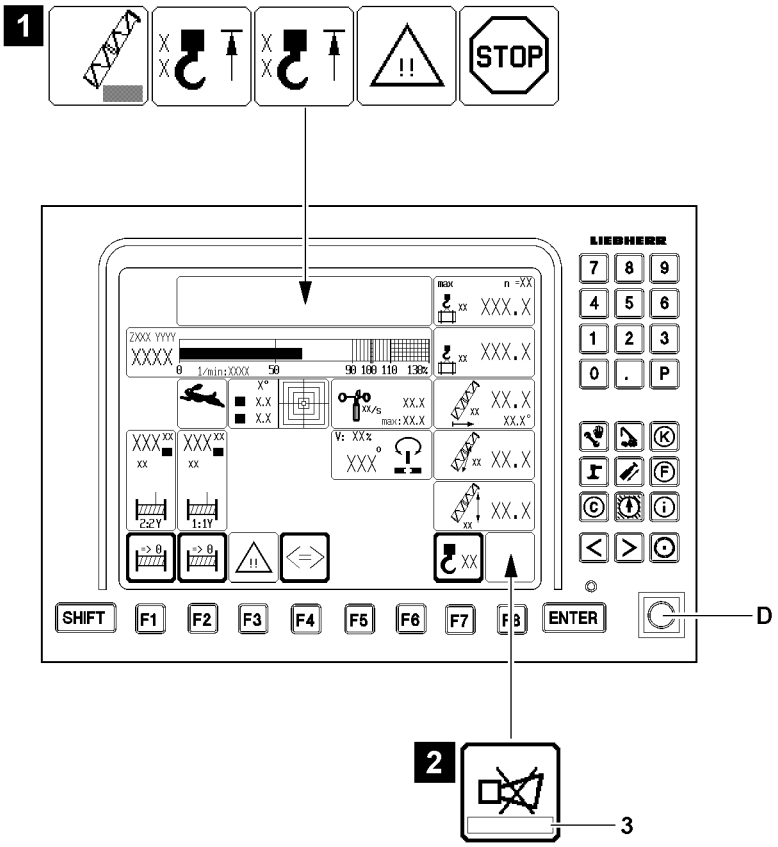
1
STOP
LIEBHERR
SHIFT
F1
F2
F3
F4
F5
F6
F7
F8
ENTER
D
2
3

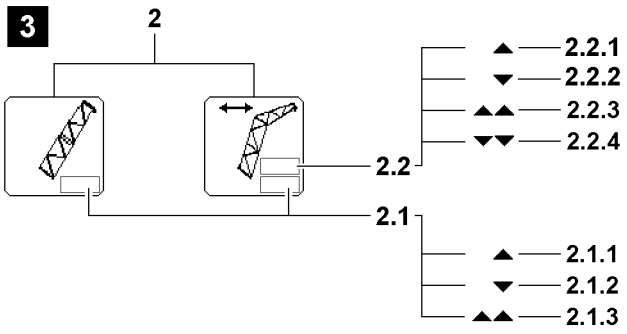
3
2
2.2.1
2.2.2
2.2.3
2.2.4
2.2
2.1
2.1.1
2.1.2
2.1.3

B111930

Limit sign auxiliary boom / accessory

Note

- ▶ The icon “Boom limitation” **2** can change in different operating modes, but it is shown always at the same position in the LICCON monitor!
- ▶ The field **2.1** “on the bottom” refers to the limit sign main boom!
- ▶ The field **2.2** “on the top” refers to the limit sign auxiliary boom / accessory!

2.2 “Boom limitation auxiliary boom / accessory” icon

- The luffing range of the auxiliary boom / accessory is limited both upwards and downwards.
- This icon appears if an end position determined by the load chart is reached when luffing the auxiliary boom / accessory or when luffing is disabled by a limit switch.
- Exclamation marks show when an associated sensor is defective.

Position	Icon	Description
2.2.1	▲	The shut off “Luffing up the auxiliary boom / accessory” is triggered by running against the upper load chart limit. **Note:** Luffing the auxiliary boom / accessory down remains possible!
2.2.2	▼	The shut off “Luffing down the auxiliary boom / accessory” is triggered by running against the lower load chart limit. **Note:** Luffing the auxiliary boom / accessory up remains possible!

WARNING

Alarm function deactivated!

When the set up key **D** is actuated, there is no shut off of crane movement via position **2.2.1** and position **2.2.2**!

- ▶ Observe the Crane operating instructions, chapter 4.20!

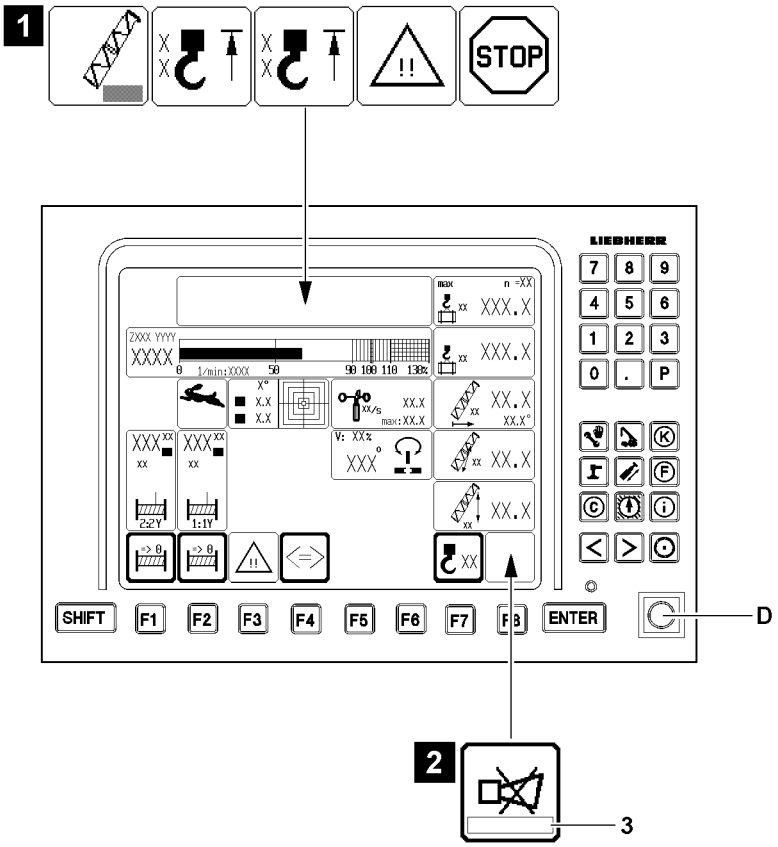
1
STOP
LIEBHERR
SHIFT
F1
F2
F3
F4
F5
F6
F7
F8
ENTER
D
2
3

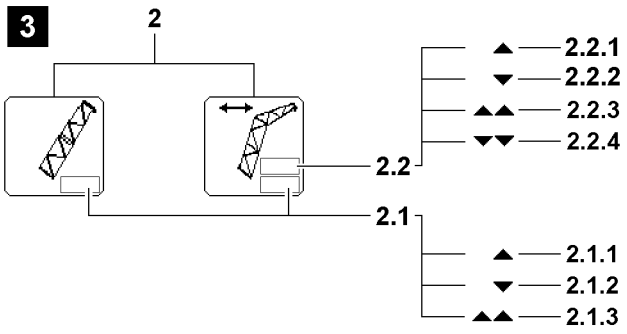
3
2
2.2.1
2.2.2
2.2.3
2.2.4
2.2
2.1
2.1.1
2.1.2
2.1.3

B111930

Position	Icon	Description
2.2.3		The shut off “Luffing up the auxiliary boom / accessory” is triggered by running against a block limit switch of the luffing jibs relapse cylinder (RFP) **or** the retaining flap **or** an error on one limit switch occurs. **Note:** Luffing the auxiliary boom / accessory down remains possible!
2.2.4		The shut off “Luffing down the auxiliary boom / accessory” is triggered by running against a block limit switch (“Auxiliary boom / accessory lower left / right”) **or** an error on one of these limit switches occurs. **Note:** Luffing the auxiliary boom / accessory up remains possible!

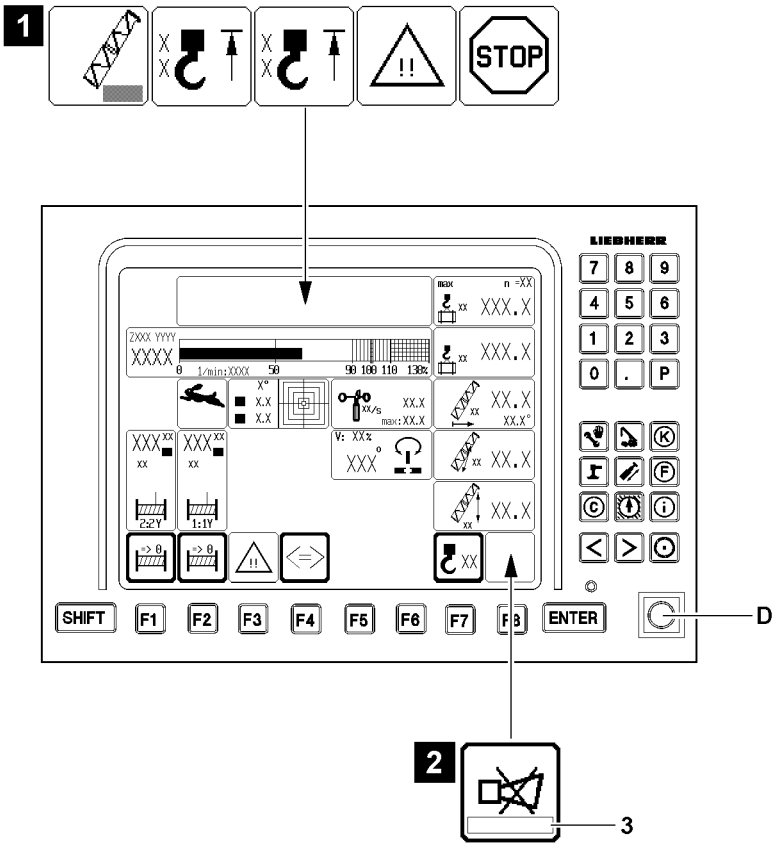
1
STOP
LIEBHERR
SHIFT
F1
F2
F3
F4
F5
F6
F7
F8
ENTER
D
2
3

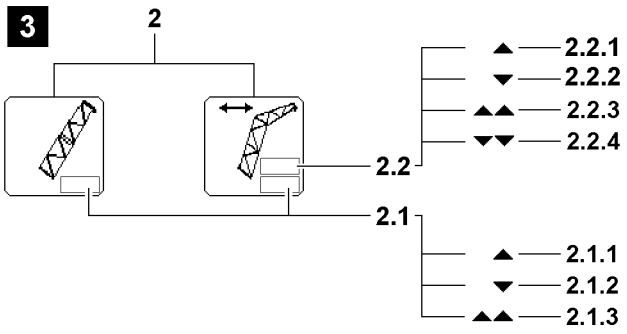
3
2
2.2.1
2.2.2
2.2.3
2.2.4
2.2
2.1
2.1.1
2.1.2
2.1.3

B111930

5.2.2 Failure of sensor / limit switch

NOTICE
Failure of sensor / limit switch!
Depending on the classification of the sensor / limit switch, the crane can continue to be operated with limitation or is shut off by the control!
If an error message is issued in the horn icon **3**, see illustration **2**!
The error message shows defective sensors / limit switches, see Diagnostics manual!

- ▶ The error must be remedied immediately!
- ▶ Crane movements after a failure of a sensor / limit switch must be carried out anticipatorily and with extreme caution!

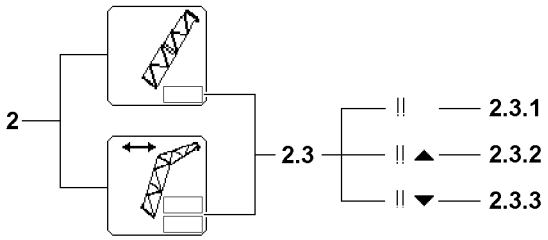

B111928

Position	Icon	Description
2.3.1	!!	On the auxiliary boom / accessory, at least one associated sensor / limit switch is defective / missing. If an alarm function occurs at the same time, then the icon can be shown differently, see position **2.3.1** , position **2.3.2** or position **2.3.3** .
2.3.2	!! ▲	
2.3.3	!! ▼	**Note** : Not every failure of a sensor / limit switch on the boom is shown in the “Boom limitation” icon **2** . Observe the error message in Horn 3 icon!

Note

- ▶ Depending on the classification of the sensor / limit switch, the respective crane movement is shut off in case of a failure **unbypassable**!
- ▶ When deflecting the master switch, an error message is issued in the horn icon **3**! The error message shows defective sensors / limit switches!
- ▶ If the error cannot be remedied by yourself, contact Liebherr Service!

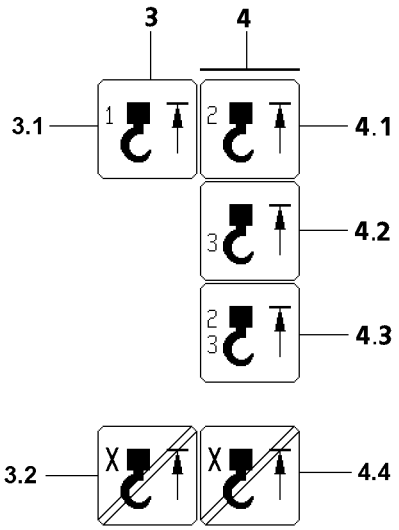

B111096

5.2.3 Hoist top limit switch HES1

3 “Hoist top on HES1” icon

- In order to prevent the crane from being operated without hoist limit switches (HES), the minimum hoist limit switch configuration is continuously monitored. If a hoist limit switch required for a particular operating mode is not plugged in, therefore not active on the LSB bus system, a LMB STOP is triggered and an error message is also issued.
- **Note:**
  HES1 must be present for all operating modes with main boom! HES1A + HES1B turn the same functions off as the remaining hoist limit switches!

3.1 HES1(1A / 1B)

- Location HES1A: Main boom head left
  Bus address: 27
- Location HES1B: Main boom head right
  Bus address: 28
- The **“HES1”** icon appears if:
  - The hook block moves against the HES1A on the left hand side of the main boom head.
  - HES1A is not active, although it must be present on the bus.
  - HES1A has an internal error.
  - The hook block moves against the HES1B on the right hand side of the main boom head.
  - HES1B is not active, although it must be present on the bus.
  - HES1B has an internal error.
- **Note:**
  The crane movements spool the hoist winches up, luff the boom down as well as luff the derrick boom down are turned off!

3.2 “Hoist top on boom bypassed” icon

- The icon appears when the “Hoist top shut off” is bypassed.

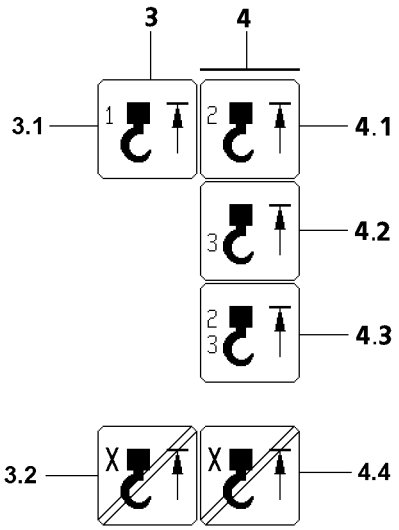

B111096

5.2.4 Hoist top limit switch HES2 and HES3

4 “Hoist top on HES2 / HES3 ” icon

- In order to prevent the crane from being operated without hoist limit switches (HES), the minimum hoist limit switch configuration is continuously monitored. If a hoist limit switch required for a particular operating mode is not plugged in, therefore not active on the LSB bus system, a LMB STOP is triggered and an error message is also issued.

4.1 “Hoist top on HES2 (2A / 2B) ” * icon

- Installation location HES2A: Auxiliary boom / accessory, left* Bus address: 27
- Installation location HES2B: Auxiliary boom / accessory, right* Bus address: 28
- The **“HES2”** icon appears if:
  - The hook block moves against the HES2A on the auxiliary boom / accessory.
  - HES2A is not active, although it must be present on the bus.
  - HES2A has an internal error.
  - The hook block moves against the HES2B on the auxiliary boom / accessory.
  - HES2B is not active, although it must be present on the bus.
  - HES2B has an internal error.
- **Note:**
  The crane movements spool the hoist winches up, luff the boom down as well as luff the derrick boom down are turned off!

Note

▶ HES2 must be present for all operating modes with auxiliary boom / accessory!

▶ If HES2 is missing despite having to be present, an “LMB STOP” is triggered! In addition, an error message is issued!

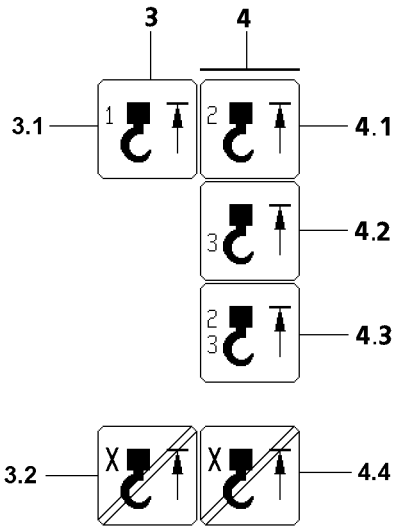

B111096

4.2 “Hoist top on HES3” icon

Installation location(s):

- Main boom boom nose 1, bus address: 24*
- Main boom boom nose 2, bus address: 25*
- Auxiliary boom / accessory boom nose 1, bus address: 24*
- Auxiliary boom / accessory boom nose 2, bus address: 25*
- The **“HES3”** icon appears if:
  - The hook block runs against the HES3 at the boom nose.
  - HES3 is not active, although it must be present on the bus.
  - HES3 has an internal error.
- **Note:**
  The crane movements spool the hoist winches up, luff the boom down as well as luff the derrick boom down are turned off!
- **Note:**
  HES3 must be present for all operating modes with “boom nose”!
  If this is not the case, an “LMB STOP” is triggered and an error message is also issued!

4.3 HES2 and HES3

- The icon appears when icon HES2 and HES3 appear simultaneously.

4.4 “Hoist top on boom bypassed” icon

- The icon appears when the “Hoist top shut off” is bypassed.

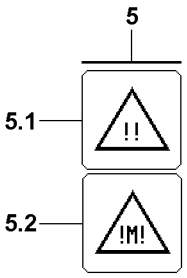

B112366

5.2.5 Advance warning LMB / advance warning engine monitoring

5 “Advance warning” icon

5.1 Advance warning LMB
- The current load chart utilization is calculated from the “Current load” and the “Maximum load according to the load chart and reeving”.
- The “Advance warning” icon appears if:
  - The current load chart utilization of the crane, according to the “Load chart and reeving” exceeds the programmed limit (**90 percent**) for the advance warning.
    or
  - The current utilization of the boom nose* exceeds the programmed limit (**90 %**) for the advance warning.

5.2 Advance warning engine monitoring
- If a warning event occurs in the engine monitoring system, the “Engine monitoring advance warning” icon is displayed on the LICCON monitor.

NOTICE
Shut off engine monitoring!
Outside of the crane operation program, the engine monitoring is turned off!
When the engine monitoring is turned off, problems and warning occurrences are not recognized!
This could result in crane failure!
▶ If work has to be carried out for a longer period outside of the crane operation program, with the engine running, then switch regularly into the engine monitoring screen!

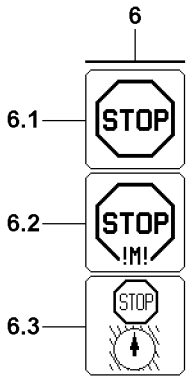

B113264

5.2.6 LMB STOP/Engine monitoring STOP

6 “STOP” icon

6.1 LMB STOP
- The “STOP” icon appears when the load chart utilization exceeds the **100 % mark** (LMB STOP).
- **Note:**
  All crane movements that increase the load momentum are shut off!

or

6.1 Sensor error
- The “STOP” icon appears when a sensor which is required to monitor the load chart has an error (LMB STOP is actuated).
- **Note:**
  All crane movements that increase the load momentum are shut off!

or

6.1 No load chart
- The “STOP” icon appears if no load chart is available (LMB STOP is actuated).
- **Note:**
  All crane movements that increase the load momentum are shut off!

6.2 Engine monitoring STOP
- If a STOP event occurs in the engine monitoring system, the system automatically switches over (from the Crane operation program) to the Engine monitoring program.

NOTICE
Shut off engine monitoring!
Outside of the crane operation program, the engine monitoring is turned off!
When the engine monitoring is turned off, problems and warning occurrences are not recognized!
This could result in crane failure!
▶ If work has to be carried out for a longer period outside of the crane operation program, with the engine running, then switch regularly into the engine monitoring screen!

6.3 Working range limitation*
- If a programmed working range limit* is reached, then this condition is indicated by the STOP icon working range limitation* **6.3** instead of the standard “STOP” icon **6**.

Note
▶ If an LMB STOP occurs simultaneously, the STOP working range limitation* **6.3** icon continues to be displayed!
▶ The LMB STOP is identifiable if the utilization bar exceeds 100 % or if a maximum load carrying capacity of 0 t is permitted!

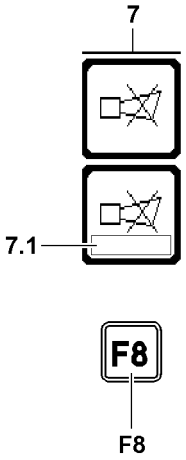

B111270

5.2.7 Acoustic warning on monitor 0

Acoustic warnings on monitor 0 are indicated by the warning sound “Horn”.
The warning sound “Horn” is divided into two categories:

– “Horn” is a beeping sound of a duration of approximately 0.5 seconds, which is repeated in a second cycle
– “Short horn” is a beeping sound of a duration of approximately 0.1 seconds, which is repeated in a second cycle

7 Horn icon	• When the horn icon is shown in the LICCON monitor, any acoustic signals which will occur can be shut off by the LICCON monitor **0** by pressing the function key **F8**. • If an error message is shown in the horn icon **7** in field **7.1**, then the present error can be determined through it in the diagnostics manual. Pressing the function key **F8** twice, automatically changes to the error determination screen of the test system. The error is displayed there in documentary form.

Acoustic signal “Horn”

1.) Sounds in addition to the optical display of an error message in field **7.1** in case of operational errors are found, which lead to a shut off of a crane movement.
Operational errors are:
- Overload
- Boom outside of the angle / radius range of the load chart.

2.) In case of application errors with error number (LICCON Error Code LEC). For example sensor errors, which occur due to insufficient sensor signals or a defective sensor.
The following sensors are monitored:
- Hoist limit switch
- Length sensors
- Angle sensors
- Pressure sensors
- Pull test brackets (force test boxes)
- Wind sensor
- Battery voltage
- Inductive sensors

Acoustic signal “Short horn”

Sounds in addition to the visual display of error messages without an error number and which do not lead directly to crane movement shut off by the LICCON overload protection.
Monitored error messages are:
- Maximum permissible wind speed exceeded (only for activated wind sensor*)
- Maximum or minimum support force exceeded (only with active support force monitoring*)
- Crane utilization value for “Advance warning” (90 %) reached

Priority acoustic signal

– The “Horn” alarm has higher priority than the “Short horn” alarm, i.e. “Horn” takes preference over “Short horn”.
– The “Horn”, as well as the “Short horn” immediately become active again if an error recurs!

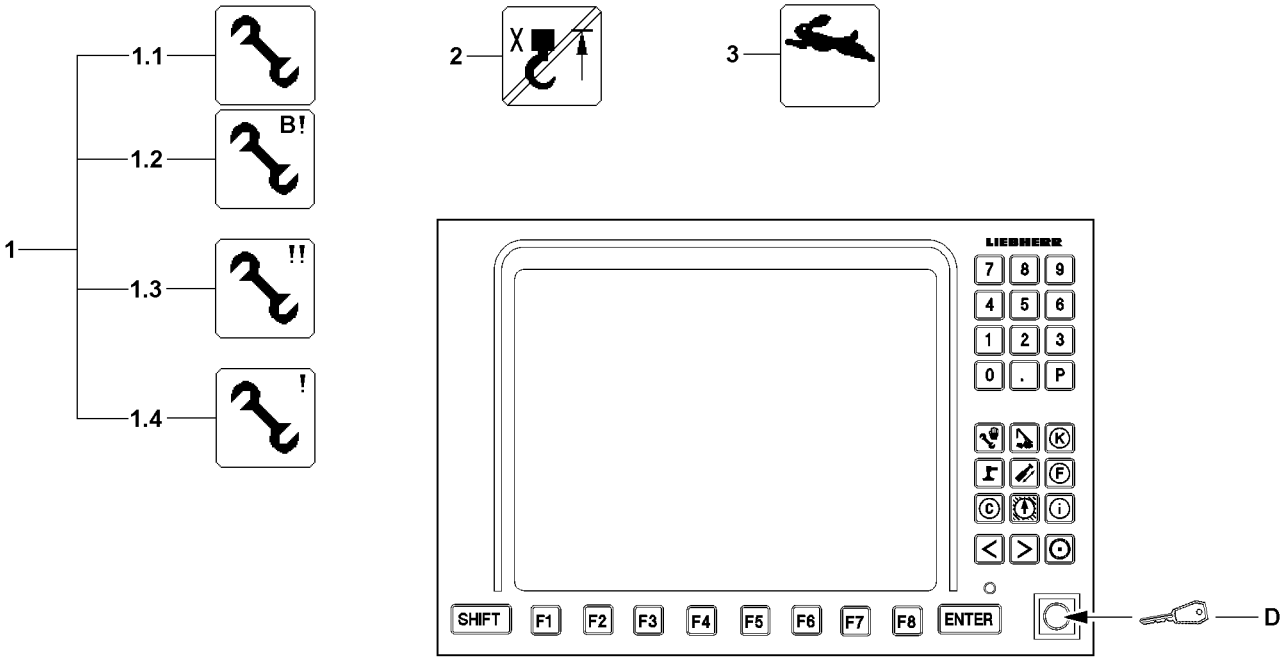
1
1.1
1.2
B!
1.3
!!
1.4
!
2
X
3
LIEBHERR
7 8 9
4 5 6
1 2 3
0 . P
SHIFT
F1
F2
F3
F4
F5
F6
F7
F8
ENTER
D

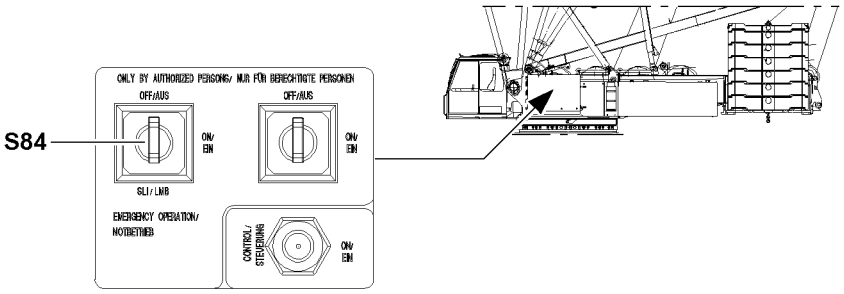
S84
ONLY BY AUTHORIZED PERSONS/ NUR FÜR BERECHTIGTE PERSONEN
OFF/AUS
ON/ EIN
SLI / LMB
EMERGENCY OPERATION/ NOTBETRIEB
CONTROL/ STEUERUNG

B113292

5.3 Special functions

Note
Double function set up key!
If the crane has **no** CE-mark, when actuating the set up key **D**, the release for the “Emergency operation LICCON overload protection” is automatically engaged!
▶ Take into account, when actuating the set up key **D**, that the “Emergency operation LICCON overload protection” is automatically released!

Note
▶ The various icons **1** are shown on the same position in the LICCON monitor, depending on the operating mode, illustration **2**.
▶ For operation and specifications for using the set up key **D** see Crane operating instructions, chapter 4.20 and 7.15.

5.3.1 Exceeding the shut off limits of the LICCON overload protection

1.1 Exceeding the shut off limits of the LICCON overload protection	• The icon appears: • When the shut off limits of the LICCON overload protection are bypassed via the set up key **D**. • **Note**: The crane operation program is locked, meaning, no other program can be turned on via the program keys.

5.3.2 No load chart is available

1.2 No load chart is available	• The icon appears: • When the shut off limits of the LICCON overload protection are bypassed via the set up key **D and** no load chart is available. • **Note**: By actuating the set up key **D**, all erection / take down procedures can be carried out within the erection / take down charts, for which no load charts are available!

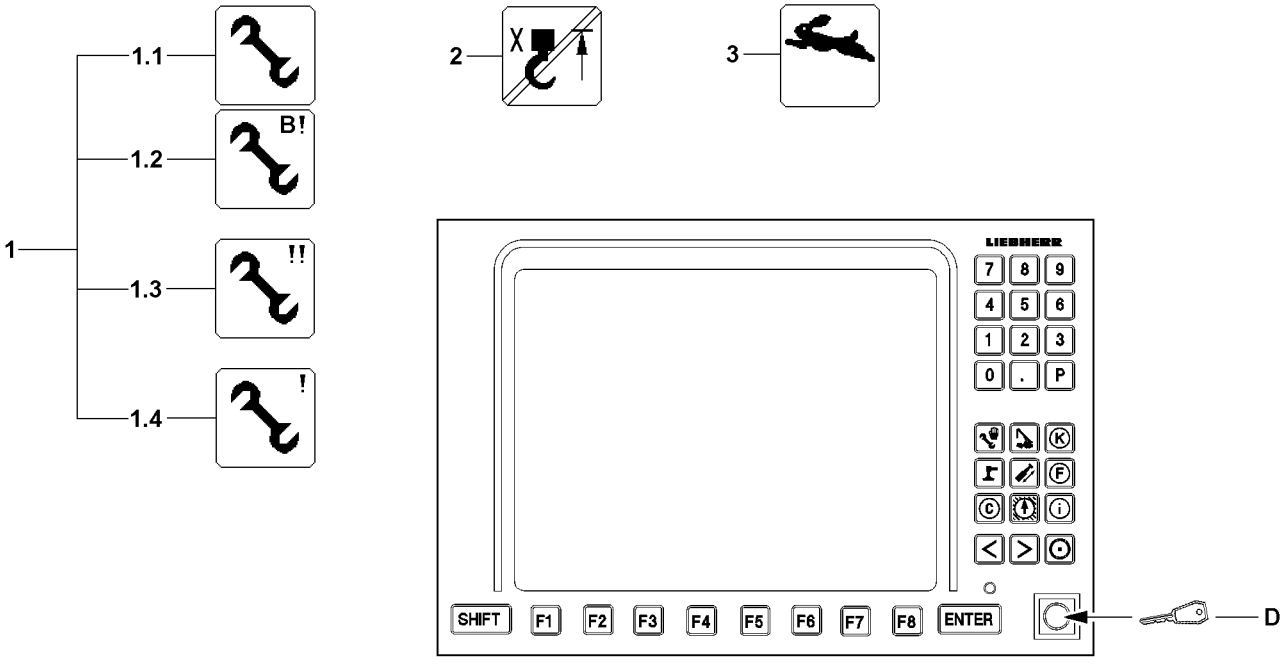
1
1.1
1.2
B!
1.3
!!
1.4
!
2
X
3
LIEBHERR
7 8 9
4 5 6
1 2 3
0 . P
SHIFT
F1
F2
F3
F4
F5
F6
F7
F8
ENTER
D

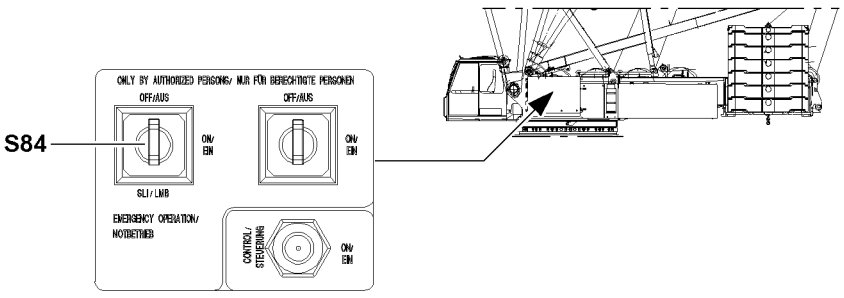
S84
ONLY BY AUTHORIZED PERSONS/ NUR FÜR BERECHTIGTE PERSONEN
OFF/AUS
ON/
EIN
SLI / LMB
EMERGENCY OPERATION/
NOTBETRIEB
CONTROL/
STEUERUNG

B113292

5.3.3 Emergency operation LICCON overload protection (according to EN 13000:2010)

1.3 LMB emergency operation activated

- The icon appears:
  - when the LMB-emergency operation is activated via the key button **S801**.
  - **Note**:
    The crane operation program is locked, meaning, no other program can be turned on via the program keys.

5.3.4 Emergency operation LICCON overload protection (crane **without** CE mark)

Note
If the crane has **no** CE mark, then the functions of the “Emergency operation of the LICCON overload protection” are also engaged by the set up key **D**!

▶ Only crane without CE-mark: If the emergency operation LICCON overload protection is needed, actuate the key button **S801** or the set up key **D**!

1.3 LMB emergency operation activated

- Icon appears:
  - when the LMB emergency operation is activated by the keyed button **S801** or the set up key **D**.
  - **Note**:
    Depending on the reason for the LMB emergency operation, the icon for no load chart available **1.2** can also appear.
  - **Note**:
    The crane operation program is locked, meaning, no other program can be turned on via the program keys.

5.3.5 Additional emergency operating modes

WARNING
Erroneous operation of the crane!
If one of the icons for additional emergency operating modes **1.4** appears, then there is a risk of accidents due to erroneous operation of the crane!
Personnel can be killed or injured!
This could result in property damage!

▶ Deactivate additional operating modes **1.4** again or contact Liebherr Service and coordinate further procedure.

1.4 Additional emergency operating modes

- Icon **1.4** appears if additional emergency operating modes were activated.

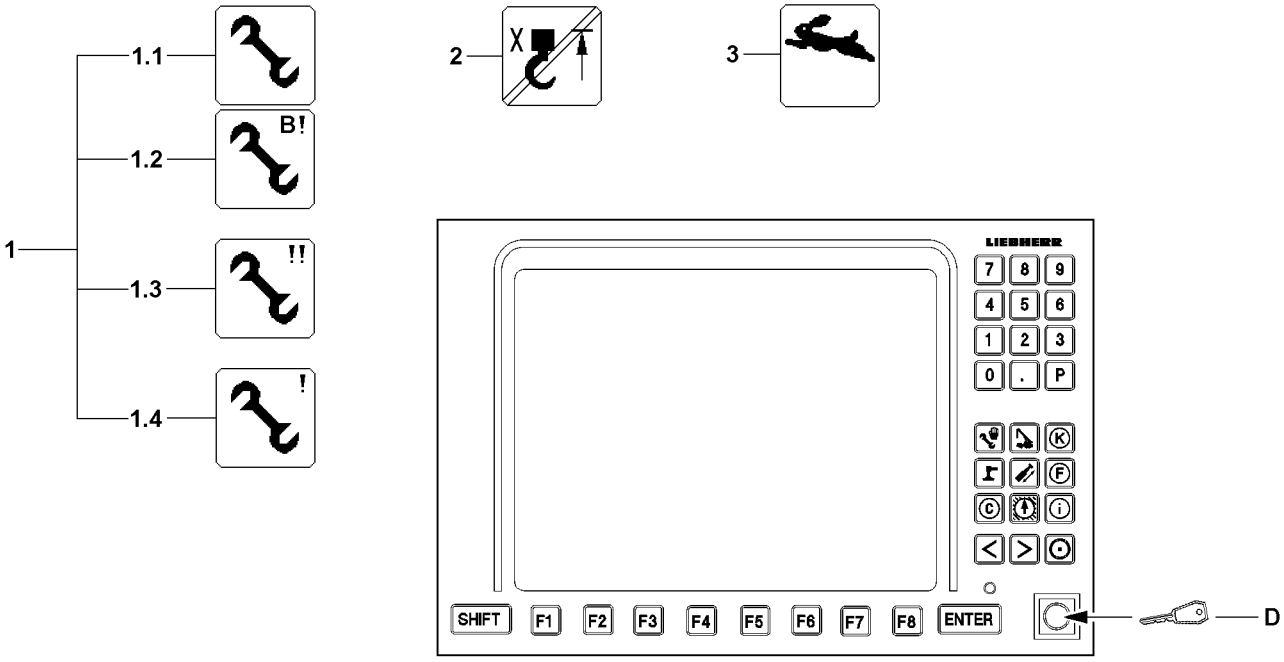
1
1.1
1.2
B!
1.3
!!
1.4
!
2
X
3
LIEBHERR
7 8 9
4 5 6
1 2 3
0 . P
SHIFT
F1
F2
F3
F4
F5
F6
F7
F8
ENTER
D

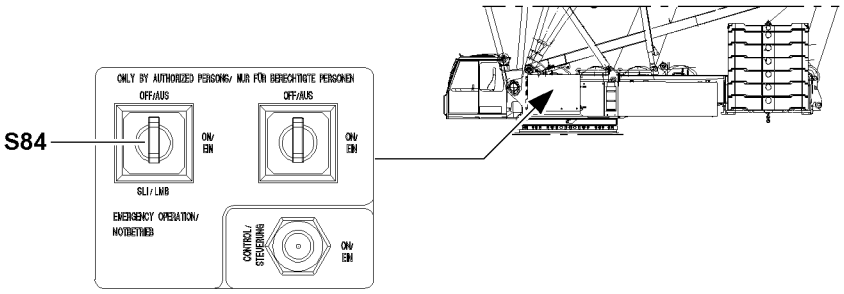
S84
ONLY BY AUTHORIZED PERSONS/ NUR FÜR BERECHTIGTE PERSONEN
OFF/AUS
ON/
EIN
SLI / LMB
OFF/AUS
ON/
EIN
EMERGENCY OPERATION/
NOTBETRIEB
CONTROL/
STEUERUNG
ON/
EIN

B113292

5.3.6 Bypass “Hoist top”

2 Bypass “Hoist top”

- The icon appears:
  - When the shut off “hoist top” is bypassed via the set up key **D**
  - **Note**:
    The crane operation program is locked, meaning, no other program can be turned on via the program keys.

5.3.7 Fast mode (Rapid gear)

3 “Rapid gear” icon

- The icon appears if the rapid gear is enabled during a crane movement.
- This is possible for the following crane movements:
  - Lift / lower hoist gears
  - Luff the boom up / down

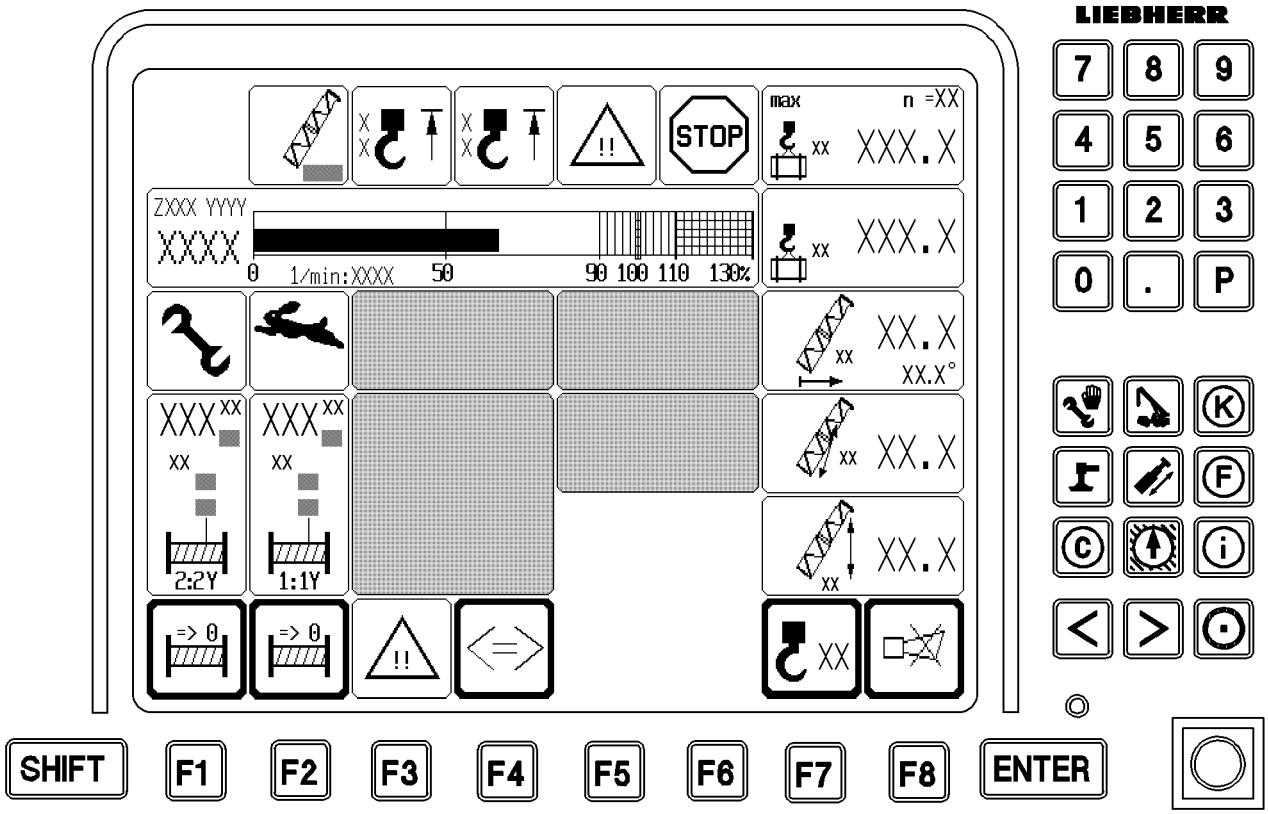
LIEBHERR
STOP
max
n =XX
ZXXX YYYY
XXXX
0 1/min:XXXX 50 90 100 110 130%
XXX.X
XX.X
XX.X°
2:2Y
1:1Y
7 8 9
4 5 6
1 2 3
0 . P
SHIFT
F1
F2
F3
F4
F5
F6
F7
F8
ENTER

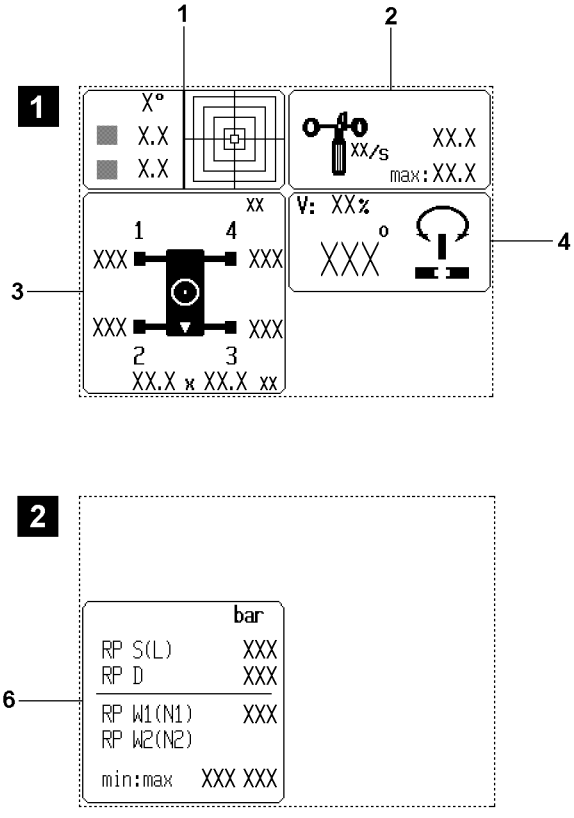
1
2
3
4
X°
X.X
X.X
XX/S
XX.X
max:XX.X
V: XX%
XXX
XX.X x XX.X xx

2
6
bar
RP S(L) XXX
RP D XXX
RP W1(N1) XXX
RP W2(N2)
min:max XXX XXX

B111895

5.4 Monitored auxiliary functions for crane operation

There are several monitored auxiliary functions, which can be displayed when needed or automatically.
The monitoring of all auxiliary functions is always active, only the icons may be hidden. The icons of the monitored auxiliary functions have their fixed place on the LICCON monitor.

Note

▶ Using the function key **F3**, you can show the icons for the monitored auxiliary functions. Since not all icons of the auxiliary functions fit on one page (at maximum assignment), they are split over two pages. The icons on page 2 (if available) can be shown with the function key **F4**!

Page 1 (illustration 1):
Crane incline **1**
Wind speed **2**
Support force monitoring **3**
Slewing range **4**

Page 2 (illustration 2):
Relapse cylinder monitoring **6**

Note

▶ Depending if the monitored auxiliary functions are turned off or on, the illustration of the monitored auxiliary functions differs!

Monitored auxiliary functions turned off:

– No error:
  Icons are not shown.
– Only error in one function on page 1:
  Icon is displayed on page 1.
– Only error in one function on page 2:
  Icon is displayed on page 2.
– Error in one function on page 1 and 2:
  Icon is displayed on page 1 and icon for **F4** blinks (= indicates an error in a function on page 2).

Monitored auxiliary functions turned on:

– No error:
  Optional icons (customer request) are displayed.
  If there are also optional icons on page 2, the icon “Change page” of the **F4** key is activated (= indication for switching option).
– Error in one function on page 2:
  Icon “Change page” blinks (= indication regarding an error of a function on the other page).
– Error in one function on page 1 and 2:
  Icon is displayed on page 1.
  Icon “Change page” blinks (= indication regarding an error of a function on the other page).

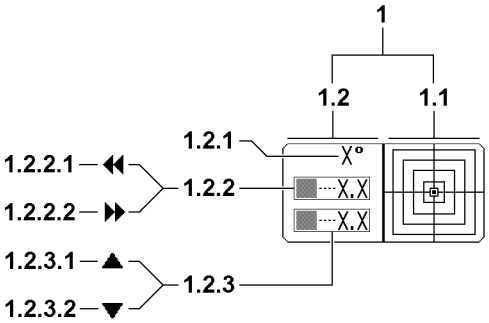

B111929

5.4.1 General

Note
"?" instead of display value!
- ▶ The value cannot be determined due to an error!
- ▶ If an error occurs and an error message is issued, see Diagnostics manual!
- ▶ Always pay attention to error messages!
- ▶ Remedy the error always as quick as possible!

5.4.2 Crane incline

1 "Incline" icon	• Display of the incline of the crane to the horizontal in longitudinal and lateral direction. The display is graphic as well as numeric. • The direction data refers to the driving direction of the crane chassis.
1.1 Graphic part	• The graphic display is in the form of a spirit level, with a moving dot (small square) representing the air bubble. The center of the dot shows the precise incline value.
1.2 Numeric part	
1.2.1 Incline range	• Value either 1° or 5° This value describes the resolution of the graphic illustration and can only assume the two values "1°" or "5°". If the incline is less than 1° in lateral direction **and** in longitudinal direction, the level moves within the 1° range. If at least one value exceeds the 1° limit, it switches to the 5° range. The range change is automatic.

1.2.2 Crane incline	• In [°] in lateral direction
	• Double arrow left **1.2.2.1**
	  • The crane is inclined to the left
	• Double arrow right **1.2.2.2**
	  • The crane is inclined to the right

1.2.3 Crane incline	• In [°] in longitudinal direction
	• Arrow pointing up **1.2.3.1**
	  • The crane is inclined to the rear
	• Arrow pointing down **1.2.3.2**
	  • The crane is inclined to the front

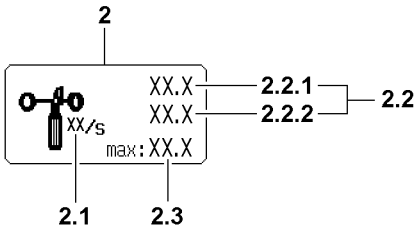

B111265

5.4.3 Wind speed

2 “Wind speed” icon
- The wind speeds are displayed in [m/sec.] or [ft/sec.] depending on the units of measurement shown in the load chart.

2.1 “Wind speed” unit
- [m/s] or [ft/s]

2.2 Current wind speed

Note
- ▶ Depending on the set up configuration of the crane, a certain number of wind sensors must be present on the LSB bus!
- ▶ If a wind sensor does not have to be present, then no display value appears in the “Wind speed” icon **2**!
- ▶ If no value can be determined for a wind sensor which must be present, then current wind speed “???” appears in the display!

2.2.1 Current wind speed

2.2.2 Current wind speed
- If several wind sensors are active, two values are shown.

WARNING
Crane operation without display value of wind speed!
If the current wind speed **2.2** “???” appears in the display, then a wind sensor which must be present is missing or there is an error in the wind sensor!
- ▶ Pay attention to the error message and remedy the error immediately!
- ▶ If an error cannot be remedied, then it must be ensured that the wind speed is monitored otherwise!

Note
- ▶ If several wind sensors are connected on the LSB bus, the location of the wind sensor determines the corresponding display in the “wind speed” icon!
- ▶ The priority depends on the installation location of the wind sensor, from “outside” (for example luffing jib) to “inside” (for example boom head). The wind speed of the “exterior” wind sensor is displayed in **2.2.1** and the wind speed of the “interior” wind sensor is displayed in **2.2.2**.
- ▶ The priority of wind sensor 2 is larger than that of wind sensor 3, this means: If both wind sensors are present, then the value of wind sensor 2 is shown!

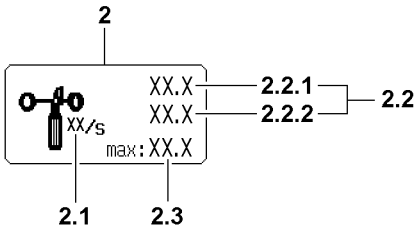

B111265

2.3 Maximum permissible wind speed

- With icon text “Max:”
- The value depends on the operating mode and the set up configuration.
- **Note:**
  If access to a load chart is not possible, then the maximum value starts to blink and the acoustic alarm “Short horn” sounds!
  If the current wind speed value exceeds the displayed maximum value, the maximum value starts to blink and the acoustic alarm “Short horn” sounds!

WARNING
Wind speed too high!
If the maximum permissible wind speed is exceeded with erected boom system, there is a danger of accidents!
Dangerous situations can arise, such as oscillating load or shaking crane!
The crane can topple over, personnel can be severely injured or killed!

- ▶ **The crane movements will not be shut off!**
- ▶ The danger notes, see Crane operating instructions, chapter 2.04 must be strictly observed and adhered to!

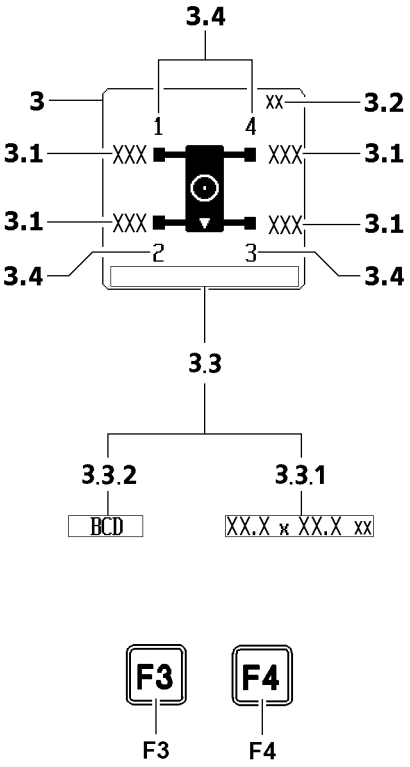
3.4
3
xx
3.2
1
4
3.1
XXX
XXX
3.1
3.1
XXX
XXX
3.1
2
3
3.4
3.4
3.3
3.3.2
3.3.1
BCD
XX.X x XX.X xx

F3
F4
F3
F4

B111896

5.4.4 Support force display

DANGER
The crane can topple over!
When reaching the programmed minimum / maximum supporting forces, no automatic shut off of the crane movements occurs!
The displayed support force values depend on the fluctuating influences of operator and environment!
The resulting expanded tolerance field of the determined values may not be utilized by the support force display to determine the tipping limit of the crane!

- ▶ The displayed support force values of the support force display may not be used to utilize the crane up to the tipping limit!
- ▶ Make sure that all support force values are within the minimum / maximum support forces!

Note

- ▶ The support force display icon **3** appears only when the crane is supported. For crane operation on crawler, the support force display icon **3** does not appear.

3 Support force display icon*

- The LICCON support force monitoring system continuously records the current hydraulic pressure present in all 4 support cylinders during crane operation using a pressure sensor, and converts this into a support force [t] value for each support.
- If needed, the support force display icon* **3** can be shown in the crane operation program with the function key **F3** or function key **F4**.
- If a critical support force value occurs, then the support force display icon* **3** appears automatically with the alarm signal “Short horn”.
- The respective critical support force value is shown blinking when:
  - A support has reached or exceeds the maximum force
  - A support has reached or exceeds the minimum force.
  - The sum of the two lowest support force values is less than 15 % of the total support forces.

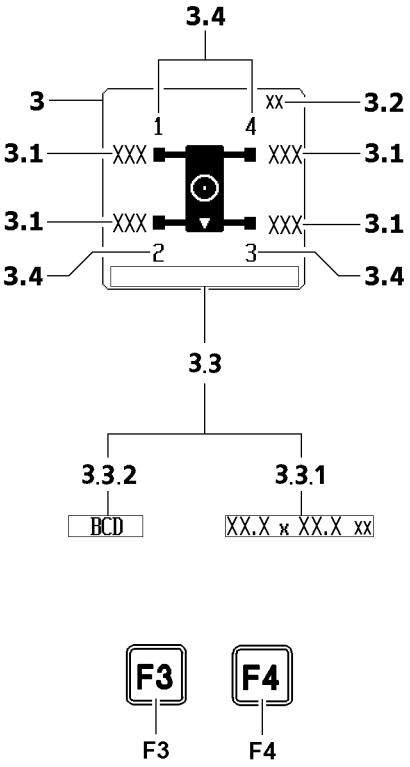
3.4
3
1
4
xx
3.2
3.1
XXX
XXX
3.1
3.1
XXX
XXX
3.1
2
3
3.4
3.4
3.3
3.3.2
3.3.1
BCD
XX.X x XX.X xx

F3
F4
F3
F4

B111896

3.1	Display of current support force	• Display of support force for each support

Note

- ▶ The same maximum support force and a common minimum support force is programmed for each support at the factory!
- ▶ In the support program, these 5 values can be changed depending on the situation, see section “The support program”!

WARNING

Tolerances and erroneous operation of the support force monitoring!

Due to the friction forces in different directions and non-measurable lateral forces in the support cylinders, a test falsification up to ± 2% in relation to the maximum load capacity of the crane is possible!

If the support cylinders are moved on “block bottom” or “block top”, then the display of the support forces is erroneous!

- ▶ Make sure that there is no block position on the support cylinders!
- ▶ Take the tolerances in the display value into account!

3.2	Weight unit of support force	• In [t] or [lbs]
3.3	Display of support base	
3.3.1	Support base LG :	• Only LG 1750 • Support bases are shown in their dimensions, for example 12.0 m x 12.0 m
3.3.2	Support base LR :	• Only LR 1750 • The various support bases are shown by letters or letter combinations, for example: B, C, D. • **Note:** The respective letters and letter combinations arise from the assembly conditions!
3.4	Numbering support cylinder :	• Support cylinder 1 to 4

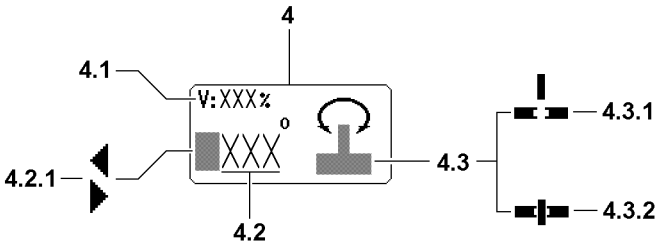

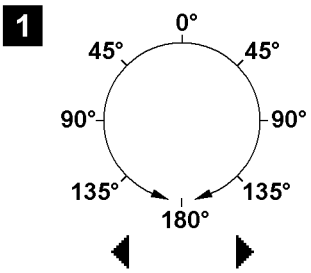

B111266

5.4.5 Slewing range

DANGER
Danger of accidents in case of excessive rotation speed!
▶ Make the selection of the rotation speed according to the specifications in the load chart manual!

4	“Slewing range” icon	
4.1	Maximum rotation speed.	• V: [%] • Identifies the current (selected) “Maximum rotation speed” of the slewing gear with a fully deflected master switch, relating to the maximum attainable rotation speed of the slewing gear. This value may be preselected in fixed percentage stages in the LICCON program control parameter.
4.2	Current position of the crane superstructure*	• In relation to the main working direction (0 [°]) Increasing to the maximum value of 180°, see illustration **1**
4.2.1	Direction of deviation	• The arrow in front of the value indicates the direction of the deviation. • Arrow to the right: Turn to the right • Arrow to the left: Turn to the left
4.3	Crane superstructure lock	• Status of lock between crane superstructure and crane chassis • **Note:** Only crane type **LG 1750**!
4.3.1	Locking pin on top	• Crane superstructure unpinned
4.3.2	Locking pin on the bottom	• Crane superstructure pinned

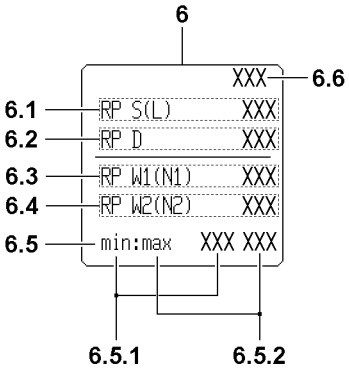
6
XXX
6.6
6.1
RP S(L) XXX
6.2
RP D XXX
6.3
RP W1(N1) XXX
6.4
RP W2(N2) XXX
6.5
min:max XXX XXX
6.5.1
6.5.2

B111897

5.4.6 Monitoring of relapse cylinders

Note
Display values pressure display!
- ▶ Pressure display = “0”, if these relapse cylinders are not present for the set operating mode!
- ▶ Pressure display = “???”, if the pressure sensor signal is erroneous! There is an error display with error number!

6	“Monitoring relapse cylinder” icon	
6.1	Pressure display RP S(L)	• Relapse cylinder S-, SL- or L-boom
6.2	Pressure display RP D	• Relapse cylinder Derrick boom
6.3	Pressure display RP W1(N1)	• Pressure W1-relapse cylinder (=RP W1) at W-operation **or** • Pressure N1-relapse cylinder (=RP N1) at N-operation
6.4	Pressure display RP W2(N2)	• Pressure W2-relapse cylinder (=RP W2) at W-operation **or** • Pressure N2-relapse cylinder (=RP N2) at N-operation
6.5	Pressure limits	• Monitored pressure limits of relapse cylinders (W/N) Minimum / maximum pressure for RP W1(N1) and RP W2(N2)
6.5.1	Minimum pressure (W/N)	• If a pressure limit value is being exceeded, then this is shown by a blinking pressure actual value and an additional error message. • This monitored minimum pressure is calculated from the angle of the main boom and the auxiliary boom / accessory. If one of the angles is invalid and is shown in the display with “???”, then no monitoring of the minimum pressure can occur.
6.5.2	Maximum pressure (W/N)	• If a pressure limit value is being exceeded, then this is shown by a blinking pressure actual value and an additional error message.
6.6	“Monitoring relapse cylinder” measuring unit	

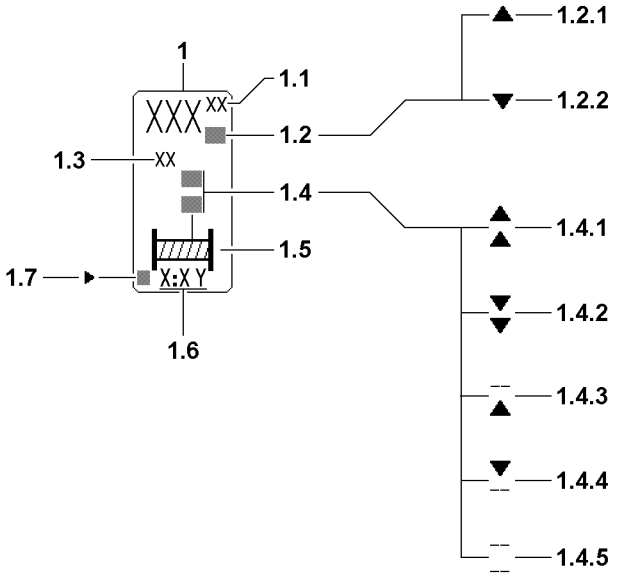

B111898

5.5 “Winch display” icon

1 Winch icon	• The winch 1 and winch 2 icons have the same meaning and are explained on one icon.
1.1 Travelled distance	• In [m] or [ft] From a zero point to be determined. • For single operation with the reeving setting made in the set up program: Completed hook path. • For parallel operation with the set total reeving made in the set up program: Distance completed by hook block. • The positions before the decimal point are displayed with a maximum of three large digits. The digits after the comma are displayed with small digits. Setting to zero point, see section “The function key line”. • A prerequisite for a correct display is that the reeving value entered equals the actual number of rope strands between the boom head and the hook block.

Note

Display area winch displays!

- ▶ The “Completed path” display **1.1** has only three positions before the comma, any positions before that are cut off! The crane operator must evaluate for himself if, for example 200 m rope are spooled up on a winch or 1200 m. **The display in both cases with 200 m is identical!**
- ▶ The hook path calculation only works accurately if the load is suspended freely and is not luffed during the lifting procedure. Not taken into account are flexation and rope expansion.
- ▶ The length display (hook path display) is only accurate and the layer sheer is only taken into account correctly if the winch has been calibrated and no interruptions of the CPU power supply have occurred (cold start). The hook travel display is calibrated by spooling the rope up or out until the calibration switch reacts.

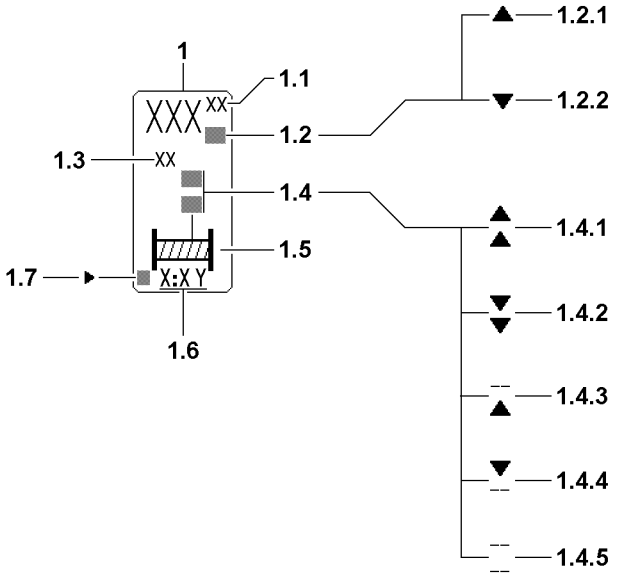

B111898

1.2 Direction of hook movement

The arrows on the length value show the direction of the hook movement in relation to the zero point:
- Arrow up **1.2.1**: Hook moves upward from the zero point
- Arrow down **1.2.2**: Hook moves downward from the zero point

1.3 Measuring unit hook path display

1.4 Winch status display
- There are five winch status icons (all blinking):

1.4.1 Spool out

1.4.2 Spool up

1.4.3 Spooled out
- Spooling out is blocked

1.4.4 Spooled up
- Spooling up is blocked

1.4.5 Winch is deactivated or unplugged
- Spooling up and spooling out are blocked (via Control parameter program)
- **Note:**
  If no winch status icon appears, the activated winch is inactive and is neither spooled up nor out!

1.5 Winch icon
- (with rope end for winch status icon)

1.6 Winch number with master switch number and master switch operating direction
- Example: 1 : 1 Y
  First digit: Winch number.
  Second digit: Master switch number.
  Letter: Master switch operating direction.

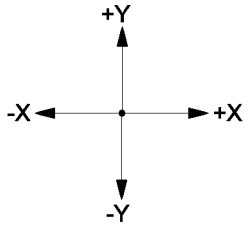

B195422

1.7 Vibration sensor
- If the vibration sensor for a winch is added on the master switch, then an arrow appears in this winch icon for the added vibration sensor.
- **Note:**
  The vibration sensor is added for the first actuated crane function!

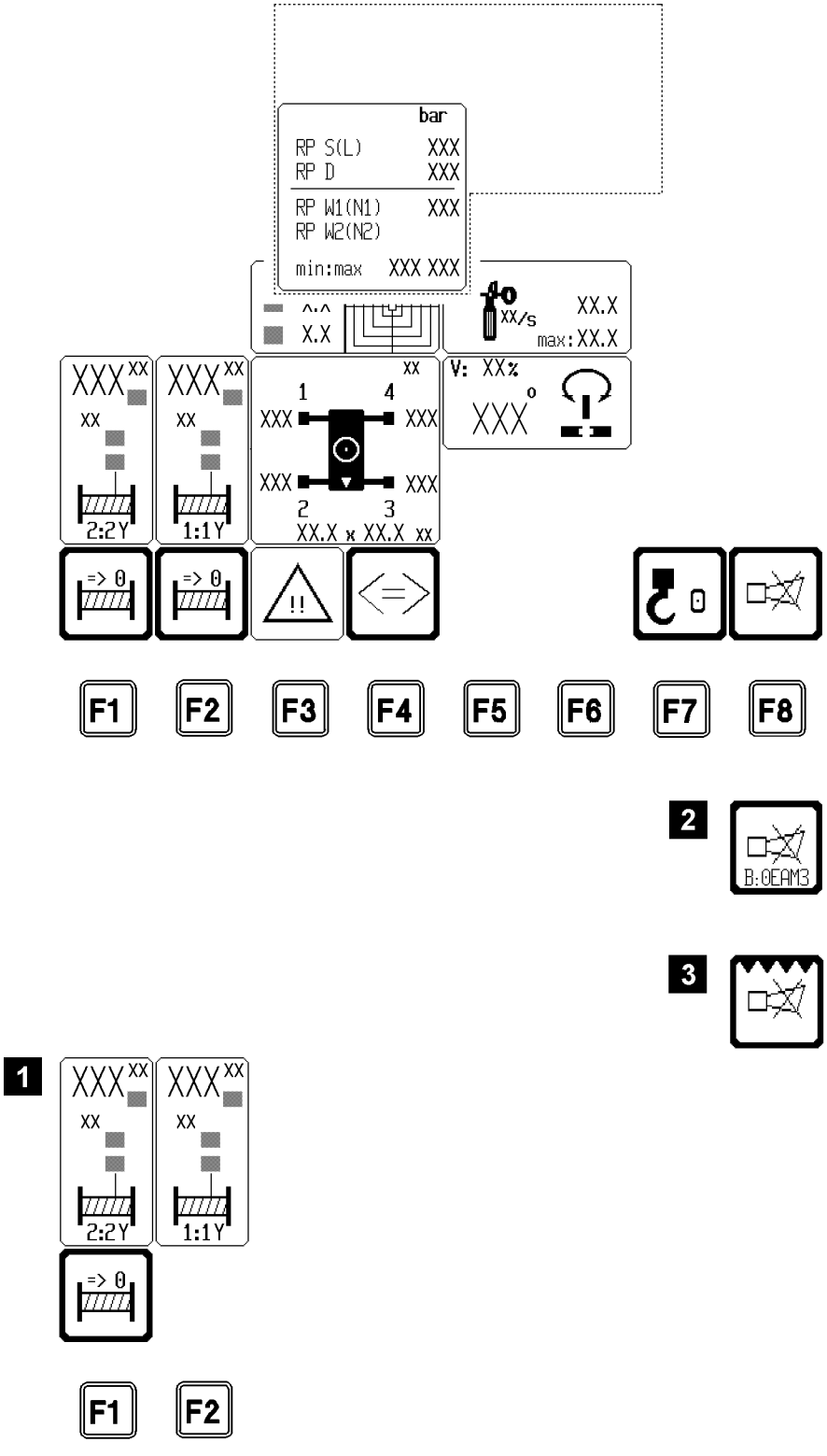
bar
RP S(L) XXX
RP D XXX
RP W1(N1) XXX
RP W2(N2)
min:max XXX XXX
XX.X
max:XX.X
V: XX%
2:2Y
1:1Y
B:0EAM3
F1
F2
F3
F4
F5
F6
F7
F8
1
2
3

B111899

5.6 The function key line in the crane operation program

The function key line consists of function keys **F1** to **F8** and the function key icon bar above it. The function keys correspond to the various function key icons above them.

The function key icons may trigger a function or they change their appearance upon the push of a key (function keys) and thereby their definition.

Not all function keys must have assigned icons. This depends on the “active” program selection.

Pressing a function key changes the appearance of the icon above, its meaning, or its textual content.

F1 Function key
- Zero point for hook path display, winch 2
- Pressing the function key **F1** causes the “Set winch display to zero” icon to appear, i.e. the winch 2 hook path display in the winch icon above is set to “000.00” when the key is pressed. The path measurement begins here.

F2 Function key
- Zero point for hook path display, winch 1
- Pressing the function key **F2** causes the “Set winch display to zero” icon to appear, i.e. the winch 1 hook path display in the winch icon above is set to “000.00” when the key is pressed. The path measurement begins here.
- **Note:**
  When winch 1 and winch 2 work in parallel operation, then the lengths displays of winch 1 and winch 2 can only be set together with the function key **F1** to “000.00”!
  Then the function key **F2** has no function, see illustration **1**!

F3 Function key
- Turn monitoring icons on / off.
- The function key **F3** can be used to turn all the monitored auxiliary functions in the crane on or off.
- The appearance of the icon changes according to the condition:
  - “Thick border” = auxiliary function icons turned off.
  - “Thin border” = auxiliary function icons turned on.
- **Note:**
  The monitoring of all auxiliary functions is always active, even if the monitoring icons are hidden!
  When a monitored limit is exceeded, then an acoustic warning (horn) sounds and the respective icon is shown!

F4 Function key
- Change monitoring page (if present).
  See also section “Monitored auxiliary functions”

F5 Function key
- Not assigned

F6 Function key
- Not assigned

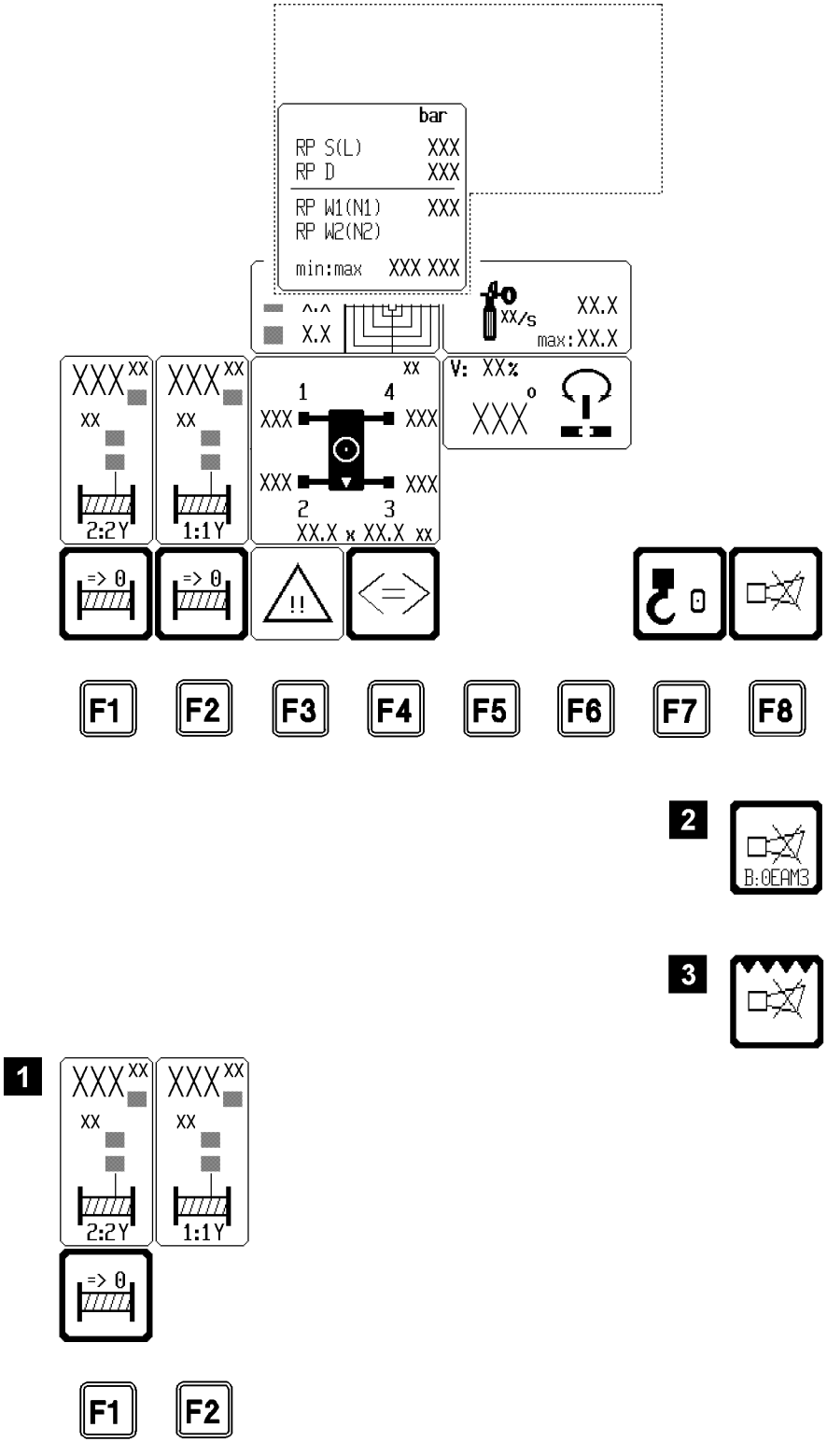
bar
RP S(L) XXX
RP D XXX
RP W1(N1) XXX
RP W2(N2)
min:max XXX XXX
XX.X
max:XX.X
V: XX%
2:2Y
1:1Y
B:0EAM3
F1
F2
F3
F4
F5
F6
F7
F8
1
2
3

B111899

F7 Function key

- Taring
- When the function key **F7** is pressed, the actual load display is set to “zero”. At the same time, the word “net” appears in the icon of the actual load display. This function, for example, makes it possible to eliminate the weights of the hoist rope, load carriers, lifting and fastening equipment and only display the weight of the load that must be lifted (net load).
  If the taring is cancelled, the word “Net” disappears from the icon “Actual load display” and the gross load value is displayed.
- Tare is cancelled by one of the following two actions:
  - Pressing the function key **F7** again.
  - Luffing by more than ± 4°.
- **Note:**
  The function key **F7** acts the same way to the actual load display of the boom nose, if the boom nose is installed!

F8 Function key

- Turn the horn off / error diagnostics
- Turn off the acoustic warning.
  The “Horn” and “Short horn” acoustic warnings can be turned off by pressing the function key **F8**.
- **Note:**
  A new error turns the acoustic warning on again!
- Error message in “Horn” icon
  If a system, application or operating error occurs, an error message appears in the “Horn” icon, see illustration **2**.
- By pressing the function key **F8** twice, the acoustic warning is turned off and the Test system program switches to the error determination screen where the error is documented. (see Diagnostics manual)

WARNING
Malfunctions in the crane control!
A special program is available for LIEBHERR crane acceptance in the LICCON computer system!
This program is blocked after conclusion of the crane acceptance!
If an additional marking is displayed in the “Horn” icon (talons along the upper margin, see illustration **3**), then the special program is activated!

▶ Contact LIEBHERR Service immediately!
▶ In order to prevent error functions, access to the special program is only permitted for trained LIEBHERR personnel!

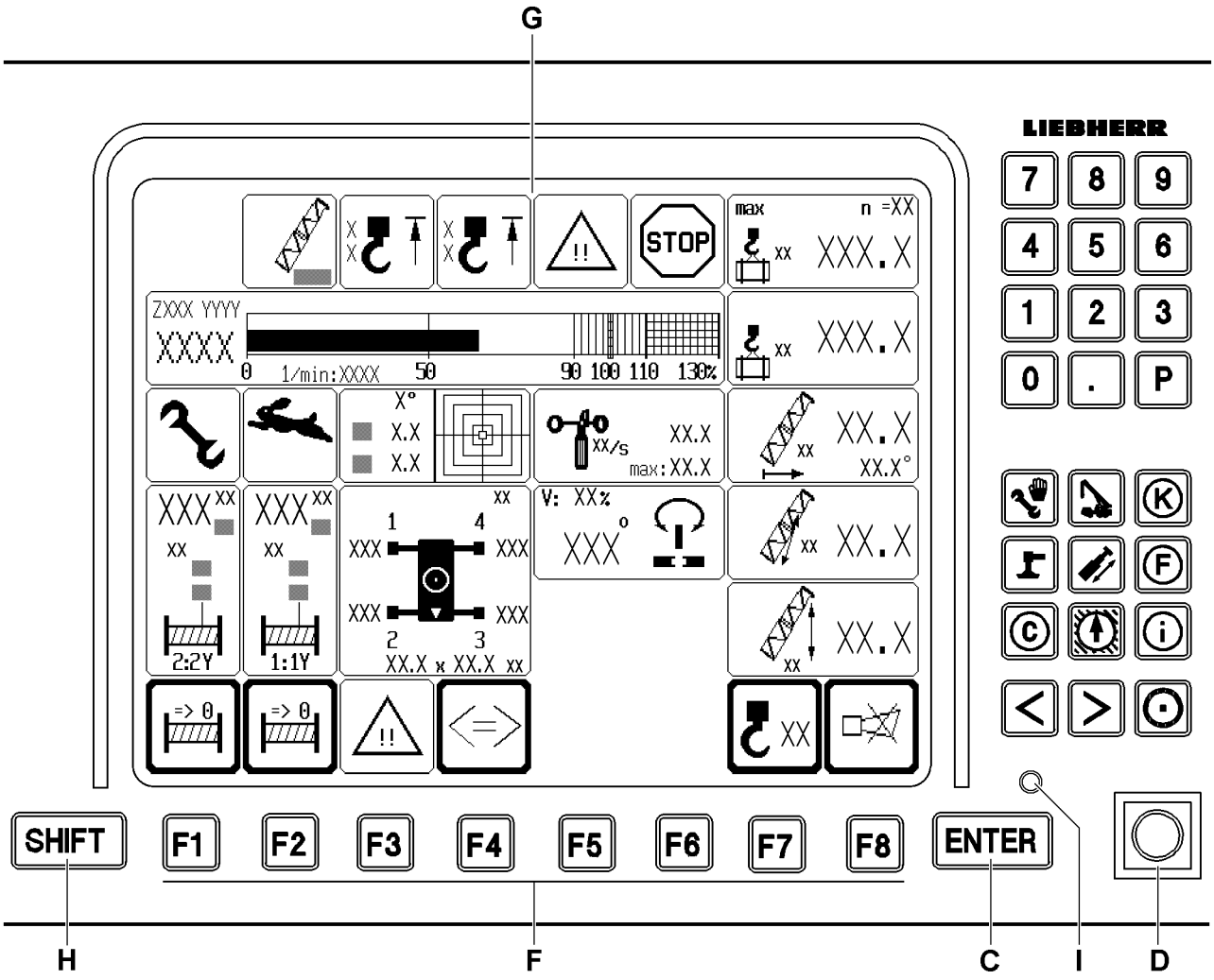
G
LIEBHERR
7 8 9
4 5 6
1 2 3
0 . P
STOP
max n =XX
ZXXX YYYY
XXXX
0 1/min:XXXX 50 90 100 110 130%
XXX.X
XX.X
XX.X°
V: XX%
XXX°
2:2Y
1:1Y
XX.X x XX.X xx
=> 0
SHIFT
F1
F2
F3
F4
F5
F6
F7
F8
ENTER
H
F
C
I
D

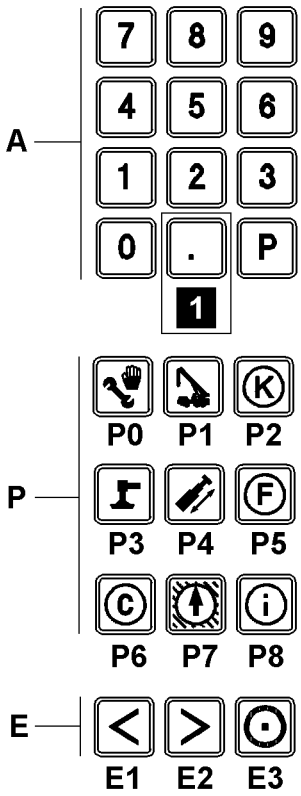
A
7 8 9
4 5 6
1 2 3
0 . P
1
P
P0 P1 P2
P3 P4 P5
P6 P7 P8
E
E1 E2 E3

B111900

5.7 Other operating elements

The following functions are assigned to the other operating elements of the display and operating unit of the LICCON computer system in the crane operation program.

A Keypad

- Keys “0” to “9” and “P” have no function in the crane operation program.
- Key “**.** ”, illustration **1**
  With the key “**.** ” the so-called test screen function is turned on and off. All existing icons appear with a test value on the LICCON monitor.
- **Note:**
  The monitored auxiliary functions must be opened in the desired page to appear in the test screen!
  The test screen display can be held by pressing the SHIFT key **H** and the key “**.** ”!
  By pressing the key “**.** ” again, the normal crane operating screen appears again!
  If the test screen is not held, then the normal crane operating screen appears after 10 seconds!

P Program keys

- The program keys are used to select individual programs. However, the appropriate program-specific features (for example, switching from set up to crane operation once with “O.K.”) must be noted.
- **Note:**
  A program currently running **cannot** be called again using its program key!
  The programs can only be called up with their program key when the set up key was not actuated before!

C Input key ENTER

- No function in crane operation program

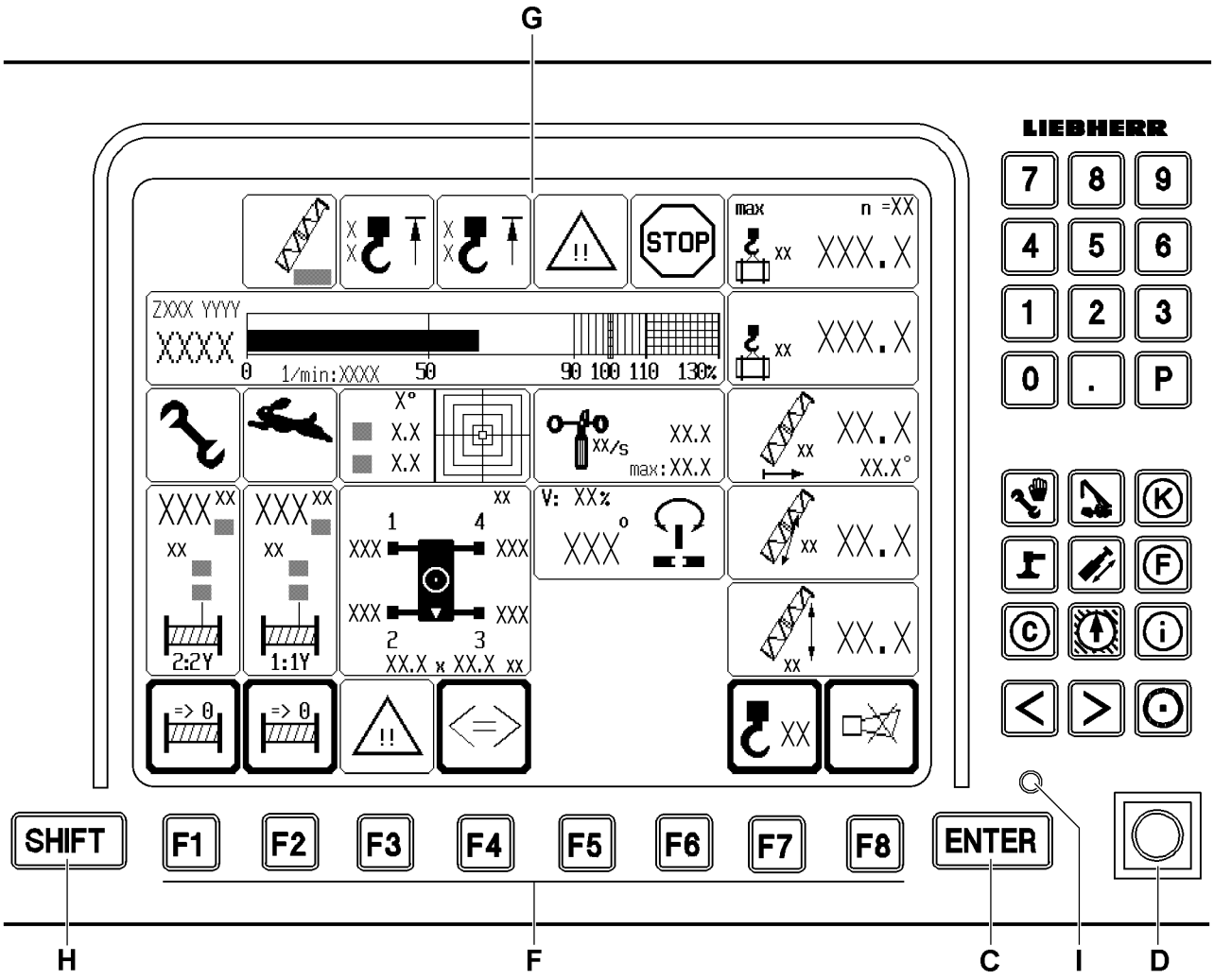
G
LIEBHERR
7 8 9
4 5 6
1 2 3
0 . P
STOP
max n =XX
ZXXX YYYY
XXXX
0 1/min:XXXX 50 90 100 110 130%
XXX.X
XX.X
XX.X°
V: XX%
XXX°
2:2Y
1:1Y
XX.X x XX.X xx
=> 0
SHIFT
F1
F2
F3
F4
F5
F6
F7
F8
ENTER
H
F
C
I
D

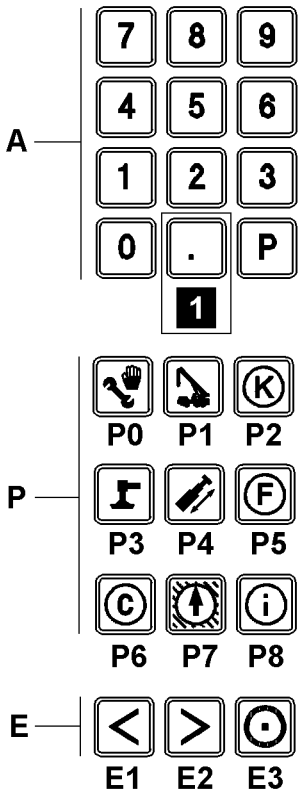
A
7 8 9
4 5 6
1 2 3
0 . P
1
P
P0 P1 P2
P3 P4 P5
P6 P7 P8
E
E1 E2 E3

B111900

D Set up key

- Zero position (not actuated):
  Normal operation
- Touching:
  Function “Exceedance of shut off limits of the LICCON overload protection” released
- **Exceeding the shut off limits of the LICCON overload protection!**
  If the shut off limits of the LICCON overload protection are exceeded, the LICCON overload protection shuts the crane movements off!
  These shut offs can be exceeded by the set up key **D** in the “Right touching” position! To do so, chapter 4.20 in the Crane operating instructions must be observed!

Note
Double function set up key!
If the crane has **no** CE-mark, when actuating the set up key **D**, the release for the “Emergency operation LICCON overload protection” is automatically engaged!
▶ Take into account, when actuating the set up key **D**, that the “Emergency operation LICCON overload protection” is automatically released!

Note
Carry out the erection / take down procedures!
▶ By actuating the set up key **D**, all erection / take down procedures can be carried out within the erection / take down charts, for which no load charts are available!

- **Bypass of the hoist top shut off**
  If the hook block touches the hoist limit switch weight during the upward movement, the hoist limit switch reacts. The crane movement “spool up winches” and others are turned off. This shut off can be bypassed by the set up key **D** in the “Right touching” position. To do so, chapter 4.20 in the Crane operating instructions must be observed!

E Special function keys

- Monitor brightness adjustment
- Key combination **E3** and **E1**: Turn background illumination on / off
- Key combination **E3** and **E2**: Brightness adjustment in three stages

Note
▶ Additional functions of the special function keys **E** are program-dependent and are further explained in the description of the individual LICCON programs!

H SHIFT key

- Second level key assignments.

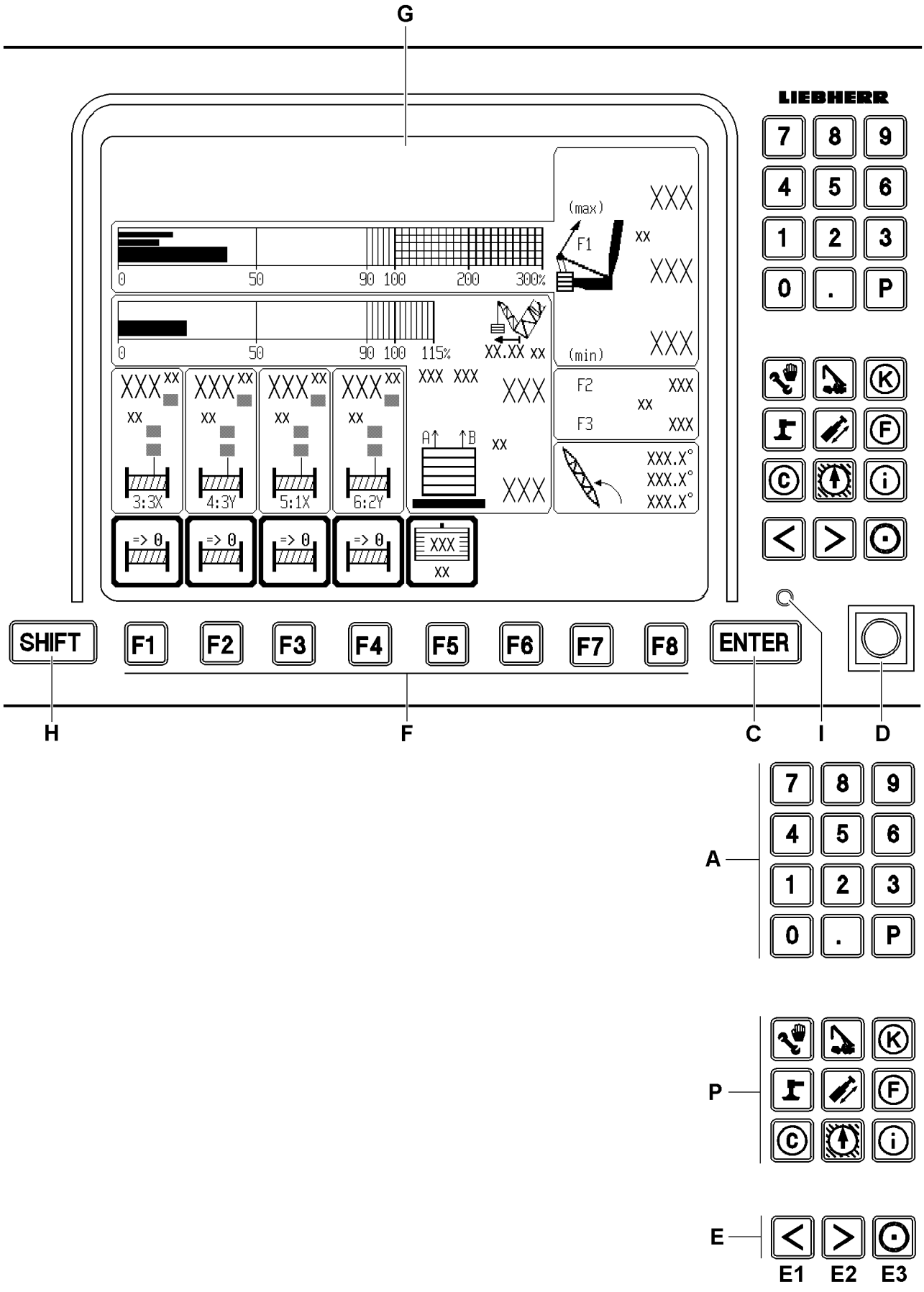
G
LIEBHERR
7 8 9
4 5 6
1 2 3
0 . P
K
F
C
SHIFT
F1 F2 F3 F4 F5 F6 F7 F8
ENTER
H
F
C
I
D
A
P
E
E1 E2 E3

B111902

6 Operating elements of the LICCON computer system on monitor 1

A	Keypad	• To edit the derrick ballast input values
P	Program keys	• No function
C	Input key ENTER	• Confirmation of changes
D	Key button	• Acoustic signals which can be shut off of bell / horn turntable can be shut off.
E	Special function keys	• Monitor brightness adjustment • Key combination **E3** and **E1**: Turn background illumination on / off • Key combination **E3** and **E2**: Brightness adjustment in three stages

Note

▶ Additional functions of the special function keys **E** are program-dependent and are further explained in the description of the individual LICCON programs!

F	Function keys	• The function keys should always be viewed in conjunction with the function key icon line displayed on the monitor.
G	Display	• In the display appears “normally” the crane operating screen of monitor 1. **Note:** For diagnostics purposes, the monitor of the ballast trailer control* can be assigned (only optional for LR1750)!
H	SHIFT key	• No function
I	LED display	• Monitor supply voltage present

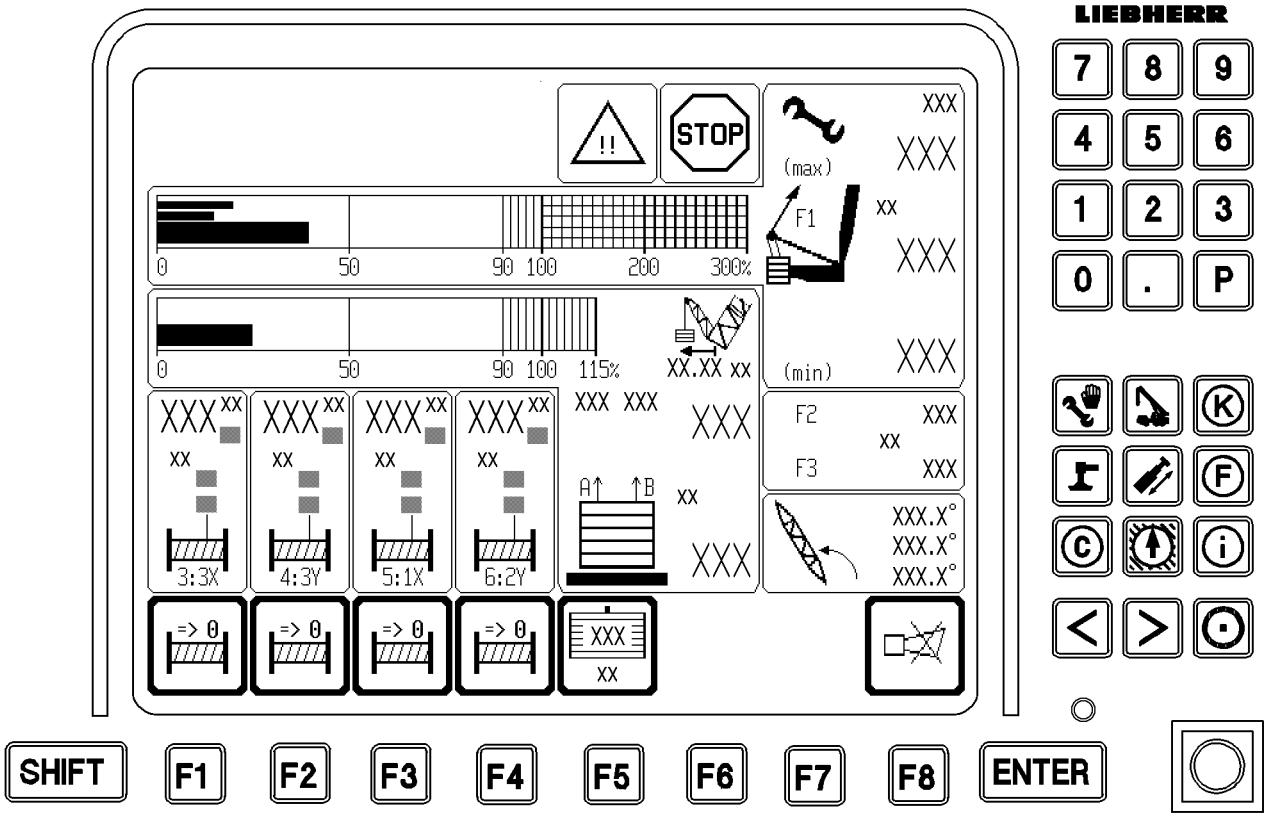
LIEBHERR
STOP
(max)
(min)
F1
F2
F3
7 8 9
4 5 6
1 2 3
0 . P
SHIFT F1 F2 F3 F4 F5 F6 F7 F8 ENTER

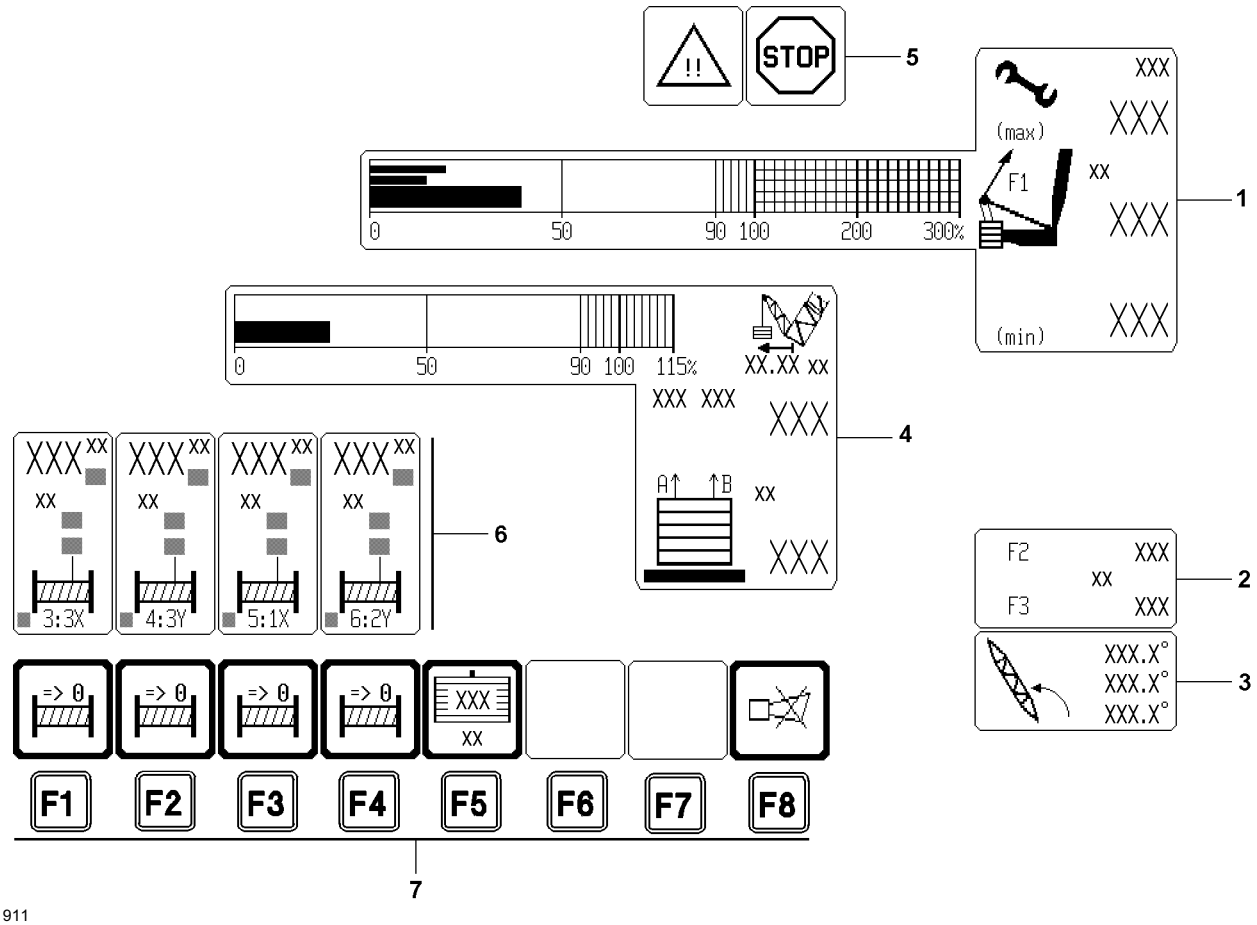
5
1
4
6
2
3
7
STOP
(max)
(min)
F1
F2
F3
F1 F2 F3 F4 F5 F6 F7 F8

B111911

7 The Crane operation program on monitor 1

The maximum or minimum load required to balance the crane can be increased or decreased on cranes with a derrick ballast* operating under load, by increasing or reducing the derrick ballast.

Note

- ▶ The suspended ballast and the ballast trailer* (only optional for LR1750) are generally described as **derrick ballast**!
- ▶ The fixed compensation weight which is assembled on the turntable is generally described as the **counterweight**!

In the crane operation program on monitor 1, the monitor is divided into eight areas:

1 Test point 1 = F1	• Pull test brackets on test points 1A and 1B in the SA-frame guying
2 Test points 2/3 = F2/F3	• Pull test brackets on test points 2A and 2B in the N/W guying. • Pull test brackets on test points 3A and 3B in the S-guying in derrick operation.
3 Derrick boom angle	
4 Derrick ballast, weight and utilization	• Derrick ballast, placed and pulled. • Derrick ballast radius • Derrick ballast utilization. • Forces in derrick ballast guyings A and B
5 Alarm functions	• “Advance warning” and **“STOP”** icons.
6 Winch displays	• Winch 3* • Winch 4 • Winch 5* • Winch 6*
7 Function key line	• Function keys always refer to the icon shown directly above • **Note:** If no icon is shown in the line directly above the function key, then no function is assigned in the program to the function key! See for example function key F6 and function key F7!

7.1 Test point 1 = F1

DANGER

Overload of crane in assembly operation!

If the crane is utilized in assembly operation past the assembly limit, then crane components can be overloaded!

The crane can topple over and personnel can be severely injured or killed!

- ▶ In assembly operation, the crane operator must make sure that the crane is not subjected to loads to the assembly limit!
- ▶ The crane may always only be erected / taken down **without load**, according to the data in the operating instructions and the erection and take down charts!

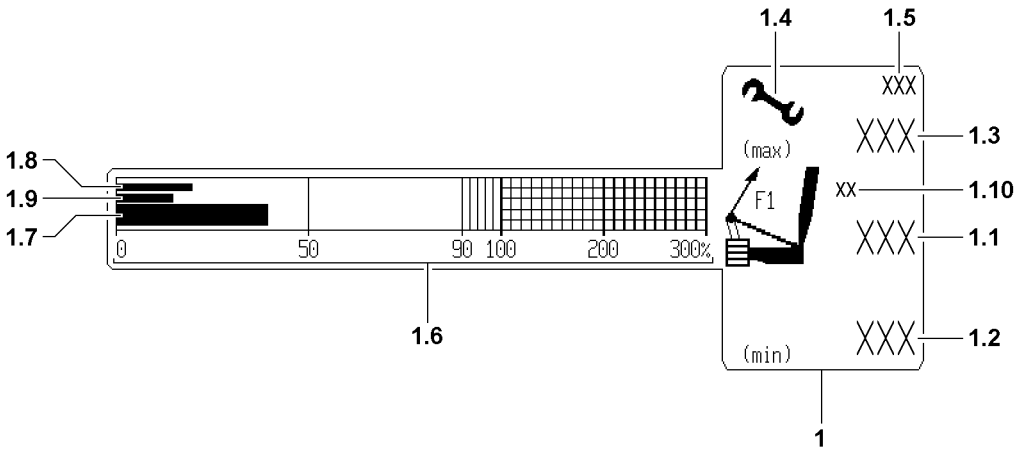
1.4
1.5
XXX
(max)
XXX
1.3
1.8
1.9
1.7
F1
XX
1.10
XXX
1.1
0
50
90 100
200
300%
1.6
(min)
XXX
1.2
1

B111912

7.1.1 F1-assembly maximum force

The F1-assembly-maximum force is abbreviated in the chapter as $F1_{max\text{-}assembly}$.

Note

- A load chart is available in the operating range of the crane! Outside of the operating range, no load chart is available, the specifications for assembly operation apply!
- $F1_{max\text{-}assembly}$ **1.5** can be larger within the operating range for static reasons than $F1_{max\text{-}assembly}$ **1.5** outside the operating range!
- When luffing out of the operating range with load chart, the value $F1_{max\text{-}assembly}$ **1.5** can therefore be significantly reduced!

DANGER

Failure of angle sensor!

If angle sensor on the boom for the LMB are defective, then the LMB uses the highest permissible $F1_{max\text{-}assembly}$ **1.5** as the non-bypassable maximum value!

This ensures that the boom can always be taken down, even with a defective angle sensor!

If the crane is not taken down after a failure of the angle sensors exactly according to the data in the operating instructions and the erection / take down charts, then it can be overloaded!

The crane can topple over and personnel can be severely injured or killed!

- Take the crane down if needed exactly according to the data in the operating instructions and the erection / take down charts!

Operating modes without derrick boom

For operating modes without derrick boom, there is a unbypassable F1-limit value:

– $F1_{max\text{-}assembly}$ **1.5**
  as upper limit for erection / take down of the boom
  and
  for crane operation with load chart

Operating modes with derrick boom

For operating modes with derrick boom there are two F1-limit values

– $F1_{max\text{-}assembly}$ **1.5** outside the operating range
  For erection and assembly of the crane (unbypassable)
– $F1_{max\text{-}operation}$ **1.3**
  As upper limit for crane operation with load chart (and a few angle degrees next to it)

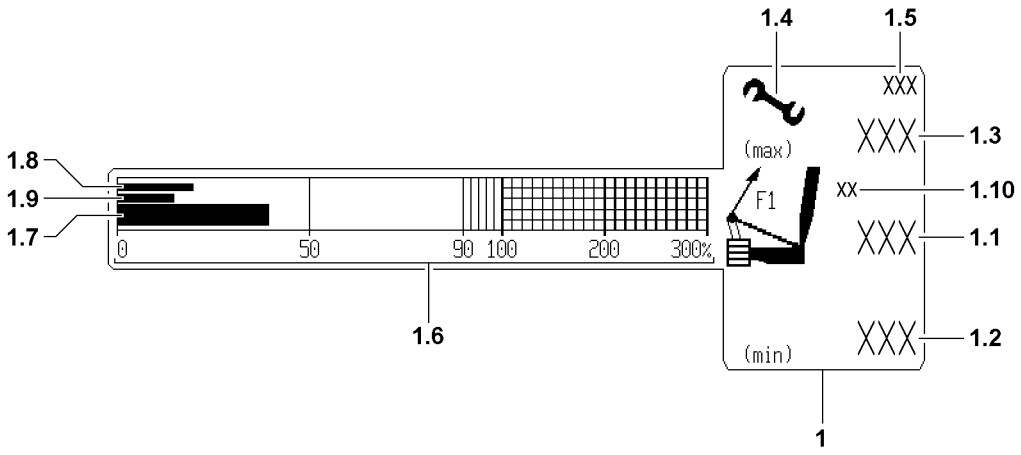
1.4
1.5
XXX
(max)
XXX
1.3
1.8
1.9
1.7
F1
XX
1.10
XXX
1.1
0
50
90
100
200
300%
1.6
(min)
XXX
1.2
1

B111912

7.1.2 Test point 1 = F1 / icon description

Pull test brackets Test point 1A and 1B are in the SA-frame guying

Position	Icons / display values	Type of display	Is shown
1	Icon “Test point 1”	Static	Always
1.1	F1-actual force = $F1_{actual}$ $F1_{actual} = F1A_{actual} + F1B_{actual}$ $F1A_{actual}$ = F1-actual force test point 1A (SA-frame left) $F1B_{actual}$ = F1-actual force test point 1B (SA-frame right)	Static	For valid value
		“???” blinking	For invalid value
1.2	F1-minimum force = $F1_{min}$	Static	Always when $F1_{min}$ is larger than 0 **Note:** A shut off occurs when falling below $F1_{min}$ If no value is shown $F1_{min} = 0$!
1.3	F1-operational maximum force = $F1_{max\text{-}operation}$	Static	Only in operating modes with derrick ballast (DB/DBW) **Note:** $F1_{max\text{-}operation}$ is the maximum value which may be reached in crane operation!

Note

Shut off $F1_{min}$

- If the utilization of the derrick ballast is below 50%, then there is no immediate shut off when falling below $F1_{min}$ **1.2**!
- The acoustical and optical warnings remain unaffected by the utilization of the derrick ballast!

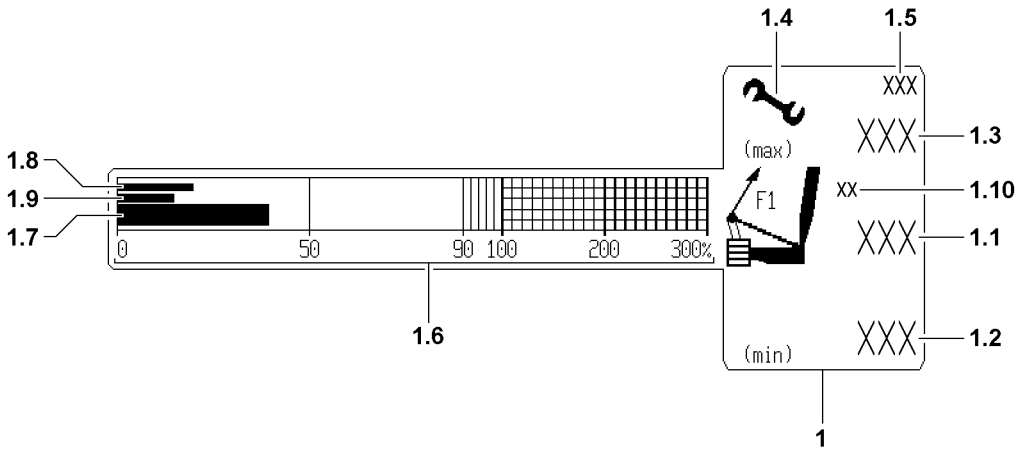
1.4
1.5
XXX
(max)
XXX
1.3
1.8
1.9
1.7
F1
XX
1.10
XXX
1.1
0
50
90 100
200
300%
1.6
(min)
XXX
1.2
1

B111912

Position	Icons / display values	Type of display	Is shown
1.4	Assembly icon	Static / blinking	In “Assembly operation: Boom not in operating range” **and / or** Advance warning / shut off: Observe F1 limit values!
1.5	F1-assembly maximum force = $F1_{max\text{-}assembly}$	Static / blinking	In “Assembly operation: Boom not in operating range” **and / or** Advance warning / shut off: Observe F1 limit values! Appears if $F1_{actual}$ is larger than 90% of $F1_{max\text{-}assembly}$
1.6	F1-utilization scale in percent [%]	Static	Always
1.7	F1-utilization bar = Ratio $F1_{actual}$ to $F1_{max\text{-}operation}$ No display (0 percent) at: $F1_{max\text{-}operation} = 0$ **or** No value **or** $F1_{min}$ = invalid	Dynamic	In operating modes with derrick ballast (DB/DBW)

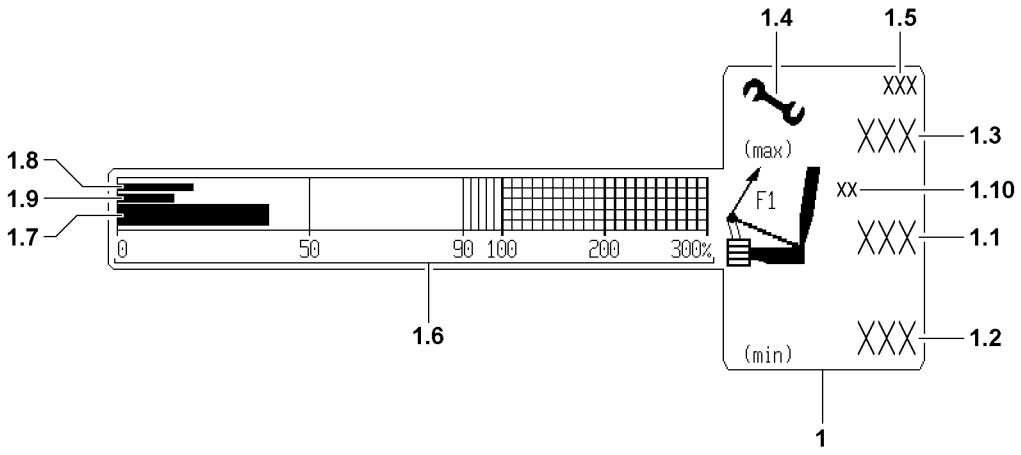
1.4
1.5
XXX
XXX
1.3
(max)
1.8
1.9
1.7
F1
XX
1.10
XXX
1.1
0
50
90 100
200
300%
1.6
(min)
XXX
1.2
1

B111912

Position	Icons / display values	Type of display	Is shown
1.8	F1-Min-warning bar = Ratio $F1_{min\text{-}warning\ value}$ to $F1_{max\text{-}operation}$ ($F1_{min\text{-}warning\ value} = F1_{min} + \Delta_{F1}$) No display (0 percent) at: $F1_{max\text{-}operation} = 0$ **or** No value **or** $F1_{max\text{-}operation} =$ invalid	Dynamic	In operating modes with derrick ballast (DB/DBW) Δ_{F1} = 15 t for cranes with max- load smaller than 1000 t
1.9	F1-min-stop bar = Ratio $F1_{min}$ to $F1_{max\text{-}operation}$ 0 percent [%] for: $F1_{max\text{-}operation} = 0$ **or** No value **or** $F1_{max\text{-}operation\ b} =$ invalid	Dynamic	In operating modes with derrick ballast (DB/DBW)
1.10	Measuring unit icon	Static	Always

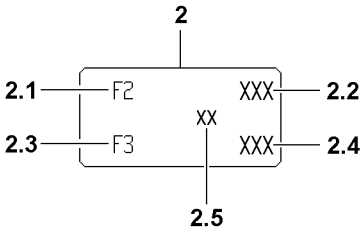

B111913

7.2 Test point 2 = F2 and test point 3 = F3

Pull test brackets test point 2A and 2B are in the guying auxiliary boom / accessory on the NA-bracket I (WA-bracket I).
Pull test brackets test point 3A and 3B are in the guying derrick boom / main boom on the main boom head.

Position	Icons / display values	Type of display	Is shown
2	Icon for N/W-guy force and main boom guy force in derrick operation	Static	In operating modes with auxiliary boom / accessory and / or derrick boom
2.1	Icon F2 for N/W-guy force test point 2	Static	In operating modes with auxiliary boom / accessory
2.2	F2-actual force = $F2_{actual}$ $F2_{actual} = F2A_{actual} + F2B_{actual}$ Test point 2A = left Test point 2B = right	Static	In operating modes with auxiliary boom / accessory and valid F2-value
		“???” blinking	In operating modes with auxiliary boom / accessory and invalid F2-value
2.3	Icon F3 for main boom guy force test point 3	Static	In operating modes with derrick boom
2.4	F3-actual force = $F3_{actual}$ $F3_{actual} = F3A_{actual} + F3B_{actual}$ Test point 3A = left Test point 3B = right	Static	In operating modes with derrick boom and valid F3-value
		“???” blinking	In operating modes with derrick boom and invalid F3-value
2.5	Measuring unit icon	Static	Always

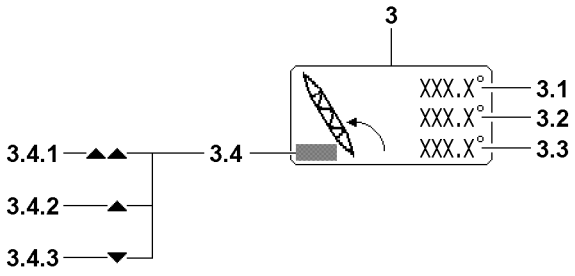

B111914

7.3 Derrick boom angle

Position	Icons / display values	Type of display	Is shown
3	Derrick boom angle icon	Static	In operating modes with derrick boom
3.1	Maximum derrick boom angle in crane operation = angle-D_{max} in [°]	Static	In operating modes with derrick boom and angle-$D_{current}$ smaller or same as angle-D_{max}
		Blinking	In operating modes with derrick boom and angle-$D_{current}$ larger than angle-D_{max}
3.2	Current derrick boom angle = angle-$D_{current}$ in [°]	Static	In operating modes with derrick boom and valid value
		“???” blinking	In operating modes with derrick boom and invalid value
3.3	Minimum derrick boom angle during crane operation = angle-D_{min} in [°]	Static	In operating modes with derrick boom and angle-$D_{current}$ larger or same as angle-D_{min}
		Blinking	In operating modes with derrick boom and angle-$D_{current}$ smaller than angle-D_{min}
3.4	Alarm functions derrick boom		Limitation / monitoring of relapse cylinders **Note:** As an icon appears, an error message is issued!
3.4.1	Two arrows pointing up	Static	Relapse cylinder on block (limit switch actuated) or sensor / limit switch defective
3.4.2	Arrow pointing up	Static	At angle-$D_{current}$ larger than angle-D_{max}
3.4.3	Arrow pointing down	Static	At angle-$D_{current}$ smaller than angle-D_{min}

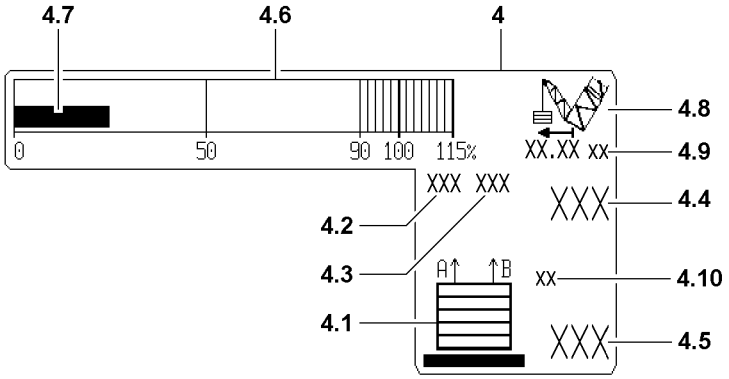
4.7
4.6
4
0
50
90 100 115%
XX.XX
xx
4.8
4.9
XXX XXX
4.4
4.2
4.3
A B
xx
4.10
4.1
XXX
4.5

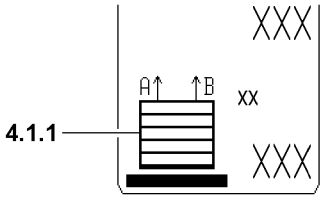
XXX
A B
xx
4.1.1
XXX

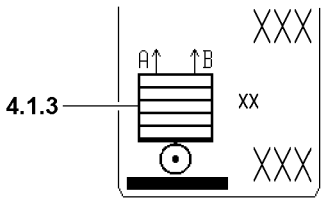
XXX
A B
xx
4.1.3
XXX

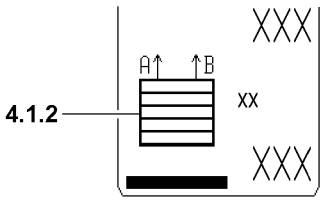
XXX
A B
xx
4.1.2
XXX

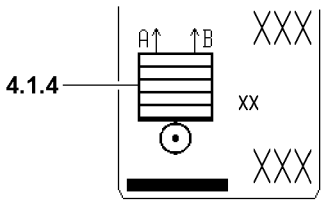
XXX
A B
xx
4.1.4
XXX

B111915

7.4 Derrick ballast, weight and utilization

Note
- ▶ Ballast trailer*: Only optional for LR1750!
- ▶ In crane operation with ballast trailer* observe the respective chapters!

Test points derrick ballast guying A are:
- – Test point 4A = pressure sensor ring surface left F4A
- – Test point 5A = pressure sensor piston surface left F5A

Test points derrick ballast guying B are:
- – Test point 4B = pressure sensor ring surface right F4B
- – Test point 5B = pressure sensor piston surface right F5B

Position	Icons / display values	Type of display	Is shown
4	“Derrick ballast, weight and utilization” icon	Static	For operating modes with derrick ballast
4.1	“Derrick ballast” icon	Static	In operating modes with derrick ballast, depending on the type and the condition of the derrick ballast (see 4.1.1 - 4.1.4)

Note
- ▶ The view of the “derrick ballast” **4.1** icon changes depending on if the derrick ballast is set up as a suspended ballast or as a ballast trailer!
- ▶ During crane operation observe the respective chapters for suspended ballast or ballast trailer in the Crane operating instructions!

Position	Icons / display values	Type of display	Is shown
4.1.1	“Suspended ballast on the ground” icon	Static	Ground contact sensor reports “Suspended ballast **not suspended** ”
4.1.2	“Suspended ballast suspended” icon	Static	Ground contact sensor reports “Suspended ballast**suspended** ”
4.1.3	“Ballast trailer on the ground” icon	Static	Key button ballast trailer in position “Ballast trailer **not suspended** ”
4.1.4	“Ballast trailer suspended” icon	Static	Key button ballast trailer in position “Ballast trailer **suspended** ”

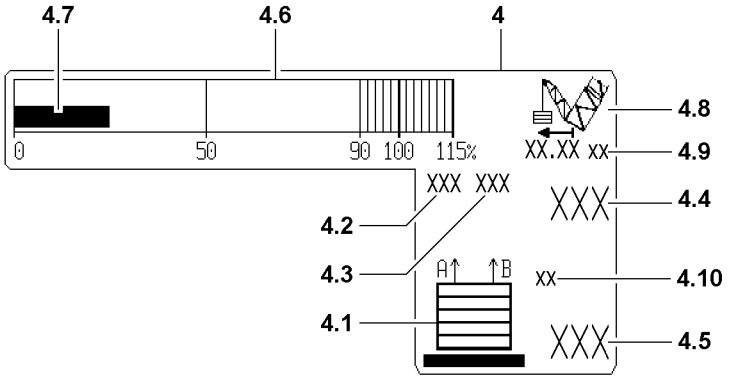
4.7
4.6
4
0
50
90 100 115%
XX.XX
xx
4.8
4.9
XXX XXX
4.4
4.2
4.3
A B
xx
4.10
4.1
XXX
4.5

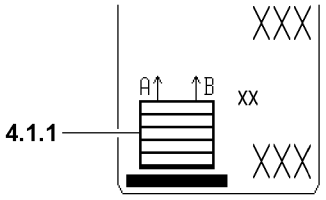
A B
xx
XXX
4.1.1

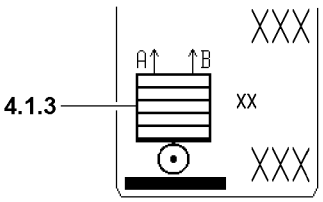
A B
xx
XXX
4.1.3

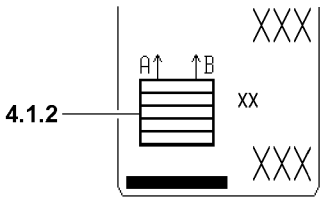
A B
xx
XXX
4.1.2

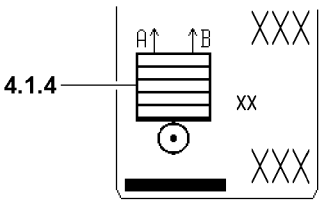
A B
xx
XXX
4.1.4

B111915

Position	Icons / display values	Type of display	Is shown
4.2	Force in derrick ballast guying A (left) Test point 4A Test point 5A	Static	For operating modes with derrick ballast **and** “Values test points” valid
		Blinking	For operating modes with derrick ballast **and** “Values test points” valid **and** Difference between guy force A and B is larger than permissible
		“???” blinking	For operating modes with derrick ballast **and** At least one “Value test point” invalid
4.3	Force in derrick ballast guying B (right) Test point 5A Test point 5B	Static	Valid in operating modes with derrick ballast and **F4B** **and** “Values test points” valid
		Blinking	For operating modes with derrick ballast **and** “Values test points” valid **and** Difference between guy force A and B is larger than permissible
		“???” blinking	For operating modes with derrick ballast **and** At least one “Value test point” invalid

Note
Failure of pressure sensor!
- ▶ If only one pressure sensor fails, for example F5A (test point 5A) invalid, then the LICCON takes F5A = F5B in the interim!
- ▶ An error message is issued!
- ▶ The error must be remedied immediately!

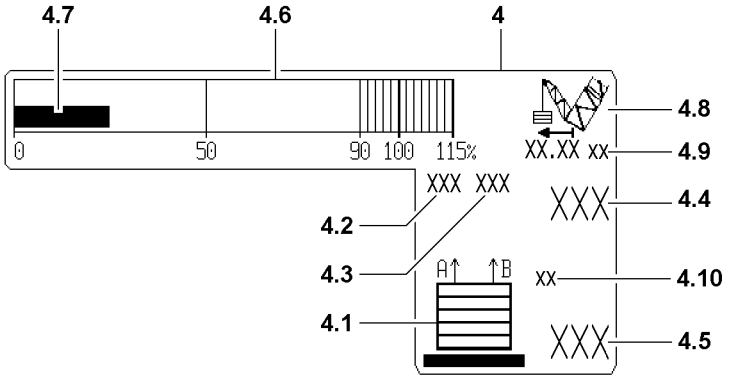
4.7
4.6
4
0
50
90 100 115%
XX.XX xx
4.8
4.9
XXX XXX
4.4
4.2
4.3
A B
xx
4.10
4.1
XXX
4.5

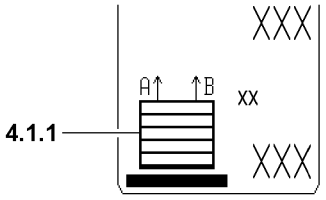
A B
xx
4.1.1
XXX
XXX

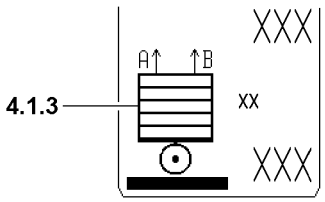
A B
xx
4.1.3
XXX
XXX

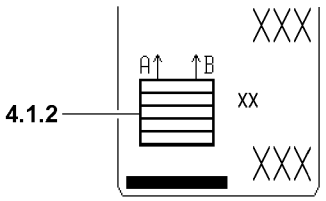
A B
xx
4.1.2
XXX
XXX

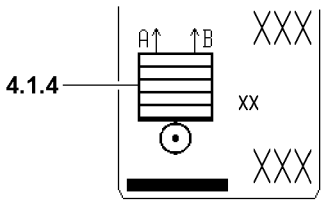
A B
xx
4.1.4
XXX
XXX

B111915

Position	Icons / display values	Type of display	Is shown
4.4	Pulled derrick ballast	Static	In operating modes with derrick ballast, if value valid
	= BA_{pulled} = vertical force components in derrick ballast guying, calculated from test points 4A, 4B, 5A and 5B **Note:** The sum of forces in the derrick ballast guying A and B is larger or the same as the pulled derrick ballast (BA_{pulled})!	"???" blinking	In operating modes with derrick ballast, if value invalid **or** Operating mode with BW and derrick ballast radius invalid
4.5	Placed derrick ballast	Static	In operating modes with derrick ballast, if value BA_{placed} is permissible
	= BA_{placed}	Blinking	In operating modes with derrick ballast, if value BA_{placed} is questionable
	Note: This value has been entered by hand and confirmed with the **ENTER** key! The value is saved when turning off and is valid again after turning on until it is changed with the function key **"F5"** !	"???" blinking	In operating modes with derrick ballast, if value invalid

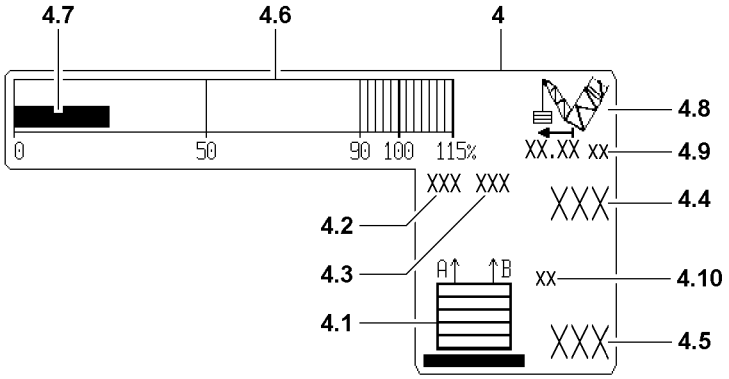
4.7
4.6
4
0
50
90 100 115%
XX.XX xx
4.8
4.9
XXX XXX
4.4
4.2
4.3
A B
xx
4.10
4.1
XXX
4.5

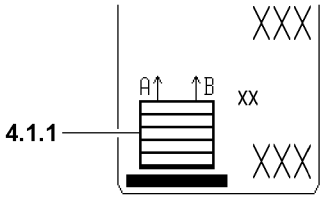
A B
xx
XXX
4.1.1

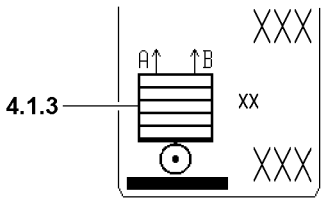
A B
xx
XXX
4.1.3

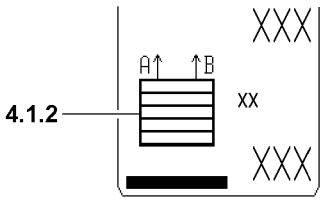
A B
xx
XXX
4.1.2

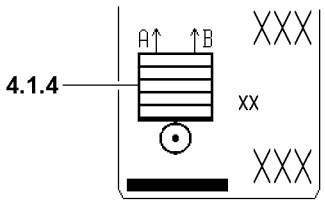
A B
xx
XXX
4.1.4

B111915

Position	Icons / display values	Type of display	Is shown
4.6	Ballast utilization scale	Static	Always
4.7	Derrick ballast utilization bar = BA_{pulled} / BA_{placed} in percentages [%] Derrick ballast utilization bar is 0 at: BA_{placed} smaller than BA_{placed_min} **or** BA_{pulled} = invalid	Dynamic	For operating modes with derrick ballast **Note:** The utilization bar can show max. 115 %! **Note:** BA_{placed_min} 5 t for cranes with max-load smaller than 1000 t ! BA_{placed_min} 10 t for cranes with max. load larger or same as 1000 t !
4.8	“Derrick ballast radius” icon	Static	For operating modes with derrick ballast
4.9	Measuring unit Derrick ballast radius	Static	Valid in operating modes with derrick ballast and derrick ballast radius value
		Blinking	Invalid in operating modes with derrick ballast and derrick ballast radius value
4.10	Measuring unit Derrick ballast weight	Static	Always

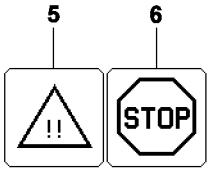

B199940

7.5 Alarm functions

NOTICE
Triggered alarm function!
If an alarm function is triggered (for example a advance warning occurrence or LMB Stop), the cause must be determined!
- ▶ Always pay attention to triggered alarm functions!
- ▶ Alarm functions can flash over the monitor!

Note
After run LMB Stop!
- ▶ An LMB stop with after run remains for a certain period of time! Possible fluctuating movements of the crane can be thereby minimized!

Position	Icons / display values	Type of display	Is shown
5	“Advance warning” icon	Blinking	At $F1_{min\text{-}advance\ warning}$ ($F1_{is}$ smaller than $F1_{min\text{-}warning\ value}$)
6	“STOP” icon	Blinking	At $F1_{min\text{-}stop}$ ($F1_{is}$ smaller than $F1_{min}$) with after run 3 s **or** At $F1_{max\text{-}operation\ stop}$ ($F1$ larger or same as $F1_{max\text{-}operation\ shut\ off\ value}$) with after run three seconds **or** $F1_{max\text{-}assembly\text{-}stop}$ ($F1_{is}$ larger or same as $F1_{max\text{-}assembly}$) with after run three seconds

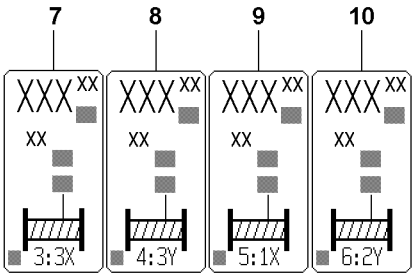
7
8
9
10
XXX XX
XX
3:3X
4:3Y
5:1X
6:2Y

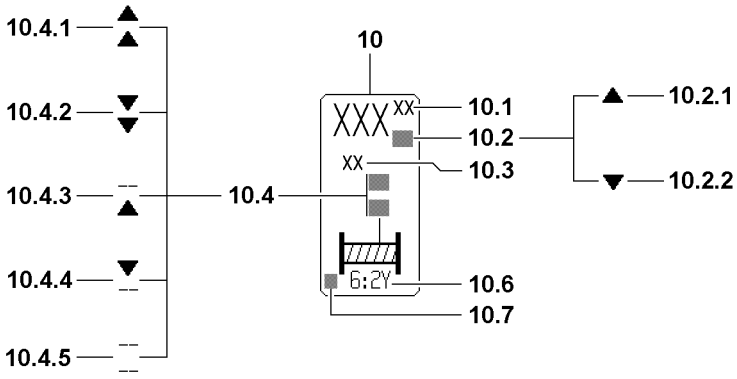
10.4.1
10.4.2
10.4.3
10.4.4
10.4.5
10.4
10
XXX XX
XX
6:2Y
10.1
10.2
10.3
10.6
10.7
10.2.1
10.2.2

B111916

7.6 Winch displays

7.6.1 Winches 3 to 6

The icons for winch 3*, winch 4, winch 5* and winch 6* are only shown on monitor 1, if the crane is equipped with these winches.
The display of winches is the same as the display of winch 1 and 2 on LICCON monitor 0.

Position	Icons / display values	Type of display	Is shown
7	Winch display winch 3*	Static	With installed and plugged in winch 3 and winch turn sensor active* **or** if emergency operation is turned on.
8	Winch display winch 4	Static	With installed and plugged in winch 4 and winch turn sensor active **or** if emergency operation is turned on.
9	Winch display winch 5*	Static	With installed and plugged in winch 5 and winch turn sensor active* **or** if emergency operation is turned on.
10	Winch display winch 6*	Static	With installed and plugged in winch 6 and winch turn sensor active* **or** if emergency operation is turned on.

Note
Assignment control winch / hoist winch
- ▶ “Winch 3* ” and “winch 4” are always calculated as control winches!
- ▶ “Winch 5* ” is calculated as control winch in crane operation with auxiliary boom / accessory!
- ▶ “Winch 5* ” is calculated as hoist winch in crane operation without auxiliary boom / accessory!
- ▶ “Winch 6* ” is always calculated as hoist winch!

Note
When “Winch 5* ” or “Winch 6* ” is calculated as hoist winch and:
- ▶ No boom nose is installed, then the hook path calculation is made with the reeving of the boom!
- ▶ The boom nose is installed, then the hook path calculation is made with the reeving of the boom nose!

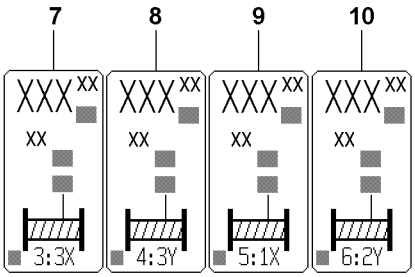
7
8
9
10
XXX XX
XX
3:3X
4:3Y
5:1X
6:2Y

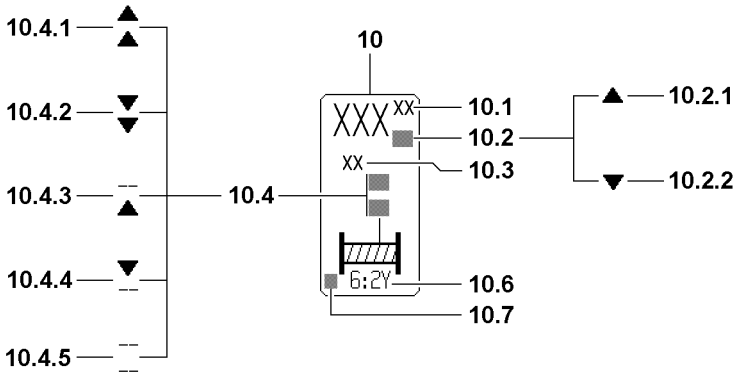
10.4.1
10.4.2
10.4.3
10.4.4
10.4.5
10.4
10
10.1
10.2
10.3
10.6
10.7
10.2.1
10.2.2
XXX XX
XX
6:2Y

B111916

7.6.2 Winch display icon

The winch 3 and winch 6 icons have the same meaning, which are explained for the "Winch 6" **10** icon.

Note

Display area winch displays!

- The display values **10.1** have only three positions before the comma, any positions before that are cut off! The crane operator must evaluate for himself if, for example 200 m rope is on a winch or 1200 m.**The display in both cases is identical with 200 m!**
- The hook path calculation only works accurately if the load is suspended freely and is not luffed during the lifting procedure. Not taken into account are flexation and rope expansion.
- The length display (hook path display) is only accurate and the layer sheer is only taken into account correctly if the winch has been calibrated and no interruptions of the CPU power supply have occurred (cold start). The hook travel display is calibrated by spooling the rope up or out until the calibration switch reacts.

Note

- If one of the winches is used as hoist winch according to the set operating mode, then the **completed hook path** is shown in the winch icon. The value, which was tared by the corresponding function key is still shown unchanged, even after turning off and on or after an operating mode change!
- If one of the winches is used as a control winch, then the current **rope length on the winch drum** is shown, not the hook path. Then taring is possible, but after turning on and off again or after an operating mode change, the original value "Rope length on the rope drum" is shown again!

10	"Winch 6" icon	
10.1	Completed hook path	• In [m] or [ft] From a zero point to be determined. • **Note:** Is statically shown when the winch is calculated as **hoist winch** and a manually entered reeving must be assigned to this winch!
or		
10.1	Rope length of the winch drum	• In [m] or [ft] • **Note:** Is statically shown when the winch is calculated as **control winch**! • **Note:** For the intake gear, the rope length is valid equally for the left and the right half of the rope drum!

Note

Error in winch path measurement!

- In case of an error in the winch path measurement, blinking "???" appear as display value **10.1**!
- If an error occurs and an error message is issued, see Diagnostics manual!

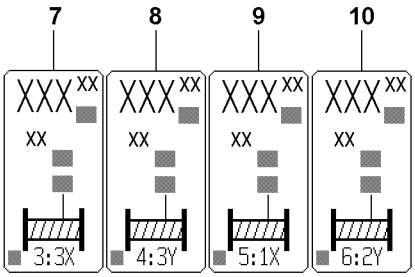
7
8
9
10
XXX XX
XX
3:3X
4:3Y
5:1X
6:2Y

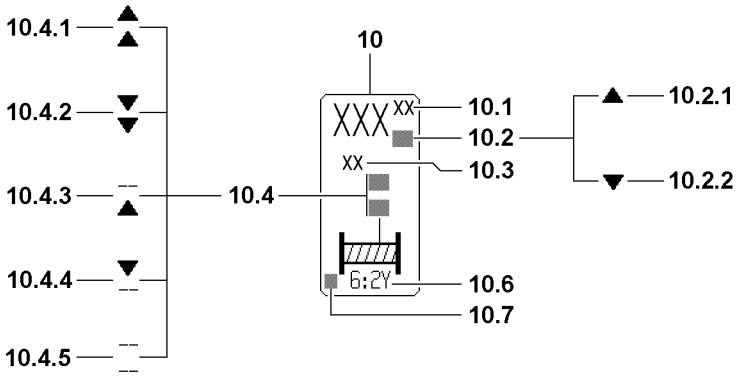
10.4.1
10.4.2
10.4.3
10.4.4
10.4.5
10.4
10
XXX XX
XX
6:2Y
10.1
10.2
10.3
10.6
10.7
10.2.1
10.2.2

B111916

10.2 Direction of hook movement

The arrows on the length value show the direction of the hook movement in relation to the zero point:
- Arrow up **10.2.1**: Hook has moved upward from the zero point.
- Arrow up **10.2.2**: Hook has moved down from the zero point.

10.3 Length unit for hook path display
- In [m] or [ft]

10.4 Winch status display
- There are five winch status icons (all blinking):

10.4.1 Spool out

10.4.2 Spool up

10.4.3 Spooled out
- Spooling out is blocked

10.4.4 Spooled up
- Spooling up is blocked

10.4.5 Winch is deactivated
- Spooling up and spooling out are blocked (via Control parameter program)
- **Note:**
  If no winch status icon appears, the activated winch is inactive and is neither spooled up nor out!

10.5 Winch icon
- (with rope end for winch status icon)

10.6 Winch number with master switch number and master switch operating direction
- Example: 6:2Y
  First digit: Winch number.
  Second digit: Master switch number.
  Letter: Master switch operating direction.

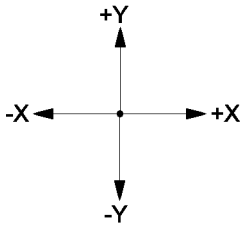

B199930

10.7 Vibration sensor
- If the vibration sensor for a winch is added on the master switch, then the arrow **10.7** appears in this winch icon for the added vibration sensor.
- **Note:**
  The vibration sensor is added for the first actuated crane function!

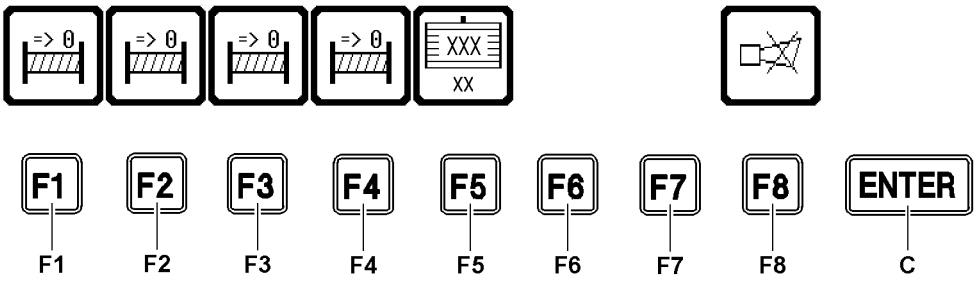

B111917

7.7 Function key line

Position	Function / function key line	Type of display	Is shown
F1	Tare length display of winch 3* **Note:** Tare = length display is set to **0** !	Static	If winch display for winch 3* is shown
F2	Tare the length display of winch 4 **Note:** Tare = length display is set to **0** !	Static	If winch display for winch 4 is shown
F3	Tare length display of winch 5* **Note:** Tare = length display is set to **0** !	Static	If winch display for winch 5* is shown
F4	Tare the length display of winch 6 **Note:** Tare = length display is set to **0** !	Static	If winch display for winch 6* is shown

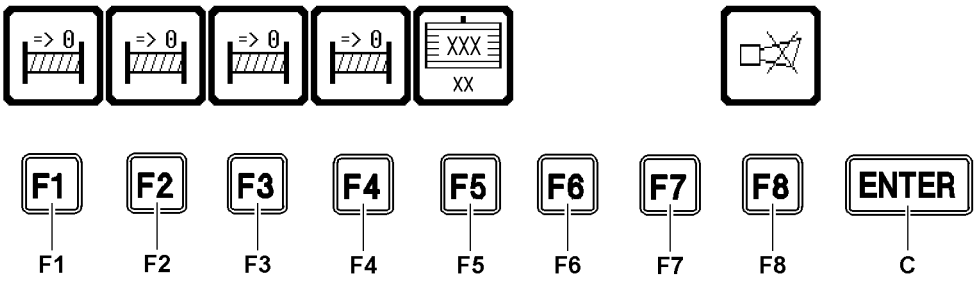

B111917

Position	Function / function key line	Type of display	Is shown
F5	Ballast editing key* When pressing function key F5, the thick icon frame changes to a thin icon frame. A blinking cursor appears in the ballast editing field. The value for the placed ballast can only be entered in the displayed weight unit [t] or [kips] via the keypad on monitor 1. **The ballast editing can be ended with:** - Pressing the ENTER key **C** . = take over value. The entered value appears now as value for the placed ballast (BA_{placed}) in the ballast icon **or** - Pressing the “F5” key. = End editing. The change is discarded. The old value of BA_{placed} remains in the ballast icon.	Static	For operating modes with derrick ballast

Note

▶ When editing the ballast, make sure to observe the respective section regarding the derrick ballast in the Crane operating instructions, chapter 4.03!

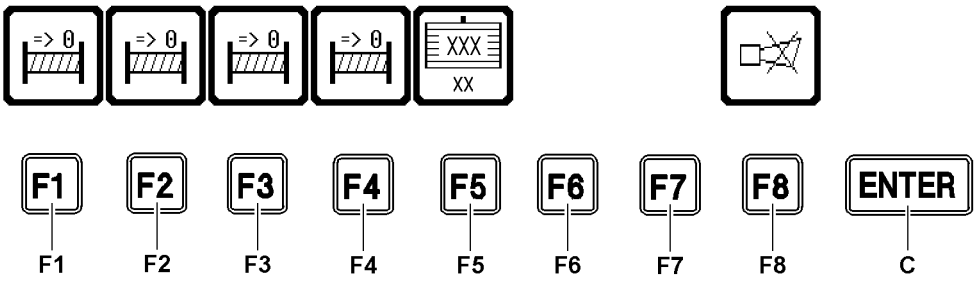

B111917

Position	Function / function key line	Type of display	Is shown
F5*	Ballast input value (BA_{edit})* = edited ballast value in function key icon of “F5”	Static	For **valid** ballast input value
		“???” blinking	For **invalid** ballast input value
F6	Not assigned		
F7	Not assigned		
F8	“Horn” icon - Turn off the acoustic signal “Horn” on monitor 1 by pressing the “F8” key.	Blinking	If the acoustic signal “Horn” sounds on monitor 1. See paragraph “Acoustic warning on monitor 1” .

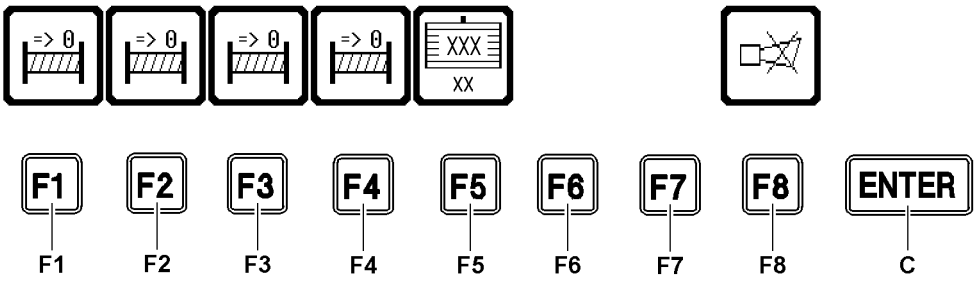

B111917

7.8 Acoustic warning on monitor 1

Acoustic warnings on monitor **1** are indicated by the warning sound “Horn”.
Error messages are shown in the horn icon of LICCON monitor **0**.
The warning sound “Horn” is divided into two categories:

– “Horn” is a beeping sound of a duration of approximately 0.5 seconds, which is repeated in a second cycle
– “Short horn” is a beeping sound of a duration of approximately 0.1 seconds, which is repeated in a second cycle

F8 “Horn” icon

• When the horn icon is shown in the LICCON monitor, any acoustic signals which will occur can be shut off by the LICCON monitor **1** by pressing the function key **F8**.

7.8.1 Acoustic signal “Horn”

For some operational errors found on the CPU 1, which can lead to a shut off of a movement, it is important to check the operating screen on monitor 1. These errors are also reported by the acoustical signal “Horn”, in addition to the optical display.

Operational errors are:

- Exceeding of test point 1 - assembly maximum threshold.
- Exceeding of test point 1 - operation -max- shut off threshold.
- Exceeding of test point 1 - minimum threshold.
- Exceeding of maximum derrick boom angle.
- Falling below minimum derrick boom angle.

Operational errors with error messages (LICCON-Error-Code LEC) are:

- Derrick ballast input error.
- Derrick ballast guy force: Difference between right (A) and left (B) too large.

Note

▶ The sensor monitored by CPU1 (pull test brackets, pressure sensors, angle sensors) are shown in case of an error by an error message on LICCON monitor 0!
▶ There is **no** acoustic signal “Horn” on monitor 1!

7.8.2 Acoustic signal “Short horn”

Sounds in addition to the visual display of error messages without an error number and which do not lead directly to crane movement shut off by the LICCON overload protection.

Monitored error messages are:

- Advance warning threshold of test point 1 - minimum force has been reached

7.8.3 Priority acoustic signal

– The “Horn” alarm has higher priority than the “Short horn” alarm, i.e. “Horn” takes preference over “Short horn”.
– The “Horn”, as well as the “Short horn” immediately become active again if an error recurs!

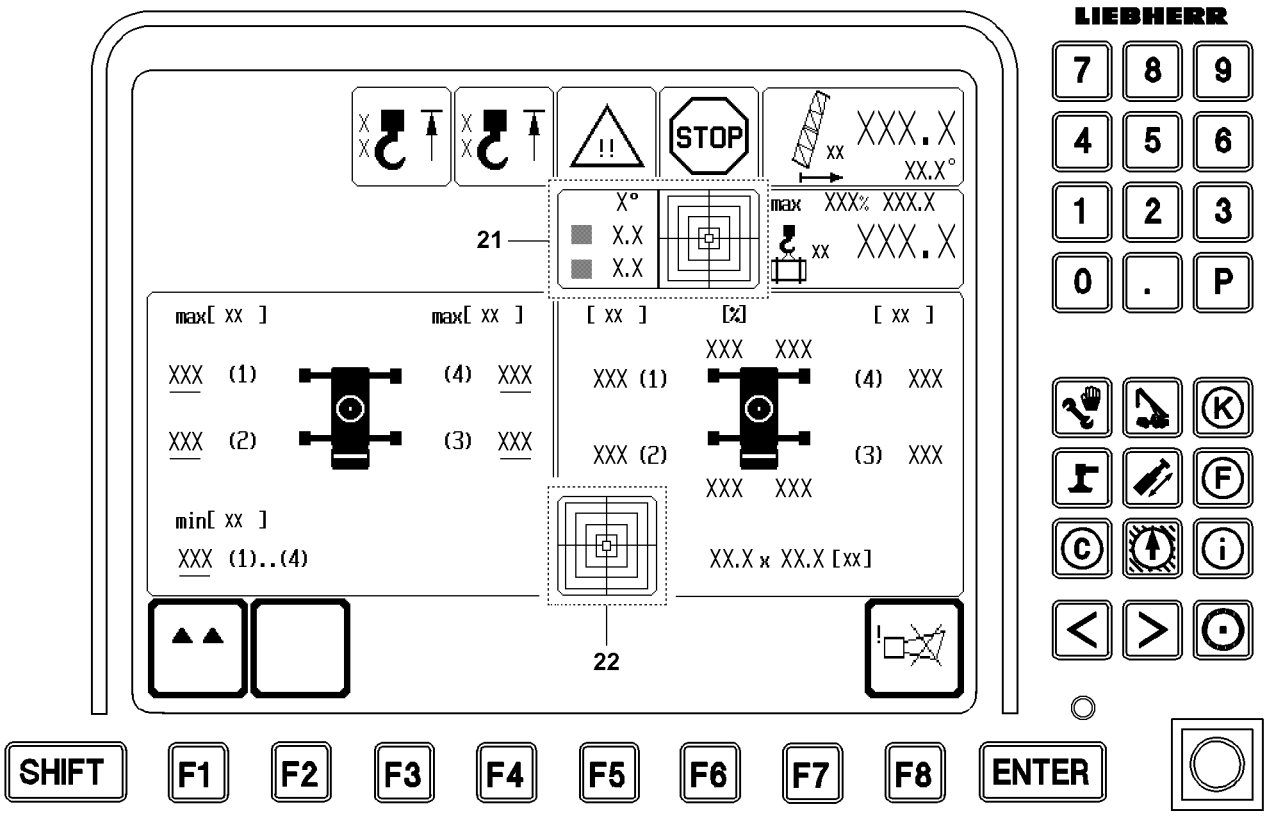
LIEBHERR
STOP
XXX.X
XX.X°
21
22
max[xx]
max[xx]
[xx]
[%]
[xx]
XXX (1)
XXX (2)
(3) XXX
(4) XXX
min[xx]
XXX (1)..(4)
XX.X x XX.X [xx]
7 8 9
4 5 6
1 2 3
0 . P
SHIFT
F1
F2
F3
F4
F5
F6
F7
F8
ENTER

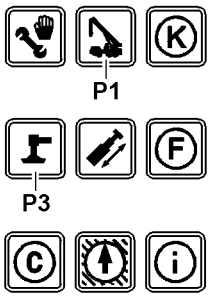
P1
P3

B111906

8 The Support program

The support program can contain up to two separate and independent parts (customer request). The monitor screen shows the complete configuration of the support program. Depending on the customer request, the individual parts of the program are inactive and therefore not visible on the LICCON monitor. The numerical values in the icons are only examples and may differ from the crane.

Note
In the support program, the incline of the crane is shown in two different icons:
- ▶ Incline of the crane in relation to the alignment of the crane superstructure: “Incline crane superstructure” icon **21**!
- ▶ Incline of the crane in relation to the alignment of the crane chassis: “Incline crane chassis” icon **22**!
- ▶ Example: If the crane superstructure is turned by 90°, then the “Incline crane superstructure” icon **21** adjusts to the changed position of the crane superstructure, the display in the “Incline crane chassis” icon **22** keeps its direction!

8.1 Starting / stopping the program

8.1.1 Starting the program

Note
- ▶ Support the crane manually / automatically, see Crane operating instructions, chapter 3.05!

▶ Press program key **P3**.

Result:
– The support program is started.

8.1.2 Stopping the program

▶ Press program key **P1**.

Result:
– The support program is terminated.
– System switches back to the crane operation program.

8.1.3 Program configuration

– **Support force monitoring** *
  Display and monitoring of support force of all four support cylinders during crane operation.
– **Sliding beam monitoring** *
  Only optional for LG 1750.
  Display and monitoring of extension conditions of all four sliding beams during crane operation.

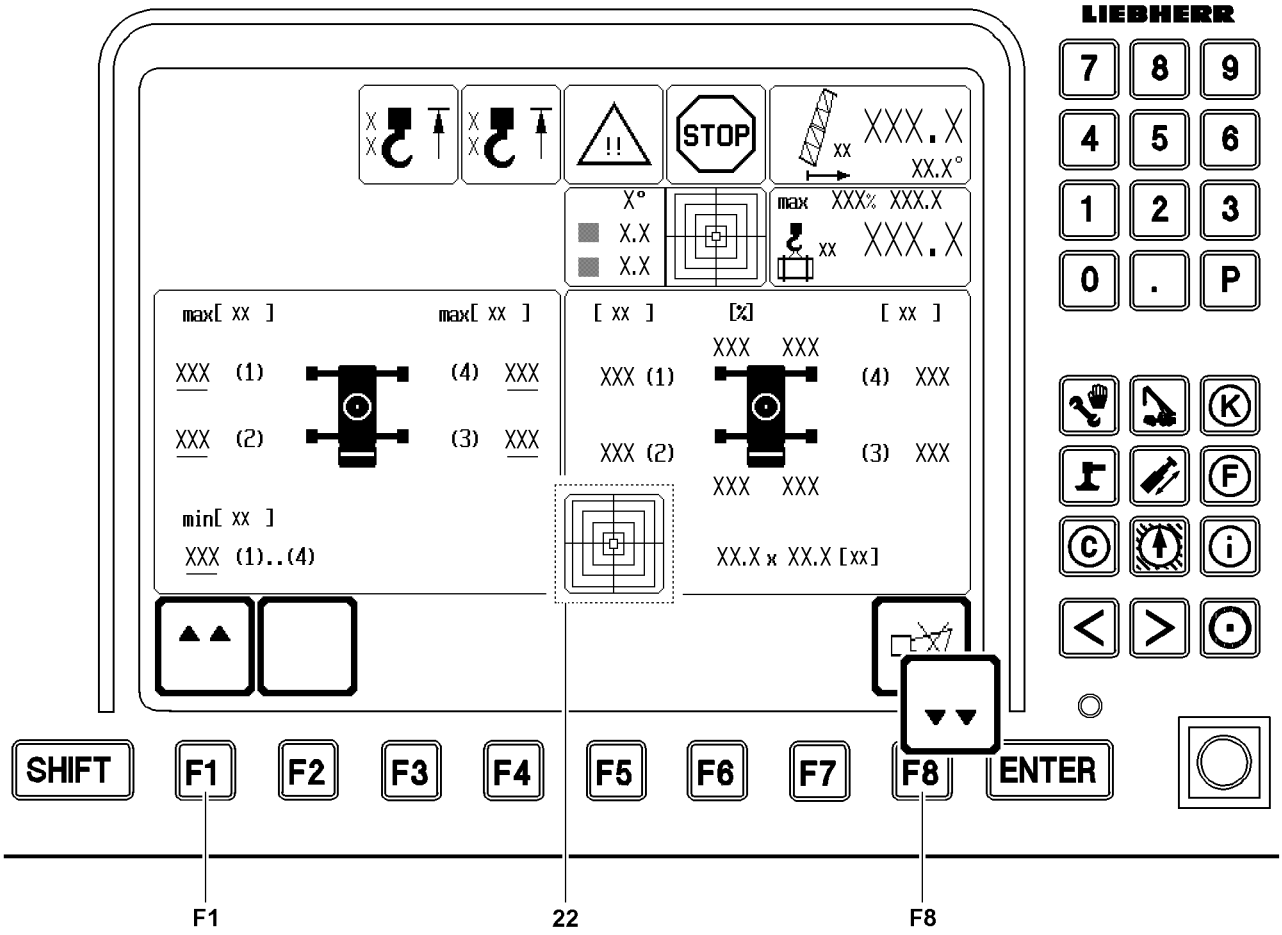
LIEBHERR
7 8 9
4 5 6
1 2 3
0 . P
STOP
XXX.X
XX.X°
max XXX% XXX.X
max[xx]
max[xx]
[xx]
[%]
[xx]
XXX (1)
XXX (2)
(3) XXX
(4) XXX
min[xx]
XXX (1)..(4)
XX.X x XX.X [xx]
SHIFT
F1
F2
F3
F4
F5
F6
F7
F8
ENTER
F1
22
F8

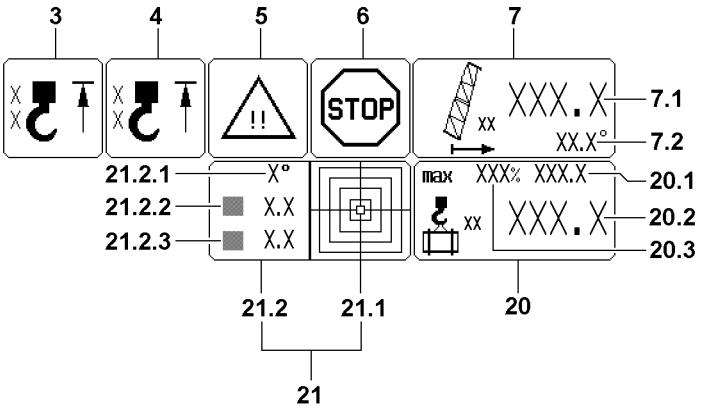
3
4
5
6
7
STOP
XXX.X
XX.X°
7.1
7.2
21.2.1
21.2.2
21.2.3
X°
X.X
X.X
max XXX% XXX.X
XXX.X
20.1
20.2
20.3
21.2
21.1
20
21

B111904

8.1.4 Crane operation in Support program

Note

- ▶ This function is only enabled for the “Support force monitoring” * option.
- ▶ For more detailed description of icons 3 to 6, see section “Alarm functions” in the crane operation program.

WARNING

Missing display values for wind speed!

No wind speed is shown in the support program during crane operation!

- ▶ If wind conditions are unclear, crane operation in the support program is not permissible!

WARNING

Missing display values for crane operation with boom nose!

The utilization of the boom nose during crane operation in the support program in not shown!

- ▶ Crane operation with boom nose is not permissible in the support program!

3	“Hoist top” icon	• On HES1
4	“Hoist top” icon	• On HES2 and / or HES3
5	“Advance warning” icon	
6	“STOP” icon	
7	“Boom radius and main boom angle” icon	• See section “Crane geometry and load information”
7.1	Radius	
7.2	Boom angle	
20	“Maximum load” icon	
20.1	Maximum load on the boom	• In [t] or [lbs]
20.2	Current load on the boom	• In [t] or [lbs]
20.3	Utilization of main boom	• In percent [%]
21	“Incline crane superstructure”.icon	
21.1	Graphic part	
21.2	Numeric part	
21.2.1	Incline range	• 1° or 5°
21.2.2	Incline	• Of crane in lateral direction
21.2.3	Incline	• Of crane in longitudinal direction
22	“Incline crane chassis” icon	
F1	Function key	• Switching over into the adjustment field for support limit forces (refer to section “Support force monitoring”) • **Note:** At actuation, an LMB STOP is triggered! All hoisting and luffing moments will be stopped and the icons for crane operation disappear!
F8	Function key	• Turn off acoustical signal / error determination screen **or** • End adjustment mode

1

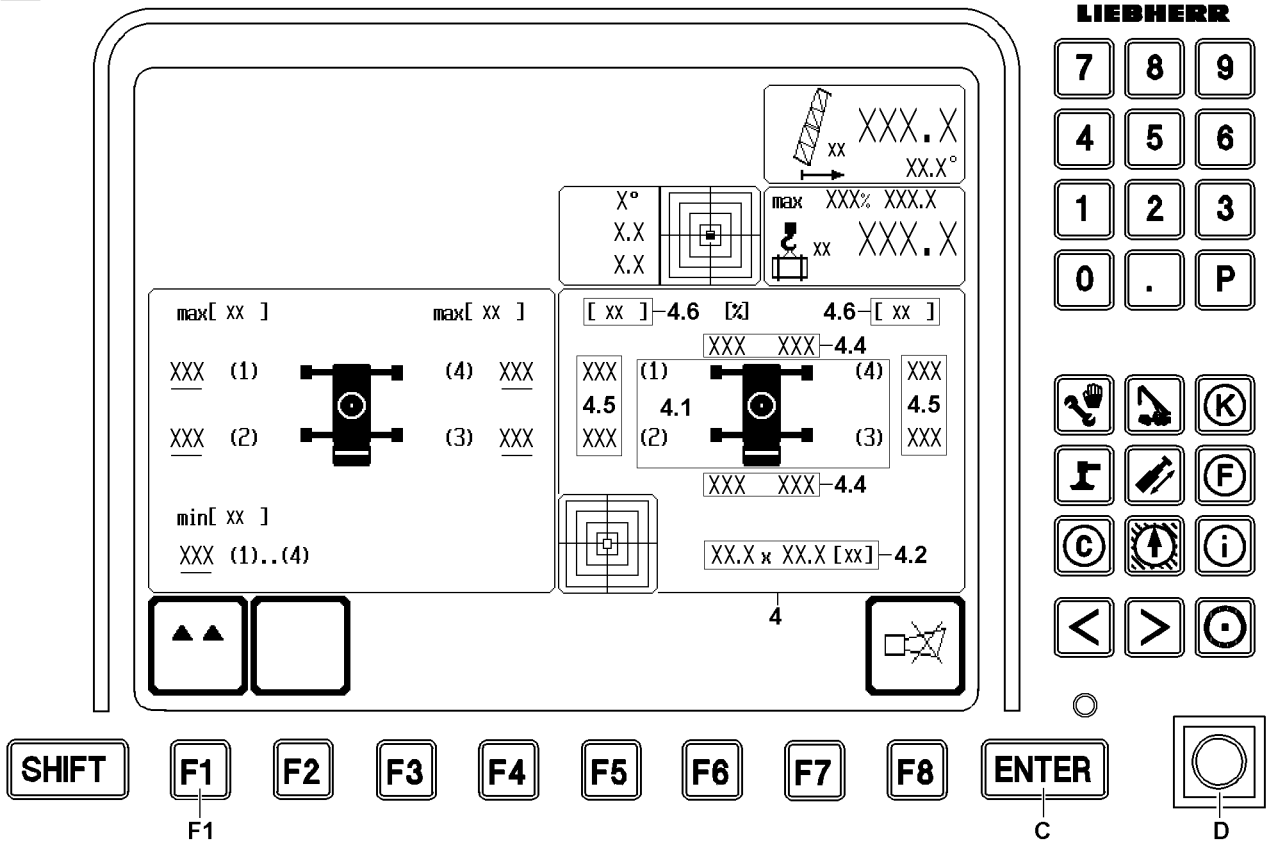
LIEBHERR
7 8 9
4 5 6
1 2 3
0 . P
XXX.X
XX.X°
X°
X.X
X.X
max XXX% XXX.X
XXX.X
max[xx]
max[xx]
XXX (1)
(4) XXX
XXX (2)
(3) XXX
min[xx]
XXX (1)..(4)
[xx] 4.6 [%] 4.6 [xx]
XXX XXX 4.4
XXX 4.5 XXX
(1) 4.1 (4)
(2) (3)
XXX 4.5 XXX
XXX XXX 4.4
XX.X x XX.X [xx] 4.2
4
SHIFT
F1
F2
F3
F4
F5
F6
F7
F8
ENTER
C
D
F1

2

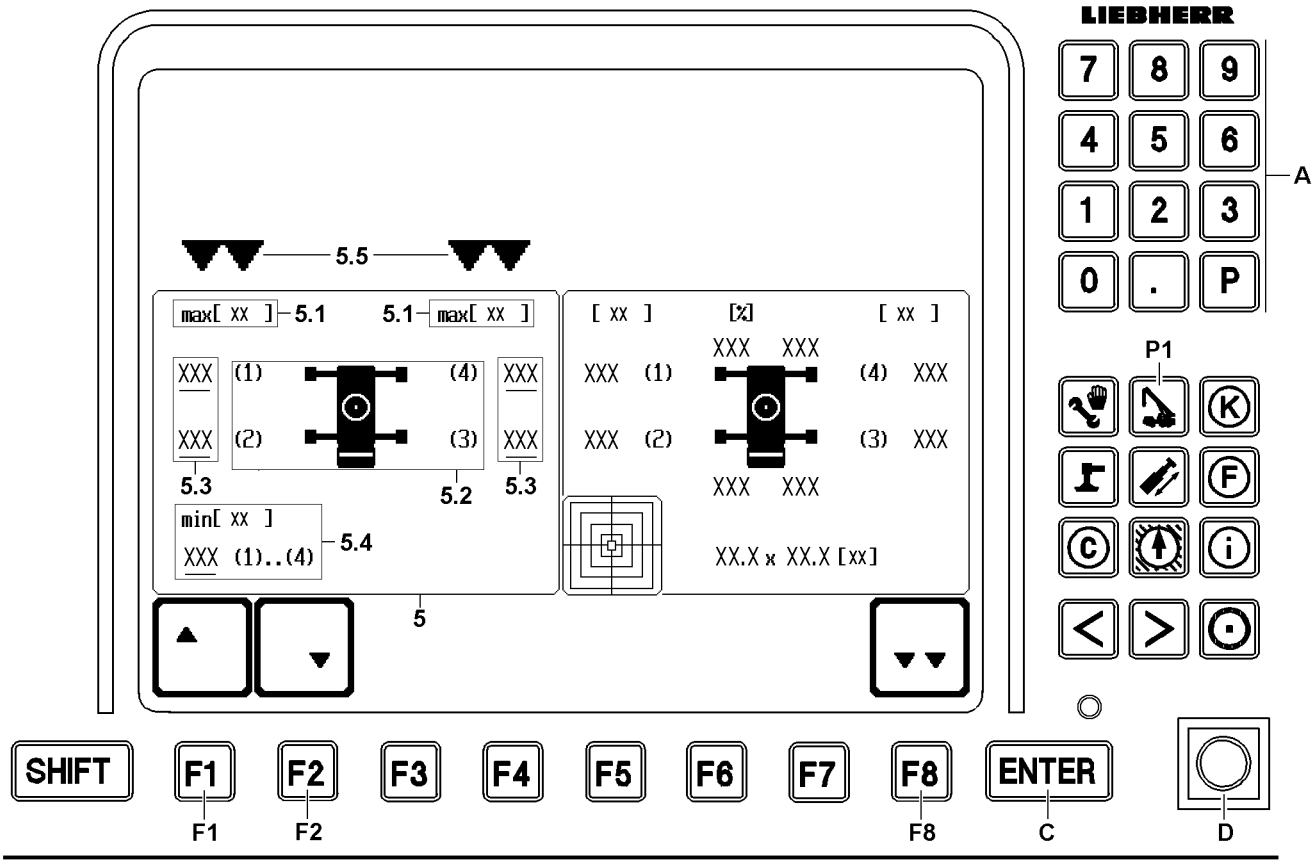
LIEBHERR
7 8 9
4 5 6
1 2 3
0 . P
A
P1
5.5
max[xx] 5.1
5.1 max[xx]
XXX
XXX (1) (4) XXX
XXX (2) (3) XXX
XXX
5.3
5.2
5.3
min[xx]
XXX (1)..(4)
5.4
5
[xx] [%] [xx]
XXX XXX
XXX (1) (4) XXX
XXX (2) (3) XXX
XXX XXX
XX.X x XX.X [xx]
SHIFT
F1
F2
F3
F4
F5
F6
F7
F8
ENTER
C
D
F1
F2
F8

B111905

8.2 Support force monitoring*

DANGER
Risk of accident!
- ▶ The LICCON support force monitoring is only an aid. It does **not** prevent a possible crane overload!
- ▶ Never use the support force monitoring to utilize the crane up to its tipping limit!

The support force monitoring constantly determines the current pressure on all 4 support cylinders during operation. The support force for each support is determined from that.
Due to the possibility to specify limit values, the support force monitoring can be utilized for individual advance warning.
Example: For application under certain placement conditions, the:
– Maximum permissible total force is 100 t.
– Desired advance warning 10% before
which results in: Maximum support limit force value to be programmed is 90 t.

8.2.1 Monitoring mode / control mode

See illustration **1**.

4	Monitoring and control operating panel	
4.1	Crane icon with support numbers	• **Note:** The icon can vary depending on crane type (LG or LR)!
4.2	Support base	• **Note:** Depending on crane type (LG or LR), as letter code or as number value!
4.4	Extension length sliding beam	• **Note:** Only optional for LG 1750!
4.5	Support force values	• In [t] or [kibs]
4.6	Unit of displayed support forces	• In [t] or [kibs]
F1	Function key	• Switch to settings field for support limit forces
F8	Function key	• Press once: Turn the acoustic signal off • Press twice: In the “Horn” icon, fields are automatically displayed on the error determination screen (see Diagnostics manual)

1

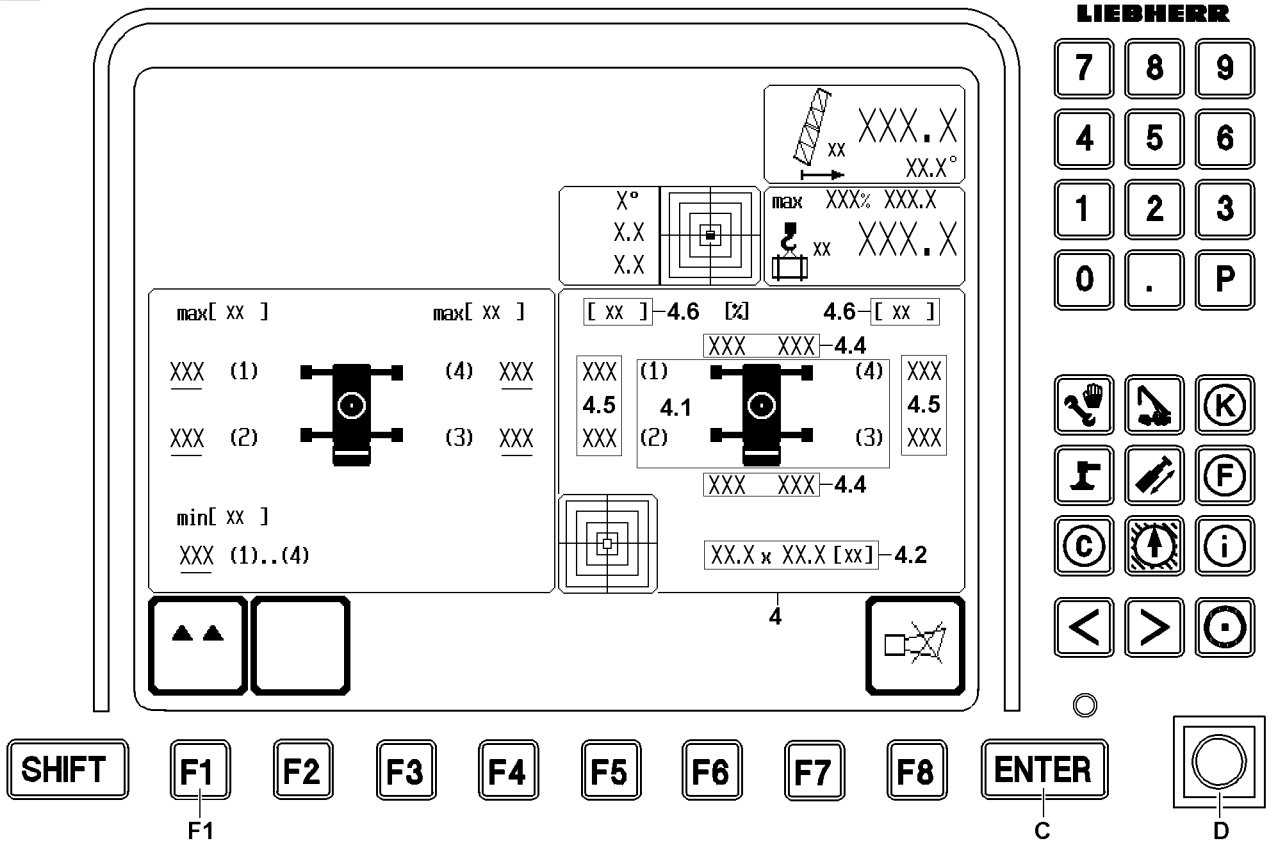
LIEBHERR
7 8 9
4 5 6
1 2 3
0 . P
XXX.X
XX.X°
X°
X.X
X.X
max XXX% XXX.X
XXX.X
max[xx]
max[xx]
XXX (1)
(4) XXX
XXX (2)
(3) XXX
min[xx]
XXX (1)..(4)
[xx] 4.6 [%] 4.6 [xx]
XXX XXX 4.4
XXX 4.5 XXX
(1) 4.1 (4)
(2) (3)
XXX 4.5 XXX
XXX XXX 4.4
XX.X x XX.X [xx] 4.2
4
SHIFT F1 F2 F3 F4 F5 F6 F7 F8 ENTER
F1
C
D

2

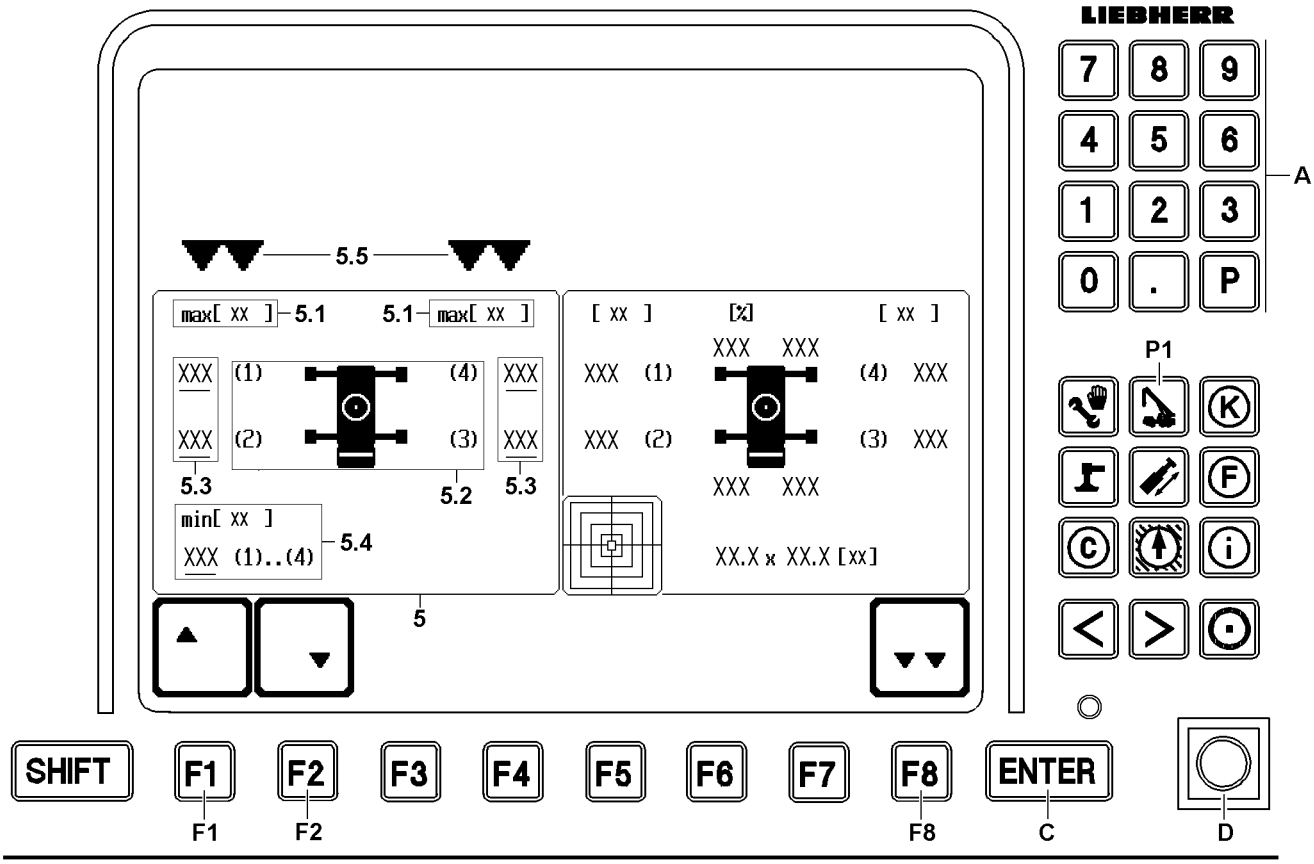
LIEBHERR
7 8 9
4 5 6
1 2 3
0 . P
A
P1
5.5
max[xx] 5.1 5.1 max[xx]
XXX (1) (4) XXX
XXX (2) (3) XXX
5.3 5.2 5.3
min[xx]
XXX (1)..(4) 5.4
5
[xx] [%] [xx]
XXX XXX
XXX (1) (4) XXX
XXX (2) (3) XXX
XXX XXX
XX.X x XX.X [xx]
SHIFT F1 F2 F3 F4 F5 F6 F7 F8 ENTER
F1
F2
F8
C
D

B111905

8.2.2 Setting mode

See illustration **2**.

5	Setting field for support limit forces	
5.1	Unit of maximum support force limit values	• In [t] or [kibs]
5.2	Crane icon with support numbers	
5.3	Maximum support force limit values	• Maximum value in [t] or [kibs]
5.4	Minimum support force limit value	• Minimum value in [t] or [kibs] Valid for all four supports
5.5	Selector arrows	• Point to the active settings field.
F1	Function key	• Move cursor (input pointer) to next support force limit value.
F2	Function key	• Move cursor (input pointer) to previous support force limit value.
F8	Function key	• Switch back to Monitoring and control operating panel **4**.

1

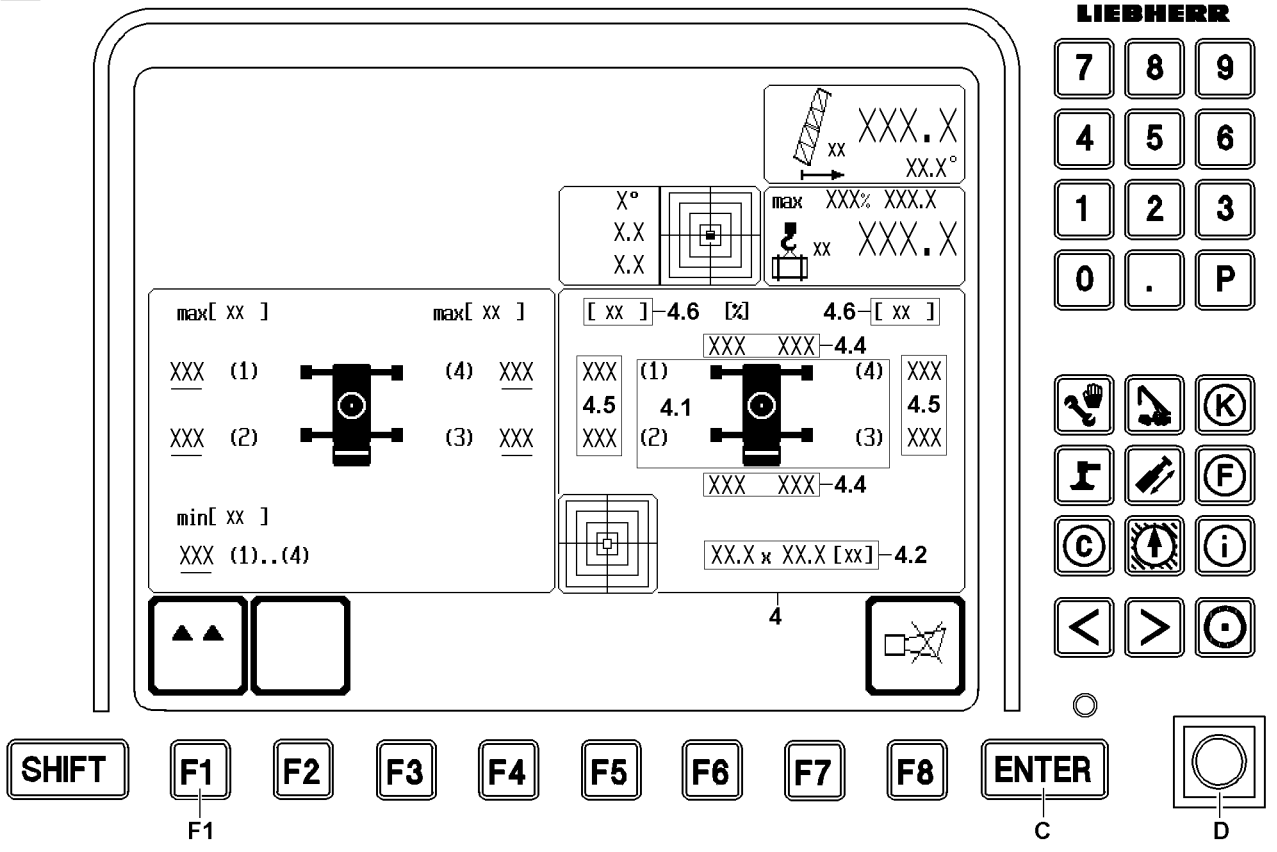
LIEBHERR
7 8 9
4 5 6
1 2 3
0 . P
XXX.X
XX.X°
X°
X.X
X.X
max XXX% XXX.X
XXX.X
max[xx]
max[xx]
XXX (1)
(4) XXX
XXX (2)
(3) XXX
min[xx]
XXX (1)..(4)
[xx] 4.6 [%] 4.6 [xx]
XXX XXX 4.4
XXX 4.5 XXX
(1) 4.1 (4)
(2) (3)
XXX 4.5 XXX
XXX XXX 4.4
XX.X x XX.X [xx] 4.2
4
SHIFT F1 F2 F3 F4 F5 F6 F7 F8 ENTER
F1
C
D

2

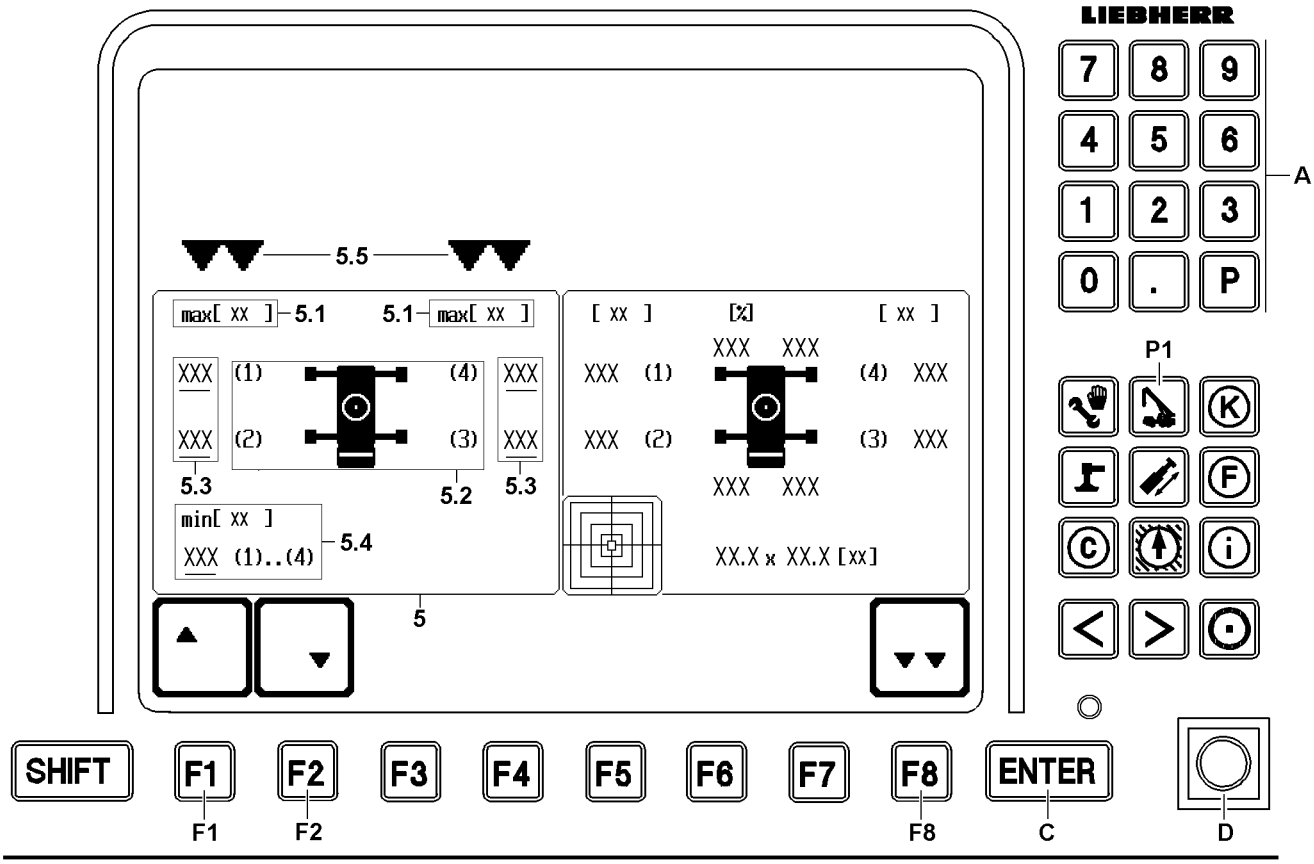
LIEBHERR
7 8 9
4 5 6
1 2 3
0 . P
A
P1
5.5
max[xx] 5.1
5.1 max[xx]
XXX (1) (4) XXX
XXX (2) (3) XXX
5.3
5.2
5.3
min[xx]
XXX (1)..(4) 5.4
5
[xx] [%] [xx]
XXX XXX
XXX (1) (4) XXX
XXX (2) (3) XXX
XXX XXX
XX.X x XX.X [xx]
SHIFT F1 F2 F3 F4 F5 F6 F7 F8 ENTER
F1
F2
F8
C
D

B111905

8.2.3 Display current support forces

Note

▶ Display current support forces in crane operating screen, see “Monitored auxiliary functions for crane operation”!

The current support force values **4.5** are shown in the monitoring and control field **4**.

8.2.4 Remarks

Because of the option to determine limit values yourself, the LICCON support force monitoring can also be used as an advance warning device:

– Any trends in changes of the support forces during crane operation can be quickly recognized.
– Advance warning limits for the support forces can be individually programmed.

WARNING

Tolerances and erroneous operation of the support force monitoring

For technical reasons, a test deviation of up to ± 2% in relation to the maximum load capacity of the crane is possible!

If the support cylinders are moved on “block bottom” or “block top”, then the display of the support forces is erroneous!

▶ Make sure that there is no block position on the support cylinders!
▶ Take the tolerances in the display value into account!
▶ Take additional influences onto the tolerance field into account!

The tolerance field expands:

– In case of large support forces.
– In case of far extended support cylinders.
– When extending the support cylinders and up to 15 minutes afterwards.

1

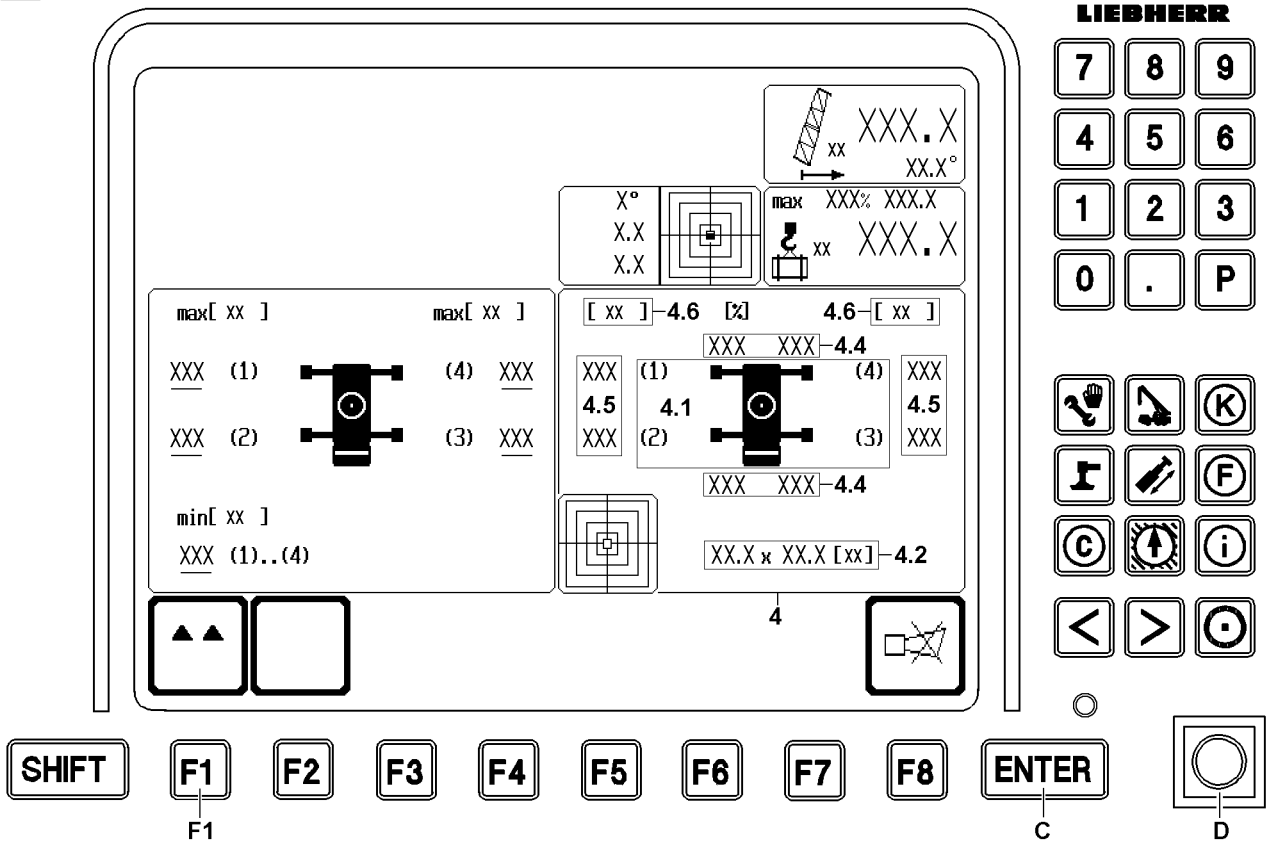
LIEBHERR
7 8 9
4 5 6
1 2 3
0 . P
max[xx]
min[xx]
XXX (1)..(4)
[xx] 4.6 [%]
4.6 [xx]
XXX XXX 4.4
4.5
4.1
XX.X x XX.X [xx] 4.2
4
SHIFT
F1
F2
F3
F4
F5
F6
F7
F8
ENTER
F1
C
D

2

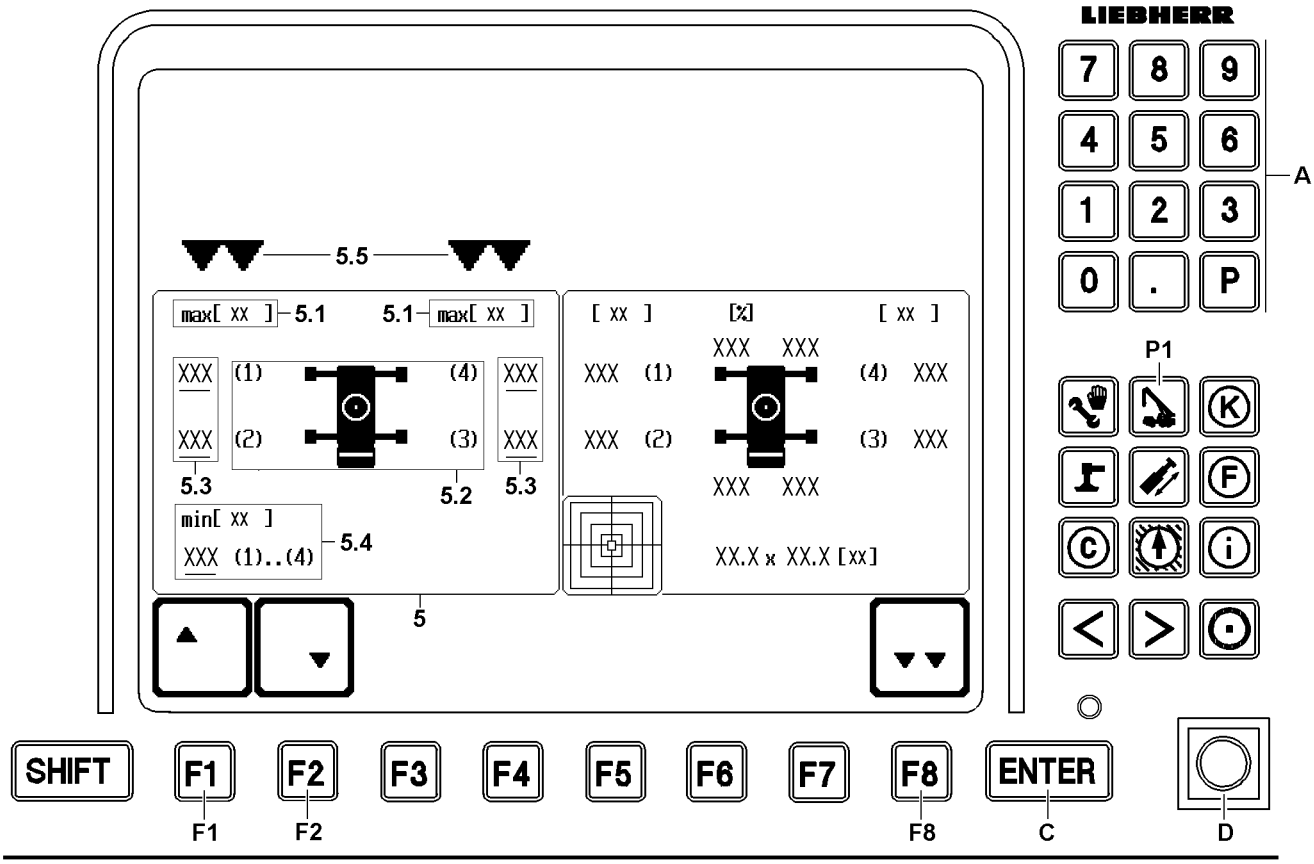
LIEBHERR
7 8 9
4 5 6
1 2 3
0 . P
A
P1
5.5
max[xx] 5.1
5.1 max[xx]
[xx] [%] [xx]
5.3
5.2
5.3
min[xx]
XXX (1)..(4) 5.4
XX.X x XX.X [xx]
5
SHIFT
F1
F2
F3
F4
F5
F6
F7
F8
ENTER
F1
F2
F8
C
D

B111905

8.2.5 Modifying minimum and maximum support force limits

As an additional safety precaution, this program monitors the set up key **D**. If the set up key **D** is actuated, the system switches back to the crane operation program.

In the Monitoring and control field **4** the current support force values are displayed.

If one or more of the values are below or above the programmed maximum values for the support force limits, then they are displayed blinking.

The programmed maximum / minimum values for the support force limits are displayed in the adjustment field **5**.

Ensure that:

– The crane is supported and horizontally aligned.
– The set up key **D** is not pressed.

The program initially runs in monitoring mode. All icons relevant to crane operation are displayed.

Note

Switching to the adjustment field for support limit forces.

▶ By pressing the function key **F1**, an LMB STOP / operational error is triggered immediately. All hoist and luffing moments are stopped and the icons for crane operation disappear.

When pressing the function key **F1**, the two double arrows **5.5** point to the settings field **5** for support limit forces. The cursor appears on the maximum value of the support limit force on support 1.

By pressing the function key **F1** or function key **F2** you switch the cursor to the next or previous maximum value for the support limit force or the minimum value for the support limit force (valid for all four support cylinders).

Note

Testing the validity range for the support limit force values.

Every newly entered support limit force value will be tested for its validity range.

▶ If valid, the value entered will be accepted.
▶ If invalid, the value will be rejected as too small or too big with an “ERROR” message.

With the keypad **A** you can change the support limit force values and then close the input function using the ENTER key **C**.

Use the function key **F8** to switch back to the Monitoring and control field **4**.

Use the program key **P1** to switch back to the crane operation program.

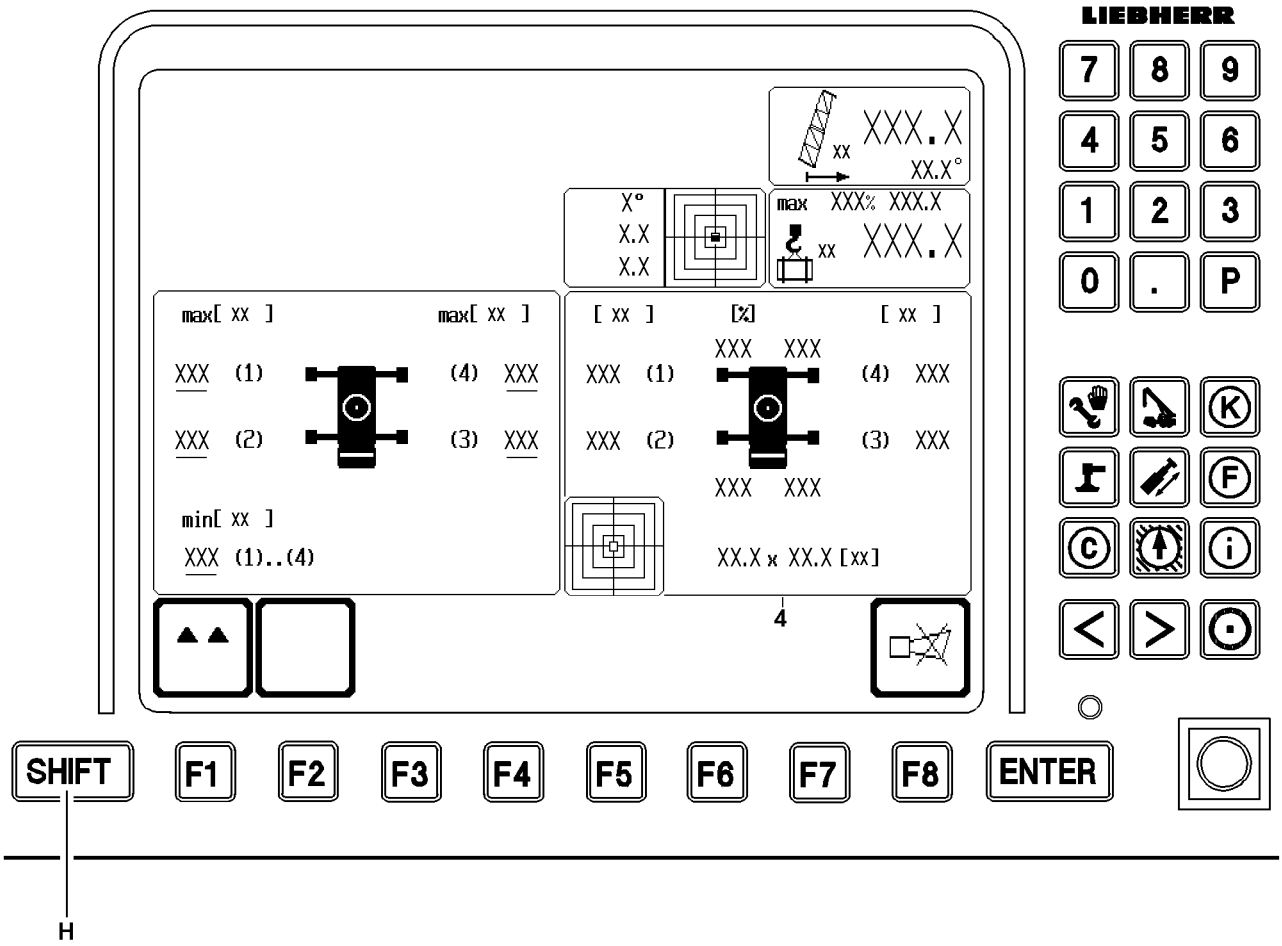
LIEBHERR
7 8 9
4 5 6
1 2 3
0 . P
XXX.X
XX.X°
max XXX% XXX.X
max[xx]
max[xx]
[xx]
[%]
[xx]
XXX (1)
(4) XXX
XXX (2)
(3) XXX
min[xx]
XXX (1)..(4)
XX.X x XX.X [xx]
4
SHIFT
F1
F2
F3
F4
F5
F6
F7
F8
ENTER
H

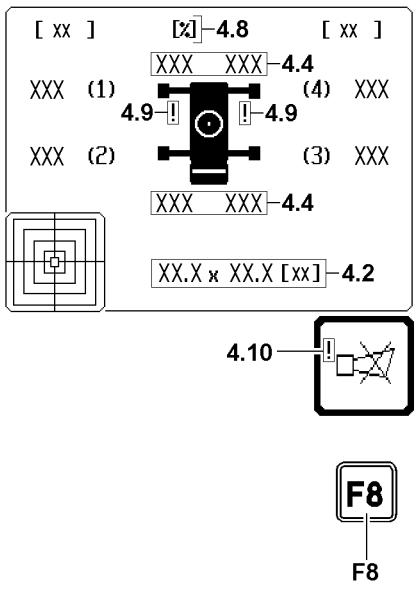
[xx]
[%] 4.8
[xx]
XXX XXX 4.4
XXX (1)
(4) XXX
4.9
4.9
XXX (2)
(3) XXX
XXX XXX 4.4
XX.X x XX.X [xx] 4.2
4.10
F8
F8

B111907

8.3 Sliding beam monitoring*

Note

▶ Only optional for LG 1750!

4	Monitoring and control operating panel	
4.2	Support base	• In [m] or [ft]
4.4	Sliding beam length values	• As a percentage of the maximum extension length. • The sliding beam length values blink in the ranges that are unsuitable for supporting. 0 – Sliding beam retracted 100 – Sliding beam widely extended
4.8	Percentage sign	• Unit for sliding beam length display
4.9	Exclamation mark “!”	• Sliding beam length monitoring is now bypassed. **Note:** An exclamation mark“!” **4.09** will appear on the support screen **and** crane operating screen when the sliding beam length monitoring is bypassed!
4.10	Exclamation mark “!”	• Sliding beam length monitoring can be bypassed. **Note:** An exclamation mark “!” **4.10** will only appear in the horn icon when it is possible to bypass the sliding beam length monitoring!
F8	Function key	• Press once: Turn the acoustic signal off • Press twice: Fields that are displayed visually in the “Horn” icon are automatically displayed in the error determination display.
SHIFT and **F8**		• Sliding beam length monitoring is bypassed • Note: By pressing the key combination SHIFT **H** and function key **F8** again, the sliding beam length monitoring is activated again!

WARNING

Increased accident risk when bypassing sliding beam length monitoring!

The position of the sliding beams is no longer monitored when the sliding beam length monitoring is bypassed. An inadequate support base may cause the crane to topple and kill personnel.

▶ The sliding beam length monitoring may only be bypassed by personnel who are aware of the consequences of the bypass!

▶ The crane operator must ensure that the sliding beam position corresponds to the data given in the load chart and LICCON!

▶ The crane operator must ensure that the crane is supported with the support base as specified in the load chart!

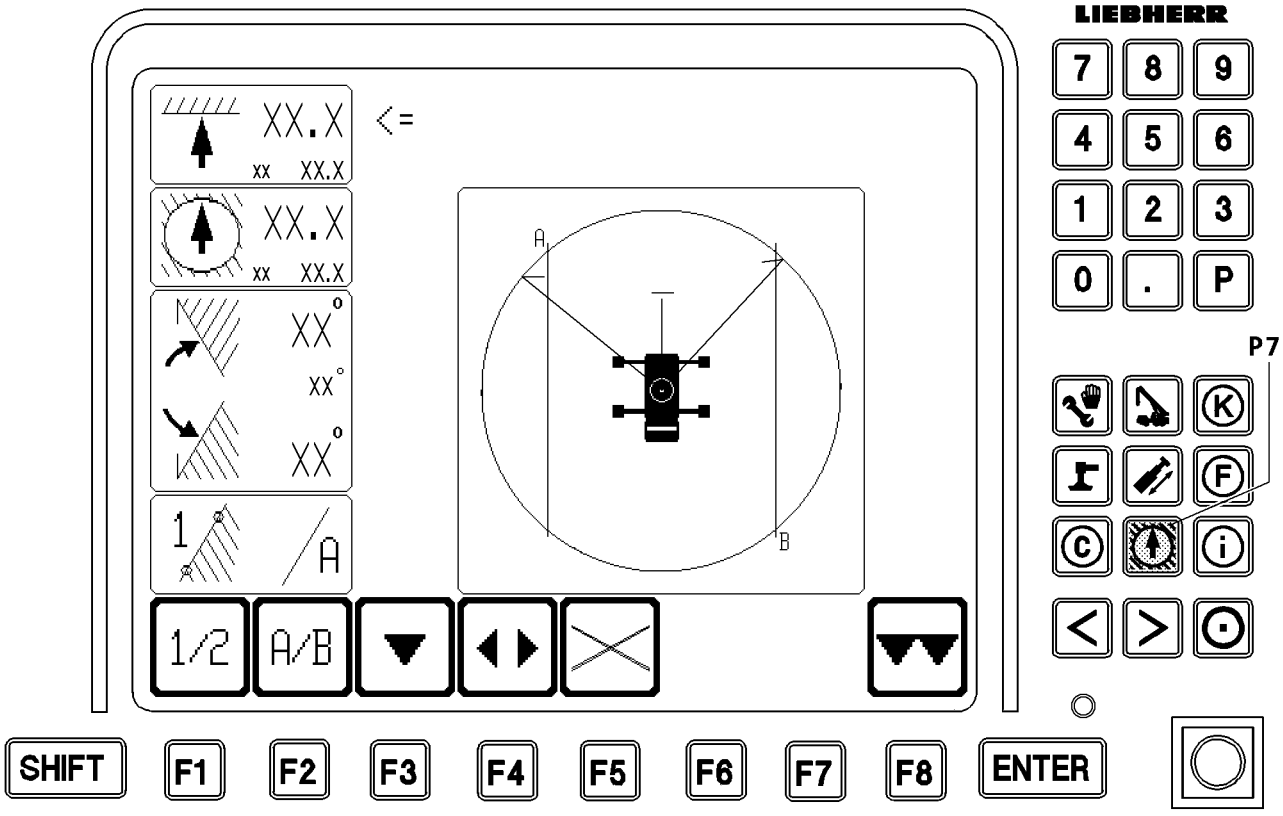
LIEBHERR
7 8 9
4 5 6
1 2 3
0 . P
P7
K
F
C
i
1/2
A/B
SHIFT
F1
F2
F3
F4
F5
F6
F7
F8
ENTER

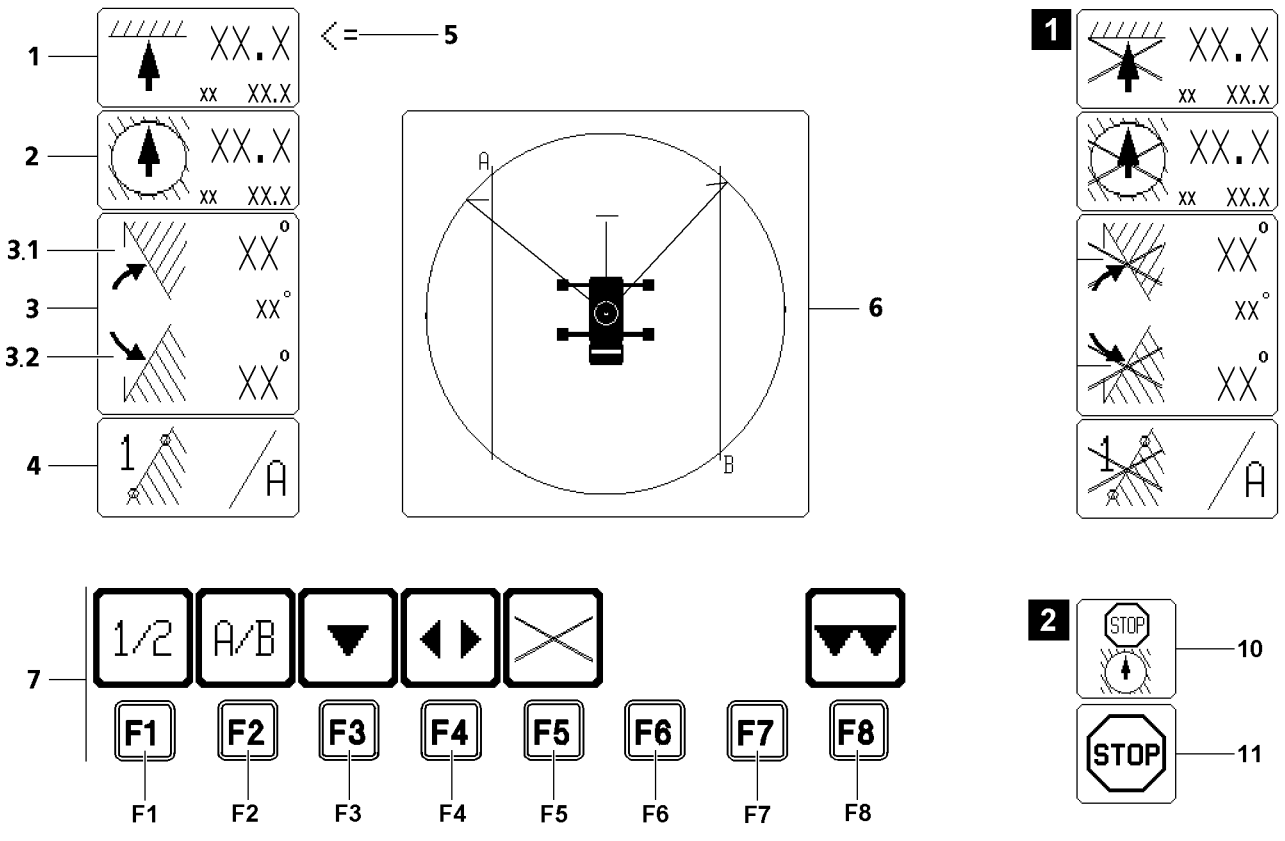
1
2
3.1
3
3.2
4
5
6
7
1
2
10
11
1/2
A/B
STOP
F1
F2
F3
F4
F5
F6
F7
F8

B111257

9 The Working range limitation program*

Note
▶ For detailed description of the working range limitation, see the “Working range limitation” manual

9.1 Starting the program

▶ Press program key **P7**.

9.2 User interface

1 “Pulley head height limitation” icon
2 “Radius limitation” icon
3 “Slewing limit stop” icon
3.1 Right slewing limit stop
3.2 Left slewing limit stop
4 “Edge limit with edge and point selection” icon
5 Function selector
- For selecting limiting functions

6 “Graphic display of programmed limits” icon
- **Note:**
  Depending on crane type, either the crane icon crane chassis or crawler travel gear are shown!

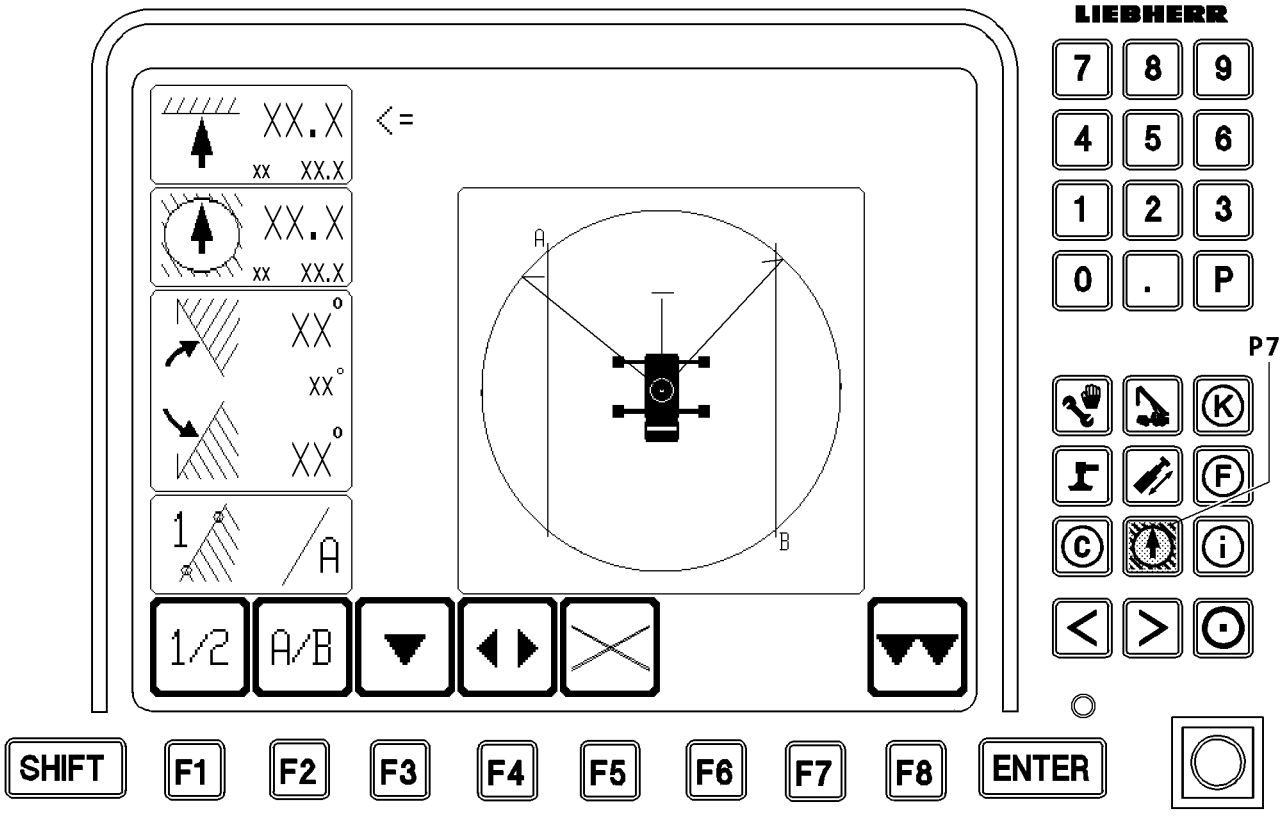
LIEBHERR
7 8 9
4 5 6
1 2 3
0 . P
P7
K
F
C
i
1/2
A/B
SHIFT
F1
F2
F3
F4
F5
F6
F7
F8
ENTER

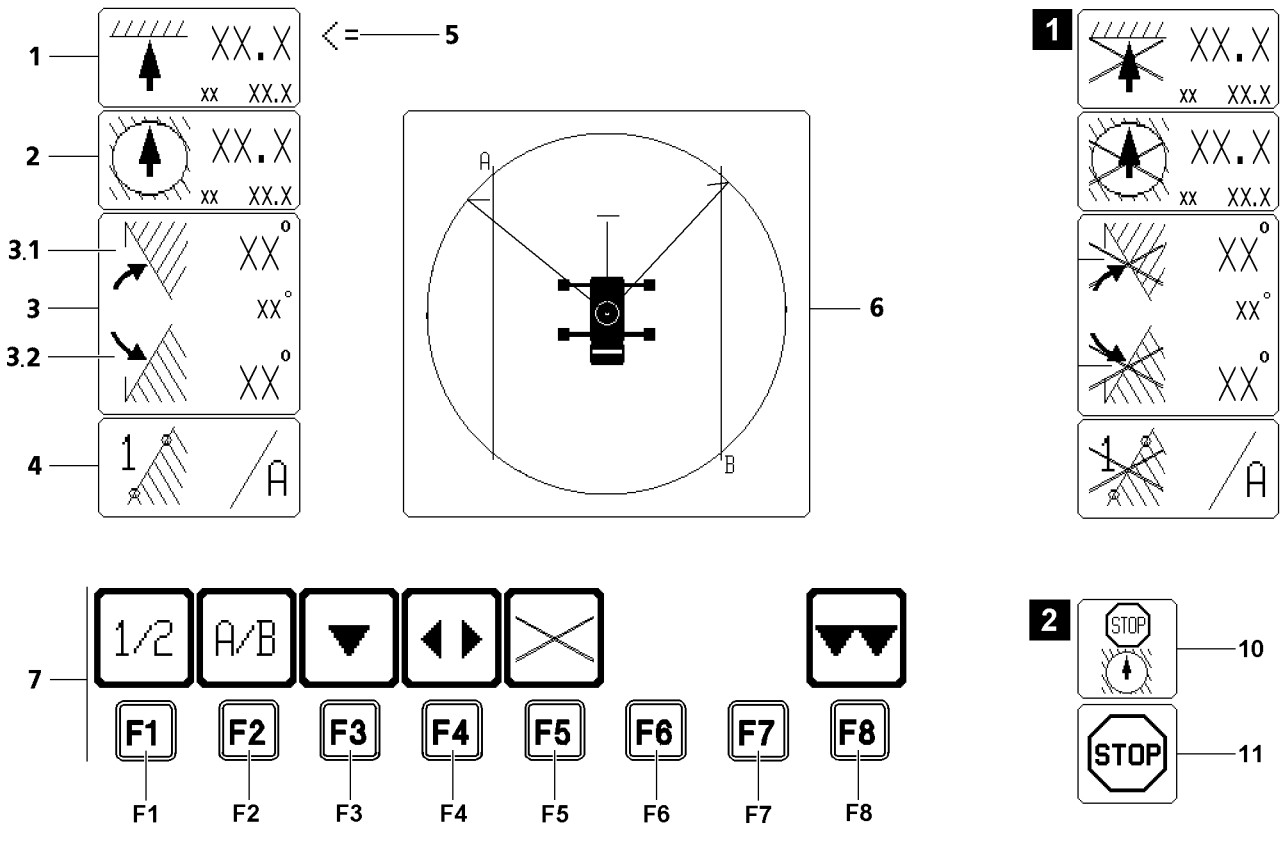
1
2
3.1
3
3.2
4
5
6
7
1/2
A/B
F1
F2
F3
F4
F5
F6
F7
F8
1
2
STOP
10
11

B111257

9.2.1 Function key line

The function key line **7** is operated via the function key located below.

F1 Function key	• Selection of point 1 or 2 of selected edge A or B
F2 Function key	• Selection of edge A or B that is being programmed
F3 Function key	• The function selector is moved down by one limit function.
F4 Function key	• The limit function selected with the function selector changes its status. If previously active, it will now be inactive when the function key **F4** is pressed, and vice versa. An inactive limit function is identified by a crossed out icon. If the function selector shows a slewing limit to the left or the right, then both limits will always be switched. • **Note:** For the edge limit, only the preselected edge will be switched! The edge that is not displayed can be active or inactive at the same time!
F5 Function key	• All limit functions become inactive, icons crossed out - see illustration **1**
F6 Function key	• Not assigned in the working range limitation program
F7 Function key	• Not assigned in the working range limitation program
F8 Function key	• Exit the program and return to the crane operation program

9.3 Displays in the crane operation program

If a programmed working range limitation is activated, then this status is indicated in the “Crane operation” program by an alternative STOP icon **10** on the position of the normal LMB STOP icon **11**, see illustration **2**.

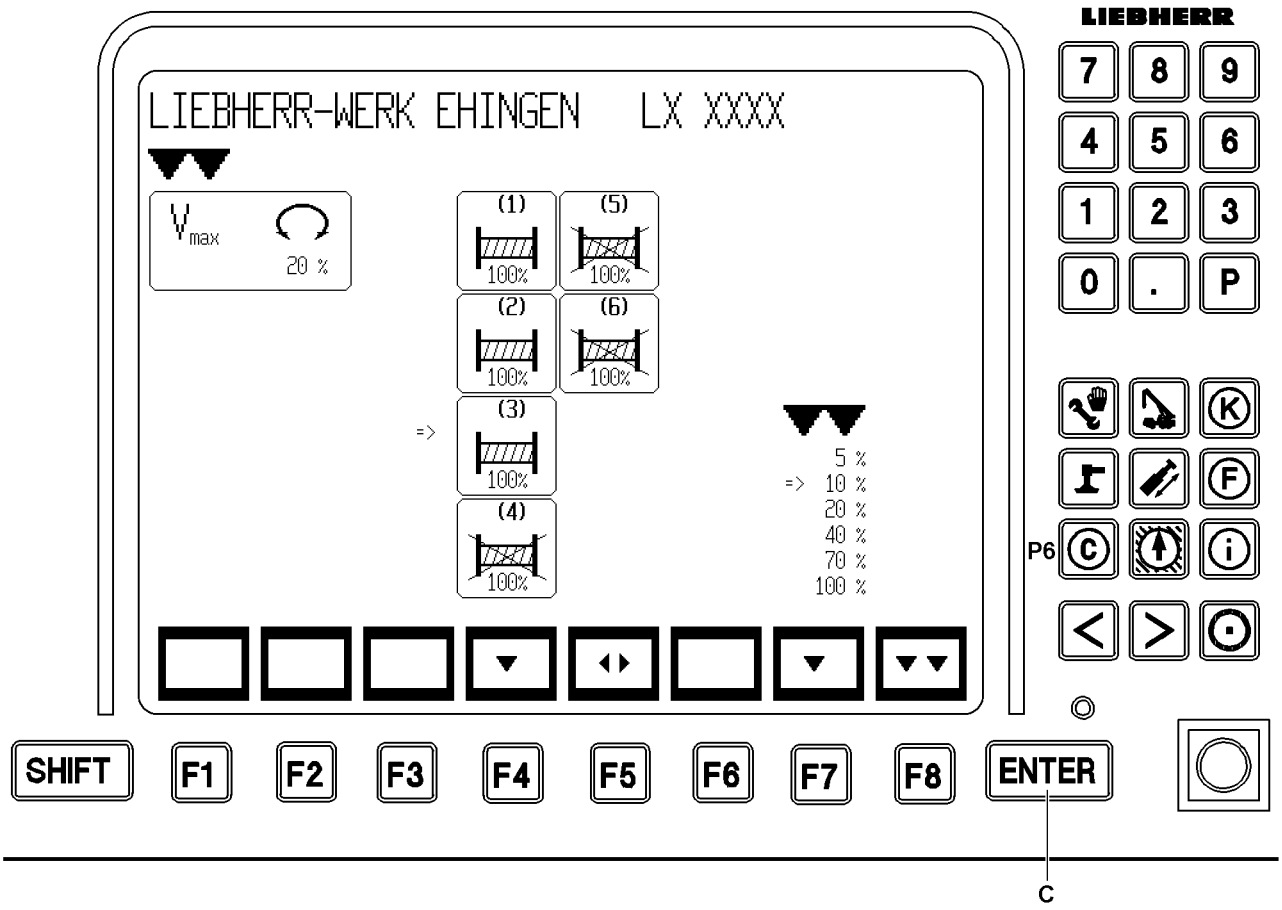
LIEBHERR-WERK EHINGEN LX XXXX
Vmax
20 %
(1)
(2)
(3)
(4)
(5)
(6)
100%
=>
5 %
=> 10 %
20 %
40 %
70 %
100 %
LIEBHERR
7 8 9
4 5 6
1 2 3
0 . P
P6
SHIFT
F1 F2 F3 F4 F5 F6 F7 F8
ENTER
C

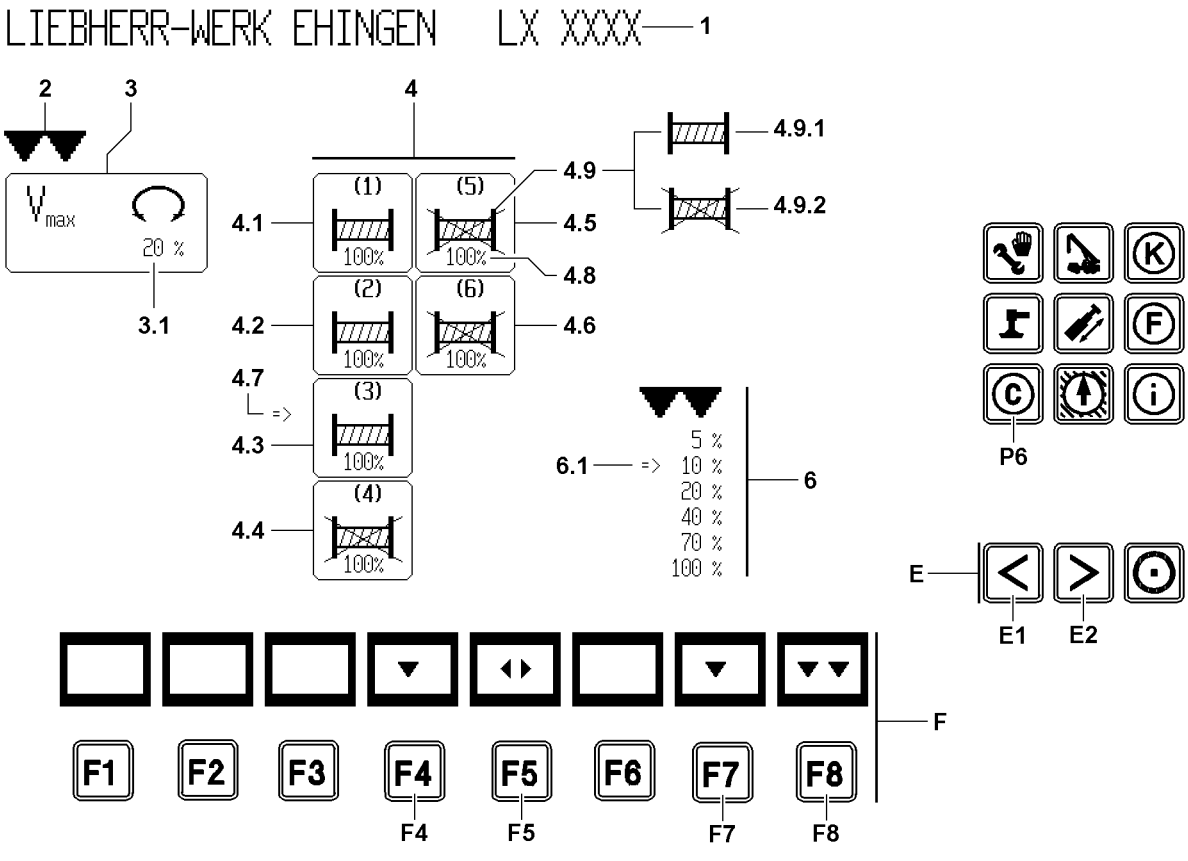
LIEBHERR-WERK EHINGEN LX XXXX
1
2
3
4
Vmax
20 %
3.1
4.1
4.2
4.3
4.4
4.5
4.6
4.7
4.8
4.9
4.9.1
4.9.2
(1)
(2)
(3)
(4)
(5)
(6)
100%
=>
6.1
5 %
=> 10 %
20 %
40 %
70 %
100 %
6
P6
E
E1
E2
F
F1 F2 F3 F4 F5 F6 F7 F8
F4
F5
F7
F8

B111903

10 The Control parameter program

The Control parameter program offers the following possibilities:
– Preselection of maximum rotation speed of slewing gear.
– Preselection of maximum rotation speed of individual winches.
– Activation / deactivation of individual winches.

The bypass switches are monitored during the control parameter program. If one of these switches is activated during the program, the system immediately switches back to the crane operation program.

DANGER
Risk of accident!
▶ **Never** change the speeds or the activation / deactivation of the winches while actuating a crane movement!

10.1 Starting the program

▶ Press the program key **P6**.

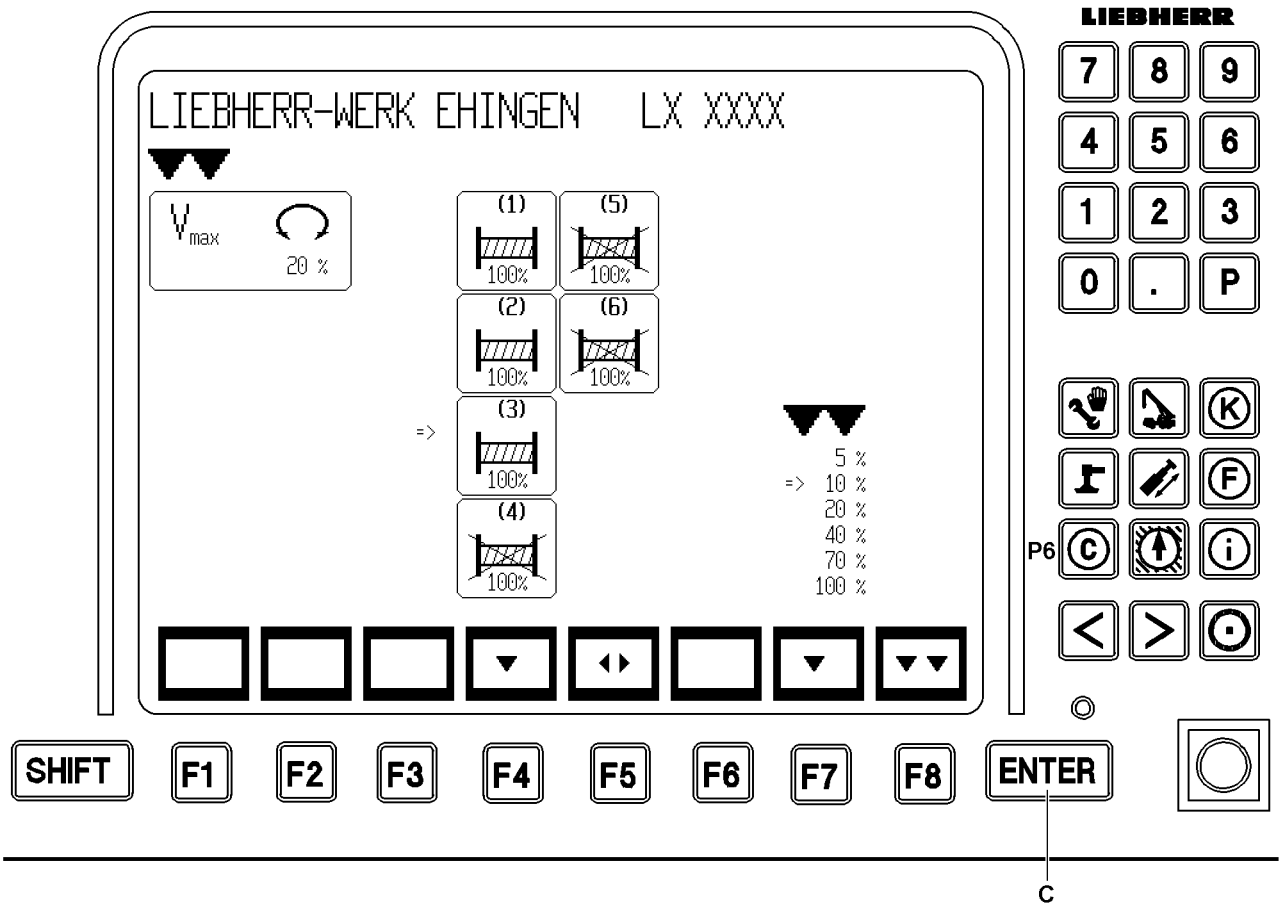
LIEBHERR-WERK EHINGEN LX XXXX
V max
20 %
(1)
(2)
(3)
(4)
(5)
(6)
100%
=>
5 %
=> 10 %
20 %
40 %
70 %
100 %
LIEBHERR
7 8 9
4 5 6
1 2 3
0 . P
P6
SHIFT
F1 F2 F3 F4 F5 F6 F7 F8
ENTER
C

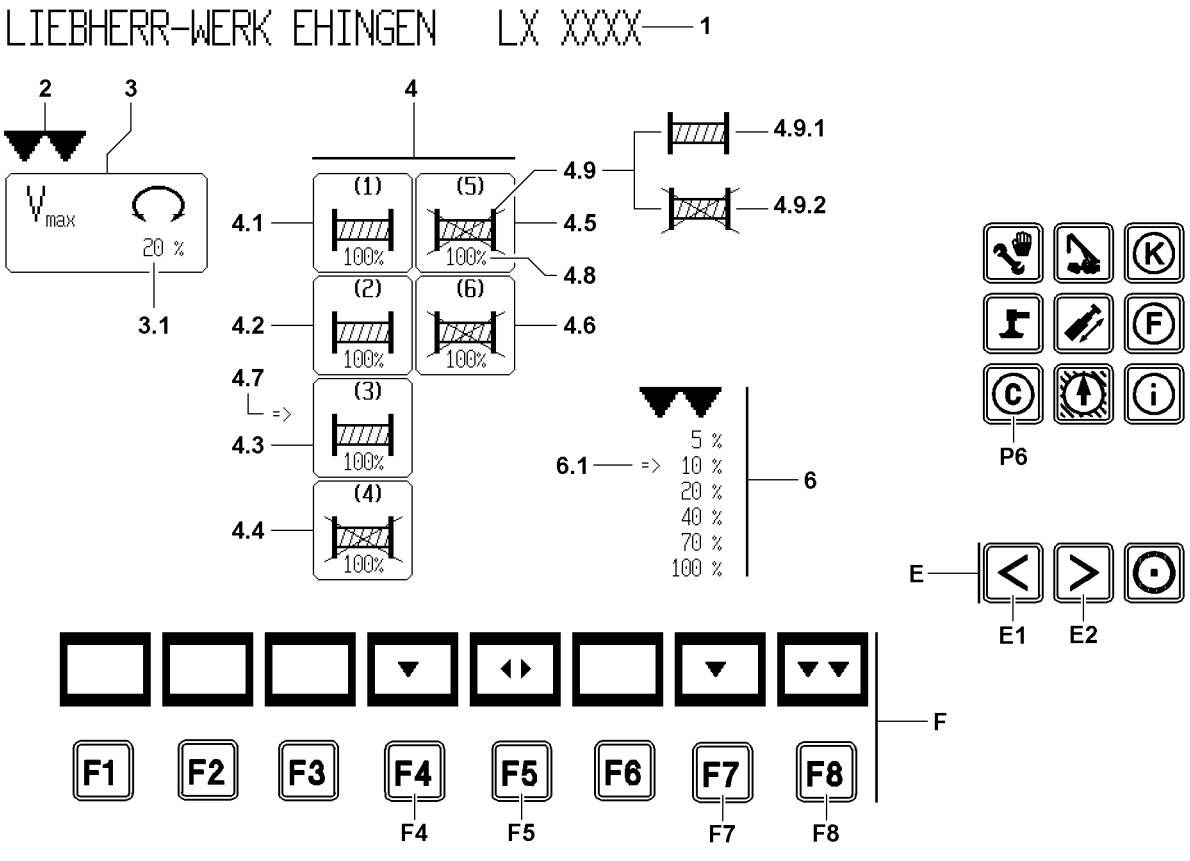
LIEBHERR-WERK EHINGEN LX XXXX
1
2
3
4
V max
20 %
3.1
4.1
4.2
4.3
4.4
4.5
4.6
4.7
4.8
4.9
4.9.1
4.9.2
6
6.1
5 %
10 %
20 %
40 %
70 %
100 %
P6
E
E1
E2
F
F1 F2 F3 F4 F5 F6 F7 F8
F4
F5
F7
F8

B111903

10.2 User interface

1	Crane type	
2	Selector “Icon selection”	• Double arrow pointing down • Select icon.
3	“Slewing gear” icon	
3.1	“Maximum rotation speed”	• V_{max} in percent [%]
4	“Winches” icon group	

Note

▶ The setting possibilities are the same for all winches and are explained on the Winch 5* icon **4.5**!

4.1	Winch 1	
4.2	Winch 2	
4.3	Winch 3*	
4.4	Winch 4	
4.5	Winch 5*	
4.6	Winch 6*	
4.7	Winch selector	• Arrow to the right • Select the winch, for which the “properties” are to be changed.
4.8	Speed	• In percent [%] • See value field with selector
4.9	Winch icon	
4.9.1	Winch activated	
4.9.2	Winch deactivated	
6	Value field with selector	• The percentage values relate to the speed with maximum deflection of the manual control lever, always in relation to the maximum achievable speed of the drive, with 100 % preselected speed. Six stages may be preselected.
6.1	Speed selector	• Arrow to the right • Select percentage value(s) for speed stages.
F	Function key line	
F4	Function key	• Select winch.
F5	Function key	• Activate / deactivate selected winch(es).
F7	Function key	• Select percentage value of corresponding speed in value field.
F8	Function key	• Return to the crane operation program and take over parameter.
C	Input key ENTER	• Take over the selected speed setting for the preset functions.
E	Special function keys	
E1	Special function key	• Move the selector **2** for selecting icons to the left
E2	Special function key	• Move the selector **2** for selecting icons to the right

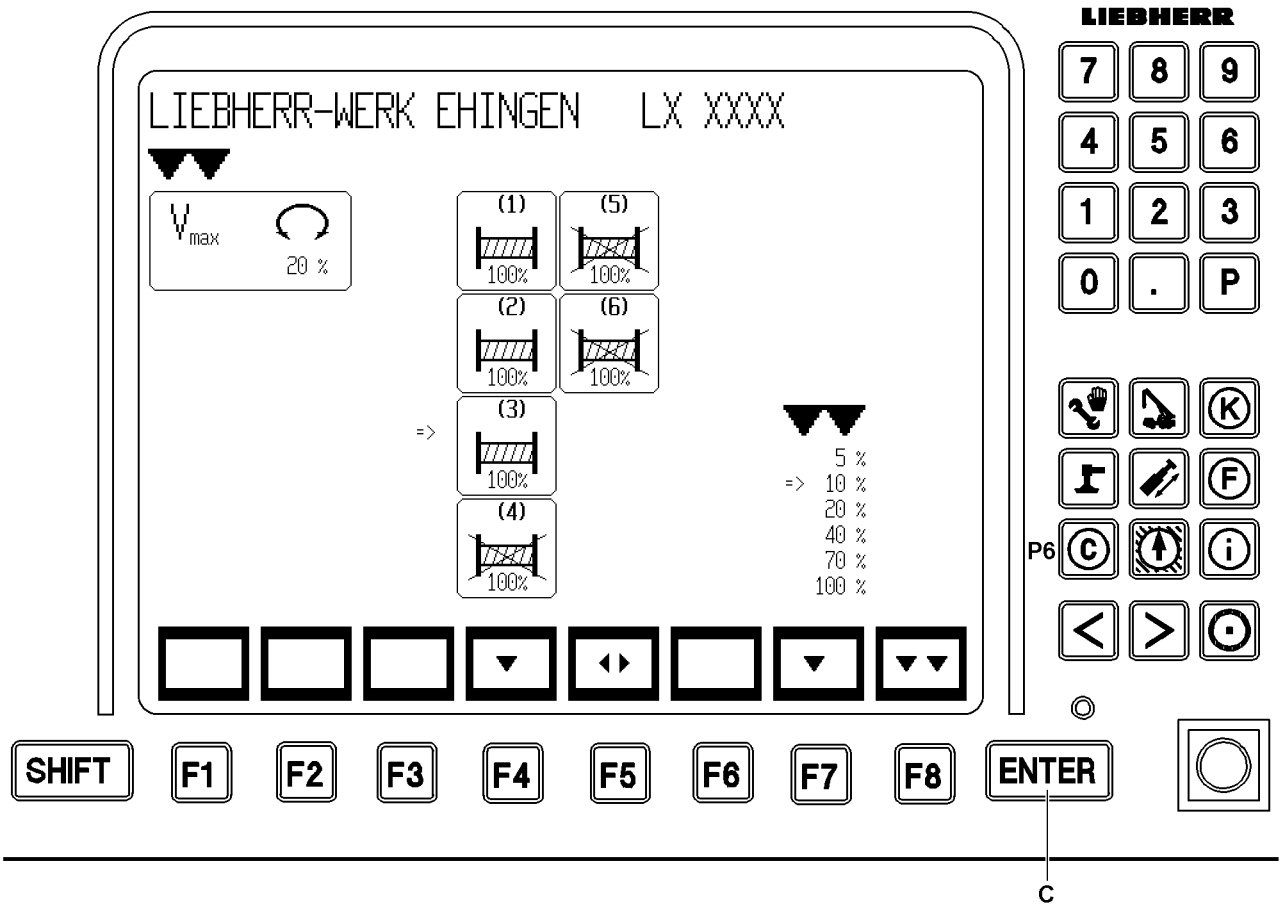
LIEBHERR
LIEBHERR-WERK EHINGEN LX XXXX
Vmax
20 %
(1) 100%
(5) 100%
(2) 100%
(6) 100%
(3) 100%
(4) 100%
=>
5 %
=> 10 %
20 %
40 %
70 %
100 %
7 8 9
4 5 6
1 2 3
0 . P
P6
SHIFT F1 F2 F3 F4 F5 F6 F7 F8 ENTER
C

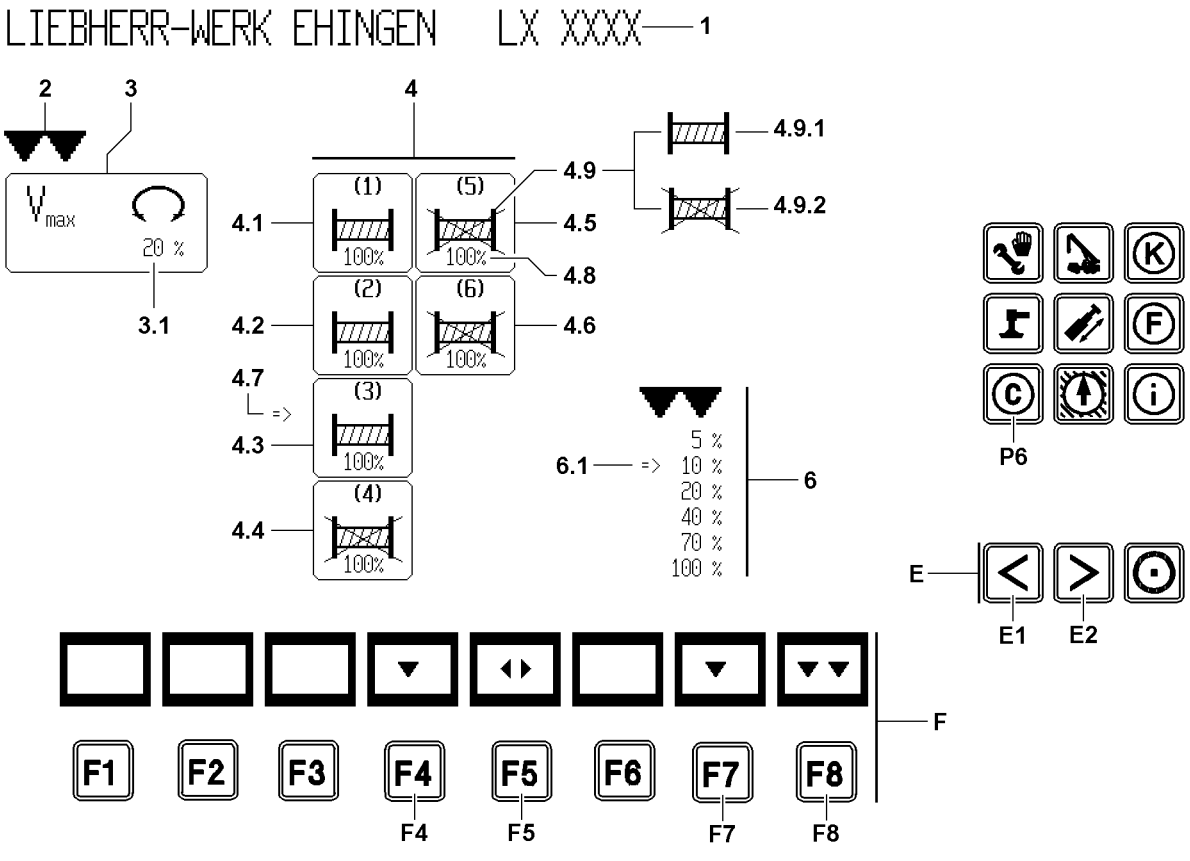
LIEBHERR-WERK EHINGEN LX XXXX
1
2
3
4
Vmax
20 %
3.1
4.1
4.2
4.3
4.4
4.5
4.6
4.7
4.8
4.9
4.9.1
4.9.2
6
6.1
5 %
10 %
20 %
40 %
70 %
100 %
P6
E
E1
E2
F
F1 F2 F3 F4 F5 F6 F7 F8
F4 F5 F7 F8

B111903

10.3 Changing the maximum rotation speed of slewing gear

DANGER
Risk of accident!
- ▶ Always adhere to the maximum speeds relative to the boom length and the operating modes during crane operations with loads (according to load charts)!
- ▶ The longer and heavier the boom is and the greater the load, the smaller the set “Maximum rotation speed” must be!
- ▶ **Never** deflect the master switch for the slewing gear to the stop at maximum load!

▶ Use the special function key **E1** or special function key **E2** to select the “Slewing gear” icon **3**.

Result:
– Selector (double arrow down) **2** appears above the “Slewing gear” icon **3**.

▶ Select the maximum rotation speed in percent [%] with function key **F7**.

Result:
– Selector (arrow to right) **6.1** shows the selected percentage value.

▶ Use the ENTER key **C** to confirm the selected “Maximum rotation speed”.

Result:
– The value of the “Maximum rotation speed” is shown in the icon and taken over into the control.

10.4 Winches

10.4.1 Changing maximum winch speed

▶ Using the special function key **E1** or special function key **E2**, select the icon group “Winches” **4**.

Result:
– Selector (double arrow down) **2** appears above the icon group “Winches”.

▶ With the function key **F4**, select the icon for “Winch 1”, **or** “Winch 2”, **or** “Winch 3” *, **or** “Winch 4”, **or** “Winch 5”, * **or** “Winch 6” *.

Result:
– Selector (arrow to right) **4.7** shows the selected winch.

▶ Select the “Maximum winch speed” in percent [%] with function key **F7**.

Result:
– Selector (arrow to right) **6.1** shows the selected percentage value.

▶ Use the ENTER key **C** to confirm the selected “Maximum winch speed”.

Result:
– The value of the “Maximum winch speed” is shown in the selected winch icon and taken over into the control.

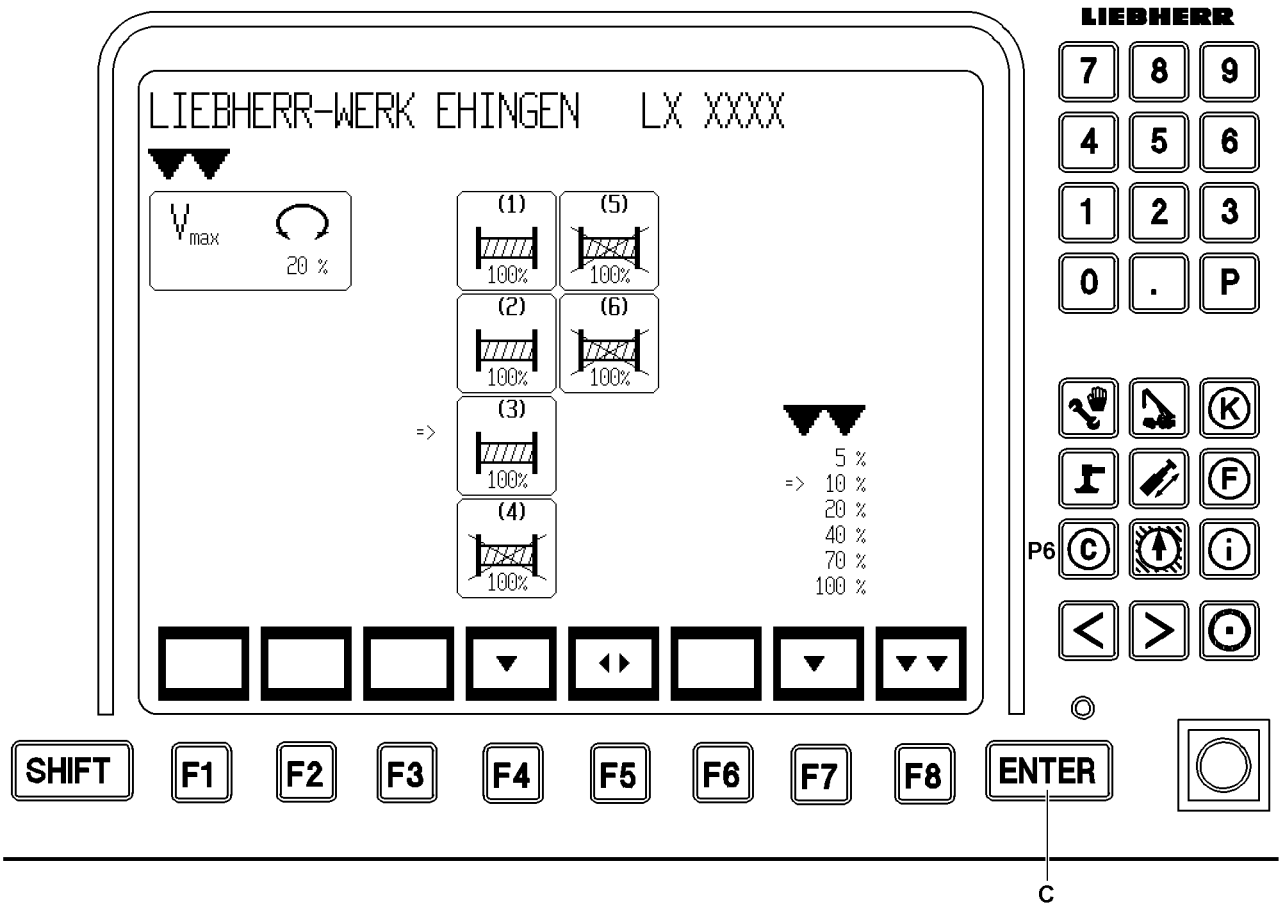
LIEBHERR
LIEBHERR-WERK EHINGEN LX XXXX
Vmax
20 %
(1) 100%
(5) 100%
(2) 100%
(6) 100%
(3) 100%
(4) 100%
=>
5 %
=> 10 %
20 %
40 %
70 %
100 %
7 8 9
4 5 6
1 2 3
0 . P
P6
SHIFT F1 F2 F3 F4 F5 F6 F7 F8 ENTER
C

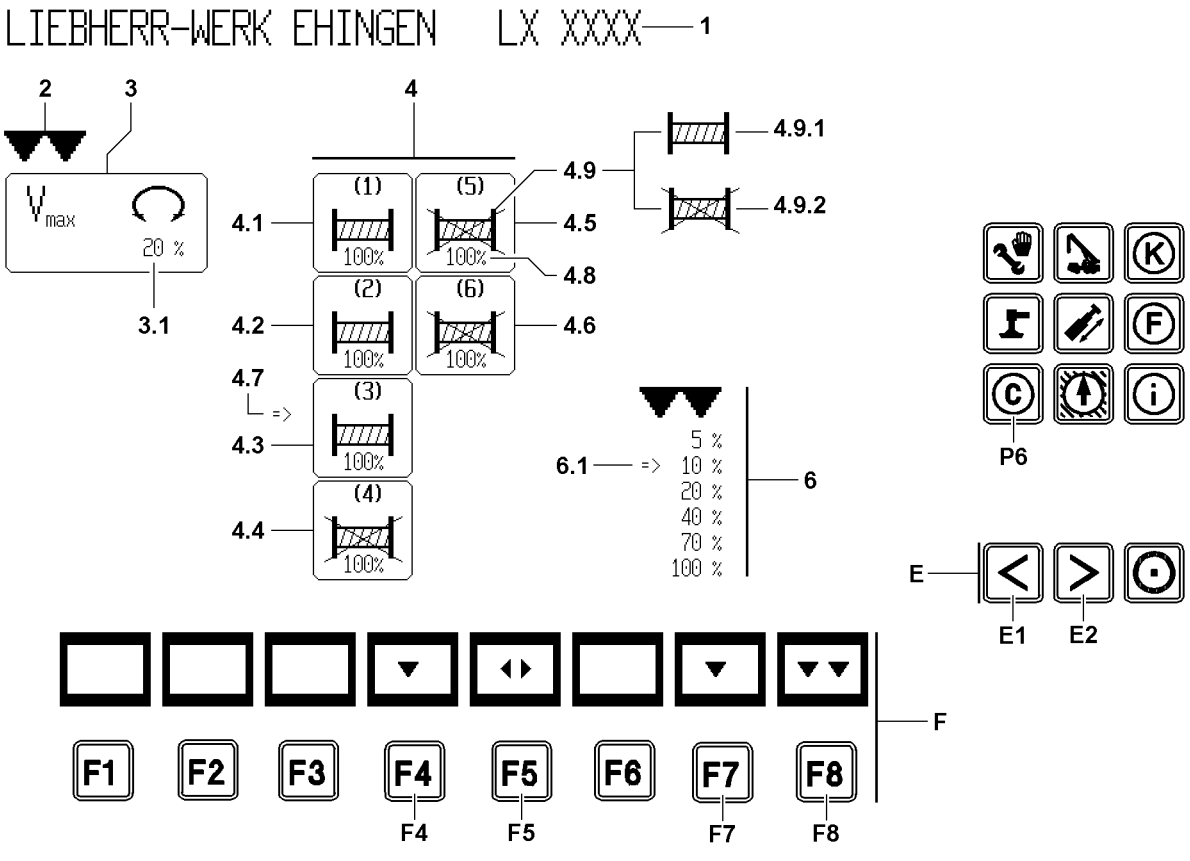
LIEBHERR-WERK EHINGEN LX XXXX
1
2
3
4
Vmax
20 %
3.1
4.1
4.2
4.3
4.4
4.5
4.6
4.7
4.8
4.9
4.9.1
4.9.2
6
6.1
P6
E
E1
E2
F
F1 F2 F3 F4 F5 F6 F7 F8
F4 F5 F7 F8

B111903

10.4.2 Activating / deactivating individual winches

In order to prevent unintentional activation of a winch that is currently not required, deactivate individual winches.

▶ Using the special function key **E1** or special function key **E2**, select the icon group “Winches” **4**.

Result:

– Selector (double arrow down) **2** appears above the icon group “Winches” **4**.

▶ With the function key **F4**, select the icon for “Winch 1”, **or** “Winch 2”, **or** “Winch 3” *, **or** “Winch 4”, **or** “Winch 5”, * **or** “Winch 6” *.

Result:

– Selector (arrow to right) **4.7** shows the selected winch.

▶ Using the function key **F5**, activate or deactivate the selected winch.

Result:

– The winch icon in the icon changes the appearance.
  • Winch icon not crossed out = winch activated **4.9.1**.
  • Winch icon crossed out = winch deactivated **4.9.2**.

10.5 Switching back to the crane operation program

▶ Press the function key **F8**.

Result:

– The parameters previously confirmed with the ENTER key **C** will be taken over into the control.

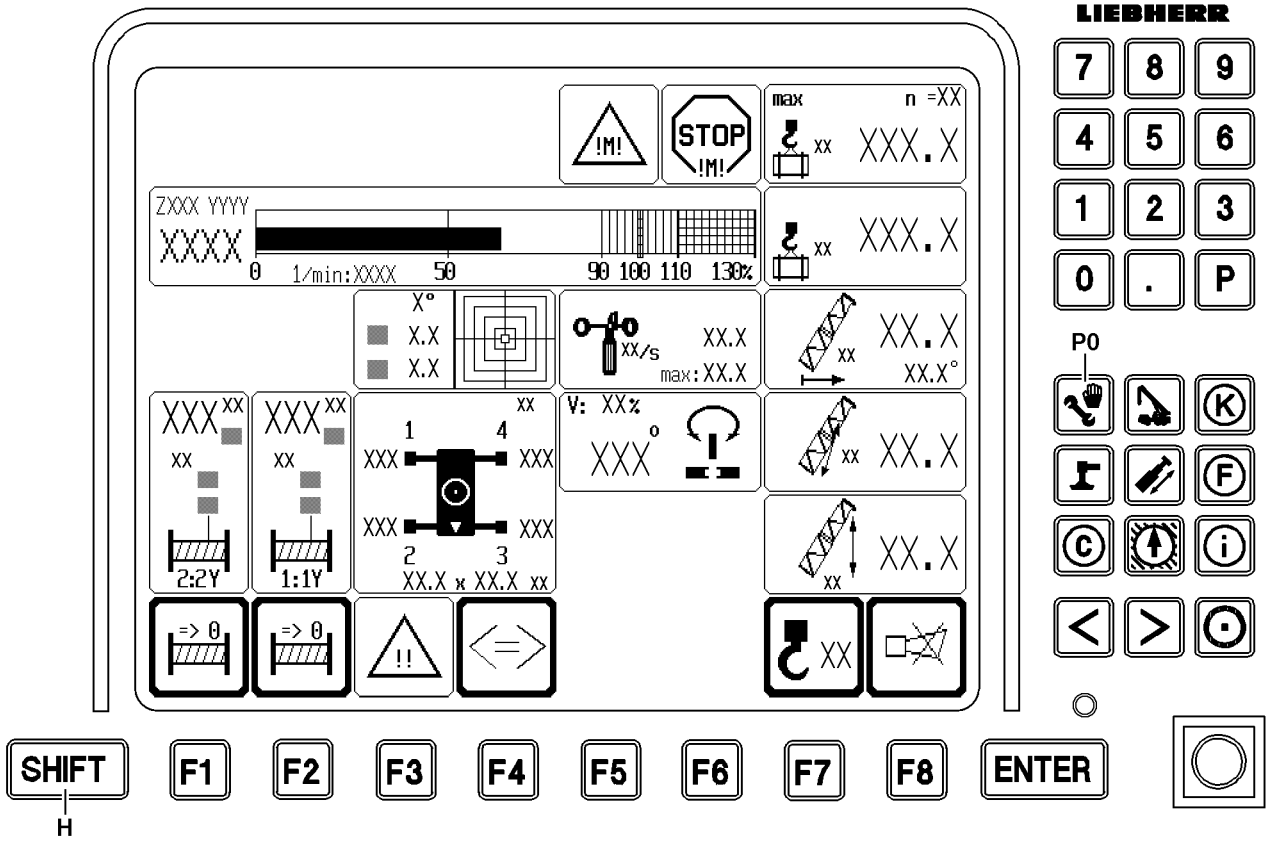
LIEBHERR
!M!
STOP
!M!
max
n =XX
ZXXX YYYY
XXXX
0
1/min:XXXX
50
90 100 110 130%
X°
X.X
X.X
XX/s
XX.X
max:XX.X
XX.X°
V: XX%
XXX°
2:2Y
1:1Y
1
4
2
3
XX.X x XX.X
=> 0
!!
7 8 9
4 5 6
1 2 3
0 . P
P0
K
F
C
i
SHIFT
H
F1
F2
F3
F4
F5
F6
F7
F8
ENTER

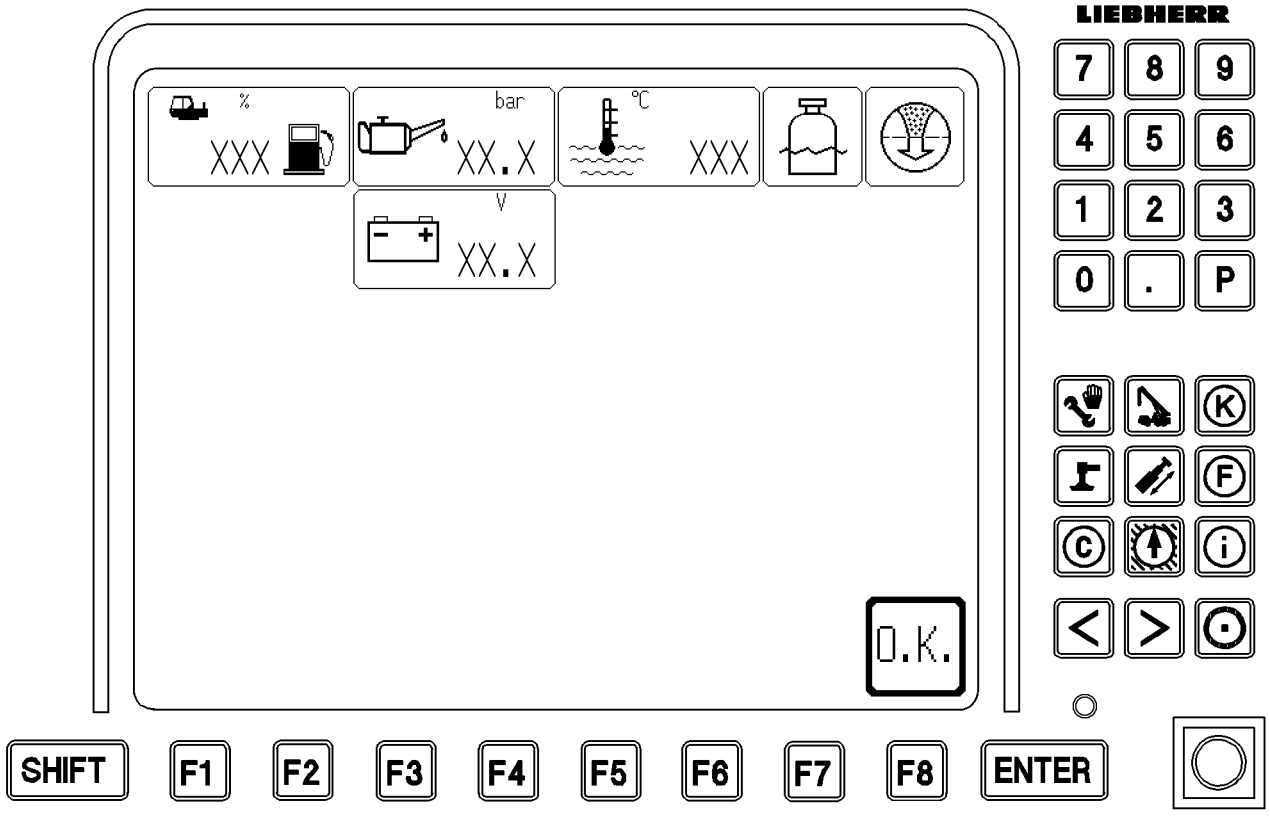
LIEBHERR
%
XXX
bar
XX.X
°C
XXX
V
XX.X
O.K.
7 8 9
4 5 6
1 2 3
0 . P
K
F
C
i
SHIFT
F1
F2
F3
F4
F5
F6
F7
F8
ENTER

B111908

11 The Engine monitoring program

All engine-related data is displayed by the engine monitoring program, such as the engine oil pressure, coolant temperature etc. The change from the crane operation into the engine monitoring program is made automatically is case of a problem.

11.1 Starting the program

The program starts automatically:

▶ Once if a STOP event of the engine monitoring takes place during **crane operation** or in the support program (at least one master switch is deflected or activated). The engine monitoring screen is displayed for approx. 5 seconds and then automatically reverts to the crane operating screen.

▶ Once if a STOP event of the engine monitoring occurs while the support program is active.

or

- At an advance warning, warning or STOP event of the engine monitoring during the boot up of the LICCON computer system.

This is how you start the program at the prompt:

▶ Press the key combination SHIFT **H** + program key **P0**.

Result:

– The engine monitoring screen is shown.
– All **load moment increasing** crane movements are blocked or turned off.

NOTICE
Danger of severe engine damage!
If the engine monitoring program reports a problem and / or warning occurrence, then you must react immediately and remedy the problem!

▶ React to problems and / or warning occurrences immediately and remedy the problem!
▶ If necessary, stop crane operation and turn the engine off!

NOTICE
Disregard of occurred STOP events!
If other programs are used for extended periods of time, for example the set up program, it is essential to switch occasionally to the engine monitoring screen in order to ensure that no engine monitoring events have occurred, which could lead to damage or destruction of the engine!

▶ Switch over occasionally to the engine monitoring screen!

▶ If you don't work in the crane operation or the support* programs, switch over occasionally to the engine monitoring screen.

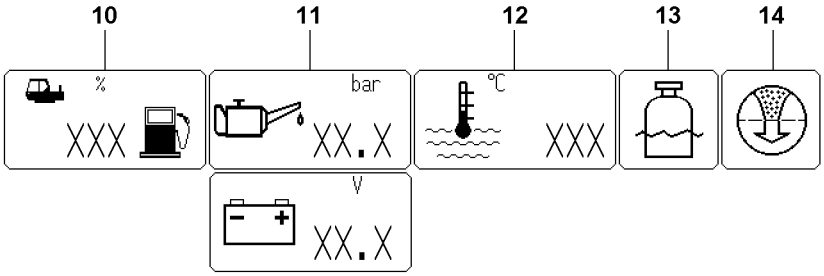

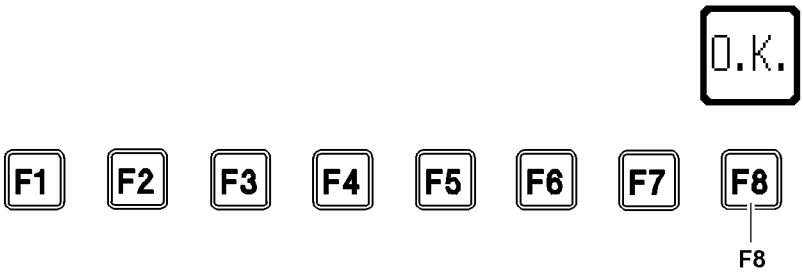

B111910

11.2 Engine monitoring icons

11.2.1 Crane engine

10	Tank content	• In percent [%] Icon blinks if the fuel reserve is less than 10 %.
11	Oil pressure	• In [bar] Numeric display in icon blinks if the engine oil pressure is too low.
12	Coolant / charge air temperature	• In [°C]
12.1	Coolant temperature	• Numeric display blinks if the coolant temperature is too high.
12.2	Charge air temperature	• Numeric display blinks if the charge air temperature is too high.
13	Coolant level too low	• Icon appears if the coolant level is too low.
14	Air filter is dirty	• Icon appears if air filter is dirty.
18	Auxiliary function - Battery voltage	• In [V] Numeric display in icon blinks if the operating voltage is less than 16 V or above 36 V

11.3 Function key line

F8	Function key	• Switching back to the crane operation program

Note

▶ The function keys **“F1”** to**“F7”** are **not** used!

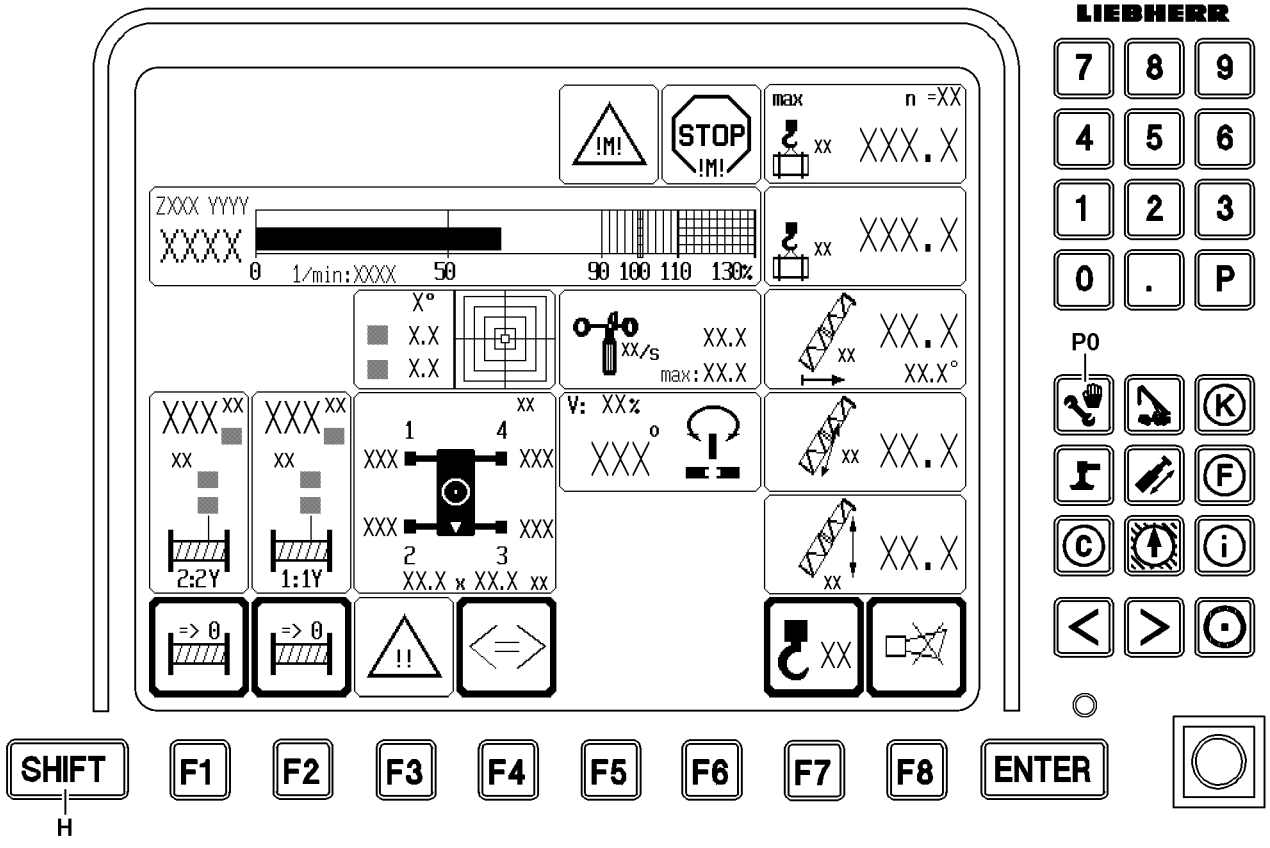
LIEBHERR
!M!
STOP
!M!
max
n =XX
XXX.X
ZXXX YYYY
XXXX
0
1/min:XXXX
50
90 100 110 130%
X°
X.X
X.X
XX/s
XX.X
max:XX.X
XX.X
XX.X°
V: XX%
XXX°
1
4
2
3
XX.X x XX.X
2:2Y
1:1Y
=> 0
=> 0
!!
P0
7 8 9
4 5 6
1 2 3
0 . P
K
F
C
i
SHIFT
H
F1
F2
F3
F4
F5
F6
F7
F8
ENTER

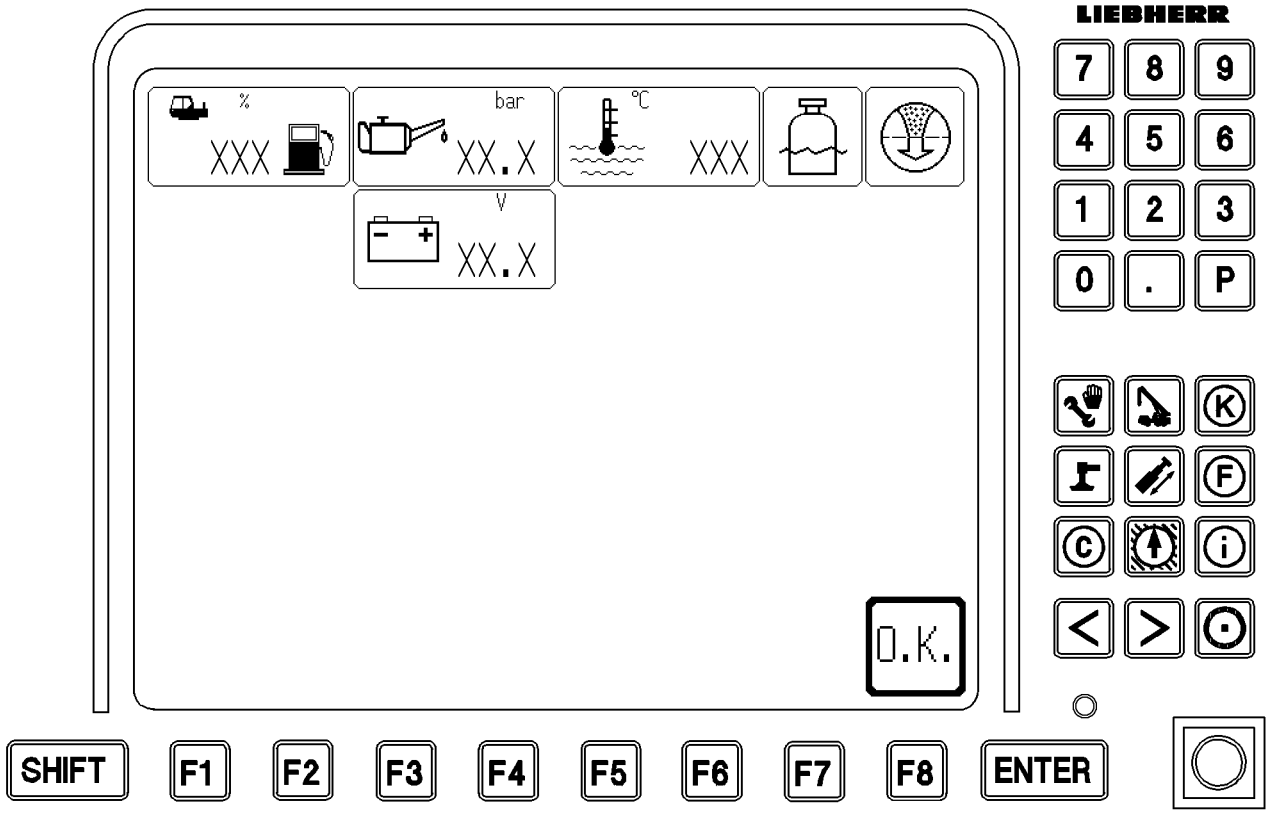
LIEBHERR
%
XXX
bar
XX.X
°C
XXX
V
XX.X
O.K.
7 8 9
4 5 6
1 2 3
0 . P
K
F
C
i
SHIFT
F1
F2
F3
F4
F5
F6
F7
F8
ENTER

B111908

11.4 Possible engine monitoring advance warning, warning and STOP events

Events	Advance warning	Warning 5.2	STOP 6.2
Engine oil pressure (display value) missing		x	
Erroneous engine oil pressure (display value)		x	
Engine oil pressure warning active			x
Coolant / charge air temperature (display value) missing		x	
Erroneous coolant / charge air temperature (display value)		x	
Coolant / charge air temperature warning active			x
Coolant level warning active			x
Hydraulic oil temperature (display value) missing	x		
Erroneous hydraulic oil temperature (display value)	x		
Hydraulic oil temperature (display value) too high		x	
Air filter monitoring		x	
Battery voltage (display value) missing	x		
Erroneous battery voltage (display value)	x		
Battery voltage not between 16 V and 36 V	x		
Fuel reserve (display value) missing	x		
Erroneous fuel reserve (display value)	x		
Fuel reserve (display value) 10 % or less	x		
Fuel reserve (display value) 6 % or less		x	
Fuel reserve (display value) 1 % or less			x

If the system automatically switches to the engine monitoring program when an engine STOP event occurs, there is an option for retaining the engine monitoring screen within 5 seconds (retaining the engine monitoring screen is achieved by pressing the function key **F1**). Switch back to the operating screen using the function key **F8** (OK) or the program key **P1** (crane operation). If the engine monitoring screen is **not** retained, then after 5 seconds the system switches back automatically to the crane operation program.

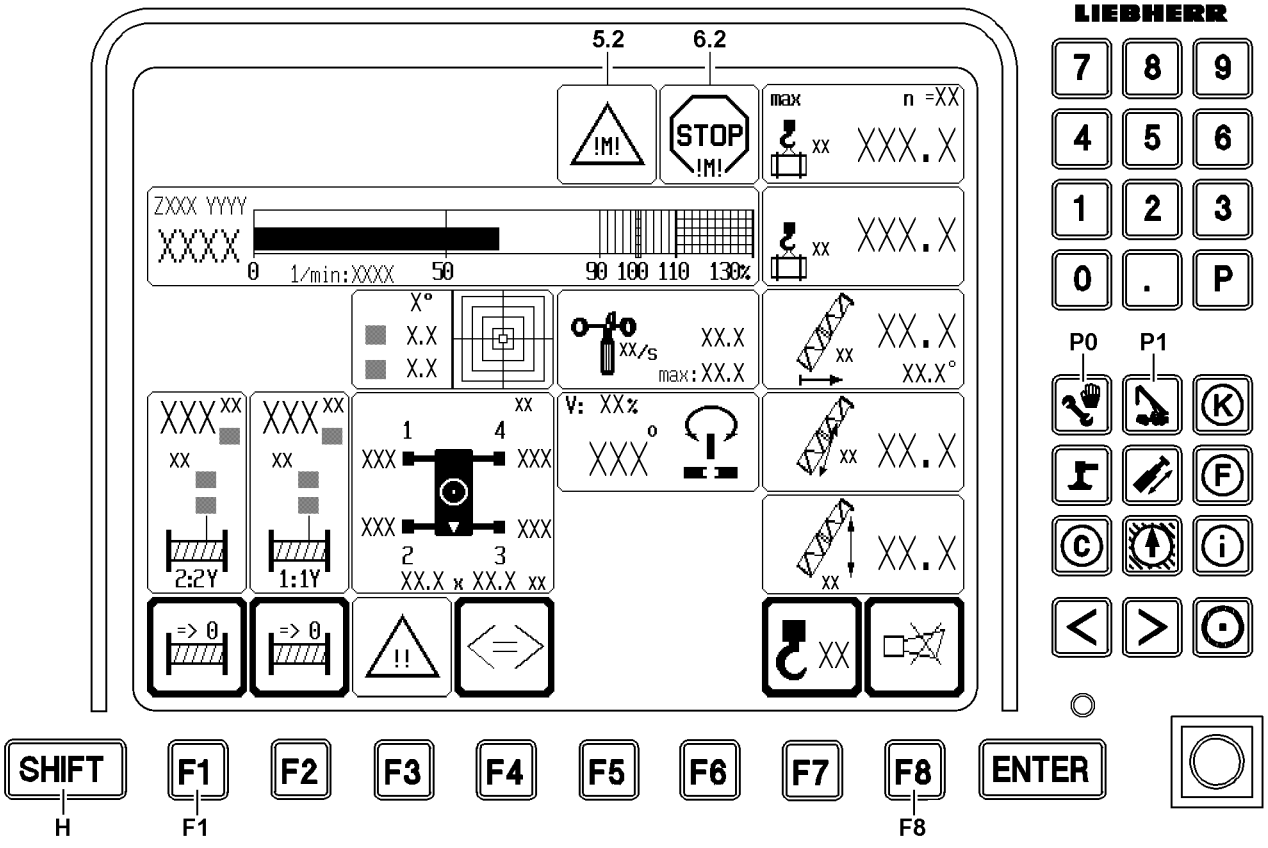
5.2
6.2
!M!
STOP
!M!
max
n =XX
XXX.X
ZXXX YYYY
XXXX
0
1/min:XXXX
50
90 100 110 130%
X°
X.X
X.X
XX/s
XX.X
max:XX.X
XX.X°
V: XX%
XXX°
2:2Y
1:1Y
1
4
2
3
XX.X x XX.X
=> 0
!!
LIEBHERR
7 8 9
4 5 6
1 2 3
0 . P
P0 P1
K F C i
SHIFT F1 F2 F3 F4 F5 F6 F7 F8 ENTER
H F1 F8

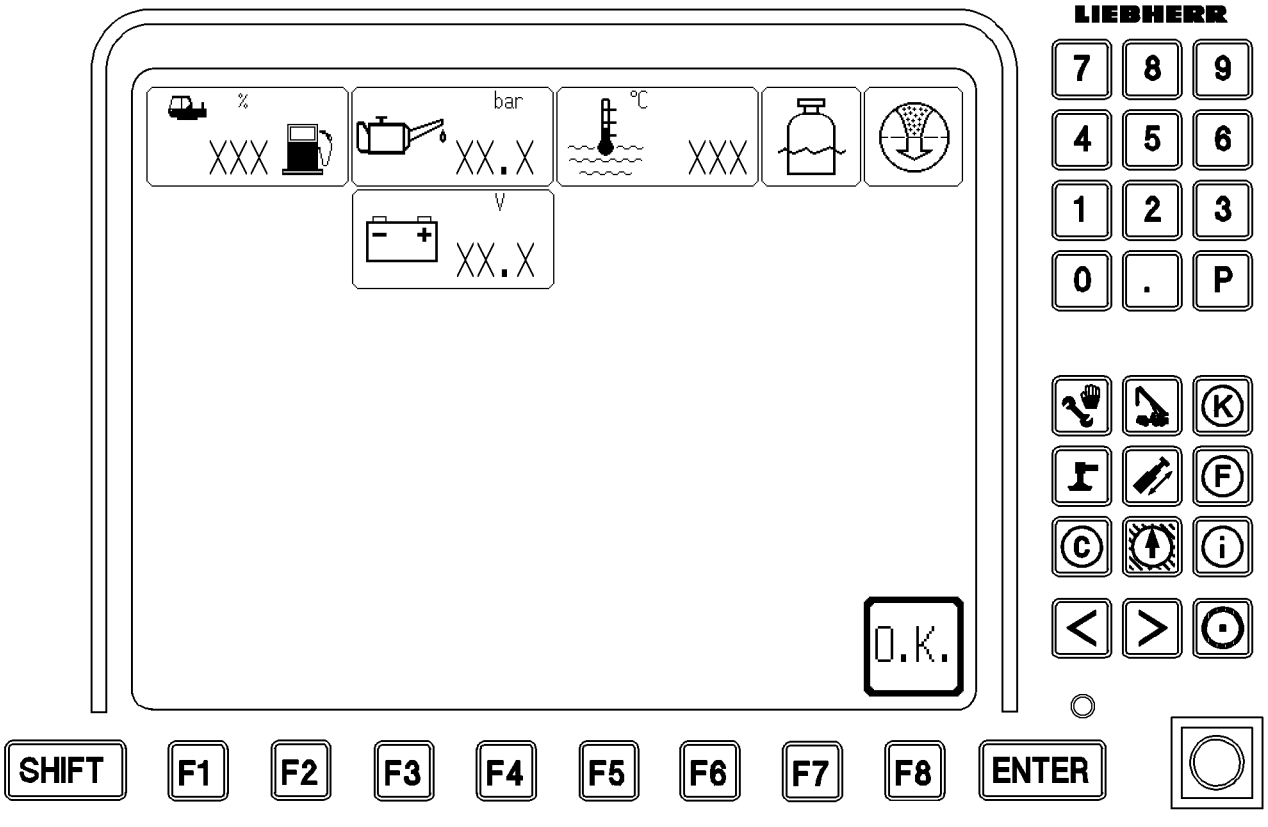
%
XXX
bar
XX.X
°C
XXX
V
XX.X
O.K.
LIEBHERR
7 8 9
4 5 6
1 2 3
0 . P
K F C i
SHIFT F1 F2 F3 F4 F5 F6 F7 F8 ENTER

B111909

11.5 Retaining the engine monitoring screen

The automatic change over into the engine monitoring screen is only made from the crane operation program.

If you confirm a monitoring event in the engine monitoring screen with the function key **F8**, then there will be **no** automatic change over to the engine monitoring screen for the same event.

When switching back to the crane operation program, the STOP icon **6.2** or the warning icon **5.2** appears. Advance warnings are **not** pointed out in the crane operation program.

NOTICE

Danger of severe engine damage due to disregard of STOP occurrences!

If other programs are used for extended periods of time, for example the set up program, it is essential to switch occasionally to the engine monitoring screen in order to ensure that no engine monitoring events have occurred, which could lead to damage or destruction of the engine!

- ▶ Switch over occasionally to the engine monitoring screen!
- ▶ In case of an active engine STOP event, turn the engine off immediately!

▶ Press the function key **F1**.

Result:

– Icon frames are displayed with a thin border.
– All load moment increasing crane movements will be turned off or blocked.

▶ Press the function key **F8**.

Result:

– System switches back to the crane operation program.
– The block of the load moment increasing crane movements will be lifted.
– The warning or STOP icon is still shown in the crane operation program.

B195219

1 Checks before start up

Various checks must be performed before operating the crane.
Make sure that the following prerequisites are met:
– Engine off.
– LICCON computer system in stand-by mode.

Note
▶ LICCON computer system in stand-by mode, see Crane operating instructions, chapter 4.02!

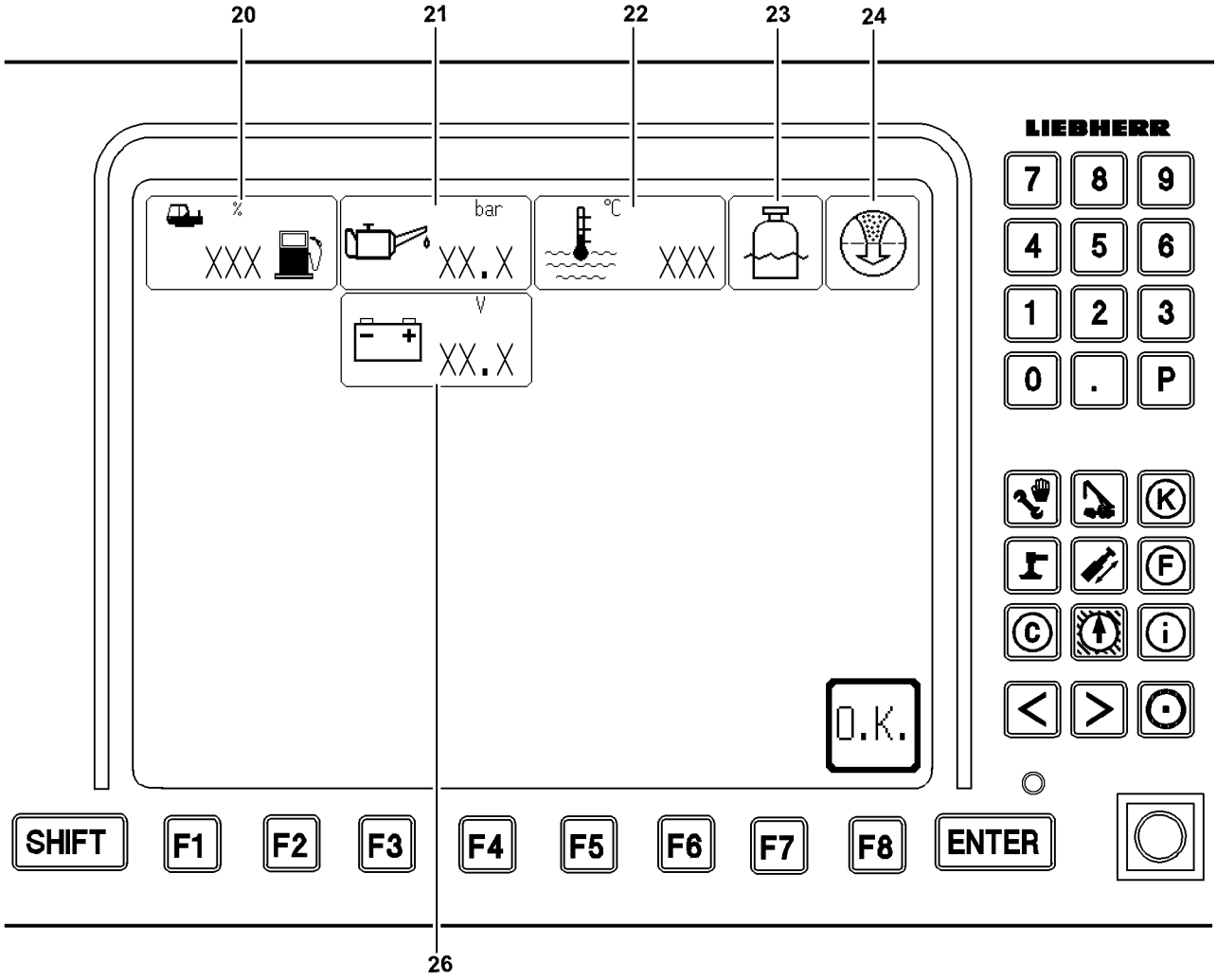
20
21
22
23
24
%
XXX
bar
XX.X
°C
XXX
V
XX.X
LIEBHERR
7
8
9
4
5
6
1
2
3
0
.
P
K
F
C
i
O.K.
SHIFT
F1
F2
F3
F4
F5
F6
F7
F8
ENTER
26

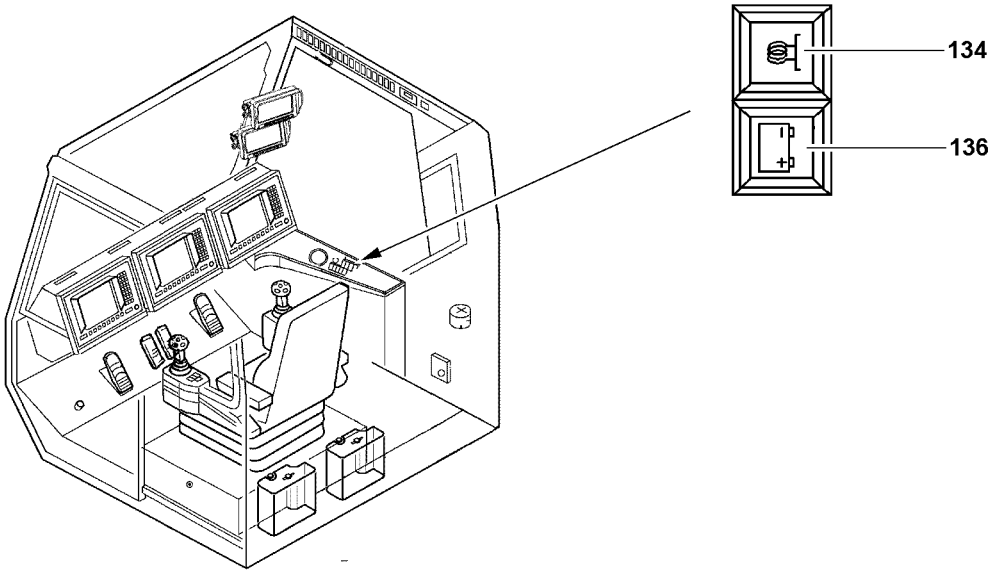
134
136

B112387

1.1 Checking the oil level and filters

- ▶ Check oil level on the crane engine.
- ▶ Check the oil level in the hydraulic tank.
- ▶ Check the filter on the hydraulic tank.

1.2 Checking the fuel level

Note
Fuel tank empty!
If the fuel tank has been run dry, then the fuel system must be bled!
▶ Refuel in time!

On the LICCON monitor, the amount of fuel left in the tank is shown in the form of a numerical display in percentages [%], see icon **20**.
▶ Check the tank contents on LICCON monitor.

1.3 Checking the coolant level

For detailed description of lubricants and fill quantities, see Crane operating instructions, chapter 7.06 and chapter 7.07.

WARNING
Danger of burns due to hot coolant!
Coolant at operating temperature is under pressure. If the cooling system is opened, there is the danger of scalding!
▶ Check the coolant level only when the engine is cold!

NOTICE
Property damage due to insufficient cooling!
▶ Check the coolant level!
If the coolant level of the coolant expansion tank falls below the overflow on the filler neck:
▶ Add coolant!

1.4 Checking the battery voltage

Note
The battery voltage must be checked in regular intervals, especially if the crane has been “out of service” for a longer period of time and users, such as the airplane warning lights - are checked and the battery must be recharged if necessary!
▶ Recharge the battery, see Crane operating instructions, chapter 7.05!

Note
Reduced battery performance requires greater power requirements!
▶ Ensure that batteries are well charged, particularly during the colder months!

▶ Check the battery voltage, see icon **26**.

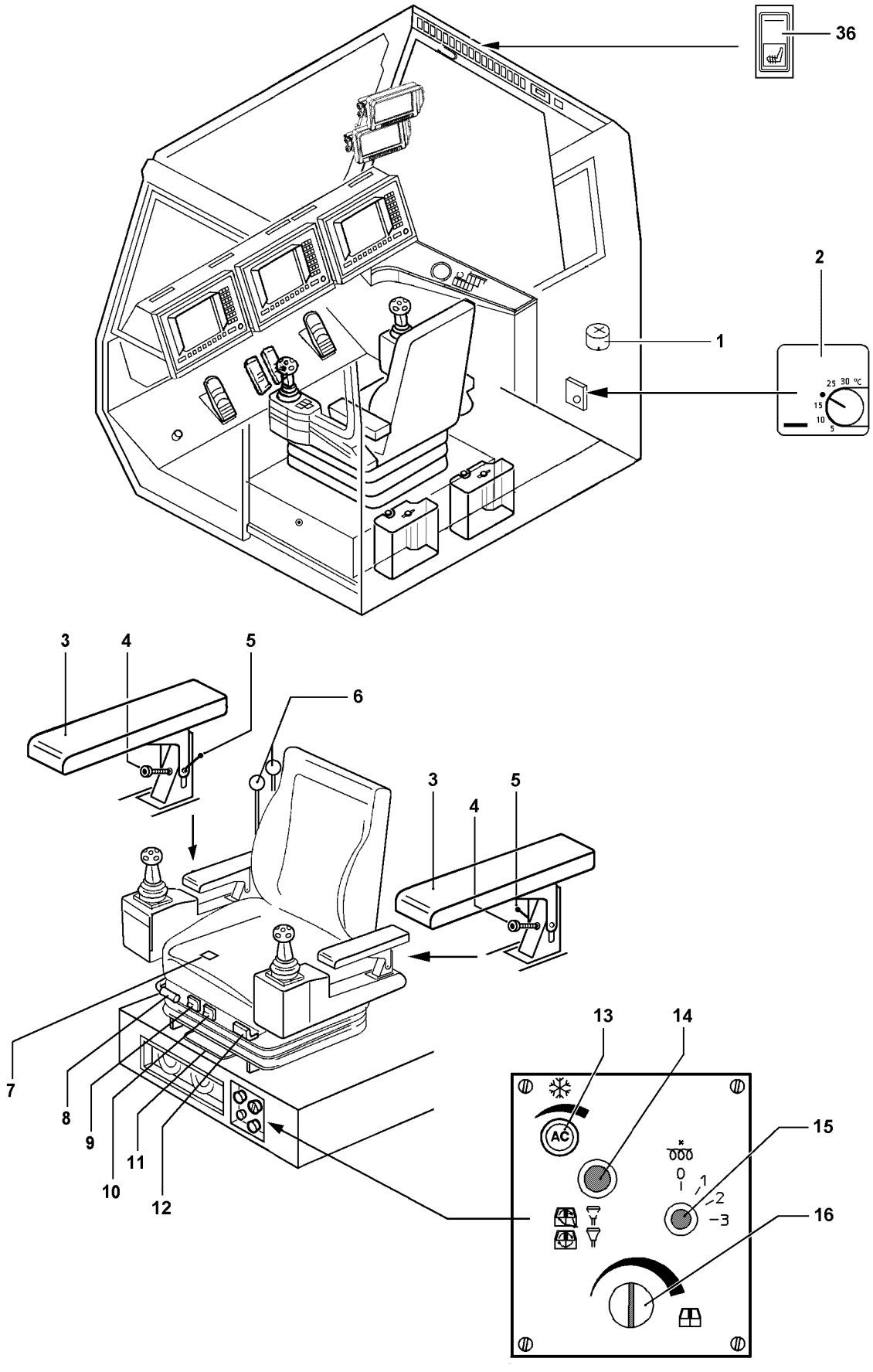

B110610

1.5 Checking the central lubrication system

For detailed description of lubricants and fill quantities, see Crane operating instructions, chapter 7.06 and chapter 7.07.

NOTICE
Property damage due to insufficient lubrication!
- ▶ Check the fill quantity of the grease containers!

If the fill quantity falls below the marked minimum amount:
- ▶ Fill the grease container with grease!

1.6 Checking the general condition of the crane

WARNING
Danger of fatal injuries due to falling parts!
If parts fall from the main boom during erection, personnel can be severely injured or killed!
- ▶ Before erecting the boom: Make sure that there are no loose parts on the boom system, such as pins, spring retainers or ice!
- ▶ Make sure that the cable / rope drum and the limit switches are free of snow and ice!

- ▶ Make sure that the crane is horizontally aligned.
- ▶ Make sure that the gear ring of the rotary connection is clean and greased.
- ▶ Make sure that the air supply to the oil and water cooler is clear.
- ▶ Make sure that side covers are closed and locked.
- ▶ Make sure that no persons or objects are within the danger zone of the crane.

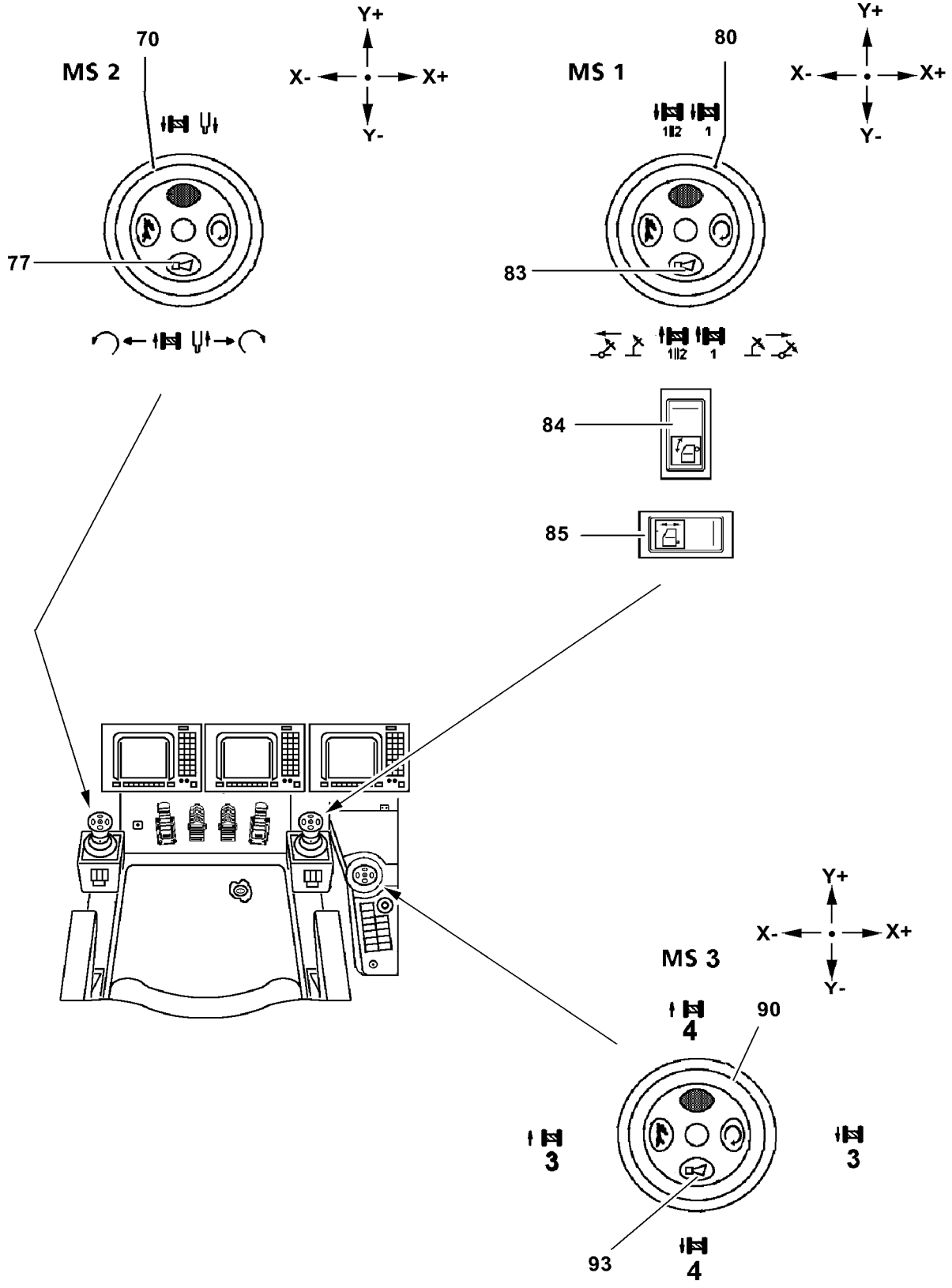

B110613

2 Moving the crane operator's cab

WARNING
Danger of crushing!
When swinging the crane operator's cab in and out, make sure that there are no persons or objects within the danger zone!
Personnel can be crushed and severely injured or killed as a result!
▶ Make sure that personnel cannot be caught by the crane operator's cab!

2.1 Swinging the crane operator's cab into operating position

The crane operator's cab is swung during transport in front of the turntable.
▶ Swinging the crane operator's cab out into operating position: Press the button **85**.
Result:
– The crane operator's cab swings out.

2.2 Swinging the crane operator's cab into transport position

Swing the crane operator's cab in from the operating position into the transport position.
▶ Swing the crane operator's cab all the way in: Press the button **85**.
Result:
– The crane operator's cab swings in.

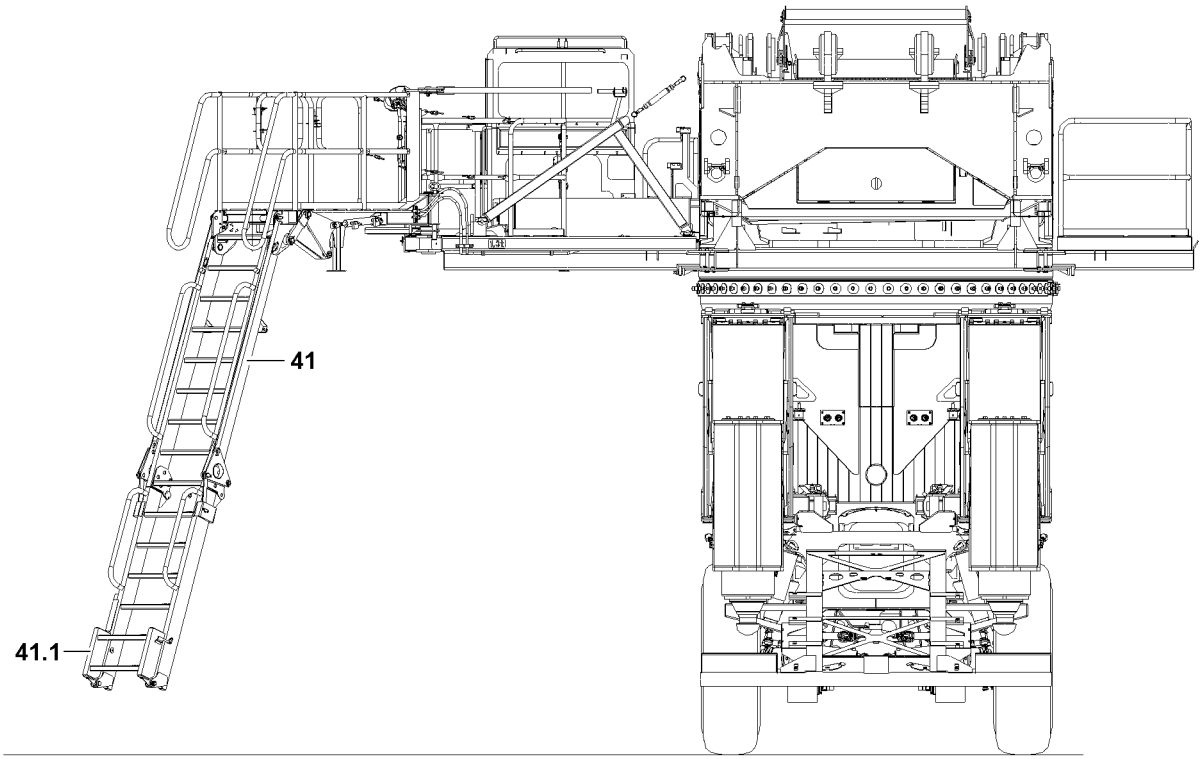

B112381

3 Operating the access ladder

WARNING
Danger of crushing!
When lowering / lifting the access ladder **41**, make sure that there are no persons or objects within the danger zone!
Personnel can be caught by the access ladder **41** and severely injured or killed as a result!
- ▶ Make sure that personnel cannot be caught by the access ladder **41**!
- ▶ When lowering / lifting the access ladder **41** without direct visual contact by the operator, all movements must be monitored by a guide!

NOTICE
Risk of collision!
If the crane superstructure is turned with folded down step **41.1** or lowered access ladder **41**, there is a danger of collision!
The access ladder and other components can be significantly damaged!
- ▶ When the step **41.1** is folded down: Fold the step **41.1** up and lock!
- ▶ Before unpinning the crane superstructure from the crane chassis, always raise the access ladder **41** all the way!
- ▶ When the access ladder **41** is lowered, an acoustical warning signal sounds, but there is no shut off!

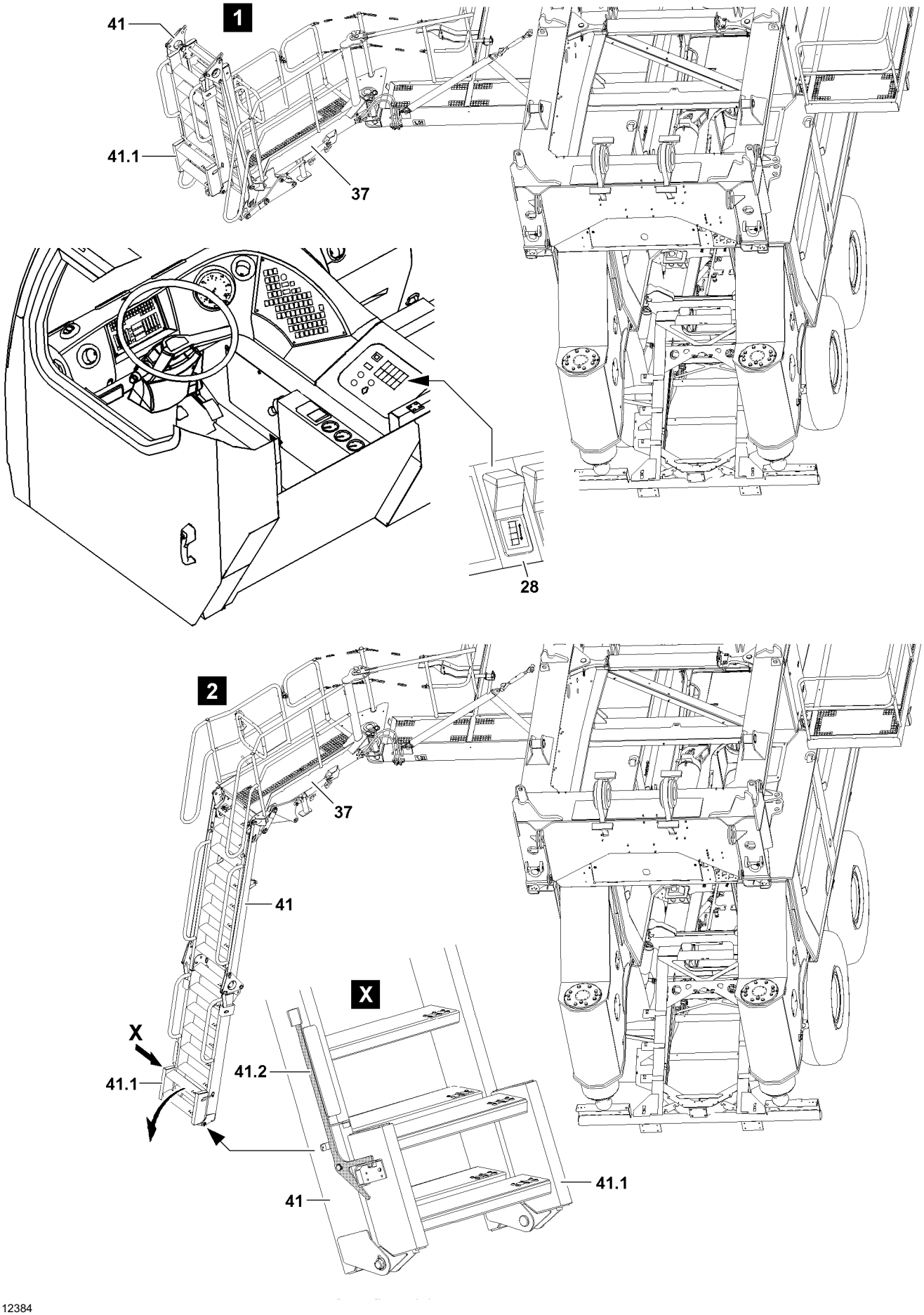

B112384

3.1 Operating the access ladder from the driver's cab

Note
▶ As a rule, the following prerequisites must be observed when operating the access ladder!

Ensure that the following prerequisites are met:
– The crane superstructure is locked with the crane chassis in longitudinal direction.
– The catwalk **37** is swung out into operating position, pinned and secured, see Crane operating instructions, chapter 2.06.
– The engine in the crane superstructure is running.
(Starting the engine in the crane superstructure, see Crane operating instructions, chapter 3.04.)

WARNING
Danger of crushing!
When the step **41.1** folds down, legs can be hit or fingers can be crushed!
▶ Do not reach with fingers or hands into the turning range of the step **41.1**!
▶ Standing in the folding area of the step **41.1** is prohibited!

3.1.1 Lowering the access ladder into operating position

▶ Lower the access ladder **41**: Press the button **28** in the center console until the access ladder has reached the “bottom” end position, see illustration **2**.

Note
▶ When the end position is reached, the control turns the “Lowering” movement off by itself!

To simplify access and egress to the crane superstructure, the step **41.1** can be folded down.
▶ Actuate the hand lever **41.2** up and fold the step **41.1** down.

3.1.2 Lifting the access ladder into transport position

Before lifting the access ladder **41**, the step **41.1** must be brought into transport position.
▶ Fold the step **41.1** up and engage it in transport position.
▶ Lift the access ladder **41**: Press the button **28** in the center console until the access ladder has reached the “top” end position, see illustration **1**.

Note
▶ When the end position is reached, the control turns the “Lifting” movement off by itself!

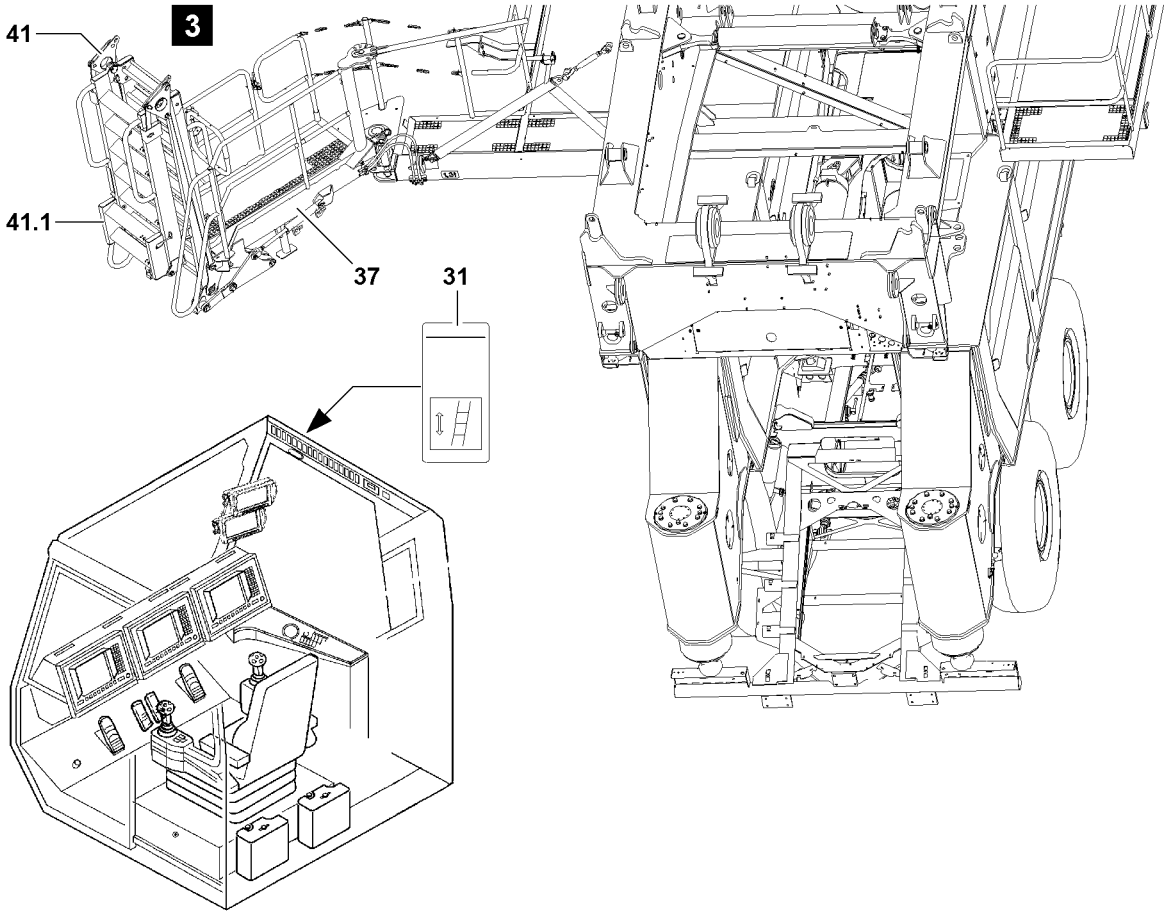

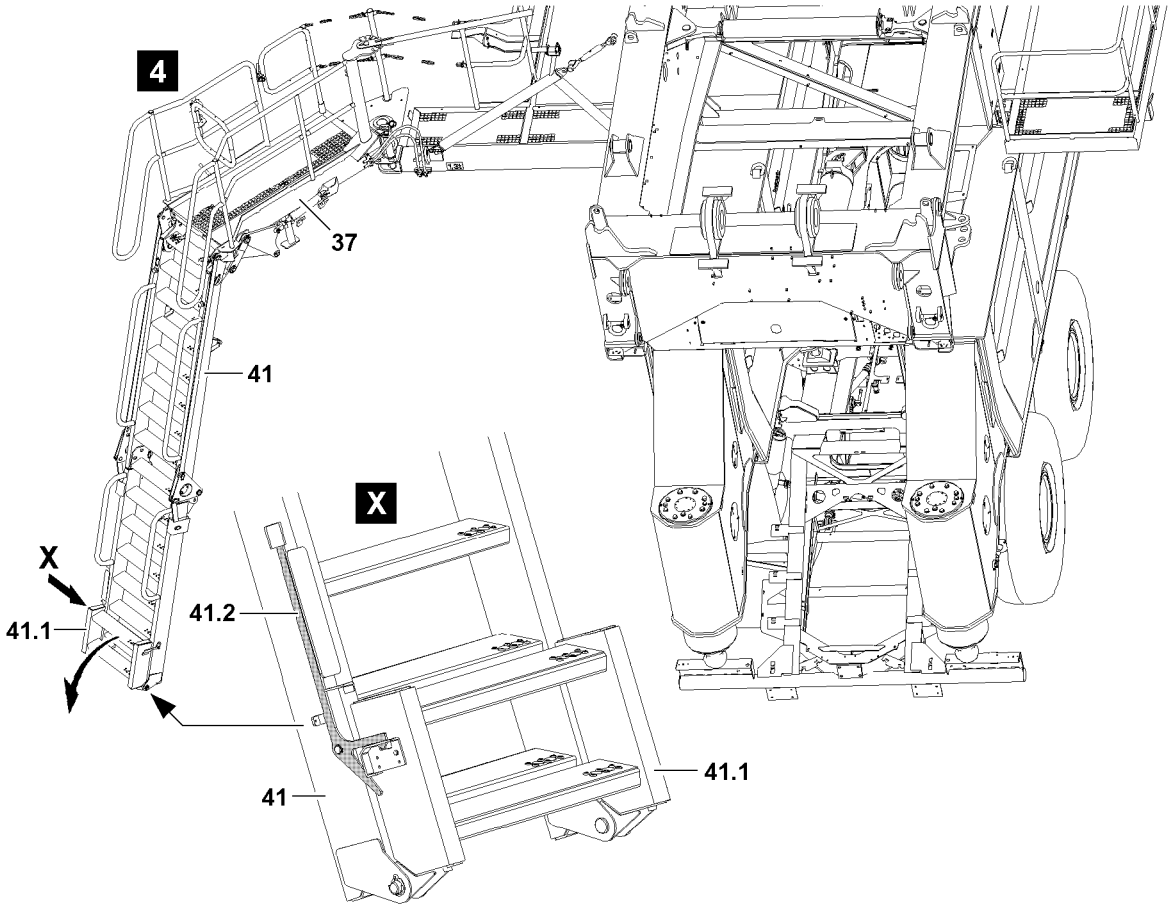

B112383

3.2 Operating the access ladder from the crane operator's cab

Note
▶ As a rule, the following prerequisites must be observed when operating the access ladder!

Ensure that the following prerequisites are met:
– The crane superstructure is locked with the crane chassis in longitudinal direction.
– The catwalk **37** is swung out into operating position, pinned and secured, see Crane operating instructions, chapter 2.06.
– The engine in the crane superstructure is running.
(Starting the engine in the crane superstructure, see Crane operating instructions, chapter 3.04.)

WARNING
Danger of crushing!
When the step **41.1** folds down, legs can be hit or fingers can be crushed!
▶ Do not reach with fingers or hands into the folding range of the step **41.1**!
▶ Standing in the folding area of the step **41.1** is prohibited!

3.2.1 Lowering the access ladder into operating position

▶ Lower the access ladder **41**: Press the button **31** in the roof console until the access ladder has reached the “bottom” end position, see illustration **4**.

Note
▶ When the end position is reached, the control turns the “Lowering” movement off by itself!

To simplify access and egress to the crane superstructure, the step **41.1** can be folded down.
▶ Actuate the hand lever **41.2** up and fold the step **41.1** down.

3.2.2 Lifting the access ladder into transport position

Before lifting the access ladder, the step **41.1** must be brought into transport position.
▶ Fold the step **41.1** up and engage it in transport position.
▶ Lift the access ladder **41**: Press the button **31** in the roof console until the access ladder has reached the “top” end position, see illustration **3**.

Note
▶ When the end position is reached, the control turns the “Lifting” movement off by itself!

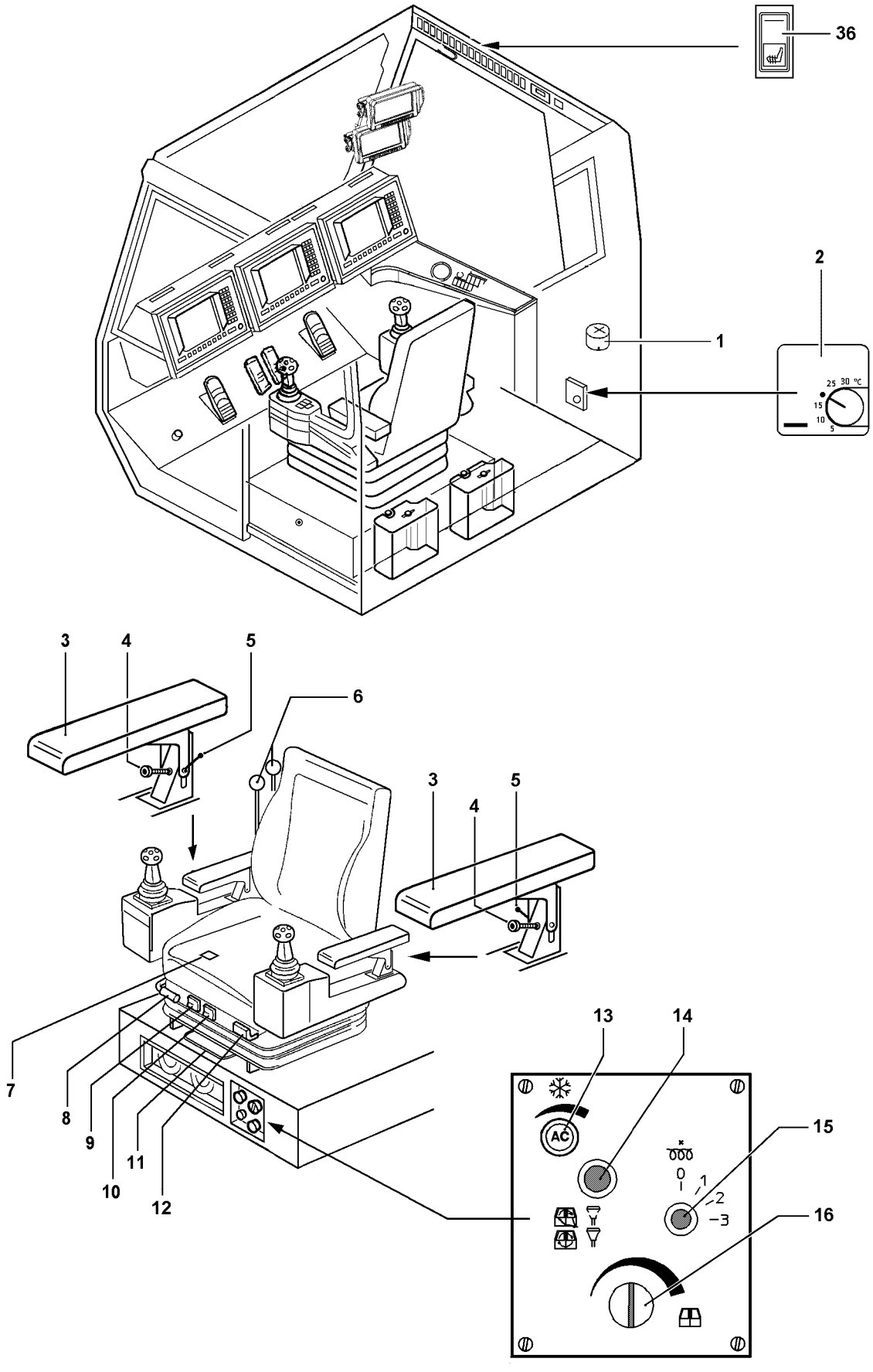

B110610

4 Work station - Crane operator's cab

4.1 Adjusting the crane operator's seat

The crane operator's seat can be adjusted to suit different body sizes.

4.1.1 Adjusting the seat position

- ▶ Adjust the armrest incline with the locking lever **5**.
- ▶ Adjust the seat surface incline with the manual lever **8**.
- ▶ With the button **9** adjust the lumbar area support “on the bottom”.
- ▶ With the button **10** adjust the lumbar area support “on top”.
- ▶ Unlock the horizontal seat adjustment with the bar **11**.
- ▶ Adjust the backrest incline with the manual lever **12**.

Note

- ▶ To ensure fatigue free and concentrated work with the crane, the arm rests should be adjusted in such a way that you can comfortably reach and operate the master switches!

4.1.2 Seat heater*

The crane operator's seat can be heated with the seat heater.

- ▶ Turn the seat heater on or off with the switch **36**.

4.2 Turning the heater and ventilation on

The crane operator's cab can be heated or ventilated depending on the desired temperature.

Note

- ▶ For a detailed description, see Crane operating instructions, chapter 6.01!

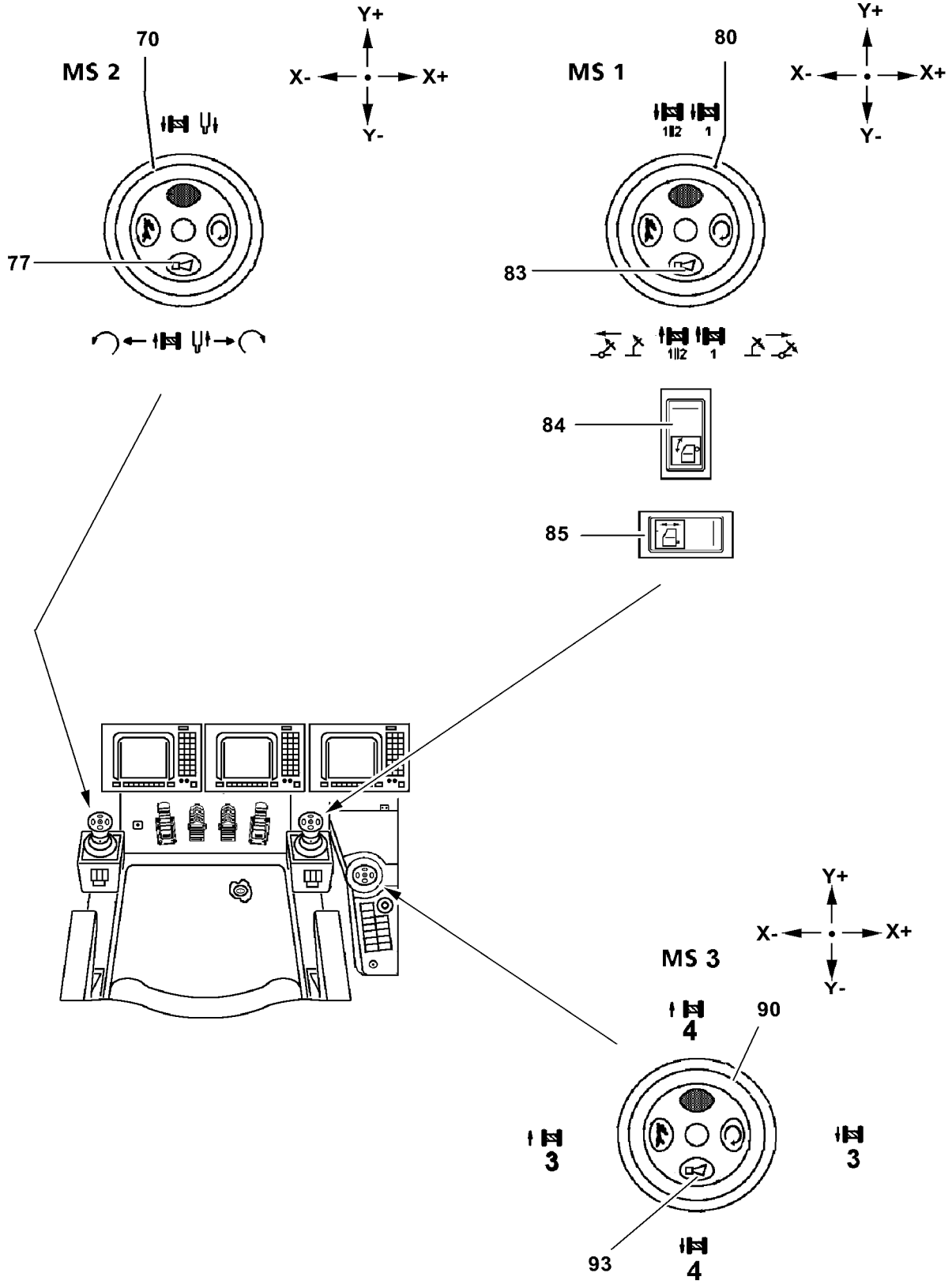

B110613

4.3 Tilting the crane operator's cab

To give the crane operator a better field of view, the crane operator's cab can be tilted upward.

WARNING
Danger of crushing!
When the crane operator's cab is tilted, the cab doors will open more quickly and hit the backstop!
Personnel can be crushed and severely injured or killed as a result!
The crane operator's cab can be damaged!
- ▶ Hold the crane operator's cab only on the handle provided for this purpose!
- ▶ To open, hold the cab door by the handle and open it slowly!

4.3.1 Tilting the crane operator's cab up

- ▶ Push the button **84** “upward”.

Result:
- – The crane operator's cab swings upward.

4.3.2 Setting the crane operator's cab into horizontal position

- ▶ Press the button **84** “downward”.

Result:
- – The crane operator's cab swings downward.

Note
- ▶ After ending crane operation: Set the crane operator's cab into horizontal position!

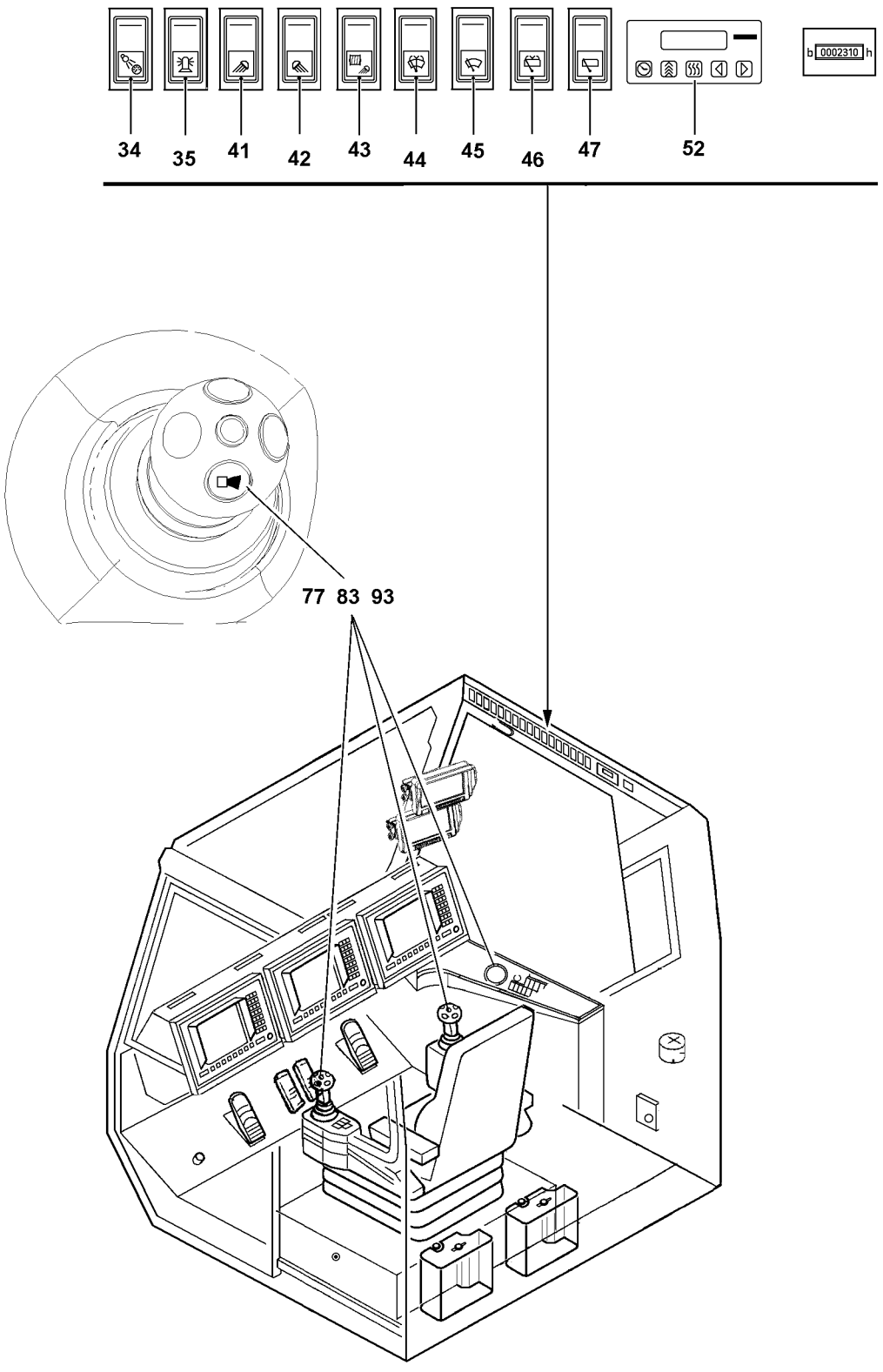

B110611

4.4 Operating the windshield wiper / windshield washer system

4.4.1 Operating the windshield wiper

The windshield wipers on the front and roof window can be actuated with the two-stage switch:

– Switch position I: Intermittent
– Switch position II: Wipe

▶ Turn the windshield wiper on the front window on: Actuate **45** the switch.
▶ Turn the windshield wiper on the roof window on: Actuate **47** the switch.

4.4.2 Operating the windshield washer system

The windshield wipers on the front and roof windows can be assisted by a windshield washer system.

Note

▶ Before the start of the cold season, fill the container for the window washer fluid with standard antifreeze mix!

▶ Turn the windshield washer system for the front window on: Press the button **44**.
▶ Turn the windshield washer system for the roof window on: Press the button **46**.

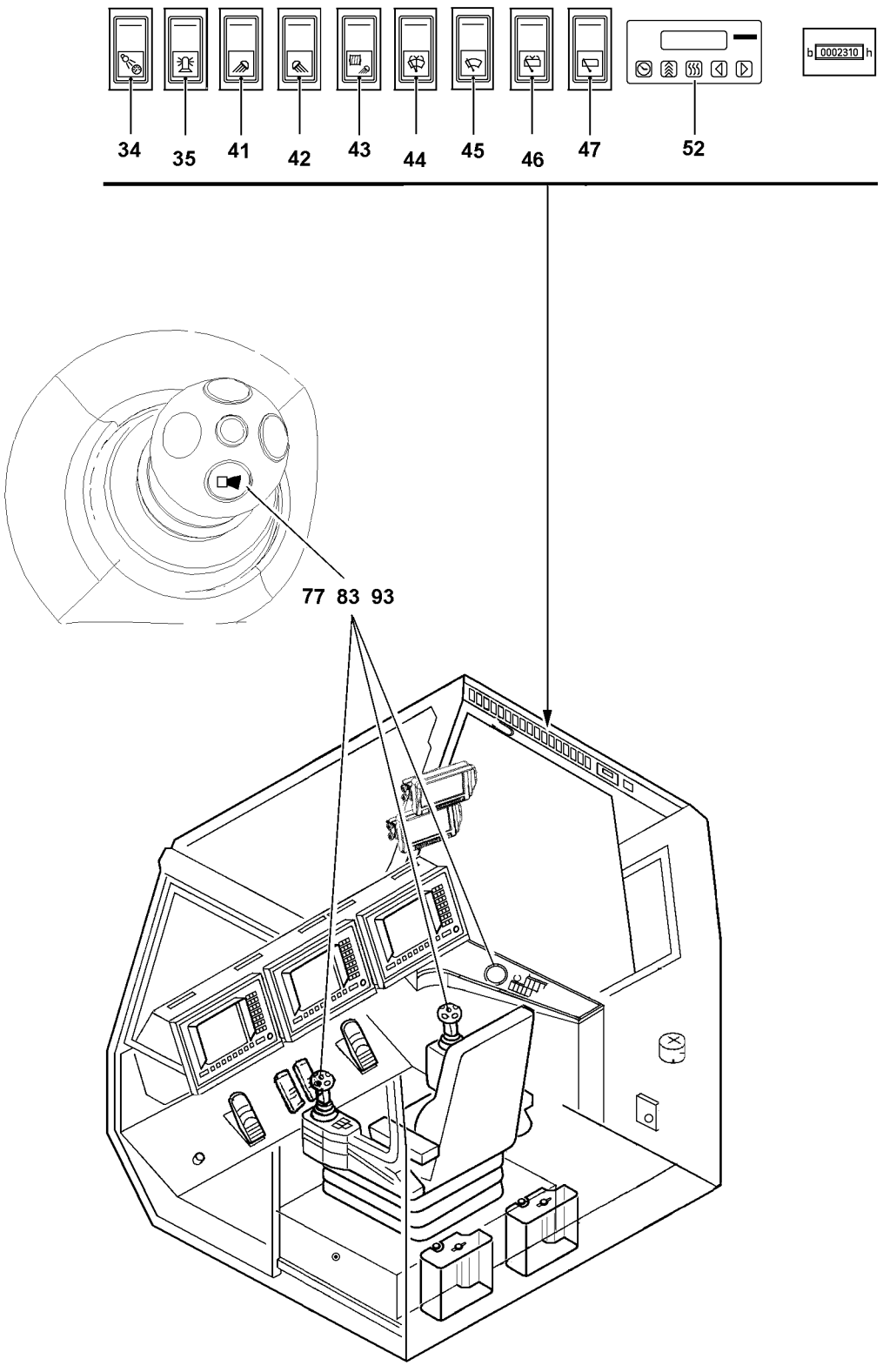

B110611

4.5 Opening the front window

WARNING
Danger of hand injury from trapping!
▶ Be careful with your hands when closing the front window!

A pair of nitrogen gas cylinders provide help to lift the front window.
▶ To open from inside, just press on the front window.

or

If you only want to partly open the window:
- Adjust the window in the desired position with the provided perforated belt.

4.6 Checking the horn

Note
Use of the horn!
▶ Only use the horn only in dangerous situations to maintain its warning effect!

Before starting to work, check that the horn is functioning:
▶ Press the button **77**.

or

- Press the button **83**.

or

- Press the button **93**.

4.7 Turning the lights on / off

▶ With the switch **34** turn the instrument panel lighting on / off.
▶ With the switch **35** turn the airplane warning light on / off.
▶ With the switch **41** turn the working floodlight on the crane operator's cab pedestal on / off.
▶ With the switch **42** turn the working floodlight on the crane operator's cab roof on the front and rear on / off.
▶ With the switch **43** turn the working floodlight on the hoist winch and the mirror heater on / off.

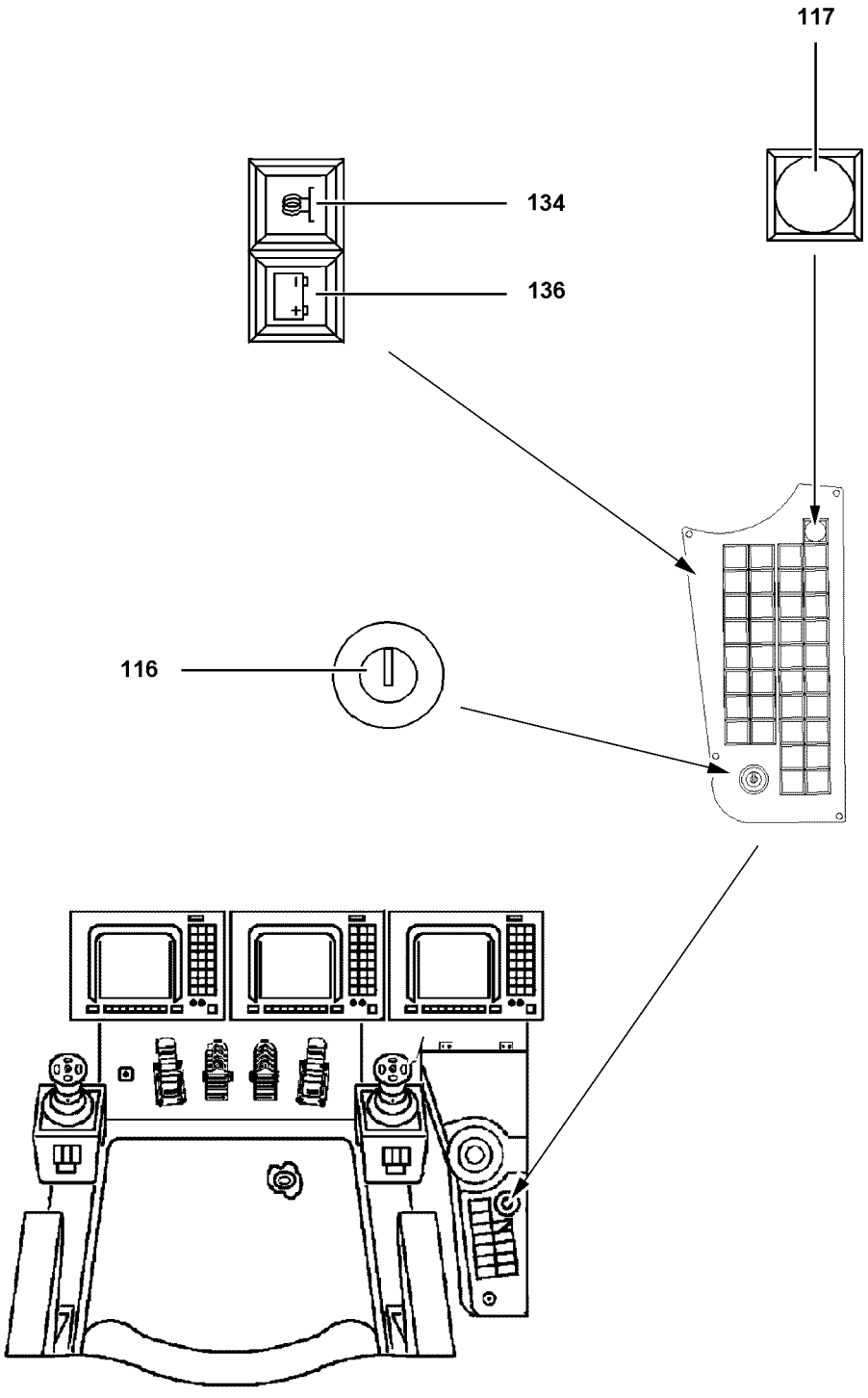

B110612

5 Starting and stopping the engine

Note

▶ The engine must be operated according to the separately supplied Engine operating instructions!

5.1 Starting the engine

▶ Turn the ignition switch **116** to position “I”.

Result:

– The indicator light **134** blinks.
– The engine is ready to start.

NOTICE

Property damage!

▶ Start the engine only when the warning light **136** lights up and the indicator light **134** blinks!

▶ Turn the ignition starter switch **116** to position “II”.

▶ Start the engine.

Troubleshooting

The engine does not start after a maximum of 10 seconds.

▶ Wait for 1 minute. The starter can be operated three times for 10 seconds per attempt with a pause in between of one minute each time.

Troubleshooting

The engine stops again after running for 4 seconds.

▶ Turn the ignition starter switch **116** to position “0”.

▶ Preheat the engine for approx. 10 seconds, then restart.

▶ The engine control now runs with default values. Make sure to observe any error message and contact Liebherr Service, if necessary.

▶ Check the instruments after starting the engine.

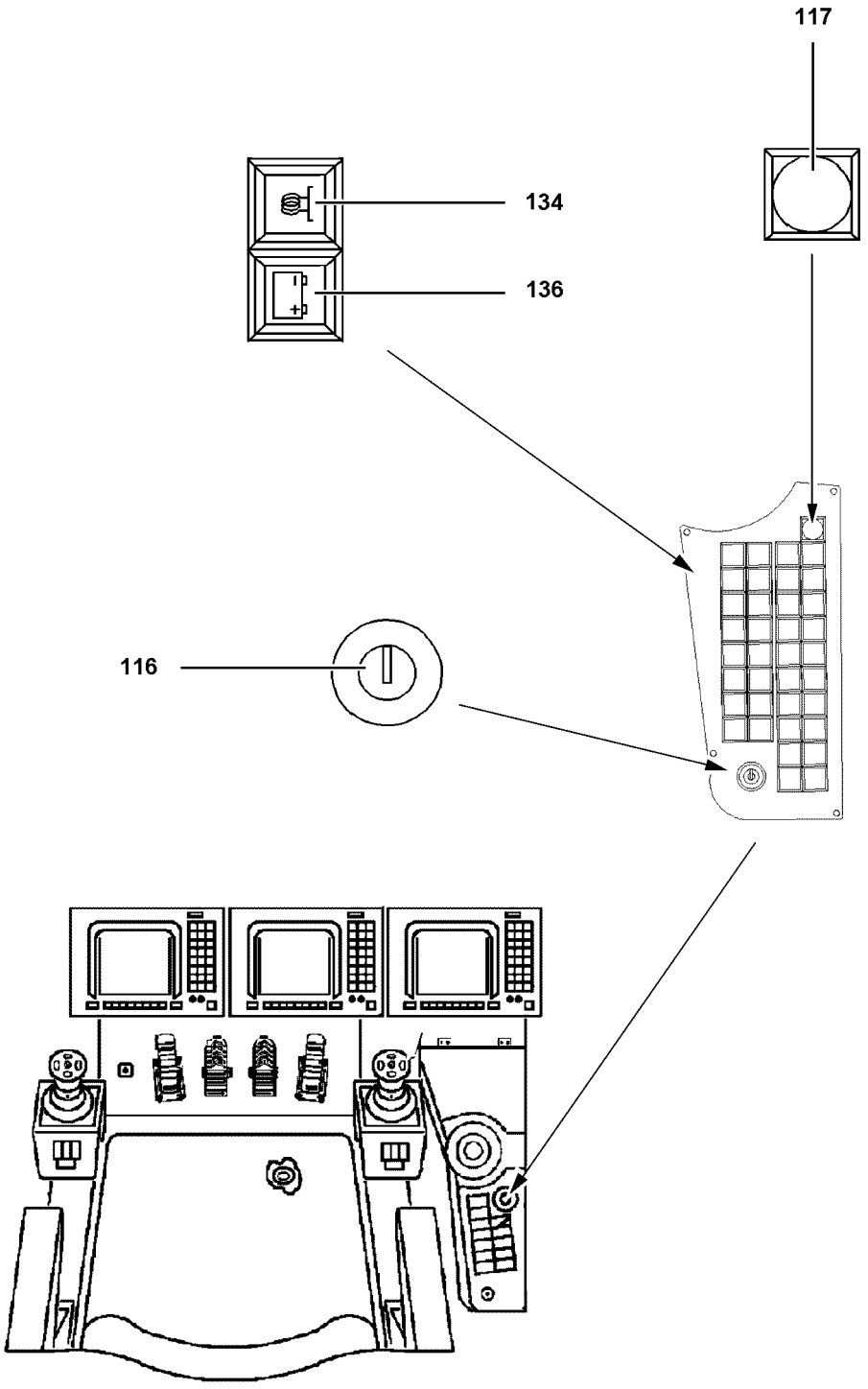

B110612

5.2 Starting the engine with the flame start system

To improve the cold start procedure, the engine is equipped with a flame start system. The flame start control turns on automatically at a coolant temperature below 15 °C and remains in operation until a coolant temperature of 25 °C has been reached.

At a coolant temperature above 15 °C, the flame start system does not turn on.

The flame start system turns off automatically if:

– The crane engine is not started when it is ready.
– The crane engine is started while the indicator light **134** lights up.
– The coolant temperature reaches 25 °C while the engine is running.

Note

Functionality of the battery in the cold season!

The starting capacity of the battery is considerably reduced in cold weather: For example, at a temperature of -10 °C, the battery is at only 66 % of its normal capacity!

▶ Once the engine has been turned off, store batteries in a heated room, if possible!

5.2.1 Starting the engine

▶ Turn the ignition switch **116** to position “I”.

Result:

– The indicator light **134** lights up first and then starts to blink after a short time.
– The engine is ready to start.

▶ Turn the ignition starter switch **116** to position “II”.
▶ Start the engine.

5.2.2 Error on the flame start system

Note

▶ If the indicator light **134** blinks too fast, then the control unit has recognized an error on the flame start control!

As errors are recognized:

– Interruption of the flame glow plug heating coil.
– Missing supply voltage on terminal 30.
– Defective fuse of flame start control unit.

▶ Remedy the error or contact Liebherr Service.

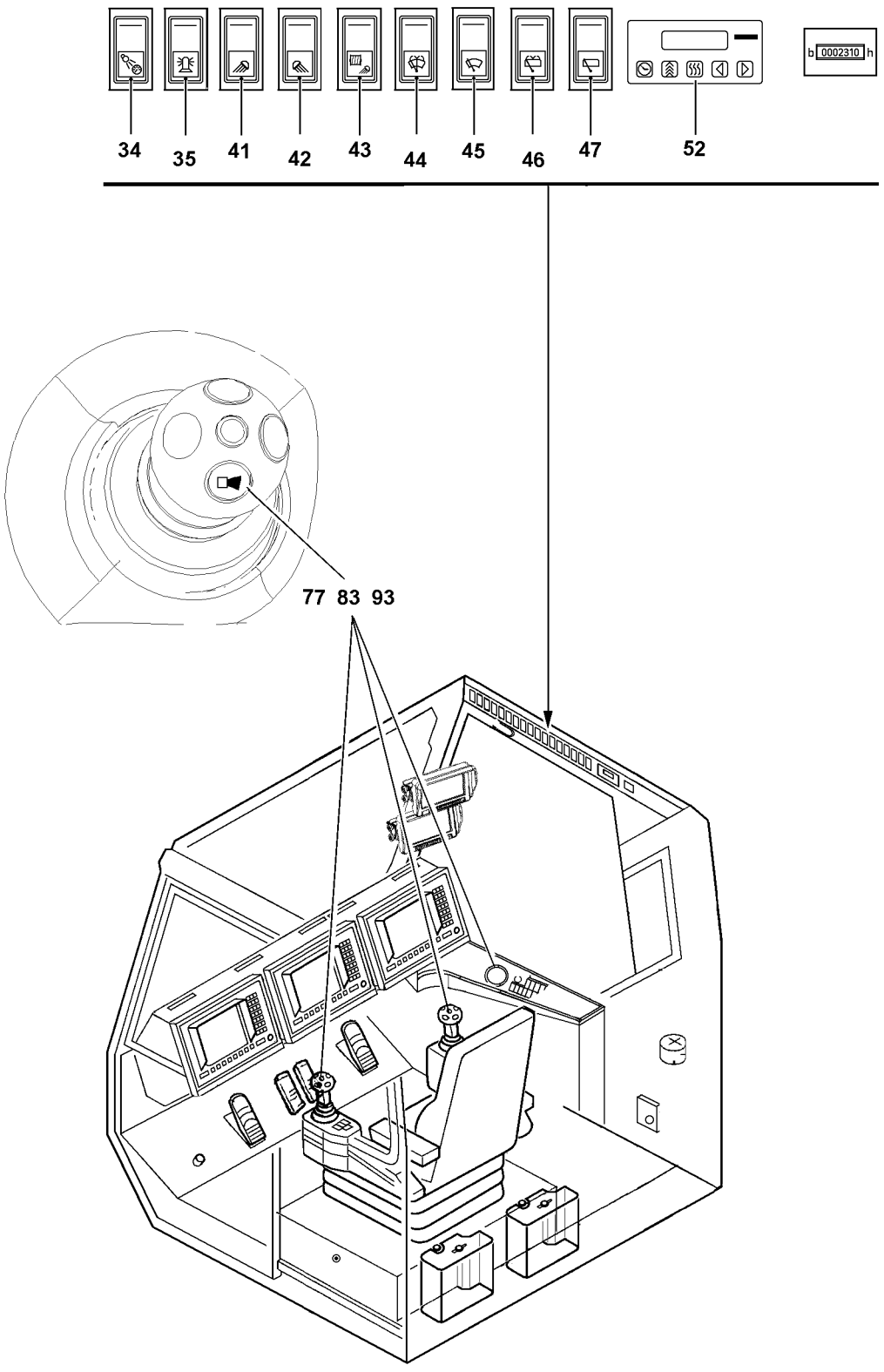

B110611

5.3 Crane engine preheating with timer

Note

▶ Refer to the separate WEBASTO operating instructions!

▶ Up to approx. 75 minutes before engine start, depending on the ambient temperature, turn the auxiliary heater on: Turn the auxiliary heater on on the timer **52**.

Result:

– The auxiliary heater starts approx. 10 seconds after turn on.

▶ Turn the auxiliary heater off after completion of the preheat time: Turn the auxiliary heater off on the timer **52**.

Result:

– An afterrun of the auxiliary heater will run up to 150 seconds.

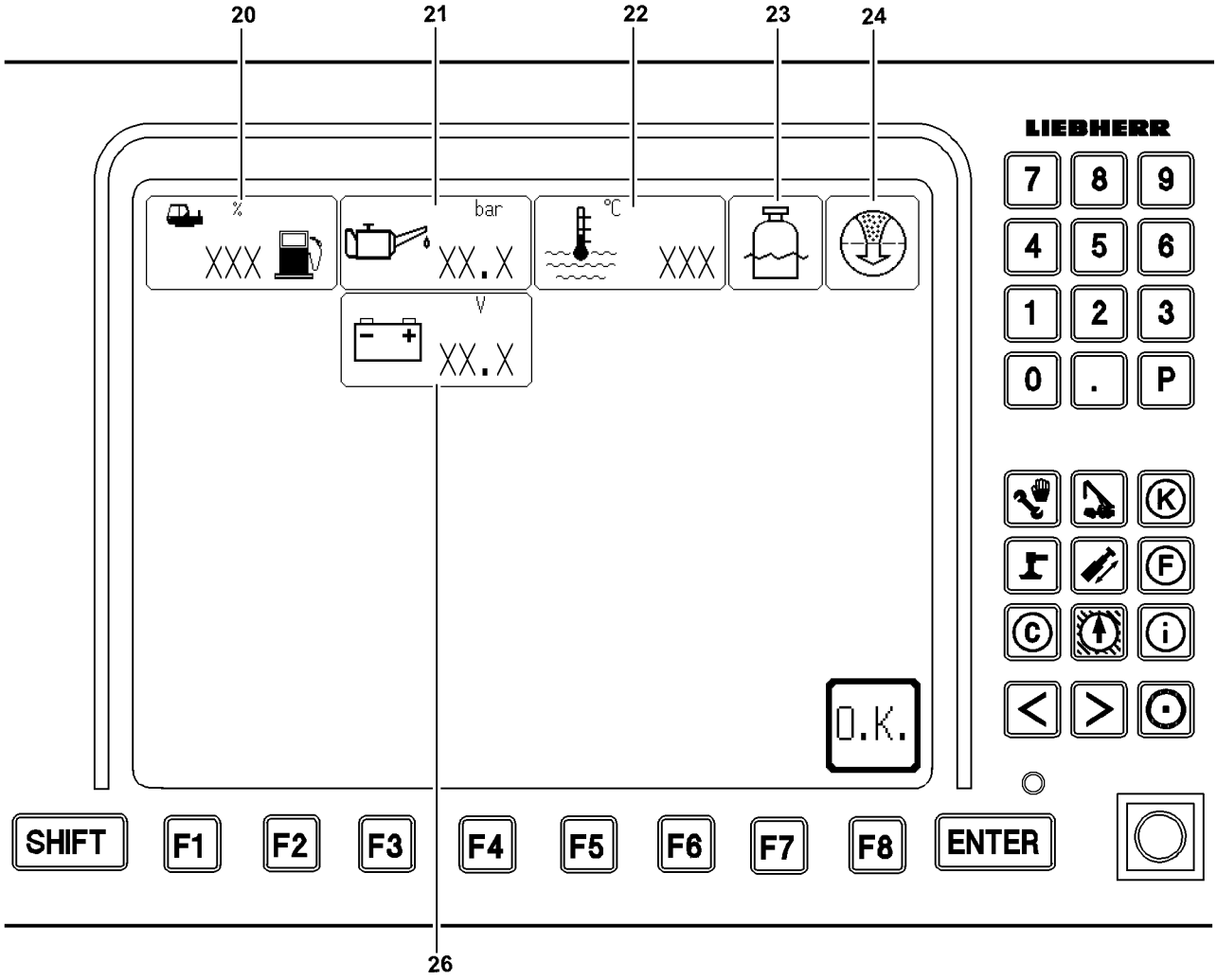
20
21
22
23
24
%
XXX
bar
XX.X
°C
XXX
V
XX.X
LIEBHERR
7
8
9
4
5
6
1
2
3
0
.
P
K
F
C
i
O.K.
SHIFT
F1
F2
F3
F4
F5
F6
F7
F8
ENTER
26

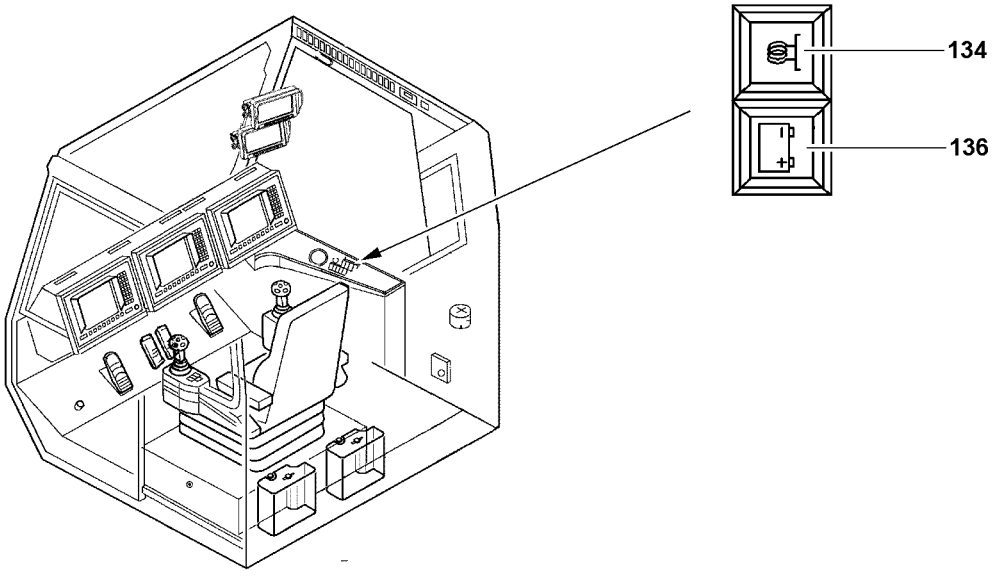
134
136

B112387

5.4 After engine start: Checking the instruments on LICCON monitor

As soon as a stable voltage is present with the engine running, the electric crane control and the LICCON computer system are turned on automatically. A self-test of the microprocessor system follows and after a few seconds the set up screen appears on the monitor.

Note

▶ Do not put a full load on the engine until it is at operating temperature!

The following icons must turn off when the engine is running:

▶ Warning light **134** “Preheat the crane engine”.

▶ Warning light **136** “Charge indicator”.

Check the following icons when the engine is running:

▶ Check the icon **21** “Engine oil pressure” on the LICCON monitor.

Troubleshooting

The numerical display for the engine oil pressure in the icon **21** blinks after approximately 10 seconds or starts to blink during crane operation.

The engine oil pressure is too low. The engine can be damaged as a result of insufficient oil pressure.

▶ Turn the engine off immediately and determine the cause.

▶ Check the icon **22** for “Coolant temperature”.

Troubleshooting

The numerical display for the “Coolant temperature” in the icon **22** blinks during operation.

The coolant temperature is too high. Excessive coolant temperatures can lead to engine damage.

▶ Turn the engine off immediately.

▶ Check the icon **20** for “Fuel content”.

▶ Check the icon **23** for “Coolant level”.

▶ Check the icon **24** for “Air filter”.

▶ Check the icon **26** for “Battery voltage”.

▶ Check the icon **27** for “Hydraulic oil temperature”.

5.5 Engine monitoring

Note

▶ For a detailed description about engine monitoring, refer to the Crane operating instructions, chapter 4.02!

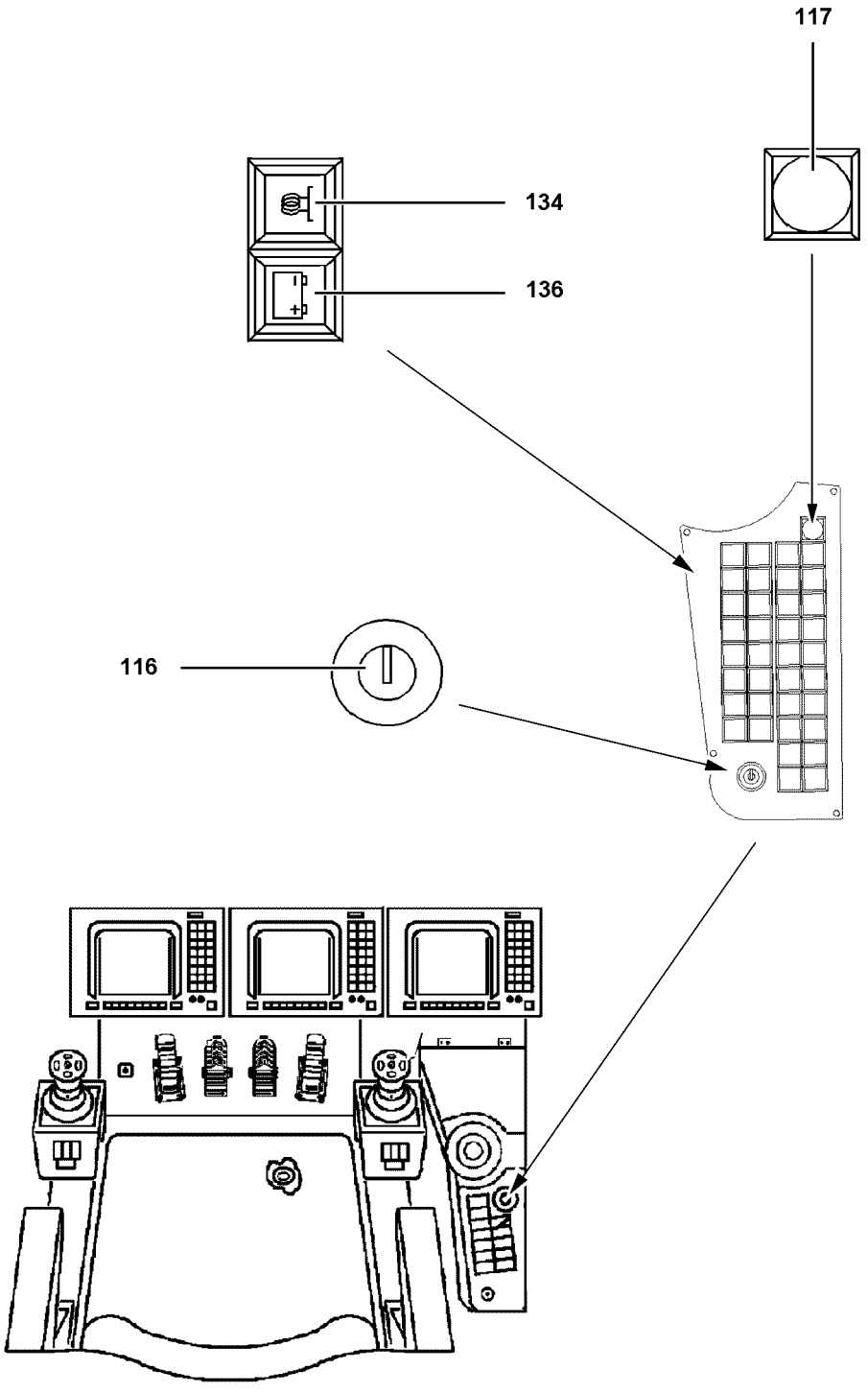

B110612

5.6 Turning the engine off

5.6.1 Turning the engine off in the event of danger

WARNING
Danger of accident due to falling loads!
If crane movements are stopped via EMERGENCY OFF, loads can start to swing and fall down!
Personnel can be severely injured or killed!
- ▶ Operational use of the EMERGENCY OFF button **117** is prohibited!
- ▶ Only use the EMERGENCY OFF button **117** in clear emergency situations!

▶ Press the EMERGENCY OFF button **117**.

Result:
– The engine will be turned off immediately.

5.6.2 Turning the engine off with the ignition key

Note
▶ If the crane has been operated at full engine output or at very high coolant temperatures (above 95 °C), let the engine run without a load for 1 to 2 minutes at low idle speed!

▶ Turn the ignition starter switch **116** back to the stop in position “0”.

Result:
– The engine is turned off.

▶ Pull the ignition key and store it in a safe place.

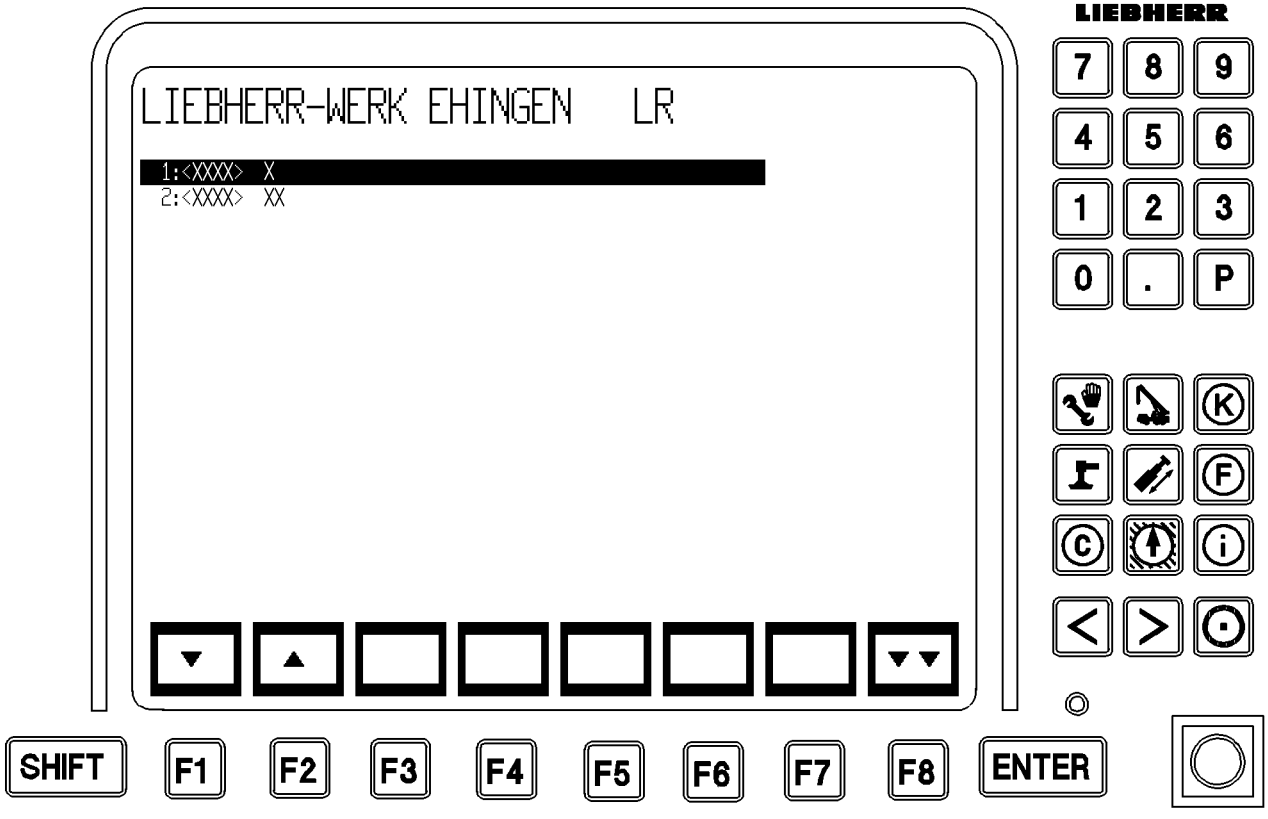
LIEBHERR
LIEBHERR-WERK EHINGEN LR
1:<XXXX> X
2:<XXXX> XX
7 8 9
4 5 6
1 2 3
0 . P
K
F
C
i
SHIFT
F1
F2
F3
F4
F5
F6
F7
F8
ENTER

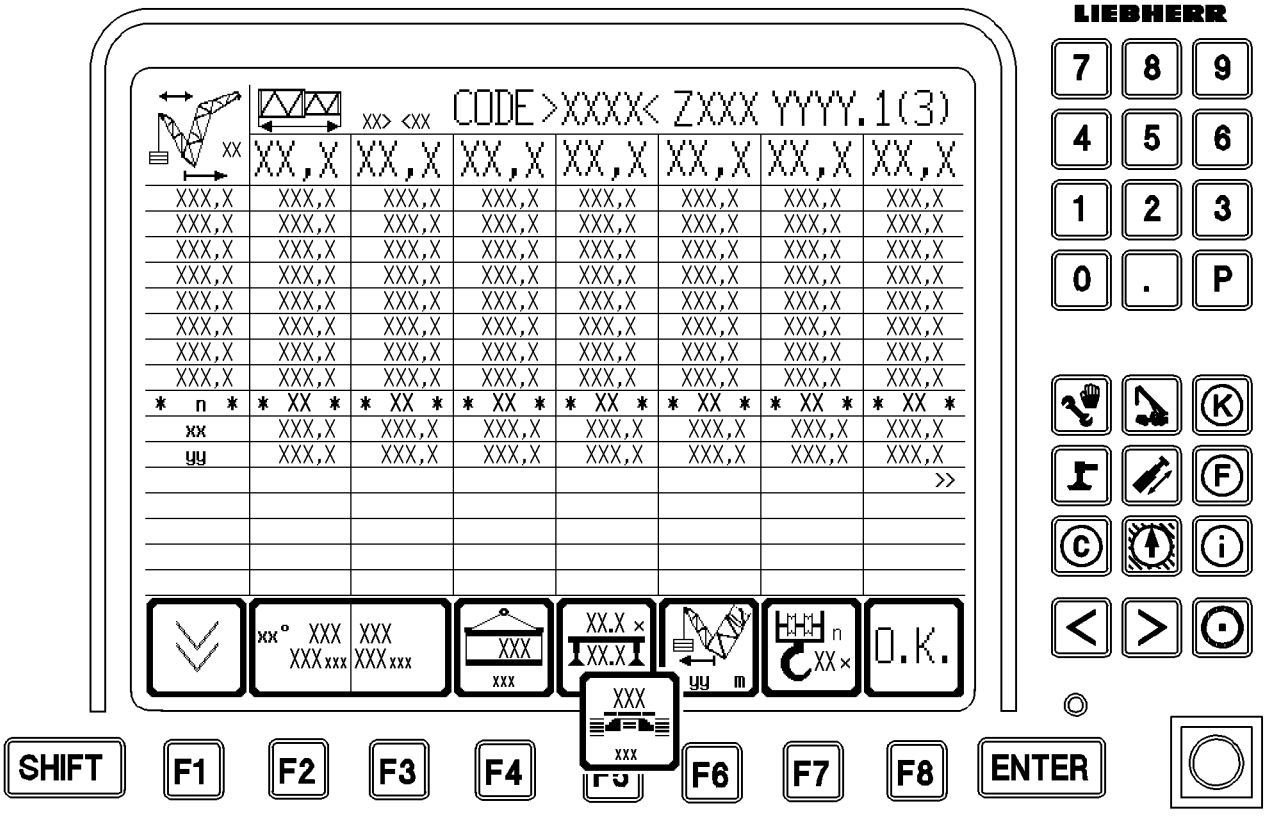
LIEBHERR
CODE >XXXX< ZXXX YYYY.1(3)
XX,X
XXX,X
* n *
* XX *
xx
yy
O.K.
7 8 9
4 5 6
1 2 3
0 . P
K
F
C
i
SHIFT
F1
F2
F3
F4
F5
F6
F7
F8
ENTER

B112385

6 LICCON computer system after engine start

6.1 Waiting for the boot up phase

Note

▶ After being turned on, the LICCON computer system boots up and carries out a self-test, see Crane operating instructions, chapter 4.02!

▶ Wait for the boot up phase.

Result:

– The operating mode preselection appears.
– After approx. 3 seconds: The set up screen appears on the LICCON monitor.

Normally, the most recently set configuration state and reeving number will be displayed.

If a master switch is moved away from the zero position during the boot up phase, the function circuit of the electrical safety chain is interrupted.

▶ In this case:
Turn the engine and ignition off and then restart, so that the crane control can carry out a valid test of the electrical safety chain.

Troubleshooting

An error message appears on the LICCON monitor.

▶ Turn the engine and the ignition off and restart.

▶ The LICCON computer system automatically displays the troubleshooting display.

Troubleshooting

The LICCON monitor does **not** show the most recently set configuration state and the most recently set reeving number.

If there has been a data loss in the memory (cold start), then the first valid configuration appears in the set up screen. The reeving number is set to “0”.

▶ Set the configuration state and reeving number again.

6.2 Taking over the previously selected configuration and hoist rope reeving

Check in the set up screen if the correct short code and the correct reeving number have been set, see Crane operating instructions, chapter 4.02.

If the settings on the set up screen are correct:

▶ Press the function key **F8**.

Result:

– The “Set up” program is terminated and the adjusted parameters are accepted for the newly started “Operation” program.

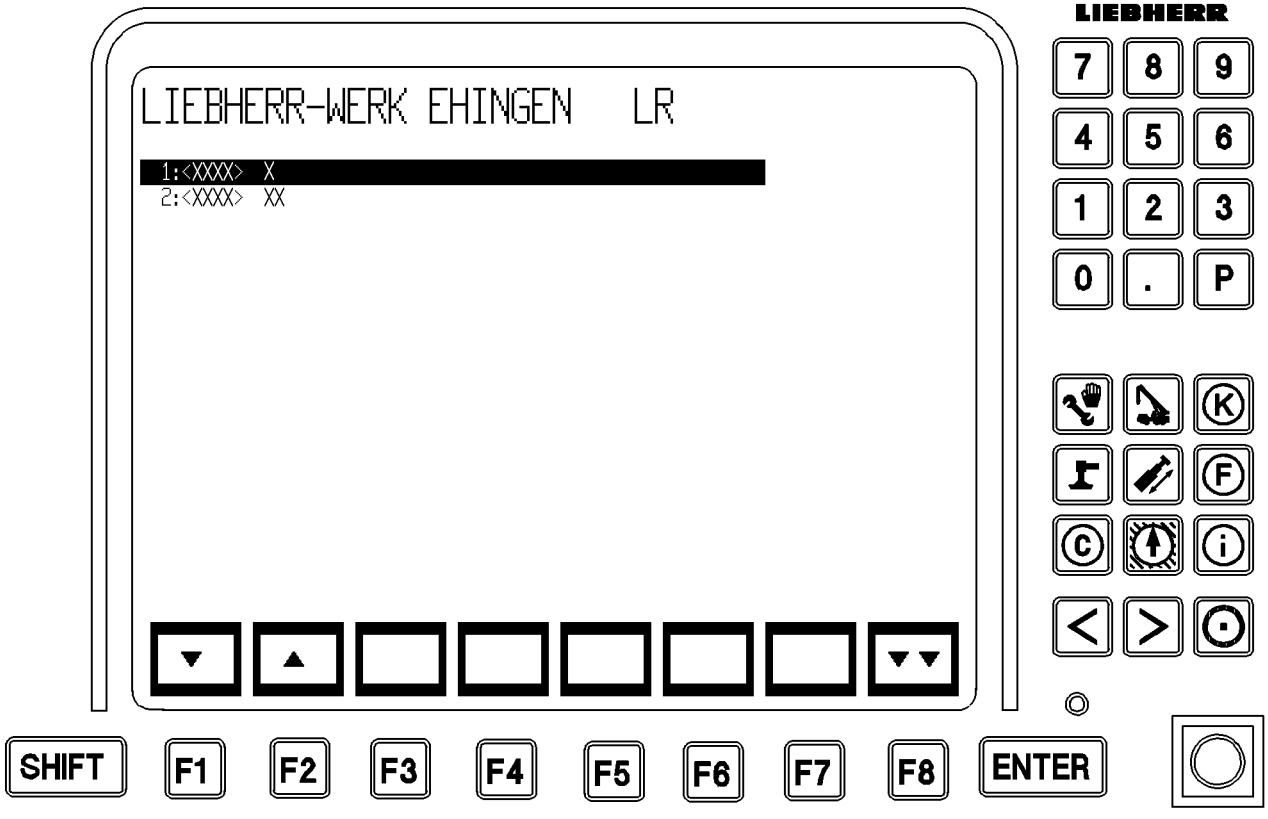
LIEBHERR
LIEBHERR-WERK EHINGEN LR
1:<XXXX> X
2:<XXXX> XX
7 8 9
4 5 6
1 2 3
0 . P
K
F
C
i
SHIFT
F1
F2
F3
F4
F5
F6
F7
F8
ENTER

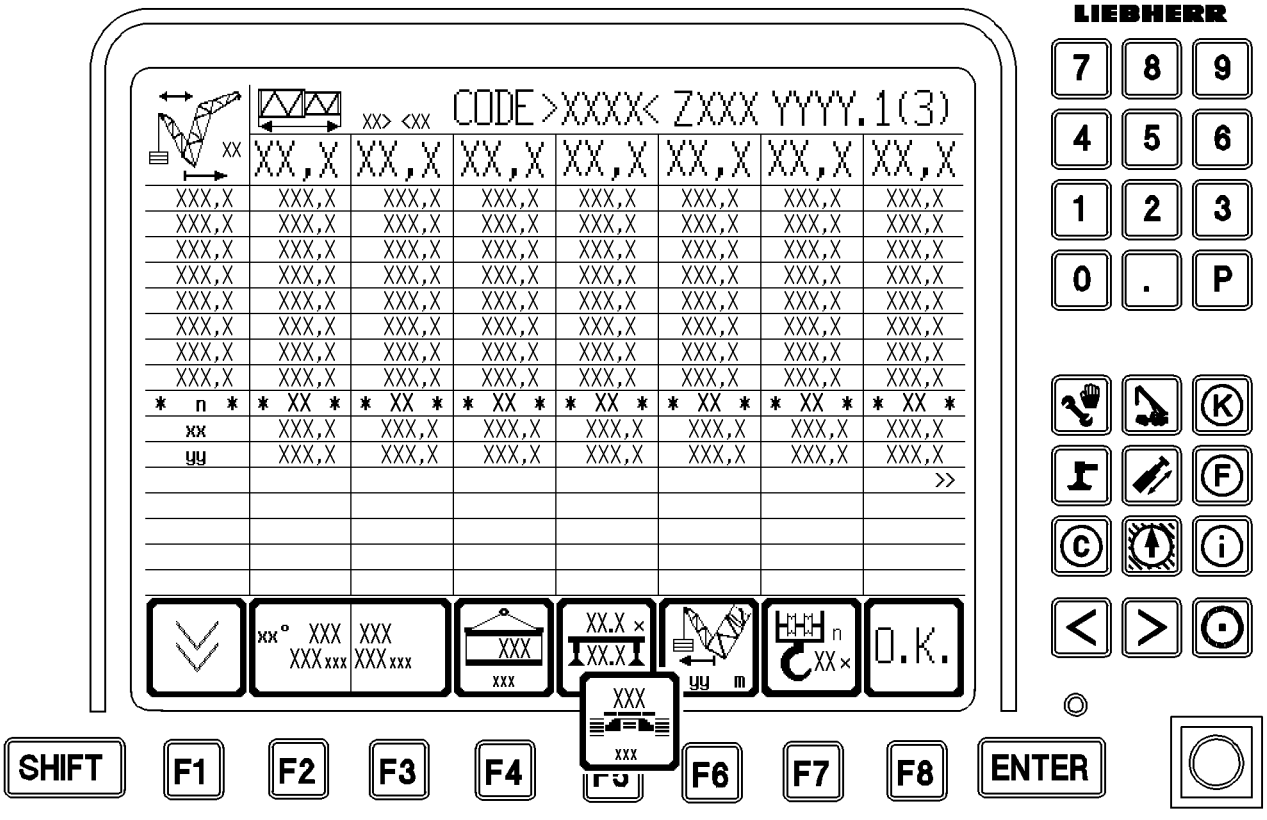
LIEBHERR
CODE >XXXX< ZXXX YYYY.1(3)
XX,X
XXX,X
* n *
* XX *
xx
yy
O.K.
7 8 9
4 5 6
1 2 3
0 . P
K
F
C
i
SHIFT
F1
F2
F3
F4
F5
F6
F7
F8
ENTER

B112385

6.3 Changing the set up configuration and hoist rope reeving

The selected and displayed configuration can be changed with the function keys or by entering the short code.

6.3.1 Setting the set up configuration with the function keys

- ▶ Press the function key **F2** until the desired main geometry status is selected.
- ▶ Press the function key **F3** until the desired accessory status is selected.
- ▶ Press the function key **F4** until the desired counterweight is selected.
- ▶ Press the function key **F5** until the desired central ballast is selected.
- ▶ For crane operation **without** derrick ballast: Press the function key **F6** until the desired turning range is selected.
- ▶ For crane operation **with** derrick ballast: Press the function key **F6** until the desired derrick ballast radius or the derrick ballast weight is selected.
- ▶ Press the **ENTER** key.
- ▶ Check the set load chart.

6.3.2 Selecting the set up configuration with short code

The short code is taken from the load chart manual or from the job planner.

- ▶ Entering the 4-digit short code with keypad.
- ▶ Confirm with the **ENTER** key.

Result:

– The data from the selected load chart can be viewed.

For a more detailed description of the “Set up” program, see Crane operating instructions, chapter 4.02.

- ▶ Check the set load chart.

6.3.3 Setting the hoist rope reeving

- ▶ Press the function key **F7** until the desired reeving number is selected.

or

- ■ Press the function key **SHIFT** and the function key **F7** until the desired reeving numbers are selected.

6.3.4 Checking and accepting the changed set up configuration and hoist rope reeving

If the settings on the set up screen are correct:

- ▶ Press the function key **F8**.

Result:

– The “Set up” program is terminated and the adjusted parameters are accepted for the newly started “Operation” program.

- ▶ Check in the operating screen if the correct short code and the correct reeving number have been set, see Crane operating instructions, chapter 4.02.

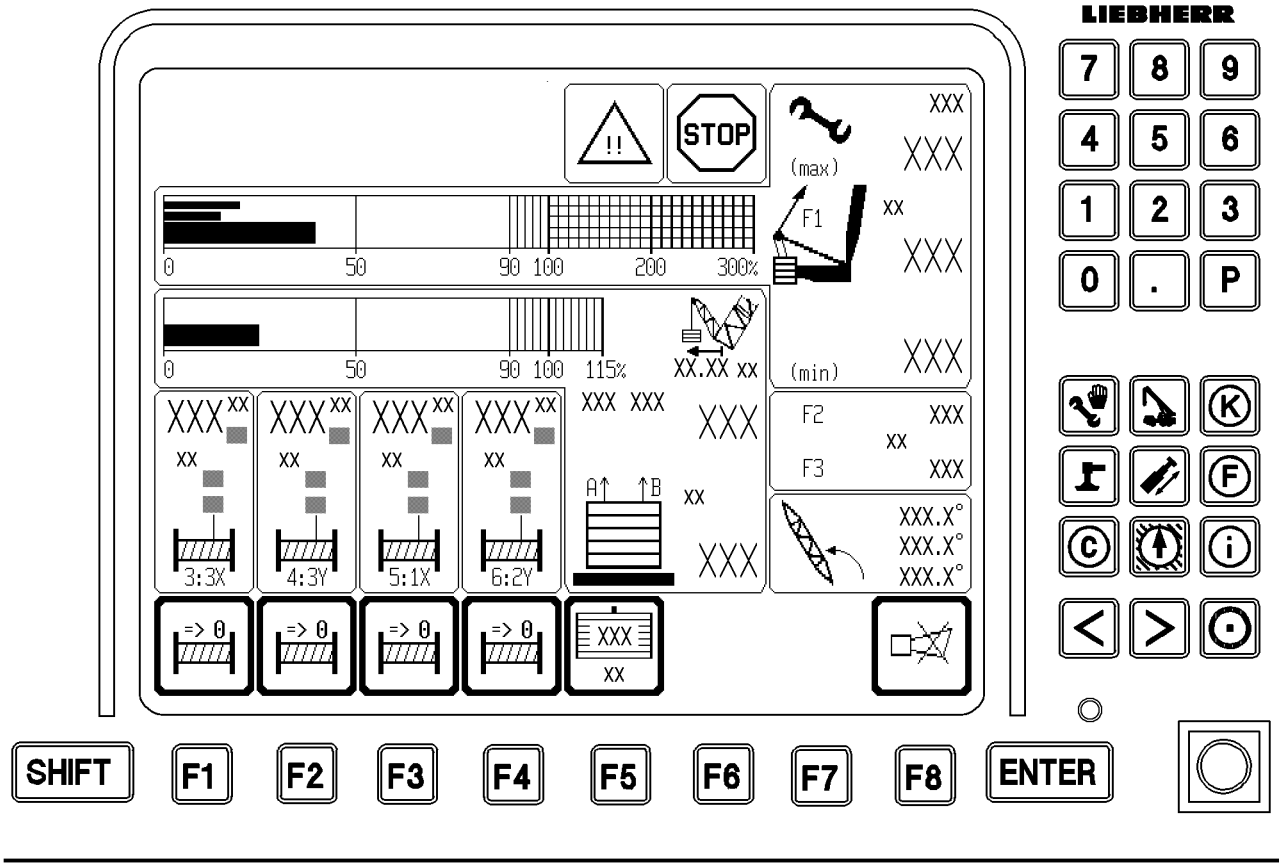
LIEBHERR
7 8 9
4 5 6
1 2 3
0 . P
STOP
(max)
(min)
F1
F2
F3
0 50 90 100 200 300%
0 50 90 100 115%
3:3X
4:3Y
5:1X
6:2Y
SHIFT
F1
F2
F3
F4
F5
F6
F7
F8
ENTER

B112386

6.4 Adjusting the control parameters

Note

▶ For detailed description to adjust the control parameters, see Crane operating instructions, chapter 4.02!

6.5 Adjusting the derrick ballast

For detailed description to adjust the derrick ballast, see Crane operating instructions, chapter 4.02.
The weight of the derrick ballast consists of:

– The weight of the empty ballast pallet or the empty ballast trailer.
– The weight of the placed derrick ballast plates.

WARNING

Risk of accident due to toppling crane!
If an incorrect derrick ballast value is entered, the safety shut offs from test point 1 ($F1_{min}$) become ineffective!
The crane can topple over and personnel can be severely injured or killed!

▶ If a derrick ballast value is set, which is too low, then the displayed derrick ballast utilization is too large!
▶ If a derrick ballast value is set, which is too large, then the displayed derrick ballast utilization is too small!
▶ Make sure that the set derrick ballast value matches the actually installed derrick ballast weight!

Note

While the derrick ballast is adjusted, the remaining monitor displays cannot be updated!
The crane operating screen on the monitor is frozen and can even show incorrect values!

▶ Quickly complete the derrick ballast adjustment!

If a master switch is actuated during the adjustment of the derrick ballast, the adjustment procedure is automatically aborted. The old value of the placed ballast (BA_{placed}) remains in the ballast icon.

▶ LICCON Monitor 1: Enter the derrick ballast with key **F5**.

7 Adjusting the winches

All rope winches are equipped with an incremental counter for relative path measurement. So that the LICCON computer system is able to calculate the absolute path between the rope length in lengths units, the rope length in a certain winch position (adjusting position) must be known to the LICCON system.
The rope length and the current angle radius for this winch position are saved with the remaining geometric data on the program memory card on the CPU 0 and CPU1.
When the winch is in this winch position (adjustment position) is recognized by winch 1 to winch 6 via an adjustment switch (cam limit switch).

Note

▶ Winch 4 has no adjustment switch (cam limit switch)!

The cam limit switches of the winches are set in such a way that they switch from “0” to “1” exactly in this winch position (adjustment position) when the rope is spooled out.

DANGER
When the rope is changed make sure to avoid the following cases, otherwise the adjustment switch (cam limit switch) must be readjusted again!
- ▶ Pull the rope from the stationary winch!
- ▶ Turn the winch without a rope!

Note
- ▶ If the adjustment switch (cam limit switch) must be readjusted, consult with Liebherr Service!

7.1 Adjusting the winches

Winches must always be readjusted when the absolute path information of the incremental sensor in the memory was lost.
Adjust all winches:
- – When the LICCON computer system is separated from the power supply.
- – When the power supply is pulled out at basic component group “0”.

Adjust winch 1 and winch 2:
- – When the CPU “1” is pulled out.
- – When there is a calculation error or an incremental sensor error.

Adjust winch 3 and winch 4:
- – When the CPU “3” is pulled out.
- – When there is a calculation error or an incremental sensor error.

Adjust winch 5 and winch 6:
- – When the CPU “4” is pulled out.
- – When there is a calculation error or an incremental sensor error.

Note
- ▶ Description of error remedy, see Diagnostics manual!

Note
Erroneous winch moment!
If the winch is adjusted, then the LICCON computer control calculates the current winch coil radius and therefore the correct winch turning moment!
If the winch is adjusted incorrectly or not at all, then the LICCON computer control works with an erroneous winch moment! This causes the brakes of the winches to open a little too early or too late when starting out which can cause a slight jerk!
- ▶ Adjust the winches!

7.2 Adjust the winches, not winch 4

Note
- ▶ A rope layer is considered to be full when the rope “jumps” for the first time from the previous row into a new layer when spooling the rope up!

- ▶ Spool the winch up or out until the adjustment position (see chart).
- ▶ Check the distance **“d”** .
- ▶ Spool the winch up and run past the adjustment point by a few turns.
- ▶ Then spool the winch out and run again past the adjustment point by a few turns.
- ▶ Check the winch display.

7.3 Adjusting winch 4

- ▶ Spool the winch up or out until the adjustment position (see chart).
- ▶ Check the distance **“d”** .
- ▶ Actuate the adjustment button in the switch cabinet by hand.
- ▶ Check the winch display.

7.4 Adjustment positions

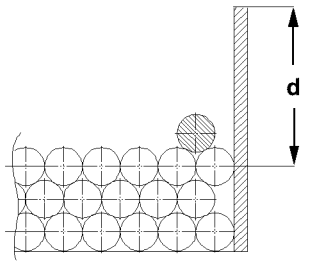

B110696

Winch	Adjustment position at	Distance d [1)]	Rise
Winch 1, 2, 3	Layer 8 full (approx. 960 m)	116 mm	Right hand rise
Winch 4	Layer 5 full (approx. 560 m)	80 mm	Left hand rise[2)]
Winch 5	Layer 9 full (approx. 1112 m)	91 mm	Left hand rise
Winch 6	Layer 3 full (approx. 306 m)	244 mm	Left hand rise

1) **d**: Distance between center of rope of full layer to the edge of the flanged wheel.
2) The left drum half is valid.

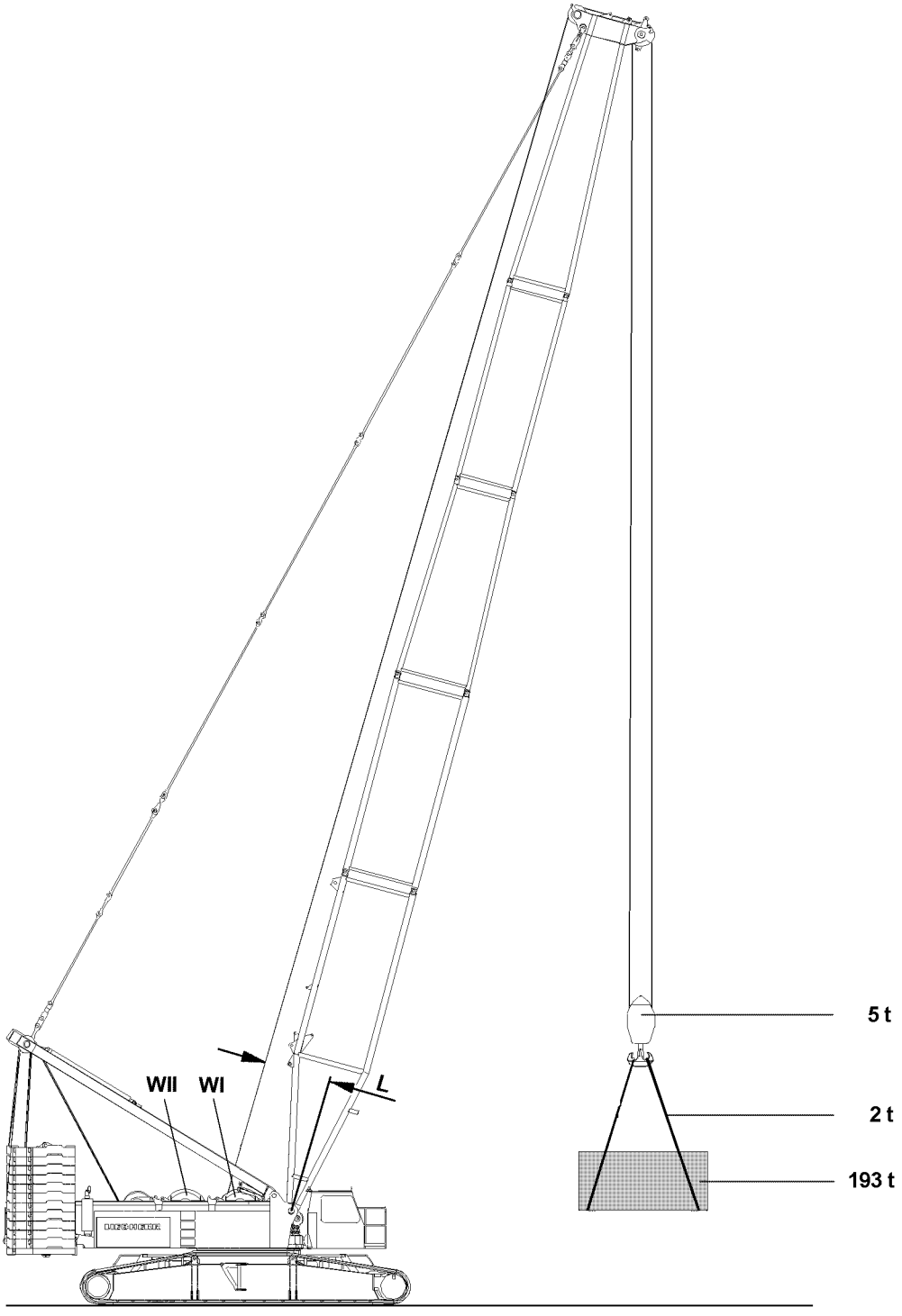

B103667

8 Load weighing and load display

Included in the load capacities given in the load charts are the weights of the load carrier, load take up equipment and tackle.

Note

- The weight of the hook block and the weight of the tackle must be subtracted from the load given in the load chart!

Example:		
Maximum permissible load according to chart		200 t
Weight of the hook block	5 t	- 5 t
Weight of the fastening rope	2 t	- 2 t
Actual load capacity of the crane		= 193 t

In this case, the load to be lifted may not exceed **193 t** .

Note

- In the LMB calculation, the lever arm to the winch winch 2 **WII** is not used, always use the lever arm **L** to winch 1 **WI**.
- For that reason, to ensure an exact load weighing to lift the load on the main boom and on the fixed accessories (for example the fixed jib), winch 1 **WI** must be used!

DANGER

Danger of accidents due to overload!

In case of inaccurate load weighing or load display, a danger exists due to unrecognized overload of the crane!

- The crane operator must know the weight, the center of gravity and the dimensions of the load to be lifted before operating the crane!
- The crane operator must check, before lifting the load, if he may even lift the load according to the data in the load chart!

DANGER

Danger of accident due to incorrect reeving!

If winch 1 **WI** is used for lifting the load on the fixed accessory because the ropes of winch 1 **WI** and winch 2 **WII** would cross otherwise, then you can assume that the load display is too small, especially for small reevings!

- For the small radii, select a large reeving for winch 2 **WII**!
- Select the reeving which is required for the maximum load in this radius range!

B195219

8.1 Load weighing

Make sure that the following prerequisites are met:
- The angle sensors are functioning.
- The incline sensors are functioning.
- The turn sensor in the turntable is functioning.
- The pressure sensors are functioning.
- The pull test brackets are functioning.

The boom position where the relapse cylinders are actuated must be recognized by the LICCON exactly via the sensors, because otherwise the relapse cylinders have a strong affect on the load - weighing error.

Note
- ▶ If only one of these sensors is not functioning, a LEC error display is issued, then the load display and the load weighing are not exact!
- ▶ The calculation is made anyway, but the result is not exact!

8.1.1 Possible weighing errors

For an exact load weighing, exact signals of the pull test bracket, angle sensor, incline sensors and pressure sensors are required.
Since all sensor values are always within a certain tolerance, a weighing error can occur.
The weighing error is increasingly larger if:
- The hoist winch sits in the turntable instead of in the main boom.
- The reeving is small.
- The hoist winch sits far to the rear in the turntable.
- Several hoist winches are used (parallel operation).
- The boom, on which the load is suspended, is short.
- The boom, on which the load is suspended, is standing steeply.

DANGER
Danger of accidents due to overload!
Overload due to weighing error!
- ▶ When the prerequisites for small weighing errors not not given, special caution must be exercised!

8.1.2 Adjustment of reeving

The number of reevings must be correctly set on the LICCON. The reeving should not be higher than the nominal reeving, otherwise the hoist ropes reeved above the nominal reeving count as part of the load.

Note
- ▶ The nominal reeving determines for which maximum reeving the load chart values of a load chart are valid!
- ▶ If the crane is in a position outside of the load chart, the hoist rope is added to the load, because no nominal reeving is recognized outside the load chart!

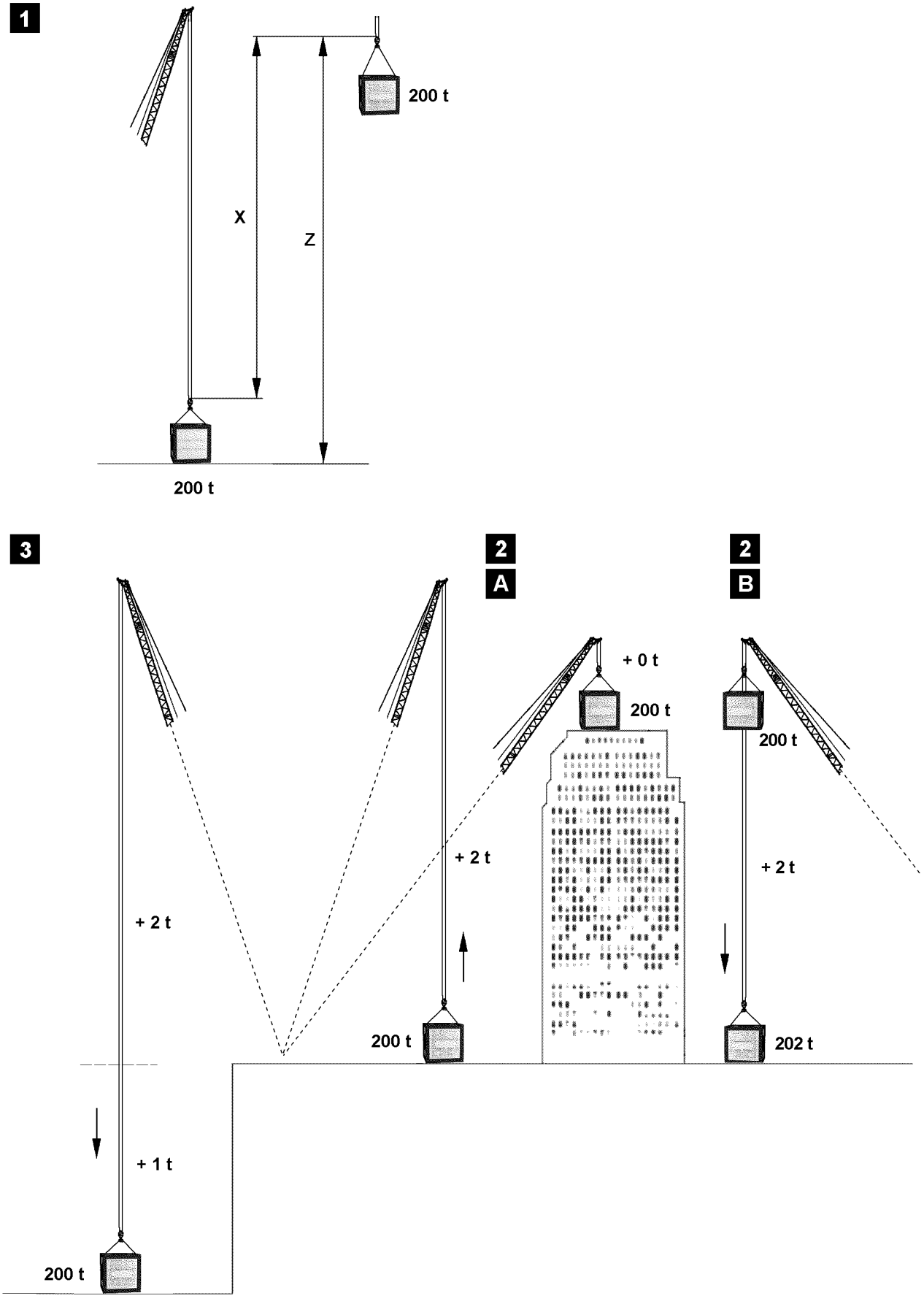
1
200 t
X
Z
200 t
3
2
A
2
B
+ 0 t
200 t
200 t
+ 2 t
+ 2 t
+ 2 t
200 t
202 t
+ 1 t
200 t
B103643

8.2 Load display

8.2.1 Lifting, illustration 1

For the calculation of the displayed actual load, the weight of the hoist rope to the ground is deducted from the total load **Z**, which hangs on the pulley head **X**, see illustration **1**.
In that case, the number of the reevings set on the LICCON is taken into account, but the nominal reeving at nominal reeving.

Note

- If the load is raised far above the ground, see illustration **1**, then the load display is too small by the weight of the hoist rope from the load to the ground!

8.2.2 Lifting over-ground, illustration 2A

When the load is raised above the crane level (high rise), then the hoist rope to the ground is deducted anyway for the display, therefore the load seems increasing lighter when lifting than it did on the ground.
Therefore a somewhat larger load can be lifted in large heights than on the ground, without triggering the LMB overload shut off at 100 %.
This poses no danger because the load stress for the crane is the same if, for example 200 t of load hangs on the bottom and 2 t rope or 202 t load on top and 0 t rope on the pulley head.

8.2.3 Load take up on high rise, illustration 2B

When a load is taken up on the high rise on top (=100 %), for example 200 t, and then lowered to the ground, then weight of the hoist rope below the high rise level is calculated as load and displayed.

8.2.4 Lifting below ground, illustration 3

When a load is lowered below the crane level (excavation), then the hoist rope below the crane level is calculated as load and displayed.

DANGER

Danger of accidents due to overload!
It must be noted that the load display in illustration 2B and illustration 3 is correct, the overload of the crane is also shown in the utilization bar, but no shut off of the lowering movement occurs!

- At LMB overload, all crane movements are shut off, which would increase the danger of overload, however, lowering the load at 100 % - LMB shut off remains clear because one normally assumes that the overload was caused by lifting the load!
- However, the crane can also be overloaded by lowering the load, especially in case of high reevings with high hoist rope weight on the pulley head! The crane operator must know this, so that he can relieve the crane by careful lifting again in this special case, even though the lifting and not the lowering of the load is automatically shut off!

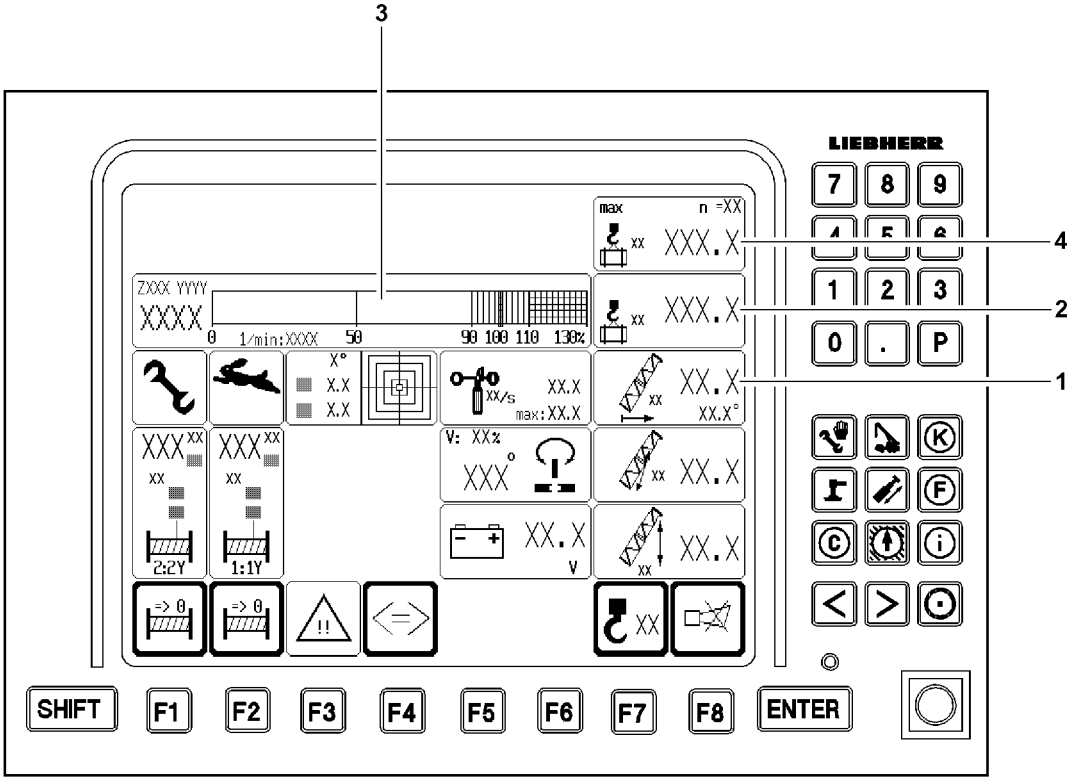
3
4
2
1
LIEBHERR
7
8
9
1
2
3
0
.
P
max
n =XX
XXX.X
ZXXX YYYY
XXXX
0
1/min:XXXX
50
90 100 110 130%
X°
X.X
X.X
XX/s
XX.X
max:XX.X
XX.X
XX.X°
V: XX%
XXX°
XX.X
V
XX.X
XX.X
2:2Y
1:1Y
=> 0
=> 0
SHIFT
F1
F2
F3
F4
F5
F6
F7
F8
ENTER

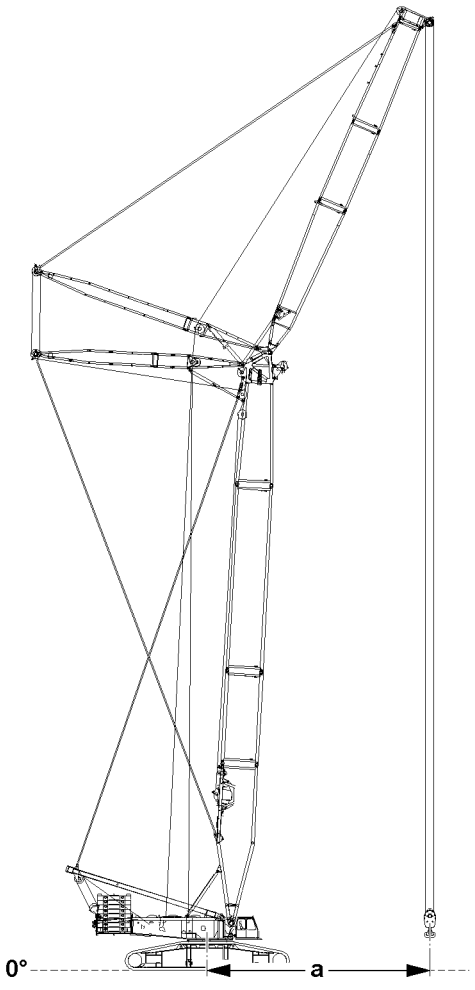
0°
a

B112968

1 General

The crane operator is obligated before every crane operation to ensure that the warning and safety devices are functioning.

WARNING
Danger of accident due to defective warning and safety systems!
If the crane is operated with defective warning and safety devices, then there is a danger of accidents!
Personnel can be killed or seriously injured!
This could result in property damage!
- ▶ Make sure that all warning and safety devices are functioning.
- ▶ Make sure that the overload protection is functioning.

2 Quick test Crane geometry

Make sure that the following prerequisites are met:
- The crane is aligned in horizontal direction.
- The set up status has been entered correctly into the LICCON computer system.
- There is no load on the hook.

Measure the horizontal distance of the load hook from the center of rotation of the crane superstructure on the ground:
- The value display radius **1** must match the measured value **a**.

3 Quick test Overload protection

Lift a known weight completely, such as the hook block or a counterweight plate and then set it down.
Make sure that the following prerequisite is met:
- The crane is aligned in horizontal direction.

The respective displayed values must be plausible:
- Actual load display **2**
- Utilization bar **3**: Ratio of value of Actual load display **2** to maximum load value **4**
- Example:
  Value Actual load display **2** is 40 t.
  Maximum load value **4** is 80 t.
  Utilization bar **3** shows 50 %.

4 LICCON computer system

The LICCON computer system is a system for controlling and monitoring mobile cranes. In addition to the LICCON overload protection (Load torque limiter = LMB), there are a number of application programs that can be used for controlling and monitoring the crane movements. For a detailed description see Crane operating instructions, chapter 4.02 and chapter 4.20.

4.1 LICCON overload protection

The LICCON overload protection is programmed to **shut off** the crane movements if the permissible load moment is exceeded (LMB-STOP).
The LICCON overload protection may not be used as an operational shut off device for crane movements of any kind.
An overload protection cannot detect all occurring conditions by itself. Careful and diligent crane operation by the crane operator is important.
The basis for the calculation of the utilization of the crane are:

– The currently data and values recorded by the crane control.
– The set up configuration entered by the crane operator.

Direct influence has, for example:

– Failure of a test device (for example: Pull test brackets, angle sensor, pressure sensor).
– A set up configuration incorrectly entered by the crane operator.
– Environmental influences not considered (such as wind influence, ground with insufficient load bearing capability).
– Assembly and operating errors.

WARNING
Danger of accident due to assembly and operating errors!
Due to assembly and operating errors it is possible that the overload protection is not effective or shut off is delayed!
A set up configuration which deviates from the load chart cannot be detected by the overload protection!
Environmental influences which are not considered cannot be detected by the overload protection!
Dangerous situations and accidents can result!
Personnel can be killed or seriously injured!
This could result in property damage!
▶ Always assemble and operate the crane carefully!

WARNING
Operational utilization of the overload protection!
If the LICCON overload protection is utilized as an operational shut off device for crane movements, then there is a danger of accidents!
For example, crane movements can be shut off abruptly or uncontrolled!
The behavior of load and crane cannot be foreseen in such a case!
Personnel can be killed or seriously injured!
This could result in property damage!
▶ Do not use the LICCON overload protection as an operational shut off device for crane movements!

WARNING
Lifting of unknown loads!
The presence of the overload protection does not relieve the crane operator of his obligation for care and attention!
The crane may not only be operated according to the displays of the LICCON overload protection!
Lifting of loads with unknown weight and unknown properties can lead to accidents!
Personnel can be killed or seriously injured!

This could result in property damage!
- ▶ Before lifting a load, its weight and properties must be known to the crane operator!
- ▶ The crane operator must check with the load chart if the crane is able to carry out the work safely!

The LICCON computer system detects various values, which result in optical and acoustical warnings if exceeded:
Within the crane operator's cab:
- – Acoustic warning “Horn / short horn” on the LICCON monitor
- – Optical warning “blinking value / display” on the LICCON monitor

Outside the crane operator's cab:
- – Acoustic warning via the horn on the slewing platform
- – Optical warning via the warning light on the slewing platform

All warnings, even those which do not lead to an immediate shut off must be noted by the crane operator and personnel within the danger zone.
The overload protection can **not** detect (examples of cases):
- – The hooking of the load or the load suspension equipment.
- – Excessive retarding forces.
- – Loads falling onto the rope.
- – Angular pulling.
- – Driving the crane on ground with large slope.
- – Collapsing ground.

4.1.1 Failure of the overload protection

WARNING
Crane operation without overload protection!
If the LICCON overload protection is no longer functioning properly because of one or more errors, then there is a danger of accidents if crane operation is continued!
Due to operation of the crane with failed LICCON overload protection, the crane can be overloaded and collapse!
Personnel can be killed or seriously injured!
This could result in property damage!
- ▶ Crane operation without overload protection is prohibited!
- ▶ Do not take up crane operation again until the overload protection is functioning again!

A failed overload protection:
- – Must be repaired before the crane can be operated again.
- – May only be bypasses in emergency cases or emergency situations.

4.2 Bypass of overload protection

The overload protection can be bypassed in case of:
- – Failure of the overload protection.
- – In an emergency situation (according to EN 13000:2010).

4.2.1 Bypass of overload protection: Failure of the overload protection

Note
- ▶ Does **not** apply for cranes with CE-mark and configuration according to EN 13000:2010!

To bring the crane into safe condition after failure of a component required for the overload protection, it can be necessary that the overload protection has to be bypassed.

WARNING
Bypassed overload protection!
If the overload protection is bypassed, crane movements are no longer monitored!
The crane can be overloaded and collapse!
Personnel can be killed or seriously injured!
This could result in property damage!
▶ Only carry out crane movements within the range of the load chart as well as the erection / take down charts!

Note
▶ For procedure in case of problems, see Crane operating instructions, chapter 7.15.
▶ For procedure of shut off of crane movement, see Crane operating instructions, chapter 4.20.

4.2.2 Bypass of overload protection: Failure of overload protection (according to EN 13000:2010)

Note
▶ Applies **only** apply for cranes configuration according to EN 13000:2010!

To bring the crane into safe condition after failure of a component required for the overload protection, it can be necessary that the overload protection has to be bypassed.
With the specification that:
– The bypass is automatically reset at engine stop.
– The bypass is automatically reset after no later than 30 minutes.
– The bypass of the overload protection limits the working speed to no more than maximum 15%.

WARNING
Bypassed overload protection!
If the overload protection is bypassed, crane movements are no longer monitored!
The crane can be overloaded and collapse!
Personnel can be killed or seriously injured!
This could result in property damage!
▶ Only carry out crane movements within the range of the load chart as well as the erection / take down charts!

Note
▶ For procedure in case of problems, see Crane operating instructions, chapter 7.15.
▶ For procedure of shut off of crane movement, see Crane operating instructions, chapter 4.20.

4.2.3 Bypass of overload protection: Emergency situation (according to EN 13000:2010)

In an emergency situation, a bypass of the overload protection may become necessary.
With the specification that:
– The bypass is automatically reset at engine stop.
– The bypass is automatically reset after no later than 30 minutes.
– The bypass of the overload protection limits the working speed to no more than maximum 15%.

DANGER

Overload of crane!

After a bypass of the overload protection, the crane movements are no longer shut off in case of a danger of overload of the crane!

A bypass of the crane can result in severe damage or collapse!

Personnel can be killed or seriously injured!

This could result in property damage!

- ▶ Do not subject the crane to such a load that it collapses!
- ▶ Clear and secure the danger zone of the crane!

Note

- ▶ Location of bypass device, see Crane operating instructions, chapter 4.01 and chapter 4.02.

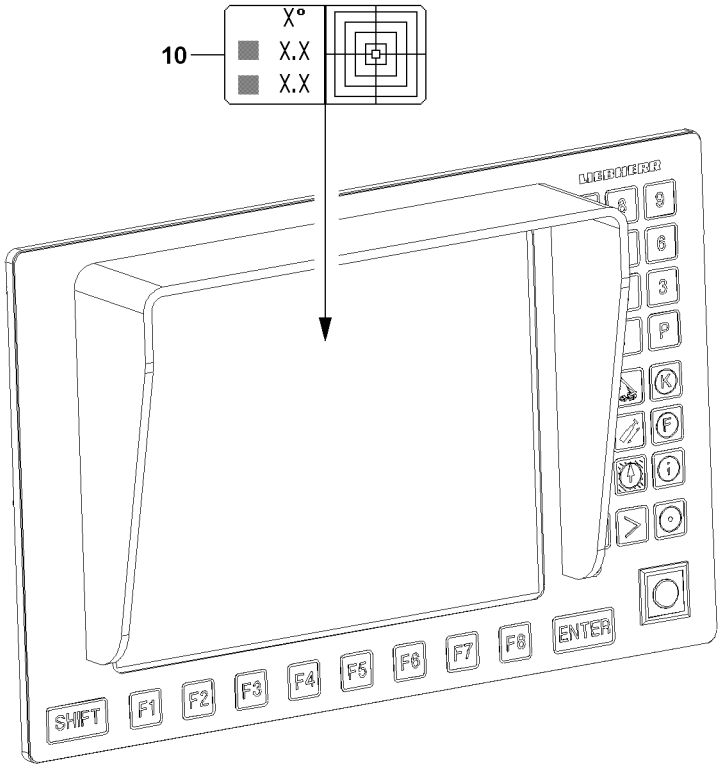
10
X°
X.X
X.X
LIEBHERR
SHIFT
F1
F2
F3
F4
F5
F6
F7
F8
ENTER

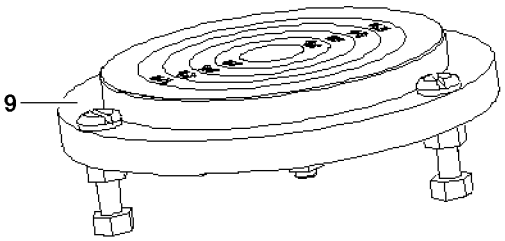
9

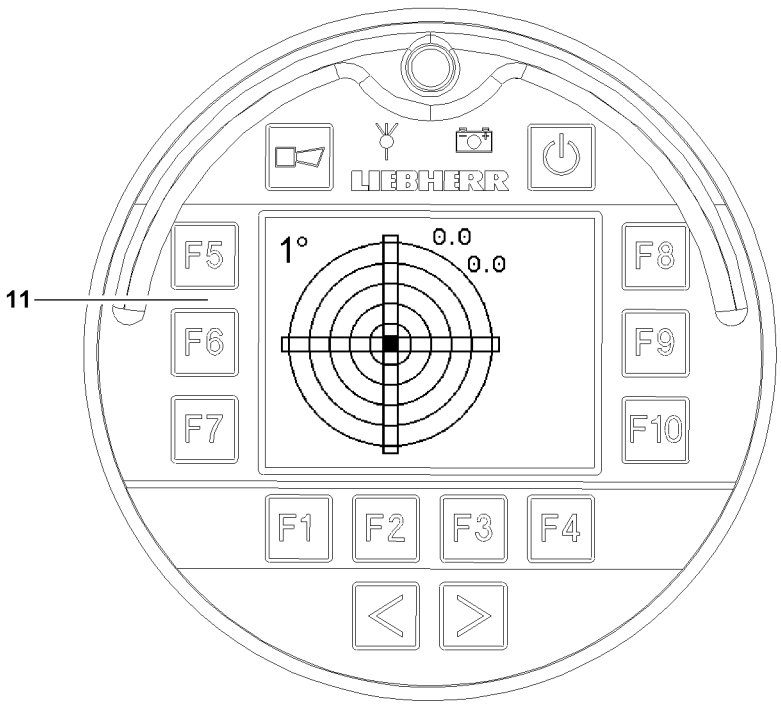
11
LIEBHERR
F5
F6
F7
F8
F9
F10
1°
0.0
0.0
F1
F2
F3
F4

B112969

5 Safety devices on the crane

5.1 Leveling instruments

To ensure the working safety of the crane, the crane must be aligned on level ground with sufficient load bearing capacity according to the load chart.
The current values are continuously shown in the Incline icon **10**, see Crane operating instructions, chapter 4.02.
The incline is shown manually in the sight gauge **9** on the crawler travel gear.

WARNING
The crane can topple over!
If the leveling instruments are defective or incorrectly adjusted, there is a danger that the crane is not aligned according to the load chart!
A crane which is not aligned according to the load chart can topple over!
Personnel can be killed or seriously injured!
This could result in property damage!
▶ Make sure to align the crane according to the load chart!

5.1.1 Leveling instruments in the LICCON monitor

The incline of the crane is shown in the Incline icon **10** graphically as well as numerically, see Crane operating instructions, chapter 4.02.

5.1.2 Leveling instrument in the BTT

Only LR1600/2-W.
The incline of the crane is shown in the Incline display menu **11** graphically as well as numerically, see Crane operating instructions, chapter 3.10 and chapter 5.31.

5.1.3 Quick test Leveling instrument

Note
The horizontal alignment of the crane can be checked with a spirit level on the top of the slewing ring, for example.
▶ The alignment of the top of the slewing ring is the determining factor for the incline display.

Make sure that the following prerequisites are met:
– The crane is aligned in horizontal direction.
– There is no load on the hook.

For horizontally aligned crane:
– The sight gauge **9** on the crawler travel gear must show 0°.
– In the incline icon **10** 0° must be shown.

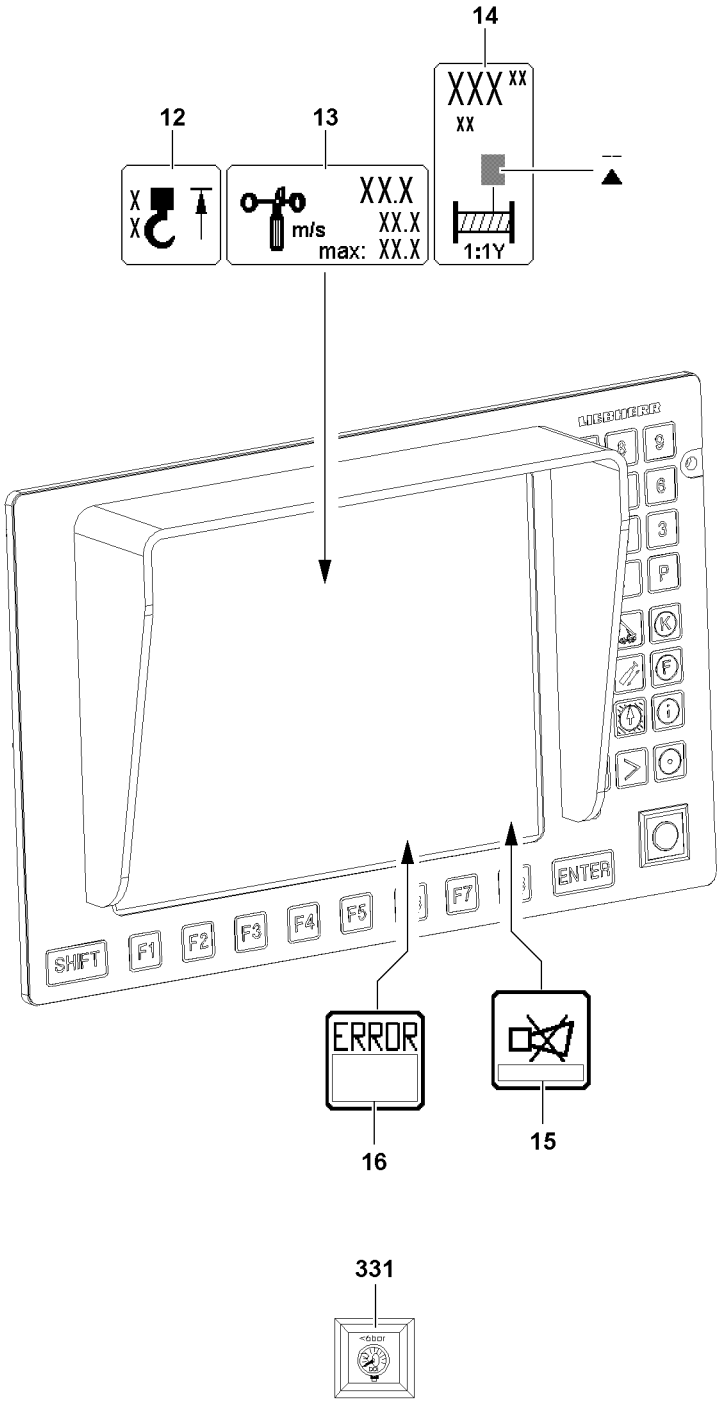
14
12
13
XXX XX
XX
XX.X
XX.X
m/s
max: XX.X
1:1Y
LIEBHERR
SHIFT
F1
F2
F3
F4
F5
F7
ENTER
ERROR
16
15
331

B112972

5.2 Acoustic and optical warning devices

Note

▶ Overview of acoustic and optical warnings, see Crane operating instructions, chapter 4.20.

– The acoustic and optical warning devices must be functioning and operational.
– Take care of any possible detriments in function, such as snow on the warning lights.

5.3 Hoist limit switch “Hoist top”

The hoist limit switch is intended to prevent the hook block from running against the boom head.
Before every crane application, the function of the hoist limit switch must be checked by running against the switch weight with the hook block.
For installation purposes and in emergency cases, the hoist limit switch can be bypassed, see Crane operating instructions, chapter 4.20.

WARNING

Falling load and property damage!
If the hoist limit switch is defective, there is the danger that the hook block or the load hook is pulled against the pulley head!
Falling load and property damage can result!
Personnel can be severely injured or killed!

▶ Crane operation without or with defective hoist limit switch is prohibited!
▶ Repair or replace a defective hoist limit switch!

The hoist limit switch must actuate when the hoist limit switch weight is lifted by the load hook / hook block:

– When the hoist limit switch is actuated, the icon **12** “Hoist top” appears in the operating screen. The crane movement “Spool winch up” as well as other crane movements which have an influence on the hoist rope are shut off.

5.3.1 Quick test Hoist limit switch

When the hoist limit switch weight is lifted:

– The icon **12** “Hoist top” must appear in the operating screen.
– The actuated crane movement must be shut off.

5.4 Error messages by the LICCON computer system

Two types are differentiated (all crane types except LR1400/2):

– Operating errors
  • Displayed in field **15** by error number / LEC: B.....
– System errors in LICCON computer system
  • Displayed in field **15** by error number / LEC: E.....

Only LR1400/2:

– Error messages
  • Displayed in field **16**

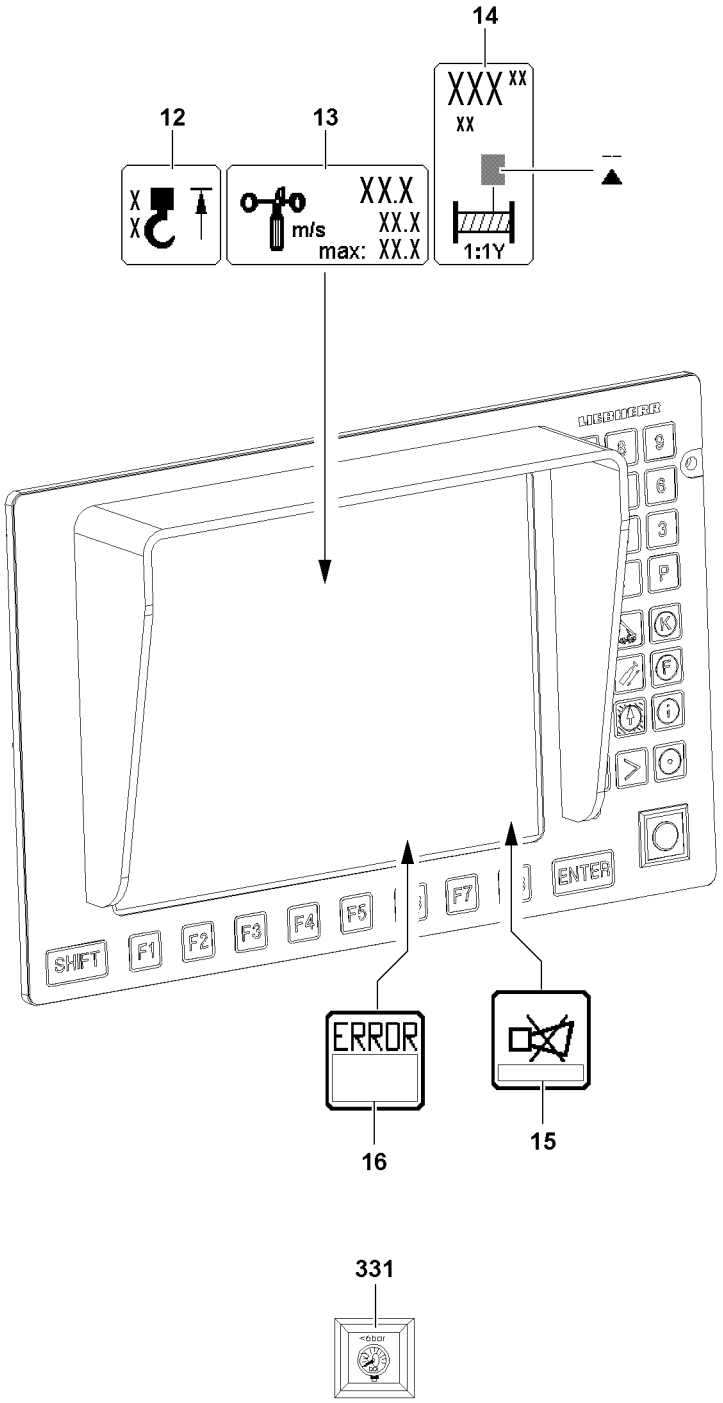
14
12
13
XXX XX
XX
XX
XX.X
m/s
XX.X
max: XX.X
1:1Y
LIEBHERR
SHIFT
F1
F2
F3
F4
F5
F7
ENTER
ERROR
16
15
331

B112972

5.5 Wind speed sensor

The wind warning by the warning speed sensor appears in the operating screen of the LICCON computer system.

WARNING
The crane can topple over!
If the crane is operated with a defective wind speed sensor, then there is the danger that excessively high wind speeds are not recognized!
The crane can topple over!
Personnel can be killed or seriously injured!
This could result in property damage!
- ▶ Crane operation with a defective wind speed sensor is prohibited!
- ▶ Repair / replace a defective wind speed sensor!

If wind occurs, then the wind speed sensor must report it speed:
- – If the actual wind speed value exceeds the displayed maximum value, the value in the icon **13** “Wind speed” starts to blink and the acoustic alarm “Short horn” sounds on the LICCON monitor. But there is **no shut off** of crane movements.

5.5.1 Quick test Wind speed sensor

When blowing in the cups:
- – The wind speed sensor must start to move.
- – An actual value must be shown in the icon **13** “Wind speed”.

5.6 Limit switch winch spooled out

The limit switches for the winches are adjusted at the factory. If used properly, the winches will not need readjustment.

Note
Minimum rope coils on the shut off point!
For the winches, a minimum of three rope coils are set for each drum.
- ▶ The shut off must occur **before** reaching the third minimum rope coil.

WARNING
The load can fall off!
If the limit switch “Winch spooled out” does not turn off **before** three minimum rope coils are reached, then there is the danger, when it is further spooled out, that the rope mounting locks are ripped out and the load falls down!
Falling load can cause the crane to sway and / or topple over!
Personnel can be severely injured or killed!
This could result in property damage!
- ▶ Crane operation with an incorrectly or non-adjusted winch is strictly prohibited!
- ▶ If the winch falls below the three minimum rope coils per winch, have it readjusted by **Liebherr Service**!

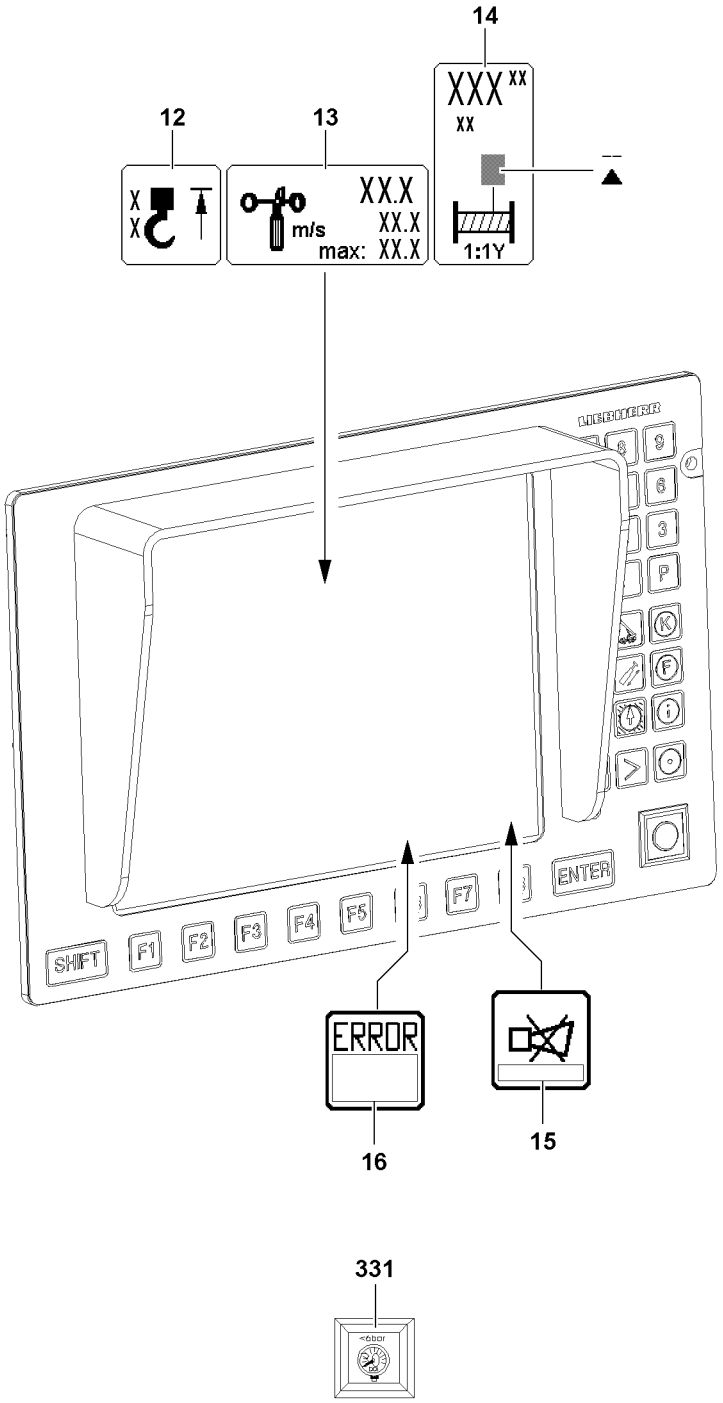
14
12
13
XXX XX
XX
XXX
XX.X
m/s
max: XX.X
1:1Y
LIEBHERR
SHIFT
F1
F2
F3
F4
F5
F7
ENTER
ERROR
16
15
331

B112972

WARNING
The load can fall off!
If the rope is not spooled up or out properly, then the adjustment of the limit switch “Winch spooled out” is changed!
If the adjustment of the limit switch “Winch spooled out” has changed, then the minimum rope coils are fallen below!
The load call fall down!
Falling load can cause the crane to sway and / or topple over!
Personnel can be severely injured or killed!
This could result in property damage!
- ▶ **Never** pull the end of rope underneath the winch by spooling up the rope winch!
- ▶ **Never** pull the rope from the “stationary” winch!
- ▶ If you suspect that the limit switch “Winch spooled out” is not adjusted correctly: Check the shut off without a load on the hook!

The limit switch “Winch spooled out” must shut off when the minimum rope coils for the winch are reached:
– When the minimum rope coil for the winch is reached, then the display “Winch spooled out” appears in the Winch icon **14**, see illustration. The crane movement “Spool winch out” is shut off.

5.6.1 Quick test Limit switch winch

When the minimum rope coil is reached:
– The display “Winch spooled out” must appear in the Winch icon **14**.
– The crane movement “Spool winch out” must be shut off.

5.7 Servo oil pressure monitoring in the winches

All crane types except LR1400/2:
– If no servo oil pressure is present when the master switch is actuated, a corresponding error message appears in field **15**.

Only LR1400/2:
– If the servo oil pressure is too low, then the indicator light **331** in the right instrument panel appears.

5.8 Pressure monitoring in the relapse cylinders

Pressure sensors are installed in the hydraulic cylinders. The pressure measured with the pressure sensor is shown on the LICCON monitor, see Crane operating instructions, chapter 4.02.

WARNING
Risk of accident due to crane toppling over or destruction of the crane!
If the pressure drops, the relapse cylinder can no longer stabilize the boom!
The crane can topple over or be destroyed!
Personnel can be severely injured or killed!
- ▶ During crane operation: Constantly monitor the pressure in the relapse cylinders!

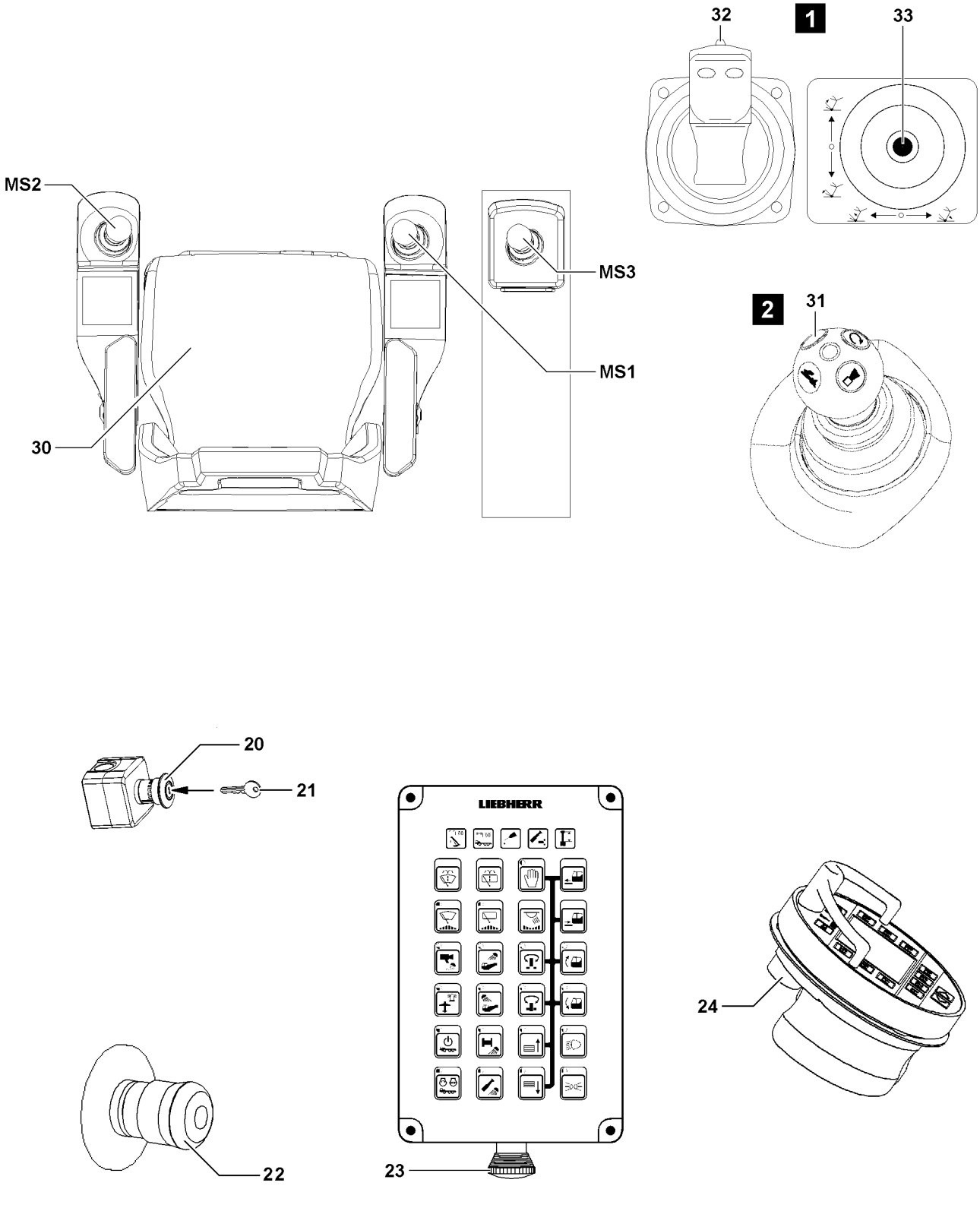

B112970

5.9 EMERGENCY STOP switch / EMERGENCY OFF switch

If an EMERGENCY STOP switch / EMERGENCY OFF switch is actuated, then the crane movement can be stopped with it.

WARNING
Defective EMERGENCY STOP switch / EMERGENCY OFF switch!
If the crane is operated with a defective EMERGENCY STOP switch / EMERGENCY OFF switch, then the crane movement cannot be stopped by actuating the EMERGENCY STOP switch!
This could result in accidents!
Personnel can be killed or seriously injured!
This could result in property damage!
- ▶ Crane operation with a defective EMERGENCY STOP switch / EMERGENCY OFF switch is prohibited!
- ▶ Repair or replace a defective EMERGENCY STOP switch / EMERGENCY OFF switch!

NOTICE
Operational actuation of the EMERGENCY STOP switch / EMERGENCY OFF switch
Actuation of the EMERGENCY STOP switch / EMERGENCY OFF switch causes the crane movement to stop abruptly!
Abruptly stopping the crane movement can cause the load to swing!
Swinging loads can cause accidents!
- ▶ Do not use the EMERGENCY STOP switch / EMERGENCY OFF switch operationally!
- ▶ Use the EMERGENCY STOP switch / EMERGENCY OFF switch only in emergency situations!

The EMERGENCY STOP switch / EMERGENCY OFF switch is available in various versions, depending on the crane type:
- – After actuation of a switch of version* **20**, the release is only obtained by an authorized person with key **21** and by subsequently turning the ignition “Off - On” momentarily.
- – After actuation of the switch of version* **22**, the release is obtained by turning and unlocking the knob and subsequently turning the ignition “Off - On” momentarily.
- – After actuation of the switch of version* **23**, the release is obtained by turning and unlocking the knob and subsequently turning the ignition “Off - On” momentarily.
- – After actuation of the switch of version* **24**, the release is obtained by turning and unlocking the knob and subsequently turning the ignition “Off - On” momentarily.

Note
- ▶ Which EMERGENCY STOP switch / EMERGENCY OFF switch is on the crane depends on the crane type.
- ▶ The switch **24** on the BTT is only activated when working with the BTT.

5.9.1 Quick test EMERGENCY STOP switch / EMERGENCY OFF switch

After actuation of the EMERGENCY STOP switch / EMERGENCY OFF switch:
- – The crane movements must be stopped.
- – No crane movements must be possible until the release was issued by turning and unlocking the knob and then turning the ignition “Off - On” momentarily.

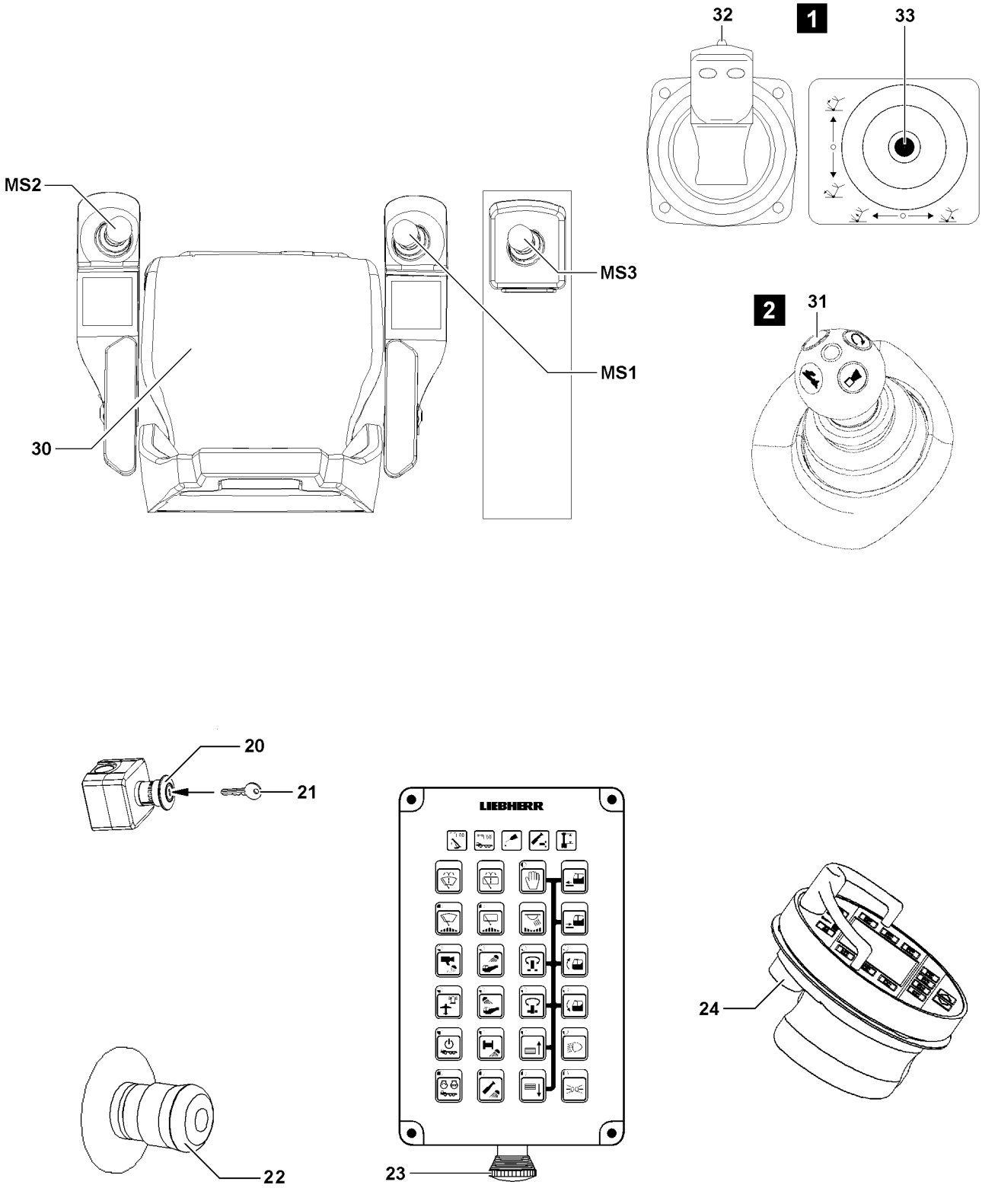

B112970

5.10 Control release

The control release can be made via three switches:

– Seat contact button **30**
– Button **31** on master switch **MS1** and **MS2** and **MS3**.
  or
– Button **32** on master switch **MS1** and **MS2** (only LR1400/2)
– Button **33** on master switch **MS3** (only LR1400/2)

The seat contact button **30** shuts down the crane control as soon as the crane operator gets up from the seat.
This prevents unintended crane movements by accidentally touching the master switch, for example when getting in or out of the cab.
Button **31** or button **32** and the button **33** bypass the seat contact switch **30**, if necessary, for example, when work must be performed standing.

5.11 Hydraulic safety valves

A differentiation is made between three types:

– Pressure relief valves
  • Prevent pipe and hose bursts due to excessive pressure.
– Shut off valves
  • Control and secure the working cylinders.
– Check valves
  • Control and secure the flow direction.

5.12 Gravity actuated relapse retainer

Note
▶ Only for cranes with luffing accessories.

The gravity actuated relapse retainer (oscillation guard / flap / relapse support) prevent luffing accessory from tipping to the rear in “steepest position”.

WARNING
The crane can topple over!
If the gravity actuated relapse retainer (oscillation guard / flap / relapse support) is hard to move, then it will no longer function.
Shut off and limit functions can be set out of service!
The crane can be overloaded and topple over!
Personnel can be killed or seriously injured!
This could result in property damage!
▶ Before erecting the crane, check the relapse retainer for easy movement!
▶ Crane operation with hard to move relapse retainer is prohibited!

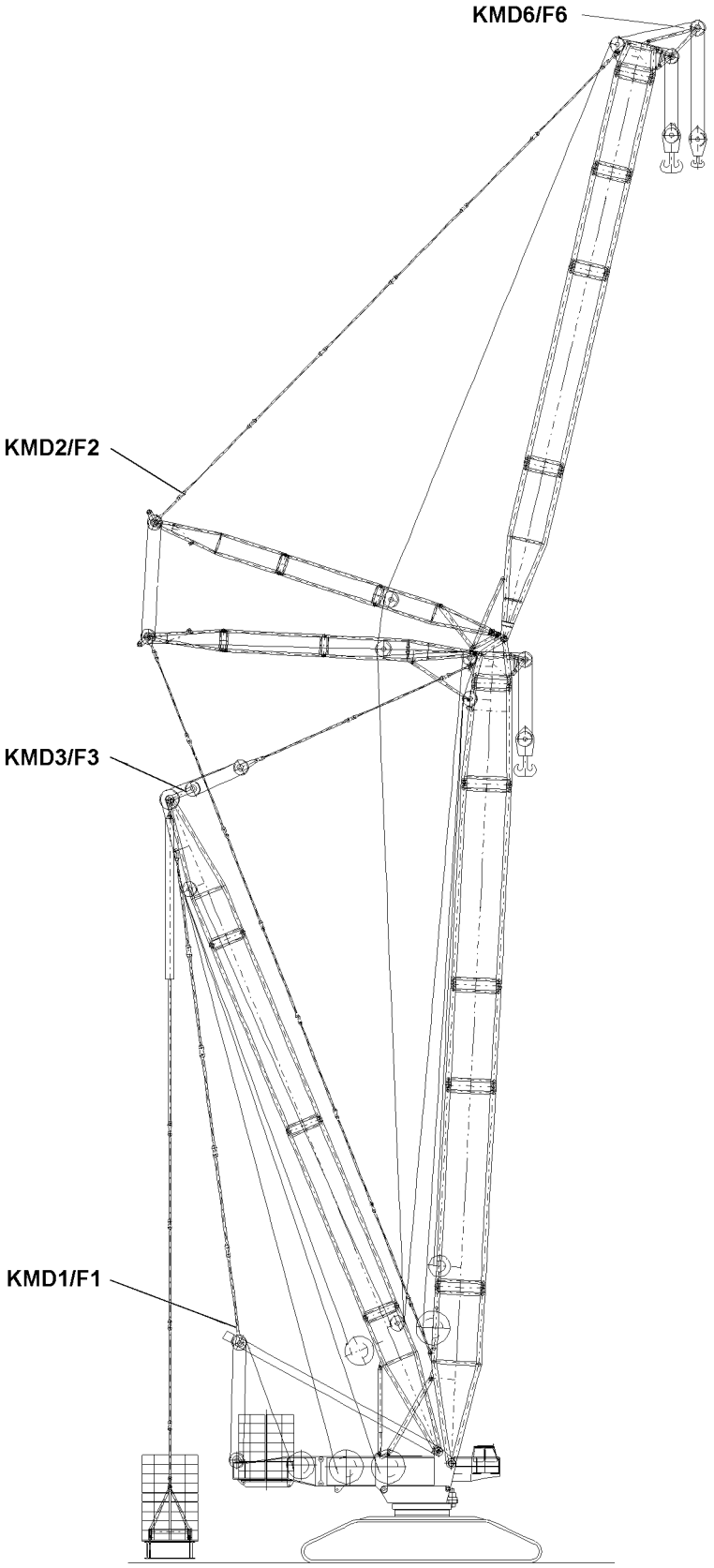

B112971

5.13 Angle sensors

Component	Description - Angle sensor (WG)
S-pivot section	Main boom bottom
S/W-end section, if used on boom	Main boom top
S/W-end section, if used on luffing jib	Luffing jib up
W-pivot section	Luffing jib bottom
W-connector head	Main boom top
D-pivot section	Derrick bottom
D-end section	Derrick top
SA-frame	SA-frame

5.14 Test brackets (KMD = force test box)

The test brackets measure the force in the guying, which results from the load and the boom momentum.
The test brackets are located:

- **KMD 1**, in the boom guying, SA-frame to boom for all operating modes **without** derrick
- **KMD 1**, in the derrick guying, SA-frame to derrick for all operating modes **with** derrick
- **KMD 2**, in the lattice jib guying, WA-frame 1 to lattice jib end section
- **KMD 3**, in the boom guying, derrick to boom for all operating modes **with** derrick
- **KMD 6**, in the boom nose (not LR1400/2)

5.15 Limit switch Boom system

WARNING
Danger of toppling or destroying the crane!
If the crane movement is stopped by the block limit switches, then the load forces cannot be absorbed and calculated by the control!
The crane can be overloaded and topple over!
Personnel can be hit and killed or seriously injured!
This could result in property damage!

- ▶ Do **not** use the hoist limit switch as an operational shut off device!
- ▶ Do not actuate the block limit switches!

B195219

1 LICCON computer system

WARNING
Danger of accidents due to overload!
- ▶ Constantly monitor the displays on the LICCON monitor!
- ▶ Observe changing utilization conditions and forces!

WARNING
Danger of accident!
- ▶ The crane operator must evaluate constantly if the data shown in the crane operating screen can even be correct. He may not rely blindly on the LICCON system but must think for himself and must recognize a possible error or overload conditions!

Note
- ▶ For a detailed description of the LICCON computer system, see Crane operating instructions, chapter 4.02!

2 Winch and master switch assignment to operating modes

The assignment of the master switches to the winches is different, according to the operating modes. The assignments are shown in the winch icons on the LICCON monitor.

Note
- ▶ The crane operator must know and observe the assignments, see Electric wiring diagram!

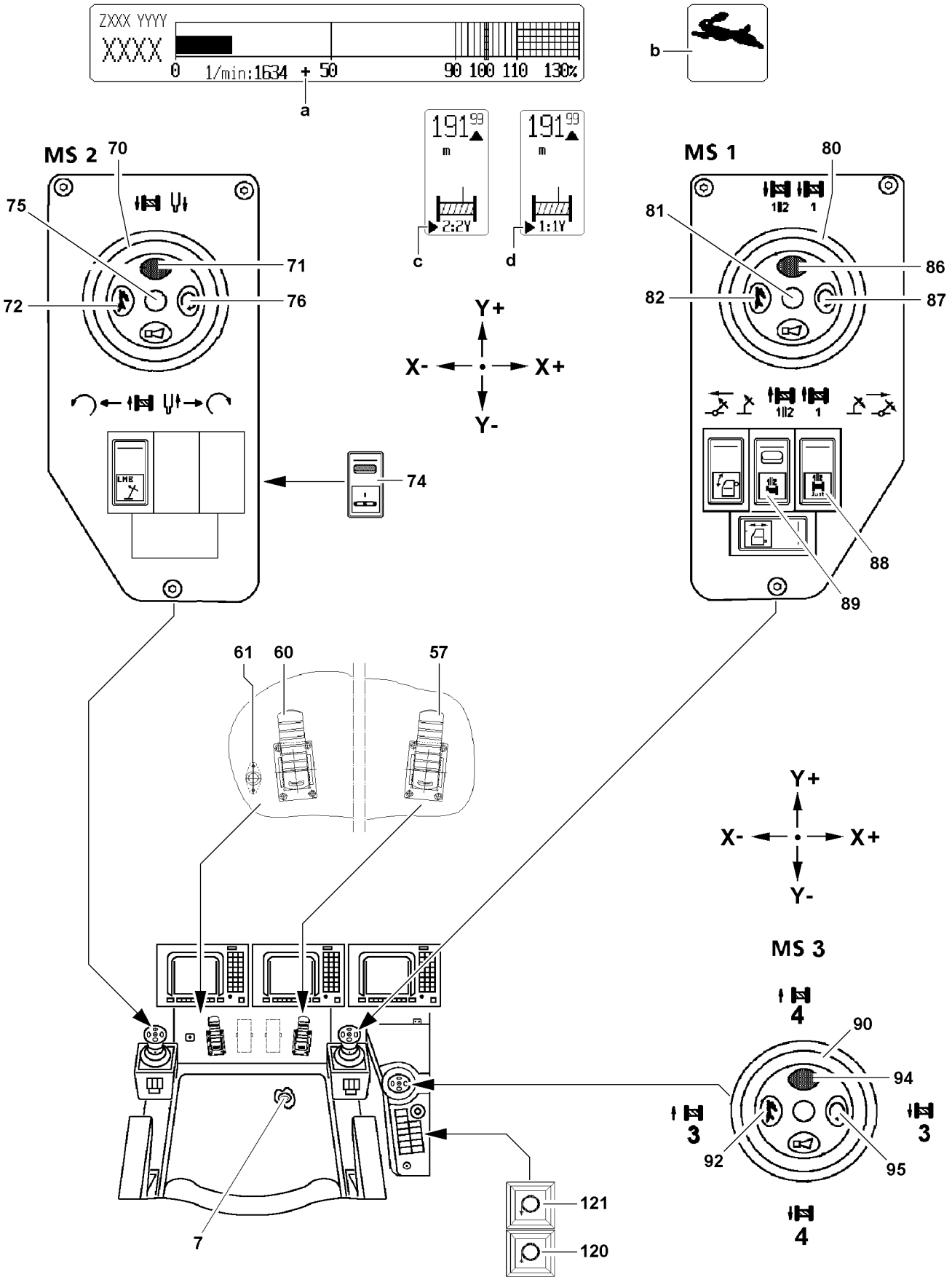
ZXXX YYYY
XXXX
0 1/min:1634 + 50 90 100 110 130%
a
b
191 99 m
2:2Y
c
191 99 m
1:1Y
d
MS 2
70
75
71
72
76
74
LME
Y+
X-
X+
Y-
MS 1
80
81
86
82
87
88
89
1|2 1
61
60
57
7
121
120
MS 3
4
90
94
3
92
95
3
4

B110601

3 Carrying out crane movements

Make sure that the following prerequisites are met:
- The crane is supported.
  (only in connection with crane support or for LG-cranes)
- The crane is aligned in horizontal direction.
- The counterweight is installed and secured according to the data in the load chart.
- The ground is able to carry the weight of the crane, the load and the load tackle.
- The hook block is correctly reeved as shown in reeving plan.
- The crawler operation is turned off: switch **74** in 0-position.
  (Only for LR-cranes)
- No bypass of the LICCON computer system or exceedance of overload protection is active.
- The LICCON computer system is in the normal operation.
- The engine is running.
- All safety devices have been adjusted according to the data in the load chart.
- There are no persons or objects in the danger zone.

WARNING
Danger of accident!
- ▶ In order to protect the crane and reduce the danger of accidents, always operate the master switch slowly and sensitively!
- ▶ Ensure that there are no obstacles in the working range of the crane and that there are no persons within the danger zone!
- ▶ Give a warning signal before initiating a crane movement!
- ▶ Observe the danger notes for crane operation, see Crane operating instructions, chapter 5.01!

3.1 Releasing the crane control

The crane control is stopped by a seat contact button **7** as soon as the crane operator gets up from his seat so that no inadvertent crane movements are carried out when entering or exiting the cab due to inadvertent movement of the master switch.

Note
- ▶ If the crane operator must work while standing up, then the seat contact button **7** can be bypassed by button **71**, button **86** and button **94** on the respective master switch!

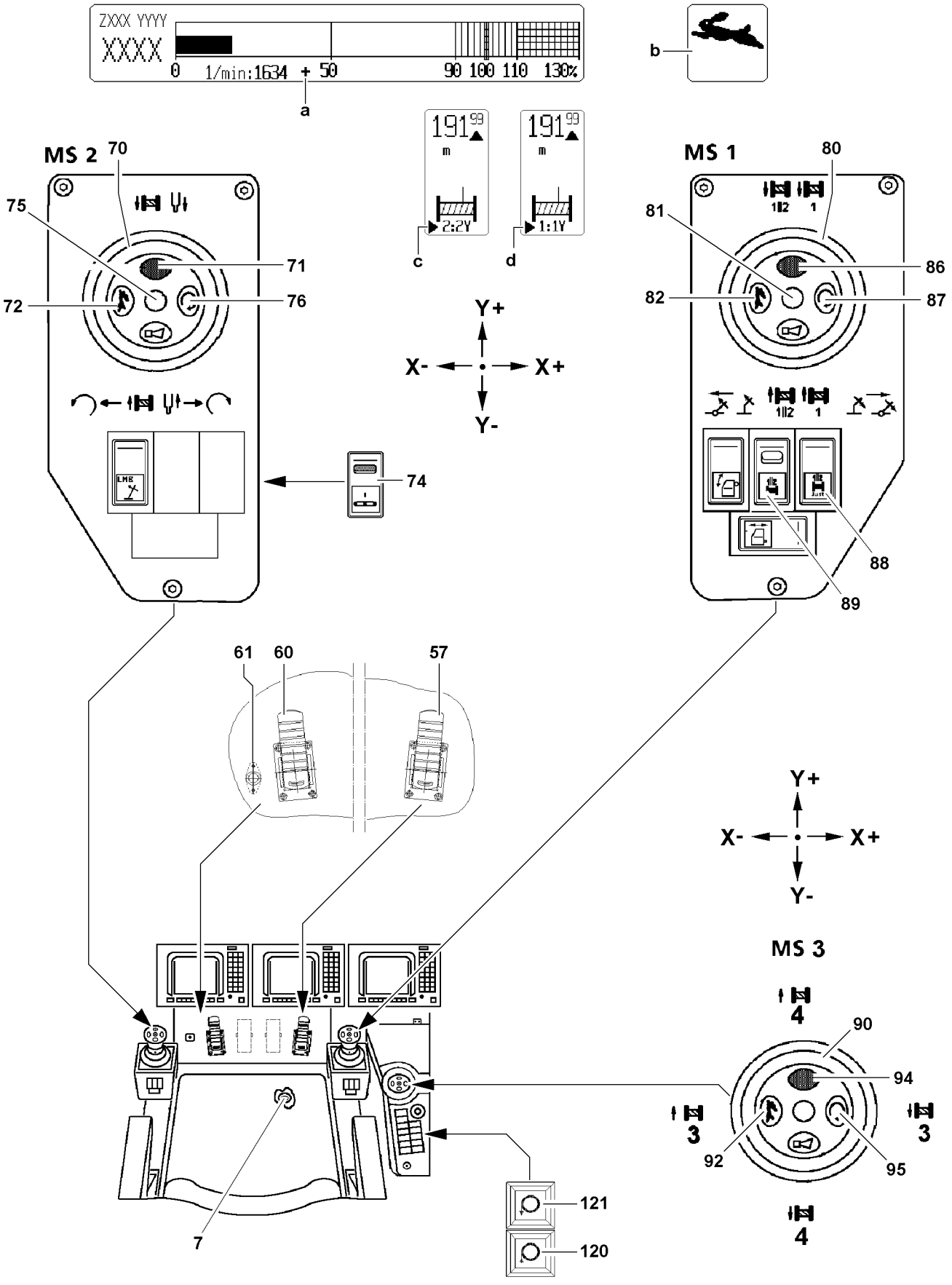
ZXXX YYYY
XXXX
0 1/min:1634 + 50 90 100 110 130%
a
b
191 99 m
2:2Y
c
191 99 m
1:1Y
d
MS 2
70
75
71
72
76
74
LME
Y+
X-
X+
Y-
MS 1
80
81
86
82
87
88
89
1|2 1
61
60
57
7
121
120
MS 3
4
90
94
3
92
95
3
4

B110601

3.2 Regulating the engine rpm

3.2.1 Locking the engine rpm

Locking the engine rpm relieves the crane operator if he needs to work for an extended period with constant rpm. The engine rpm can be locked in any position.

▶ Press the pedal **57** down for the engine regulation until the desired rpm is reached.

▶ Press the button **76**.

or

■ Press the button **87**.

or

■ Press the button **95**.

Result:

– The pedal **57** is locked and the engine rpm is saved.

– The icon **a** appears on the monitor.

3.2.2 Increasing the engine rpm via the pedal

Make sure that the following prerequisite is met:

– The maximum rpm has not yet been reached.

When the engine rpm is locked, the engine rpm can be increased with the pedal.
When the pedal is no longer actuated, the engine rpm drops to the saved value.

▶ Press the pedal **57** and increase the engine rpm.

▶ When this engine rpm is to be saved:
Press the button **76**.

or

■ Press the button **87**.

or

■ Press the button **95**.

3.2.3 Releasing the engine rpm lock

If the engine rpm is locked:

▶ Do no longer press down the pedal for the engine regulation **57**.

▶ Press the button **76**.

or

■ Press the button **87**.

or

■ Press the button **95**.

Result:

– The lock is released.

– The icon **a** turns off on the monitor.

– The rpm reduces to low idle rpm.

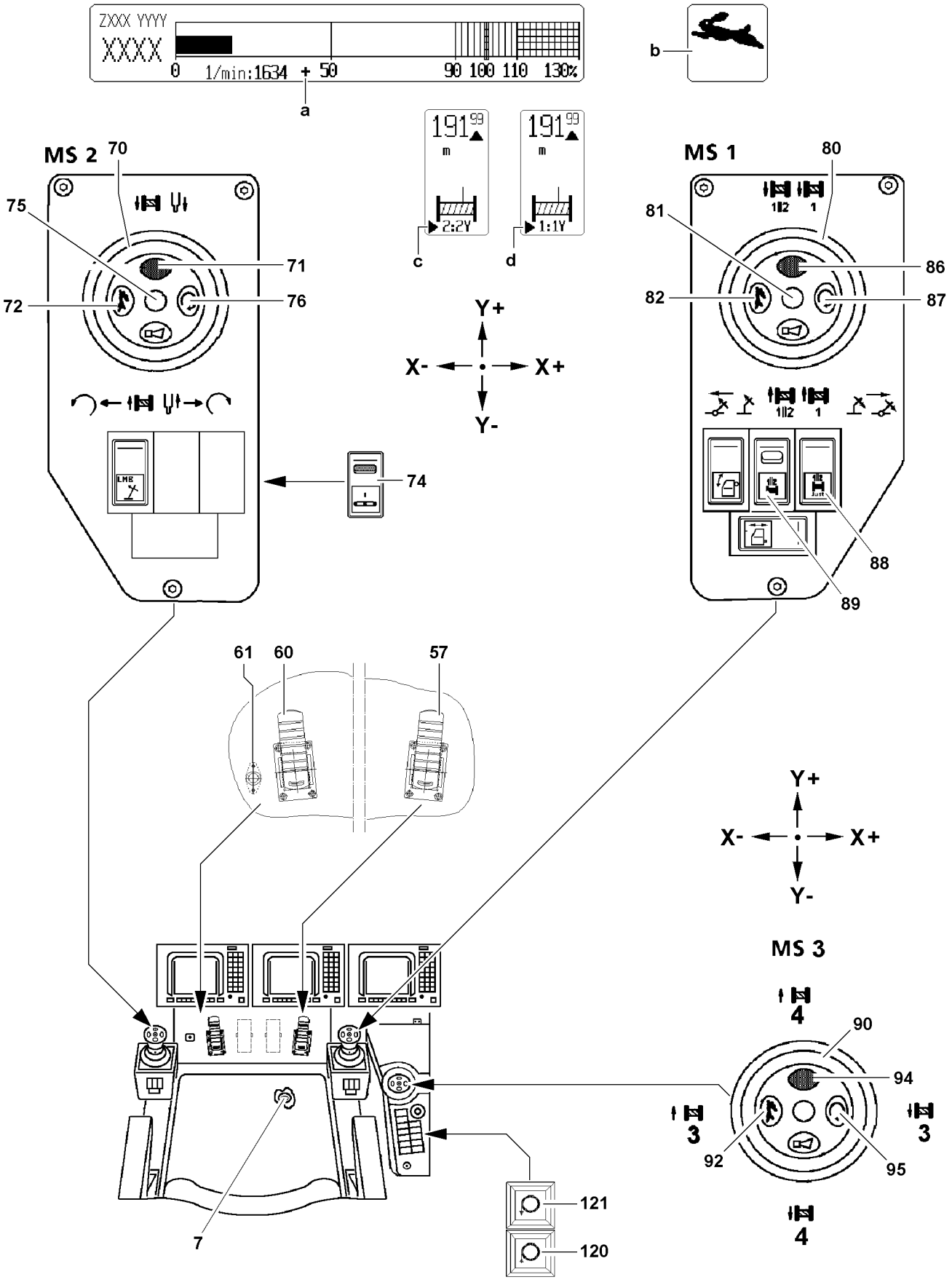
ZXXX YYYY
XXXX
0 1/min:1634 + 50 90 100 110 130%
a
b
191 99 m
2:2Y
c
191 99 m
1:1Y
d
MS 2
70
75
71
72
76
74
LME
Y+
X-
X+
Y-
MS 1
80
81
86
82
87
88
89
1|2 1
61
60
57
7
121
120
MS 3
4
90
94
3
92
95
3
4

B110601

3.2.4 “Power Plus”

Note
When “Power Plus” is turned on, observe the following:
- ▶ If a crane movement has reached its maximum speed due to the current utilization, then no speed increase is possible by adding the “Power Plus”!
- ▶ If the total power requirement of all actuated crane movements is larger than the available power, then those crane movements are reduced which require the most power!
- ▶ If another crane movement is added or taken back to one or more actuated crane movements then this has an influence on the other movements. For that reason we recommend in situations in which an interference of the individual crane movements is troublesome, not to turn the “Power Plus” on to turn the “Power Plus” off!

Adding “Power Plus”

The speed of the “lift / lower” crane movement is increased with the button **72**, button **82** or button **92**.

WARNING
Danger of accidents in case of single to triple sheave reeving!
- ▶ Do **not** add “Power Plus” if the crane is utilized by more than 50 % of its maximum permissible load carrying capacity for the corresponding radius!

▶ Press the button **72**.

or

■ Press the button **82**.

or

■ Press the button **92**.

Result:
– “Power Plus” is added.
– The icon **b** appears on the LICCON monitor.

Turning the “Power Plus” off

If the “Power Plus” is added:
▶ Press the button **72** again.

or

■ Press the button **82** again.

or

■ Press the button **92** again.

Result:
– “Power Plus” is turned off.
– The icon **b** turns off on the LICCON monitor.

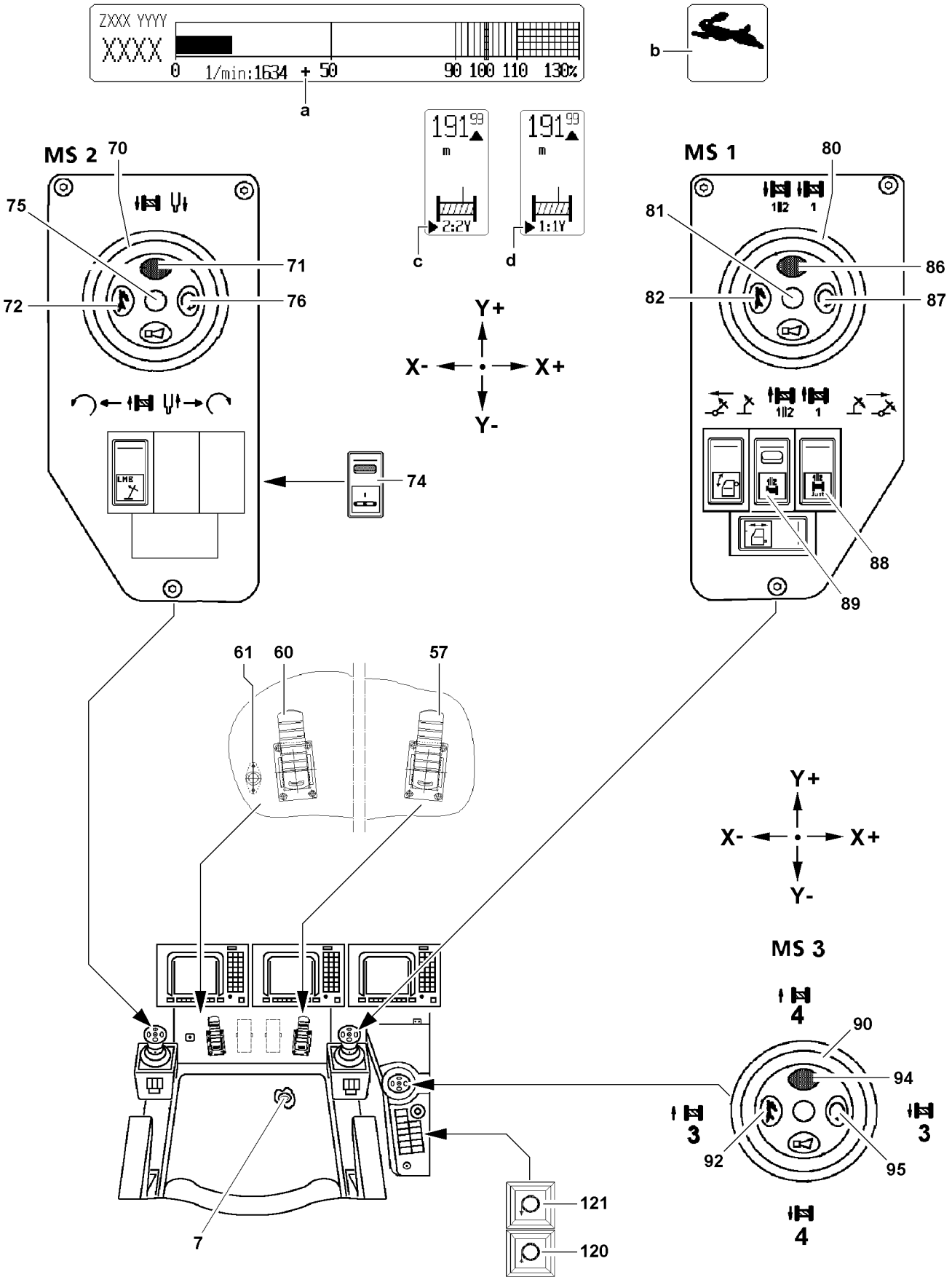
ZXXX YYYY
XXXX
0 1/min:1634 + 50 90 100 110 130%
a
b
191 99 m
2:2Y
c
191 99 m
1:1Y
d
MS 2
70
75
71
72
76
74
LME
Y+
X-
X+
Y-
MS 1
80
81
86
82
87
88
89
1|2 1
61
60
57
7
121
120
MS 3
4
90
94
3
92
95
3
4

B110601

3.3 Vibration sensor*

By adding the vibration sensor, a crane movements can be detected by vibration of the master switch. Make sure that the following prerequisite is met:

– The seat contact button **7** is actuated.

3.3.1 Vibration sensor winch 1

Adding the vibration sensor

▶ Press the button **86**.

Result:

– The vibration sensor **81** is turned on.
– The icon **d** appears on the LICCON monitor.

Turning the vibration sensor off

When the vibration sensor **81** is turned on:

▶ Press the button **86** again.

Result:

– The vibration sensor **81** is turned off.
– The icon **d** turns off on the LICCON monitor.

3.3.2 Vibration sensor winch 2 or slewing gear

If winch 2 and the slewing gear are operated, then the vibration sensor **75** will react to the first deflected movement.

Adding the vibration sensor

▶ Press the button **71**.

Result:

– The vibration sensor **75** is turned on.
– The icon **c** appears on the LICCON monitor.

Turning the vibration sensor off

When the vibration sensor **75** is turned on:

▶ Press the button **71** again.

Result:

– The vibration sensor **75** is turned off.
– The icon **c** turns off on the LICCON monitor.

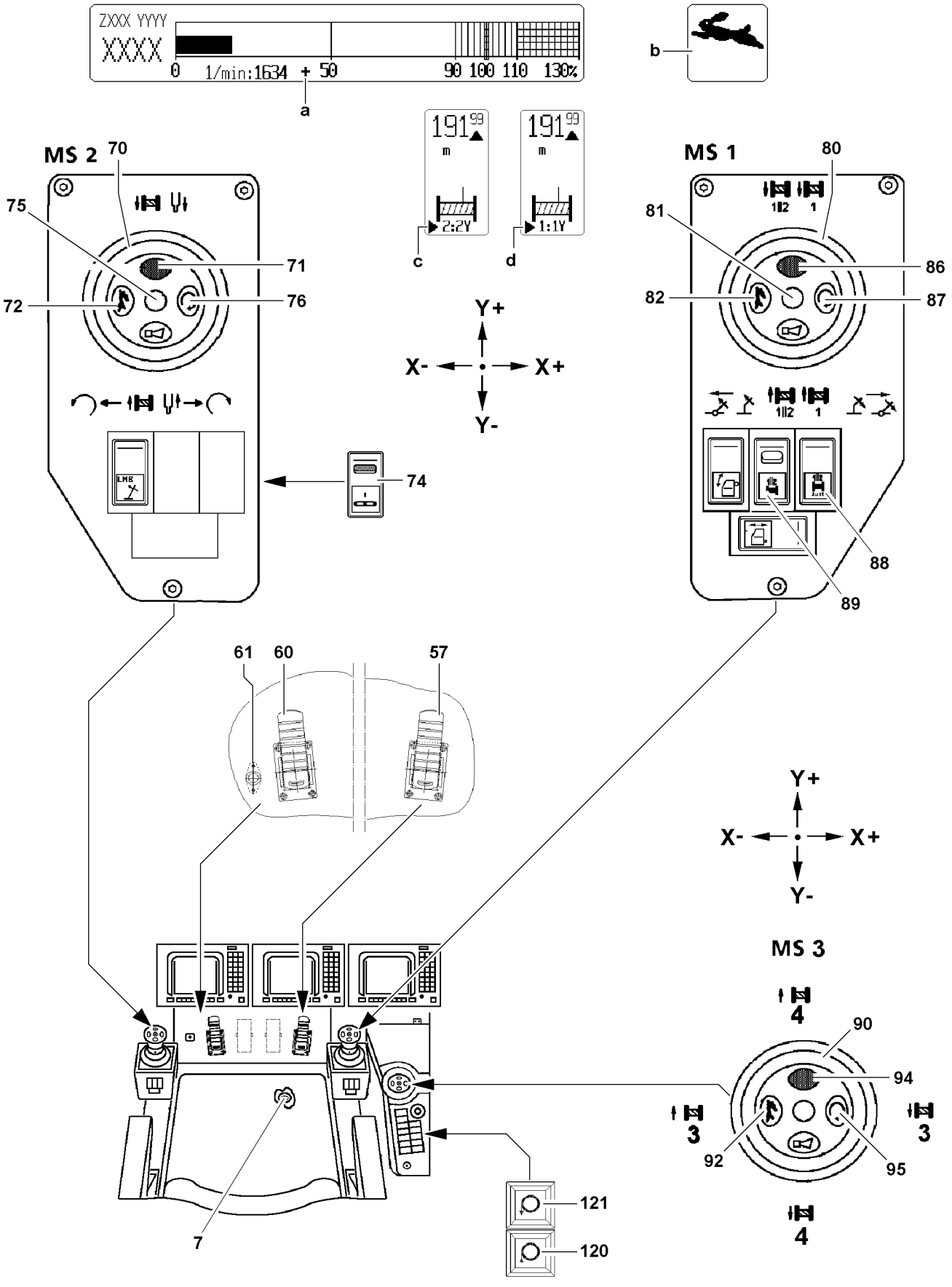
ZXXX YYYY
XXXX
0 1/min:1634 + 50 90 100 110 130%
a
b
191 99 m
2:2Y
c
191 99 m
1:1Y
d
MS 2
70
75
71
72
76
74
LME
Y+
X-
X+
Y-
MS 1
80
81
86
82
87
88
89
1|2 1
61
60
57
Y+
X-
X+
Y-
MS 3
4
90
94
3
3
92
95
4
7
121
120

B110601

3.4 Lifting / lowering a load

NOTICE
Rope damage due to slack rope!
▶ When spooling the winches up or out, make sure that no slack rope forms!

The speed of crane movement “lifting and lowering” is controlled via the deflection of the corresponding master switch and via the pedal **57** of the engine regulation.
In the “Control Parameter” program, it is possible to preselect the maximum winch speed. It is also possible to deactivate or activate the individual winches.
See Crane operating instructions, chapter 4.02.
Make sure that the following prerequisite is met:
– The winches are correctly assigned to the respective pulley heads, see Crane operating instructions, chapter 4.02.

3.4.1 Operating winch 1 - hoist winch

In the winch icon is shown with the arrow icons that the winch is turning, even if no hook movement is visible due to multiple reeving and low speed.
▶ Deflect master switch 1 **80** in direction Y+.
Result:
– Winch 1 spools out and the load is lowered.

▶ Deflect master switch 1 **80** in direction Y-.
Result:
– Winch 1 spools up and the load is lifted.

3.4.2 Operating winch 2 - hoist winch

In the winch icon is shown that the winch is turning, even if no hook movement is visible due to multiple reeving and low speed.
▶ Deflect master switch 2 **70** in direction Y+.
Result:
– Winch 2 spools out and the load is lowered.

▶ Deflect master switch 2 **70** in direction Y-.
Result:
– Winch 2 spools up and the load is lifted.

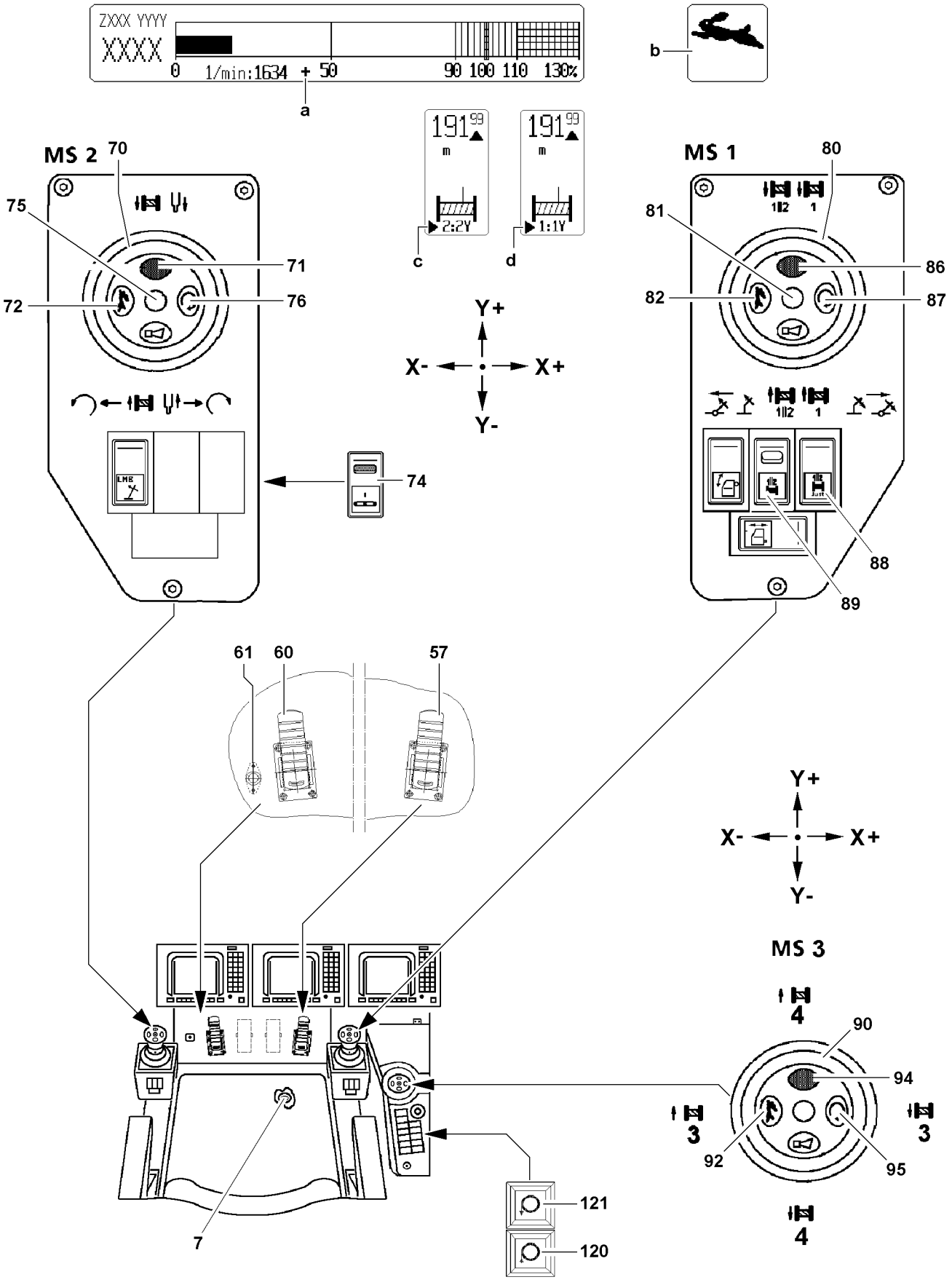
ZXXX YYYY
XXXX
0 1/min:1634 + 50 90 100 110 130%
a
b
191 99 m
2:2Y
c
191 99 m
1:1Y
d
MS 2
70
75
71
72
76
74
LME
Y+
X-
X+
Y-
MS 1
80
81
86
82
87
88
89
1|2 1
61
60
57
7
121
120
MS 3
4
90
94
3
92
95
3
4

B110601

3.4.3 Winch 1II2 - Parallel operation

Setting up parallel operation

For parallel operation, winch 1 and winch 2 are used.
In parallel operation, actuation of winch 1 and winch 2 is made only together with master switch 1 **80**.
Make sure that the following prerequisites are met:
– The double hook blocks are installed together, see Crane operating instructions, chapter 4.06.
– The double hook blocks are reeved according to the load charts.
– The double hook blocks are properly reeved according to the reeving plan, see separate reeving plan.
– The total reeving has been entered on the LICCON monitor.
– The reeving number on both winches 1 and 2 must be the same and even.

WARNING
Danger of accident!
▶ The total reeving number on both winches 1 and winch 2 must be the same and even in parallel operation. If the minimum value of the reeving is uneven, then - in parallel operation - the next higher, even reeving must be selected!
▶ Make sure to unpin the transport pins on the hook block before horizontal alignment and before crane operation!
▶ Make sure that there are no persons within the danger zone!

Align the hook blocks horizontally

Make sure that the following prerequisites are met:
– Individual operation for winch 1 and winch 2 is set.
– The parallel operation switch **89** is turned off.
– There is no load on the hook.

Check visually and align the hook blocks horizontally. To do so, spool the winches manually up or out.
▶ Deflect master switch 1 **80** or master switch 2 **70** in direction Y.

Result:
– Winch 1 or winch 2 spools out or up until the hook blocks are horizontally aligned.

Adjusting the parallel control of winch 1 and winch 2

Make sure that the following prerequisites are met:
– The double hook blocks are horizontally aligned, check visually.
– There is no load on the hook.

▶ Turn on the switch **89** for the parallel operation.
▶ Press the button **88**.

Result:
– The parallel control of winch 1 and winch 2 is adjusted.

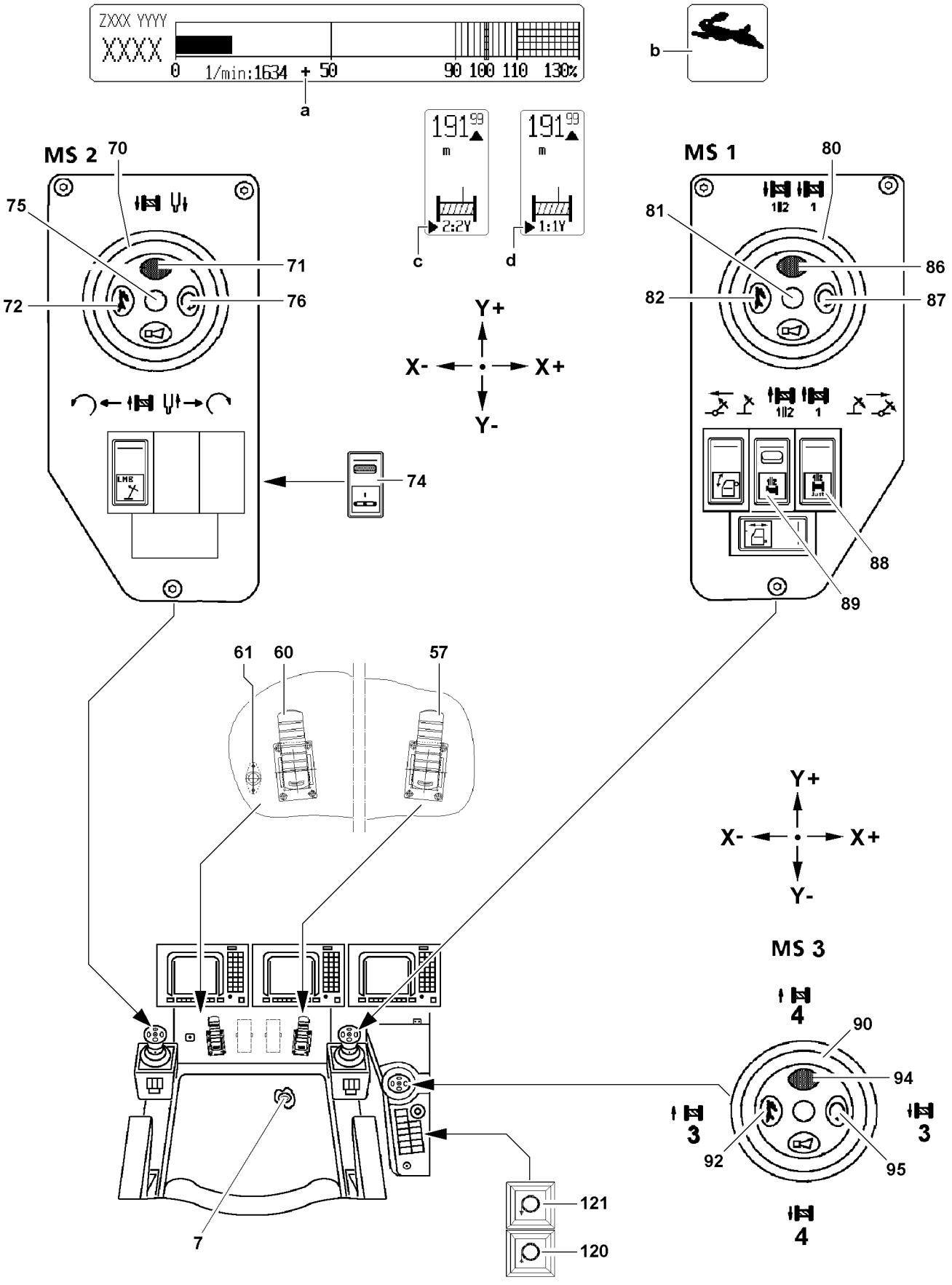
ZXXX YYYY
XXXX
0 1/min:1634 + 50 90 100 110 130%
a
b
191 99 m
2:2Y
c
191 99 m
1:1Y
d
MS 2
70
75
71
72
76
74
LME
Y+
X-
X+
Y-
MS 1
80
81
86
82
87
88
89
1|2 1
61
60
57
7
121
120
MS 3
4
90
94
3
92
95
3
4

B110601

Parallel operation: Lifting / lowering a load

WARNING
Danger of accidents due to overload!
If the compensation cross bar is inclined, then significant load increases will occur on the individual hook blocks!
If this is not observed, then the hook block, boom or rope can be overloaded, resulting in property damage and personal injury!
▶ Make sure that the compensation cross bar is always aligned horizontally on the double hook blocks!

WARNING
Danger of accidents due to different level of hook blocks!
The electronic parallel control monitors only the same turning speed of both winches, but it does not take the following errors into account:
- Uneven rope length
- Different rope diameters
- Different winding behavior
- Uneven reeving

▶ The crane operator must ensure and is responsible for that the hook blocks are always on the same level, despite electronic monitoring!

Note
▶ The winch movement is shut off if the difference range of the parallel control is being exceeded. In that case, the winches must be again parallel adjusted!

Make sure that the following prerequisites are met:
– The double hook blocks are horizontally aligned, check visually.
– There is no load on the hook.
– Parallel control of winches is adjusted.
– The button **89** for parallel operation is turned on.

▶ Deflect master switch 1 **80** in direction Y+.

Result:
– Winch 1 and winch 2 spool out together: The load is lowered.

▶ Deflect master switch 1 **80** in direction Y-.

Result:
– Winch 1 and winch 2 spool up together: The load is lifted.

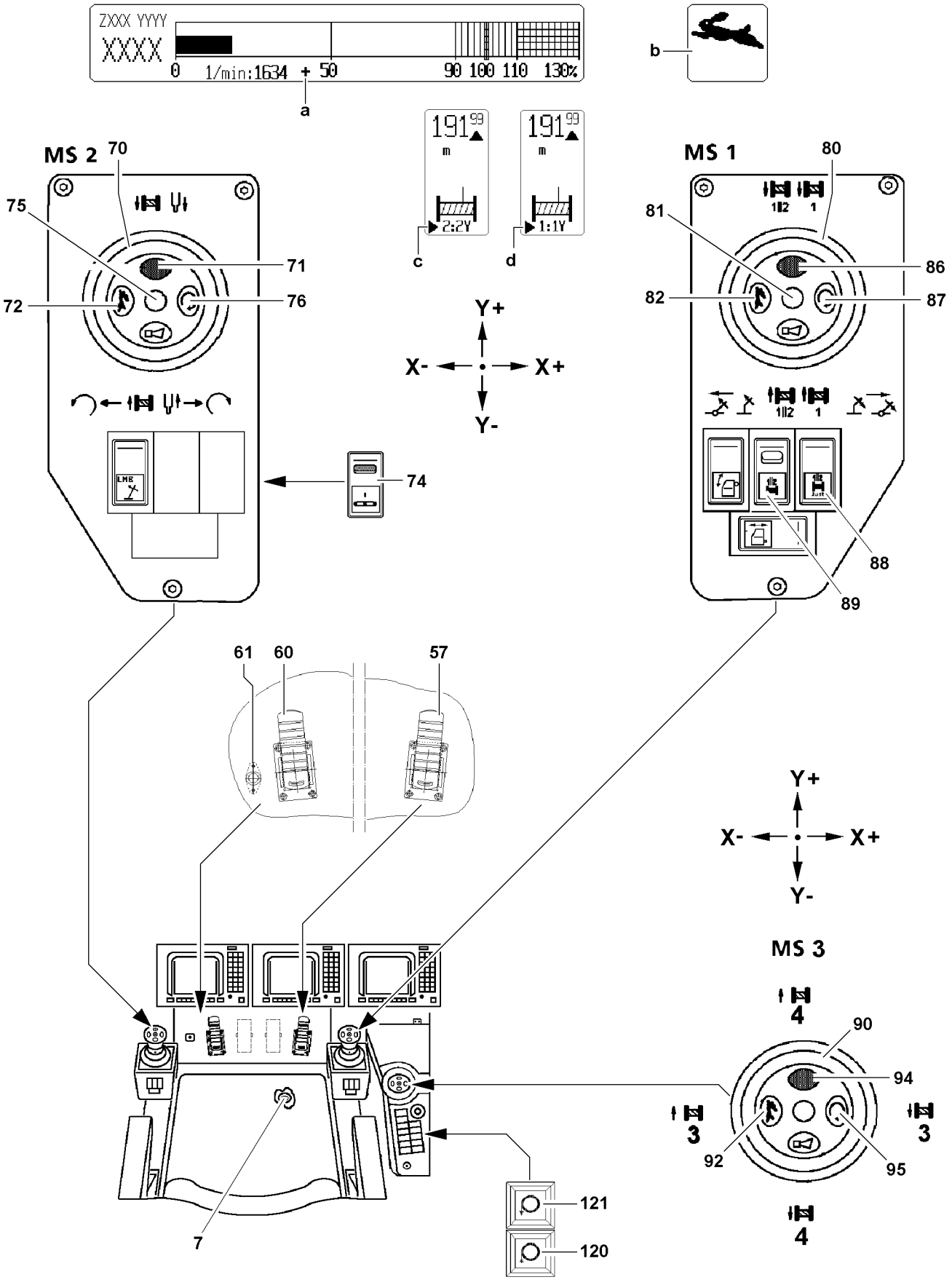
ZXXX YYYY
XXXX
0 1/min:1634 + 50 90 100 110 130%
a
b
191 99 m
2:2Y
c
191 99 m
1:1Y
d
MS 2
70
75
71
72
76
74
LME
Y+
X-
X+
Y-
MS 1
80
81
86
82
87
88
89
1|2 1
61
60
57
Y+
X-
X+
Y-
MS 3
4
90
94
3
3
92
95
4
7
121
120

B110601

3.4.4 Operating winch 6 - hoist winch

In the winch icon is shown that the winch is turning, even if no hook movement is visible due to multiple reeving and low speed.

Note

- ▶ In individual operation of winch 1 and winch 2, no master switch is assigned to winch 6!
- ▶ In parallel operation, winch 1 and winch 2 are actuated with the master switch 1 **80**!
- ▶ When the switch **89** is turned on, then the master switch 2 **70** is assigned to winch 6!

Operating winch 6 in parallel operation of winch 1 and winch 2

Make sure that the following prerequisite is met:

– Switch **89** is turned on.

▶ Deflect master switch 2 **70** in direction Y+.

Result:

– Winch 6 spools out and the load is lowered.

▶ Deflect master switch 2 **70** in direction Y-.

Result:

– Winch 6 spools up and the load is lifted.

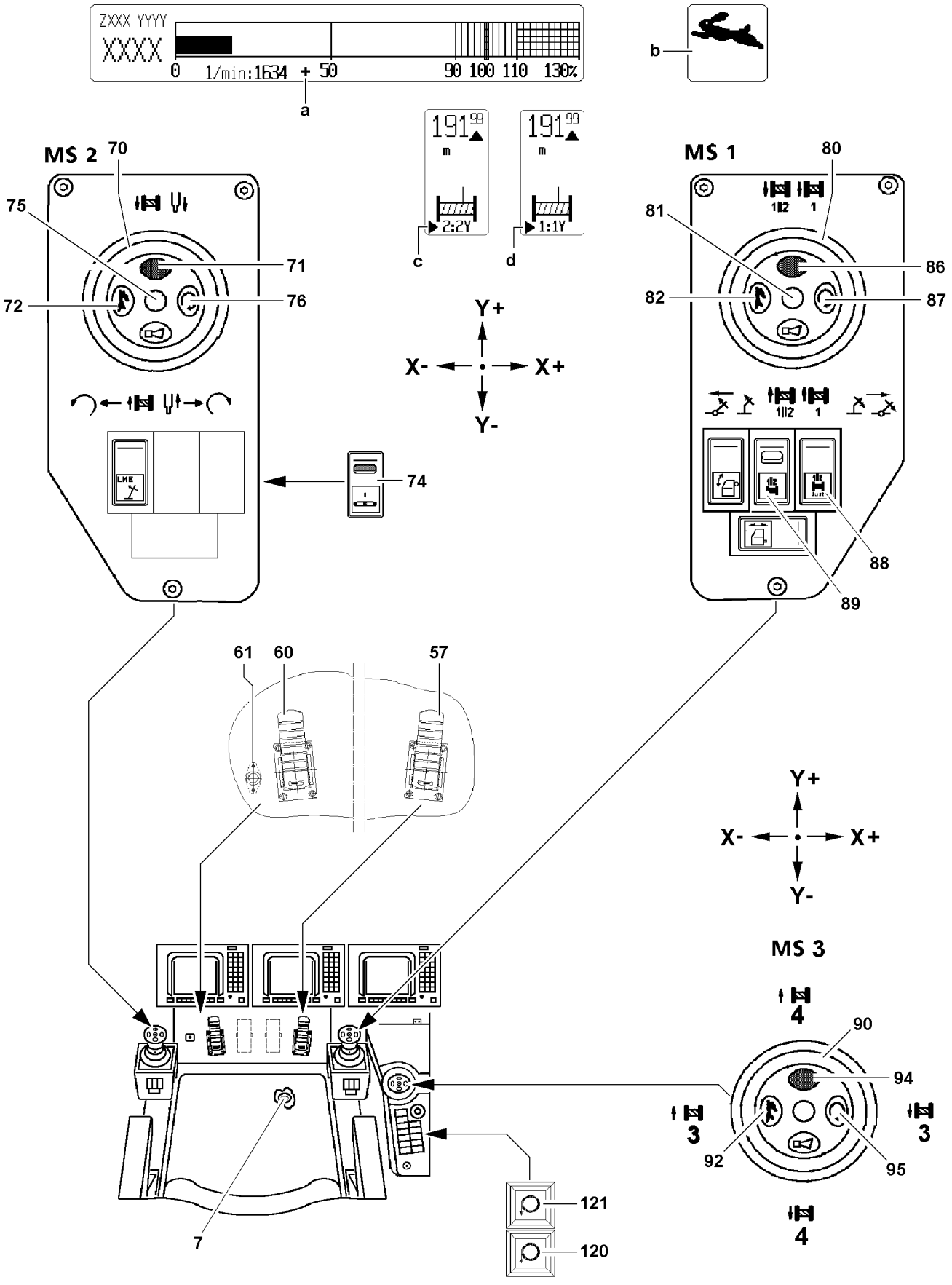
ZXXX YYYY
XXXX
0 1/min:1634 + 50 90 100 110 130%
a
b
191 99 m
2:2Y
c
191 99 m
1:1Y
d
MS 2
70
75
71
72
76
74
LME
Y+
X-
X+
Y-
MS 1
80
81
86
82
87
88
89
1|2 1
61
60
57
7
121
120
MS 3
4
90
94
3
92
95
3
4

B110601

3.4.5 Operating winch 6 as winch 5

Crane operation with winch 6

In operating modes, except SDW-operation, winch 6 must be connected on the hydraulic and electrical system of winch 5, because winch 6 and winch 4 are supplied by the same pump.

Note

- ▶ Winch 6 and winch 4 cannot be moved simultaneously if they are connected to the same pump!

If winch 6 is connected to the pump 5 of winch 5, then winch 6 and winch 4 can be moved separately.

Note

- ▶ If winch 6 is moved as hoist winch with the hydraulic and electrical connections of winch 5, then winch 6 is operated as winch 5!
- ▶ In the LICCON crane operating screen, winch 6 is then shown as winch 5!
- ▶ The hook path display is then not correct for winch 6!

WARNING

Danger of accident due to falling load!

If the wind speed sensor does not turn off on the minimum rope coil, then the rope mount can be ripped out and the load can fall down!

Personnel can be severely injured or killed!

- ▶ Crane operation with an incorrectly or non-adjusted winch is strictly prohibited!
- ▶ Make sure that the winches are correctly adjusted: Check the shut off without a load on the hook!

If it is found during operation or when changing a rope that there is no shut off at the minimum rope coil:

- ▶ Have the winch turn sensor readjusted by **Liebherr Service**!

If winch 5 is operated again on pump 5, then the hook path display is incorrect until winch 5 is readjusted!

Crane operation without winch 6

If winch 6 is not installed, then the hoist rope is placed on the N/W-control winch (winch 5) which allows constant operation for control operation only for maximum 2 months.

WARNING

Damage to the hoist rope!

If no rotation-resistant control rope is placed and used for more than 2 to 3 months on the control winch (winch 5), then the hoist rope can be damaged and rip!

Personnel can be severely injured or killed!

- ▶ Carry out visual inspection!
- ▶ If any damage is found, then place the rope down immediately!
- ▶ Check the rope regularly and unreeve no later than after two month in operation and reeve in again!

Note

- ▶ Before crane operation, check which type of rope is placed on winch 5!
- ▶ Important inspection and maintenance notes for ropes, see Crane operating instructions, chapter 8.04!

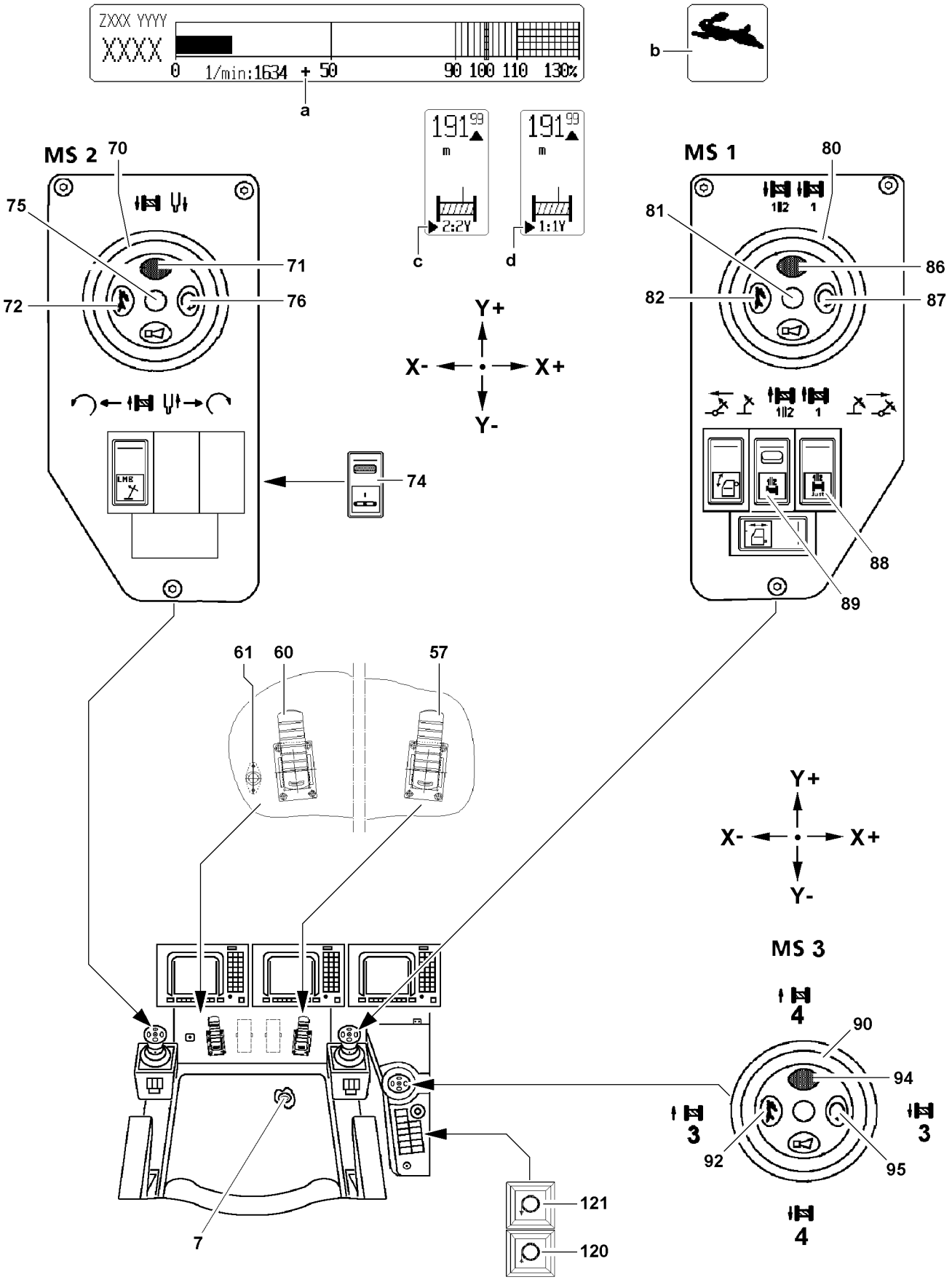
ZXXX YYYY
XXXX
0 1/min:1634 + 50 90 100 110 130%
a
b
191 99 m
2:2Y
c
191 99 m
1:1Y
d
MS 2
70
75
71
72
76
74
LME
Y+
X-
X+
Y-
MS 1
80
81
86
82
87
88
89
1|2 1
61
60
57
7
121
120
MS 3
4
90
94
3
92
95
3
4

B110601

3.4.6 Operating the assembly winch

Spool assembly winch out:

▶ Press the button **121** and hold.

Result:

– The assembly winch spools out.

▶ Stop the assembly winch:
Stop pressing the button **121**.

Result:

– The assembly winch is stopped.

Spool the assembly winch up:

▶ Press the button **120** and hold.

Result:

– The assembly winch spools up.

▶ Stop the assembly winch:
Stop pressing the button **120**.

Result:

– The assembly winch is stopped.

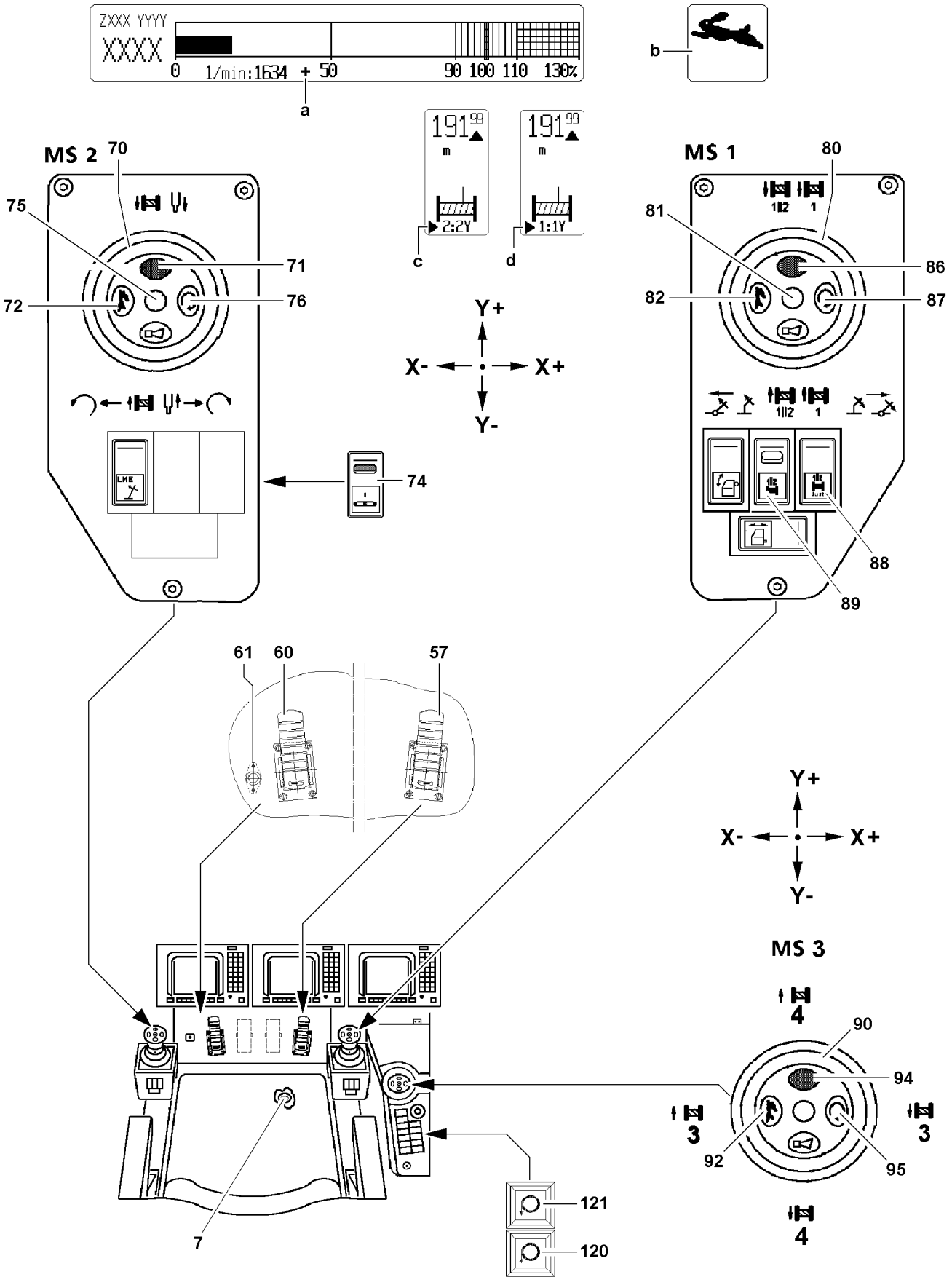
ZXXX YYYY
XXXX
0 1/min:1634 + 50 90 100 110 130%
a
b
191 99 m
2:2Y
c
191 99 m
1:1Y
d
MS 2
70
75
71
72
76
74
LME
Y+
X-
X+
Y-
MS 1
80
81
86
82
87
88
89
1|2 1
61
60
57
7
121
120
MS 3
4
90
94
3
3
92
95
4

B110601

3.5 Luffing the boom

DANGER
Danger of accident due to toppling crane!
If the LICCON overload protection turns off while trying to lift the load with the winch, then a subsequent luffing movement can cause the crane to topple over or damage it!
Personnel can be severely injured or killed!
▶ Do not lift the load by luffing up the boom, see Crane operating instructions, chapter 4.04!

The speed of crane movement “Luffing” is controlled by the deflection of the corresponding master switch and the pedal **57**.

Note
▶ The operating modes are explained in the load chart manual!

Note
▶ Observe the pump - master switch assignment in the electric wiring diagram!

3.5.1 Luffing the main boom in operating mode S/SL

▶ Deflect the master switch 1 **80** in direction X-.
Result:
– The boom is luffed up.

▶ Deflect the master switch 1 **80** in direction X+.
Result:
– The boom is luffed down.

3.5.2 Luffing the main boom in operating mode SW

▶ Deflect master switch 3 **90** in direction Y-.
Result:
– The boom is luffed up.

▶ Deflect master switch 3 **90** in direction Y+.
Result:
– The boom is luffed down.

3.5.3 Luffing the main boom in operating mode SDW

▶ Deflect the master switch 3 **90** in direction X-.
Result:
– The boom is luffed up.

▶ Deflect the master switch 3 **90** in direction X+.
Result:
– The boom is luffed down.

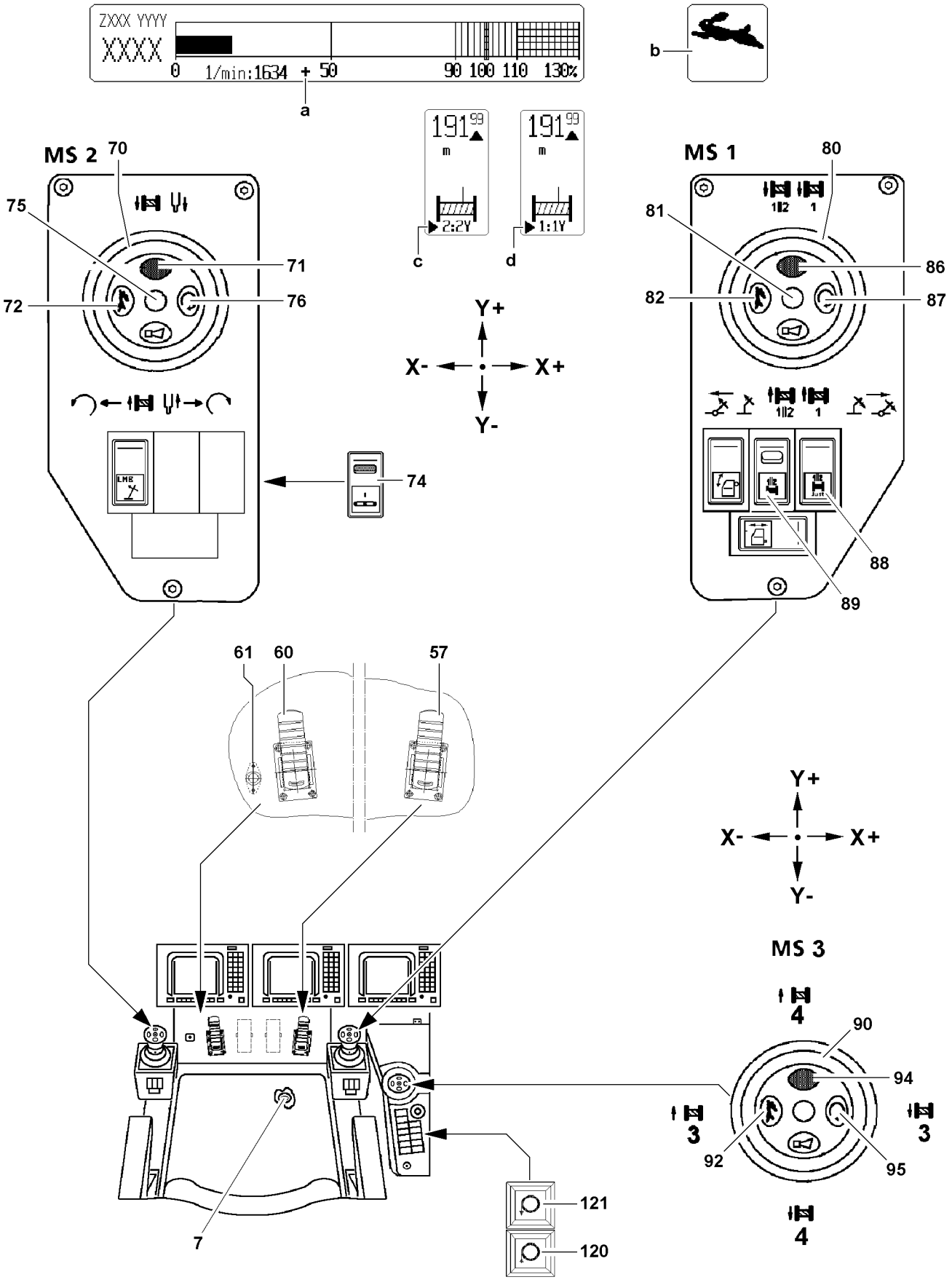
ZXXX YYYY
XXXX
0 1/min:1634 + 50 90 100 110 130%
a
b
191 99 m
2:2Y
c
191 99 m
1:1Y
d
MS 2
70
75
71
72
76
74
LME
Y+
X-
X+
Y-
MS 1
80
81
86
82
87
88
89
1|2 1
61
60
57
7
121
120
MS 3
4
90
94
3
92
95
3
4

B110601

3.5.4 Luffing the lattice jib in operating mode SW/SDW

▶ Deflect the master switch 1 **80** in direction X-.

Result:

– The lattice jib is luffed up.

▶ Deflect the master switch 1 **80** in direction X+.

Result:

– The lattice jib is luffed down.

3.5.5 Luffing the lattice jib in operating mode SDWV/SLK

▶ Deflect the master switch 3 **90** in direction X-.

Result:

– The lattice jib is luffed up.

▶ Deflect the master switch 3 **90** in direction X+.

Result:

– The lattice jib is luffed down.

3.5.6 Luffing the derrick, for all D-operating modes

▶ Deflect master switch 3 **90** in direction Y-.

Result:

– The derrick is luffed up.

▶ Deflect master switch 3 **90** in direction Y+.

Result:

– The derrick is luffed down.

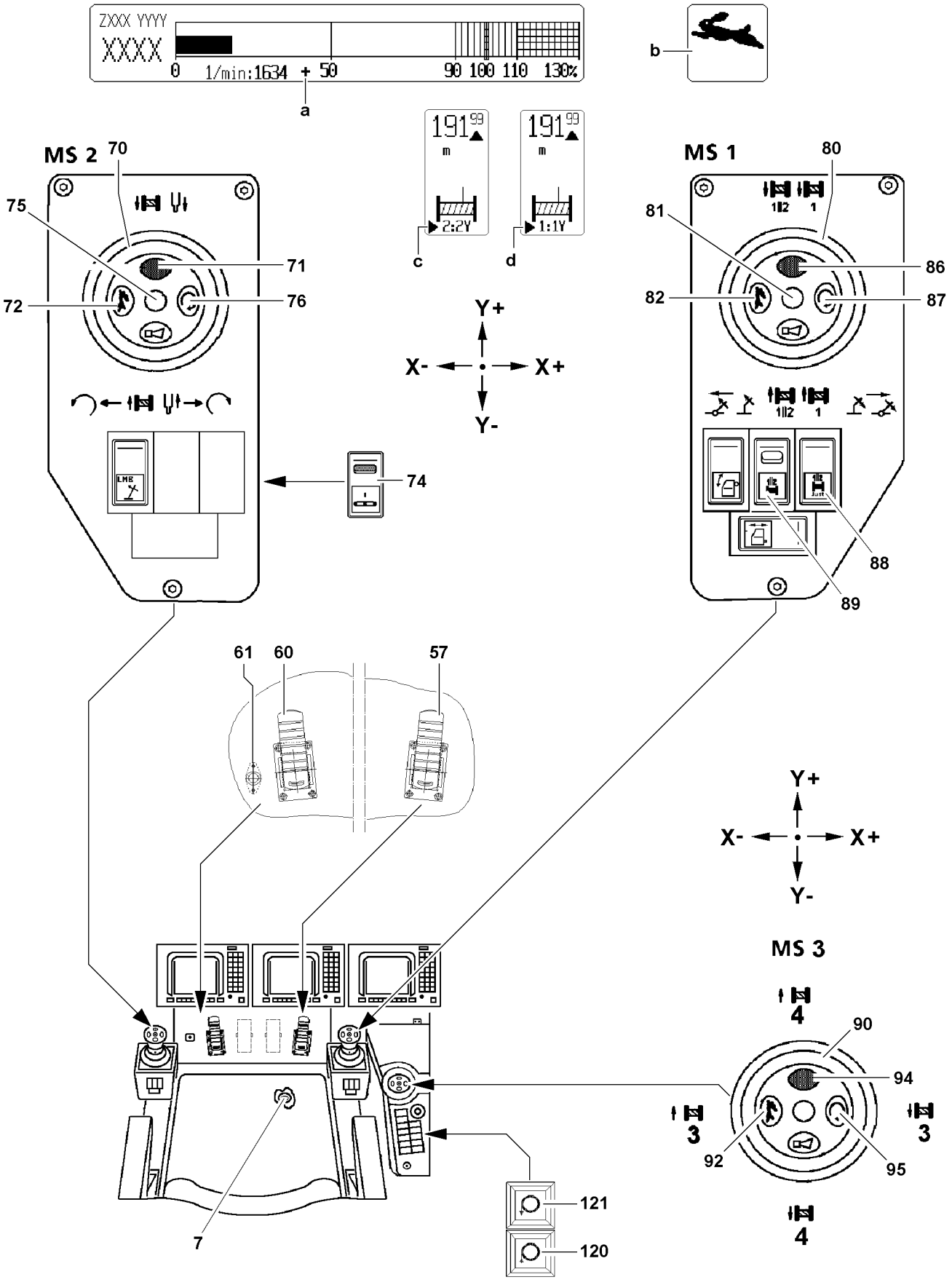
ZXXX YYYY
XXXX
0 1/min:1634 + 50 90 100 110 130%
a
b
191 99 m
2:2Y
c
191 99 m
1:1Y
d
MS 2
70
75
71
72
76
74
LME
Y+
X-
X+
Y-
MS 1
80
81
86
82
87
88
89
1|2 1
61
60
57
7
121
120
MS 3
4
90
94
3
92
95
3
4

B110601

3.6 Running / slowing down the slewing movement with the pedal

NOTICE
Danger of property damage on the slewing ring connection!
When actuating the slewing gear brake with the pedal **60**, only part of the braking momentum of the slewing gear brake can be created!
- ▶ Use the pedal **60** to actuate the slewing gear brake only at minimum turning speeds, which means the master switch 2 **70** is almost in zero position!
- ▶ Do not brake the turning movement of the crane by moving the master switch 2 **70** back to the neutral position and / or by abruptly applying the slewing brake with the pedal **60**!

Use the pedal **60** to actuate the slewing gear brake only in the following cases:
– Running the slewing movement in strong side wind
– Stopping the slewing movement in strong side wind

3.6.1 Running the slewing movement in strong side wind

When turning against the wind in strong side wind and with a long boom systems, then the superstructure, due to leakage in the hydraulic motor, will turn into the opposite direction, in relation to the deflection of the master switch.
This can be avoided as follows:
- ▶ Actuate the pedal **60** and deflect the master switch 2 **70** into the desired turning direction.
- ▶ Slowly release the pedal **60** until the superstructure turns in the desired turning direction.

3.6.2 Stopping the slewing movement in strong side wind

- ▶ Slow down the crane with master switch 2 **70** to minimum turning speed.
- ▶ Apply the pedal **60** carefully, until the crane has come to a standstill at the desired position.

Note
- ▶ Preselection of slewing speed, see Crane operating instructions, chapter 4.02!

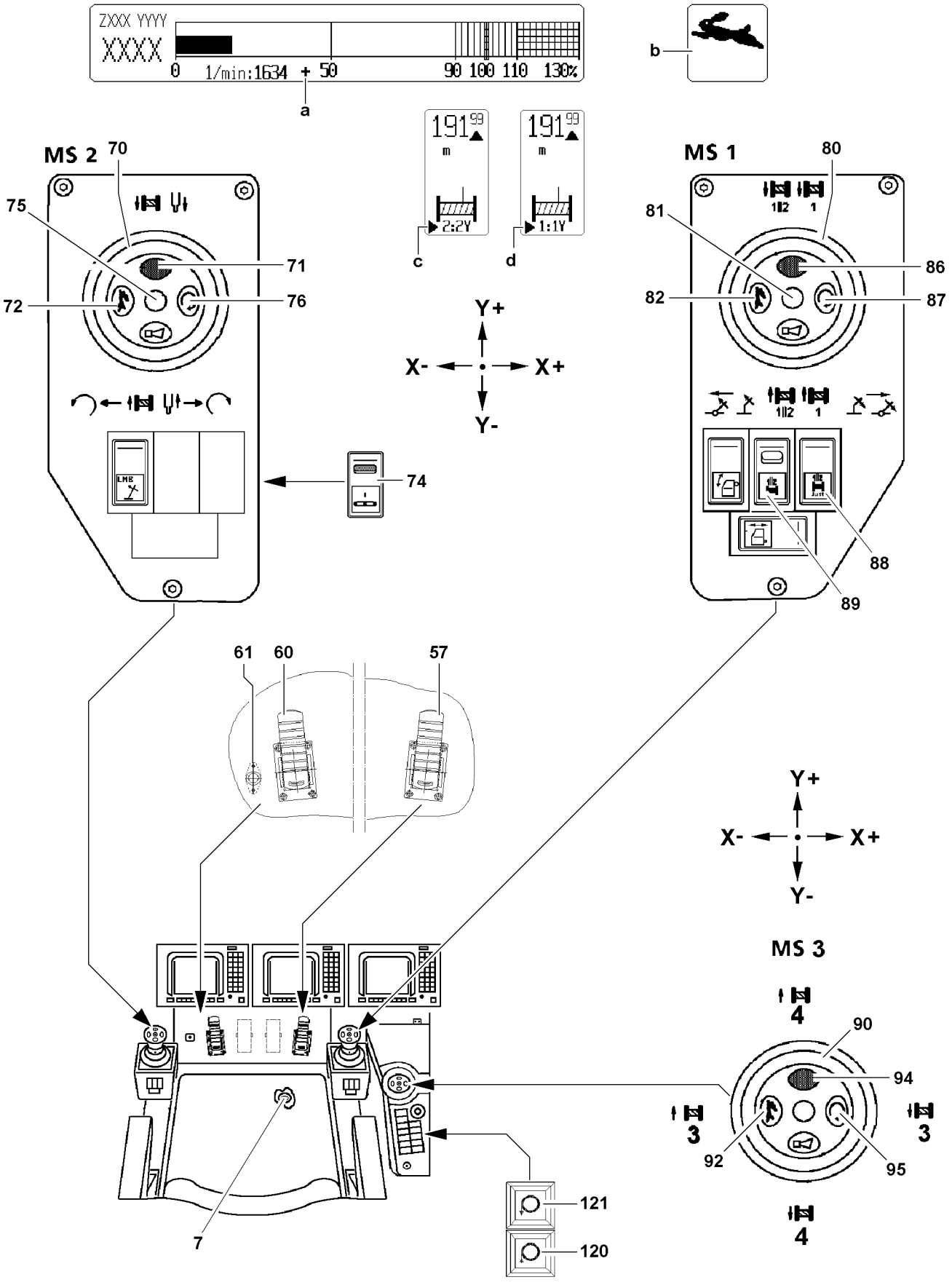
ZXXX YYYY
XXXX
0 1/min:1634 + 50 90 100 110 130%
a
b
191 99
m
2:2Y
1:1Y
c
d
MS 2
70
75
71
72
76
74
MS 1
80
81
86
82
87
88
89
Y+
X-
X+
Y-
61
60
57
MS 3
4
90
94
3
92
95
121
120
7

B110601

3.7 Switching the slewing gear to coasting

In order to position the boom over the load more easily, the slewing gear can be switched to coasting.
The master switch 2 **70** may not be deflected while doing so.
The slewing gear **cannot** be switched to coasting in these situations:
– Slewing gear shut off by the LICCON overload protection.
– Activated working range limitation.

▶ Press the foot button **61**.

Result:
– The slewing gear is switched to coasting.

Troubleshooting
With the slewing gear released, the superstructure turns unintentionally (for example due to wind).
▶ Continue to hold the foot button **61**.
▶ Deflect the master switch 2 **70** in slewing direction and then no longer press the foot button **61**.
▶ Slow down the slewing movement by slowly resetting the master switch 2 **70**.

3.8 Turning the crane superstructure

WARNING
Danger of accident!
▶ Ensure that there are no obstacles in the turning range for the crane and that there are no persons within the danger zone!
▶ Give a short warning signal (horn) before initiating a crane movement!

WARNING
Danger of accident due to toppling crane!
If the slewing speed is exceeded, there is the danger that the loads start to swing!
The crane can be damaged or topple over!
Personnel can be severely injured or killed!
▶ Turning with a load: Initiate and slow down a turning movement extremely sensitively!
▶ Longer boom and larger load: Operate the crane with lower turning speed!
▶ Observe and adhere to the values in the load chart manual!

The speed of the “turning” crane movement is controlled via the deflection of master switch 2 **70** and via the pedal **57** of the engine regulation.
In the “Control Parameter” program, it is possible to preselect the maximum rotational speed.
See Crane operating instructions, chapter 4.02.
▶ Deflect the master switch 2 **70** in direction X+.

Result:
– The crane superstructure turns to the right.

▶ Deflect the master switch 2 **70** in direction X-.

Result:
– The crane superstructure turns to the left.

Note
▶ Preselection of slewing speed, see Crane operating instructions, chapter 4.02!

3.9 Control measures

WARNING
The crane can topple over!
If the control measures are not carried out before crane operation, then the crane can topple over or be damaged!
Personnel can be severely injured or killed!
- ▶ Crane operation with safety devices which are **not** functioning correctly is strictly prohibited!
- ▶ Start crane operation only after all safety devices have been checked and are functioning correctly!
- ▶ Start crane operation only if the overload protection has been set according to the data in the load chart!
- ▶ Start crane operation only if the crane is properly supported and horizontally aligned!

Note
- ▶ If the crane operator leaves the cab, even for a short time, the operating mode setting must be checked and reset if necessary before resuming crane operation!

3.9.1 Control measures before crane operation

The following checks must be made before crane operation:
- ▶ Check the function of the overload protection by running against the operating positions “on top” and “bottom”.
- ▶ Check the function of the hoist limit switch “on top” by running against the hoist limit switch weight.
- ▶ Check the function of the limit switch “Boom steep” on running on the relapse cylinder.
- ▶ Check the function of the limit switch “Derrick” on running on the relapse cylinder.
- ▶ Check the function of the limit switch “Lattice jib steep” on running on the relapse cylinder.

WARNING
Tipping of W-lattice jib!
If the relapse retainer is not moving easily, then the mechanical relapse support cannot engage correctly in steep lattice jib position!
The lattice jib can tip backward uncontrolled and cause the crane to topple over!
Personnel can be severely injured or killed!
- ▶ Make sure that the pedal can be easily moved before erecting the W-boom system!

Carry out the following checks additionally before crane operation with the W-lattice jib:
- ▶ Check the function of the limit switch on the flap (pendulum).
- ▶ Check that the mechanical relapse support moves into the flap.

3.9.2 Guy rods of lattice sections in crane operation

Note
- ▶ Guy rods on lattice sections in crane operation, see Crane operating instructions, chapter 5.01!

3.9.3 Dangerous conditions without shut off

Block position of relapse cylinders when setting down a load

NOTICE

Damage to boom or relapse cylinder!

If the block position of the relapse cylinders is triggered by the boom or the derrick with attached, freely suspended load, then there is a danger of damaging the boom or the relapse cylinders when setting down the load onto the ground! By setting down the load, the crane is relieved, which causes the boom system to move to the rear!

There is no shut off of the spooling out function of the winch!

▶ Operational running on the block position is prohibited!

If the crane should be in block position once:

▶ Actuate the opposite direction of movement which caused the block position and eliminate the block position!

1

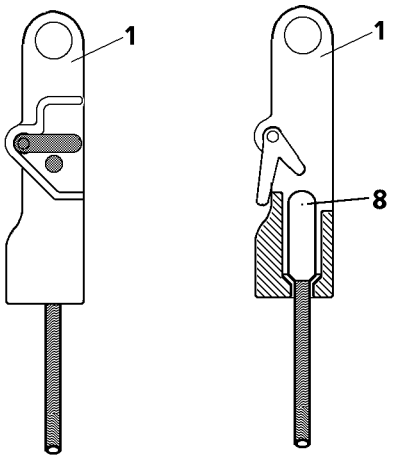

2

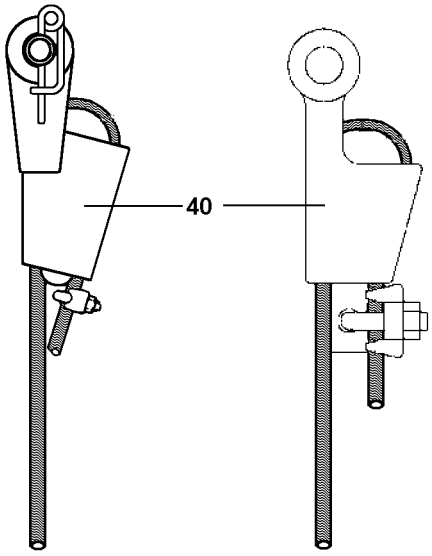

B108118

1 Wire ropes and rope end connections

1.1 Wire ropes

Please check if a **non-rotating** or a **rotation-resistant** rope is required for the application. The type of rope that is selected then determines the required type of rope end connections, see Crane operating instructions, chapter 8.04.

Note

▶ The correct choice and use of wire rope and rope end connections are decisive preconditions for proper and accident-free crane operation!

DANGER

Danger of serious personnel injury and equipment damage!

▶ **Never** use rotation-resistant ropes with a rotating rope end connection!

▶ **Never** install a twist compensator / swivel!

1.2 Rope end connections

Rope end connections are grouped into:

– Rope end connections with locking clamp **8**.
  For that, use a rope lock **1**, see illustration **1**.
– Rope end connections without locking clamp.
  For that, use a wedge lock **40**, see illustration **2**.

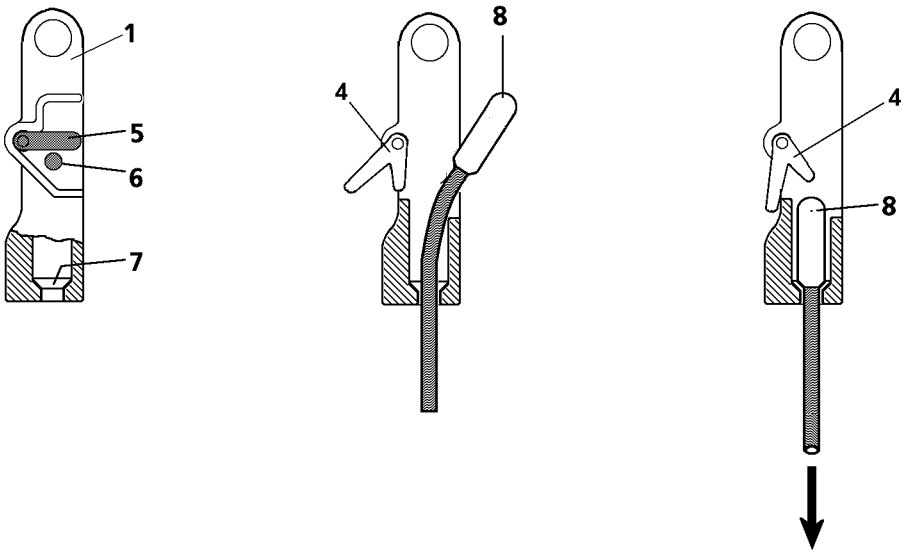

1

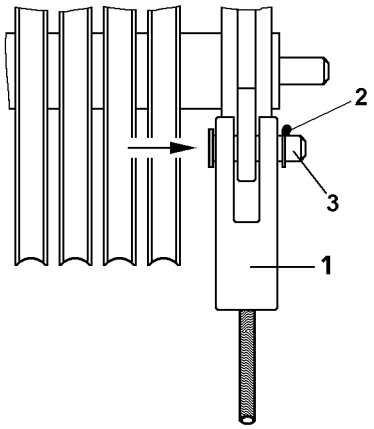

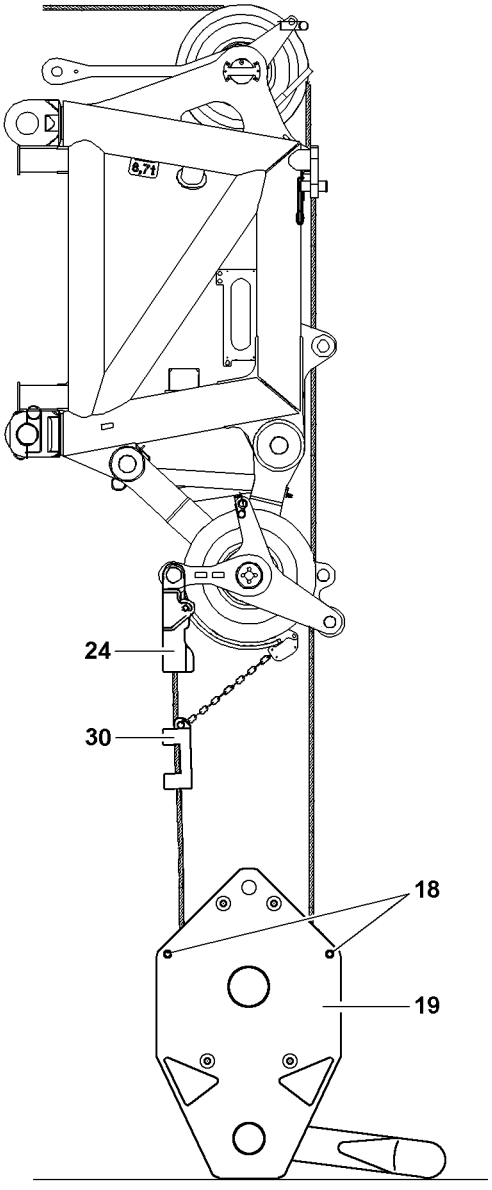

B108211

2 Reeving the hook block in and out

WARNING
Erroneous operation of crane function and danger of slipping on the boom!
If the following notes are not observed and adhered to, personnel can be severely injured or killed!
- ▶ Step on the boom only via the catwalks!
- ▶ The assembly personnel must secure themselves for all work on the lattice mast boom with approved antifall systems, on the safety ropes or on the lattice sections, with snap hook on both sides to prevent them from falling!
- ▶ Complete the assembly work from a stable location!
- ▶ Observe and adhere to the assembly guidelines in chapter 5.01 of the crane operating instructions!

2.1 Reeving in the hook block

WARNING
The hook block can fall over!
If the pins **2** are **not** inserted into the hook block before setting the hook block down, the hook block can fall over when unreeving the hoist rope!
Personnel can be severely injured or killed!
- ▶ Pin in the pin **2**, see chapter 5.19 of the crane operating instructions!

Note
- ▶ The reeving of the hoist rope can be carried out manually or with the aid of the assembly winch!
- ▶ Make sure that no slack rope forms during reeving!

NOTICE
Damage to the hoist rope!
An incorrectly reeved hoist rope or the incorrect selection of the rope fixed point can cause the hook block not to hang vertically and thus cause damage to the hoist rope!
- ▶ Always carry out the reeving of the hoist rope according to the reeving plan!
- ▶ The rope fixed point on the hook block is to be selected in such a way that the last strand runs parallel to the remaining rope strands, as much as possible!

Make sure that the following prerequisites are met:
- the crane is aligned in horizontal direction,
- the hook block is set down on the ground properly,
- the boom is luffed down to the point where the pulley head is above the hook block,
- an assistant is present to guide the hoist rope.

2.1.1 Procedure

- ▶ Release and unpin the rope retaining pipe on the hook block.
- ▶ Release and unpin the rope retaining pipes on the back pulley and on the pulley head.

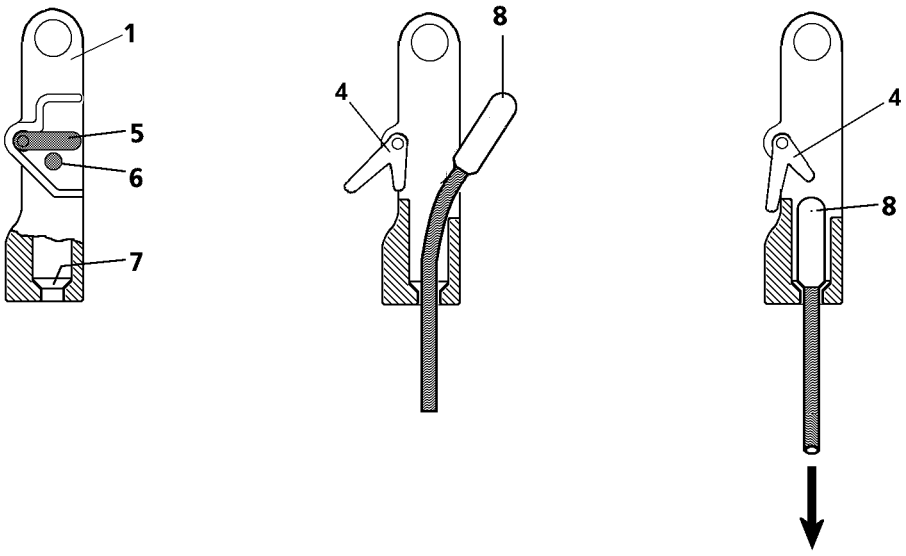

1

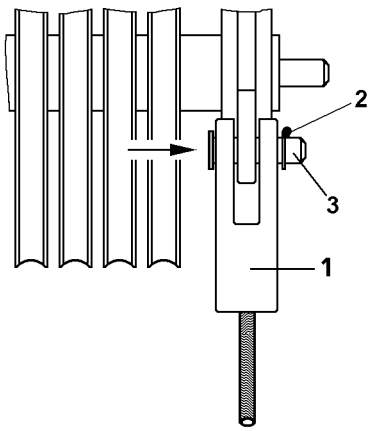

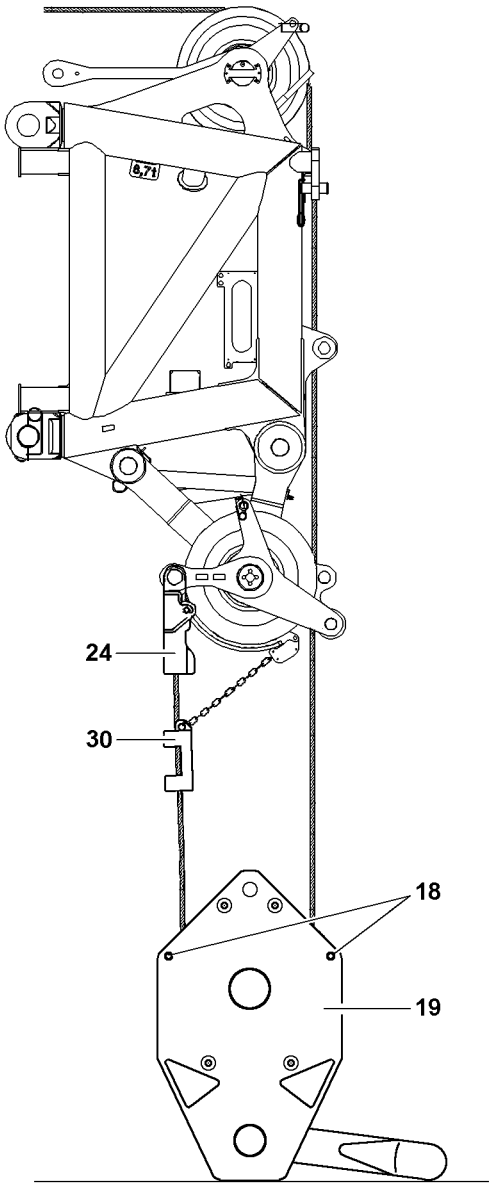

B108211

2.1.2 Manual reeving

- ▶ An assistant guides the hoist rope over the boom to the pulley head and at the same time, the crane operator spools the hoist winch out.
- ▶ Place the hoist rope of the back pulley and reeve in according to the reeving plan between the pulley head and the hook block.
- ▶ When the hook block is completely reeved in:
  Insert the rope retaining pipes again and secure with spring retainers.

2.1.3 Reeving with assembly winch

- ▶ Reeve in the auxiliary rope in the reverse direction between the hook block and the pulley head.
- ▶ Connect the auxiliary rope with the hoist rope.
- ▶ Unwind the hoist rope from the hoisting winch and simultaneously wind up the auxiliary rope of the assembly winch.
- ▶ When the hook block is completely reeved in:
  Insert the rope retaining pipes again and secure with spring retainers.

2.1.4 Hook the hoist rope on the rope lock

NOTICE
Scraping of hoist rope!
If the pin **3** has been assembled incorrectly, the hoist rope may rub against the pin **3** or on the linch pin **2**!
Hoist rope, pin **3** and linch pin **2** are damaged!

- ▶ Always insert pins **3** from “inside to outside” and secure them from the outside, see illustration **1**.

- ▶ The rope lock **1** must be pinned in either at the pulley head or on the hook block and secured with linch pins **2**, depending on reeving.
- ▶ On the rope lock **1**, push the retaining pin **6** in.
- ▶ Swing the lever **5** “down” and hold it in this position.

Result:

– The latch **4** will be swivelled “downward”.

- ▶ Attach the rope end with the locking clamp **8** in the rope lock **1** and pull “down” firmly (in direction of arrow), until the locking clamp **8** is touching in the cone **7**.

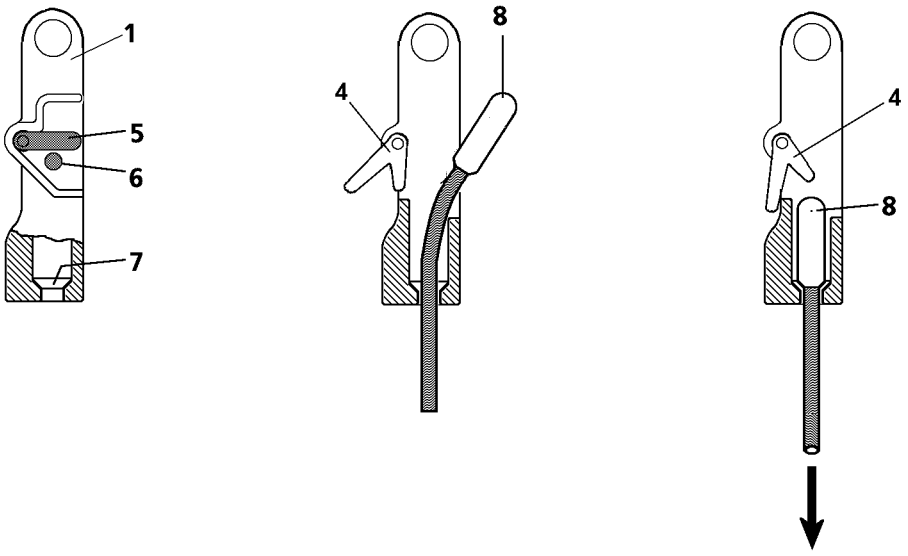

1

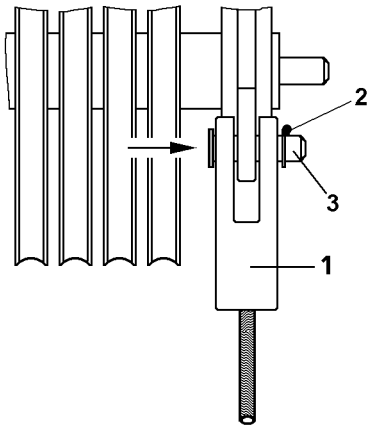

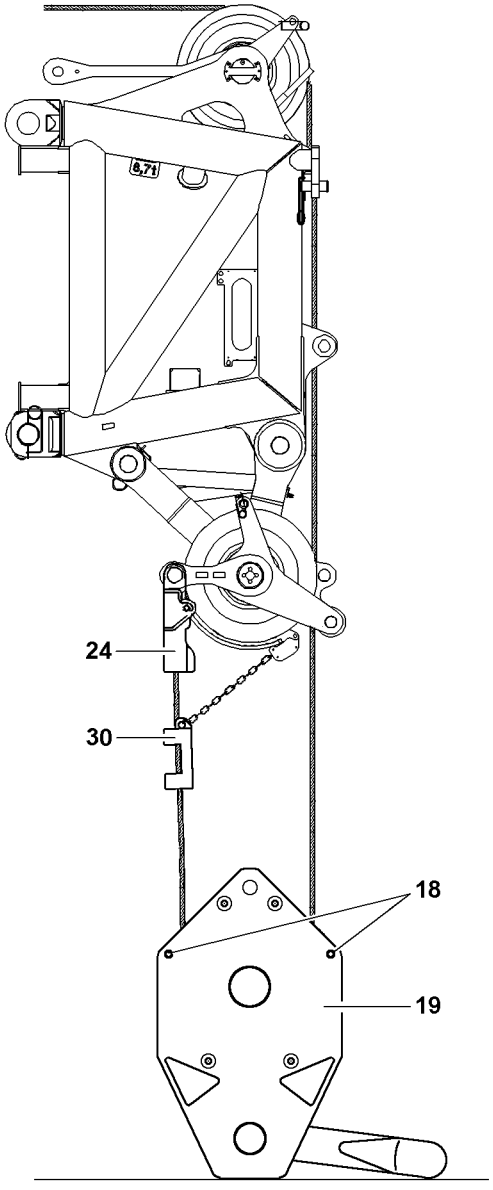

B108211

WARNING
Incorrectly secured locking clamp!
If the locking clamp **8** is hooked and secured incorrectly or insufficiently in the rope lock **1**, then the load and the hook block can fall down!
Personnel can be severely injured or killed!
▶ The locking clamp **8** must touch on the cone **7** after hanging it into the rope lock **1** and must be secured by the latch **4**!

▶ Release the lever **5**.

Result:
– The lever **5** returns to the initial position and is locked by the retaining pin **6**.

▶ Check the rope retainer. Check visually!

2.1.5 Preparing the hook block for crane operation

▶ Raise the boom or spool the hoist rope up until the hook block is completely lifted off the ground.

Note
▶ See chapter 5.19 of the crane operating instructions!

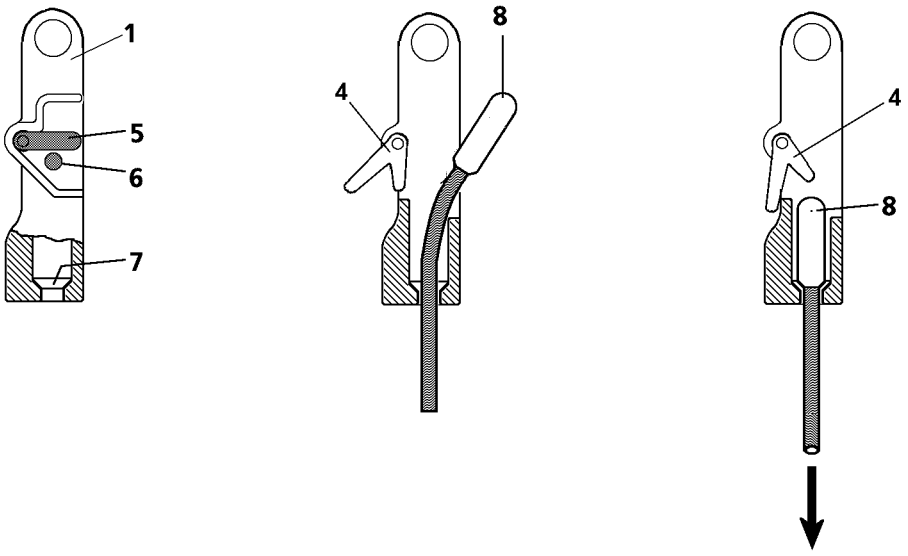

1

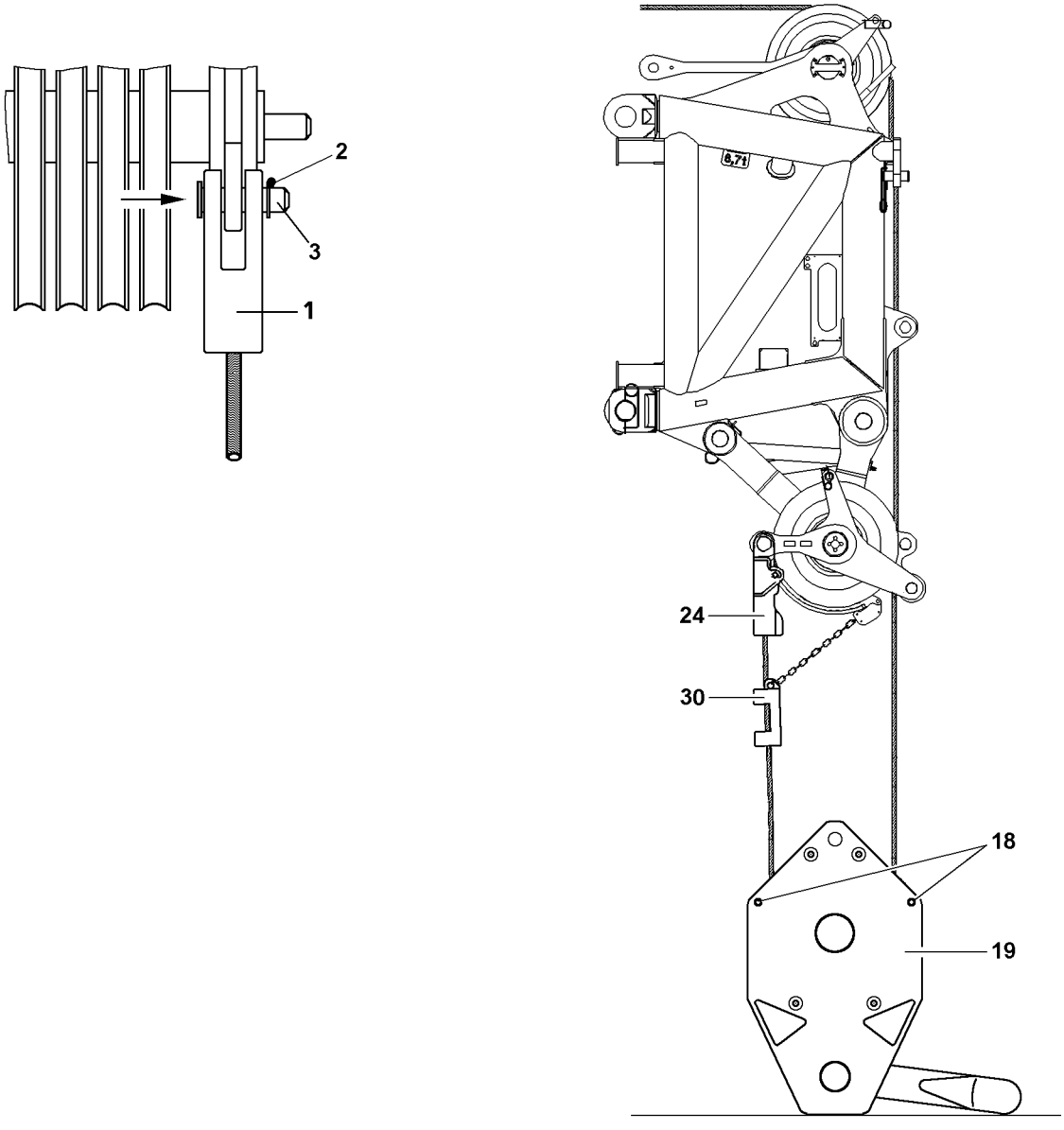

B108211

2.2 Unreeving the hook block

Make sure that the following prerequisites are met:
- the crane is aligned in horizontal direction,
- the ground is level and of sufficient load carrying capacity,
- the hook block is prepared for removal, see chapter 5.19 of the crane operating instructions,
- an assistant is present to guide the hoist rope.

2.2.1 Lowering the hook block

WARNING
Crushing of hands!
When guiding the hook block by hand, hands or fingers can be crushed!
When unreeving the hook block, it can topple over!
Personnel can be severely injured or killed!
- ▶ Use the handles in the safe area of the hook block!
- ▶ Make sure the hook block is safely positioned!

- ▶ Lower the hook block and set it on the ground.
- ▶ Remove the hoist limit switch weight, see section “Removing the hoist limit switch weight”.

2.2.2 Detaching the hoist rope

- ▶ Push in retaining pin **6** on the rope lock **1** move the lever **5** downward and hold it in this position.

Result:
- The latch **4** is moved to the side and the locking clamp **8** is released.

- ▶ Push the hoist rope up and detach the locking clamp **8**.
- ▶ Release and unpin the rope retaining pipe on the hook block.
- ▶ Unreeve the hoist rope from the hook block and the pulley head.
- ▶ Insert the rope retaining pipes again and secure with spring retainers.

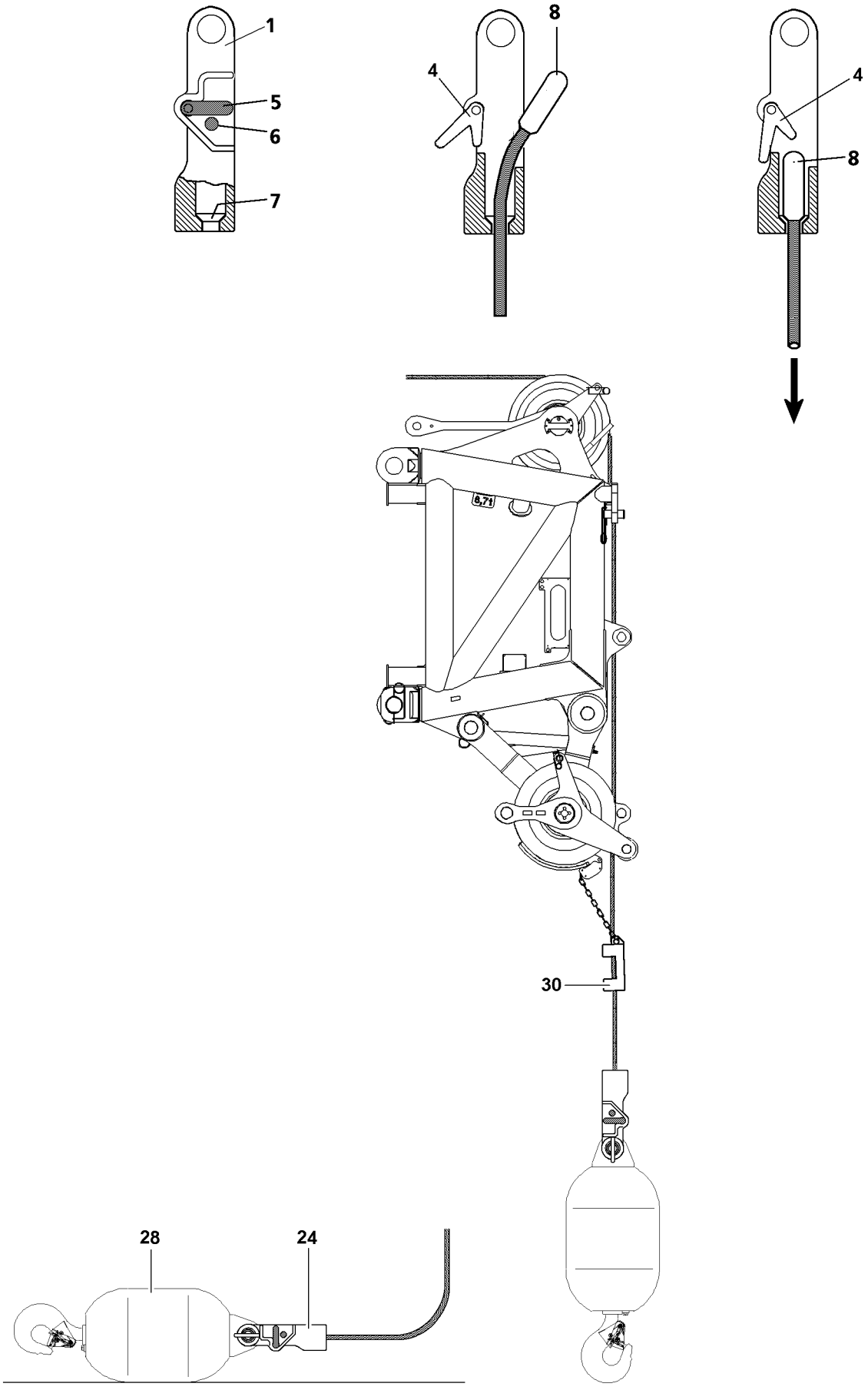

B108212

3 Securing and removing the load hook*

3.1 Securing the load hook*

3.1.1 Assembling the load hook*

- ▶ Place the load hook under the pulley head of the boom.
- ▶ Release and unpin the rope retaining pipes on the back pulley and on the pulley head.

WARNING
Erroneous operation of crane function and danger of slipping on the boom!
If the following notes are not observed and adhered to, personnel can be severely injured or killed!
- ▶ Step on the boom only via the catwalks!
- ▶ The assembly personnel must secure themselves for all work on the lattice mast boom with approved antifall systems, on the safety ropes or on the lattice sections, with snap hook on both sides to prevent them from falling!
- ▶ Complete the assembly work from a stable location!
- ▶ Observe and adhere to the assembly guidelines in chapter 5.01 of the crane operating instructions!

- ▶ An assistant guides the hoist rope over the boom to the pulley head and at the same time, the crane operator spools the hoist winch out.
- ▶ Place the hoist rope over the back pulley.
- ▶ Insert the rope retaining pipes again and secure with spring retainers.
- ▶ Pin the rope lock **1** in the load hook **26** and secure with spring retainers.

3.1.2 Fastening the hoist rope

- ▶ Push the retaining pin **6** in on the rope lock **1**, move the lever **5** to the side and hold it in this position.

Result:
– The latch **4** is moved to the side.

- ▶ Fasten the rope end with the locking clamp **8** in the rope lock and pull the rope firmly in the direction of the arrow, until the locking clamp **8** contacts the cone **7**.

WARNING
Incorrectly secured locking clamp!
If the locking clamp **8** is hooked and secured incorrectly or insufficiently in the rope lock **1**, then the load and the hook block can fall down!
Personnel can be severely injured or killed!
- ▶ The locking clamp **8** must touch on the cone **7** after hanging it into the rope lock **1** and must be secured by the latch **4**!

- ▶ Release the lever **5**.

Result:
– The lever **5** returns to the initial position and is locked by the retaining pin **6**.

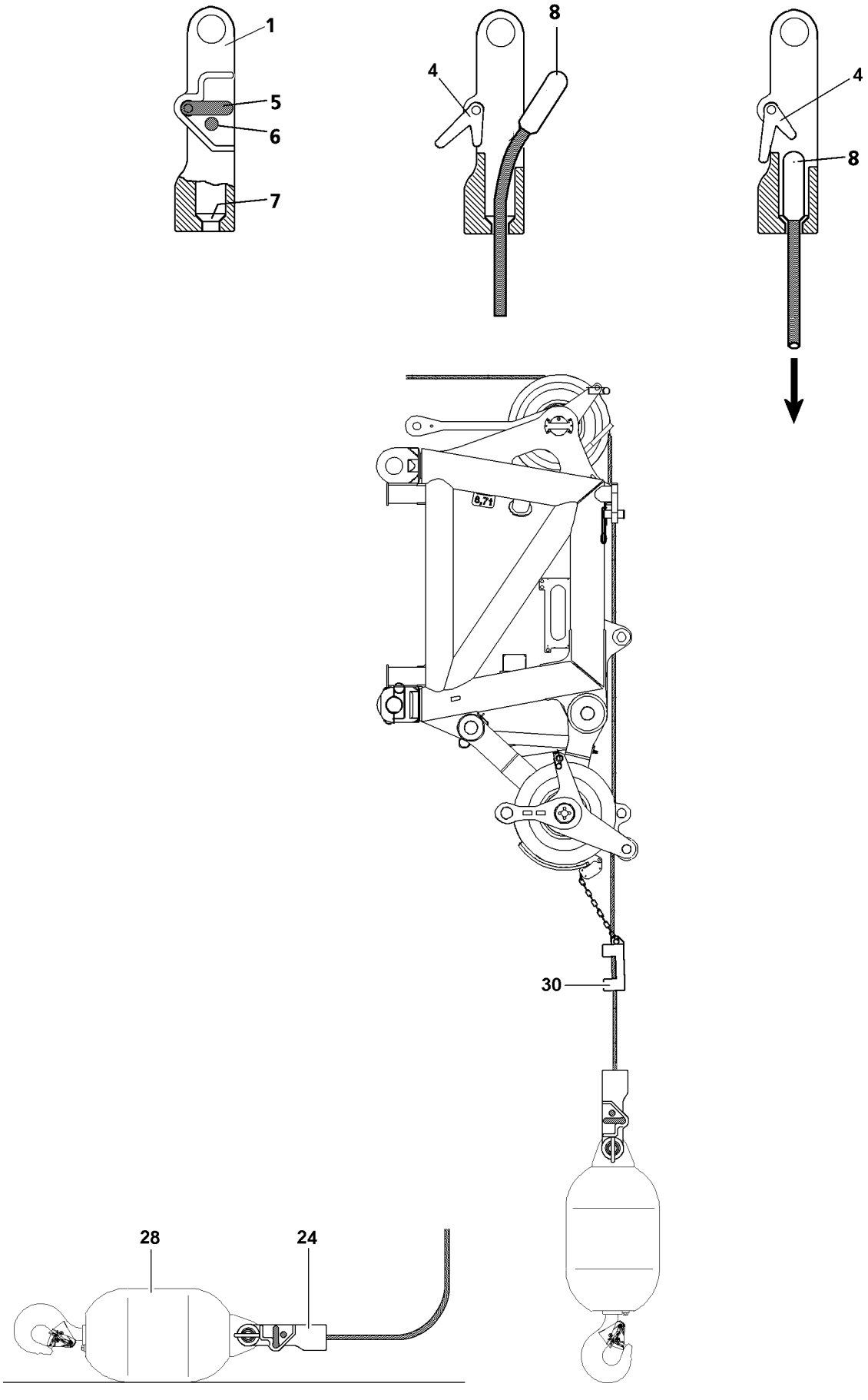

B108212

3.2 Removing the load hook*

Make sure that the following prerequisites are met:
– the crane is aligned in horizontal direction,
– an assistant is present to guide the hoist rope,
– the ground is level and of sufficient load carrying capacity.

3.2.1 Lowering the load hook

WARNING
Crushing of hands!
When guiding the load hook by hand, hands or fingers can be crushed!
The load hook could roll away!
▶ Make sure the load hook is safely positioned!

▶ Place the load hook **28** on the ground.
▶ Remove the hoist limit switch weight, see section “Removing the hoist limit switch weight”.

3.2.2 Detaching the hoist rope

▶ Push the retaining pin **6** in on the rope lock **1**, move the lever **5** to the side and hold it in this position.

Result:
– The latch **4** is moved to the side and the locking clamp **8** is released.

▶ Push the hoist rope in the direction of the load hook and detach the locking clamp **8**.
▶ Remove the rope retaining pipes on the pulley head and on the back pulley.
▶ Lift the hoist rope from the rope pulleys.
▶ Insert the rope retaining pipes again and secure with spring retainers.

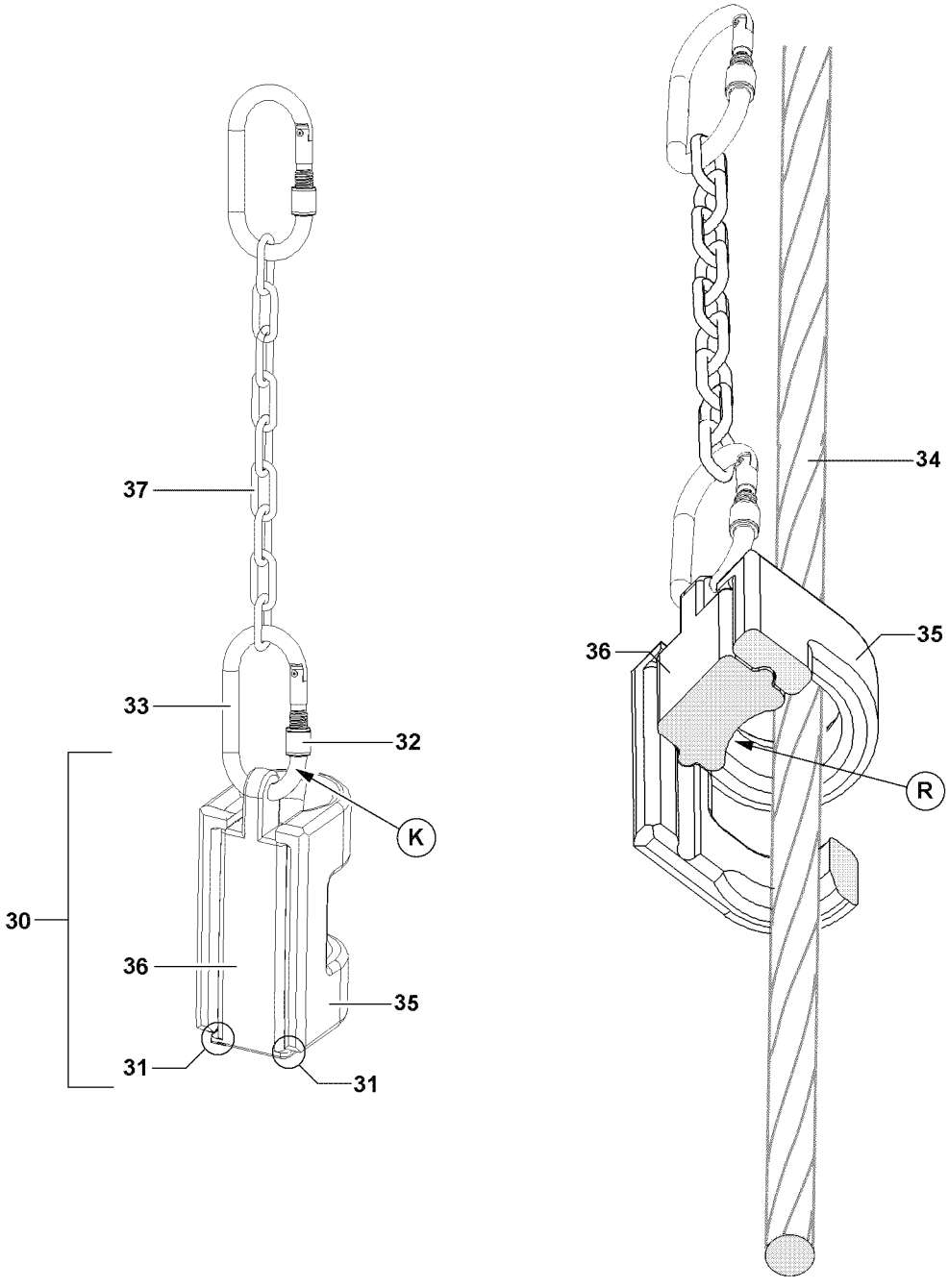

B106127

4 Attaching / removing the hoist limit switch weight

4.1 Attaching the hoist limit switch weight

The hoist limit switch weight **30** consists of 2 parts, which are pushed into each other:
– The weight **35**
– The carrier section **36**

▶ Loosen and open the screw retainer **32**.

WARNING
The hoist limit switch can fall down!
If the hoist limit switch weight is incorrectly assembled, components can fall down!
Personnel can be severely injured or killed!
▶ Do not replace the snap hook **33** with other parts, such as a shackle or similar!
▶ When detaching or fastening the hoist limit switch weight **30** make sure that the weight **35** and the carrier section **36** do not fall down!
▶ Make sure that the curvature **R** of the carrier section **36** points to the hoist rope **34**!
▶ Make sure that the stubs **31** of the carrier section **36** touch on the weight **35**!
▶ Make sure that the screw retainer **32** can be turned to be closed from top to bottom, point **K**!

The attachment of the hoist limit switch weight **30** depends on the position of the rope fixed point.

Rope fixed point on the pulley head:
– In the event of multiple hoist rope reeving, the hoist limit switch weight **30** must always be laid around the “stationary rope strand”, in other words around the rope strand that leads directly to the cable lock.

Rope fixed point on hook block:
– The hoist limit switch weight **30** is laid around the outer strand which shows the least diagonal pull, i.e. the one with the smallest angle between the hanging hoist limit switch weight and the hoist rope.

Note
▶ The chain **37** must be attached in full length during crane operation and may not be shortened.

▶ Push the weight **35** with one hand on the hoist rope **34** and hold.
▶ With the other hand, guide the carrier section **36** behind the hoist rope **34** and under the weight **35**. The curvature **R** of the carrier section **36** must point to the hoist rope **34**.
▶ Push the weight **35** on the carrier section **36**.
▶ Hang in the hoist limit switch weight **30** with the carrier section **36** in the snap hook **33**.

The snap hook **33** must be secured with the screw retainer **32**.
▶ Close the screw retainer **32** on the snap hook **33**.

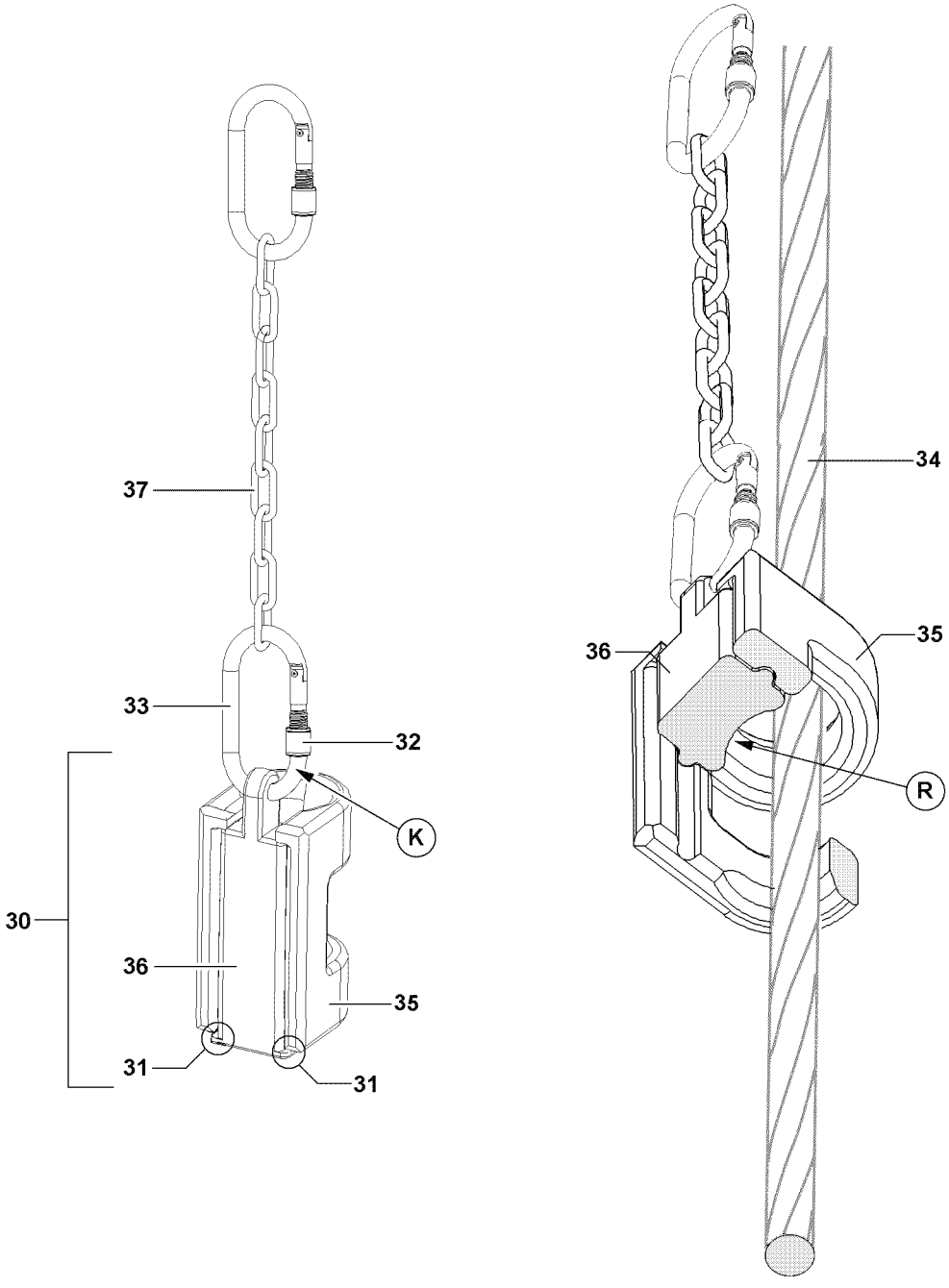

B106127

4.2 Removing the hoist limit switch weight

WARNING
The hoist limit switch can fall down!
If the hoist limit switch weight is incorrectly disassembled, components can fall down!
Personnel can be severely injured!

- When detaching or fastening the hoist limit switch weight **30** make sure that the weight **35** and the carrier section **36** do not fall down!
- It is prohibited for anyone to remain in the danger zone!

- Release and open the screw retainer **32** on the snap hook **33**.
- Detach the hoist limit switch weight **30** from the snap hook **33**.
- Hold the weight **35** with one hand and with the other hand, push the carrier section **36** from the weight **35**.
- Store the weight **35** and carrier section **36** safely.

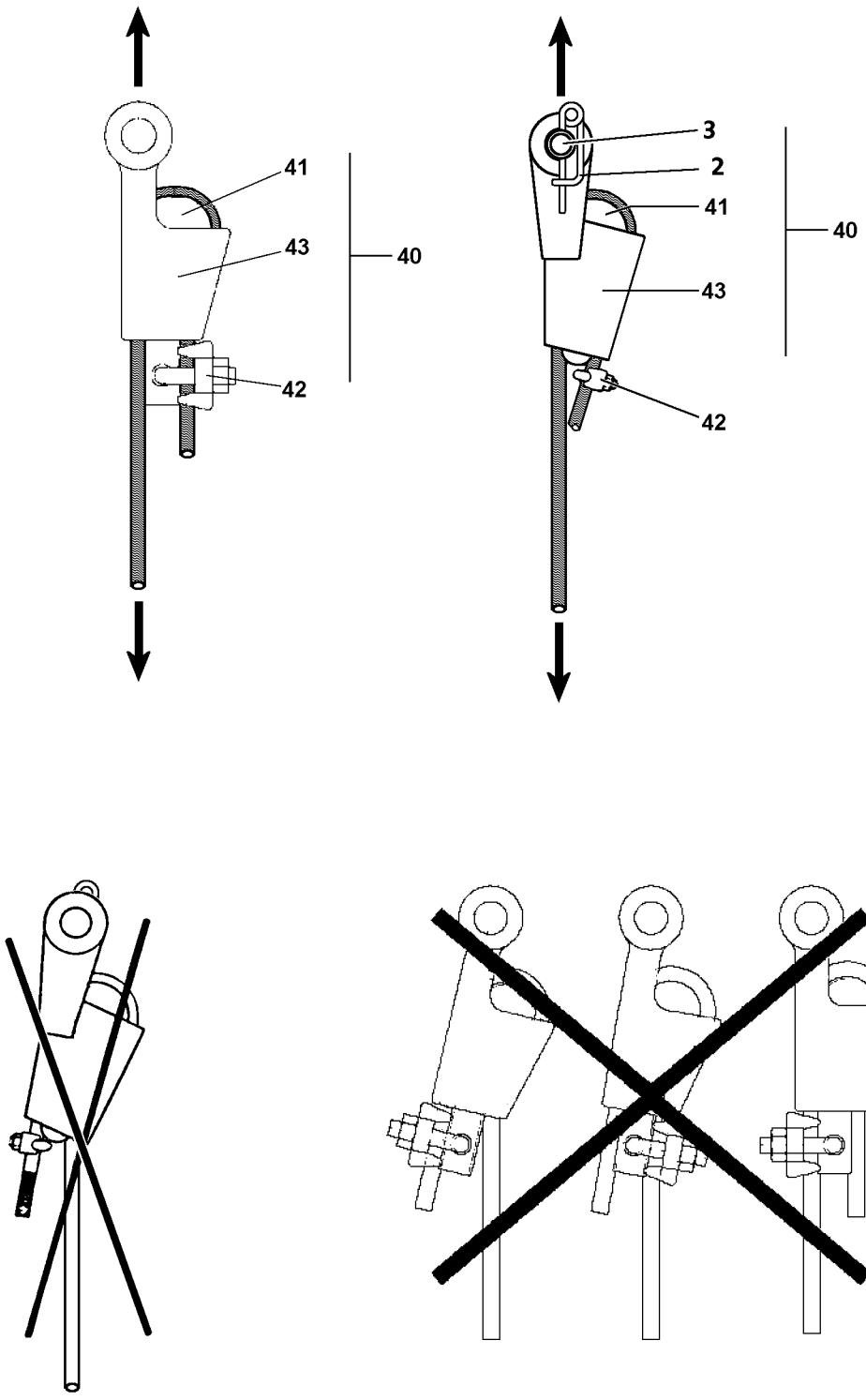

B108119

5 Assembling / disassembling the wedge lock

Make sure that the following prerequisites are met:
– the locking clamp is cut off on the hoist rope,
– the hook block or the load hook are ready for assembly.

5.1 Assembling the wedge lock

WARNING
Danger of fatal accidents due falling load!
If an incorrect wedge lock **40** is used or if the wedge lock **40** is incorrectly assembled, the hoist rope can rip off or the hoist rope can be pulled through the wedge lock **40**!
The hook block and the load can fall down and kill personnel!
- ▶ Use only a wedge lock **40** approved by **LIEBHERR-Werk Ehingen GmbH**!
- ▶ Assembling the wedge lock **40** correctly!
- ▶ Place the hoist rope with the wedge **41** into the housing **43** in such a way that the rope strand runs in the pull axle of the wedge lock **40**!
- ▶ The dead end of the rope must be secured by the clamp **42** to prevent it from being pulled through!
- ▶ It is prohibited for personnel to remain in the danger zone!

- ▶ Take a matching wedge lock **40** from the tool box.
- ▶ Place the hoist rope with the wedge **41** into the housing **43**.
- ▶ If possible, assemble the clamp **42** through the wedge **41** on the dead end of the rope.

NOTICE
Damage to the hoist rope!
If the pin **3** has been assembled incorrectly, the hoist rope may rub against the pin **3** or on the linch pin **2**.
- ▶ Always insert the pins **3** from “inside to outside” and secure from the outside.

- ▶ Pin and secure the wedge lock **40** on the fixed point of the pulley head or that of the hook block or on the load hook, depending on the reeving plan.

5.2 Disassembling the wedge lock

- ▶ Unpin the wedge lock **40** on the fixed point.
- ▶ Remove the clamp **42** and pull the hoist rope with the wedge from the housing.
- ▶ Store the wedge lock **40**.

6 Rope reeving

Note
- ▶ For reeving plans, see crane operating instructions, chapter 4.15!

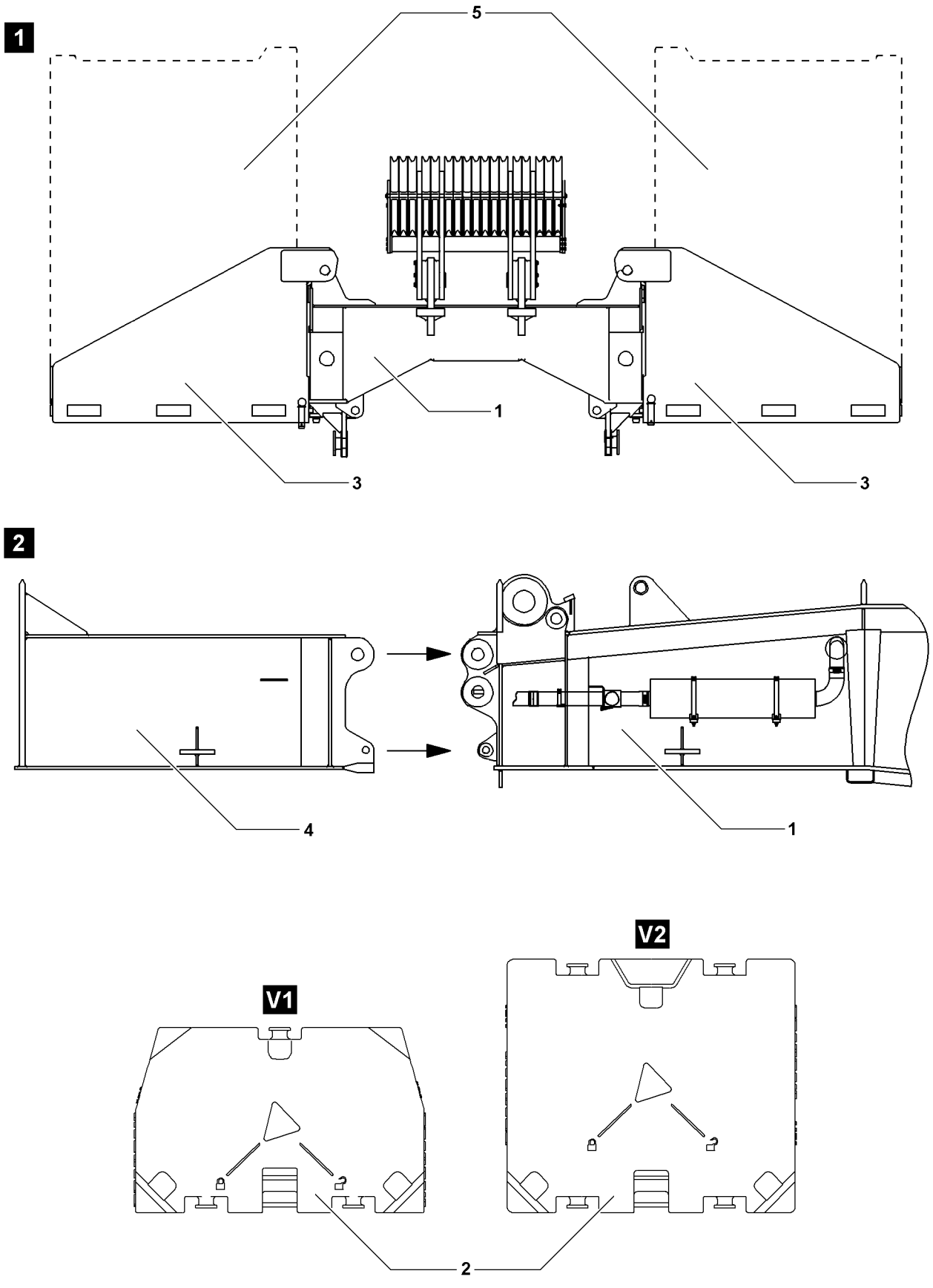

B109119

1 Components

The following components are required for the counterweight on the turntable **1**:
Counterweight plates **2**
Bracket counterweight **3**
Turntable extension* **4**

1.1 Counterweight plates

The counterweight plates **2** are placed down as the counterweight stack **5**.
Counterweight plates **2** are available in variation **V1** and variation **V2**:

Component	Weight
Variation **V1**	5.0 t 7.5 t 10.0 t
Variation **V2**	12.5 t

1.2 Bracket counterweight

Component	Weight
Bracket counterweight	10.0 t

1.3 Turntable extension*

WARNING
The crane can topple over!
The use of the turntable extension **4** is only permissible when the respective erection and take down charts, load charts and set up configurations for a certain operating mode are available!
If this is not observed, the crane can topple over and personnel can be severely injured or killed!
▶ The installation of the counterweight on the turntable extension **4** must be checked before setting up the crane!

By installing the turntable extension **4** on the turntable **1**, it can be extended by approx. 2.5 m. This means the counterweight is set back by approx. 2.5 m .
When using the turntable extension **4** higher load capacities, for example during operation without derrick ballast, can be obtained.

Component	Weight
Turntable extension	5.0 t

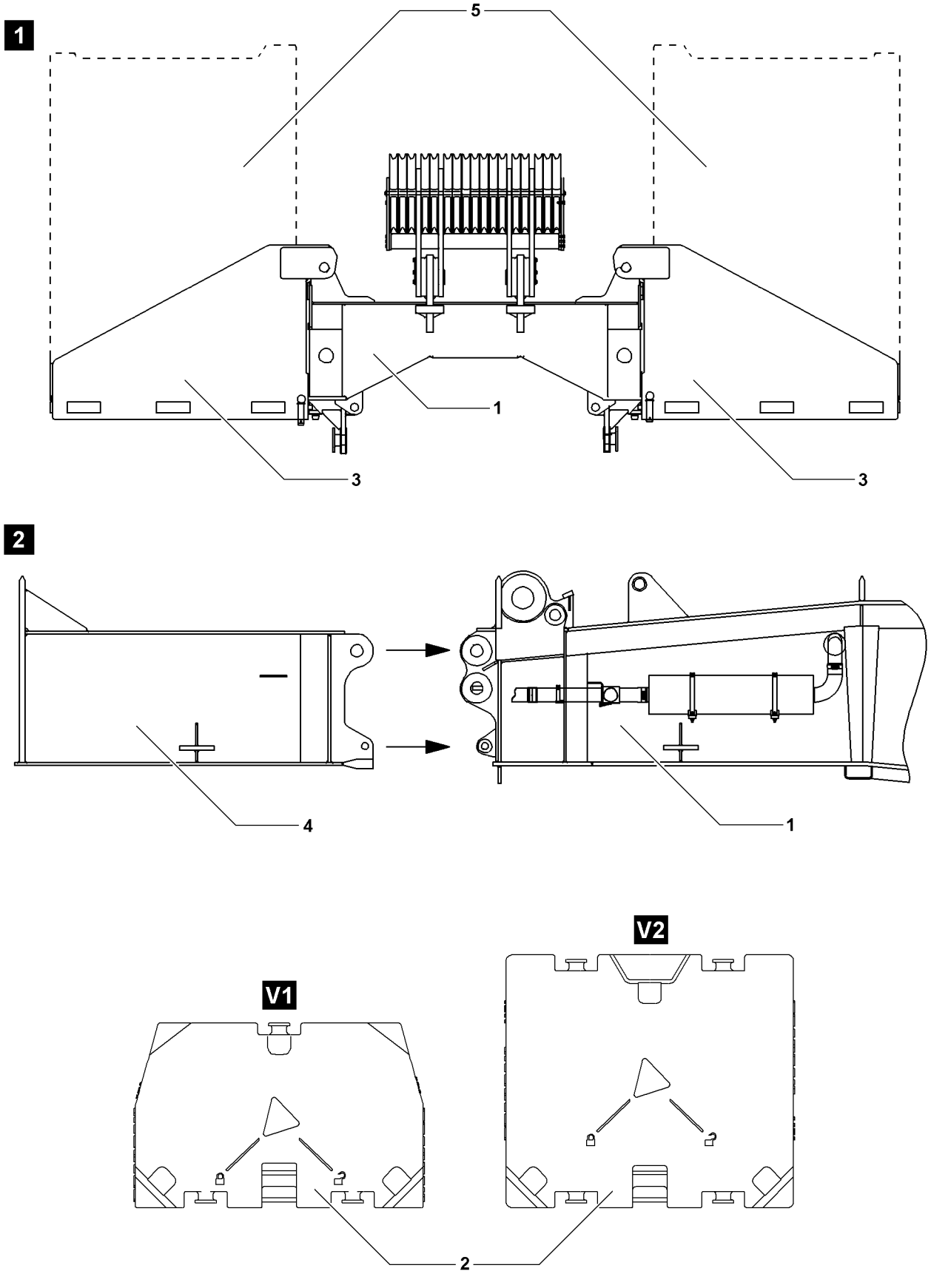

B109119

2 Counterweight combinations

WARNING
Incorrectly calculated counterweight!
The nominal dimension of the counterweight from the load charts includes also the own weight of the brackets **3** and possible the turntable extension* **4**!
If the weight of the brackets **3** and possibly the turntable extension **4** is not taken into account, too much counterweight has been placed!
The crane can be severely damaged and topple over!
Personnel can be severely injured or killed!
- ▶ Make sure that for the combination of the counterweight the weight of the brackets **3** has been taken into account!
- ▶ Make sure that for the combination of the counterweight the weight of the turntable extension **4** has been taken into account!
- ▶ Observe the chart “Calculation example counterweight combination” in this chapter!
- ▶ The central ballast must be installed according to the erection and take down charts and the load charts!

2.1 Counterweight plates Variation V1 and Variation V2

2.1.1 Counterweight plates Variation V1

Variation V1		
Maximum counterweight	**Combination**	**Individual weight**
250.0 t	The counterweight can be assembled from the following counterweight plates:	5.0 t 7.5 t 10.0 t
	Bracket	10.0 t
	Turntable extension*	5.0 t

WARNING
Installation position counterweight!
If counterweight combinations are installed on the “incorrect” installation position, then the crane can be damaged and topple over!
Personnel can be severely injured or killed!
- ▶ The following counterweight combinations are intended exclusively for the use on the turntable extension!

Counterweight combinations on the turntable extension 4				
Counterweight				
125.0 t	175.0 t	200.0 t	225.0 t	250.0 t

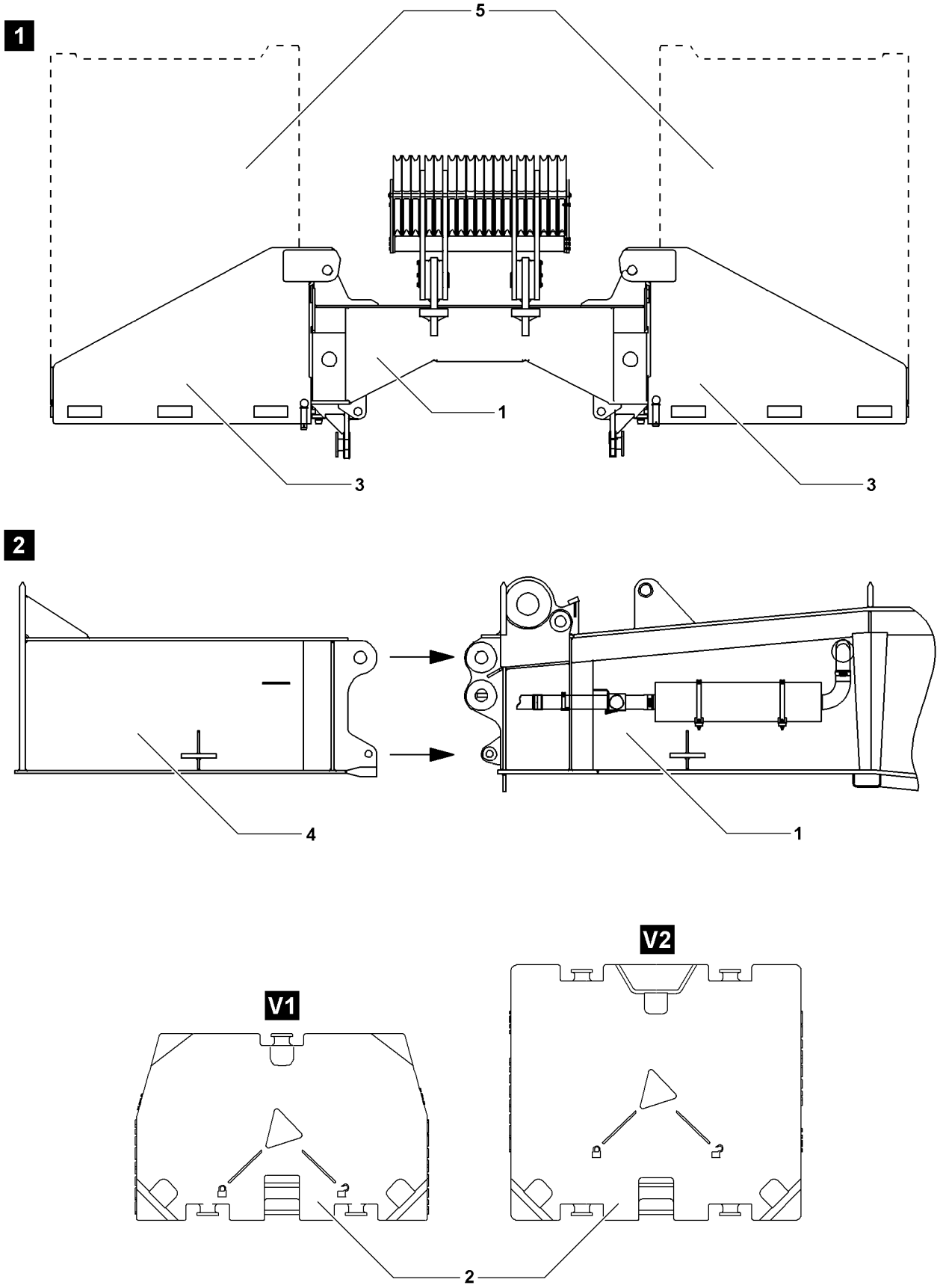

B109119

2.1.2 Counterweight plates Variation V2

Variation V2		
Maximum counterweight	**Combination**	**Individual weight**
250.0 t	The counterweight can be assembled from the following counterweight plates:	12.5 t
	Bracket	10.0 t
	Turntable extension*	5.0 t

WARNING
Installation position counterweight!
If counterweight combinations are installed on the “incorrect” installation position, then the crane can be damaged and topple over!
Personnel can be severely injured or killed!
▶ The following counterweight combinations are intended exclusively for the use on the turntable extension!

Counterweight combinations on the turntable extension 4				
Counterweight				
125.0 t	175.0 t	200.0 t	225.0 t	250.0 t

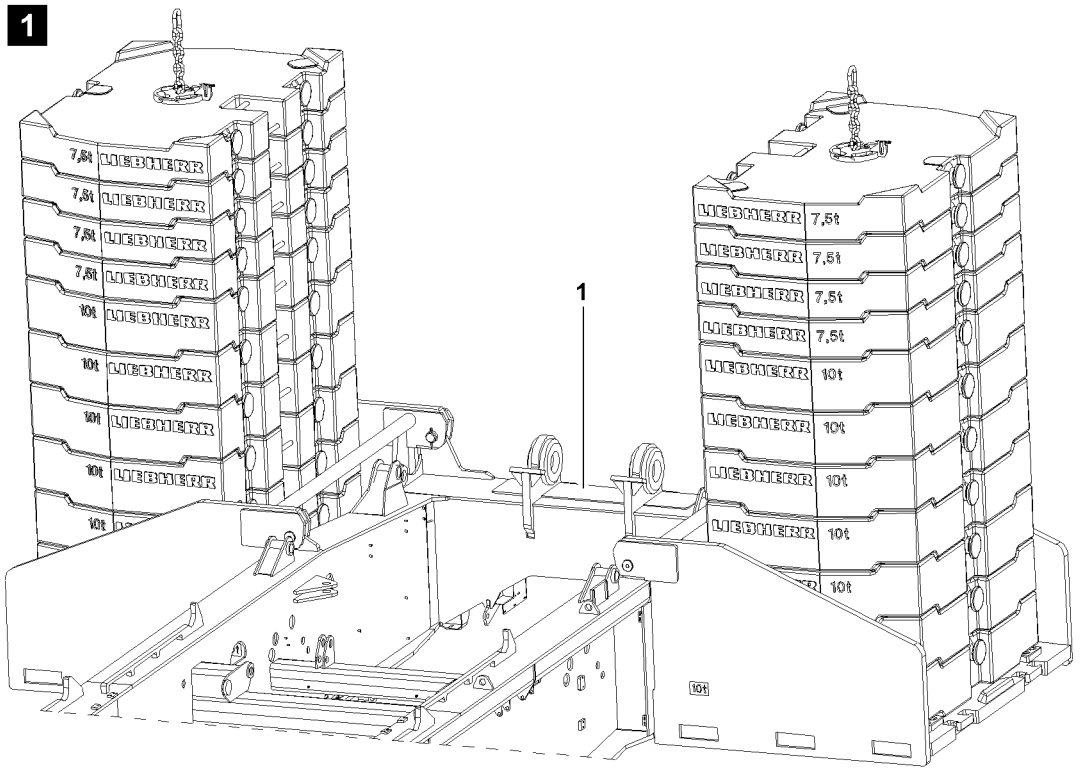
1
1
7,5t LIEBHERR
10t LIEBHERR

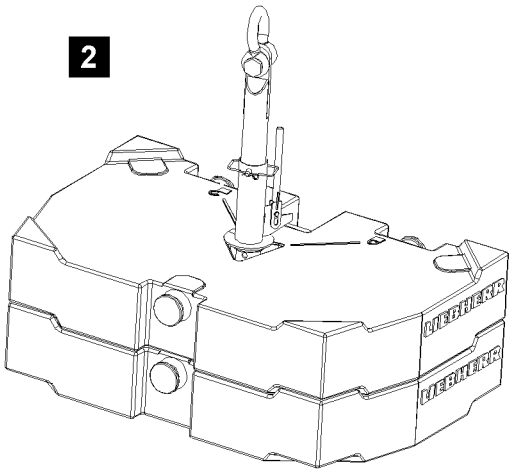
2
LIEBHERR

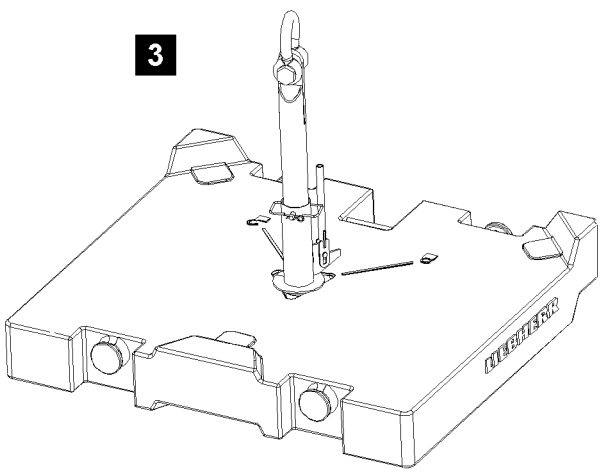
3
LIEBHERR

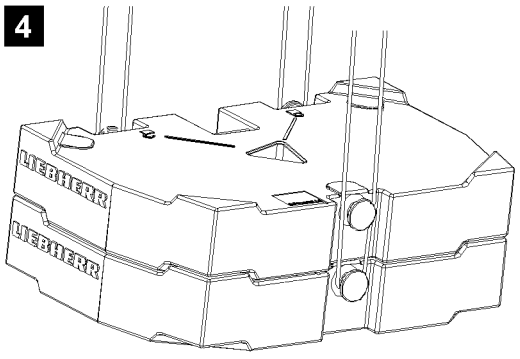
4
LIEBHERR

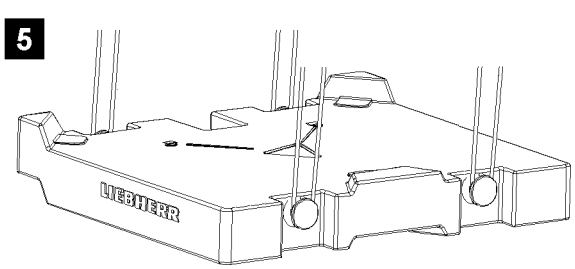
5
LIEBHERR

B114076

2.2 Calculation examples installation location: Turntable

Note
Observe possibly deviating installation locations at the assembly of the counterweight combinations!
- ▶ Installation location: Turntable **1**
- ▶ Installation location: Turntable extension* **4**!

Note
- ▶ The counterweight combinations are examples and can possibly be reached also in another combination!

2.2.1 Counterweight plates Variation V1

Counterweight from load chart 220.0 t		
2 x	Bracket 10.0 t =	20.0 t
8 x	Counterweight plate 7.5 t =	60.0 t
14 x	Counterweight plate 10.0 t =	140.0 t
Counterweight:		220.0 t

2.2.2 Counterweight plates Variation V2

Counterweight from load chart 220.0 t		
2 x	Bracket 10.0 t =	20.0 t
16 x	Counterweight plate 12.5 t =	200.0 t
Counterweight:		220.0 t

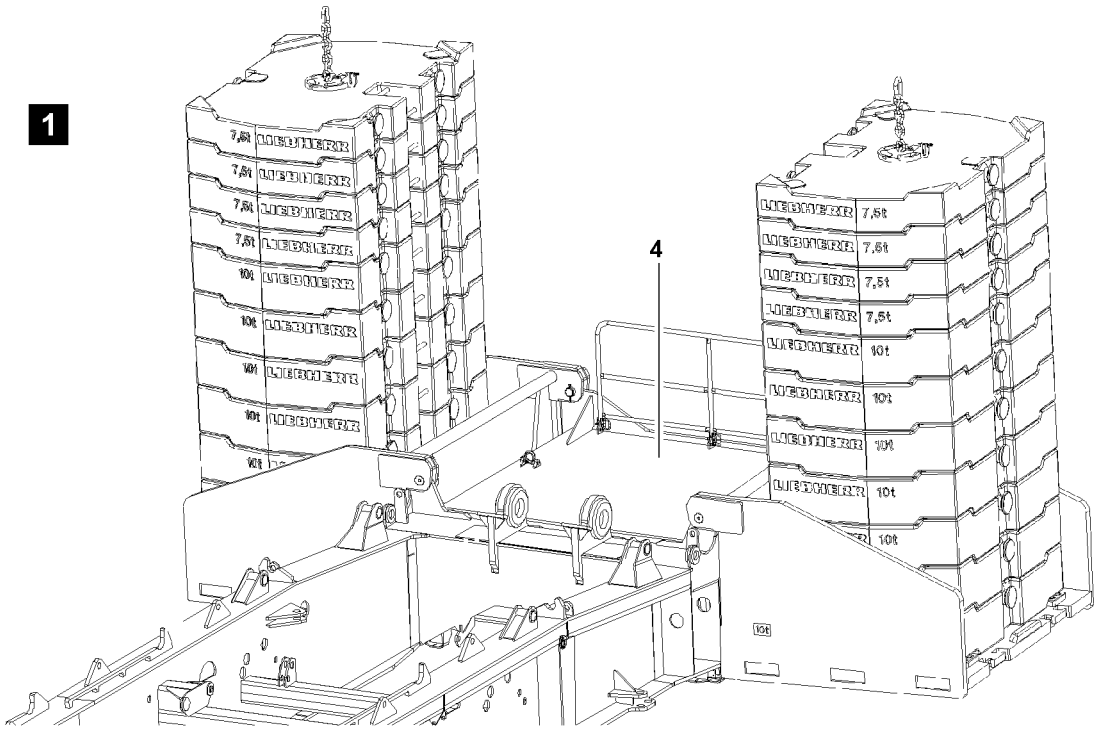
1
4
LIEBHERR 7,5t
LIEBHERR 10t

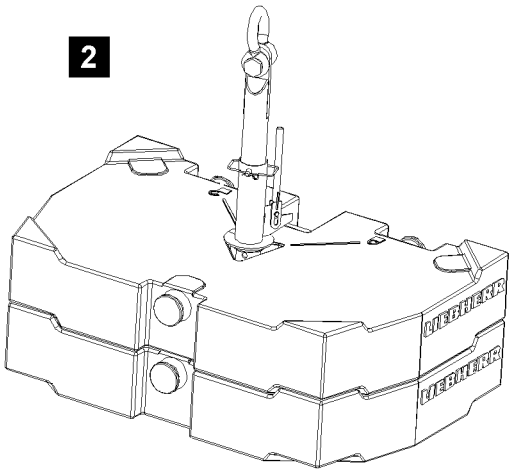
2
LIEBHERR

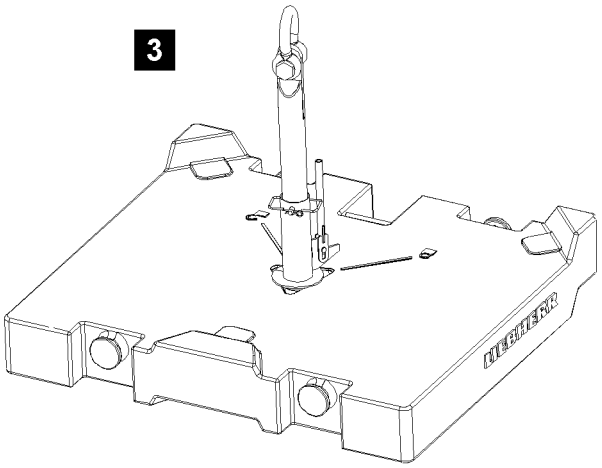
3
LIEBHERR

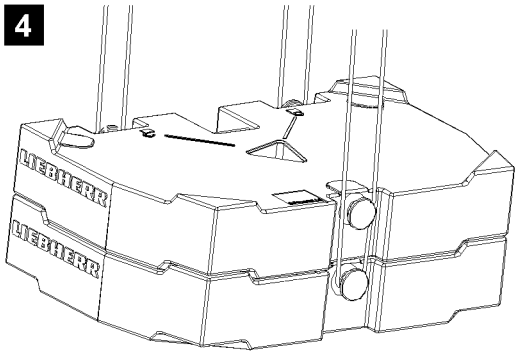
4
LIEBHERR

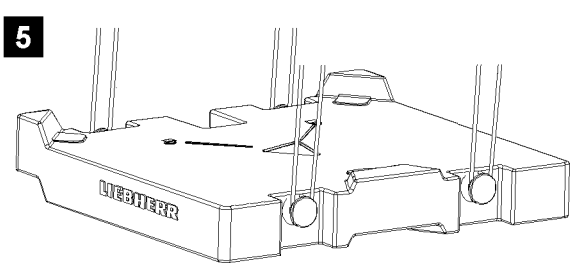
5
LIEBHERR

B114075

2.3 Calculation examples installation location: Turntable extension*

Note
Observe possibly deviating installation locations at the assembly of the counterweight combinations!
- ▶ Installation location: Turntable **1**
- ▶ Installation location: Turntable extension* **4**!

Note
- ▶ The counterweight combinations are examples and can possibly be reached also in another combination!

2.3.1 Counterweight plates Variation V1

Counterweight from load chart 225.0 t		
1 x	Turntable extension* 5.0 t =	5.0 t
2 x	Bracket 10.0 t =	20.0 t
8 x	Counterweight plate 7.5 t =	60.0 t
14 x	Counterweight plate 10.0 t =	140.0 t
Counterweight:		225.0 t

2.3.2 Counterweight plates Variation V2

Counterweight from load chart 225.0 t		
1 x	Turntable extension* 5.0 t =	5.0 t
2 x	Bracket 10.0 t =	20.0 t
16 x	Counterweight plate 12.5 t =	200.0 t
Counterweight:		225.0 t

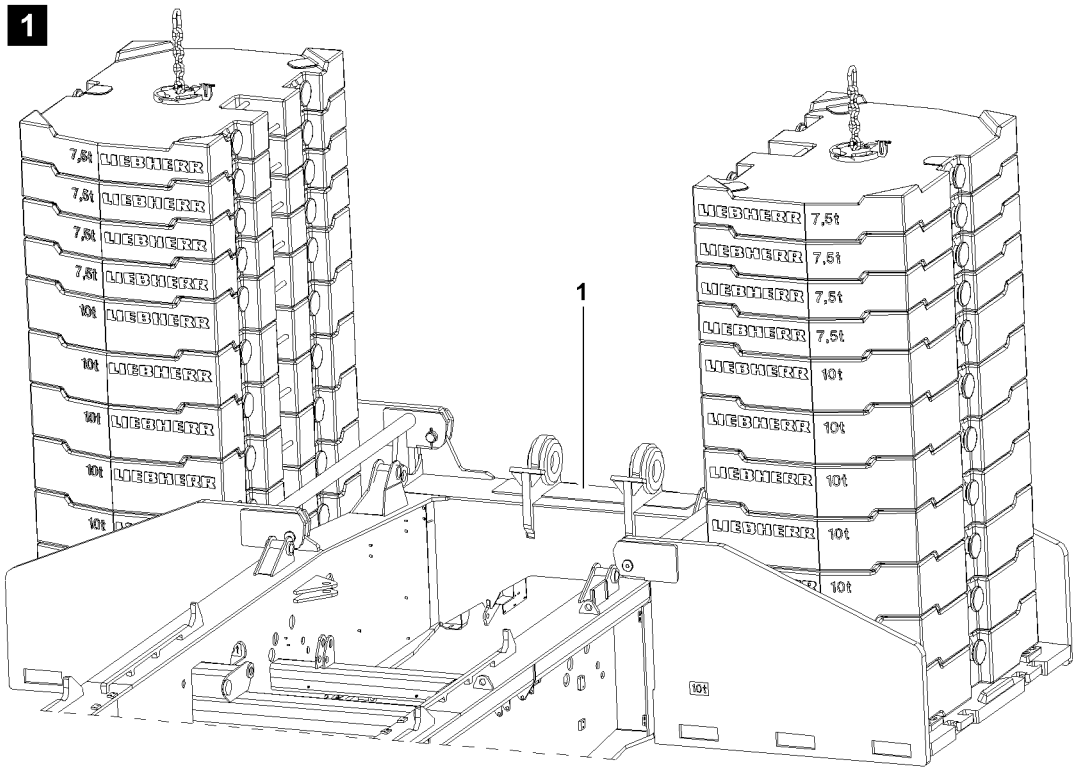
1
1
7,5t LIEBHERR
10t LIEBHERR

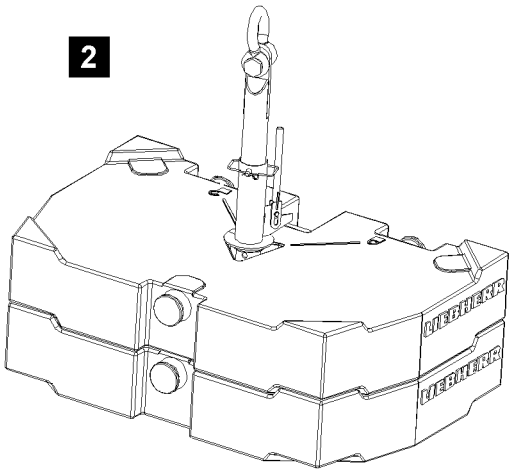
2
LIEBHERR

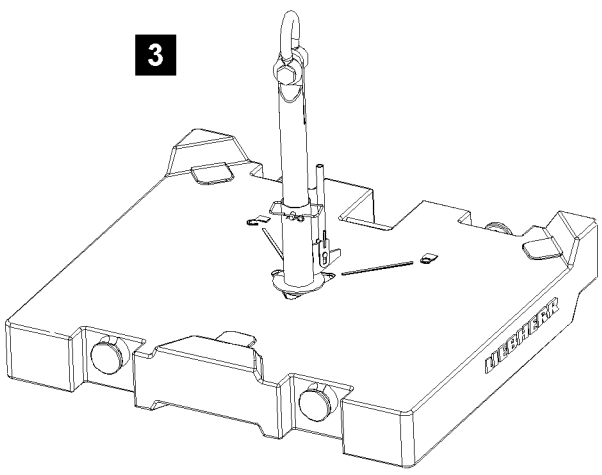
3
LIEBHERR

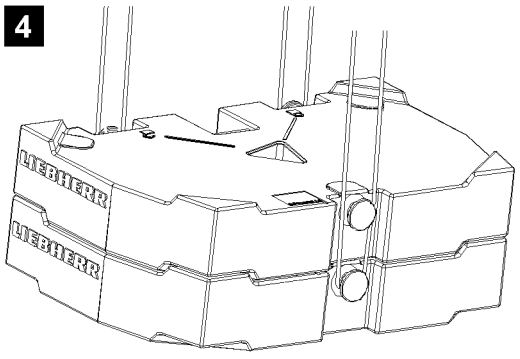
4
LIEBHERR

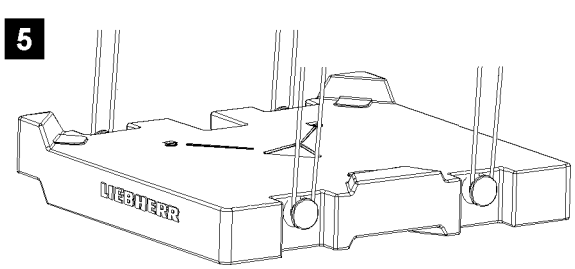
5
LIEBHERR

B114076

3 Permissible counterweight assemblies

WARNING
Overload fastening points counterweight plates!
If more than the permissible number of counterweight plates are lifted together, then the fastening points can be overloaded!
The counterweight plates and components can fall down!
Personnel can be severely injured or killed!
▶ Attach only the maximum permissible number of counterweight plates per lift!

WARNING
Incorrect set up of counterweight assemblies!
When lifting mixed weight counterweight assemblies, and the heavier counterweight plates are placed on top, the fastening points can be overloaded!
The counterweight plates and components can fall down!
Personnel can be severely injured or killed!
▶ Always stack the heavier counterweight plate on the bottom in the counterweight assembly!

Individual weight Counterweight plate	Maximum number of same counterweight plates per lift over	
	Twistlock	Bitt
5.0 t	2	1
7.5 t	2	2
10.0 t	2	2
12.5 t	1	2

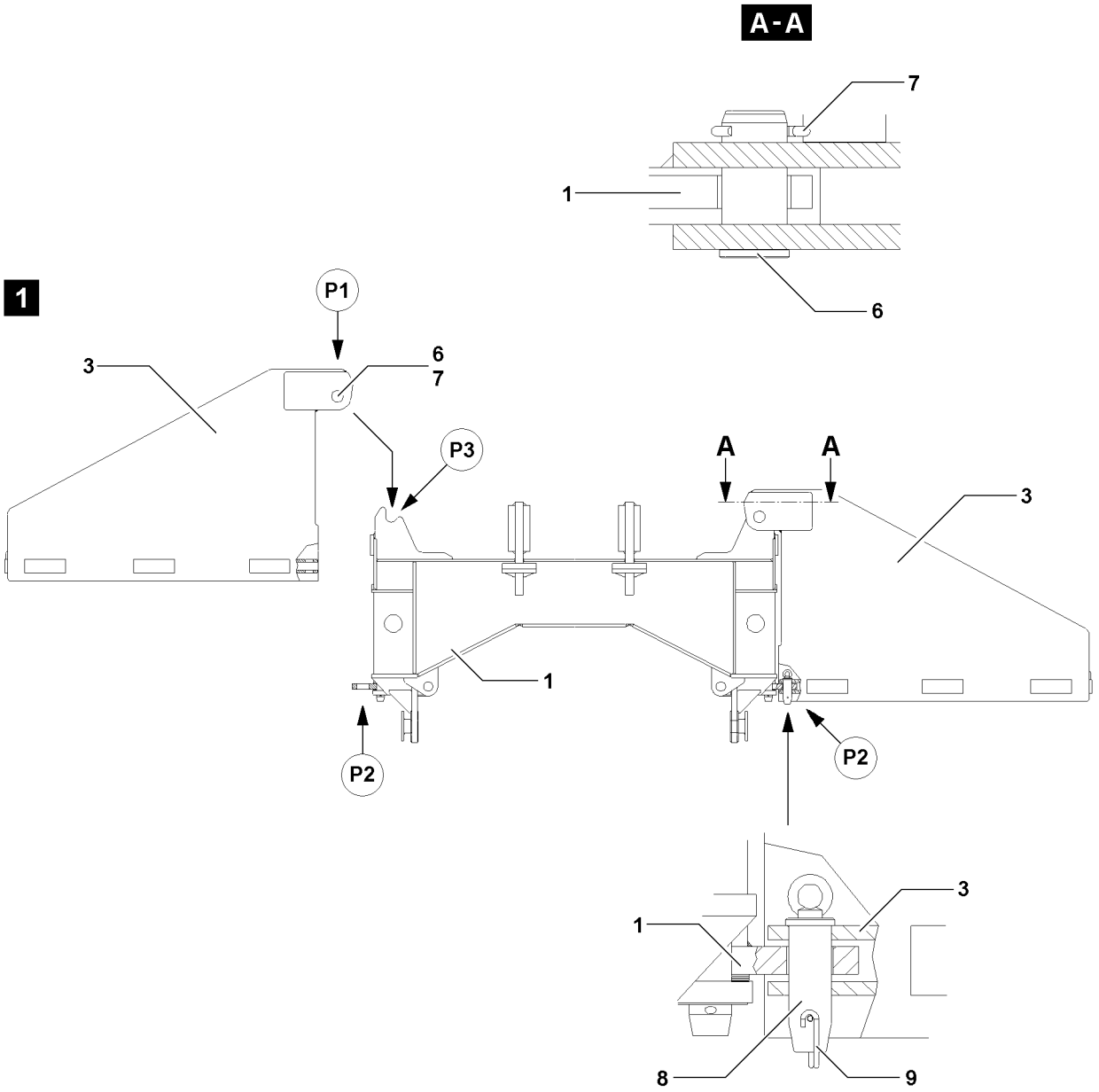

B109129

4 Installing the counterweight

WARNING
Falling components and counterweight plates!
At assembly, the components and counterweight plates can fall down!
Personnel can be severely injured or killed!
▶ Make sure that no persons or objects are within the danger zone!

WARNING
Danger of impact / crushing when working with the auxiliary crane!
When installing / removing crane components with the auxiliary crane, crane components can start to swing back and forth!
Personnel can be caught and severely injured or killed!
▶ Make sure that no persons can be caught when installing the components!
▶ If necessary, guide the components with suitable aids!

WARNING
Danger of falling during assembly / disassembly work!
During assembly and disassembly work, personnel must be secured with appropriate aids to prevent them from falling!
If this is not observed, assembly personnel could fall and suffer severe or fatal injuries!
▶ All assembly work must be carried out using suitable aids (lifting platforms, scaffolding, ladder, auxiliary crane, etc.)!
▶ If work cannot be carried out on the ground or using such aids, then assembly personnel must be secured with the personal fall arrest system (see Crane operating instructions, chapter 2.04) to protect against falling!
▶ Hang in the personal fall arrest system in the corresponding fastening points on the crane (see Crane operating instructions, chapter 2.06)!
▶ If railings are present on the components, then they must be brought into the corresponding position and secured for assembly / disassembly work!
▶ Step on aids and fall protection equipment only with clean shoes!
▶ Keep aids and fall protection equipment clean and free from snow and ice!

4.1 Installing the brackets

Make sure that the following prerequisites are met:
– The crane is aligned in horizontal direction.
– The SA-bracket is erected, see chapter 5.02 of the Crane operating instructions.
– The boom is not installed.
– The pin **6** on point **P1** is inserted and secured with cotter pin **7**.
– The pin **8** is unpinned on point **P2**.

▶ Attach the bracket **3** onto the auxiliary crane.
▶ Hang in the bracket **3** with the auxiliary crane on point **P3** on the side of the turntable **1**.
▶ Pin the bracket **3** on the turntable **1**: Insert the pin **8** on point **P2** and secure with spring retainer **9**.
▶ Release and remove the fastening equipment.

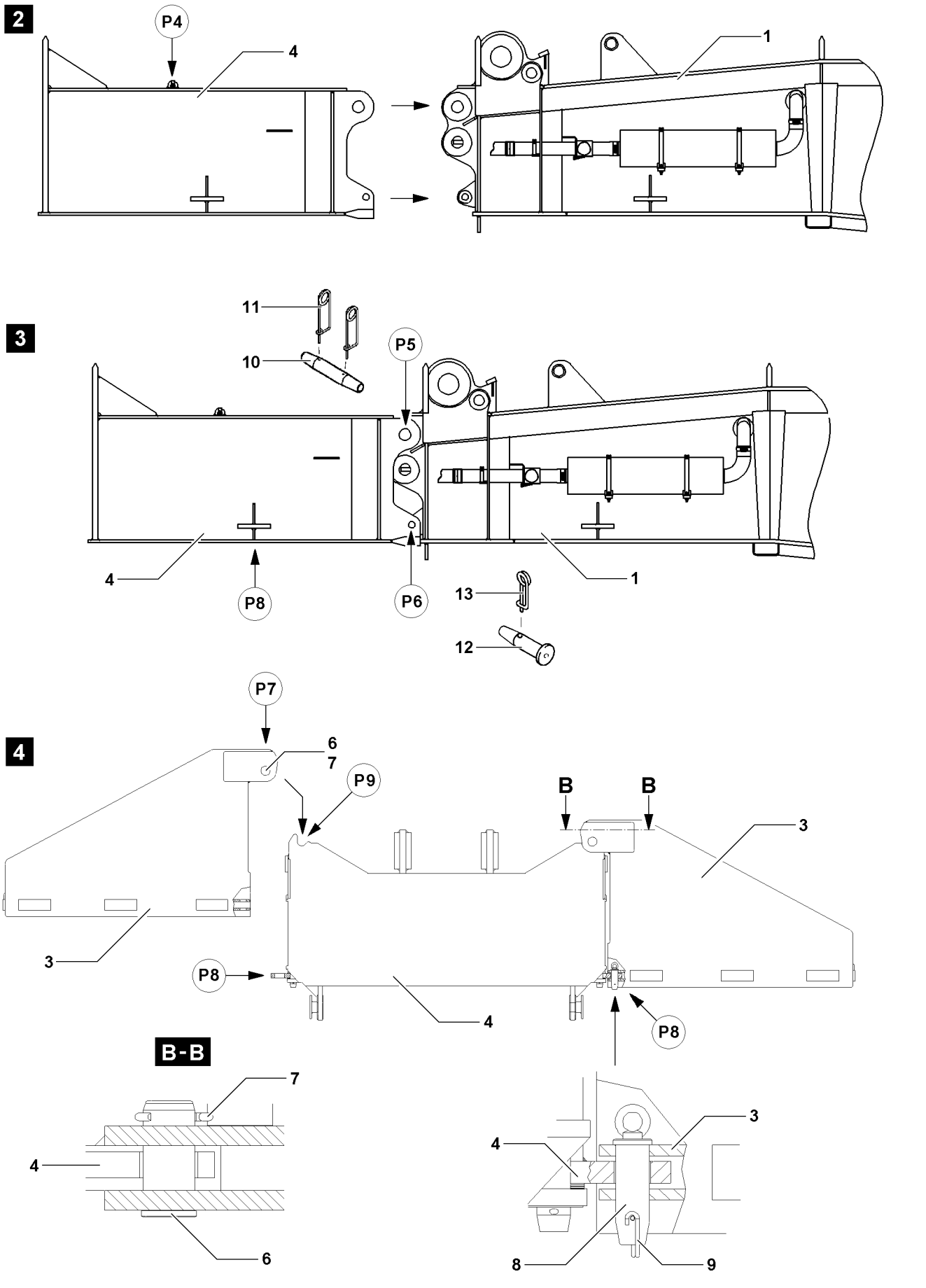

B109171

4.2 Installing the brackets with turntable extension*

WARNING
The crane can topple over if the center of gravity shifts!
When installing the counterweight in connection with the turntable extension **4**, the center of gravity of the crane is shifted!
A non-supported crane can topple over under these circumstances!
Personnel can be severely injured or killed!
▶ The crane must be supported with the crane support* and levelled in horizontal direction!

Make sure that the following prerequisites are met:
– The crane support is installed on the crawler center section or on the crawler carriers, see chapter 3.05 in the Crane operating instructions.
– The crane support is swung out, pinned and secured.
– The crane is supported and horizontally aligned.
– The SA-bracket is erected, see chapter 5.02 of the Crane operating instructions.
– The boom is not installed.
– The pin **6** on point **P7** is inserted and secured with cotter pin **7**, see illustration **4**.
– The pin **8** is unpinned on point **P8**.

▶ Attach the turntable extension **4** on the auxiliary cane on point **P4**, see illustration **2**.
▶ Retract the turntable extension **4** with the auxiliary crane to the stop on the rear of the turntable.
▶ Pin the turntable extension **4** on the turntable **1**, see illustration **3**: Insert the pins **10** on point **P5** and secure with spring retainers **11**. Insert the pin **12** on point **P6** and secure with spring retainer **13**.
▶ Release and remove the fastening equipment.
▶ Attach the bracket **3** onto the auxiliary crane.
▶ Hang the bracket **3** with the auxiliary crane on point **P9** on the side on the turntable extension **4** and the turntable **1**, see illustration **4**.
▶ Pin the bracket **3** on the turntable extension **4**: Insert the pin **8** on point **P8** and secure with spring retainer **9**.
▶ Release and remove the fastening equipment.

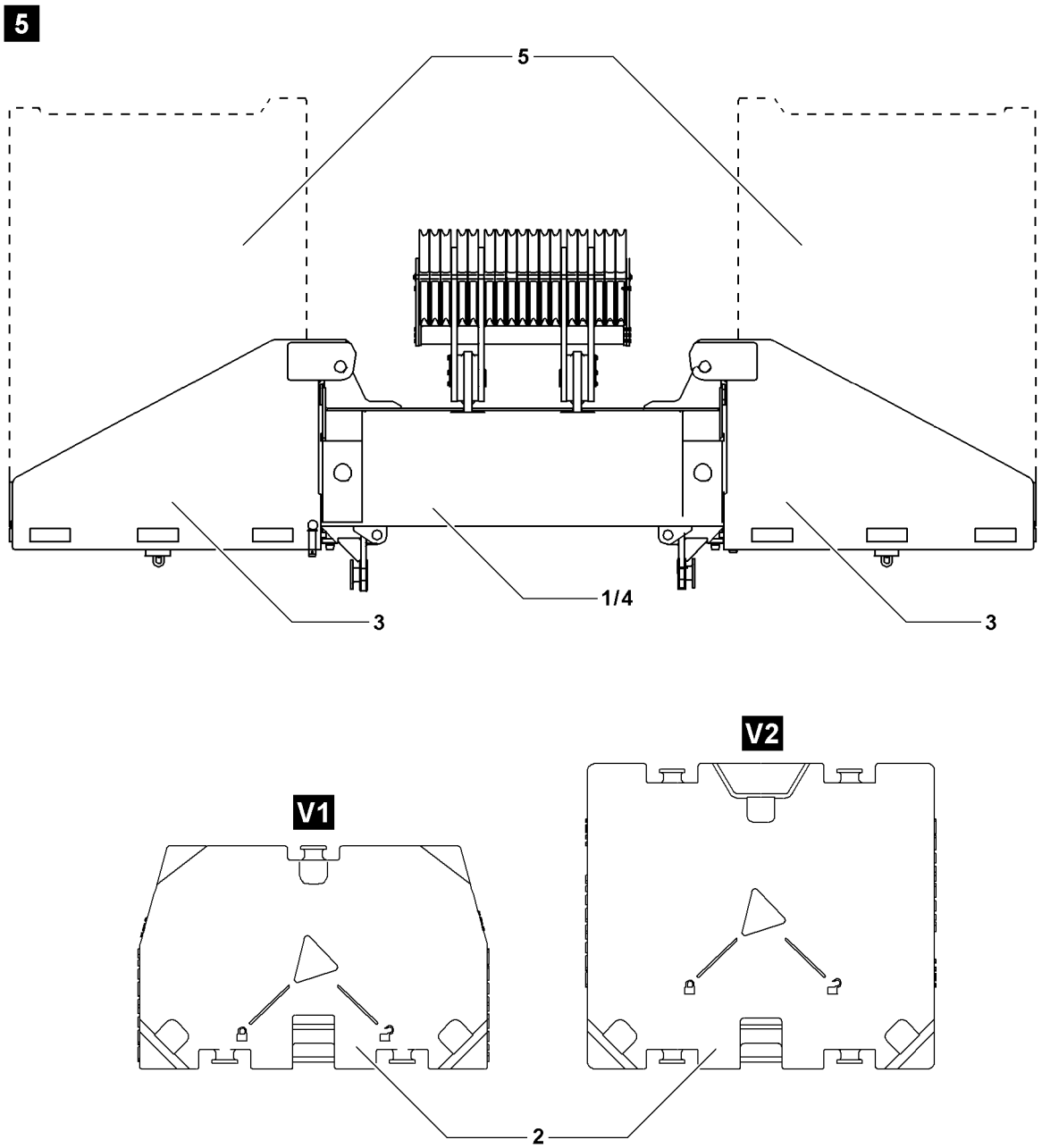

B109136

4.3 Placing the counterweight plates

WARNING
Damaged counterweight plates!
Damage on the counterweight plates **2** can cause the fastening equipment to release!
The counterweight plates **2** and components can fall down!
Personnel can be severely injured or killed!
▶ Do not use damaged counterweight plates **2** and replace them immediately!

WARNING
Impermissible combination of counterweight plates!
Combining counterweight plates **2** of variation **V1** and variation **V2** creates instability in the counterweight stack **5**!
The counterweight plates **2** can tip from the brackets **3** and cause the crane to topple over!
Personnel can be severely injured or killed!
▶ Only counterweight plates **2** of the same variation may be stacked on each other!

WARNING
Counterweight too low / too high!
If the placed counterweight deviates from the specified data in the load charts or the assembly conditions, then the crane can be damaged or topple over!
Personnel can be severely injured or killed!
▶ Place the counterweight according to the data in the load chart!
▶ Before placing the counterweight plates **2** check the maximum permissible counterweight depending on the assembly conditions, see chapter 3.06 in the Crane operating instructions!

WARNING
Asymmetrical counterweight distribution!
If more than 25 t are asymmetrically placed / removed on the counterweight stacks **5**, the crane can topple over!
Personnel can be severely injured or killed!
▶ A weight difference between the right and left counterweight stack **5** of more than 25 t is prohibited!
▶ Place / remove the counterweight assemblies alternately symmetrically on the left and right on the counterweight stack **5**!

WARNING
Toppling counterweight stack!
Lopsided stacked counterweight plates **2** create instability in the counterweight stack **5**!
The counterweight plates **2** can tip from the brackets **3** and cause the crane to topple over!
Personnel can be severely injured or killed!
▶ Make sure that the counterweight plates **2** are placed correctly in the centerings!

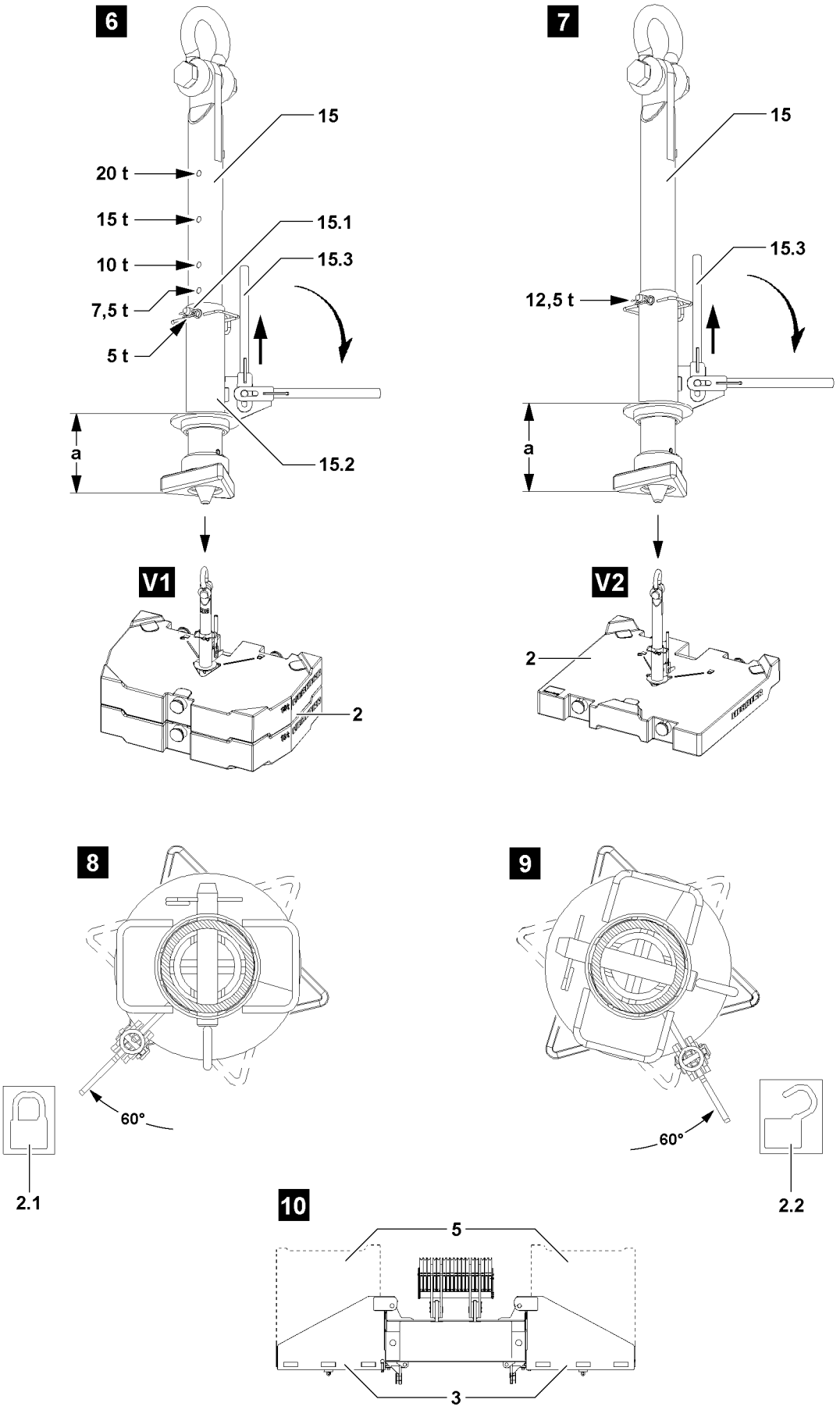
6
15
20 t
15 t
10 t
7,5 t
5 t
15.1
15.3
15.2
a
V1
2
7
15
12,5 t
15.3
a
V2
2
8
60°
2.1
9
60°
2.2
10
5
3

B109228

4.3.1 Placing the counterweight plates, fastening system: “Twistlock”

WARNING
Overload of receptacle stud and counterweight plates!
If more than the permissible number of counterweight plates **2** are lifted with the receptacle stud **15**, the receptacle stud **15** and the counterweight plates **2** can be overloaded and damaged!
Counterweight plates **2** can fall down!
Personnel can be severely injured or killed!
▶ Observe the chart “Permissible counterweight assemblies” in this chapter!

WARNING
Damage of receptacle stud and counterweight plates!
If two counterweight plates **2** are lifted which do not lay correctly in their centerings, the receptacle stud **15** and the counterweight plates **2** can be damaged!
Damage can cause the counterweight plates **2** to fall down!
Personnel can be severely injured or killed!
▶ Make sure that the counterweight plates **2** to be lifted are placed correctly in the centerings!

WARNING
The Twistlock system opens by itself!
If the receptacle stud **15** is not correctly locked, the Twistlock system can open by itself!
Counterweight plates **2** can fall down!
Personnel can be severely injured or killed!
▶ Make sure, when initiating a lift, that the lever **15.3** points directly on the “Locked” icon **2.1**!

Note
▶ During a lift, the locked Twistlock system cannot release by itself due to its gravitational retention!
▶ During a lift, the locked Twistlock system cannot be released by hand due to its gravitational retention!

Note
▶ For counterweight plates **2** variation **V1** use the adjustable receptacle stud **15** illustration **6**!
▶ For counterweight plates **2** variation **V2** use the receptacle stud **15** illustration **7**!

Note
▶ The counterweight plates **2** are marked with their own weights!

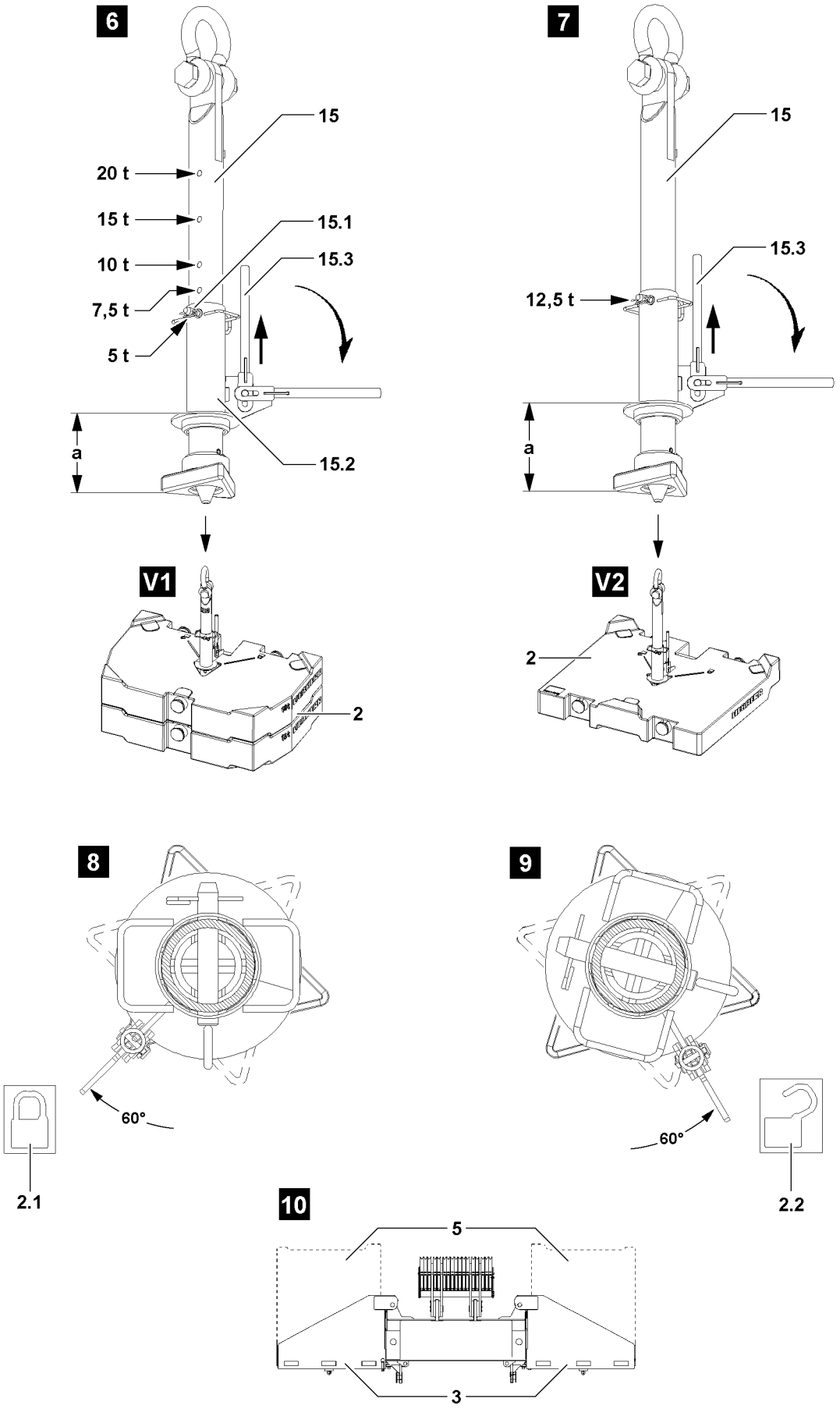
6
15
20 t
15 t
10 t
7,5 t
5 t
15.1
15.3
15.2
a
V1
2
7
15
12,5 t
15.3
a
V2
2
8
60°
2.1
9
60°
2.2
10
5
3

B109228

Make sure that the following prerequisite is met:
– The brackets **3** are pinned and secured on the turntable **1** and possibly on the turntable extension **4**.

Before the receptacle stud **15** is guided into the counterweight plates **2** Variation **V1**, it must be ensured that the insertion length **a** of the receptacle stud **15** is set correctly.
The insertion length **a** of the receptacle stud **15** for counterweight plates **2** Variation **V1** can be adjusted by hand.
▶ If the insertion length **a** of the receptacle stud **15** is to be adjusted:
Release and unpin the pin **15.1**.
▶ Adjust the insertion length **a** by moving the guide sleeve **15.2** to the desired insertion length **a**, observe the stages in illustration **6**.
▶ Insert and secure pin **15.1**.

Result:
– The receptacle stud **15** is adjusted.

▶ Attach the receptacle stud **15** on the auxiliary crane and guide it into the counterweight plate(s) **2**.
▶ Pull the lever **15.3** up and fold it down.
▶ Turn the receptacle stud **15** with the lever **15.3** by 60° until it points to the symbol “Locked” **2.1** of the counterweight plate **2**, see illustration **8**.

Note
▶ The receptacle stud **15** is locked by lifting the counterweight plate(s) **2**!

▶ Lift the counterweight plate **2** or the counterweight assembly with the receptacle stud **15** and place it carefully on the centerings on the bracket **3** or on another counterweight plate **2** in the counterweight assembly **5**, see illustration **10**.
▶ When the counterweight plate(s) **2** are placed down:
Turn the receptacle stud **15** with the lever **15.3** by 60° to the stop in direction of the “Unlocked” icon **2.2**, see illustration **9**.

Result:
– The receptacle stud **15** is unlocked.

▶ Carefully pull out the receptacle stud **15**.
▶ Stack the counterweight plates **2** according to the load chart.

11

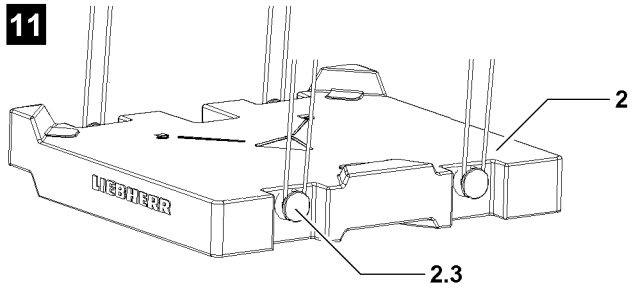

12

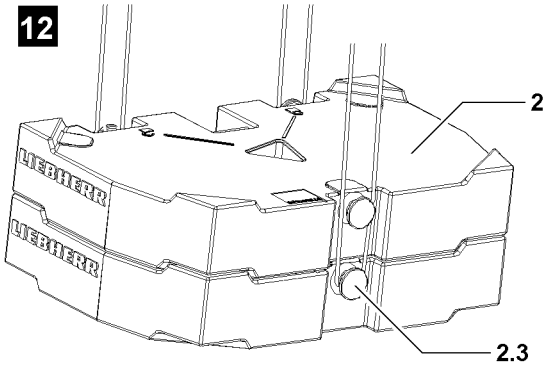

13

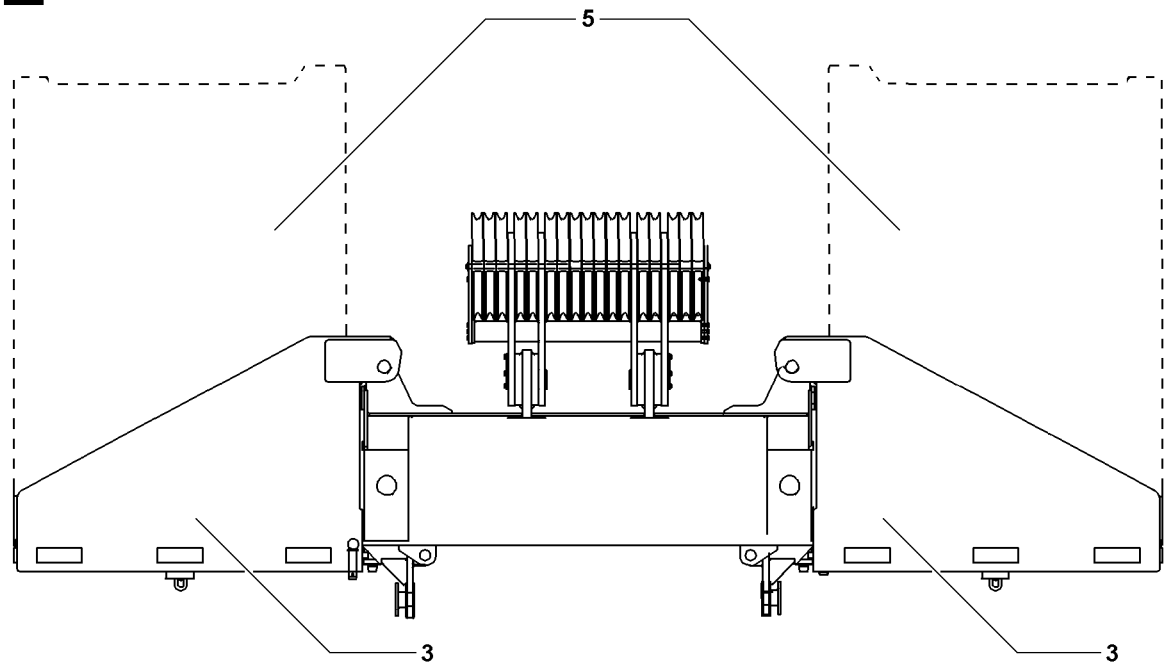

B109229

4.3.2 Placing the counterweight plates, fastening points: Bitt

WARNING
Overloaded counterweight plates!
If more than the permissible loads are lifted, the bitts **2.3** are overloaded!
The counterweight plates **2** can be damaged and fall down!
Personnel can be severely injured or killed!
▶ Observe the chart “Permissible counterweight assemblies” in this chapter!

WARNING
Incorrect handling of the fastening equipment!
If fastening equipment cannot be attached correctly and / or if it is not secured sufficiently to prevent it from loosening up, the counterweight plates **2** can fall down!
Personnel can be severely injured or killed!
▶ Make sure that the fastening equipment is correctly attached on the bitts **2.3** and that it is secured sufficiently to prevent it from loosening up!

▶ Attach counterweight plate **2** or the counterweight assembly, see illustration **11** and illustration **12** on the auxiliary crane.
▶ Place the counterweight plate **2** or the counterweight assembly on the centerings on the bracket **3** or on another counterweight plate **2** in the counterweight stack **5**.

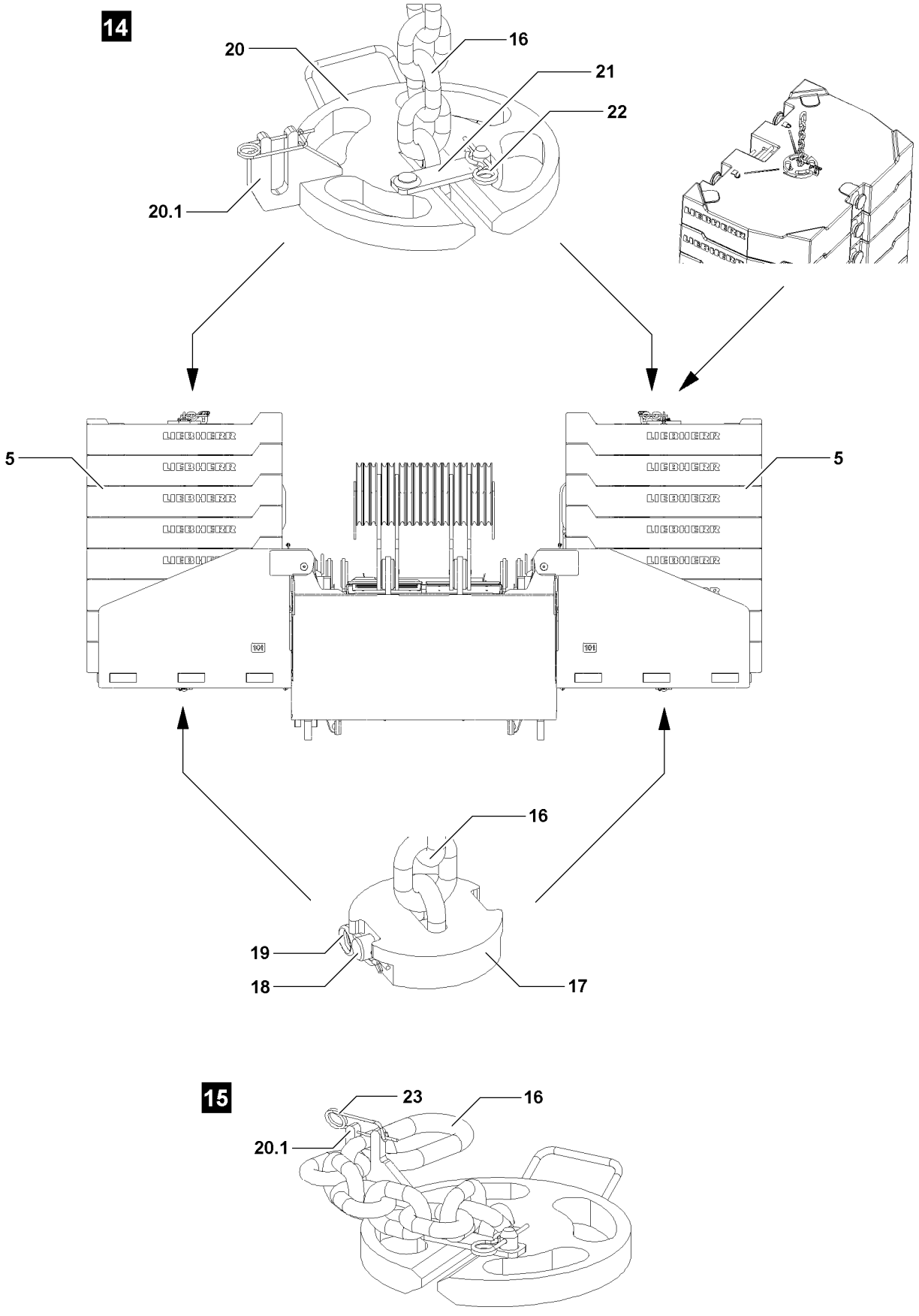

B109230

4.4 Securing the counterweight

WARNING
Unsecured counterweight plates!
If the counterweight is not or not correctly secured, then it can fall down!
Personnel can be severely injured or killed!
▶ Before starting crane operation, the complete counterweight must be secured!

Make sure that the following prerequisite is met:
– The counterweight has been stacked according to the load chart and the operating instructions.

▶ Guide the retaining chain **16** on the auxiliary crane from top through the counterweight stack **5**.
▶ Pin the retaining chain **16** on the bottom with the retaining plate **17**: Insert the pin **18** in the lowest chain link and secure with spring retainer **19**.
▶ Carefully tighten the retaining chain **16** with the auxiliary crane vertically.

Note
▶ To optimally secure the counterweight stack **5**, keep the retaining chain **16** between the retaining plate **17** and the retaining plate **20** as short as possible!

▶ Push the retaining plate **20** on top on the side over the retaining chain **16**.
▶ Insert the retaining plate **21** in the retaining plate **20**.
▶ Secure the retainer **21** with spring retainer **22**.

WARNING
Danger of accidents due to chain overhang!
If the stack height of the counterweight plates is not high enough, the chain overhang of the retaining chain **16** on the side on the counterweight stack **5** can fall down!
Personnel can be severely injured or killed!
▶ Secure the chain overhang from falling down!

▶ Hang the chain overhang of the retaining chain **16** into the fork **20.1** and secure with spring retainer **23** to prevent it from falling down, see illustration **15**.

B195219

5 Removing the counterweight

WARNING
Falling components and counterweight plates!
At disassembly, the components and counterweight plates can fall down!
Personnel can be severely injured or killed!
- ▶ Make sure that no persons or objects are within the danger zone!

WARNING
Danger of falling during assembly / disassembly work!
During assembly and disassembly work, personnel must be secured with appropriate aids to prevent them from falling!
If this is not observed, assembly personnel could fall and suffer severe or fatal injuries!
- ▶ All assembly work must be carried out using suitable aids (lifting platforms, scaffolding, ladder, auxiliary crane, etc.)!
- ▶ If work cannot be carried out on the ground or using such aids, then assembly personnel must be secured with the personal fall arrest system (see Crane operating instructions, chapter 2.04) to protect against falling!
- ▶ Hang in the personal fall arrest system in the corresponding fastening points on the crane (see Crane operating instructions, chapter 2.06)!
- ▶ If railings are present on the components, then they must be brought into the corresponding position and secured for assembly / disassembly work!
- ▶ Step on aids and fall protection equipment only with clean shoes!
- ▶ Keep aids and fall protection equipment clean and free from snow and ice!

WARNING
Danger of impact / crushing when working with the auxiliary crane!
When installing / removing crane components with the auxiliary crane, crane components can start to swing back and forth!
Personnel can be caught and severely injured or killed!
- ▶ Make sure that no persons can be caught when installing the components!
- ▶ If necessary, guide the components with suitable aids!

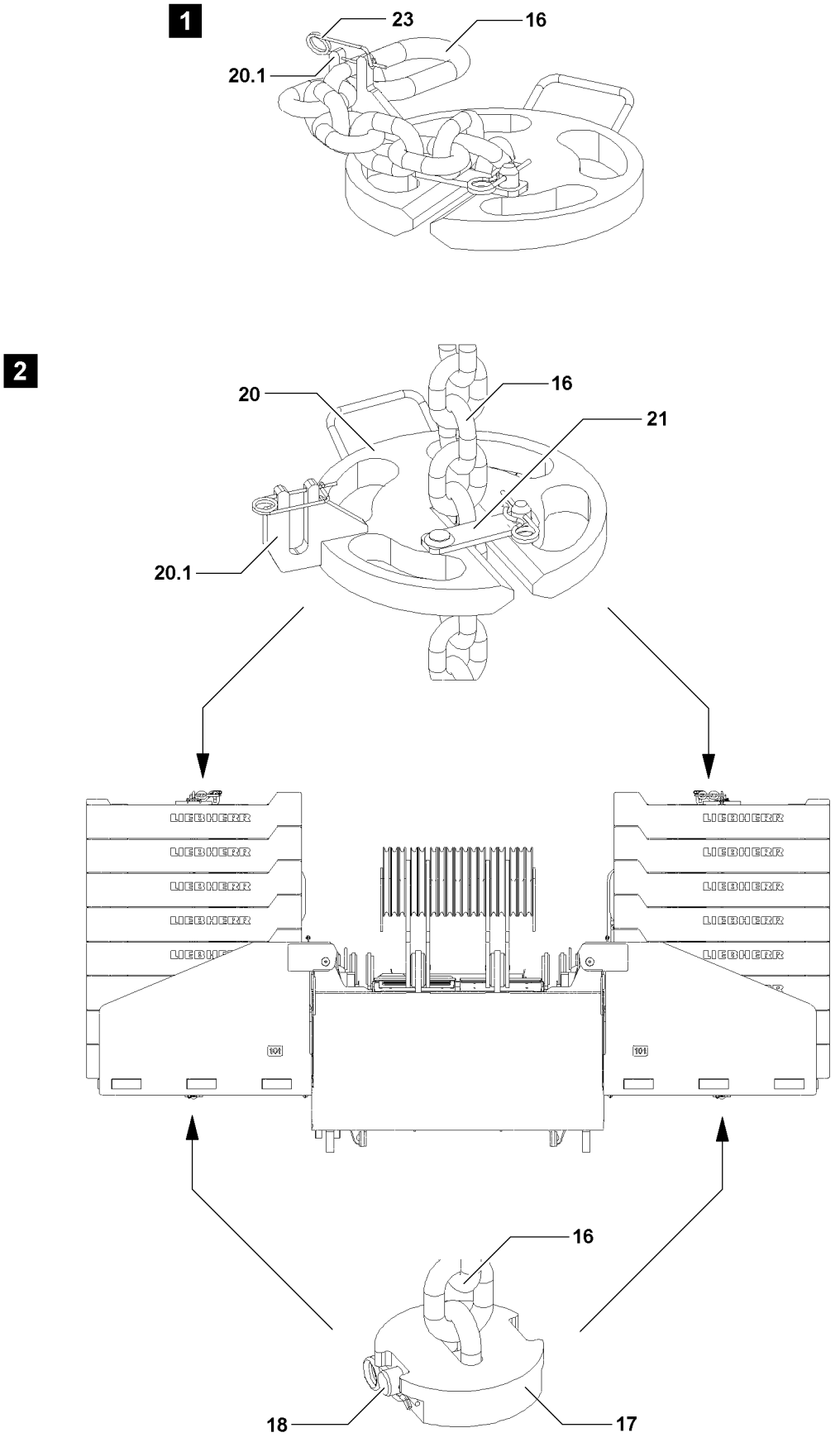
1
23
16
20.1
2
20
16
21
20.1
16
18
17
B109231

5.1 Releasing the counterweight

Make sure that the following prerequisites are met:
- The crane is aligned in horizontal direction.
- The SA-bracket is erected, see chapter 5.02 of the Crane operating instructions.
- The boom is not installed.

In case of previous operation with crane support* and turntable extension*:
- The crane support is swung out, pinned and secured.
- The crane is supported and horizontally aligned.

▶ For secured chain overhang, see illustration **1**:
Remove the spring retainer **23**, unhook the retaining chain **16** from the fork **20.1**.

▶ Chain overhang loose, see illustration **2**:
Attach the retaining chain **16** on the auxiliary crane and tension it slightly.

▶ Remove the retaining plate **20**: Release and remove retaining plate **21**, remove the retaining plate **20** on the side.

▶ Lower the retaining chain **16** until the lower retaining plate **17** is freely accessible.

▶ Unpin the pin **18** and remove the retaining plate **17**.

▶ Pull the retaining chain **16** through upward and remove it.

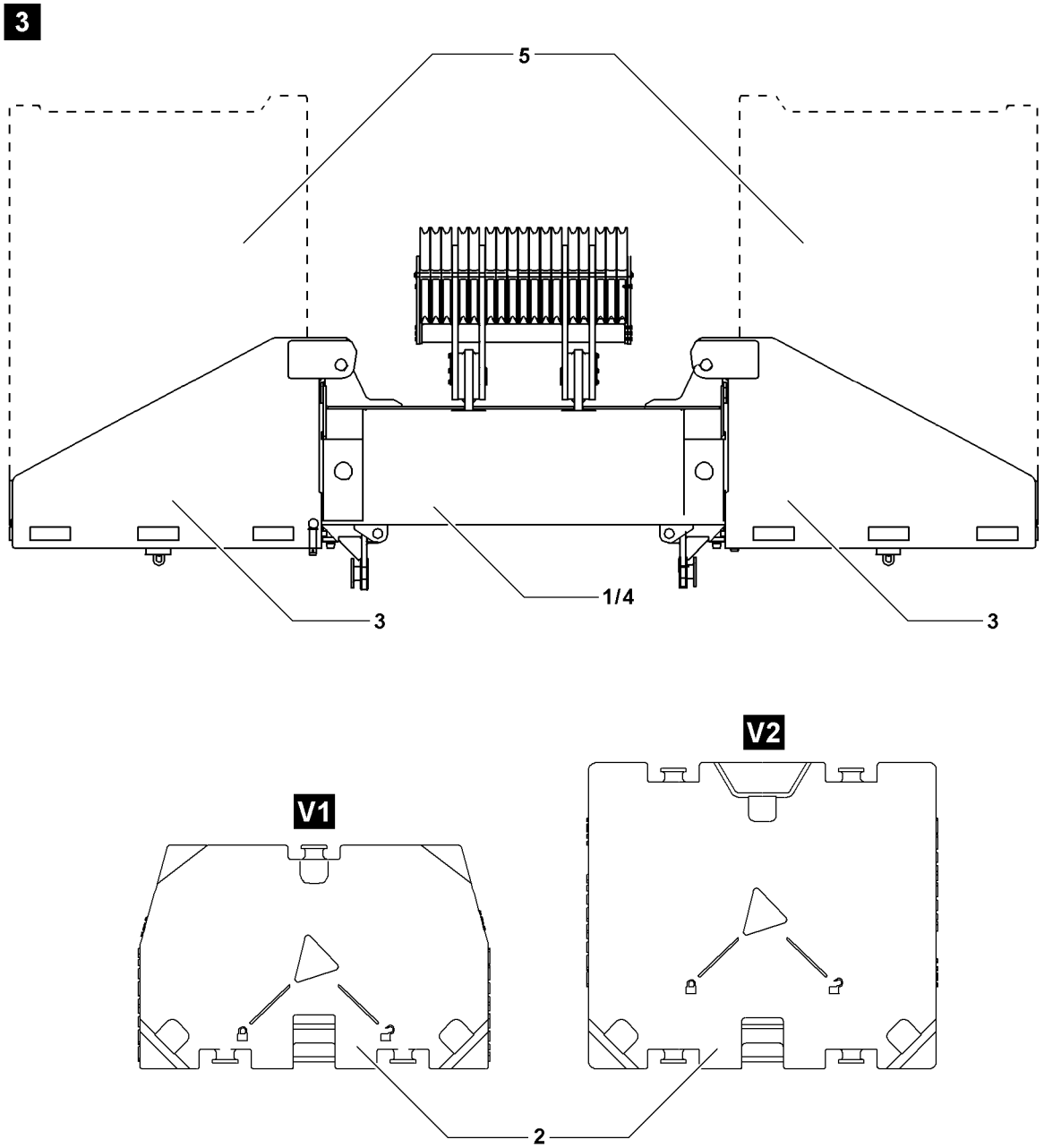

B109232

5.2 Removing the counterweight plates

WARNING
Damaged counterweight plates!
Damage on the counterweight plates **2** can cause the fastening equipment to release!
The counterweight plates **2** and components can fall down!
Personnel can be severely injured or killed!
▶ Do not use damaged counterweight plates **2** and replace them immediately!

WARNING
Asymmetrical counterweight distribution!
If more than 25 t are asymmetrically placed / removed on the counterweight stacks **5**, the crane can topple over!
Personnel can be severely injured or killed!
▶ A weight difference between the right and left counterweight stack **5** of more than 25 t is prohibited!
▶ Place / remove the counterweight assemblies alternately symmetrically on the left and right on the counterweight stack **5**!

Note
▶ The counterweight plates are marked with their own weights!

Make sure that the following prerequisite is met:
– The retaining chains are removed.

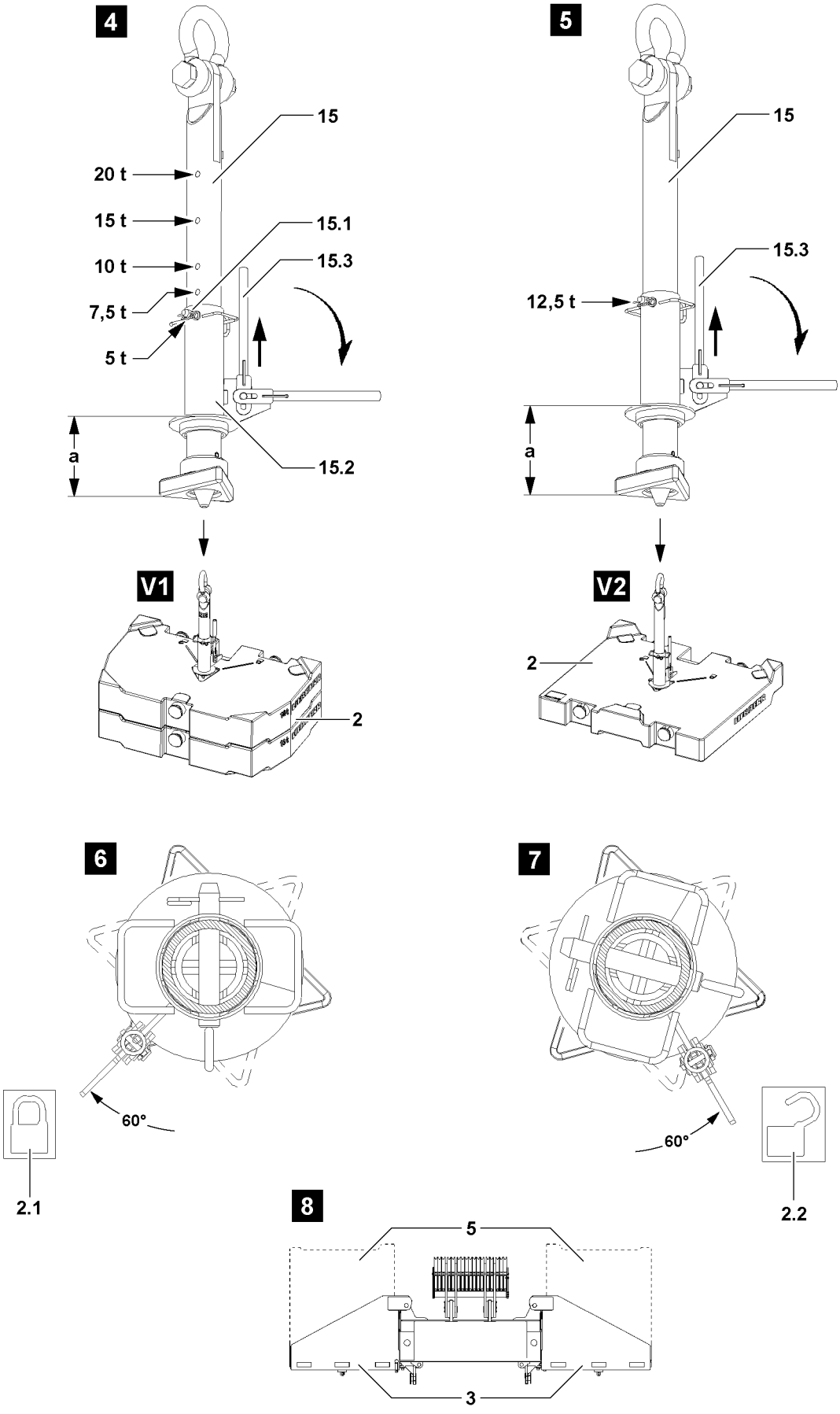
4
15
20 t
15 t
15.1
10 t
15.3
7,5 t
5 t
a
15.2
V1
2
5
15
15.3
12,5 t
a
V2
2
6
60°
2.1
7
60°
2.2
8
5
3

B109233

5.2.1 Removing the counterweight plates, fastening system: “Twistlock”

WARNING
Overload of receptacle stud and counterweight plates!
If more than the permissible number of counterweight plates **2** are lifted with the receptacle stud **15**, the receptacle stud **15** and the counterweight plates **2** can be overloaded and damaged!
Counterweight plates **2** can fall down!
Personnel can be severely injured or killed!
▶ Observe the chart “Permissible counterweight assemblies” in this chapter!

WARNING
Damage of receptacle stud and counterweight plates!
If two counterweight plates **2** are lifted which do not lay correctly in their centerings, the receptacle stud **15** and the counterweight plates **2** can be damaged!
Damage can cause the counterweight plates **2** to fall down!
Personnel can be severely injured or killed!
▶ Make sure that the counterweight plates **2** to be lifted are placed correctly in the centerings!

WARNING
The Twistlock system opens by itself!
If the receptacle stud **15** is not correctly locked, the Twistlock system can open by itself!
Counterweight plates **2** can fall down!
Personnel can be severely injured or killed!
▶ Make sure, when initiating a lift, that the lever points directly on the symbol “Locked” **2.1**!

Note
▶ During a lift, the locked Twistlock system cannot release by itself due to its gravitational retention!
▶ During a lift, the locked Twistlock system cannot be released by hand due to its gravitational retention!

Note
▶ For counterweight plates **2** variation **V1** use the adjustable receptacle stud **15** illustration **4**!
▶ For counterweight plates **2** variation **V2** use the receptacle stud **15** illustration **5**!

Note
▶ The counterweight plates **2** are marked with their own weights!

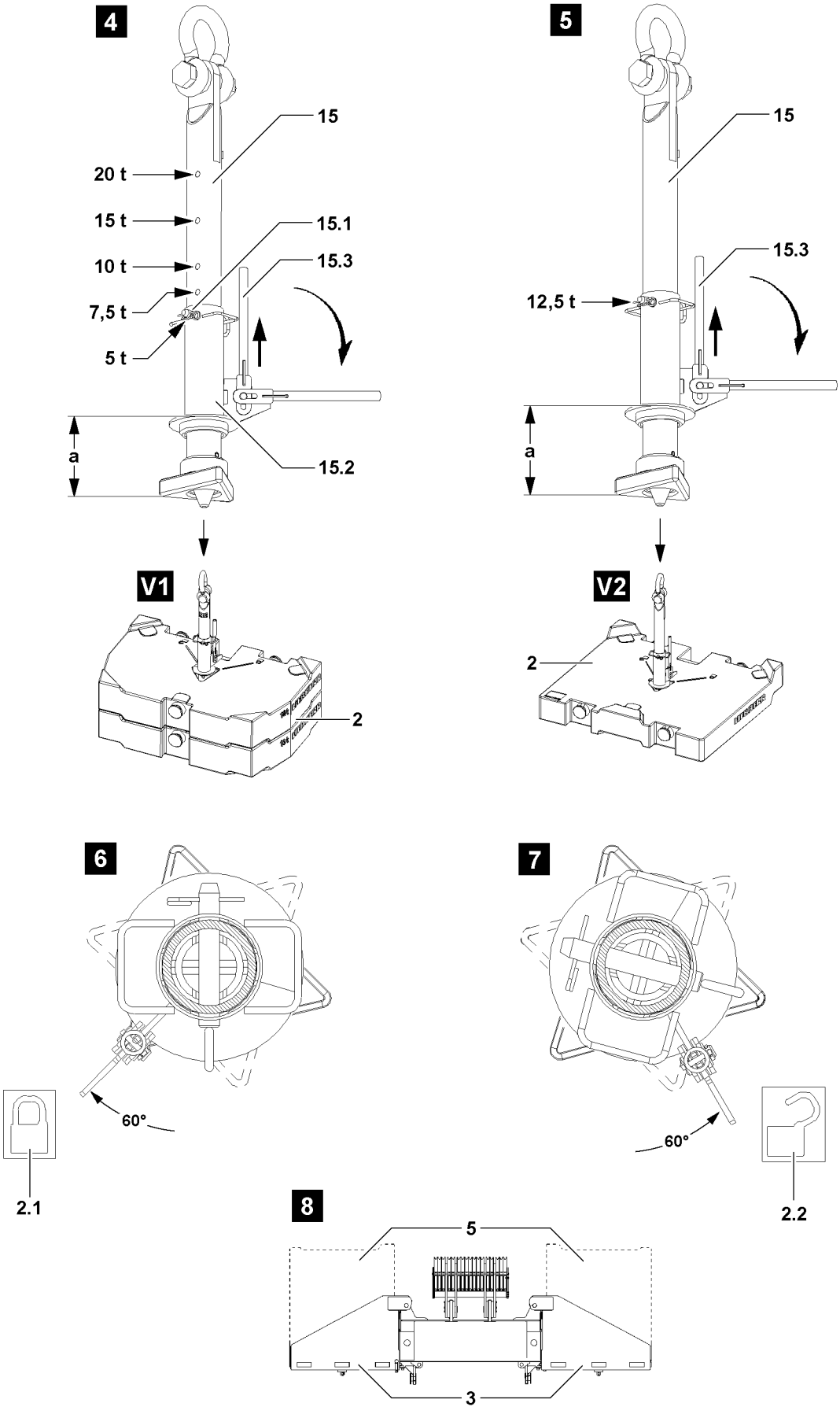
4
15
20 t
15 t
15.1
10 t
15.3
7,5 t
5 t
a
15.2
V1
2
5
15
15.3
12,5 t
a
V2
2
6
60°
2.1
7
60°
2.2
8
5
3

B109233

Before the receptacle stud **15** is guided into the counterweight plates **2** Variation **V1**, it must be ensured that the insertion length **a** of the receptacle stud **15** is set correctly.
The insertion length **a** of the receptacle stud **15** for counterweight plates **2** Variation **V1** can be adjusted by hand.

- ▶ If the insertion length **a** of the receptacle stud **15** is to be adjusted:
  Release and unpin the pin **15.1**.
- ▶ Adjust the insertion length **a** by moving the guide sleeve **15.2** to the desired insertion length **a**, observe the stages in illustration **4**.
- ▶ Insert and secure pin **15.1**.

Result:

– The receptacle stud **15** is adjusted.

- ▶ Attach the receptacle stud **15** on the auxiliary crane and guide it into the counterweight plate(s) **2**.
- ▶ Pull the lever **15.3** up and fold it down.
- ▶ Turn the receptacle stud **15** with the lever **15.3** by 60° until it points to the symbol “Locked” **2.1** of the counterweight plate **2**, see illustration **6**.

Note

- ▶ The receptacle stud **15** is locked by lifting the counterweight plate(s) **2**.

- ▶ Lift the counterweight plate(s) **2** with the receptacle stud **15** and place them on a suitable storage location.
- ▶ When the counterweight plate(s) are placed down:
  Turn the receptacle stud **15** with the lever **15.3** by 60° to the stop in direction of the “Unlocked” icon **2.2**, see illustration **7**.

Result:

– The receptacle stud **15** is unlocked.

- ▶ Carefully pull the receptacle stud **15** from the counterweight plate.

9

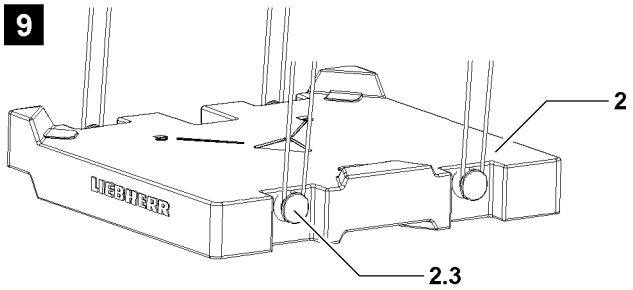

10

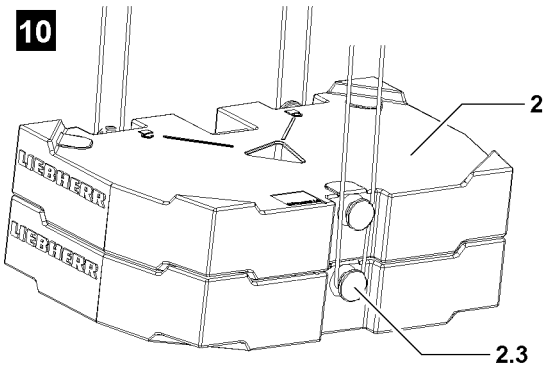

11

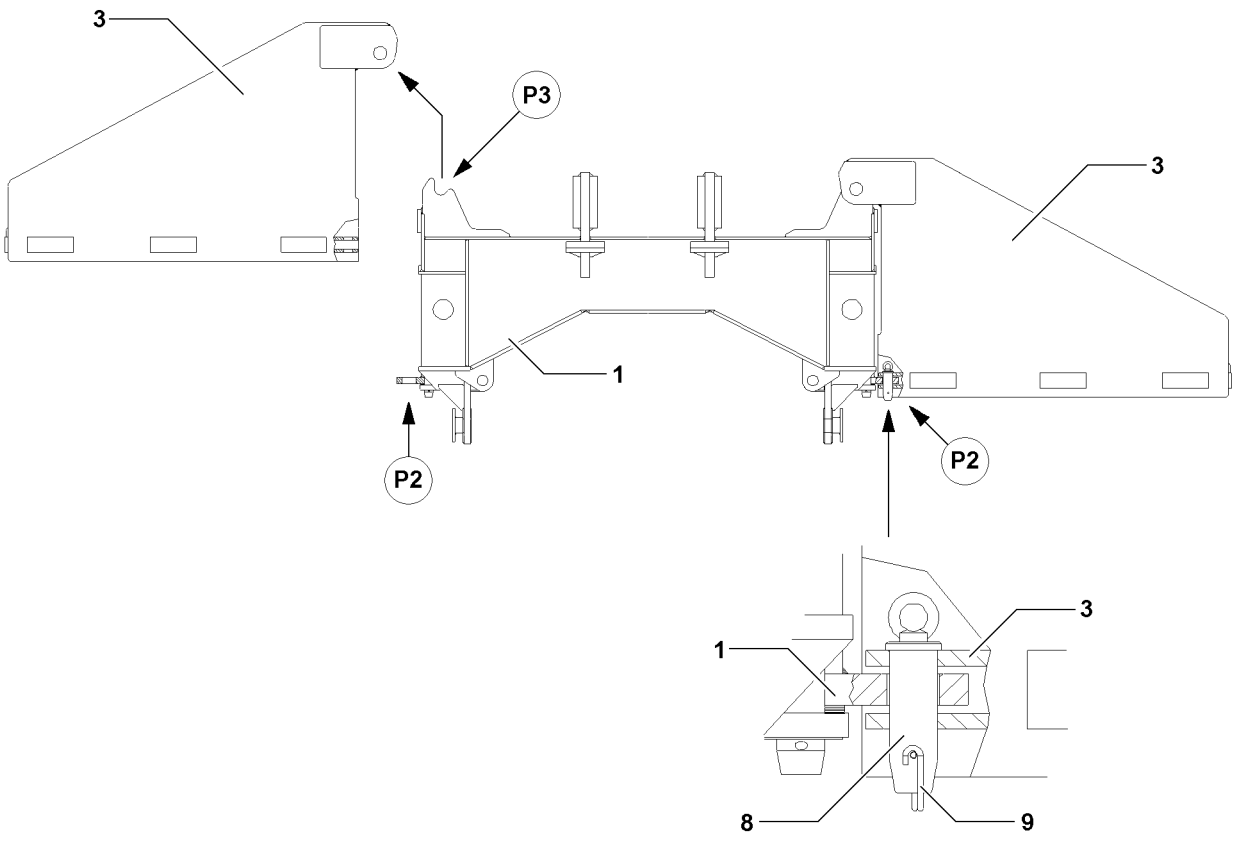

B109234

5.2.2 Removing the counterweight plates, fastening points: Bitt

WARNING
Overloaded counterweight plates!
If more than the permissible loads are lifted, the bitts **2.3** are overloaded!
The counterweight plates **2** can be damaged and fall down!
Personnel can be severely injured or killed!
▶ Observe the chart “Permissible counterweight assemblies” in this chapter!

WARNING
Incorrect handling of the fastening equipment!
If fastening equipment cannot be attached correctly and if it is not secured sufficiently to prevent it from loosening up, the counterweight plates **2** can fall down!
Personnel can be severely injured or killed!
▶ Make sure that the fastening equipment is correctly attached on the bitts **2.3** and that it is secured sufficiently to prevent it from loosening up!

▶ Attach counterweight plate **2** or the counterweight assembly, see illustration **9** and illustration **10** on the auxiliary crane and place it on a suitable storage location.

5.3 Removing the bracket

See illustration **11**.
Make sure that the following prerequisite is met:
– In the bracket **3** are no counterweight plates **2**.

▶ Attach the bracket **3** onto the auxiliary crane.
▶ Unpin the bracket **3** on the turntable **1**: Unpin the pin **8** on point **P2**.
▶ Remove the bracket **3** with the auxiliary crane on point **P3** on the side of the turntable **1**.
▶ Place the bracket **3** on a suitable storage location.

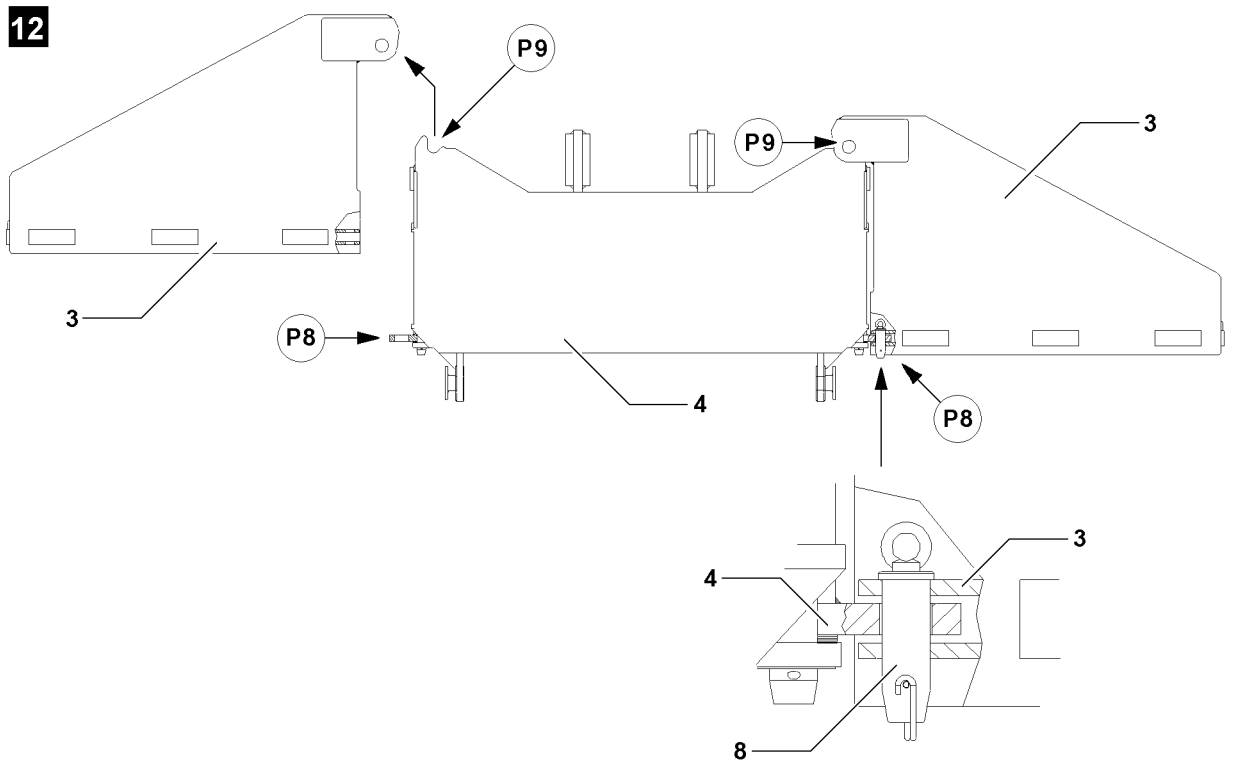

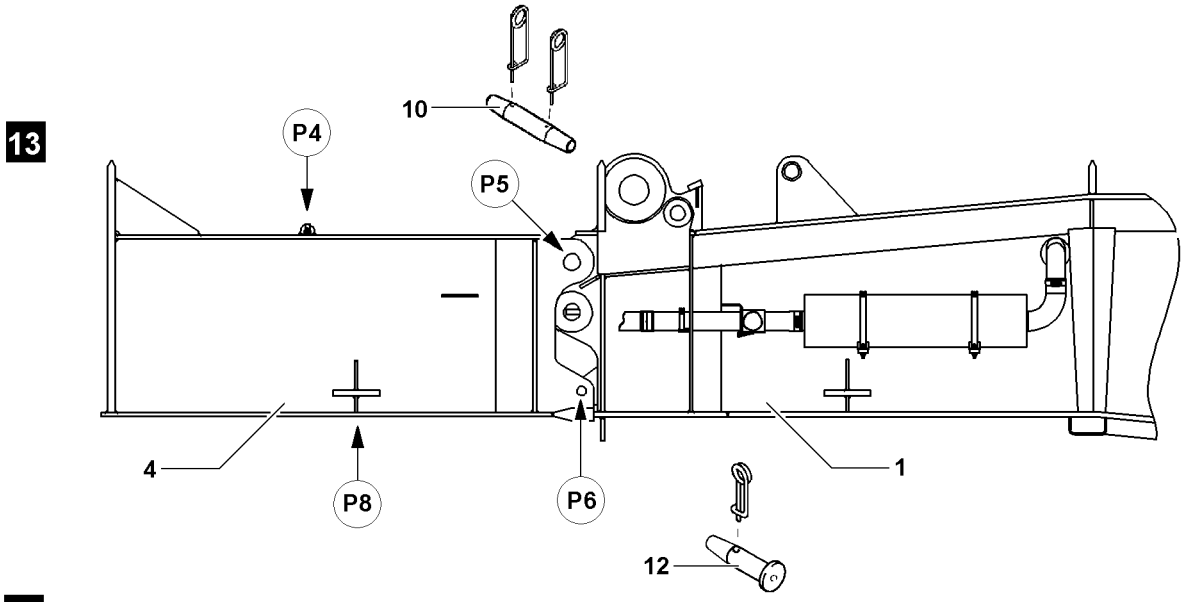

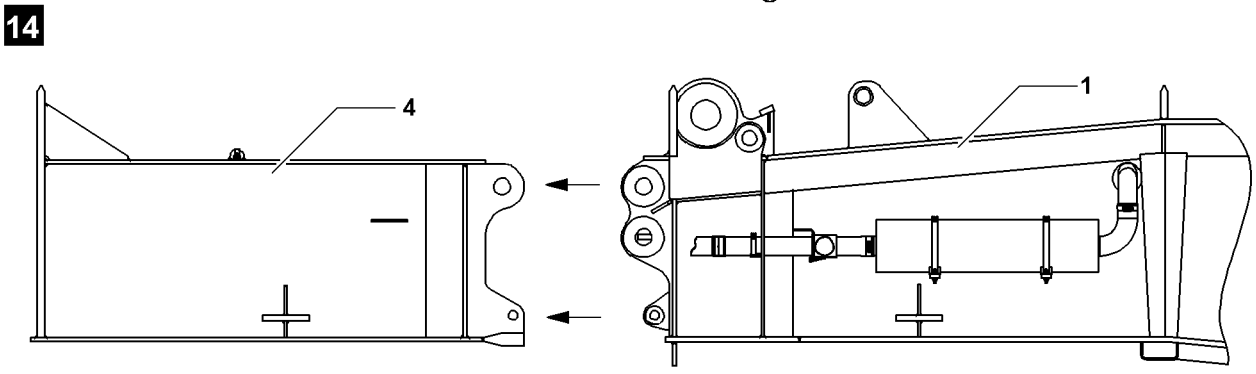

B109236

5.4 Removing the brackets with the turntable extension

Make sure that the following prerequisite is met:

– In the bracket **3** are no counterweight plates.

- ▶ Attach the bracket **3** onto the auxiliary crane.
- ▶ Unpin the bracket **3** on the turntable extension **4**: Unpin the pin **8** on point **P8**.
- ▶ Unhook in the bracket **3** with the auxiliary crane on point **P9** on the side of the turntable extension **4**.
- ▶ Place the bracket **3** on a suitable storage location.

5.5 Removing the turntable extension on the turntable

- ▶ Attach the turntable extension **4** on the auxiliary cane on point **P4**, see illustration **13**.
- ▶ Unpin the turntable extension **4** on the turntable **1**: Unpin the pin **10** on point **P5** and Unpin the pin **12** on point **P6**.
- ▶ Remove the turntable extension **4** with the auxiliary crane from the rear of the turntable.
- ▶ Place the turntable extension **4** on a suitable storage location.

B195219

1 Safety technical instructions for working with a load

For more information, see chapter 2.04.

WARNING
The crane can topple over!
For steep boom positions, for which no loads are specified in the load charts there is a risk of the crane superstructure toppling when turning “backward”, i.e. towards the counterweight side! There is a particular danger if the support base has been reduced and supported with the sliding beams retracted!
Personnel can be severely injured or killed!
▶ The radii specified in the load chart must be observed!

WARNING
Danger of accident due to erroneous operation!
If the reeving number on the pulley head is less than the reeving number set on the LICCON computer system and if the load is lifted with the luffing gear, it can result in an overload of the hoist rope, as a result, the hoist rope can rip, causing the load to drop!
Personnel can be severely injured or killed!
▶ Always comply with the reeving numbers specified in the load chart for maximum loads!
▶ The reeving on the pulley head and the reeving set on the LICCON computer system must match, otherwise crane operation is prohibited!

DANGER
Danger of fatal accidents due falling load!
If the number of three coils is fallen below (for example due to a technical defect), the hoist rope is ripped from the winch drum and the load falls down.
Personnel can be severely injured or killed!
▶ The crane operator must ensure that there are always at least three windings on the winch drum!

Always comply with the maximum loads specified in the load chart.
The weight of the hook block according the load chart must be taken into account.
For the lift, use the hook block which is suited best for the existing set up configuration in connection with the load chart.
Initiate all crane movements carefully. Also slow down the crane movements carefully. That way you can avoid a swinging or pendulum motion in the suspended load.

2 Checks before starting to work with the crane

Before starting work with the crane, the crane operator must carry out a further inspection to satisfy himself about the crane's operational safety:

– Check that the crane is properly supported and level.
– Check that all values in the load chart that apply to the current equipment configuration have been entered and met.
– Ensure that there are no people or objects in the crane danger zone.

WARNING
Danger of accidents when turning the crane superstructure!
By turning the crane superstructure in restricted space conditions on the job site, especially in the rear area of the counterweight and towards the chassis, personnel can be crushed and severely injured or killed!

▶ Give a short warning signal (horn) before starting a slewing movement!
▶ Ensure before starting any slewing movement that there are no people or objects in the danger zone!

2.1 Visual check for damage

WARNING
Danger of accident!
If the crane is operated despite existing defects, personnel can be severely injured or killed!

▶ In the event of deficiencies that threaten operational safety, stop crane operation immediately!

The following deficiencies threaten the crane's operational safety:

– Damage to load-bearing parts of the crane design, such as booms, supports etc.
– Failure of the hoist gear brake and consequent slipping of the load
– Functional failures in the crane control system
– Functional failures in the indicator and warning lights
– Damage to the hoist ropes
– Functional failures in the safety devices
– Leakages on safety relevant components of the crane hydraulic

Inform the appropriate supervisor about the deficiencies on the crane and also inform your relief when crane operators are changed.

2.2 Telescopic boom distortion because of sunshine on one side

A temperature difference occurs between the side facing the sun and the side facing away from the sun for cranes with telescopic boom. This causes telescopic boom side distortion, which can reduce the load-bearing capacity of the telescopic boom. For example, a temperature difference between the two boom sides of 30 °C and a boom length of 60 m results in a length difference caused by the temperature difference between the two sides of the telescopic boom of approximately 22 mm. With narrow boom parts, this causes the profiles to bend sideways!
If the maximum load carrying capacity is being utilized when a telescopic boom extension such as a fixed lattice jib, luffing lattice jib or folding jib is being used, then in must be ensured through a visual inspection before picking up the load that the boom is not showing signs of side deformation due to one-sided sun exposure.

WARNING
Danger of accident because of component overloading!
If the telescopic boom has become distorted because of one-sided sun exposure this can cause component overload and therefore accidents!

▶ Turn crane so that both sides of the boom are brought to about the same temperature, therefore preventing side deformation due to temperature differences!

3 Crane movement - Telescoping

If the telescopic boom is telescoped with the auxiliary boom or telescopic boom extension, before the telescoping procedure, ensure that:

– The crane is properly supported and horizontally aligned.
– The telescopic boom is evenly warmed up by solar radiation.
– There is no strong side wind.

WARNING

Damage of the telescopic boom or the hoist rope!

If these 3 factors are not adhered to, damage of the telescopic boom or the hoist rope can occur and lead to accidents!

▶ Support the crane properly and align it horizontally!
▶ Keep both sides of the boom at about the same temperature!
▶ Telescope only to the permissible wind speed according to the load chart!
▶ If the actual wind speed is higher than the permissible wind speed noted on the load chart, telescoping is prohibited!

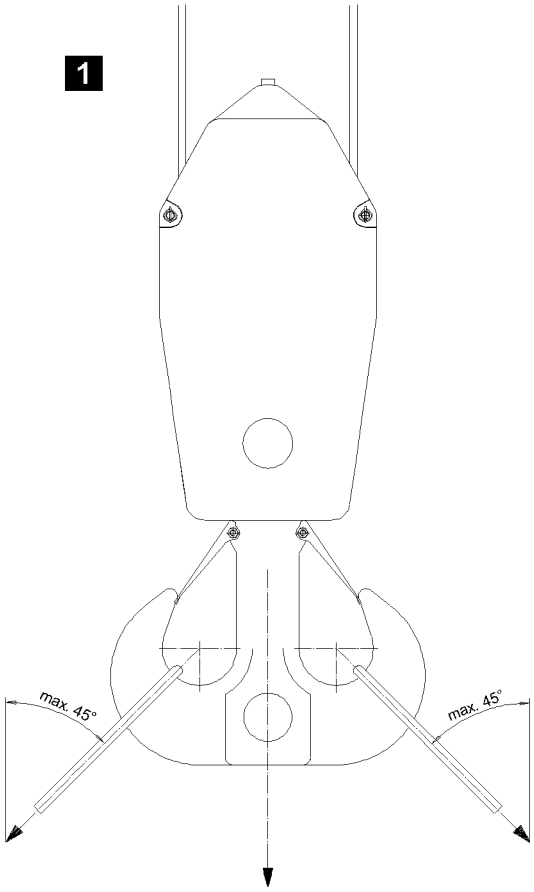
1
max. 45°
max. 45°

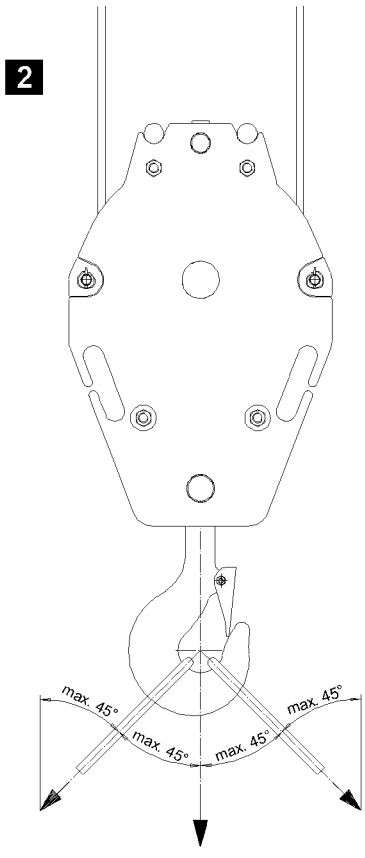
2
max. 45°
max. 45°
max. 45°
max. 45°

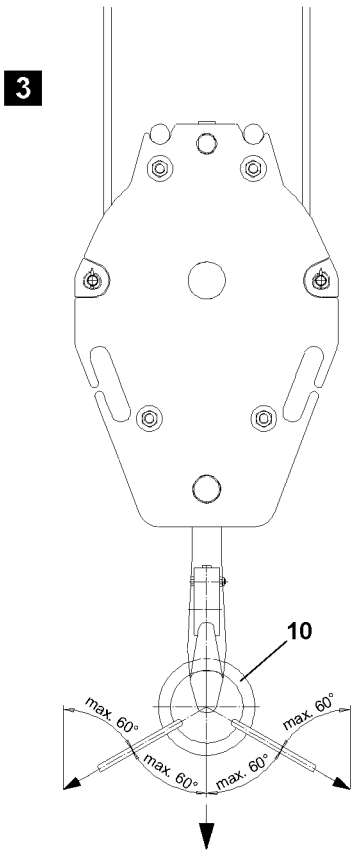
3
10
max. 60°
max. 60°
max. 60°
max. 60°

B112108

4 Taking on a load

The crane must always be operated in such a way that its load-bearing parts are not destroyed or damaged and its stability is ensured.
Make sure that the following prerequisites are met:
– The crane is supported and horizontally aligned.
– The LICCON overload protection has been set according to the load chart.
– The counterweight is installed according to the load chart.
– The hook block or the load hook is correctly reeved.

4.1 Attaching the load

WARNING
The crane can topple over!
If the following conditions are not met, the crane can topple over and cause fatal injuries!
This could result in high property damage!
▶ Observe own weight of the load tackle!
▶ Observe own weight of the load tackle!
▶ The maximum permissible incline of the strands fastened on single or double hooks in the hook jaws is 45°! See illustration **1** and illustration **2**.
If necessary for the single hook:
▶ Use fastening equipment with a suspension link **10**! The maximum permissible incline in this case is 60°! See illustration **3**.
▶ Load a single and double hook symmetrically! A maximum deviation of ±3° from the direction of the center of gravity is permissible!
If necessary:
▶ Use crossbars or two cranes for taking up the load!

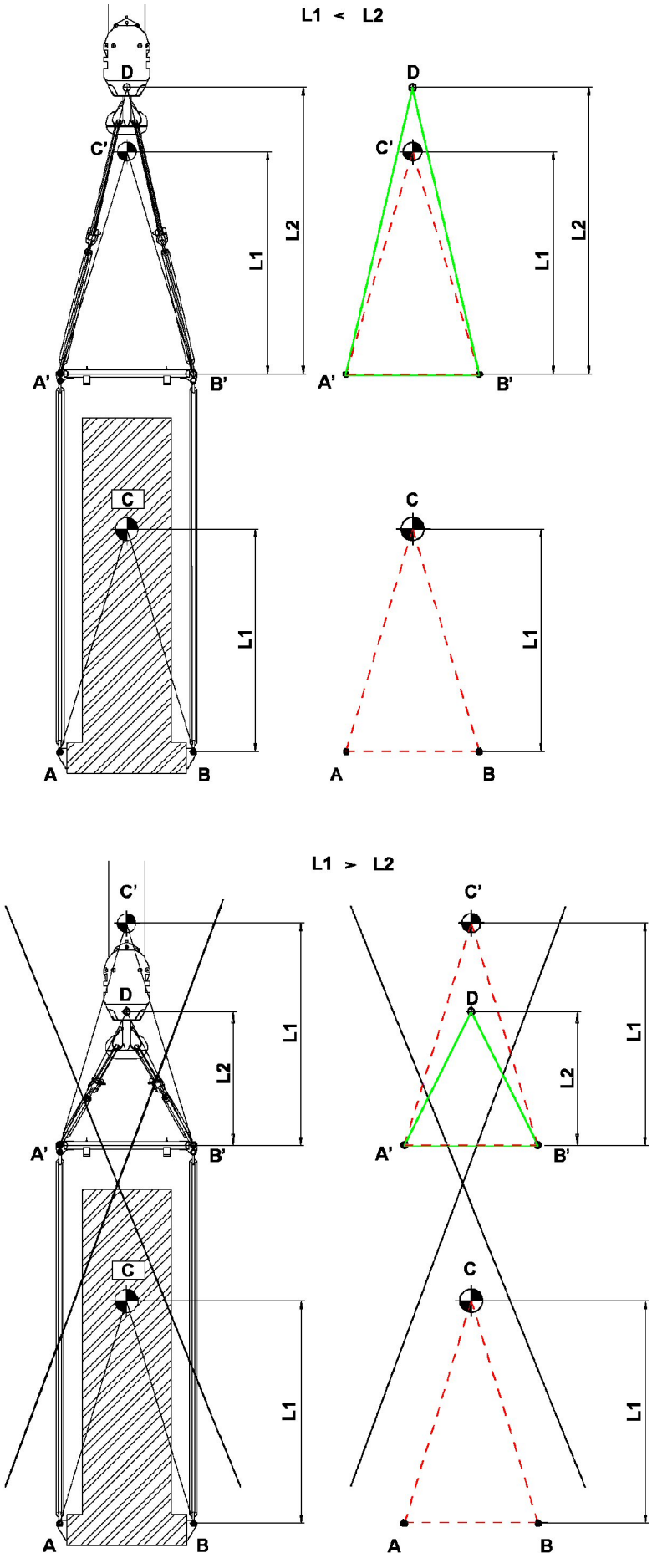
L1 < L2
D
C'
L1
L2
A'
B'
C
L1
A
B
D
C'
L2
L1
A'
B'
C
L1
A
B
L1 > L2
C'
D
L2
L1
A'
B'
C
L1
A
B
C'
D
L2
L1
A'
B'
C
L1
A
B

B116274

4.2 Load take up with cross bar

Cross bars are load lifting equipment between crane hook and load.
The distance of the center of gravity **L1** is the vertical dimension from the fastening point of the load to the center of gravity of the load.
The cross bar height **L2** is the vertical dimension from the point of rotation of the crane hook to the next lower linkage point of the cross bar.

WARNING
Tipping of load to the side!
If fastening ropes are used which are too short, so that the load center of gravity is above the fastening point, then there is a danger of the load tipping to the side!
Personnel can be severely injured or killed!
- ▶ The load center of gravity must be below the crane hook.
- ▶ The distance of the center of gravity **L1** must be smaller than the cross bar height **L2** (L1 < L2).
- ▶ The triangle **A'B'C'** must be within the triangle **A'B'D**.

4.3 Transporting the hook block

WARNING
Danger of accident!
If a hook block is fastened incorrectly for transport, personnel can be injured!
- ▶ Fasten the hook block for transport on the fixed point in the center!
- ▶ Fastening the complete hook block on the auxiliary weights is prohibited!

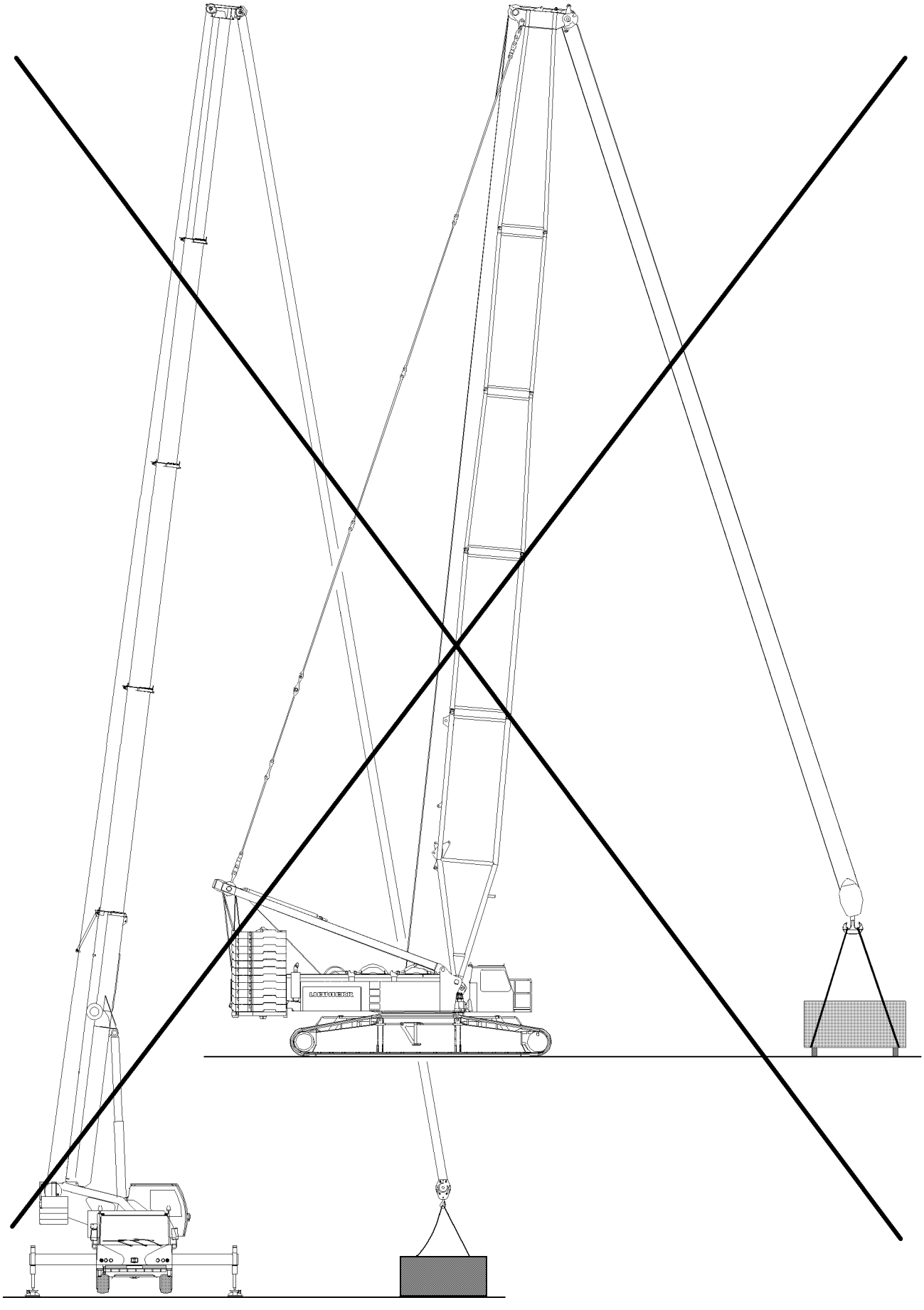

B102716

4.4 Lifting the load

WARNING
Danger of crushing for people in the load zone!
If personnel are located between the load to be lifted and a possible interfering edge (such as a wall of a building or similar) when the load is lifted, personnel can be severely injured or killed!
- ▶ Before lifting the load it must be ensured that there are no persons within the danger zone!
- ▶ It is prohibited for anyone to remain in the danger zone!
- ▶ It is prohibited for anyone to be under the load! Keep a safety distance!
- ▶ Swinging of the load is prohibited!
- ▶ Exercise extreme caution when lifting a load!

WARNING
The crane can topple over!
If an attempt to lift a load above the hoist gear causes the LICCON overload protection to turn off, then the load may not be lifted by luffing up the boom. This leads to overloading and toppling of the crane!
Personnel can be severely injured or killed!
- ▶ Do not lift the load by luffing up the boom from the ground!

Note
When using the assembly winch* observe the following:
- ▶ Use the assembly winch* only for assembly and not for lifting loads!
- ▶ Lifting of loads with the auxiliary winch is prohibited!

If the fastening rope is manually attached by an assistant to the load to be lifted:
- – Make sure that the assistant's hands are not crushed by the tightened ropes between the load and the fastening rope.
- – Make sure that the assistant's body parts (hands, legs etc.) are not crushed by a swaying movement of the load during lifting.

4.5 Angular pulling

WARNING
The crane can topple over!
Angular pulling can destroy the crane or cause it to topple over!
Personnel can be severely injured or killed!
- ▶ Attach (hang) the hook block always vertically over the center of gravity of the load to be lifted!
- ▶ Do not use the slewing gear to pull and set up loads!
- ▶ Angular pull is prohibited!

The crane is designed only to lift loads vertically. During angular pulling, regardless of whether this is done in the same direction as the boom or laterally, horizontal forces are generated in addition to the vertical forces, for which the boom is not designed.

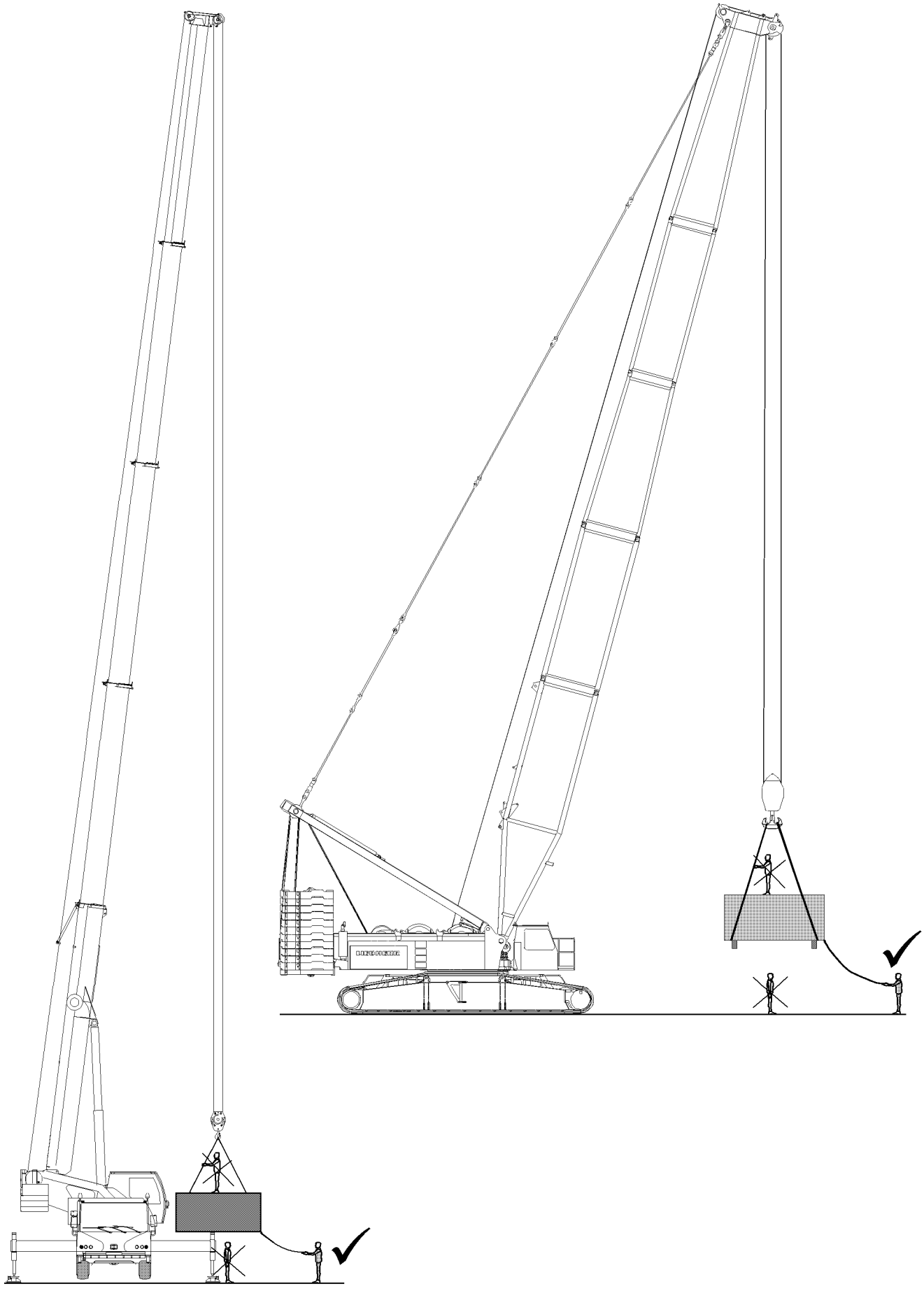

B102717

4.6 Breaking away fixed loads

WARNING
The crane can topple over!
Ripping stuck loads free can destroy the crane or cause it to topple over!
Personnel can be severely injured or killed!
▶ Ripping stuck loads free is prohibited!

5 Crane operation

The maximum load capacity of the crane is not just limited by the stability, but in many cases a load-bearing component breaks when the crane is overloaded **before** the crane topples over. Components that are susceptible to buckling such as the telescopic boom may fail suddenly **without showing signs of distortion beforehand** if the crane is overloaded.

WARNING
Danger of accidents for cranes with luffing cylinders!
When the luffing cylinder is on block position, the overload protection is not functioning!
▶ Crane operation at block position of luffing cylinders is prohibited!

5.1 General

A suspended load must always be kept under control. A fundamental requirement for this is the safe and delicate control of the crane's functions.

WARNING
Risk of accident due to swaying loads!
A swaying load can damage the crane and cause it to topple!
▶ All crane movements must be executed slowly and delicately!
▶ Initiate all crane movements slowly!
▶ Apply the brakes slowly in all crane movements!
▶ Crane operation with swaying loads is prohibited!

NOTICE
Damage of rope pulleys!
▶ Place down hook blocks, booms, folding jibs, auxiliary booms and boom noses in such a way that the rope pulleys do not lie on the ground and are damaged!

5.2 Guiding the load

The use of guide ropes is recommended to help the crane operator to manage the load more precisely and to prevent the load from swaying. This will prevent undesirable movements of the load and consequent damage.

5.3 Danger of being crushed!

WARNING
Danger of fatal injury!
Extreme care is needed when lowering a load! Mortal danger exists for personnel in the immediate area of the load being lowered!
Personnel can be severely injured or killed!
▶ Standing under a suspended loads is strictly prohibited!

5.4 Danger of falling!

WARNING
Danger of fatal injury!
If persons are on the suspended load, then they can fall down and be severely injured or killed!
- ▶ Remaining on a suspended load is strictly prohibited.
- ▶ Remaining on or within crane components (for example: At assembly of boom sections, lattice sections) which are moved during lifting, lowering, turning or closing procedures is strictly prohibited.

5.5 Working in the vicinity of electricity transmission lines

If there are electricity transmission lines in the immediate vicinity of the building site, then the electrical transmission lines must be turned off by qualified electricians. If this is not possible, the danger area must be covered over or cordoned off.

WARNING
Danger of current transfer!
If electricity transmission lines are not shut off nor covered nor blocked off, then there is an increased danger due to current transfer!
- ▶ Adhere to a safety distance of at least 6 m!

If the crane becomes electrified despite having taken all necessary precautions, proceed as follows:
- ▶ Remain calm!
- ▶ Do not leave the crane cab!
- ▶ Warn people outside: Stay in place and do not touch the crane!
- ▶ Move the crane out from the danger zone!

5.6 Ram work or pulling sheet piles

Vibration can be transmitted to the supporting steel structure of the crane during ram work or when pulling sheet piles with the crane. This vibration can cause premature fatigue of the material and therefore cracks in the supporting steel structure.

DANGER
Important instructions for “ram work” or “pulling sheet piles”!
If the crane is used for ram work or pulling sheet piles, then the following instructions must be followed. Failure to follow the instructions can result in damage to the crane.
- ▶ The ramming equipment may not pass on vibrations into the boom!
- ▶ When pulling sheet piles, the maximum pull force of the crane is limited according to the load chart! Restricting the maximum pull force via the crane overload protection **only** is prohibited! The pull force must be additionally checked by measuring.

blank page!

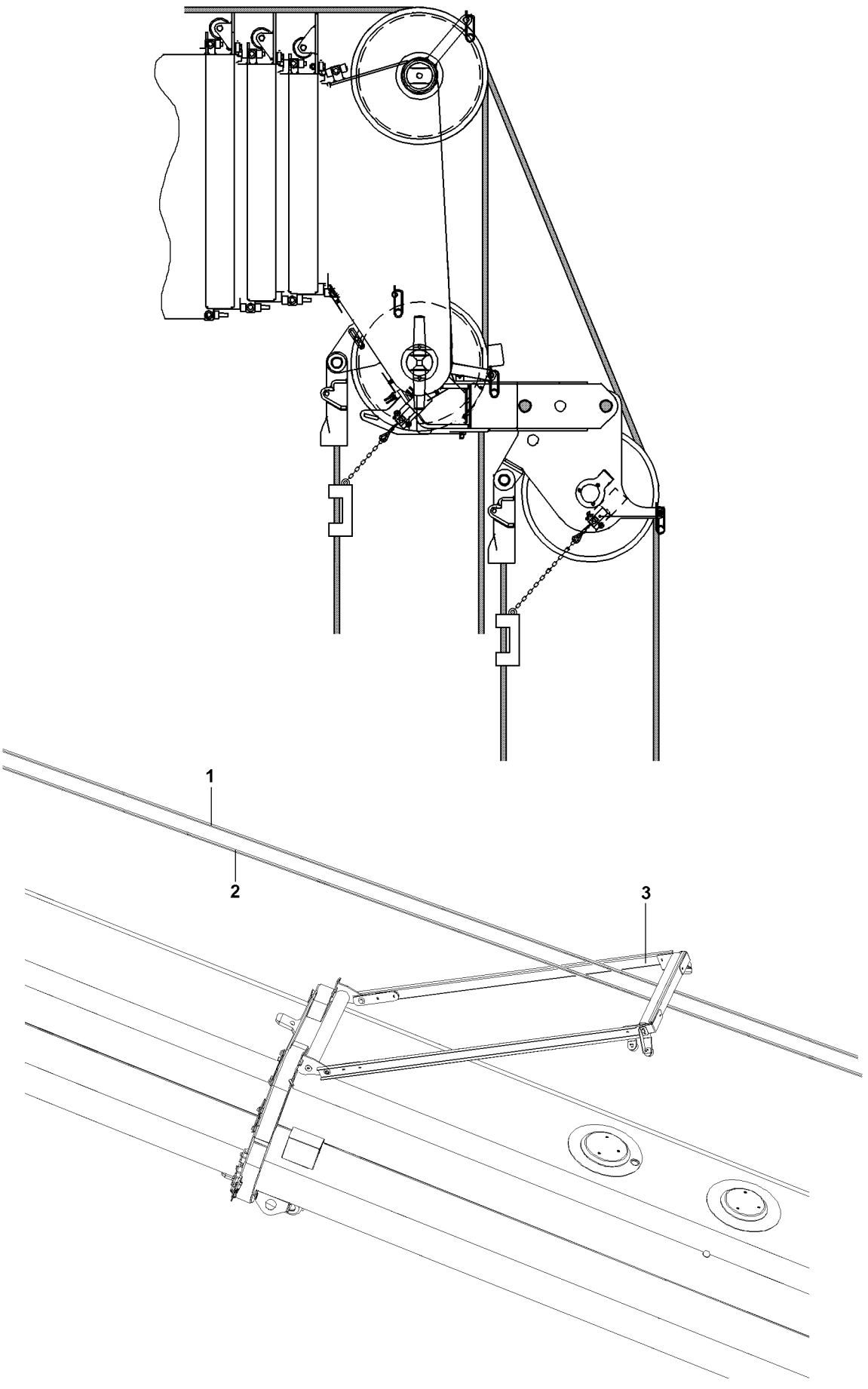

B108770

1 General

In 2-hook operations there is a difference between:

1.) Operations with a boom nose* on the telescopic boom
2.) Operations with a boom nose* on the lattice jib
3.) Operations with a boom extension (folding jib, auxiliary boom, luffing jib)

1.1 Operations with a boom nose* on the telescopic boom

NOTICE
Danger of damage on the hoist ropes!
When reeving in, the hoist rope **1** and hoist rope **2** must be guided through the bracket **3** on the telescopic boom!
▶ Guide the hoist rope **1** and hoist rope **2** through the bracket **3** on the telescopic boom.

This option is set up for rapid hoists over the boom nose, whereby the hook block reeved on the telescopic boom can remain reeved.
No special loading tables are available for boom nose operations. The boom nose is generally run in the telescopic boom operating mode.

DANGER
Danger of accidents because of imprecise radius and load displays.
▶ When operating with the boom nose, the overload protection radius and load display is not precise, because the boom nose is not taken into account in the boom geometry.

▶ Set the operating mode of the telescopic boom to overload protection.

DANGER
Danger of accidents because of overloading the hoisting gear or the hoisting cable!
Overload protection is only achieved when the reeving on the telescopic boom is equal to, or greater than, the reeving on the mast boom.
▶ Set the overload protection to the smaller reeving of the two hooks.

The weight of the hook blocks (load hook), the boom nose and the lifting accessories must be added to the load to be lifted.
Setting this to the smaller reeving of the two hooks ensures that the crane cannot be overloaded.
▶ Enter the cable reeving that corresponds to the actual reeving on the mast nose.

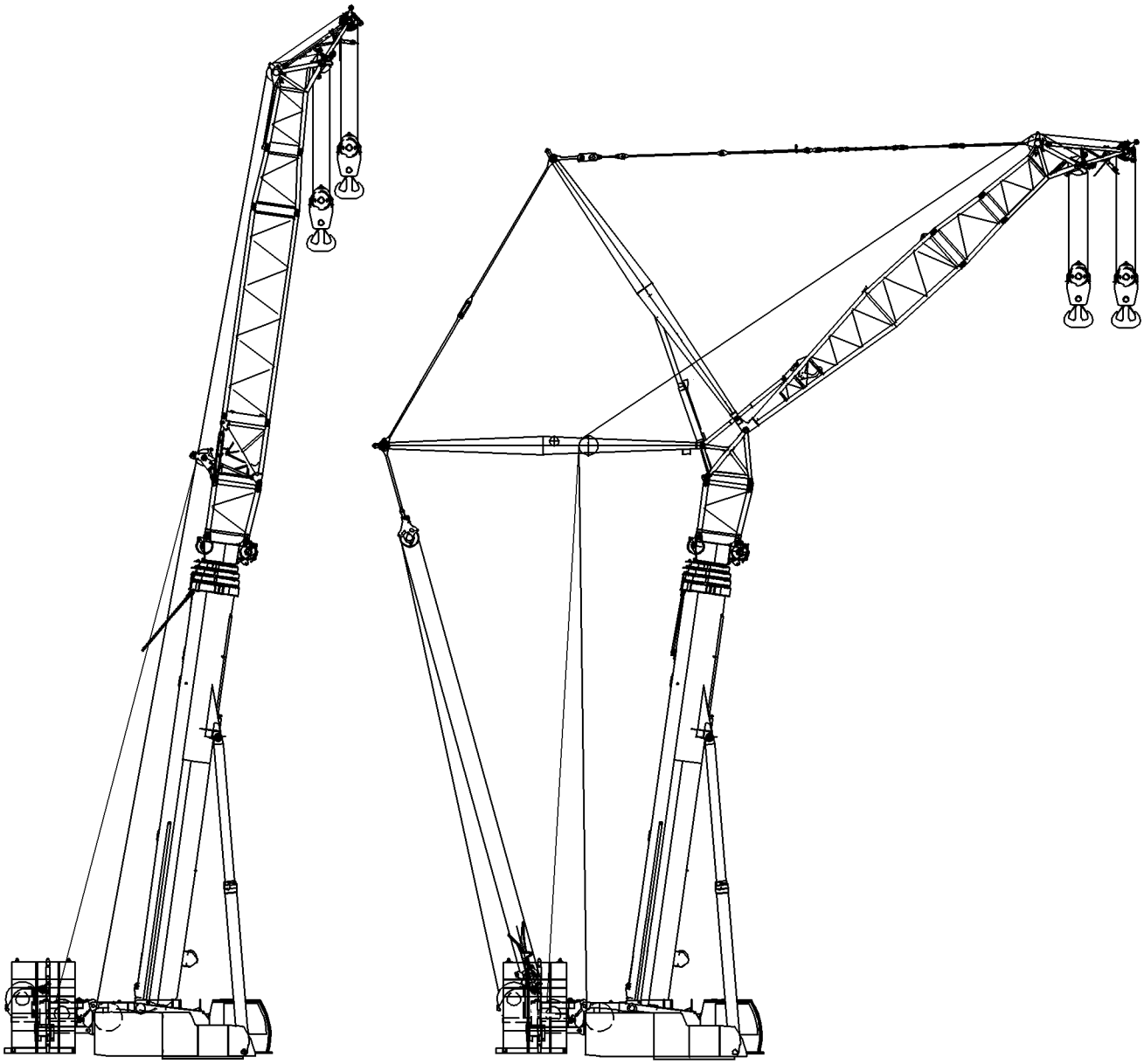

B195475

1.2 Operations with a boom nose* on the lattice jib

This option is set up for rapid hoists over the boom nose, whereby the hook block reeved on the lattice jib can remain reeved.
No special loading tables are available for boom nose operations. The boom nose is generally extended in the lattice jib operating mode.

DANGER
Danger of accidents because of imprecise radius and load displays.
▶ When operating with the boom nose, the overload protection radius and load display is not precise, because the boom nose is not taken into account in the boom geometry.

▶ Set the operating mode of the lattice jib to overload protection.

DANGER
Danger of accidents because of overloading the hoisting gear or the hoisting cable!
Overload protection is only achieved when the reeving on the lattice jib is equal to, or greater than, the reeving on the mast boom.
▶ Set the overload protection to the smaller reeving of the two hooks.

The weight of the hook blocks (load hook) and the lifting accessories must be added to the load to be lifted.
Setting this to the smaller reeving of the two hooks ensures that the crane cannot be overloaded.
▶ Enter the cable reeving that corresponds to the actual reeving on the mast nose.

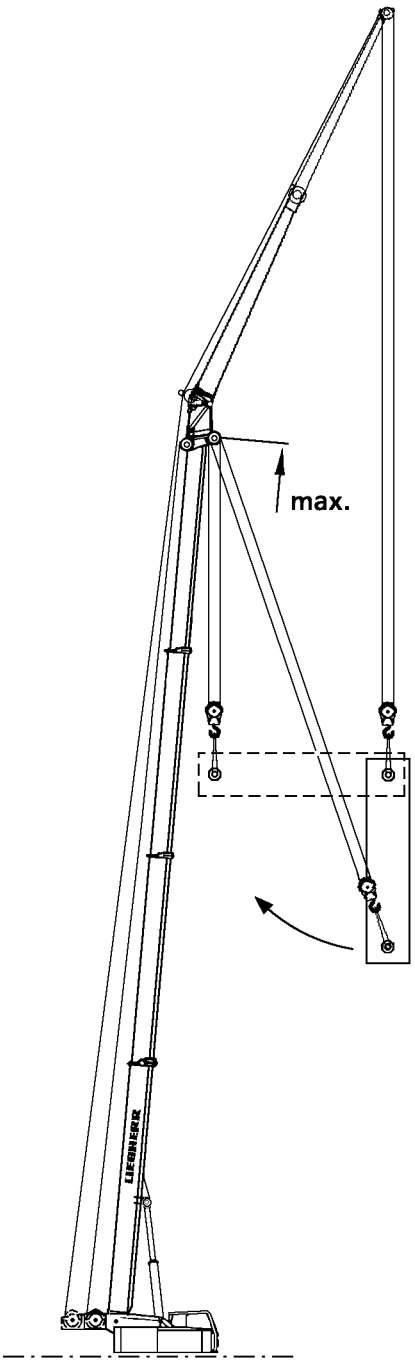

Va. 1

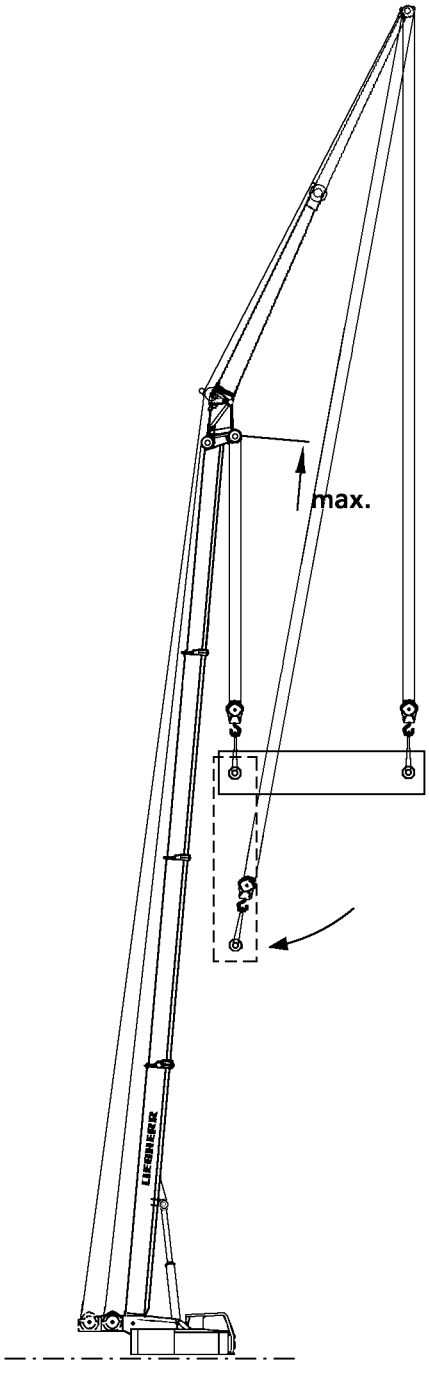

Va. 2

B180647

1.3 Operations with a boom extension (folding jib, auxiliary boom, luffing jib)

This option is set up for turning loads during the simultaneous operation of both sets of hoisting gear.

Note
Raising the load
- ▶ The load must always be raised or lowered using the weakest component (folding jib, auxiliary boom, luffing jib) initially at 100%

- ▶ In “2-hook operations” with a boom extension (folding jib, auxiliary boom, luffing jib), the overload protection must be set to the operating mode boom extension (folding jib, auxiliary boom, luffing jib).

DANGER
Risk of accident by overloading the hoisting gear or hoisting cable!
- ▶ The reeving on the boom must be equal to or greater than the reeving on the boom extension (folding jib, auxiliary boom, luffing jib).

- ▶ Enter the reeving that corresponds to the existing reeving on the boom extension (folding jib, auxiliary boom, luffing jib) into the overload protection.

In this case, the maximum permissible total load corresponds to the maximum permissible load in the corresponding loading table for operating with the boom extension (folding jib, auxiliary boom, luffing jib).
The weight of the hook blocks (load hook) and the lifting accessories must be added to the load to be lifted.

Note
Radius display
- ▶ The radius is displayed, depending on the boom extension (folding jib, auxiliary boom, luffing jib) entered.
- ▶ The load-bearing capacity for each hook in “2-hook operations” is the permissible load in the corresponding loading table for operating with a boom extension (folding jib, auxiliary boom, luffing jib).
- ▶ In 2-hook operations, the total load is the permissible load in the corresponding loading table for operating with a boom extension (folding jib, auxiliary boom, luffing jib).

DANGER
Risk of accident from overloading individual components on the crane!
- ▶ Lifting a load with two hooks is only permissible if done as shown in the illustrations Va. 1 and Va 2.

DANGER
Danger of accidents
- ▶ If both hooks are loaded, it is forbidden to lower the boom!
- ▶ In those circumstances, safety cover from the overload protection is not available.
- ▶ This is why the load must always be picked up at the maximum radius.

As soon as the inner hook is pulled, the overload protection load display is wrong!
- ▶ If a load is raised as shown in Va. 1, the load must first be fully lifted to 100% with the hook furthest away.

B195219

1 Reeving plans

Note

▶ See separate reeving plans!

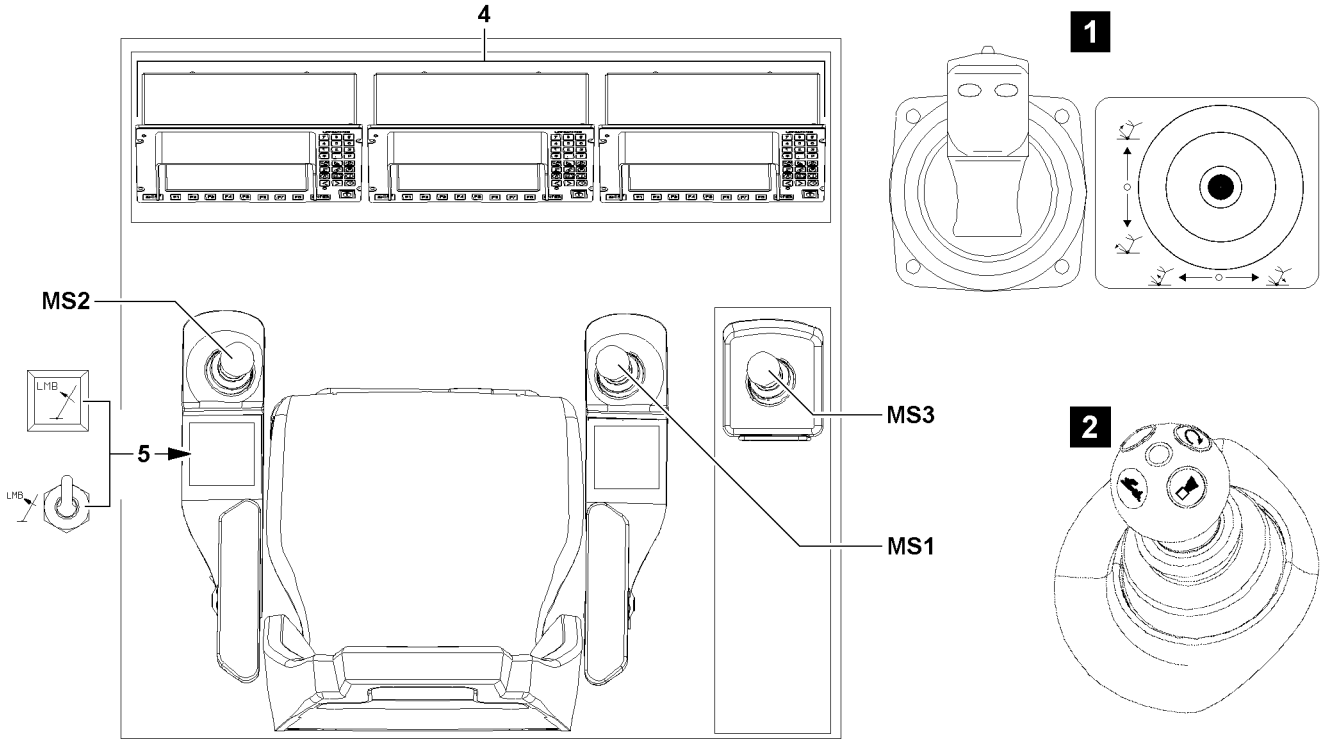
4
1
MS2
LMB
5
LMB
MS3
MS1
2

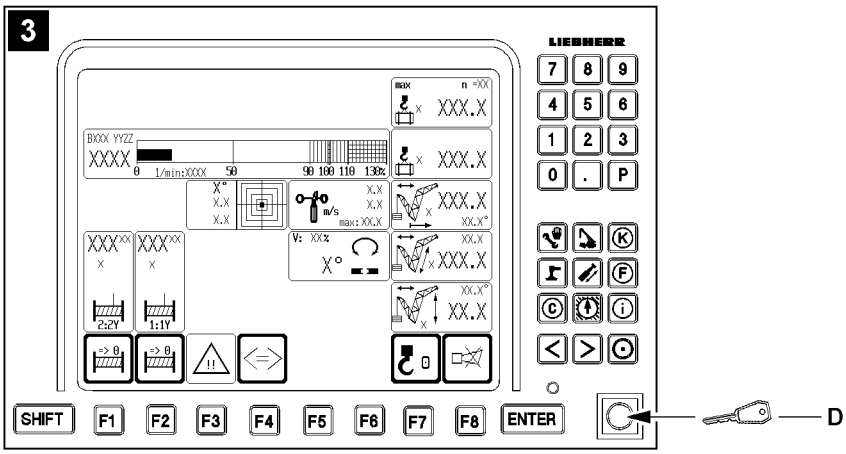
3
LIEBHERR
SHIFT
F1
F2
F3
F4
F5
F6
F7
F8
ENTER
D

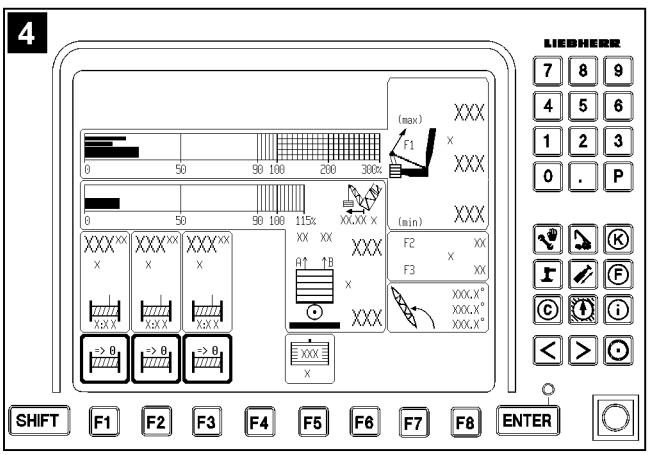
4
LIEBHERR
SHIFT
F1
F2
F3
F4
F5
F6
F7
F8
ENTER

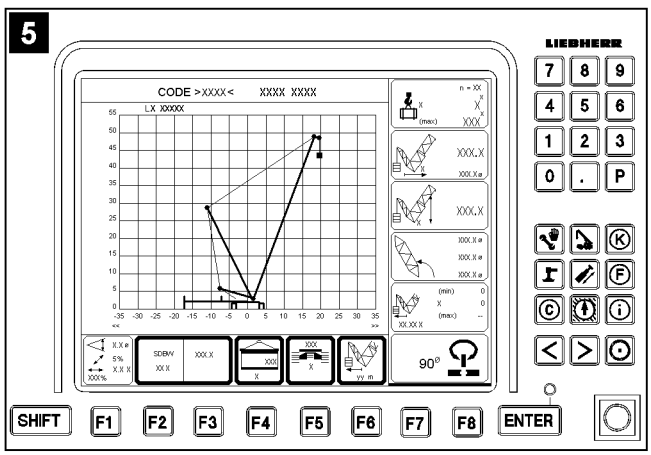
5
LIEBHERR
CODE >XXXX<
SHIFT
F1
F2
F3
F4
F5
F6
F7
F8
ENTER

B112332

1 General

To operate the crane, three manually actuated master switches (MS1, MS2, MS3) are available.
– Master switch **MS1**
  • Right control console
– Master switch **MS2**
  • Left control console
– Master switch **MS3**
  • Right instrument panel

To monitor the crane, depending on the crane type, two or three LICCON monitors **4** are in the instrument panel.
– LICCON monitor, illustration **3**
  • User interface for entry of equipment configurations and for crane operation (crane operating screen), also described as LICCON monitor 0
– LICCON monitor, illustration **4**
  • User interface for operation with “Derrick” boom, also described as LICCON monitor 1
– LICCON monitor, illustration **5**
  • User interface for “LICCON job planner” (only for crane types with three monitors), also described as LICCON monitor 2

Equipment in the crane cab		
Crane type	**Manually actuated master switches**	**LICCON monitors**
LR 1350/1	Three (version illustration **2**)	Two (three*)
LR 1400/2	Three (versions illustration **1**)	Two
LR 1600/2	Three (version illustration **2**)	Three
LR 1750	Three (version illustration **2**)	Three
LG 1750	Three (version illustration **2**)	Three
LR 11350	Three (version illustration **2**)	Three

In the crane operator's cab, two buttons are installed to make it possible to bring the crane from an emergency situation after a shut off of the LICCON overload protection.
– Set up key **D** (Function “Exceeding the shut off limits for the LICCON overload protection”) on the LICCON monitor with crane operating screen, illustration **3**
– Button **5** “Luffing in with suspended load” in the left control console

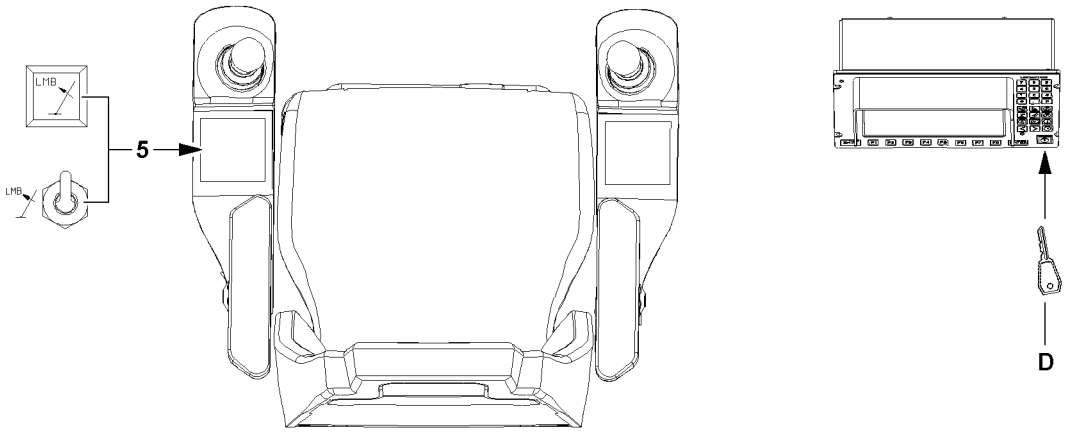

B112333

The function “Exceedance of shut off limits of the LICCON overload protection”, which is activated with the set up key **D** includes the following:

– Exceedance of the maximum permissible load moment
– Bypass of the hoist top shut off
– Exceedance of limit values from load charts
– Exceedance of maximum value test point 1 (force F1)
– Allowance of individual, limited crane movements after LMB STOP (error message)
– Completion of crane movements outside of load charts (erection / take down procedures)

NOTICE

Multi action function “Exceedance of shut off limits of the LICCON overload protection”

If the set up key **D** is actuated, then it is possible to exceed several shut off limits of the LICCON overload protection simultaneously!

The LICCON overload protection as a whole is deactivated or limited.

There is no additional protection against crane overload!

▶ When the set up key **D** is actuated, it must be taken into account that the LICCON overload protection as a whole is deactivated or limited.

Note

The set up key **D** has two functions, independent of each other:

▶ If no crane movement can be carried out due to the shut off of crane operation by the LICCON overload protection, then by pressing the set up key **D**, a 100 % utilization can be exceeded and / or an active shut off can be bypassed. The crane can thereby be controlled again in normal operating status (utilization below 100 % and no active shut off).

▶ When the set up key **D** is actuated, all erection / take down procedures can be carried out within the erection / take down charts (assembly operation).

WARNING

Danger of accident due to function “Exceedance of shut off limits of the LICCON overload protection”!

If the shut off limits of the LICCON overload protection are exceeded, there is no additional protection against crane overload!

Due to erroneous operation or deliberate misuse, the crane could collapse, the boom can break off or the crane can topple over!

Personnel can be severely injured or killed!

- The button **5** “Luffing in with suspended load” and the set up key **D** may only be actuated when it is ensured that no normal operating condition (utilization below 100 % and no active shut off) can be reached without the function “Exceedance of shut off limits of the LICCON overload protection”!
- Actuate the set up key **D** only when no normal operating condition (utilization below 100 % and no active shut off) can be reached with the button **5** “Luffing in with suspended load”!
- The function “Exceedance of shut off limits of the LICCON overload protection” is only permissible in emergencies and for assembly purposes!
- The set up key **D** may only be actuated by persons who are aware of the effects of their acts regarding the function “Exceedance of shut off limits of the LICCON overload protection”!
- The function “Exceedance of shut off limits of the LICCON overload protection” requires the presence of an authorized person and must be performed with utmost caution!
- Crane operation with activated function “Exceedance of shut off limits of the LICCON overload protection” is prohibited!

WARNING

Expanded working / danger zone of the crane!

Due to the function “Exceedance of shut off limits of the LICCON overload protection” it is possible that the working / danger zone of the crane is significantly expanded!

If these circumstances are not observed, collisions and accidents can occur!

Personnel can be severely injured or killed!

- With activated function “Exceedance of shut off limits of the LICCON overload protection” take an expanded working / danger zone of the crane into account and monitor it!

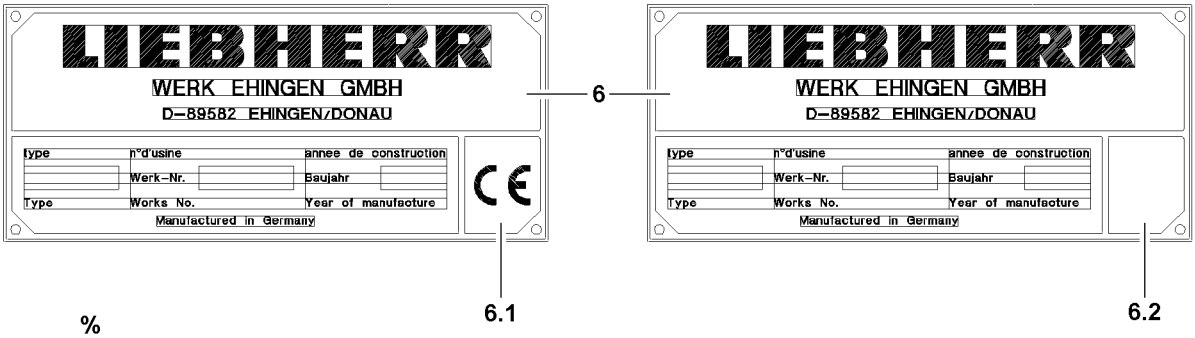
LIEBHERR
WERK EHINGEN GMBH
D-89582 EHINGEN/DONAU
type
n°d'usine
annee de construction
Werk-Nr.
Baujahr
Type
Works No.
Year of manufacture
Manufactured in Germany
6
6.1
6.2

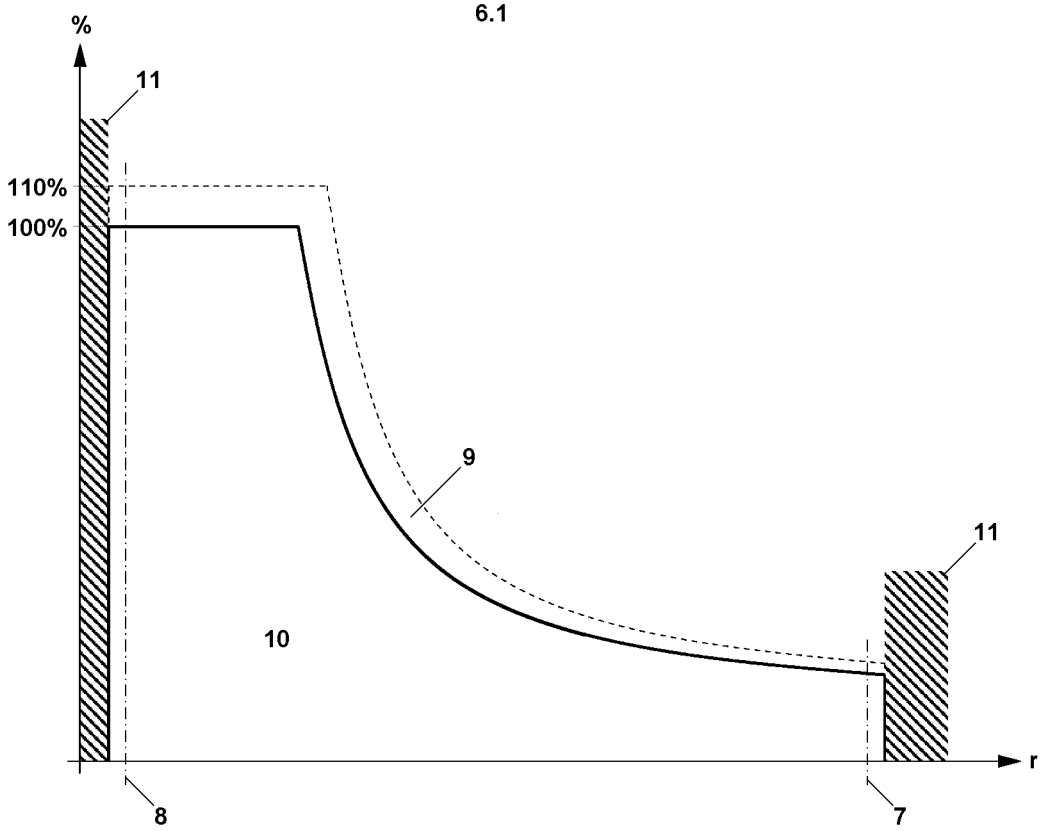
%
11
110%
100%
9
10
11
r
8
7

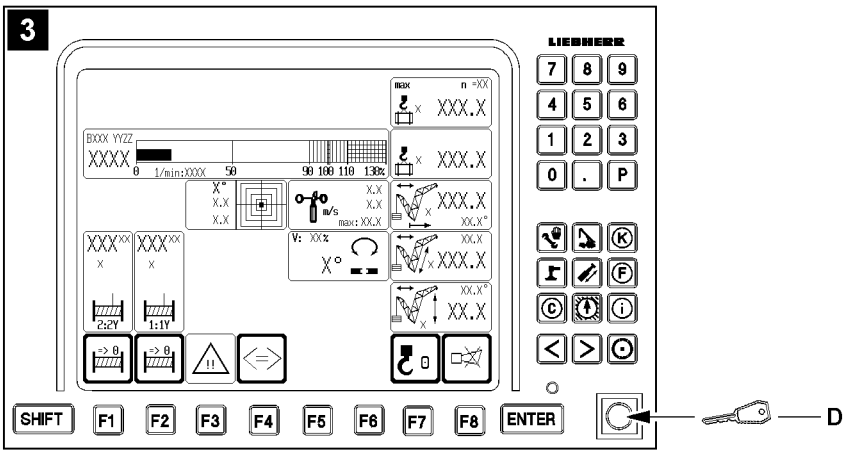
3
LIEBHERR
SHIFT
F1
F2
F3
F4
F5
F6
F7
F8
ENTER
D

B111211

2 Instructions for resuming crane movements for cranes with CE mark

WARNING
Risk of accident!
If the following points are not observed, personnel can be severely injured or killed.
- The crane operator bears the sole and full responsibility for the adherence to measures to be taken in case of shut off of crane movement!
- The crane operator must make sure, before crane operation, that he is using the correct description for the current programming!

Note
- Check the data tag **6** to determine if your crane has a CE mark!
- The following section applies to a crane with CE mark, see data tag **6.1**!
- If your crane does not have a CE mark, see data tag **6.2**, then you must observe the description in section “Instructions for resuming a crane movement for cranes without CE mark”!

2.1 Overview load chart for cranes with CE mark

Axle	Description
r	Radius boom (working radius)
%	Utilization of the crane in percentages

Position	Description
7	Lower limit angle load chart
8	Upper limit angle load chart
9	Utilization up to 110 % with reduced working speed
10	Area “Load chart available”
11	Area “No load chart available”

Note
- If the set up key **D** (LICCON monitor with crane operating screen, illustration **3**) is actuated in the area “Load chart available”, then the working speed is reduced and all displays of the LICCON overload protection remain functional!
- If the set up key **D** is actuated in the area “No load chart available”, then the working speed is not reduced!

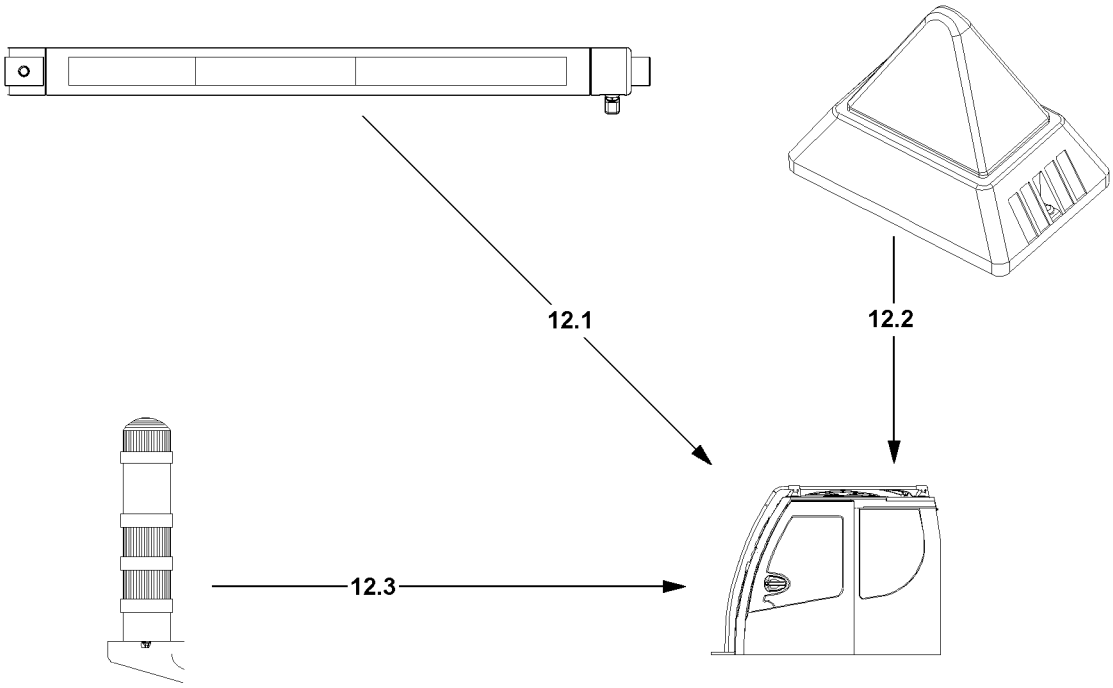

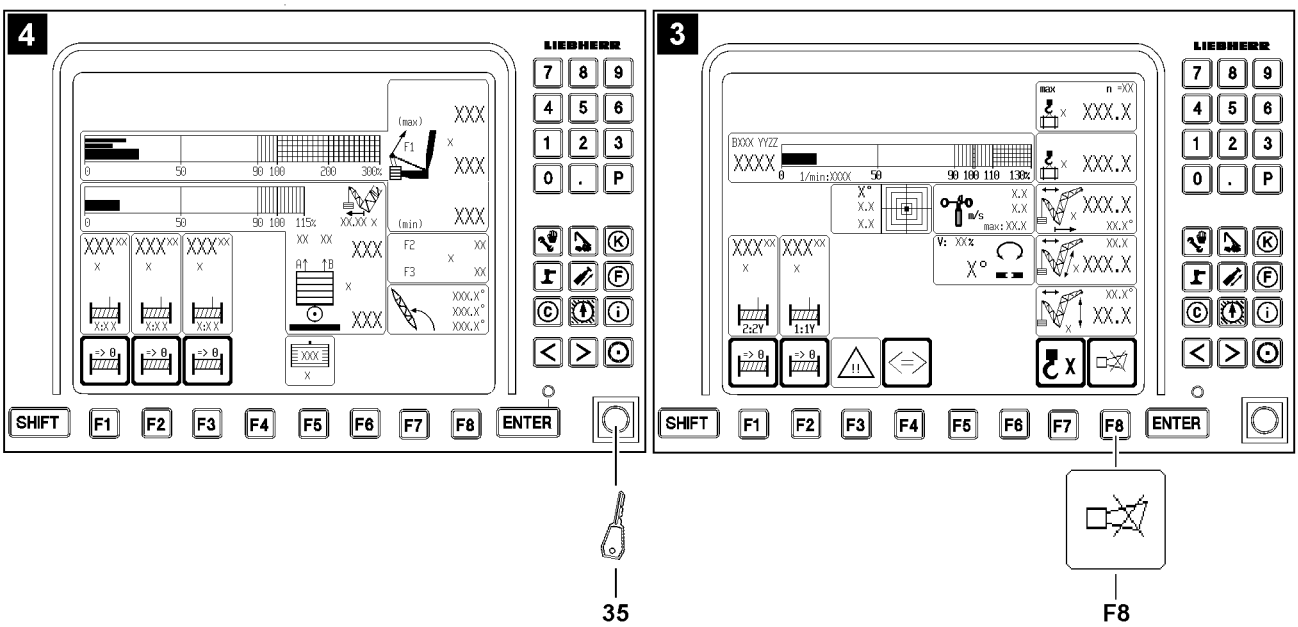

B111212

2.2 Overview of acoustic / visual warnings for cranes with CE mark

- Depending on the crane type, either a warning light **12.1** or a flashing beacon **12.2** or a combination of flashing beacon **12.2** and warning light* **12.3** are installed.
- The acoustic warnings within the crane operator's cab are turned off by pressing the button **F8** on the LICCON monitor with crane operating screen (illustration **3**).
- The acoustic warnings outside the crane operator's cab are turned off by actuating the key button **35** on the LICCON monitor with derrick operating screen (illustration **4**).

2.2.1 Description of acoustic / visual warnings

The case numbers from the chart “Overview of case numbers” are valid for the following charts in this chapter:

- “Acoustic / visual warnings on the LICCON monitor”
- “Warning light 12.1”
- “Flashing beacon 12.2”
- “Warning light 12.3”

Overview of case numbers	
Case number	**Description Case**
Case 001	Utilization of crane from 0 % to 89 %
Case 002	Utilization of crane from 90 % to 100 %
Case 003	Utilization of crane over 100 %
Case 004	Shut off of crane movements - LMB STOP
Case 005	Luffing in with suspended load
Case 006	Participating sensor (LMB) defective
Case 010	Exceeding the shut off limits of the LICCON overload protection
Case 011	Bypass of shut off hoist top
Case 016	Bypass of shut off luffing down the boom / auxiliary boom / accessories, “Load chart available”
Case 018	Bypass of shut off luffing down the boom / auxiliary boom / accessories, “No load chart available”
Case 020	Exceeding the shut off limits of the LICCON overload protection during erection / take down procedures, “No load chart available”

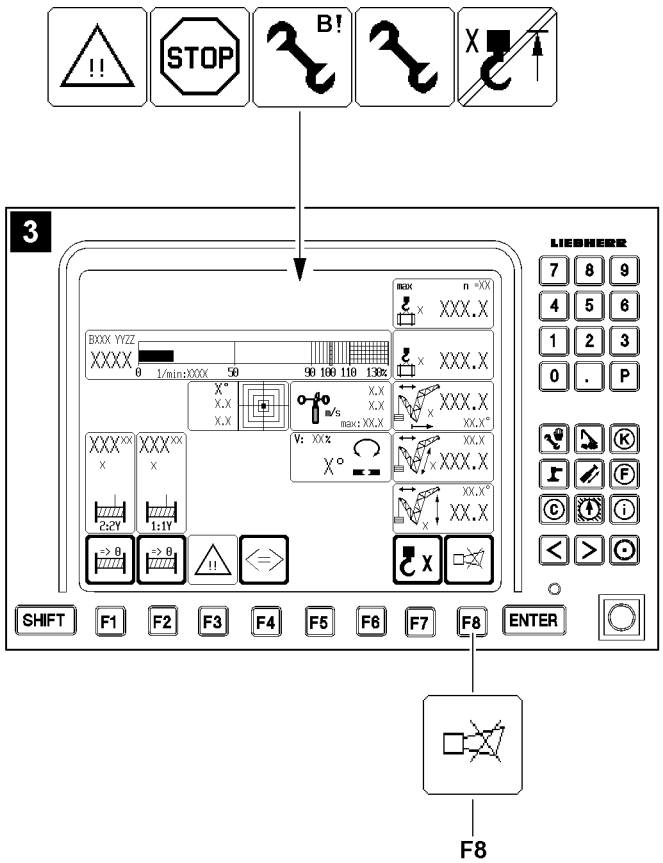

B111209

2.2.2 Acoustic / visual warnings within the crane operator's cab

Note
▶ Description of individual case numbers, see chart “Overview of case numbers”!

Acoustic / visual warnings on the LICCON monitor									
Case number	**Acoustic warning LICCON monitor at utilization of crane**			**Visual warning LICCON monitor**					
	Short sound	**Long sound**	**Long sound**	**Utilization of crane**		**Occurrence**			
	From 90 %	**Above 100 %**	**Always**	**From 90 %**	**Above 100 %**	**LMB STOP**	**Appears if the set up key D is actuated**		
Case 001							—	—	—
Case 002	X[2]			O			—	—	—
Case 003		X[2]		O	O		—	—	—
Case 004			X[2]		O		—	—	—
Case 005	X[2]	X[2]		O	O		—	—	—
Case 006			X[2]			O	Cannot be bypassed[5]		
Case 010	X[2]	X[2]		O	O		O		
Case 011			X[2]	O	O	O	O		O
Case 016	X[2]	X[2]		O	O		O		
Case 018			X[2]			O		O	
Case 020			X[2]			O		O	

O = cannot be turned off
X[2] = can be turned off immediately on the LICCON monitor key **F8**
Cannot be bypassed[5] = contact Liebherr Service

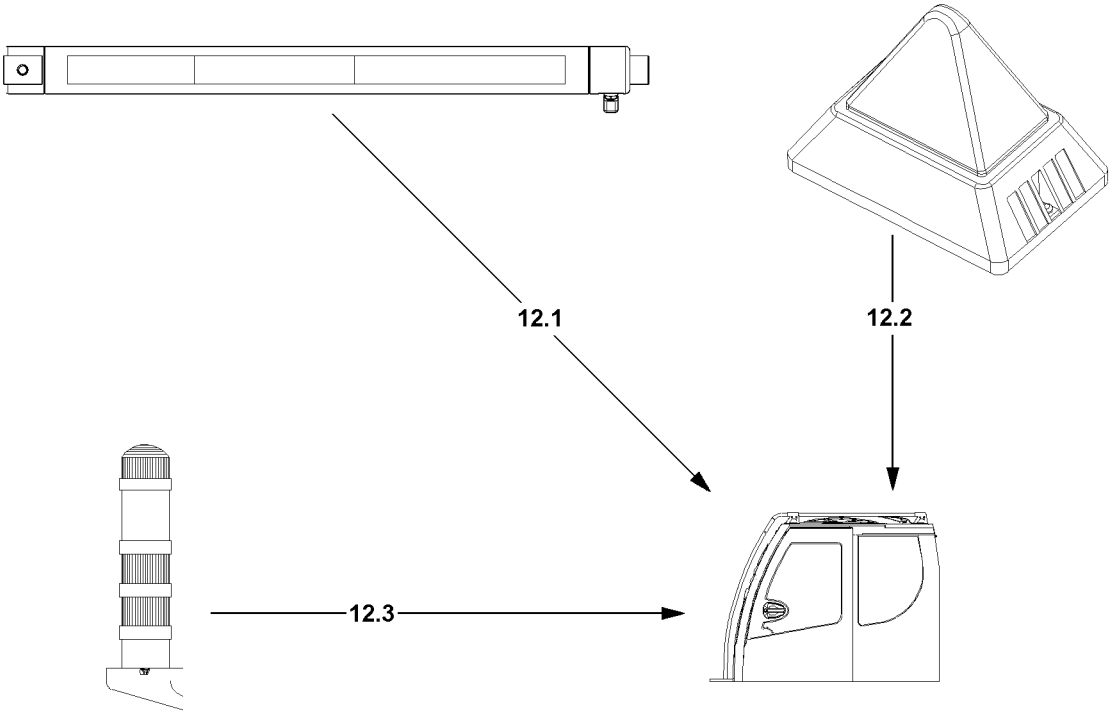
12.1
12.2
12.3

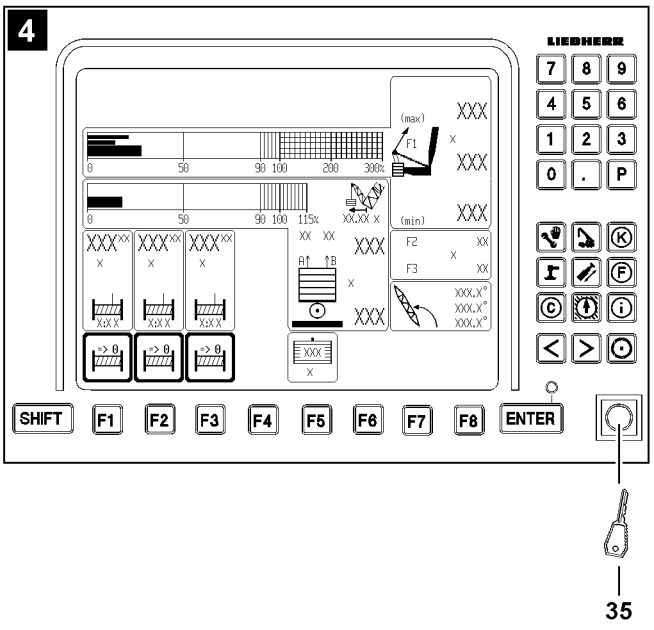
4
LIEBHERR
7 8 9
4 5 6
1 2 3
0 . P
SHIFT
F1
F2
F3
F4
F5
F6
F7
F8
ENTER
35

B111206

2.2.3 Acoustic / visual warnings outside the crane operator's cab

Note
▶ Description of individual case numbers, see chart “Overview of case numbers”!

Warning light 12.1					
Case number	**At utilization of crane**	**Acoustic warning**	**Visual warning**		
		Signal turntable	**Green**	**Yellow**	**Red**
Case 001	From 0 % to 89 %		O^1		
Case 002	From 90 % to 100 %			O^1	
Case 003	Above 100 %	X^1			O^1
Case 004	-				O^1
Case 005	From 0 % to 89 %		O^1		
Case 005	From 90 % to 100 %			O^1	
Case 005	Above 100 %	X^1			O^2
Case 006	-				O^1
Case 010	From 0 % to 89 %		O^1		
Case 010	From 90 % to 100 %			O^1	
Case 010	Above 100 % to 110 %			O^2	
Case 010	Above 110 %	X^1			O^1
Case 011	Up to 110 %			O^2	
Case 011	Above 110 %	O			O^2
Case 016	From 0 % to 89 %		O^1		
Case 016	From 90 % to 100 %			O^1	
Case 016	Above 100 % to 110 %			O^2	
Case 016	Above 110 %	X^1			O^1
Case 018	No value available			O^2	
Case 020	No value available			O^2	

O = cannot be turned off
O^1 = warning light **12.1** lights up
O^2 = warning light **12.1** blinks
X^1 = can be turned off by actuating (right touching) the key button **35** on the LICCON monitor with the derrick operating screen (illustration **4**), effective after at least 5 seconds

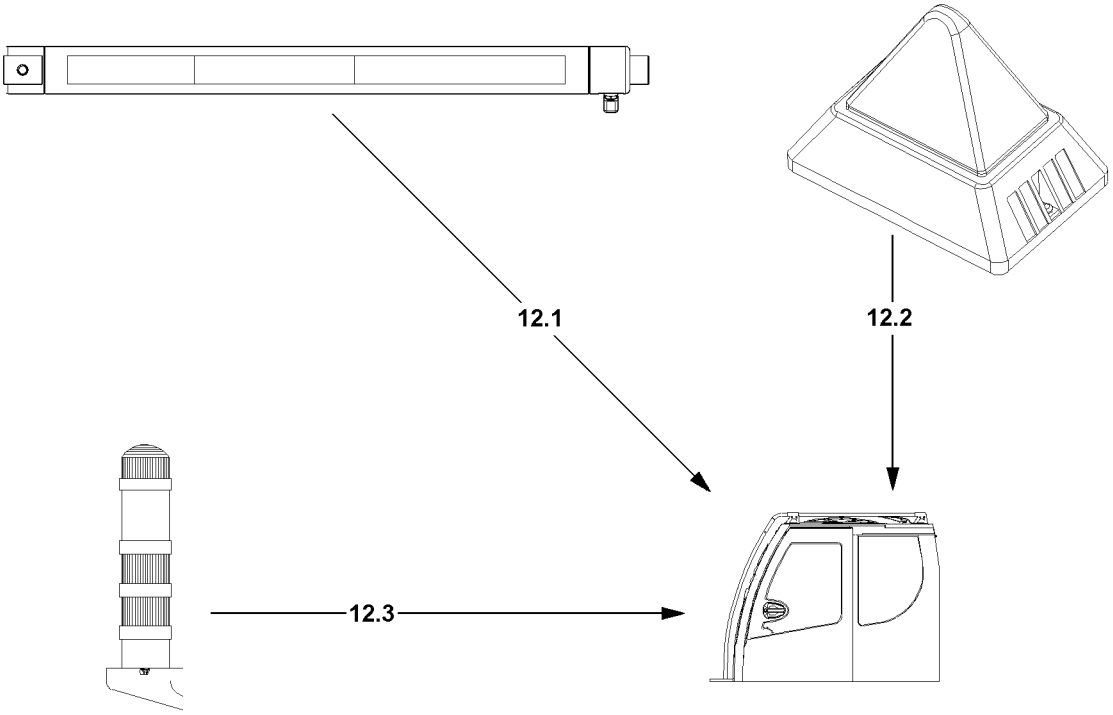
12.1
12.2
12.3

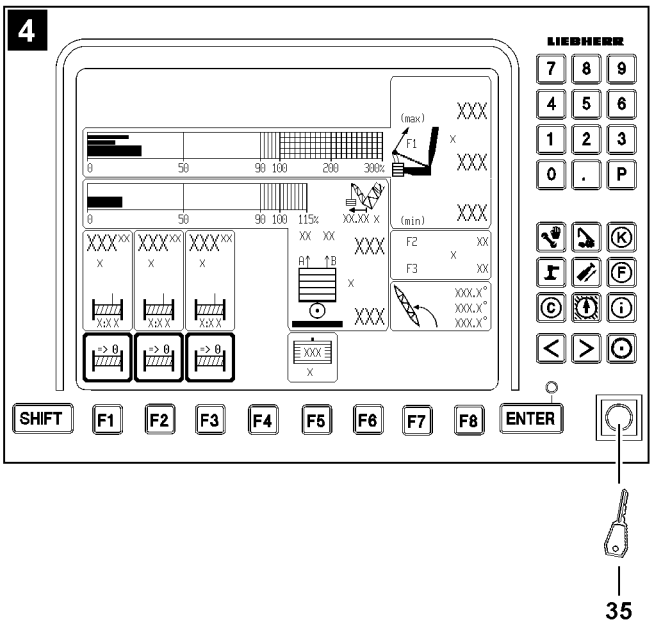
4
LIEBHERR
7 8 9
4 5 6
1 2 3
0 . P
SHIFT
F1 F2 F3 F4 F5 F6 F7 F8
ENTER
35

B111206

Note

▶ Description of individual case numbers, see chart “Overview of case numbers”!

Flashing beacon 12.2			
Case number	**At utilization of crane**	**Acoustic warning**	**Visual warning**
		Signal turntable	**Red**
Case 001	0 % up to 89 %	-	-
Case 002	90 % up to 100 %	-	-
Case 003	Above 100 %	X^1	O^2
Case 004	-		O^2
Case 005	Above 100 %	X^1	O^2
Case 006	-		O^2
Case 010	Above 110 %	X^1	O^2
Case 011	Above 110 %	X^1	O^2
Case 016	Above 110 %	X^1	O^2
Case 018	No value available		O^2
Case 020	No value available		O^2

O = cannot be turned off

O^2 = flashing beacon **12.2** blinks

X^1 = can be turned off by actuating (right touching) the key button **35** on the LICCON monitor with the derrick operating screen (illustration **4**), effective after at least 5 seconds

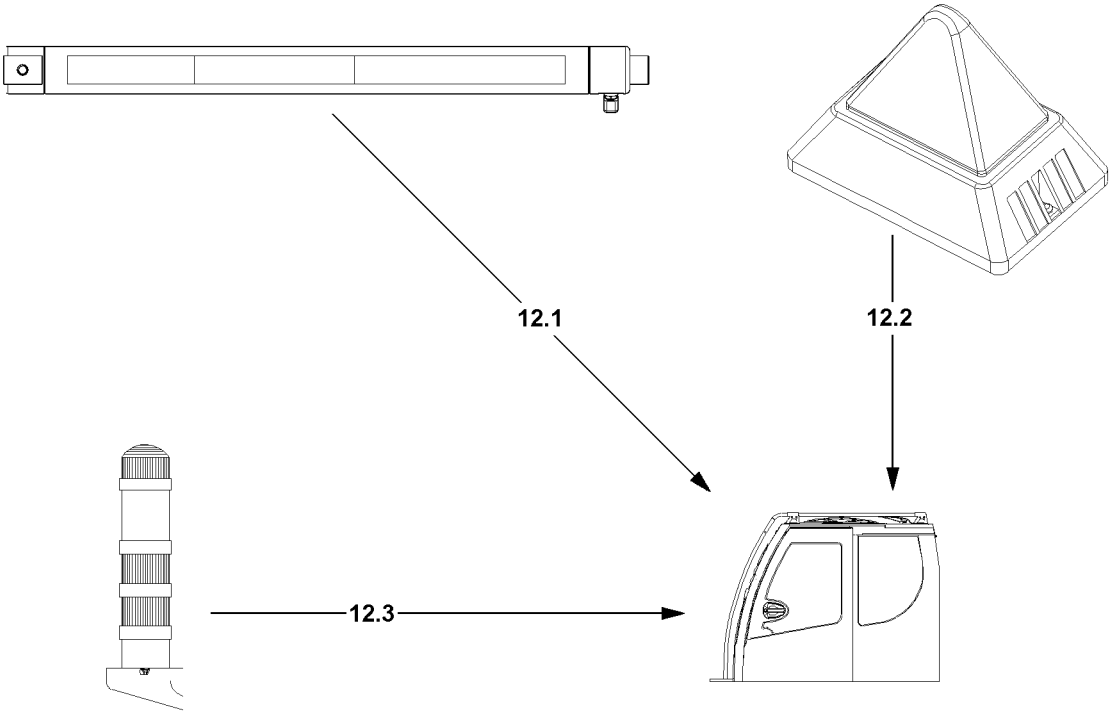

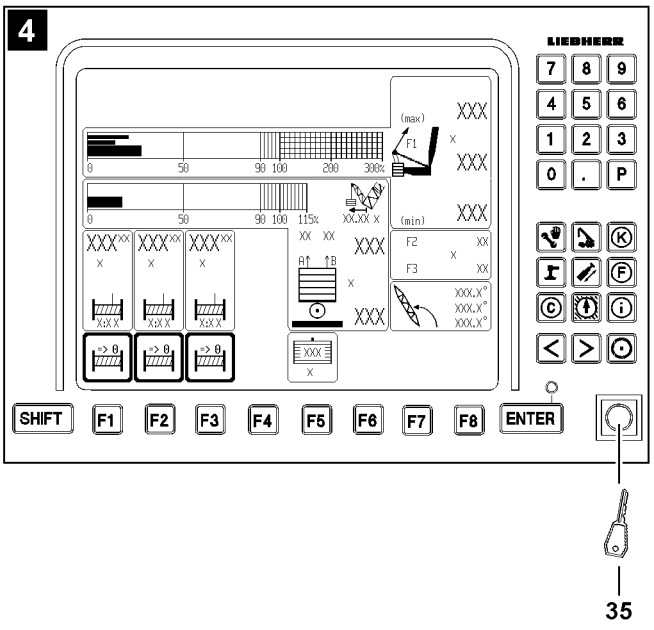

B111206

Note
▶ Description of individual case numbers, see chart “Overview of case numbers”!

Warning light 12.3					
Case number	**At utilization of crane**	**Acoustic warning**	**Visual warning**		
		Signal turntable	**Green**	**Yellow**	**Red**
Case 001	From 0 % to 89 %		O^1		
Case 002	From 90 % to 100 %			O^1	
Case 003	Above 100 %	X^1			O^2
Case 004	-				O^2
Case 005	From 0 % to 89 %		O^1		
Case 005	From 90 % to 100 %			O^1	
Case 005	Above 100 %	X^1			O^2
Case 006	-				O^2
Case 010	From 0 % to 89 %		O^1		
Case 010	From 90 % to 110 %			O^1	
Case 010	Above 110 %	X^1			O^2
Case 011	Up to 110 %			O^1	
Case 011	Above 110 %	X^1			O^2
Case 016	From 0 % to 89 %		O^1		
Case 016	From 90 % to 110 %			O^1	
Case 016	Above 110 %	X^1			O^2
Case 018	No value available				O^2
Case 020	No value available				O^2

O = cannot be turned off
O^1 = warning light **12.3** lights up
O^2 = warning light **12.3** blinks
X^1 = can be turned off by actuating (right touching) the key button **35** on the LICCON monitor with the derrick operating screen (illustration **4**), effective after at least 5 seconds

2.3 Monitoring of crane movement

Note
▶ If the LICCON overload protection turns the crane movement off, then the exact cause for the shut off must be determined first.
▶ As a first step, try to rescind the crane movement which has caused a shut off.
▶ If it is not possible to rescind the affected crane movement, then the additional steps are described in the following sections of the chapter.

Note

▶ For detailed description of the individually listed icons, see Crane operating instructions, chapter 4.02.

The LICCON overload protection carries out the following shut offs if a limit value is exceeded in crane operation:

– Shut off luffing the main boom up / down
– Shut off luffing the auxiliary boom / accessory up / down
– Shut off maximum / minimum value test point 1 (force F1)
– Shut off spooling the winch up / out
– Shut off hoist top
– Shut off due to error message

The LICCON overload protection warns if the limit values are exceeded, but does not turn off:

– Minimum / maximum support forces

2.3.1 Shut off luffing the main boom up / down

Note

▶ In crane operation with derrick boom, it is also shown in the icon!

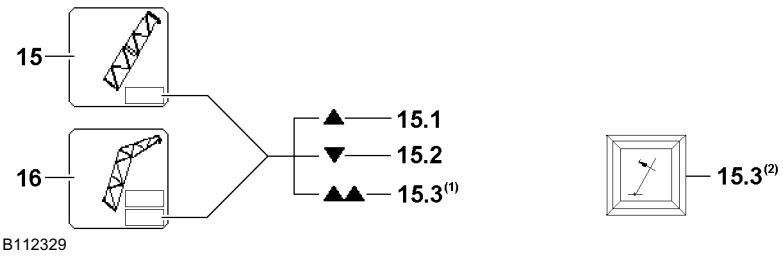

(1) not LR 1400/2

(2) only LR 1400/2

In icon **15** or icon **16** (lower field) arrow **15.1** or arrow **15.2** appear and the LICCON overload protection has shut off the crane movement.
“Luffing the main boom up” (arrow **15.1**) or “Luffing the main boom down” (arrow **15.2**) was shut off because the upper / lower limit angle of the selected load chart was exceeded / fallen below.

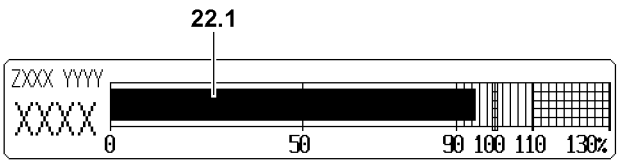

Note

▶ If the utilization of the crane is more than 95 % (utilization bar **22.1** exceeds 95 %) and the maximum load according to the load chart (falling load capacity) drops by continuing to luff up the boom, then the arrow **15.1** also appears and the crane movement “Luffing the main boom up” is turned off.

If the double arrow / warning light **15.3** appears, then:

– **either** it was luffed up to a limit switch or the limit switch has turned off the crane movement “Luffing the main boom up”
– **or** there is an error on one of the limit switches “Main boom top”

The arrow **15.1** appears and the crane movement “Luffing the main boom up” was turned off:

▶ Luff the main boom down.

Result:

– Crane operation is possible again.

The arrow **15.2** appears and the crane movement “Luffing the main boom down” was turned off:

▶ Luff the main boom up.

Result:

– Crane operation is possible again.

The double arrow / warning light **15.3** appears and the crane movement “Luffing the main boom up” was turned off:

▶ Luff the main boom down.

Result:

– Crane operation is possible again.

Troubleshooting

The double arrow / warning light **15.3** appears continuously?

If a double arrow / warning light **15.3** appears without having luffed the main boom up to a limit switch, then there may be an error in the limit switches “Main boom top”.

▶ Check if there is an error message from the LICCON computer system, see Diagnostics manual.
▶ If yes: Remedy the error immediately.

WARNING

Limited warning functions!

If one of the double version limit switches is not ok and the crane is continued to be operated, then the warning functions of the LICCON overload protection are limited!

▶ The crane can only be operated in an emergency after failure of a double version limit switch!

▶ Carry out crane movements in such a way that no repeated shut off by the LICCON overload protection occurs.

2.3.2 Shut off luffing the auxiliary boom / accessory up / down

Note

▶ In crane operation with derrick boom, it is also shown in the icon!

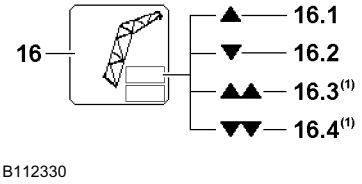

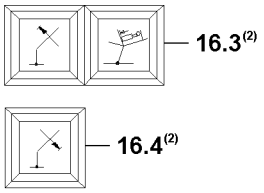

(1) not LR 1400/2

(2) only LR 1400/2

In the icon **16** (upper field) the arrow **16.1** or arrow **16.2** appear and the LICCON overload protection has shut off the crane movement.
“Luffing the auxiliary boom / accessory up” (arrow **16.1**) or “Luffing the auxiliary boom / accessory down” (arrow **16.2**) was shut off because the upper / lower limit angle of the selected load chart was exceeded / fallen below.
If the double arrow / warning light **16.3** appears, then:

– **either** it was luffed up to a limit switch or the limit switch has turned off the crane movement “Luffing the auxiliary boom / accessory up”
– **or** the mechanical relapse support has turned off the crane movement “Luffing the auxiliary boom / accessory up”
– **or** there is an error on one of the limit switches “Auxiliary boom / accessory top”.

If the double arrow / warning light **16.4** appears, then:

– **either** it was luffed down to a limit switch “Auxiliary boom / accessory bottom” and the limit switch has turned off the crane movement “Luffing the auxiliary boom / accessory up”
– **or** there is an error on one of the limit switches “Auxiliary boom / accessory bottom”

The arrow **16.1** appears and the crane movement “Luffing the auxiliary boom / accessory up” was turned off:

▶ Luff the auxiliary boom / accessory down.

Result:

– Crane operation is possible again.

The arrow **16.2** appears and the crane movement “Luffing the auxiliary boom / accessory down” was turned off:

▶ Luff the auxiliary boom / accessory up.

Result:

– Crane operation is possible again.

The double arrow / warning light **16.3** appears and the crane movement “Luffing the auxiliary boom / accessory up” was turned off:

▶ Luff the auxiliary boom / accessory down.

Result:

– Crane operation is possible again.

Troubleshooting

The double arrow / warning light **16.3** appears continuously?

If a double arrow / warning light **16.3** appears without having luffed up to a limit switch, then there may be an error in the limit switches “Auxiliary boom / accessory top”.

▶ Check if there is an error message from the LICCON computer system, see Diagnostics manual.

▶ If yes: Remedy the error immediately.

The double arrow / warning light **16.4** appears and the crane movement “Luffing the auxiliary boom / accessory down” was turned off:

▶ Luff the auxiliary boom / accessory up.

Result:

– Crane operation is possible again.

Troubleshooting

The double arrow / warning light **16.4** appears continuously?

If a double arrow / warning light **16.4** appears without having luffed down to a limit switch, then there may be an error in the limit switches “Auxiliary boom / accessory bottom”.

▶ Check if there is an error message from the LICCON computer system, see Diagnostics manual.

▶ If yes: Remedy the error immediately.

WARNING

Limited warning functions!

If one of the double version limit switches is not ok and the crane is continued to be operated, then the warning functions of the LICCON overload protection are limited!

▶ The crane can only be operated in an emergency after failure of a double version limit switch!

▶ Carry out crane movements in such a way that no repeated shut off by the LICCON overload protection occurs.

2.3.3 Shut off maximum / minimum value test point 1 (force F1)

Note

▶ The force determined on test point 1 is generally described as $F1_{actual}$ (actual value F1).

▶ In the icon **17** (F1-load display), the force relationship as well as the number values are shown in number values as well as a bar display (called F1-bar display).

▶ The value $F1_{max\text{-}operation}$ **17.3** corresponds to 100 % in the F1-bar display.

▶ The F1-utilization bar **17.1** shows the relationship $F1_{actual}$ **17.2** to $F1_{max\text{-}operation}$ **17.3**.

▶ In crane operation without derrick ballast, fewer values may be shown in the icon **17** (F1-load display).

Shut off maximum value F1 in crane operation

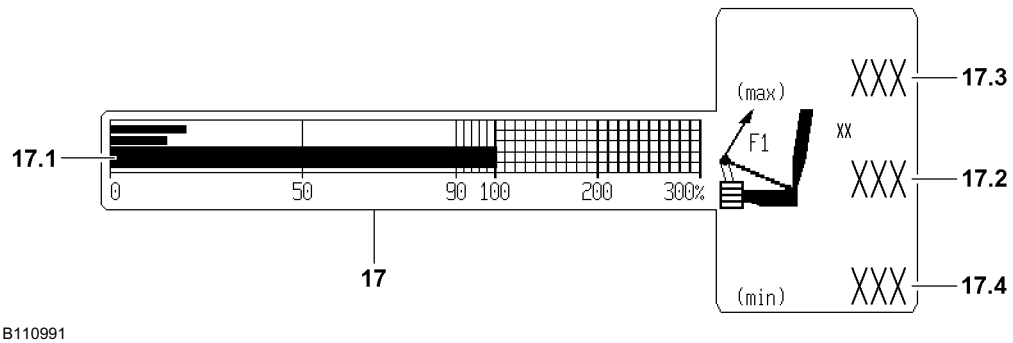

In the icon **17** (F1-load display) the F1-utilization bar **17.1** exceeds the 100 % mark and the LICCON overload protection has shut off the crane movement. The value $F1_{actual}$ **17.2** has exceeded the value $F1_{max\text{-}operation}$ **17.3**.
All further movements, which lead to an increase of the force F1(value $F1_{actual}$) are shut off.

▶ Reverse any crane movement which has caused the shut off.

or

■ Initiate an alternative crane movement, which lowers the force F1 (value $F1_{actual}$).

Result:

– Crane operation is possible again.

Troubleshooting

The crane operation is limited because the value $F1_{max\text{-}operation}$ apparently is being reached too early?

▶ Make sure that a valid configuration status has been entered on the LICCON computer system!

▶ Make sure that the crane is assembled according to the assembly drawings!

▶ Make sure that the actual configuration status and the entered configuration status of the crane match.

▶ Make sure that all attachment parts and guy rods on the boom system, which are not needed, have been removed (weight)!

▶ Make sure that the boom system is free of snow and ice (weight)!

▶ Make sure that the wind influence onto the boom is not too great!

▶ If no irregularities can be found:
Contact LIEBHERR Service.

Shut off maximum value F1 in crane operation

Note

▶ A shut off minimum value F1 ($F1_{min}$) only occurs in operating modes with derrick ballast. The status $F1_{actual} = F1_{min}$ cannot be reached in all other operating modes.

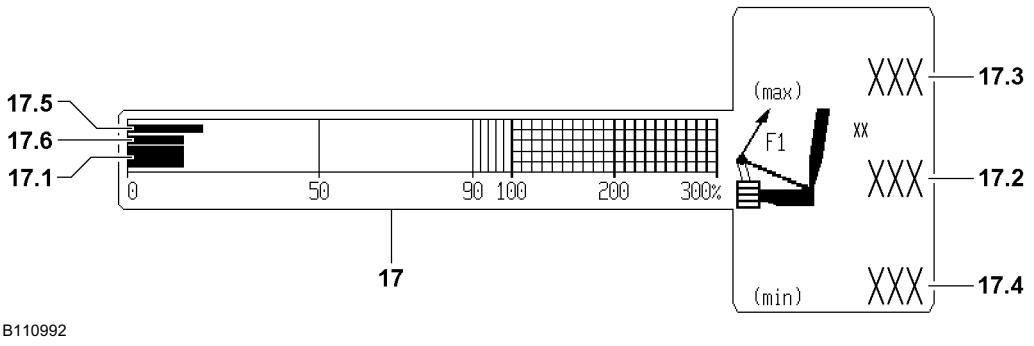

In the icon **17** (F1-load display), when falling below the $F1_{min}$ advance warning bar **17.5**, a warning of the upcoming shut off is issued by the F1-utilization bar **17.1**.
If the F1-utilization bar **17.1** falls below the $F1_{min}$-STOP bar **17.6**, then the LICCON overload protection shuts off the crane movement. The value $F1_{actual}$ **17.2** has fallen below the value $F1_{min}$ **17.4**.

Note
Shut off $F1_{min}$
▶ If the utilization of the derrick ballast is below 50 %, then there is no immediate shut off when falling below value $F1_{min}$!

All further movements, which lead to an decrease of the force F1 (value $F1_{actual}$) are shut off.
▶ Reverse any crane movement which has caused the shut off.

or

■ Initiate an alternative crane movement, which increases the force F1 (value $F1_{actual}$).

Result:
– Crane operation is possible again.

Troubleshooting
The crane operation is limited because the value $F1_{min}$ apparently is being reached too early?
▶ Make sure that a valid configuration status has been entered on the LICCON computer system!
▶ Make sure that the crane is assembled according to the assembly drawings!
▶ Make sure that the actual configuration status and the entered configuration status of the crane match.
▶ Make sure that all attachment parts and guy rods on the boom system, which are not needed, have been removed (weight)!
▶ Make sure that the boom system is free of snow and ice (weight)!
▶ Make sure that the wind influence onto the boom is not too great!
▶ If no irregularities can be found:
Contact LIEBHERR Service.

2.3.4 Shut off spooling the winch up / out

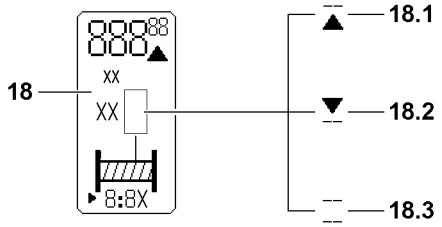

B110878

In the icon **18**, the line / arrow **18.1**, arrow / line **18.2** or line / line **18.3** appears and the LICCON overload protection has shut off the crane movement.
“Spooling the winch out” (line / arrow **18.1**) or “Spooling the winch up” (arrow / line **18.2**) was shut off because the upper / lower limit angle of the rope for the selected winch was exceeded or fallen below.
If line / line **18.3** appears blinking in the icon **18**, then the affected winch is deactivated.

The line / arrow **18.1** appears and the crane movement “Spooling the winch out” was turned off:
▶ Spool the winch up.

Result:
– Crane operation is possible again.

The arrow / line **18.2** appears and the crane movement “Spooling the winch up” was turned off:
▶ Spool the winch out.

Result:
– Crane operation is possible again.

The line / line **18.3** appear and the winch is deactivated:
▶ Activate the winch, see Crane operating instructions, chapter 4.02.

Result:
– Crane operation is possible again.

2.3.5 Shut off hoist top

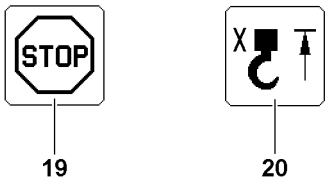

B110875

The icon **19** and hoist top icon **20** appear in the LICCON monitor and the LICCON overload protection has turned off crane movement.
Spooling the hoist winch up was turned off because the hook block or the load hook has run against a hoist limit weight during the upward movement and the affected hoist limit switch was triggered.

WARNING
Property damage / falling load!
▶ After shut off spool hoist winch up (hoist top), for every further crane movement, the distance between the hook block / load hook and the boom head must be checked!

Note
▶ After a hoist top shut off occurred, further crane movements, which affect the length of the hoist rope are also shut off!

▶ Spool the hoist winch out.

Result:
– Crane operation is possible again.

2.3.6 Shut off due to error message

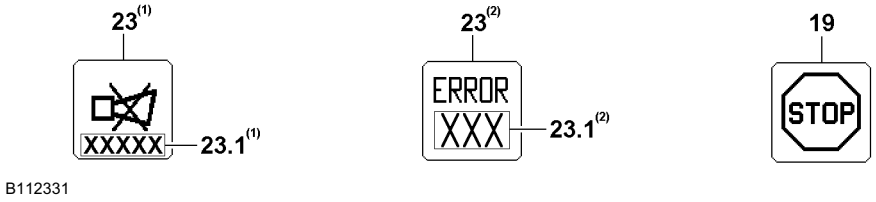

B112331

(1) not LR 1400/2

(2) only LR 1400/2

In the icon **23** appears an error message, the icon **19** appears in the LICCON monitor and the LICCON overload protection has turned off crane movement.
▶ Determine the existing error with the help of the error message from the error field **23.1** in icon **23**, see Diagnostics manual.
▶ Remedy the error.
▶ If the error cannot be remedied:
Contact LIEBHERR Service.

Troubleshooting

The erection of the crane, for example after assembly on a new job site or with another equipment configuration, is not possible due to an error message?

- ▶ Evaluate the error message.
- ▶ Make sure that all electrical connections are established correctly.
- ▶ Check if all sensors or dummy plugs with integrated electric have been connected properly.

Note

- ▶ If there is a defect on a participating sensor (LMB), then the crane can no longer be operated in normal operating condition. Contact Liebherr Service and fix / replace the sensors.

2.3.7 Minimum / maximum support forces

Note

- ▶ Applies only for cranes with support force monitoring*.
- ▶ Description of support force monitoring, see Crane operating instructions, chapter 4.02.

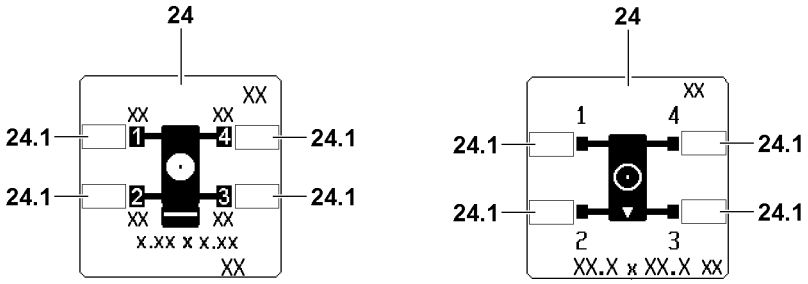

B110881

WARNING

The crane can topple over!

When reaching the programmed minimum / maximum support forces there is no automatic shut off of crane movements!

The displayed support force values are subjected to fluctuating influences, for example crane operation, surrounding and environmental influences!

The resulting tolerance field of the determined values may not be utilized by the support force display to determine the tipping limit of the crane!

If this is disregarded, then the crane can topple over!

Personnel can be severely injured or killed!

- ▶ The displayed support force values of the support force display may not be used to utilize the crane up to the tipping limit!
- ▶ Make sure that all support force values are within the minimum / maximum support forces!

The icon **24** (depending on the crane, similar to the left or right illustration) is shown in the LICCON monitor with blinking value in one or several fields **24.1**. Blinking values in the fields **24.1** signal exceedance of the minimum / maximum support forces.

- ▶ Reverse the crane movements, which caused the support forces to be outside the minimum / maximum values.

Result:

– All values in the fields **24.1** are within the minimum / maximum support forces.

- ▶ Carry out crane movements in such a way that the support forces always remain within the minimum / maximum values.

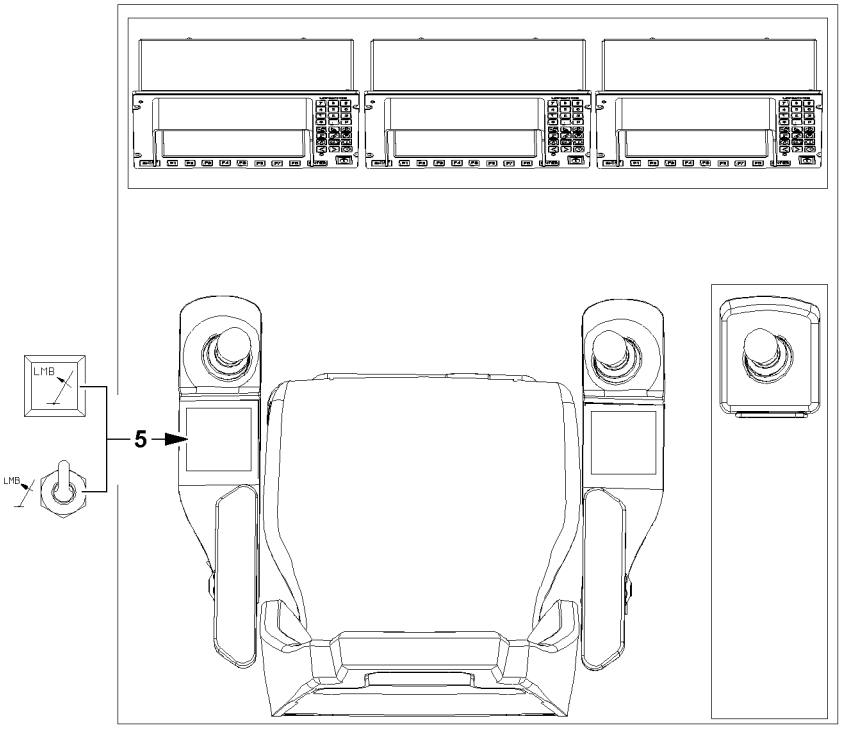

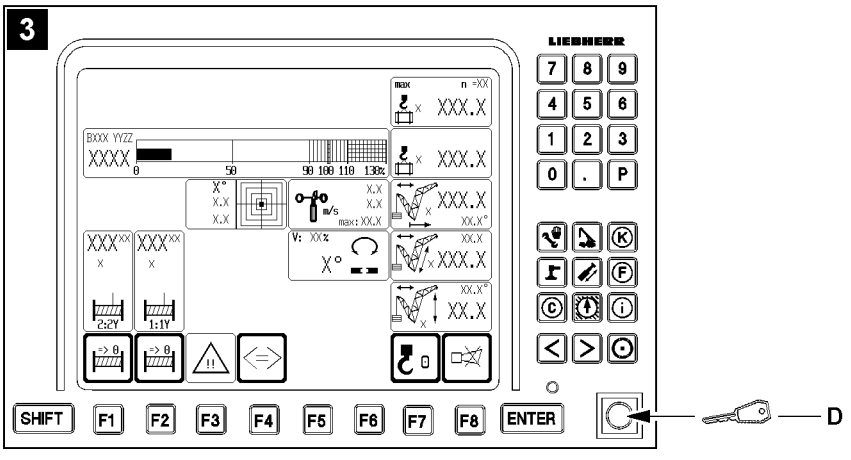

B112334

2.4 Shut off of crane movement: LMB STOP by LICCON overload protection

WARNING
Risk of overload and toppling the crane!
If the shut off limits of the LICCON overload protection are exceeded without knowing the exact cause for the shut off by the LICCON overload protection, then the crane can be overloaded and topple over!
Personnel can be severely injured or killed!
- ▶ Before activating the function “Exceedance of shut off limits of the LICCON overload protection” determine the exact cause for the shut off!

WARNING
Danger of accident due to function “Exceedance of shut off limits of the LICCON overload protection”!
If the shut off limits of the LICCON overload protection are exceeded, there is no additional protection against crane overload!
Due to erroneous operation or deliberate misuse, the crane could collapse, the boom can break off or the crane can topple over!
Personnel can be severely injured or killed!
- ▶ The button **5** “Luffing in with suspended load” and the set up key **D** may only be actuated when it is ensured that no normal operating condition (utilization below 100 % and no active shut off) can be reached without the function “Exceedance of shut off limits of the LICCON overload protection”!
- ▶ Actuate the set up key **D** only when no normal operating condition (utilization below 100 % and no active shut off) can be reached with the button **5** “Luffing in with suspended load”!
- ▶ The function “Exceedance of shut off limits of the LICCON overload protection” is only permissible in emergencies and for assembly purposes!
- ▶ The set up key **D** may only be actuated by persons who are aware of the effects of their acts regarding the function “Exceedance of shut off limits of the LICCON overload protection”!
- ▶ The function “Exceedance of shut off limits of the LICCON overload protection” requires the presence of an authorized person and must be performed with utmost caution!
- ▶ Crane operation with activated function “Exceedance of shut off limits of the LICCON overload protection” is prohibited!

WARNING
Expanded working / danger zone of the crane!
Due to the function “Exceedance of shut off limits of the LICCON overload protection” it is possible that the working / danger zone of the crane is significantly expanded!
If these circumstances are not observed, collisions and accidents can occur!
Personnel can be severely injured or killed!
- ▶ With activated function “Exceedance of shut off limits of the LICCON overload protection” take an expanded working / danger zone of the crane into account and monitor it!

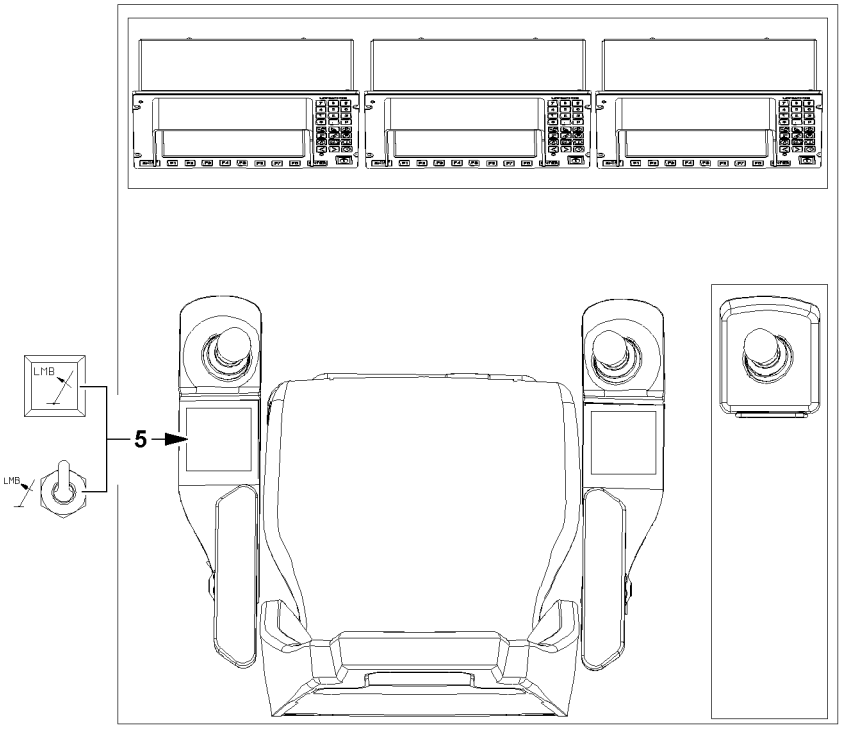

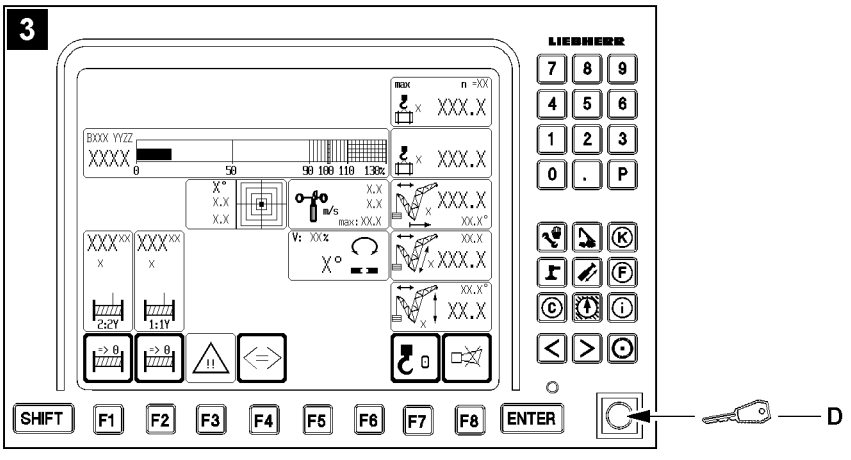

B112334

WARNING
Overload of crane!
When taking on a load by luffing the boom up, the crane can be overloaded!
This could result in serious accidents!
- ▶ Taking on load by luffing up the boom is prohibited!
- ▶ Take on a load only with the hoist gear!

Note
- ▶ If the set up key **D** is actuated in the area “Load chart available”, then the working speed is reduced!
- ▶ If the set up key **D** is actuated in the area “No load chart available”, then the working speed is not reduced!

There are two possibilities to exceed the shut off limits of the LICCON overload protection after LMB STOP:
– With button **5** “Luffing in with suspended load” in the left control console
– With the set up key **D** on the LICCON monitor with crane operating screen, see illustration **3**

NOTICE
Danger of mix up!
The function “Exceedance of shut off limits of LICCON overload protection” can only be activated with the set up key **D** on the LICCON monitor with crane operating screen, see illustration **3**!
The key buttons on the other monitors are not assigned with this function!
- ▶ Do not mix up the set up key **D** with the other key buttons!
- ▶ In case of mix up: Deactivate the activated function!

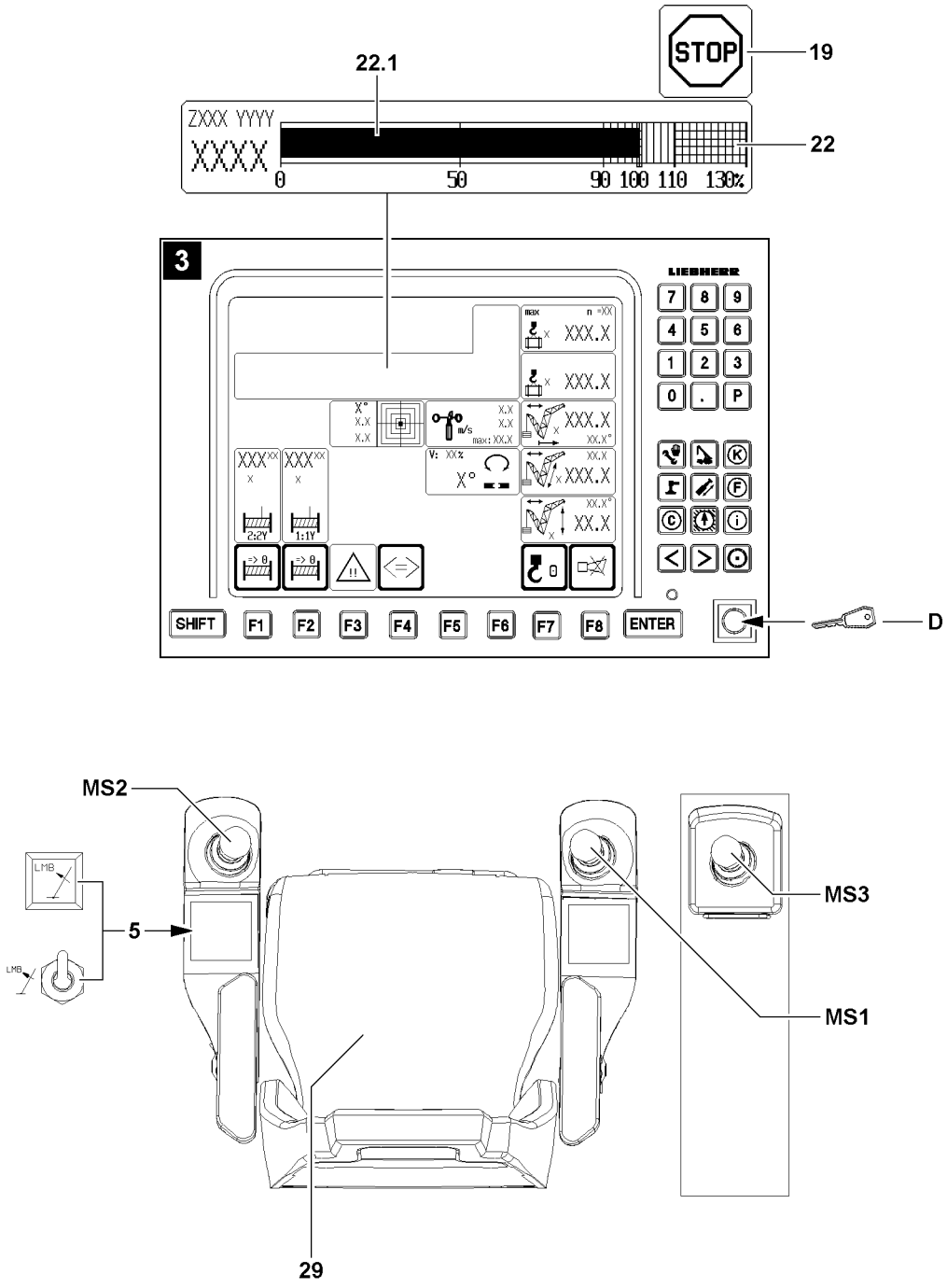
STOP
19
22.1
22
ZXXX YYYY
XXXX
0
50
90 100 110 130%
3
LIEBHERR
SHIFT
F1
F2
F3
F4
F5
F6
F7
F8
ENTER
D
MS2
MS3
MS1
5
29
LMB
1
1
1
2
1

B112335

2.4.1 Luffing in with suspended load

If the maximum permissible load moment is exceeded, the LICCON overload protection turns off all crane movements that increase the load moment.
In the icon **22** (load moment display) the utilization bar **22.1** has exceeded the 100 % mark and in the LICCON monitor appears the icon **19**.
This shut off limit can be exceeded by actuating the button **5** “Luffing in with suspended load”.
Make sure that the following prerequisite is met:

– Either the seat contact button **29** or one of the buttons **1** of the master switches (MS1, MS2, MS3) is actuated.

Note

▶ If the load is reduced by luffing up, then the button **5** “Luffing in with suspended load” is possibly not functioning.

▶ For the procedure when the button **5** “Luffing in with suspended load” is not functioning, see section “Exceedance of maximum permissible load moment”.

▶ Press the function key **5** “Luffing in with suspended load” and hold it.

Result:

– The LICCON overload protection is inactive.

▶ Luff the load in.

Result:

– If the crane reaches a normal operation status (utilization below 100 % and no active shut off) then the icon **19** turns off, normal crane operation is possible again.

The function “Luffing in with suspended load” is deactivated:

– When the function key **5** “Luffing in with suspended load” is not longer actuated.
– When neither the seat contact button **29** nor one of the buttons **1** of the master switches (MS1, MS2, MS3) is actuated.
– In case of defect of an associated sensor (LMB).
– At engine stop.

The function “Luffing in with suspended load” is deactivated:

– The LICCON overload protection is active.

▶ Carry out crane movements in such a way that no repeated shut off by the LICCON overload protection occurs.

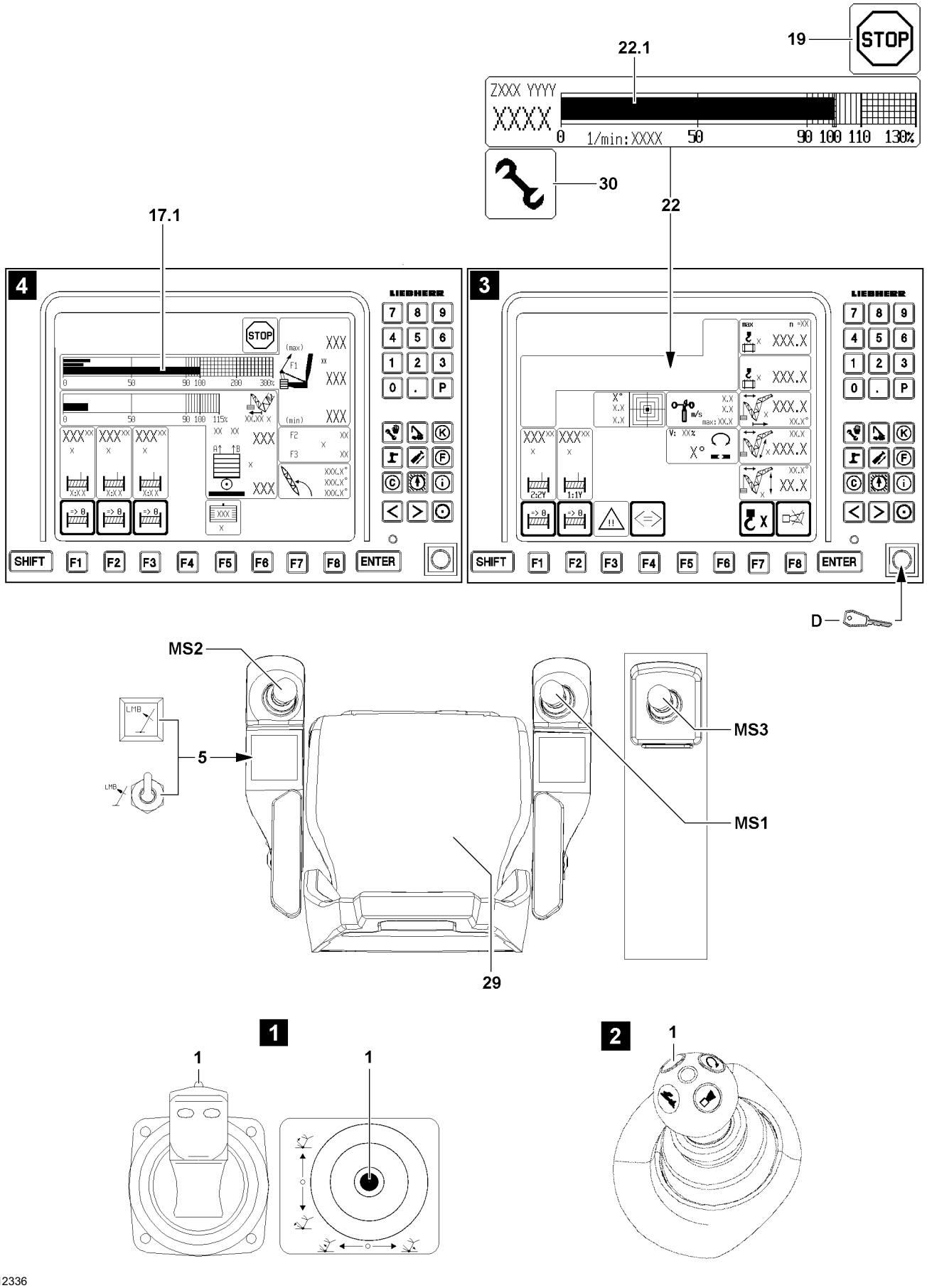
19
STOP
22.1
ZXXX YYYY
XXXX
0 1/min:XXXX 50 90 100 110 130%
30
22
17.1
4
3
LIEBHERR
SHIFT F1 F2 F3 F4 F5 F6 F7 F8 ENTER
D
MS2
MS3
MS1
5
LMB
29
1
1
1
2
1

B112336

2.4.2 Exceedance of the maximum permissible load moment

If the maximum permissible load moment is exceeded, the LICCON overload protection turns off all crane movements that increase the load moment.
In the icon **22** (load moment display) the utilization bar **22.1** has exceeded the 100 % mark and in the LICCON monitor appears the icon **19**.
This shut off can be exceeded by the configuration button **D** in the “right touching” position.

WARNING
Shut off safety device!
If the function “Exceedance of shut off limits of LICCON overload protection” is activated by actuating the set up key **D** then it is possible to exceed the maximum permissible load moment! The function “Exceedance of maximum value test point 1” is automatically activated too. Thus there is no shut off when exceeding the maximum value test point 1!

- ▶ All notes regarding the function “Exceedance of shut off limits of LICCON overload protection” must be observed!
- ▶ The utilization bar $F1_{actual}$ **17.1** of the F1 load display must be observed!

Note

- ▶ In emergency situations, the function “Exceedance of shut off limits of the LICCON overload protection” can be activated with the set up key **D** and the maximum permissible load moment can be exceeded by 10 % to maximum 110 %.

The set up key **D** on the LICCON monitor has two positions:
– Operating position (not pressed): Crane is in normal operation.
– Position to right (touching): The function “Exceedance of shut off limits of the LICCON overload protection” is activated, the assembly icon **30** appears in the LICCON monitor.

Make sure that the following prerequisites are met:
– With the button **5** “Luffing in with suspended load” no normal operating condition (utilization below 100 % and no active shut off) can be reached.
– All master switches (MS1, MS2, MS3) are in zero position (not deflected).
– Either the seat contact button **29** or one of the buttons **1** of the master switches (MS1, MS2, MS3) is actuated.
– Radio operation* is not active.
– The load moment display 110 % has not been reached and a load chart is available.

- ▶ Turn the set up key **D** to the right (touching).

Result:
– The LICCON overload protection is inactive.
– The assembly icon **30** appears in the LICCON monitor.
– The working speed in the area “Load chart available” is reduced for all functions.

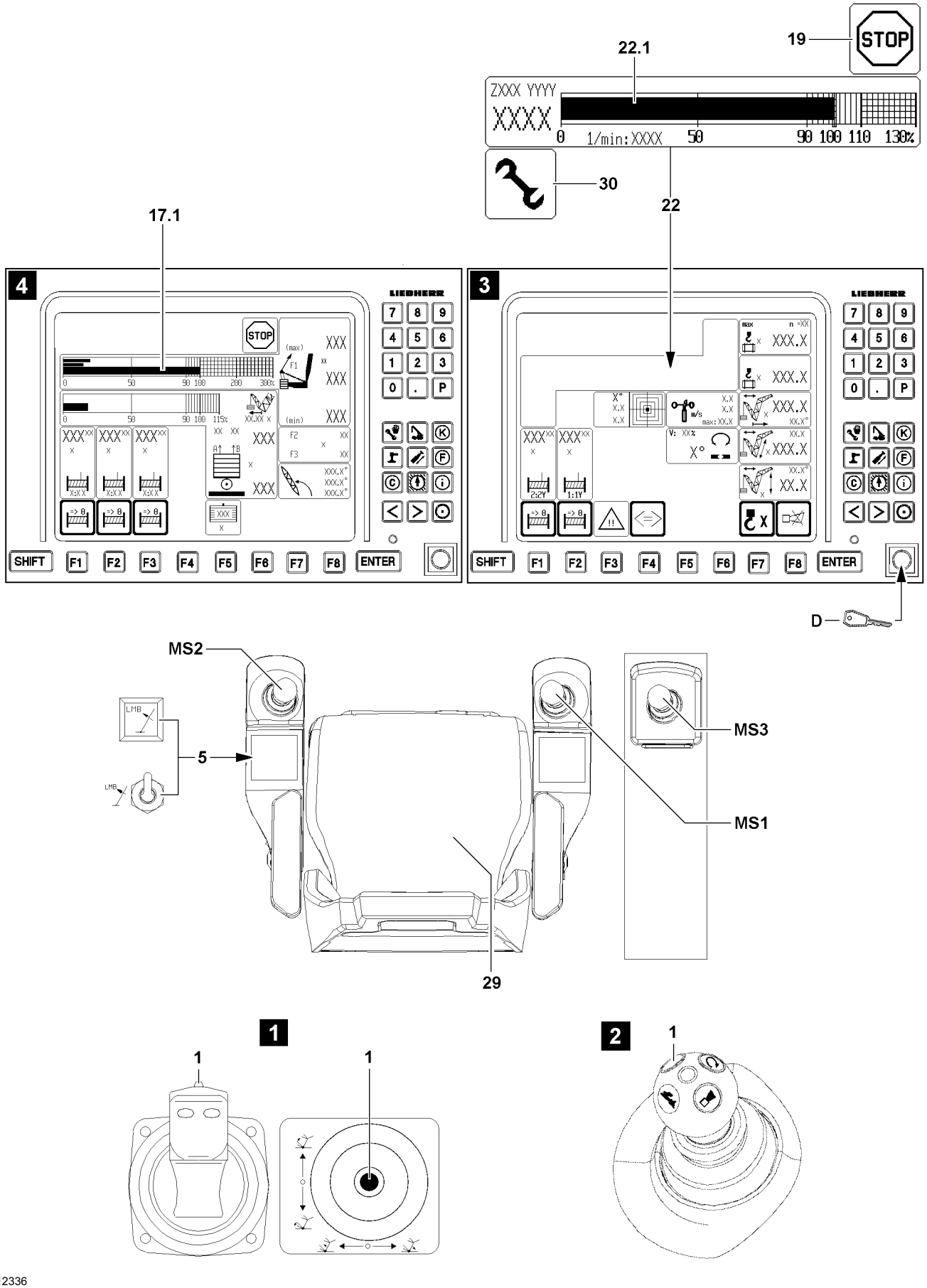
19
STOP
22.1
ZXXX YYYY
XXXX
0 1/min:XXXX 50 90 100 110 130%
30
22
17.1
4
3
LIEBHERR
SHIFT F1 F2 F3 F4 F5 F6 F7 F8 ENTER
D
MS2
MS3
MS1
5
LMB
29
1
1
1
2
1

B112336

▶ Initiate crane movements which directly lead to a normal operating status (utilization below 100 % and no active shut off).

Result:

– If a crane reaches a normal operation status (utilization below 100 % and no active shut off), then the function “Exceedance of shut off limits of the LICCON overload protection” shuts off, the assembly icon **30** and icon **19** in the LICCON monitor turn off.

In addition, the function “Exceedance of shut off limits of LICCON overload protection” turns off immediately:

– If the set up key **D** is actuated again.
– If all master switches (MS1, MS2, MS3) are in neutral position for 10 seconds (with load chart available).
– When neither the seat contact button **29** nor one of the buttons **1** of the master switches (MS1, MS2, MS3) is actuated.
– If radio operation* is activated.
– At engine stop.
– At hoist top shut off.
– When leaving the angle range of the load chart.
– When the utilization bar **22.1** (load moment display) exceeds a utilization of 110 %.

Note

▶ The function “Exceedance of shut off limits of the LICCON overload protection” is only turned off when the assembly icon **30** in the LICCON monitor turns off.
▶ If the function “Exceedance of shut off limits of the LICCON overload protection” does not turn off after pressing the set up key **D** once, then press the set up key **D** again until the assembly icon **30** in the LICCON monitor turns off.

The function “Exceedance of shut off limits of the LICCON overload protection” has / was shut off:

– The assembly icon **30** in the LICCON monitor turns off.
– The working speed is reduced until all master switches (MS1, MS2, MS3) are in zero position at the same time.

▶ Make sure that the assembly icon **30** does no longer appear in the LICCON monitor.
▶ Carry out crane movements in such a way that no repeated shut off by the LICCON overload protection occurs.

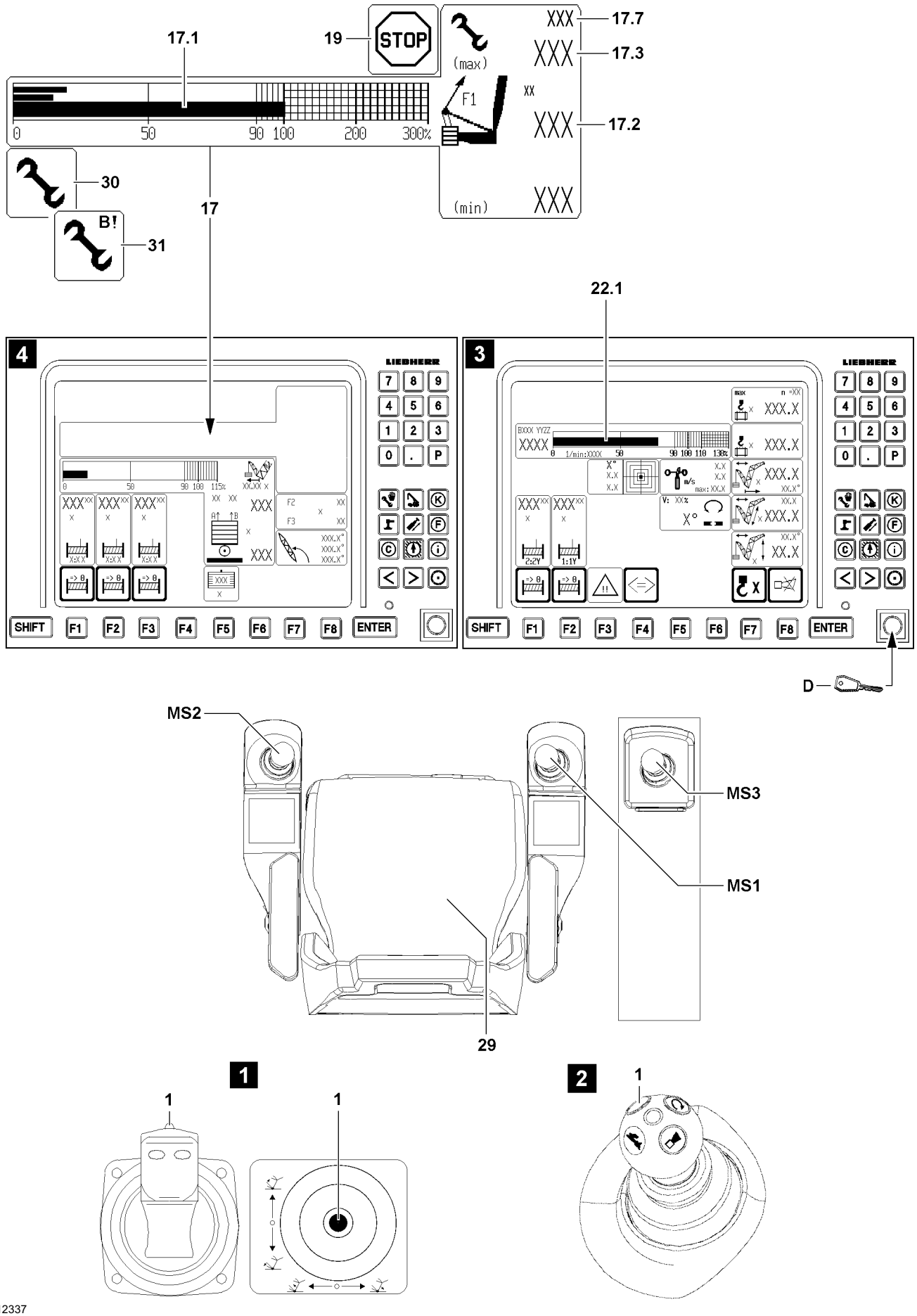
17.1
19
STOP
17.7
17.3
17.2
(max)
(min)
F1
XX
XXX
0
50
90 100
200
300%
30
B!
31
17
22.1
4
3
LIEBHERR
SHIFT
F1
F2
F3
F4
F5
F6
F7
F8
ENTER
D
MS2
MS3
MS1
29
1
2
1
1
1

B112337

2.4.3 Exceedance of maximum value test point 1 (force F1) in crane operation

WARNING
Leaving the load chart with load on hook!
If, by actuating the set up key **D**, the shut off is bypassed by value $F1_{max\text{-}operation}$ **17.3** and exceeded by more than 110 %, then the crane is in assembly operation, the assembly icon **31** appears in the LICCON monitor!
There is no load chart available any longer and various display values may not be shown any longer in the crane operating screen!
The load on the hook is no longer monitored by the load chart!
Severe accidents due to crane overload can result!
Personnel can be severely injured or killed!
- ▶ In assembly operation, the data in the erection / take down charts is binding!

WARNING
Shut off safety device!
If, by actuating the set up key **D**, the function “Exceedance of maximum value test point 1” is activated, then the function “Exceedance of shut off limits of LICCON overload protection” is also activated automatically. Thus there is no shut off if the maximum permissible load moment is exceeded!
- ▶ All notes regarding the function “Exceedance of shut off limits of LICCON overload protection” must be observed!
- ▶ The utilization bar **22.1** of the load moment display must be observed!

Note
- ▶ The force determined on test point 1 is generally described as $F1_{actual}$ (actual value F1).
- ▶ In the icon **17** (F1-load display), the force relationship as well as the number values are shown in number values as well as a bar display (called F1-bar display).
- ▶ The value $F1_{max\text{-}operation}$ **17.3** corresponds to 100 % in the F1-bar display.
- ▶ The F1-utilization bar **17.1** shows the relationship $F1_{actual}$ **17.2** to $F1_{max\text{-}operation}$ **17.3**.
- ▶ In crane operation without derrick ballast, fewer values may be shown in the icon **17** (F1-load display).
- ▶ If the actual load is **larger** than the permissible hook block weight according to the erection / take down charts, then it can be exceeded up to maximum 110 % of $F1_{max\text{-}operation}$ **17.3**!
- ▶ If the actual load is **smaller** than the permissible hook block weight according to the erection / take down charts, then the assembly operation becomes active above 110 % of $F1_{max\text{-}operation}$ **17.3**. In assembly operation, there is no load chart available!
- ▶ The value $F1_{max\text{-}assembly}$ **17.7** appears in crane operation when 90 % of its nominal value is exceeded!

In the icon **17** (F1 load display) the utilization bar $F1_{actual}$ **17.1** exceeds the 100 % mark and the LICCON overload protection has shut off the crane movement. The value $F1_{actual}$ **17.2** has exceeded the value $F1_{max\text{-}operation}$ **17.3**.
All further movements, which lead to an increase of the force (value $F1_{actual}$) are shut off.
In the LICCON monitor with the derrick operating screen (illustration **4**) appears the icon **19**.

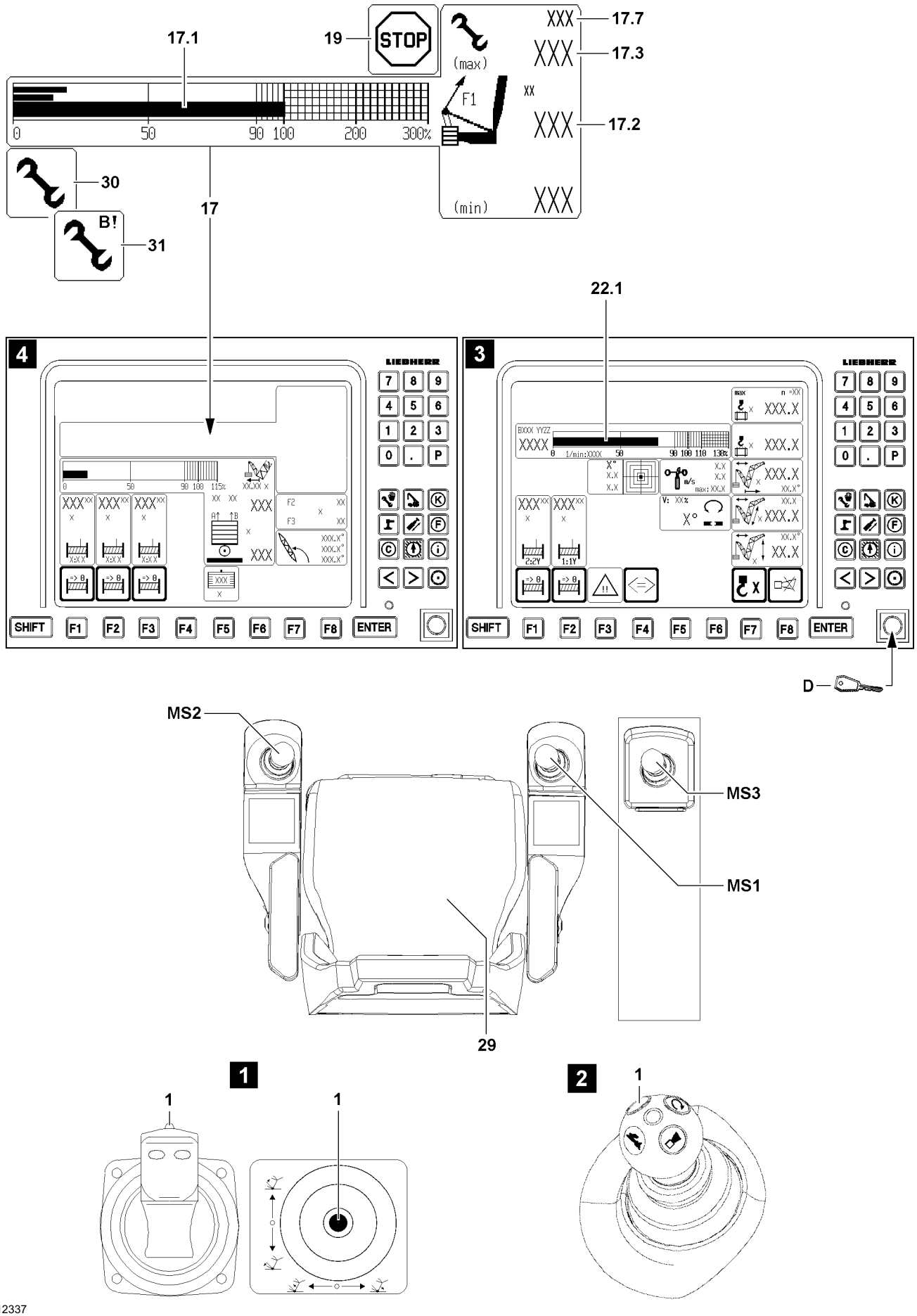
17.1
19
STOP
(max)
XXX
17.7
XXX
17.3
XX
F1
XXX
17.2
(min)
XXX
0
50
90 100
200
300%
30
B!
31
17
22.1
4
3
LIEBHERR
7 8 9
4 5 6
1 2 3
0 . P
SHIFT
F1
F2
F3
F4
F5
F6
F7
F8
ENTER
D
MS2
MS3
MS1
29
1
1
1
2
1
B112337

Make sure that the following prerequisites are met:
- All master switches (MS1, MS2, MS3) are in zero position (not deflected).
- Either the seat contact button **29** or one of the buttons **1** of the master switches (MS1, MS2, MS3) is actuated.
- Radio operation* is not active.
- The F1 load display 110 % has not been reached and a load chart is available.

▶ Turn the set up key **D** to the right (touching).

Result:
- The function “Exceedance of maximum value test point 1” is activated in connection with the function “Exceedance of the shut off limits of the LICCON overload protection”.
- $F1_{max\text{-}operation}$ **17.3** can be exceeded.

The function “Exceedance of shut off limits of the LICCON overload protection” in connection with the function “Exceedance of the maximum value test point 1” also shuts off immediately:
- If the set up key **D** is actuated again.
- If all master switches (MS1, MS2, MS3) are in neutral position for 10 seconds (with load chart available).
- When neither the seat contact button **29** nor one of the buttons **1** of the master switches (MS1, MS2, MS3) is actuated.
- If radio operation* is activated.
- At engine stop.
- At hoist top shut off.

Note
- ▶ The function “Exceedance of shut off limits of the LICCON overload protection” is only turned off when the assembly icon **30** in the LICCON monitor turns off.
- ▶ If the function “Exceedance of shut off limits of the LICCON overload protection” does not turn off after pressing the set up key **D** once, then press the set up key **D** again until the assembly icon **30** in the LICCON monitor turns off.

The function “Exceedance of shut off limits of the LICCON overload protection” has / was shut off:
- The assembly icon **30** in the LICCON monitor turns off.
- The working speed is reduced until all master switches (MS1, MS2, MS3) are in zero position at the same time.

▶ Make sure that the assembly icon **30** does no longer appear in the LICCON monitor.

▶ Carry out crane movements in such a way that no repeated shut off by the LICCON overload protection occurs.

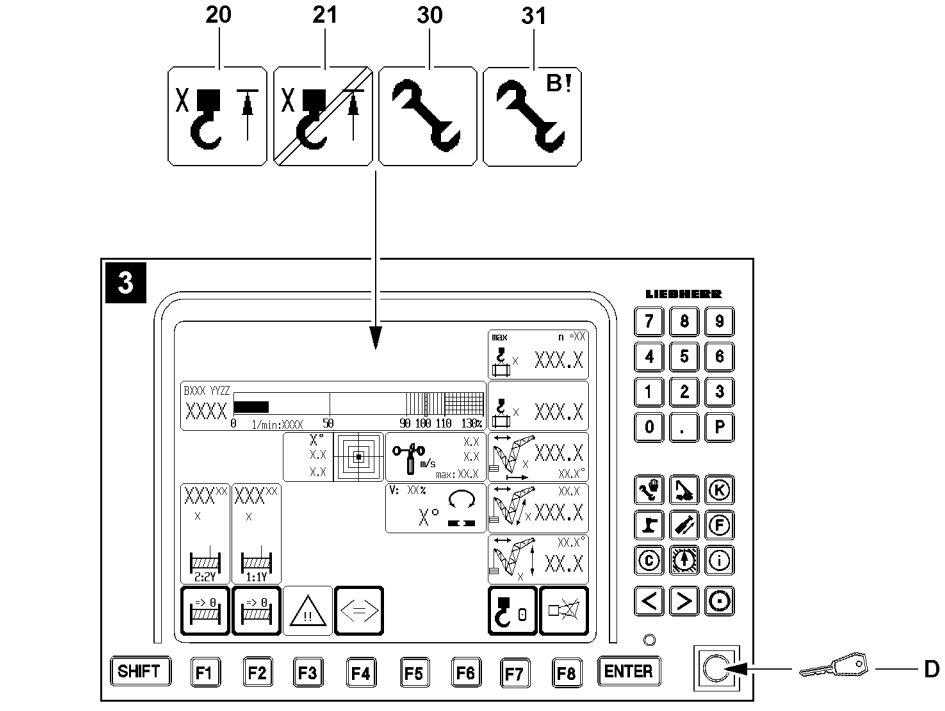
20
21
30
31
B!
3
LIEBHERR
SHIFT
F1
F2
F3
F4
F5
F6
F7
F8
ENTER
D

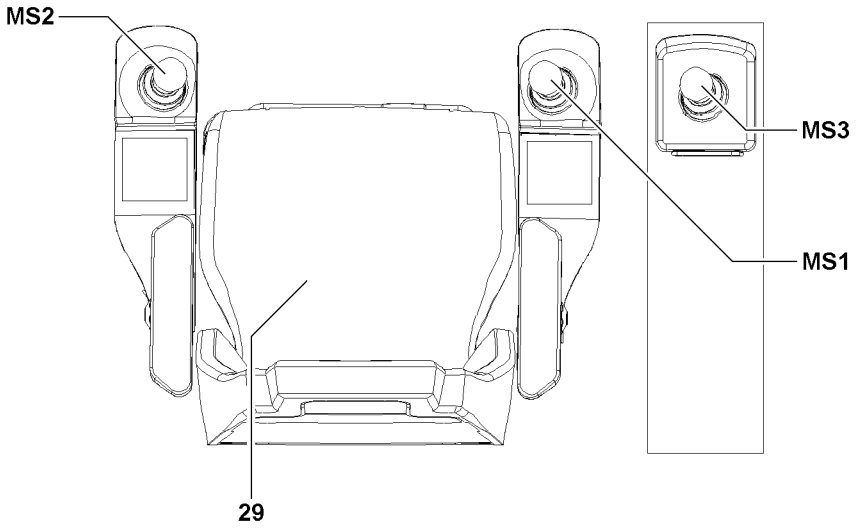
MS2
MS3
MS1
29

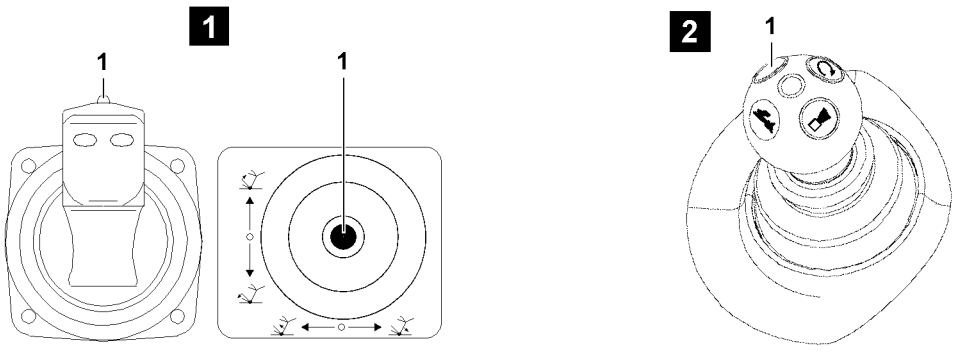
1
1
1
2
1

B111230

2.5 Bypass of the hoist top shut off

WARNING
Improper use of the function “Bypass of hoist top shut off”!
- ▶ The function “Bypass of hoist top shut off” may never be used to increase the lifting height during crane operation!

WARNING
Property damage and falling load!
If the function “Bypass of hoist top shut off” is activated, there is the danger that the hook block or the load hook is pulled against the pulley head!
This danger exists especially when the hoist winch is continued to be spooled up and for crane movements which have an influence on the hoist rope, for example luffing the boom, the auxiliary boom / accessory or the derrick boom!
Property damage and falling load can result!
Personnel can be severely injured or killed!
- ▶ The function “Bypass of hoist top shut off” may only be carried out by an authorized person, along with a guide. The guide must be in direct contact with the crane operator and must continually monitor the distance between the hook block / load hook and the boom head!
- ▶ Carry out all crane movements with utmost caution!

Note
- ▶ The activation of the function “Bypass of hoist top shut off” is only possible if the hoist limit switch was touched and the hoist top shut off has occurred.
- ▶ If the hoist limit switch is triggered when the set up key **D** is actuated (function “Exceedance of shut off limits of the LICCON overload protection” is active, the assembly icon **30** or the assembly icon **31** appear), then a hoist top shut off occurs and the function “Exceedance of shut off limits of the LICCON overload protection” is deactivated.
- ▶ For assembly purposes or in emergency cases, if the activation of the function “Bypass of hoist top shut off” **and** activation of the function “Exceedance of shut off limits of the LICCON overload protection” is necessary, then the set up key **D** must be actuated until the icon **21** and assembly icon **30** or assembly icon **31** (assembly operation) appear.

Make sure that the following prerequisites are met:
- – A hoist top shut off has occurred, the hoist top icon **20** appears in the LICCON monitor.
- – Either the seat contact button **29** or one of the buttons **1** of the master switches (MS1, MS2, MS3) is actuated.
- – All master switches (MS1, MS2, MS3) are in zero position (not deflected).
- – The radio operation* is not active.

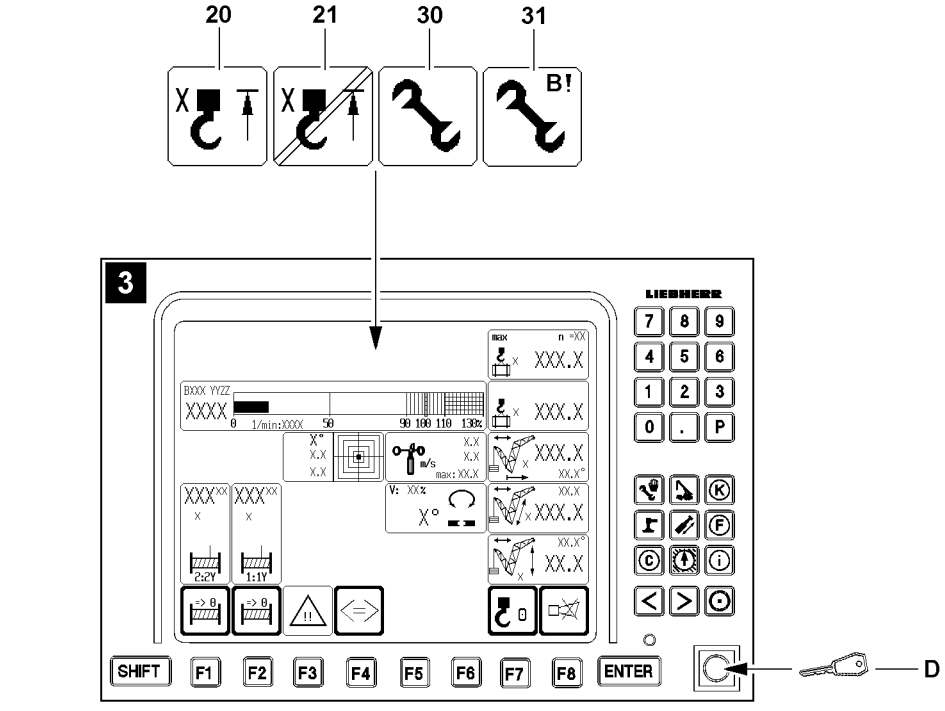
20
21
30
31
B!
3
LIEBHERR
SHIFT
F1
F2
F3
F4
F5
F6
F7
F8
ENTER
D

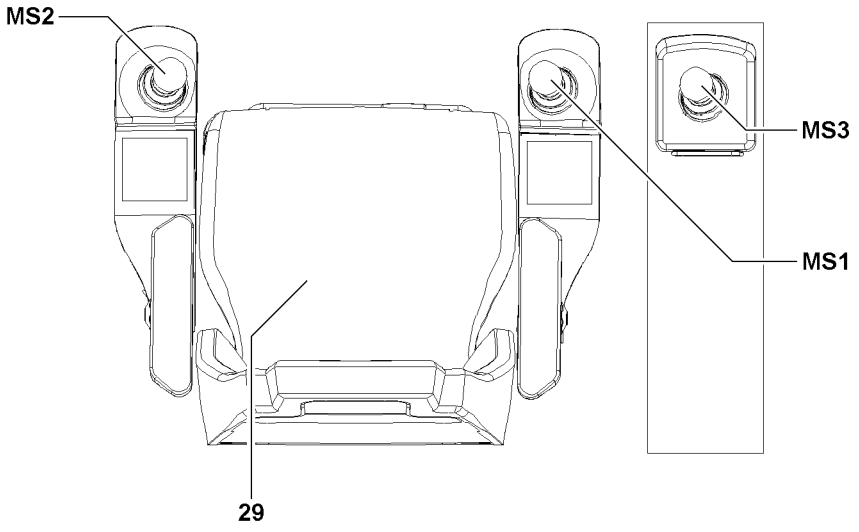
MS2
MS3
MS1
29

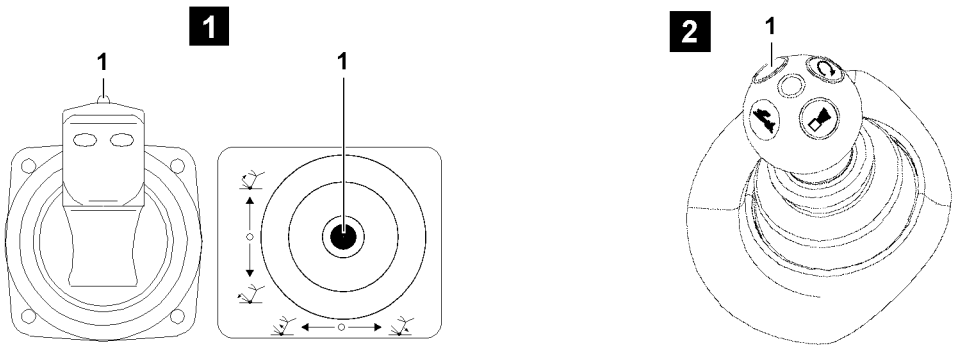
1
1
1
2
1

B111230

▶ Turn the set up key **D** to the right (touching).

Result:

– The assembly icon **30** or the assembly icon **31** (assembly operation) appear in the LICCON monitor.
– The hoist top icon **20** in the LICCON monitor changes to the icon **21**.
– The working speed is reduced for all functions (if load chart is available).
– All hoist limit switches are bypassed.

▶ Carry out a crane movement with bypassed hoist limit switches with utmost caution and by taking the safety guidelines into account.

The function “Bypass of the hoist top shut off” turns off:

– If the set up key **D** is actuated again.
– When no master switch (MS1, MS2, MS3) was deflected for 10 seconds.
– When neither the seat contact button **29** nor one of the buttons **1** of the master switches (MS1, MS2, MS3) is actuated.
– If there is no longer a shut off of a hoist limit switch.
– If the radio operation* is active.
– At engine stop.

The function “Bypass of the hoist top shut off” has / was turned off:

– The assembly icon **30** or the assembly icon **31** (assembly operation) in the LICCON monitor turn off.
– The icon **21** on the LICCON monitor turns off.
– The working speed is reduced until all master switches (MS1, MS2, MS3) are in zero position at the same time.

▶ Make sure that the assembly icon **30** or the assembly icon **31** (assembly operation) as well as the icon **21** no longer appear in the LICCON monitor.

▶ Carry out the crane movements in such a way that no repeated hoist top shut off occurs.

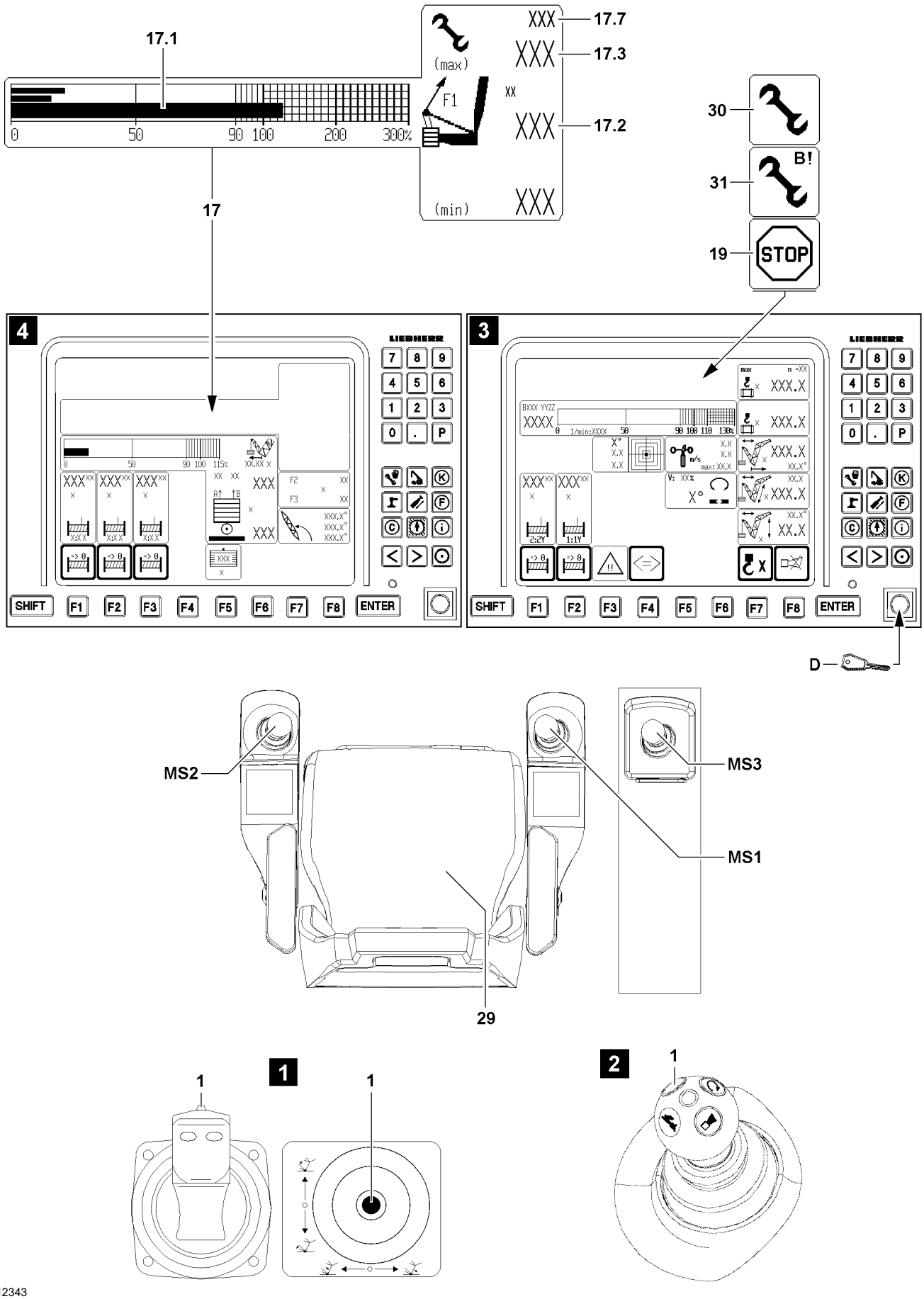
17.1
0
50
90 100
200
300%
(max)
F1
XX
XXX
17.7
XXX
17.3
XXX
17.2
(min)
XXX
17
30
31
B!
19
STOP
4
3
LIEBHERR
SHIFT
F1
F2
F3
F4
F5
F6
F7
F8
ENTER
D
MS2
MS3
MS1
29
1
1
1
2
1
B112343

2.6 Exceeding the shut off limits of the LICCON overload protection during erection / take down procedures (assembly operation)

Note

- If the crane is in the area “No load chart available” then there is a shut off of the crane control by the LICCON overload protection. The icon **19** appears in the LICCON monitor.
- By an actuated set up key **D**, the function “Exceedance of shut off limits of the LICCON overload protection” can be activated, all erection / take down procedures can be carried out within the erection / take down charts, for which no load charts are available.

WARNING

Danger of accident during erection / take down procedures!

If the erection / take down charts are not observed, the crane could collapse, the boom can break off or the crane can topple over!

Personnel can be severely injured or killed!

- The erection / take down charts must be observed!
- Press the set up key **D** only when the configuration status has been entered correctly in the LICCON computer system and matches the actual situation!

Note

- The force determined on test point 1 is generally described as $F1_{actual}$ (actual value F1).
- In the icon **17** (F1-load display), the force relationship as well as the number values are shown in number values as well as a bar display (called F1-bar display).
- The value $F1_{max\text{-}operation}$ **17.3** corresponds to 100 % in the F1-bar display.
- The F1-utilization bar **17.1** shows the relationship $F1_{actual}$ **17.2** to $F1_{max\text{-}operation}$ **17.3**.
- In crane operation without derrick ballast, fewer values may be shown in the icon **17** (F1-load display).
- If a load chart is available, then the value $F1_{max\ operation}$ **17.3** is valid as the limit value for a shut off of crane operation.
- When leaving the area “Load chart available”, the assembly icon **30** turns off and the assembly icon **31** appears!
- When leaving the area “Load chart available” then $F1_{max\ assembly}$ **17.7** is valid as the upper limit value!
- $F1_{max\text{-}assembly}$ **17.7** might only appear when 90 % of its nominal value is exceeded!

2.6.1 Carrying out erection procedures (assembly operation)

Make sure that the following prerequisites are met:

– All master switches (MS1, MS2, MS3) are in zero position (not deflected).
– Either the seat contact button **29** or one of the buttons **1** of the master switches (MS1, MS2, MS3) is actuated.
– Radio operation* is not active.
– The set up configuration corresponds to the erection / take down charts.
– The set up configuration has been entered correctly into the LICCON computer system.

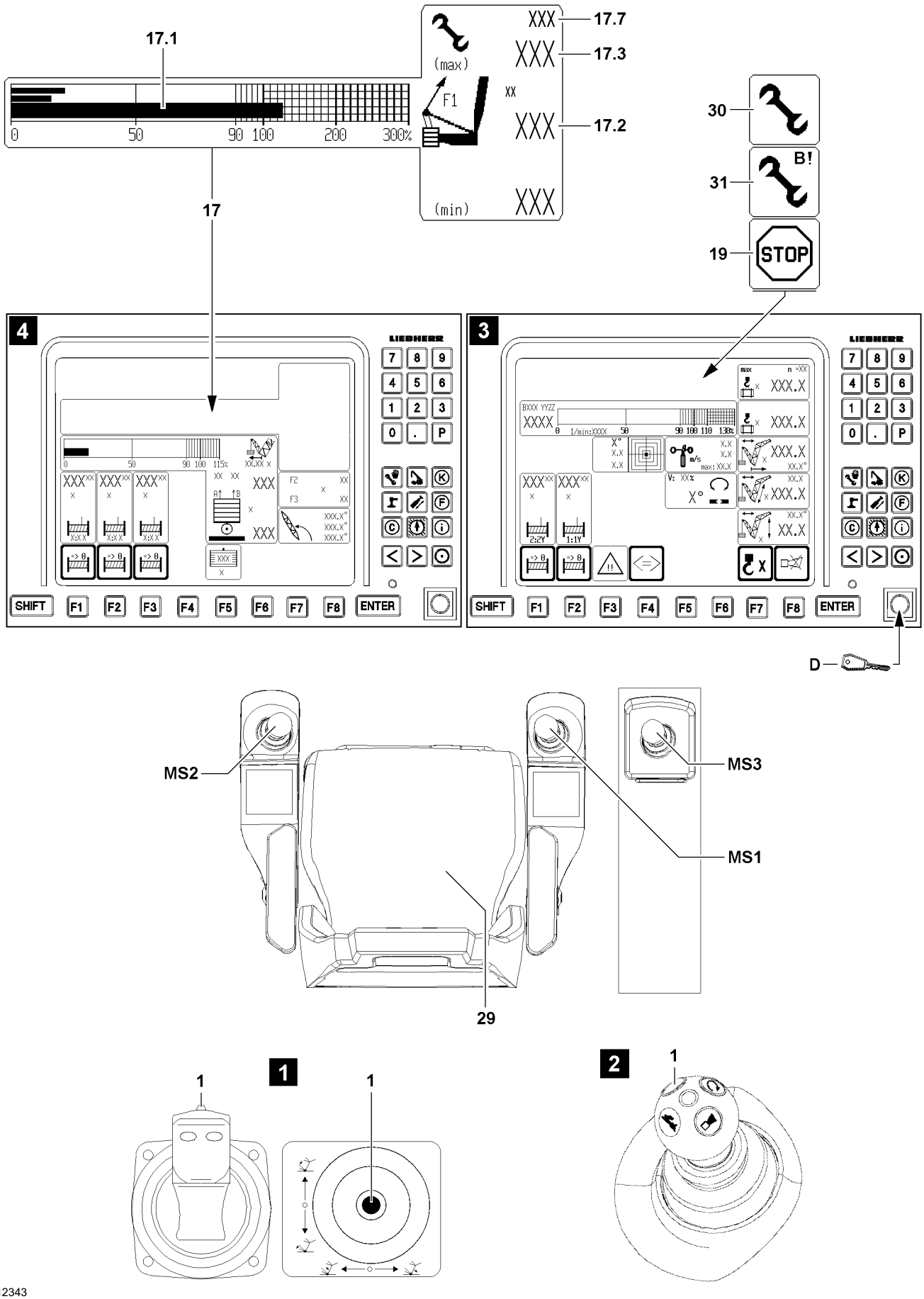
17.1
17.7
17.3
17.2
(max)
F1
(min)
0
50
90
100
200
300%
17
30
31
B!
19
STOP
4
3
LIEBHERR
SHIFT
F1
F2
F3
F4
F5
F6
F7
F8
ENTER
D
MS2
MS3
MS1
29
1
2

B112343

▶ Turn the set up key **D** to the right (touching).

Result:

– The assembly icon **31** appears in the area “No load chart available”.
– The erection / take down procedures can be carried out.

▶ Watch the icon **17** (F1-load display), the value $F1_{actual}$ **17.2** may not exceed the value $F1_{max\text{-}assembly}$ **17.7**.

Troubleshooting

The erection / take down procedure cannot be carried out due to shut off “$F1_{max\text{-}assembly}$ **17.7** exceeded”?

▶ See section “Danger of exceeding $F1_{max\ assembly}$”.

Troubleshooting

The function “Exceedance of shut off limits of the LICCON overload protection” can not be activated during erection / take down procedures?

▶ Check the error messages.
▶ Check the electrical connections.
▶ Check if all sensors or dummy plugs with integrated electric have been connected properly.

The function “Exceedance of shut off limits of the LICCON overload protection” turns off:

– If the set up key **D** is actuated again.
– When an area with existing load chart is reached (erection procedure).
– If all master switches (MS1, MS2, MS3) are in neutral position for 10 seconds (with “Load chart available”).
– When neither the seat contact button **29** nor one of the buttons **1** of the master switches (MS1, MS2, MS3) is actuated.
– At engine stop.

The function “Exceedance of shut off limits of the LICCON overload protection” has / was shut off:

– The assembly icon **30** or the assembly icon **31** in the LICCON monitor turns off.

▶ After completion of the erection / take down procedures, make sure that the assembly icon **30** or the assembly icon **31** no longer appear in the LICCON monitor.

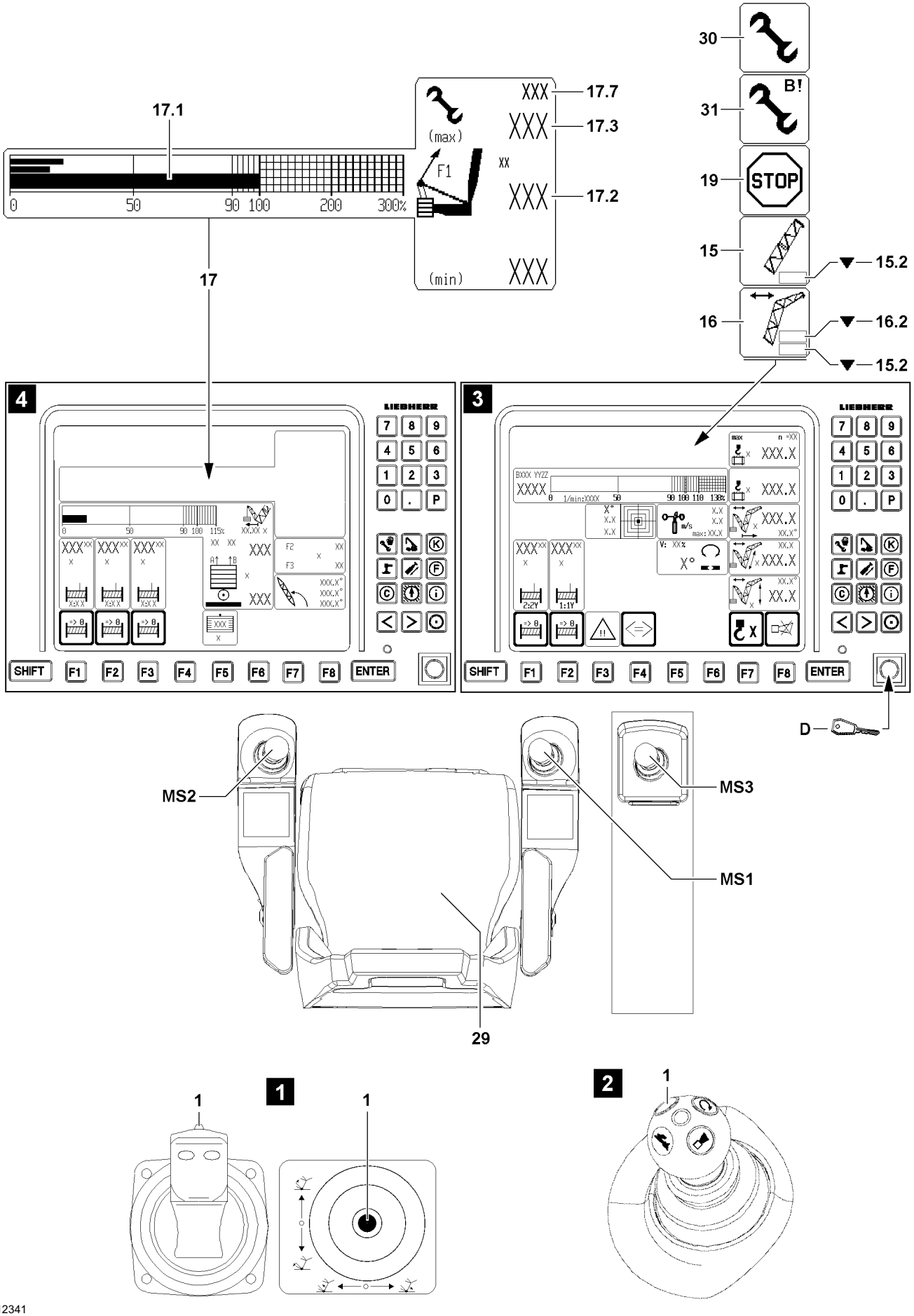
17.1
17
17.7
17.3
17.2
(max)
(min)
F1
XXX
XX
0
50
90 100
200
300%
30
31
B!
19
STOP
15
15.2
16
16.2
15.2
4
3
LIEBHERR
SHIFT
F1
F2
F3
F4
F5
F6
F7
F8
ENTER
D
MS2
MS3
MS1
29
1
1
1
2
1

B112341

2.6.2 Carrying out take down procedures (assembly operation)

WARNING
Increased danger of accidents due to bypass of shut off of luffing the main boom / auxiliary boom / accessory down!
When the shut off luffing the main boom / auxiliary boom / accessory down is bypassed, then the LICCON overload protection as a whole is deactivated or limited.
When the shut off luffing the main boom / auxiliary boom / accessory down is bypassed and the main boom and / or the auxiliary boom / accessory is further luffed down, then there is no load chart available any longer!
Crane operation with bypassed shut off luffing the main boom / auxiliary boom / accessory down is prohibited, since severe accidents can result!
Personnel can be severely injured or killed!
- ▶ Activate the bypass of the shut off luffing the main boom / auxiliary boom / accessory down only in emergency cases or for erection / take down procedures with erection / take down charts!
- ▶ Carry out all crane movements with utmost caution!

Make sure that the following prerequisites are met:
- – In icon **15** or icon **16** the arrow **15.2** or arrow **16.2** appear and the LICCON overload protection has shut off the crane movement.
- – Either the seat contact button **29** or one of the buttons **1** of the master switches (MS1, MS2, MS3) is actuated.
- – All master switches (MS1, MS2, MS3) are in zero position (not deflected).
- – The radio operation* is not active.

▶ Turn the set up key **D** to the right (touching).

Result:
- – The assembly icon **30** appears in the LICCON monitor.
- – The function “Exceedance of shut off limits of the LICCON overload protection” is activated and has bypassed the shut off luffing the main boom / auxiliary boom / accessory down.

Note
- ▶ If a load chart is available, then the value $F1_{max\ operation}$ **17.3** is valid as the limit value for a shut off of crane operation.
- ▶ When leaving the area “Load chart available”, the assembly icon **30** turns off and the assembly icon **31** appears!
- ▶ When leaving the area “Load chart available” then $F1_{max\ assembly}$ **17.7** is valid as the upper limit value!
- ▶ If no derrick boom is installed, then the icon **17** only shows $F1_{actual}$ **17.1** and $F1_{max\text{-}assembly}$ **17.7**.
- ▶ $F1_{max\text{-}assembly}$ **17.7** might only appear when 90 % of its nominal value is exceeded!

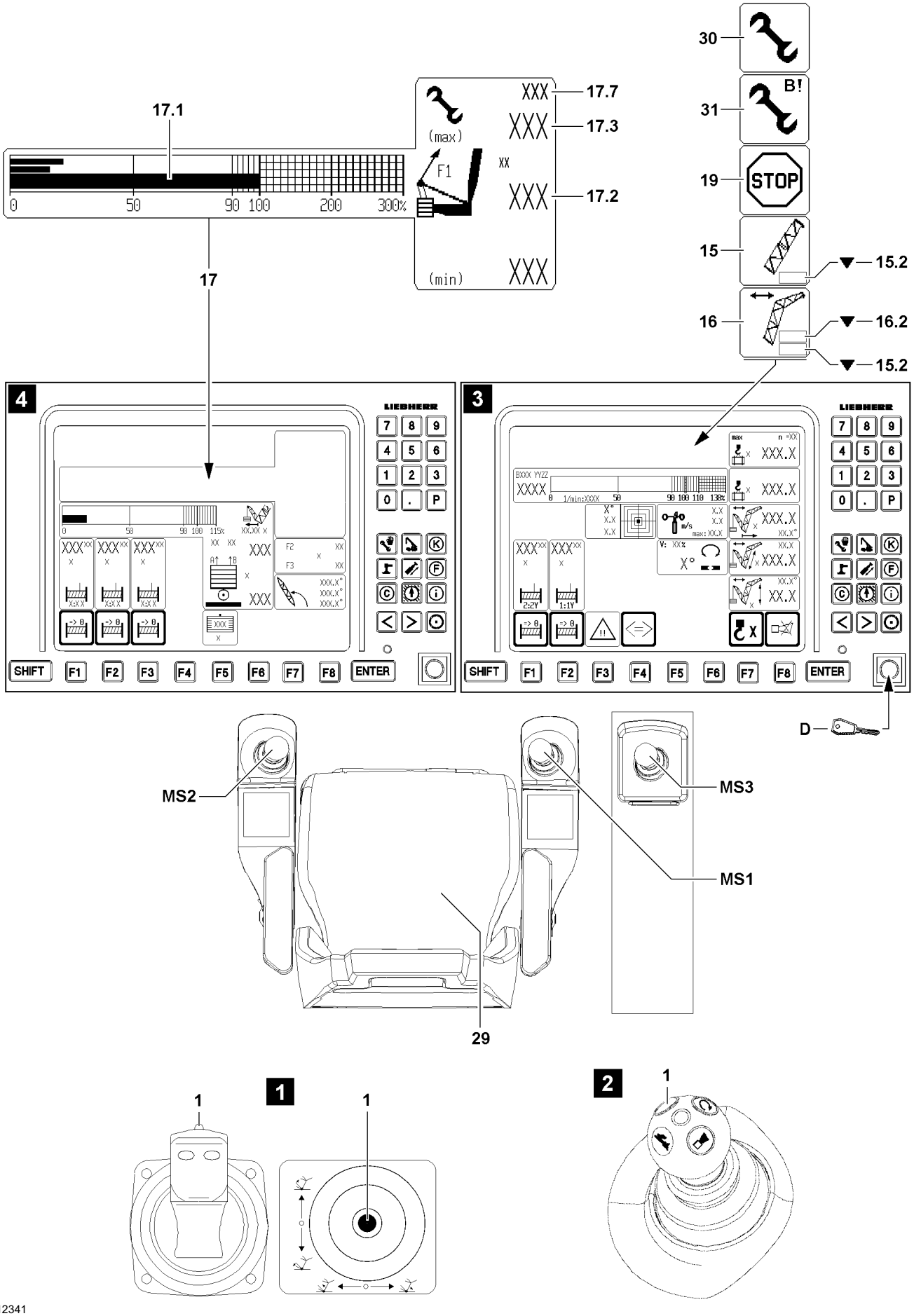
17.1
17
17.7
17.3
17.2
(max)
(min)
F1
XXX
XX
0
50
90 100
200
300%
30
31
B!
19
STOP
15
15.2
16
16.2
15.2
4
3
LIEBHERR
SHIFT
F1
F2
F3
F4
F5
F6
F7
F8
ENTER
D
MS2
MS3
MS1
29
1
1
1
2
1

B112341

DANGER
The crane can topple over!
There is **no** shut off of the luff down movement after reaching the limit value $F1_{max\ assembly}$ **17.7**!
If the warnings by the LICCON overload protection are ignored, then the crane will be overloaded or topples over!
Personnel can be severely injured or killed!

- ▶ The icon **17** (F1-load display) must be watched permanently! It must be ensured that the value $F1_{actual}$ **17.2** is smaller than the value $F1_{max\ assembly}$ **17.7**!
- ▶ The luff down movement must be stopped before the value $F1_{actual}$ **17.2** exceeds the limit value $F1_{max\ assembly}$ **17.7**!

▶ During the take down procedure watch the icon **17** (F1-load display).

Troubleshooting
The take down procedure cannot be carried out due to danger of exceeding the $F1_{max\ assembly}$ **17.7**?
▶ See section “Danger of exceeding $F1_{max\ assembly}$”.

The bypass of the shut off luffing the main boom / auxiliary boom / accessory down turns off:
– If the set up key **D** is actuated again.
– When neither the seat contact button **29** nor one of the buttons **1** of the master switches (MS1, MS2, MS3) is actuated.
– When an area with existing load chart is reached.
– If the radio operation* is active.
– At engine stop.

The bypass of the shut off luffing the main boom / auxiliary boom / accessory down has / was turned off:
– The assembly icon **31** or the assembly icon **30** in the LICCON monitor turns off.

▶ Make sure that the assembly icon **30** or the assembly icon **31** no longer appear in the LICCON monitor.

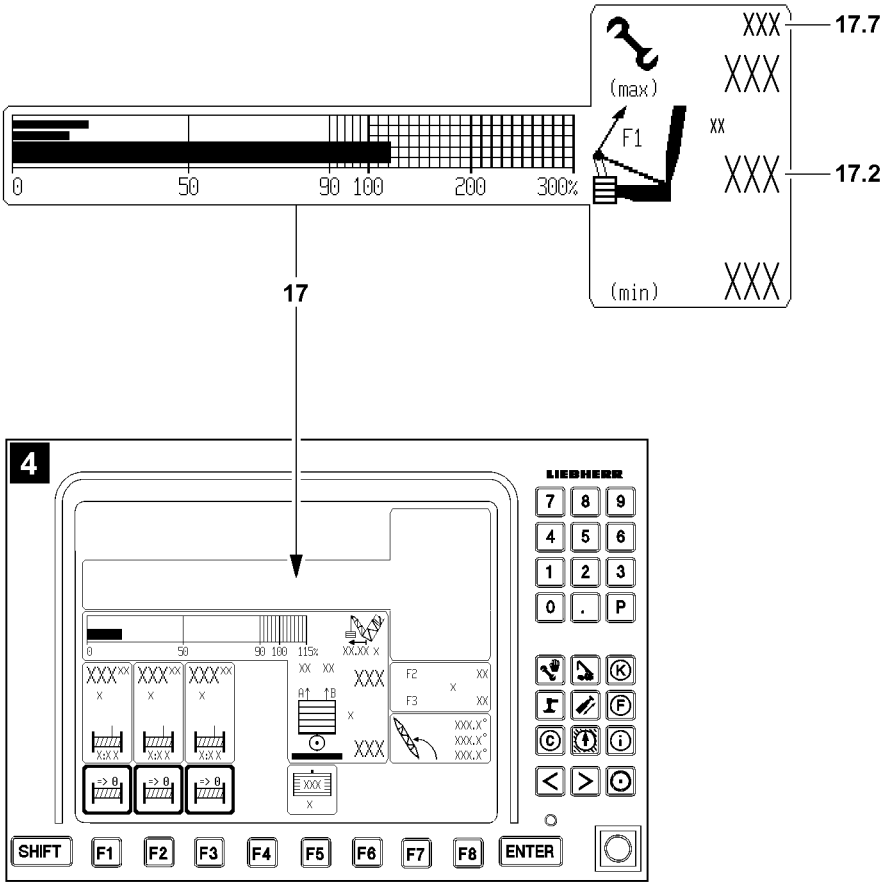
XXX
17.7
(max)
XXX
F1
XX
0
50
90 100
200
300%
XXX
17.2
(min)
XXX
17
4
LIEBHERR
7 8 9
4 5 6
1 2 3
0 . P
SHIFT
F1
F2
F3
F4
F5
F6
F7
F8
ENTER

B112344

2.6.3 Danger of exceeding $F1_{max\ assembly}$

Note

▶ $F1_{max\text{-}assembly}$ **17.7** might only appear when 90 % of its nominal value is exceeded!

DANGER

The crane can topple over!

There is **no** shut off of the luff down movement after reaching the limit value $F1_{max\ assembly}$ **17.7**!

If the warnings by the LICCON overload protection are ignored, then the crane will be overloaded or topples over!

Personnel can be severely injured or killed!

▶ The luff down movement must be stopped before the value $F1_{actual}$ **17.2** exceeds the limit value $F1_{max\ assembly}$ **17.7**!

In the icon **17** (F1-load display), the value $F1_{actual}$ **17.2** has reached the upper limit value $F1_{max\text{-}assembly}$ **17.7**.

▶ Check if a crane movement, which can lower the force F1 (value $F1_{actual}$ **17.2**) can be initiated, for example setting down the hook block / load hook.

▶ Check if the correct set up configuration has been entered on the LICCON computer system.

▶ Check if the actual set up configuration matches the entered set up configuration.

▶ Check if the correct hook block weight has been entered.

▶ Check if the respective hook block / load hook is installed.

▶ Check if all attachment parts and guy rods on the boom system, which are not needed, have been removed.

▶ Check if environmental influences (wind, snow or ice) on the crane are not too great.

Note

▶ Hook block weight entry and correction of weighing errors, see Crane operating instructions, chapter 4.02.

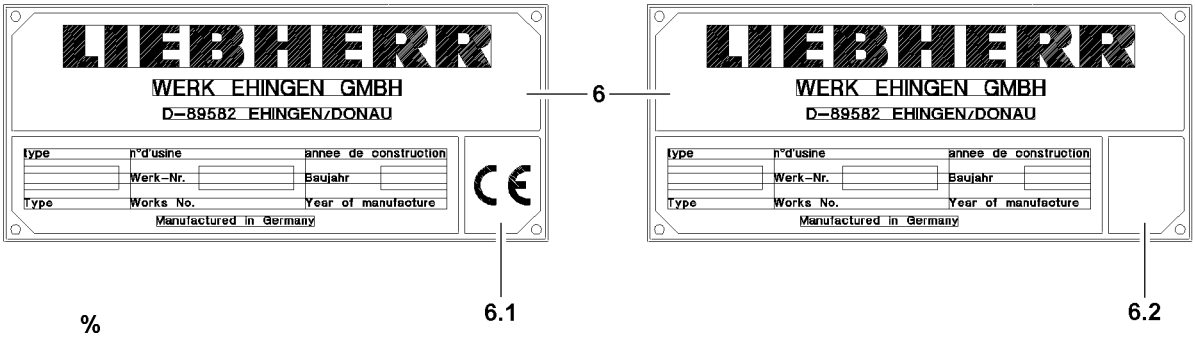
LIEBHERR
WERK EHINGEN GMBH
D-89582 EHINGEN/DONAU
type
n°d'usine
annee de construction
Werk-Nr.
Baujahr
Type
Works No.
Year of manufacture
Manufactured in Germany
6
6.1
6.2

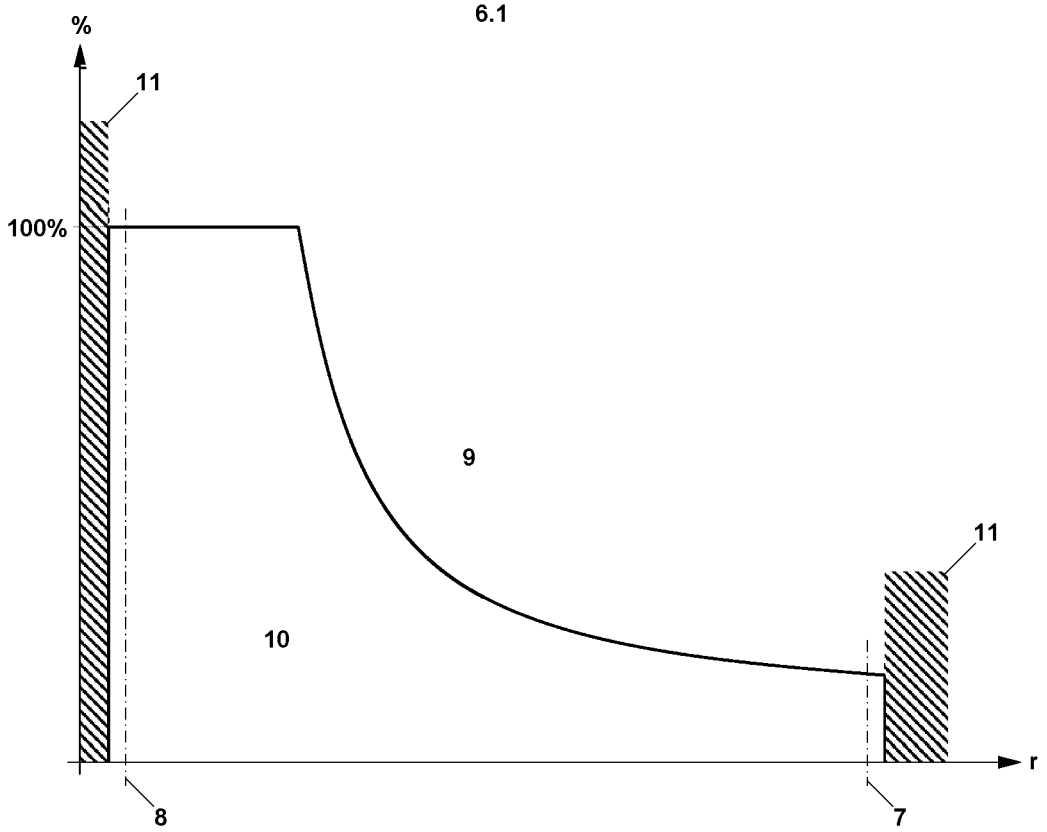
%
11
100%
9
11
10
r
8
7

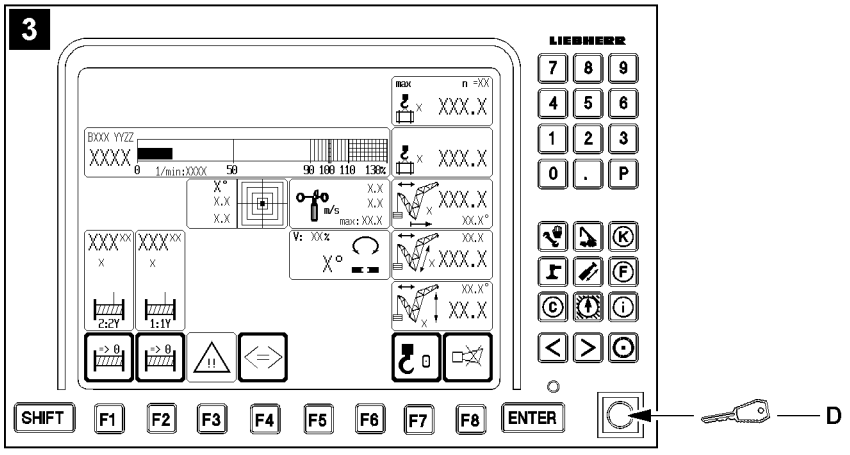
3
LIEBHERR
SHIFT
F1
F2
F3
F4
F5
F6
F7
F8
ENTER
D

B111208

3 Instructions for resuming crane movements for cranes without CE mark

WARNING
Risk of accident!
If the following points are not observed, personnel can be severely injured or killed.
- The crane operator bears the sole and full responsibility for the adherence to measures to be taken in case of shut off of crane movement!
- The crane operator must make sure, before crane operation, that he is using the correct description for the current programming!

Note
- Check the data tag **6** to determine if your crane has a CE mark!
- The following section applies to a crane without CE mark, see data tag **6.2**!
- If your crane does have a CE mark, see data tag **6.1**, then you must observe the description in section “Instructions for resuming a crane movement for cranes with CE mark”!

3.1 Overview load chart for cranes without CE mark

Axle	Description
r	Radius boom (working radius)
%	Utilization of the crane in percentages

Position	Description
7	Lower limit angle load chart
8	Upper limit angle load chart
9	Area “Exceeding the overload protection”
10	Area “Load chart available”
11	Area “No load chart available”

Note
- If the set up key **D** (LICCON monitor with crane operating screen, illustration **3**) is actuated, the working speed is not reduced!

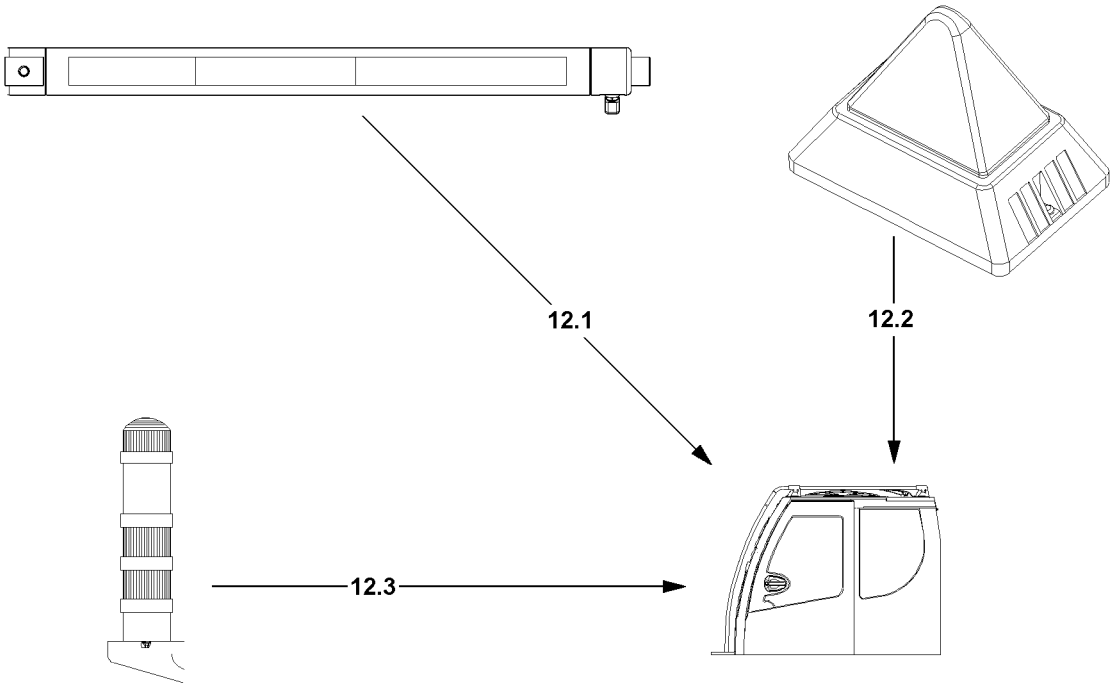

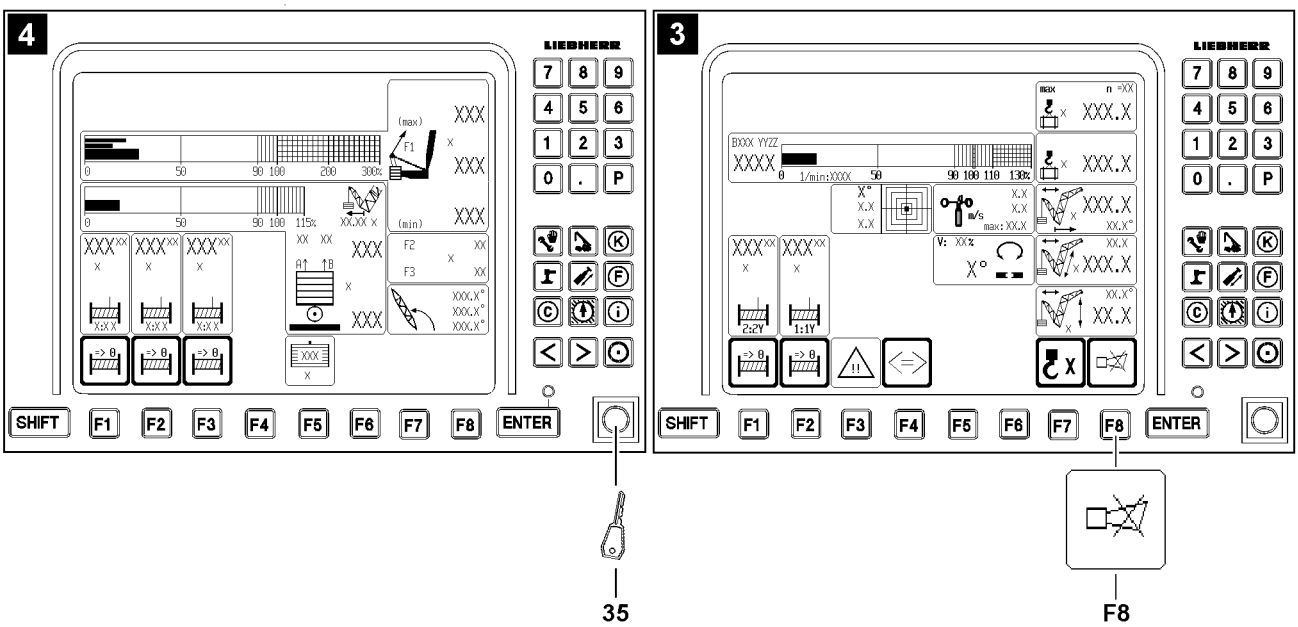

B111212

3.2 Overview of acoustic / visual warnings for cranes without CE mark

– Depending on the crane type, either a warning light **12.1** or a flashing beacon **12.2** or a combination of flashing beacon **12.2** and warning light* **12.3** are installed.
– The acoustic warnings within the crane operator's cab are turned off by pressing the button **F8** on the LICCON monitor with crane operating screen (illustration **3**).
– The acoustic warnings outside the crane operator's cab are turned off by actuating the key button **35** on the LICCON monitor with derrick operating screen (illustration **4**).

3.2.1 Description of acoustic / visual warnings

The case numbers from the chart “Overview of case numbers” are valid for the following charts in this chapter:
– “Acoustic / visual warnings on the LICCON monitor”
– “Warning light 12.1”
– “Flashing beacon 12.2”
– “Warning light 12.3”

Overview of case numbers	
Case number	**Description Case**
Case 001	Utilization of crane from 0 % to 89 %
Case 002	Utilization of crane from 90 % to 100 %
Case 003	Utilization of crane over 100 %
Case 004	Shut off of crane movements - LMB STOP
Case 005	Luffing in with suspended load
Case 006	Participating sensor (LMB) defective
Case 010	Exceeding the shut off limits of the LICCON overload protection
Case 011	Bypass of shut off hoist top
Case 016	Bypass of shut off luffing down the boom / auxiliary boom / accessories, “Load chart available”
Case 018	Bypass of shut off luffing down the boom / auxiliary boom / accessories, “No load chart available”
Case 020	Exceeding the shut off limits of the LICCON overload protection during erection / take down procedures, “No load chart available”

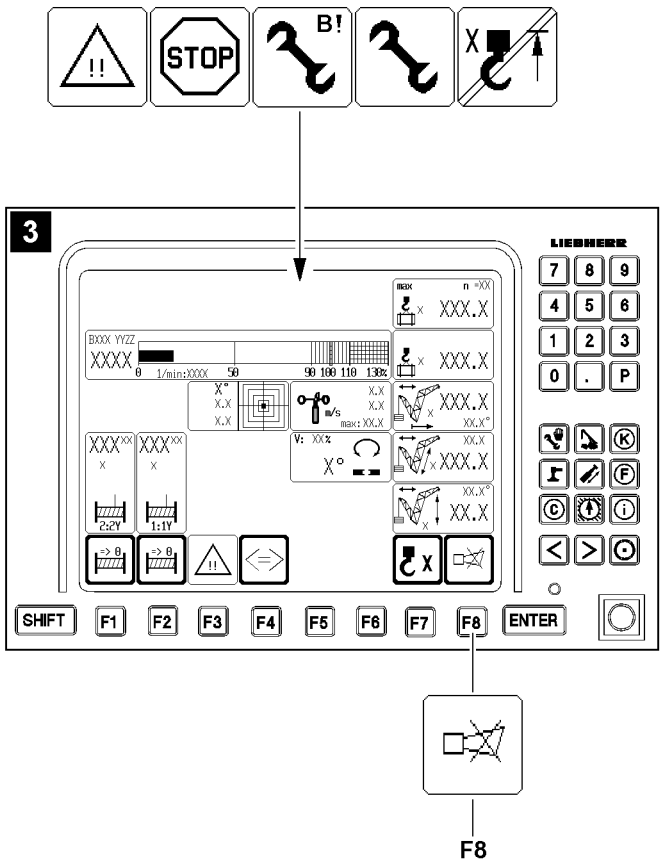

B111209

3.2.2 Acoustic / visual warnings within the crane operator's cab

Note
▶ Description of individual case numbers, see chart “Overview of case numbers”!

Acoustic / visual warnings on the LICCON monitor									
Case number	**Acoustic warning LICCON monitor at utilization of crane**			**Visual warning LICCON monitor**					
	Short sound	**Long sound**	**Long sound**	**Utilization of crane**		**Occurrence**			
	From 90 %	**Above 100 %**	**Always**	**From 90 %**	**Above 100 %**	**LMB STOP**	**Appears if the set up key D is actuated**		
Case 001							—	—	—
Case 002	X[2]			O			—	—	—
Case 003		X[2]		O	O		—	—	—
Case 004			X[2]		O		—	—	—
Case 005	X[2]	X[2]		O	O		—	—	—
Case 006			X[2]			O		O	
Case 010	X[2]	X[2]		O	O		O		
Case 011			X[2]	O	O	O	O		O
Case 016	X[2]	X[2]		O	O		O		
Case 018			X[2]			O		O	
Case 020			X[2]			O		O	

O = cannot be turned off
X[2] = can be turned off immediately on the LICCON monitor key **F8**

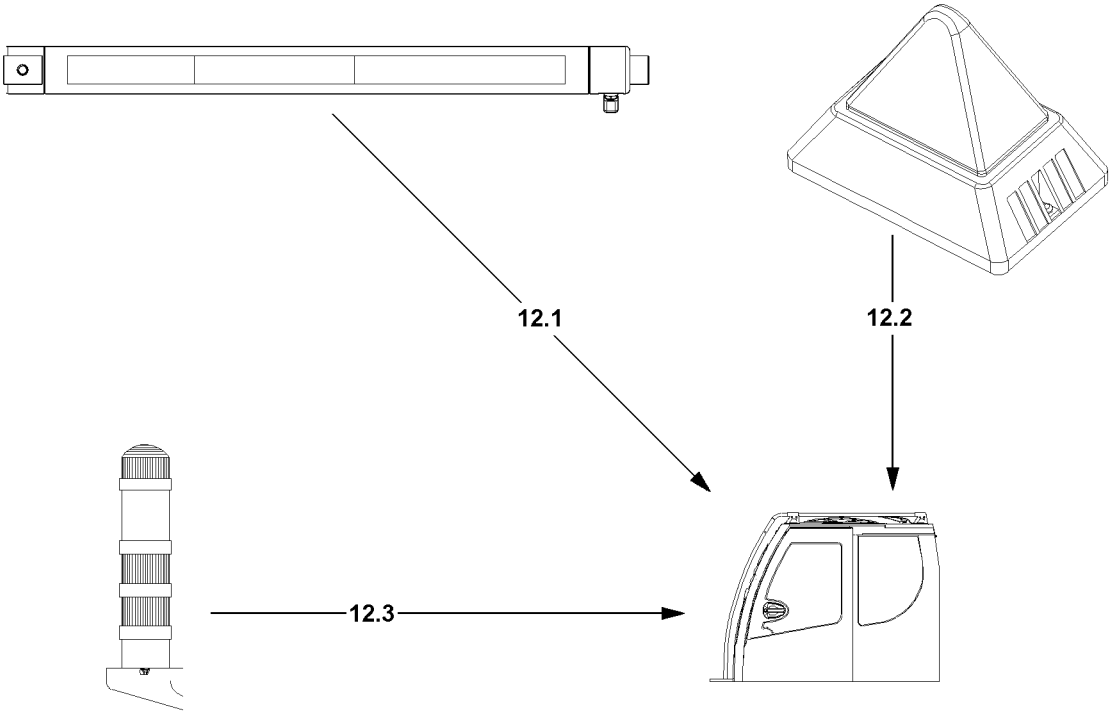

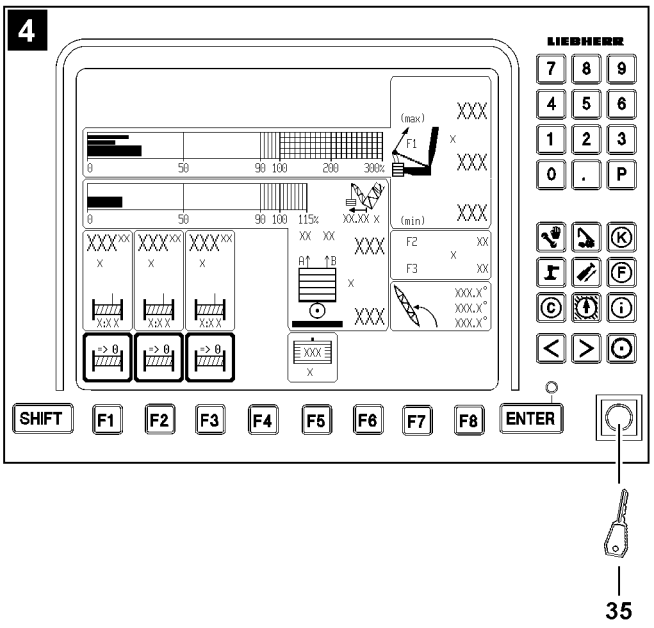

B111206

3.2.3 Acoustic / visual warnings outside the crane operator's cab

Note
▶ Description of individual case numbers, see chart “Overview of case numbers”!

Warning light 12.1					
Case number	**At utilization of crane**	**Acoustic warning**	**Visual warning**		
		Signal turntable	**Green**	**Yellow**	**Red**
Case 001	From 0 % to 89 %		O^1		
Case 002	From 90 % to 100 %			O^1	
Case 003	Above 100 %	X^1			O^1
Case 004	-				O^1
Case 005	From 0 % to 89 %		O^1		
Case 005	From 90 % to 100 %			O^1	
Case 005	Above 100 %	X^1			O^2
Case 006	-			O^2	
Case 010	From 0 % to 89 %		O^1		
Case 010	From 90 % to 100 %			O^1	
Case 010	Above 100 %	O			O^2
Case 011	From 0% to 100 %			O^2	
Case 011	Above 100 %	O			O^2
Case 016	Up to 90 %		O^1		
Case 016	Above 90 % to 100 %			O^1	
Case 016	Above 100 %	O			O^2
Case 018	No value available			O^2	
Case 020	No value available			O^2	

O = cannot be turned off
O^1 = warning light **12.1** lights up
O^2 = warning light **12.1** blinks
X^1 = can be turned off by actuating (right touching) the key button **35** on the LICCON monitor with the derrick operating screen (illustration **4**), effective after at least 5 seconds

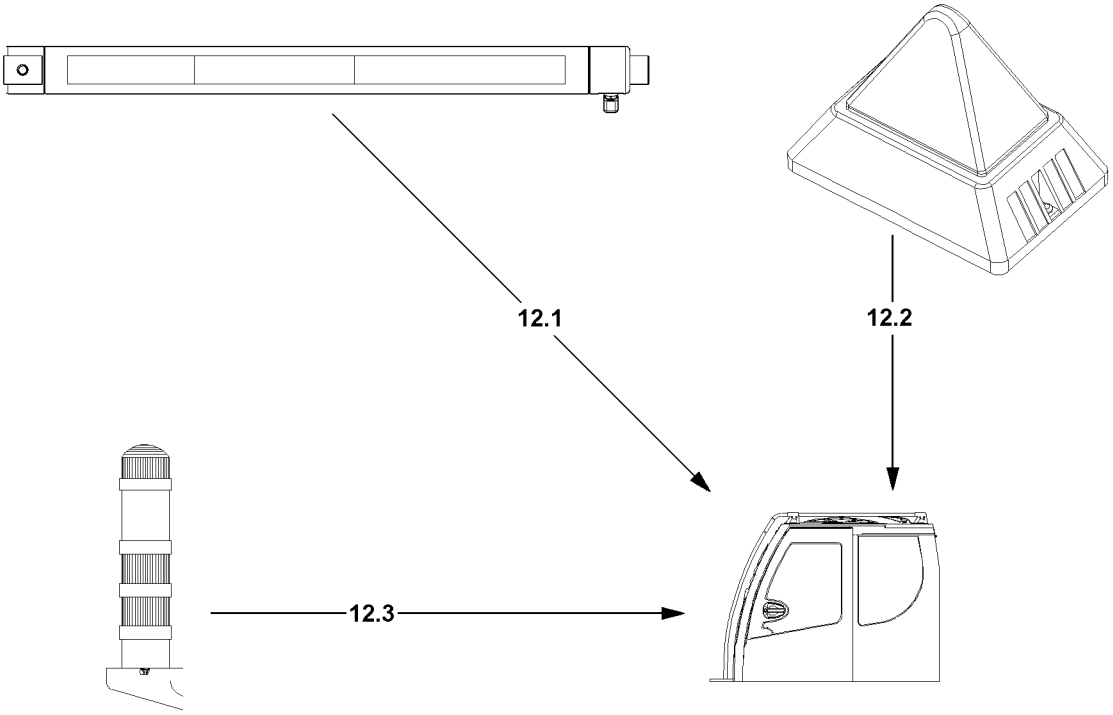
12.1
12.2
12.3

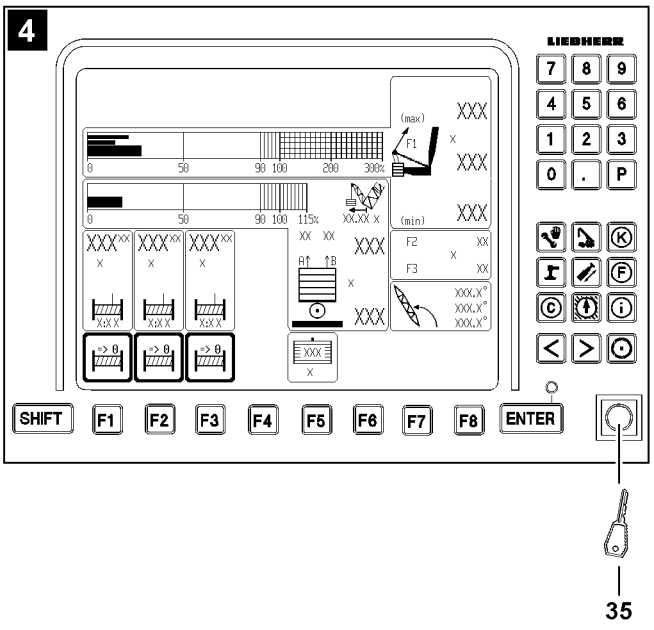
4
LIEBHERR
7 8 9
4 5 6
1 2 3
0 . P
SHIFT
F1
F2
F3
F4
F5
F6
F7
F8
ENTER
35

B111206

Note

▶ Description of individual case numbers, see chart “Overview of case numbers”!

Flashing beacon 12.2			
Case number	**At utilization of crane**	**Acoustic warning**	**Visual warning**
		Signal turntable	**Red**
Case 001	0 % up to 89 %	-	-
Case 002	90 % up to 100 %	-	-
Case 003	Above 100 %	X^1	O^2
Case 004	-		O^2
Case 005	Above 100 %	X^1	O^2
Case 006	-		O^2
Case 010	Above 100 %	O	O^2
Case 011	Above 100 %	O	O^2
Case 016	Above 100 %	O	O^2
Case 018	No value available		O^2
Case 020	No value available		O^2

O = cannot be turned off

O^2 = flashing beacon **12.2** blinks

X^1 = can be turned off by actuating (right touching) the key button **35** on the LICCON monitor with the derrick operating screen (illustration **4**), effective after at least 5 seconds

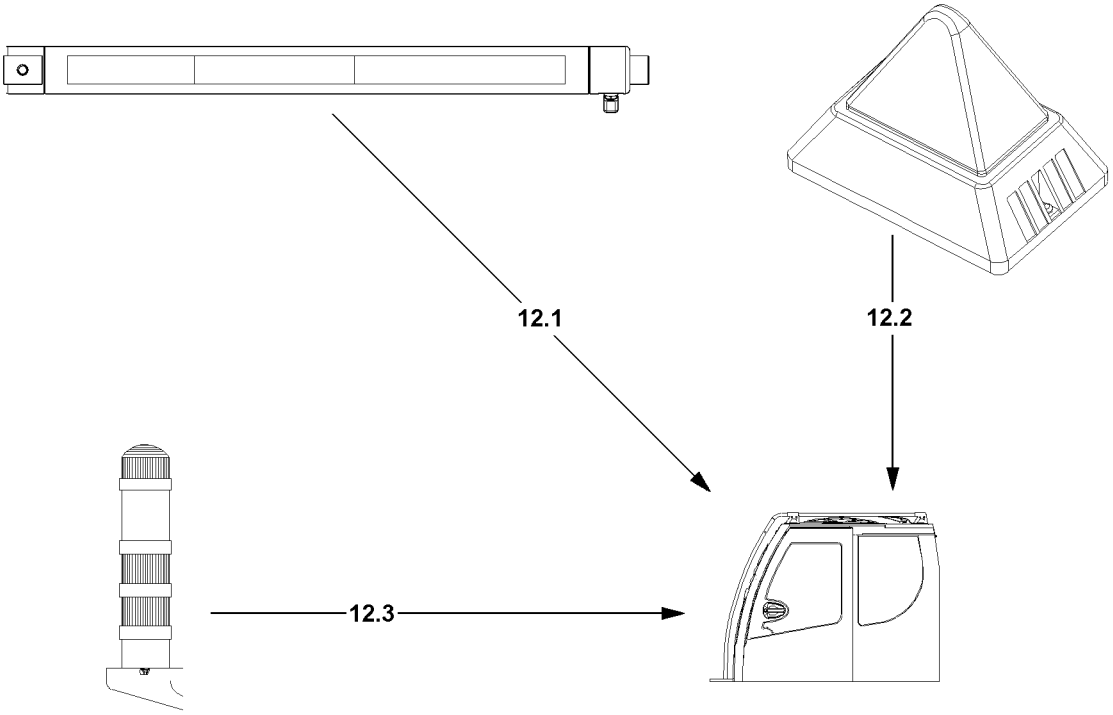
12.1
12.2
12.3

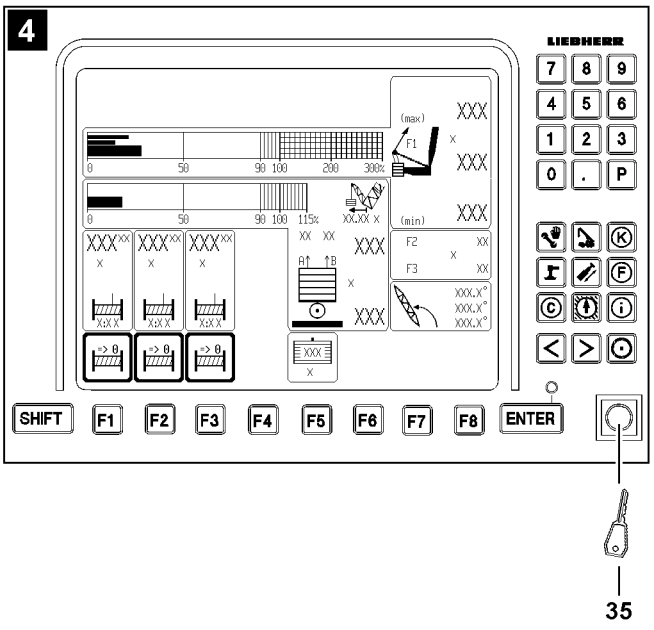
4
LIEBHERR
7 8 9
4 5 6
1 2 3
0 . P
SHIFT
F1
F2
F3
F4
F5
F6
F7
F8
ENTER
35

B111206

Note
▶ Description of individual case numbers, see chart “Overview of case numbers”!

Warning light 12.3					
Case number	**At utilization of crane**	**Acoustic warning**	**Visual warning**		
		Signal turntable	**Green**	**Yellow**	**Red**
Case 001	From 0 % to 89 %		O^1		
Case 002	From 90 % to 100 %			O^1	
Case 003	Above 100 %	X^1			O^2
Case 004	-				O^2
Case 005	From 0 % to 89 %		O^1		
Case 005	From 90 % to 100 %			O^1	
Case 005	Above 100 %	X^1			O^2
Case 006	-				O^2
Case 010	From 0 % to 89 %		O^1		
Case 010	From 90 % to 100 %			O^1	
Case 010	Above 100 %	O			O^2
Case 011	From 0% to 100 %			O^1	
Case 011	Above 100 %	O			O^2
Case 016	From 0 % to 89 %		O^1		
Case 016	From 90 % to 100 %			O^1	
Case 016	Above 100 %	O			O^2
Case 018	No value available				O^2
Case 020	No value available				O^2

O = cannot be turned off
O^1 = warning light **12.3** lights up
O^2 = warning light **12.3** blinks
X^1 = can be turned off by actuating (right touching) the key button **35** on the LICCON monitor with the derrick operating screen (illustration **4**), effective after at least 5 seconds

3.3 Monitoring of crane movement

Note
▶ If the LICCON overload protection turns the crane movement off, then the exact cause for the shut off must be determined first.
▶ As a first step, try to rescind the crane movement which has caused a shut off.
▶ If it is not possible to rescind the affected crane movement, then the additional steps are described in the following sections of the chapter.

Note

▶ For detailed description of the individually listed icons, see Crane operating instructions, chapter 4.02.

The LICCON overload protection carries out the following shut offs if a limit value is exceeded in crane operation:

– Shut off luffing the main boom up / down
– Shut off luffing the auxiliary boom / accessory up / down
– Shut off maximum / minimum value test point 1 (force F1)
– Shut off spooling the winch up / out
– Shut off hoist top
– Shut off due to error message

The LICCON overload protection warns if the limit values are exceeded, but does not turn off:

– Minimum / maximum support forces

3.3.1 Shut off luffing the main boom up / down

Note

▶ In crane operation with derrick boom, it is also shown in the icon!

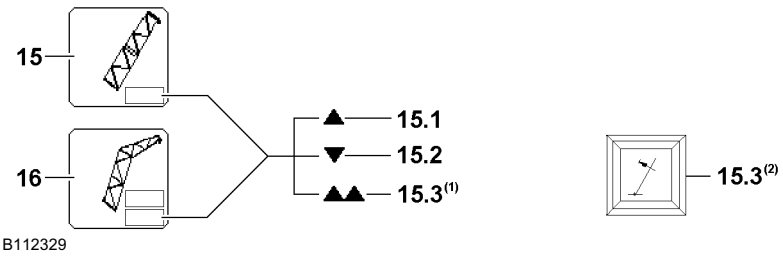

(1) not LR 1400/2

(2) only LR 1400/2

In icon **15** or icon **16** (lower field) arrow **15.1** or arrow **15.2** appear and the LICCON overload protection has shut off the crane movement.
“Luffing the main boom up” (arrow **15.1**) or “Luffing the main boom down” (arrow **15.2**) was shut off because the upper / lower limit angle of the selected load chart was exceeded / fallen below.

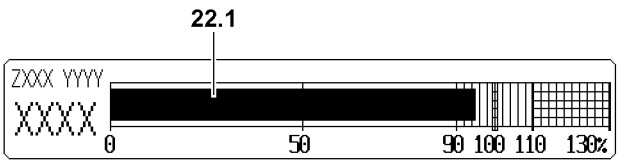

Note

▶ If the utilization of the crane is more than 95 % (utilization bar **22.1** exceeds 95 %) and the maximum load according to the load chart (falling load capacity) drops by continuing to luff up the boom, then the arrow **15.1** also appears and the crane movement “Luffing the main boom up” is turned off.

If the double arrow / warning light **15.3** appears, then:

– **either** it was luffed up to a limit switch or the limit switch has turned off the crane movement “Luffing the main boom up”
– **or** there is an error on one of the limit switches “Main boom top”

The arrow **15.1** appears and the crane movement “Luffing the main boom up” was turned off:

▶ Luff the main boom down.

Result:

– Crane operation is possible again.

The arrow **15.2** appears and the crane movement “Luffing the main boom down” was turned off:

▶ Luff the main boom up.

Result:

– Crane operation is possible again.

The double arrow / warning light **15.3** appears and the crane movement “Luffing the main boom up” was turned off:

▶ Luff the main boom down.

Result:

– Crane operation is possible again.

Troubleshooting

The double arrow / warning light **15.3** appears continuously?

If a double arrow / warning light **15.3** appears without having luffed the main boom up to a limit switch, then there may be an error in the limit switches “Main boom top”.

▶ Check if there is an error message from the LICCON computer system, see Diagnostics manual.
▶ If yes: Remedy the error immediately.

WARNING

Limited warning functions!

If one of the double version limit switches is not ok and the crane is continued to be operated, then the warning functions of the LICCON overload protection are limited!

▶ The crane can only be operated in an emergency after failure of a double version limit switch!

▶ Carry out crane movements in such a way that no repeated shut off by the LICCON overload protection occurs.

3.3.2 Shut off luffing the auxiliary boom / accessory up / down

Note

▶ In crane operation with derrick boom, it is also shown in the icon!

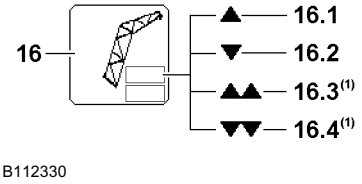

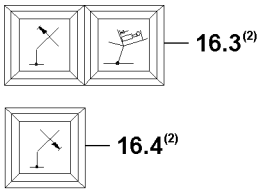

(1) not LR 1400/2

(2) only LR 1400/2

In the icon **16** (upper field) the arrow **16.1** or arrow **16.2** appear and the LICCON overload protection has shut off the crane movement.
“Luffing the auxiliary boom / accessory up” (arrow **16.1**) or “Luffing the auxiliary boom / accessory down” (arrow **16.2**) was shut off because the upper / lower limit angle of the selected load chart was exceeded / fallen below.
If the double arrow / warning light **16.3** appears, then:

– **either** it was luffed up to a limit switch or the limit switch has turned off the crane movement “Luffing the auxiliary boom / accessory up”
– **or** the mechanical relapse support has turned off the crane movement “Luffing the auxiliary boom / accessory up”
– **or** there is an error on one of the limit switches “Auxiliary boom / accessory top”.

If the double arrow / warning light **16.4** appears, then:

– **either** it was luffed down to a limit switch “Auxiliary boom / accessory bottom” and the limit switch has turned off the crane movement “Luffing the auxiliary boom / accessory up”
– **or** there is an error on one of the limit switches “Auxiliary boom / accessory bottom”

The arrow **16.1** appears and the crane movement “Luffing the auxiliary boom / accessory up” was turned off:

▶ Luff the auxiliary boom / accessory down.

Result:

– Crane operation is possible again.

The arrow **16.2** appears and the crane movement “Luffing the auxiliary boom / accessory down” was turned off:

▶ Luff the auxiliary boom / accessory up.

Result:

– Crane operation is possible again.

The double arrow / warning light **16.3** appears and the crane movement “Luffing the auxiliary boom / accessory up” was turned off:

▶ Luff the auxiliary boom / accessory down.

Result:

– Crane operation is possible again.

Troubleshooting

The double arrow / warning light **16.3** appears continuously?

If a double arrow / warning light **16.3** appears without having luffed up to a limit switch, then there may be an error in the limit switches “Auxiliary boom / accessory top”.

▶ Check if there is an error message from the LICCON computer system, see Diagnostics manual.

▶ If yes: Remedy the error immediately.

The double arrow / warning light **16.4** appears and the crane movement “Luffing the auxiliary boom / accessory down” was turned off:

▶ Luff the auxiliary boom / accessory up.

Result:

– Crane operation is possible again.

Troubleshooting

The double arrow / warning light **16.4** appears continuously?

If a double arrow / warning light **16.4** appears without having luffed down to a limit switch, then there may be an error in the limit switches “Auxiliary boom / accessory bottom”.

▶ Check if there is an error message from the LICCON computer system, see Diagnostics manual.

▶ If yes: Remedy the error immediately.

WARNING

Limited warning functions!

If one of the double version limit switches is not ok and the crane is continued to be operated, then the warning functions of the LICCON overload protection are limited!

▶ The crane can only be operated in an emergency after failure of a double version limit switch!

▶ Carry out crane movements in such a way that no repeated shut off by the LICCON overload protection occurs.

3.3.3 Shut off maximum / minimum value test point 1 (force F1)

Note

▶ The force determined on test point 1 is generally described as $F1_{actual}$ (actual value F1).

▶ In the icon **17** (F1-load display), the force relationship as well as the number values are shown in number values as well as a bar display (called F1-bar display).

▶ The value $F1_{max\text{-}operation}$ **17.3** corresponds to 100 % in the F1-bar display.

▶ The F1-utilization bar **17.1** shows the relationship $F1_{actual}$ **17.2** to $F1_{max\text{-}operation}$ **17.3**.

▶ In crane operation without derrick ballast, fewer values may be shown in the icon **17** (F1-load display).

Shut off maximum value F1 in crane operation

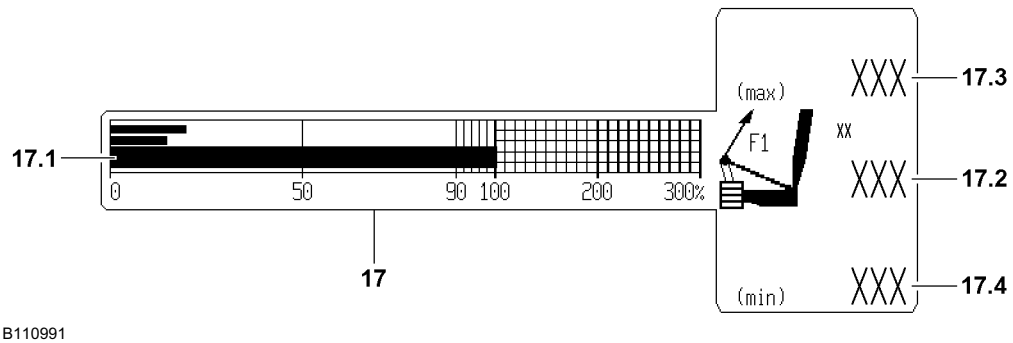

In the icon **17** (F1-load display) the F1-utilization bar **17.1** exceeds the 100 % mark and the LICCON overload protection has shut off the crane movement. The value $F1_{actual}$ **17.2** has exceeded the value $F1_{max\text{-}operation}$ **17.3**.
All further movements, which lead to an increase of the force F1(value $F1_{actual}$) are shut off.

▶ Reverse any crane movement which has caused the shut off.

or

■ Initiate an alternative crane movement, which lowers the force F1 (value $F1_{actual}$).

Result:

– Crane operation is possible again.

Troubleshooting

The crane operation is limited because the value $F1_{max\text{-}operation}$ apparently is being reached too early?

▶ Make sure that a valid configuration status has been entered on the LICCON computer system!

▶ Make sure that the crane is assembled according to the assembly drawings!

▶ Make sure that the actual configuration status and the entered configuration status of the crane match.

▶ Make sure that all attachment parts and guy rods on the boom system, which are not needed, have been removed (weight)!

▶ Make sure that the boom system is free of snow and ice (weight)!

▶ Make sure that the wind influence onto the boom is not too great!

▶ If no irregularities can be found:
Contact LIEBHERR Service.

Shut off maximum value F1 in crane operation

Note

▶ A shut off minimum value F1 ($F1_{min}$) only occurs in operating modes with derrick ballast. The status $F1_{actual} = F1_{min}$ cannot be reached in all other operating modes.

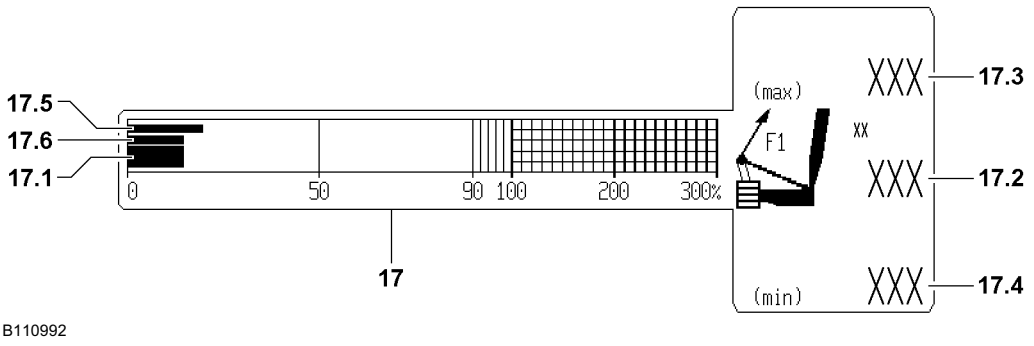

In the icon **17** (F1-load display), when falling below the $F1_{min}$ advance warning bar **17.5**, a warning of the upcoming shut off is issued by the F1-utilization bar **17.1**.
If the F1-utilization bar **17.1** falls below the $F1_{min}$-STOP bar **17.6**, then the LICCON overload protection shuts off the crane movement. The value $F1_{actual}$ **17.2** has fallen below the value $F1_{min}$ **17.4**.

Note
Shut off $F1_{min}$
▶ If the utilization of the derrick ballast is below 50 %, then there is no immediate shut off when falling below value $F1_{min}$ **17.4**!

All further movements, which lead to an decrease of the force F1 (value $F1_{actual}$) are shut off.
▶ Reverse any crane movement which has caused the shut off.

or

■ Initiate an alternative crane movement, which increases the force F1 (value $F1_{actual}$).

Result:
– Crane operation is possible again.

Troubleshooting
The crane operation is limited because the value $F1_{min}$ apparently is being reached too early?
▶ Make sure that a valid configuration status has been entered on the LICCON computer system!
▶ Make sure that the crane is assembled according to the assembly drawings!
▶ Make sure that the actual configuration status and the entered configuration status of the crane match.
▶ Make sure that all attachment parts and guy rods on the boom system, which are not needed, have been removed (weight)!
▶ Make sure that the boom system is free of snow and ice (weight)!
▶ Make sure that the wind influence onto the boom is not too great!
▶ If no irregularities can be found:
Contact LIEBHERR Service.

3.3.4 Shut off spooling the winch up / out

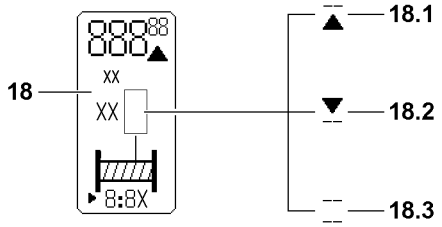

B110878

In the icon **18**, the line / arrow **18.1**, arrow / line **18.2** or line / line **18.3** appears and the LICCON overload protection has shut off the crane movement.
“Spooling the winch out” (line / arrow **18.1**) or “Spooling the winch up” (arrow / line **18.2**) was shut off because the upper / lower limit angle of the rope for the selected winch was exceeded or fallen below.
If line / line **18.3** appears blinking in the icon **18**, then the affected winch is deactivated.

The line / arrow **18.1** appears and the crane movement “Spooling the winch out” was turned off:
▶ Spool the winch up.

Result:
– Crane operation is possible again.

The arrow / line **18.2** appears and the crane movement “Spooling the winch up” was turned off:
▶ Spool the winch out.

Result:
– Crane operation is possible again.

The line / line **18.3** appear and the winch is deactivated:
▶ Activate the winch, see Crane operating instructions, chapter 4.02.

Result:
– Crane operation is possible again.

3.3.5 Shut off hoist top

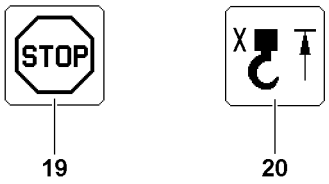

B110875

The icon **19** and hoist top icon **20** appear in the LICCON monitor and the LICCON overload protection has turned off crane movement.
Spooling the hoist winch up was turned off because the hook block or the load hook has run against a hoist limit weight during the upward movement and the affected hoist limit switch was triggered.

WARNING
Property damage / falling load!
▶ After shut off spool hoist winch up (hoist top), for every further crane movement, the distance between the hook block / load hook and the boom head must be checked!

Note
▶ After a hoist top shut off occurred, further crane movements, which affect the length of the hoist rope are also shut off!

▶ Spool the hoist winch out.

Result:
– Crane operation is possible again.

3.3.6 Shut off due to error message

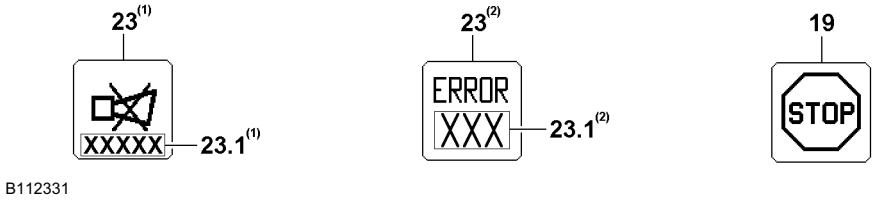

B112331

(1) not LR 1400/2

(2) only LR 1400/2

In the icon **23** appears an error message, the icon **19** appears in the LICCON monitor and the LICCON overload protection has turned off crane movement.

WARNING
Limited warning functions!
If there is a defect on a participating sensor (LMB) and the crane is continued to be operated by bypassing the sensor other otherwise, then the warning functions and the shut offs of the LICCON overload protection are deactivated!
▶ If there is a defect on a participating sensor (LMB), then the crane may be operated further only in emergency cases!
▶ Fix / replace the sensor before starting crane operation again!

- ▶ Determine the existing error with the help of the error message from the error field **23.1** in icon **23**, see Diagnostics manual.
- ▶ Remedy the error.

Troubleshooting

The erection of the crane, for example after assembly on a new job site or with another equipment configuration, is not possible due to an error message?

- ▶ Evaluate the error message.
- ▶ Make sure that all electrical connections are established correctly.
- ▶ Check if all sensors or dummy plugs with integrated electric have been connected properly.

- ▶ If the error cannot be remedied:
  Contact LIEBHERR Service.

3.3.7 Minimum / maximum support forces

Note

- ▶ Applies only for cranes with support force monitoring*.
- ▶ Description of support force monitoring, see Crane operating instructions, chapter 4.02.

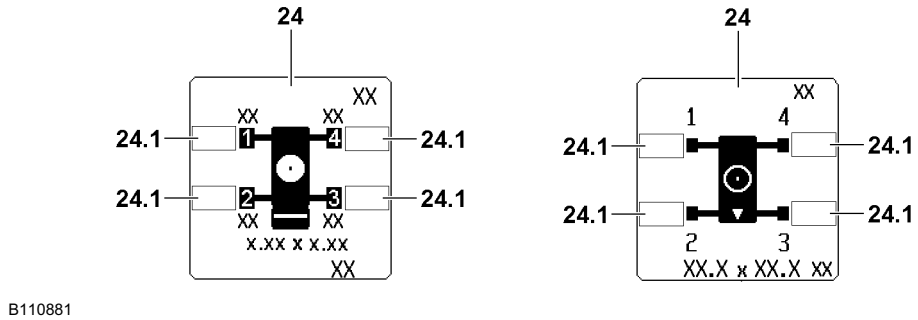

B110881

WARNING

The crane can topple over!

When reaching the programmed minimum / maximum support forces there is no automatic shut off of crane movements!

The displayed support force values are subjected to fluctuating influences, for example crane operation, surrounding and environmental influences!

The resulting tolerance field of the determined values may not be utilized by the support force display to determine the tipping limit of the crane!

If this is disregarded, then the crane can topple over!

Personnel can be severely injured or killed!

- ▶ The displayed support force values of the support force display may not be used to utilize the crane up to the tipping limit!
- ▶ Make sure that all support force values are within the minimum / maximum support forces!

The icon **24** (depending on the crane, similar to the left or right illustration) is shown in the LICCON monitor with blinking value in one or several fields **24.1**. Blinking values in the fields **24.1** signal exceedance of the minimum / maximum support forces.

- ▶ Reverse the crane movements, which caused the support forces to be outside the minimum / maximum values.

Result:

– All values in the fields **24.1** are within the minimum / maximum support forces.

- ▶ Carry out crane movements in such a way that the support forces always remain within the minimum / maximum values.

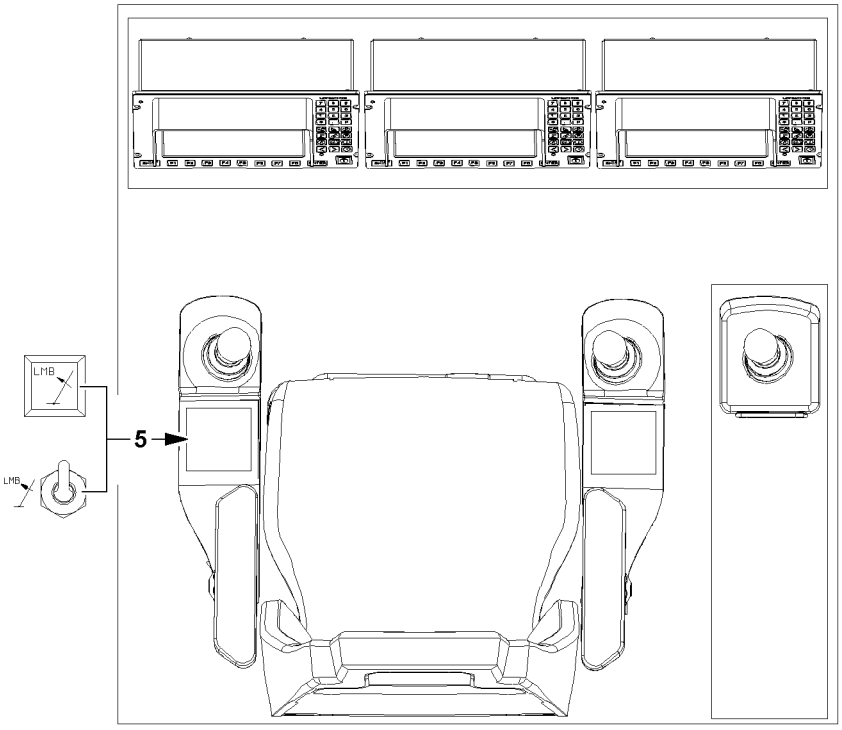

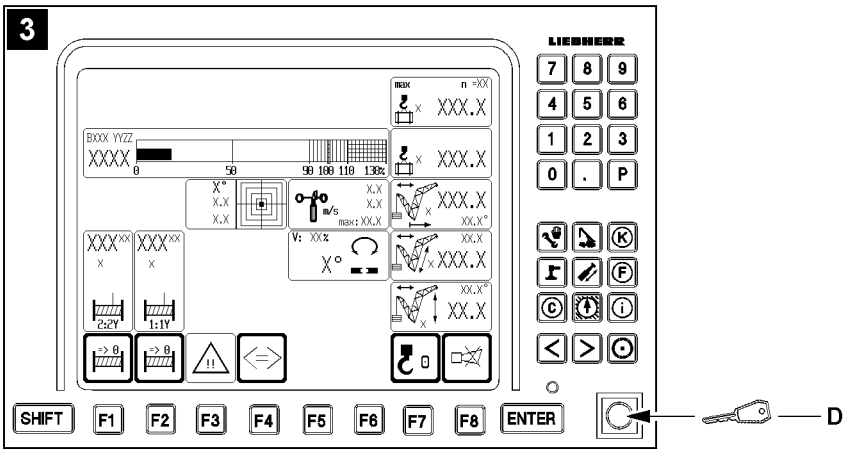

B112334

3.4 Shut off of crane movement: LMB STOP by LICCON overload protection

WARNING
Risk of overload and toppling the crane!
If the shut off limits of the LICCON overload protection are exceeded without knowing the exact cause for the shut off by the LICCON overload protection, then the crane can be overloaded and topple over!
Personnel can be severely injured or killed!
- ▶ Before activating the function “Exceedance of shut off limits of the LICCON overload protection” determine the exact cause for the shut off!

WARNING
Danger of accident due to function “Exceedance of shut off limits of the LICCON overload protection”!
If the shut off limits of the LICCON overload protection are exceeded, there is no additional protection against crane overload!
Due to erroneous operation or deliberate misuse, the crane could collapse, the boom can break off or the crane can topple over!
Personnel can be severely injured or killed!
- ▶ The button **5** “Luffing in with suspended load” and the set up key **D** may only be actuated when it is ensured that no normal operating condition (utilization below 100 % and no active shut off) can be reached without the function “Exceedance of shut off limits of the LICCON overload protection”!
- ▶ Actuate the set up key **D** only when no normal operating condition (utilization below 100 % and no active shut off) can be reached with the button **5** “Luffing in with suspended load”!
- ▶ The function “Exceedance of shut off limits of the LICCON overload protection” is only permissible in emergencies and for assembly purposes!
- ▶ The set up key **D** may only be actuated by persons who are aware of the effects of their acts regarding the function “Exceedance of shut off limits of the LICCON overload protection”!
- ▶ The function “Exceedance of shut off limits of the LICCON overload protection” requires the presence of an authorized person and must be performed with utmost caution!
- ▶ Crane operation with activated function “Exceedance of shut off limits of the LICCON overload protection” is prohibited!

WARNING
Expanded working / danger zone of the crane!
Due to the function “Exceedance of shut off limits of the LICCON overload protection” it is possible that the working / danger zone of the crane is significantly expanded!
If these circumstances are not observed, collisions and accidents can occur!
Personnel can be severely injured or killed!
- ▶ With activated function “Exceedance of shut off limits of the LICCON overload protection” take an expanded working / danger zone of the crane into account and monitor it!

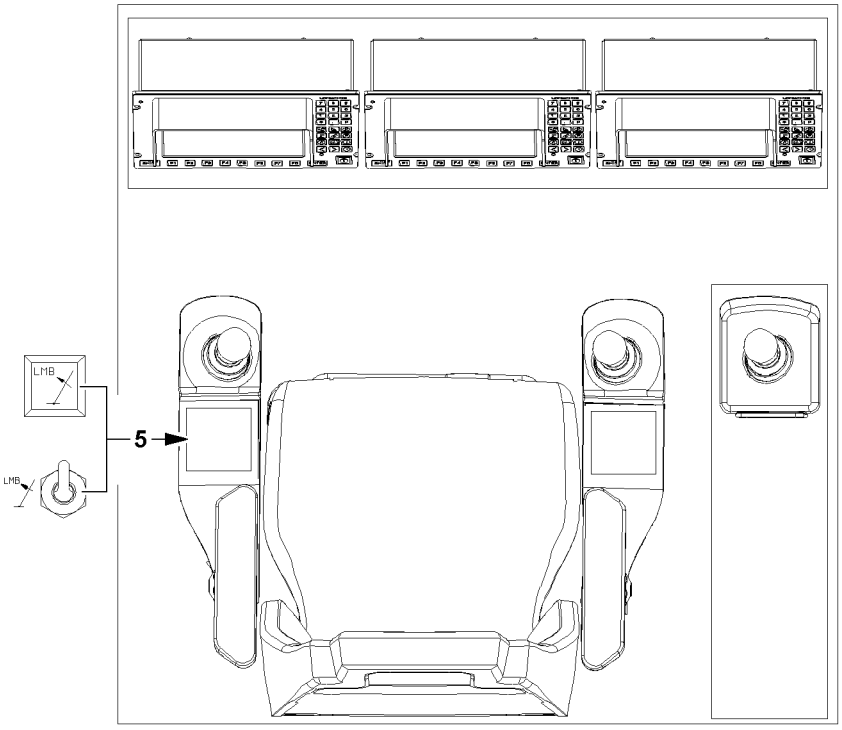

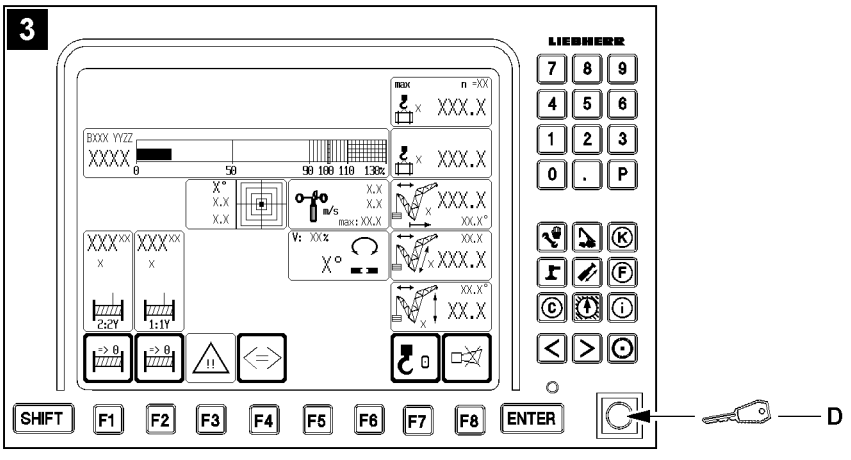

B112334

WARNING
Overload of crane!
When taking on a load by luffing the boom up, the crane can be overloaded!
This could result in serious accidents!
- ▶ Taking on load by luffing up the boom is prohibited!
- ▶ Take on a load only with the hoist gear!

There are two possibilities to exceed the shut off limits of the LICCON overload protection after LMB STOP:
- – With button **5** “Luffing in with suspended load” in the left control console
- – With the set up key **D** on the LICCON monitor with crane operating screen, see illustration **3**

NOTICE
Danger of mix up!
The function “Exceedance of shut off limits of LICCON overload protection” can only be activated with the set up key **D** on the LICCON monitor with crane operating screen, see illustration **3**!
The key buttons on the other monitors are not assigned with this function!
- ▶ Do not mix up the set up key **D** with the other key buttons!
- ▶ In case of mix up: Deactivate the activated function!

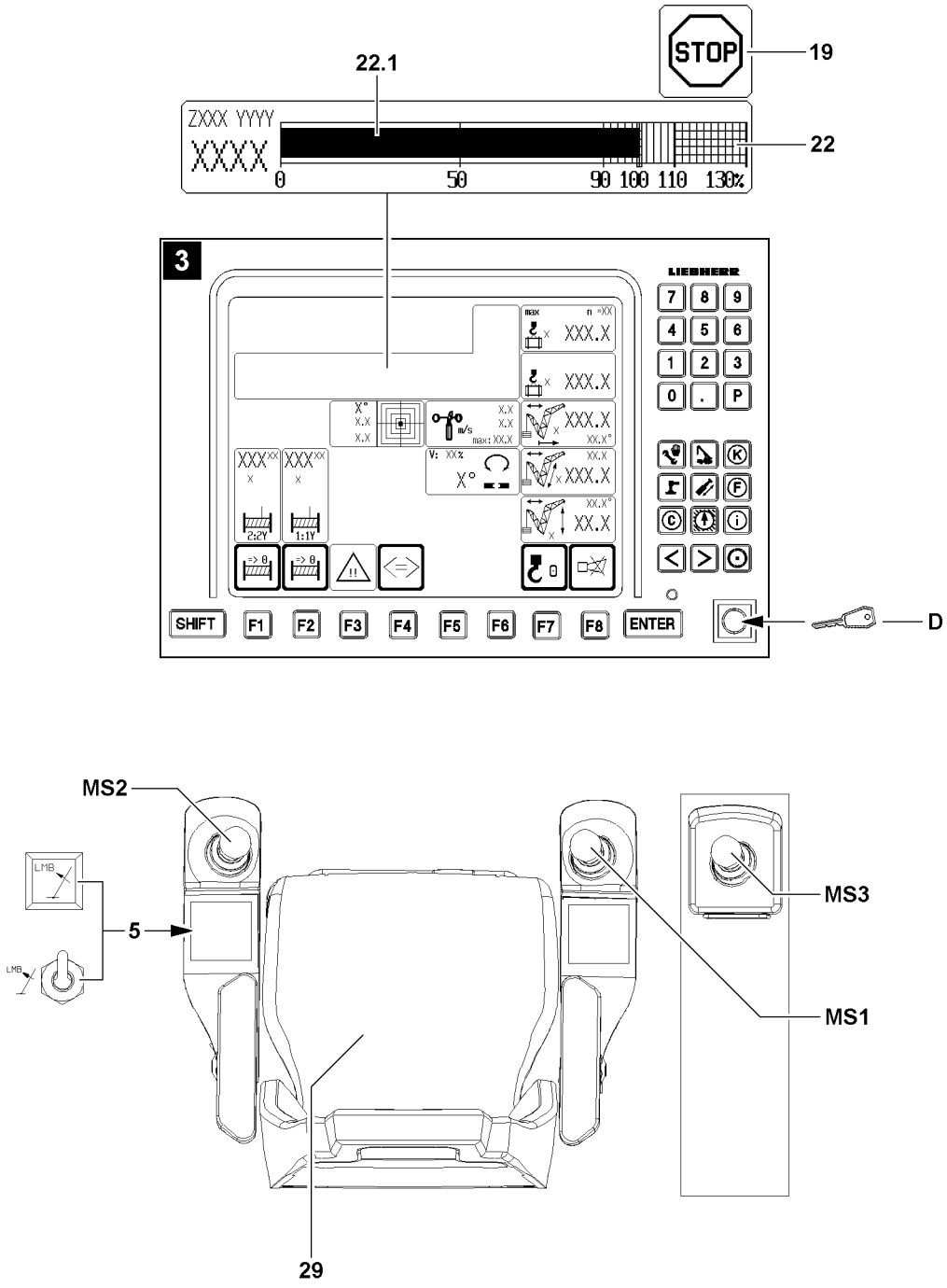
STOP
19
22.1
22
ZXXX YYYY
XXXX
0
50
90 100 110 130%
3
LIEBHERR
SHIFT
F1
F2
F3
F4
F5
F6
F7
F8
ENTER
D
MS2
MS3
MS1
5
29
LMB
1
1
1
2
1

B112335

3.4.1 Luffing in with suspended load

If the maximum permissible load moment is exceeded, the LICCON overload protection turns off all crane movements that increase the load moment.
In the icon **22** (load moment display) the utilization bar **22.1** has exceeded the 100 % mark and in the LICCON monitor appears the icon **19**.
This shut off limit can be exceeded by actuating the button **5** “Luffing in with suspended load”.
Make sure that the following prerequisite is met:

– Either the seat contact button **29** or one of the buttons **1** of the master switches (MS1, MS2, MS3) is actuated.

Note

▶ If the load is reduced by luffing up, then the button **5** “Luffing in with suspended load” is possibly not functioning.

▶ For the procedure when the button **5** “Luffing in with suspended load” is not functioning, see section “Exceedance of maximum permissible load moment”.

▶ Press the function key **5** “Luffing in with suspended load” and hold it.

Result:

– The LICCON overload protection is inactive.

▶ Luff the load in.

Result:

– If the crane reaches a normal operation status (utilization below 100 % and no active shut off) then the icon **19** turns off, normal crane operation is possible again.

The function “Luffing in with suspended load” is deactivated:

– When the function key **5** “Luffing in with suspended load” is not longer actuated.
– When neither the seat contact button **29** nor one of the buttons **1** of the master switches (MS1, MS2, MS3) is actuated.
– At engine stop.

The function “Luffing in with suspended load” is deactivated:

– The LICCON overload protection is active.

▶ Carry out crane movements in such a way that no repeated shut off by the LICCON overload protection occurs.

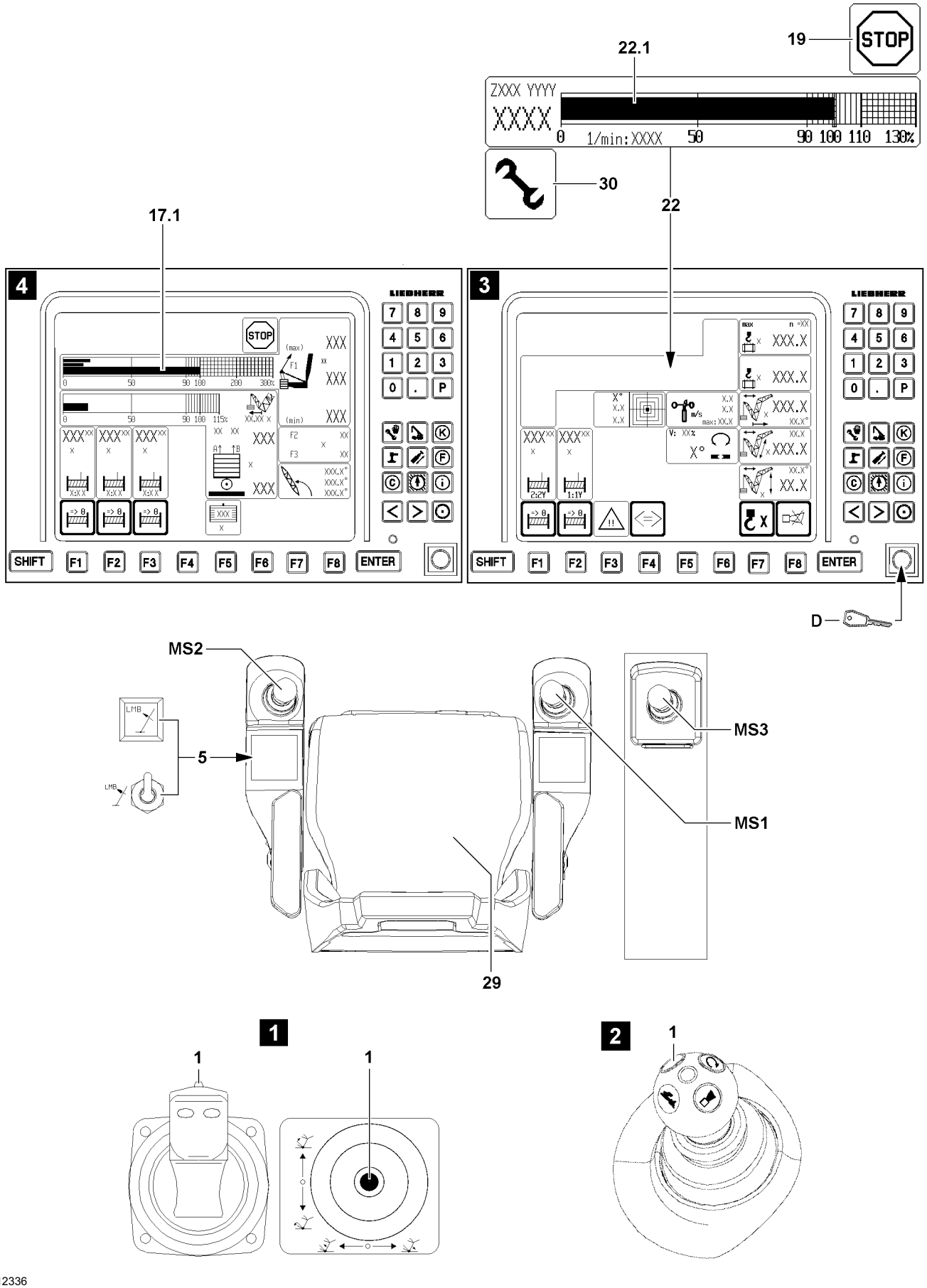
19
STOP
22.1
ZXXX YYYY
XXXX
0 1/min:XXXX 50 90 100 110 130%
30
22
17.1
4
3
LIEBHERR
SHIFT F1 F2 F3 F4 F5 F6 F7 F8 ENTER
D
MS2
MS3
MS1
5
LMB
29
1
2
1
1
1

B112336

3.4.2 Exceedance of the maximum permissible load moment

If the maximum permissible load moment is exceeded, the LICCON overload protection turns off all crane movements that increase the load moment.
In the icon **22** (load moment display) the utilization bar **22.1** has exceeded the 100 % mark and in the LICCON monitor appears the icon **19**.
This shut off can be exceeded by the configuration button **D** in the “right touching” position.

WARNING
Shut off safety device!
If the function “Exceedance of shut off limits of LICCON overload protection” is activated by actuating the set up key **D** then it is possible to exceed the maximum permissible load moment! The function “Exceedance of maximum value test point 1” is automatically activated too. Thus there is no shut off when exceeding the maximum value test point 1!

- ▶ All notes regarding the function “Exceedance of shut off limits of LICCON overload protection” must be observed!
- ▶ The utilization bar $F1_{actual}$ **17.1** of the F1 load display must be observed!

Note

- ▶ In emergency situations, the function “Exceedance of shut off limits of the LICCON overload protection” can be activated with the set up key **D** and the maximum permissible load moment of 100 % can be exceeded.

The set up key **D** on the LICCON monitor has two positions:
– Operating position (not pressed): Crane is in normal operation.
– Position to right (touching): The function “Exceedance of shut off limits of the LICCON overload protection” is activated, the assembly icon **30** appears in the LICCON monitor.

Make sure that the following prerequisites are met:
– With the button **5** “Luffing in with suspended load” no normal operating condition (utilization below 100 % and no active shut off) can be reached.
– All master switches (MS1, MS2, MS3) are in zero position (not deflected).
– Either the seat contact button **29** or one of the buttons **1** of the master switches (MS1, MS2, MS3) is actuated.
– Radio operation* is not active.

- ▶ Turn the set up key **D** to the right (touching).

Result:
– The LICCON overload protection is inactive.
– The assembly icon **30** appears in the LICCON monitor.

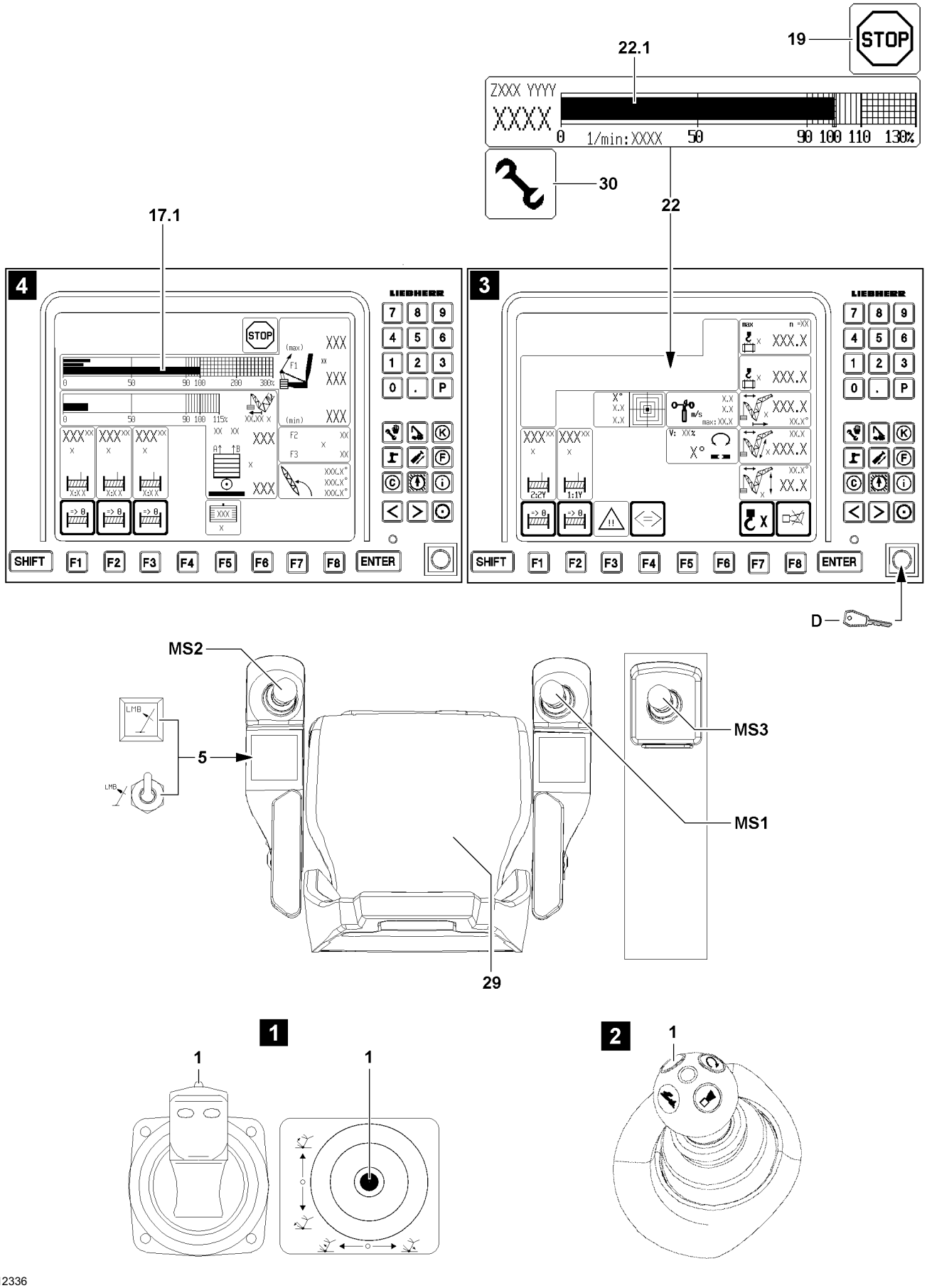
19
STOP
22.1
ZXXX YYYY
XXXX
0 1/min:XXXX 50 90 100 110 130%
30
22
17.1
4
3
LIEBHERR
SHIFT F1 F2 F3 F4 F5 F6 F7 F8 ENTER
D
MS2
MS3
MS1
5
LMB
29
1
1
1
2
1

B112336

▶ Initiate crane movements which directly lead to a normal operating status (utilization below 100 % and no active shut off).

Result:

– If a crane reaches a normal operation status (utilization below 100 % and no active shut off), then the function “Exceedance of shut off limits of the LICCON overload protection” shuts off, the assembly icon **30** and icon **19** in the LICCON monitor turn off.

In addition, the function “Exceedance of shut off limits of LICCON overload protection” turns off immediately:

– If the set up key **D** is actuated again.
– If all master switches (MS1, MS2, MS3) are in neutral position for 10 seconds (with load chart available).
– When neither the seat contact button **29** nor one of the buttons **1** of the master switches (MS1, MS2, MS3) is actuated.
– If radio operation* is activated.
– At engine stop.
– At hoist top shut off.
– When leaving the angle range of the load chart.

Note

▶ The function “Exceedance of shut off limits of the LICCON overload protection” is only turned off when the assembly icon **30** in the LICCON monitor turns off.
▶ If the function “Exceedance of shut off limits of the LICCON overload protection” does not turn off after pressing the set up key **D** once, then press the set up key **D** again until the assembly icon **30** in the LICCON monitor turns off.

The function “Exceedance of shut off limits of the LICCON overload protection” has / was shut off:

– The assembly icon **30** in the LICCON monitor turns off.

▶ Make sure that the assembly icon **30** does no longer appear in the LICCON monitor.
▶ Carry out crane movements in such a way that no repeated shut off by the LICCON overload protection occurs.

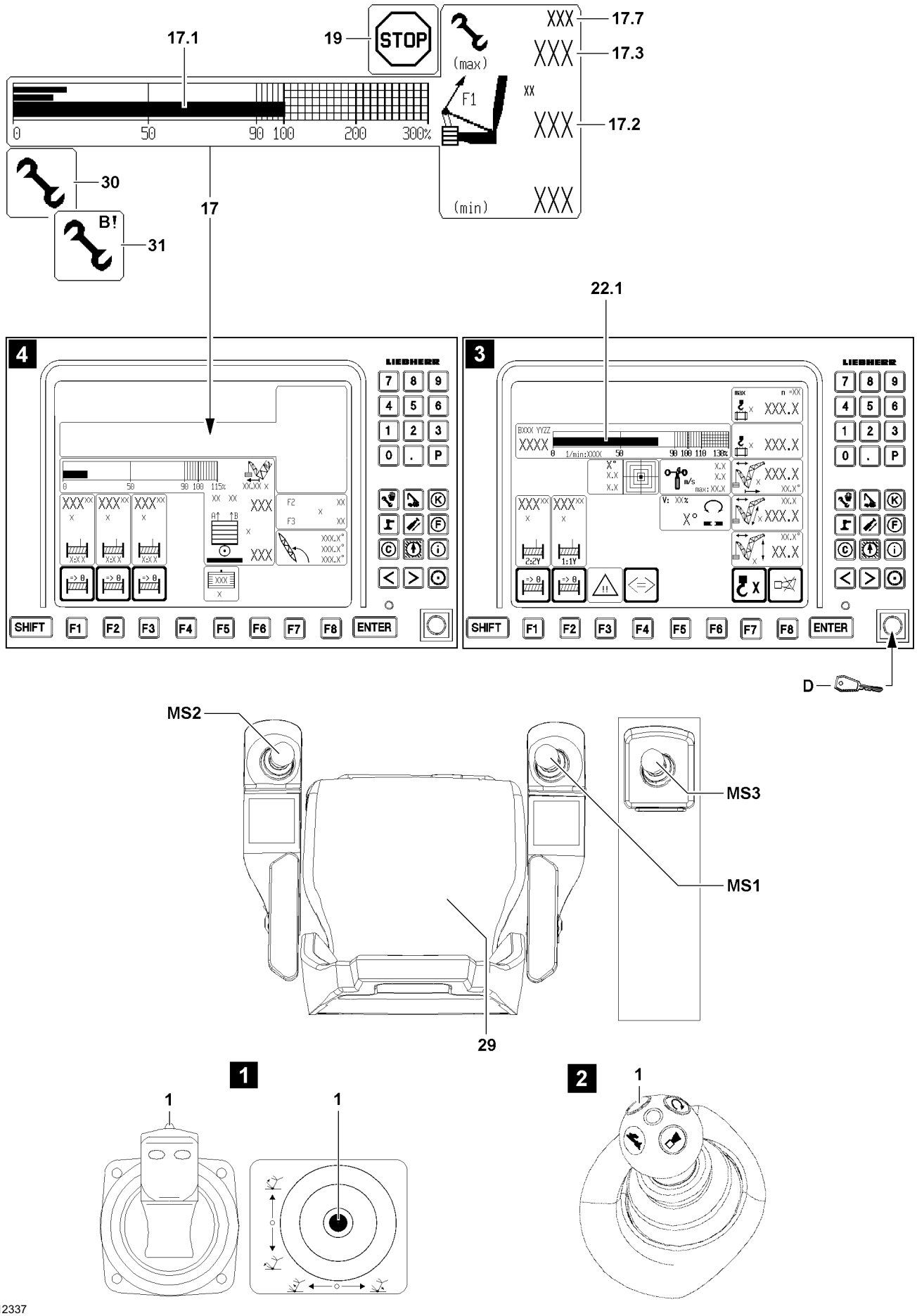
17.1
19
STOP
17.7
17.3
17.2
(max)
(min)
F1
XX
XXX
0
50
90 100
200
300%
30
B!
31
17
22.1
4
3
LIEBHERR
7 8 9
4 5 6
1 2 3
0 . P
SHIFT
F1 F2 F3 F4 F5 F6 F7 F8
ENTER
D
MS2
MS3
MS1
29
1
2
1
1
1

B112337

3.4.3 Exceedance of maximum value test point 1 (force F1) in crane operation

WARNING
Leaving the load chart with load on hook!
If, by actuating the set up key **D**, the shut off is bypassed by value $F1_{max\text{-}operation}$ **17.3** and exceeded by more than 110 %, then the crane is in assembly operation, the assembly icon **31** appears in the LICCON monitor!
There is no load chart available any longer and various display values may not be shown any longer in the crane operating screen!
The load on the hook is no longer monitored by the load chart!
Severe accidents due to crane overload can result!
Personnel can be severely injured or killed!
- ▶ In assembly operation, the data in the erection / take down charts is binding!

WARNING
Shut off safety device!
If, by actuating the set up key **D**, the function “Exceedance of maximum value test point 1” is activated, then the function “Exceedance of shut off limits of LICCON overload protection” is also activated automatically. Thus there is no shut off if the maximum permissible load moment is exceeded!
- ▶ All notes regarding the function “Exceedance of shut off limits of LICCON overload protection” must be observed!
- ▶ The utilization bar **22.1** of the load moment display must be observed!

Note
- ▶ The force determined on test point 1 is generally described as $F1_{actual}$ (actual value F1).
- ▶ In the icon **17** (F1-load display), the force relationship as well as the number values are shown in number values as well as a bar display (called F1-bar display).
- ▶ The value $F1_{max\text{-}operation}$ **17.3** corresponds to 100 % in the F1-bar display.
- ▶ The F1-utilization bar **17.1** shows the relationship $F1_{actual}$ **17.2** to $F1_{max\text{-}operation}$ **17.3**.
- ▶ In crane operation without derrick ballast, fewer values may be shown in the icon **17** (F1-load display).
- ▶ If the actual load is **larger** than the permissible hook block weight according to the erection / take down charts, then it can be exceeded up to maximum 110 % of $F1_{max\text{-}operation}$ **17.3**!
- ▶ If the actual load is **smaller** than the permissible hook block weight according to the erection / take down charts, then the assembly operation becomes active above 110 % of $F1_{max\text{-}operation}$ **17.3**. In assembly operation, there is no load chart available!
- ▶ The value $F1_{max\text{-}assembly}$ **17.7** appears in crane operation when 90 % of its nominal value is exceeded!

In the icon **17** (F1 load display) the utilization bar $F1_{actual}$ **17.1** exceeds the 100 % mark and the LICCON overload protection has shut off the crane movement. The value $F1_{actual}$ **17.2** has exceeded the value $F1_{max\text{-}operation}$ **17.3**.
All further movements, which lead to an increase of the force (value $F1_{actual}$) are shut off.
In the LICCON monitor with the derrick operating screen (illustration **4**) appears the icon **19**.

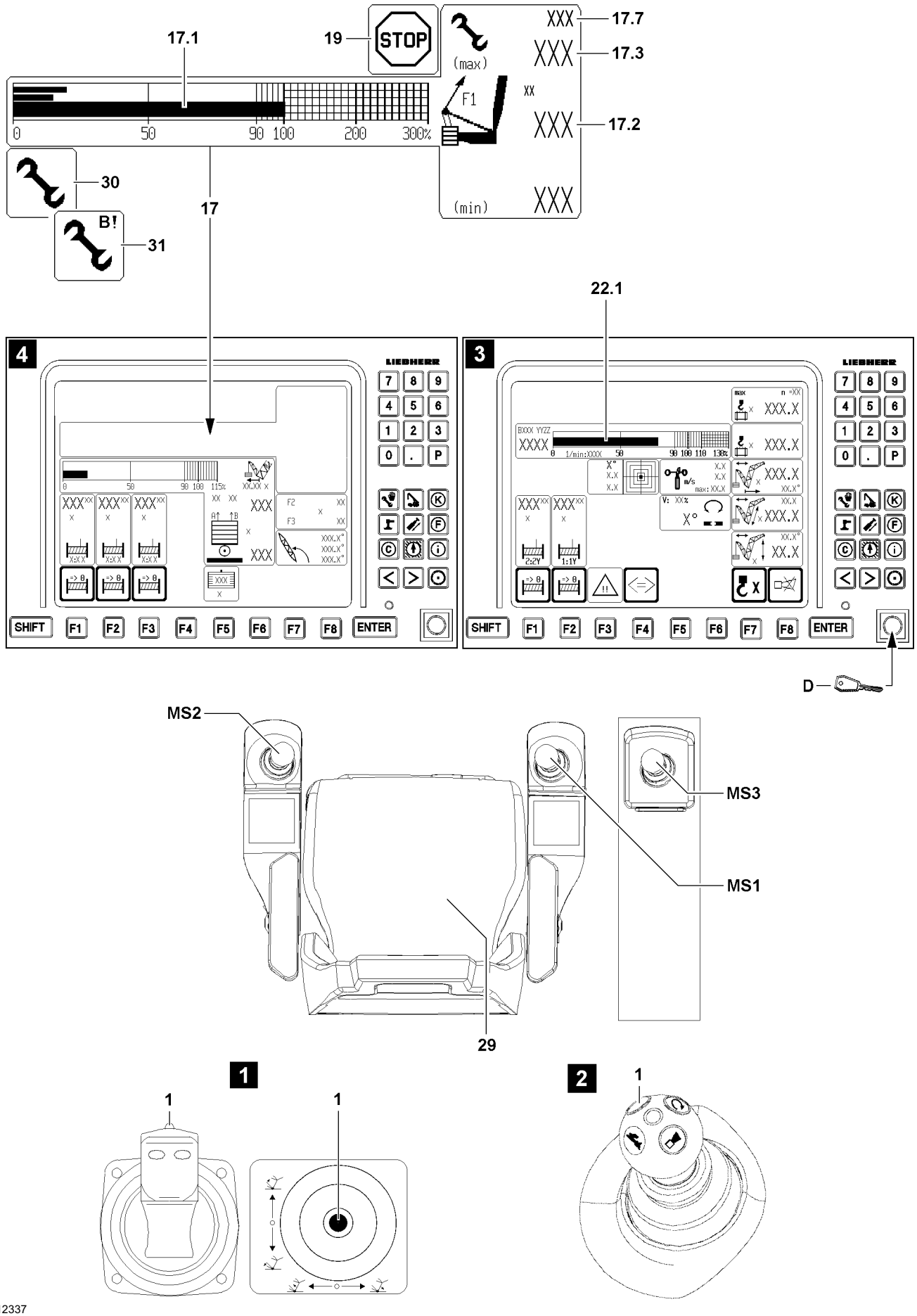
17.1
19
STOP
(max)
F1
XXX
17.7
XXX
17.3
XX
XXX
17.2
(min)
XXX
0
50
90 100
200
300%
30
B!
31
17
22.1
4
3
LIEBHERR
7 8 9
4 5 6
1 2 3
0 . P
SHIFT
F1
F2
F3
F4
F5
F6
F7
F8
ENTER
D
MS2
MS3
MS1
29
1
1
1
2
1

B112337

Make sure that the following prerequisites are met:
- All master switches (MS1, MS2, MS3) are in zero position (not deflected).
- Either the seat contact button **29** or one of the buttons **1** of the master switches (MS1, MS2, MS3) is actuated.
- Radio operation* is not active.
- The F1 load display 110 % has not been reached and a load chart is available.

▶ Turn the set up key **D** to the right (touching).

Result:
- The function “Exceedance of maximum value test point 1” is activated in connection with the function “Exceedance of the shut off limits of the LICCON overload protection”.
- $F1_{max\text{-}operation}$ **17.3** can be exceeded.

The function “Exceedance of shut off limits of the LICCON overload protection” in connection with the function “Exceedance of the maximum value test point 1” also shuts off immediately:
- If the set up key **D** is actuated again.
- If all master switches (MS1, MS2, MS3) are in neutral position for 10 seconds (with load chart available).
- When neither the seat contact button **29** nor one of the buttons **1** of the master switches (MS1, MS2, MS3) is actuated.
- If radio operation* is activated.
- At engine stop.
- At hoist top shut off.

Note
- ▶ The function “Exceedance of shut off limits of the LICCON overload protection” is only turned off when the assembly icon **30** in the LICCON monitor turns off.
- ▶ If the function “Exceedance of shut off limits of the LICCON overload protection” does not turn off after pressing the set up key **D** once, then press the set up key **D** again until the assembly icon **30** in the LICCON monitor turns off.

The function “Exceedance of shut off limits of the LICCON overload protection” has / was shut off:
- The assembly icon **30** in the LICCON monitor turns off.
- The working speed is reduced until all master switches (MS1, MS2, MS3) are in zero position at the same time.

▶ Make sure that the assembly icon **30** does no longer appear in the LICCON monitor.

▶ Carry out crane movements in such a way that no repeated shut off by the LICCON overload protection occurs.

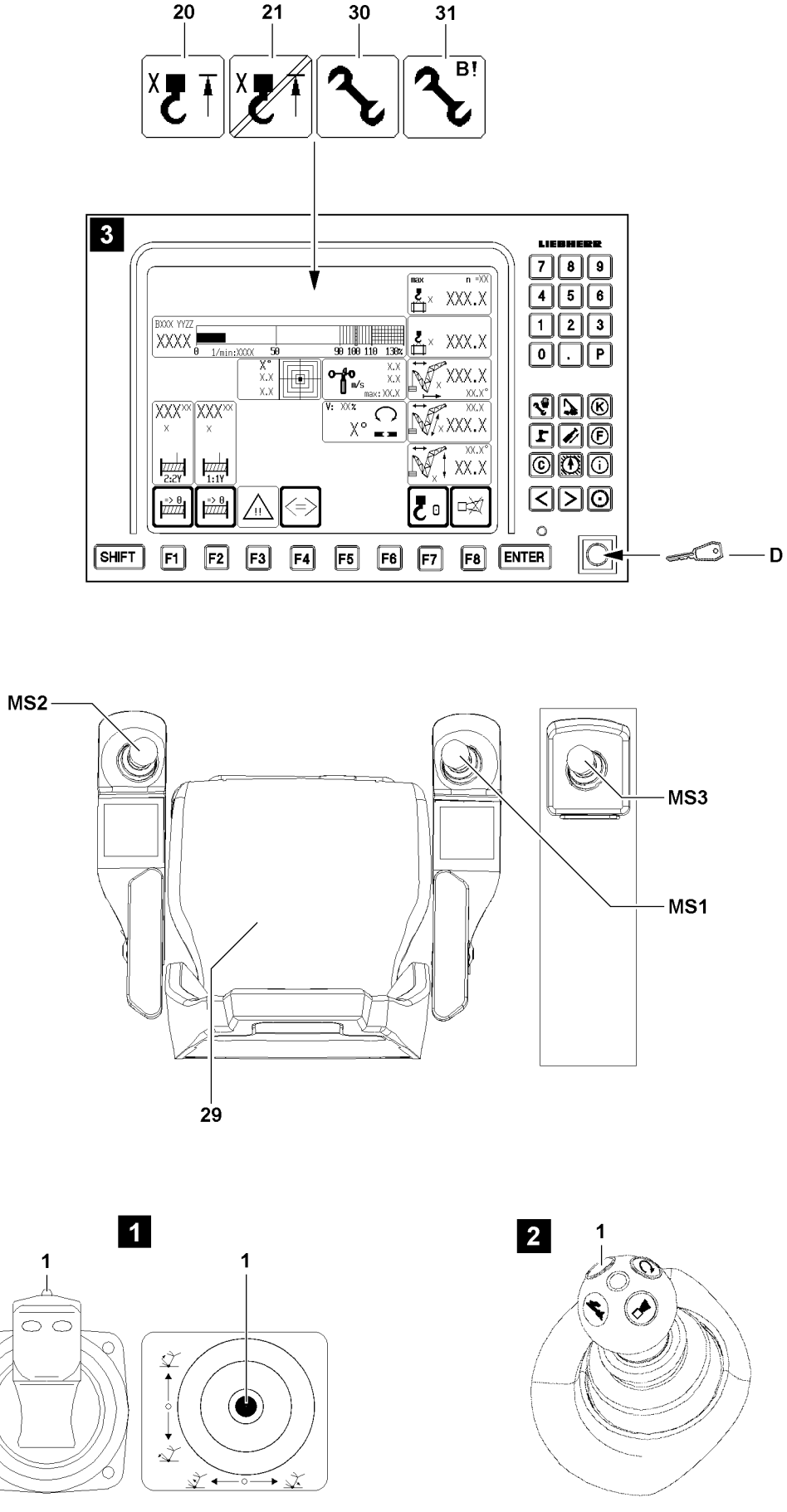
20
21
30
31
B!
3
LIEBHERR
SHIFT
F1
F2
F3
F4
F5
F6
F7
F8
ENTER
D
MS2
MS3
MS1
29
1
1
1
2
1

B111230

3.5 Bypass of the hoist top shut off

WARNING
Improper use of the function “Bypass of hoist top shut off”!
- ▶ The function “Bypass of hoist top shut off” may never be used to increase the lifting height during crane operation!

WARNING
Property damage and falling load!
If the function “Bypass of hoist top shut off” is activated, there is the danger that the hook block or the load hook is pulled against the pulley head!
This danger exists especially when the hoist winch is continued to be spooled up and for crane movements which have an influence on the hoist rope, for example luffing the boom, the auxiliary boom / accessory or the derrick boom!
Property damage and falling load can result!
Personnel can be severely injured or killed!
- ▶ The function “Bypass of hoist top shut off” may only be carried out by an authorized person, along with a guide. The guide must be in direct contact with the crane operator and must continually monitor the distance between the hook block / load hook and the boom head!
- ▶ Carry out all crane movements with utmost caution!

Note
- ▶ The activation of the function “Bypass of hoist top shut off” is only possible if the hoist limit switch was touched and the hoist top shut off has occurred.
- ▶ If the hoist limit switch is triggered when the set up key **D** is actuated (function “Exceedance of shut off limits of the LICCON overload protection” is active, the assembly icon **30** or the assembly icon **31** appear), then a hoist top shut off occurs and the function “Exceedance of shut off limits of the LICCON overload protection” is deactivated.
- ▶ For assembly purposes or in emergency cases, if the activation of the function “Bypass of hoist top shut off” **and** activation of the function “Exceedance of shut off limits of the LICCON overload protection” is necessary, then the set up key **D** must be actuated until the icon **21** and assembly icon **30** or assembly icon **31** (assembly operation) appear.

Make sure that the following prerequisites are met:
- – A hoist top shut off has occurred, the hoist top icon **20** appears in the LICCON monitor.
- – Either the seat contact button **29** or one of the buttons **1** of the master switches (MS1, MS2, MS3) is actuated.
- – All master switches (MS1, MS2, MS3) are in zero position (not deflected).
- – The radio operation* is not active.

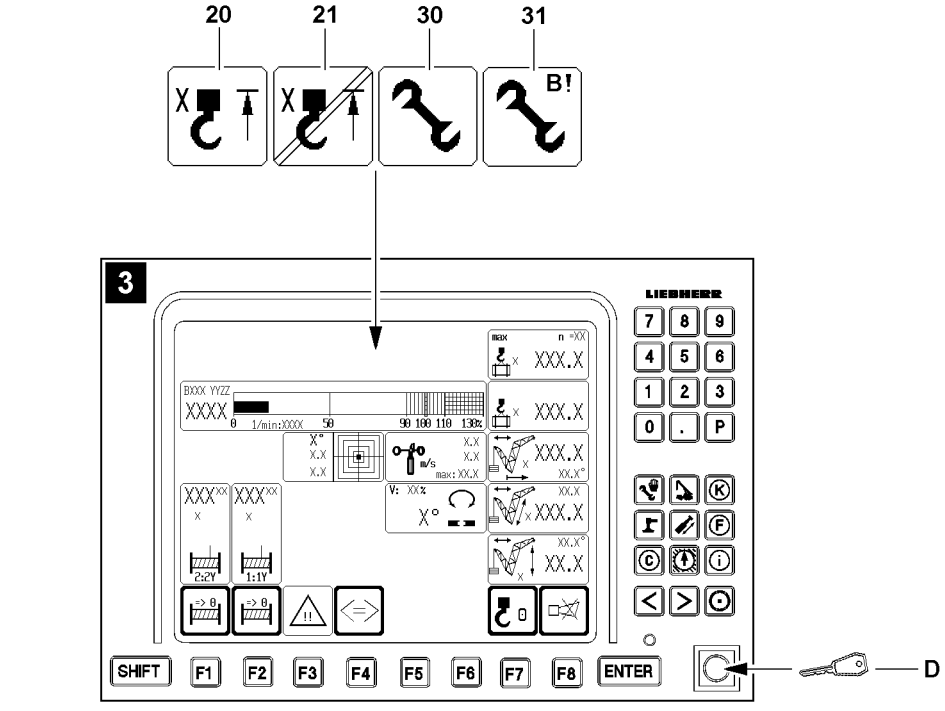
20
21
30
31
B!
3
LIEBHERR
SHIFT
F1
F2
F3
F4
F5
F6
F7
F8
ENTER
D

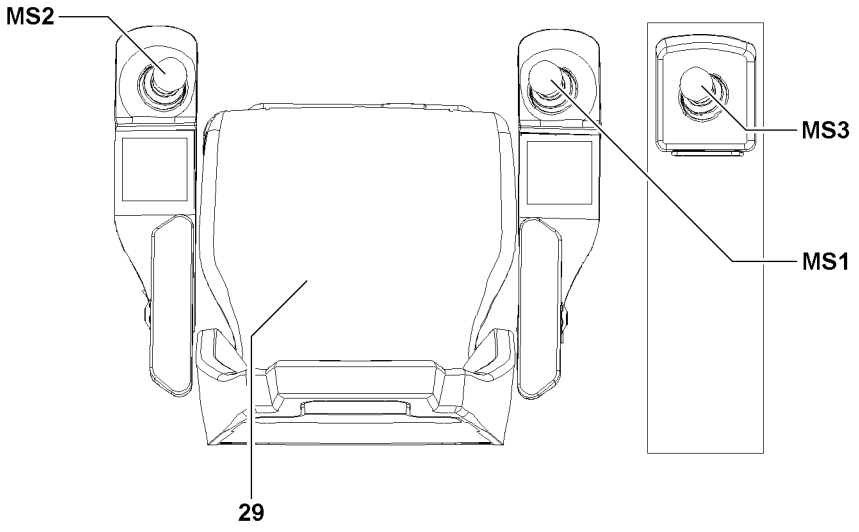
MS2
MS3
MS1
29

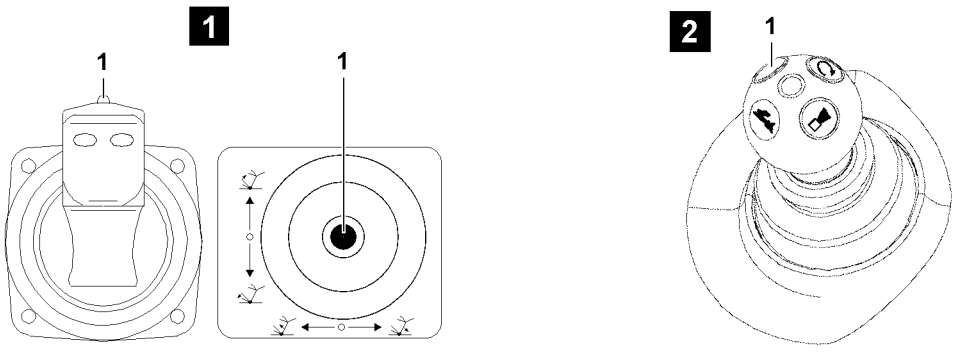
1
1
1
2
1

B111230

▶ Turn the set up key **D** to the right (touching).

Result:

– The assembly icon **30** or the assembly icon **31** (assembly operation) appear in the LICCON monitor.
– The hoist top icon **20** in the LICCON monitor changes to the icon **21**.
– All hoist limit switches are bypassed.

▶ Carry out a crane movement with bypassed hoist limit switches with utmost caution and by taking the safety guidelines into account.

The function “Bypass of the hoist top shut off” turns off:

– If the set up key **D** is actuated again.
– When no master switch (MS1, MS2, MS3) was deflected for 10 seconds.
– When neither the seat contact button **29** nor one of the buttons **1** of the master switches (MS1, MS2, MS3) is actuated.
– If there is no longer a shut off of a hoist limit switch.
– If the radio operation* is active.
– At engine stop.

The function “Bypass of the hoist top shut off” has / was turned off:

– The assembly icon **30** or the assembly icon **31** (assembly operation) in the LICCON monitor turn off.
– The icon **21** on the LICCON monitor turns off.

▶ Make sure that the assembly icon **30** or the assembly icon **31** (assembly operation) as well as the icon **21** no longer appear in the LICCON monitor.

▶ Carry out the crane movements in such a way that no repeated hoist top shut off occurs.

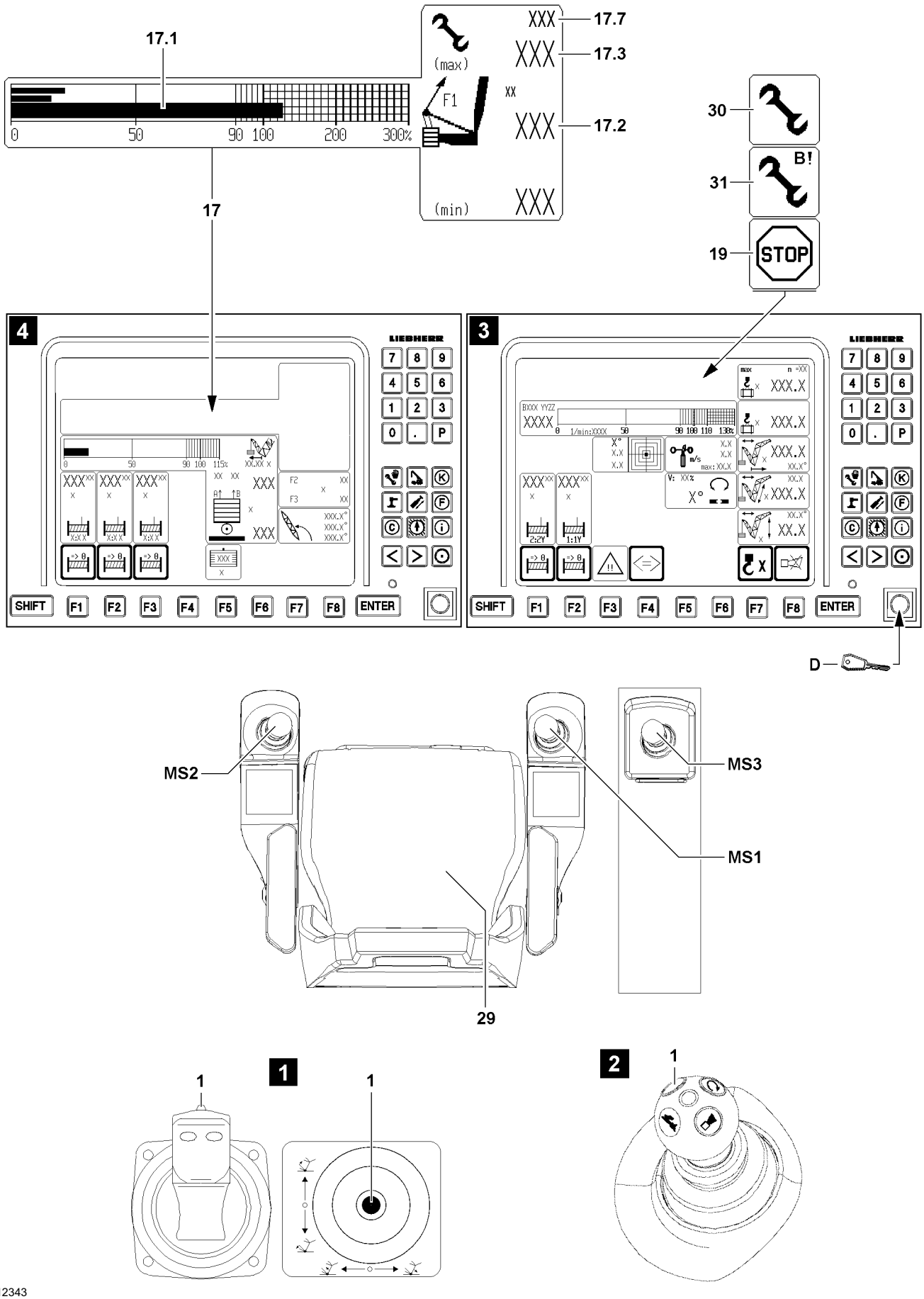
17.1
17.7
17.3
17.2
(max)
(min)
F1
XX
XXX
0
50
90 100
200
300%
17
30
31
B!
19
STOP
4
3
LIEBHERR
SHIFT
F1
F2
F3
F4
F5
F6
F7
F8
ENTER
D
MS2
MS3
MS1
29
1
1
1
2
1
B112343

3.6 Exceeding the shut off limits of the LICCON overload protection during erection / take down procedures (assembly operation)

Note

- If the crane is in the area “No load chart available” then there is a shut off of the crane control by the LICCON overload protection. The icon **19** appears in the LICCON monitor.
- By an actuated set up key **D**, the function “Exceedance of shut off limits of the LICCON overload protection” can be activated, all erection / take down procedures can be carried out within the erection / take down charts, for which no load charts are available.

WARNING

Danger of accident during erection / take down procedures!

If the erection / take down charts are not observed, the crane could collapse, the boom can break off or the crane can topple over!

Personnel can be severely injured or killed!

- The erection / take down charts must be observed!
- Press the set up key **D** only when the configuration status has been entered correctly in the LICCON computer system and matches the actual situation!

Note

- The force determined on test point 1 is generally described as $F1_{actual}$ (actual value F1).
- In the icon **17** (F1-load display), the force relationship as well as the number values are shown in number values as well as a bar display (called F1-bar display).
- The value $F1_{max\text{-}operation}$ **17.3** corresponds to 100 % in the F1-bar display.
- The F1-utilization bar **17.1** shows the relationship $F1_{actual}$ **17.2** to $F1_{max\text{-}operation}$ **17.3**.
- In crane operation without derrick ballast, fewer values may be shown in the icon **17** (F1-load display).
- If a load chart is available, then the value $F1_{max\ operation}$ **17.3** is valid as the limit value for a shut off of crane operation.
- When leaving the area “Load chart available”, the assembly icon **30** turns off and the assembly icon **31** appears!
- When leaving the area “Load chart available” then $F1_{max\ assembly}$ **17.7** is valid as the upper limit value!
- $F1_{max\text{-}assembly}$ **17.7** might only appear when 90 % of its nominal value is exceeded!

3.6.1 Carrying out erection procedures (assembly operation)

Make sure that the following prerequisites are met:

– All master switches (MS1, MS2, MS3) are in zero position (not deflected).
– Either the seat contact button **29** or one of the buttons **1** of the master switches (MS1, MS2, MS3) is actuated.
– Radio operation* is not active.
– The set up configuration corresponds to the erection / take down charts.
– The set up configuration has been entered correctly into the LICCON computer system.

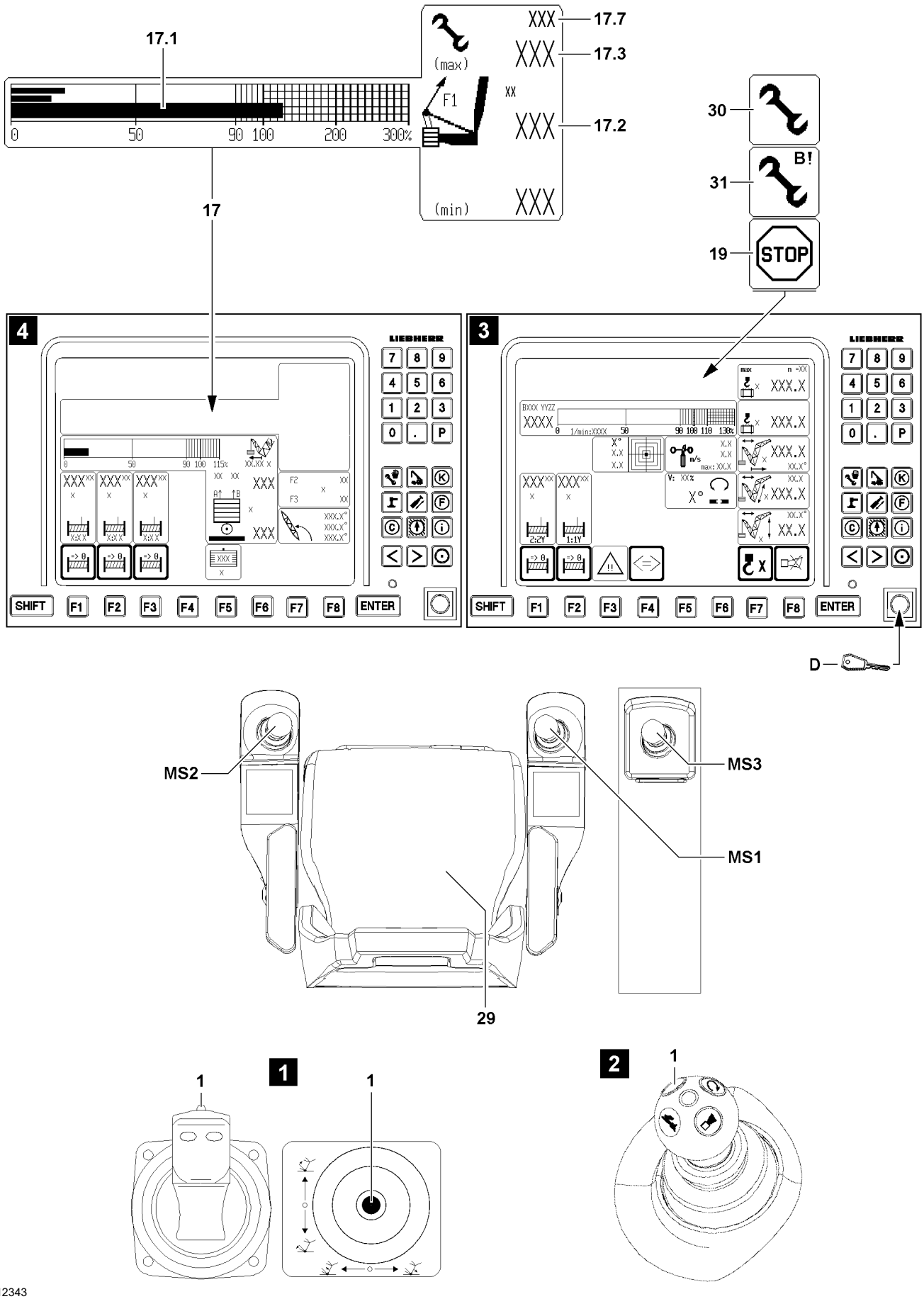
17.1
17.7
17.3
17.2
(max)
(min)
F1
XXX
XX
0
50
90 100
200
300%
17
30
31
B!
19
STOP
4
3
LIEBHERR
SHIFT
F1
F2
F3
F4
F5
F6
F7
F8
ENTER
D
MS2
MS3
MS1
29
1
2
B112343

▶ Turn the set up key **D** to the right (touching).

Result:

– The assembly icon **31** appears in the area “No load chart available”.
– The erection / take down procedures can be carried out.

▶ Watch the icon **17** (F1-load display), the value $F1_{actual}$ **17.2** may not exceed the value $F1_{max\text{-}assembly}$ **17.7**.

Troubleshooting

The erection / take down procedure cannot be carried out due to shut off “$F1_{max\text{-}assembly}$ **17.7** exceeded”?

▶ See section “Danger of exceeding $F1_{max\ assembly}$”.

Troubleshooting

The function “Exceedance of shut off limits of the LICCON overload protection” can not be activated during erection / take down procedures?

▶ Check the error messages.
▶ Check the electrical connections.
▶ Check if all sensors or dummy plugs with integrated electric have been connected properly.

The function “Exceedance of shut off limits of the LICCON overload protection” turns off:

– If the set up key **D** is actuated again.
– When an area with existing load chart is reached (erection procedure).
– If all master switches (MS1, MS2, MS3) are in neutral position for 10 seconds (with “Load chart available”).
– When neither the seat contact button **29** nor one of the buttons **1** of the master switches (MS1, MS2, MS3) is actuated.
– At engine stop.

The function “Exceedance of shut off limits of the LICCON overload protection” has / was shut off:

– The assembly icon **30** or the assembly icon **31** in the LICCON monitor turns off.

▶ After completion of the erection / take down procedures, make sure that the assembly icon **30** or the assembly icon **31** no longer appear in the LICCON monitor.

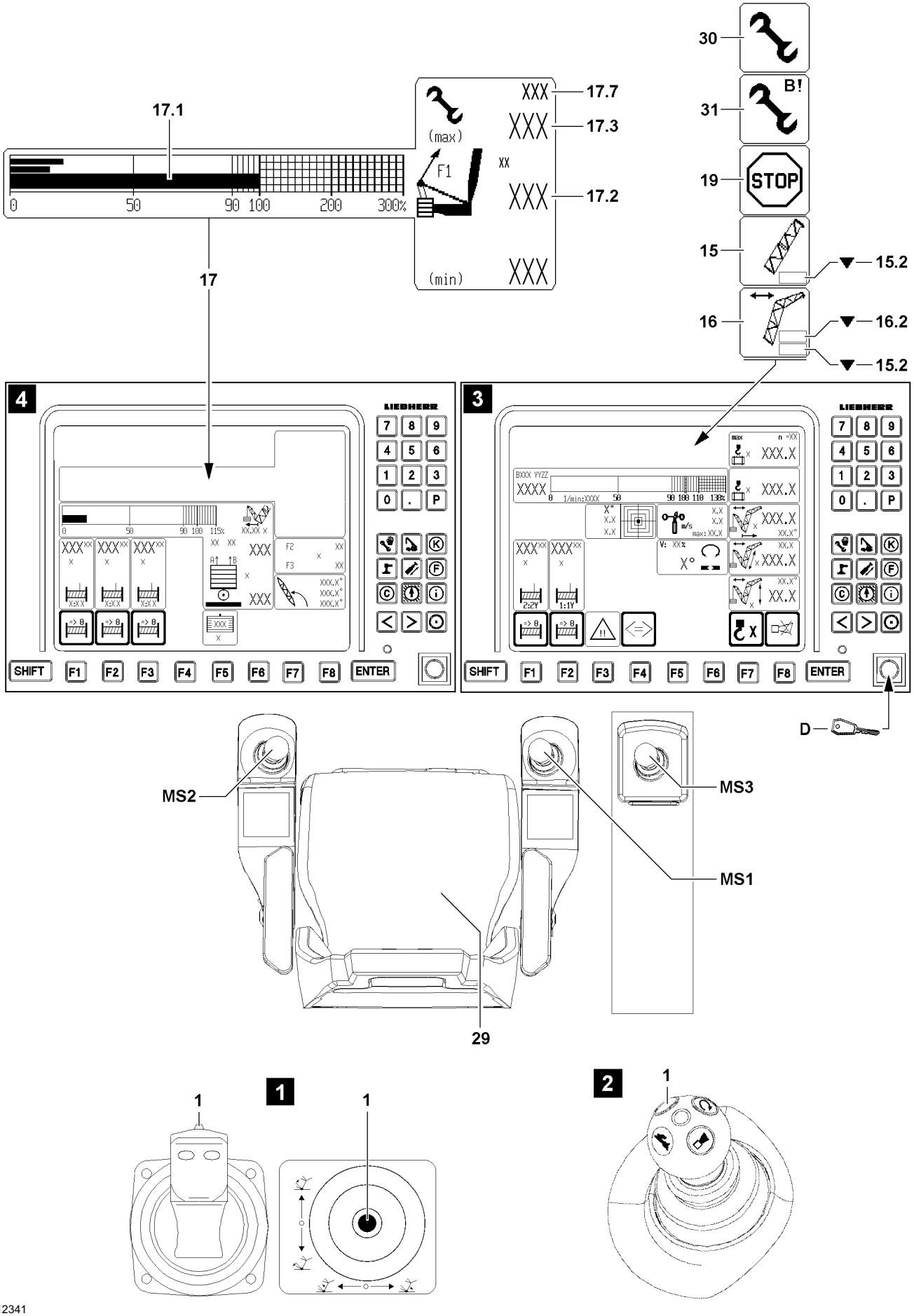
17.1
17
17.7
17.3
17.2
(max)
(min)
F1
XXX
XX
0
50
90 100
200
300%
30
31
B!
19
STOP
15
15.2
16
16.2
15.2
4
3
LIEBHERR
SHIFT
F1
F2
F3
F4
F5
F6
F7
F8
ENTER
D
MS2
MS3
MS1
29
1
1
1
2
1

B112341

3.6.2 Carrying out take down procedures (assembly operation)

WARNING
Increased danger of accidents due to bypass of shut off of luffing the main boom / auxiliary boom / accessory down!
When the shut off luffing the main boom / auxiliary boom / accessory down is bypassed, then the LICCON overload protection as a whole is deactivated or limited.
When the shut off luffing the main boom / auxiliary boom / accessory down is bypassed and the main boom and / or the auxiliary boom / accessory is further luffed down, then there is no load chart available any longer!
Crane operation with bypassed shut off luffing the main boom / auxiliary boom / accessory down is prohibited, since severe accidents can result!
Personnel can be severely injured or killed!
- ▶ Activate the bypass of the shut off luffing the main boom / auxiliary boom / accessory down only in emergency cases or for erection / take down procedures with erection / take down charts!
- ▶ Carry out all crane movements with utmost caution!

Make sure that the following prerequisites are met:
- – In icon **15** or icon **16** the arrow **15.2** or arrow **16.2** appear and the LICCON overload protection has shut off the crane movement.
- – Either the seat contact button **29** or one of the buttons **1** of the master switches (MS1, MS2, MS3) is actuated.
- – All master switches (MS1, MS2, MS3) are in zero position (not deflected).
- – The radio operation* is not active.

▶ Turn the set up key **D** to the right (touching).

Result:
- – The assembly icon **30** appears in the LICCON monitor.
- – The function “Exceedance of shut off limits of the LICCON overload protection” is activated and has bypassed the shut off luffing the main boom / auxiliary boom / accessory down.

Note
- ▶ If a load chart is available, then the value $F1_{max\ operation}$ **17.3** is valid as the limit value for a shut off of crane operation.
- ▶ When leaving the area “Load chart available”, the assembly icon **30** turns off and the assembly icon **31** appears!
- ▶ When leaving the area “Load chart available” then $F1_{max\ assembly}$ **17.7** is valid as the upper limit value!
- ▶ If no derrick boom is installed, then the icon **17** only shows $F1_{actual}$ **17.1** and $F1_{max\text{-}assembly}$ **17.7**. $F1_{max\text{-}assembly}$ **17.7** might only appear when 90 % of its nominal value is exceeded!

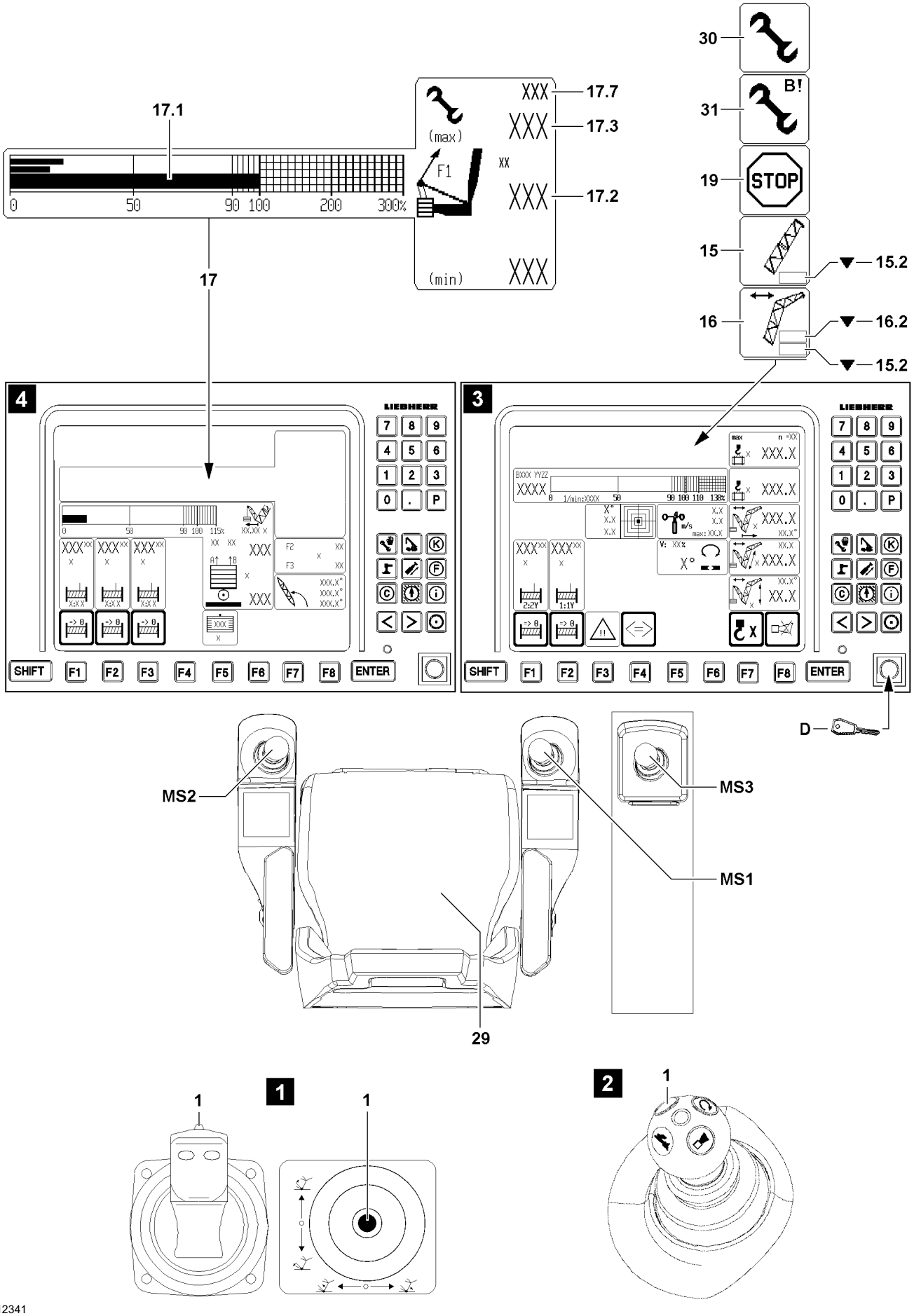
17.1
17
17.7
17.3
17.2
(max)
(min)
F1
XXX
XX
0
50
90 100
200
300%
30
31
B!
19
STOP
15
15.2
16
16.2
15.2
4
3
LIEBHERR
SHIFT
F1
F2
F3
F4
F5
F6
F7
F8
ENTER
D
MS2
MS3
MS1
29
1
1
1
2
1

B112341

DANGER
The crane can topple over!
There is **no** shut off of the luff down movement after reaching the limit value $F1_{max\ assembly}$ **17.7**!
If the warnings by the LICCON overload protection are ignored, then the crane will be overloaded or topples over!
Personnel can be severely injured or killed!

- ▶ The icon **17** (F1-load display) must be watched permanently! It must be ensured that the value $F1_{actual}$ **17.2** is smaller than the value $F1_{max\ assembly}$ **17.7**!
- ▶ The luff down movement must be stopped before the value $F1_{actual}$ **17.2** exceeds the limit value $F1_{max\ assembly}$ **17.7**!

▶ During the take down procedure watch the icon **17** (F1-load display).

Troubleshooting
The take down procedure cannot be carried out due to danger of exceeding the $F1_{max\ assembly}$ **17.7**?
▶ See section “Danger of exceeding $F1_{max\ assembly}$”.

The bypass of the shut off luffing the main boom / auxiliary boom / accessory down turns off:
– If the set up key **D** is actuated again.
– When neither the seat contact button **29** nor one of the buttons **1** of the master switches (MS1, MS2, MS3) is actuated.
– When an area with existing load chart is reached.
– If the radio operation* is active.
– At engine stop.

The bypass of the shut off luffing the main boom / auxiliary boom / accessory down has / was turned off:
– The assembly icon **31** or the assembly icon **30** in the LICCON monitor turns off.

▶ Make sure that the assembly icon **30** or the assembly icon **31** no longer appear in the LICCON monitor.

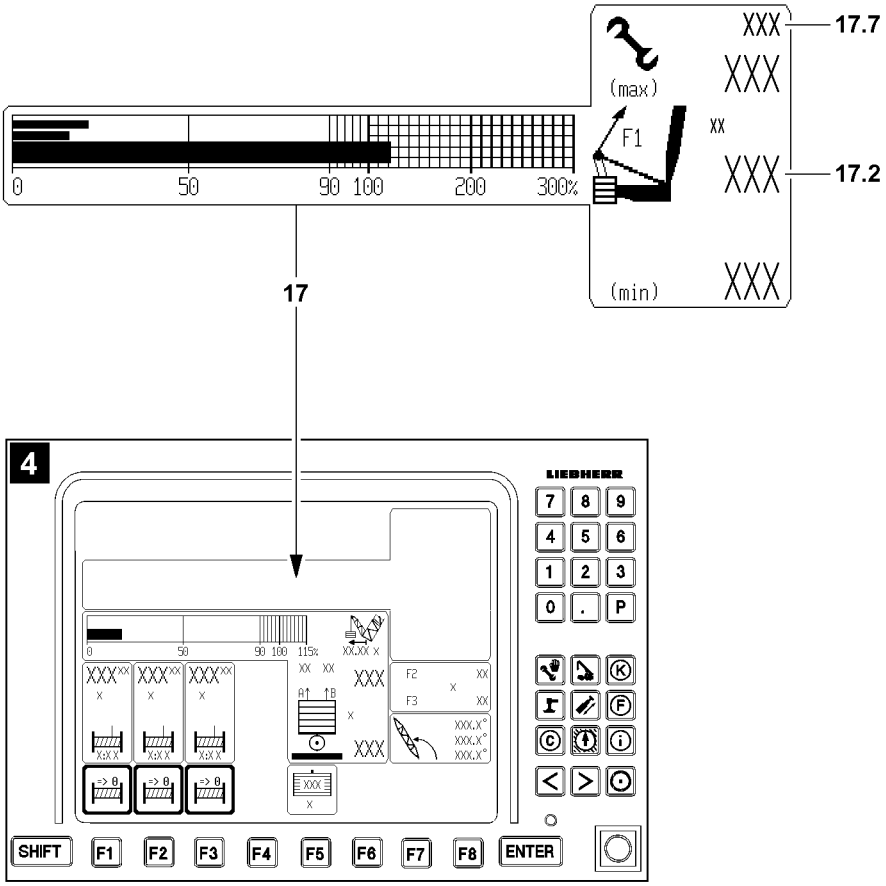
XXX
17.7
(max)
XXX
F1
XX
0
50
90 100
200
300%
XXX
17.2
(min)
XXX
17
4
LIEBHERR
7 8 9
4 5 6
1 2 3
0 . P
SHIFT
F1
F2
F3
F4
F5
F6
F7
F8
ENTER

B112344

3.6.3 Danger of exceeding $F1_{max\ assembly}$

Note

▶ $F1_{max\text{-}assembly}$ **17.7** might only appear when 90 % of its nominal value is exceeded!

DANGER

The crane can topple over!

There is **no** shut off of the luff down movement after reaching the limit value $F1_{max\ assembly}$ **17.7**!

If the warnings by the LICCON overload protection are ignored, then the crane will be overloaded or topples over!

Personnel can be severely injured or killed!

▶ The luff down movement must be stopped before the value $F1_{actual}$ **17.2** exceeds the limit value $F1_{max\ assembly}$ **17.7**!

In the icon **17** (F1-load display), the value $F1_{actual}$ **17.2** has reached the upper limit value $F1_{max\text{-}assembly}$ **17.7**.

▶ Check if a crane movement, which can lower the force F1 (value $F1_{actual}$ **17.2**) can be initiated, for example setting down the hook block / load hook.

▶ Check if the correct set up configuration has been entered on the LICCON computer system.

▶ Check if the actual set up configuration matches the entered set up configuration.

▶ Check if the correct hook block weight has been entered.

▶ Check if the respective hook block / load hook is installed.

▶ Check if all attachment parts and guy rods on the boom system, which are not needed, have been removed.

▶ Check if environmental influences (wind, snow or ice) on the crane are not too great.

Note

▶ Hook block weight entry and correction of weighing errors, see Crane operating instructions, chapter 4.02.

5 Equipment

B195219

1 Checking the retaining elements

Retaining elements are used to secure the pins. Due to mechanical damage / distortion, the function of the retaining elements can be compromised. In addition, the spring force of the retaining elements can be reduced significantly. Do not re-use retaining elements if there is insufficient spring force. The pin retainer must be secured with a correctly **functioning** retaining element.

WARNING
Failure of retaining element!
If the spring force of the retaining element is not sufficient or in case of mechanical damage / distortion, the retaining element can fail!
If the correct retention of the pin is no longer ensured, then the pin can unpin by itself! Accidents with bodily injuries / property damage can result!
▶ Use exclusively **functioning** retaining elements in proper condition.

2 Rope pulleys

WARNING
Danger of crushing due to rotating rope pulleys!
Arms and legs can be caught and crushed or severed between the rope pulley and the rope due to rotating rope pulleys!
▶ It is prohibited to touch the ropes or rope pulleys during operation!
▶ Adhere to the safety distance to ropes and rotating rope pulleys!

3 Checking the ropes

WARNING
Danger of accident!
▶ The ropes must be checked by an expert before assembly and checks must be performed at regular intervals in order to detect possible damage or wear and tear at an early stage. See Crane operating instructions, chapter 8.04.

The ropes must be removed immediately if any of the following damage is detected:
– Breakage of a strand
– Wire breaks
– Broken wire nests
– Reduction in the rope diameter by 10 % or more of the nominal size
– Rope deformations

3.1 Placing the hoist / control ropes

In order to guarantee safety and operating characteristics, only original Liebherr replacement parts or parts approved by Liebherr may be used.

NOTICE
Damage of hoist / control rope!
If a hoist / control rope is placed with worn rope pulleys, damage can occur!
▶ The rope pulleys must be checked before placing a rope. See Crane operating instructions, chapter 8.01!
▶ Replace worn or damaged rope pulleys!

NOTICE
If the following notes are not observed, the cam limit switch / winch turn sensor must be readjusted.
- When the hoist rope is spooled up, the end of the hoist rope must remain in front of the winch and may not be pulled over the winch.
- Never pull the hoist rope ends under the winch by spooling the winch up!
- Never pull the hoist rope off from the “stationary” winch.
- The winch turn sensor must also be readjusted, if it is determined during operation or when changing the hoist rope that the winch does not turn off when the minimum rope coils are reached.

3.1.1 Cranes with cam limit switch

The cam limit switch is adjusted at the factory that it turns off before the minimum rope coils are reached (three hoist rope coils on the winch).

WARNING
Danger of accident due to falling load!
If the following instructions are not observed, the hoist rope end attachment may be torn out, causing the load to topple.
- If a new hoist rope is used, the cam limit switch must be reset!
- The cam limit switch must be adjusted so that it turns off when only 3 hoist rope coils remain on the winch!

3.1.2 Cranes with winch turn sensor

The winch turn sensor is adjusted at the factory that it turns off before the minimum rope coils are reached (four hoist rope coils on the winch). If used properly, the winch turn sensor will not need readjustment.

WARNING
Danger of accident due to falling load!
If the following instructions are not observed, the hoist rope end attachment may be torn out, causing the load to topple.
- If a new hoist rope is placed, the winch turn sensor must be checked!
- The winch turn sensor must be set to turn off when only 4 hoist rope coils remain on the winch!

4 Control measures

WARNING
The crane can topple over!
If the control measures are not carried out before crane operation, then accidents can occur. The crane can be overloaded, topple over or be damaged!
Personnel can be killed or injured!
- Crane operation with safety devices which are **not** functioning correctly is strictly prohibited!
- Start crane operation only after all safety devices have been checked and are functioning correctly!
- Start crane operation only if the overload protection has been set according to the data in the load chart!
- Start crane operation only if the crane is properly supported and horizontally aligned!

WARNING
Interruption of crane operation!
If the following specifications for interruption of crane operation are not observed, accidents can occur.
- ▶ If the crane operator leaves the crane cab even if for just a short time, the crane must be secured to prevent unauthorized access.
- ▶ Before starting to work again with the crane, the crane operator is obligated to check the operating mode settings and to reset them, if necessary.

B113437

Make sure that the following prerequisites are met:
– The overload protection is not bypassed.
– No assembly operation is activated.
– Crane operation can be carried out with minimum boom radius.

4.1 General control measures before crane operation

– Make sure that no visible damage is visible on the crane.
– Make sure that there are no loose parts on the boom, crane chassis and crane superstructure.
– Make sure that the cable / rope drum and the limit switches are free of snow and ice.
– Make sure that the gear ring of the rotary connection is clean and greased.
– Make sure that the air supply to the oil and water cooler is clear.
– Make sure that the step, ladders and pedestals are in the correct position for crane operation.
– Make sure that all tool boxes, compartments, coverings, covers and cabinet doors are closed.
– Make sure that no persons or objects are within the danger zone of the crane.
– Make sure that the crane is standing on level, load bearing ground.
– Make sure that the crane is sufficiently supported depending on the load case and the ground conditions.
– Make sure that there is sufficient distance to excavations and slopes.
– Make sure that no obstacles are within the working range of the crane, which obstruct the required crane movements.
– Make sure that the crane has sufficient distance to live power lines.
– Make sure that the LICCON overload protection is set according to the data in the load chart.
– Make sure that the overload protection is set according to the actual set up configuration of the crane.
– Make sure that the electrical connections, the connector plug, the pull release, the cables and the protective insulation function. Replace missing or defective parts.
– Make sure that the cable routings on the electrical connections are seated tightly. If necessary, tighten loose screw connections.
– Make sure that the existing safety devices are functioning.
– Make sure that the overload protection is functioning.
– Make sure that the hoist limit switches are functioning.
– Make sure that the limit switch boom “steepest position” is functioning.
– Make sure that the wind speed sensor easily moves and is functioning.

4.2 Additional controls for cranes with crane support

– Make sure that the folding / sliding beams are secured with pins to prevent them from sliding.
– Make sure that the support plates are secured in the operating position.
– Make sure that the crane is properly supported.
– Make sure that the crane is horizontally aligned.
– Make sure that the axle suspension is blocked (mobile crane).
– Make sure that the tires have no contact to the ground (mobile crane).
– Make sure that the track chains are secured to prevent them from sagging (crawler crane).

4.3 Additional controls for freestanding crane operation (on tires)

– Make sure that all prerequisites for freestanding crane operation are met.
– Make sure that sufficient tire pressure is in all tires for crane operation on tires.
– Make sure that the ground is sufficiently level for crane operation on tires.

4.4 Additional controls for cranes with derrick boom

– Make sure that the shut off via the limit switch - derrick is functioning.
– Make sure that the entire swing range of the suspended ballast / ballast trailer is free of personnel and obstacles.

4.5 Additional controls for cranes with luffing auxiliary boom / accessories

– Make sure that the shut off via the limit switch luffing auxiliary boom / accessories “steepest position” is functioning.
– Make sure that the shut off via the limit switch luffing auxiliary boom / accessories “lowest position” is functioning.
– Make sure that the shut off via the limit switch flap in “steepest position” position is functioning.
– Make sure that the pendulum of the mechanical relapse retainer moves easily over the entire swing range and is functioning.

4.6 Additional controls for certain crawler cranes

For existing crawler assembly key button:
– Make sure that the crawler assembly key button is turned off.

5 Dangerous conditions without shut off

5.1 Block position of relapse cylinders when setting down the load

NOTICE
Damage to boom or relapse cylinder!
If the block position of the relapse cylinders is triggered by the boom or the derrick with attached, freely suspended load, then there is a danger of damaging the boom or the relapse cylinders when setting down the load onto the ground! By setting down the load, the crane is relieved, which causes the boom system to move to the rear.
There is no shut off of the hoist gear down function!
▶ Actuate the opposite direction of movement which caused the block position and eliminate the block position!

6 Transporting components

WARNING
Danger of accident!
- If any components are transported on an auxiliary vehicle, then they must be properly secured. If necessary, transport these components on supports or using a special transport device.

6.1 Transporting lattice sections

WARNING
Danger of accident!
- If the lattice sections are pushed into each other for transport, the lattice sections must be safely rigged on the transport vehicle and secured on at least two independent points.

7 Pneumatic springs for assembly support of components

Pneumatic springs are installed on various crane components to simplify the installation of these components.

WARNING
Danger of crushing!
Defective pneumatic springs no longer provide the supporting properties on the movable components!
Due to falling components, personnel can be killed or severely injured!
High risk of accident!
- Always check pneumatic springs for damage before actuating the corresponding components!
- Do not use components with defective pneumatic springs! Replace defective pneumatic springs immediately!
- Make sure that no persons or objects are in the movement range of the moving components which is supported by the pneumatic spring!
- It is strictly prohibited to remain or place any objects in the movement or other danger zone of the moving crane components which are supported by the pneumatic spring!

8 Manual rope winches for assembly support of components

Manual rope winches are installed on various components to simplify the installation or removal of these components.

WARNING
Danger of crushing!
Defective manual rope winches no longer provide the supporting action on the movable components!
Due to falling components, personnel can be killed or severely injured!
High risk of accident!
- Always check manual rope winches for external and functional damage before actuating the respective components!

- ▶ Check the rope of the manual rope winch for damage!
- ▶ At least two rope coils must always remain on the rope drum!
- ▶ Do not use components with defective manual rope winches! Replace defective manual rope winches!
- ▶ It is strictly prohibited for personnel or objects to remain within the movement range of the components, which are supported by the manual rope winch!
- ▶ It is prohibited for personnel or objects to remain within the danger zone of the moveable components!

9 Weights

Note

- ▶ The weight of each component is specified in the chapter 1.03 or the respective chapter in the Crane operating instructions or is stated on the tag attached to the corresponding component!
- ▶ If components are pushed into one another (for example intermediate sections) or folded together (for example the folding jib), then the total weight is given by the sum of the individual components!

NOTICE

False estimation of weights

- ▶ Contact the Service department at **Liebherr-Werk Ehingen GmbH** if the weight of the respective component is not stated on the tag or in the Crane operating instructions!
- ▶ Use an auxiliary crane with sufficient load carrying capacity including judicious reserve!

10 Guy rods

WARNING

Boom can break off!

The arrangement of the guy rods for the boom or boom systems is stipulated in the rod plan! If the arrangement of the guy rods according to the rod plan is not observed, the crane can collapse, the boom can break off or the crane can topple over!

Personnel can be severely injured or killed!

- ▶ Always carry out the arrangement of the guy rods according to the rod plan!
- ▶ If an auxiliary guying is required for a certain boom length, then it must always be installed according to the rod plan on the position defined in the rod plan!

WARNING

Unutilized guy rods on boom!

If guy rods are on the lattice sections which are not used for operation, then there is a risk of accidents!

Unused guy rods can loosen up and fall down!

Personnel can be severely injured or killed!

The load chart is invalid!

The load display of the LICCON computer system shows an incorrect value!

The weight of the boom is too large for erection!

- ▶ Disassemble and remove the guy rods which are not needed on the transport retainers before erecting the boom!

Note

- ▶ Inspection and maintenance of guy rods, see Crane operating instructions, chapter 8.15!

11 Auxiliary guying

The auxiliary guying is of significant importance for safe crane operation.

The auxiliary guying is a deciding factor in relieving the boom, or the boom system during erection and take down as well as during crane operation.

WARNING

The crane can topple over!

If the auxiliary guying is not installed or not installed on the position specified in the rod plan, then the crane can collapse, the boom can break off or the crane can topple over!

- ▶ If an auxiliary guying is specified in the rod plan for the required boom length, then it must be installed on the respective position!
- ▶ Make sure that the auxiliary guying is always completely installed and that all pins are properly pinned and secured!

12 Bypassing the overload protection

B113438

– Illustration **1**: LICCON monitor (only certain crane types).
– Illustration **2**: Indicator light “Assembly” in instrument panel crane cab (only certain crane types).

The overload protection is considered bypassed for:

– all types of assembly operations.
– all types of exceeded shut off limits of the overload protection.
– all types of emergency operation.
– all types of crane operation with deactivated or defective sensors and limit switches.
– all types of deviation from specified set up configuration of the crane.

DANGER

Increased accident risk when bypassing the overload protection!

As section 4.2.6.3.2 of EN 13000 does not put the requirements of appendix 1 of the EC machinery directive 89/37/EC into concrete terms, the overload protection has not been designed according to this definition.

Proper and destined use of the crane is ensured due to the construction of the overload protection system and observance of the information in the Crane operating instructions. All **sensibly foreseeable erroneous operations** of the crane have been taken into consideration.

Prohibited crane operation with bypassed overload protection – with the aim of increasing the maximum load capacity of the crane above the rated value in the load chart, or to extend the designated working range of the crane – does not constitute a **sensibly foreseeable erroneous operation**, rather **a deliberate improper use with high risk of accident**!

The possible risks and consequences of such deliberate improper use are detailed in the Crane operating instructions.

Such deliberate improper use can neither be prevented by means of the constructive design, nor by means of information in the Crane operating instructions!

- ▶ Bypass the overload protection only according to the Crane operating instructions!
- ▶ Exceed the shut off limits of the overload protection only according to the Crane operating instructions!
- ▶ Any other use of the crane with bypassed overload protection than that described in the Crane operating instructions is prohibited!

12.1 Bypassing the overload protection

If the maximum permissible load moment is exceeded, the overload protection turns all load moment increasing crane movements off.
This shut off can be bypassed or exceeded various ways by:
– exceeding the shut off limits (utilization more than 100 % or leaving the load chart).
– activating an assembly operation.
– activating an emergency operation.

The displays of the LICCON overload protection remain functioning in as far as all associated sensors and limit switches are active and a load chart is available.

WARNING
Increased accident risk when bypassing the overload protection!
If the overload protection is bypassed, there is no additional protection against crane overload!
In the event of deliberate improper use, the crane could collapse, the boom can break off or the crane can topple over!
Personnel can be killed!
This could result in high property damage!
▶ It is only permitted to bypass the overload protection for assembly or in emergencies!
▶ The bypass of the overload protection may only be carried out by persons who are aware of the effects of their acts!
▶ Bypassing the overload protection requires the presence of a person authorized by the crane operator and must be performed with utmost caution!
▶ Crane operation with bypassed overload protection is strictly prohibited!

12.1.1 Bypassing the LICCON overload protection

Note
▶ Applies only for cranes with LICCON overload protection!

Depending on the crane version, one or more operating elements are available to bypass the overload protection:
– Button in the control console.
– Key button on the LICCON monitor.
– Key button in the instrument panel.
– Key button in the switch cabinet.
– Sensor for transponder on the crane cab.

▶ Actuate the respective operating element.

Result:
– The LICCON overload protection is bypassed / inactive.
– The “Assembly” icon appears on the LICCON monitor.
– Depending on the circumstances, acoustical and / or optical warning signals (blinkers, flashing lights, bells and horns).

▶ If the LICCON overload protection is to be reactivated:
No longer actuate the respective operating element or reset.

Result:
– The LICCON overload protection is active.
– The “Assembly” icon no longer appears on the LICCON monitor.
– The acoustical and / or optical warning signals which were triggered by the bypass are turned off again.

12.1.2 Bypassing the PAT overload protection

Note
▶ Applies only for cranes with PAT overload protection!

▶ Actuate the bypass key button and turn the PAT overload protection off.

Result:
– The PAT overload protection is bypassed / inactive.

▶ Actuate the bypass key button and turn the PAT overload protection on.

Result:
– The PAT overload protection is active.

13 Bypassing the hoist top shut off

Note
▶ Applies only for cranes with hoist limit switch!

If the hook block contacts the hoist limit switch weight during its upward movement, the hoist limit switch is triggered. The crane movements “Spool up winches”, “Luff boom down” and “Telescope telescopic boom out” are turned off. The shut off can be bypassed.

WARNING
Danger of accidents due to bypass of Hoist top shut off!
When bypassing the hoist top shut off, there is a risk that the hook block may be pulled against the pulley head when continuing to lift or luffing down the boom. This may damage the pulleys and cause the loads to fall!
▶ The bypass of the hoist top shut off in crane operation with a load may only be carried out by a person authorized by the crane operator with the aid of a “Guide”. The guide must be in direct contact with the crane operator and must continually monitor the distance between the hook block and the boom head.
▶ Carry out all crane movements with maximum care and minimum speed.

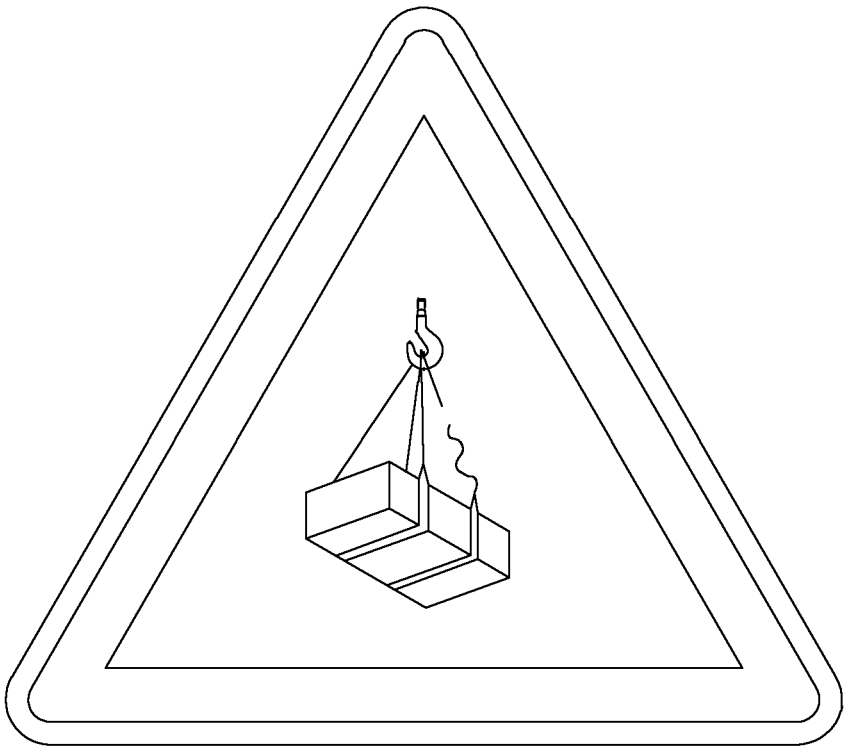

DANGER
IMPACT HAZARD!
Moving attachments can crush and impale.
Keep clear of machine working area.

B108048

14 Assembly / disassembly

WARNING
Risk of fatal injury due to incorrect assembly or disassembly!
The assembly / disassembly of components may never be performed by untrained personnel.
Incorrect assembly / disassembly can result in death or severe injuries!
- ▶ Assembly and disassembly may only be carried out by authorized and trained expert personnel!
- ▶ For assembly / disassembly of individual components, also refer to the chapters relating to those components!
- ▶ The boom combinations must be assembled according to the separately supplied rod plans!
- ▶ The winch use is regulated in the master switch assignment in the Electric wiring diagram. The winches may only be operated according to this master switch assignment specified in the Electric wiring diagram.
- ▶ Transport all separately transported components close to the ground using appropriate auxiliary cranes and fastening equipment and connect them safely (correctly) to the crane.

WARNING
Failure of auxiliary winch
- ▶ Only use the auxiliary winch (assembly or reeving winch) for assembly and not to lift loads!
- ▶ Lifting of loads with the auxiliary winch is prohibited!

WARNING
Danger of impact and crushing!
There is a risk of impact and crushing when standing in the vicinity of suspended loads moving sideways.
- ▶ During assembly / disassembly no one may be in the dangerous area around or underneath the suspended load before the load has been secured!

Part of the category “Aids for working aloft” are, for example:
- – Lifting platforms
- – Scaffolding
- – Auxiliary cranes

WARNING
Danger of falling!
During assembly / disassembly, inspection and maintenance work, personnel must be secured with appropriate aids to prevent them from falling! If this is not observed, assembly personnel could fall and suffer life-threatening or fatal injuries!
- ▶ All work aloft, where there is a danger of falling must be carried out with suitable aids!
- ▶ If fall protection equipment is available, then it must be used, see Crane operating instructions, chapter 2.06!
- ▶ If aids are not available and work cannot be carried out from the ground, then the assembly personnel must secure themselves with the specified fall arrest system to prevent falling, see Crane operating instructions, chapter 2.04!
- ▶ The fall arrest system must be fastened on the fastening and hook points as well as on the safety ropes. For safety points, see Crane operating instructions, chapter 2.06!
- ▶ Only step on the aids, ladders and catwalks with clean shoes!
- ▶ Keep aids, ladders and catwalks free of heavy dirt, snow and ice!

- ▶ Remaining on a suspended load is prohibited!
- ▶ Remaining on or within crane components (for example: At assembly of boom sections, lattice sections) which are moved during lifting, lowering, turning or closing procedures is strictly prohibited!
- ▶ During all assembly and disassembly work, maintenance work and inspections, travel or crane operation is prohibited!
- ▶ It is prohibited to walk on the telescopic or an auxiliary boom without suitable protective devices!
- ▶ Stepping or walking on crane components and lattice sections, which have an incline of more than 20° is prohibited!

WARNING
Danger of fatal accidents due falling components!
The engraved pull load on the fastening eye shows only the maximum permissible pull load of the fastening eye. The maximum permissible fastening load of the respective components can differ to the maximum permissible pull load of the fastening eye!
Components can be damaged at overload and fall down during lifting!
- ▶ Observe the maximum permissible fasting load according to the operating instructions and the tags on the components!
- ▶ Do not overload the components!

WARNING
Falling components and tools!
Whenever working aloft, for example on the crane or on an aerial platform, components or tools can fall down. Personnel can be severely injured or killed!
- ▶ Make sure that the danger zone under the work area is blocked off and marked.

14.1 Assembly drawings

WARNING
Use of assembly drawings!
Due to sole use of assembly drawings, dangerous situations can arise up to toppling of the crane!
Personnel can be severely injured or killed!
- ▶ Assembly drawings should only be considered to be **additional** and **supplementary** information.
- ▶ The respective chapters in the crane operating instructions are decisive for the assembly and disassembly of booms or equipment.
- ▶ The detailed information and danger notes in the respective chapters must be observed and adhered to.

14.2 Pin connections

WARNING
Danger due to pin connections!
If the pins / pin connections are not properly greased or lubricated before assembly, then they can corrode, seize in the pin bores and / or be damaged!
This could result in high property damage!
Personnel can be severely injured or killed due to suddenly releasing pins at disassembly!
- ▶ Make sure that all pins, which are not supplied with grease via the central lubrication system are sufficiently greased before assembly.
- ▶ Make sure that all lube points, which are equipped with a grease fitting, are properly greased at assembly and according to the respective interval specification.
- ▶ Make sure that all pins are secured with the intended retaining elements to prevent them from loosening up by themselves.
- ▶ Never pin or unpin pins by force.

14.3 Guiding crane sections, lattice sections or crane components

WARNING
Danger due to oscillating load!
During the assembly of crane sections, lattice sections or crane components with the auxiliary crane, they can start to swing back and forth!
Personnel can be severely injured or killed!
- ▶ To guide and position crane sections, lattice sections or crane components always use a guide rope.
- ▶ Make sure that the guide rope is sufficiently long and that the assembly personnel does not enter the danger zone.

14.4 Assembly / disassembly of booms

WARNING
The crane can topple over!
Angular pull can overload the crane. Overload can cause destruction of the crane or cause it to topple over.
- ▶ The hook block must always be attached vertically over the center of gravity of the load to be lifted!
- ▶ Angular pull is prohibited!

B113444

WARNING
Danger of accident at assembly / disassembly of booms!
The disassembling of unsecured or unsupported booms may result in fatal injury or mutilation.
- ▶ Never unpin the pins under unsecured or unsupported booms!
- ▶ Never unpin the connecting pins on unsecured or unsupported booms!
- ▶ Do not stand under the booms or within the complete danger zone during the pinning and unpinning procedure of the booms!
- ▶ Safely secure the pins in the bearing points as well as receptacles!
- ▶ The railing at assembly and disassembly of booms must be horizontal!
- ▶ Do not lean the ladder against the component being disassembled!

WARNING
Risk of accident due to distorted pins!
Angular pulling or excessive / low hoisting force of the auxiliary crane may result in distortion of the pins.
Distorted parts can suddenly detach themselves when the pins are unpinned. This represents a fatal injury risk to assembly personnel.
- ▶ When the pins are unpinned, the “lifting force” of the crane must be adapted to the “weight” of the parts being lifted!
- ▶ Do **not** remove difficult to remove pins by force!
- ▶ Remove the reason for the distortion!

WARNING
If the following specifications are not observed, accidents can result:
- ▶ Pin or unpin both pins at the same horizontal level, i.e. **left and right**!
- ▶ Pin the lower collar pins **from the inside to the outside** and unpin from the **outside to inside**!
- ▶ Insert and unpin horizontally installable double cone pins from the **outside to inside**!
- ▶ Insert and unpin vertically installable double cone pins from **top to bottom**!

Make sure that the following prerequisites are met:
- – If parts of the equipment (for example lattice sections) are not in contact with the ground during assembly / disassembly, then they must be supported with suitable, stable materials.
- – Select the height of the support so that the parts of the equipment are not in contact with the ground.
- – Place the parts of the equipment with rope pulleys down in such a way that the rope pulleys are not damaged.
- – During disassembly make sure that the auxiliary crane can lift the load vertically.
- – Have an auxiliary crane with sufficient load carrying capacity available to be able to hold the load at a respective radius.

blank page!

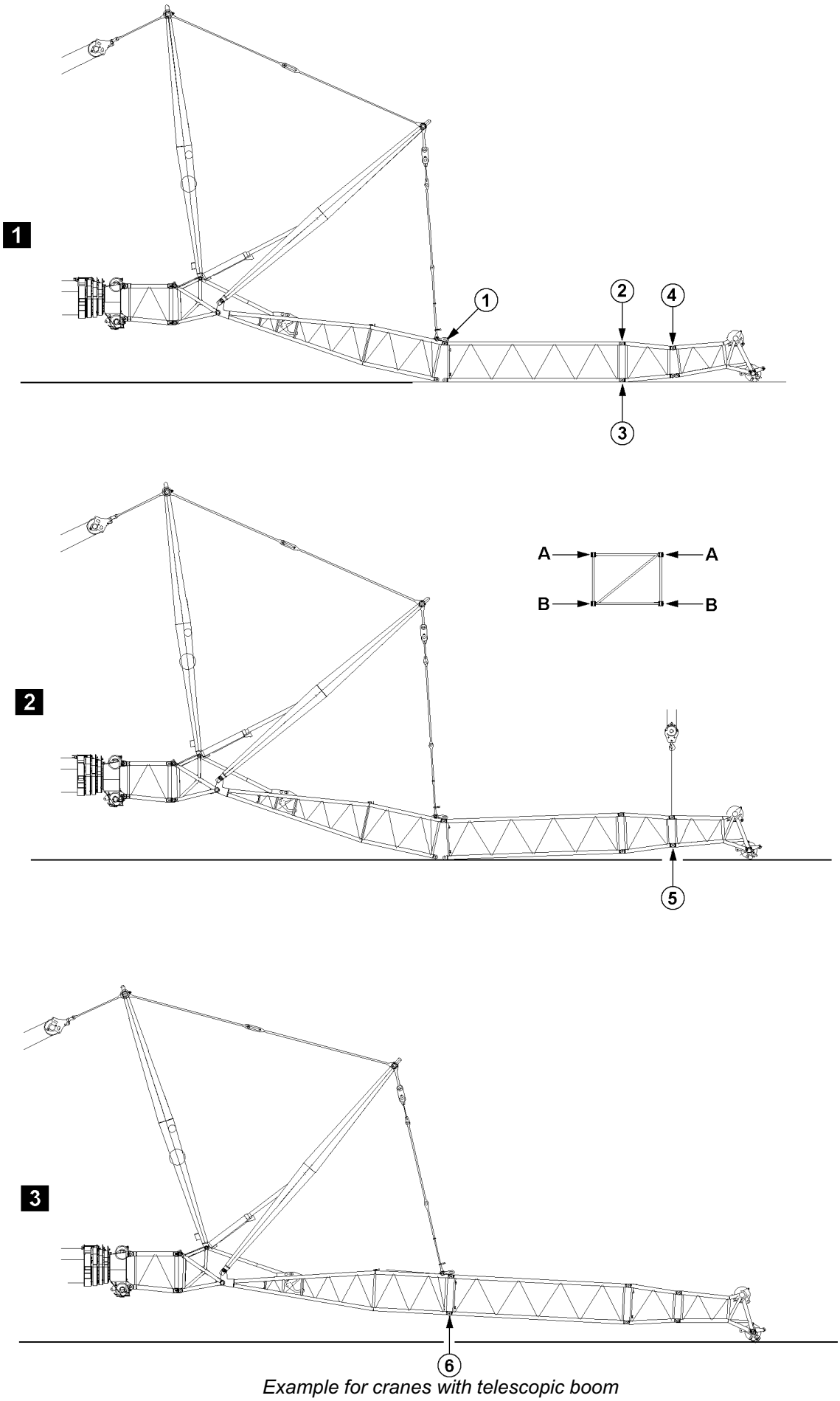

B197718

Example for cranes with telescopic boom

14.5 Assembly of lattice sections for telescopic cranes

14.5.1 Assembly of lattice sections for guyed auxiliary boom with an auxiliary crane

The illustrations serve as examples. The illustrations may differ depending on the crane.

WARNING
Risk of fatal injury when assembling auxiliary booms!
If the pins are not pinned in the given sequence, then lattice sections may suddenly fold down or fall down. This can result in life-threatening injuries to personnel.
- ▶ Pins must be pinned in the order specified!

- ▶ Pin and secure pins at both sides (level **A**) at point **1**, illustration **1**.
- ▶ Pin and secure pins at both sides (level **A**) at point **2**, illustration **1**.
- ▶ Pin and secure pins at both sides (level **B**) at point **3**, illustration **1**.
- ▶ Pin and secure pins at both sides (level **A**) at point **4**, illustration **1**.
- ▶ Lift the end section with the auxiliary crane, illustration **2**.
- ▶ Pin and secure pins at both sides (level **B**) at point **5**, illustration **2**.
- ▶ Lift the lattice sections, illustration **3**.
- ▶ Pin and secure pins at both sides (level **B**) at point **6**, illustration **3**.

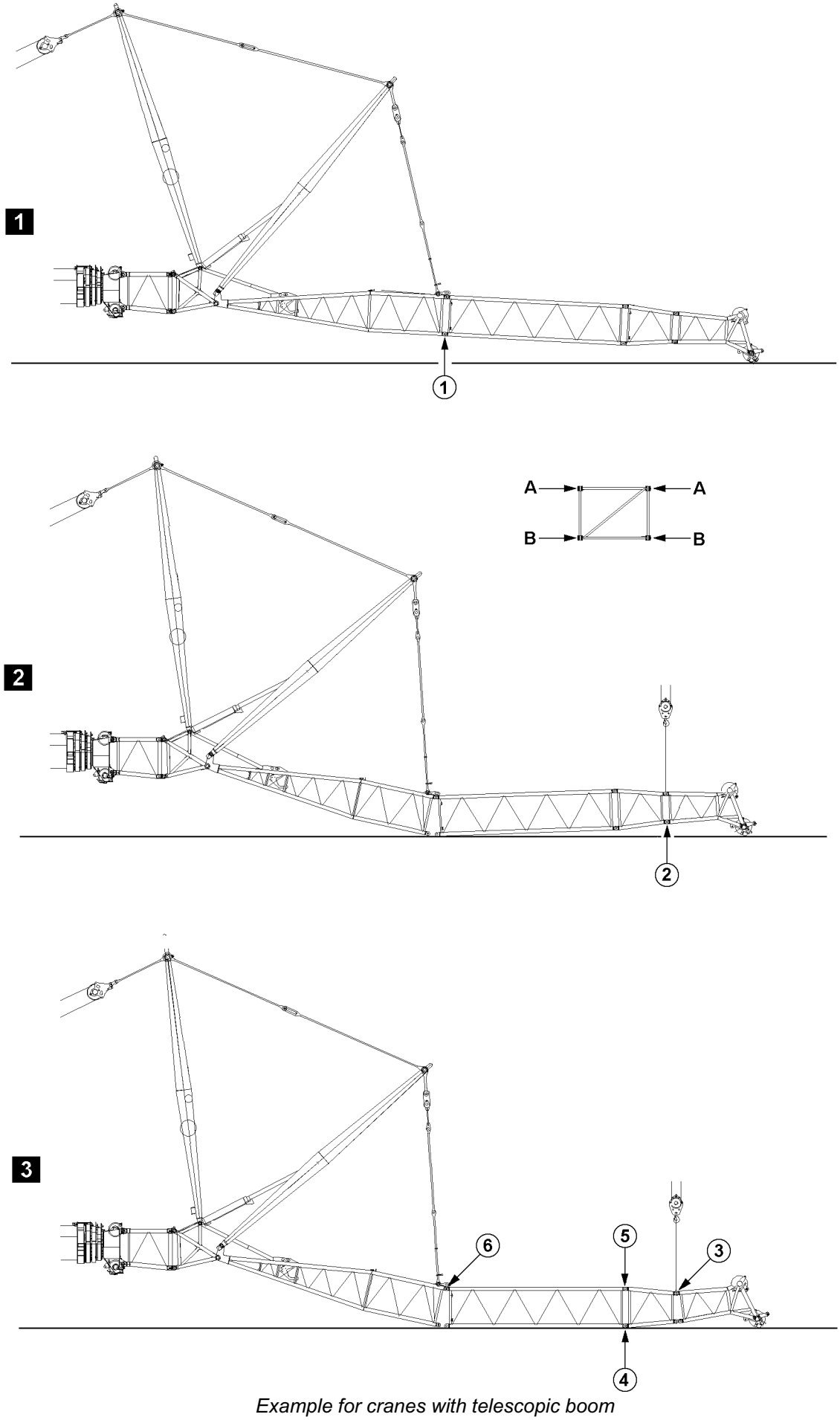

B197719

Example for cranes with telescopic boom

14.5.2 Disassembly of lattice sections for guyed auxiliary boom with an auxiliary crane

The illustrations serve as examples. The illustrations may differ depending on the crane.

WARNING
Risk of fatal injury when disassembling auxiliary booms!
If the pins are not unpinned in the given sequence, then lattice sections may suddenly fold down or fall down. This can result in life-threatening injuries to personnel.
▶ Pins must be unpinned in the order specified!

- ▶ Luff the auxiliary boom down until the end section touches the ground slightly, illustration **1**.
- ▶ Release and unpin the pins at both sides (level **B**) at point **1**, illustration **1**.
- ▶ Completely remove the lattice sections, illustration **2**.
- ▶ Lift the end section with the auxiliary crane, illustration **2**.
- ▶ Release and unpin the pins at both sides (level **B**) at point **2**, illustration **2**.
- ▶ Release and unpin the pins at both sides (level **A**) at point **3**, illustration **3**.
- ▶ Release and unpin the pins at both sides (level **B**) at point **4**, illustration **3**.
- ▶ Release and unpin the pins at both sides (level **A**) at point **5**, illustration **3**.
- ▶ Release and unpin the pins at both sides (level **A**) at point **6**, illustration **3**.

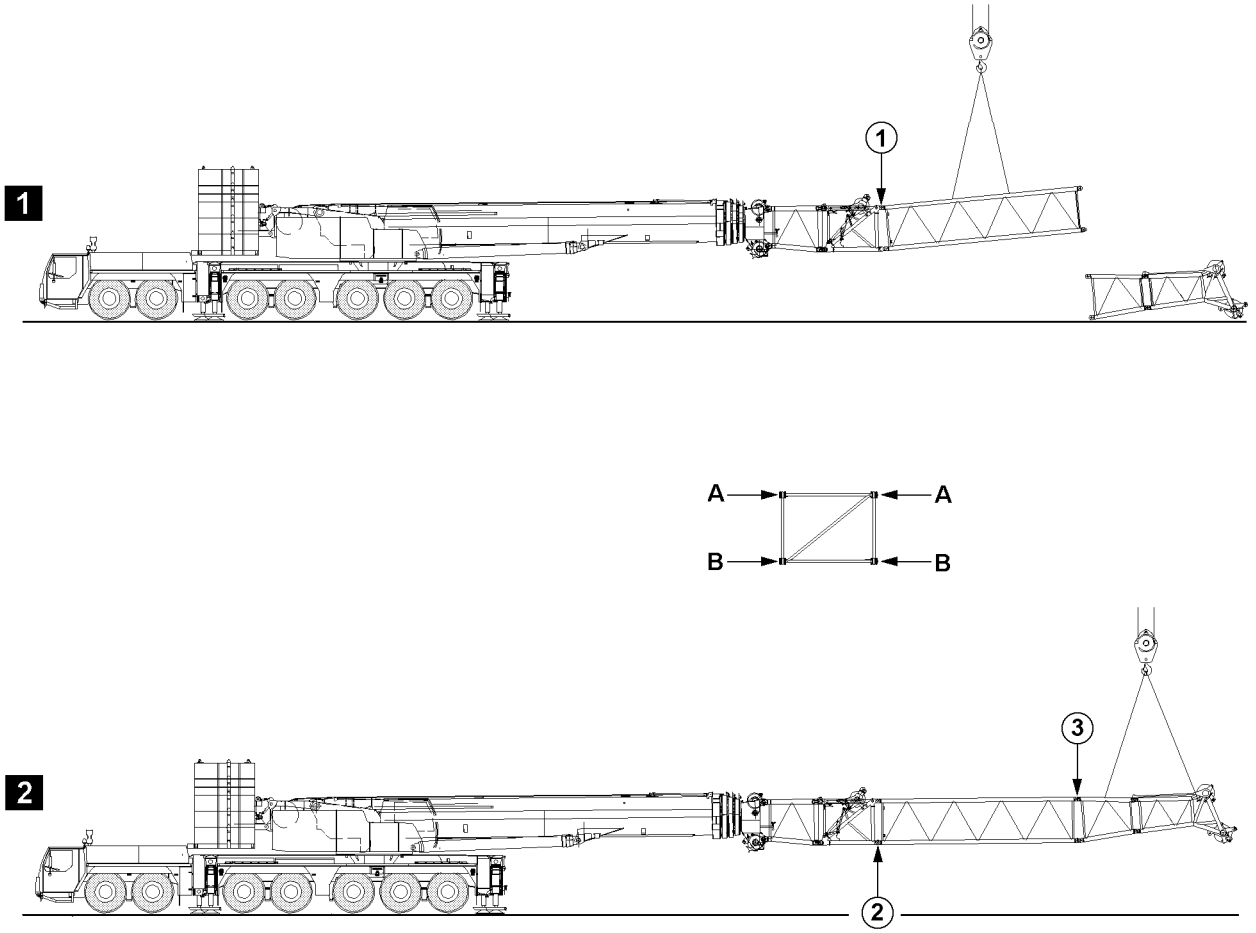

B197705 *Example for cranes with telescopic boom*

14.5.3 Assembly of lattice sections on self-supporting auxiliary booms using an auxiliary crane

The illustrations serve as examples. The illustrations may differ depending on the crane.

WARNING
Risk of fatal injury when assembling auxiliary booms!
If the pins are not pinned in the given sequence, then lattice sections may suddenly fold down or fall down. This can result in life-threatening injuries to personnel.
▶ Pins must be pinned in the order specified!

- ▶ Pin and secure pins at both sides (level **A**) at point **1**, illustration **1**.
- ▶ Pin and secure pins at both sides (level **B**) at point **2**, illustration **2**.
- ▶ Pin and secure pins at both sides (level **A**) at point **3**, illustration **2**.
- ▶ Pin and secure pins at both sides (level **B**) at point **4**, illustration **3**.

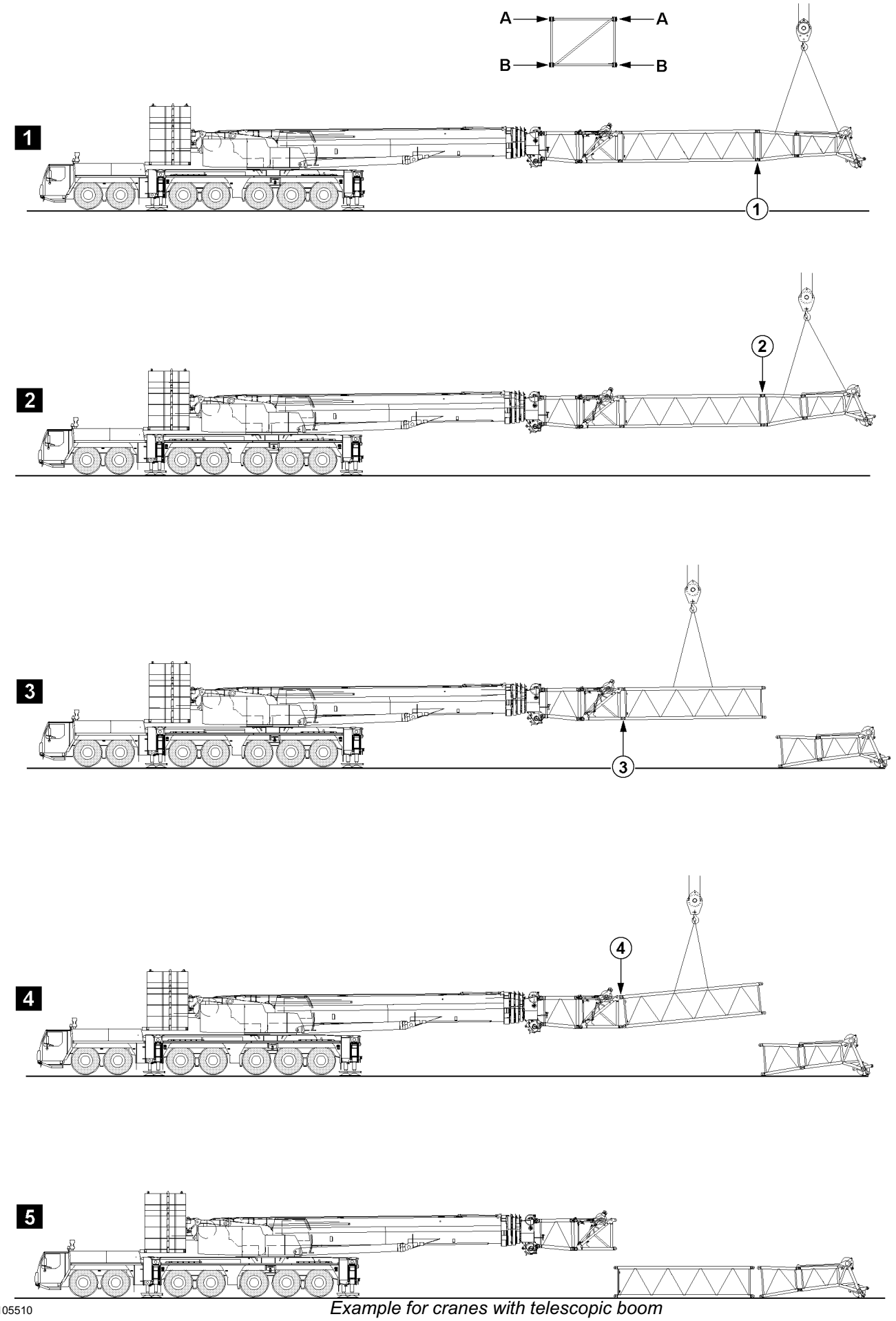

B105510

Example for cranes with telescopic boom

14.5.4 Disassembly of lattice sections on self-supporting auxiliary booms using an auxiliary crane

The illustrations serve as examples. The illustrations may differ depending on the crane.

WARNING
Risk of fatal injury when disassembling auxiliary booms!
If the pins are not unpinned in the given sequence, then lattice sections may suddenly fold down or fall down. This can result in life-threatening injuries to personnel.
▶ Pins must be unpinned in the order specified!

- ▶ Release and unpin the pins at both sides (level **B**) at point **1**, illustration **1**.
- ▶ Release and unpin the pins at both sides (level **A**) at point **2**, illustration **2**.
- ▶ Release and unpin the pins at both sides (level **B**) at point **3**, illustration **3**.
- ▶ Release and unpin the pins at both sides (level **A**) at point **4**, illustration **4**.

1

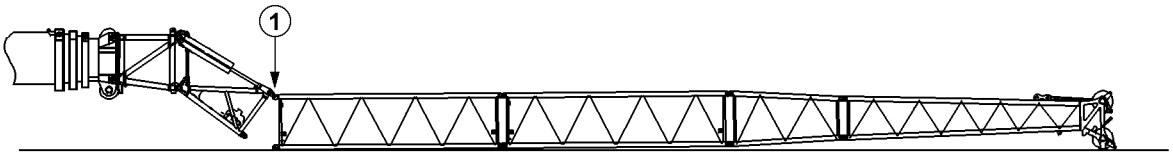

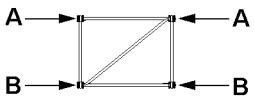

2

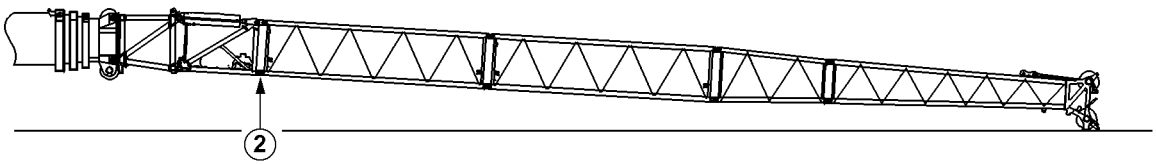

3

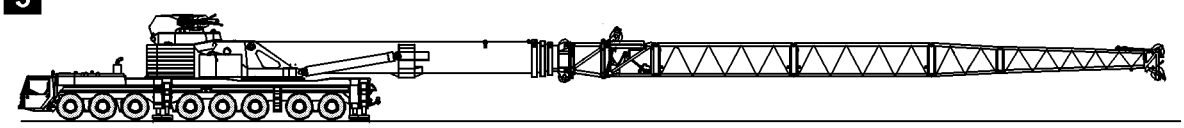

B197712

Example for cranes with telescopic boom

14.5.5 Assembly of lattice sections on self-supporting auxiliary booms, without auxiliary crane

The illustrations serve as examples. The illustrations may differ depending on the crane.

WARNING
Risk of fatal injury when assembling auxiliary booms!
If the pins are not pinned in the given sequence, then lattice sections may suddenly fold down or fall down. This can result in life-threatening injuries to personnel.
▶ Pins must be pinned in the order specified!

For cranes with hydraulic angle adjustment and self-supporting auxiliary boom, the assembly / disassembly of additional lattice sections may be performed using the crane itself.
In order to do so, proceed as follows.
▶ Assemble the lattice sections to the required length.
▶ Pin and secure pins at both sides (level **A**) at point **1**, illustration **1**.
▶ Luff the auxiliary boom up until the pins can be pinned at point **2**, illustration **2**.
▶ Pin and secure pins at both sides (level **B**) at point **2**, illustration **2**.

1

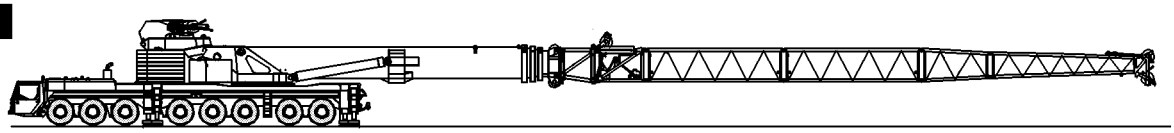

2

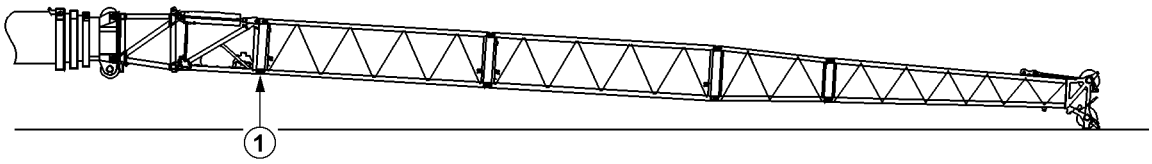

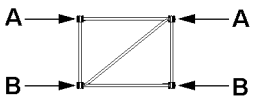

3

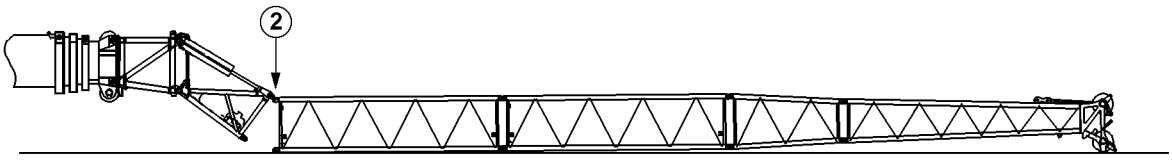

B197713 *Example for cranes with telescopic boom*

14.5.6 Disassembly of lattice sections on self-supporting auxiliary booms, without auxiliary crane

The illustrations serve as examples. The illustrations may differ depending on the crane.

WARNING
Risk of fatal injury when disassembling auxiliary booms!
If the pins are not unpinned in the given sequence, then lattice sections may suddenly fold down or fall down. This can result in life-threatening injuries to personnel.
▶ Pins must be unpinned in the order specified!

For cranes with hydraulic angle adjustment and self-supporting auxiliary boom, the assembly / disassembly of additional lattice sections may be performed using the crane itself.
In order to do so, proceed as follows.

▶ Luff the auxiliary boom down until the end section touches the ground slightly, illustration **2**.
▶ Release and unpin the pins at both sides (level **B**) at point **1**, illustration **2**.
▶ Luff the auxiliary boom down until the lattice sections to be removed are laying completely on the ground, illustration **3**.
▶ Release and unpin the pins at both sides (level **A**) at point **2**, illustration **3**.
▶ Completely remove the auxiliary boom.

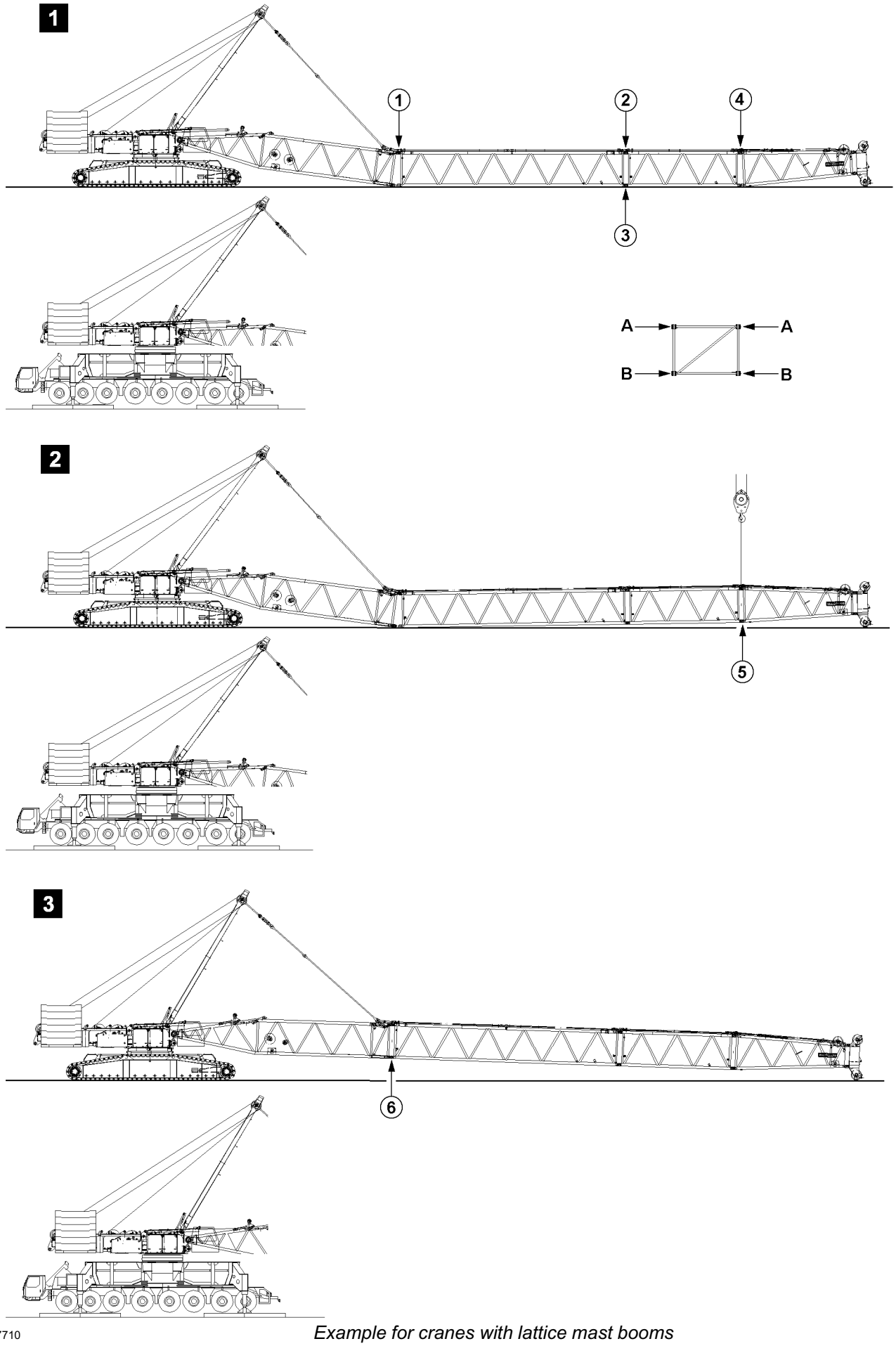

B197710 *Example for cranes with lattice mast booms*

14.6 Assembly of lattice sections for lattice mast cranes

14.6.1 Assembly of lattice sections

The illustrations serve as examples. The illustrations may differ depending on the crane.

WARNING
Risk of fatal injury when assembling booms!
If the pins are not pinned in the given sequence, then lattice sections may suddenly fold down or fall down. This can result in life-threatening injuries to personnel.
▶ Pins must be pinned in the order specified!

- ▶ Pin and secure pins at both sides (level **A**) at point **1**, illustration **1**.
- ▶ Pin and secure pins at both sides (level **A**) at point **2**, illustration **1**.
- ▶ Pin and secure pins at both sides (level **B**) at point **3**, illustration **1**.
- ▶ Pin and secure pins at both sides (level **A**) at point **4**, illustration **1**.
- ▶ Lift the end section with the auxiliary crane, illustration **2**.
- ▶ Pin and secure pins at both sides (level **B**) at point **5**, illustration **2**.
- ▶ Lift the lattice sections, illustration **3**.
- ▶ Pin and secure pins at both sides (level **B**) at point **6**, illustration **3**.

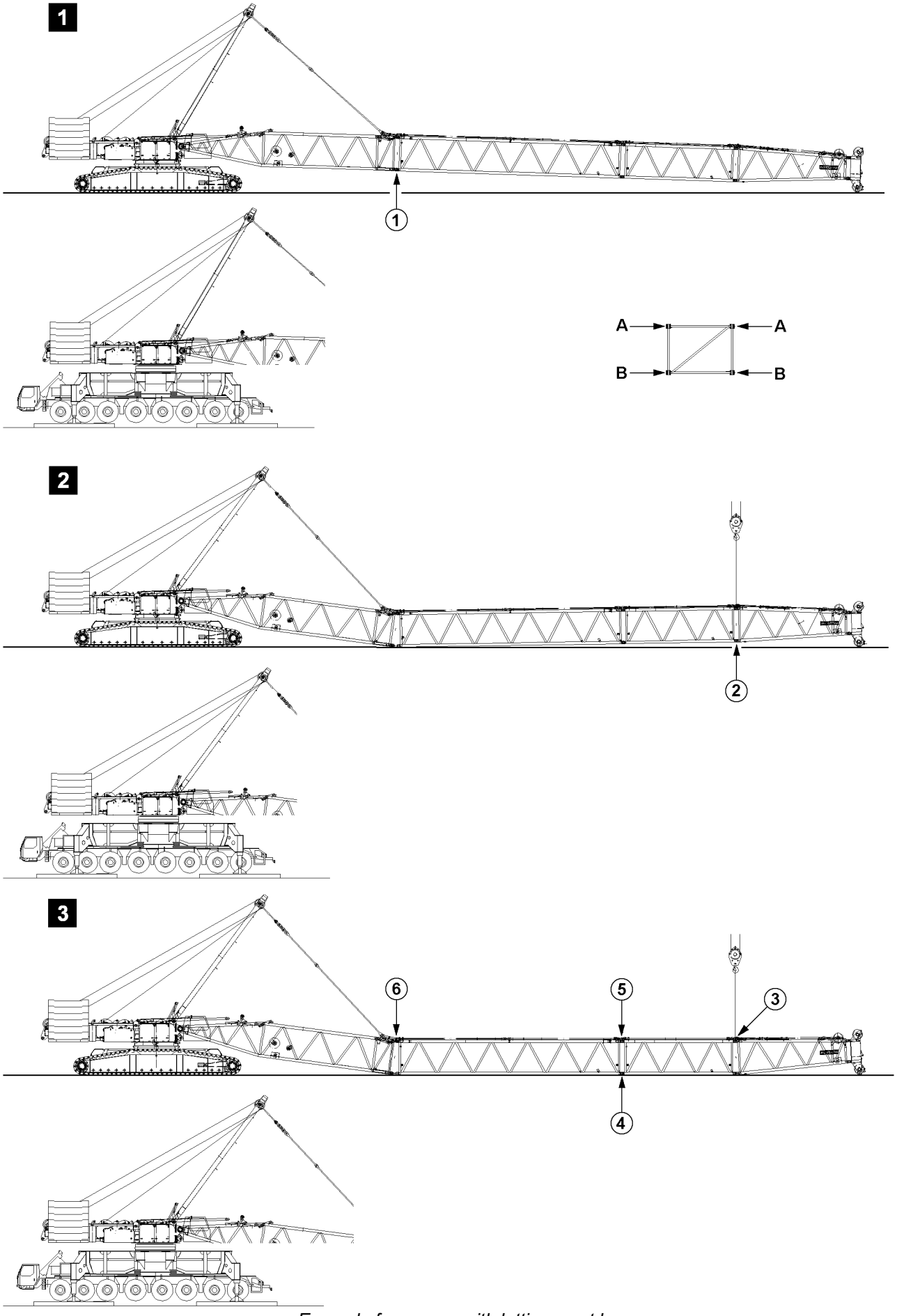

B197711 *Example for cranes with lattice mast booms*

14.6.2 Disassembly of lattice sections

The illustrations serve as examples. The illustrations may differ depending on the crane.

WARNING
Risk of fatal injury when disassembling booms!
If the pins are not unpinned in the given sequence, then lattice sections may suddenly fold down or fall down. This can result in life-threatening injuries to personnel.
- ▶ Pins must be unpinned in the order specified!

- ▶ Luff the boom down until the end section touches the ground slightly, illustration **1**.
- ▶ Release and unpin the pins at both sides (level **B**) at point **1**, illustration **1**.
- ▶ Completely remove the lattice sections, illustration **2**.
- ▶ Lift the end section with the auxiliary crane, illustration **2**.
- ▶ Release and unpin the pins at both sides (level **B**) at point **2**, illustration **2**.
- ▶ Release and unpin the pins at both sides (level **A**) at point **3**, illustration **3**.
- ▶ Release and unpin the pins at both sides (level **B**) at point **4**, illustration **3**.
- ▶ Release and unpin the pins at both sides (level **A**) at point **5**, illustration **3**.
- ▶ Release and unpin the pins at both sides (level **A**) at point **6**, illustration **3**.

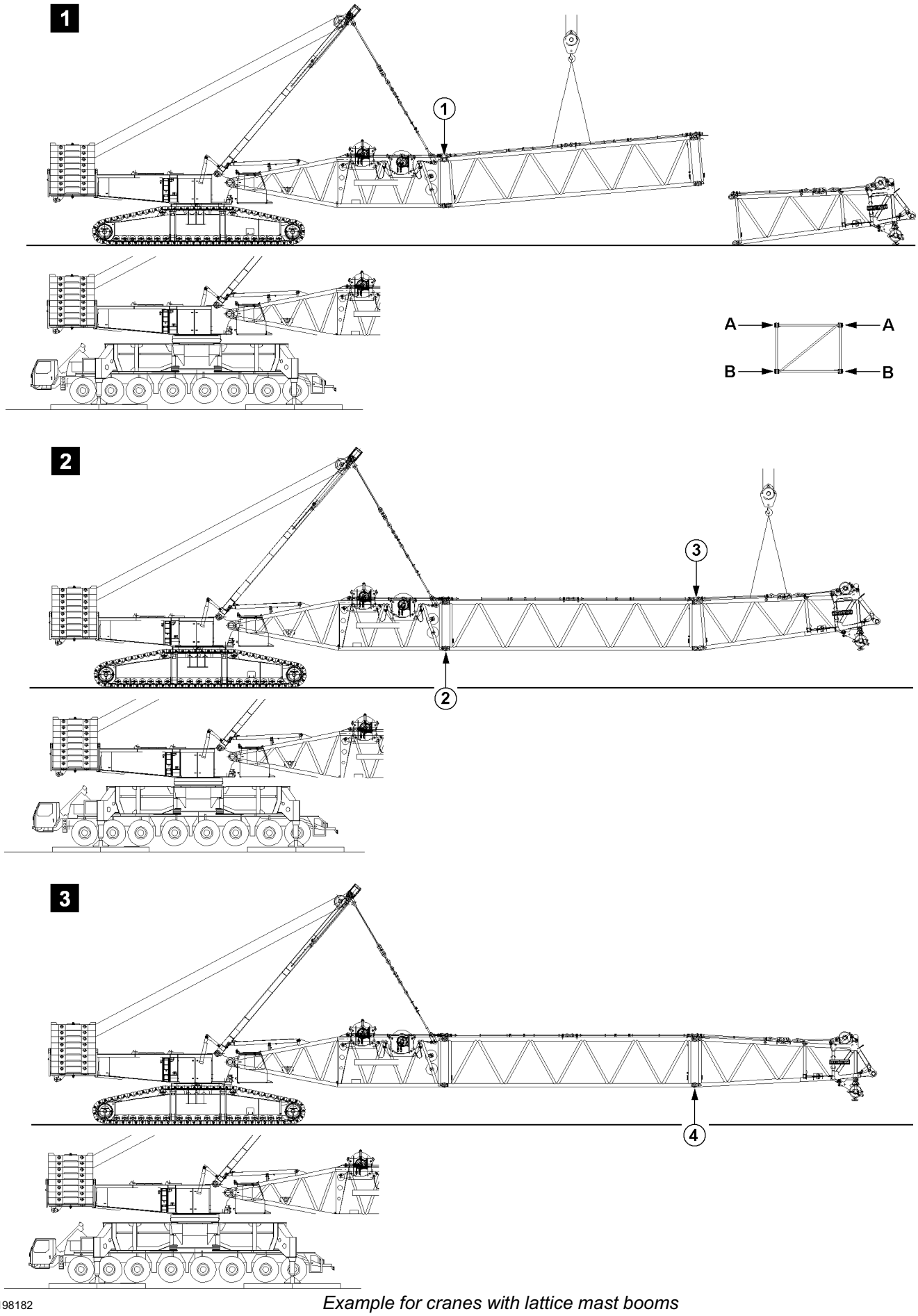

B198182 *Example for cranes with lattice mast booms*

14.6.3 Flying assembly of lattice sections

The illustrations serve as examples. The illustrations may differ depending on the crane.

WARNING
Risk of fatal injury when assembling booms!
If the pins are not pinned in the given sequence, then lattice sections may suddenly fold down or fall down. This can result in life-threatening injuries to personnel.

- ▶ Pins must be pinned in the order specified!

- ▶ Pin and secure pins at both sides (level **A**) at point **1**, illustration **1**.
- ▶ Pin and secure pins at both sides (level **B**) at point **2**, illustration **2**.
- ▶ Pin and secure pins at both sides (level **A**) at point **3**, illustration **2**.
- ▶ Pin and secure pins at both sides (level **B**) at point **4**, illustration **3**.

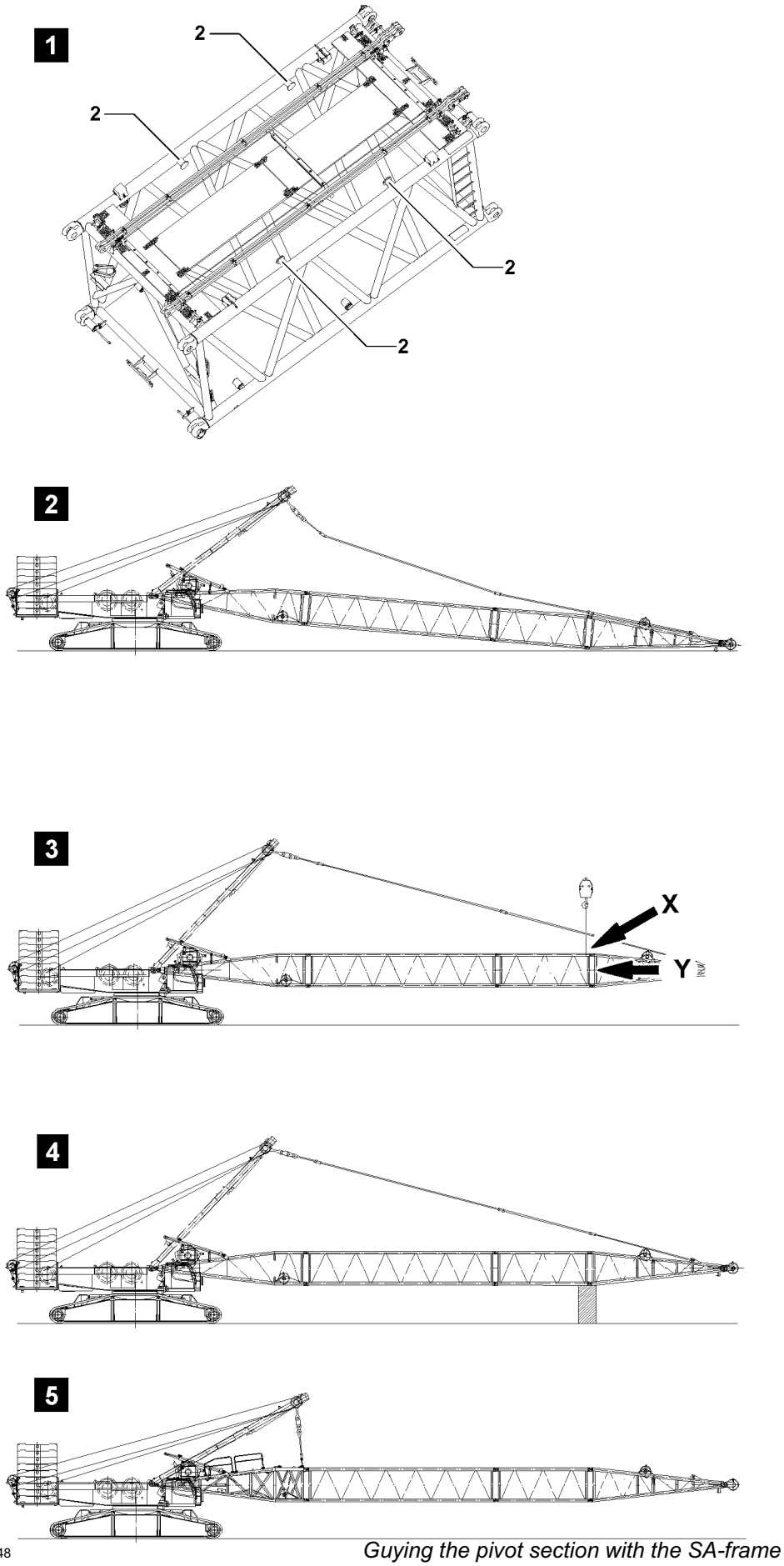

B111448 *Guying the pivot section with the SA-frame*

14.6.4 Flying disassembly of lattice sections

The illustrations serve as examples. The illustrations may differ depending on the crane.
The flying disassembly of lattice sections can be used on:
– Derrick boom
– Main boom

Ensure that the following prerequisite is met:
– Before guying the pivot section, secure the boom properly to prevent it from falling down!

Guying the pivot section in flying mode with the SA-frame

▶ Place the boom on the ground, see illustration **2**.

or

WARNING
Lattice section incorrectly attached!
If the fastening equipment is attached on the bitts **2** when securing the boom, then the bitts will be overloaded! The lattice section will be damaged. The boom can fall down! Personnel can be severely injured or killed!
If the auxiliary crane is used to secure the boom for flying disassembly:
▶ Do **not** fasten the lattice section on the bitts **2**, see illustration **1**!
▶ Attach the fastening equipment in the area of point **P1** on both sides on the lattice section, see detail **X**!
▶ Make sure that the long fastening equipment is used, so that the angle between the cross section of lattice section and guyed fastening equipment is at least 60°, see detail **Y**!

■ Secure the boom with the auxiliary crane, see illustration **3**.

or

WARNING
Falling boom!
If the boom is not properly and securely supported from below, then the boom can fall down!
▶ Support the boom properly and safely with suitable material!

■ Support the boom, see illustration **4**.
Result:
– The guy rods can be disassembled.

▶ Place down, secure and disassemble the guy rods.
▶ Pin and secure the guy rods SA-frame on the pivot section.
▶ Tighten the guy rods SA-frame until the boom is in horizontal position.
Result:
– Pivot section is guyed in flying mode with the SA-frame, see illustration **5**.
– The lattice sections can be disassembled in flying mode.

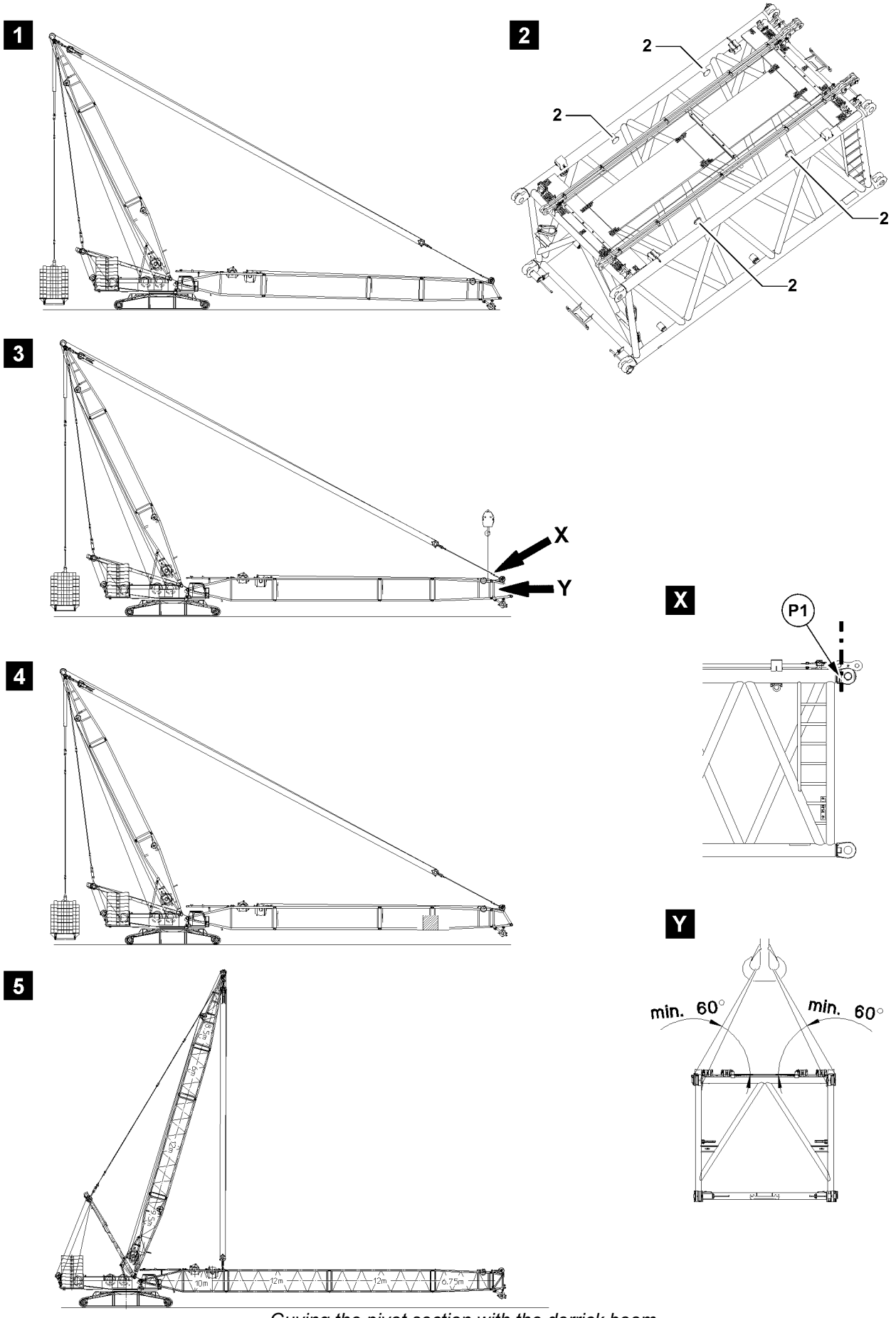

B111449 *Guying the pivot section with the derrick boom*

Guying the pivot section in flying mode with the derrick boom

▶ Place the boom on the ground, see illustration **1**.

or

WARNING
Lattice section incorrectly attached!
If the fastening equipment is attached on the bitts **2** when securing the boom, then the bitts will be overloaded! The lattice section will be damaged. The boom can fall down! Personnel can be severely injured or killed!
If the auxiliary crane is used to secure the boom for flying disassembly:
▶ Do **not** fasten the lattice section on the bitts **2**, see illustration **2**!
▶ Attach the fastening equipment in the area of point **P1** on both sides on the lattice section, see detail **X**!
▶ Make sure that the long fastening equipment is used, so that the angle between the cross section of lattice section and guyed fastening equipment is at least 60°, see detail **Y**!

■ Secure the boom with the auxiliary crane, see illustration **3**.

or

WARNING
Falling boom!
If the boom is not properly supported from below, then the boom can fall down!
▶ Support the boom properly and safely with suitable material!

■ Support the boom, see illustration **4**.

Result:
– The guy rods can be disassembled.

▶ Place down, secure and disassemble the guy rods.
▶ Pin and secure the pulley block on the pivot section.
▶ Tighten the control rope until the boom is in horizontal position.

Result:
– Pivot section is guyed in flying mode with the SA-frame, see illustration **5**.
– The lattice sections can be disassembled in flying mode.

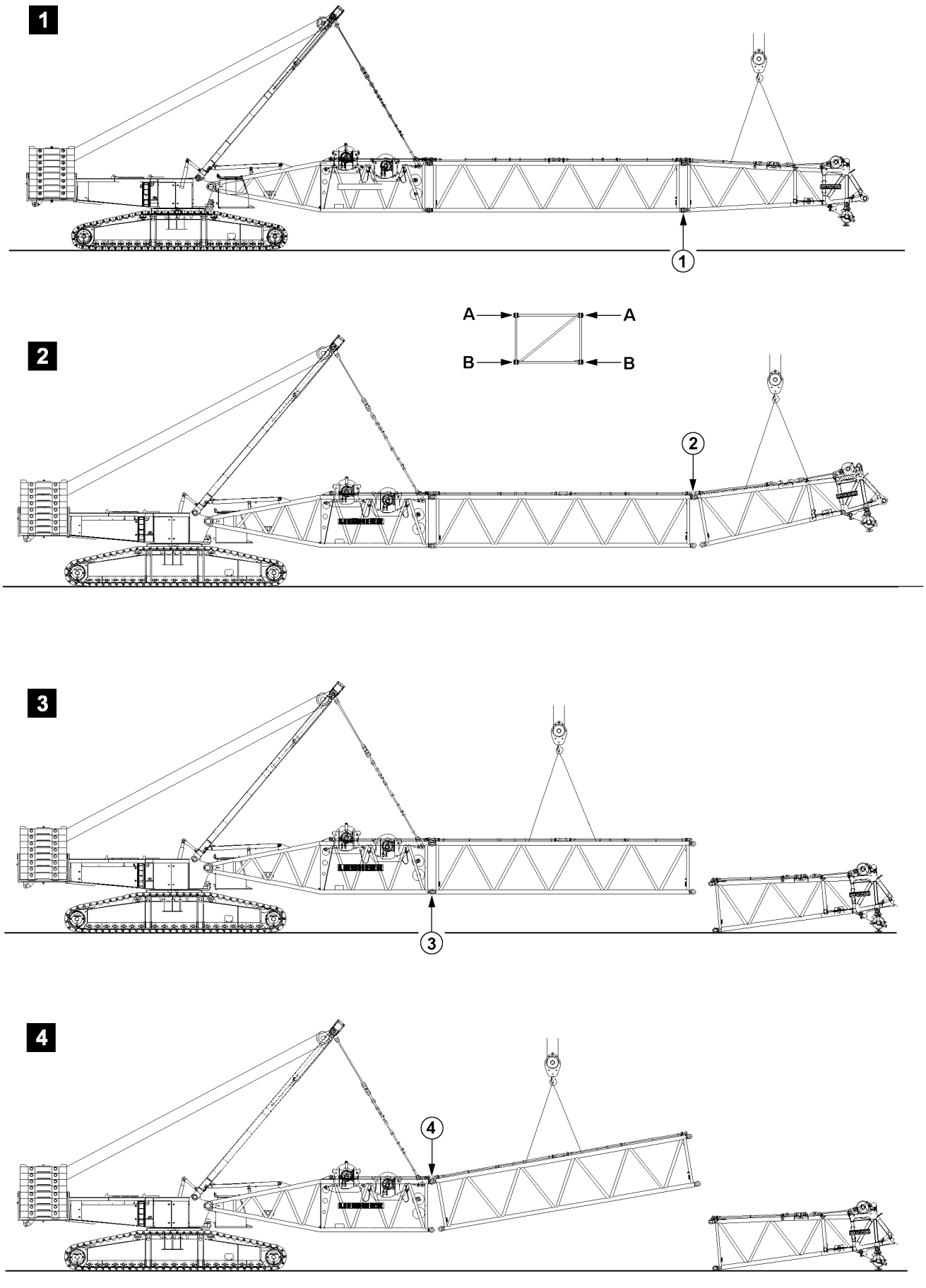

B105511 *Example for cranes with lattice mast booms*

Unpinning the lattice components

WARNING
Risk of fatal injury when disassembling booms!
If the pins are not unpinned in the given sequence, then lattice sections may suddenly fold down or fall down. This can result in life-threatening injuries to personnel.
▶ Pins must be unpinned in the order specified!

▶ Release and unpin the pins at both sides (level **B**) at point **1**, illustration **1**.
▶ Release and unpin the pins at both sides (level **A**) at point **2**, illustration **2**.
▶ Release and unpin the pins at both sides (level **B**) at point **3**, illustration **3**.
▶ Release and unpin the pins at both sides (level **A**) at point **4**, illustration **4**.

14.7 Bypass for assembly and disassembly

Depending on the crane version, the “Bypass at assembly and disassembly” is activated by:
– The set up button (key button) on the LICCON monitor.
– The assembly key button in the instrument panel.

WARNING
High risk of accident in crane operation with activated “Bypass at assembly and disassembly”!
At activated “Bypass at assembly and disassembly” the overload protection and possible the hoist limit switches are bypassed!
In the event of deliberate improper use, the crane could collapse, the boom can break off or the crane can topple over!
Personnel can be killed!
This could result in high property damage!
▶ The activation of the “Bypass at assembly and disassembly” is only permissible for assembly and disassembly purposes!
▶ All other usage of the “Bypass at assembly and disassembly” other than as described in the operating instructions is prohibited!
▶ The “Bypass at assembly and disassembly” may only be activated by persons who are aware of the consequences of a bypass!
▶ Crane operation with activated “Bypass at assembly and disassembly” is strictly prohibited!
▶ The “Bypass at assembly and disassembly” must be deactivated immediately after assembly and disassembly work!
▶ The crane operator or a person authorized by him must make sure that no misuse of the bypass device is possible (remove the key and store it safely, if necessary)!

14.7.1 Activating the Bypass at assembly and disassembly

Note
▶ Applies only for cranes with LICCON overload protection.
▶ Indicator light “Assembly” is only present in the instrument panel for certain crane types.

B113438

– Illustration **1**: LICCON monitor (only certain crane types).
– Illustration **2**: Indicator light “Assembly” in instrument panel crane cab (only certain crane types).

▶ Actuate the respective operating element.

Result:
- The LICCON overload protection is bypassed / inactive and the “Bypass at assembly and disassembly” is activated.
- The “Assembly” icon appears in the LICCON monitor and / or the indicator light “Assembly” in the instrument panel lights up.
- Depending on the circumstances, acoustical and / or optical warning signals (blinkers, flashing lights, bells and horns).

14.7.2 Bypass at assembly and disassembly

Note
- ▶ Applies only for cranes with LICCON overload protection.
- ▶ Indicator light “Assembly” is only present in the instrument panel for certain crane types.

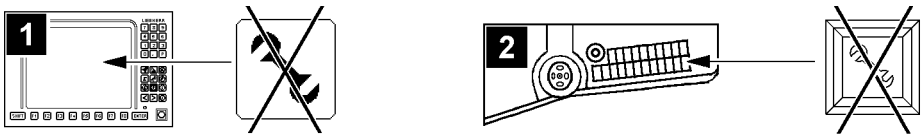

B113437

▶ No longer actuate the respective operating element or reset.

Result:
- The LICCON overload protection is active and the “Bypass at assembly and disassembly” is deactivated.
- The “Assembly” icon turns off in the LICCON monitor and / or the indicator light “Assembly” in the instrument panel no longer lights up.
- The acoustical and / or optical warning signals which were triggered by the bypass are turned off again.

14.8 Bypassing during crawler assembly

Note
- ▶ Applies only for cranes with crawler assembly key button.

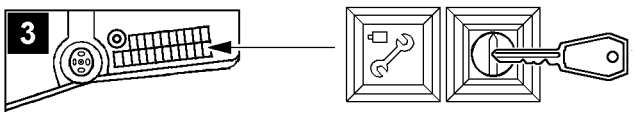

B113441

– Illustration **3**: Crawler assembly key button and indicator light

Ensure that the following prerequisite is met:
- The LICCON overload protection is bypassed / inactive and the “Bypass at assembly and disassembly” is activated.

WARNING
High risk of injury in case of actuated crawler assembly key button!
Operating the crawler assembly key button bypasses the overload protection! No shut off at overload will occur in assembly mode or in crane operations!
In the event of deliberate misuse, the crane can topple over!
Personnel can be killed!

This could result in high property damage!

- ▶ The crawler assembly key button may only be actuated for assembly tasks!
- ▶ All other usage of the crawler assembly key button other than as described in the operating instructions is prohibited!
- ▶ Operating the crane with the crawler assembly key button enabled is strictly prohibited!

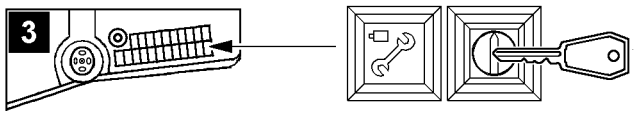

B113441

- ▶ Actuate the crawler assembly key button.

Result:

– The LICCON overload protection is inactive.
– The indicator light “Crawler assembly” lights up.

- ▶ If the bypass at crawler assembly is to be turned off:
  Turn the crawler assembly off by pressing the off button.

Result:

– The indicator light in the button turns off.

14.9 Assembling / disassembly of hydraulic lines

When connecting and releasing hydraulic lines with quick couplings, make sure that the coupling procedure is carried out correctly.

WARNING
Danger of accident due to loss of pressure or leakage!
Incorrectly coupled or self-loosening quick-release couplings (particularly return lines) can result in serious accidents due to component failure!
Personnel can be severely injured or killed!

- ▶ Check the quick-release couplings after installation for correct connection.

WARNING
Pressure in the hydraulic lines!
If the pressure supply is not interrupted before releasing the hydraulic lines, the hydraulic oil can escape with high pressure!
Personnel can be severely injured or killed!

- ▶ Release the pressure in the hydraulic system before releasing. Interrupt the pressure supply and wait for a short time.

- ▶ Release the pressure in the hydraulic system before connecting and disconnecting: Turn the engine off and wait for short time.
- ▶ Connect the coupling components (sleeve and connector) and screw together with the hand-tightened nut.
- ▶ Tighten the hydraulic coupling by hand. Rotate the hand-tightened nut until it reaches a tangible, fixed stop position.

14.10 Assembly / disassembly of electrical lines

NOTICE
Danger of damage of electrical connections!
If the following measures are not adhered to, the electrical connections can be damaged!
- ▶ Do not plug in the plug connection or unplug them under tension!
- ▶ Do not pinch or crush electrical connections!

When pulling the cable out:
- ▶ Hold the plug and not the cable. Do not pull on the cable to release the plug connection!
- ▶ Relieve the electrical connections in operating condition!
- ▶ In case of defective or faulty electrical lines, contact Service at Liebherr-Werk Ehingen!

NOTICE
Corroding of plug connections!
The plug connections are only protected when plugged in. If the plug connections are not plugged in, then the contact surfaces can corrode!
- ▶ Always plug or screw the plug connections together properly!
- ▶ Keep plug connections clean and dry! Clean contact surfaces provide the best signal transfer.

- ▶ If a pull release for the cable drum is present:
  Hang the pull release in on the fixed point and relieve the plug connections from the pull strain.
- ▶ After installing the plug connections:
  Check all plug connections for proper connection.
- ▶ If a plug connection is not properly connected:
  Plug or screw the plug connection together properly.
- ▶ After removing the plug connections:
  Protect the electrical connections with dust caps or place them in intended parking retainers.
- ▶ If locking brackets are present:
  Close the locking bracket.

15 Erection / take down

WARNING
The crane can topple over!
Due to an unforeseen occurrence, for example: Sudden strong wind or storm can lead to dangerous operating situations, up to toppling the crane!
Personnel can be severely injured or killed!
- ▶ The boom must be able to be placed down at any time with its current equipment!
- ▶ The required counterweight must always be in direct vicinity of the crane!
- ▶ The crane operator must ensure that the required counterweight is carried along when driving the crane with the equipment in place and that the boom can be placed down at any time!

WARNING
Danger of fatal injury!
- ▶ Incorrectly assembled or non-operational limit switches and falling parts (pins, spring retainers, ice etc.) can cause accidents!

15.1 Erection / take down for mobile cranes

Make sure that the following prerequisites are met:

- The crane is properly supported.
- The crane is aligned in horizontal direction.
- The counterweight has been installed on the turntable according to the load chart or the erection / take down charts.
- The derrick ballast (suspended ballast or ballast trailer ballast) is installed according to the load chart or the erection / take down charts.
- The telescopic boom is fully telescoped in.
- The boom has been installed according to the load chart and the Crane operating instructions.
- All limit switches have been correctly installed and are fully functional.
- All pin connections have been secured.
- The hoist rope has been correctly placed in the rope pulleys and prevented from jumping out with the rope retaining pins.
- No personnel is within the danger zone.
- There are no loose parts on the boom or the auxiliary boom.
- In winter, the telescopic boom, the auxiliary boom and their associated components (limit switches, cable drum, flashing beacon, wind speed sensor etc.) must be kept free of ice and snow.

▶ Check if all prerequisites have been met.

15.2 Erection / take down for crawler cranes

Make sure that the following prerequisites are met:

- The crane is aligned in horizontal direction.
- The crane is properly supported (cranes with support).
- The counterweight has been installed on the turntable according to the load chart.
- The central ballast has been attached according to the load chart.
- The counterweight is installed according to the load chart or the erection / take down charts.
- The derrick ballast (suspended ballast or ballast trailer ballast) is installed according to the load chart or the erection / take down charts.
- The boom has been installed according to the load chart and the Crane operating instructions.
- All limit switches have been correctly installed and are fully functional.
- All pin connections have been secured.
- The hoist rope has been correctly placed in the rope pulleys and prevented from jumping out with the rope retaining pins.
- No personnel is within the danger zone.
- There are no loose parts on the boom or the auxiliary boom.
- In winter, the boom, the auxiliary boom and their associated components (limit switches, cable drum, flashing beacon, wind speed sensor etc.) must be kept free of ice and snow.

▶ Check if all prerequisites have been met.

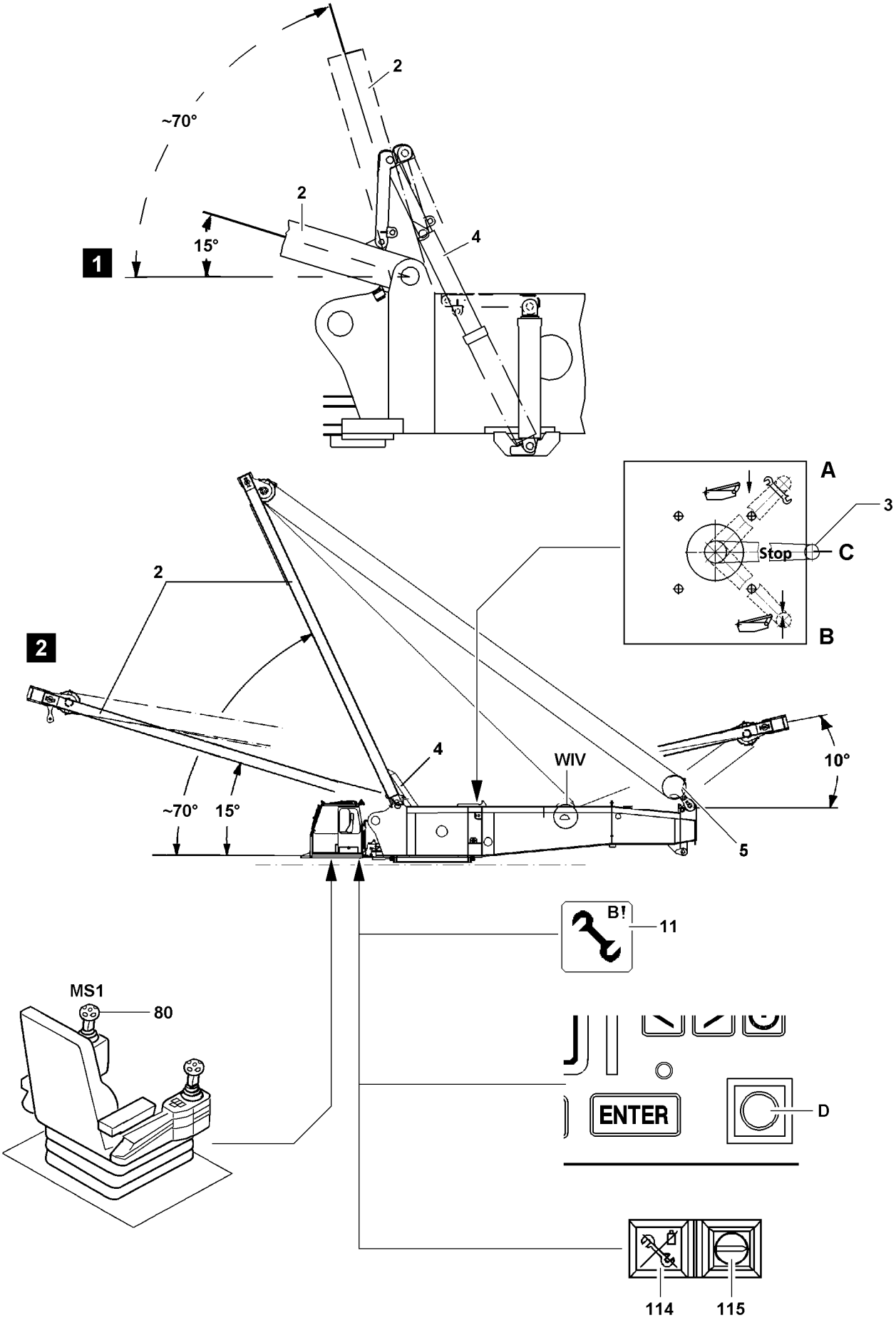

B111021

1 SA-frame

Note

- The SA-frame is used in assembly operation to install the crawler travel gear, see Crane operating instructions, chapter 3.01!
- In addition, the SA-frame is used in assembly operation for closing boom systems and for guying the boom in flying assembly of lattice sections, see Crane operating instructions, chapter 5.38!

Switch positions of the ball valve 3:		
Switch position	**Function**	
A	Lower the SA-frame	Transport position
C	SA-frame stop, cylinder stop,	Erection cylinders are blocked
B	Erecting the SA-frame	Assembly and operating position

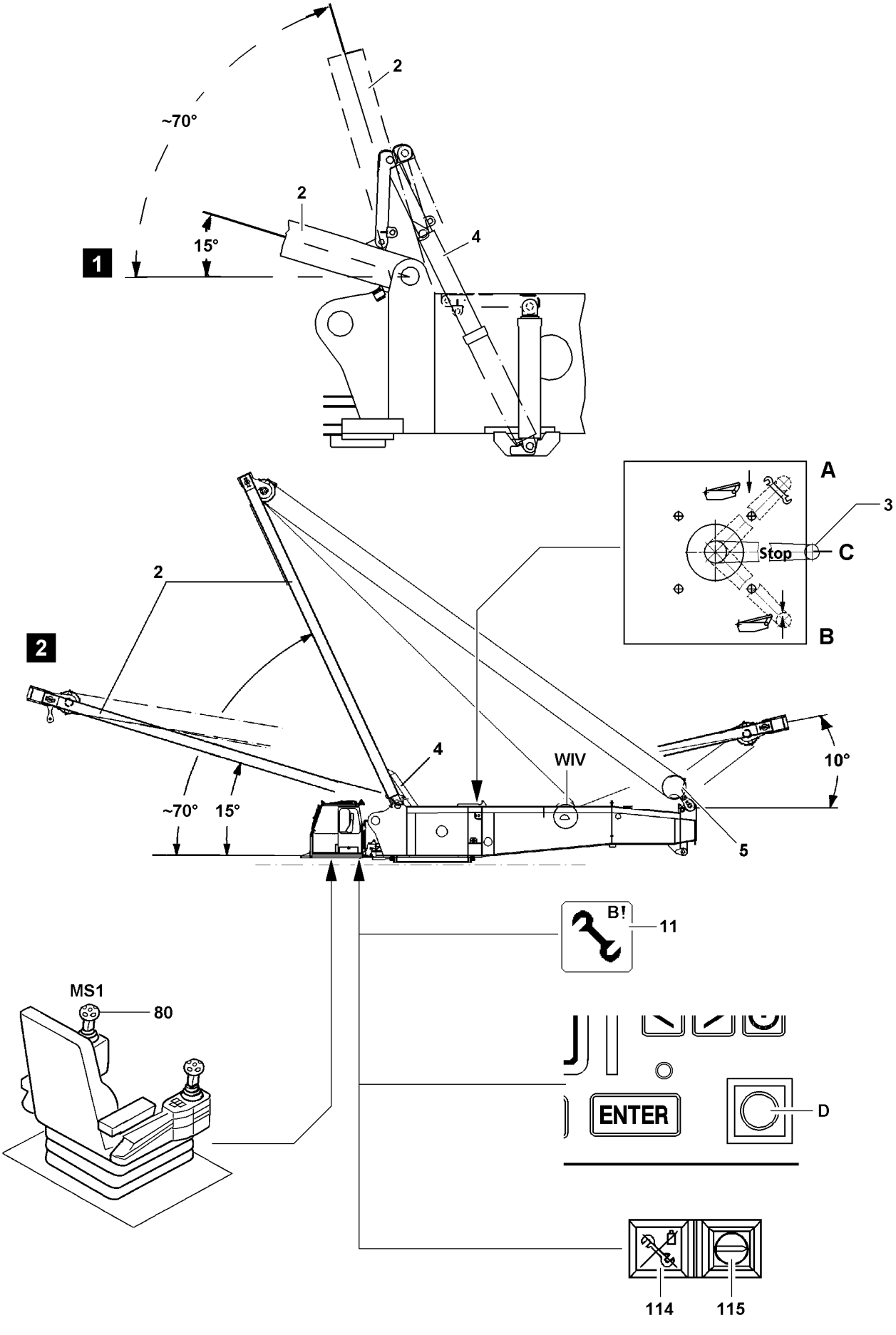

B111021

1.1 Erecting the SA-frame

1.1.1 Erection procedure

Make sure that the following prerequisites are met:

– The turntable is assembled.
– The SA-frame is in transport position.
– Winch 1 and winch 2 installed in the turntable.
– There is no counterweight on the turntable.
– Winch 4 is reeved on the roller set of the SA-frame.
– The engine is running.
– The set up key **D** is actuated, the assembly icon **11** on the LICCON monitor blinks.
– The crawler assembly key button **115** is actuated, the indicator light in the button **114** lights up.
– Observe the assembly conditions.

Note

▶ When the erection cylinders are extended, the SA-frame is located approx. 70° to the horizontal to the front, illustration **1**!

Note

▶ Due to the own weight of the SA-frame and by spooling out winch 4 simultaneously, the SA-frame is lowered to the front!
▶ After reaching SA-frame position 15°, switch off of the movement winch 4 takes place “spool our” and an operating error is displayed!
▶ If the minimum pressure of 30 bar falls below in the erection cylinder, the winch 4 is shut off and an operating error is displayed!

WARNING

Independent lowering of the SA-frame!
By a false stop-cock setting during the erection procedure, the SA-frame can lower backward by itself!
Personnel can be severely injured or killed!
It can result in slack rope build-up!

▶ The ball valve **4** must be positioned in position **B** during assembly and crane operation!
▶ Ball valve position **A** “lower” and ball valve position **C** “stop” are only permissible when lowering the SA-frame onto the turntable (transport position)!

▶ Set the ball valve **3** into position **B**.
▶ Secure the ball valve **3** in position **B**, for example with a padlock, against unauthorized activation!
▶ Move master switch MS1 **80** in direction X+.

Result:

– Spool out winch 4 **WIV** and SA-frame **2** is erected through the erection cylinder **4** up to 70° forward, see illustration **1**.

▶ When the SA-frame is erected forward to 70°:
Move master switch MS1 **80** in direction X+.

Result:

– Spool out winch 4 **WIV** and the SA-frame is lowered forward by its own weight.

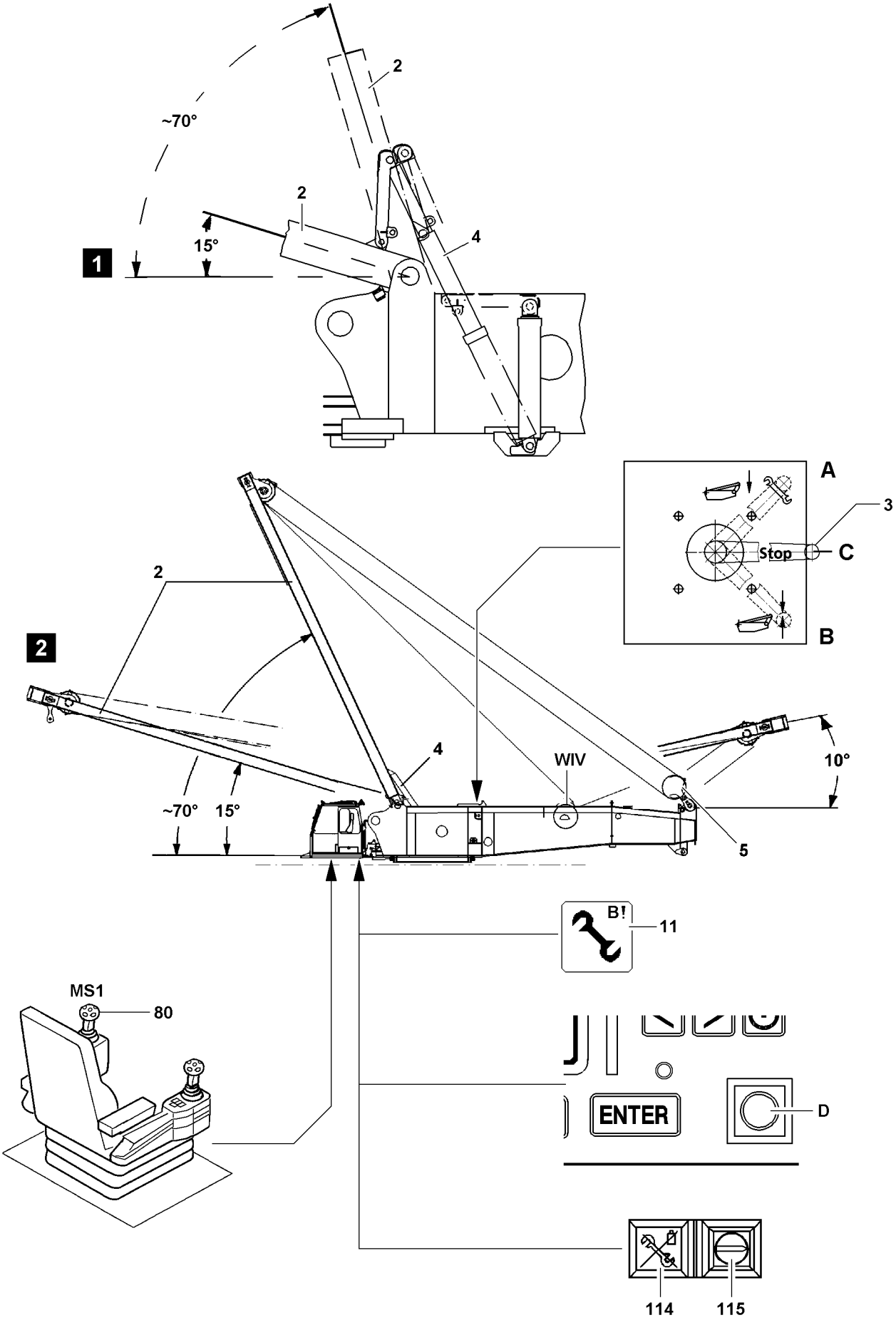

B111021

1.2 Placing the SA-frame onto the turntable

1.2.1 Take down procedure

Make sure that the following prerequisites are met:
– The ball cock **3** is in position **B**.
– The ball valve **3** is secured in position **B** against unauthorized operation.

WARNING
Danger of fatal injury from SA-frame!
During the take down of the SA-frame, personnel can be severely injured or killed!
▶ The crane operator must make sure that no persons or objects are within the danger zone!

▶ Move master switch MS1 **80** in direction X-.

Result:
– Winch 4 spools up.
– The SA-frame **2** is pulled back against the pressure in the erection cylinder.

▶ When the SA-frame **2** is found circa 10° before transport position, illustration **2**:
Set the master switch MS1 **80** to zero position.

WARNING
Independent lowering of the SA-frame!
Through a false ball valve setting, the SA-frame can lower backward by itself!
Personnel can be severely injured or killed!
It can result in slack rope build up and to destruction of crane components!
▶ The ball valve **4** must be positioned in position **B** during assembly and crane operation!
▶ Ball valve position **A** “lower” and ball valve position **C** “stop” are only permissible when lowering the SA-frame onto the turntable (transport position)!

▶ Switch over ball valve **3** from position **B** after position **A**.

Result:
– The SA-frame **2** lowers itself slowly on the turntable.

▶ When the SA-frame **2** is lowered completely onto the turntable:
Carefully spool up winch 4 in order to avoid slack rope build up.
▶ Lay down SA-frame **2** completely onto the turntable.
▶ Secure the ball valve **3** in position **A**, for example with a padlock, against unauthorized operation.

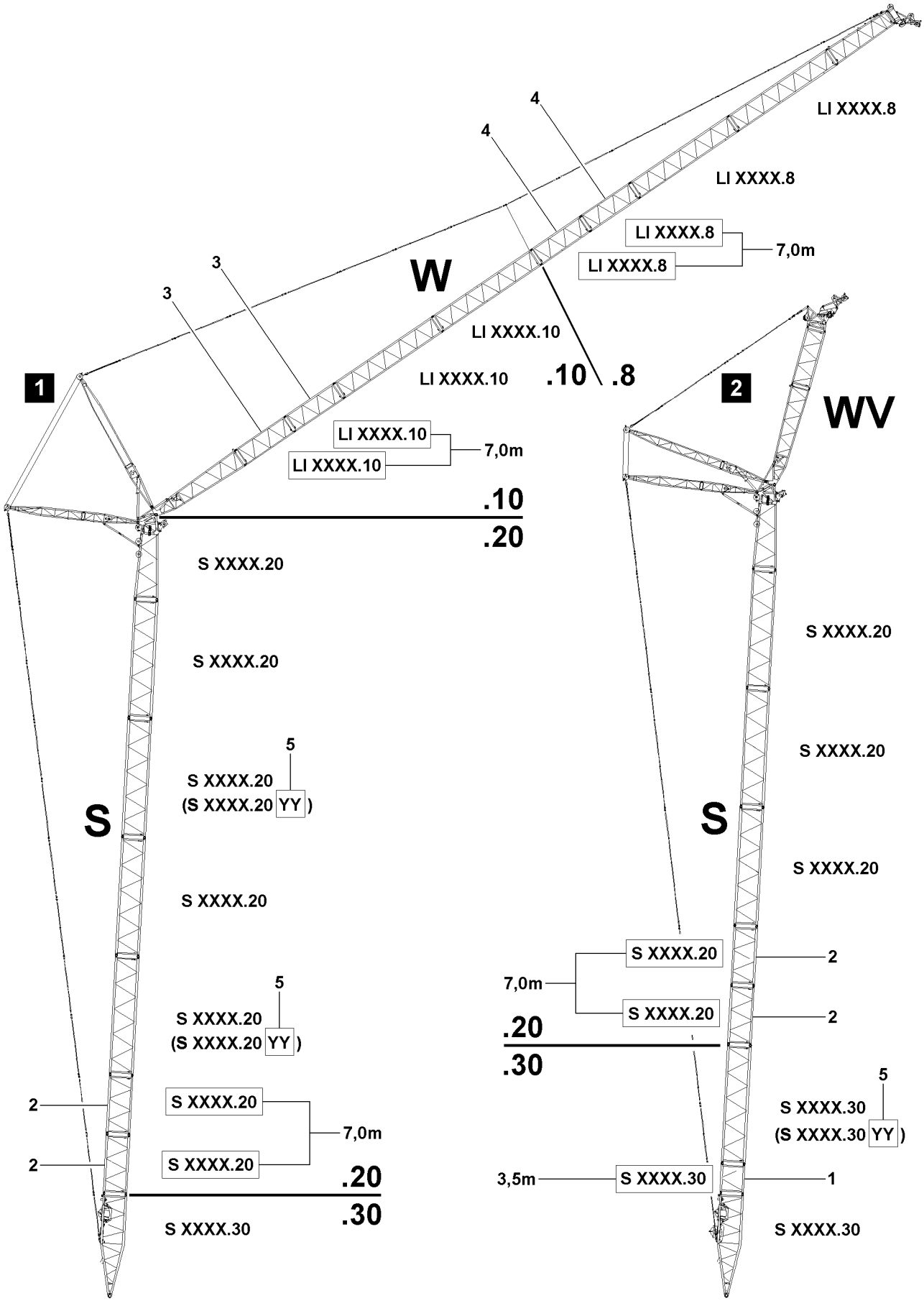
W
WV
1
2
S
S
4
4
3
3
LI XXXX.8
LI XXXX.8
LI XXXX.8
LI XXXX.8
7,0m
LI XXXX.10
LI XXXX.10
.10
.8
LI XXXX.10
LI XXXX.10
7,0m
.10
.20
S XXXX.20
S XXXX.20
S XXXX.20
5
S XXXX.20
(S XXXX.20 YY)
S XXXX.20
5
S XXXX.20
(S XXXX.20 YY)
2
2
S XXXX.20
S XXXX.20
7,0m
.20
.30
S XXXX.30
S XXXX.20
S XXXX.20
S XXXX.20
S XXXX.20
S XXXX.20
7,0m
S XXXX.20
2
2
.20
.30
5
S XXXX.30
(S XXXX.30 YY)
3,5m
S XXXX.30
1
S XXXX.30

B116151

1 Boom components

Note

- For boom components including associated system dimensions, lengths and component weights refer to the Crane operating instructions, chapter 1.03!

2 Arrangement of intermediate sections on the boom

Note

- The following description is an example and may not exactly match to your crane!
- Lengths, weights and system dimensions of the intermediate sections are examples and my differ from the data on your crane!
- For exact crane data refer to the respective rod plan!
- For dimensions and weights of crane components, see Crane operating instructions, chapter 1.03!

WARNING

Boom can break off!

The arrangement of the intermediate sections on booms or boom systems are based on extensive static calculations! If the arrangement of the intermediate sections according to the rod plan is not observed, the crane can collapse, the boom can break off or the crane can topple over!

Personnel can be severely injured or killed!

- Always carry out the arrangement of the intermediate sections according to the rod plan!
- If an auxiliary guying is required for a certain boom length, then it must always be installed according to the rod plan on the position defined in the rod plan!

General specifications for the configuration of booms or boom systems:

- With the same system dimension, two short intermediate sections with a length of 3.5 m are heavier than one single intermediate section with a length of 7.0 m!
- With the same system dimension, two short intermediate sections with a length of 7.0 m are heavier than one single intermediate section with a length of 14.0 m!
- With the same system dimension, two short intermediate sections with a length of 3.5 m can be replaced by one single intermediate section with a length of 7.0 m!
- With the same system dimension, two short intermediate sections with a length of 7.0 m can be replaced by one single intermediate section with a length of 14.0 m!
- For intermediate sections with the same system dimension but different lengths, always install the short intermediate sections on the bottom in the boom, due to their weight, in direction of the slewing ring, see also illustration **1** and illustration **2**!
- The heavier one intermediate section is, the higher is the value of the last two digits on the system dimension plate!
- Pay attention to the last two letters following the letter combinations (YY) **5** on the last two letters on the system dimension plate and observe them!

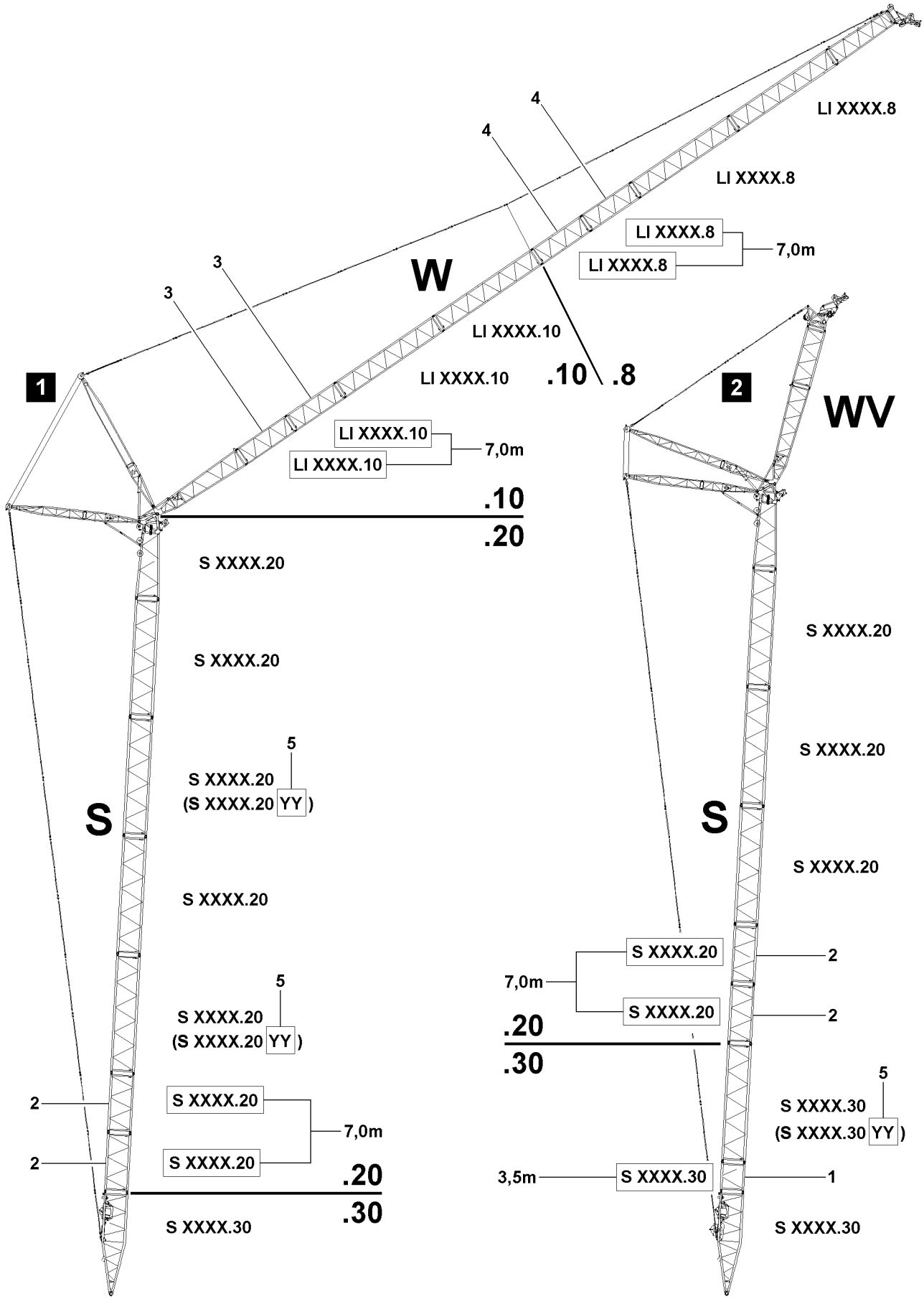
1
2
W
WV
S
4
4
3
3
LI XXXX.8
LI XXXX.8
LI XXXX.8
LI XXXX.8
7,0m
LI XXXX.10
LI XXXX.10
.10
.8
LI XXXX.10
LI XXXX.10
7,0m
.10
.20
S XXXX.20
S XXXX.20
5
S XXXX.20
(S XXXX.20 YY)
S XXXX.20
5
S XXXX.20
(S XXXX.20 YY)
2
2
S XXXX.20
S XXXX.20
7,0m
.20
.30
S XXXX.30
S XXXX.20
S XXXX.20
S XXXX.20
S XXXX.20
S XXXX.20
7,0m
S XXXX.20
2
S XXXX.20
2
.20
.30
5
S XXXX.30
(S XXXX.30 YY)
3,5m
S XXXX.30
1
S XXXX.30

B116151

System dimensions and assignment			
Position	System	Heavy	Light
1	S XXXX **.30**	X	
2	S XXXX **.20**		X
3	LI XXXX **.10**	X	
4	LI XXXX **.8**		X
5	S XXXX **.40** YY	X	

2.1 Arrangement of intermediate sections

WARNING
Danger of accidents due to incorrectly assembled intermediate sections!
- ▶ Any other arrangement of the intermediate sections and guy rods than specified in the operating instructions or the rod plans is prohibited!
- ▶ There is the danger that intermediate sections are mixed up, they are differently sized and do not differ externally!
- ▶ The intermediate sections differ externally only by the welded on plates (.8, .10, .12, .16, .20, .25, .30, .40 **YY**)!
- ▶ When assembling the boom, it must be ensured that the intermediate sections are arranged and installed according to their description as stated on the rod plan!
- ▶ Observe and adhere to the additional letter combinations (YY) **5** on the system dimension plate of the intermediate sections at assembly of the intermediate sections!

WARNING
Arrangement of intermediate sections!
If the arrangement of the intermediate sections is not carried out according to the rod plan, then the boom can be overloaded, bend down and break off!
Personnel can be severely injured or killed!
This could result in high property damage!
- ▶ For intermediate sections with the same system dimension but different length, always install the shorter intermediate sections on the bottom in the boom, in direction of the slewing ring!

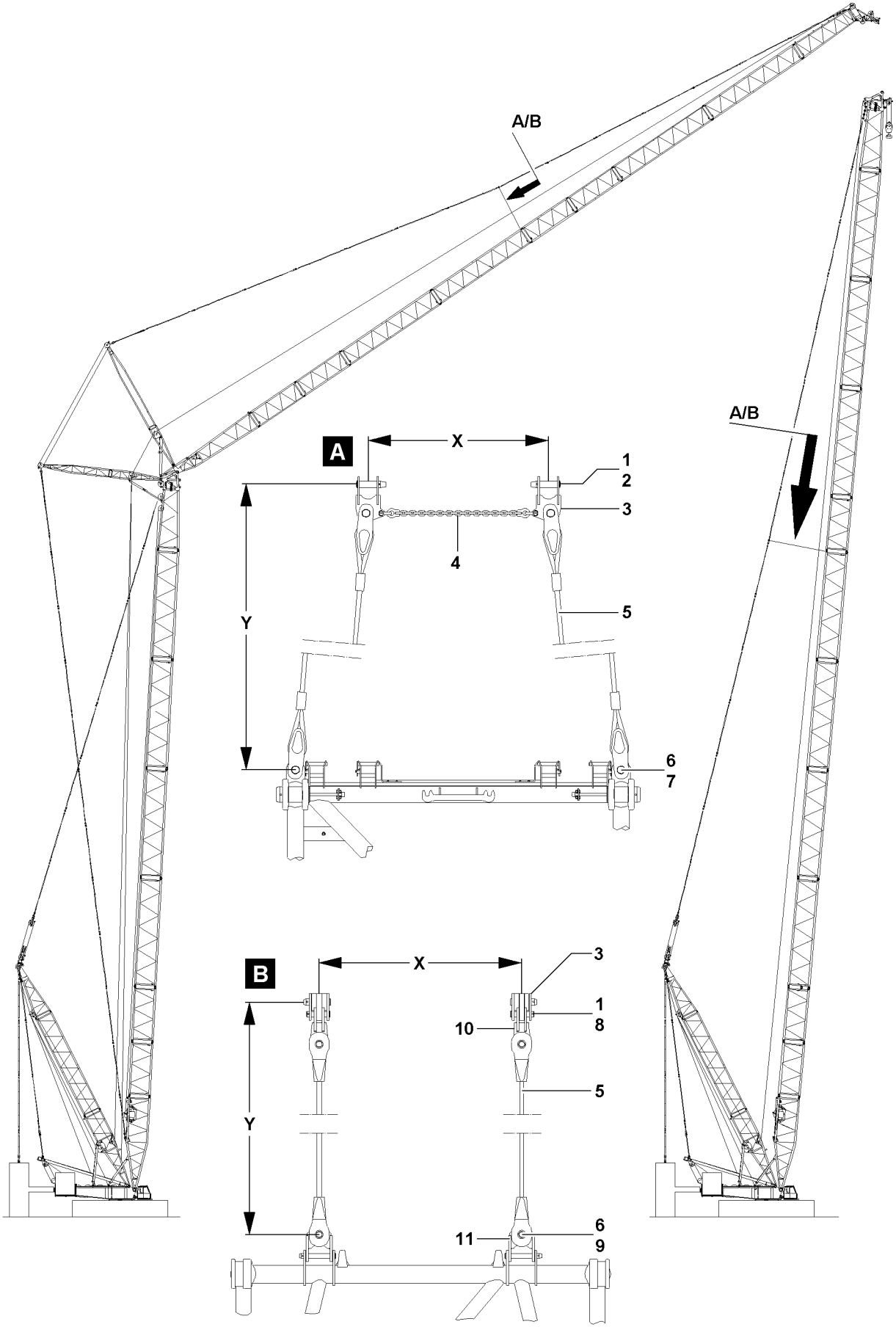

B112270

3 Auxiliary guying

Note
- The following description is an example and may not exactly match to your crane!
- For exact crane data refer to the respective rod plan!

3.1 Installing the auxiliary guying

The auxiliary guying, in regards to safe crane operation - especially for long boom systems - is of vital importance.
The auxiliary guying is a deciding factor in relieving the boom, or the boom system during erection and take down as well as during crane operation.

WARNING
The crane can topple over!
If the auxiliary guying is not installed or not installed on the position specified in the rod plan, then the crane can collapse, the boom can break off or the crane can topple over!
- If an auxiliary guying is specified in the rod plan for the required boom length, then it must be installed on the respective position!
- Make sure that the auxiliary guying is always completely installed and that all pins are properly pinned and secured!

Note
- The boom lengths, for which an auxiliary guying is required, can be seen in the rod plan!
- Depending on the crane type: To install the auxiliary guying, remove the standard lugs and install the “Lugs for the auxiliary guying”!

Components of auxiliary guying, illustration A	
Position	**Description**
1	Pin
2	Spring retainer
3	Bracket
4	Chain
5	Rope
6	Pin
7	Spring retainer

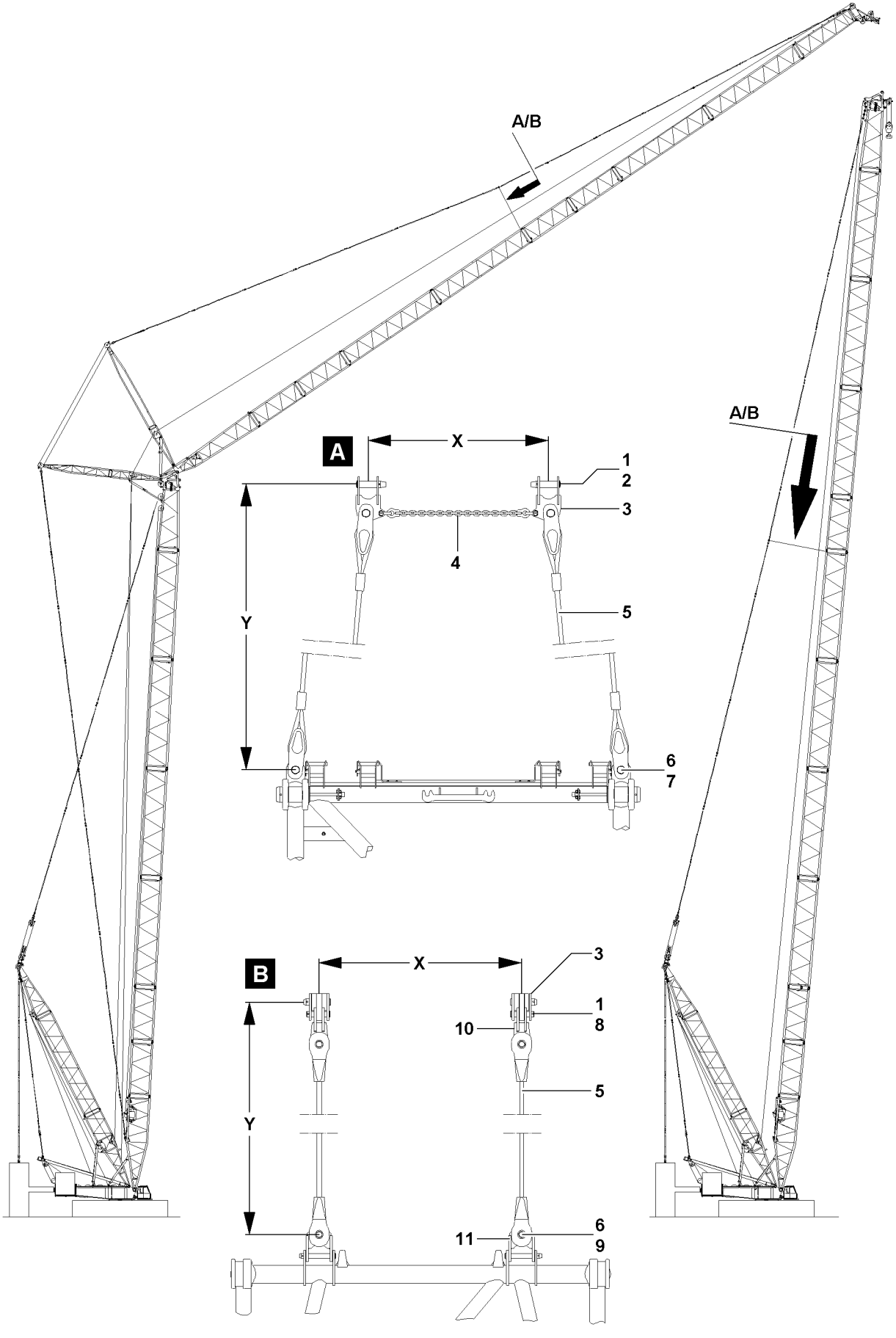

B112270

Components of auxiliary guying, illustration B	
Position	**Description**
1	Pin
3	Bracket
5	Rope
6	Pin
8	Linch pin
9	Linch pin
10	Cross-shaped lug
11	Cross-shaped lug

The lugs **3** must be installed in the guying instead of the standard lugs. The auxiliary guying is installed on the lugs **3**.
The guy ropes **5** are pinned on top on the lugs **3** of the guying or on the cross-shaped lugs **10**. The guy ropes **5** are pinned on the bottom on the lugs / connector points on the boom, see illustration **A** or on the cross-shaped lugs **11**, see illustration **B**.

▶ Install the guy ropes: Pin the guy ropes on top on the guying with pin **1** and secure with spring retainer **2**, see illustration **A**.

or

- Install the guy ropes: Pin the guy ropes on top on the guying with pin **1** and secure with linch pin **8**, see illustration **B**.

▶ When the guy ropes **5** are pinned and secured on the lugs **3** of the guying or on the cross-shaped lugs **10**:
Pin the guy ropes **5** on the lugs / connection points on the boom, see illustration **A** with pin **6** and secure with locking spring **7**.

or

- Pin the guy ropes **5** on the cross-shaped lugs **11** on the boom, see illustration **B** with pin **6** and secure with linch pin **9**.

WARNING
The crane can topple over!
If the chain **4** is not installed in connection with the auxiliary guying, then the guying can be damaged, the boom can break off and the crane can topple over!
Personnel can be severely injured or killed!

▶ The auxiliary guying must be installed according to the rod plans!
▶ If a chain **4** is specified in the rod plan, then it must always be installed in connection with the auxiliary guying, otherwise the guy rods will be pulled apart!

▶ Recheck the proper and complete assembly of the auxiliary guying before erecting the boom / boom system.

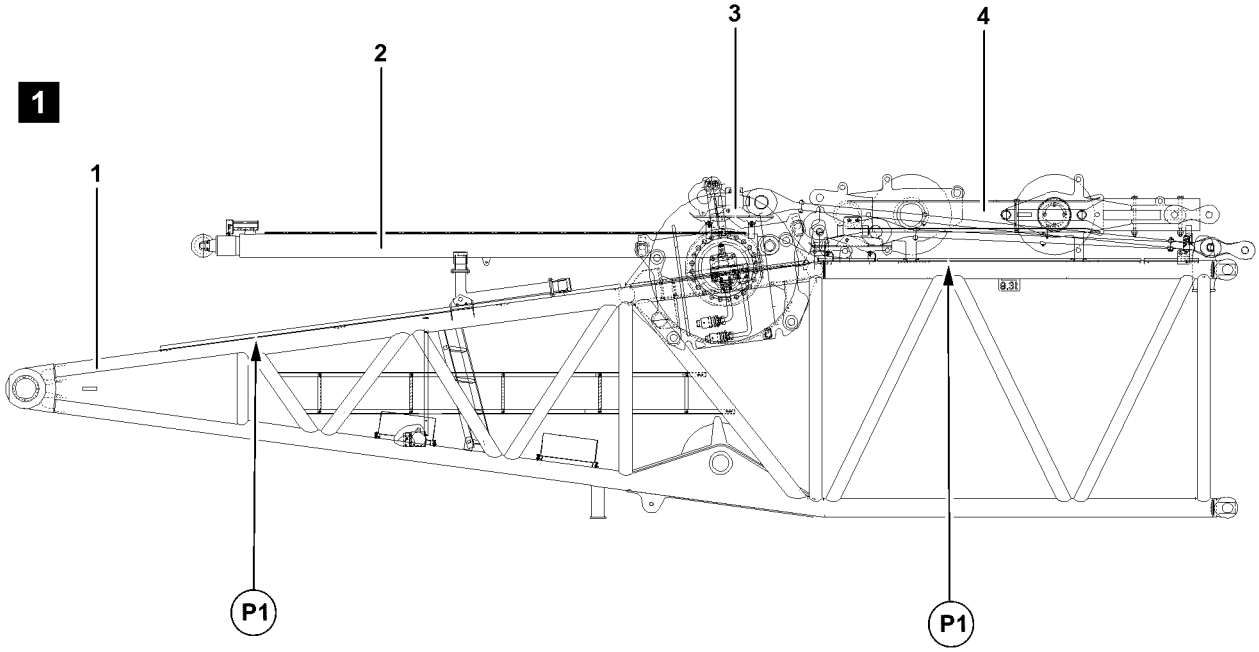

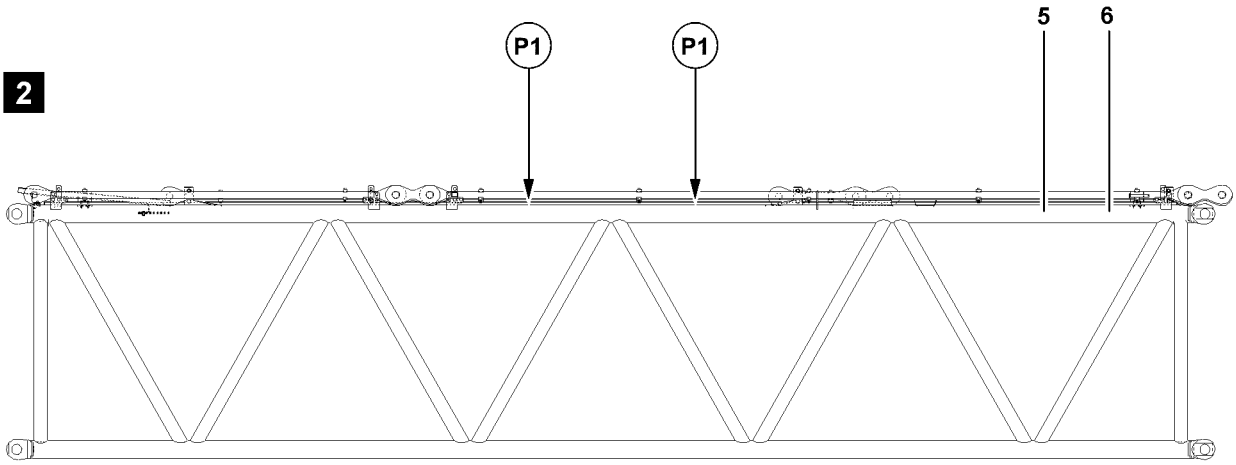

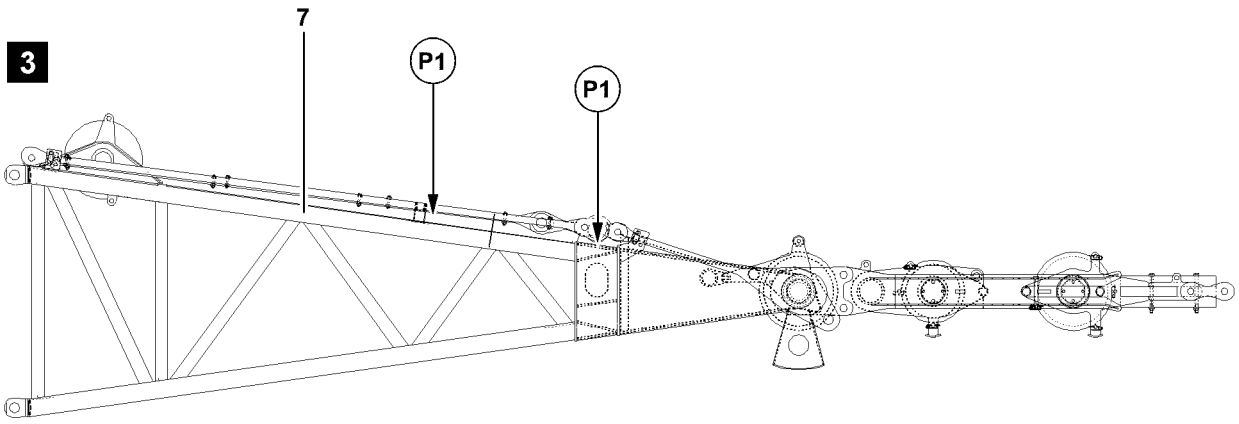

B111658

1 Components and fastening points

1.1 D-pivot section

The D-pivot section consists of:

Position	Component	Weight[1)]
1	D-pivot section without rods	6.3 t
2	D-relapse cylinder - 2x	1.8 t
3	Winch 3 with rope	8.8 t
4	D-pulley blocks	4.5 t

1) The stated weights are approximate

1.2 D-intermediate section

Position	Component	Weight[1)]
5	D-intermediate section 10 m	7.0 t
6	D-intermediate section 14 m	8.6 t

1) The stated weights are approximate

1.3 D-end section

Position	Component	Weight[1)]
7	D-end section	12.0 t

1) The stated weights are approximate

1.4 Fastening points D-pivot section

WARNING
Danger of accident due to incorrect attachment!
Life-threatening situations can arise due to improper or incorrect attachment of the corresponding components!
Personnel can be severely injured or killed!
▶ Attach the components on the intended fastening points **P1**!

B195219

2 Assembly

WARNING
Risk of falling!
During assembly and disassembly, personnel must be secured with appropriate aids to prevent them from falling. If this is not observed, assembly personnel can fall and suffer life-threatening or fatal injuries!
- ▶ Any work, where there is a danger of falling must be carried out with suitable aids (for example: lifting platforms, scaffoldings, ladders, auxiliary crane)!
- ▶ If the work cannot be carried out with such aids nor from the ground, then the assembly personnel must secure themselves with approved catch systems to avoid falling, see Crane operating instructions chapter 2.04!
- ▶ If railings are present on the components, then they must be brought into the corresponding position and secured for assembly / disassembly work!
- ▶ Step on aids and fall protection equipment only with clean shoes!
- ▶ Keep aids and fall protection equipment clean and free from snow and ice!
- ▶ During all assembly and disassembly work, maintenance work and inspections, travel or crane operation is prohibited!

WARNING
Falling components!
If unsecured or non-supported components are installed or removed, they can fall down!
Personnel can be severely injured or killed!
- ▶ During pinning and unpinning of the lattice sections, it is prohibited for anyone to remain **under** or **on** the components as well as within the entire danger zone!
- ▶ Support the boom and components before pinning / unpinning!
- ▶ Pin or unpin both pins laying in a horizontal, i.e. **left** and **right**!
- ▶ Secure the pins in the bearing points and in the receptacles!
- ▶ Do not disengage the auxiliary crane until each component is pinned on and secured!
- ▶ It is prohibited to lean a ladder against the component being disassembled!

WARNING
Danger of impact / crushing!
When installing / removing counterweight components with the auxiliary crane, crane components can start to swing back and forth!
When lifting / lowering and positioning crane components, there is an increased danger of impacts / crushing!
Personnel can be severely injured or killed!
- ▶ Make sure that personnel cannot be caught by components!
- ▶ Make sure that the crane is aligned in horizontal position to avoid the support beams from swinging by themselves!
- ▶ When working in danger zones: Use aids to protect limbs!
- ▶ Guide components with suitable aids to minimize oscillation!

B195219

NOTICE

Damage of derrick boom and SA-frame!

If the SA-frame is pulled by winch 4 (intake gear) to the rear in direction of the turntable, then the derrick boom and the SA-frame can be severely damaged!

Expensive and extensive repairs can result!

▶ As long as the guying between the SA-frame and the assembled D-pivot section or between the SA-frame and the assembled D-boom is **not** assembled and guyed, do not pull the SA-frame to the rear in direction of the turntable!

Make sure that the following prerequisites are met:

– The crane is supported.
  (only in connection with crane support or for LG-cranes)
– The crane is aligned in horizontal direction.
– An auxiliary crane is available.
– An assembly scaffolding / work platform is available.
– The counterweight has been installed on the turntable according to the load chart.
– The LICCON overload protection has been set according to the data in the load chart.
– The LICCON overload protection settings have been compared with the actual crane configuration.
– No main boom is assembled on the turntable.

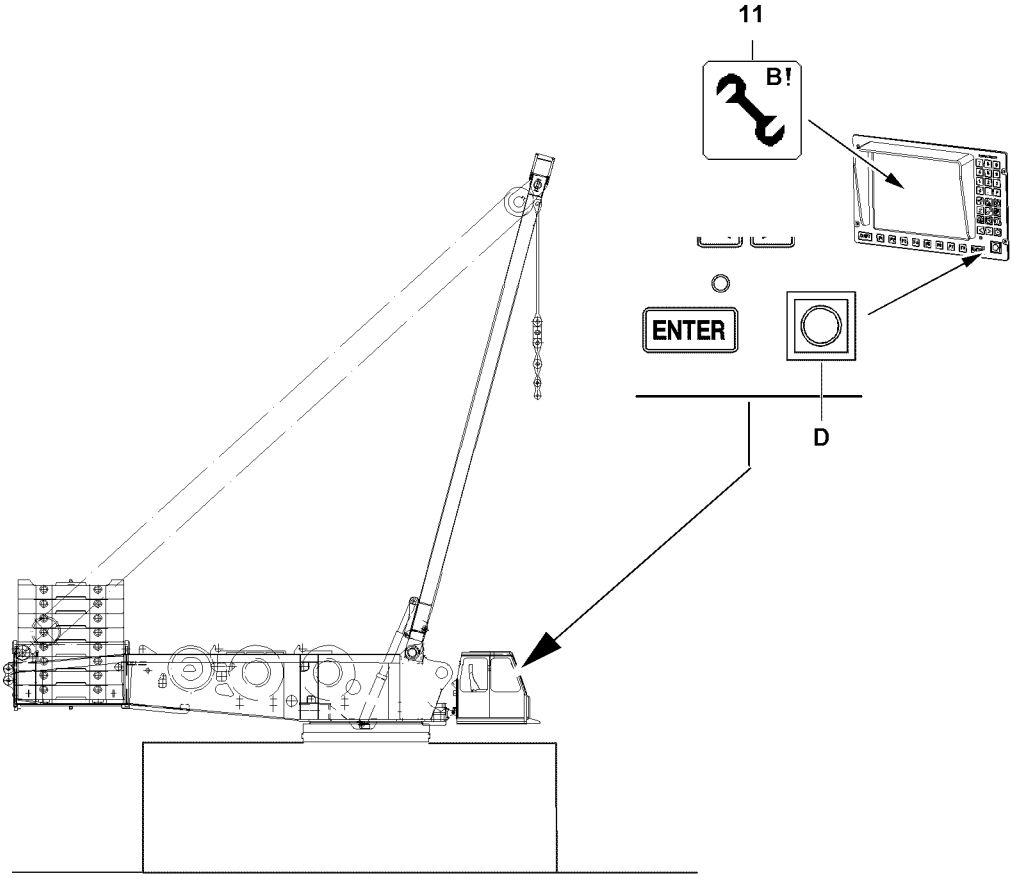

B111659

2.1 Assembling the D-boom

2.1.1 Turning the turntable into assembly position

DANGER
The crane can topple over!
If the following conditions are not met before turning the turntable - **without** installed D-boom, the crane can topple over!
Personnel can be severely injured or killed!
▶ Observe the data in the erection and take down charts!

▶ Turn the turntable in longitudinal direction of the travel gear or to the side.

2.1.2 Exceeding the LICCON overload protection for assembly

WARNING
Assembly with turned on set up key!
When the set up key is engaged, the LICCON overload protection is exceeded!
In the event of deliberate improper use, the crane could collapse, the boom can break off or the crane can topple over!
Personnel can be severely injured or killed!
This could result in high property damage!
▶ The set up key **D** may only be actuated by persons who know the effects of a bypass!
▶ Press the set up key **D** only when the set up status was correctly entered into the LICCON computer system!
▶ Observe the erection / take down charts!
▶ Crane operation with the set up key **D** turned on is strictly prohibited!

▶ Turn the set up key **D** to the right.

Result:
– The LICCON overload protection is exceeded.
– The assembly icon **11** appears on the LICCON monitor.

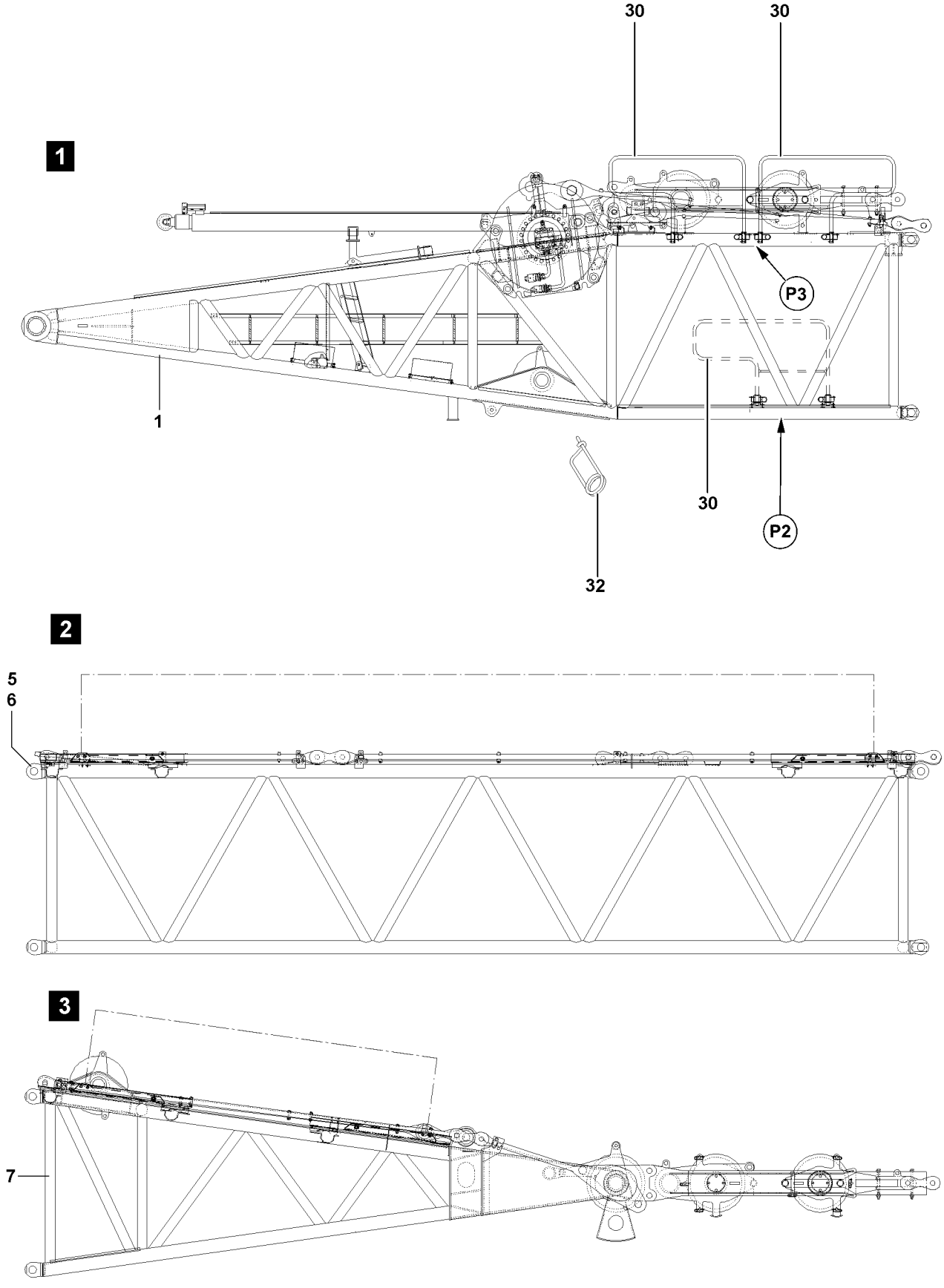

B111660

2.1.3 Assembling the fall protection equipment on the D-pivot section

- ▶ Release the railing in the transport retainer point **P2** on the D-pivot section **1**: Remove the spring retainers **32**, see illustration **1**.
- ▶ Remove the railing from the transport retainer point **P2** and insert into the intended fastening points, point **P3** on the D-pivot section **1**.
- ▶ Secure the railing **30** in the fastening points, point **P3**, with spring retainers **32**.

2.1.4 Assembling the fall protection equipment on the D-intermediate section and on the D-end section

See illustration **2** and illustration **3**.

Note

- ▶ Observe the notes, see Crane operating instructions, chapter 2.06 and / or chapter 6.50!

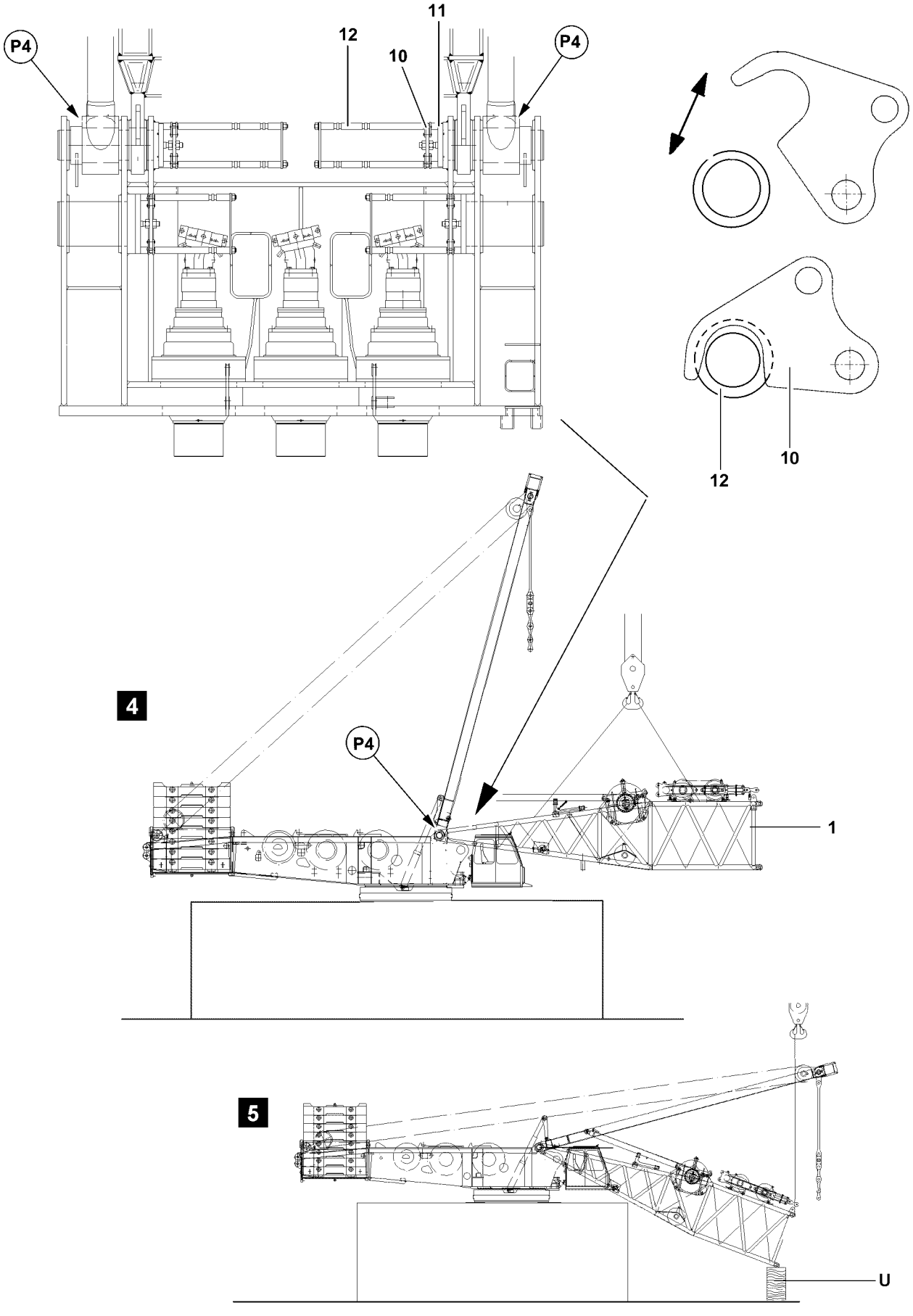

B111661

2.1.5 Pinning the D-pivot section on the turntable

DANGER
Danger of fatal accidents due falling components!
If the pin connections are not visually inspected, the pins can loosen up by themselves and cause components to fall down!
Personnel can be severely injured or killed!
- ▶ All pins must be secured after assembly with the intended safety elements! Check visually!
- ▶ The guy rods must be inspected regularly, see Crane operating instructions, chapter 8.15!

Make sure that the following prerequisites are met:
- – The SA-frame is erected to approx. 100°.
- – The pins **11** on the turntable are unpinned.

▶ Hang the D-pivot section **1** onto the auxiliary crane and swing in to the pin points **P4** on the turntable, see illustration **4**.

WARNING
Falling D-pivot section!
Due to non-secured or insufficiently secured connector pins, the D-pivot section can fall down!
Personnel can be severely injured or killed!
- ▶ The pins **11** must be secured after the pinning procedure on the turntable by folding the retaining hooks **10** into the guide **12**!

▶ Move the D-pivot section **1** in on the turntable.
▶ Open both retaining hooks **10** from the guide **12**.

Note
- ▶ Operation of radio remote control (only available for the LR-crane), see Crane operating instructions, chapter 6.08!

▶ Actuate the radio remote control and insert the connector pins **11**.
▶ Secure the pins **11** by folding the retaining hooks **10** into the guide **12**.

NOTICE
Damage to the D-pivot section!
Property damage can occur on the D-pivot section by placing the assembled pivot section on the ground!
- ▶ The D-pivot section may not be placed directly on the ground!
- ▶ When placing the D-pivot section down, always use a sufficiently load bearing and large enough base support!

▶ Place the D-pivot section carefully with the auxiliary crane on the support **U**!
▶ Remove the auxiliary crane!

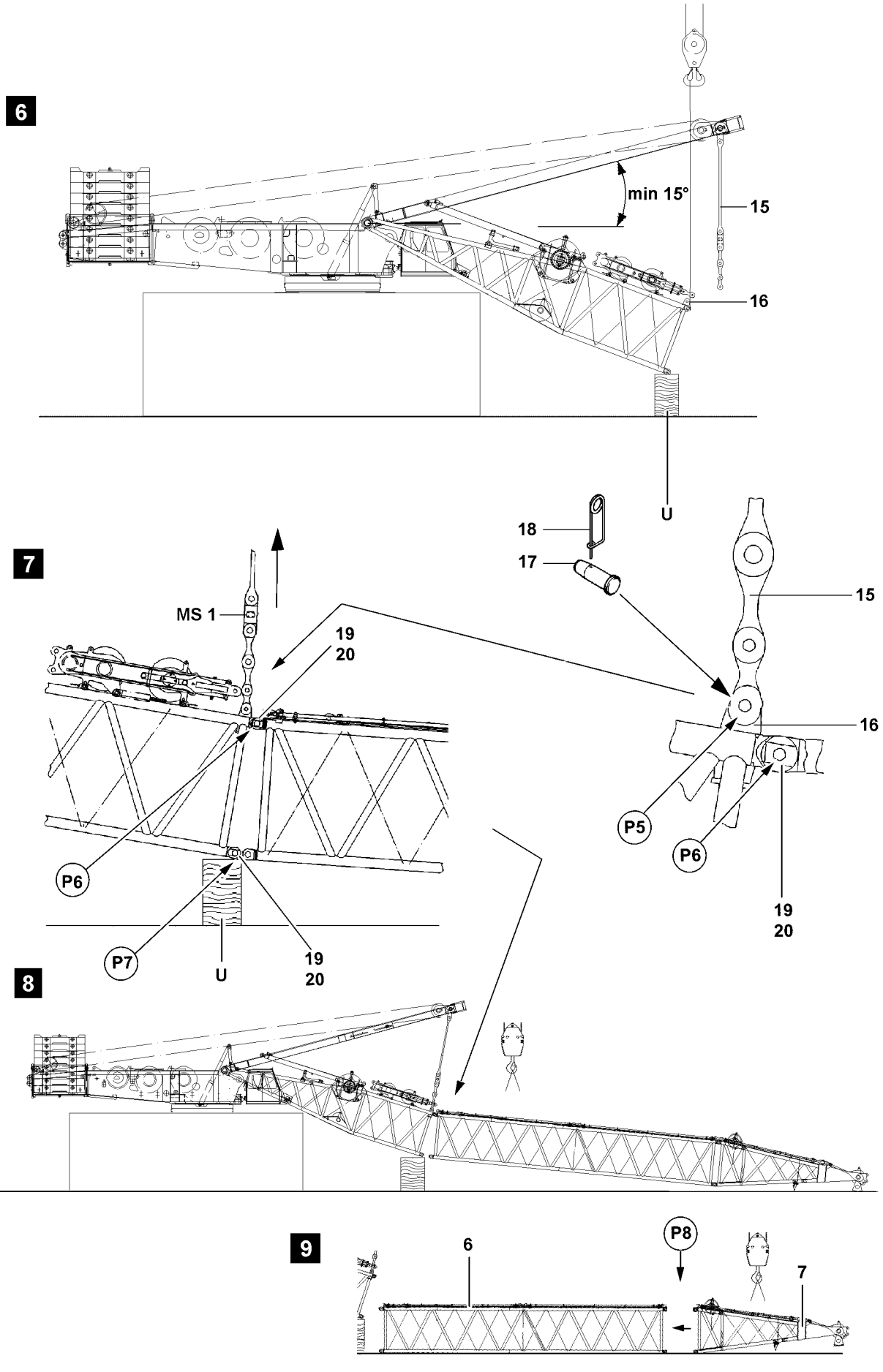
6
min 15°
15
16
U
7
18
17
15
MS 1
19
20
16
P6
P5
P6
19
20
P7
U
19
20
8
9
P8
6
7
B111662

2.1.6 Assembling the guy rods from the SA-frame

Make sure that the following prerequisites are met:
– The D-pivot section is pinned and secured on the turntable.
– The D-pivot section is placed on the support **U**.

▶ Luff the SA-frame down to the front, see Crane operating instructions, chapter 5.02.
▶ Connect the guy rods **15** on the assembly bracket **16** on the D-pivot section, point **P5**: Insert the pin **17** and secure with spring retainer **18**, see illustration **7**.

2.1.7 Installing the D-lattice sections on the D-pivot section

Make sure that the following prerequisite is met:
– The guy rods **15** are pinned and secured on the assembly bracket **16** on the D-pivot section, point **P5**.

Note
▶ Always support the D-lattice sections sufficiently for easier installation!
▶ Pin and secure the D-lattice sections with the pin pulling device, see Crane operating instructions, chapter 5.30!

▶ Attach the D-end section **7** on the auxiliary crane and align on the D-intermediate section **6**.
▶ When the pin bores on the D-intermediate section and on the D-end section, point **P8** align: Insert and secure the pins on top and bottom and secure with spring retainers.
▶ Assemble the D-lattice sections and the respective guy rods to the required length.
▶ Hook the derrick boom on the auxiliary crane and align on the D-pivot section.
▶ When the pin bores on the D-pivot section and on the derrick boom, point **P6** align: Insert the pin **19** and secure with spring retainer **20**.
▶ Luff the D-pivot section up until it can be pinned on the D-pivot section, point **P7**, see illustration **7**.
▶ Erect the SA-frame until the pin bores on the D-pivot section and on the D-intermediate section "on the bottom" align, point **P7**: Insert the pins **19** on both sides at point **P7** and secure with spring retainers **20**, illustration **7**.
▶ When the pins are properly pinned and secured on all D-lattice sections: Luff the SA-frame down and unpin the guy rods **15** on the assembly bracket **16** on the D-pivot section.

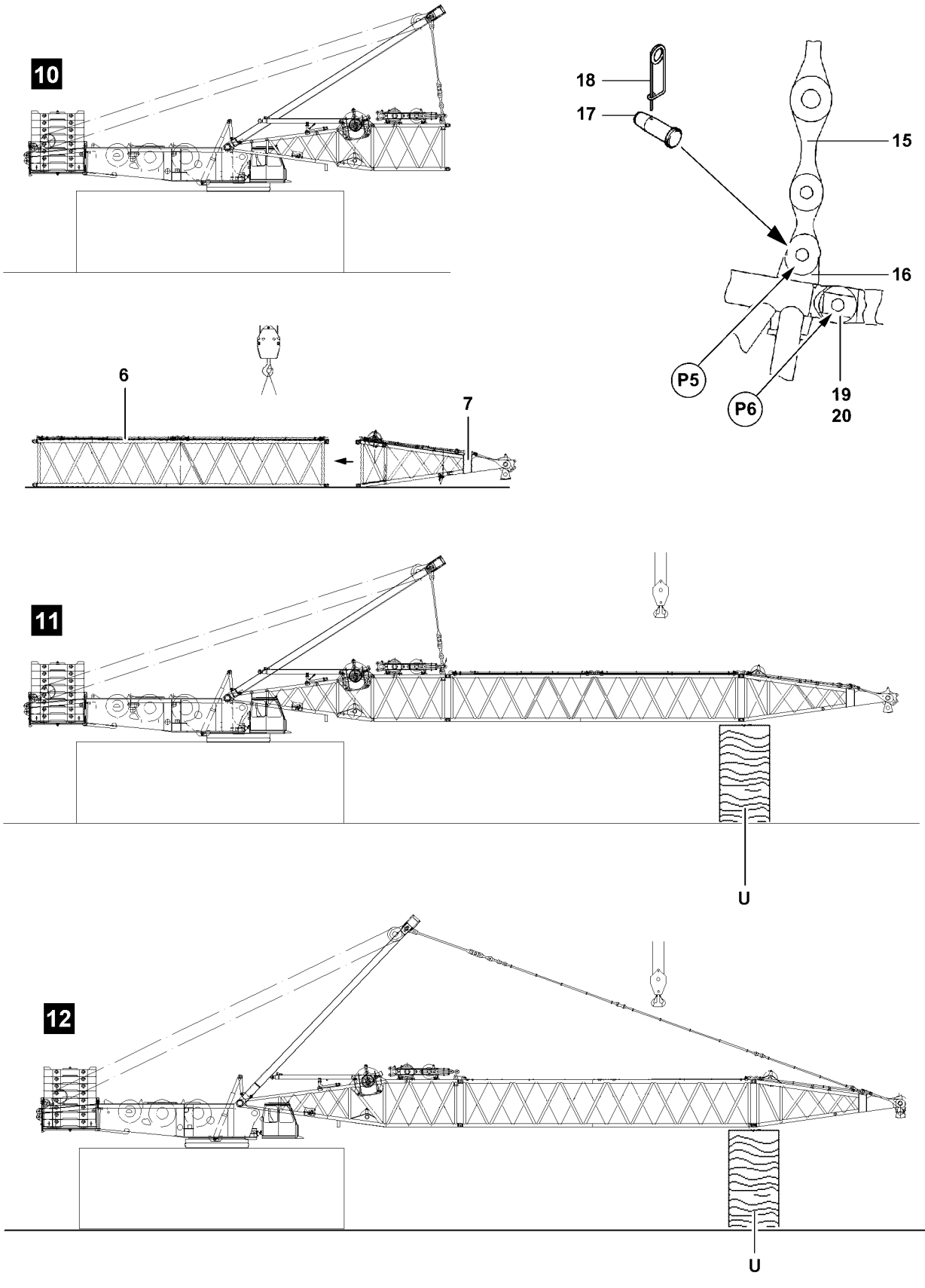

B111663

2.1.8 Assembling the derrick boom in flying mode

Make sure that the following prerequisites are met:
– The D-pivot section is pinned and secured on the turntable.
– The guy rods **15** are pinned and secured on the assembly brackets **16** on the D-pivot section.
– The D-pivot section is horizontally guyed.

Pin and secure the D-intermediate section and the D-end section or the D-intermediate section and the complete D-end section on the D-pivot section.
▶ Insert and secure the pins on top and bottom.

WARNING
Mortal danger due to folding down of derrick boom!
If the derrick boom is not properly supported with stable materials or held by an auxiliary crane before unpinning the guy rods, then the derrick boom can fold down suddenly!
In addition, the derrick boom can be severely damaged!
Personnel can be severely injured or killed!
▶ The crane operator must ensure that the derrick boom is supported properly with stable materials or that it is held by an auxiliary crane!

▶ When the D-lattice sections or the preassembled assembly unit are installed and secured on the D-pivot section:
Fasten the derrick boom on the auxiliary crane or support it with stable materials.
▶ Lower the SA-frame to the front, see Crane operating instructions, chapter 5.02.

Result:
– The guy rods are relieved.

▶ Separate the guy rods **15** on the assembly bracket **16**:
Remove the spring retainer **20** and unpin the pins **19**.
▶ Lower the SA-frame to the front.
▶ Connect the guy rods from the D-boom with the guy rods from the SA-frame:
Insert the pin and secure with spring retainer.
▶ Erect the SA-frame and tension the guy rods between the SA-frame and the D-boom.

DANGER
Mortal danger due to folding down of derrick boom!
▶ Before removing the auxiliary crane, the crane operator must ensure that the derrick boom is safely held by the guy rods!

▶ When the guy rods are tensioned between the SA-frame and the D-end section:
Remove the auxiliary crane.

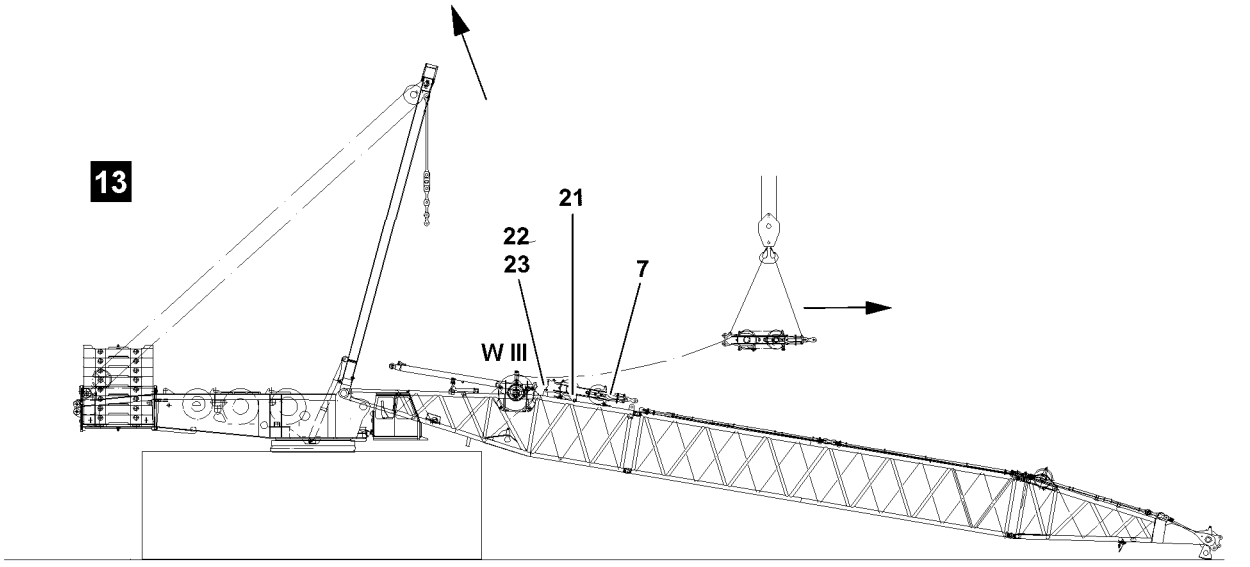

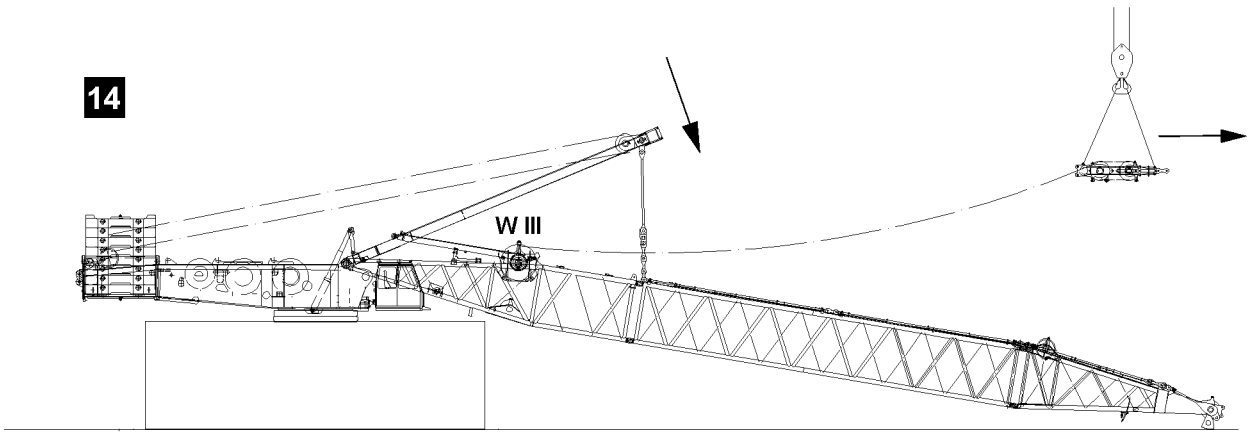

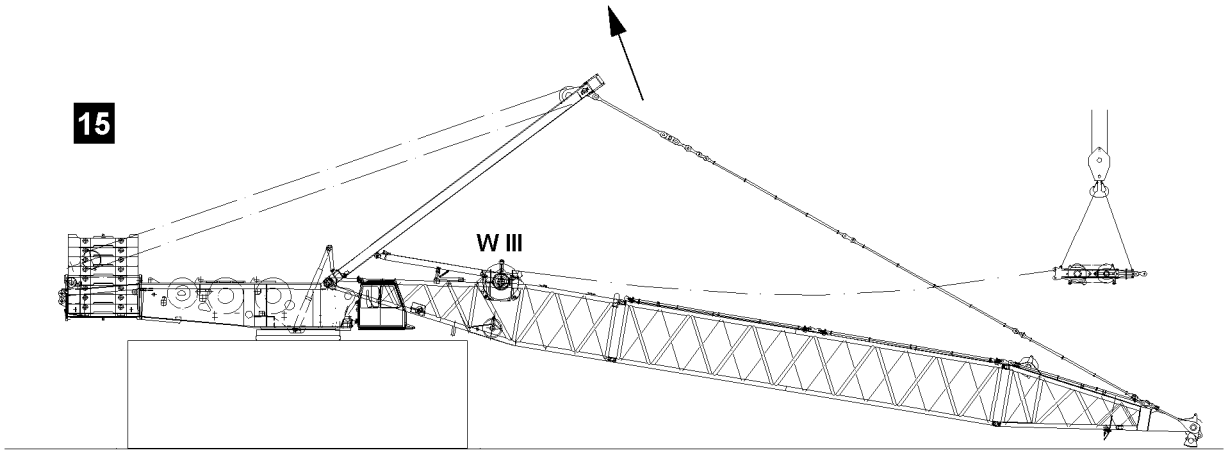

B111664

2.1.9 Assembling the guy rods

Note

- ▶ Assemble the D-guy rods according to the rod plan!
- ▶ The numbering on the rod plan must be identical to the numbering on the guy rods!

WARNING

Neglectful inspection and maintenance of guy rods!

If the regular inspection and maintenance of the guy rods is not carried out or is carried out only in irregular intervals, then severe accidents can occur due to existing and unrecognized damage to the guy rods!

Personnel can be severely injured or killed!

- ▶ Check the guy rods before every assembly, see Crane operating instructions, chapter 8.15!

Make sure that the following prerequisite is met:

– The derrick boom is placed on the ground.

▶ Luff the SA-frame up for easier assembly of the pulley block **7**.

WARNING

Slipping pulley block!

By unpinning the pulley block on the D-pivot section, the pulley block can start to slip!

Personnel can be severely injured or killed!

- ▶ The pulley block must be secured by an auxiliary crane before unpinning on the D-pivot section!

▶ Fasten the pulley block onto the auxiliary crane.

▶ Unpin the pulley block on the D-pivot section: Release and unpin the pin **22** on the transport retainer **21**.

NOTICE

Danger of slack rope formation!

If winch 3 is spooled out too quickly when pulling the pulley block, slack rope can form!

- ▶ The hoist rope must be tensioned during the entire pulling procedure!

▶ Pull the pulley block with the auxiliary crane to the D-end section while spooling out winch 3 at the same time, see illustration **13**.

DANGER

Risk of accident!

- ▶ The pins of the derrick guy rods may only be pinned from the “inside” to the “outside”!

▶ Luff the SA-frame down to the front and pin and secure the guy rods from the SA-frame with the guy rods from the derrick boom, see illustration **14**.

▶ Tension the guy rods between the SA-frame and the D-end section.
Actuate winch 4, see illustration **15**.

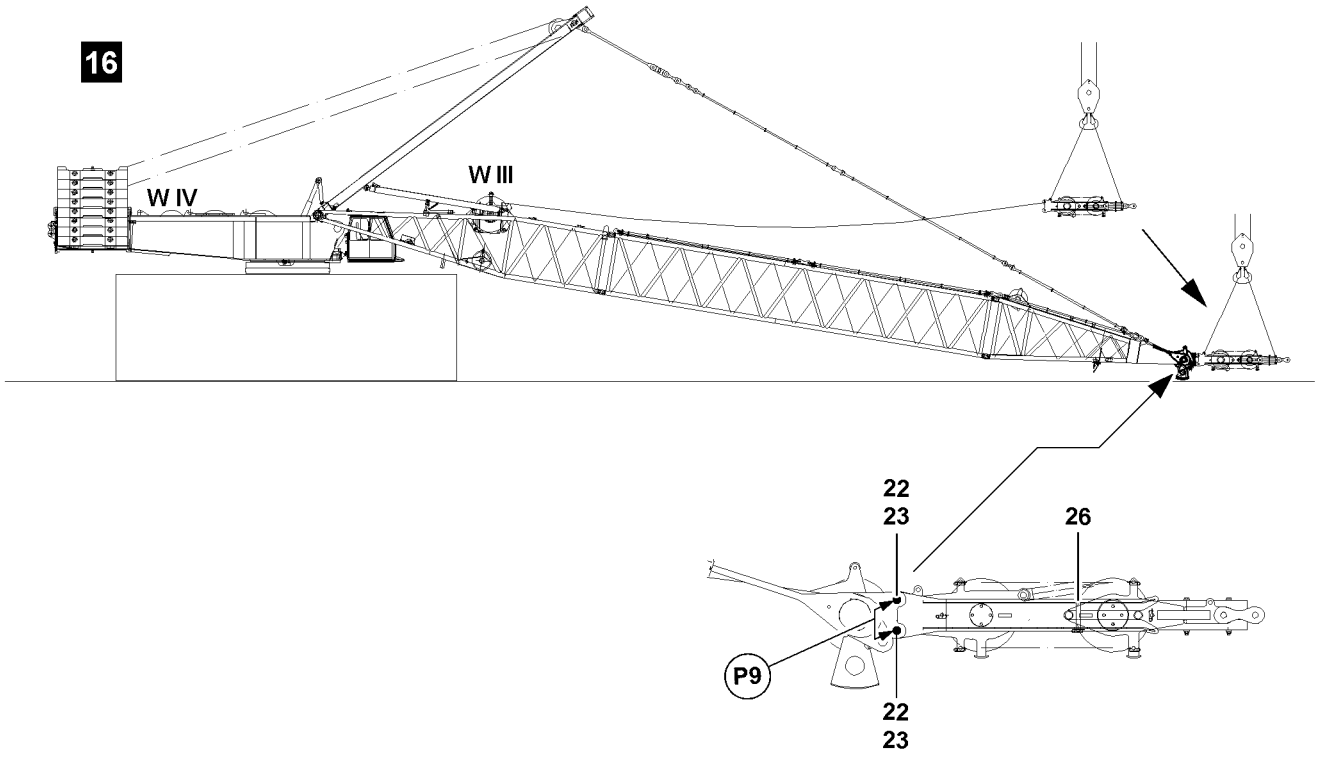
16
W IV
W III
22
23
26
P9
22
23

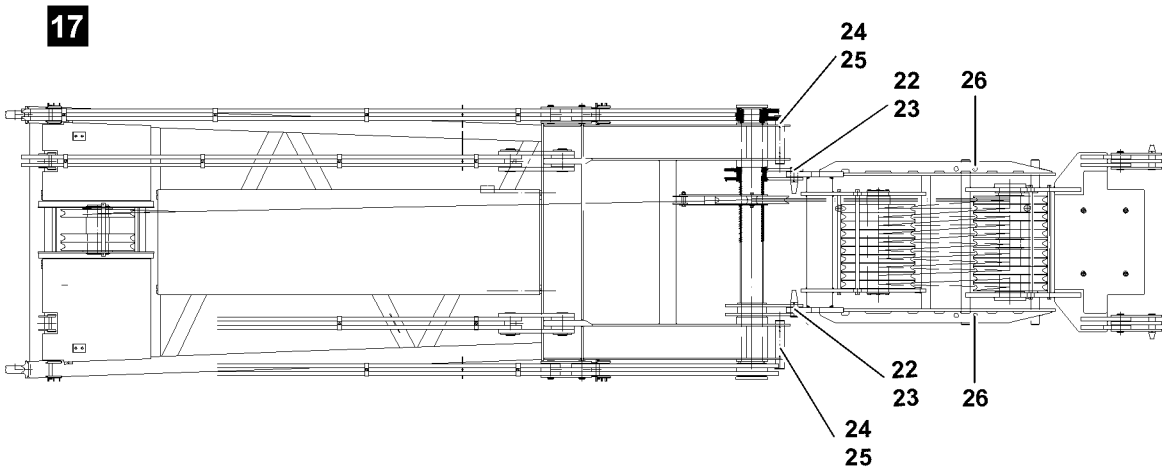
17
24
25
22
23
26
22
23
26
24
25

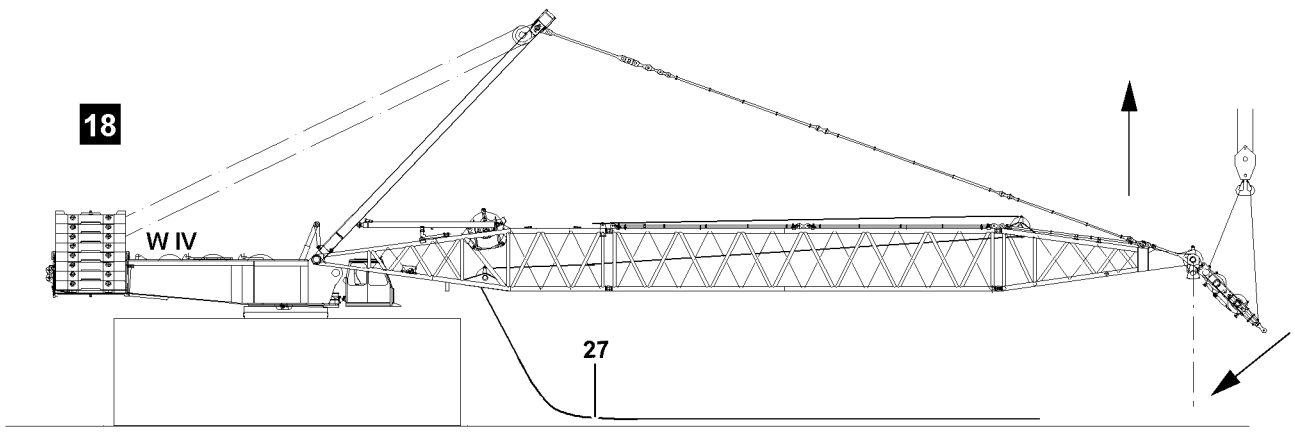
18
W IV
27

B111665

2.1.10 Assembling the pulley block

For assembly move the pulley block with the auxiliary crane from the D-pivot section to the D-end section and pin on the D-end section in horizontal direction. When the D-boom is lifted off the ground, the lock of the pulley block is released and lowered with the auxiliary crane into “down” position.
Make sure that the following prerequisites are met:

– The D-boom is placed on the ground.
– The guy rods between the SA-frame and the D-end section are tensioned
– The pulley block hangs on the auxiliary crane.

▶ Pull the pulley block with the auxiliary crane to the D-end section while spooling out winch 3 **WIII** at the same time and align on the pin bores, points **P9**, see illustration **16**.
▶ Insert the pins **22** on both sides “on top” and “bottom” and secure with spring retainers **23**, point **P9**.

Lock the pulley block horizontally on the D-end section.

▶ Insert the pins **24** on both sides and secure with spring retainers **25**.
▶ Luff the derrick boom up to the horizontal, see illustration **17**:
Spool the winch 4 up.
▶ When the derrick boom is erected to the horizontal:
Fasten the pulley block onto the auxiliary crane.
▶ When the pulley block is safely held by the auxiliary crane:
Release and unpin the pins **24** on both sides.
▶ Lower the pulley block carefully with the auxiliary crane, see illustration **17**.
▶ Spool up winch 3 **W III** until the control rope is slightly tensioned between the upper pulley block and the lower pulley block.
▶ Unpin the pins **26** on both sides.

Result:

– The upper and the lower pulley block are held by the control rope.

▶ Remove the auxiliary crane.

DANGER
Falling hoist rope!
If the following conditions are not met before erecting the D-boom, the hoist rope can fall down due to its own weight!
Personnel can be severely injured or killed!

▶ Enough hoist rope must be guided over the rope pulleys so that the hoist rope is **not** pulled back and falls down when erecting the D-boom!

▶ Pull the hoist rope **27** with the assembly winch over the rope pulleys in the D-end section and the D-pivot section, see Crane operating instructions, chapter 4.06.
▶ Luff the D-boom up until the pulley block hangs freely.

B195219

2.2 Establishing the electrical connections

Make sure that the following prerequisite is met:
– The D-boom is completely assembled.

Note
▶ To establish the electrical connections, see Electric wiring diagram!

▶ Establish the electrical connections.
▶ Make sure that all electrical connections on the boom are established.

2.3 Establishing the hydraulic connections

The hydraulic connections are made with quick-release couplings.

When connecting hydraulic lines with quick-release couplings, make sure that the coupling procedure is carried out correctly.

WARNING
Pressure in the hydraulic lines!
If the pressure supply is not interrupted before connecting / releasing the hydraulic lines, the hydraulic oil can escape with high pressure!
Personnel can be severely injured or killed!
▶ Release the pressure in the hydraulic system before connecting / disconnecting: Interrupt the pressure supply and wait for a short time!

WARNING
Loss of pressure or leakage!
Incorrectly coupled or self-loosening quick-release couplings (particularly return lines) can result in serious accidents due to component failure!
▶ Check that the quick-release couplings have been properly connected before using the crane!

▶ Connect the coupling components (sleeve and connector) and screw together with the hand-tightened nut.
▶ Tighten the hydraulic coupling by hand. Rotate the hand-tightened nut until it reaches a tangible, fixed stop position.
▶ Establish the electrical connection to the D-relapse cylinders.

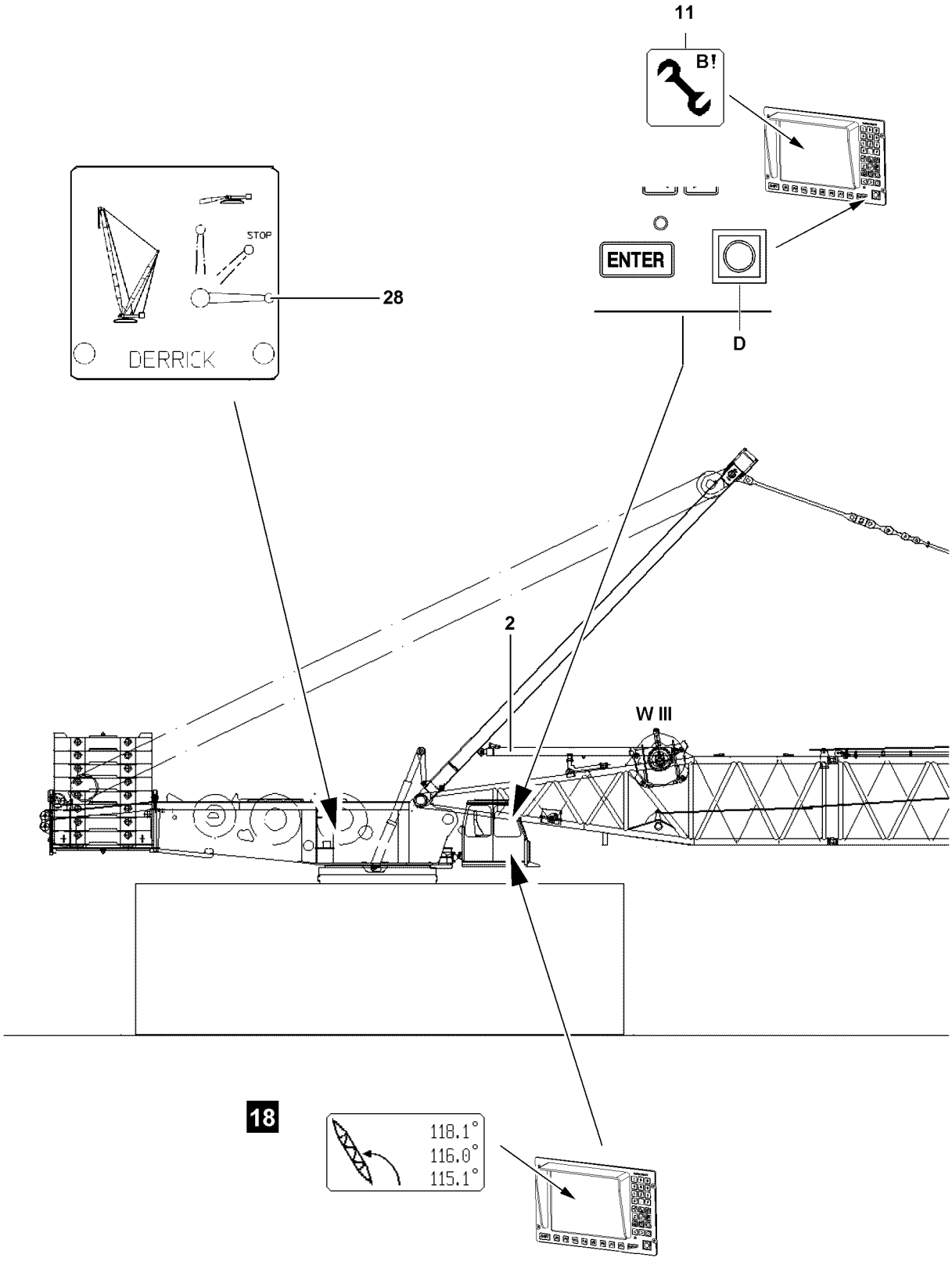

B111666

2.4 Checking the function of the safety devices

WARNING
Non-functioning safety devices!
If the function of the safety devices is defective, personnel can be severely injured or killed!
▶ Crane operation with non-functioning safety devices is **prohibited**!

Note
▶ The function of the individual limit switches must be checked before erection!
▶ The function of the limit switch initiators must be checked in the test system, see Diagnostics manual!

Note
▶ If a function check on the limit switches or on the safety devices does not lead to the desired shut offs, then the plug connections on the connector boxes or the components itself must be checked!
▶ If no visible connection errors or component defects can be found, contact **LIEBHERR** Service!

Make sure that the following prerequisites are met:
– All electrical connections have been made.
– The crane engine is running.
– The corresponding operating mode is set on the LICCON monitor.

2.4.1 Checking the limit switch D-boom “Steepest position”

Note
▶ The limit switch functions have to be checked individually before erection!

▶ Cover the limit switch initiators on the D-relapse cylinders individually with a metal plate.

Result:
– The spool up function of the hoist winch turns off.
– The icon “Derrick boom angle” appears on LICCON monitor 1, see illustration **18**.
– The limit switch is functioning.

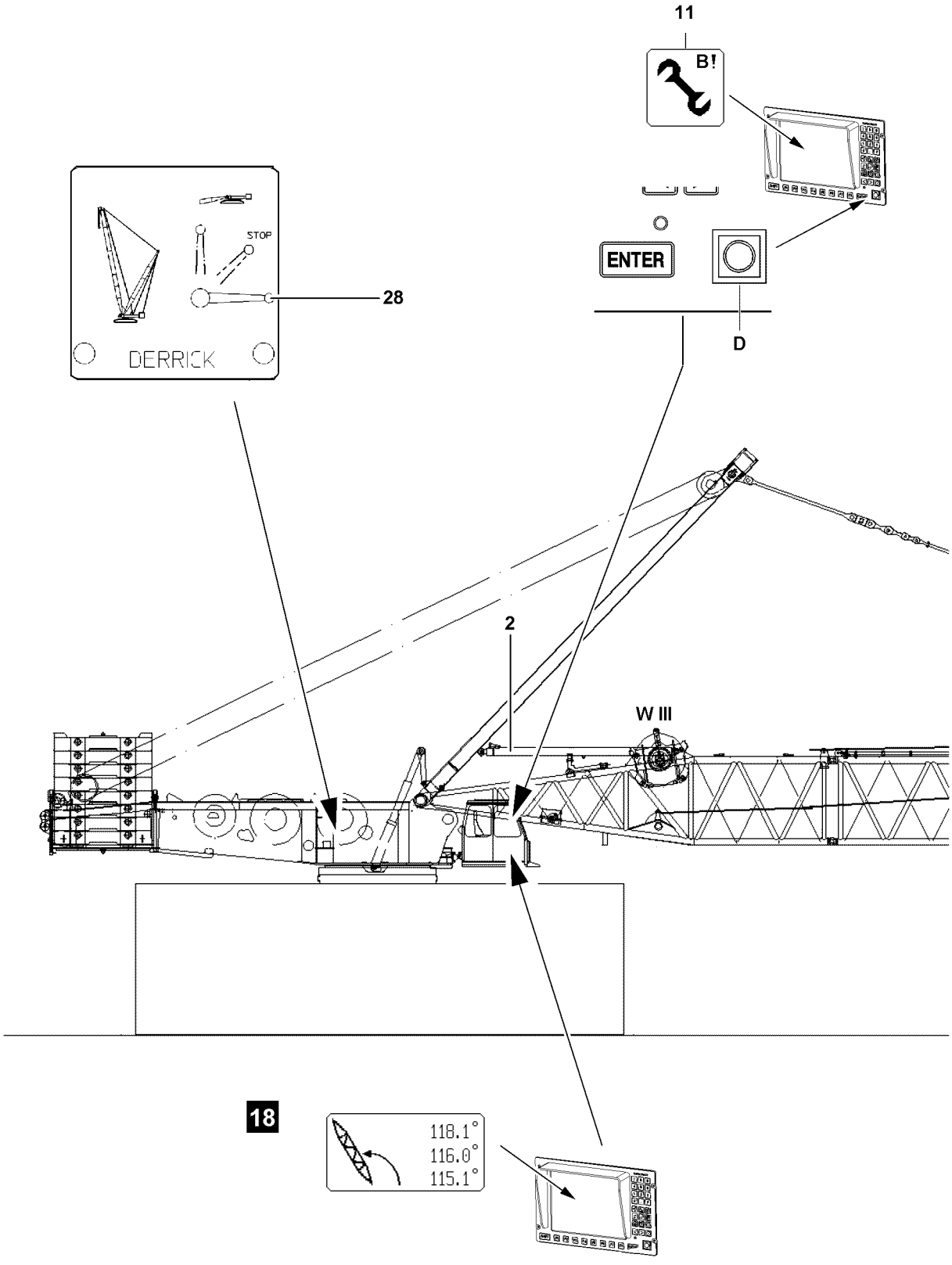

B111666

2.5 Erecting the D-boom

DANGER
The crane can topple over!
- ▶ It is not permitted to turn the crane during the erection procedure!
- ▶ Observe the data in the erection and take down charts!

WARNING
The crane can topple over!
If the following conditions are not met before erecting the D-boom, the crane can topple over!
Personnel can be severely injured or killed!
- ▶ Observe the Safety technical notes, see Crane operating instructions, chapter 5.01!
- ▶ Extend the D-relapse cylinder **2** before erection!
- ▶ Do not allow slack cable to build up on the winch 3!
- ▶ The ball valve cabinet must be locked!
- ▶ Always pull the key on the ball valve cabinet and hand it to an authorized person!

WARNING
Falling hoist rope!
If the hoist rope is not reeved with the respective length over the D-boom before the erection procedure, then it can fall backward due to its own weight!
Personnel can be severely injured or killed!
- ▶ Reeve the hoist rope before the erection procedure with sufficient length on the D-boom!
- ▶ The hoist rope must be constantly monitored during erection!
- ▶ Do not step into the danger zone!

Make sure that the following prerequisites are met:
- – The crane is supported.
  (only in connection with crane support or for LG-cranes)
- – The crane is aligned in horizontal direction.
- – All electrical connections have been made.
- – All limit switches are functioning.
- – The counterweight has been installed on the turntable according to the load chart.
- – All pin connections have been secured.
- – The folding consoles of the D-relapse cylinders are in operating position.
- – The D-relapse cylinders on the D-pivot section are extended.
- – The hoist rope has been correctly placed in the rope pulleys and is prevented from jumping out with the rope retaining pins.
- – The LICCON overload protection has been set according to the data in the load chart.
- – The LICCON overload protection settings have been compared with the actual crane configuration.
- – The LICCON overload protection is exceeded.
- – The assembly icon **11** is visible on the LICCON monitor.
- – No personnel is within the danger zone.

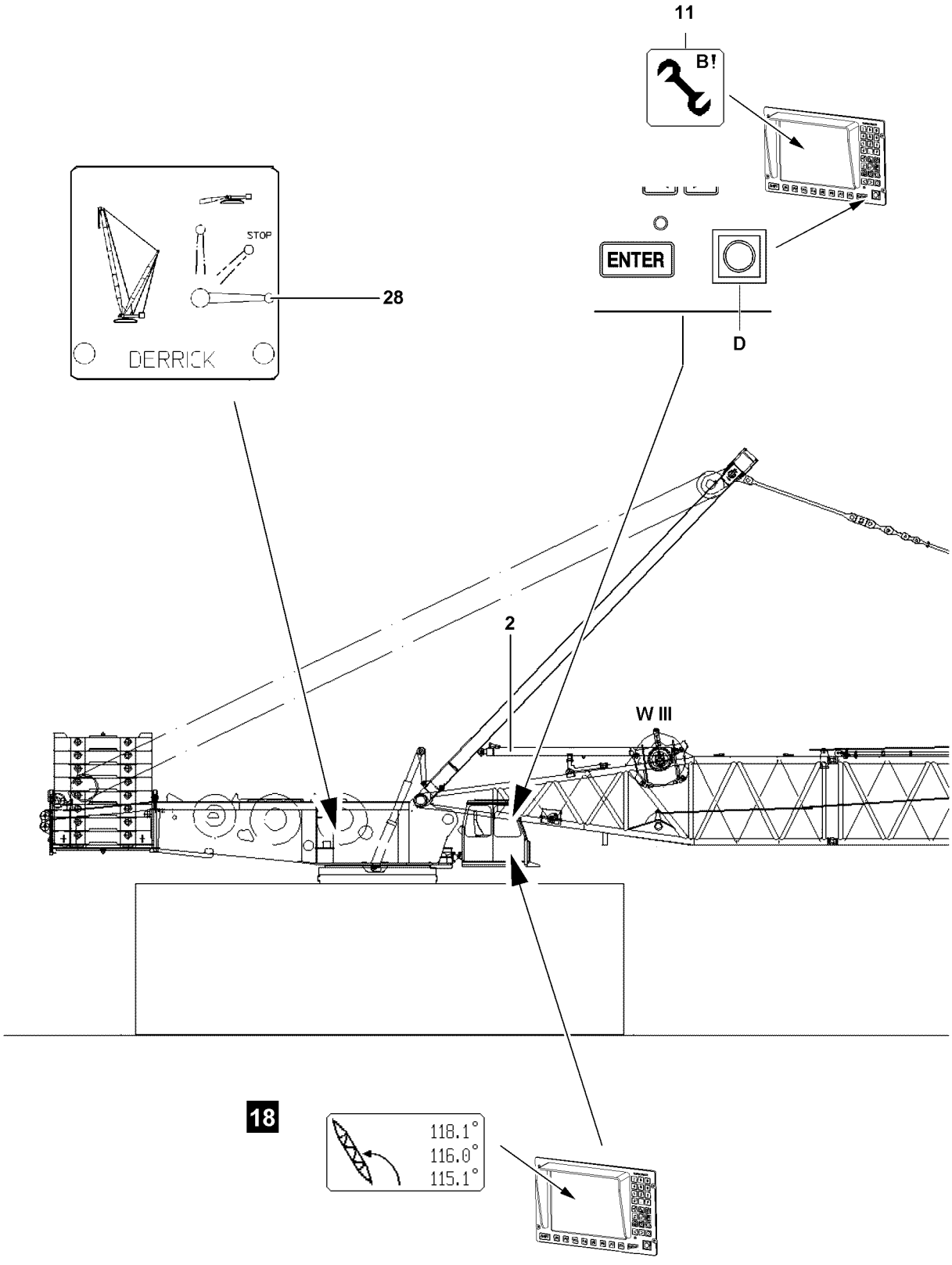

B111666

2.5.1 Extending the D-relapse cylinder

WARNING
Mortal danger due to the D-boom!
If the D-relapse cylinders are not extended before erecting the D-boom, then the D-boom can fall backward!
Personnel can be severely injured or killed!
▶ The D-relapse cylinders must be extended before erection of the D-boom!
▶ The ball valve must be secured during crane operation to prevent unintended actuation!

The piston rod on the D-relapse cylinder must be extended by actuating the ball valve **28**.

Ball valve positions	
Horizontal	Crane operation, extend the piston rod
Vertical	Assembly, retract the piston rod
45°	STOP (The piston rod cannot be moved in / moved out)

Make sure that the following prerequisite is met:
– All hydraulic connections have been made.

▶ Move the ball cock **28** into horizontal position.

Result:
– The piston rods of the D-relapse cylinders **2** extend.

Note
▶ The ball valve is secured by closing the cabinet door and removing the key!

▶ Close the cabinet door and pull the key.
▶ Hand the key to an authorized person.

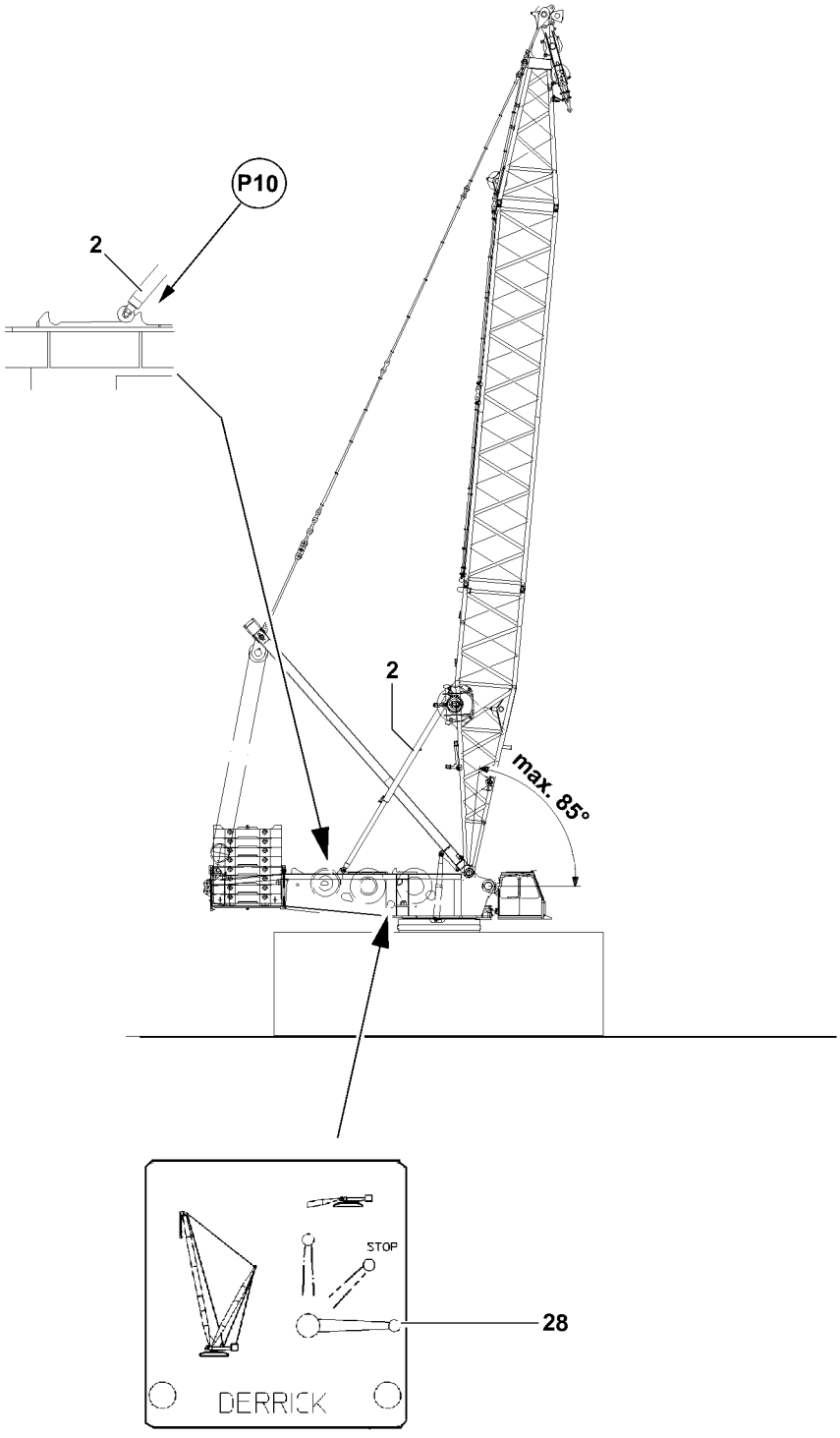

B111667

2.5.2 Erection procedure

Make sure that the following prerequisites are met:

– The D-relapse cylinders **2** are fully extended before erection.
– The control rope of winch 3 is properly reeved on the pulley block and properly secured on the rope fixed point.
– The pins between the upper pulley block and the lower pulley block are unpinned.

Note

▶ During the erection procedure it must be ensured that the D-relapse cylinders **2** engage past the first stop (point **10**) into the second rail on the D-relapse retainer!

DANGER

The crane can topple over!

▶ It is not permitted to turn the crane superstructure during erection procedure!
▶ Do not allow slack cable to build up on the winch 3!
▶ Do not erect the D-boom further than maximum 85° to the horizontal!

▶ Actuate winch 4 and erect the D-boom to an angle range of 75° to 85°.

B195219

3 Disassembly

WARNING
Risk of falling!
During assembly and disassembly, personnel must be secured with appropriate aids to prevent them from falling. If this is not observed, assembly personnel can fall and suffer life-threatening or fatal injuries!
- ▶ Any work, where there is a danger of falling must be carried out with suitable aids (for example: lifting platforms, scaffoldings, ladders, auxiliary crane)!
- ▶ If the work cannot be carried out with such aids nor from the ground, then the assembly personnel must secure themselves with approved catch systems to avoid falling, see Crane operating instructions chapter 2.04!
- ▶ If railings are present on the components, then they must be brought into the corresponding position and secured for assembly / disassembly work!
- ▶ Step on aids and fall protection equipment only with clean shoes!
- ▶ Keep aids and fall protection equipment clean and free from snow and ice!
- ▶ During all assembly and disassembly work, maintenance work and inspections, travel or crane operation is prohibited!

WARNING
Falling components!
If unsecured or non-supported components are installed or removed, they can fall down!
Personnel can be severely injured or killed!
- ▶ During pinning and unpinning of the lattice sections, it is prohibited for anyone to remain **under** or **on** the components as well as within the entire danger zone!
- ▶ Support the boom and components before pinning / unpinning!
- ▶ Pin or unpin both pins laying in a horizontal, i.e. **left** and **right**!
- ▶ Secure the pins in the bearing points and in the receptacles!
- ▶ Do not disengage the auxiliary crane until each component is pinned on and secured!
- ▶ It is prohibited to lean a ladder against the component being disassembled!

WARNING
Danger of impact / crushing!
When installing / removing counterweight components with the auxiliary crane, crane components can start to swing back and forth!
When lifting / lowering and positioning crane components, there is an increased danger of impacts / crushing!
Personnel can be severely injured or killed!
- ▶ Make sure that personnel cannot be caught by components!
- ▶ Make sure that the crane is aligned in horizontal position to avoid the support beams from swinging by themselves!
- ▶ When working in danger zones: Use aids to protect limbs!
- ▶ Guide components with suitable aids to minimize oscillation!

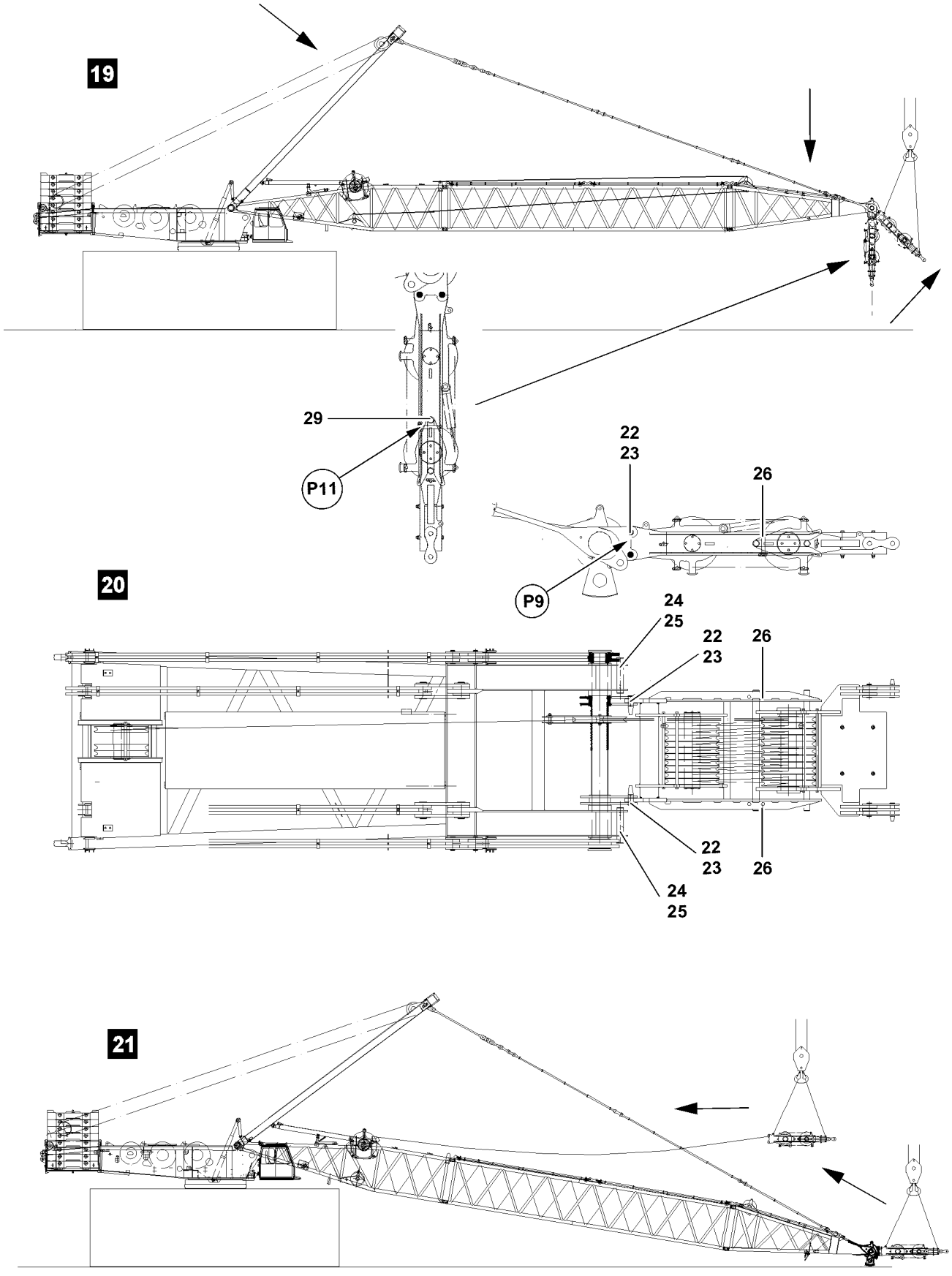

B111668

3.1 Disassembling the D-boom

WARNING
Falling boom!
If the D-boom is not properly supported before disassembly or held with an auxiliary crane, then the D-boom can fall down when it is unpinned!
Personnel can be severely injured or killed!
- ▶ Before supporting the D-boom, the ground condition must be checked regarding load bearing capability and level!

If the ground condition is not classified as sufficient:
- ▶ Support the D-boom properly and safely with suitable material!

3.1.1 Luffing the D-boom down

NOTICE
Damage to the pulley block!
If the D-boom is luffed down too quickly “to the front”, significant damage can occur on the pulley block and on the D-end section!
- ▶ Luff the D-boom down carefully to the front!

- ▶ Luff the D-boom down to the front until the pulley block is just above the ground.

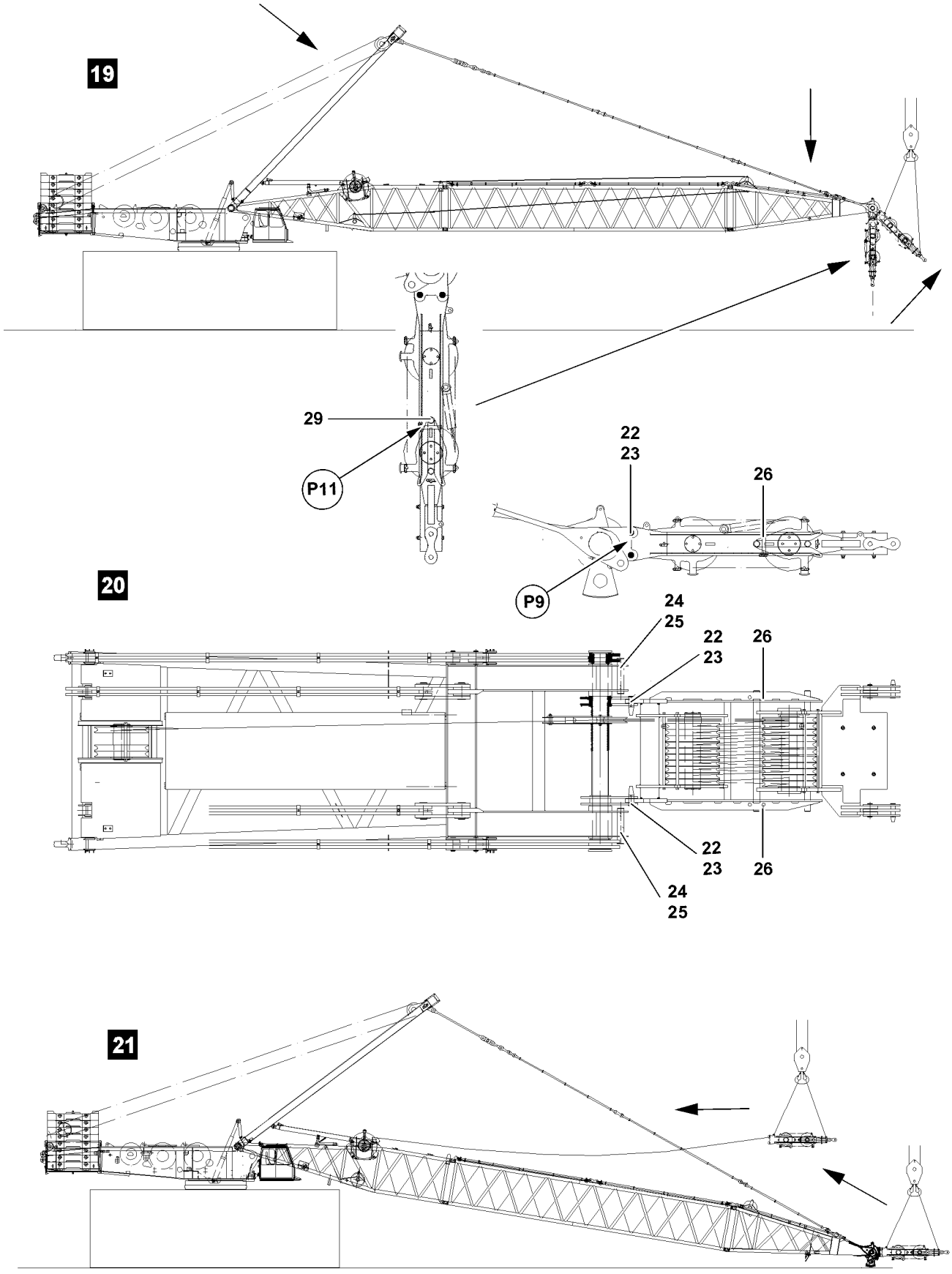

B111668

3.1.2 Pinning the upper pulley block with the lower pulley block

Make sure that the following prerequisites are met:
- The main boom is completely disassembled.
- The upper pulley block hangs in reeved condition above the ground level.
- The pins **26** on the bracket of the lower pulley block are unpinned.

The upper pulley block must be pinned with the lower pulley block before the complete pulley block can be placed in the transport receptacle on the D-pivot section.

▶ Luff the D-boom down slowly and spool up winch 3 at the same time until the upper pulley block has moved together with the lower pulley block.

▶ When the upper pulley block is approx. 150 mm before the stop of the lower pulley block: Luff the D-boom down slowly and carefully until the upper pulley block is in contact with the ground.

NOTICE

Danger of property damage on the pulley block!

If the D-boom is luffed down too quickly, then significant property damage can occur on the upper as well as the lower pulley block!

▶ Always use a guide when connecting the upper and lower pulley block!

▶ Carry out all crane movements slowly and with utmost caution!

▶ When the guide pin **29** reaches the stop at point **11**, stop the luff down movement of the D-boom immediately!

▶ When the upper pulley block is in contact with the ground: Luff the D-boom down slowly and carefully until the guide pin **29** is entered to the stop at point **11**.

▶ When the guide pin touches on the stop, point **11**, of the lower pulley block: Stop the luff down movement immediately.

▶ Pin the pins **26** on both sides on the bracket of the lower pulley block and secure with spring retainer.

Result:

- The upper pulley block is connected with the lower pulley block and now forms the “Transport unit” pulley block.

3.1.3 Disassembling the pulley block

▶ Pull the pulley block up with the auxiliary crane, see illustration **19**.

▶ Luff the derrick down until the D-end section is laying on the ground, see illustration **21**.

Note

The pulley block can be fastened on both sides horizontally on the D-end section with the pin **24**!

▶ Insert the pins **24** on both sides and secure with spring retainers **25**!

▶ When the pulley block is fastened, it must be hung again on the auxiliary crane before unpinning!

▶ Remove spring retainers **25** and unpin the pins **24** on both sides!

▶ Remove the pulley block from the D-end section: Remove the spring retainers **22** and unpin the pins **24** on both sides.

▶ Swing the pulley block out with the auxiliary crane.

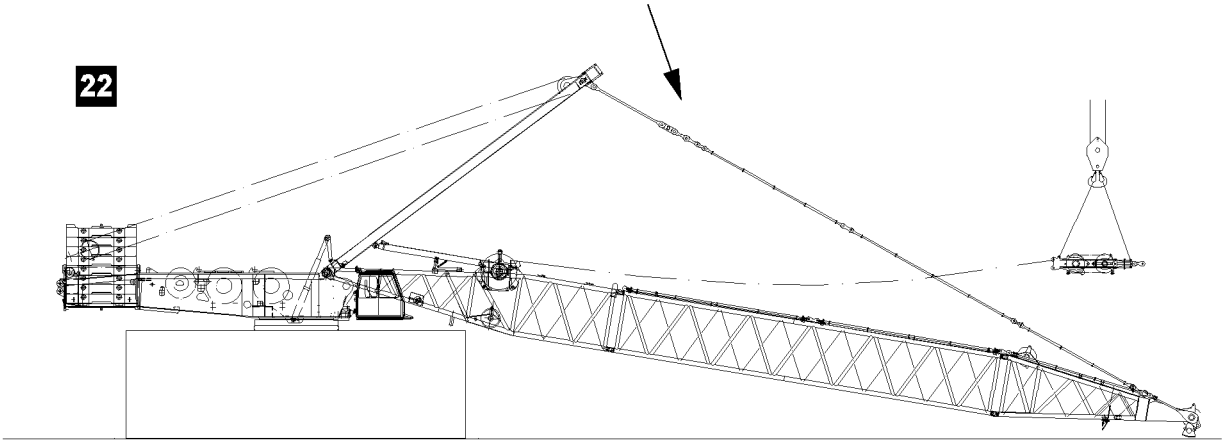

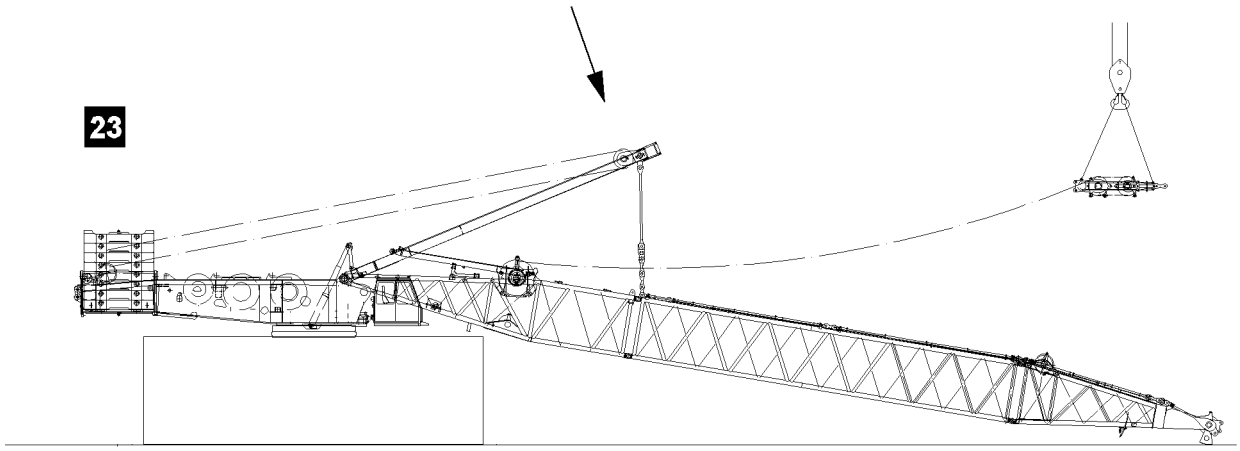

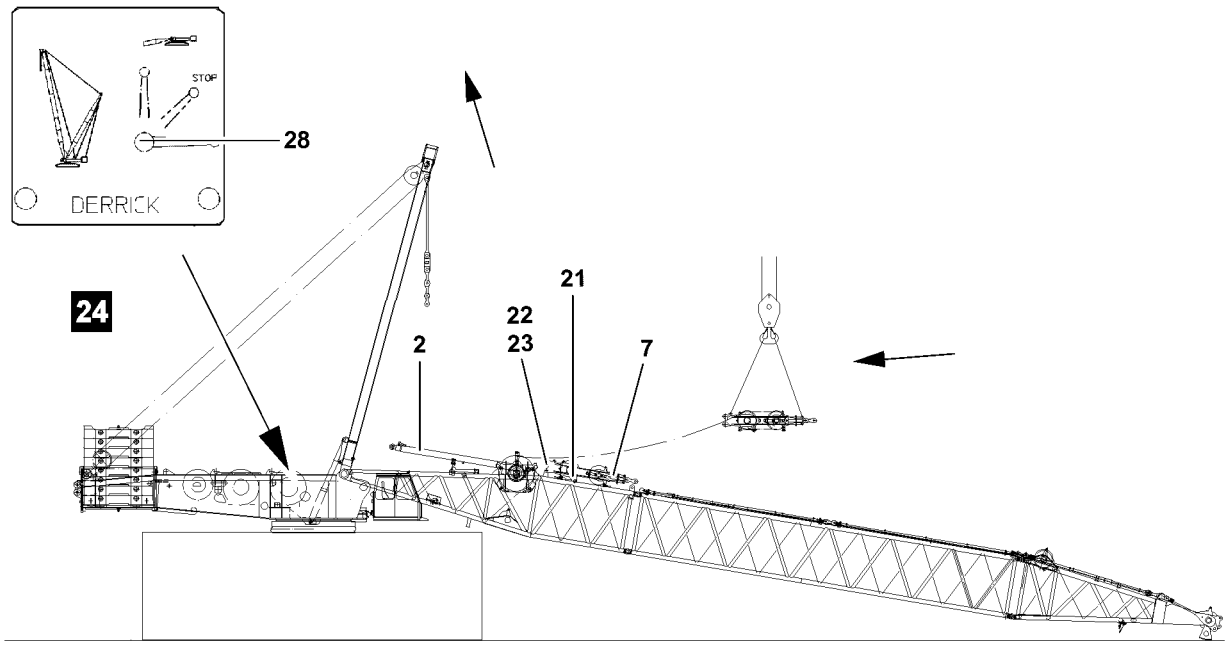

B111669

3.1.4 Disassembling the D-guy rods

- ▶ Place the guy rods into the transport retainers of the D-intermediate sections: Lower the SA-frame to the front.
- ▶ Luff the SA-frame forward until it can be unpinned on the guy rods, see illustration **23**.
- ▶ Pin and secure the guy rods in the transport retainers.
- ▶ Luff the SA-frame for easier assembly of the pulley blocks on the D-pivot section, see illustration **24**.

3.1.5 Placing the pulley block into the transport retainer on the D-pivot section

Make sure that the following prerequisites are met:

– The lower and the upper pulley block are pinned together as a "Transport unit" pulley block.
– The rope retaining pins on the D-end section are released and unpinned.
– The guy rods are placed in the transport retainers and secured.
– The SA-frame is luffed up to approx. 75° to 85°.
– The D-boom is lying fully on the ground (on the support).

NOTICE

Danger of slack rope formation!

If winch 3 is spooled up too slowly when pulling the pulley block, slack rope can form!

- ▶ The hoist rope must be slightly tensioned during the entire pulling procedure!

- ▶ Pull the pulley block **7** with the auxiliary crane to the D-pivot section while spooling out winch 3 at the same time.
- ▶ Place the pulley block into the transport retainer **21** on the D-pivot section, see illustration **24**.
- ▶ Secure the pulley block in the transport retainer:
  Insert the pin **22** and secure with spring retainer **23**.

3.1.6 Retracting the D-relapse cylinder

The piston rod on the D-relapse cylinder must be retracted by actuating the ball valve **28**.

- ▶ Move the ball valve **28** into vertical position.

Result:

– The piston rod of the D-relapse cylinder retracts.

B195219

3.1.7 Disconnecting the electrical connections

▶ Disconnect all electrical connections on the D-boom properly and store the plug and cable properly.

3.1.8 Disconnecting the hydraulic connections

When releasing hydraulic lines with quick-release couplings, make sure that the uncoupling procedure is carried out correctly.

WARNING
Pressure in the hydraulic lines!
If the pressure supply is not interrupted before connecting / releasing the hydraulic lines, the hydraulic oil can escape with high pressure!
Personnel can be severely injured or killed!

▶ Release the pressure in the hydraulic system before connecting / disconnecting: Interrupt the pressure supply and wait for a short time!

▶ Release the hydraulic coupling by hand.

▶ Disconnect the hydraulic connection.

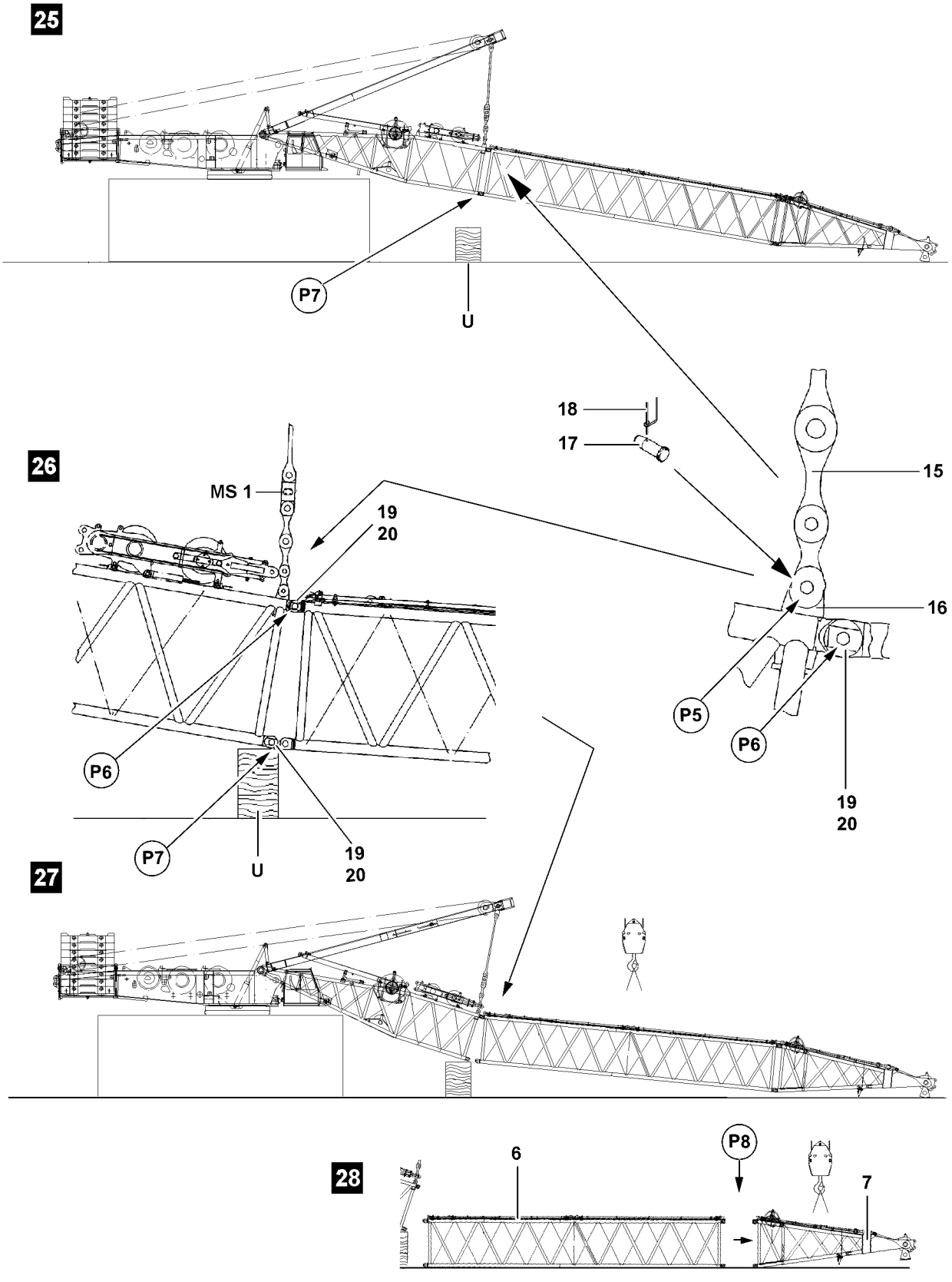

B111670

3.1.9 “Open” the D-boom and place it down

Make sure that the following prerequisites are met:

– The guy rods are placed in the transport retainers and secured.
– The pulley block is pinned and secured in the transport retainer.
– The D-relapse cylinders are retracted.
– The support **U** is positioned under the D-pivot section.

▶ Luff the SA-frame down to the front, see Crane operating instructions, chapter 5.02.
▶ Connect the guy rods **15** from the SA-frame on the assembly bracket **16** on the D-pivot section, point **P5**:
Insert the pin **17** and secure with spring retainer **18**.
▶ Luff the SA-frame up until the guying between the SA-frame and the D-pivot section is tensioned.

WARNING
Falling D-boom!
When unpinning the D-boom on the D-pivot section, the D-boom can fall down!
Personnel can be severely injured or killed!
▶ It is prohibited for anyone to remain under the D-boom during the unpinning procedure!
▶ Make sure that the D-boom is safely held by the guying!

▶ Unpin the D-pivot section and the D-intermediate section: Release and unpin the pins **19** on both sides “on the bottom”.
▶ Luff the SA-frame down and place the D-pivot section carefully on the support **U**, see illustration **26**.
▶ Fasten the D-boom on the auxiliary crane.
▶ When the D-boom is safely held by the auxiliary crane:
Release and unpin the pins **19** on both sides “on top”.
▶ Place the D-boom carefully on the ground, see illustration **28**.

WARNING
Tipping lattice sections!
When the lattice sections are unpinned, they can tip over, depending on the ground or the support!
Personnel can be severely injured or killed!
▶ The lattice sections must be safely held by the auxiliary crane before unpinning them!
▶ The tackle must be tensioned before unpinning!

▶ Disassemble the D-end section and the D-intermediate section, point **P8**, see illustration **28**.

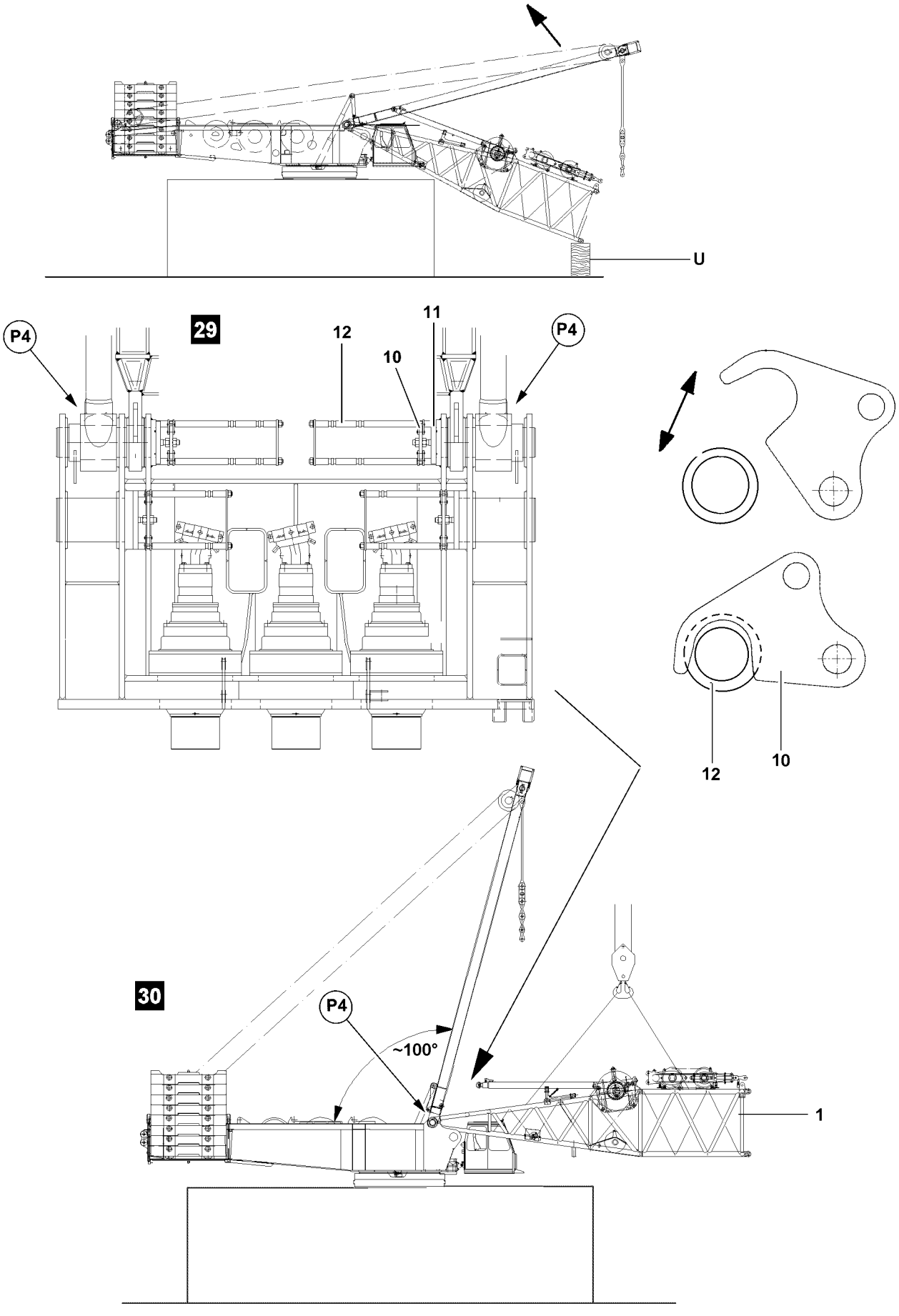

B111671

3.1.10 Unpinning the D-pivot section

Make sure that the following prerequisite is met:

– The SA-frame is erected to approx. 100°.

▶ Fasten the D-pivot section on the fastening points on the auxiliary crane, see illustration **30**.

▶ Pull the D-pivot section up with the auxiliary crane to the horizontal.

▶ Open both retaining hooks **10** from the guide **12**.

Note

▶ Operation of radio remote control (only available for the LR-crane), see Crane operating instructions, chapter 6.08!

▶ Actuate the radio remote control and unpin the pin **11**.

▶ Secure the pins **11** by folding the retaining hooks **10** into the guide **12**.

▶ Carefully swing the D-pivot section out from the turntable with the auxiliary crane and place it on the ground!

▶ Remove the auxiliary crane!

3.2 Disassembling the fall protection equipment on the D-pivot section

Note

▶ To retain the transport dimensions on the D-pivot section, remove the fall protection equipment!

The railings must be removed after disassembly of the D-pivot section and stored in the transport retainer.

▶ Insert the railings in the intended transport retainers on the D-pivot section and secure with spring retainers.

3.3 Disassembling the fall protection equipment on the D-boom

Note

▶ Observe the notes, see Crane operating instructions, chapter 2.06 and / or chapter 6.50!

1

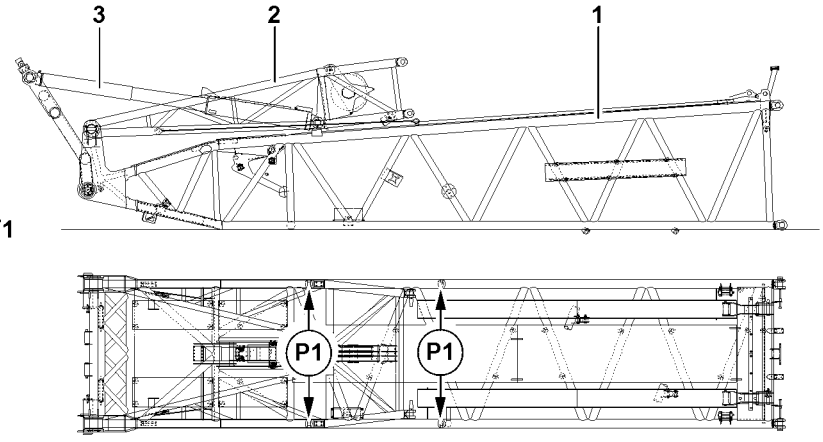

2

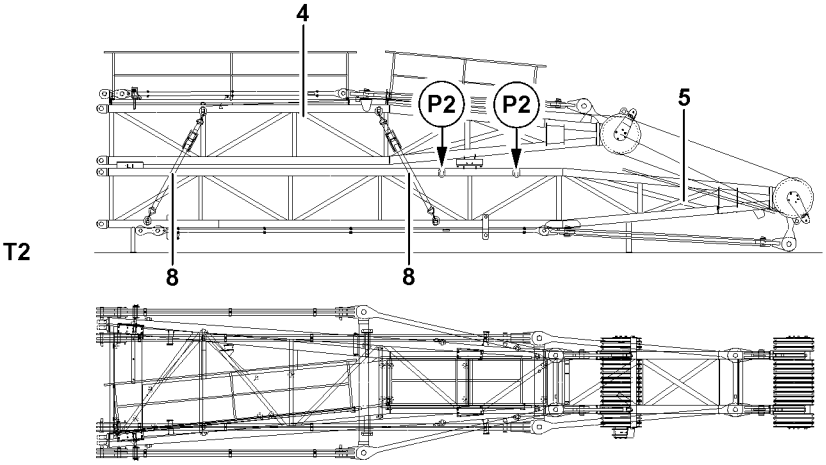

3

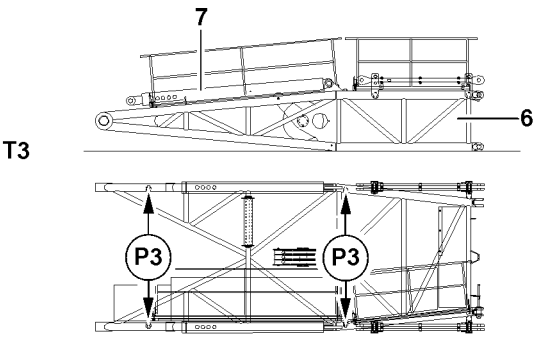

4

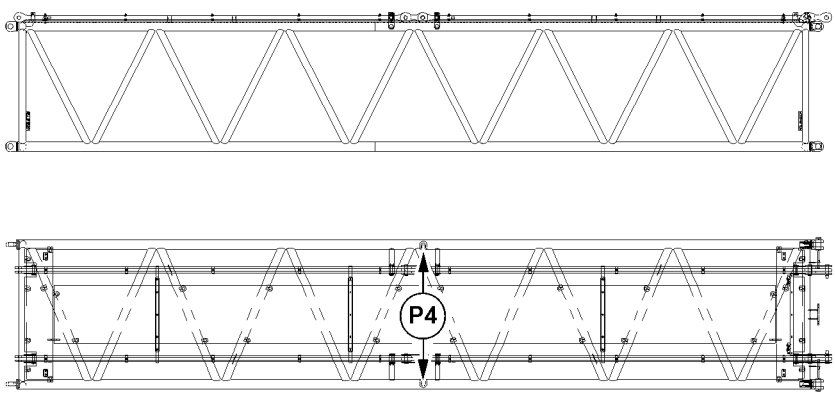

B111632

1 Component overview W-boom system

The transport unit **T1** consists of:
– W-pivot section **1**
– WA-frame 1, pivot section **2**
– W-relapse retainer **3**

The transport unit **T2** consists of:
– WA-frame 2, end section **4**
– WA-frame 1, end section **5**
– Lashing belts **8**

The transport unit **T3** consists of:
– WA-frame 2, pivot section **6**
– Relapse support **7**

2 Weights W-transport units

Position	Component	Weight
T1	Transport unit 1	10.6 t
T2	Transport unit 2	8.4 t
T3	Transport unit 3	2.2 t

3 Fastening points components W-system

Fastening points	
P1	For transport unit 1, see illustration 1
P2	For transport unit 2, see illustration 2
P3	For transport unit 3, see illustration 3
P4	LI-intermediate section, see illustration 4

B195219

4 Assembling the W-boom system

WARNING
Risk of falling!
During assembly and disassembly, personnel must be secured with appropriate aids to prevent them from falling! If this is not observed, assembly personnel can fall and suffer life-threatening or fatal injuries!

- Any work, where there is a danger of falling must be carried out with suitable aids (for example: lifting platforms, scaffoldings, ladders, auxiliary crane)!
- If the work cannot be carried out with such aids nor from the ground, then the assembly personnel must secure themselves with approved catch systems to avoid falling, see Crane operating instructions chapter 2.04!
- If railings are present on the components, then they must be brought into the corresponding position and secured for assembly / disassembly work!
- Step on aids and fall protection equipment only with clean shoes!
- Keep aids and fall protection equipment clean and free from snow and ice!
- During all assembly and disassembly work, maintenance work and inspections, travel or crane operation is prohibited!

WARNING
The lattice sections can fall down!
If the lattice sections are not pinned and secured correctly, then they can fall down and fatally injure personnel!

- Pin or unpin both pins at the same horizontal level, i.e. **left and right**!
- Do not stand under the booms or within the entire danger zone during the boom pinning and unpinning procedure!
- Secure the pins in the bearing points and the receptacles!
- It is prohibited to lean the ladder against the components being disassembled!
- Do not remove the fastening equipment and the auxiliary crane until each component is pinned on and secured!

WARNING
Danger of impact / crushing!
When installing / removing counterweight components with the auxiliary crane, crane components can start to swing back and forth!
When lifting / lowering and positioning crane components, there is an increased danger of impacts / crushing!
Personnel can be caught and severely injured or killed!

- Make sure that personnel cannot be caught by components!
- Make sure that the crane is aligned in horizontal position to avoid the support beams from swinging by themselves!
- When working in danger zones: Use aids to protect limbs!
- Guide components with suitable aids to minimize oscillation!

B195219

WARNING
Neglectful inspection and maintenance on guy rods!
If the regular inspection and maintenance of the guy rods is not carried out or is carried out only in irregular intervals, then severe accidents can occur due to existing and unrecognized damage to the guy rods!
Personnel can be severely injured or killed!
▶ Check the guy rods before every assembly, see Crane operating instructions, chapter 8.15!

NOTICE
Property damage!
▶ Always insert the pins of the guy rods from the “inside” to the “outside”!

Note
▶ By supporting the components during assembly / disassembly, ground unevenness is compensated for and the material is protected.
▶ The W-intermediate sections are pinned and unpinned with the aid of the pin pulling device, see Crane operating instructions, chapter 5.30!

Note
▶ Assembly of boom combinations, see rod plans!
▶ Assembly and retention of S-guy rods, see rod plans! The numbering on the rod plans must be identical to the numbering on the guy rods!

The W-boom system can be assembled on the following basic configurations:
– S-operation
– SDB-operation

Make sure that the following prerequisites are met:
– The crane is aligned in horizontal direction.
– An assembly scaffolding / work platform is available.
– The S-boom is assembled.
– The derrick boom and derrick ballast are assembled.
– The counterweight is installed on the turntable and on the derrick according to the load chart.
– The LICCON overload protection has been set according to the data in the load chart.
– The LICCON overload protection settings have been compared with the actual crane configuration.
– An auxiliary crane is available.

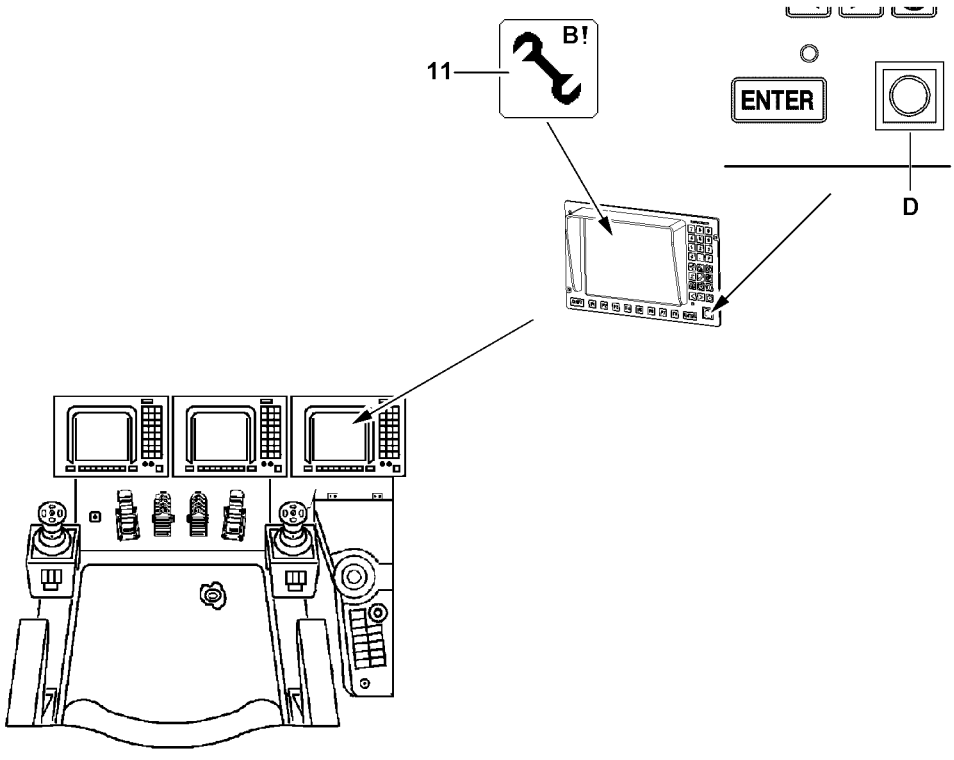

B111633

4.1 Exceeding the LICCON overload protection for assembly

WARNING
Assembly with turned on set up key!
When the set up key is engaged, the LICCON overload protection is exceeded!
In the event of deliberate improper use, the crane could collapse, the boom can break off or the crane can topple over!
Personnel can be killed!
This could result in high property damage!

- ▶ The set up key **D** may only be actuated by persons who know the effects of a bypass!
- ▶ Press the set up key **D** only when the set up status was correctly entered into the LICCON computer system!
- ▶ Observe the erection / take down charts!
- ▶ Crane operation with the set up key **D** turned on is strictly prohibited!

▶ Turn the set up key **D** to the right.

Result:

– The LICCON overload protection is exceeded.
– The assembly icon **11** appears in the LICCON monitor.

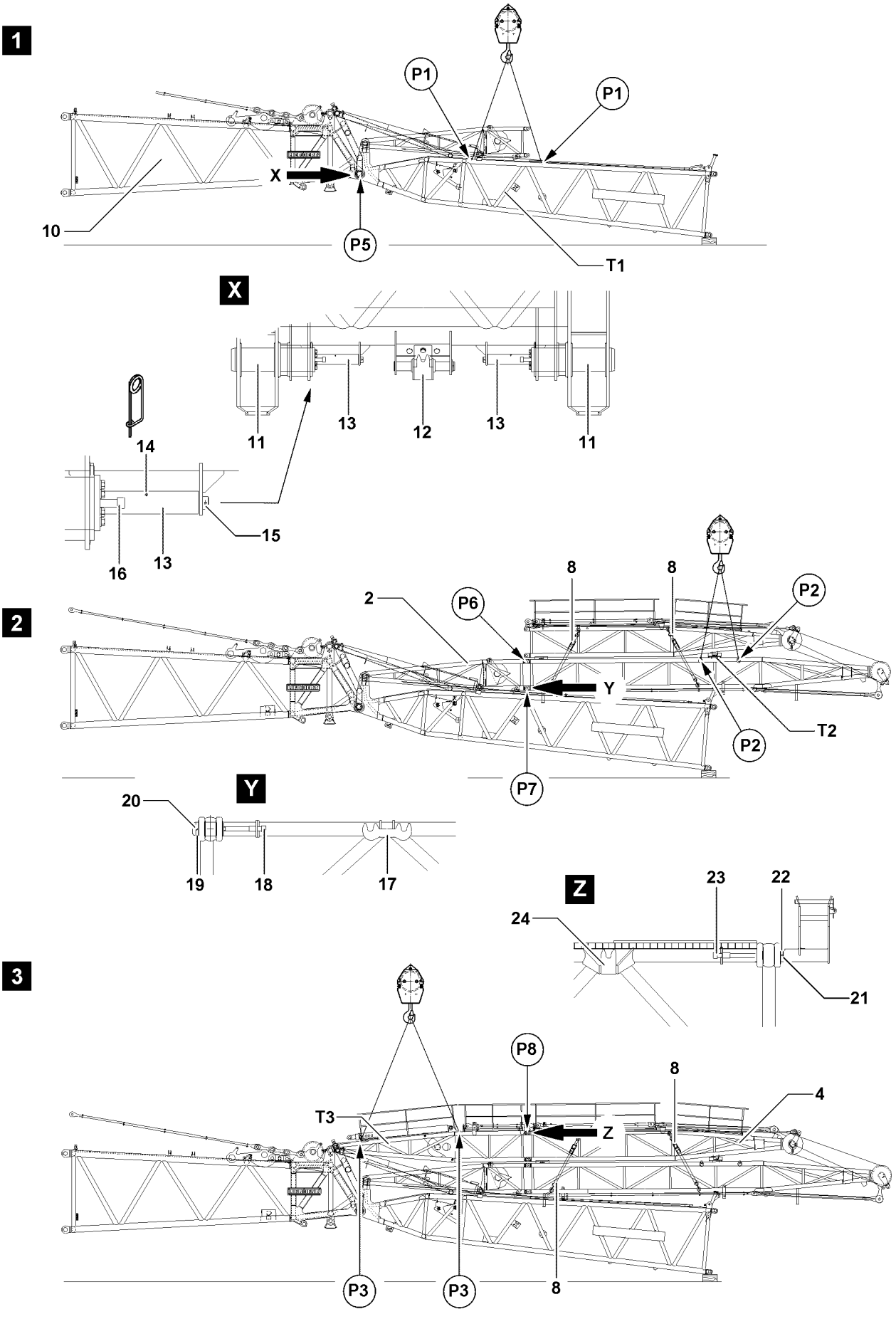
1
P1
P1
X
10
P5
T1
X
14
11
13
12
13
11
15
16
13
2
8
8
2
P6
P2
Y
T2
P2
P7
Y
20
19
18
17
Z
23
22
24
21
3
P8
8
4
T3
Z
P3
P3
8

B111634

4.2 Assembling the W-transport units

4.2.1 Assembling the W-transport unit 1

See illustration **1**.

- ▶ Attach the auxiliary crane on the fastening points **P1** on the transport unit **T1**.
- ▶ Remove the retaining plate **13**: Remove the spring retainer **14** and pull the retaining plate **13** from the pin .

Result:

– The pin **11** can be pinned.

Note

- ▶ The retainer **12** can be offset to the left or right when the piston stroke of the pin pulling cylinder is not sufficient to pin or unpin the pin **11** completely!

- ▶ Hang the pin pulling cylinder on the retainer **12** and screw **16**, see detail **X**.
- ▶ Pin the transport unit **T1** on the S-end section **10**: Insert the pins **11** on both sides on point **P5**.
- ▶ Secure the pins **11**: Slide the retaining plate **13** over the pin **15** and secure with spring retainer **14**.

4.2.2 Assembling the W-transport unit 2

See illustration **2**.

Make sure that the following prerequisite is met:

– The lashing belts **8** are tightly rigged on transport unit 2.

WARNING

Slipping component!

If the lashing belts are not present or insufficiently secured while raising the transport unit 2, the end section of the WA-frame 2 can slide down. Personnel can be severely injured or killed!

- ▶ Make sure that the lashing belts **8** on the transport unit **T2** are tightly secured!

- ▶ Attach the auxiliary crane on the fastening points **P2** on the transport unit **T2**.
- ▶ Hang the pin pulling cylinder on the retainer **17** and screw **18**, see detail **Y**.
- ▶ Pin the transport unit **T2** on the WA-frame 1 pivot section **2** “on top”: Insert the pin **19** on both sides on points **P6** and secure with spring retainer **20**.
- ▶ Pin the transport unit **T2** on the WA-frame 1 pivot section **2** “on the bottom”:

4.2.3 Assembling the W-transport unit 3

See illustration **3**.

- ▶ Attach the auxiliary crane on the fastening points **P3** on the transport unit **T3**.
- ▶ Hang the pin pulling cylinder on the retainer **24** and screw **23**, see detail **Z**.
- ▶ Pin the transport unit **T3** on the WA-frame 2 end section **4**: Insert the pin **22** on both sides at point **P8** and secure with spring retainer **21**.
- ▶ Remove lashing belts **8** on the transport unit **T2**.

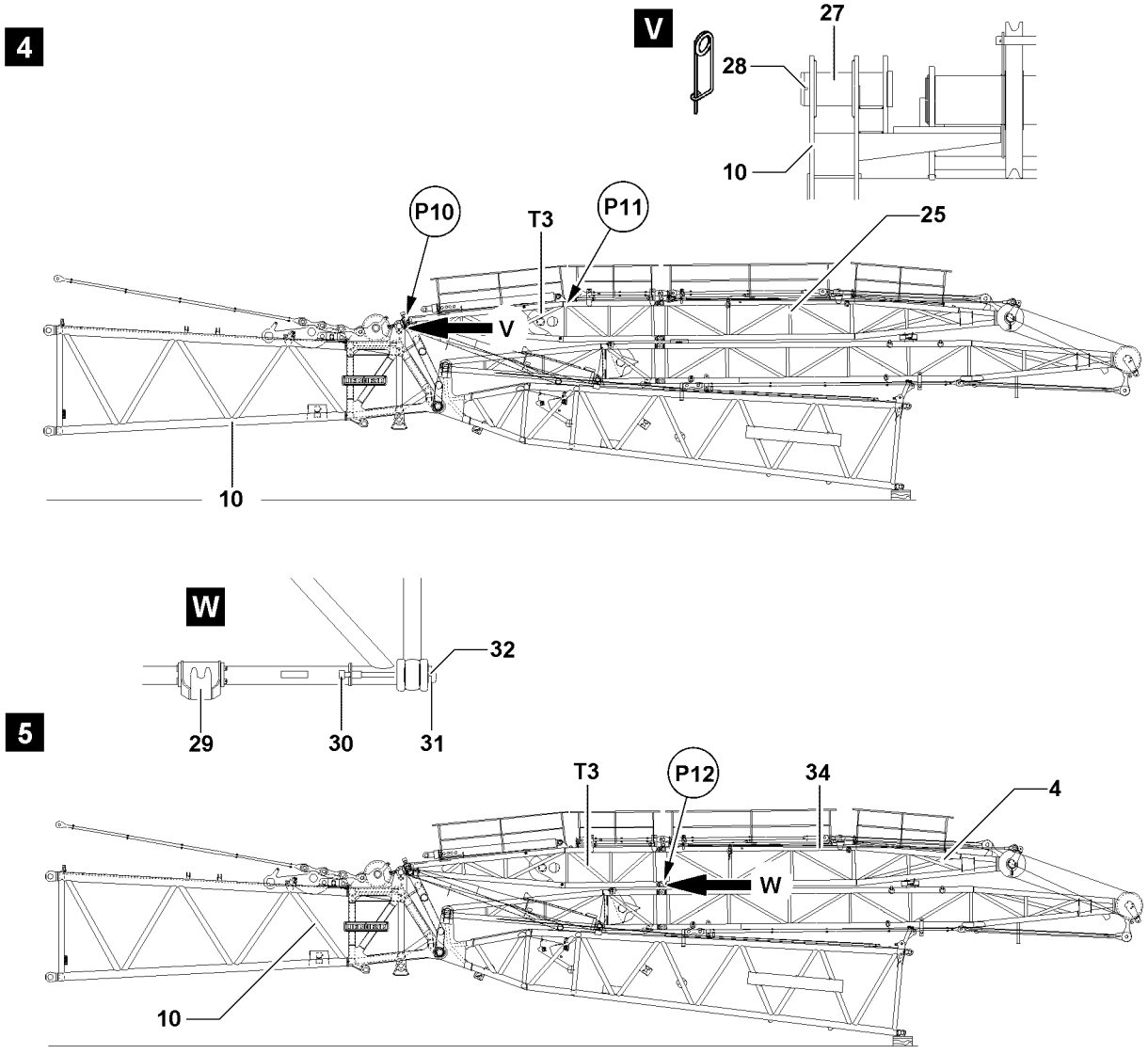

B111635

4.2.4 Pinning the W-transport units together

Ensure that the following prerequisite is met:
– The pins **33** are released, see detail **V**.

See illustration **4**.
▶ Attach the auxiliary crane on the fastening points **P11** on the transport unit **T3**.

The pinning position between the transport unit and the S-end section is established by:
– Luffing the S-boom up or down.
– Positioning of the WA-frame 2 **25** with the auxiliary crane.

▶ Position the WA-Bock 2 **25** until the pin points **P10** align.
▶ Pin the transport unit **T3** on the S-end section **10**: Insert the pin **27** on both sides at point **P10** and secure with spring retainer **28**.

See illustration **5**.
▶ Lift the transport unit **T3** with auxiliary crane until the pin points **P12** align.
▶ Hang the pin pulling cylinder on the retainer **29** and on the screw **30**.
▶ Pin the transport unit **T3** on the WA-frame 2 end section **4**: Insert the pin **31** on both sides at point **P12** and secure with spring retainer **32**.

6

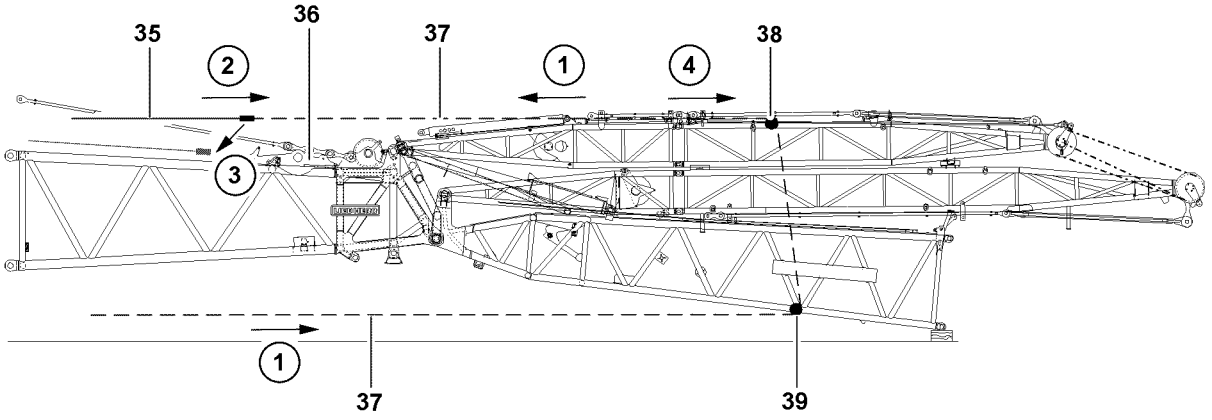
35
36
37
38
2
1
4
3
1
37
39

7

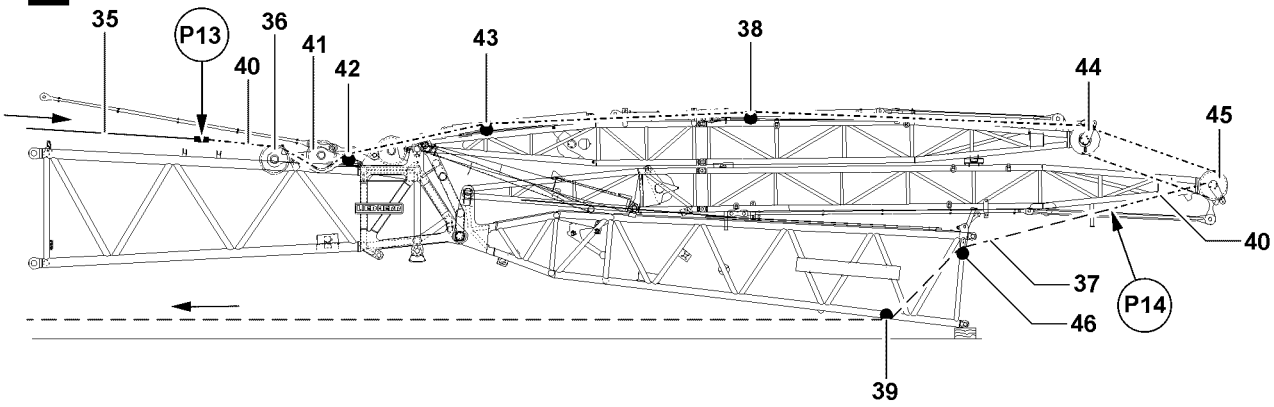
35
P13
36
41
43
38
40
42
44
45
40
37
P14
46
39

8

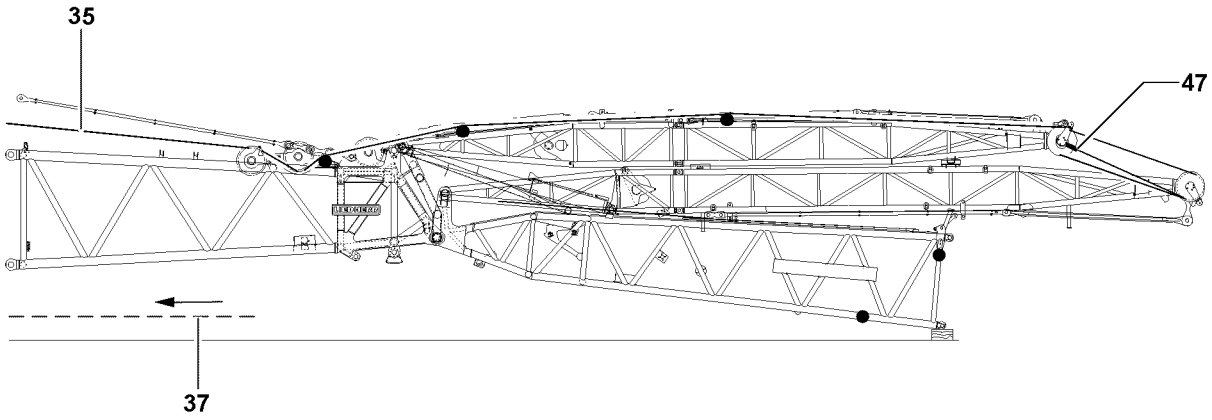
35
47
37

B111982

4.3 Reeving the W-control rope in

NOTICE
Slack rope formation!
The control rope can become damaged due to slack rope formation.
- ▶ Make sure that the rope does not slacken up when spooling the W-control rope out!
- ▶ Make sure that the W-control rope remains tensioned when spooling out!

Note
- ▶ Reeving, see reeving plan!

4.3.1 Getting the W-control rope with the assembly rope

Rope run for the assembly rope **37**, see illustration **6**.
- ▶ Pull the assembly rope **37** for the assembly winch over the roller **39** and the roller **38** up to winch 5, action step **1**.
- ▶ Connect the assembly rope **37** with the W-control rope **35** from winch 5.
- ▶ Pull the W-control rope **35** up to the rope pulley **36** on the S-boom: Spool the assembly winch up and simultaneously spool winch 5 out, action step **2**.
- ▶ Separate the W-control rope **35** from the assembly rope **37** and lay it down in front of the rope pulley **36**, action step **3**.
- ▶ Pull the assembly rope **37** back up to the roller **39** and lay on the ground, action step **4**.

4.3.2 Reeving the W-control rope in

Make sure that the following prerequisites are met:
- – The intake ropes are interconnected on the WA-frame 2.
- – The intake role is reeved in on the W-roller sets.

Note
- ▶ Before reeving in the W-control rope, the rope retaining pins of the rope pulley **42**, pulley set **44** and pullet set **45** must be released and unpinned!

Note
- ▶ For simplify the reeving, the W-pulley sets are raised with an auxiliary crane!

Rope run for the intake rope **40** and the assembly rope **37**, see illustration **7**.
- ▶ Connect the W-control rope **35** and the intake rope **40** on point **P13**.
- ▶ Lay the intake rope **40** on the rope pulley **36** and the under the rope pulley **41**.
- ▶ Pull the assembly rope **37** over the roller **46** to the point **P14**.
- ▶ Connect the assembly rope **37** and the intake rope **40** on point **P14**.

See illustration **8**.
- ▶ Pull the W-control rope **35** in and hook it on the rope fixed point **47**.
- ▶ Spool the assembly rope **37** on the assembly winch.

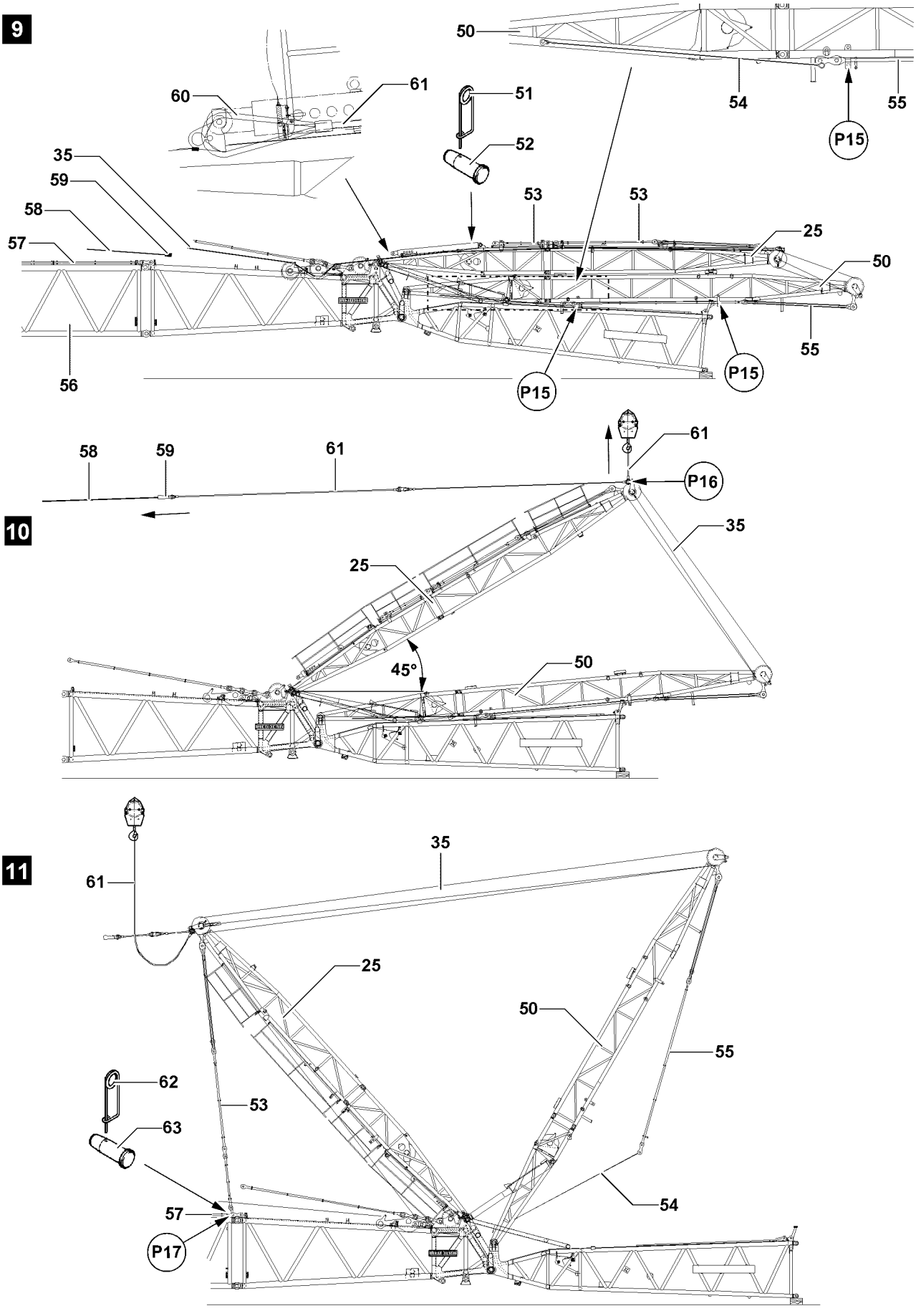
9
50
60
61
51
52
54
55
P15
35
59
58
57
53
53
25
50
55
56
P15
P15
10
58
59
61
61
P16
35
25
45°
50
11
61
35
25
50
55
62
53
63
57
54
P17

B111983

4.4 Assembling the guy rods WA-frame 2

NOTICE
Property damage!
▶ Always insert the pins of the guy rods from the “inside” to the “outside”!

Make sure that the following prerequisite is met:
– The WA-frame 2 **25** is lying on the WA-frame 1 **50**.

Note
▶ Additional guy rods for certain operating modes, see rod plan!

Fastened on the pulley set on point **P16**, see illustration **10**, are the two ropes **61**:
– The first rope is used to lift the WA-frame 2 **25** with the auxiliary crane.
– The second rope is used to erect the WA-frame 2 **25** with the hoist rope **58**.

See illustration **9**.
▶ Release and unpin transport retainers of the W-guy rods **57** on the S-lattice sections **56** on both sides.
▶ If required according to the rod plan:
Pin and secure the additionally required guy rods.
▶ Release and unpin the transport retainers for the W-guy rods **53** on the WA-frame 2 **25**.
▶ Pin the W-guy rods **53** on the WA-frame 2 **25** together: Insert the pin **52** on both sides from the “inside” to the “outside” and secure with spring retainer **51**.
▶ Hook the lock **59** on the first rope **61** and secure.
▶ Make sure that the two parts of the ropes **61** are connected to each other and that they are secured.
▶ Hang the hoist rope **58** in the lock **59** on the rope **61** and secure.

Result:
– The WA-frame 2 is connected with the hoist rope.

▶ Ensure that the WA-frame 1 **50** and the guy rods **55** are secured with the assembly ropes **54**, see illustration **11**.
▶ Release and unpin the transport retainers on the guy rods **55** on point **P15**.

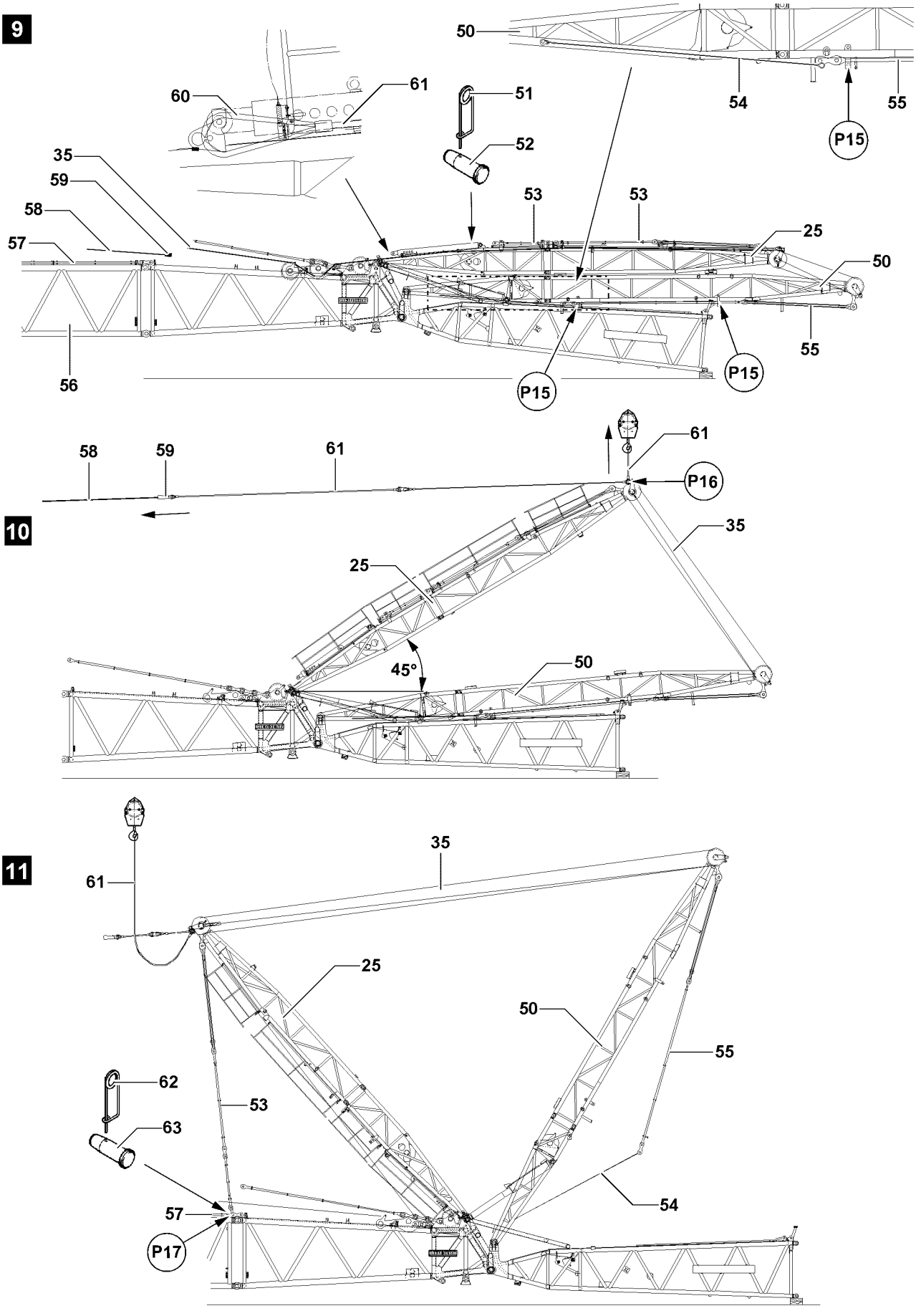
9
50
60
61
51
52
54
55
P15
35
59
58
57
53
53
25
50
55
56
P15
P15
10
58
59
61
61
P16
35
25
45°
50
11
61
35
25
50
55
62
53
63
57
54
P17

B111983

See illustration **10**.

Note

- While spooling out the W-control rope, the WA-frame 1 **50** is lifted up with the auxiliary crane in order to prevent slack rope formation!

- Fasten the second rope **61**, which is attached on point **P16** onto the auxiliary crane.
- Spool out the W-control rope **35** and simultaneously lift the WA-frame 2 **25** with auxiliary crane to approximately 45°.
- Tension the hoist rope **58** until the WA-frame 2 **25** is held by the hoist rope.

See illustration **11**.

- Lower the rope **61** with the auxiliary crane.
- Offset the auxiliary crane so that the WA-frame 2 can be pulled back, see illustration.
- Spool the W-control rope **35** out and pull the WA-frame 2 **25** back at the same time with the hoist rope until the W-guy rods move away from the WA-frame 2 and hang down vertically.
- Remove the auxiliary crane.
- Spool the W-control rope **35** out and simultaneously pull back the WA-frame 2 **25** with the hoist rope until the guy rods **53** and the W-guy rods **57** can be pinned together on point **P17**.
- Pin the W-guy rods **53** on the W-guy rods **57**: Insert the pin **63** on both sides at point **P17** from the “inside” to the “outside” and secure with spring retainer **62**.

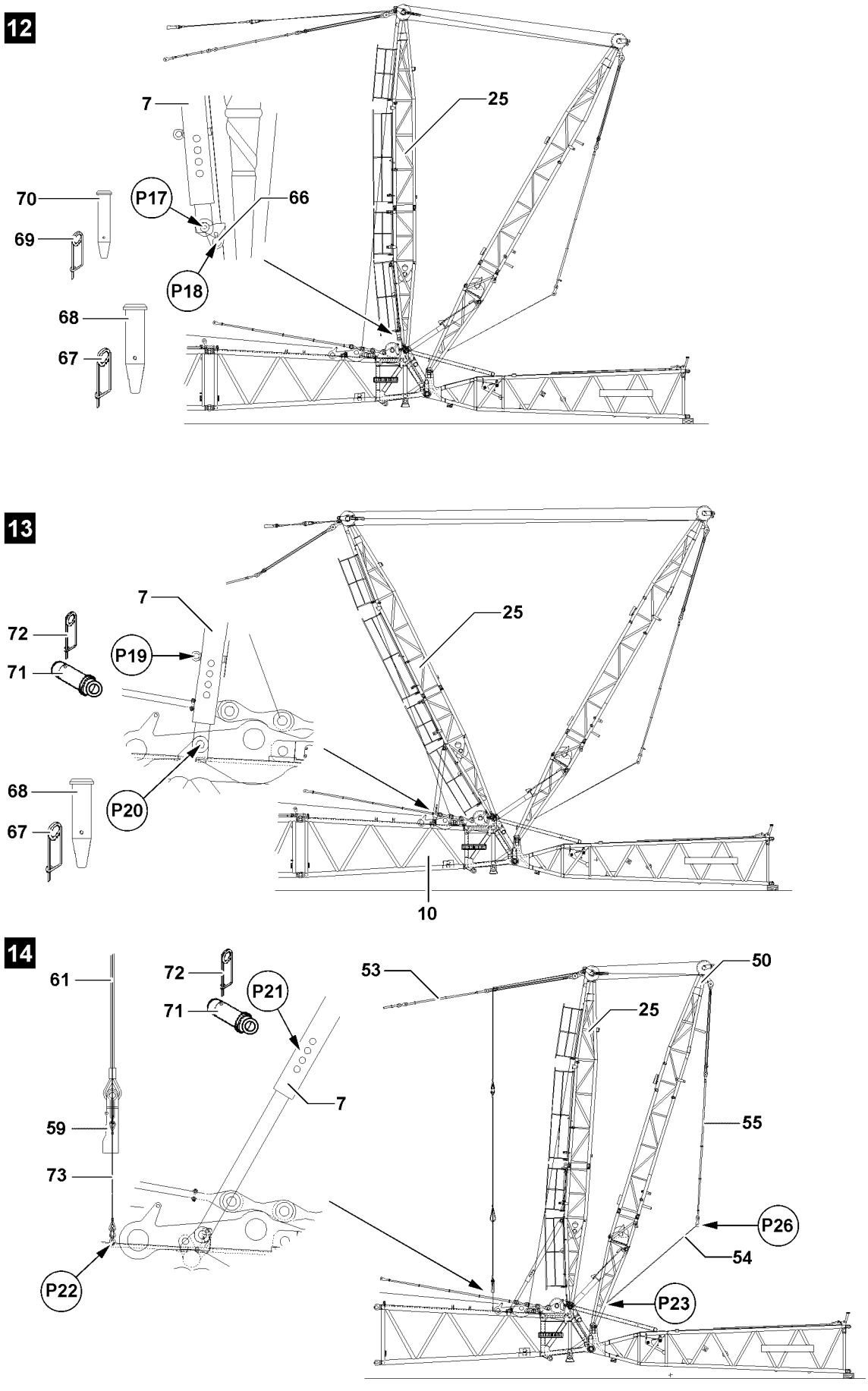
12
7
25
70
P17
66
69
P18
68
67
13
7
25
72
P19
71
68
P20
67
10
14
61
72
P21
71
53
50
25
7
59
55
73
P26
54
P22
P23

B111984

4.5 Pinning the relapse supports

See illustration **12**.

▶ Erect the WA-frame 2 **25** vertically: Spool the W-control rope up and simultaneously spool out the hoist rope.

WARNING
Uncontrolled swinging of the relapse supports!
If the relapse supports are unpinned without the WA-frame 2 standing vertically, the relapse supports can swing without control. Personnel can be severely injured or killed!

▶ Unpin the relapse supports **7** after the WA-frame 2 **25** is erected vertically!

▶ Unpin the relapse supports **7** on point **17**: Remove the spring retainer **69** and unpin the pin **70**.

The pin **68** and the spring retainer **67** to pin the relapse support are in the retainer **66**.

See illustration **13**.

▶ Spool the W-control rope out and pull the WA-frame 2 **25** back with the hoist rope at the same time until the relapse supports **7** can be pushed in by hand to point **P20** on the S-end section **10**.

▶ Pin the relapse supports **7** on point **20**: Insert the pin **68** and secure with spring retainer **67**.

NOTICE
Damage of WA-frame 2!
If the pin for the connection is not unpinned before erection of WA-frame 2, the WA-frame 2 can be damaged!

▶ Unpin the pin **71** before erection of the WA-frame 2 **25**!

▶ Unpin the relapse supports: Remove the spring retainer **72** and unpin the pin **71** on point **P19**.

See illustration **14**.

▶ Erect the WA-frame 2 **25** until the guy rods **53** tension and the WA-frame 2 **25** is standing vertically: Spool the W-control rope up.

▶ Lower the WA-frame 1 **50** until the LICCON computer system turns the movement off.

▶ Lower the WA-frame 1 **50** until the pin **71** in the next bore on the relapse support **7** can be pinned on point **P21**.

Result:

– The relapse supports are extended as far as possible and can be pinned.

▶ Pin the relapse supports **7** on both sides in maximum possible length: Insert the pin **71** on bore at point **P21** and secure with spring retainer **72**.

▶ Raise / lower the WA-frame 1 **50** until the guy rods hang vertically.

▶ Unhook the rope **54** on point **P23**.

▶ Spool the hoist rope up and place it on the S-boom until the rope **61** hangs vertically.

▶ Unpin the hoist rope on the lock **59**.

▶ Hook the rope **73** on the lock **59** and secure.

▶ Fasten the ropes **61** on both sides on the S-end section **10** on point **P22**.

▶ Lower the WA-frame 1 **50** until the rope **54** can be unhooked.

▶ Unhook the rope **54** on point **26**.

15

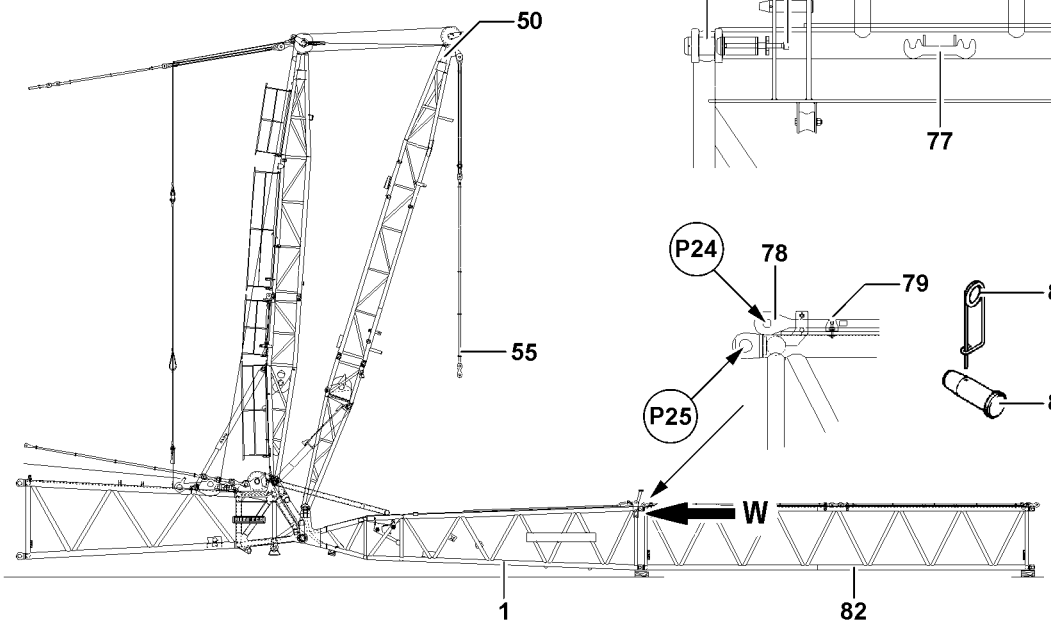

W

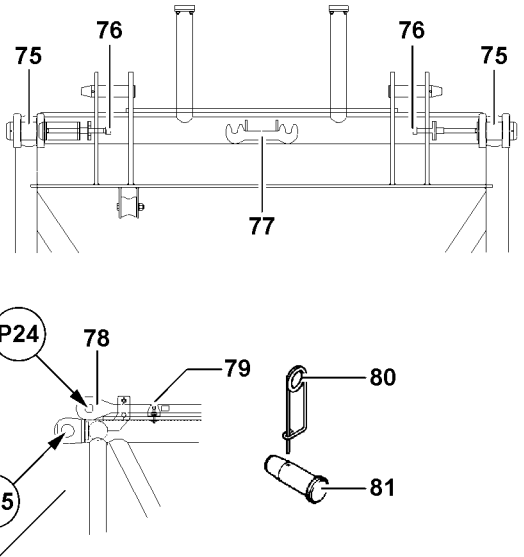

16

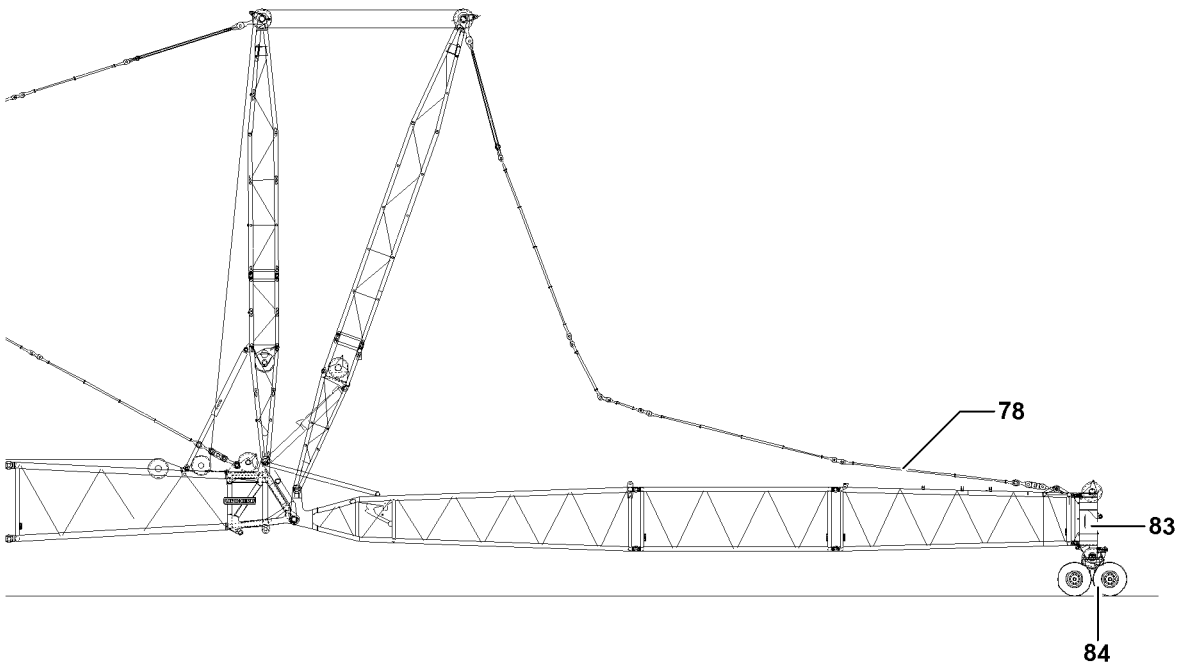

B111985

4.6 Assembling the W-lattice jib

Note

▶ During assembly of the W-lattice jib, adhere to the pin sequence, see Crane operating instructions, chapter 5.01!

4.6.1 Assembling the W-lattice sections

See illustration **15**.

▶ Position the LI-intermediate section **82** with the auxiliary crane on the W-pivot section **1** until the pin points on point **P25** align.

▶ Hang the pin pulling cylinder in the retainer **77** and screw **76**, see detail **W**.

▶ Pin the LI-intermediate section **82** on the W-pivot section **1** “on top”: Insert the pin **81** on both sides at point **P25** and secure with spring retainer **80**.

▶ Pin the LI-intermediate section **82** on the W-pivot section **1** “on the bottom”.

Make sure that the following prerequisite is met, illustration **16**:

– The S-end section **83** has been placed in the pulley cart **84** at assembly of the W-lattice jib, see Crane operating instructions, chapter 5.15.

Note

▶ The air pressure in the tires of the pulley cart is 9 bar!

WARNING

Falling components!

If the intermediate sections are incompletely pinned, then components can fall down. Personnel can be severely injured or killed!

▶ Make sure that all components of the boom are completely pinned and secured!

▶ Assemble the W-lattice jib to the required length.

▶ Spool the hoist rope out and pull it to the LI-end section, see reeving plan.

15

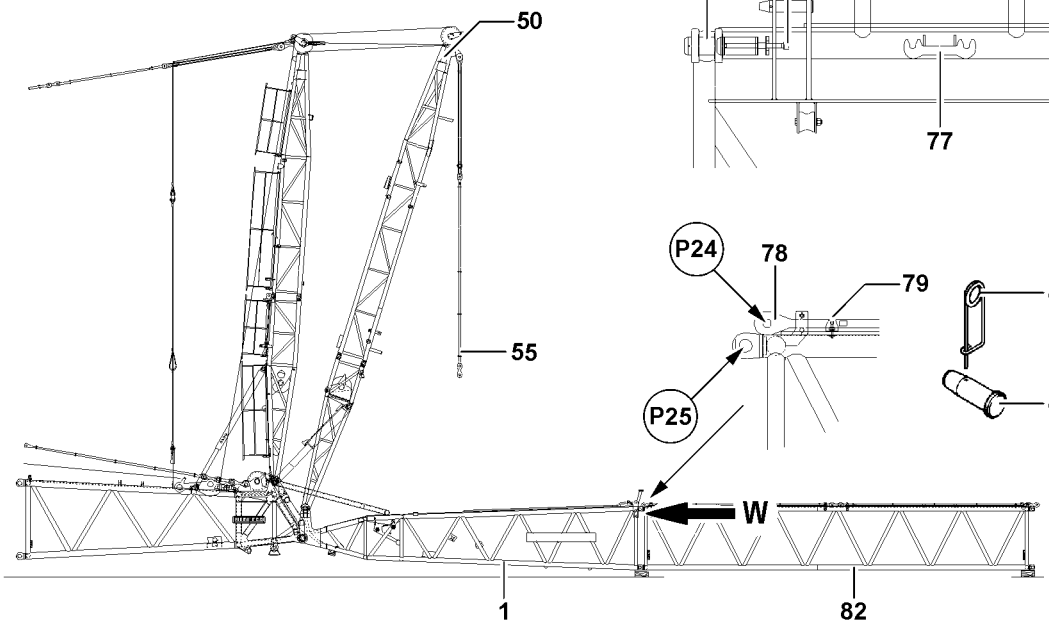

W

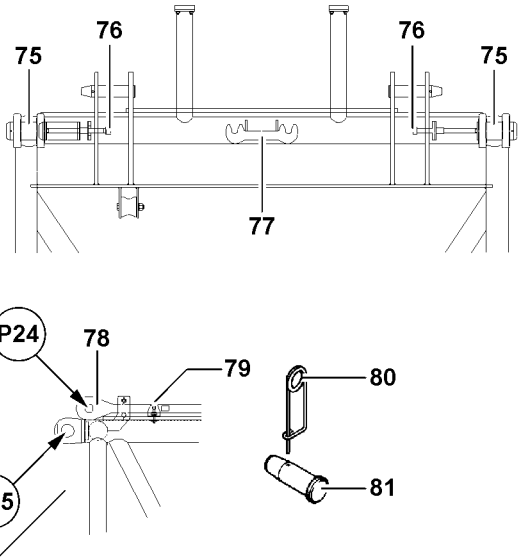

16

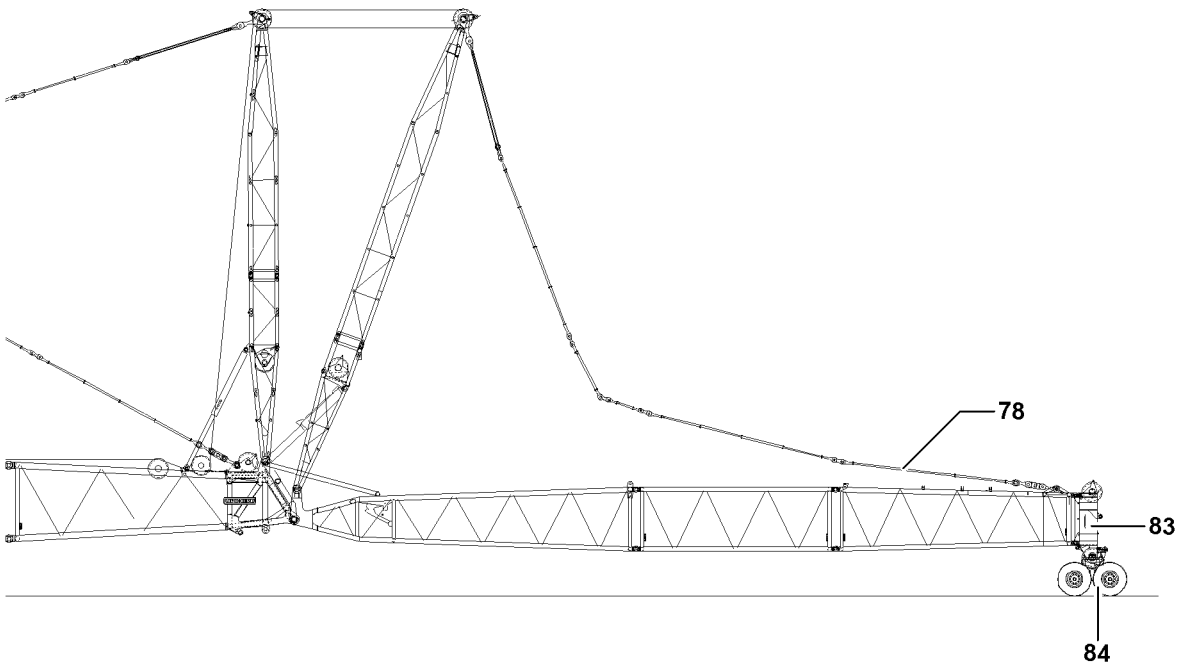

B111985

4.6.2 Assembling the W-guy rods

The W-guy rods are placed and secured for transport on the W-lattice sections. Before assembly of the W-guy rods, the transport retainers must be released.
See illustration **15**.

- ▶ Release and unpin the transport retainers **79** of the W-guy rods **78**.

Note

- ▶ The guy rods for the LI-intermediate sections are pinned to each other starting from the fixed point on the end section of the boom.

NOTICE
Property damage!

- ▶ Always insert the pins of the guy rods from the “inside” to the “outside”!

- ▶ Pin and secure the guy rods for all LI-intermediate sections.
- ▶ When all guy rods for the W-boom system are pinned together:
  Lower the WA-frame 1 **50** until the guy rods **55** can be pinned on the guy rods **78** on point **P24**:
  Spool the W-control rope out.
- ▶ Pin the guy rods **55** on the guy rods **78**: Insert the pin **81** on both sides at point **P24** and secure with spring retainer **80**.
- ▶ Lift the W-guy rods: Spool the W-control rope up.

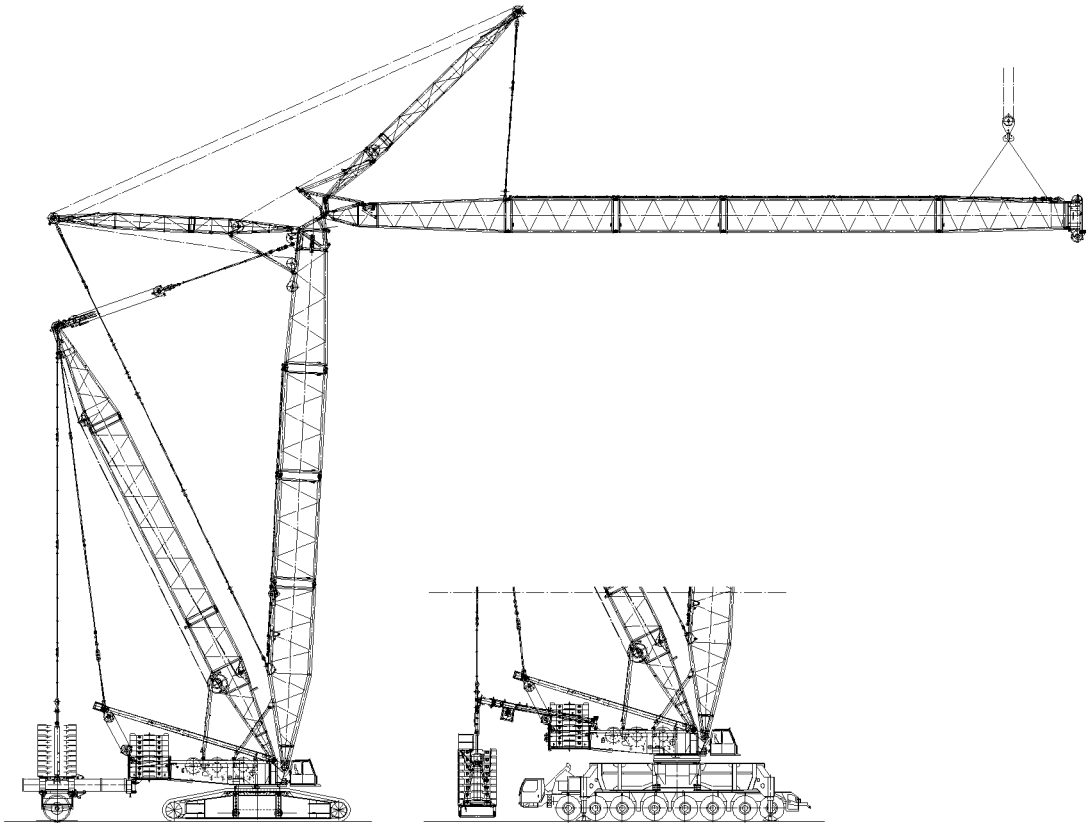

B111986

4.7 Assembling the W-lattice jib in flying mode

Note

▶ It is possible to assembly the W-boom in flying mode in space restricted conditions on the job site!

DANGER

Improper assembly!

The crane can be severely damaged! Personnel can be severely injured or killed!

▶ The W-assembly in flying mode may only be carried out after consultation and written approval by **Liebherr Werk Ehingen GmbH**!

▶ The W-assembly in flying mode may only be carried out by authorized and trained expert personnel!

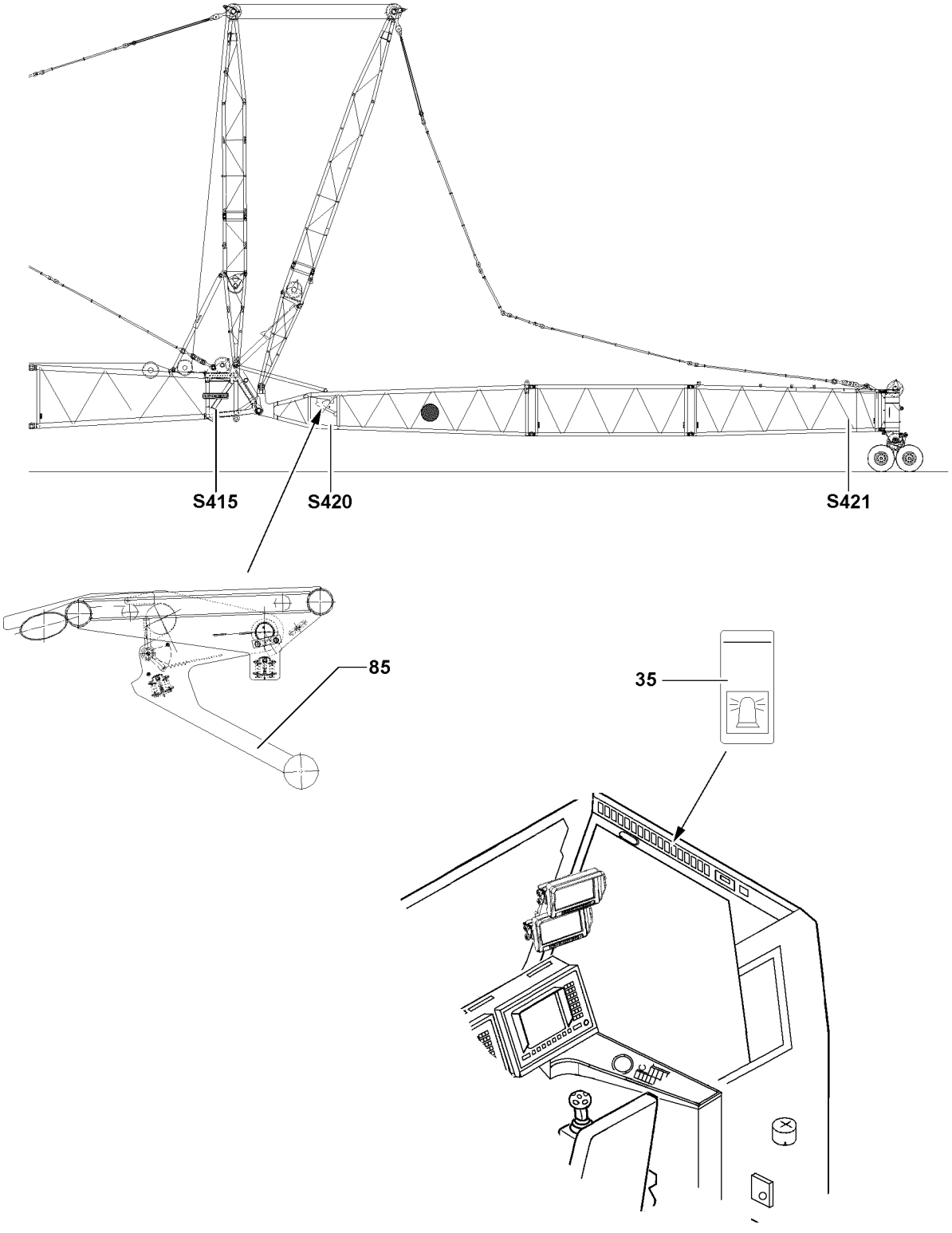

B111987

4.8 Establishing the electrical connections

Make sure that the following prerequisite is met:

– The W-boom is completely assembled.
– The airplane warning light and the wind speed sensors are installed.

CAUTION

Damage to the electrical connection on the cable drum!

If the electrical connection from the cable drum to the terminal box on the W-pivot section is established first before the connection to the terminal box on the LI-end section, then the electrical connection will be damaged when spooling out the cable drum!

▶ Establish first the electrical connection from the cable drum on the W-pivot section to the terminal box on the LI-end section and then the electrical connection from the terminal box to the cable drum on the W-pivot section!

Note

▶ To establish the electrical connections on the W-boom, see Electric wiring diagram!

▶ Establish the electrical connections.

▶ Make sure that all electrical connections on the boom are established.

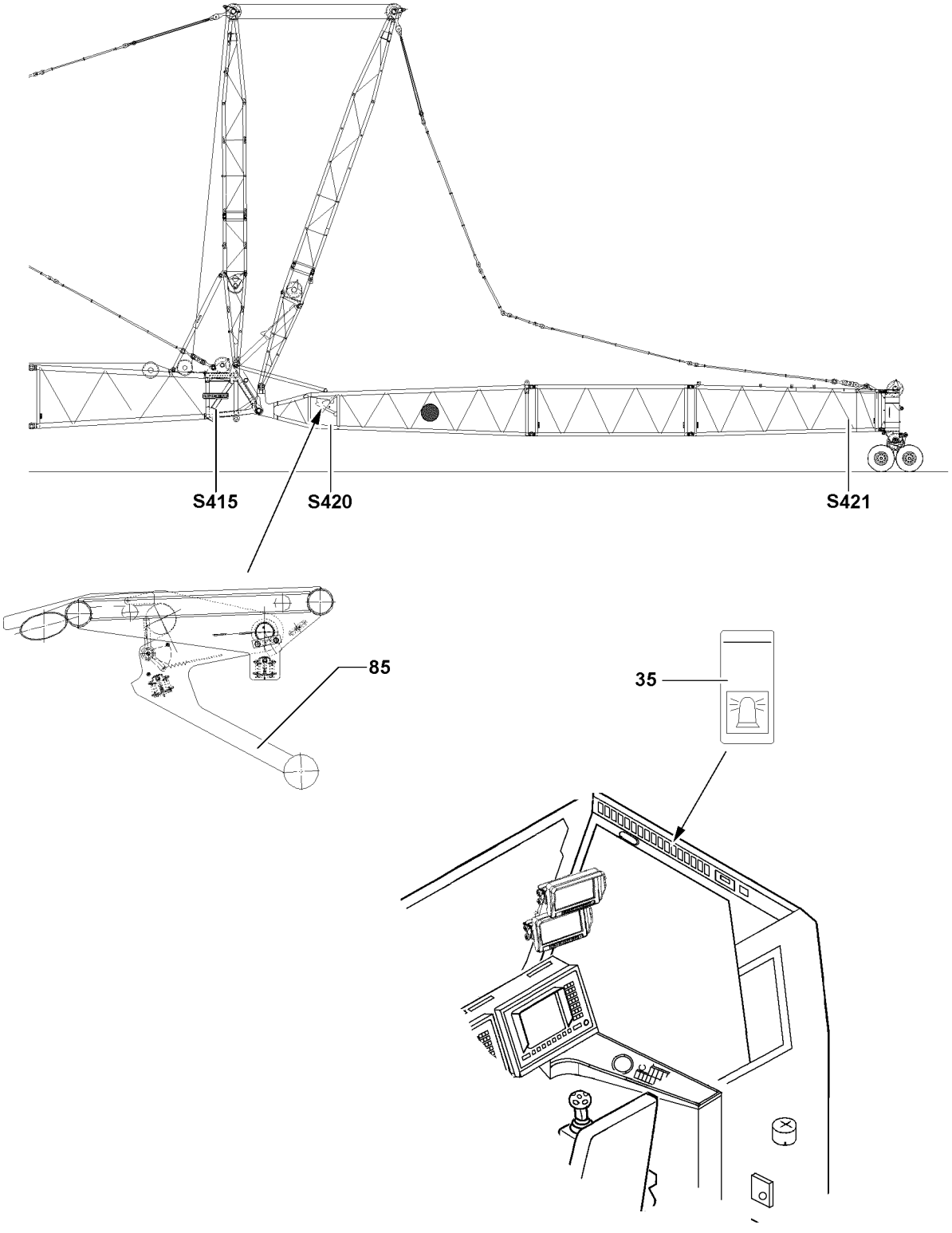

B111987

4.9 Checking the function of the safety devices

WARNING
Non-functioning safety devices!
If the function of the safety devices is defective, personnel can be severely injured or killed!
▶ Crane operation with non-functioning safety devices is **prohibited**!

Note
▶ The function of the individual limit switches must be checked before erection!
▶ The function of the limit switch initiators must be checked in the test system, see Diagnostics manual!

Note
▶ If a function check on the limit switches or on the safety devices does not lead to the desired shut offs, then the plug connections on the connector boxes or the components itself must be checked.
▶ If no visible connection errors or component defects can be found, contact **LIEBHERR** Service!

Make sure that the following prerequisites are met:
– All electrical connections have been made.
– The crane engine is running.
– The corresponding operating mode is set in the LICCON computer system.

4.9.1 Checking the wind speed sensor

▶ Test the movement and the function of the wind speed sensor.

4.9.2 Checking the airplane warning light

▶ Turn on the airplane warning light on with the switch **35**.
▶ Visually check functionality.

4.9.3 Checking the oscillation guard

DANGER
Tipping lattice jib!
If the easy movement on the pendulum of the mechanical relapse support is not checked before erection or not re-established, if necessary, then the mechanical relapse support will not engage in steep lattice jib position. As a result, the lattice jib can tip to the rear!
Personnel can be severely injured or killed!
▶ Check the easy movement of the pendulum **5** of the mechanical relapse support in the entire swing range before erection!
▶ If the pendulum does not move easily: Make the pendulum **5** easy to move!

▶ Check the oscillation guard **5** for easy movement.

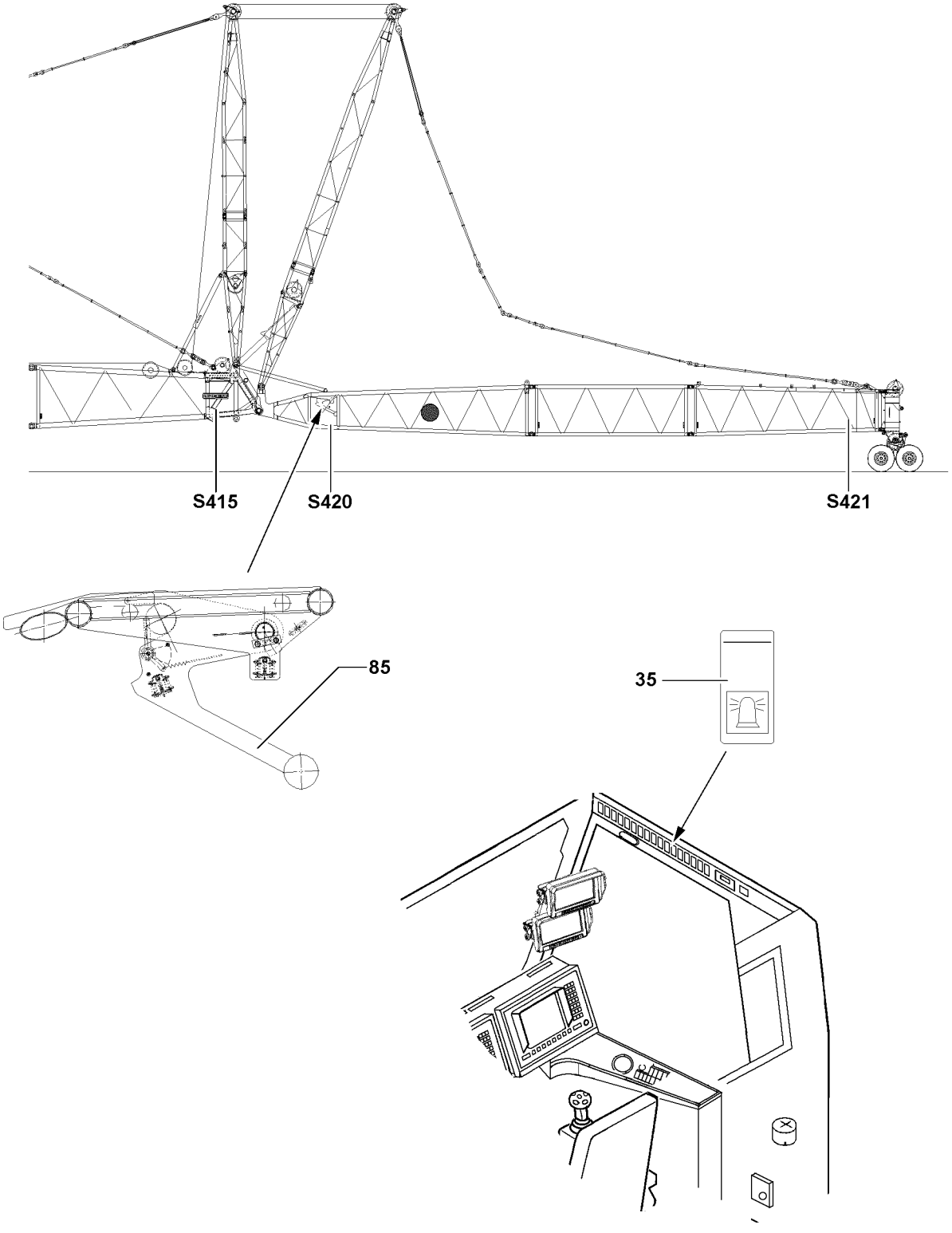

B111987

4.9.4 Checking the hoist limit switch on the pulley head

Note

▶ When replacing or changing a hoist limit switch (HES), the corresponding hoist limit switch must have the correct bus address and the correct software version in order to be detected again by the bus system (LSB)!

▶ Actuate the hoist limit switch manually on the pulley head.

Result:

– The spool up function of the hoist winch turns off.
– The “Hoist top” icon appears on the LICCON monitor.
– The limit switch is functioning.

4.9.5 Checking the limit switches

Note

▶ The limit switch functions have to be checked individually before erection!

Testing the limit switch W-lattice jib “Steepest position”, relapse cylinder

▶ Cover the limit switch initiators individually with a metal plate, see Crane operating instructions, chapter 8.12!

Result:

– The “Boom limitation” icon appears on the LICCON monitor.
– The spool up function of winch 5 turns off.

Testing the limit switch W-lattice jib “Steepest position”, relapse cylinder

▶ Cover the limit switch initiators individually with a metal plate, see Crane operating instructions, chapter 8.12!

Result:

– The “Boom limitation” icon appears on the LICCON monitor.
– The spool up function of winch 5 turns off.

Testing the limit switch flap W-lattice jib “Steepest position”, relapse cylinder

▶ Cover the limit switch initiators individually with a metal plate, see Crane operating instructions, chapter 8.12!

Result:

– The “Boom limitation” icon appears on the LICCON monitor.
– The spool up function of winch 5 turns off.

4.9.6 Checking the limit switch S-boom “Steepest position”

▶ Cover the limit switch initiators on the S-relapse cylinders individually with a metal plate.

Result:

– The limit switch is actuated manually.
– The spool up function of winch 4 (control winch) turns off.
– The “Boom limitation” icon appears on the LICCON monitor.
– The limit switch is functioning.

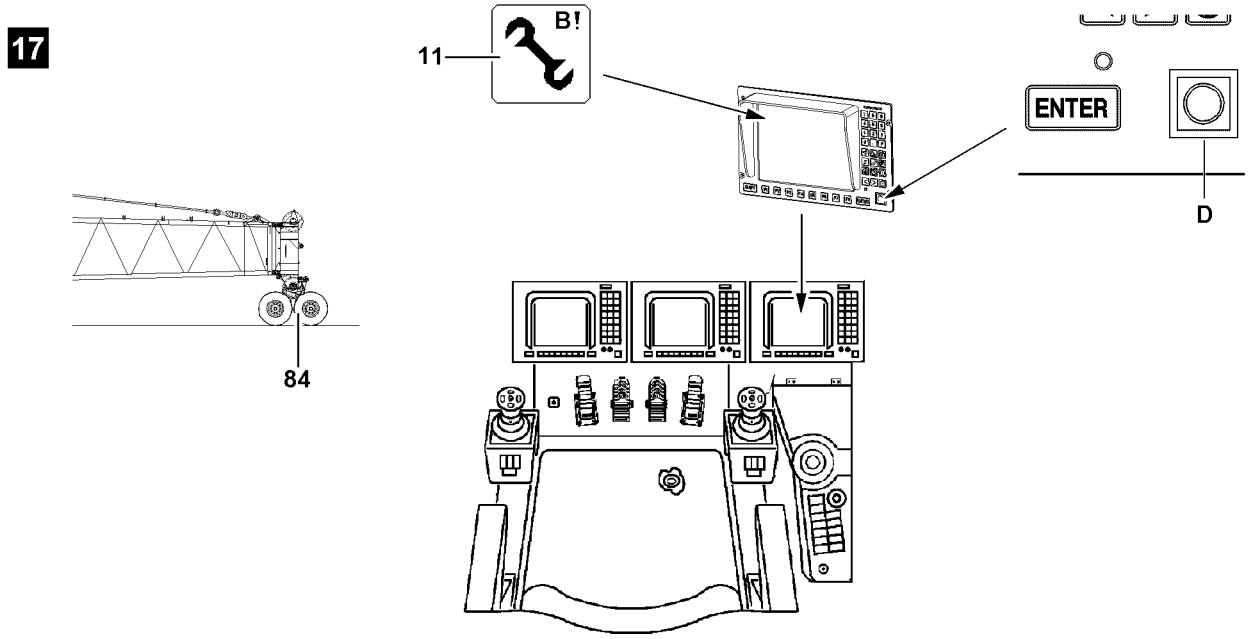

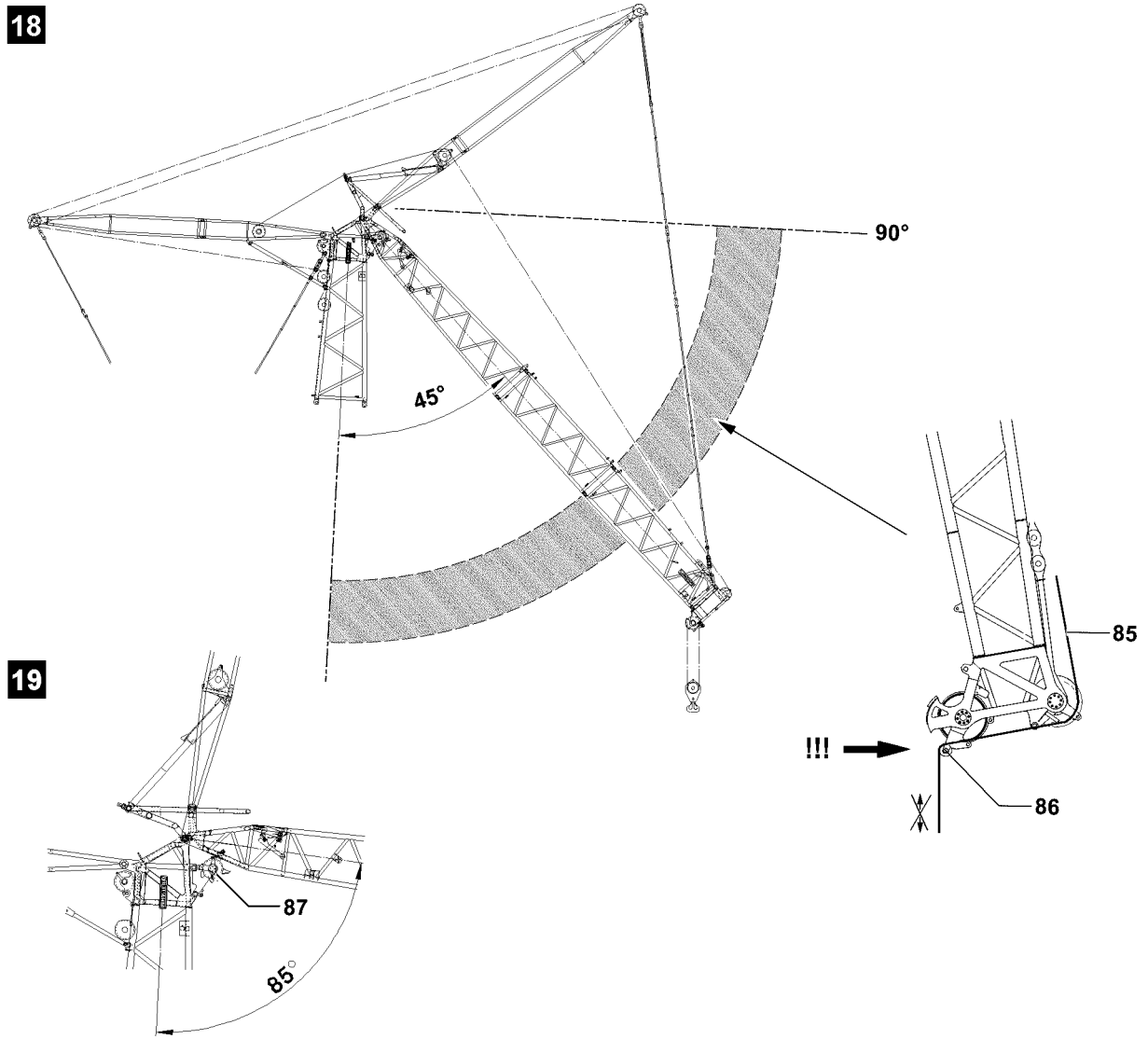

B111988

4.10 Erecting the boom

DANGER
The crane can topple over!
- ▶ It is not permitted to turn the crane during erection!
- ▶ Observe the data in the erection and take down charts!
- ▶ Observe the safety technical notes, see Crane operating instructions, chapter 5.01!

DANGER
Danger of tipping over if the oscillation guard is hard to move!
If the oscillation guard is hard to move, the mechanical relapse retainer will no longer function. The W-lattice jib can tip backwards uncontrolled and cause the crane to topple over!
- ▶ Crane operation with hard to move oscillation guard is prohibited!

WARNING
The crane can topple over!
If the following conditions are not met before erecting the boom, the crane can topple over. Personnel can be severely injured or killed!
- ▶ The lattice jib must roll on the ground with its entire weight!
- ▶ Spool the lattice jib control out so that the guy rods sag slightly!
- ▶ Do not allow slack cable to build up on the control winch!
- ▶ Move the relapse cylinder out before erection!

WARNING
Falling hoist rope!
If the hoist rope before the erection procedure is not properly secured onto the corresponding length on the W-lattice jib, it can fall down backward on the basis of its own weight. Personnel can be severely injured or killed!
- ▶ Reeve in the hoist rope with sufficient length on the W-lattice jib before the erection process!
- ▶ The hoist rope must be constantly monitored during erection!
- ▶ Do not step into the danger zone!

WARNING
The SW-system is overloaded!
If the maximum forces on the SW-boom system are exceeded, personnel can be severely injured or killed!
- ▶ Adjust the W-lattice jib control so that the maximum forces are not exceeded!
- ▶ Make sure that the maximum permissible forces on the W-guying (test point 2) are not exceeded, see Erection and take down chart!
- ▶ Do not allow slack cable to build up on the control winch!

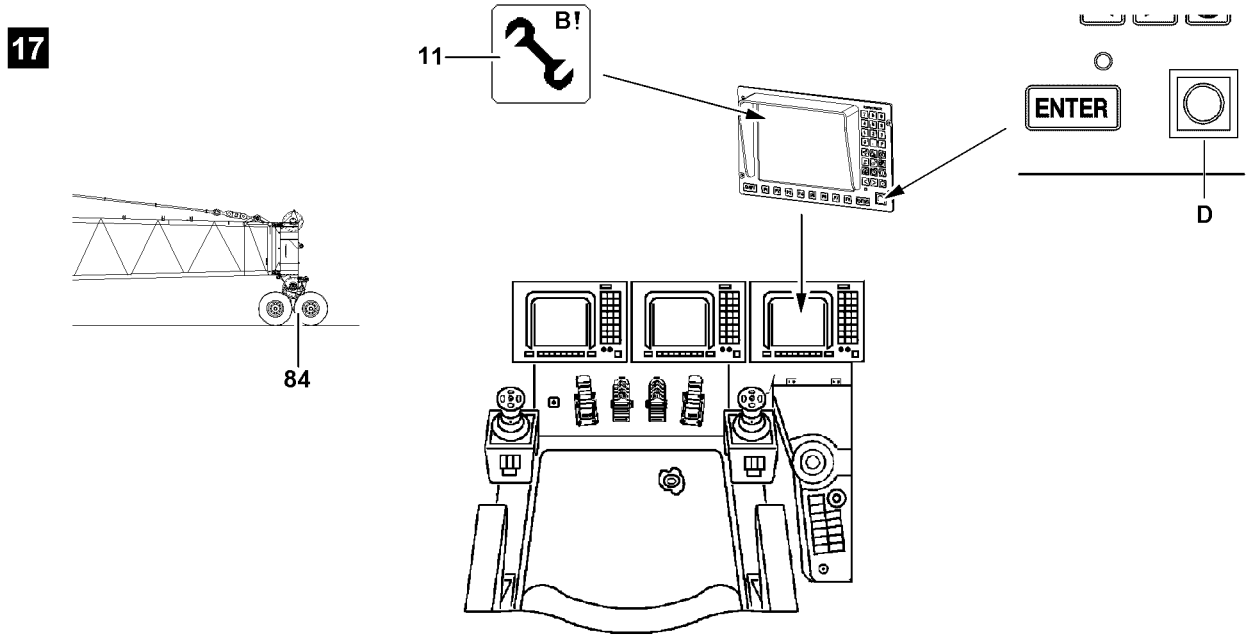

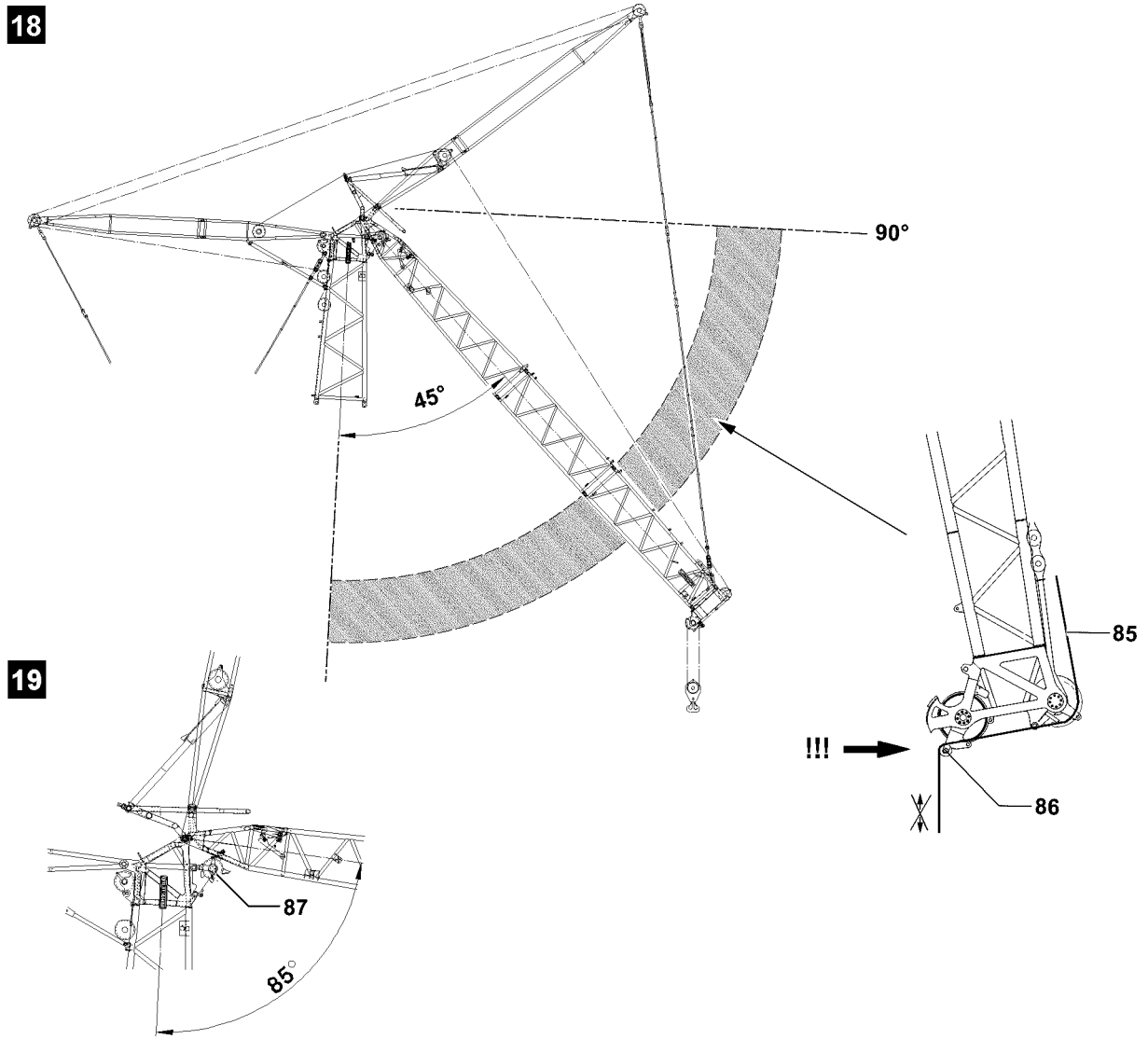

B111988

Make sure that the following prerequisites are met:
- The W-lattice jib is fully assembled.
- The pulley cart **84** is assembled on the LI-end section, see illustration **17**.
- No personnel is within the danger zone.
- The crane is aligned in horizontal direction.
- All electrical connections have been established.
- All limit switches are functioning.
- The oscillation guard has been checked and is easily movable.
- The counterweight has been installed on the turntable and on the derrick, according to the load chart.
- All pin connections have been secured.
- The hoist rope has been correctly placed in the rope pulleys and is prevented from jumping out with the rope retaining pins.
- There are no loose parts on the boom or the lattice jib.
- Boom, lattice jib and safety devices are free from snow and ice.
- The LICCON overload protection has been set according to the data in the load chart.
- The LICCON overload protection settings have been compared with the actual crane configuration.
- The LICCON overload protection is exceeded.
- The assembly icon **11** is visible on the LICCON monitor.

4.10.1 Reeving in the hook block

The erection process is carried out until:
- Without pulley set on the S-end section: Until the S-boom and the W-lattice jib form an angle of approximately 45° (switch position “W-lattice jib bottom”), see illustration **18**.
- **or** with pulley set **87** on the S-end section: Until the S-boom and the W-lattice jib form an angle of approximately 85° (switch position “W-lattice jib bottom”), see illustration **19**.
- **or** the LI-end section lifts off from the ground.

▶ Luff the S-boom up and simultaneously spool the W-control rope out so that the LI-end section remains on the ground with the pulley cart.

▶ When the erection angle is reached or before the LI-end section lifts off the ground:

▶ Release the pulley cart from the LI-end section: Remove the pulley cart, see Crane operating instructions, chapter 5.15!

▶ Luff the S-boom up until the LI-end section lifts off the roller cart.

▶ Check the actual load on the LICCON monitor.

Troubleshooting

Actual load on the LICCON monitor is larger than 0.0 t!

▶ Observe the notes for input of hook block weight, see Crane operating instructions, chapter 4.02!

▶ Reeve in the hook block properly and secure the hoist rope on the rope fixed point, for reeving, see reeving plan.

▶ Attach the hoist limit switch weight.

▶ Enter the weight of the hook block into the LICCON computer system!

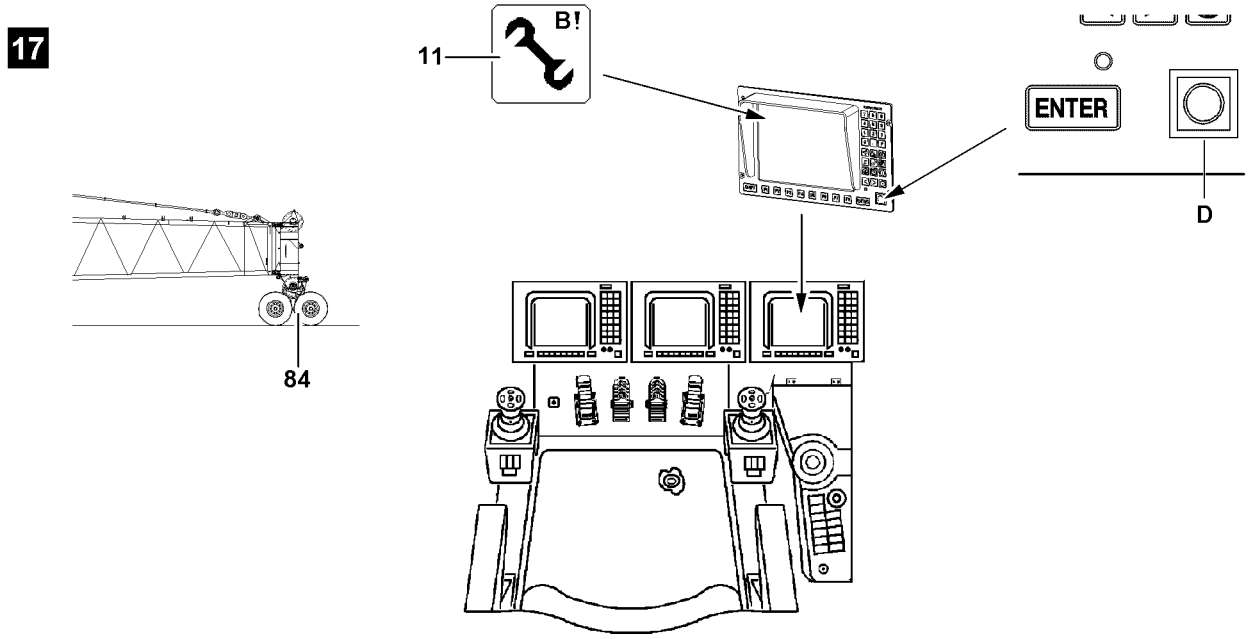

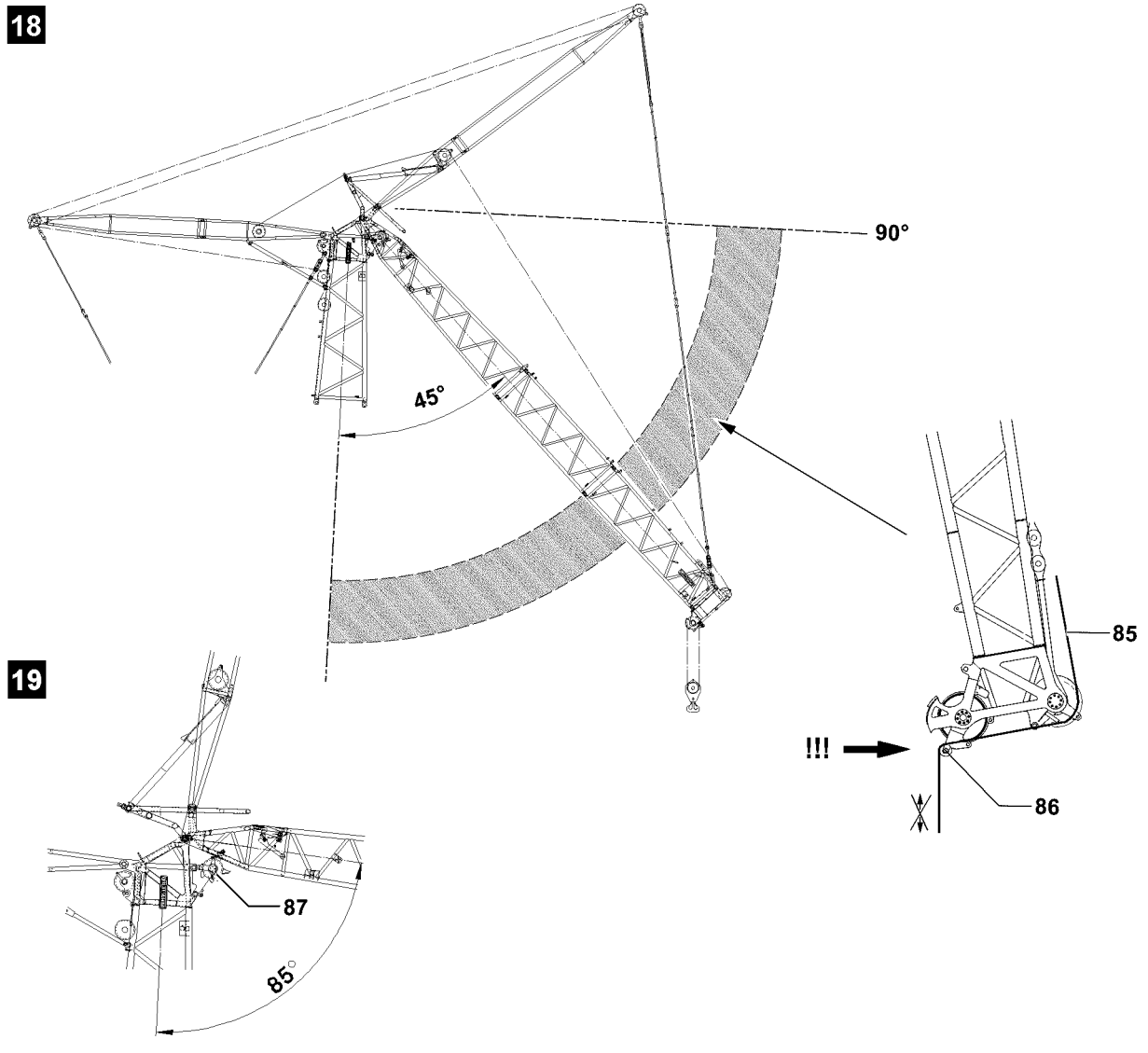

B111988

4.10.2 Erecting the boom

Make sure that the following prerequisite is met:

– The weight of the hook block has been entered into the LICCON computer system.

DANGER

The crane can topple over!

In crane operation with exceeded LICCON overload protection, the crane can topple over.

▶ Personnel can be severely injured or killed!

▶ The radii listed in the load chart may not be exceeded or fallen below, even if there is no load on the hook!

WARNING

Unutilized guy rods on boom!

If guy rods are on the lattice sections which are not used for operation, then there is a risk of accidents!

Personnel can be severely injured or killed!

Guy rods can loosen up and fall down!

The load chart is invalid!

The load display of the LICCON computer system shows the incorrect value!

The weight of the boom is too large for erection!

▶ Disassembly and remove unutilized guy rods on the transport retainers before erecting the boom!

NOTICE

Damage to the hoist rope!

If the hoist rope **85** are reeved on the hook block and redirected over the small guard rollers **86**, the hoist gear may no longer be driven. During spooling up or spooling out, the hoist rope can become damaged!

▶ Do not spool up or spool out the hoist rope **85**, if the angle between the S-boom and the W-lattice jib is less than 90°, illustration **18**!

Note

▶ When the lowest operating position of the W-lattice jib is reached, the LICCON overload protection is activated!

▶ In the maximum load icon appears a load number in “t” instead of the display “???”!

▶ Luff the boom up to the lowest operating position.

▶ When the boom has reached the lowest operating position:
Make sure that the assembly icon **11** on the LICCON monitor turns off.

Result:

– The LICCON overload protection is active.

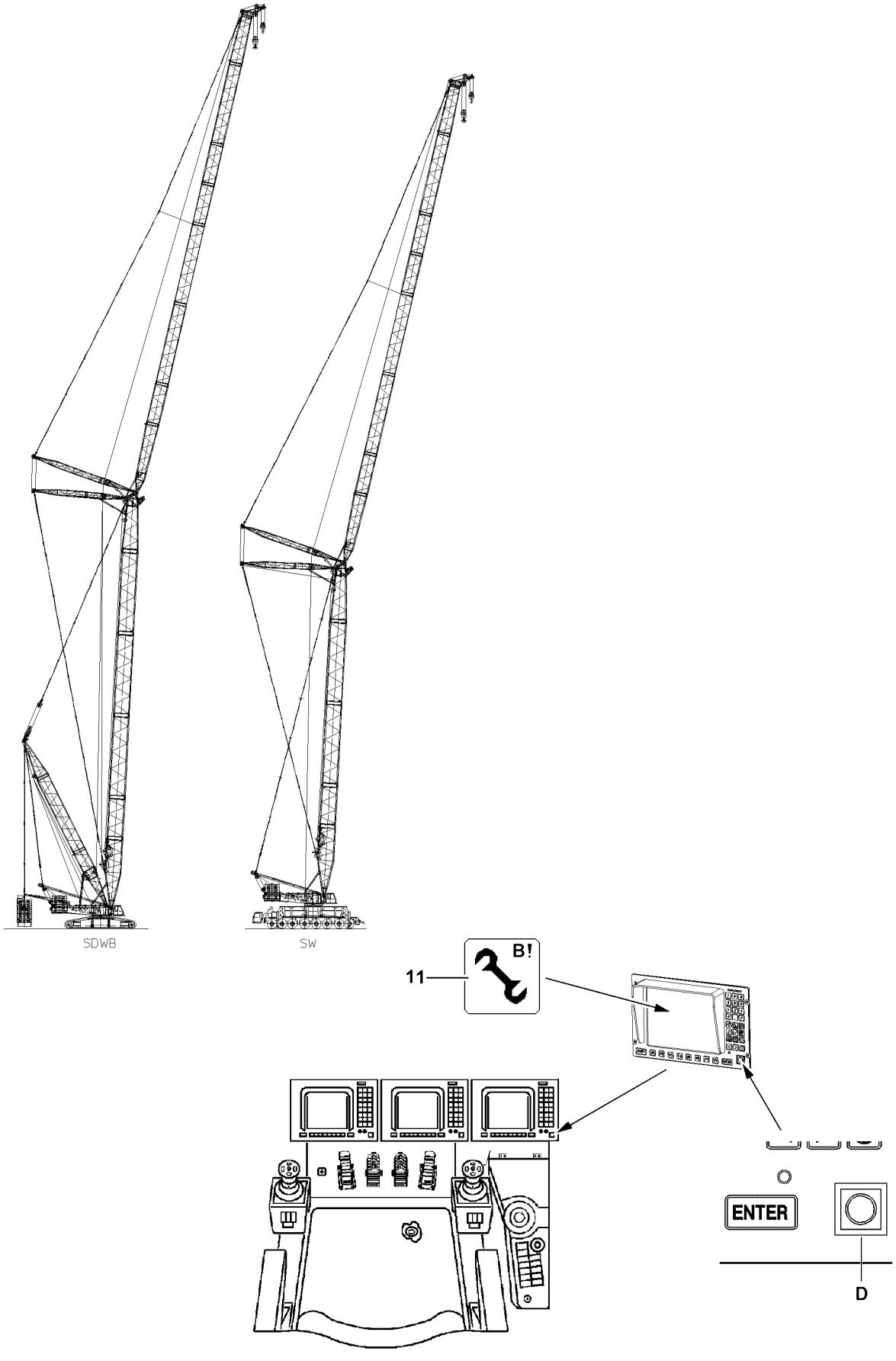

B111989

5 Operating the crane

5.1 Preparing for crane operation

Note

▶ Observe the notes, see Crane operating instructions, chapter 4.05, chapter 4.08 and chapter 5.01!

Make sure that the following prerequisites are met:

– The LICCON overload protection is active.
– The LICCON overload protection has been set according to the data in the load chart.

WARNING

The crane can topple over!

▶ Check the horizontal position of the crane before and during operation!
▶ If the crane operator leaves the cab, even for a short time, the operating mode setting must be checked and reset if necessary before resuming crane operation!

5.2 Checking the settings

▶ Check the function of the overload protection by running against the operating positions “on top” and “bottom”.
▶ Check the hoist limit switch by running against the hoist limit switch weight.
▶ Check the function of the limit switches on the relapse cylinders.

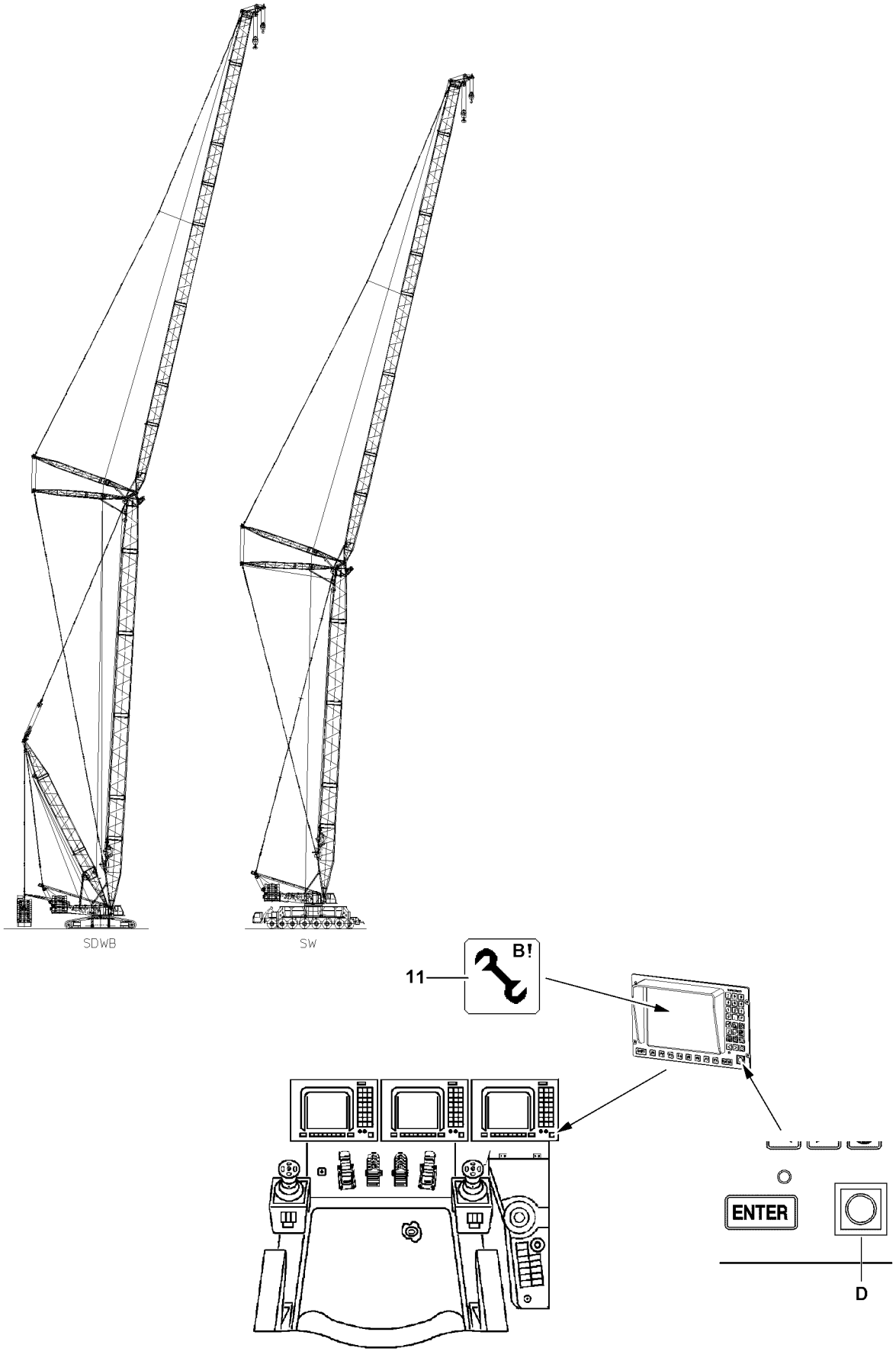

B111989

6 Disassembling the W-boom system

WARNING
Risk of falling!
During assembly and disassembly, personnel must be secured with appropriate aids to prevent them from falling! If this is not observed, assembly personnel can fall and suffer life-threatening or fatal injuries!

- Any work, where there is a danger of falling must be carried out with suitable aids (for example: lifting platforms, scaffoldings, ladders, auxiliary crane)!
- If the work cannot be carried out with such aids nor from the ground, then the assembly personnel must secure themselves with approved catch systems to avoid falling, see Crane operating instructions chapter 2.04!
- If railings are present on the components, then they must be brought into the corresponding position and secured for assembly / disassembly work!
- Step on aids and fall protection equipment only with clean shoes!
- Keep aids and fall protection equipment clean and free from snow and ice!
- During all assembly and disassembly work, maintenance work and inspections, travel or crane operation is prohibited!

WARNING
The lattice sections can fall down!
If the lattice sections are not pinned and secured correctly, then they can fall down and fatally injure personnel!

- Pin or unpin both pins at the same horizontal level, i.e. **left and right**!
- Do not stand under the booms or within the entire danger zone during the boom pinning and unpinning procedure!
- Secure the pins in the bearing points and the receptacles!
- It is prohibited to lean the ladder against the components being disassembled!
- Do not remove the fastening equipment and the auxiliary crane until each component is pinned on and secured!

WARNING
Danger of impact / crushing!
When installing / removing crane components with the auxiliary crane, crane components can start to swing back and forth!
When lifting / lowering and positioning crane components, there is an increased danger of impacts / crushing!
Personnel can be caught and severely injured or killed!

- Make sure that personnel cannot be caught by components!
- Make sure that the crane is aligned in horizontal position to avoid the support beams from swinging by themselves!
- When working in danger zones: Use aids to protect limbs!
- Guide components with suitable aids to minimize oscillation!

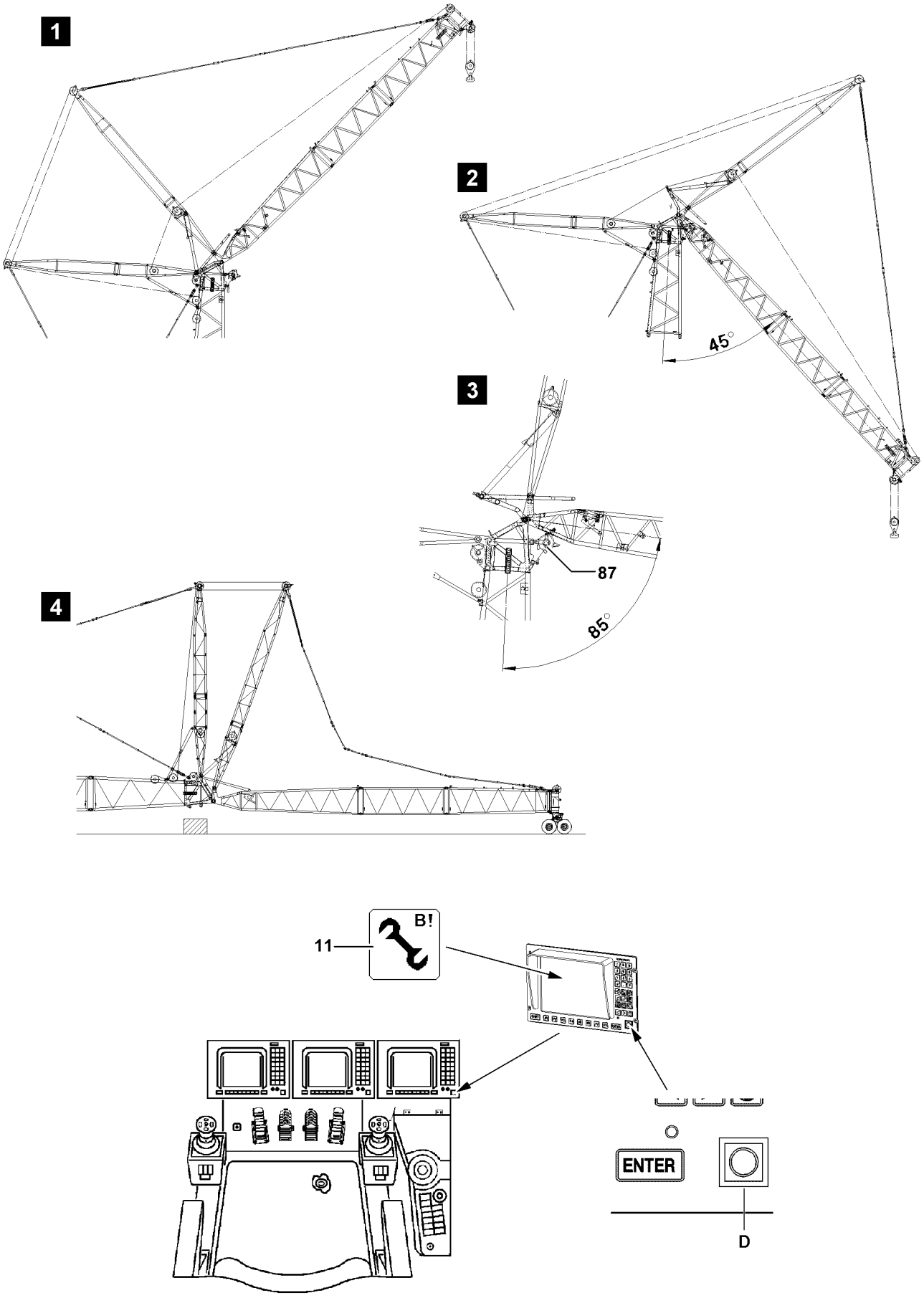

B111990

Note

▶ By supporting the components during assembly / disassembly, ground unevenness is compensated for and the material is protected!

Note

▶ The LI-intermediate sections are pinned and unpinned with the aid of the pin pulling device, see Crane operating instructions, chapter 5.30!

WARNING

Risk of accident!

Personnel can be severely injured or killed!

▶ For pinning and unpinning with the pin pulling device, observe and follow the warning guidelines, see Crane operating instructions, chapter 5.30!

6.1 Laying the W-lattice jib down

WARNING

The crane can topple over!

If the following conditions are not met before taking down the boom, the crane can topple over and fatally injure personnel!

▶ Observe the safety technical notes, see Crane operating instructions, chapter 5.01!

▶ Observe the data in the erection and take down charts!

WARNING

The SW-system is overloaded!

If the maximum forces on the SW-boom system are exceeded, personnel can be severely injured or killed!

▶ Adjust the W-lattice jib control so that the maximum forces are not exceeded!

▶ Make sure that the maximum permissible forces on the W-guying (test point 2) are not exceeded, see Erection and take down chart!

▶ Do not allow slack cable to build up on the control winch!

NOTICE

Damage of boom components!

Taking down the boom system can lead to a collision between the hook block and the pulley head! The boom components can be severely damaged!

▶ Luff the boom system down at the same time and spool the hoist winch out!

Make sure that the following prerequisite is met:

– The S-boom is in operating position, see illustration **1**.
– The LICCON overload protection has been set according to the data in the load chart.
– The hook block is approx. 5 m below the pulley head of the lattice jib.
– The pulley cart is available.
– An auxiliary crane is available.

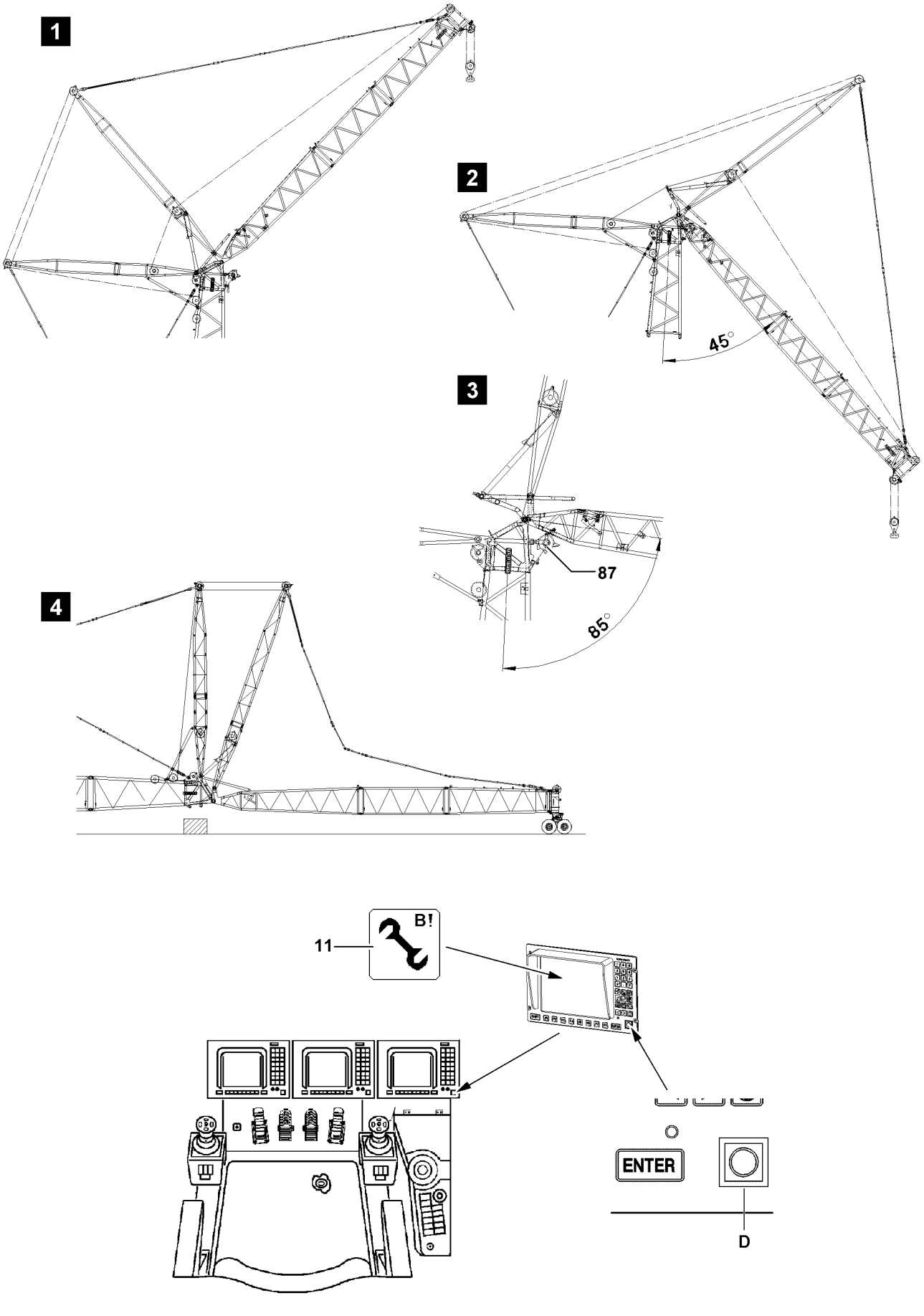

B111990

6.1.1 Luffing the W-lattice jib down

Note

- ▶ The luff down movement is turned off as soon as the lowest operating position is reached!
- ▶ When the lowest operating position of the W-lattice jib is reached, the load display in the maximum load icon turns off and instead of the load display appears the display “???”!
- ▶ In the crane operating screen appear alarm functions!

▶ Luff the W-lattice jib down to the “lowest” operating position.

Result:

– The luffing movement is turned off.
– The “STOP” icon appears on the LICCON monitor.
– The horn icon appears on the LICCON monitor.

WARNING

Assembly with turned on set up key!

When the set up key is engaged, the LICCON overload protection is exceeded!

In the event of deliberate improper use, the crane could collapse, the boom can break off or the crane can topple over!

Personnel can be killed!

This could result in high property damage!

- ▶ The set up key **D** may only be actuated by persons who know the effects of a bypass!
- ▶ Press the set up key **D** only when the set up status was correctly entered into the LICCON computer system!
- ▶ Observe the erection / take down charts!
- ▶ Crane operation with the set up key **D** turned on is strictly prohibited!

▶ When the W-lattice jib has reached the “lowest” operating position:
Turn the set up key **D** to the right.

Result:

– The LICCON overload protection is deactivated.
– The assembly icon **11** appears on the LICCON monitor.

The luff down procedure is carried out until:

– Without pulley set on the S-end section: Until the S-boom and the W-lattice jib form an angle of approximately 45° (switch position “W-lattice jib bottom”), see illustration **2**.
– **or** with pulley set **87** on the S-end section: Until the S-boom and the W-lattice jib form an angle of approximately 85° (switch position “W-lattice jib bottom”), see illustration **3**.
– **or** the hook block can be reeved out.

▶ Luff the W-lattice jib down as specified.

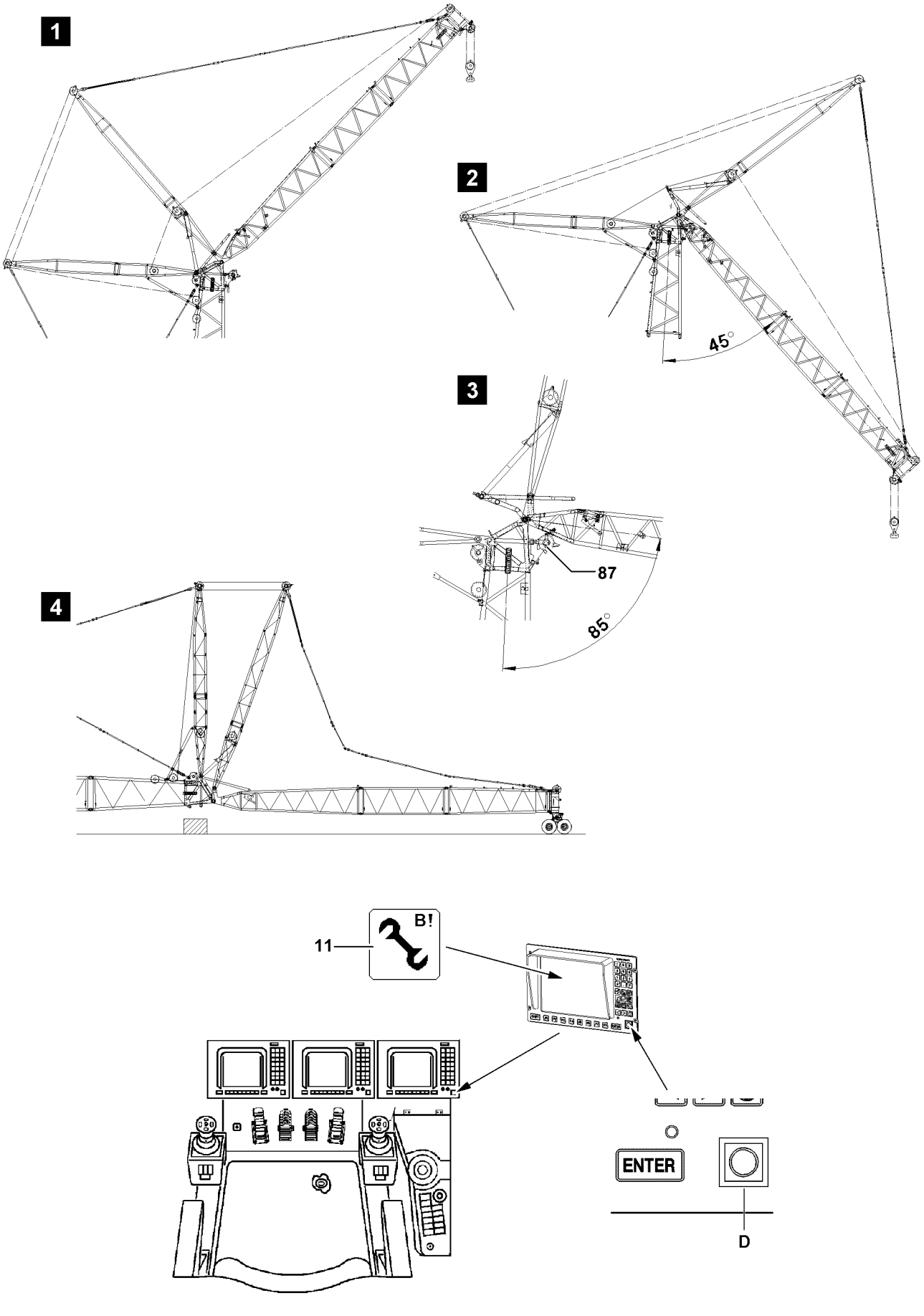

B111990

6.1.2 Laying the W-lattice jib down

- ▶ If the hook block has not yet touched the ground:
  At the same time, spool the hoist winch out and luff the S-boom down until the hook block touches the ground.
- ▶ Disassemble hoisting limit switch weight.
- ▶ Unreeve and remove the hook block.

Note

- ▶ The air pressure in the tires of the pulley cart is 9 bar!

If the W-lattice jib is vertically on the pulley cart, the W-guying is tensioned slightly so that the pulley cart rolls forward.

- ▶ Luff the S-boom up until the S-end section lies on the roller cart.
- ▶ Assemble the LI-end section on pulley cart, see Crane operating instructions, chapter 5.15.

WARNING

The crane can topple over!

If the following conditions are not met before taking down the boom, the crane can topple over. Personnel can be severely injured or killed!

- ▶ Spool the lattice jib control out so that the guy rods sag slightly!
- ▶ The lattice jib must roll on the ground with its entire weight!
- ▶ Do not allow slack cable to build up on the control winch!
- ▶ Do not pull the hook block along on the ground!

- ▶ Continue to luff down the S-boom and simultaneously spool the W-control rope out so that the guy rods sag slightly.
- ▶ Lower the S-boom until the S-boom head is laying the support on the ground, see illustration **4**.

WARNING

Risk of accident!

- ▶ Make sure that no personnel is within the danger zone!
- ▶ Secure the hoist rope with the assembly rope and spool it up slowly over the rope pulleys of the WA-frames to the S-end section!

- ▶ Place the hoist rope on the S-end section.

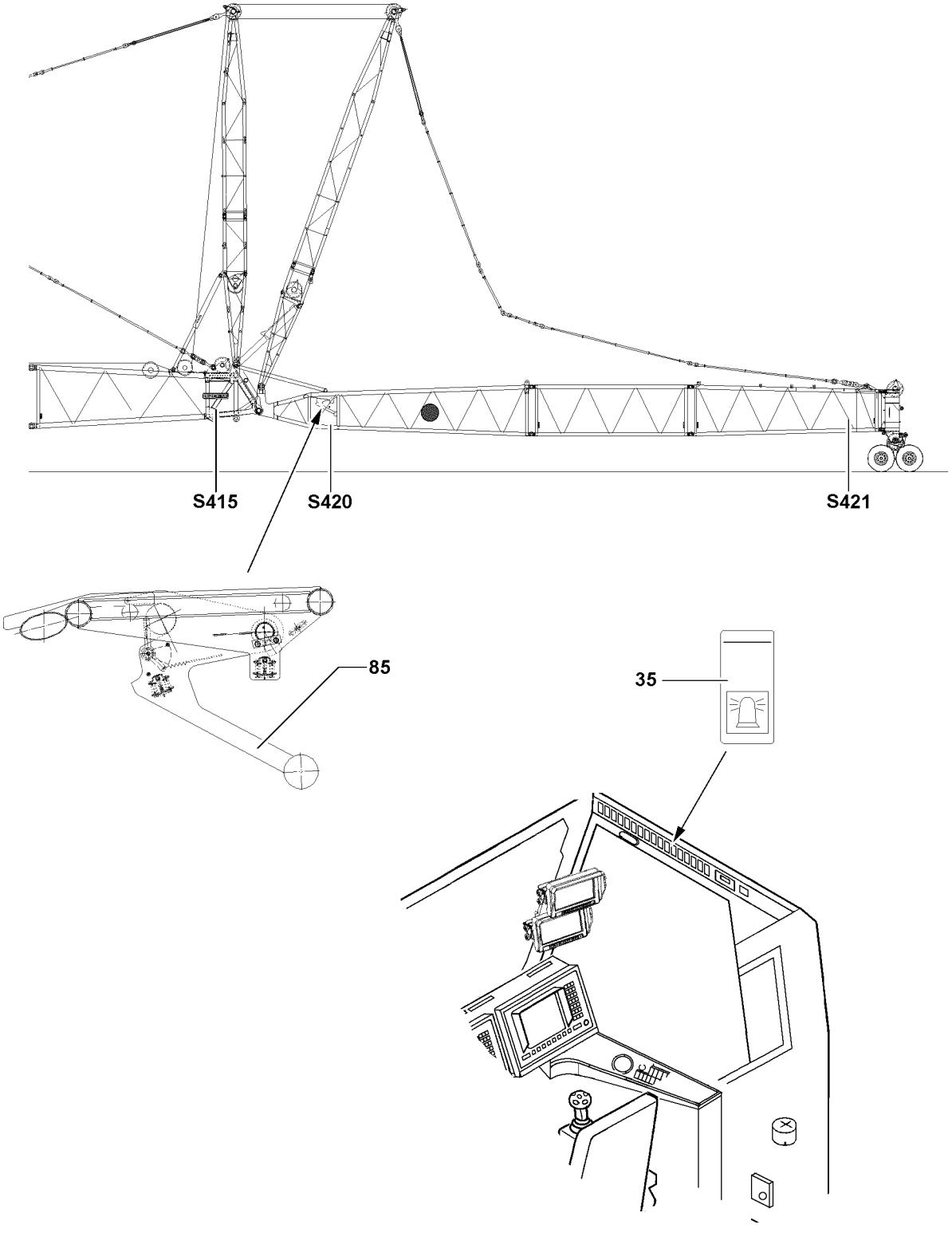

B111987

6.2 Disconnecting the electrical connections

Make sure that the following prerequisite is met:

– The S-boom has been placed down.

NOTICE

Damage to cable drum or cable!

If the electrical connection between the terminal box W-pivot section and cable drum is not separated before spooling up the cable drum, the electrical connection will be damaged!

If the cable of the cable drum is not properly spooled up on the cable drum after unplugging the LI-end section, then the cable drum or the cable can be significantly damaged!

- ▶ Make the electrical connection from the cable drum to the terminal box on the W-pivot section first and then disconnect the electrical connection from the terminal box on the LI-end section to the cable drum!
- ▶ After unplugging, spool the cable onto the cable drum!

- ▶ Disconnect the electrical connections.
- ▶ After unplugging, spool the cable onto the cable drum and secure it to prevent it from spooling out inadvertently.
- ▶ Secure the cable: Reestablish the electrical connection between the terminal box and the cable drum on the W-pivot section.

5

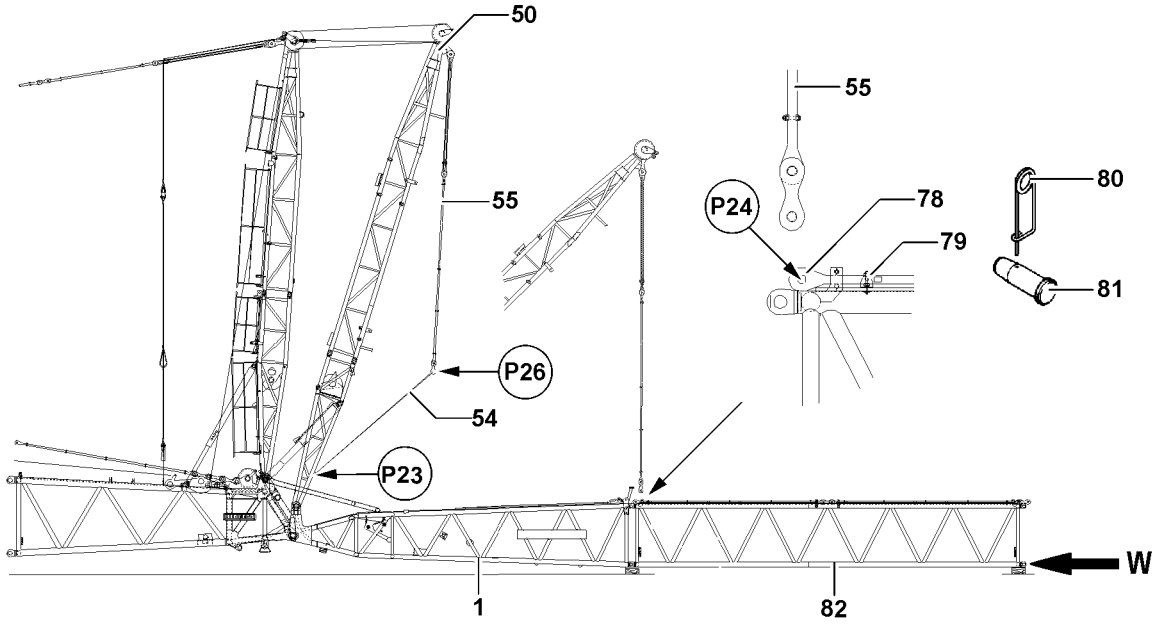

W

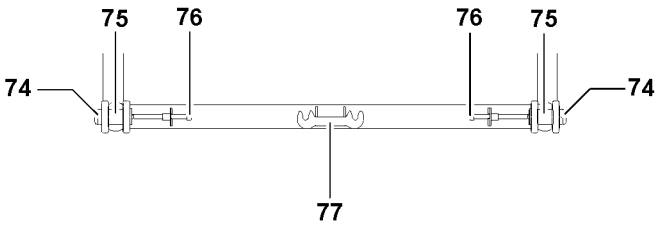

B111991

6.3 Disassembling the W-lattice jib

WARNING
Falling components!
If unsecured or non-supported components are assembled or disassembled, they can fall down.
Personnel can be killed or seriously injured!

- ▶ During pinning and unpinning of the lattice sections, it is prohibited for anyone to remain **under** or **on** the components as well as within the entire danger zone!
- ▶ Support the remaining assembled boom or secure it with the auxiliary crane!
- ▶ Secure the components which are being removed with the auxiliary crane!
- ▶ Pin or unpin both pins laying in a horizontal, i.e. **left** and **right**!
- ▶ Secure the pins in the bearing points and in the receptacles!
- ▶ It is prohibited to lean a ladder against the component being disassembled!
- ▶ During disassembly of the W-lattice jib, adhere to the unpinning sequence, see Crane operating instructions, chapter 5.01!

6.3.1 Disassembling the W-guy rods

Make sure that the following prerequisite is met:

– The transport retainers on the LI-lattice sections are unpinned.

- ▶ Place the W-guy rods in the transport retainers on the LI-intermediate sections: Lower the WA-frame 1 **50**.
- ▶ Lower the WA-frame 1 **50** until the guy rods **78** and guy rods **55** in point **P24** can be unpinned: Spool the W-control rope out.
- ▶ Separate the guy rods **78** and the guy rods **55** on both sides on point **P24**: Remove the spring retainer **80** and unpin the pin **81**.
- ▶ Hook the assembly rope **54** on point **P26**.
- ▶ Erect the WA-frame 1 **50** until the assembly rope **54** can be hooked on point **P23**: Spool the W-control rope up.
- ▶ Hook the assembly rope **54** on point **P23**.
- ▶ Unpin the W-guy rods on the LI-intermediate sections from each other.
- ▶ When all W-guy rods are separated:
  Secure the W-guy rods in the transport retainers on the LI-intermediate sections.

6.3.2 Disassembling the W-lattice section

See illustration **5**.

- ▶ Support the W-boom or secure it with the auxiliary crane.
- ▶ Release the pulley cart from the LI-end section: Remove the pulley cart, see Crane operating instructions, chapter 5.15.
- ▶ Secure the components for disassembly with the auxiliary crane.
- ▶ Hook the pin pulling cylinder on the retainer **77** and on the screw **76**, see detail **W**.
- ▶ Unpin the LI-end section and the LI-intermediate sections “on the bottom”: Remove the spring retainer **74** and unpin the pin **75**.
- ▶ Unpin the LI-end section and the LI-intermediate sections “on top”.
- ▶ Disassemble the W-lattice jib to the W-pivot section **1**.

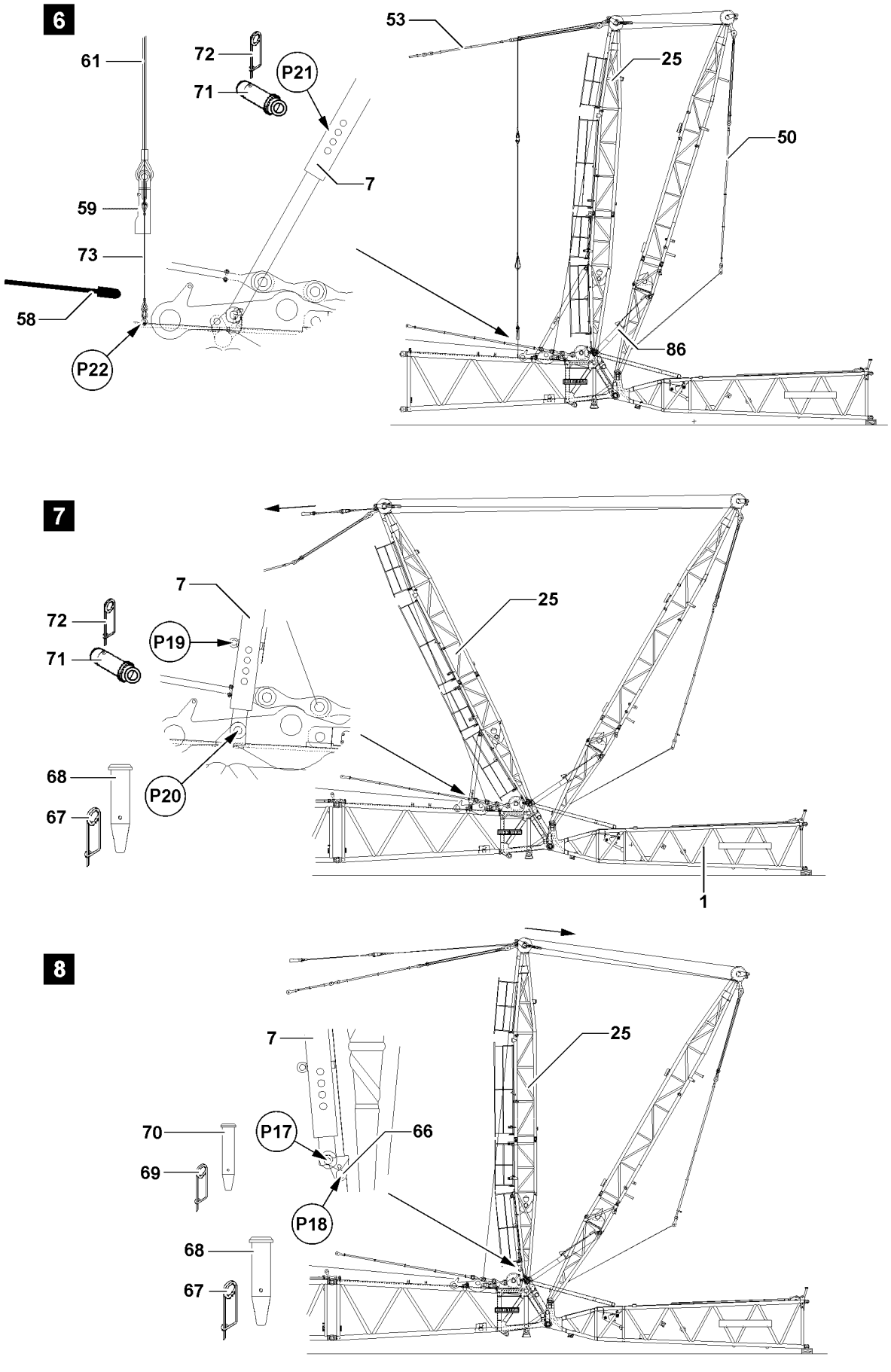
6
61
72
71
P21
7
59
73
58
P22
53
25
50
86
7
7
72
71
P19
P20
68
67
25
1
8
7
70
69
P17
66
P18
68
67
25

B112151

6.4 Unpinning the relapse supports

See illustration **6**.

▶ Erect the WA-frame 1 **50** until the relapse cylinder **86** is completely retracted.

Result:

– The relapse supports **7** are relieved: The pin **71** can be unpinned.

NOTICE

Damage of WA-frame 2!

If the pin **71** on the relapse supports is pinned when the WA-frame 2 is not pulled back, then the WA-frame 2 can be damaged!

▶ Unpin the pins **71** on both sides before the WA-frame 2 **25** is pulled back!

▶ Remove the spring retainer **72** on both sides and unpin the connecting pins **71**.

Fastened on the S-end section on point **P22**, see illustration **6** are the two ropes **61**:

– The first rope is used to pull back the WA-frame 2 **25** with the hoist rope **58**.
– The second rope is used to secure the WA-frame 2 **25** with the auxiliary crane at take down.

▶ Unhook the ropes **73** on point **P22**.

▶ Unhook the rope **73** on the lock **59** and remove.

▶ Hook the hoist rope **58** in the lock **59** on the first rope **61**.

See illustration **7**.

▶ Pull the WA-frame 2 **25** backward: Spool the W-control rope out and spool the hoist rope **58** up until the relapse supports **7** are pushed in and can be pinned.

▶ Insert the pin **71** on point **P19** and secure with spring retainer **72**.

▶ Unpin the relapse supports **7** on both sides on the point **P20**: Remove the spring retainer **67** and unpin the pin **68**.

See illustration **8**.

▶ Erect the WA-frame 2 **25** vertically: Spool the W-control rope up and simultaneously spool out the hoist rope **60**.

▶ Pin the relapse supports **7** on both sides on point **17**: Insert the pin **70** and secure with spring retainer **69**.

▶ Insert the pin **68** on point **18** on the retainer **66** and secure with spring retainer **67**.

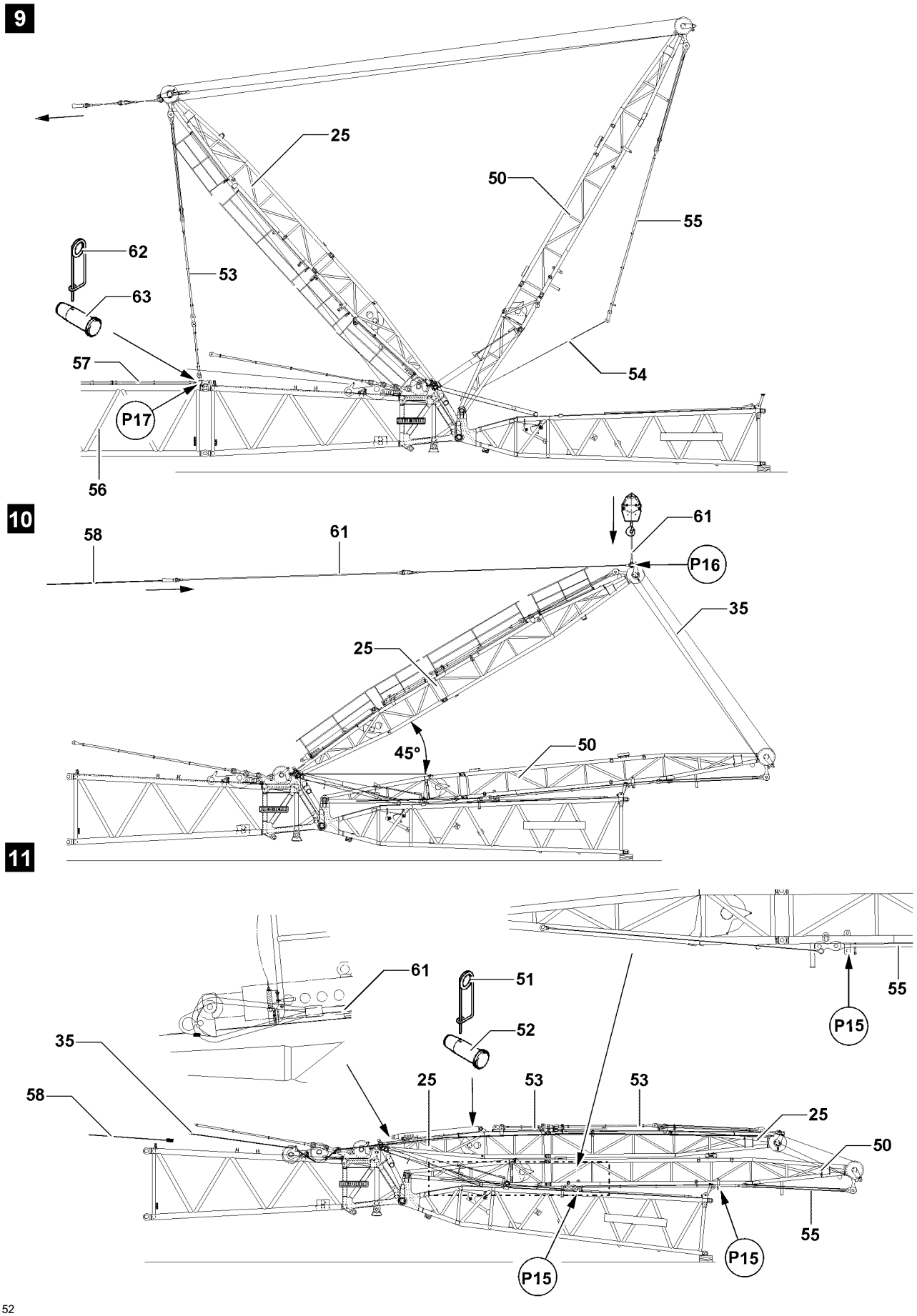
9
25
50
55
62
53
63
57
54
P17
56
10
58
61
61
P16
35
25
45°
50
11
61
51
55
52
P15
35
25
53
53
58
25
50
55
P15
P15

B112152

6.5 Disassembling the WA-frame 2 guy rods

See illustration **9**.

- ▶ Pull the WA-frame 2 **25** back until the W-guy rods **53** hang down vertically: Spool the W-control rope out and simultaneously spool up the hoist rope.
- ▶ Release the transport retainers of the W-guy rods on the S / SL-boom and unpin.
- ▶ Place the W-guy rods **57** in the transport retainers on the S / SL-boom **56**.
- ▶ Separate the W-guy rods **57** on the point **P17** from the W-guy rods **53**: Remove the spring retainer **62** and unpin the pin **63**.
- ▶ Secure the W-guy rods **57** in the transport retainers on the S / SL-boom **56**.

See illustration **10**.

WARNING
WA-frame 2 folding downward!
If WA-frame 2 is not held with the auxiliary crane at 45° while placing down, it can fold downward.
Personnel can be severely injured or killed!

- ▶ Fasten the WA-frame 2 **25** on the auxiliary crane and secure it!

Note

- ▶ While spooling up the W-control rope, hold the WA-frame 2 **25** with the auxiliary crane on tension to prevent slack rope formation!

- ▶ Erect the WA-frame 2 **25** and tilt it forward by 45°: Spool the W-control rope **35** up and simultaneously spool out the hoist rope **58**.
- ▶ Secure the WA-frame 2 **25**: Fasten the second rope **61** on the auxiliary crane.
- ▶ Position the auxiliary crane vertically over point **P16** and tension the rope **61**.
- ▶ Spool the hoist rope **58** out until the rope **61** is relieved and the WA-frame 2 **25** can be placed down.

See illustration **11**.

- ▶ Place the WA-frame 1 **50** down.
- ▶ Secure the W-guy rods **55** in retainers on point **P15** on the WA-frame 1 **50**.
- ▶ Place the WA-frame 2 **25** down with the auxiliary crane on the WA-frame 1 **50**, spool the W-control rope **35** up and simultaneously spool the hoist rope **58** out.
- ▶ Secure the rope **61** on the WA-frame 2 **25** and separate it from the hoist rope **58**.
- ▶ Spool the hoist rope **58** up.
- ▶ Separate the W-guy rods **53** on the WA-frame 2 **25**: Remove the spring retainer **51** and unpin the pin **52**.
- ▶ Secure the W-guy rods **53** with transport retainers on the WA-frame 2 **25**.

12

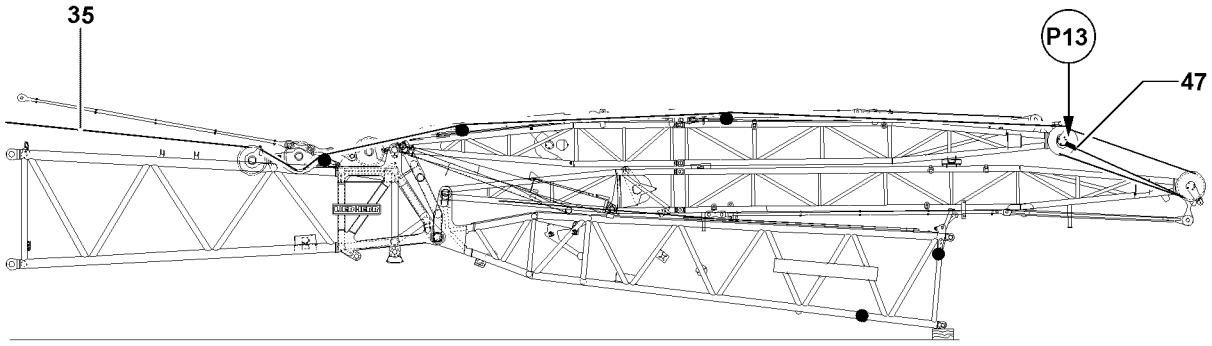

13

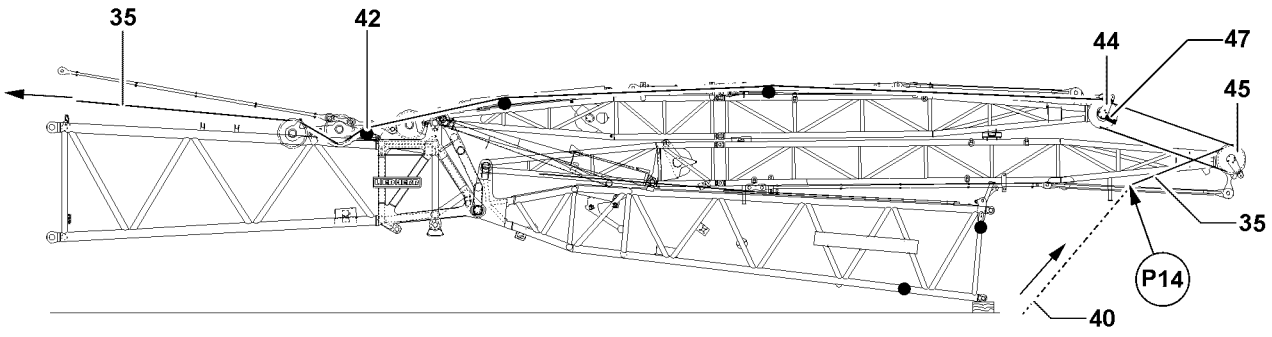

14

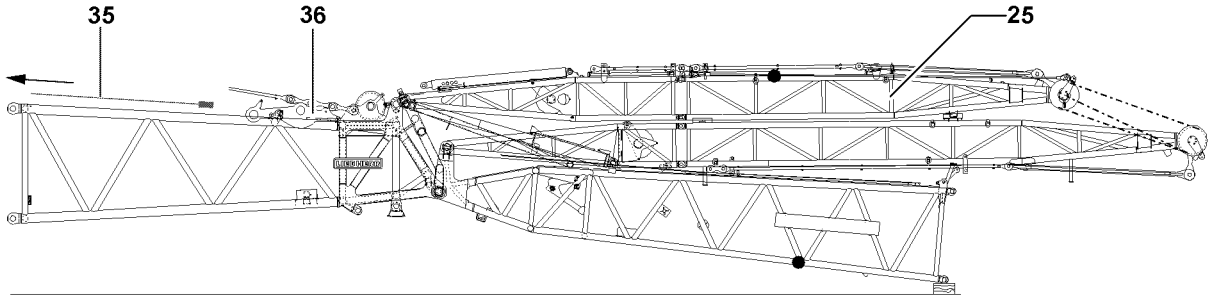

B112153

6.6 Unreeving the W-control rope

NOTICE
Slack rope formation!
The control rope can be damaged if the ropes are slack!
- ▶ Do not allow slack rope formation while spooling the W-control rope up!
- ▶ When spooling the W-control rope up, keep the rope tight!

Note
- ▶ Before unreeving in the W-control rope, the rope retaining pins of the rope pulley **42**, pulley set **44** and pullet set **45** must be released and unpinned, see illustration **13**!

6.6.1 Unreeving the W-control rope on the pulley sets

Make sure that the following prerequisite is met:
– The intake rope for the pulley sets is available.

See illustration **12**.
- ▶ Unhook the W-control rope **35** on point **P13** on the lock **47**.

See illustration **13**.
- ▶ Pull the intake rope **40** to point **P14**.
- ▶ Connect the intake rope **40** and the W-control rope **35** on point **P14**.
- ▶ Spool the W-control rope **35** up and pull the intake rope in on the pulley set **44** and on the pulley set **45**.
- ▶ Hook the intake rope **40** on the lock **47**.
- ▶ Separate the W-control rope **35** on the pulley set **44** from the intake rope **40**.
- ▶ Pin and secure the rope retaining pins on the pulley sets.

6.6.2 Pulling the W-control rope from the WA-frame 2

Make sure that the following prerequisite is met:
– The intake rope for the WA-frame 2 is available.

See illustration **14**.
- ▶ Pull the W-control rope **35** from the WA-frame 2 **25** and spool onto winch 5.
- ▶ Pin and secure the rope retaining pins on the rope pulley **42**.

Result:
– The W-assembly units can be disassembled.

15

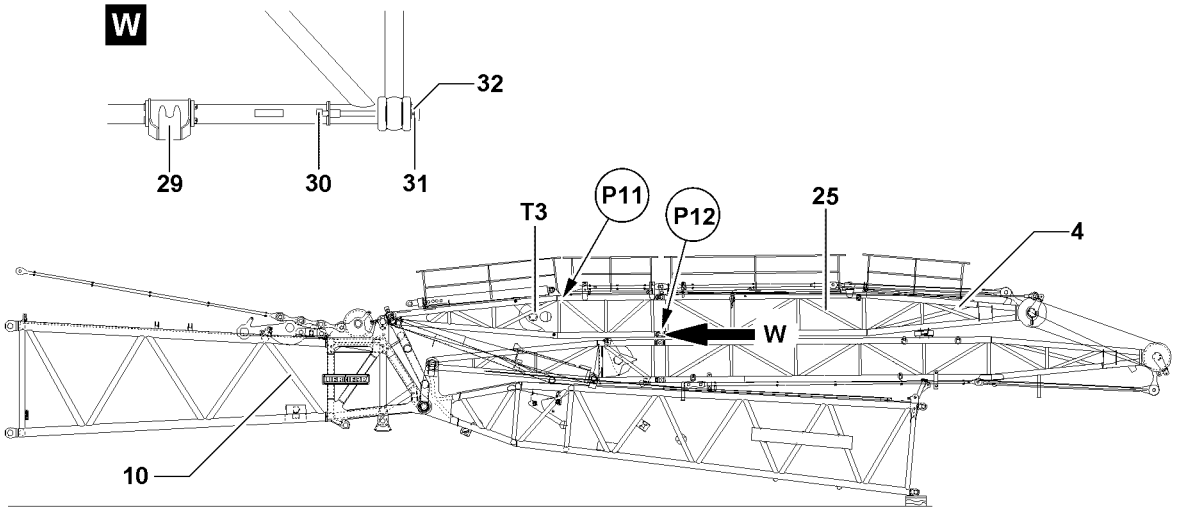

16

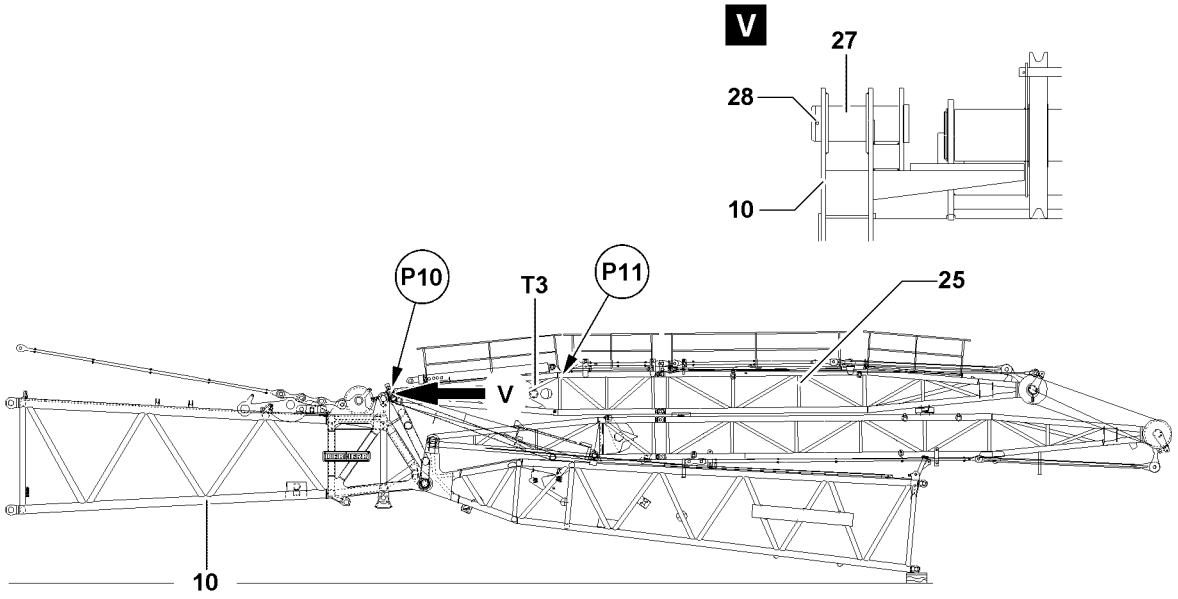

B112154

6.7 Disassembling the W-transport units

6.7.1 Separating the WA-frame 2

See illustration **15**.

- ▶ Secure and slightly lift the WA-frame 2 **25** with the auxiliary crane on point **P11** until it can be unpinned on point **P12**.
- ▶ Hang the pin pulling cylinder on the retainer **29** and on the screw **30**.
- ▶ Disconnect the transport unit **T3** and the WA-frame 2 end section **4**: Remove the spring retainer **31** on both sides on point **P12** and unpin the pin **32**.

See illustration **16**.

- ▶ Disconnect the transport unit **T3** and the S-end section **10**: Remove the spring retainer **28** on both sides on point **P10** and unpin the pin **27**.

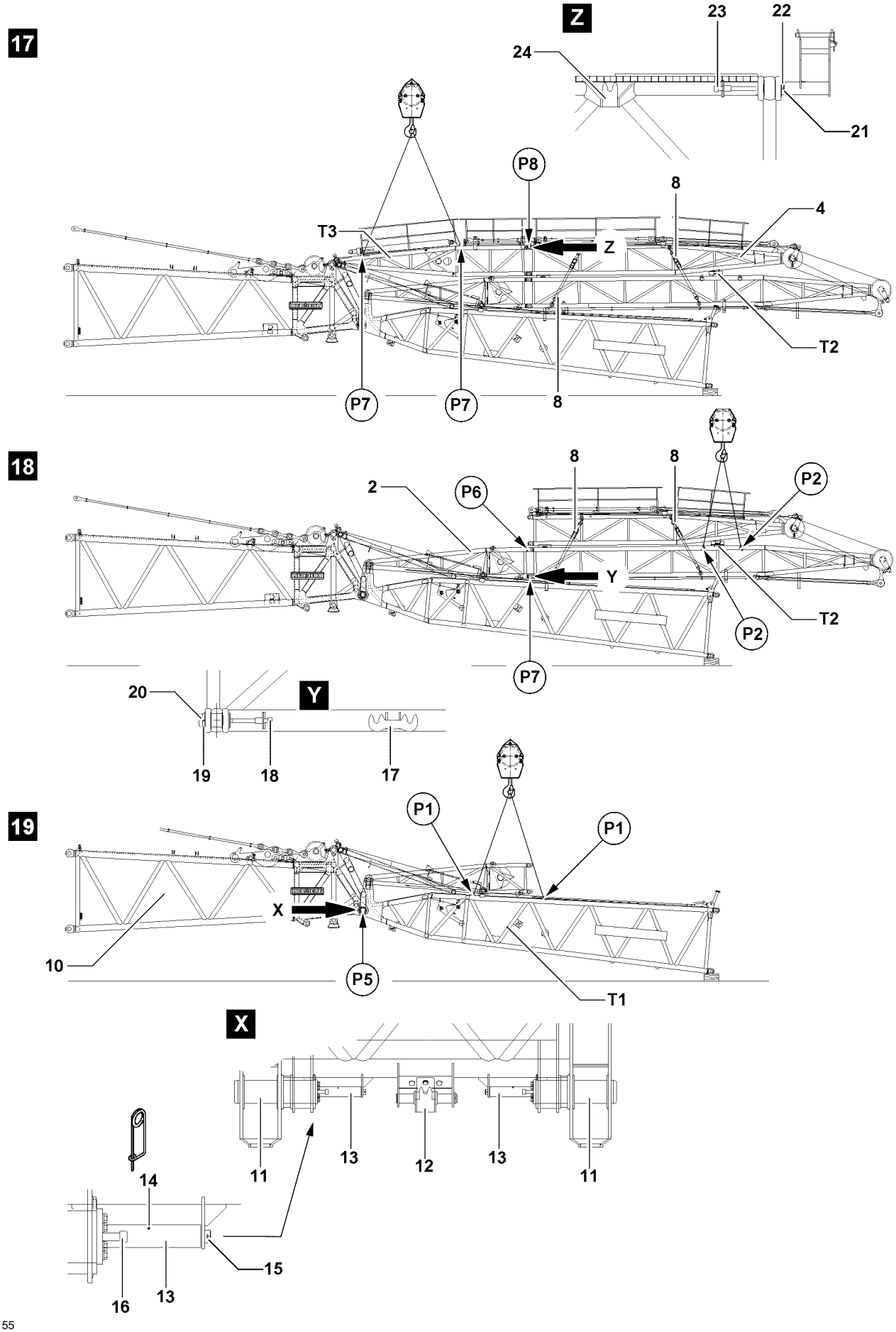
17
Z
23
22
24
21
P8
8
4
T3
Z
T2
P7
P7
8
18
8
8
2
P6
P2
Y
T2
P2
P7
20
Y
19
18
17
19
P1
P1
X
10
P5
T1
X
11
13
12
13
11
14
15
16
13

B112155

6.7.2 Disassembling the W-transport unit 3

See illustration **17**.

- ▶ Secure the transport unit **T2** with the lashing belts **8**.
- ▶ Attach and secure the auxiliary crane on the fastening points **P7** on the transport unit **T3**.
- ▶ Hang the pin pulling cylinder on the retainer **24** and on the screw **23**.
- ▶ Disconnect the transport unit **T3** and the WA-frame 2 end section **4** “on top”: Remove the spring retainer **21** on both sides on point **P8** and insert the pin **22**.
- ▶ Remove the transport unit **T3** with the auxiliary crane.

6.7.3 Disassembling the W-transport unit 2

See illustration **18**.

Make sure that the following prerequisite is met:

– The lashing belts **8** are tightly rigged on the transport unit **T2**.

WARNING

Slipping component!

If the lashing belts are not present or insufficiently secured while raising the transport unit **T2**, the end section of the WA-frame 2 can slide down.

Personnel can be severely injured or killed!

- ▶ Make sure that the lashing belts **8** on the transport unit **T2** are tightly secured!

- ▶ Attach and secure the auxiliary crane on the fastening points **P2** on the transport unit **T2**.
- ▶ Hang the pin pulling cylinder on the retainer **17** and on the screw **18**.
- ▶ Disconnect the transport unit **T2** and the WA-frame 1 pivot section **2** “on the bottom”: Remove the locking pin **19** on both sides on point **P7** and unpin the pin **18**.
- ▶ Disconnect the transport unit **T2** and the WA-frame 1 pivot section **2** “on top” on point **P6**.
- ▶ Remove the transport unit **T2** with the auxiliary crane.

6.7.4 Disassembling the W-transport unit 1

See illustration **19**.

- ▶ Attach and secure the auxiliary crane on the fastening points **P1** on the transport unit **T1**.
- ▶ Remove the retaining plate **13**: Remove the spring retainer **14** and pull the retaining plate **13** from the pin **15**.

Result:

– The pin **11** can be unpinned.

Note

- ▶ The retainer **12** can be offset to the left or right when the piston stroke of the pin pulling cylinder is not sufficient to pin or unpin the pin **11** completely!

- ▶ Hang the pin pulling cylinder on the retainer **12** and screw **16**, see detail **X**.
- ▶ Disconnect the transport unit **T1** and the S-end section **10**: Unpin pin **11** on both sides on point **P5**.
- ▶ Remove the transport unit **T1** with the auxiliary crane.
- ▶ Secure the pins **11** when they are unpinned: Slide the retaining plate **13** on both sides over the pin **15** and secure with spring retainer **14**.

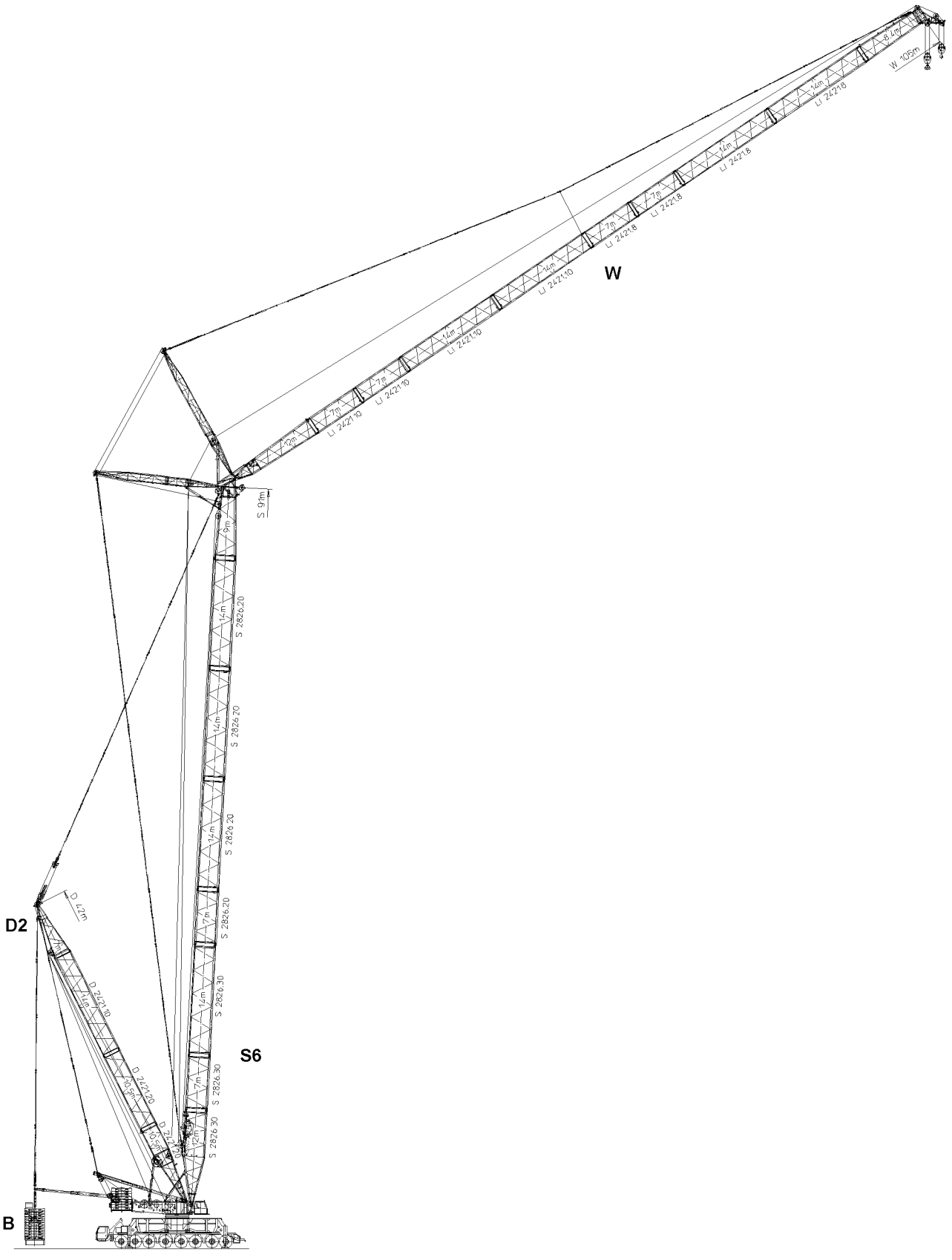

B114937

S6D2W / S6D2WB

7 W-lattice jib in operating mode S6D2WB (only for LG 1750)

The operating mode **S6D2WB** differs from the operating mode SDWB by a reinforced S-boom and by another derrick boom length. The W-guying however is identical.

Derrick boom lengths	
SD-operation	S6**D2** -operation
31.5 m	42.0 m

7.1 Assembling the W-lattice jib

WARNING
The crane can topple over!
If danger notes are not observed, the crane can topple over!
Personnel can be severely injured or killed!
▶ Observe and adhere to the danger notes during assembly of the S6D2WB-boom system!

Note
▶ The assembly of the W-lattice jib on the S6D2-boom system is identical to the assembly on the SD-boom system!

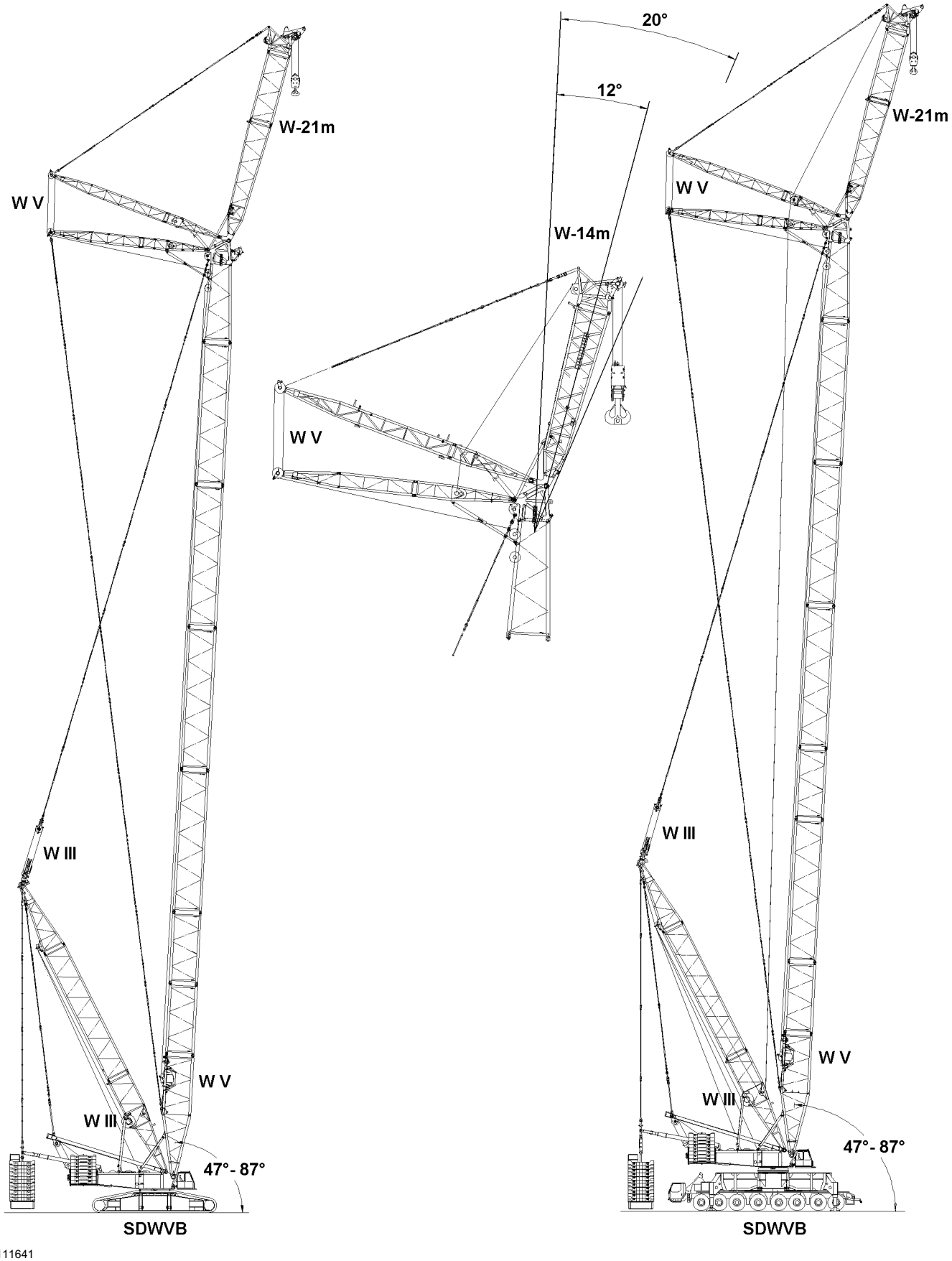
W-21m
W V
W III
W V
W III
47° - 87°
SDWVB
20°
12°
W-14m
W V
W-21m
W V
W III
W V
W III
47° - 87°
SDWVB

B111641

1 WV-lattice jib

This chapter refers to the SDW-boom systems with the following WV-lattice jib lengths:
– 14 m
– 21 m

Note
▶ For the WV-lattice jibs W-14 and W-21m additional guy rods must be installed according to the rod plan!

The operating positions of the WV-lattice jib to the S-boom are:
– 12 °
– **or** 20 °

The adjustment of the WV-lattice jib is made by winch 5 **W V**.
The adjustment of the S-boom, together with the WV-lattice jib is made by winch 3 **W III**.

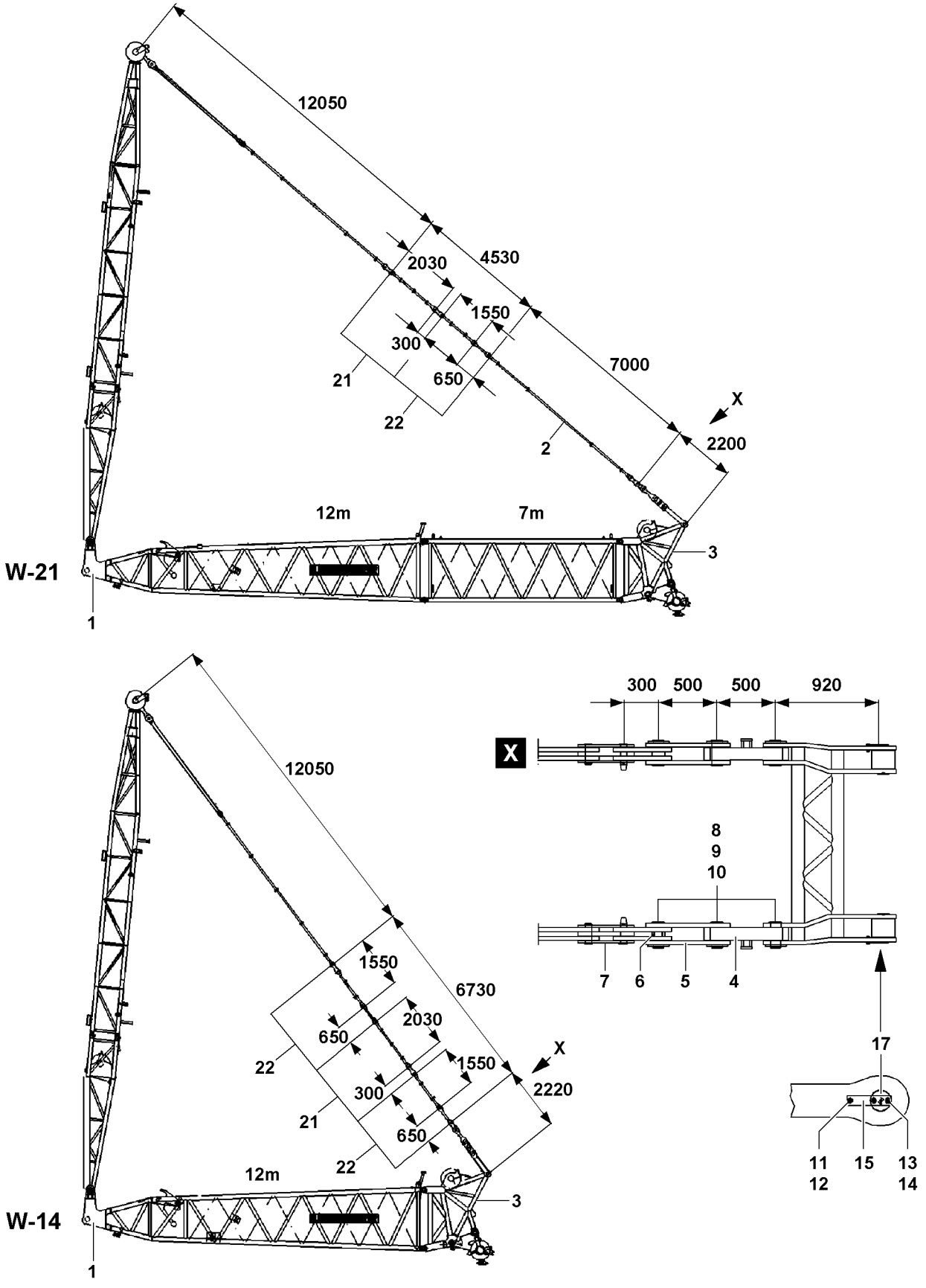
W-21
12050
4530
2030
1550
300
650
7000
21
22
2
X
2200
12m
7m
3
1
W-14
12050
1550
6730
2030
650
22
X
1550
2220
300
21
650
22
12m
3
1
300 500 500 920
X
8
9
10
7 6 5 4
17
11 15 13
12 14

B111647

1.1 Components

Component overview	
Position	**Description**
1	Assembly unit, consisting of three transport units
2	Guy rod 7000 mm
3	W-adapter for pulley head 600 t / 400 t
4	Pull test bracket
5	Lug 500 mm
6	Pipe
7	Lug 300 mm
8	Pin
9	Retaining ring
10	Washer
11	Nut
12	Screw
13	Lock washer
14	Screw
15	Plate
16	Pin
21	Guy rod 2330 mm
22	Guy rod 2200 mm

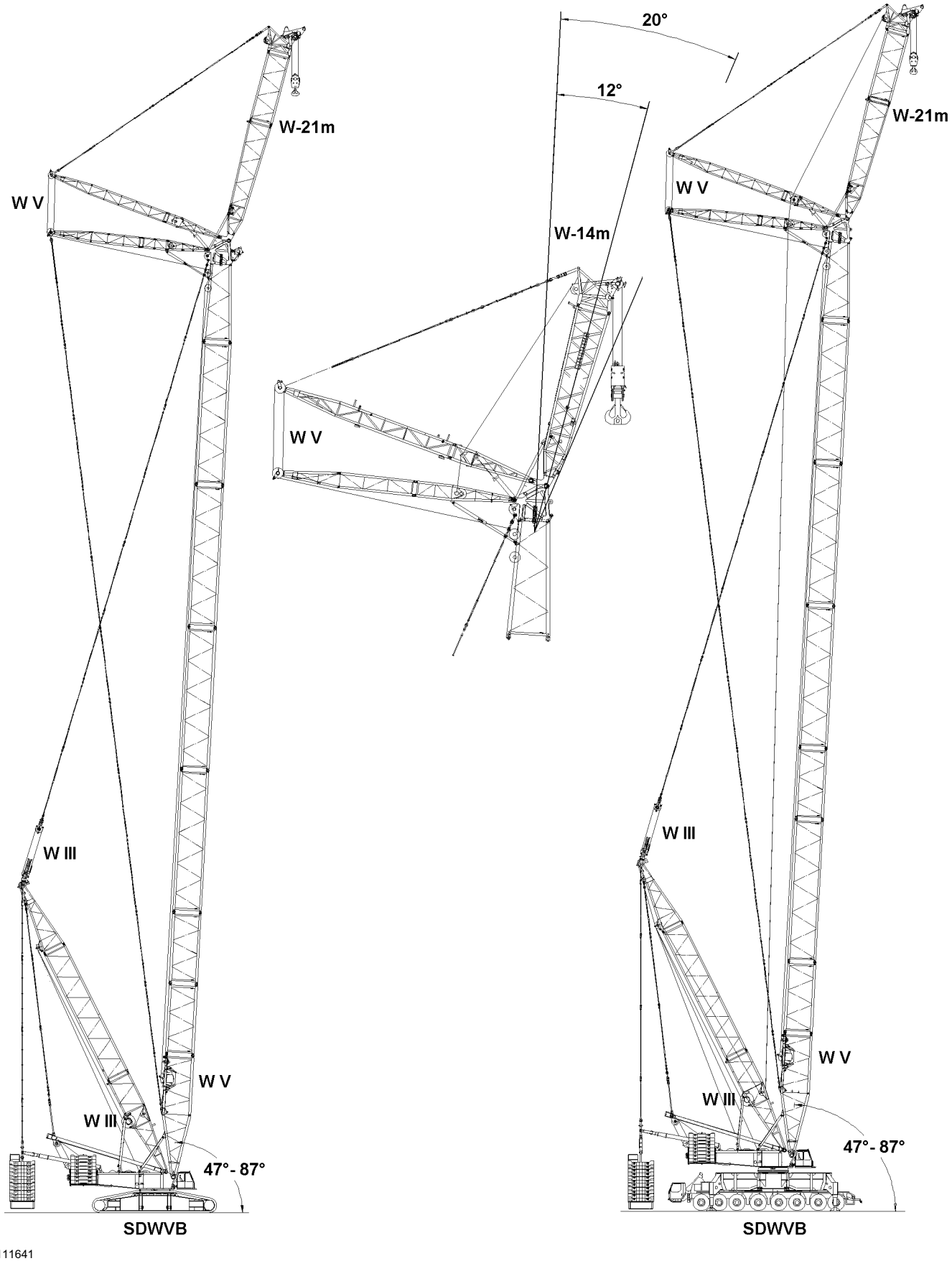
W-21m
W V
W III
W V
W III
47° - 87°
SDWVB
20°
12°
W-14m
W V
W-21m
W V
W III
W V
W III
47° - 87°
SDWVB

B111641

2 Assembling the WV-boom system

WARNING
Risk of falling!
During assembly / disassembly work, personnel must be secured with appropriate aids to prevent them from falling. If this is not observed, assembly personnel could fall and suffer life-threatening or fatal injuries.
- ▶ All assembly work must be carried out using suitable aids (lifting platforms, scaffolding, ladder, auxiliary crane, etc.)!
- ▶ If work cannot be carried out on the ground or using such aids, then assembly personnel must be secured with the personal fall arrest system (see Crane operating instructions, chapter 2.04) to protect against falling! The personal fall arrest system must be attached in the corresponding fastening points on the crane (see Crane operating instructions, chapter 2.06)!
- ▶ If railings are present on the components, then they must be brought into the corresponding position and secured for assembly / disassembly work!
- ▶ Step on aids and fall protection equipment only with clean shoes!
- ▶ Keep aids and fall protection equipment clean and free from snow and ice!

WARNING
Falling components!
If unsecured or non-supported components are assembled or disassembled, they can fall down.
Personnel can be severely injured or killed!
- ▶ During pinning and unpinning of the lattice sections, it is prohibited for anyone to remain **under** or **on** the components as well as within the entire danger zone!
- ▶ Support the boom and components before pinning / unpinning!
- ▶ Pin or unpin both pins laying in a horizontal, i.e. **left** and **right**!
- ▶ Secure the pins in the bearing points and in the receptacles!
- ▶ Do not disengage the auxiliary crane until each component is pinned and secured!
- ▶ It is prohibited to lean a ladder against the component being disassembled!

WARNING
Danger of crushing!
Components can swing during assembling. Hands can be crushed or severed!
- ▶ Make sure that the components do not swing back and forth during assembly!

WARNING
Neglected inspection and maintenance on guy rods!
If the regular inspection and maintenance of the guy rods is not carried out or is carried out only in irregular intervals, then severe accidents can occur due to existing and unrecognized damage to the guy rods!
Personnel can be severely injured or killed!
- ▶ Check the guy rods before every assembly, see Crane operating instructions, chapter 8.15!

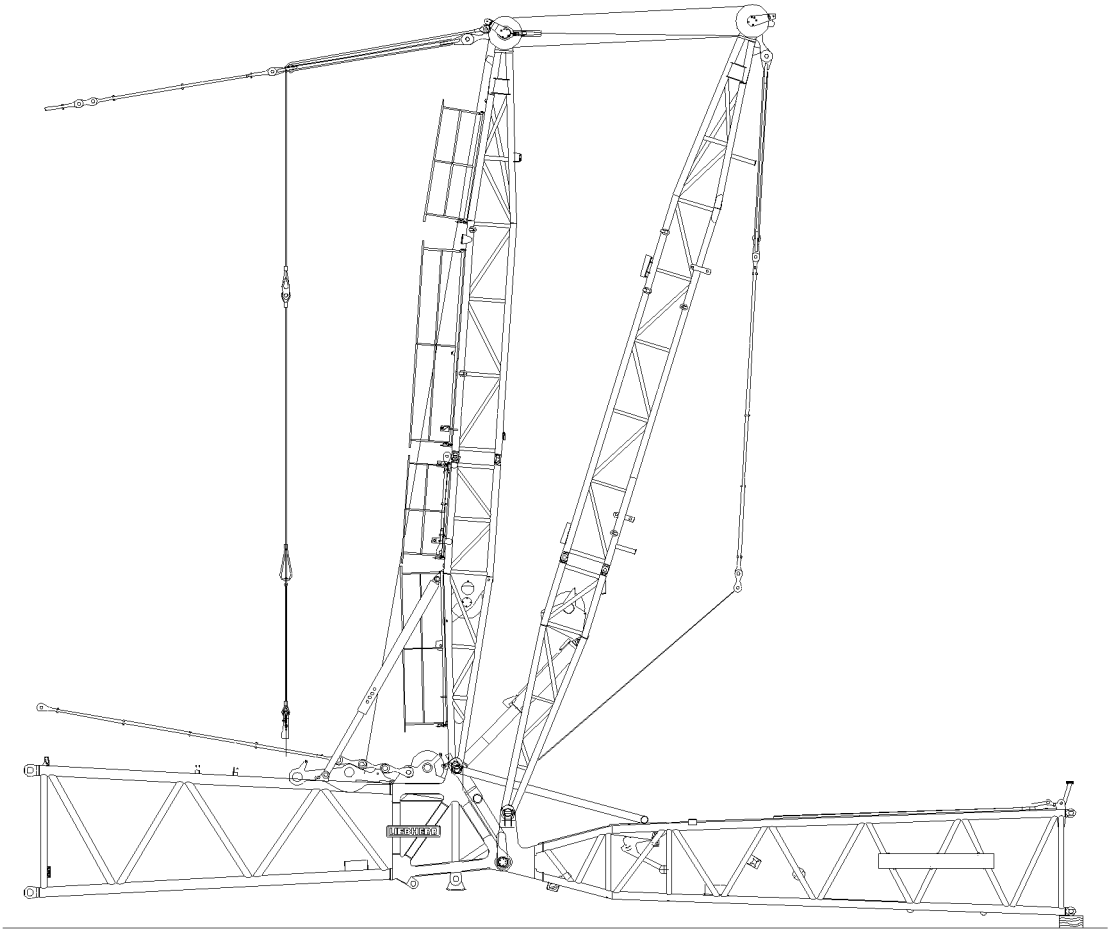

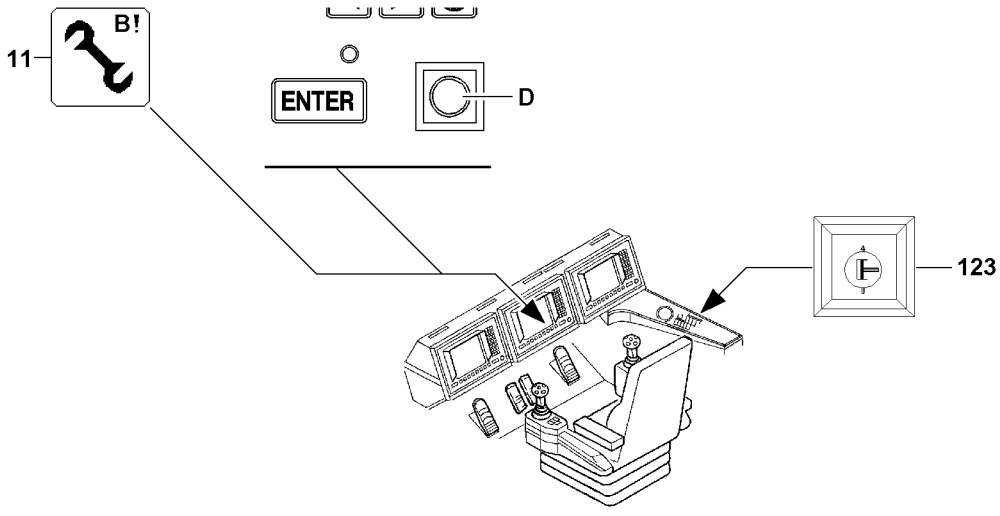

B111642

Note

▶ By supporting the components during assembly / disassembly, ground unevenness is compensated for and the material is protected!

Note

▶ The intermediate sections are pinned and unpinned with the aid of the pin pulling device, see Crane operating instructions, chapter 5.30!

NOTICE

Property damage!

▶ Always insert the pins of the guy rods from the “inside” to the “outside”!

Note

▶ The boom combinations must be installed according to the rod plans!

WARNING

Assembly with turned on set up key!

When the set up key is engaged, the LICCON overload protection is exceeded!

In the event of deliberate improper use, the crane could collapse, the boom can break off or the crane can topple over!

Personnel can be severely injured or killed!

This could result in high property damage!

▶ The set up key **D** may only be actuated by persons who know the effects of a bypass!
▶ Press the set up key **D** only when the set up status was correctly entered into the LICCON computer system!
▶ Observe the erection / take down charts!
▶ Crane operation with the set up key **D** turned on is strictly prohibited!

Make sure that the following prerequisites are met:

– The crane is supported.
  (only in connection with crane support or for LG-cranes)
– The crane is aligned in horizontal direction.
– The SD-boom combination is assembled, see Crane operating instructions, chapter 5.04 or chapter 5.38 and chapter 5.05.
– The counterweight has been installed on the turntable according to the load chart.
– The derrick ballast is placed on the suspended ballast or the ballast trailer according to the load chart.
– The LICCON overload protection has been set according to the data in the load chart.
– The LICCON overload protection settings have been compared with the actual crane configuration.
– The LICCON overload protection is exceeded.
– The assembly icon **11** is visible on the LICCON monitor.
– An auxiliary crane is available.

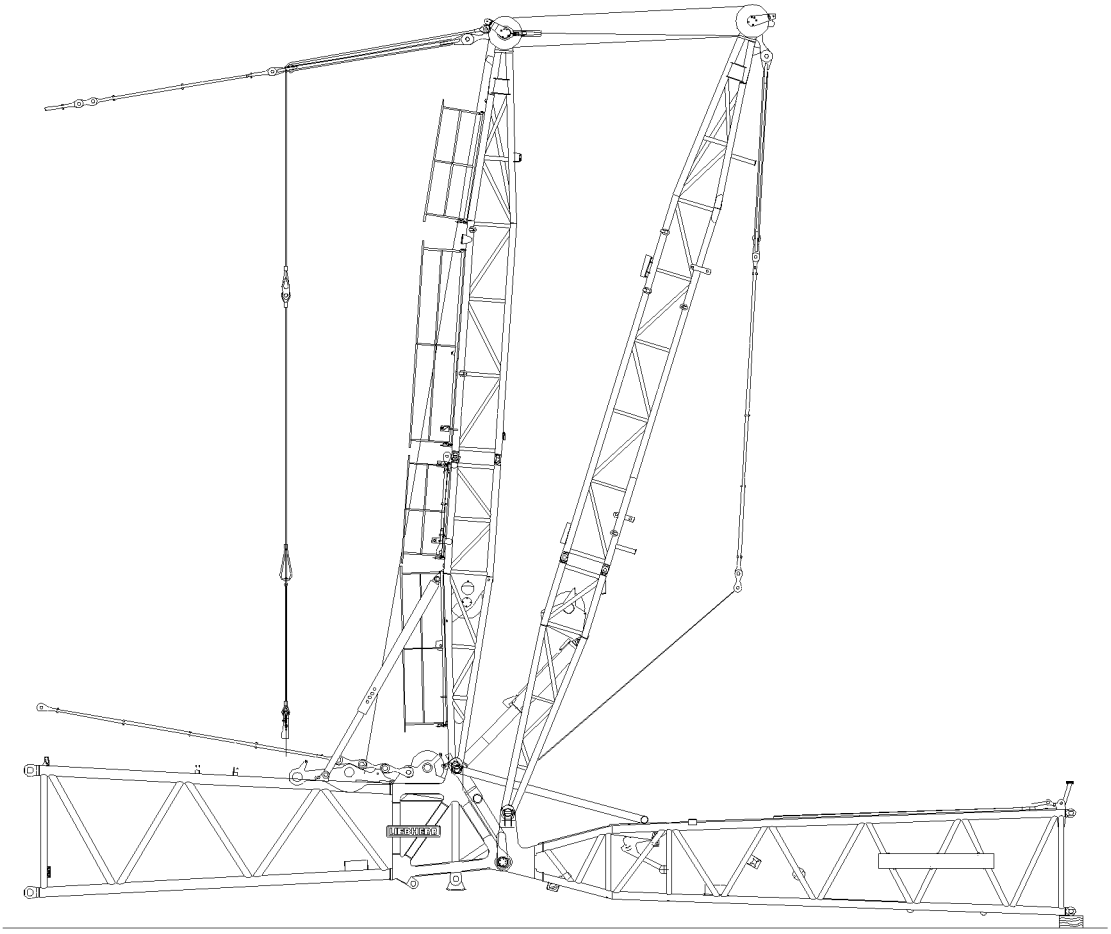

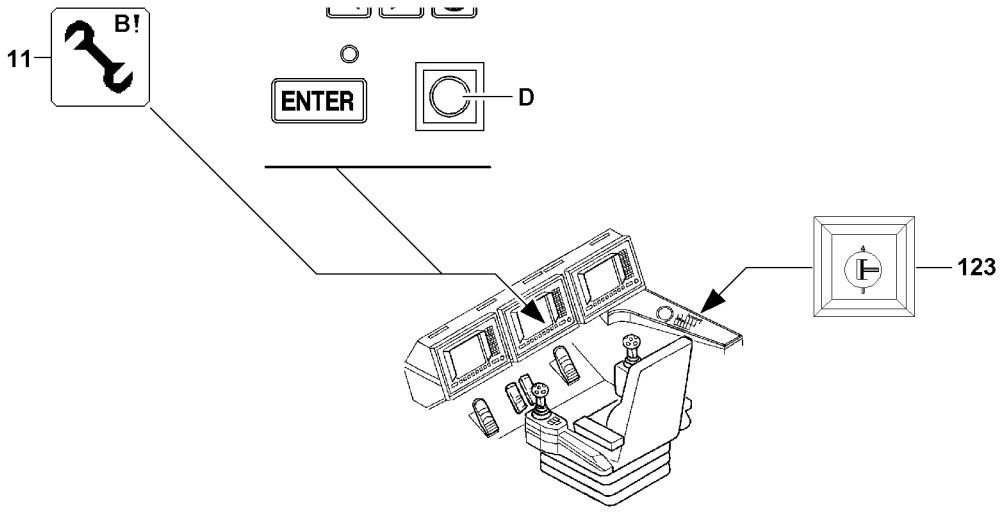

B111642

2.1 Assembling the W-transport units

Note
▶ Observe the instructions, see Crane operating instructions, chapter 5.07!

2.2 Reeving the W-control rope in

Note
▶ Observe the instructions, see Crane operating instructions, chapter 5.07!

2.3 Assembling the guy rods WA-frame 2

Note
▶ Observe the instructions, see Crane operating instructions, chapter 5.07!

2.4 Pinning the relapse supports

Note
▶ Observe the instructions, see Crane operating instructions, chapter 5.07!

2.5 Assembling the WV-lattice jib

Note
▶ Observe the instructions, see Crane operating instructions, chapter 5.07!

2.6 Establishing the electrical connections

Note
▶ Observe the instructions, see Crane operating instructions, chapter 5.07!
▶ Additionally observe the electric wiring diagram!

2.7 Checking the function of the safety devices

Note
▶ Observe the instructions, see Crane operating instructions, chapter 5.07!

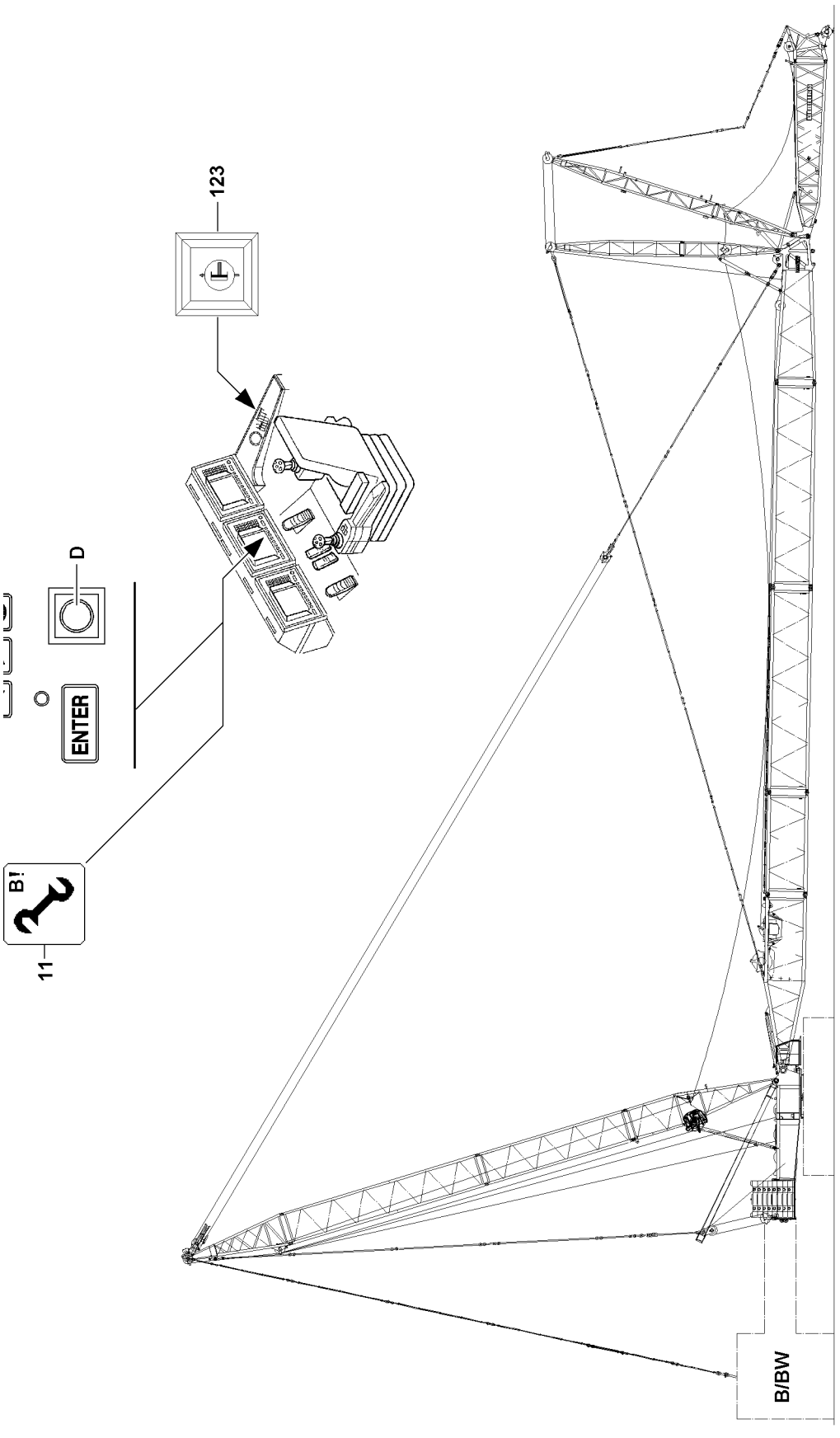

B111643

2.8 Erecting the boom

Note

▶ The erection procedure in this chapter refers to the WV-lattice jibs W-14 and W-21!

DANGER

The crane can topple over!

▶ It is not permitted to turn the crane during the erection procedure!
▶ Observe the data in the erection and take down charts!
▶ Observe the safety technical notes, see Crane operating instructions, chapter 5.01!

DANGER

The crane can topple over!

For certain boom lengths, the mechanical auxiliary supports must be assembled (only for LR-crane), see Erection and take down charts!

▶ The boom must be erected or taken down “to the side” “in the direction” of the mechanical auxiliary supports!
▶ Always erect or take down according to the data in the **erection and take down charts**!

DANGER

Tipping lattice jib!

If the easy movement on the pendulum of the mechanical relapse support is not checked before erection or not reestablished, if necessary, then the mechanical relapse support will not engage in steep lattice jib position. As a result, the lattice jib can tip to the rear!

Personnel can be severely injured or killed!

▶ Check the easy movement on the pendulum **40** of the mechanical relapse support before erection!
▶ If the pendulum does not move easily: Make the pendulum **40** easy to move!

WARNING

The crane can topple over!

If the following conditions are not met before erecting the boom, the crane can topple over!

Personnel can be severely injured or killed!

▶ Spool the lattice jib control out so that the guy rods sag slightly!
▶ Do not allow slack rope to form on the control winch!
▶ Move the relapse cylinder out before erection!

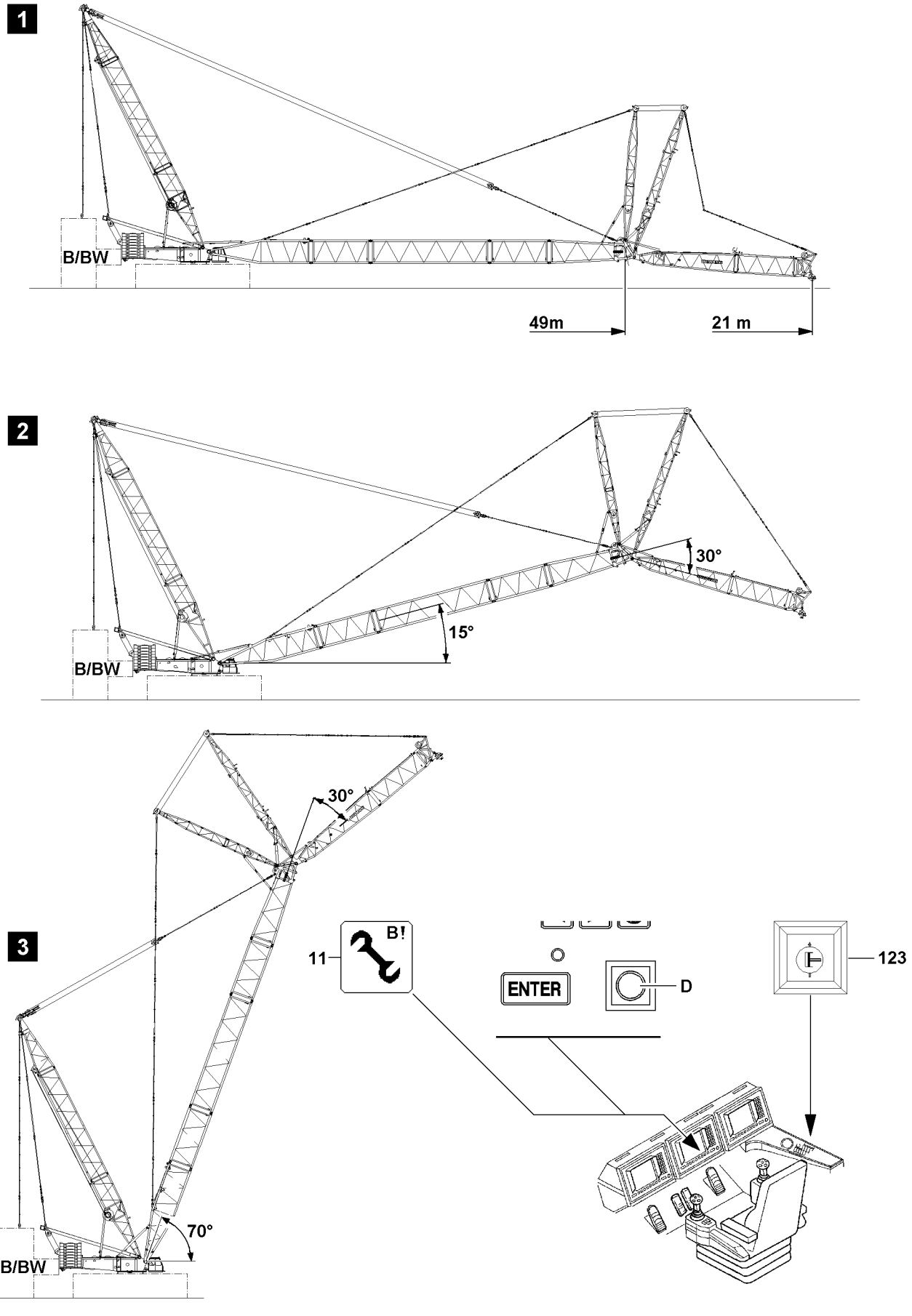

B111644

Make sure that the following prerequisites are met:
- The WV-lattice jib is fully assembled.
- No personnel is within the danger zone.
- The crane is supported.
  (only in connection with crane support or for LG-cranes)
- The crane is aligned in horizontal direction.
- All electrical connections have been established.
- All limit switches are functioning.
- The counterweight has been installed to the turntable according to the load chart.
- The derrick ballast is placed according to the data in the erection and take down charts.
- All pin connections have been secured.
- The hoist rope has been correctly placed in the rope pulleys and is prevented from jumping out with the rope retaining pins.
- There are no loose parts on the boom or the lattice jib.
- The boom, lattice jib and safety devices are free from snow and ice.
- The LICCON overload protection has been set according to the data in the load chart.
- The LICCON overload protection settings have been compared with the actual crane configuration.
- The LICCON overload protection is exceeded.
- The assembly icon **11** is visible on the LICCON monitor.

WARNING
Falling hoist rope!
If the hoist rope is not properly secured with a corresponding length on the WV-lattice jib before the erection procedure, then it can fall backward due to its own weight!
Personnel can be severely injured or killed!
- ▶ Reeve in the hoist rope with sufficient length on the WV-lattice jib before the erection procedure!
- ▶ The hoist rope must be constantly monitored during erection!
- ▶ Do not step into the danger zone!

WARNING
The crane can topple over!
If the S-relapse cylinders are not extended before erecting the boom, then the boom can fall down towards the rear during crane operation and the crane can topple over!
Personnel can be severely injured or killed!
- ▶ Extend the S-relapse cylinder before erecting the boom, see Crane operating instructions, chapter 5.07!

- ▶ Luff the S-boom down until the hook block can be reeved.
- ▶ Reeve in the hook block properly and secure the hoist rope on the rope fixed point, for reeving, see separate reeving plans.
- ▶ Attach the hoist limit switch weight.

See illustration **2**.
- ▶ Luff the S-boom up to 15 °.

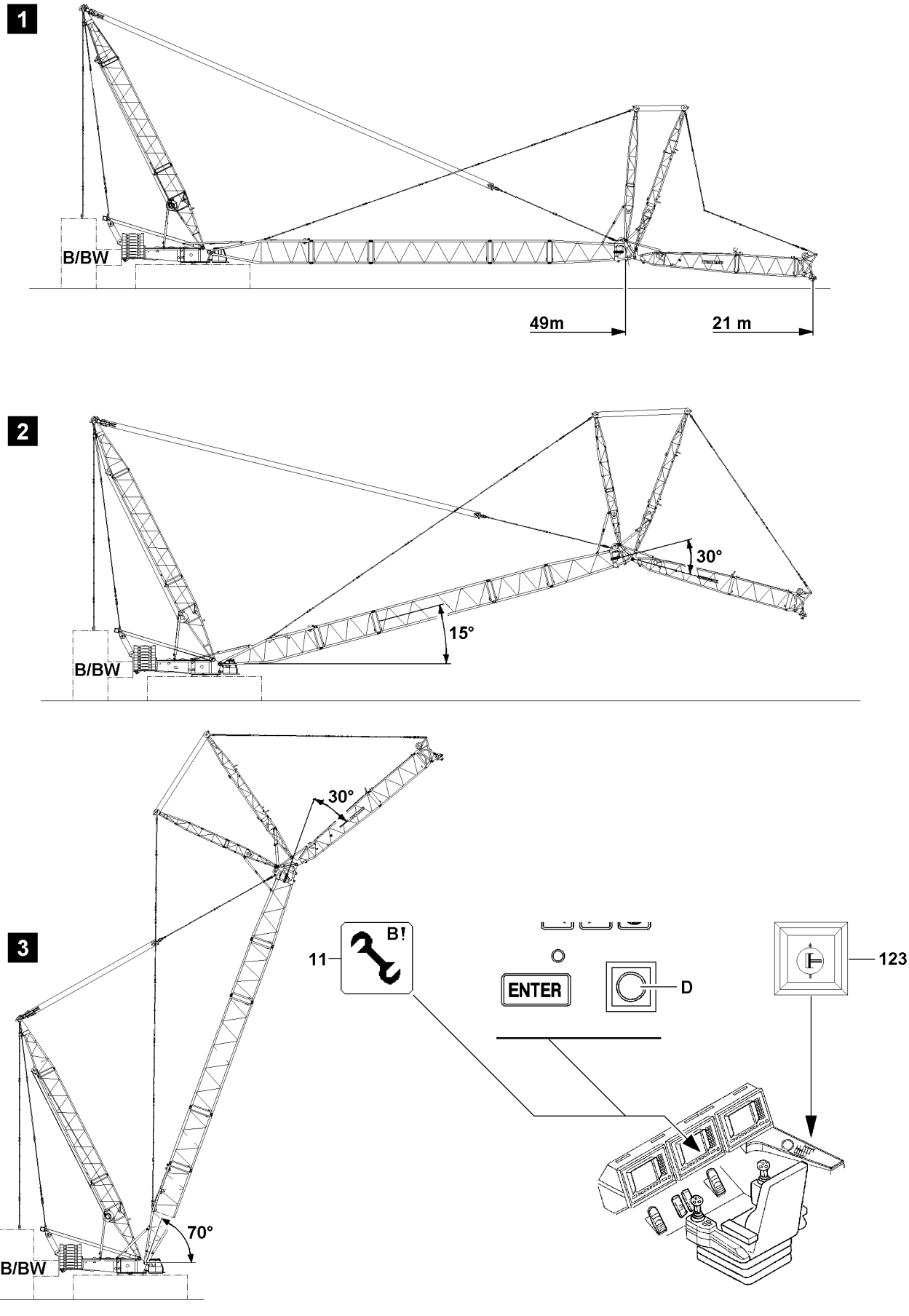

B111644

WARNING
The crane can topple over!
If the angle between the boom and the lattice jib is smaller than or equal to 30 °, then the mechanical relapse support will collide with the flap on the oscillating guard. The crane can topple over!
Personnel can be severely injured or killed!
- ▶ Make sure that the angle between the S-boom and the WV-lattice jib is more than 30 ° during the erection procedure!
- ▶ The angle between the S-boom and the WV-lattice jib may not fall below 30 ° during the erection procedure!
- ▶ Perform a visual inspection during erection!

▶ Lower the WV-boom to -15 ° (the angle between the S-boom and the WV-lattice jib is 30 °).

See illustration **3**.

DANGER
The crane can topple over!
In crane operation with exceeded LICCON overload protection, the crane can topple over!
Personnel can be severely injured or killed!
- ▶ Crane operation with exceeded overload protection is prohibited!
- ▶ The radii listed in the load chart may not be exceeded or fallen below, even if there is no load on the hook!

Note
- ▶ When the lowest operating position of the WV-lattice jib is reached, the LICCON overload protection is activated!
- ▶ In the maximum load icon appears a load number in “t” instead of the display “???”!

▶ Luff the S-boom up to the lowest operating position.

▶ When the S-boom has reached the lowest operating position:
Make sure that the assembly icon **11** on the LICCON monitor turns off.

Result:

– The LICCON overload protection is active.

▶ Luff the S-boom up to 70°.

▶ Luff the WV-lattice jib to 12° or 20° operating position.

▶ Luff the S-boom up into operating position.

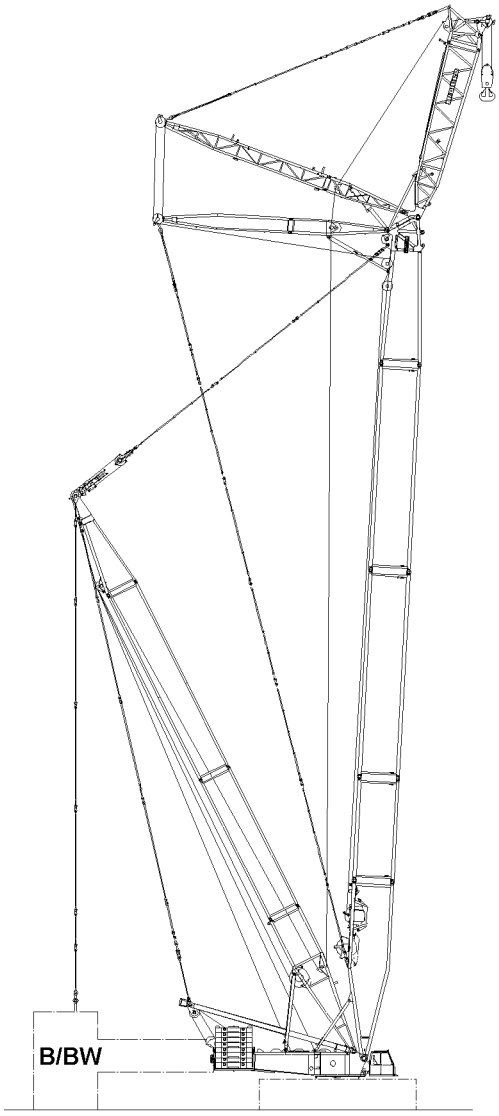

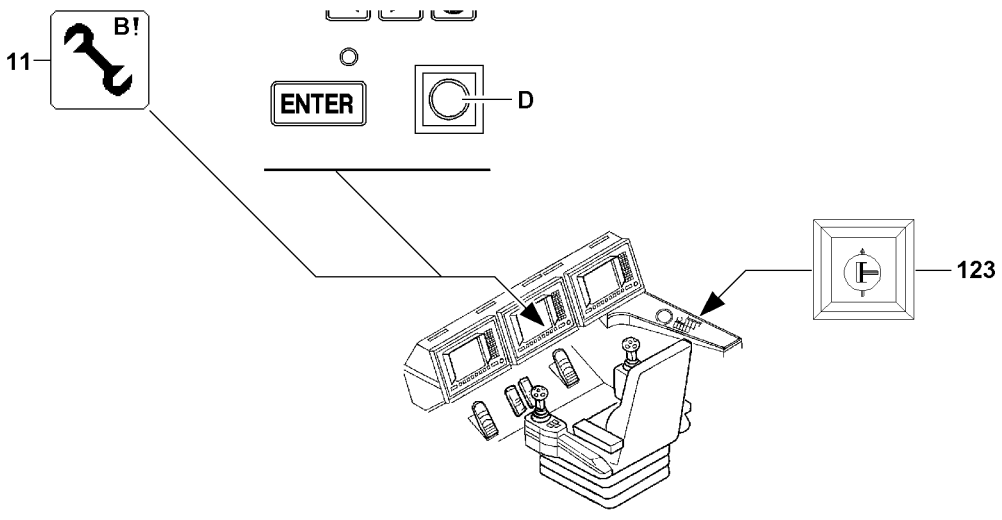

B111645

3 Operating the crane

3.1 Preparing for crane operation

Note

▶ Observer the notes, see Crane operating instructions, chapter 4.05, chapter 4.08 and chapter 5.01!

Make sure that the following prerequisites are met:

– The LICCON overload protection is active.
– The LICCON overload protection has been set according to the data in the load chart.

WARNING

The crane can topple over!

▶ Check the horizontal position of the crane before and during operation!
▶ If the crane operator leaves the cab, even for a short time, the operating mode setting must be checked and reset if necessary before resuming crane operation!

3.2 Checking the settings

▶ Check the function of the overload protection by running against the operating positions “on top” and “bottom”.
▶ Check the hoist limit switch by running against the hoist limit switch weight.
▶ Check the function of the limit switches on the relapse cylinders.

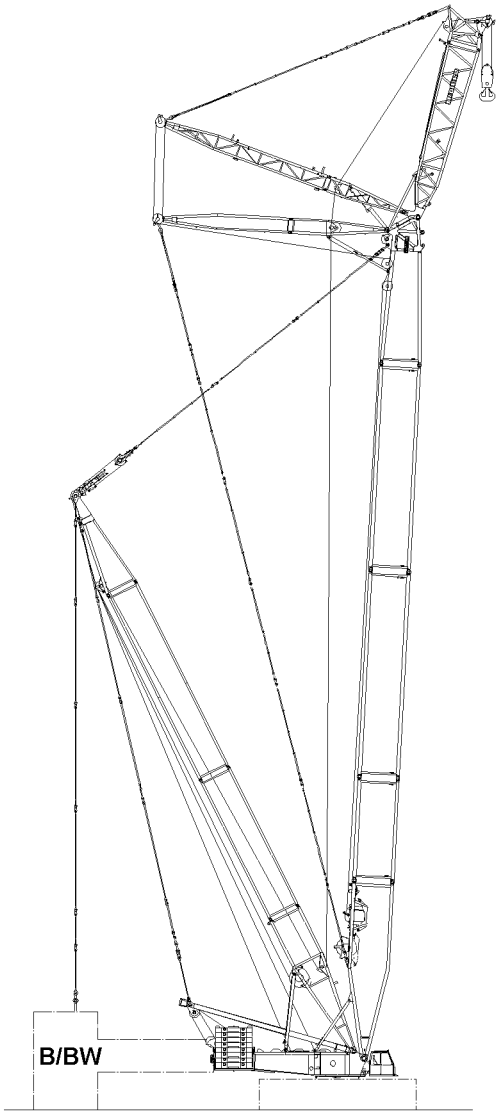

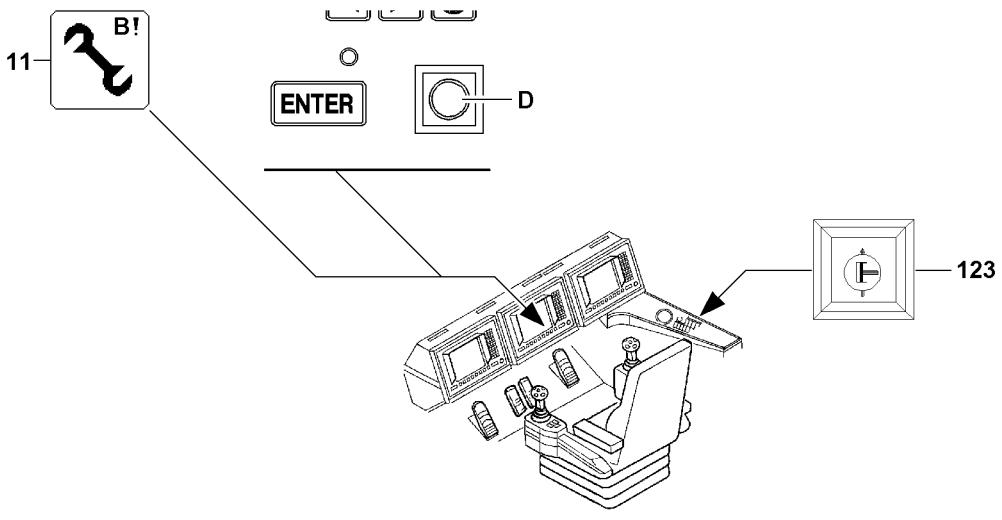

B111645

4 Disassembling the WV-boom system

WARNING
Risk of falling!
During assembly / disassembly work, personnel must be secured with appropriate aids to prevent them from falling. If this is not observed, assembly personnel could fall and suffer severe or fatal injuries!

- ▶ All assembly work must be carried out using suitable aids (lifting platforms, scaffolding, ladder, auxiliary crane, etc.)!
- ▶ If work cannot be carried out on the ground or using such aids, then assembly personnel must be secured with the personal fall arrest system (see Crane operating instructions, chapter 2.04) to protect against falling! The personal fall arrest system must be attached in the corresponding fastening points on the crane (see Crane operating instructions, chapter 2.06)!
- ▶ If railings are present on the components, then they must be brought into the corresponding position and secured for assembly / disassembly work!
- ▶ Step on aids and fall protection equipment only with clean shoes!
- ▶ Keep aids and fall protection equipment clean and free from snow and ice!

WARNING
Falling components!
If unsecured or non-supported components are assembled or disassembled, they can fall down.
Personnel can be killed or seriously injured!

- ▶ During pinning and unpinning of the lattice sections, it is prohibited for anyone to remain **under** or **on** the components as well as within the entire danger zone!
- ▶ Support the boom and components before pinning / unpinning!
- ▶ Pin or unpin both pins laying in a horizontal, i.e. **left** and **right**!
- ▶ Secure the pins in the bearing points and in the receptacles!
- ▶ Do not disengage the auxiliary crane until each component is pinned and secured!
- ▶ It is prohibited to lean a ladder against the component being disassembled!

WARNING
Danger of crushing!
Components can swing during assembling. Hands can be crushed or severed.

- ▶ Make sure that the components do not swing back and forth during assembly!

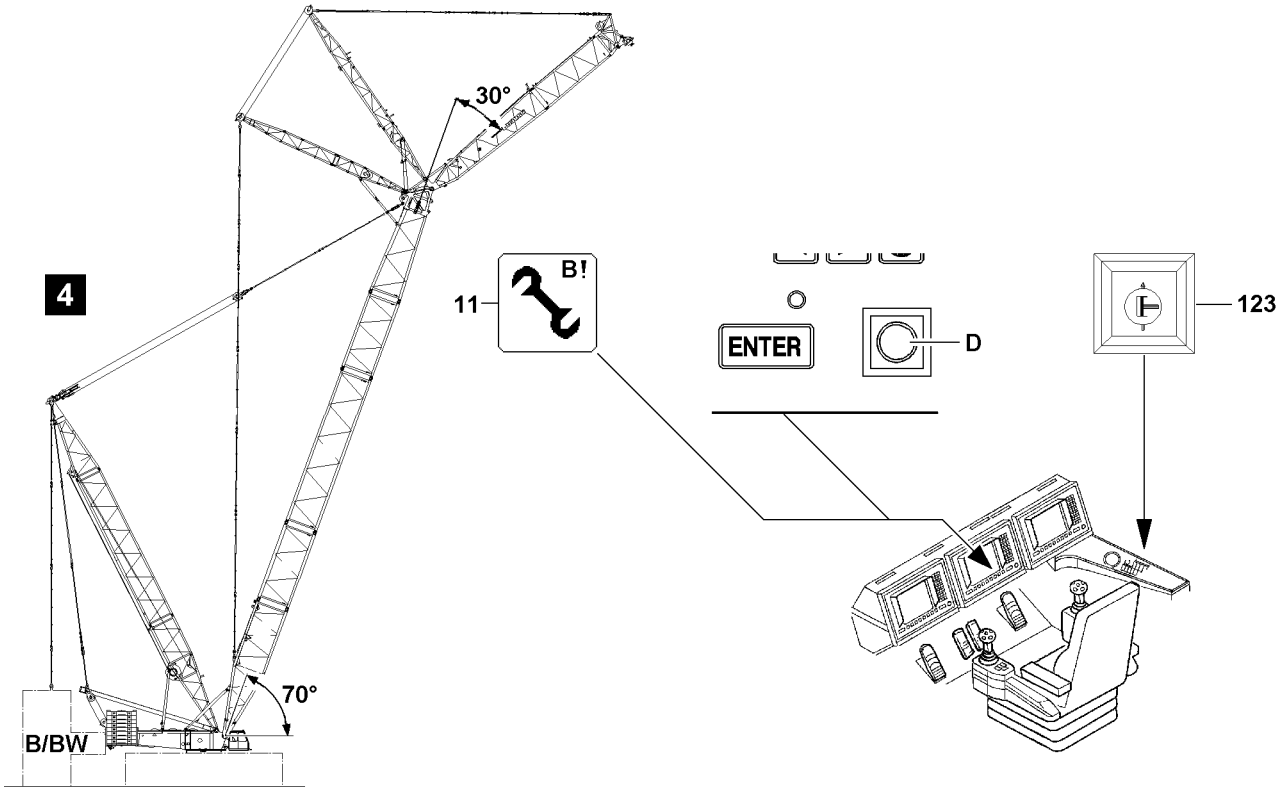

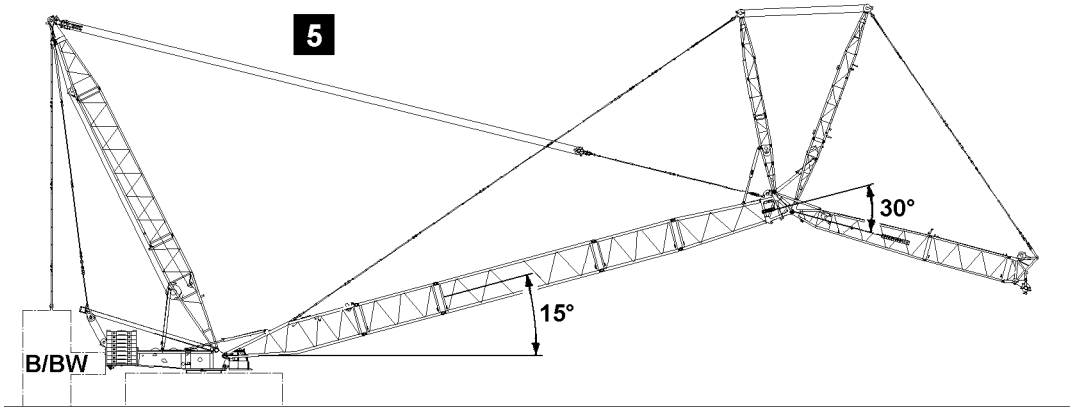

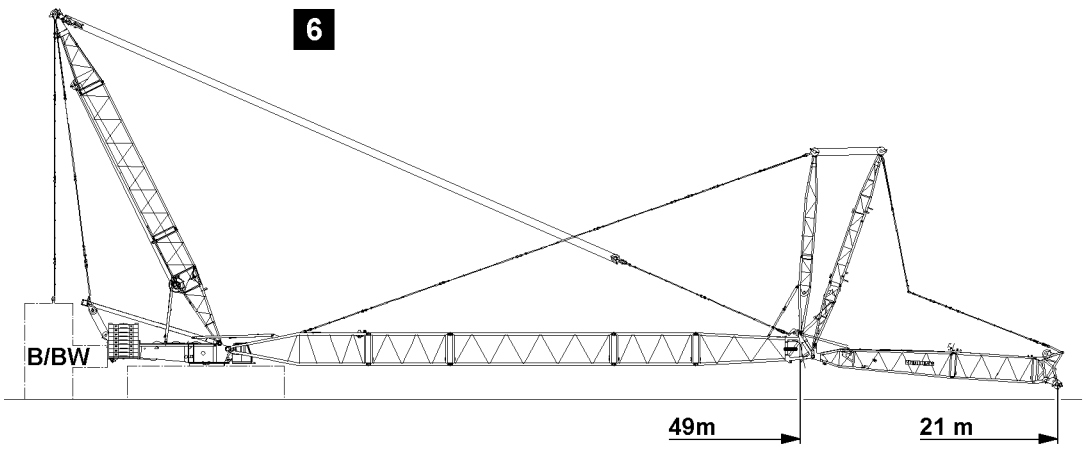

B111646

Note

▶ By supporting the components during assembly / disassembly, ground unevenness is compensated for and the material is protected!

Note

▶ The intermediate sections are pinned and unpinned with the aid of the pin pulling device, see Crane operating instructions, chapter 5.30!

WARNING

Risk of accident!

Personnel can be severely injured or killed!

▶ For pinning and unpinning with the pin pulling device, observe and follow the warning guidelines, see Crane operating instructions, chapter 5.30!

Make sure that the following prerequisites are met:

– The LICCON overload protection is exceeded.
– The LICCON overload protection has been set according to the data in the load chart.
– The assembly icon **11** is visible on the LICCON monitor.
– An auxiliary crane is available.

4.1 Placing the WV-lattice jib down

DANGER

The crane can topple over!

For certain boom lengths, the mechanical auxiliary supports must be assembled (only for LR-crane), see Erection and take down charts!

▶ The boom must be erected or taken down “to the side” “in the direction” of the mechanical auxiliary supports!
▶ Always erect or take down according to the data in the **erection and take down charts**!

WARNING

The crane can topple over!

If the following conditions are not met before taking down the boom, the crane can topple over!

Personnel can be severely injured or killed!

▶ Observe the safety technical notes, see Crane operating instructions, chapter 5.01!
▶ Observe the data in the erection and take down charts!

NOTICE

Damage of boom components!

Taking down the boom system can lead to a collision between the hook block and the pulley head. The boom components can be severely damaged!

▶ Luff the boom system down at the same time and spool the hoist winch out!

Make sure that the following prerequisites are met:

– The S-boom is in operating position.
– The hook block is approx. 5 m below the pulley head of the lattice jib.

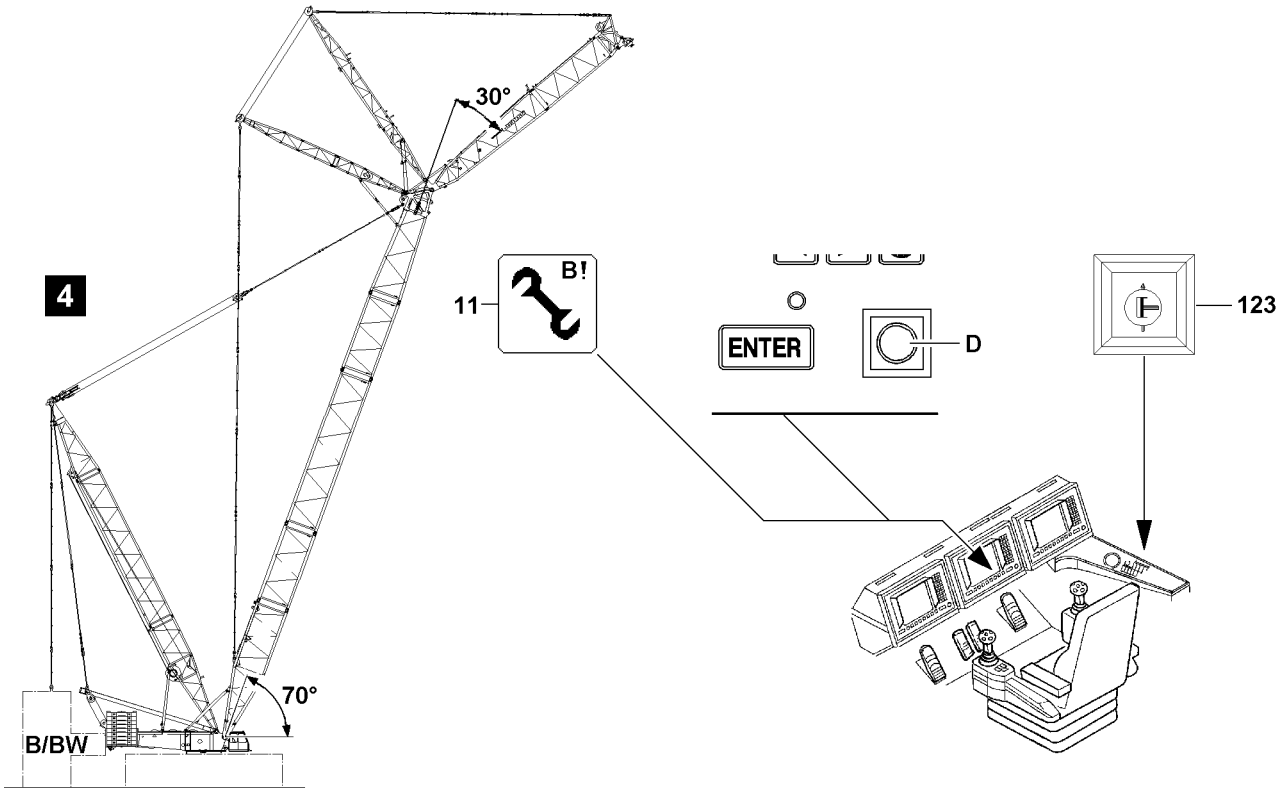

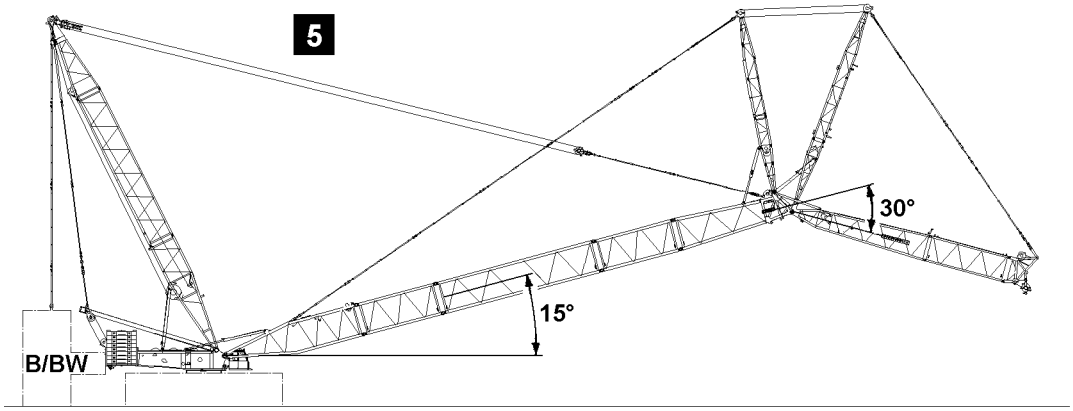

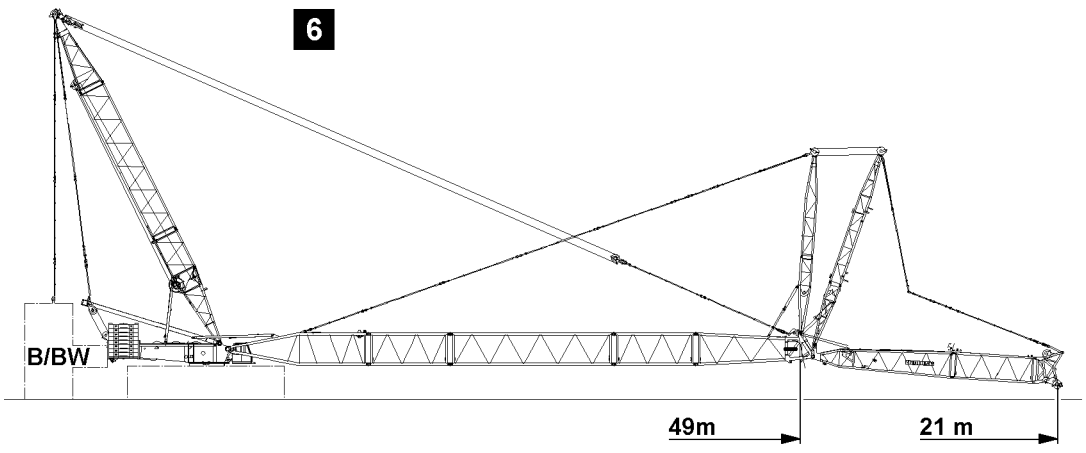

B111646

4.1.1 Luffing the WV-lattice jib down

▶ Luff the S-boom down to 70°, see illustration **4**.

WARNING
The crane can topple over!
If the angle between the boom and the lattice jib is smaller than or equal to 30°, the mechanical relapse support will collide with the flap on the oscillating guard!
The crane can topple over!
Personnel can be severely injured or killed!
▶ Make sure that the angle between the S-boom and the WV-lattice jib is more than 30° during the take down procedure!
▶ Make sure that the angle between the S-boom and the WV-lattice jib does not fall below 30° during the take down procedure!
▶ Perform a visual inspection during erection!

▶ Luff the WV-lattice jib down to approx. 30° to the S-boom, see illustration **5**.

Note
▶ The luff down movement is turned off as soon as the lowest operating position is reached!
▶ When the lowest operating position of the WV-lattice jib is reached, the load display in the maximum load icon turns off and instead of the load display appears the display “???”!
▶ In the crane operating screen appear alarm functions!

▶ Luff the WV-lattice jib down to the “lowest” operating position.

Result:
– The luff down movement is turned off.
– The “STOP” icon appears on the LICCON monitor.
– The horn icon appears on the LICCON monitor.

WARNING
Assembly with turned on set up key!
When the set up key is engaged, the LICCON overload protection is exceeded!
In the event of deliberate improper use, the crane could collapse, the boom can break off or the crane can topple over!
Personnel can be severely injured or killed!
This could result in high property damage!
▶ The set up key **D** may only be actuated by persons who know the effects of a bypass!
▶ Press the set up key **D** only when the set up status was correctly entered into the LICCON computer system!
▶ Observe the erection / take down charts!
▶ Crane operation with the set up key **D** turned on is strictly prohibited!

▶ When the WV-lattice jib has reached the “lowest” operating position:
Turn the set up key **D** to the right.

Result:
– The LICCON overload protection is deactivated.
– The assembly icon **11** appears on the LICCON monitor.

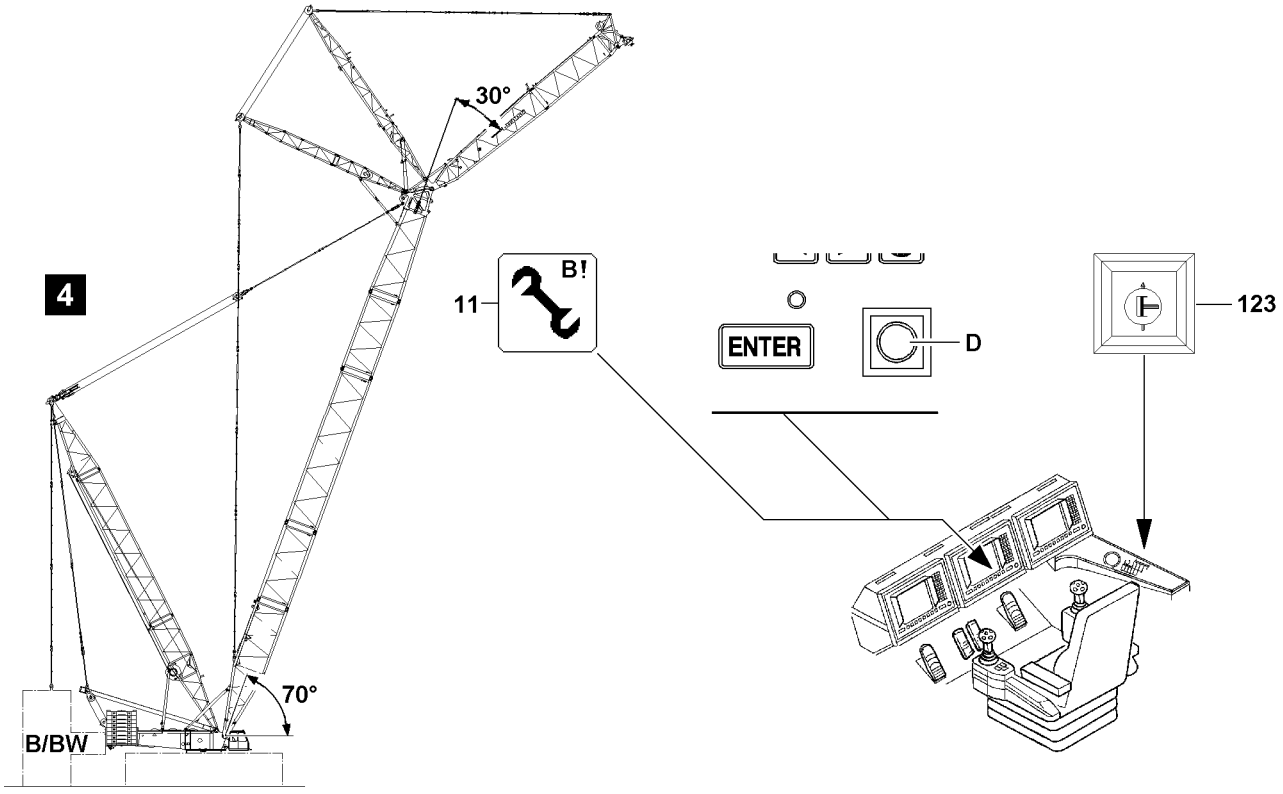

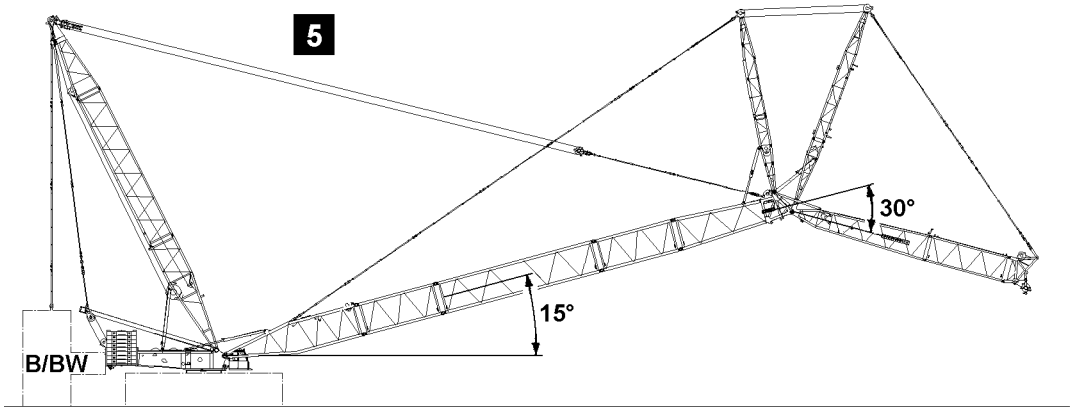

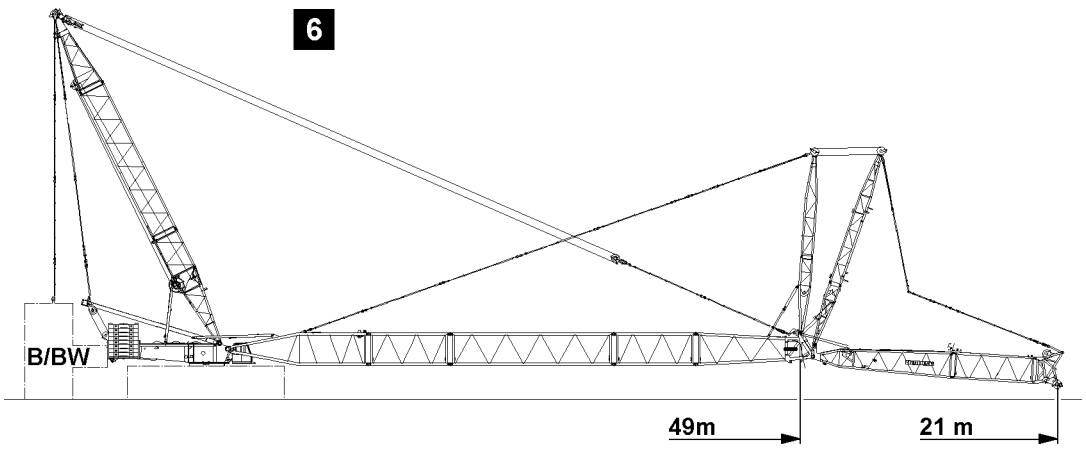

B111646

4.1.2 Placing the WV-lattice jib down

- If the hook block has not yet touched the ground:
  At the same time, spool the hoist winch out and luff the S-boom down until the hook block touches the ground.
- Remove the hoist limit switch weight.
- Unreeve the hook block.
- Luff the S-boom down until SW-end section is laying on the ground.

WARNING
The crane can topple over!
If the following conditions are not met before taking down the boom, the crane can topple over!
Personnel can be severely injured or killed!
- Spool the lattice jib control out so that the guy rods sag slightly!
- Do not allow slack rope to form on the control winch!
- Do not pull the hook block along on the ground!

- Continue to luff down the S-boom and simultaneously spool the WV-lattice jib control out so that the guy rods sag slightly.
- Luff the S-boom down until the S-boom head is laying on the support on the ground.

WARNING
Risk of accident!
- Make sure that no personnel is within the danger zone!
- Secure the hoist rope with the assembly rope and pull it back slowly over the rope pulleys in the WA-frames and lower it toward the W-connector head!

- Lay the hoist rope down.

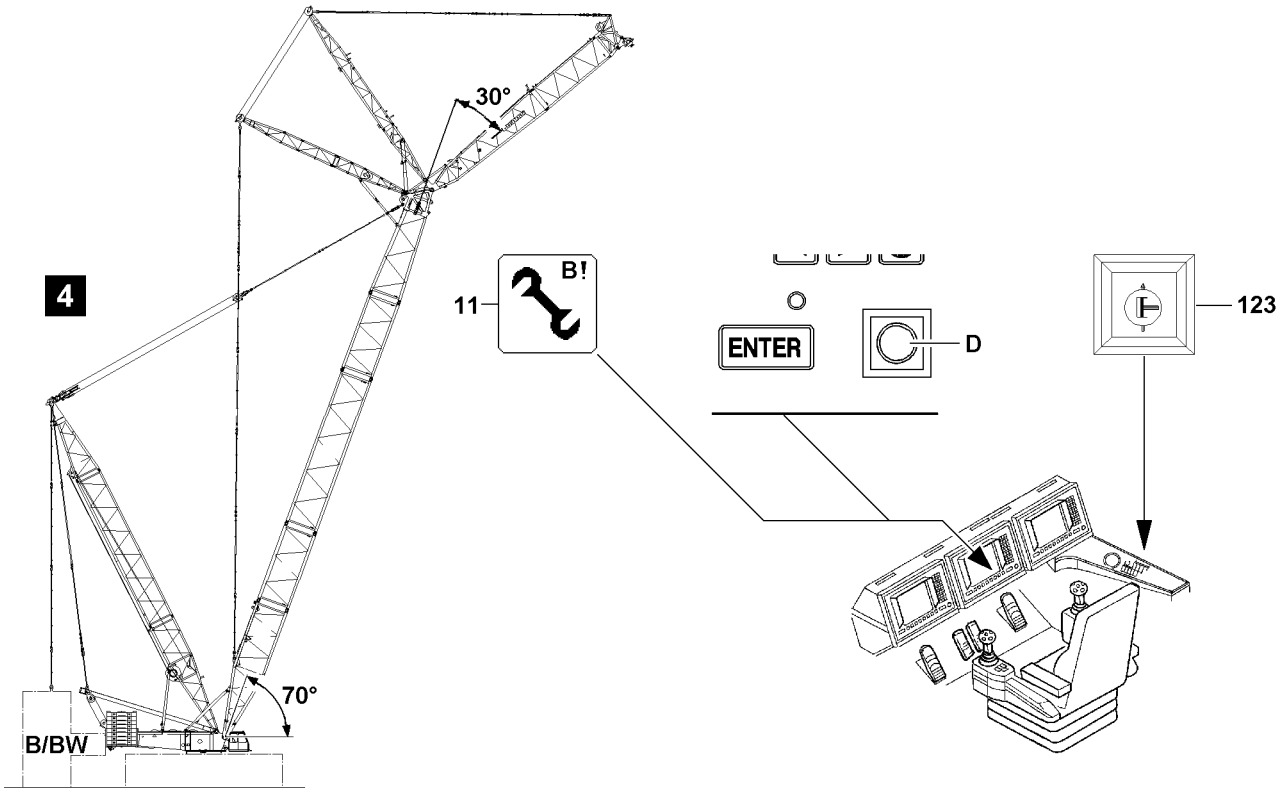

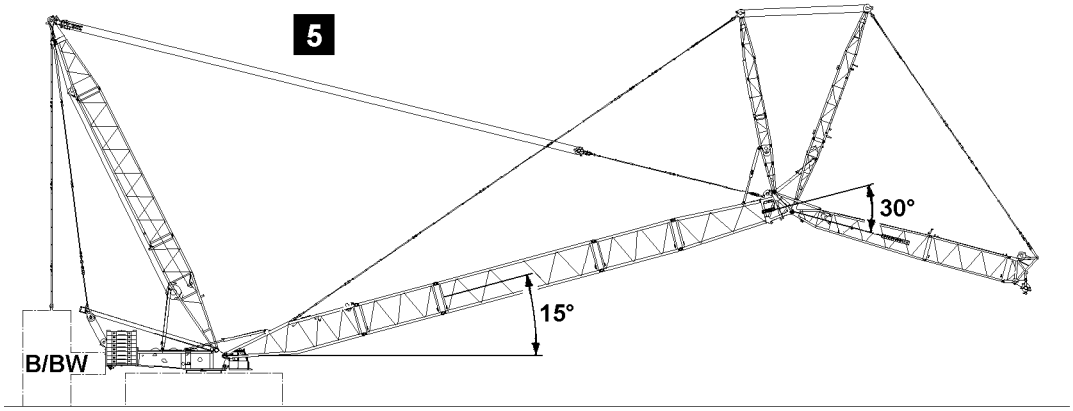

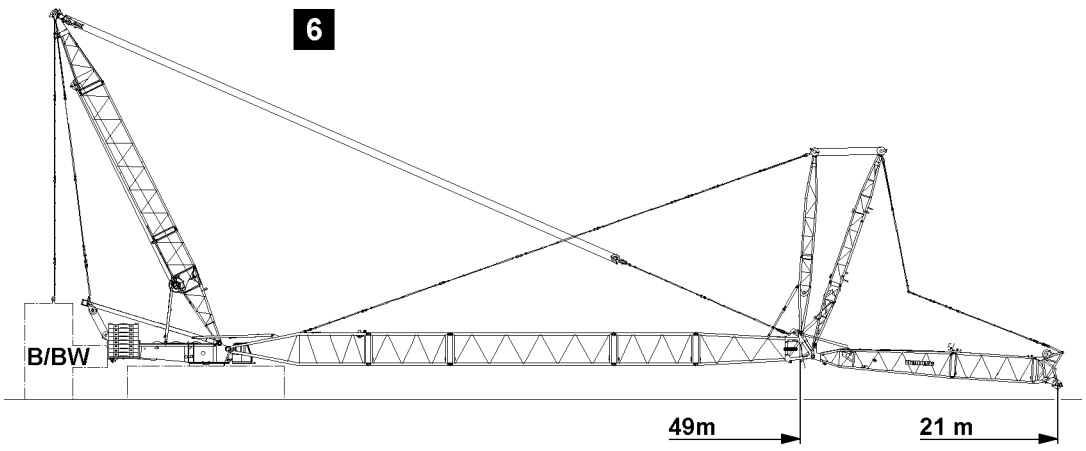

B111646

4.2 Disconnecting the electrical connections

Note
▶ Observe the instructions, see Crane operating instructions, chapter 5.07!

4.3 Disassembling the WV-lattice jib

Note
▶ Observe the instructions, see Crane operating instructions, chapter 5.07!

4.4 Unpinning the relapse supports

Note
▶ Observe the instructions, see Crane operating instructions, chapter 5.07!

4.5 Disassembling the WA-frame 2 guy rods

Note
▶ Observe the instructions, see Crane operating instructions, chapter 5.07!

4.6 Unreeving the W-control ropes

Note
▶ Observe the instructions, see Crane operating instructions, chapter 5.07!

4.7 Disassembling the W-transport units

Note
▶ Observe the instructions, see Crane operating instructions, chapter 5.07!

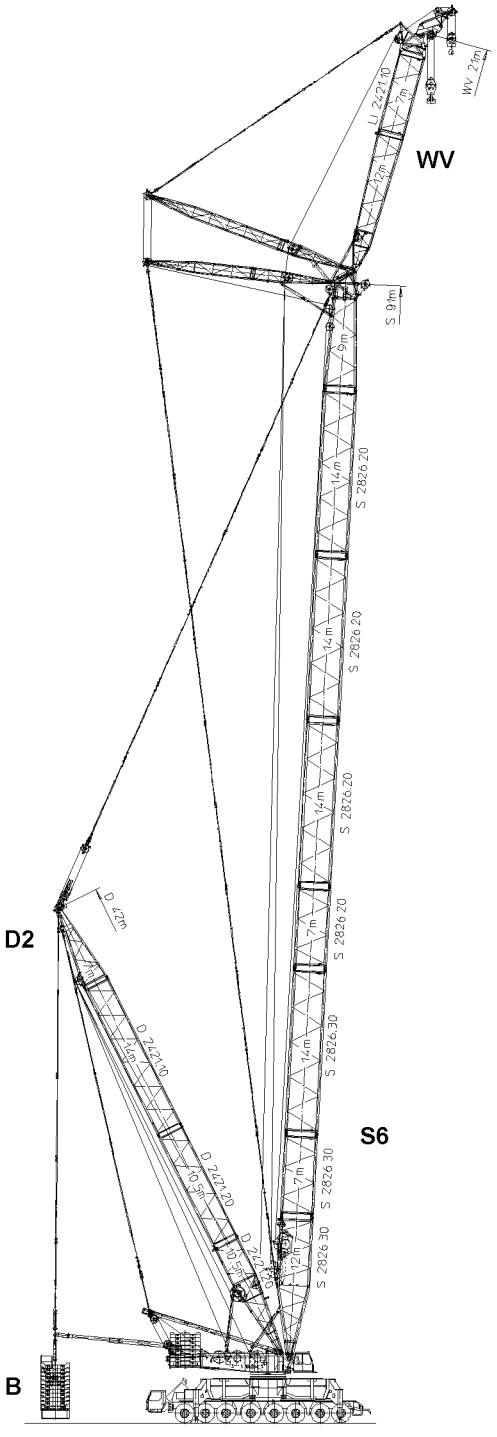

B114936

S6D2WV / S6D2WVB

5 WV-lattice jib in operating mode S6D2WVB (only for LG 1750)

The operating mode **S6D2WVB** differs from the operating mode SDWVB by a reinforced S-boom and by another derrick boom length. The WV-guying however is identical.

Derrick boom lengths	
SD-operation	S6**D2** -operation
31.5 m	42.0 m

5.1 Assembling the WV-lattice jib

WARNING
The crane can topple over!
If danger notes are not observed, the crane can topple over!
Personnel can be severely injured or killed!
▶ Observe and adhere to the danger notes during assembly of the S6D2WVB-boom system!

Note
▶ The assembly of the WV-lattice jib on the S6D2-boom system is identical to the assembly on the SD-boom system!

S

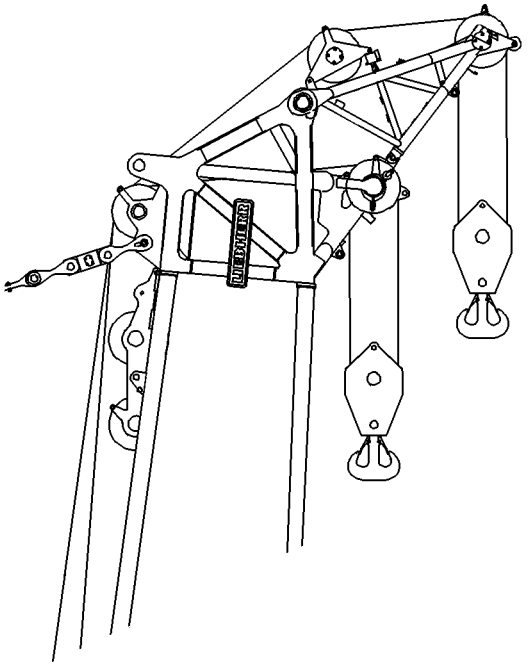

L- (W-)

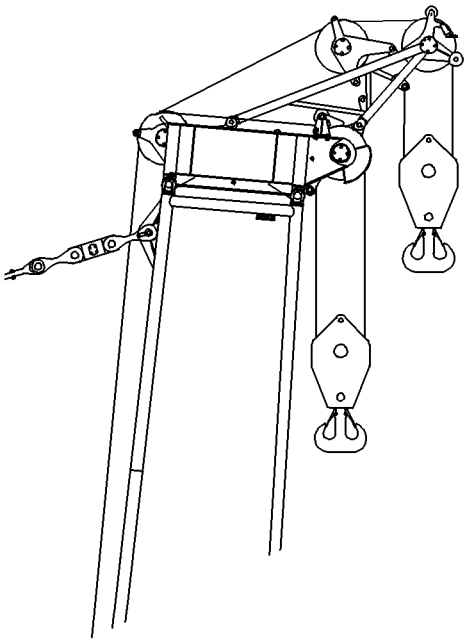

WV

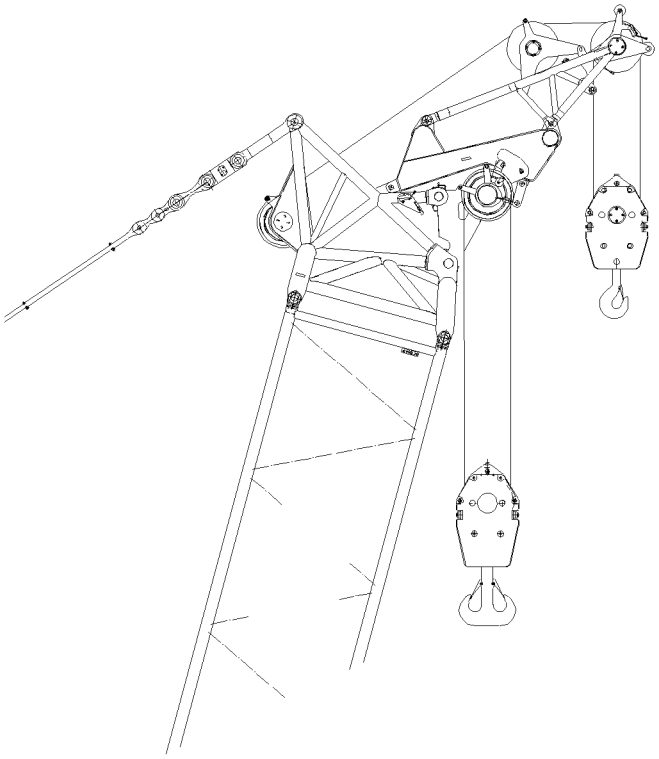

B104486

1 Installing the boom nose 60 t on the boom

1.1 Installing the boom nose

WARNING
Risk of falling!
During assembly / disassembly work, personnel must be secured with appropriate aids to prevent them from falling. If this is not observed, assembly personnel can fall and suffer life-threatening or fatal injuries!

- ▶ Any work, where there is a danger of falling must be carried out with suitable aids (for example lifting platform, scaffolding, ladder, auxiliary crane)!
- ▶ If the work cannot be carried out with such aids nor from the ground, then the assembly personnel must secure themselves with approved fall arrest systems to avoid falling, see Crane operating instructions, chapter 2.04!
- ▶ Approved fall arrest systems must be hung into the respective fastening points on the crane, see Crane operating instructions, chapter 2.06!
- ▶ If railings are present on the components, then they must be brought into the corresponding position and secured for assembly / disassembly work!
- ▶ Step on aids and fall protection equipment only with clean shoes!
- ▶ Keep aids and fall protection equipment clean and free from snow and ice!
- ▶ During all assembly and disassembly work, maintenance work and inspections, travel and crane operation is prohibited!

WARNING
Falling components!
If unsecured or non-supported components are assembled or disassembled, they can fall down. Personnel can be severely injured or killed!

- ▶ During pinning and unpinning of the lattice sections, it is prohibited for anyone to remain **under** or **on** the components as well as within the entire danger zone!
- ▶ Support the boom and components before pinning / unpinning!
- ▶ Pin or unpin both pins at the same horizontal level, i.e. **left** and **right**!
- ▶ Secure the pins in the bearing points and in the receptacles!
- ▶ Do not disengage the auxiliary crane until each component is pinned on and secured!
- ▶ It is prohibited to lean a ladder against the component being disassembled!

WARNING
Danger of impact / crushing!
When installing / removing counterweight components with the auxiliary crane, crane components can start to swing back and forth!
When lifting / lowering and positioning crane components, there is an increased danger of impacts / crushing!
Personnel can be caught and severely injured or killed as a result!

- ▶ Make sure that personnel cannot be caught by components!
- ▶ When working in danger zones: Use aids to protect limbs!
- ▶ Guide components with suitable aids to minimize oscillation!

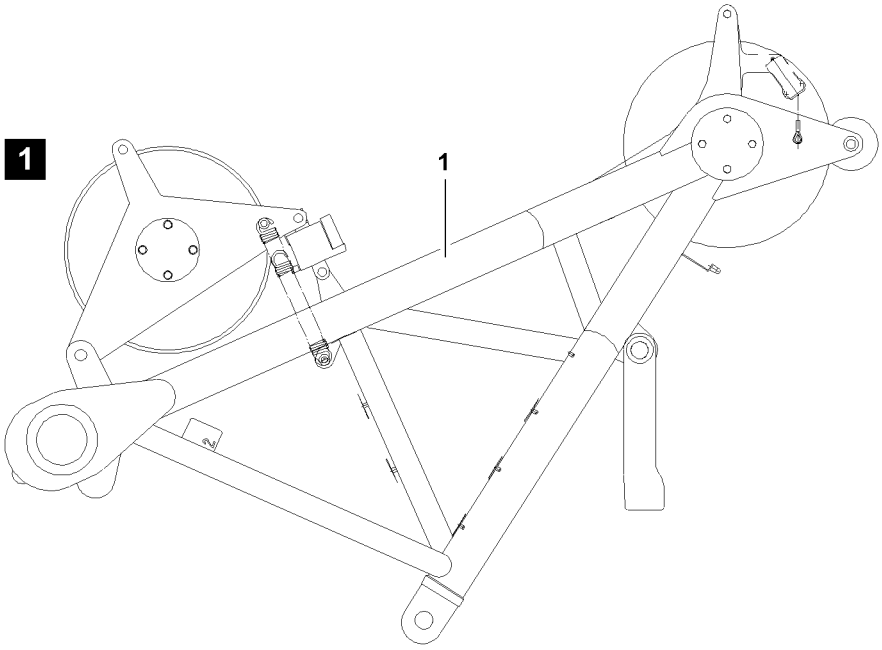

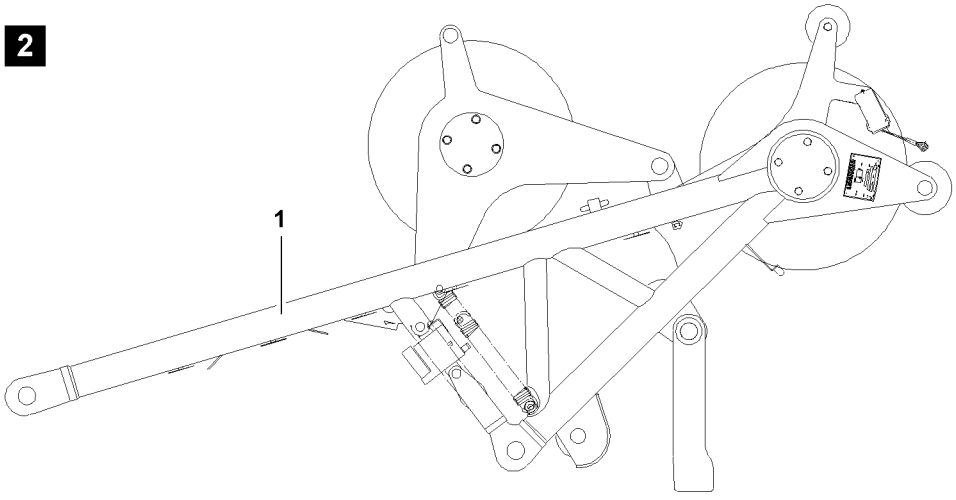

B111812

Note

- The respective boom combination, in connection with the boom nose 60 t, must be assembled according to the supplied rod plans!
- Assembling the boom combination, see Crane operating instructions, chapter 5.38 or chapter 5.39 or chapter 5.07 or chapter 5.08!

1.2 Variations of boom nose and their use

Note

- The boom nose 60 t **1** is available in two variations!
- The boom nose variation of the S-end section can **not** be installed on the L-, W or WV-end section, see illustration **1**!
- The boom nose variation for the L-end section can be installed on the W- as well as on the W-adapter, see illustration **2**!

	Use of boom nose 60 t	
	Variation 1 (illustration 1)	**Variation 2 (illustration 2)**
S-end section	X	
L-end section		X
W-end section		X
W-adapter		X

1.3 Assembly prerequisites for boom nose(s)

WARNING

Assembly with bypassed / exceeded LICCON overload protection!

With bypassed / exceeded LICCON overload protection, the crane can collapse due to overload, the boom can break off or the crane can topple over!

Personnel can be severely injured or killed!

This could result in high property damage!

- The LICCON overload protection may only be bypassed / exceeded by persons who are aware of the consequences of a bypass!
- Bypass / exceed the LICCON overload protection only when the set up status of the crane has been correctly entered into the LICCON computer system!
- Observe the erection / take down charts!
- Crane operation with bypassed / exceeded LICCON overload protection is strictly prohibited!

Make sure that the following prerequisites are met:

– The crane is supported.
(only in connection with crane support or for LG-cranes)
– The crane is aligned in horizontal direction.
– The boom including the respective end section **1** are installed.
– The boom is placed on a load-bearing support.
– The counterweight has been installed on the turntable according to the load chart.
– The LICCON overload protection has been set according to the data in the load chart.
– The LICCON overload protection is exceeded.
– The assembly icon is visible on the LICCON monitor.
– An auxiliary crane is available.

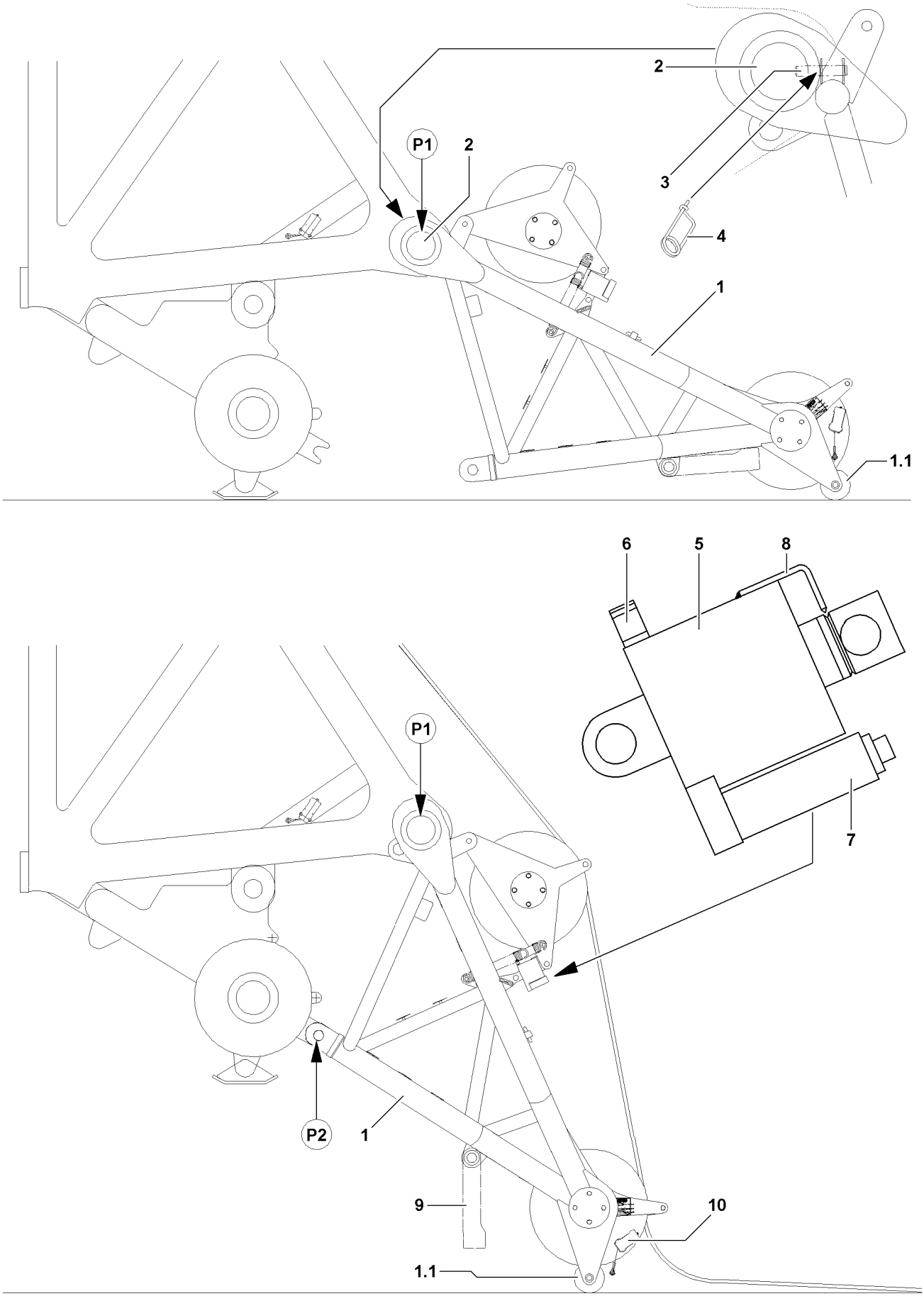

B111811

2 Boom nose 60 t on S-end section

2.1 Installing the boom nose 60 t on the S-end section

Position	Description
1	Boom nose 60 t
1.1	Roller
2	Pin
3	Retaining pin
4	Spring retainer
5	Test cylinder
6	Measuring point
7	Pressure sensor
8	Pointer
9	Rope fixed point (rope lock)
10	Hoist limit switch
20	S-end section

Weight of boom nose 60 t
1100 kg

Make sure that the following prerequisites are met:
- The boom head is laying on the ground.
- An auxiliary crane is available.

▶ Swing the boom nose 60 t **1** with the auxiliary crane in to the pin points, point **P1**, on the S-end section **20**.

▶ Pin the boom nose 60 t on the S-end section **20** on both sides at point **P1** “on top”: Insert the pins **2**.

▶ When the pins **2** are pinned on both sides:
Secure the pins **2** on both sides with retaining pins **3** and locking pins **4**.

▶ Carefully place the boom nose 60 t **1** with the auxiliary crane on the ground.

▶ Remove the auxiliary crane.

▶ Pull the hoist rope over the rope pulleys of the boom nose 60 t **1**, see Reeving plan.

Note

▶ When the boom nose 60 t is installed and reeved on the S-end section, continue the assembly according to section “Lifting the boom off the ground”!

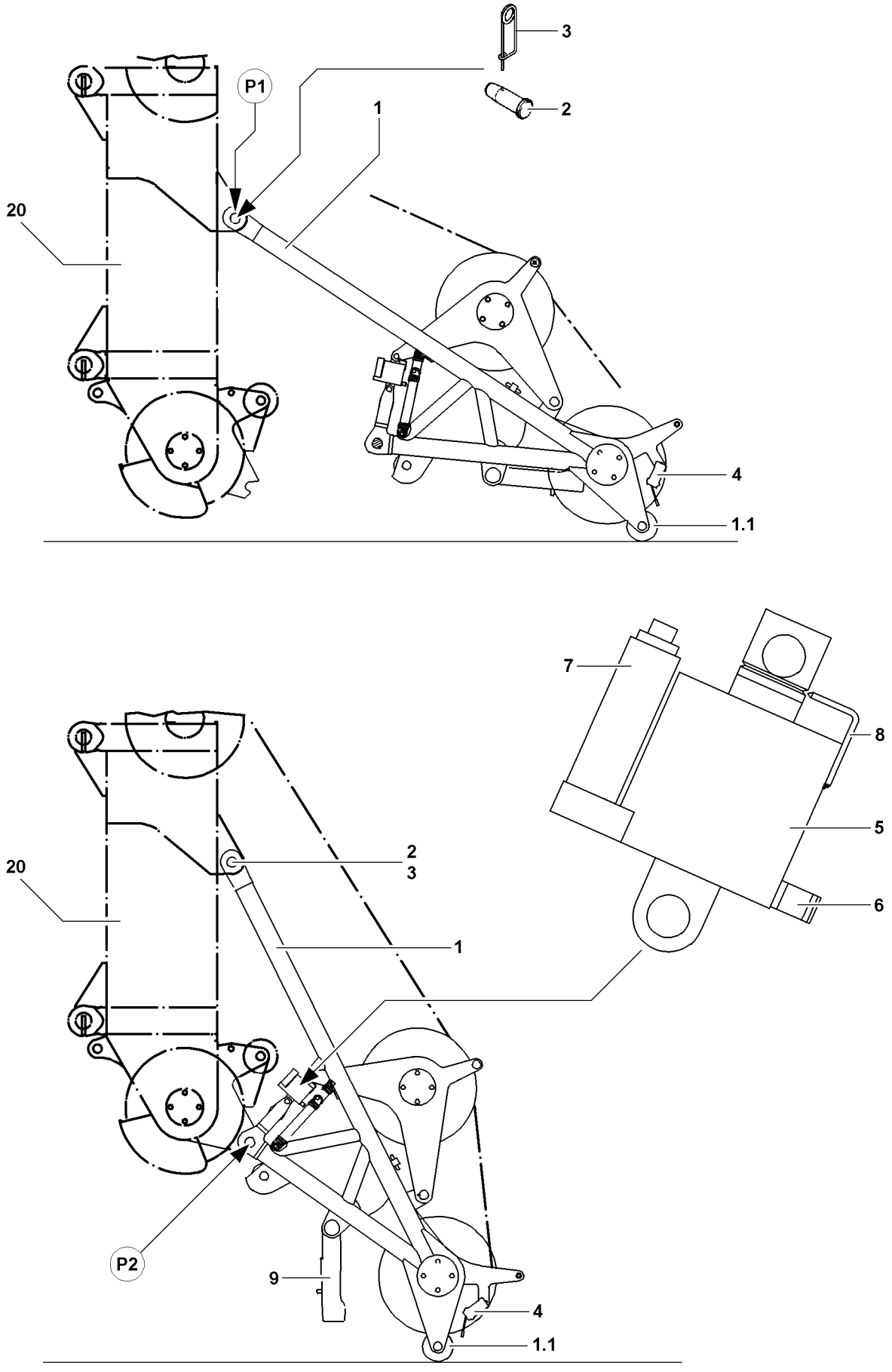

B111813

3 Boom nose 60 t on the L- / W-end section

3.1 Installing the boom nose 60 t on the L- / W-end section

Position	Description
1	Boom nose 60 t
1.1	Roller
2	Pin
3	Spring retainer
4	Hoist limit switch
5	Test cylinder
6	Measuring point
7	Pressure sensor
8	Pointer
9	Rope fixed point (rope lock)
20	L-end section / W-end section

Weight of boom nose 60 t
770 kg

Make sure that the following prerequisites are met:
- The boom head is laying on the ground.
- An auxiliary crane is available.

▶ Swing the boom nose 60 t **1** with the auxiliary crane in to the pin points, point **P1**, on the L- / W-end section **20**.

▶ Pin the boom nose 60 t on the L- / W-end section **20** on both sides at point **P1** “on top”: Insert the pins **2**.

▶ When the pins **2** are pinned on both sides:
Secure the pins **2** on both sides with spring retainers **3**.

▶ Carefully place the boom nose 60 t **1** with the auxiliary crane on the ground.

▶ Remove the auxiliary crane.

▶ Pull the hoist rope over the rope pulleys of the boom nose 60 t **1**, see Reeving plan.

Note

▶ When the boom nose 60 t is installed and reeved on the L- / W-end section, continue the assembly according to section “Lifting the boom off the ground”!

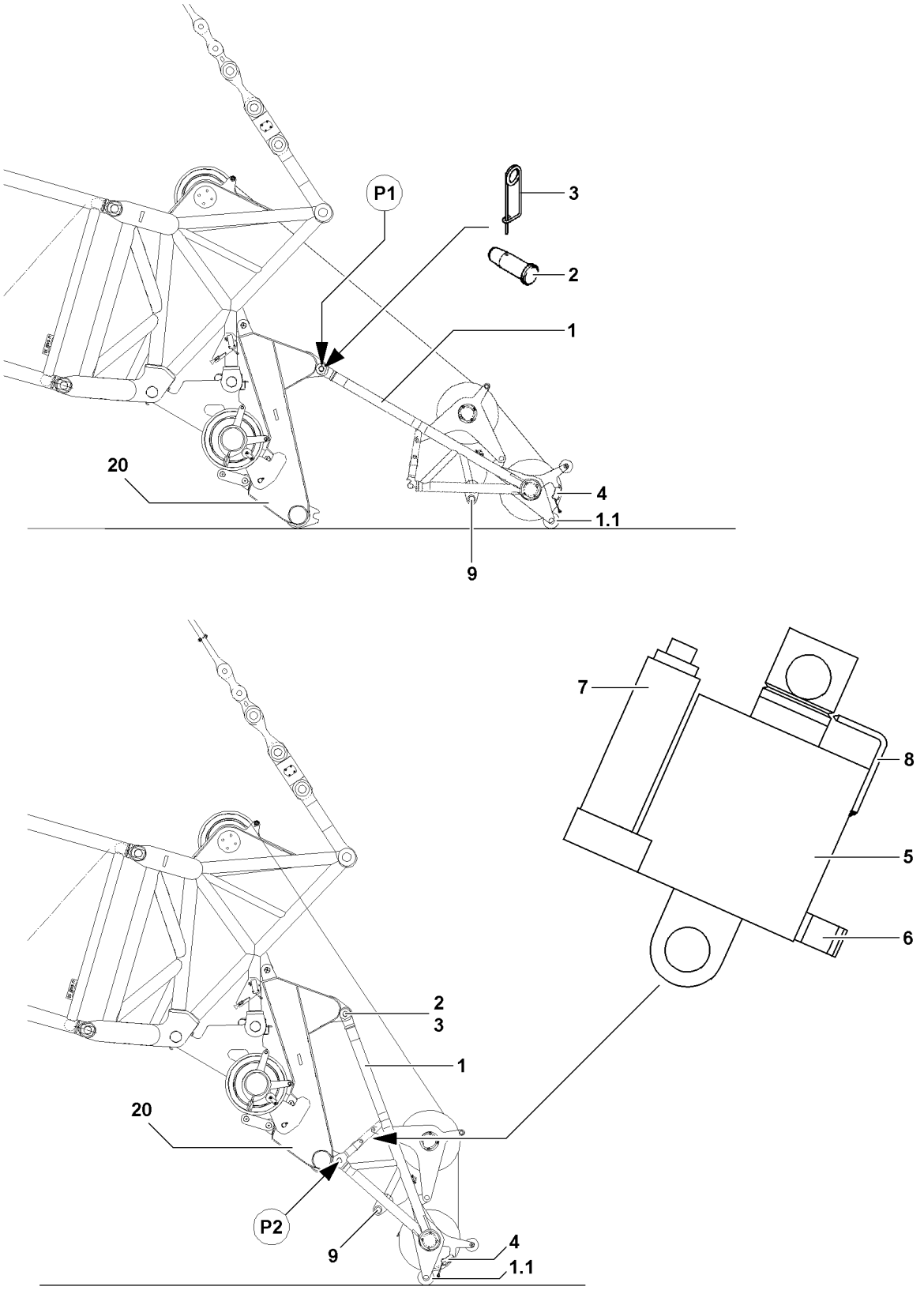

B111814

4 Boom nose 60 t on the SW-adapter

4.1 Installing the boom nose 60 t on the W-adapter

Position	Description
1	Boom nose 60 t
1.1	Roller
2	Pin
3	Spring retainer
4	Hoist limit switch
5	Test cylinder
6	Measuring point
7	Pressure sensor
8	Pointer
9	Rope fixed point (rope lock)
20	W-adapter

Weight of boom nose 60 t
770 kg

Make sure that the following prerequisites are met:
- The boom head is laying on the ground.
- An auxiliary crane is available.

▶ Swing the boom nose 60 t **1** with the auxiliary crane in to the pin points, point **P1**, on the W-adapter **20**.

▶ Pin the boom nose 60 t on the W-adapter **20** on both sides at point **P1** “on top”: Insert the pins **2**.

▶ When the pins **2** are pinned on both sides:
Secure the pins **2** on both sides with spring retainers **3**.

▶ Carefully place the boom nose 60 t **1** with the auxiliary crane on the ground.

▶ Remove the auxiliary crane.

▶ Pull the hoist rope over the rope pulleys of the boom nose 60 t **1**, see Reeving plan.

Note

▶ When the boom nose 60 t is installed and reeved on the W-adapter, continue to assembly according to section “Lifting the boom off the ground”!

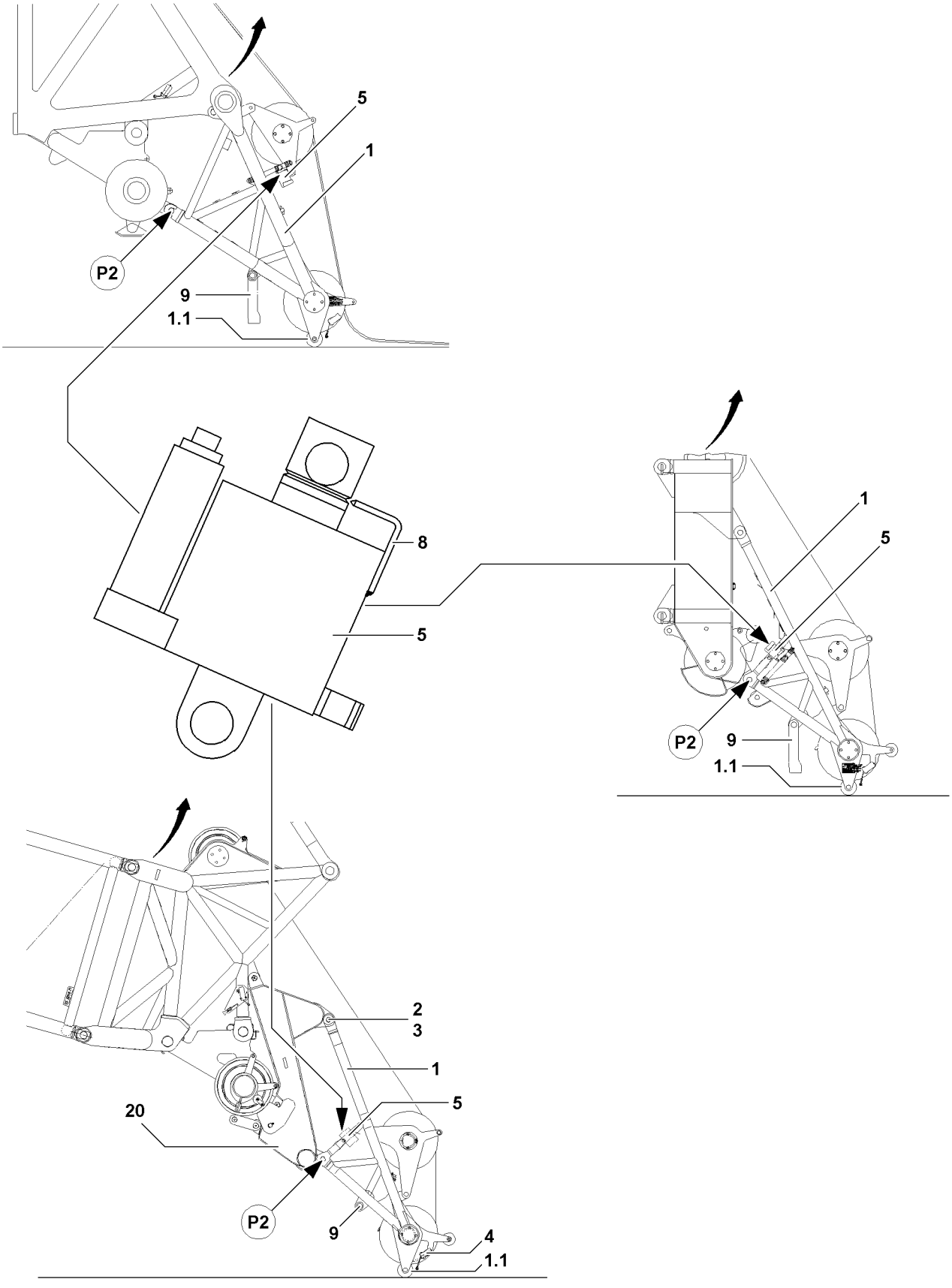

B111815

5 Lifting the boom off the ground

5.1 Lifting the boom off

WARNING
The crane can topple over!
During erection of the respective boom or the boom systems, the crane can be overloaded and topple over!
Personnel can be severely injured or killed!
- ▶ Observe the data in the erection and take down charts!
- ▶ It is prohibited to turn the crane superstructure while erecting the boom!

▶ Luff the boom up carefully.

Result:
– Due to its own weight, the boom nose 60 t runs on the rollers **1.1** slowly toward the “inside”.

▶ Luff up the boom until the boom nose 60 t **1** lifts off the ground.

Result:
– The boom nose 60 t **1** supports itself at point **P2** on the respective end section or on the W-adapter.

NOTICE
Damage of boom nose 60 t!
After the boom nose 60 t **1** is installed on the end section **20**, the boom combination may be placed on the ground again only with utmost caution, otherwise the boom nose 60 t can be severely damaged!
- ▶ Place the boom combination on the ground only with utmost caution!

▶ Carefully place the boom combination down.

Result:
– The boom nose 60 t **1** folds out automatically when it is placed down and runs on the rollers **1.1** toward the “outside”.

6 Establishing the electrical connections

6.1 Establishing the connections

NOTICE
Damage to the electrical connection on the cable drum!
If the electrical connection from the cable drum on the S-pivot section to the terminal box on the S-pivot section is established first before the connection to the terminal box on the respective end section, the electrical connection can be damaged when spooling out the cable drum!
- ▶ Establish first the electrical connection from the cable drum in the S-pivot section to the terminal box on the respective end section and then the electrical connection from the terminal box in the S-pivot section to the cable drum in the S-pivot section!

Note

▶ To establish the electrical connections, use the electrical wiring diagram!

Make sure that the following prerequisites are met:

– The boom is fully assembled.
– The airplane warning light and the wind speed sensor are assembled.

▶ Establish the electrical connections.
▶ Make sure that all electrical connections on the boom are established.

7 Checking the function of the safety devices

7.1 Checking the safety devices

WARNING

Non-functioning safety devices!

If the function of the safety devices is defective, personnel can be severely injured or killed!

▶ Crane operation with non-functioning safety devices is **prohibited**!

Note

▶ The function of the individual limit switches must be checked before erection!
▶ The function of the limit switch initiators must be checked in the test system, see Diagnostics manual!

Note

▶ If a function check on the limit switches or on the safety devices does not lead to the desired shut offs, then the plug connections on the terminal boxes or the components itself must be checked!
▶ If no visible connection errors or component defects can be found, contact **LIEBHERR** Service!

Make sure that the following prerequisites are met:

– All electrical connections have been made.
– The crane engine is running.
– The corresponding operating mode is set on the LICCON monitor.

7.1.1 Checking the wind speed sensor

▶ Test the movement and the function of the wind speed sensor.

7.1.2 Checking the airplane warning light

▶ Turn the airplane warning light on.
▶ Visually check functionality.

7.1.3 Checking the hoist limit switch on the pulley head

Note

▶ When replacing or changing a hoist limit switch (HES), the corresponding hoist limit switch must have the correct bus address and the correct software version in order to be detected again by the bus system (LSB)!

▶ Actuate the hoist limit switch manually on the pulley head.

Result:

– The spool up function of the hoist winch turns off.
– The icon “Hoist top” appears on the LICCON monitor 0.
– The limit switch is functioning.

7.1.4 Checking the limit switch S-boom “Steepest position”

Note

▶ The limit switch functions have to be checked individually before erection!

▶ Cover the limit switch initiators on the S-relapse cylinders individually with a metal plate.

Result:

– The limit switch is actuated manually.
– The spool up function of winch 4 turns off.
– The icon “Boom limitation” appears on the LICCON monitor 0.
– The limit switch is functioning.

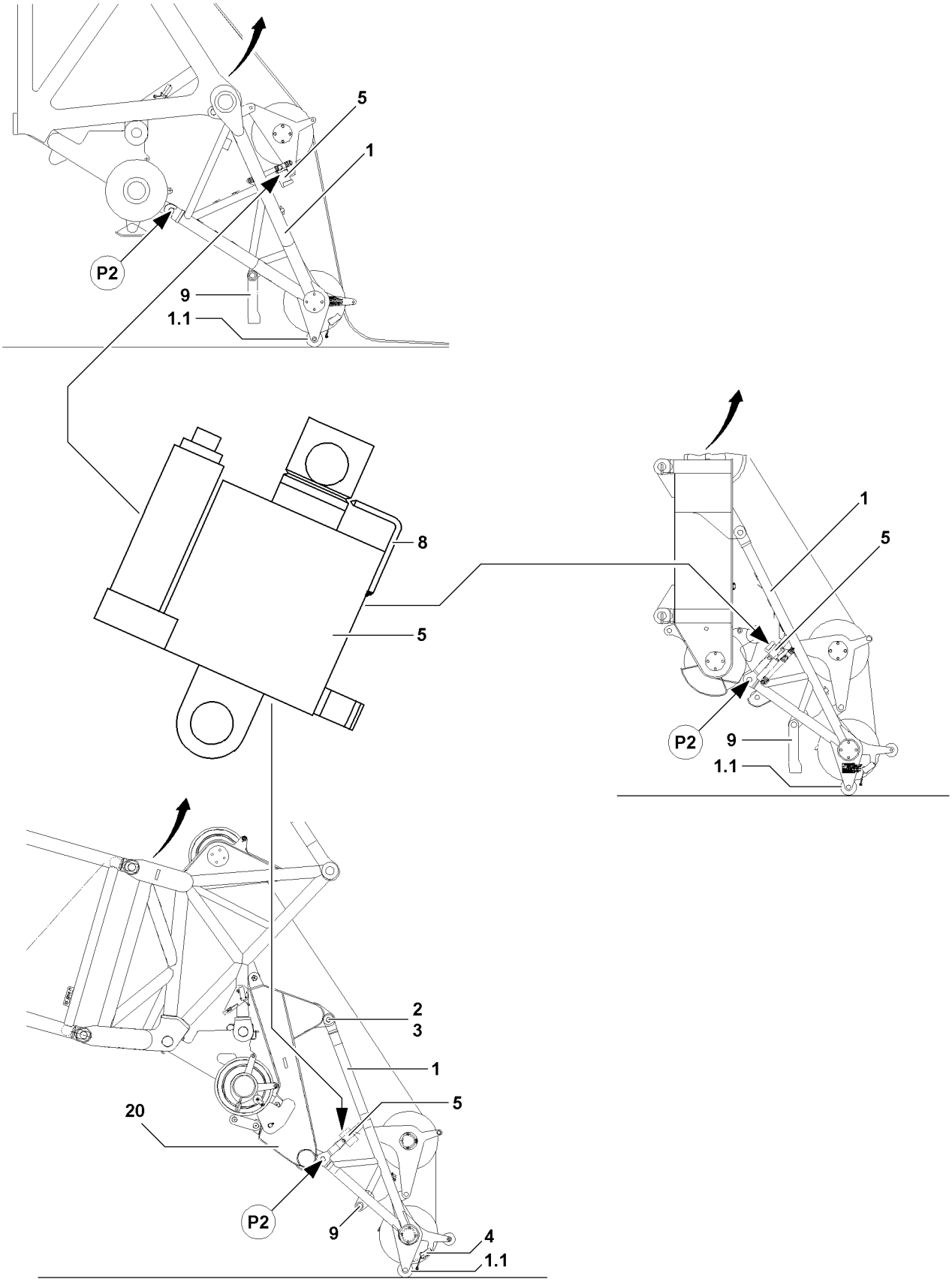

B111815

8 Erecting the boom

8.1 Erection procedure

DANGER
The crane can topple over!
- ▶ It is prohibited to turn the crane superstructure while erecting the boom!
- ▶ Observe the data in the erection and take down charts!

WARNING
The crane can topple over!
If the following conditions are not met before erecting the boom, the crane can topple over!
Personnel can be severely injured or killed!
- ▶ Observe the safety technical notes, see Crane operating instructions, chapter 5.01!
- ▶ Extend the S-relapse cylinders before erecting the boom combinations!
- ▶ Do not allow slack cable to build up on the control winch!

WARNING
Falling hoist rope!
If the hoist rope is not reeved before the erection procedure with the corresponding length on the boom nose 60 t, then it can fall down backward due to its own weight!
Personnel can be severely injured or killed!
- ▶ Reeve the hoist rope with sufficient length on the boom nose 60 t before the erection procedure!
- ▶ The hoist rope must be constantly monitored during the erection procedure!
- ▶ Do not step into the danger zone!

Make sure that the following prerequisites are met:
- – The crane is supported.
  (only in connection with crane support or for LG-cranes)
- – The crane is aligned in horizontal direction.
- – All electrical connections have been established.
- – All limit switches are functioning.
- – The counterweight has been installed to the turntable according to the data in the erection and take down chart.
- – All pin connections have been secured.
- – The hoist rope has been correctly placed in the rope pulleys and is prevented from jumping out with the rope retaining pins.
- – There are no loose parts on the boom.
- – The LICCON overload protection has been set according to the data in the load chart.
- – The LICCON overload protection settings have been compared with the actual crane configuration.
- – The LICCON overload protection is exceeded.
- – The assembly icon is visible on the LICCON monitor.

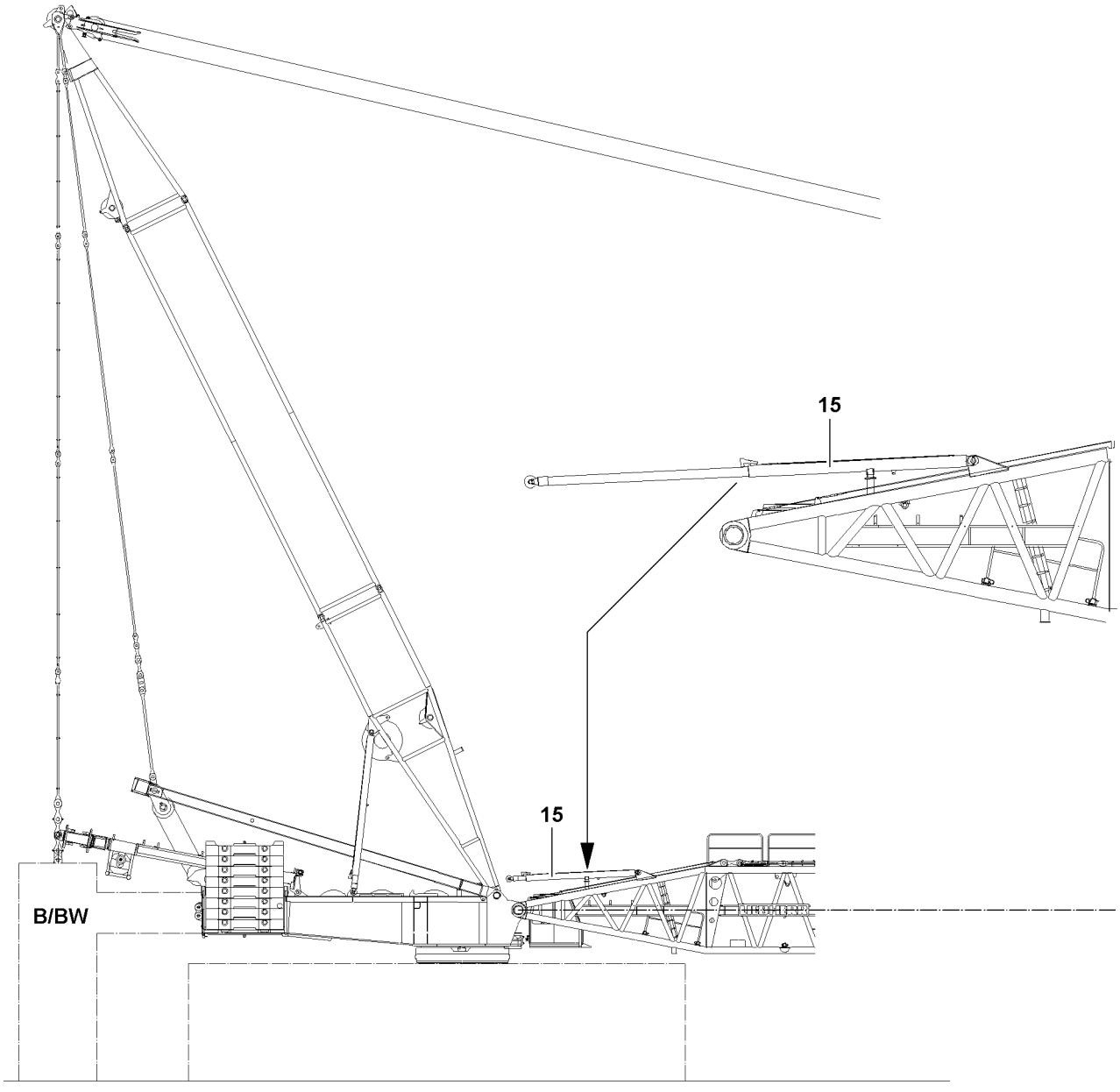

B111819

8.1.1 Extending the S-relapse cylinder

WARNING
The crane can topple over!
If the S-relapse cylinders **15** are not extended before erecting the boom, then the boom can fall down towards the rear during crane operation and the crane can topple over!
Personnel can be severely injured or killed!
▶ Extend the S-relapse cylinders **15** before erecting the boom!

WARNING
The crane can topple over!
If the danger notes for erection of the boom or the boom systems in the following chapters are not observed, then the crane can topple over!
Personnel can be severely injured or killed!
Boom nose installed on S-end section:
▶ Observe and adhere to the danger notes for erection in the Crane operating instructions, chapter 5.38 and chapter 5.39!
Boom nose installed on L-end section:
▶ Observe and adhere to the danger notes for erection in the Crane operating instructions, chapter 5.38 and chapter 5.39!
Boom nose installed on W-end section:
▶ Observe and adhere to the danger notes for erection in the Crane operating instructions, chapter 5.07!
Boom nose installed on W-adapter:
▶ Observe and adhere to the danger notes for erection in the Crane operating instructions, chapter 5.07 and chapter 5.08!

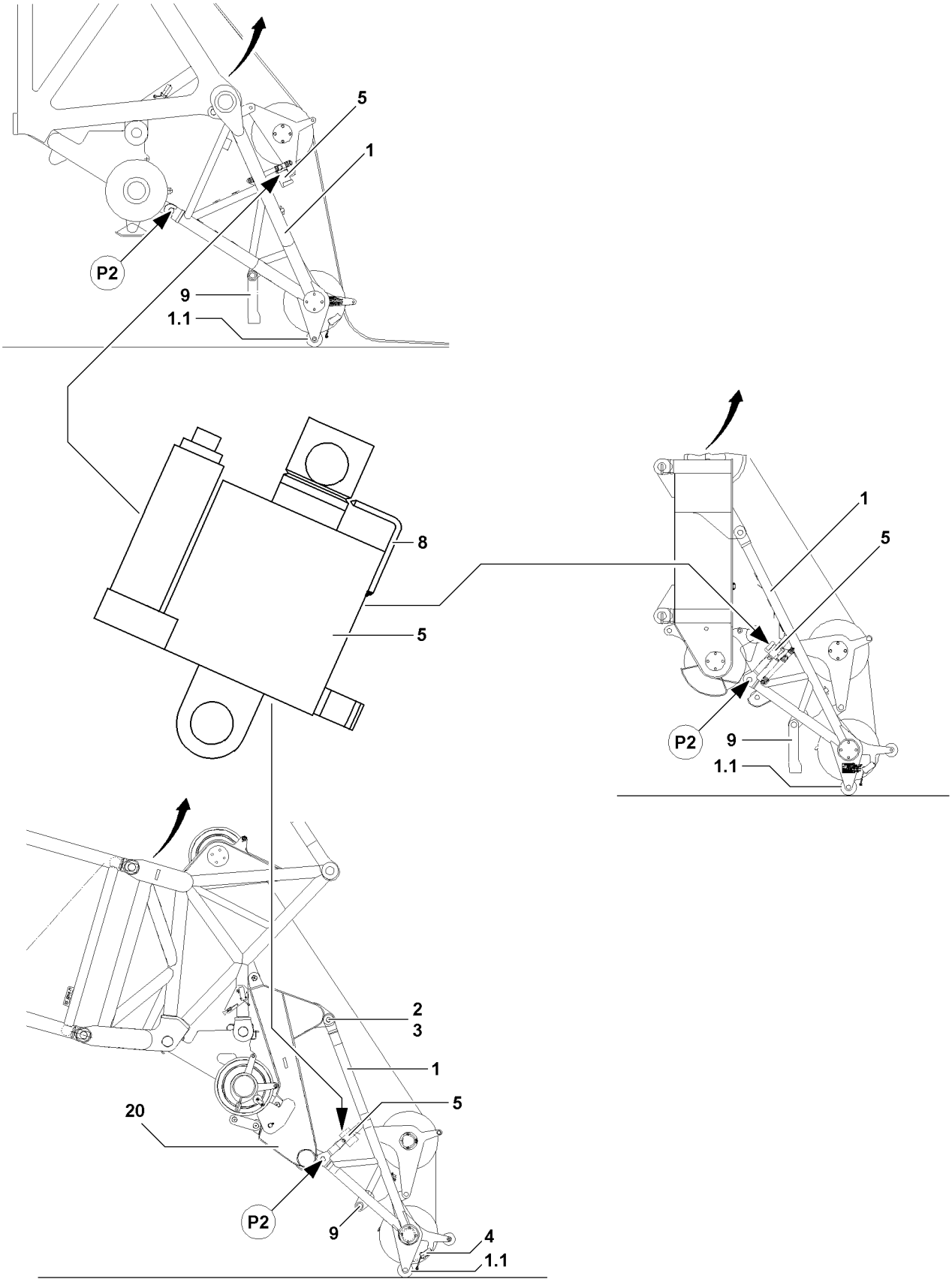

B111815

8.1.2 Erecting the boom

WARNING
Overload of crane!
If the pointer **8** is not at the height of the zero mark (notch) of the test cylinder **5** at operation of the boom nose 60 t **1**, non-exact or incorrect values will be determined when the load is weighed, due to incorrect test values!
The load display on the LICCON monitor does not match the actual load on the load hook or on the hook block!
The crane can be overloaded and topple over!
Personnel can be severely injured or killed!
- ▶ Make sure that the pointer **8** before erecting the boom or before operating the boom nose 60 t **1** is exactly on the zero mark (notch) of the test cylinder **5**!
- ▶ If the pointer **8** is not on the zero mark of the test cylinder **5**, contact the Service Department at LIEBHERR-Werk Ehingen GmbH!

DANGER
The crane can topple over!
- ▶ It is prohibited to turn the crane superstructure while erecting the boom!
- ▶ Observe the data in the erection and take down charts!

Reeving in the hook block

- ▶ Reeve in the hook block properly and secure the hoist rope on the rope fixed point with the required rope end connection, for reeving, see Reeving plans.
- ▶ Insert and secure the rope retaining pin.
- ▶ Attach the hoist limit switch weight, see section Crane operating instructions, chapter 4.06!

Erection

WARNING
The crane can topple over!
In crane operation with exceeded LICCON overload protection, the crane can topple over!
Personnel can be severely injured or killed!
- ▶ The radii listed in the load chart may not be exceeded or fallen below, even if there is no load on the hook!

Note
- ▶ When the lowest operating position of the boom is reached, the LICCON overload protection is activated!
- ▶ In the maximum load icon appears a load number in “t” instead of the display “???”!

- ▶ Luff the boom up to the lowest operating position.
- ▶ When the boom has reached the lowest operating position:
  Make sure that the assembly icon turns off on the LICCON monitor.

Result:
– The LICCON overload protection is active.

S

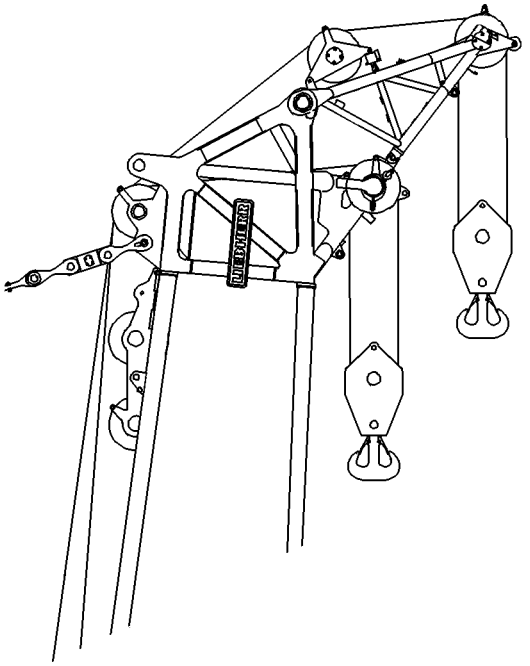

L- (W-)

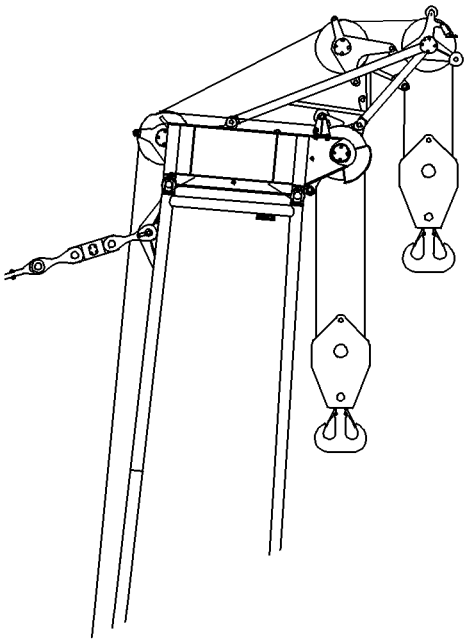

WV

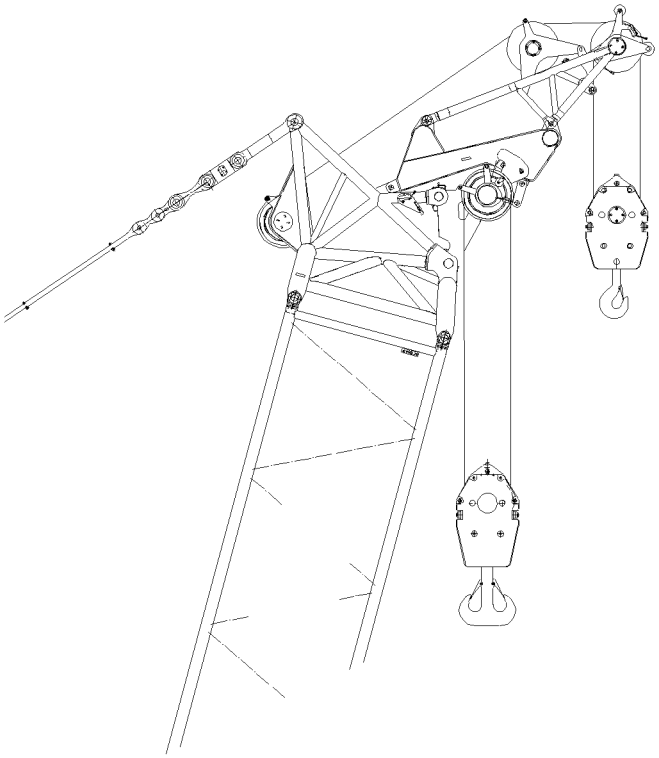

B104486

9 Operating the crane

9.1 Preparing for crane operation

Note

▶ Observe the notes, see Crane operating instructions, chapter 4.05, chapter 4.08 and chapter 5.01!

Make sure that the following prerequisites are met:

– The LICCON overload protection is active.
– The LICCON overload protection has been set according to the data in the load chart.

WARNING

The crane can topple over!

▶ Check the horizontal position of the crane before and during operation!
▶ If the crane operator leaves the cab, even for a short time, the operating mode setting must be checked and reset if necessary before resuming crane operation!

9.2 Checking the settings

▶ Check the function of the overload protection by running against the operating positions “on top” and “bottom”.
▶ Check the hoist limit switch by running against the hoist limit switch weight.
▶ Check the function of the limit switches on the relapse cylinders.

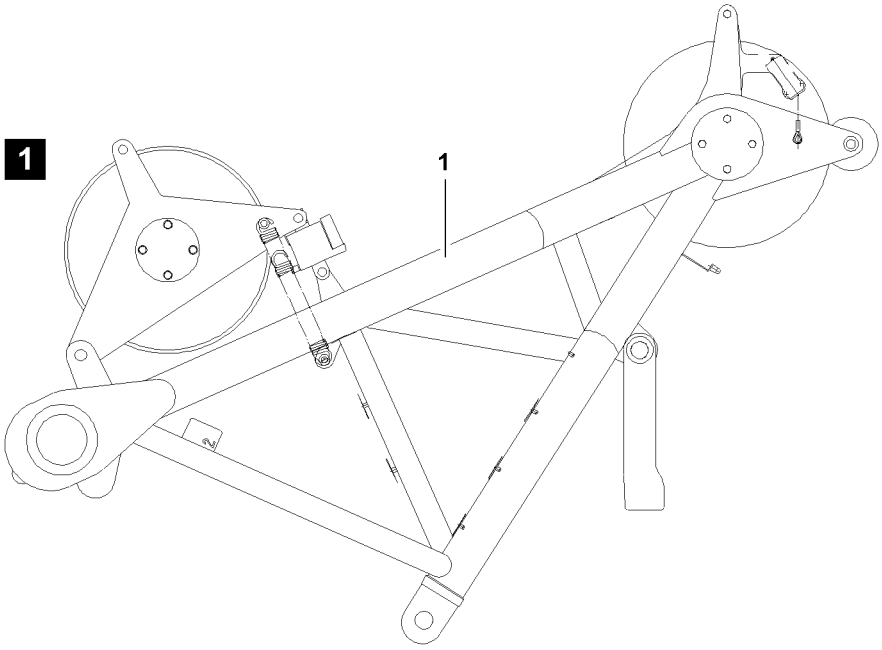

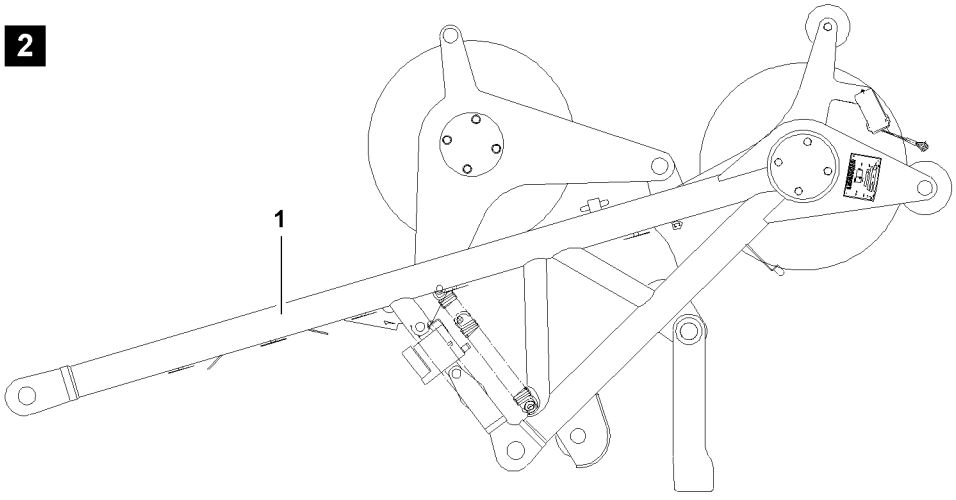

B111812

10 Disassembling the 60 t boom nose

WARNING
Risk of falling!
During assembly / disassembly work, personnel must be secured with appropriate aids to prevent them from falling. If this is not observed, assembly personnel can fall and suffer life-threatening or fatal injuries!

- ▶ Any work, where there is a danger of falling must be carried out with suitable aids (for example lifting platform, scaffolding, ladder, auxiliary crane)!
- ▶ If the work cannot be carried out with such aids nor from the ground, then the assembly personnel must secure themselves with approved fall arrest systems to avoid falling, see Crane operating instructions, chapter 2.04!
- ▶ Approved fall arrest systems must be hung into the respective fastening points on the crane, see Crane operating instructions, chapter 2.06!
- ▶ If railings are present on the components, then they must be brought into the corresponding position and secured for assembly / disassembly work!
- ▶ Step on aids and fall protection equipment only with clean shoes!
- ▶ Keep aids and fall protection equipment clean and free from snow and ice!
- ▶ During all assembly and disassembly work, maintenance work and inspections, travel and crane operation is prohibited!

WARNING
The lattice sections can fall down!
If the lattice sections are not pinned and secured correctly, then they can fall down and fatally injure personnel!

- ▶ Pin or unpin both pins at the same horizontal level, i.e. **left and right**!
- ▶ Do not stand under the booms or within the entire danger zone during the boom pinning and unpinning procedure!
- ▶ Safely secure the pins in the bearing points as well as receptacles!
- ▶ It is prohibited to lean the ladder against the component being disassembled!

WARNING
Danger of crushing!
When assembling crane components, limbs can be crushed or even severed due to oscillation of components!

- ▶ Make sure that the components do not swing back and forth during assembly!

DANGER
The components can fall down!
If the corresponding components are disengaged from the auxiliary crane before the corresponding component is pinned, the corresponding component can fall down and fatally injure personnel!

- ▶ Do not disengage the auxiliary crane until the corresponding component is pinned and secured!

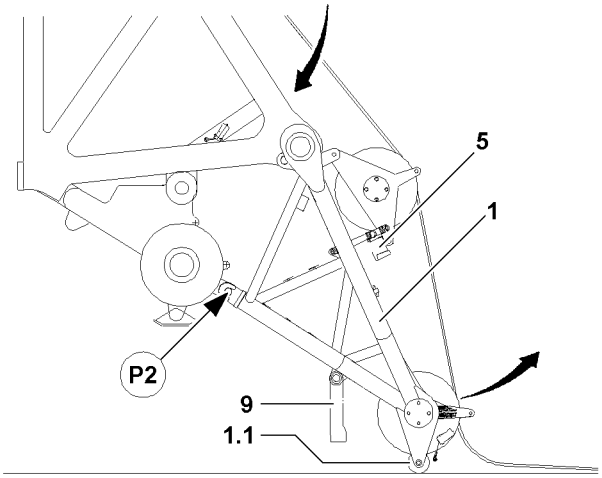

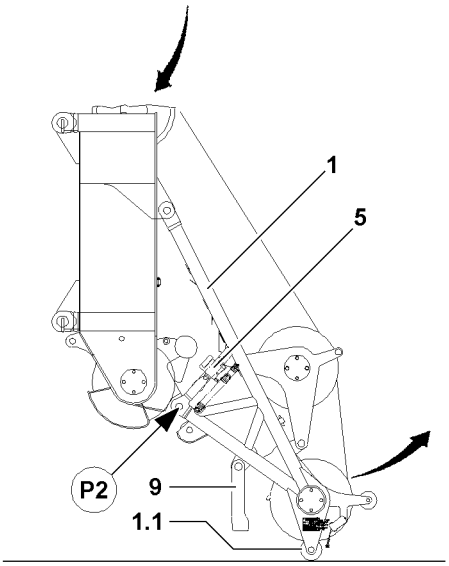

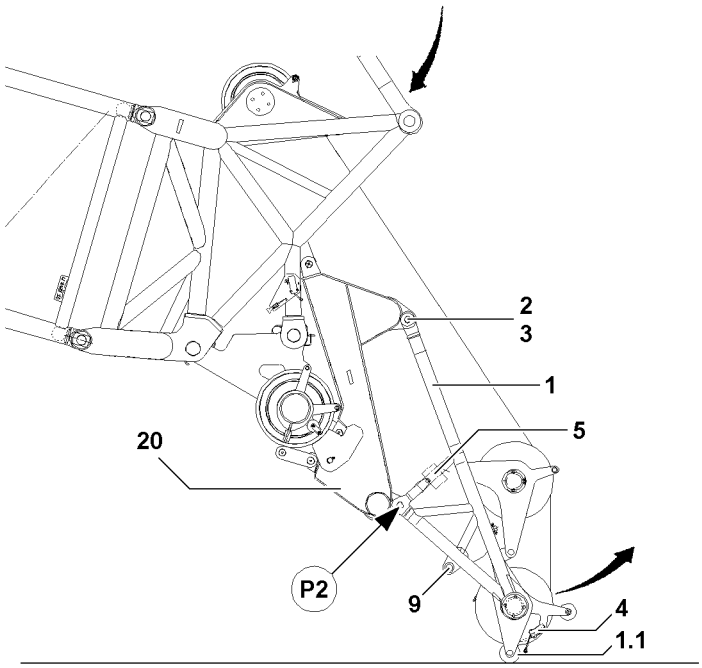

B111816

10.1 Placing the boom down

WARNING
The crane can topple over!
If the following conditions are not met before taking down the boom, the crane can topple over and fatally injure personnel!
- ▶ Observe the safety technical notes, see Crane operating instructions, chapter 5.01!
- ▶ Observe the data in the erection and take down charts!

NOTICE
Damage of boom components!
Taking down the boom system can lead to a collision between the hook block and the pulley head. The boom components can be severely damaged!
- ▶ Luff the boom system down at the same time and spool the hoist winch out!

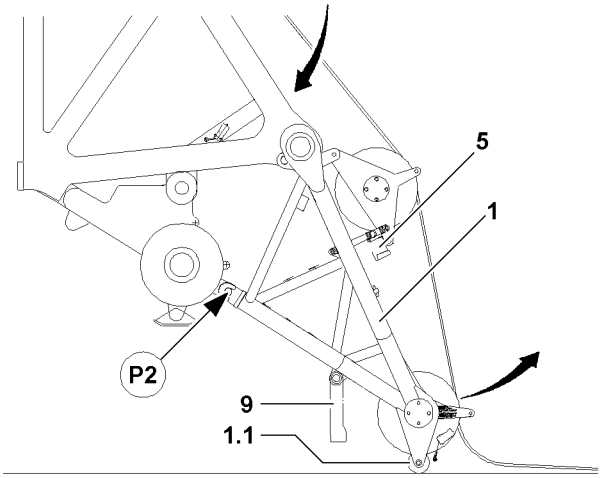

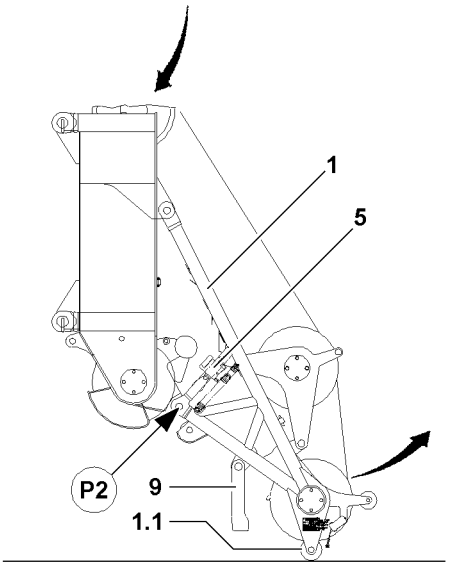

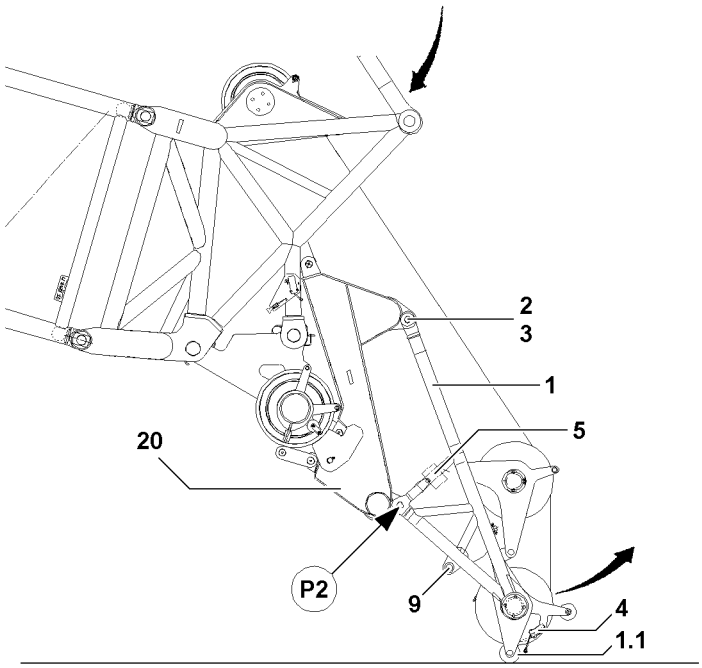

B111816

10.1.1 Lower boom

WARNING
The crane can topple over!
If the danger notes for take down of the boom or the boom systems in the following chapters are not observed, then the crane can topple over!
Personnel can be severely injured or killed!
Boom nose installed on S-end section:
▶ Observe and adhere to the danger notes in the Crane operating instructions, chapter 5.38 and chapter 5.39!
Boom nose installed on L-end section:
▶ Observe and adhere to the danger notes in the Crane operating instructions, chapter 5.38 and chapter 5.39!
Boom nose installed on W-end section:
▶ Observe and adhere to the danger notes in the Crane operating instructions, chapter 5.07!
Boom nose installed on W-adapter:
▶ Observe and adhere to the danger notes in the Crane operating instructions, chapter 5.07 and chapter 5.08!

▶ Luff the boom down according to the instructions in the above chapters.

WARNING
Assembly with bypassed / exceeded LICCON overload protection!
With bypassed / exceeded LICCON overload protection, the crane can collapse due to overload, the boom can break off or the crane can topple over!
Personnel can be severely injured or killed!
This could result in high property damage!
▶ The LICCON overload protection may only be bypassed / exceeded by persons who are aware of the consequences of a bypass!
▶ Bypass / exceed the LICCON overload protection only when the set up status of the crane has been correctly entered into the LICCON computer system!
▶ Observe the erection / take down charts!
▶ Crane operation with bypassed / exceeded LICCON overload protection is strictly prohibited!

▶ At the same time, spool the hoist winch out and luff the boom down until the hook block touches the ground.

10.1.2 Unreeving the hook block

▶ Remove the hoist limit switch weight and unreeve the hook block.
▶ Carefully luff the boom down until the boom nose 60 t is just above the ground with the rollers **1.1**.
▶ When the rollers **1.1** are just above the ground:
Luff the boom down slowly until the boom nose 60 t folds out by itself.
▶ Continue to luff down the boom.
Result:
– The boom nose 60 t runs on the rollers **1.1** toward the “outside”.

▶ Place the boom on the support base.

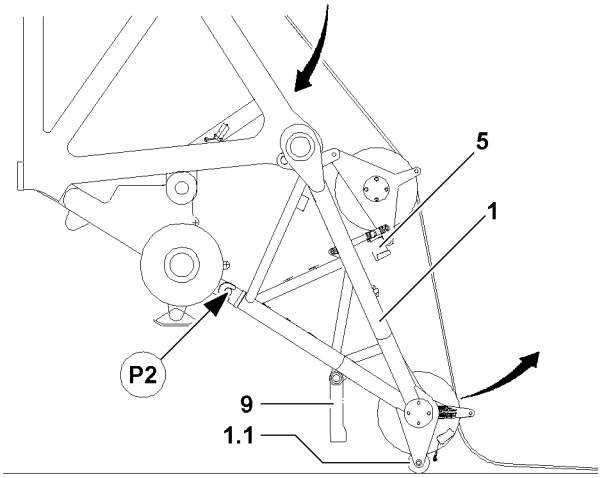

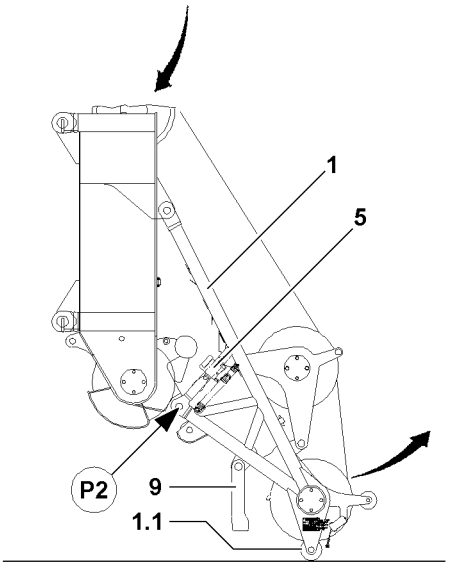

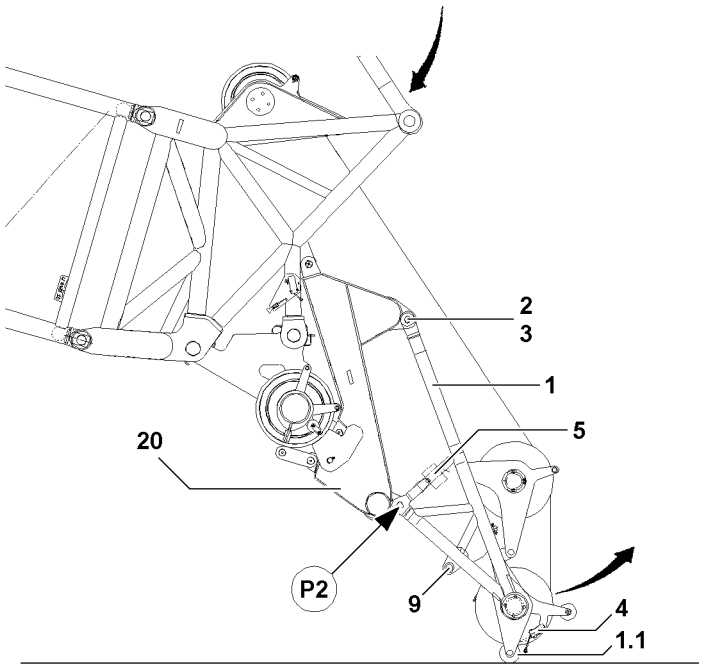

B111816

10.1.3 Spool the hoist rope up

WARNING
Falling hoist rope!
By spooling the hoist rope up, personnel can be severely injured or killed!
- ▶ All rope retaining pins / pipes on the boom nose 60 t **1** have been removed!
- ▶ All rope retaining pins / pipes on the respective end section / W-adapter **20** and on the boom have been removed!
- ▶ Slowly spool up the hoist rope over the rope pulleys back to the winch!
- ▶ Make sure that no personnel is within the danger zone!

NOTICE
Overspooled winch!
If the rope is pulled under the winch when spooling up, then the adjustment of the cam limit switch changes!
A new adjustment by **LIEBHERR Service** must be made!
- ▶ Stop the winch in time, with sufficient rope reserve!
- ▶ Do not overspool the winch!

- ▶ Spool the hoist rope up.

10.2 Disconnecting the electrical connections

Make sure that the following prerequisite is met:
– The boom is properly placed down as specified.

NOTICE
Damage to the electrical connections on the cable drum!
If the electrical connection from the cable drum on the S-pivot section to the terminal box on the respective end section is disconnected and spooled up, then the electrical connection from the cable drum to the terminal box on the S-pivot section can be damaged!
- ▶ Disconnect the electrical connection from the cable drum to the terminal box on the S-pivot section first and then the electrical connection from the terminal box to the respective end section!

- ▶ Store the cable from the terminal box on the S-pivot section properly.
- ▶ Spool the cable drum up and secure it to prevent inadvertent spooling out.

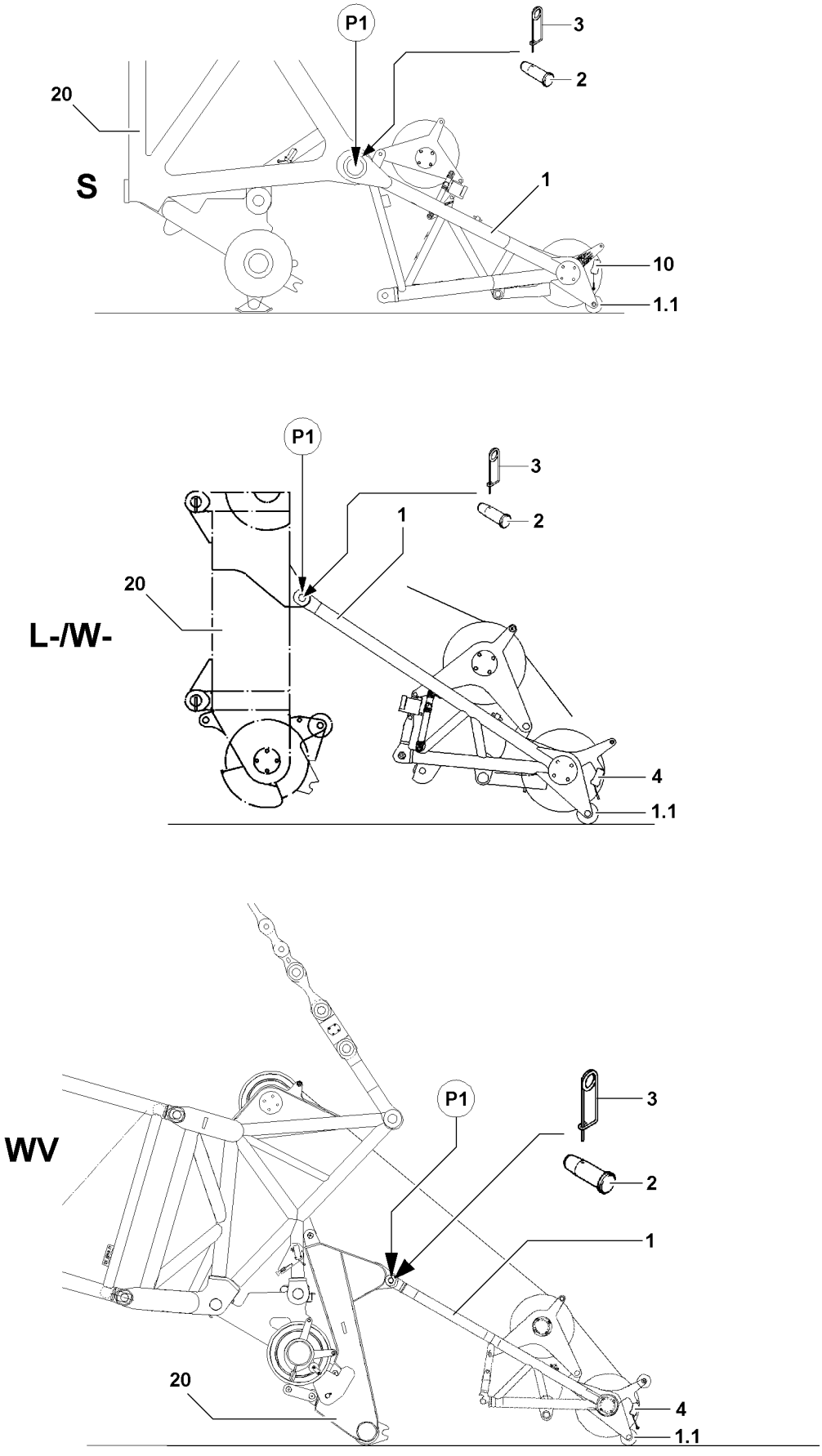

B111821

10.3 Disassembling the 60 t boom nose

WARNING
Folding down boom!
If the following conditions are not met before disassembling the boom nose 60 t **1**, the boom can fold down!
Personnel can be severely injured or killed!
▶ Support the boom during disassembly with suitable materials!

Make sure that the following prerequisites are met:
– The boom is placed on a load-bearing support.
– The boom nose 60 t **1** is laying on the ground.
– All electrical connections are separated on the boom.

▶ Attach the boom nose 60 t **1** on the auxiliary crane.
▶ Lift the boom nose 60 t **1** with the auxiliary crane until the boom nose 60 t hangs horizontally.
▶ Release and unpin the pins **2** on the boom nose 60 t **1** at point **P1**.
▶ When the pins **2** are unpinned:
Remove the boom nose 60 t **1** with the auxiliary crane.

Note
▶ Disassembling the boom, see Crane operating instructions, chapter 5.38 or chapter 5.39 or chapter 5.07 or chapter 5.08!

▶ Disassemble the boom properly.

1

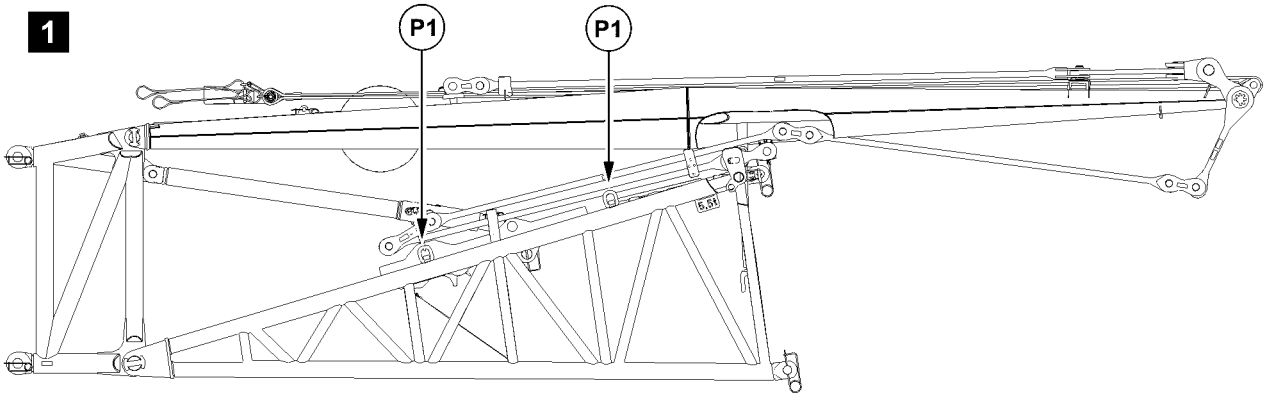

2

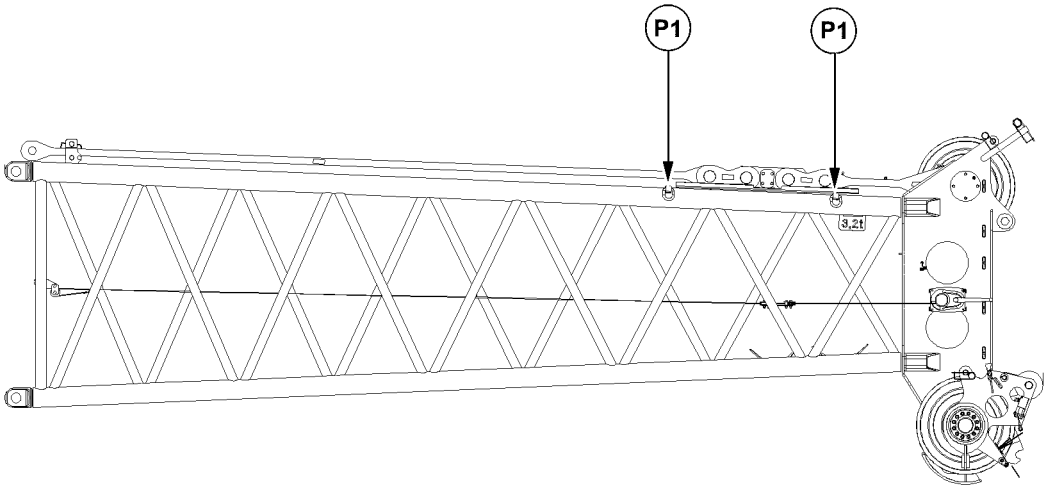

3

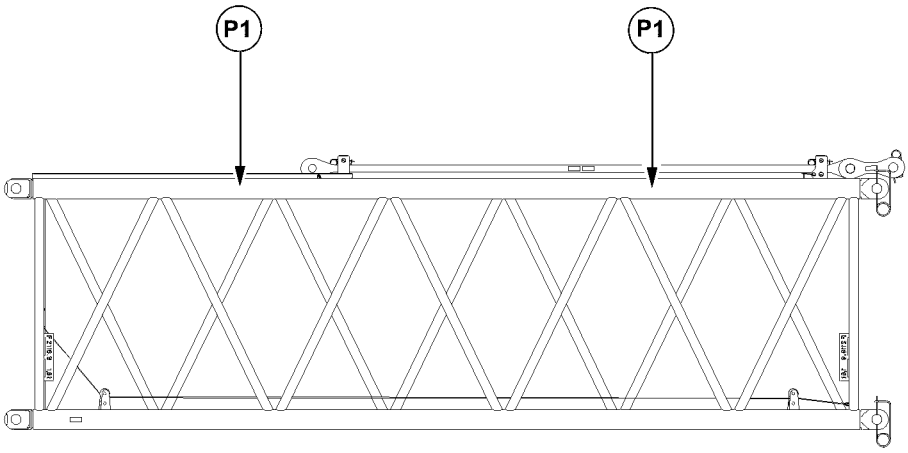

B111511

1 Component overview

1.1 Fastening points

WARNING
Danger of accident due to incorrect attachment!
Life-threatening situations can arise due to improper or incorrect attachment of the corresponding components!
▶ The corresponding components must be attached on the intended points **P1**!

1.2 F-assembly unit, see illustration 1

Description	Abbreviation	Weight
F-assembly unit	—	5.5 t

1.3 F-end section, see illustration 2

Description	Abbreviation	Weight
F-end section	—	3.2 t

1.4 F-intermediate section 6 m, see illustration 3

Description	Abbreviation	Weight
F-intermediate section 6 m	F 2116.9	1.5 t

B195219

2 Assembling the F-jib

DANGER
The crane can topple over!
At assembly of the intermediate sections, make sure that they are assembled according to their description, if this is not observed, the boom can break and boom sections can fall down!
- ▶ Assemble the lattice sections and guy rods as noted in the set up drawings.
- ▶ Assemble the boom combinations according to the assembly drawings, see Assembly plans!
- ▶ Any other arrangement of the lattice sections and the guy rods than specified in the Assembly and Rod plans is prohibited!

WARNING
Danger of falling!
During assembly / disassembly work, personnel must be secured with appropriate aids to prevent them from falling. If this is not observed, assembly personnel can fall and suffer life-threatening or fatal injuries!
- ▶ Any work, where there is a danger of falling must be carried out with suitable aids (for example lifting platform, scaffolding, ladder, auxiliary crane)!
- ▶ If the work cannot be carried out with such aids nor from the ground, then the assembly personnel must secure themselves with approved fall arrest systems to avoid falling, see Crane operating instructions, Chapter 2.04!
- ▶ Approved fall arrest systems must be hung into the respective fastening points on the crane, see Crane operating instructions, chapter 2.06!
- ▶ If railings are present on the components, then they must be brought into the corresponding position and secured for assembly / disassembly work!
- ▶ Step on aids and fall protection equipment only with clean shoes!
- ▶ Keep aids and fall protection equipment clean and free from snow and ice!
- ▶ During all assembly and disassembly work, maintenance work and inspections, travel and crane operation is prohibited!

WARNING
Falling components!
If unsecured or non-supported components are installed or removed, they can fall down!
Personnel can be severely injured or killed!
- ▶ During pinning and unpinning of the lattice sections, it is prohibited for anyone to remain **under** or **on** the components as well as within the entire danger zone!
- ▶ Support the boom and components before pinning / unpinning!
- ▶ Pin or unpin both pins laying in a horizontal, i.e. **left** and **right**!
- ▶ Secure the pins in the bearing points and in the receptacles!
- ▶ Do not disengage the auxiliary crane until each component is pinned on and secured!
- ▶ It is prohibited to lean a ladder against the component being disassembled!

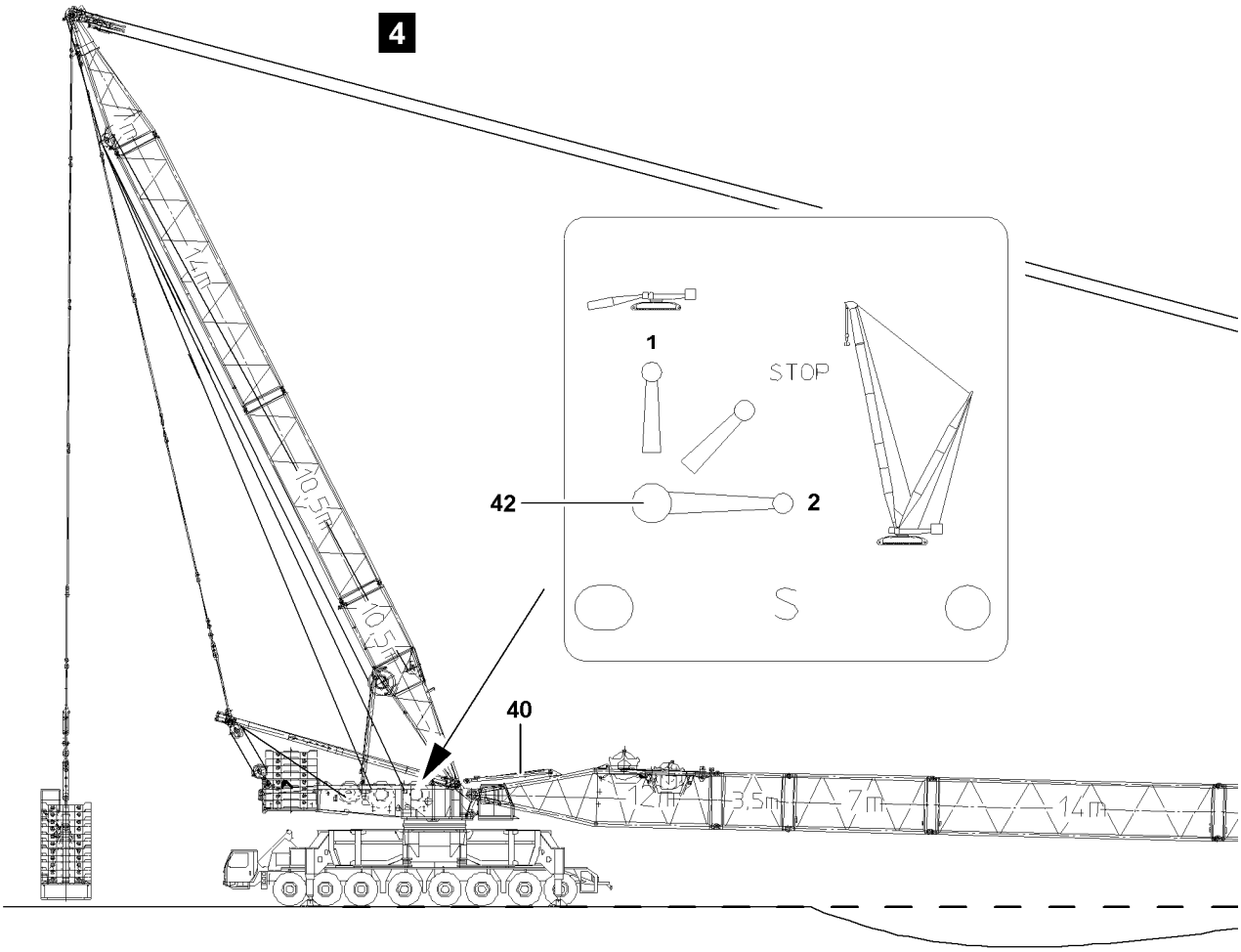

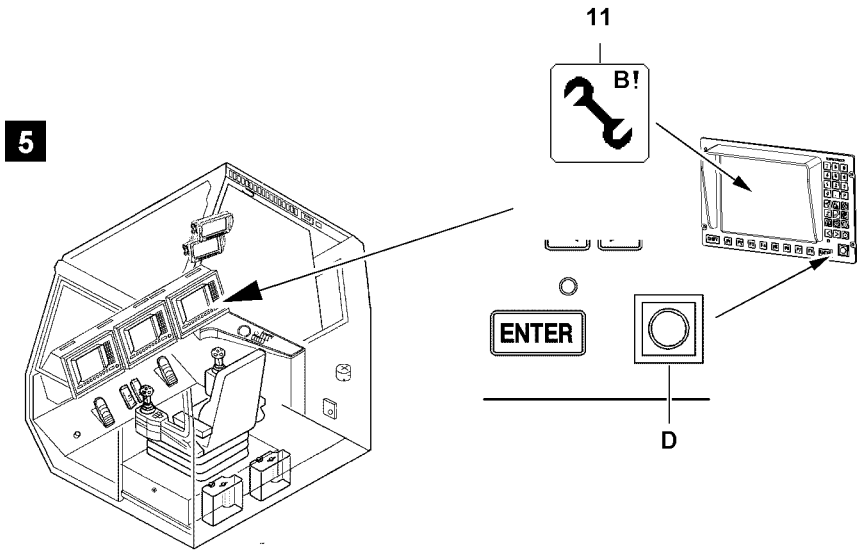

B111512

WARNING
Danger of impact / crushing!
When installing / removing counterweight components with the auxiliary crane, crane components can start to swing back and forth!
When lifting / lowering and positioning crane components, there is an increased danger of impacts / crushing!
Personnel can be severely injured or killed!
- ▶ Make sure that personnel cannot be caught by components!
- ▶ Make sure that the crane is aligned in horizontal position to avoid the support beams from swinging by themselves!
- ▶ When working in danger zones: Use aids to protect limbs!
- ▶ Guide components with suitable aids to minimize oscillation!

WARNING
Neglected inspection and maintenance on guy rods!
If the regular inspection and maintenance of the guy rods is not carried out or is carried out only in irregular intervals, then severe accidents can occur due to existing and unrecognized damage to the guy rods!
Personnel can be severely injured or killed!
- ▶ Check the guy rods before every assembly, see Crane operating instructions, chapter 8.15!

Note
- ▶ The F-jib is **not** adjustable in crane operation!

Make sure that the following prerequisites are met:
- – The crane is supported and horizontally aligned.
- – The WA-frame guy rods have been removed on the SL-boom.
- – The derrick ballast is placed on the suspended ballast pallet according to the erection and take down chart.
- – The SLD-boom combination is assembled and set down on the ground or on the support, see illustration **4**.
- – The LICCON overload protection has been set according to the data in the load chart.
- – The LICCON overload protection settings match the actual crane configuration.
- – The LICCON overload protection is exceeded.
- – The assembly icon **11** is visible on the LICCON monitor.
- – An auxiliary crane is available.

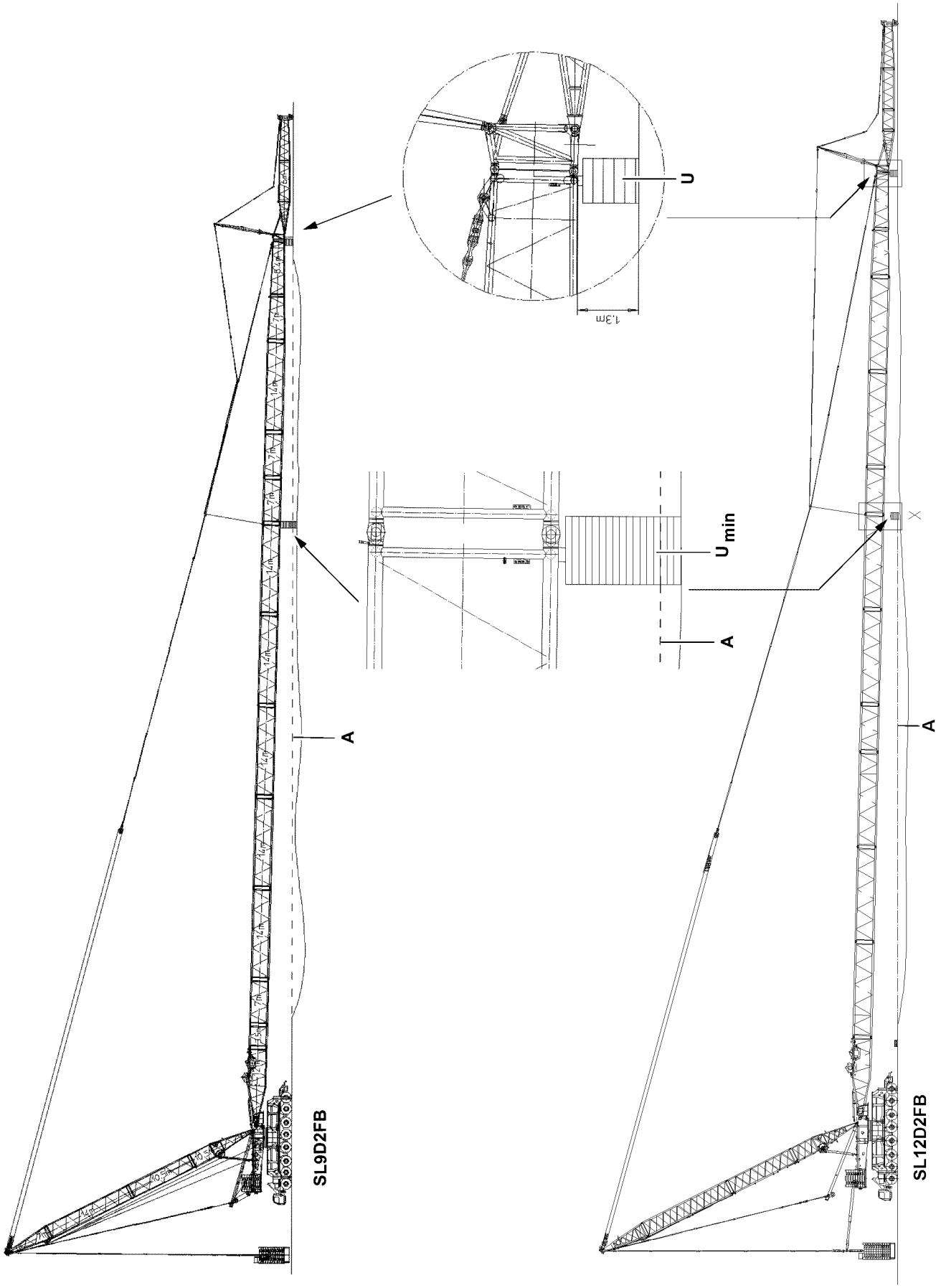

B116336

2.1 Assembling the SL-boom

Note
▶ Observe the instructions, see Crane operating instructions, chapter 5.05!

2.2 Installing the suspended ballast

Note
▶ Observe the instructions, see Crane operating instructions, chapter 5.36!

2.3 Assembling the SLF-boom with support

NOTICE
Overload of boom!
If the SLF-boom is not supported before the erection procedure, then the boom will be overloaded!
The crane will be damaged!
▶ Support the boom with suitable material of sufficient load bearing capacity!

Support on the L-head (light) 1.3 m		
Boom system	**Length**	**U_{min}**
SL9D2FB	136.5 m	> 0.8 m
SL12D2FB	136.5 m	
SL12D2FB	140.0 m	

Note
▶ The support of the boom sysems is required from a length of 136.5 m!

The support base **U** is independent of the length of the F-jib.

Note
▶ The alignment level **A** is the placement level of the crane!

Note
▶ The upper edge of the support base **U** must be at least 0.80 m above the placement level **A**!

▶ Assemble the SLD-boom, see Crane operating instructions, chapter 5.05.
▶ Assemble the suspended ballast, see Crane operating instructions, chapter 5.36.

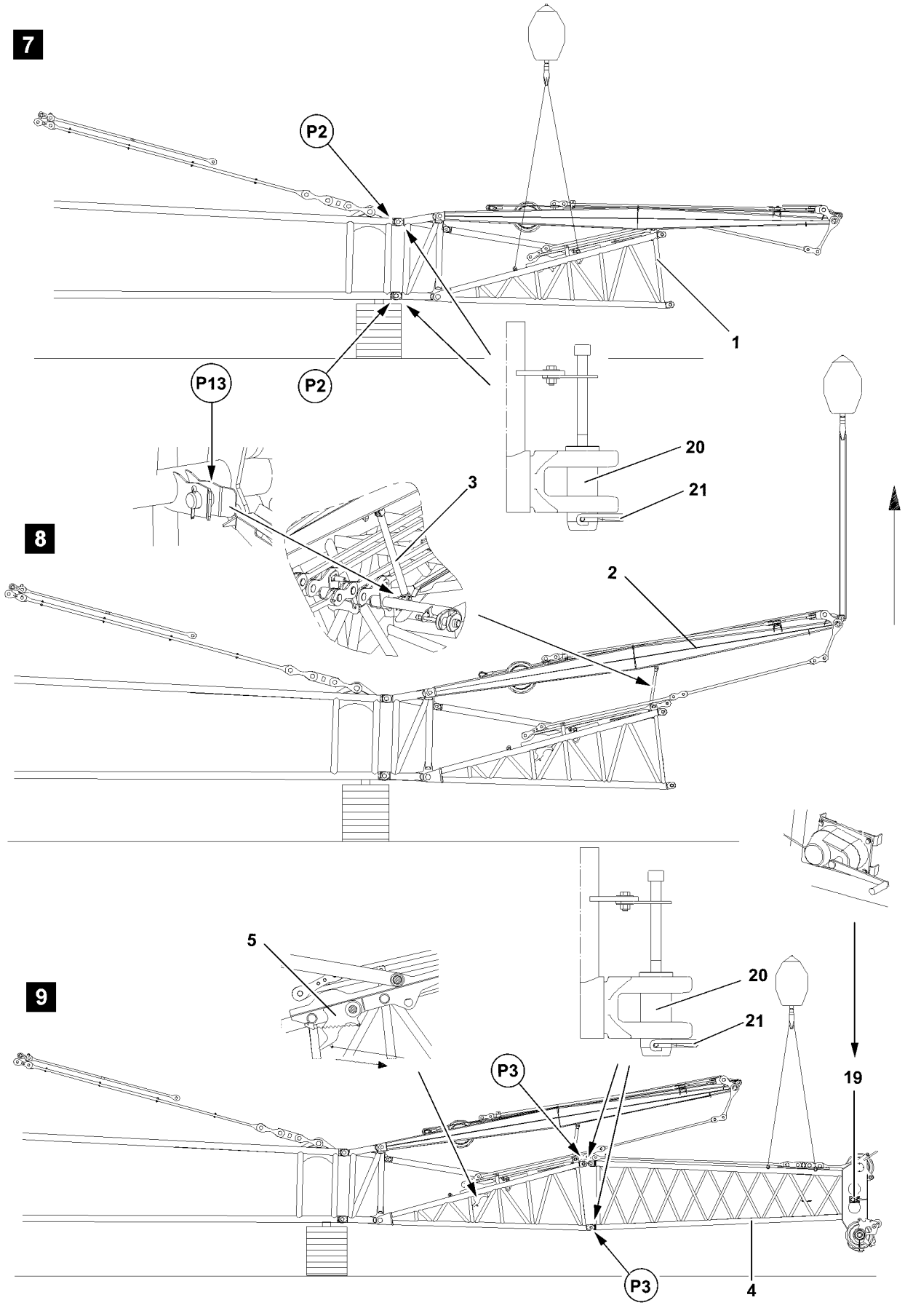

B111513

2.4 Assembling the F-auxiliary jib

- ▶ Hang the F- assembly unit **1** on the auxiliary crane and swing it in to the pin points **P2**, see illustration **7**.

WARNING
Falling components!
If the components are incompletely pinned or secured, then components can fall down!
Personnel can be severely injured or killed!

- ▶ Make sure that all components are completely pinned and secured!

- ▶ Insert the pins **20** on points **P2** and secure with spring retainers **21**, see illustration **7**.
- ▶ Lift the FA-frame **2** with the auxiliary crane and set it down slowly on the support **3** into the intended receptacle, point **P13**, see illustration **8**.
- ▶ Hang the F- end section **4** on the auxiliary crane and swing it in to the pin points **P3**, see illustration **9**.
- ▶ Insert the pins **20** on points **P3** and secure with spring retainers **21**, see illustration **9**.
- ▶ Connect the rope strand from the flap **5** with the manual rope winch **19** on the F-end section.
- ▶ Set the flap **5** on the F-pivot section with the manual rope winch **19** into “down” position!

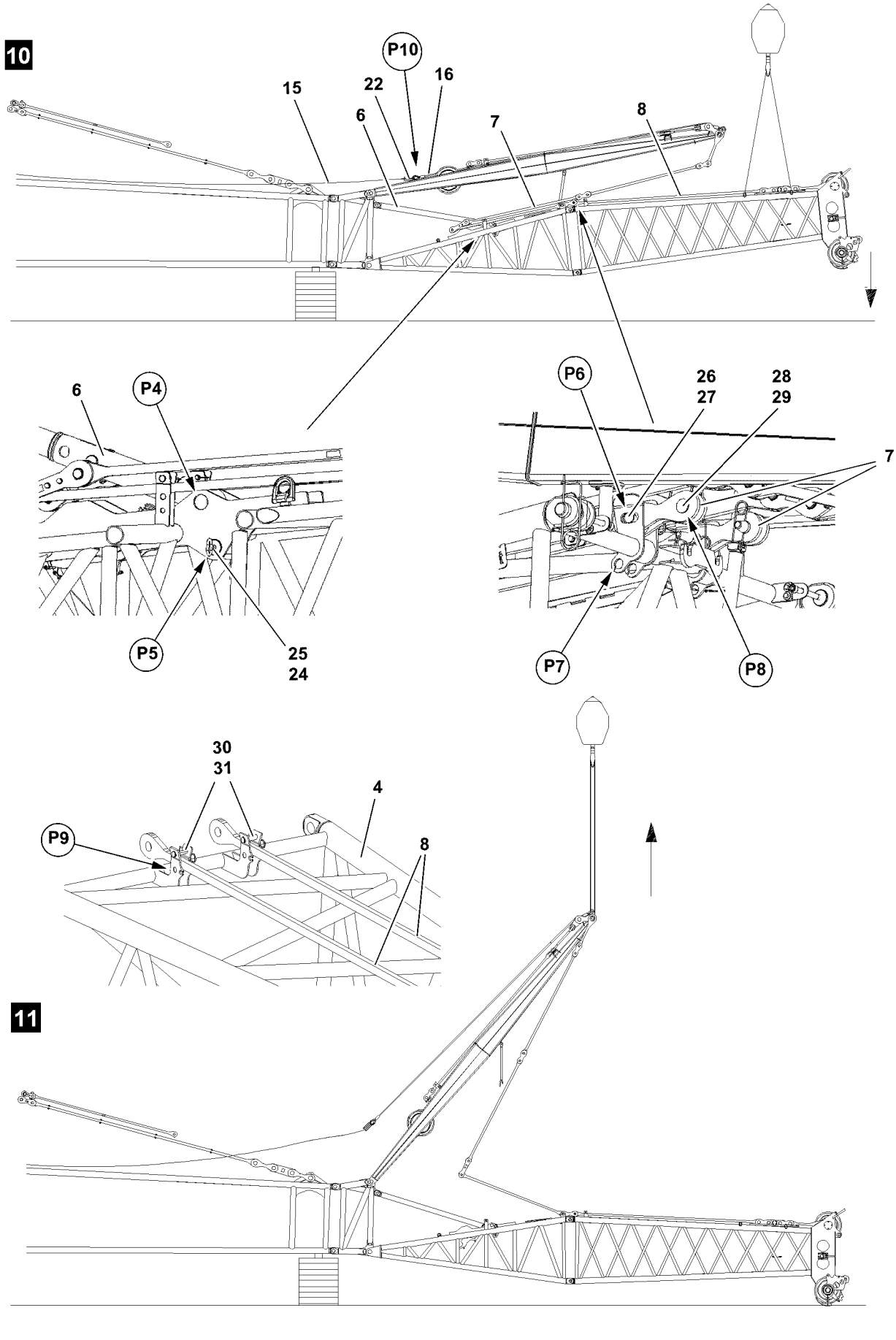

B116867

- ▶ Release and unpin the pin **24** of the FA-frame relapse retainer **6** on point **P4**.
- ▶ Insert the pin **24** of the FA-frame relapse retainer **6** in parking position, point **P5** and secure with spring retainer **25**.
- ▶ Release the auxiliary rope **16** on the Fa-frame from the parking position.
- ▶ Get the lock **22** from the tool box or from the F-end section and pin on the auxiliary rope **16**.
- ▶ Pull the hoist rope **15** forward to the Fa-frame and place the lock **22** at point **P10**.
- ▶ Unpin the locking pin **26** of the FA-frame rods **7** and pin in parking position, point **P7** and secure with spring retainer **27**.
- ▶ Unpin the locking pin **30** of the FA-end section rods **8** and pin in parking position, point **P9** and secure with spring retainer **31**.
- ▶ Place the F-boom down with the auxiliary crane.

WARNING
Falling components!
If the components are incompletely pinned or secured, then components can fall down!
Personnel can be severely injured or killed!
- ▶ Make sure that all components are completely pinned and secured!

- ▶ Pin the rods **7** with F- rods **8** with pins **28**, point **P8** and secure with spring retainers **29**.

Note
- ▶ We recommend to erect the FA-frame to approx. 95°!

NOTICE
Danger of slack rope formation!
- ▶ When erecting the FA-frame, watch for slap rope formation of the hoist winch!

- ▶ Raise the FA-frame with the auxiliary crane, see illustration **11**.

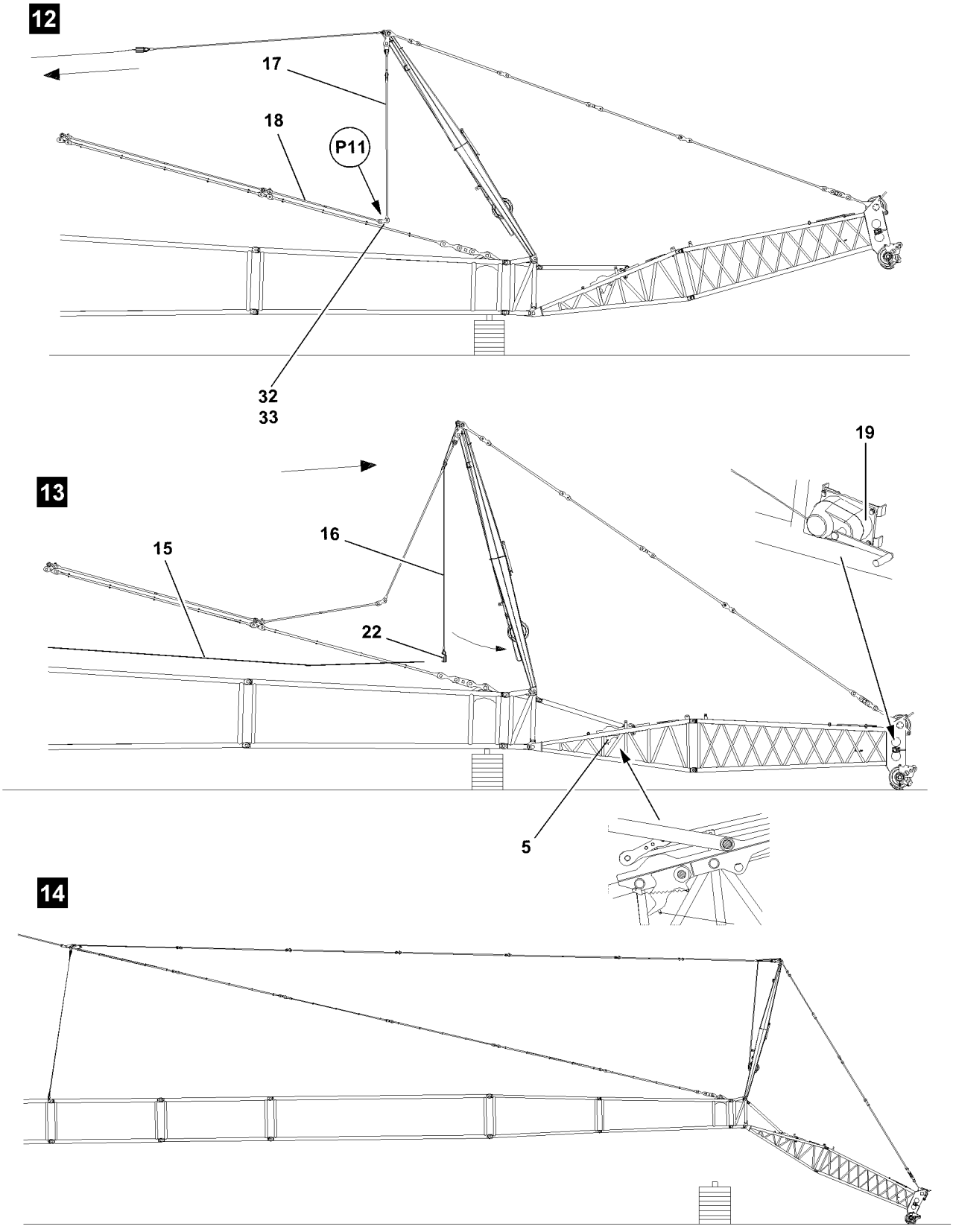

B116868

- ▶ Spool the hoist winch up until the F-jib lifts off the ground, see illustration **12**.
- ▶ Continue to spool up the hoist winch until the guy rods can be pinned on point **P11**, see illustration **12**.
- ▶ Connect the rods **17** with the F- rods **18** at point **P11**:
  Insert the pins **32** and secure with spring retainers **33**.
- ▶ Remove the auxiliary crane.
- ▶ Spool the hoist winch out until the F-boom is laying on the ground.
- ▶ Relieve the hoist winch rope **15** and remove it from the lock **22**.
- ▶ Unpin the lock **22** on the auxiliary rope **16** and remove.
- ▶ Affix the auxiliary rope **16** on the FA-frame.
- ▶ Reeve in the hoist rope, see Reeving plans.

WARNING
Danger of accident!
During crane operation, the flap **5** must be in the “up” position!
- ▶ Make sure that the flap **5** is in “up” position immediately before lift off of the F-end section or when erecting the boom!
- ▶ Make sure that the crank of the manual rope winch **19** has been removed!

- ▶ Set the flap **5** with the manual rope winch **19** in “up” position.

Result:
– The mechanical relapse retainer of the FA-frame is activated.

- ▶ Remove the crank of the manual rope winch **19** and place it into the tool box.

B195219

2.5 Establishing the electrical connections

Make sure that the following prerequisites are met:
– The SLF-boom is completely assembled.
– The airplane warning light and the wind speed sensor are installed.

NOTICE
Damage to the electrical connection on the cable drum!
If the electrical connection of the cable drum to the terminal box is made in incorrect sequence, then the electrical connection can be damaged when spooling the cable drum out!
▶ When establishing the electrical connections, pay attention to the sequence!

Note
▶ To establish the electrical connections, see Electric wiring diagram!

▶ Establish the electrical connections.
▶ Make sure that all electrical connections on the boom are established.

2.6 Checking the function of the safety devices

WARNING
Non-functioning safety devices!
If the function of the safety devices is defective, personnel can be severely injured or killed!
▶ Crane operation with non-functioning safety devices is **prohibited**!

Note
▶ The function of the individual limit switches must be checked before erection!
▶ The function of the limit switch initiators must be checked in the test system, see Diagnostics manual!

Note
▶ If a function check on the limit switches or on the safety devices does not lead to the desired shut offs, then the plug connections on the connector boxes or the components itself must be checked!
▶ If no visible connection errors or component defects can be found, contact LIEBHERR Service!

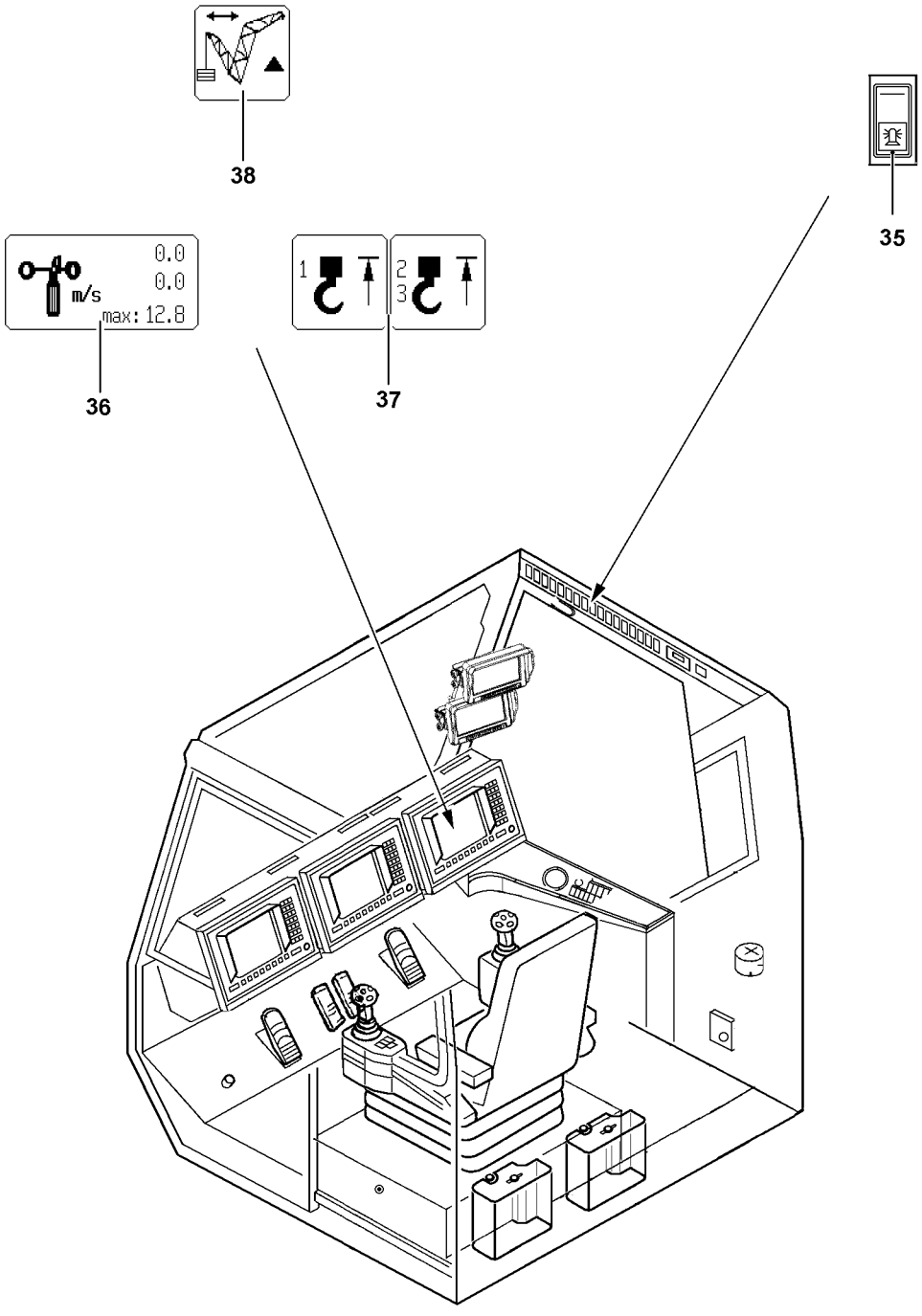

B111517

Make sure that the following prerequisites are met:
– The electrical connections have been made.
– The crane engine is running.
– The corresponding operating mode is set on the LICCON monitor.

2.6.1 Wind speed sensor*

▶ Test the movement and the function of the wind speed sensor.

Result:
– The “wind speed **36** icon” appears on the LICCON monitor.

2.6.2 Airplane warning light*

▶ Turn on the airplane warning light on with the switch **35**.
▶ Check the function visually.

2.6.3 Hoist limit switch

Note
▶ When replacing or changing a hoist limit switch (HES), the corresponding hoist limit switch must have the correct bus address and the correct software version in order to be detected again by the bus system (LSB)!

▶ Actuate the hoist limit switch manually on the pulley head.

Result:
– The spool up function of the hoist winch turns off.
– The “Hoist top” icon **37** appears on the LICCON-Monitor 0.
– The limit switch is functioning.

2.6.4 Checking the limit switch S-boom “steepest position”

Note
▶ The limit switch functions have to be checked individually before erection!

▶ Cover the limit switch initiators on the S-relapse cylinder individually with a metal plate.

Result:
– The hoist limit switch is actuated manually.
– The spool up function of winch 4 (control winch) turns off.
– The “boom limitation” icon **38** appears on the LICCON monitor 0.
– The limit switch is functioning.

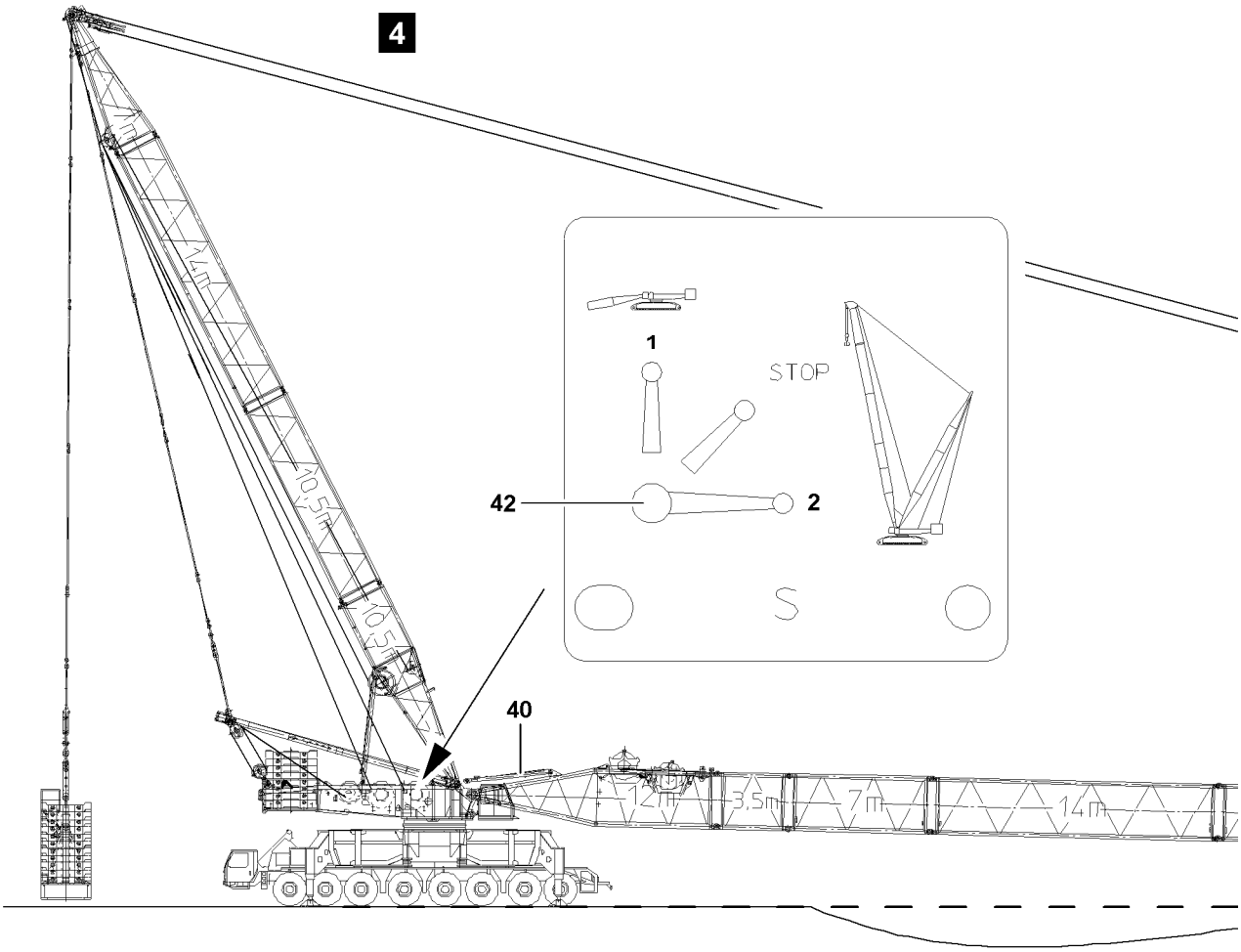

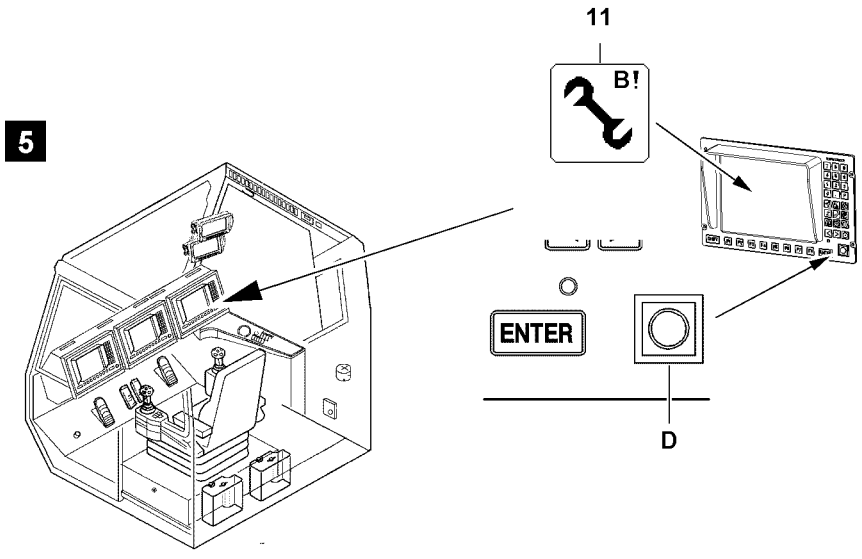

B111512

2.7 Erecting the SLF-boom

WARNING
The crane can topple over!
If the following conditions are not met before erecting the boom, the crane can topple over and fatally injure personnel!
- ▶ It is not permitted to turn the crane during erection!
- ▶ Observe the Safety technical notes, see Crane operating instructions, chapter 5.01!
- ▶ Observe the data in the erection and take down charts!
- ▶ Move the relapse cylinder out before erection!
- ▶ Do not allow slack cable to build up on the control winch!
- ▶ The ball valve cabinet must be locked! Always pull the key and hand it to an authorized person!

WARNING
Falling hoist rope!
If the hoist rope is not properly attached on the end section before the erection procedure, then it can fall down backward due to its own weight!
Personnel can be severely injured or killed!
- ▶ Attach the hoist rope properly on the end section before the erection procedure!

Make sure that the following prerequisites are met:
- – The crane is supported and horizontally aligned.
- – All electrical connections have been established.
- – All limit switches are functioning.
- – The counterweight has been installed to the turntable according to the load chart.
- – All pin connections have been secured.
- – The hoist rope has been correctly placed in the rope pulleys and is prevented from jumping out with the rope retaining pins.
- – There are no loose parts on the boom.
- – The LICCON overload protection has been adjusted according to the data in the load chart.
- – The LICCON overload protection settings have been compared with the actual crane configuration.
- – The LICCON overload protection is exceeded.
- – The assembly icon **11** is visible on the LICCON monitor.

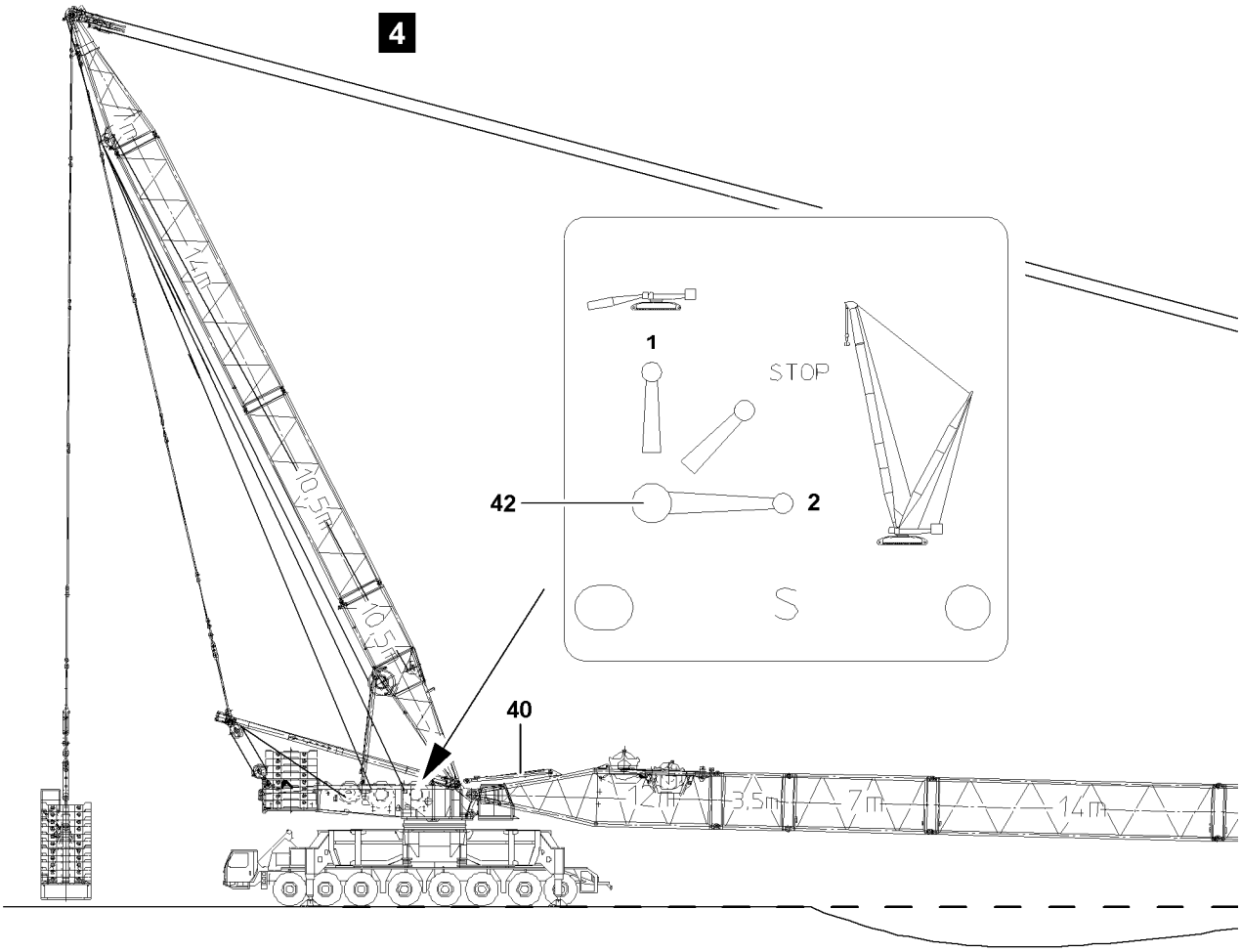

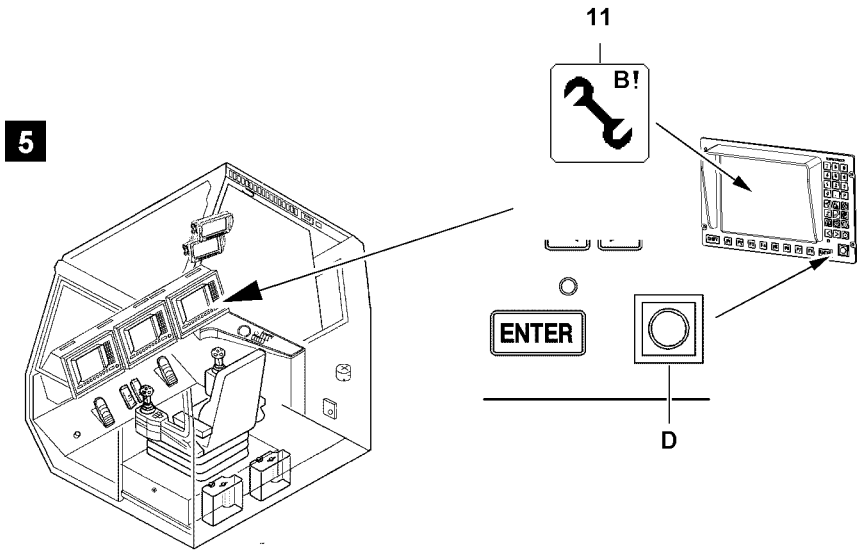

B111512

2.7.1 Extending the S-relapse cylinder

WARNING
The crane can topple over!
If the S-relapse cylinders are not extended before erecting the SL-boom, then the SL-boom can fall down towards the rear during crane operation and the crane can topple over!
Personnel can be severely injured or killed!
- ▶ Extend the S-relapse cylinders **40** before erecting the SL-boom!
- ▶ Secure the ball valve **42** during crane operation to prevent inadvertent actuation!

Ball valve positions	
2	Crane operation, extend the piston rod
1	Assembly, retract the piston rod
STOP	The piston rod cannot be retracted / extended

The piston rods on the S-relapse cylinders **40** can be extended with the ball valve **42**.
- ▶ Set the ball valve **42** to **Position 2**.

Result:
– The piston rods of the S-relapse cylinders **40** extend.

Note
- ▶ The ball valve **42** is secured by closing the cabinet door and removing the key!

- ▶ Close the cabinet door and pull the key.
- ▶ Hand the key to an authorized person.

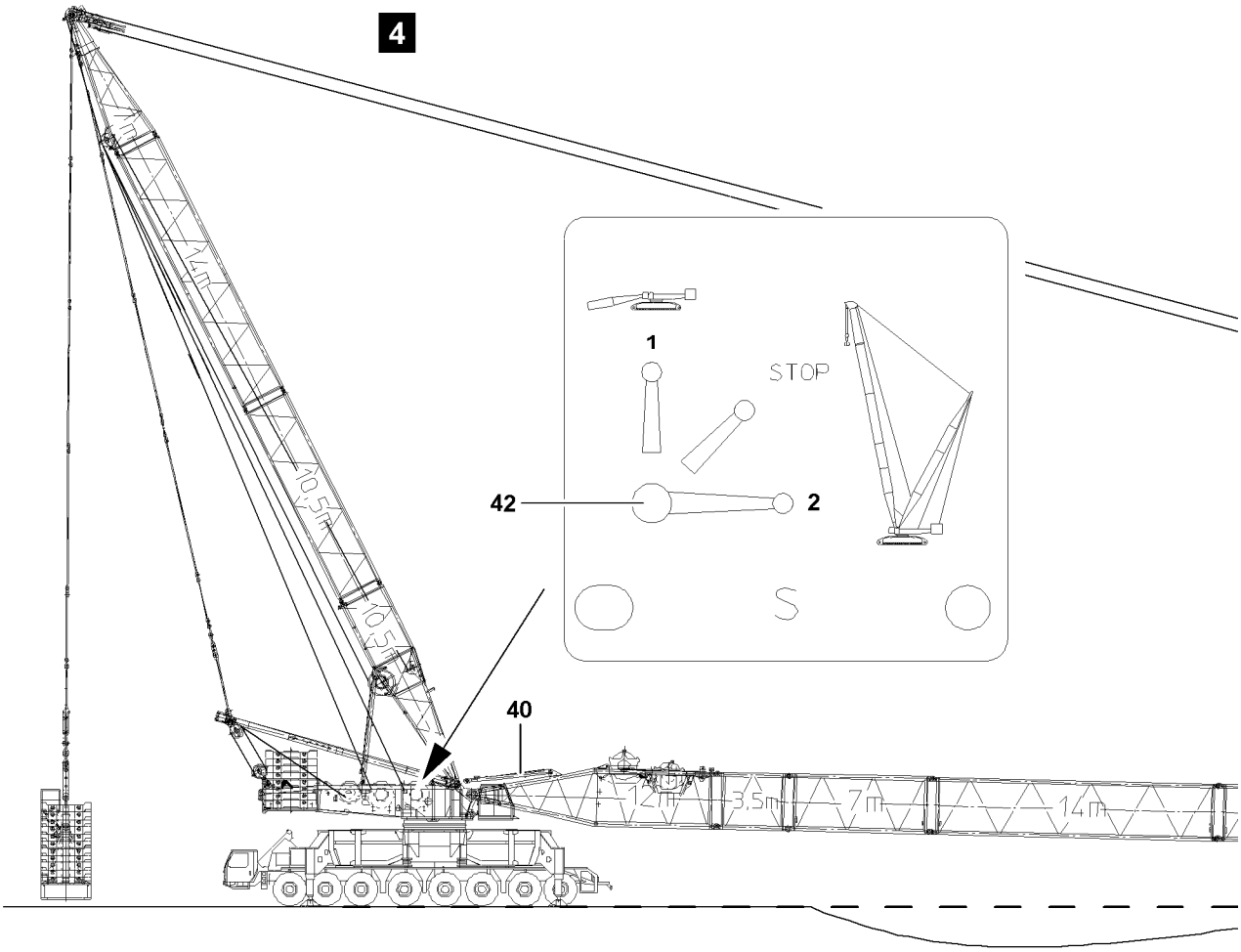

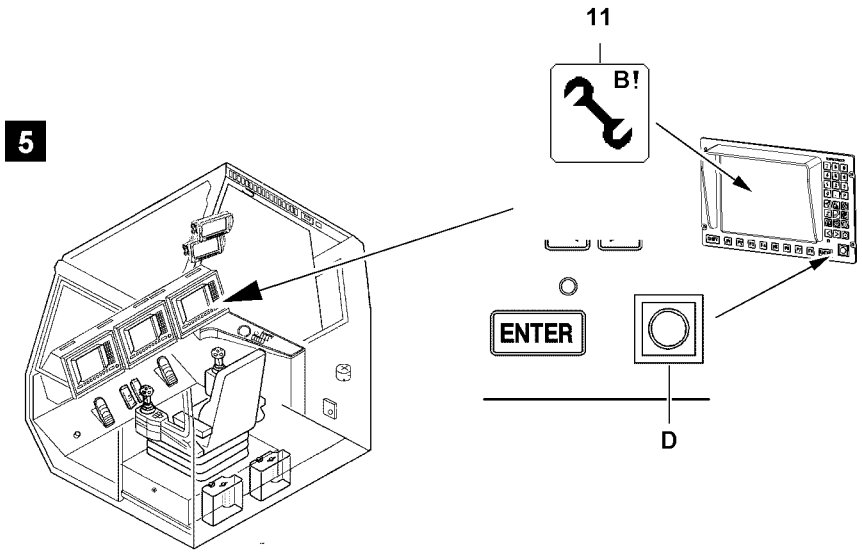

B111512

2.7.2 Erection procedure

DANGER
The crane can topple over!
- ▶ It is not permitted to turn the crane superstructure during erection procedure!
- ▶ Observe the data in the erection and take down charts!

▶ Erect the boom until the end section lifts off the ground.

Note
- ▶ Hoist rope reevings, see Crane operating instructions, chapter 4.06 and Reeving plan!

▶ Reeve the hook block properly and secure it on the rope fixed point.

▶ Attach the hoist limit switch weight.

DANGER
The crane can topple over!
In crane operation with exceeded LICCON overload protection, the crane can topple over!
Personnel can be severely injured or killed!
- ▶ The radii listed in the load chart may not be exceeded or fallen below, even if there is no load on the hook!

Note
- ▶ When the lowest operating position of the boom is reached, the LICCON overload protection is activated!
- ▶ In the maximum load icon appears a load number in “t” instead of the display “???”!

▶ Luff the boom up to the lowest operating position.

▶ When the boom has reached the lowest operating position:
Make sure that the assembly icon **11** on the LICCON monitor turns off.

Result:
– The LICCON overload protection is active.

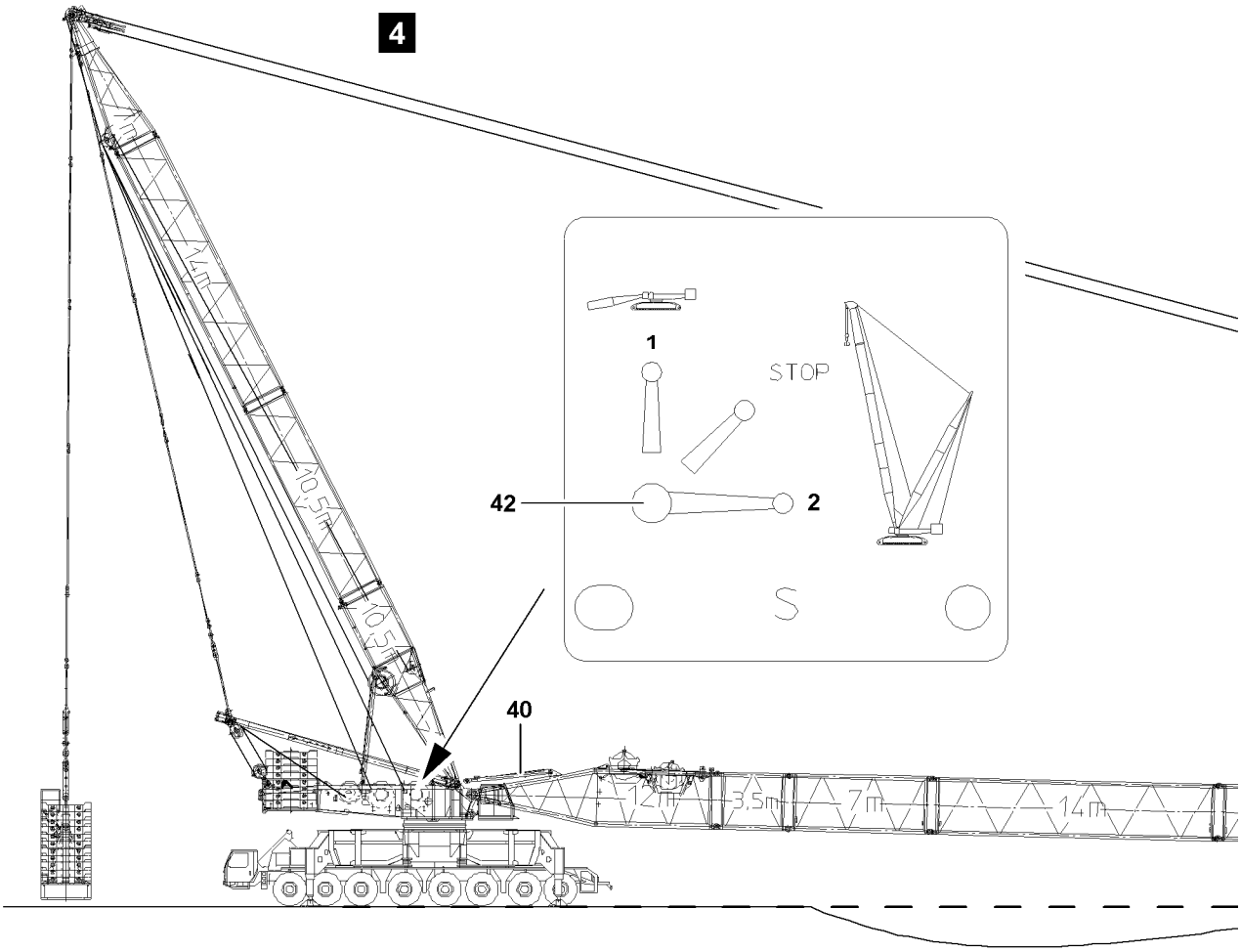

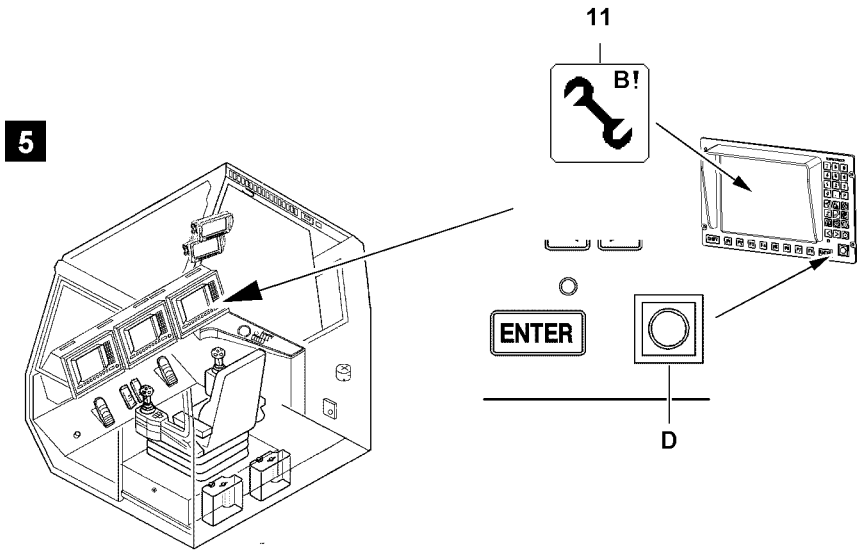

B111512

3 Operating the crane

Note

▶ Observe the notes in the chapters, see Crane operating instructions, chapter 4.05, chapter 4.08 and chapter 5.01!

Make sure that the following prerequisites are met:

– The LICCON overload protection is active.
– The LICCON overload protection has been set according to the data in the load chart.

WARNING

The crane can topple over!

▶ Check the horizontal position of the crane before and during operation!
▶ If the crane operator leaves the cab, even for a short time, the operating mode setting must be checked and reset if necessary before resuming crane operation!

3.1 Checking the settings

▶ Check the function of the overload protection by running against the operating positions “on top” and “bottom”.
▶ Check the hoist limit switch by running against the hoist limit switch weight.
▶ Check the function of the limit switches “Boom steep” on the relapse cylinders.

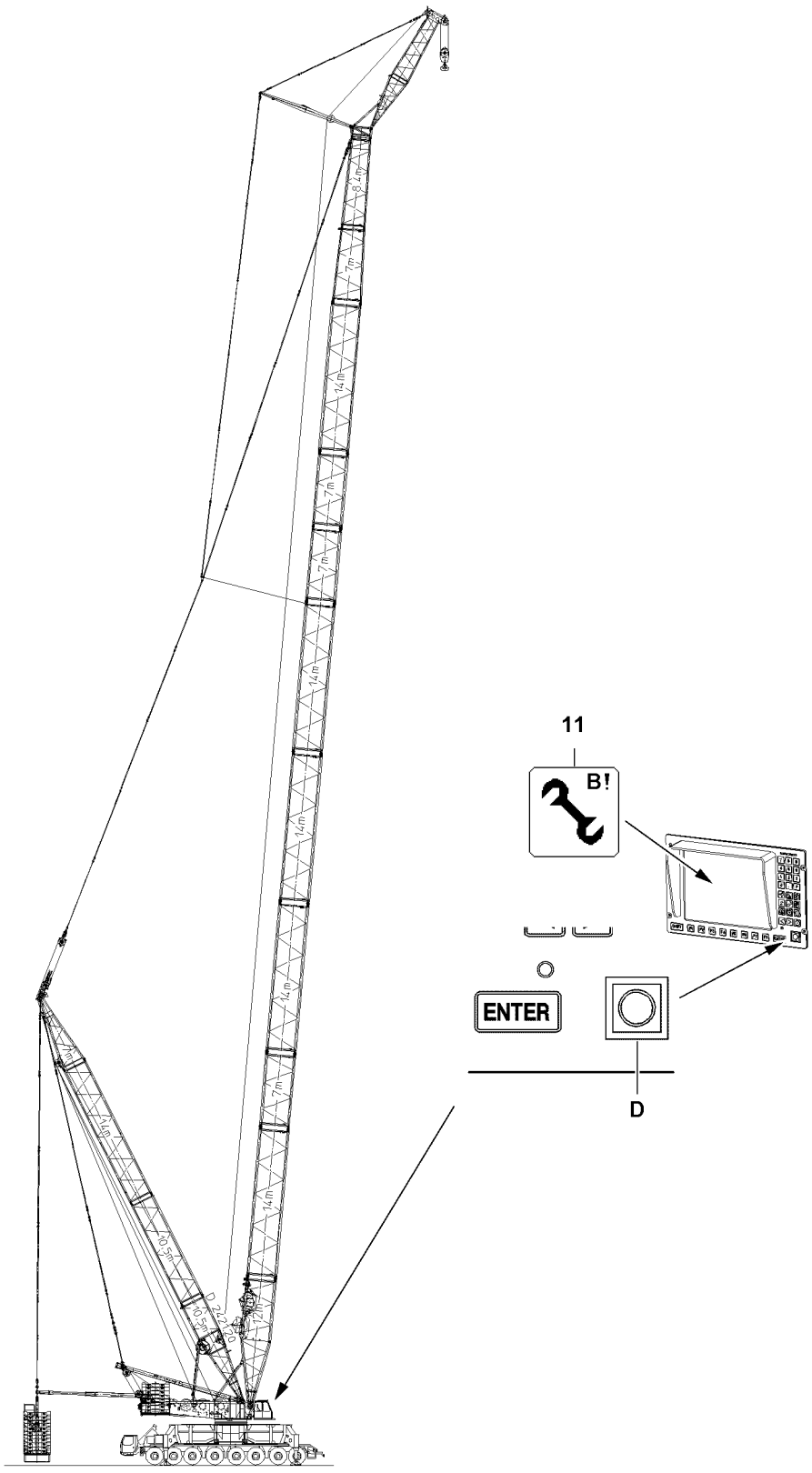

B111518

4 Disassembling the F-jib

WARNING
Danger of falling!
During assembly and disassembly, personnel must be secured with appropriate aids to prevent them from falling! If this is not observed, assembly personnel can fall and suffer life-threatening or fatal injuries!

- ▶ Any work, where there is a danger of falling, must be carried out with suitable aids (for example: lifting platforms, scaffoldings, ladders, auxiliary crane)!
- ▶ If the work cannot be carried out with such aids nor from the ground, then the assembly personnel must secure themselves with approved catch systems to avoid falling, see Crane operating instructions chapter 2.04!
- ▶ If railings are present on the components, then they must be brought into the corresponding position and secured for assembly / disassembly work!
- ▶ Step on aids and fall protection equipment only with clean shoes!
- ▶ Keep aids and fall protection equipment clean and free from snow and ice!
- ▶ During all assembly and disassembly work, maintenance work and inspections, travel or crane operation is prohibited!

WARNING
Falling components!
If unsecured or non-supported components are installed or removed, they can fall down!
Personnel can be severely injured or killed!

- ▶ During pinning and unpinning of the lattice sections, it is prohibited for anyone to remain **under** or **on** the components as well as within the entire danger zone!
- ▶ Support the boom and components before pinning / unpinning!
- ▶ Pin or unpin both pins laying in a horizontal, i.e. **left** and **right**!
- ▶ Secure the pins in the bearing points and in the receptacles!
- ▶ Do not disengage the auxiliary crane until each component is pinned on and secured!
- ▶ It is prohibited to lean a ladder against the component being disassembled!

WARNING
Danger of impact / crushing!
When installing / removing counterweight components with the auxiliary crane, crane components can start to swing back and forth!
When lifting / lowering and positioning crane components, there is an increased danger of impacts / crushing!
Personnel can be severely injured or killed!

- ▶ Make sure that personnel cannot be caught by components!
- ▶ Make sure that the crane is aligned in horizontal position to avoid the support beams from swinging by themselves!
- ▶ When working in danger zones: Use aids to protect limbs!
- ▶ Guide components with suitable aids to minimize oscillation!

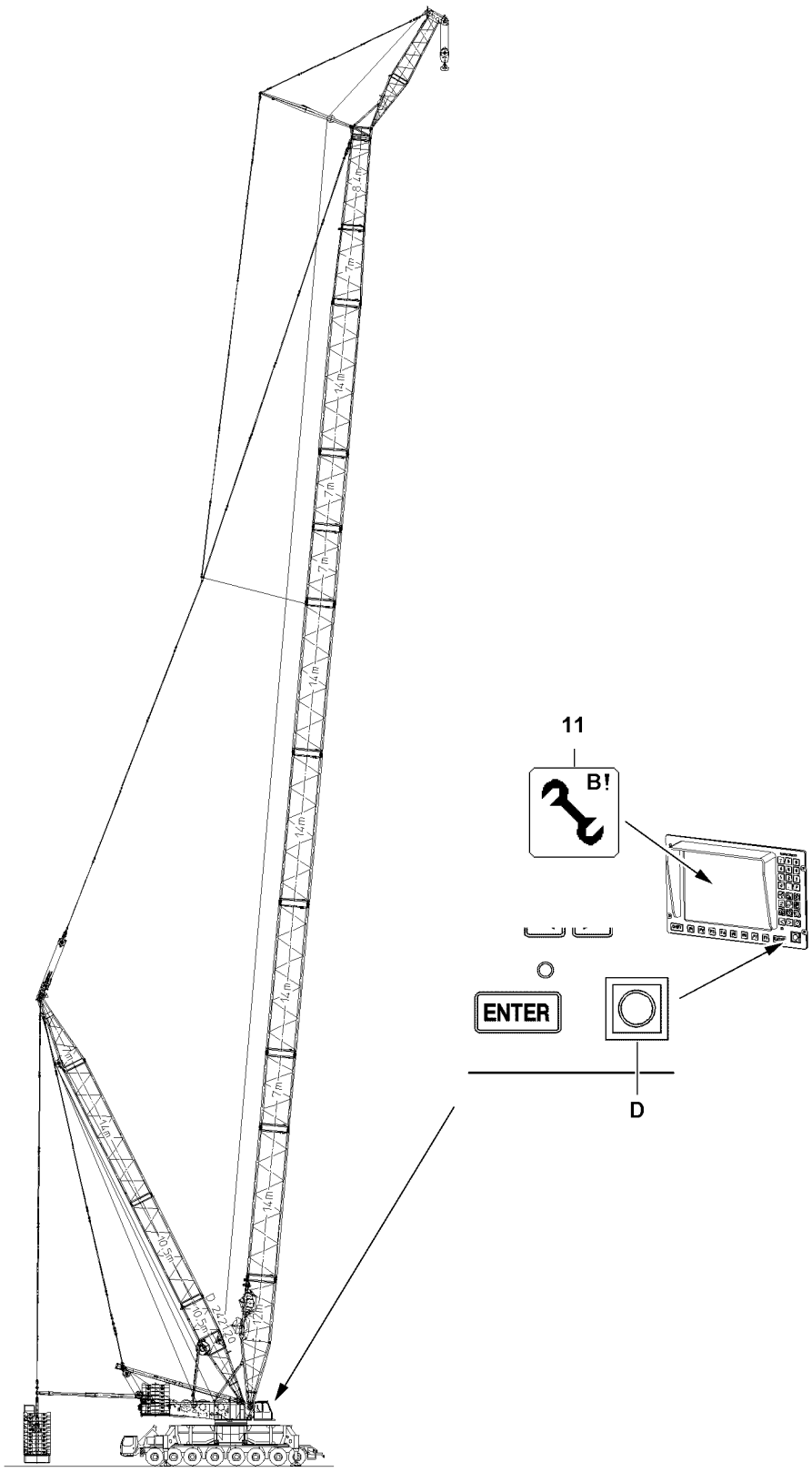

B111518

4.1 Taking the SLF-boom down

WARNING
Danger of accident!
If the following instructions are not observed, personnel can be severely injured or killed!
- ▶ The turntable may not be turned during the assembly of the boom!
- ▶ Observe the Safety technical notes, see Crane operating instructions, chapter 5.01!
- ▶ Observe the data in the erection and take down charts!

NOTICE
Damage of boom components!
Taking down the boom system can lead to a collision between the hook block and the pulley head!
There is the danger that boom components may be significantly damaged!
- ▶ When taking down the boom system, always spool out the hoist winch at the same time!

Make sure that the following prerequisites are met:
- – The crane is supported and horizontally aligned.
- – An auxiliary crane is available.
- – An assembly scaffolding / work platform is available.
- – The counterweight has been installed to the turntable according to the erection chart.
- – The LICCON overload protection has been set according to the data in the load chart.

- ▶ Turn the turntable in longitudinal axle of the crawler travel gear against the travel direction or vertically to the crawler travel gear, see Erection and take down chart.

Note
- ▶ The luff down movement is turned off as soon as the lowest operating position is reached!
- ▶ When the lowest operating position of the boom is reached, the load display in the maximum load icon turns off and instead of the load display appears the display “???”!
- ▶ In the crane operating screen appear alarm functions!

- ▶ Luff the SLF-boom down to the “lowest” operating position.

Result:
- – The luffing movement is turned off.
- – The “STOP” icon appears on the LICCON monitor.
- – The “horn” icon appears on the LICCON monitor.

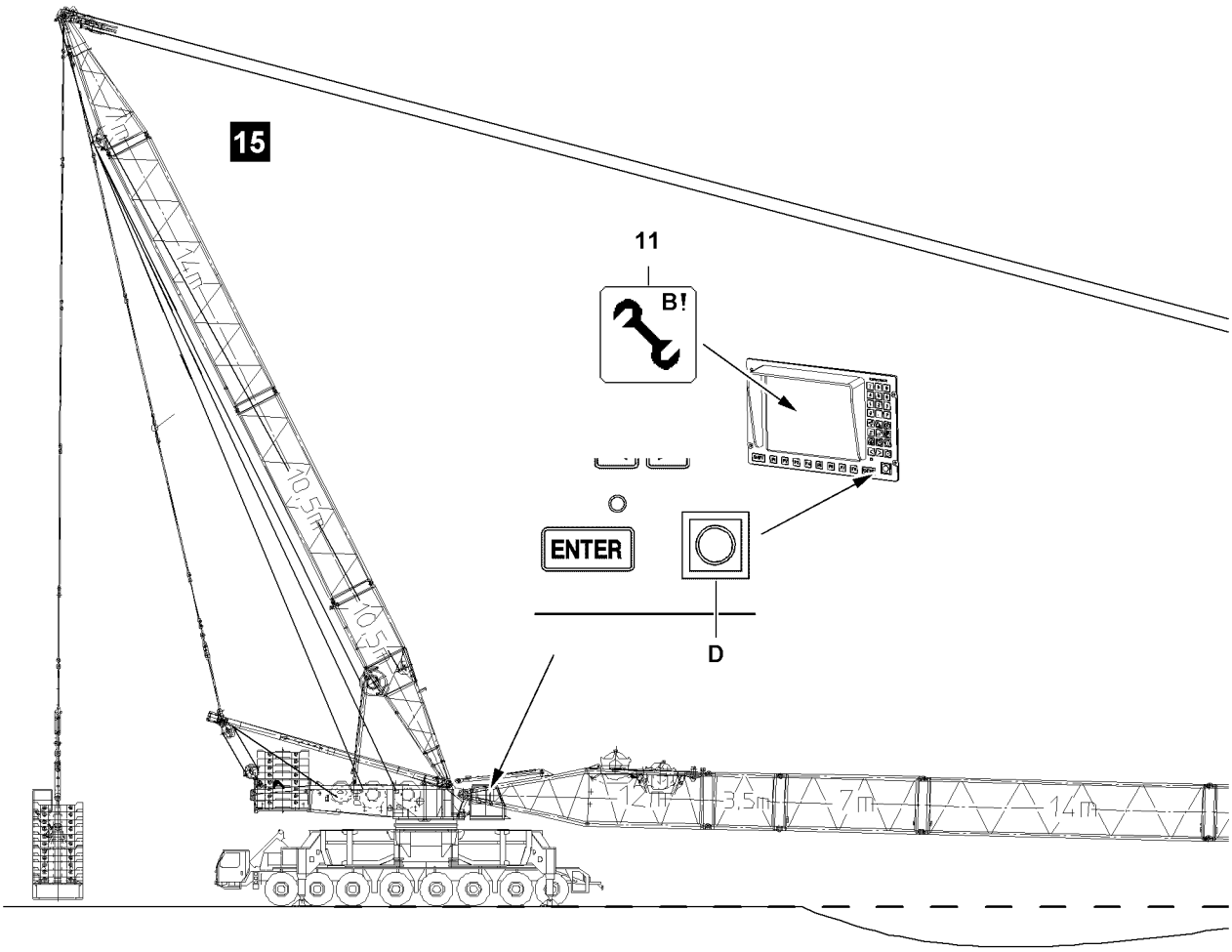

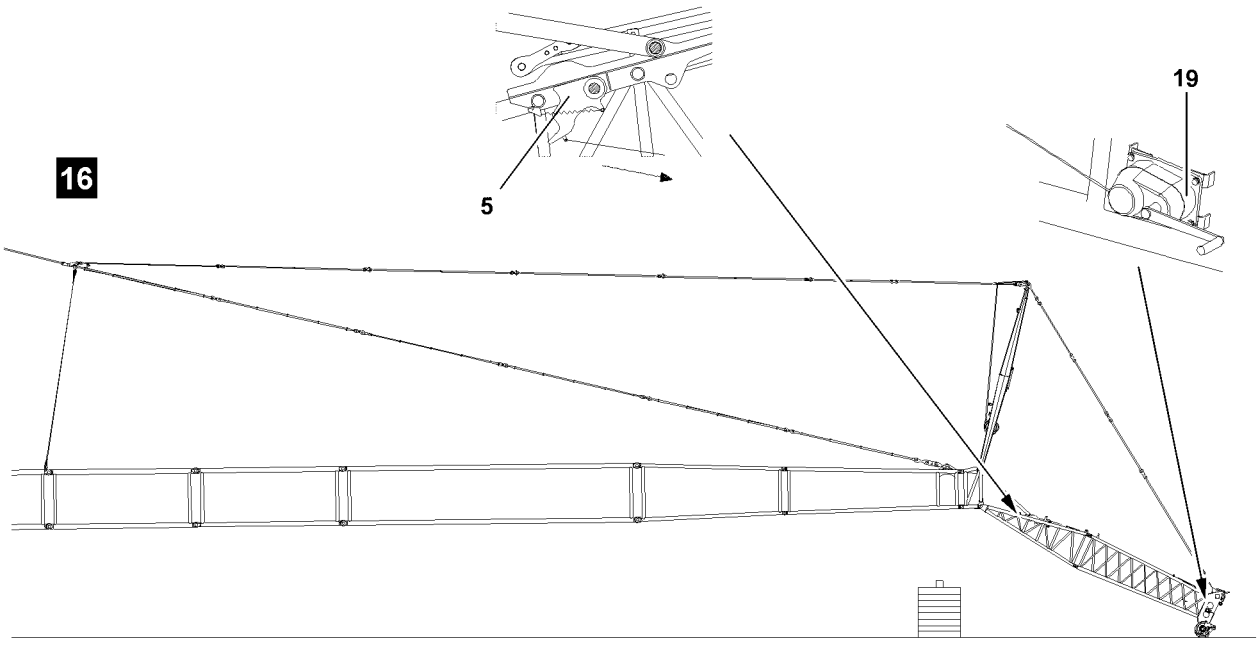

B111581

WARNING
Assembly with turned on set up key!
When the set up key is engaged, the LICCON overload protection is exceeded!
In the event of deliberate improper use, the crane could collapse, the boom can break off or the crane can topple over!
Personnel can be severely injured or killed!
This could result in high property damage!
- ▶ The set up key **D** may only be actuated by persons who know the effects of a bypass!
- ▶ Press the set up key **D** only when the set up status was correctly entered into the LICCON computer system!
- ▶ Observe the erection / take down charts!
- ▶ Crane operation with the set up key **D** turned on is strictly prohibited!

▶ When the S-boom has reached the “lowest” operating position:
Turn the set up key **D** to the right.

Result:
– The LICCON overload protection is deactivated.
– The assembly icon **11** appears on the LICCON monitor.

▶ At the same time, spool the hoist winch out and continue to luff the SLF-boom down until the hook block touches the ground.
▶ Remove the hoist limit switch weight and unreeve the hook block.

NOTICE
Danger of damage on the relapse support!
When taking the boom down, the flap **5** must be set in “down” position before the F-end section touches the ground or as soon as the manual rope winch **19** can be reached!
If this is not observed, components on the F-jib can be damaged!
▶ Make sure that the flap is in “down” position!

▶ Set the flap **5** on the F-pivot section with the manual rope winch **19** into “down” position!
▶ Luff the boom down until the SLF-boom is laying on the support base.

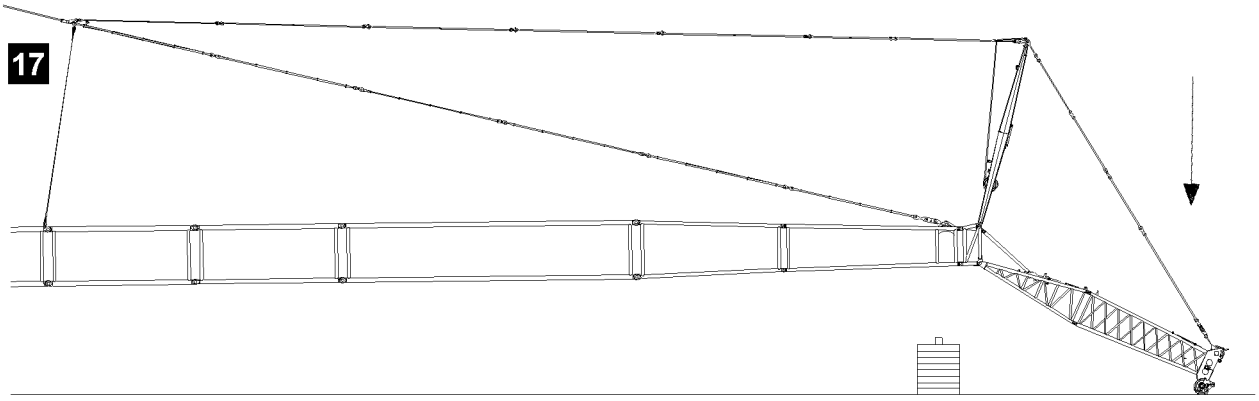

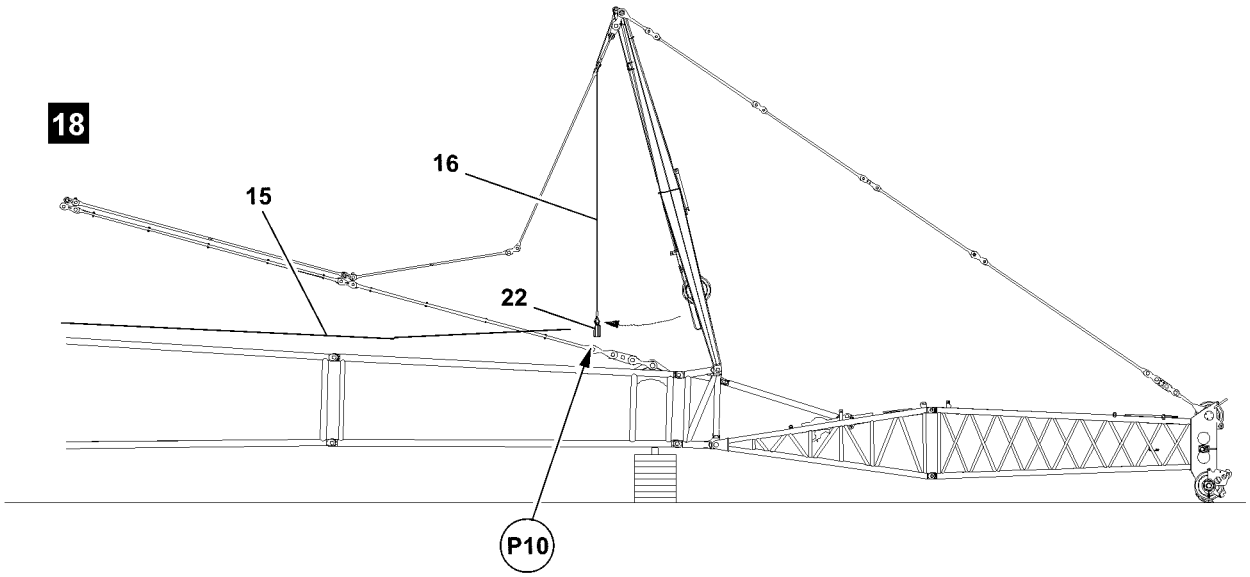

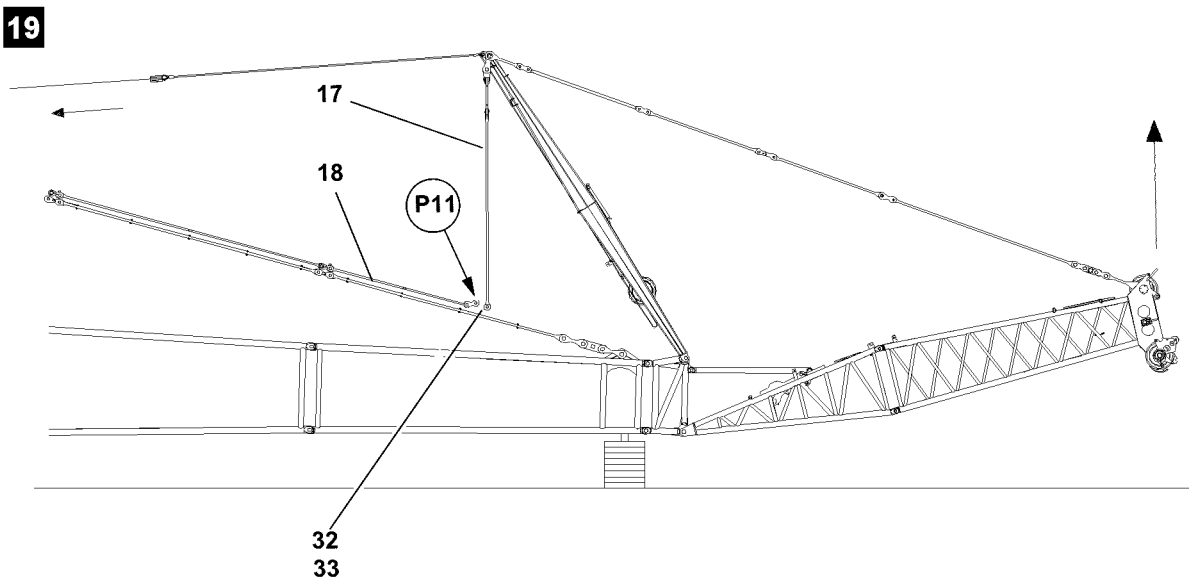

B116869

4.2 Disconnecting the electrical connections

Make sure that the following prerequisite is met:
– The SLF-boom has been placed down.

▶ Disconnect the electrical connections.

NOTICE
Damage to cable drum or cable!
If the cable of the cable drum is not properly spooled up on the cable drum after unplugging, then the cable drum or the cable can be significantly damaged!
▶ Make sure that the cable drum is completely spooled up after unplugging!

▶ Spool the cable drum up and secure it to prevent inadvertent spooling out.
▶ Make sure that all electrical connections on the boom have been disconnected.

4.3 Disassembling the F-auxiliary jib

Make sure that the following prerequisites are met:
– The SLF-boom has been placed down.
– The electrical connections are separated.
– An auxiliary crane is available.

▶ Release the auxiliary rope **16** on the Fa-frame from the parking position.
▶ Get the lock **22** from the tool box or from the F-end section and pin on the auxiliary rope **16**.
▶ Place the hoist winch rope **15** into the lock **22** at point **P10**.
▶ Spool the hoist winch up until it can be unpinned on point **11**, see illustration **19**.
▶ Disconnect the rods **17** with the F- rods **18** at point **P11**:
Remove the spring retainers **33** and unpin the pins **32**.
▶ Secure the guy rods in the receptacles.

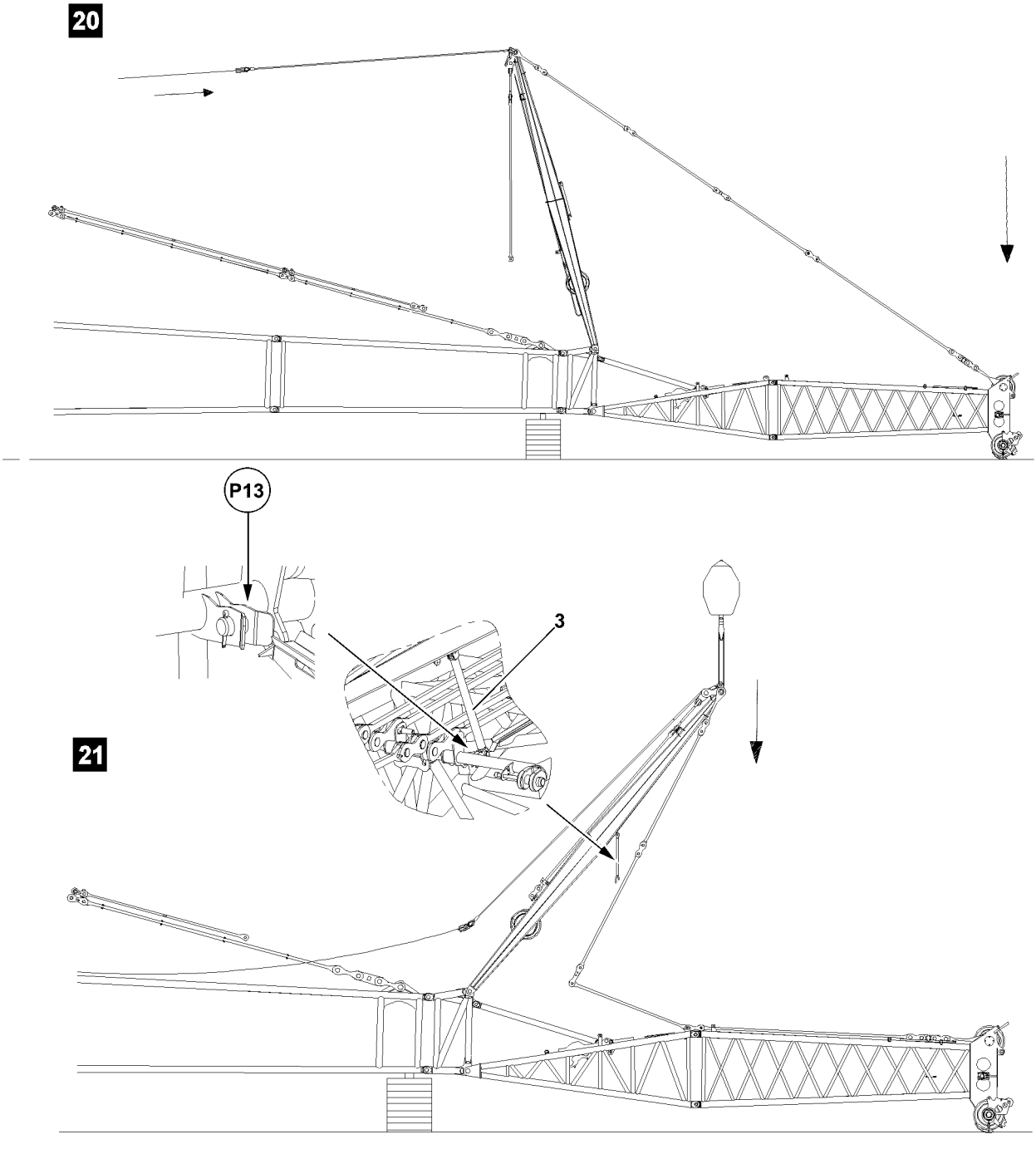

B116870

▶ Spool the hoist winch out until the F-end section is laying on the ground, see illustration **20**.

WARNING
FA-frame folding downward!
If FA-frame is not held with the auxiliary crane while placing down, it can fold downward!
Personnel can be severely injured or killed!
▶ Attach the FA-frame properly on the auxiliary crane before placing it down, see illustration **21**!

▶ Attach the FA-frame on the auxiliary crane.

NOTICE
Danger of slack rope formation!
If the hoist winch is spooled out too quickly during the take down procedure of the FA-frame, slack rope can form!
▶ The hoist rope must be tensioned during the entire take down procedure!
▶ The spool out speed of the hoist winch must be matched to the take down speed of the FA-frame!

▶ Swing the FA-frame with the auxiliary crane “carefully forward in direction of the F-boom” while spooling the hoist winch out at the same time, see illustration **21**.
▶ Lower the FA-frame with the auxiliary crane onto the support **3** at point **P13**.

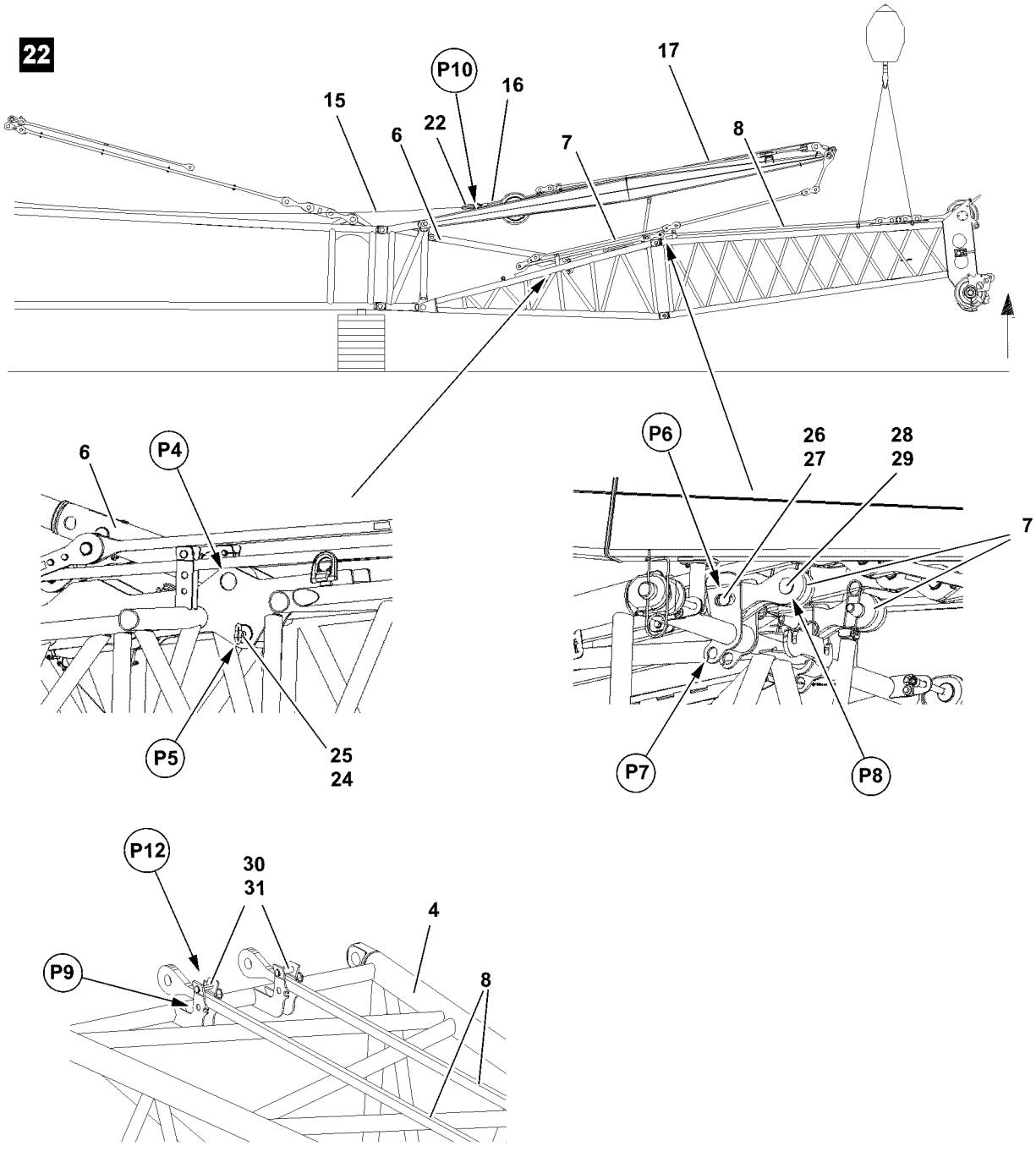
22
P10
15
16
17
6
22
7
8
6
P4
P5
25
24
P6
26
27
28
29
7
P7
P8
P12
30
31
4
P9
8

B116871

- ▶ Fasten the F-end section on the auxiliary crane and lift, see illustration **22**.
- ▶ Unpin the pin **24** of the FA-frame relapse retainer **6** from the parking position, point **P5**.

WARNING
Falling components!
If the components are incompletely pinned or secured, then components can fall down!
Personnel can be severely injured or killed!
- ▶ Make sure that all components are completely pinned and secured!

- ▶ Insert the pin **24** of the FA-frame relapse retainer **6** on point **P4** and secure with spring retainer **25**.

Result:
– The F-assembly unit is secured in transport position.

- ▶ Relieve the hoist winch rope **15** and remove it from the lock **22**.
- ▶ Unpin the lock **22** on the auxiliary rope **16** and remove.
- ▶ Affix the auxiliary rope **16** on the FA-frame in parking position.
- ▶ Secure the FA-frame rods **17** on the FA-frame.
- ▶ Disconnect the FA-frame rods **7** from the F-head rods **8**:
  Release the spring retainers **29** and unpin the pin **28** at point **P8**.
- ▶ Release and unpin the locking pin **26** of the FA-frame rods **7** at point **P7**.
- ▶ Insert the locking pin **26** on point **P6** and secure with spring retainer **27**.
- ▶ Release and unpin the locking pin **30** of the FA-frame rods **8** at point **P9**.
- ▶ Insert the locking pin **30** on point **P12** and secure with spring retainer **31**.

Result:
– The guy rods are secured in the receptacles.

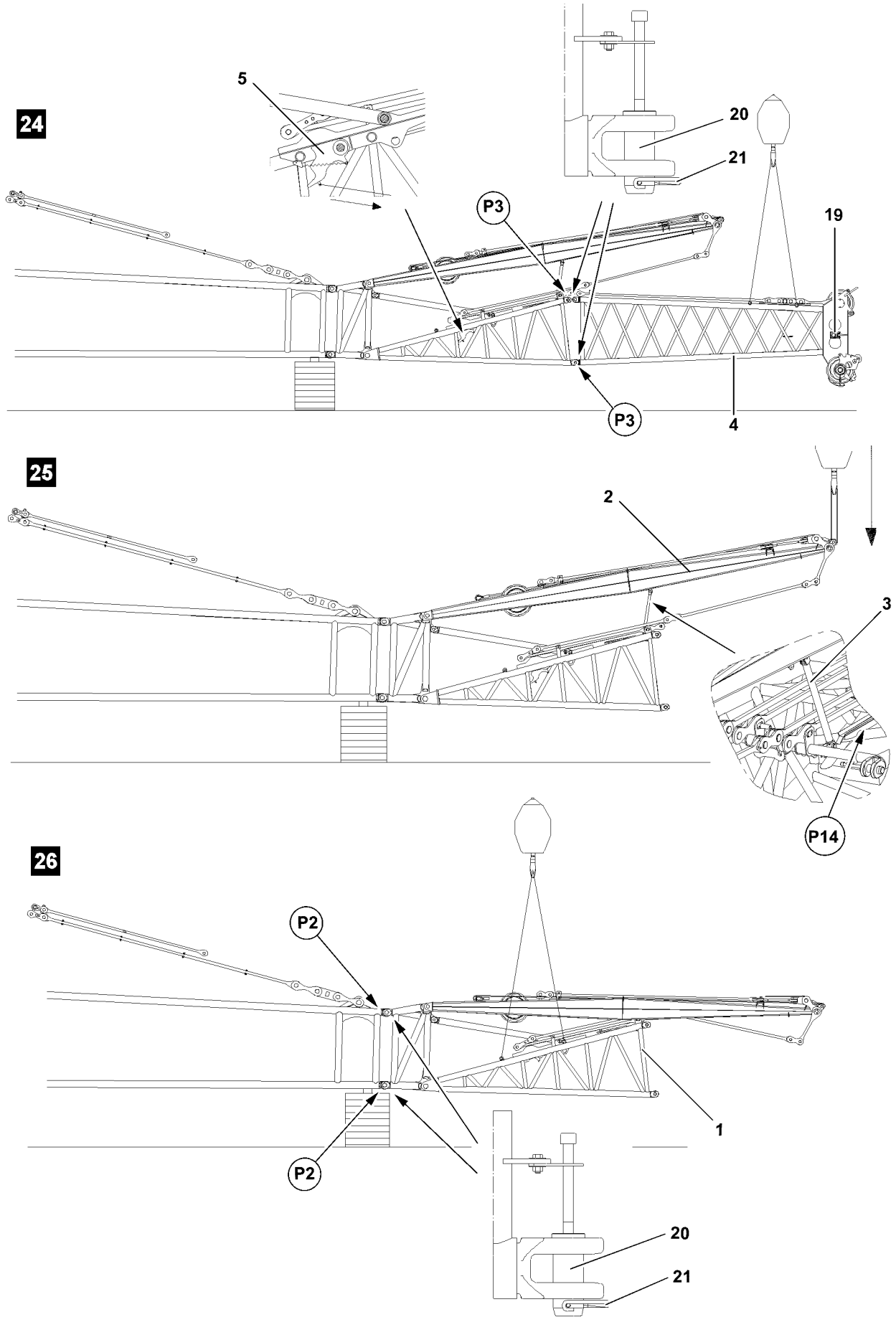

B111592

- ▶ Set the flap **5** with the manual rope winch **19** in “up” position.
- ▶ Remove the crank of the manual rope winch **19** and place it into the tool box.
- ▶ Disconnect the rope strand from the flap **5** to the manual rope winch **19** on the F-end section.
- ▶ Release the spring retainers **21** and unpin the pin **20** at point **P3**.
- ▶ Remove the F-end section with the auxiliary crane from the assembly unit and place it down.
- ▶ Lift the FA-frame with the auxiliary crane, position the support **3** over the placement sheeting, point **14**, see illustration **25**.
- ▶ Place the FA-frame completely down on the assembly unit.
- ▶ Attach the auxiliary crane on the F-assembly unit.
- ▶ Release the spring retainers **21** and unpin the pin **20** at point **P2**.
- ▶ Remove the F-assembly unit with the auxiliary crane from the SL-boom and place it down.

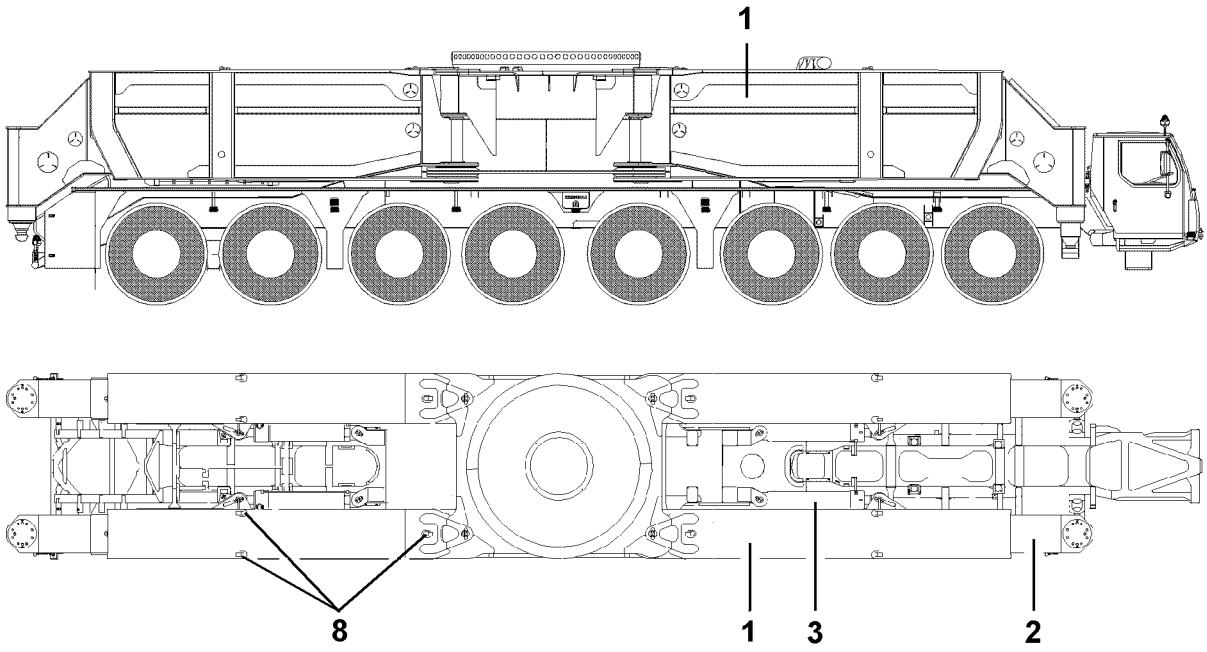

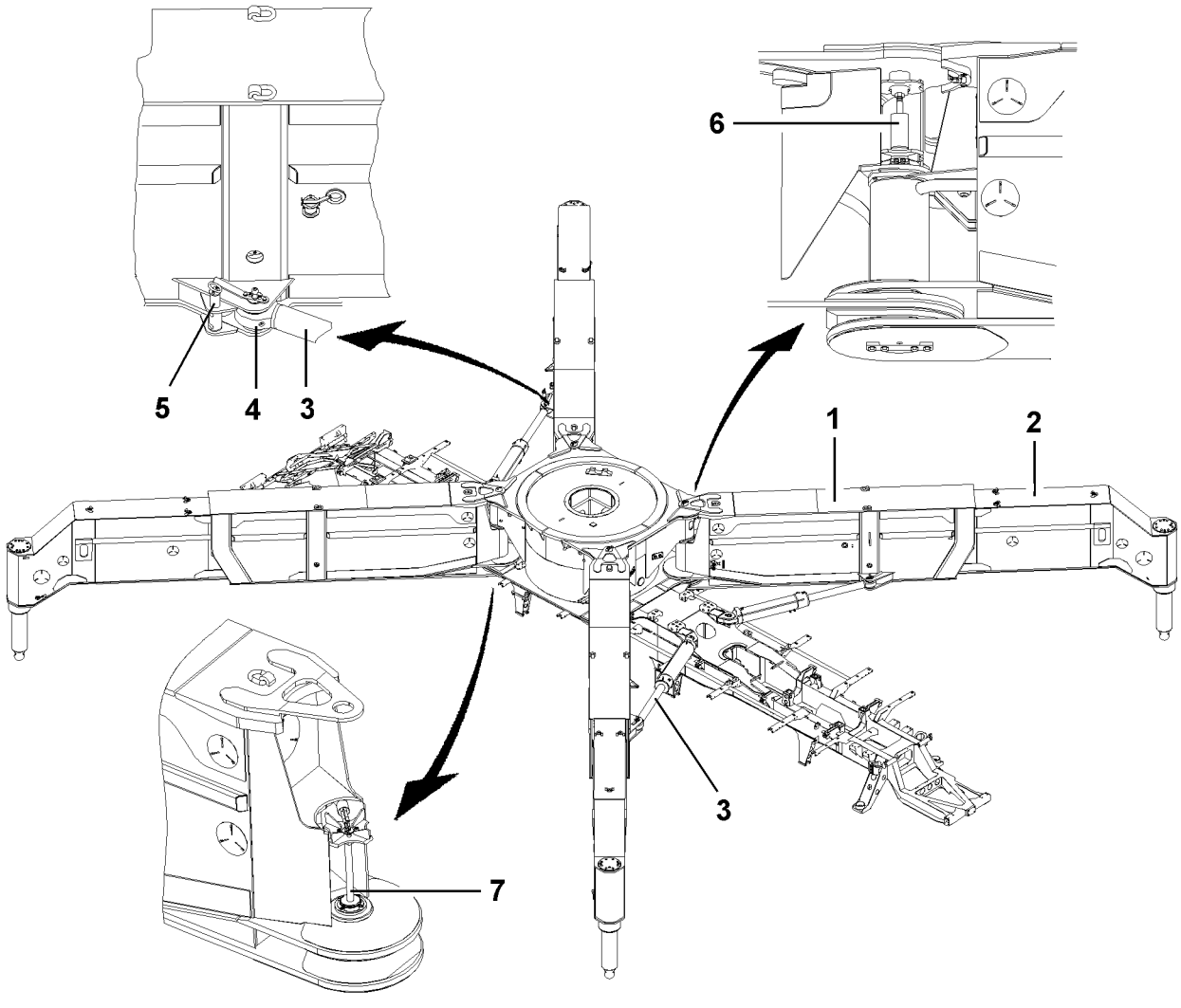

B196246

1 General

In order to reduce the axle loads for this crane, the support beams can be removed.

1.1 Component overview

Components	
1	Support beams
2	Sliding beams
3	Swing cylinder
4	Pinning of swing cylinder
5	Pins for transport retainer
6	Pinning “top”
7	Pinning “bottom”
8	Eyehooks

1.2 Tackle points support beams

To attach the support beams, 3 eyehooks **8** each are installed.

Note

▶ The“supplied tackle chains” must be used for the removal and installation of the support beams!

1.3 Weights

Component	Weight
Support beam 1	12 t
Support beam 2	12 t
Support beam 3	12 t
Support beam 4	12 t

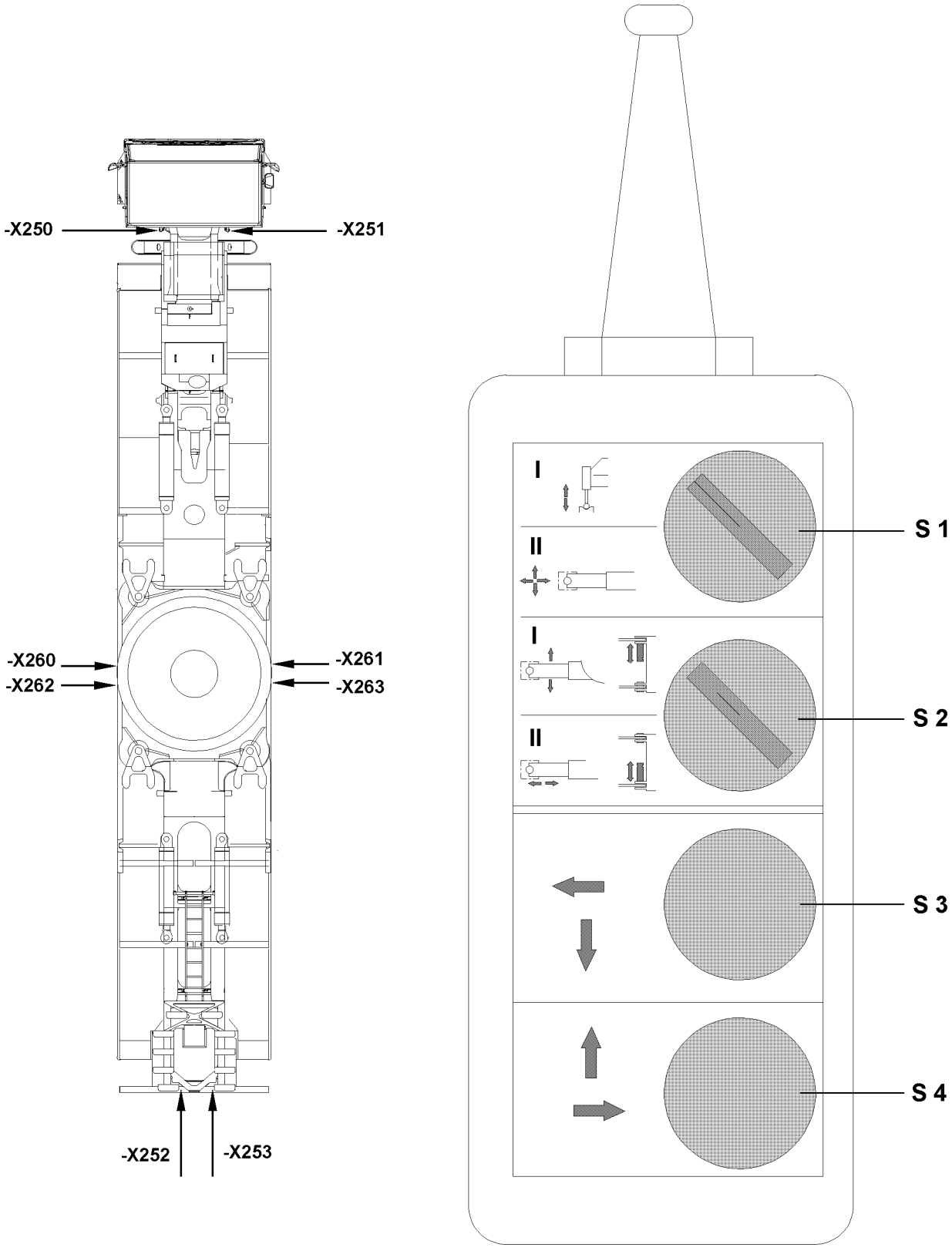

B196250

2 Remote control panel

Note
- ▶ Swinging the support beams out or in to approx. 10 ° is only possible with the remote control panel.
- ▶ After the remote control panel has been connected to a socket, the support control units on the left and right on the vehicle frame are no longer active.
- ▶ The pressure supply is set to approx. 10 bar.
- ▶ Remote control panel, see also “Chapter 3.05”.

2.1 Functions on the remote control panel

2.1.1 Extending / retracting the support cylinders

Note
- ▶ The remote control panel is plugged into corresponding socket (-X250 to -X253).

Extend / retract the support cylinders	
S1	Position I
S3	Extend the support cylinders
S4	Retract the support cylinders

2.1.2 Swinging the support beam out / in

Note
- ▶ The remote control panel is plugged into corresponding socket (-X250 to -X253).

Swing the support beam out / in	
S1	Position II
S2	Position I
S3	Swing the support arm in
S4	Swing the support arm out

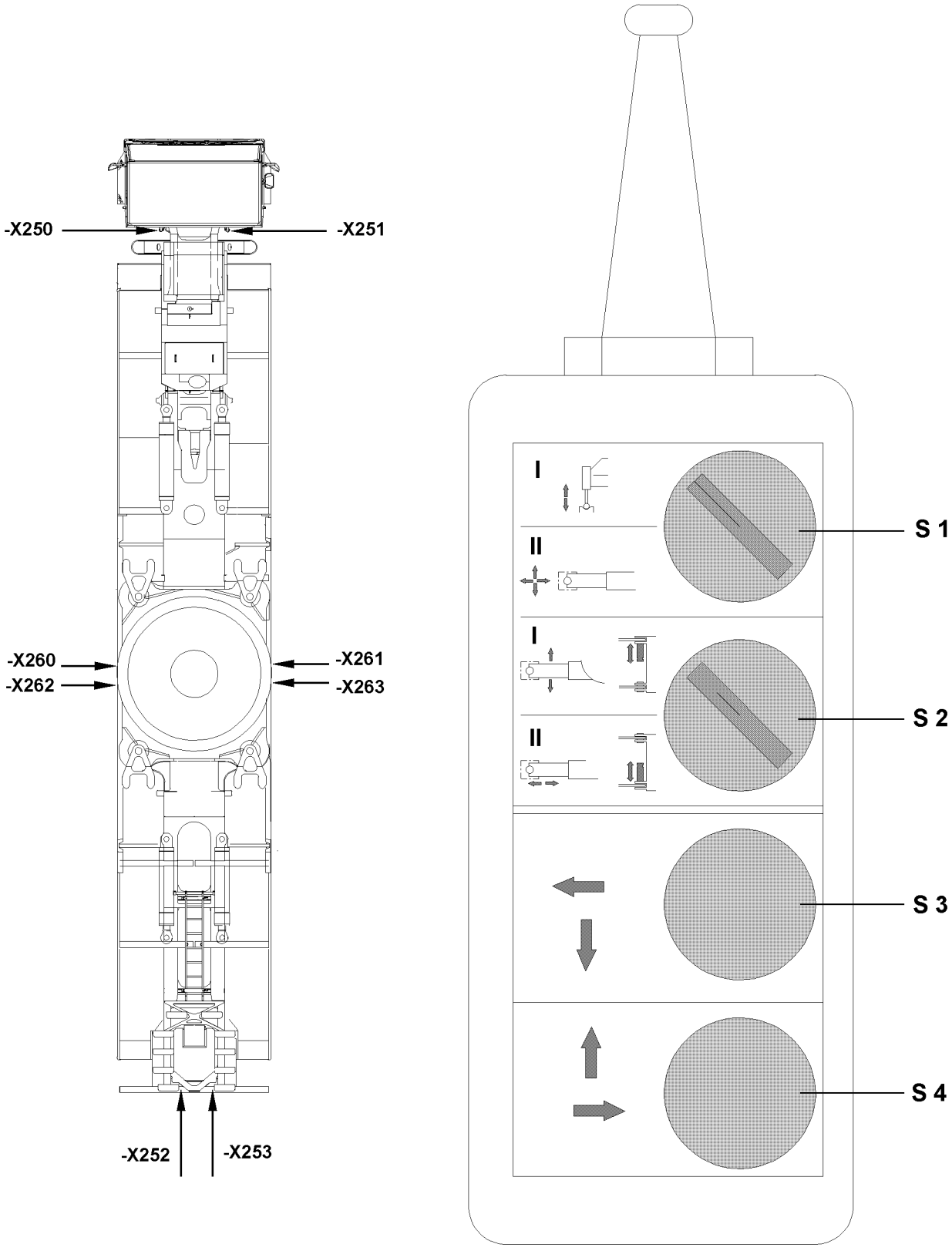

B196250

2.1.3 Pushing the sliding beam out / in

Note
▶ The remote control panel is plugged into corresponding socket (-X250 to -X253).

Push the sliding beam out / in	
S1	Position II
S2	Position II
S3	Push the sliding beam out
S4	Push the sliding beam in

2.1.4 Pin / unpin the support beams ON TOP

Note
▶ The remote control panel is plugged into corresponding socket (-X260 to -X263).

Pin / unpin the support beams ON TOP	
S1	Position II
S2	Position I
S3	Pin the support beams ON TOP
S4	Unpin the support beams ON TOP

2.1.5 Pin / unpin the support beams ON THE BOTTOM

Note
▶ The remote control panel is plugged into corresponding socket (-X260 to -X263).

Pin / unpin the support beams ON THE BOTTOM	
S2	Position II
S3	Unpin the support beams ON THE BOTTOM
S4	Pin the support beams ON THE BOTTOM

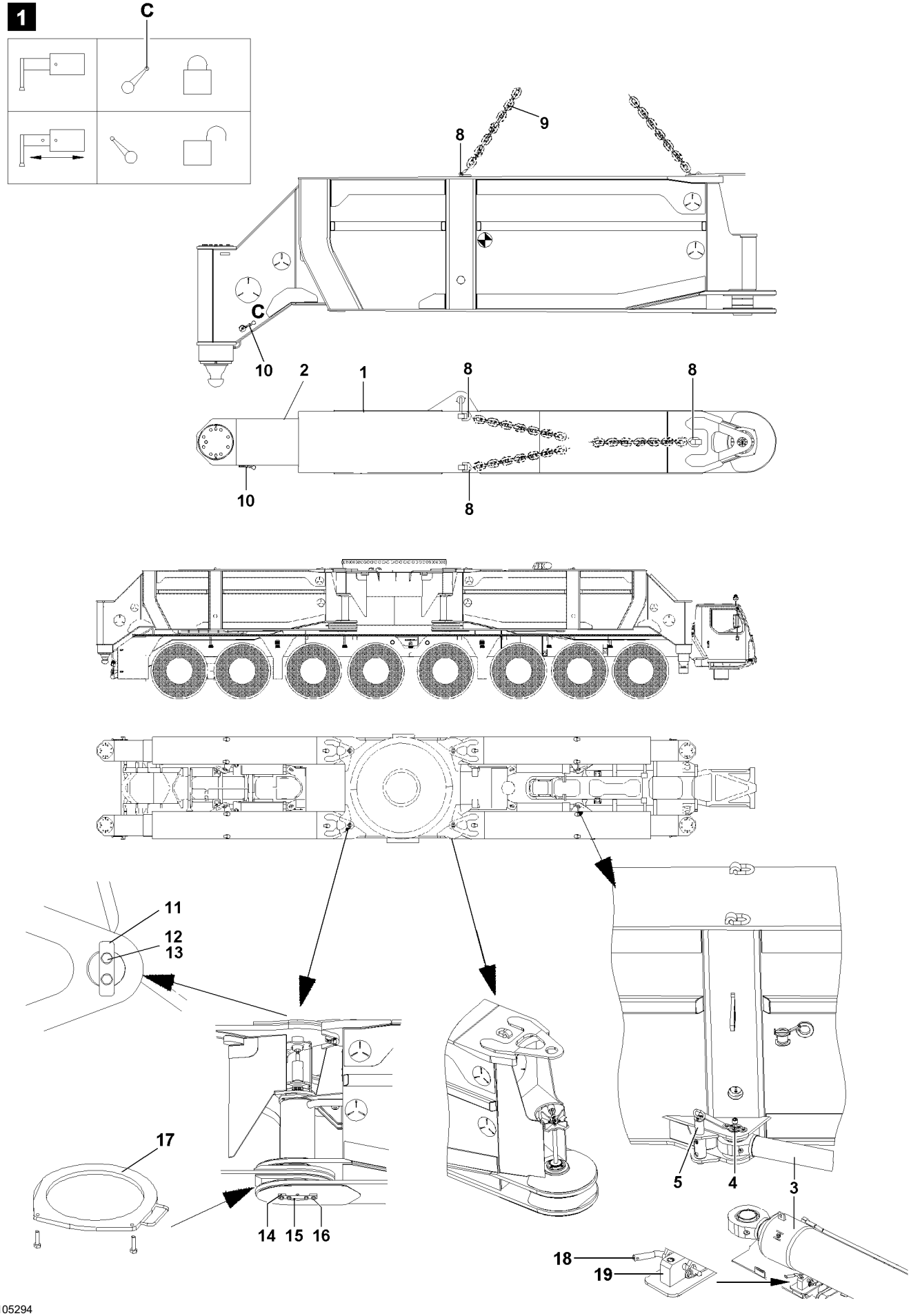

B105294

3 Removal of support beams

DANGER
Risk of accident!
It is prohibited for anyone to remain between the support beams and the vehicle frame or the center section during the swing procedure!
The crane must be aligned horizontally to prevent the support beams from swinging out by themselves!
Remove the support beams only crosswise, i.e. the left front, then the right rear or the right front, then the left rear!
If this is not observed, the crane can topple over!

- ▶ Retract the rear sliding beams completely and set all levers **10** to position **C**, see fig. **1**.
- ▶ Remove the support beams crosswise, i.e. the left front, then the right rear or the right front, then the left rear.

Note

- ▶ The removal of the support beams is identical for all 4 support beams.

Ensure that the following prerequisites are met:

– the crane is positioned on level ground and is horizontally aligned
– the rear sliding beams are fully retracted and manually pinned with the levers **10**
– all levers **10** are in pinned position **C**, see fig. **1**
– an auxiliary crane is available

3.1 Removing the support beams

- ▶ Start the engine.
- ▶ Swing the support beam out a little with the remote control, so that the swing cylinder **3** can be unpinned.

DANGER
Uncontrolled swinging of the support beam!
The support beam can swing uncontrolled to the side and fatally injure personnel as soon as the swing cylinder **3** is unpinned on the support beam!

- ▶ Before the swing cylinder **3** is unpinned, extend the support cylinder from the support beam to the ground and secure it to prevent uncontrolled swinging!

- ▶ Hang the swing cylinder **3** onto the auxiliary crane.
- ▶ Unpin the pin **4** on the swing cylinder **3**, for example with a pin pulling device.
- ▶ Place the swing cylinder **3** in the receptacle **19**, pin with pin **18** and secure with cotter pin.
- ▶ Hang the support beam on the tackle points **8** with the “supplied tackle chains **9** ” on the auxiliary crane.
- ▶ Remove the spacer plate **17** (2 screws M12).
- ▶ Remove the pin retainers “on top” and “on the bottom”. Unscrew the axle retainer **11** and axle retainer **14**.
- ▶ Lightly lift the support beam with the auxiliary crane until the support beam touches on “on top”.
- ▶ Plug in the remote control panel on the corresponding socket, see “Remote control panel section”.
- ▶ Unpin the support beam first “on top”, then “on the bottom”.
- ▶ Remove all hydraulic connections, 2 x quick couplers.

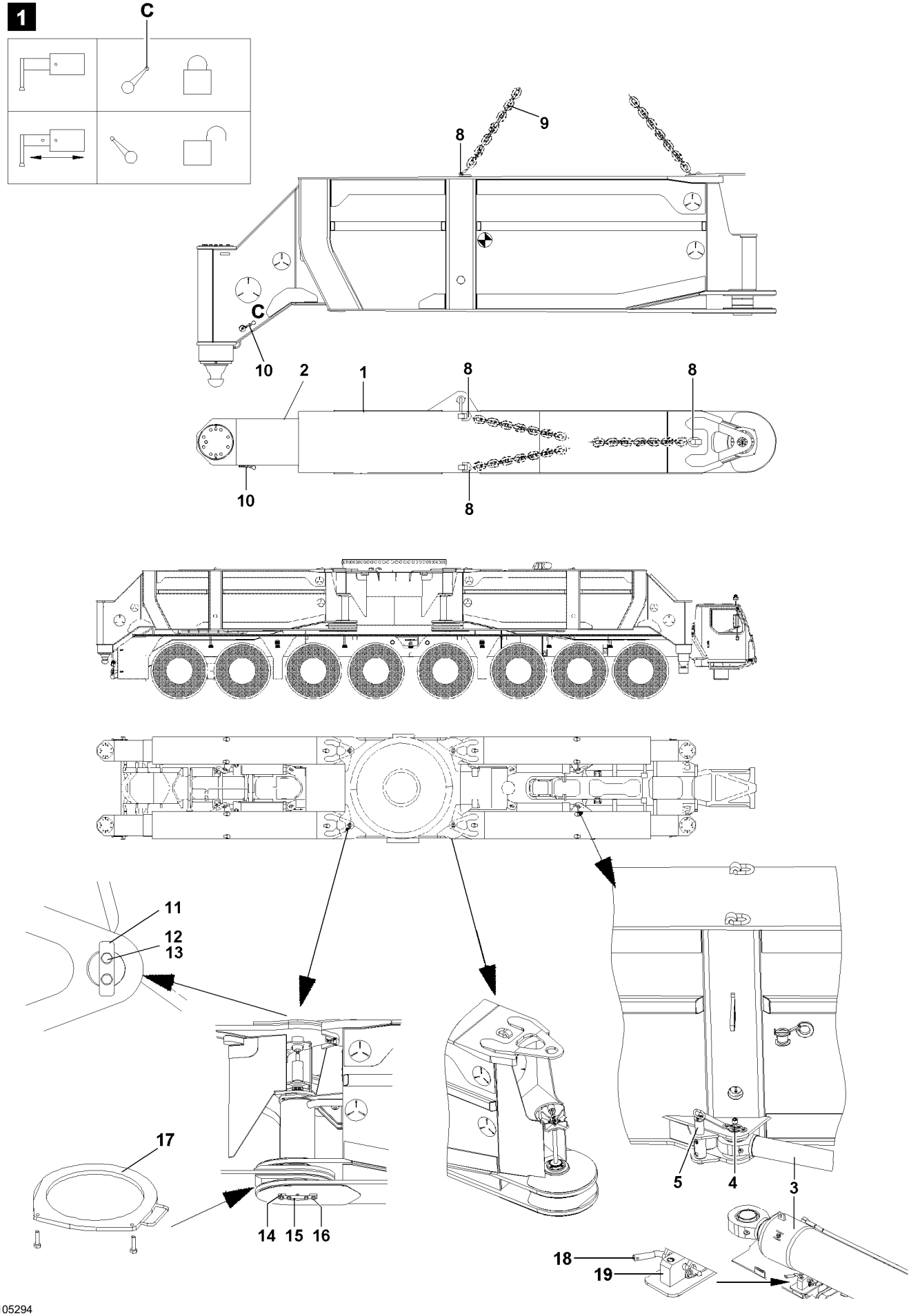

B105294

▶ Unplug all electrical connections.

Note

▶ There are two electrical connections per support beam. One plug each must be plugged in on the center section for the brake force reduction. It is not possible to mix up the plugs.

▶ Place the support beam on the transport vehicle and secure.

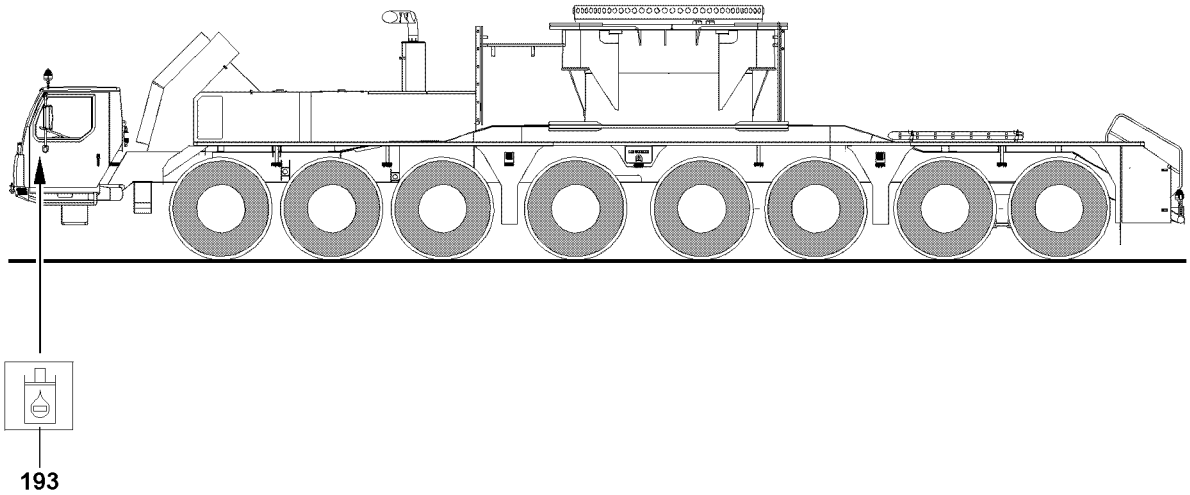

B105295

3.2 Travel operation without support beams

WARNING
Danger of accident due to excess breaking the crane vehicle!
If the brake force reduction is not activated with removed support beams, then the brake of the crane vehicle is oversized!
▶ Driving with removed support beams is only permitted if the brake force reduction is activated!

When all 4 support beams are removed and all electrical connections are plugged into the dummy plugs, the brake force reduction is active.
▶ Plug all electrical connections into the dummy plugs.

Result:
– The control light **193** lights up.
– The brake force reduction is active.

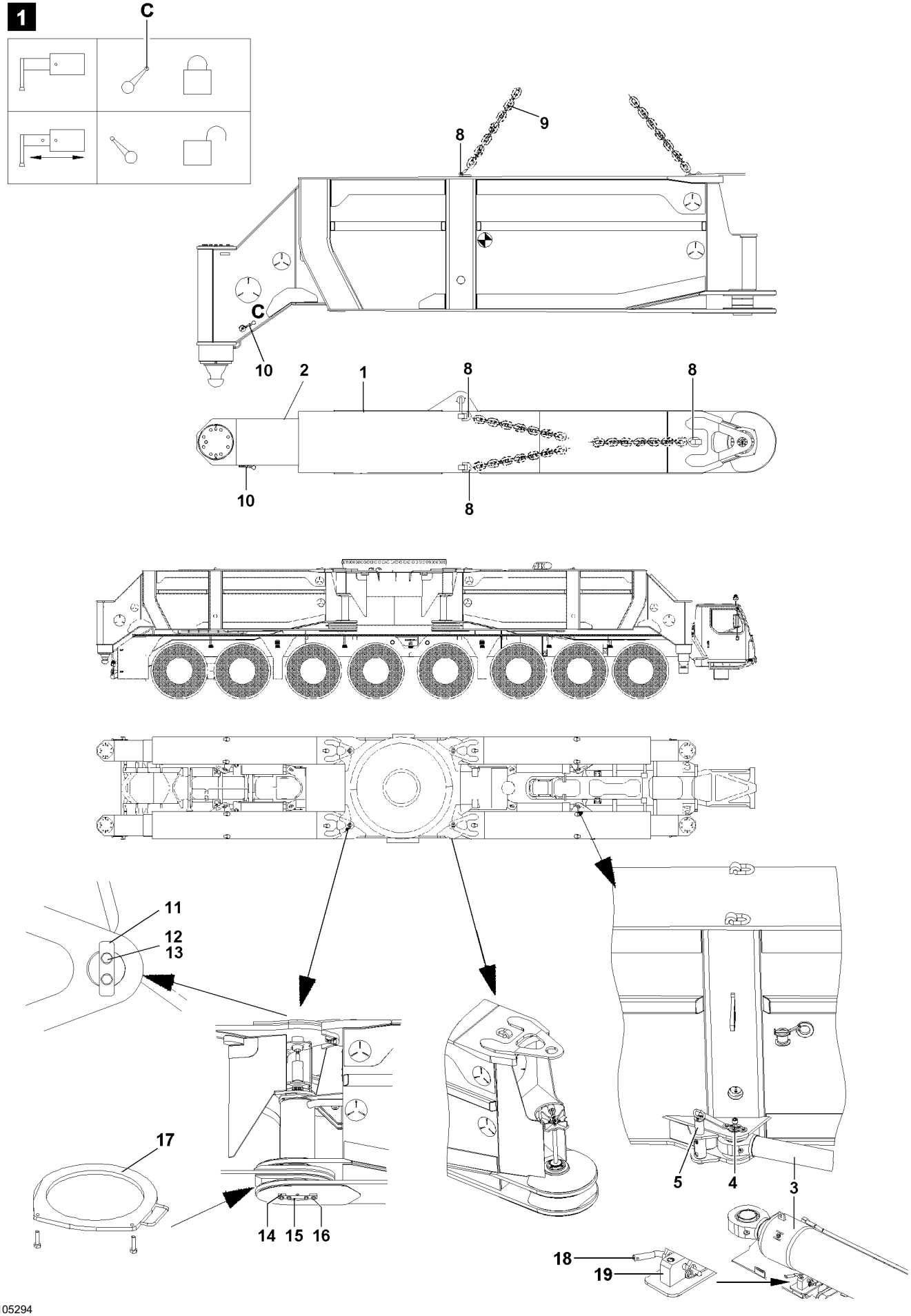

B105294

4 Installation of support beams

DANGER
Risk of accident!
It is prohibited for anyone to remain between the support beams and the vehicle frame or the center section during the swing procedure!
The crane must be aligned horizontally to prevent the support beams from swinging out by themselves!
Install the support beams only crosswise, i.e. the left front, then the right rear or the right front, then the left rear!
If this is not observed, the crane can topple over!

- ▶ Set all levers **10** to position **C**, see fig. **1**.
- ▶ Install the support beams crosswise, i.e. the left front, then the right rear or the right front, then the left rear.

Note

- ▶ The installation of the support beams is identical for all 4 support beams.

Ensure that the following prerequisites are met:

- the crane is positioned on level ground and is horizontally aligned
- the sliding beams are fully retracted and manually pinned with the levers **10**
- all levers **10** are in pinned position **C**, see fig. **1**
- an auxiliary crane is available

4.1 Installing the support beams

- ▶ Hang the “supplied tackle chain **9** ” on the eyehooks **8** on the support beam **1**.
- ▶ Swing the support beam with the auxiliary crane to the center section and swing it carefully into the pin receptacles “on top” and “bottom” until the bores align.
- ▶ Lightly lift the support beam with the auxiliary crane until the support beam touches on “on top”.
- ▶ Establish all hydraulic connections, 2 x quick couplers.
- ▶ Establish all electrical connections.
- ▶ Turn the ignition on.
- ▶ Start the engine.
- ▶ Plug in the remote control panel, see “Remote control panel section”.

Note

- ▶ The remote control panel must be plugged in on the side on which the support beam is being pinned.

- ▶ Actuate the remote control panel and pin the support beam on the center section with pins, first “on top” and then “on the bottom”.
- ▶ Secure the pin “on top” with axle retainer **11**, washer **12** and screw **13** and “on the bottom” with axle retainer **14**, washer **15** and screw **16**.

Note

- ▶ When pinning, pay attention to he position of the groove on the pin. The groove must align with the retaining plate (axle retainer **14**).

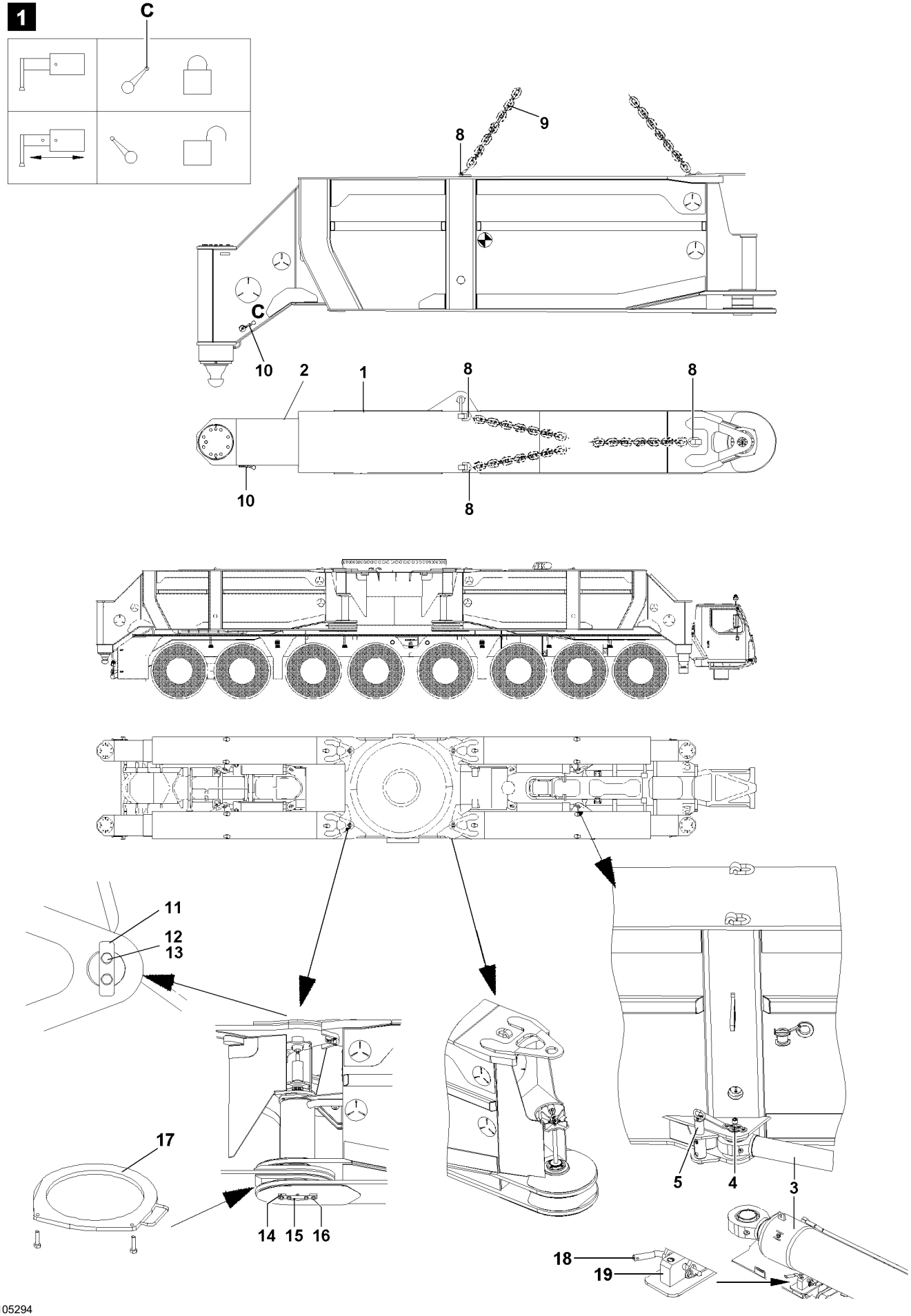

B105294

DANGER
Risk of accident!
- ▶ Before unpinning, it must be ensured that the pin receptacle is clear.

- ▶ After pinning, secure the pins.
- ▶ Install the spacer plate **17** (2 screws M12).
- ▶ Fold the support beam all the way in with the auxiliary crane, secure and pin and secure the swing cylinder **3** on the support beam **1** with pin **4**.

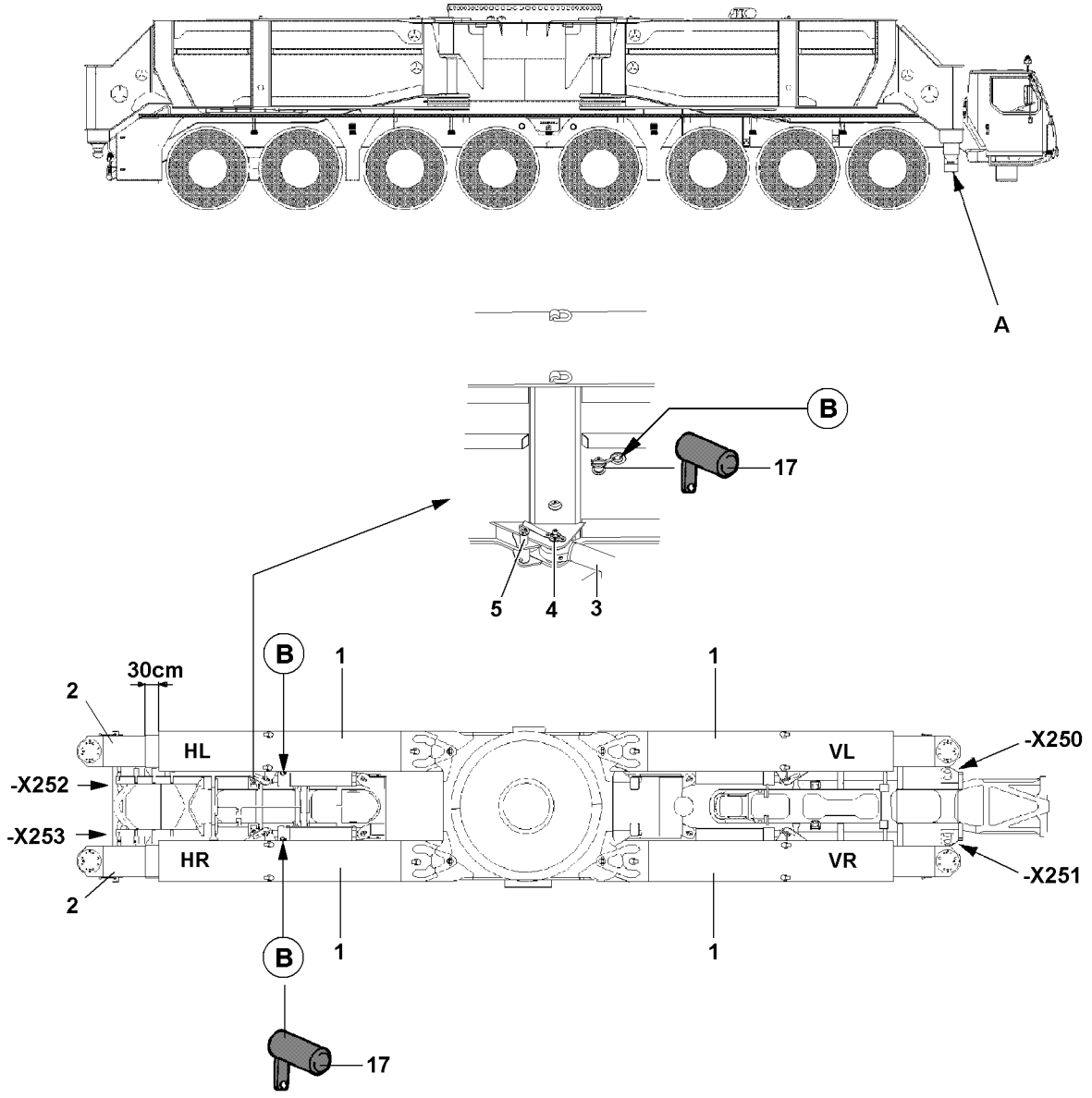

B198585

4.2 Bringing the support beams into transport position

4.2.1 Support beams front

- ▶ Plug the remote control panel on the left front into the socket **-X250**.
- ▶ Swing the left front support beam **VL** in.
- ▶ Plug the remote control panel on the right front into the socket **-X251**.
- ▶ Swing the right front support beam **VR** in.
- ▶ Secure the support beam by extending the support cylinder into the calotte **A**.

4.2.2 Rear support beams

DANGER
Risk of accident!
The sliding beams on the rear support beams must be pushed out approx. 300 mm for even distribution of the axle pressure during transport and secured with the pins **17** to prevent them from sliding out.

- ▶ Secure the rear support beams on both sides with pins **5** to prevent them from swinging out.
- ▶ Secure the rear support beams on both sides with pins **17** on points **B** to prevent them from sliding out.

- ▶ Plug the remote control panel on the left rear into the socket **-X252**.
- ▶ Unlock the sliding beam and extend it approx. 300 mm.
- ▶ Pin the sliding beam from the inside and secure.
- ▶ Swing the left support beam **HL** in and secure it with pin **5** to prevent it from swinging out.
- ▶ Insert the pin **17** on point **B** and secure the support beam **HL** to prevent it from sliding out.
- ▶ Plug the remote control panel on the right rear into the socket **-X253**.
- ▶ Unlock the sliding beam and extend it approx. 300 mm.
- ▶ Pin the sliding beam from the inside and secure.
- ▶ Swing the right support beam **HR** in and secure it with pin **5** to prevent it from swinging out.
- ▶ Insert the pin **17** on point **B** and secure the support beam **HR** to prevent it from sliding out.

B195219

1 Minimum required hook block weight

WARNING
Falling components and hook block!
If the chosen hook block weight is not large enough. then the hoist rope pulls the hook block between the boom head and the winch from a certain hoisting height suddenly upward. As a result, the boom head and the hook block can be damaged. Damaged components and the hoist rope between the boom head and the winch can fall down.
If slack rope forms between the winch and the boom head when spooling the winch out, then the hook block can suddenly fall down.
Personnel can be severely injured or killed!
- ▶ Calculate the minimum required hook block weight before lifting the load!
- ▶ Select the weight of the hook block depending on the calculation!

If the weight of the hook block is not sufficient:
- ▶ Select a heavier hook block or increase the weight of the hook block with fastening items, load tackle, auxiliary weights or modification kits!

NOTICE
Rope damage due to insufficient weight of the hook block!
If the hook block is operated with a higher reeving than is required by the load on the respective boom length, the minimum required hook block weight increases.
If the hook block weight is too low to tighten the hoist rope sufficiently, spooling problems may occur on the winches when lowering and lifting the hook block due to slack rope formation. Rope damage can result.
If no minimum system-related hoist reeving is required for the operating mode:
- ▶ Reeve the hook block at the minimum depending on the maximum rope pull and the weight of the load to be lifted!

If the weight of the hook block is not sufficient:
- ▶ Select a heavier hook block or increase the weight of the hook block with fastening items, load tackle, auxiliary weights or modification kits!

Note
Recommendation for selection of hook block weight!
If the maximum load capacity for the respective boom configuration is not exceeded by an additional weight increase of the hook block:
- ▶ Increase the minimum required hook block weight additionally by at least 10%!

If an additional weight increase of the hook block due to the maximum load capacity for the respective boom configuration is not possible:
- ▶ Lower the hook block only with utmost caution!

Note
Observe the permissible hook block weights for erection and take down of the boom system!
If the permissible hook block weight for erection and take down of the boom system is exceeded due to the own weight increase of the hook block, then the boom system cannot be erected or taken down with this hook block weight.
- ▶ Observe the permissible hook block weights for erection and take down in the erection and take down charts!

If the permissible hook block weight for erection and take down is exceeded:
- ▶ Remove auxiliary weights for the erection and take down of the boom system!

1.1 Calculating the minimum required hook block weight

$$G = L \times M \times N \times F$$

B109881

Formula to determine the minimum required hook block weight

Abbreviation	Description	Unit
G	Minimum required hook block weight	kg
L	Overall boom length	m
M	Rope weight	kg/m
N	Reeving	-
F	Factor	-

Explanation of variables to calculate the minimum required hook block weight

1.2 Determining the rope weight for the rope diameter

Rope diameter	Rope weight M
13 mm	0.85 kg/m
15 mm	1.12 kg/m
17 mm	1.45 kg/m
19 mm	1.81 kg/m
21 mm	2.24 kg/m
23 mm	2.67 kg/m
25 mm	3.09 kg/m
28 mm	3.94 kg/m
30 mm	4.46 kg/m
32 mm	5.09 kg/m
38 mm	7.21 kg/m
40 mm	7.99 kg/m
52 mm	13.50 kg/m

Rope diameter and rope weight

1.3 Determining the factor for reeving

Reeving N	Factor F
1	1,31
2	1,34
3	1,36
4	1,39
5	1,41
6	1,44

Reeving N	Factor F
7	1,46
8	1,49
9	1,52
10	1,54
11	1,57
12	1,60
13	1,63
14	1,65
15	1,68
16	1,71
17	1,74
18	1,77
19	1,80
20	1,83
21	1,87
22	1,90
23	1,93
24	1,96
25	2,00
26	2,03
27	2,06
28	2,10
29	2,13
30	2,17

Reeving and factor

1.4 Calculation examples

1.4.1 Calculating the required hook block weight for crane operation with 1 hoist rope winch in single operation with single hook block

Crane configuration:

– Length of main boom: 70 m
– Length of auxiliary boom: 28 m
– Rope diameter: 28 mm
– Reeving: 12 rope strands

Variables for calculation:

L = overall boom length = 98 m
M = rope weight for rope diameter 28 mm = 3.94 kg/m
N = reeving = 12
F = Factor for 12 rope strands = 1.60

Calculation:

G = **L** x **M** x **N** x **F**
G = 98 m x 3.94 kg/m x 12 x 1.60
G = 7414 kg
The minimum required hook block weight must be 7414 kg and must be increased additionally by at least 10 % (741 kg) to 8155 kg. The maximum load capacity for the respective boom configuration may not be exceeded by the additional weight increase of the hook block.

1.4.2 Calculating the required hook block weight for crane operation with 2 hoist rope winches in parallel operation with double hook block

Crane configuration:

– Length of main boom: 70 m
– Length of auxiliary boom: 28 m
– Rope diameter: 28 mm
– Reeving: 2 x 8 rope strands

Variables for calculation:

L = overall boom length = 98 m
M = rope weight for rope diameter 28 mm = 3.94 kg/m
N = reeving = (2 x 8)
F = Factor for 8 rope strands = 1.49

Calculation:

G = **L** x **M** x (**2** x **N**) x **F**
G = 98 m x 3.94 kg/m x (2 x 8) x 1.49
G = 9205 kg
The minimum required hook block weight must be 9205 kg and must be increased additionally by at least 10 % (921 kg) to 10126 kg. The maximum load capacity for the respective boom configuration may not be exceeded by the additional weight increase of the hook block.

2 Procedure in case of slack rope

2.1 Lowering the hook block if slack rope forms

If the hook block can no longer be lowered due to slack rope formation, then the following steps must be carried out.

2.1.1 Spooling op loose hoist rope

▶ Spool up loose hoist rope between the boom head and the wind carefully onto the winch.

Note

▶ A slight rope slack must remain between the boom head and the winch!

2.1.2 Luffing the boom down

NOTICE

Risk of collision!

When luffing the boom down, the hoist rope length can shorten and pull the hook block against the boom head.

▶ Monitor the distance of the hook block to the boom head!

▶ Luff the boom down carefully.

Result:

– The hoist rope between the boom head and the winch is tensioned.

2.1.3 Lowering the hook block

▶ Lower the hook block carefully with the hoist gear.

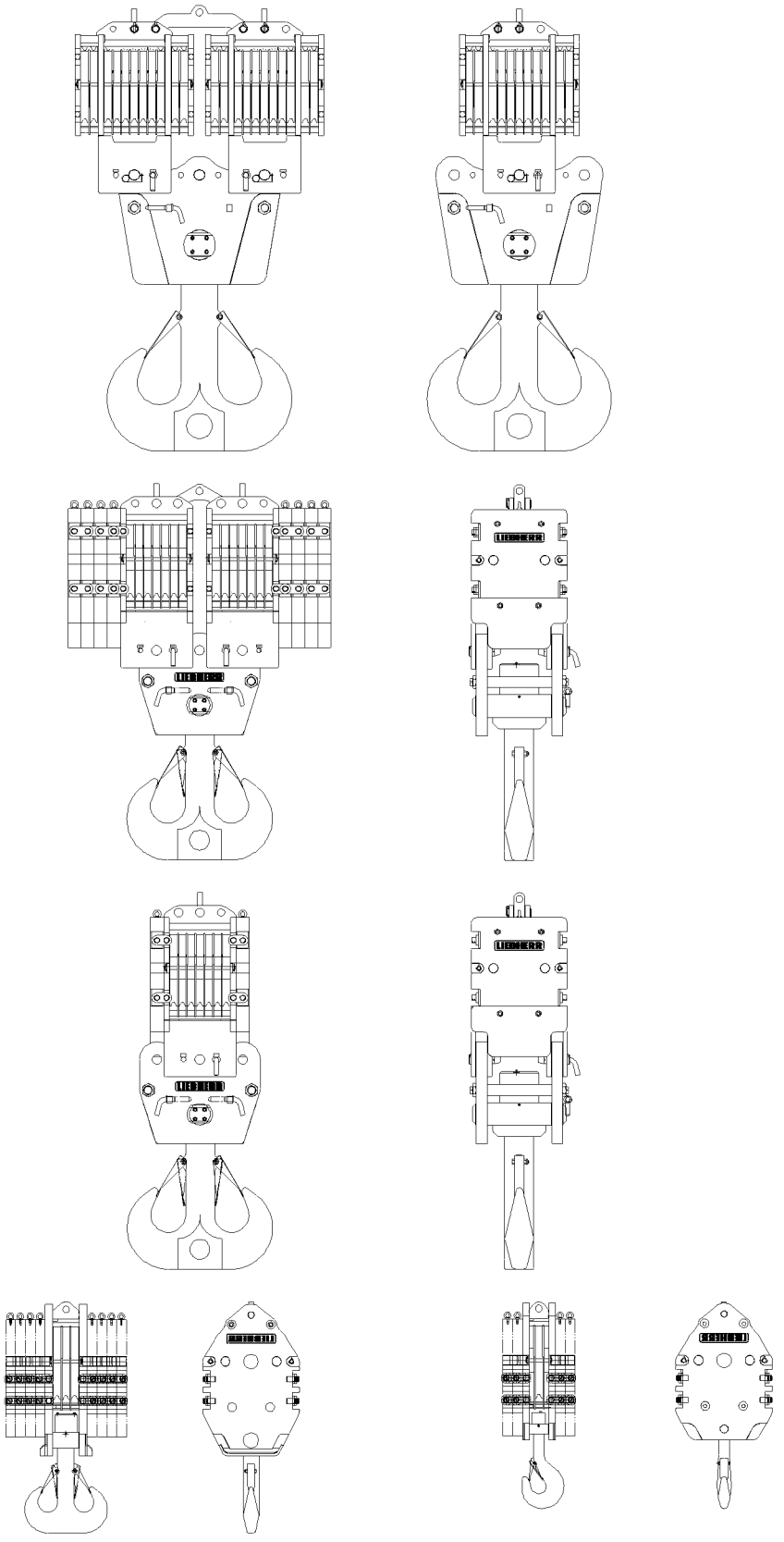

B108122

3 Hook block overview

3.1 Handling of hook blocks

Note

- For the load hooks and hook blocks approved for this crane type refer to the separate load chart manual!
- The hook blocks shown in this chapter are only examples and can differ from your hook block in type and number of rope pulleys. The different assembly and disassembly procedures are therefore only an example of the description for a number of different hook blocks!

DANGER

Hook block weights!

If the data in the erection and take down charts as well as the load charts are not observed, dangerous situations up to toppling of the crane can occur!

Personnel can be severely injured or killed, in addition, high property damage can result!

- Observe the data in the erection and take down charts!
- The specifications in the load charts must be adhered to!
- The crane operator bears the sole and full responsibility for the adherence to the data in the erection and take down charts as well as the load charts!

Differently sized hook blocks can be used for various loads.

NOTICE

Rope damage due to insufficient hook block weight!

If the hook block weight is too low to tighten the hoist rope sufficiently, spooling problems may occur on the winches when lowering and lifting the hook block due to slack rope formation!

The hoist rope can be damaged!

- In order to prevent spooling problems on the winches, the hook block weight may be increased with auxiliary weights, if necessary!
- If problems develop in the assembly and set up conditions due to the weight increase of the hook block, auxiliary weights must be removed again!

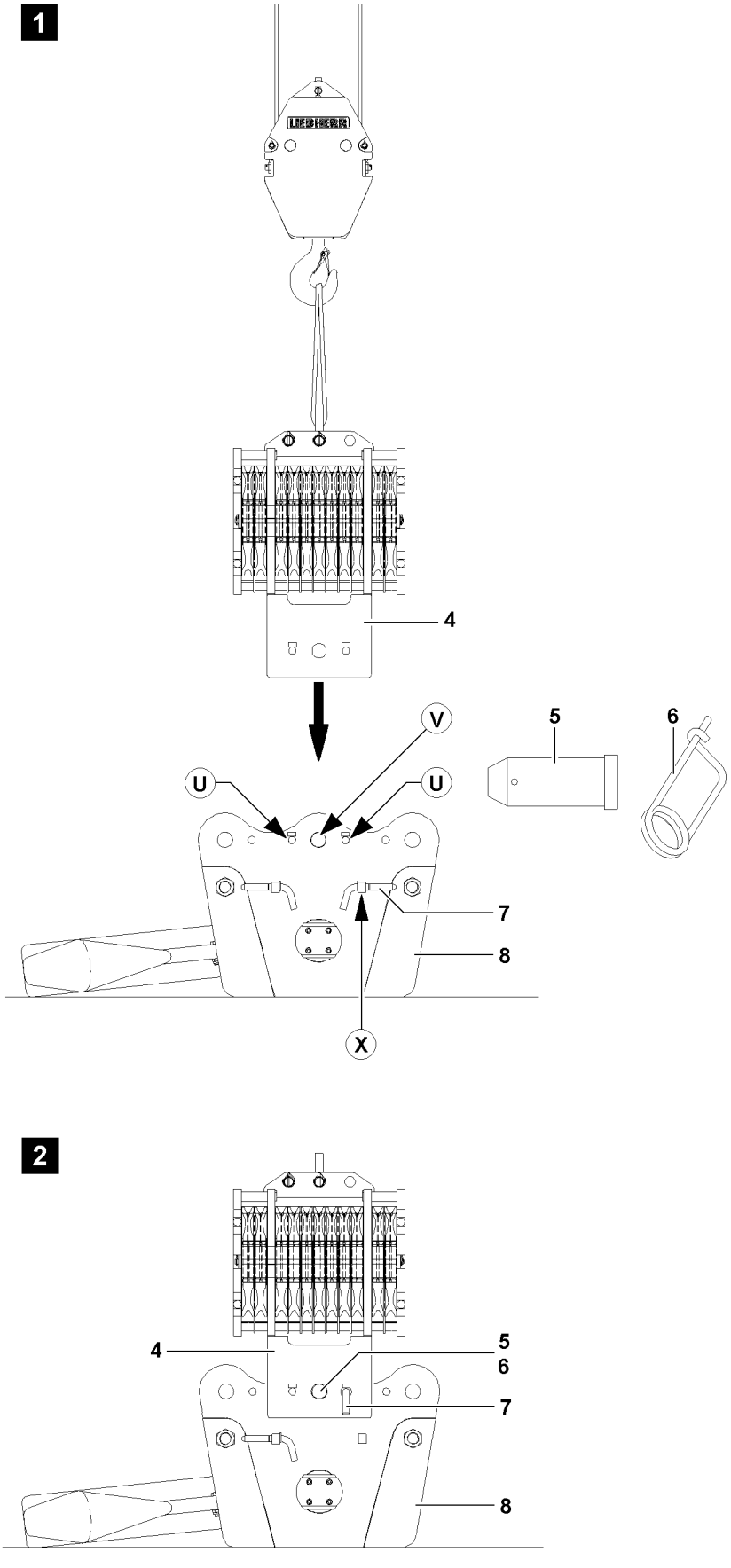

B108123

4 Installing a double hook block for single operation

4.1 Installing the hook block

If the hook blocks are to be used in single operation, then the pulley block **4** must be installed centered on the cross brace **8**.

4.1.1 Installing the pulley block on cross brace

Make sure that the following prerequisites are met:

– The ground is sufficiently load bearing to take on the weight of the hook block safely.
– The ground is level and horizontal.
– The cross brace **8** is placed on the ground, see illustration **1**.

DANGER
Risk of tipping the pulley block!
If the retaining pins **7**, during assembly of the pulley block **4** are not pinned on the cross brace, then the pulley block tips to the side when the auxiliary crane is removed!
Personnel remaining in the danger zone can be severely injured or killed!

▶ Insert the retaining pins **7** into the bores **U** on the hook block!
▶ Make sure before removing the auxiliary crane that the pulley block is properly pinned and secured!

▶ Attach the pulley block **4** onto the auxiliary crane, illustration **1**.
▶ Position pulley block **4** on the cross brace **8** and align the pin bore **V**.
▶ Insert the pin **5** on point **V** and secure with spring retainer **6**.
▶ Unpin the retaining pin **7** from the transport receptacle (point **X**).
▶ Insert the retaining pins **7** into one of the bores (point **U**) on the cross brace **8**, illustration **1**.
▶ When the pulley block **4** is secured by the retaining pins **7** at point **U**:
Remove the auxiliary crane.

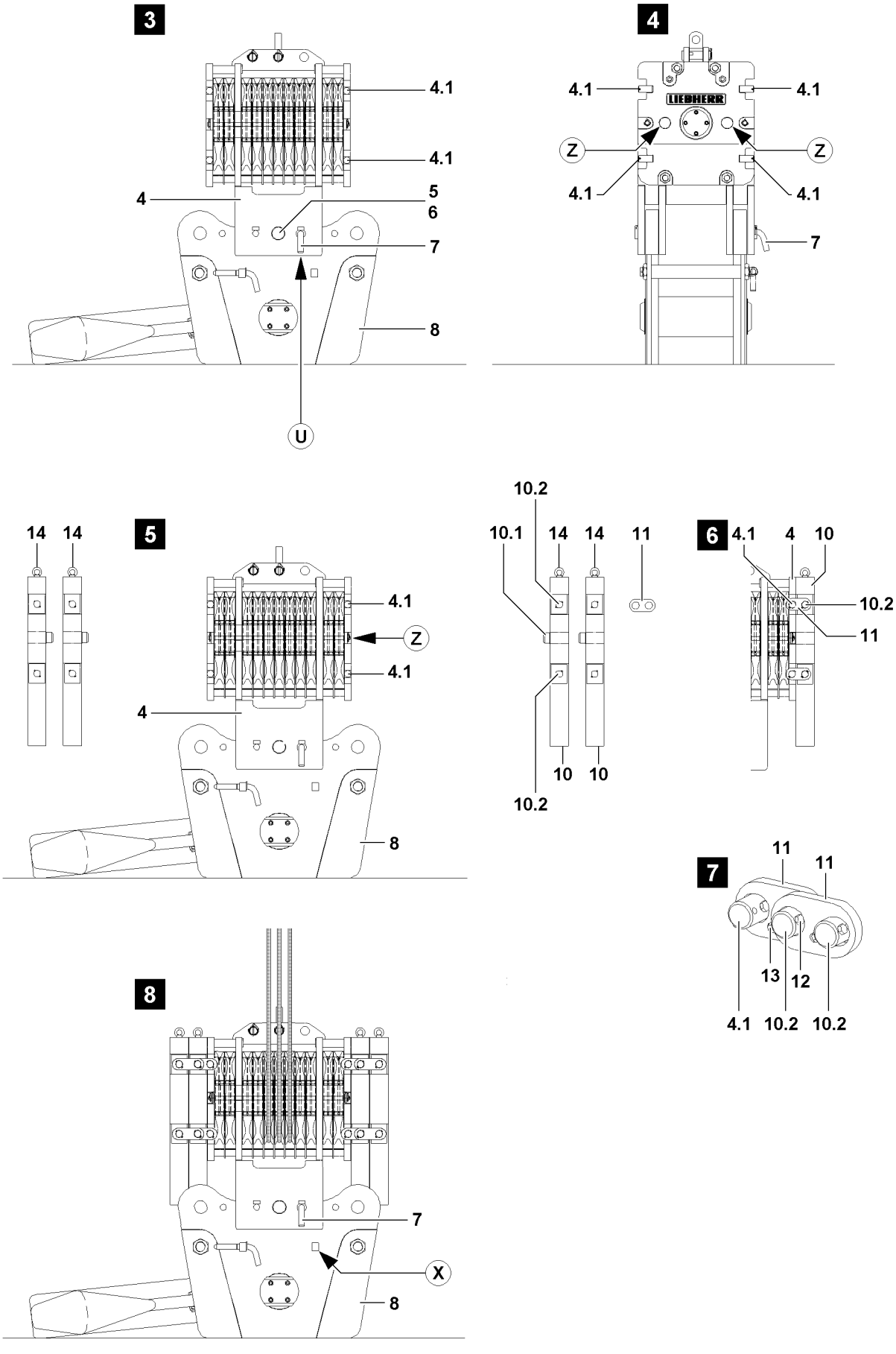
3
4.1
4.1
4
5
6
7
8
U
4
4.1
4.1
LIEBHERR
Z
Z
4.1
4.1
7
14 14
5
4.1
Z
4.1
4
8
10.2
10.1
14
14
11
10
10
10.2
6
4.1
4
10
10.2
11
7
11
11
13
12
4.1
10.2
10.2
8
7
X
8

B108141

4.1.2 Installing the auxiliary weights

Note

▶ Each auxiliary weight's own weight is marked on the auxiliary weight!

WARNING

Toppling of hook block!

If the auxiliary weights are installed one-sided, the hook block can topple over!

Personnel can be severely injured or killed!

▶ The auxiliary weights may only be installed **individually** and alternating left and right on the pulley block!

▶ When the required auxiliary weight is installed on the hook block, the difference between the left and right side may never be more than one auxiliary weight!

▶ Asymmetrical installation of auxiliary weights is prohibited!

▶ Do not exceed the maximum permissible own weight of the hook block! The maximum permissible own weight is engraved on ballastable hook blocks. See “Engraving WT max.”.

Make sure that the following prerequisites are met:

– The hook block is placed on the ground.

– The pulley block **4** is properly installed and secured.

– The retaining pin **7** is pinned and secured at point **U**.

WARNING

Falling auxiliary weights!

If the auxiliary weights are not properly installed on the pulley block, then they can fall down during installation or in crane operation!

Personnel can be severely injured or killed!

▶ Standing under a suspended auxiliary weight is prohibited!

▶ Make sure that the auxiliary weights are properly installed and secured!

▶ Crane operation with insufficiently secured auxiliary weights is prohibited!

▶ Attach the auxiliary weight **10** on the ring screw **14** on the auxiliary crane, illustration **5**.

WARNING

Danger of crushing!

When swinging the auxiliary weights to the pulley block, personnel can be severely injured or killed!

Fingers, hands and arms can be crushed or severed!

▶ It is prohibited for anyone to remain between the pulley block and the auxiliary weight!

▶ Swing auxiliary weights in to the pulley block with utmost caution and at the least possible speed!

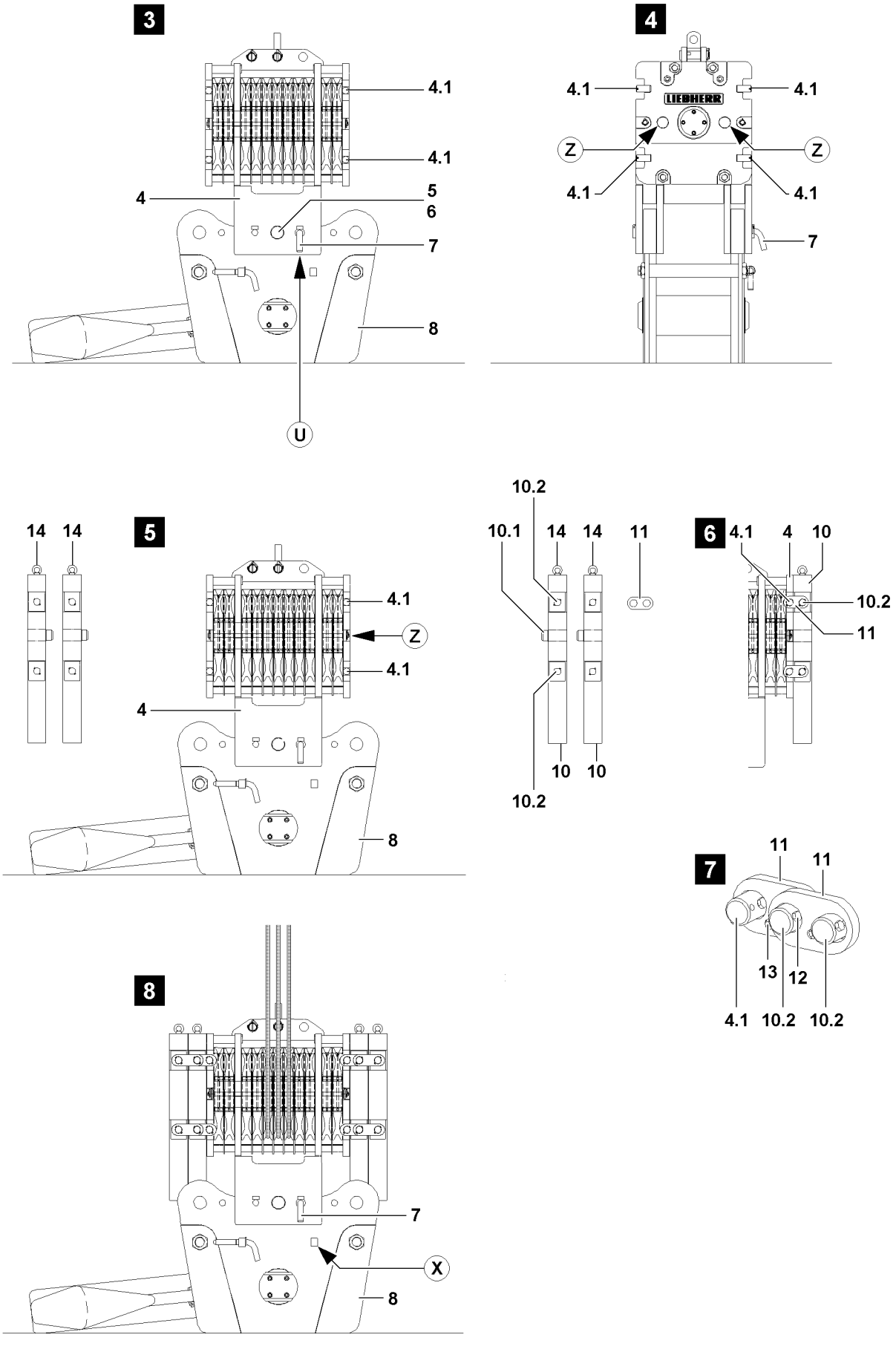
3
4.1
4.1
4
5
6
7
8
U
4
4.1
4.1
LIEBHERR
Z
Z
4.1
4.1
7
14 14
5
4.1
Z
4.1
4
8
10.2
10.1
14
14
11
10
10
10.2
6
4.1
4
10
10.2
11
7
11
11
13
12
4.1
10.2
10.2
8
7
X
8

B108141

- ▶ Align the auxiliary weight **10** on the pulley block **4**.
- ▶ Move the centering pin **10.1** of the auxiliary weight into the centering bores **Z** on the pulley block **4**, illustration **6**.

WARNING
Falling auxiliary weights!
If all mounting brackets **11** are removed simultaneously on an unsecured auxiliary weight, then the auxiliary weight can fall down!
Personnel can be severely injured or killed!
- ▶ Never remove all mounting brackets **11** of an unsecured auxiliary weight at the same time!
- ▶ Always install or remove the mounting brackets **11** alternately!

- ▶ Install the mounting brackets **11** on the side and connect the pulley block **4** with the auxiliary weight **10**, illustration **7**.
- ▶ Secure the mounting brackets **11** with screws **12** and lock nuts **13**, illustration **7**.

Note
- ▶ Additional auxiliary weights must be connected with the mounting brackets **11**!

WARNING
Falling auxiliary weights!
The auxiliary weights can fall down by removing the auxiliary crane!
Personnel can be severely injured or killed!
- ▶ Remove the auxiliary crane only when it is ensured that the auxiliary weight **10** is properly secured with the mounting brackets **11**!

- ▶ When the respective auxiliary weight is properly installed and secured:
  Remove the auxiliary crane.

4.1.3 Preparing the hook block for crane operation

Note
- ▶ The reeving of the hook blocks is described in chapter 4.06 of the Crane operating instructions!
- ▶ Observe the “permissible hook block weights” in the erection and take down charts!

- ▶ Reeve the hoist rope according to the instructions in chapter 4.06 of the Crane operating instructions and the reeving plans!

NOTICE
Retaining pins **7** pinned when lifting the load!
If the retaining pin **7** is not unpinned before crane operation, then the retaining pin **7** may be shorn off when lifting the load!
- ▶ Unpin the retaining pin **7** from the hook block before crane operation!

- ▶ When the hook block is properly reeved and has been lifted off the ground:
  Unpin the retaining pin **7** and pin and secure into the transport receptacle (point **X**), illustration **8**.

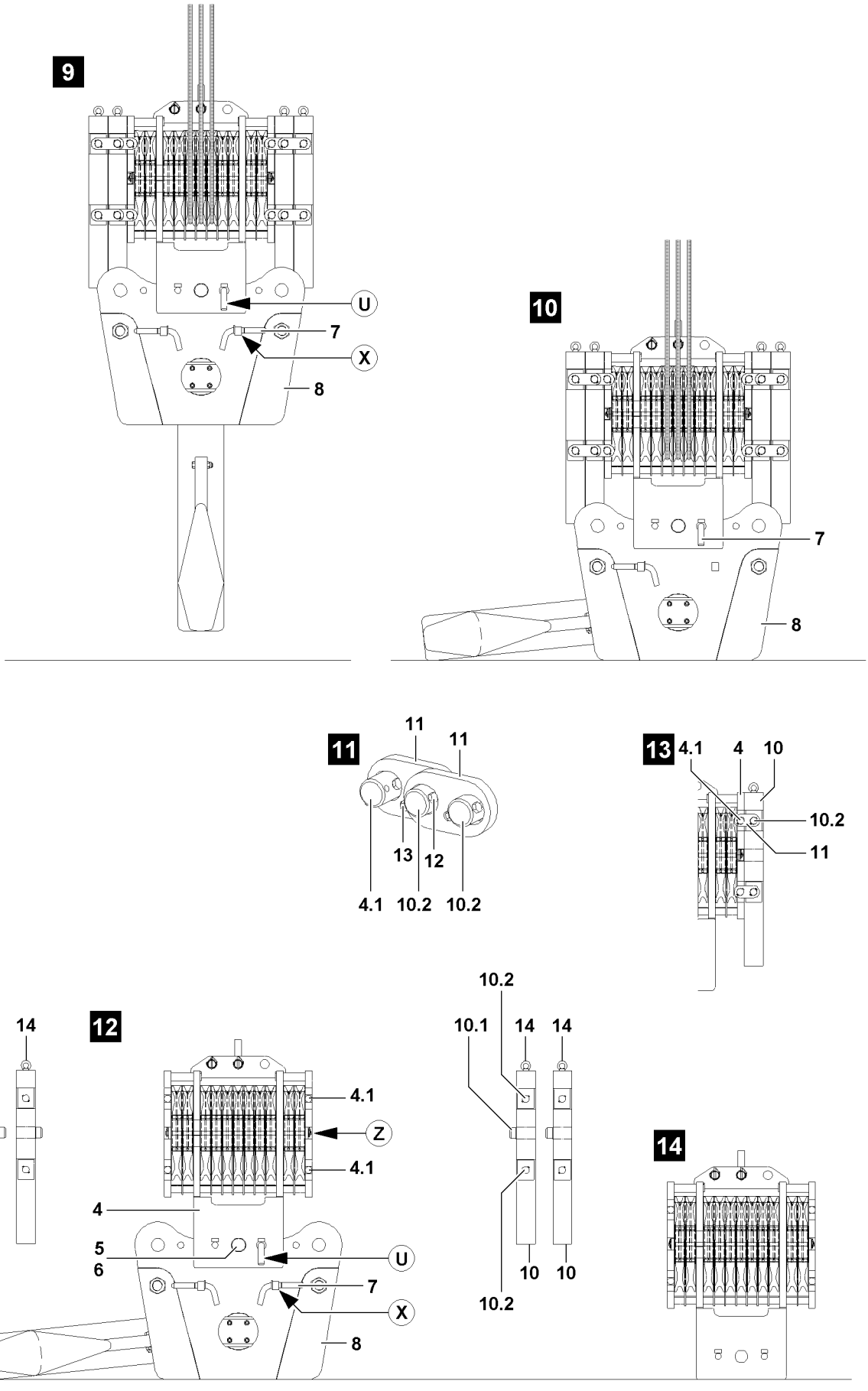
9
U
7
X
8
10
7
8
11
11
11
13
12
4.1
10.2
10.2
13
4.1
4
10
10.2
11
12
14
14
4.1
Z
4.1
4
5
6
U
7
X
8
10.2
10.1
14
14
10
10
10.2
14

B108142

4.2 Removing the hook block

4.2.1 Preparing the hook block for removal

Note
- ▶ The unreeving of the hook blocks is described in chapter 4.06 of the Crane operating instructions!
- ▶ Observe the “permissible hook block weights” in the erection and take down charts!

NOTICE
Retaining pin **7** unpinned when setting down the hook block!
If the retaining pin **7** - before setting the hook block on the ground - is not pinned, then the pulley block tips away to the side when it is set down!
Personnel can be severely injured or killed!
- ▶ Insert and secure the retaining pin **7**, before setting the hook block on the ground, at point **U**!

Make sure that the following prerequisites are met:
- – The ground is sufficiently load bearing to take on the weight of the hook block and the auxiliary weights safely.
- – The ground is level and horizontal.

- ▶ Lower the hook block completely to the ground.
- ▶ When the hook block was placed down on the ground properly:
  Unreeve the hoist rope according to chapter 4.06 of the Crane operating instructions!

4.2.2 Removing the auxiliary weights

Note
- ▶ Each auxiliary weight's own weight is marked on the auxiliary weight!

WARNING
Toppling of hook block!
If the auxiliary weights are removed one-sided, the hook block can topple over!
Personnel can be severely injured or killed!
- ▶ The auxiliary weights may only be removed **individually** and alternating left and right on the pulley block!
- ▶ The difference between the left and the right side at removal of the auxiliary weights may never be more than one auxiliary weight!
- ▶ Asymmetrical removal of auxiliary weights is prohibited!

Make sure that the following prerequisite is met:
- – The retaining pin **7** is pinned and secured at point **U**.

WARNING
Falling auxiliary weights!
If the auxiliary weights on the pulley block are not properly removed, then they can fall down at removal!
Personnel can be severely injured or killed!
- ▶ Standing under a suspended auxiliary weight is prohibited!

- ▶ Attach the auxiliary weight **10** on the ring screw **14** on the auxiliary crane.
- ▶ Tension the tackle carefully.

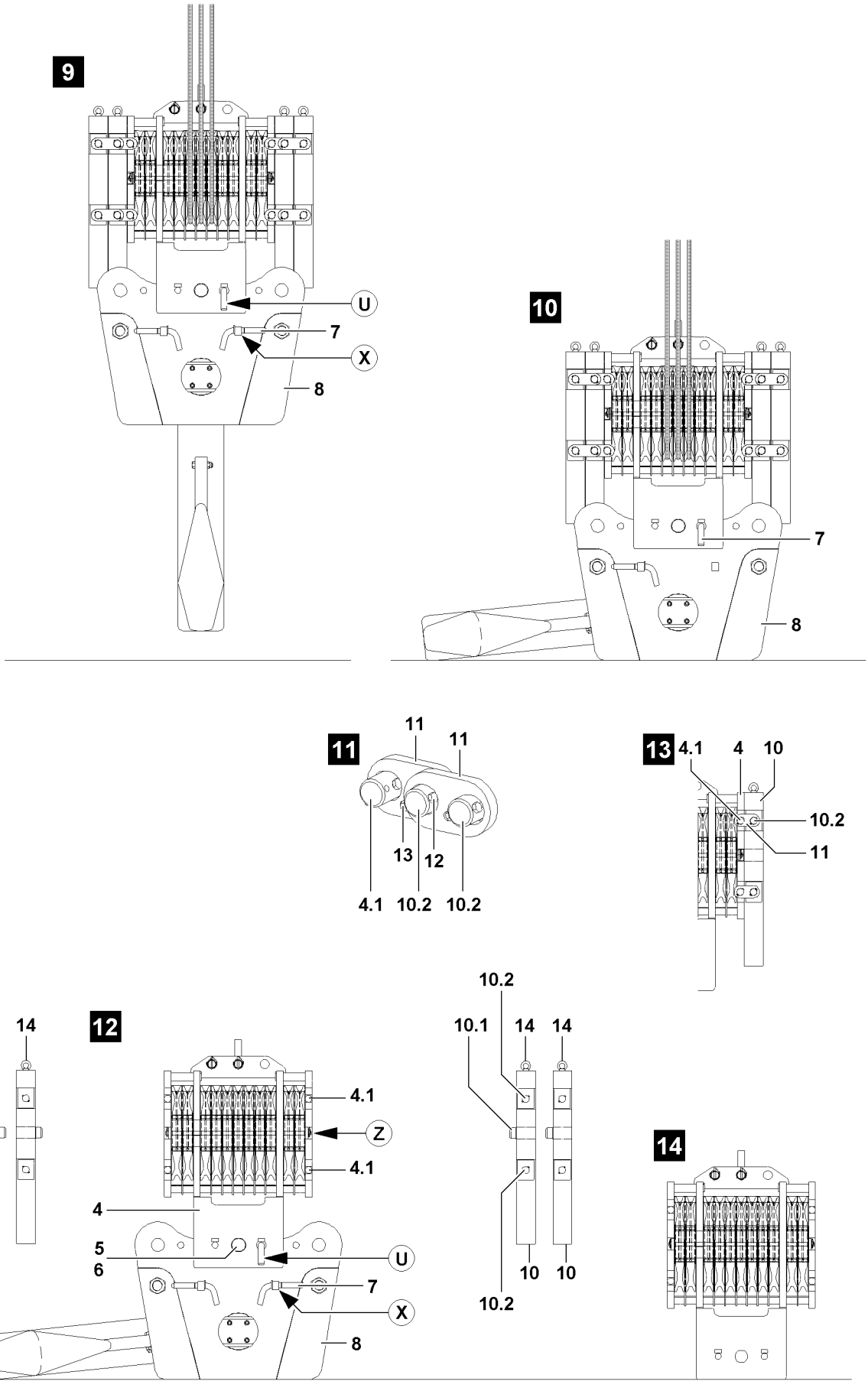
9
U
7
X
8
10
7
8
11
11
11
13
12
4.1
10.2
10.2
13
4.1
4
10
10.2
11
14
14
12
4.1
Z
4.1
4
5
6
U
7
X
8
10.2
10.1
14
14
10
10
10.2
14

B108142

WARNING
Oscillating auxiliary weights!
During the removal of the auxiliary weights, the auxiliary weights can start to swing back and forth!
Personnel can be severely injured or killed!
- ▶ It is prohibited for anyone to remain in the danger zone!
- ▶ Make sure that the auxiliary weight which is being removed is properly attached on the auxiliary crane before releasing the mounting brackets!
- ▶ Angular pull is prohibited!

- ▶ When the tackle is tensioned on the auxiliary weight:
  Release the screw connection on the mounting brackets of the outermost auxiliary weight and remove the screws.

WARNING
Falling auxiliary weights!
If all mounting brackets **11** are removed simultaneously on an unsecured auxiliary weight, then the auxiliary weight can fall down!
Personnel can be severely injured or killed!
- ▶ Never remove all mounting brackets **11** of an unsecured auxiliary weight at the same time!
- ▶ Always install or remove the mounting brackets **11** alternately!

- ▶ Pull the mounting brackets **11** off to the side.

WARNING
Falling auxiliary weights!
If additional auxiliary weights which are being removed are released, then these auxiliary weights can fall down!
Personnel can be severely injured or killed!
- ▶ Make sure, before removing the outermost auxiliary weight, that the other auxiliary weights are secured with the mounting brackets!

- ▶ If additional mounting brackets must be removed to release the outermost auxiliary weight:
  Reinstall the mounting brackets again immediately, so that only the auxiliary weight which is being removed is released.
- ▶ Lift the auxiliary weight with the auxiliary crane from the pulley block.
- ▶ Place the auxiliary weight onto the ground.
- ▶ Remove the auxiliary crane.
- ▶ Remove additional auxiliary weights as described above.

4.2.3 Removing the pulley block on cross brace

Make sure that the following prerequisite is met:
– The auxiliary weights have been removed.

- ▶ Attach the pulley block **4** on the auxiliary crane.
- ▶ Tension the tackle carefully.
- ▶ Unpin the retaining pin **7** at point **U** and pin into the transport receptacle on the cross brace, point **X**, illustration **12**.
- ▶ Release and unpin the pin **5**.
- ▶ Swing the pulley block **4** out with auxiliary crane.
- ▶ Place the pulley block **4** on the ground, illustration **14**.
- ▶ Remove the auxiliary crane.

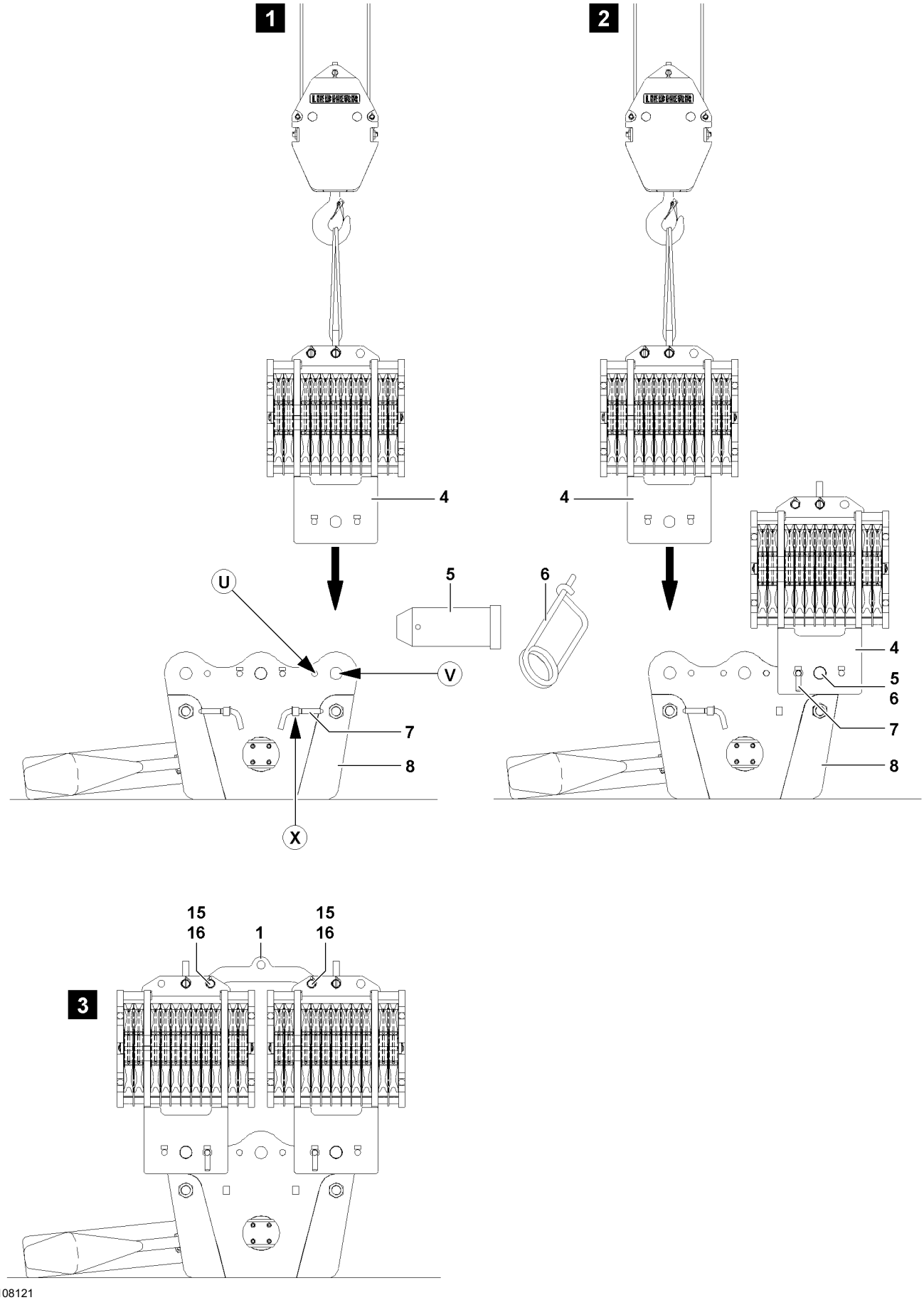

B108121

5 Installing a double hook block for parallel operation

5.1 Installing the hook block

If the hook blocks are to be used in parallel operation, then the pulley blocks **4** must be installed on the left and right on the cross brace **8**.

5.1.1 Installing the pulley blocks on the cross brace

Make sure that the following prerequisites are met:

– The ground is sufficiently load bearing to take on the weight of the hook block safely.
– The ground is level and horizontal.
– The cross brace **8** is placed on the ground, see illustration **1**.

DANGER
Risk of tipping the pulley blocks!
If the retaining pins **7**, during assembly of the pulley blocks **4** are not pinned on the cross brace, then the pulley blocks tip to the side when the auxiliary crane is removed!
Personnel remaining in the danger zone can be severely injured or killed!

▶ Insert the retaining pins **7** into the bores **U** on the hook block!
▶ Make sure before removing the auxiliary crane that the pulley blocks are properly pinned and secured!

Note

▶ The installation of two pulley blocks **4** is identical and is described on the example of one pulley block!

▶ Attach the pulley block **4** onto the auxiliary crane, illustration **1**.
▶ Position pulley block **4** on the cross brace **8** and align the pin bore **V**.
▶ Insert the pin **5** on point **V** and secure with spring retainer **6**.
▶ Unpin the retaining pin **7** from the transport receptacle (point **X**).
▶ Insert the retaining pins **7** into the bores (point **U**) on the cross brace **8**, illustration **1**.
▶ When the pulley block **4** is secured by the retaining pins **7** at point **U**:
Remove the auxiliary crane, illustration **2**.
▶ Install the second pulley block.

5.1.2 Installing the block connector

Make sure that the following prerequisite is met:

– The two pulley blocks **4** are installed and secured on the cross brace **8**.

Both pulley blocks **4** are pinned with the block connector **1**.

▶ Attach the block connector **1** on the auxiliary crane.
▶ Position the block connector **1** with auxiliary crane in pin position, illustration **3**.
▶ Insert the pins **15** on both sides on the pulley blocks **4** and secure with linch pin **16**, illustration **3**.
▶ When the block connector **1** is pinned and secured properly:
Remove the auxiliary crane.

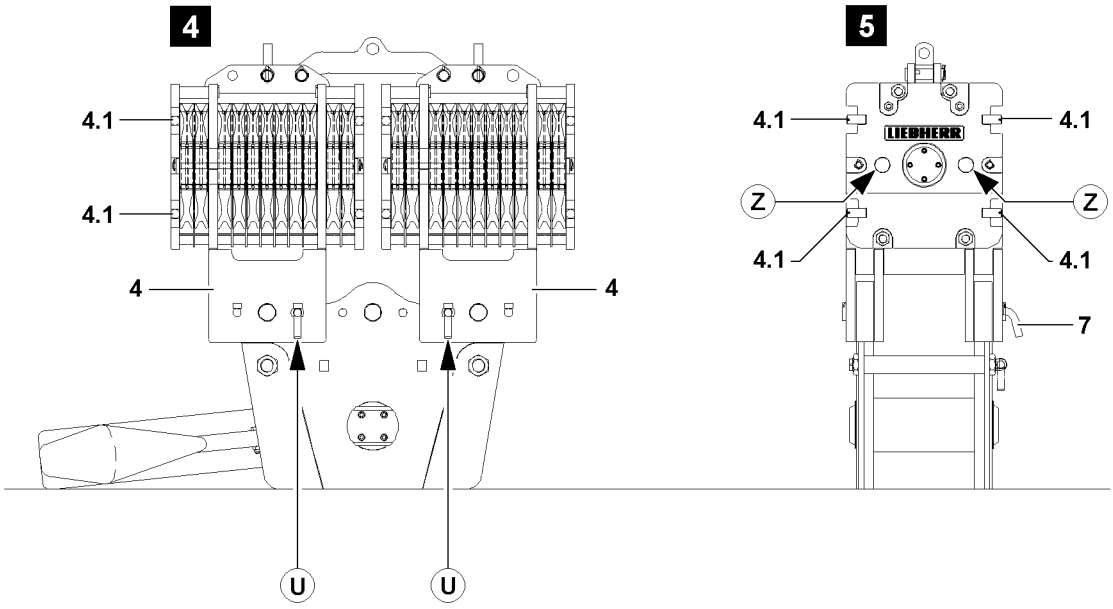
4
4.1
4.1
4
4
U
U
5
4.1
4.1
LIEBHERR
Z
Z
4.1
4.1
7

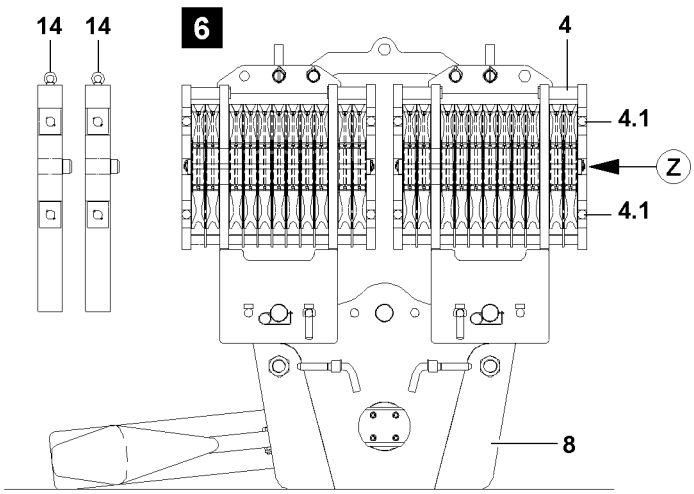
14
14
6
4
4.1
Z
4.1
8

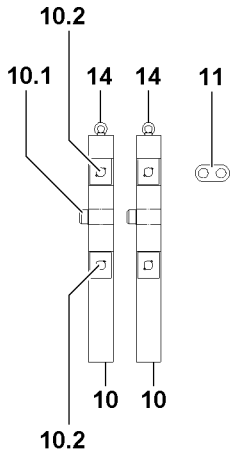
10.2
10.1
14
14
11
10
10
10.2

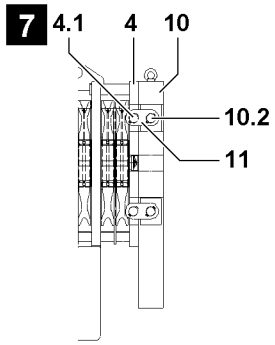
7
4.1
4
10
10.2
11

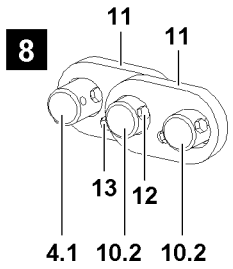
8
11
11
13
12
4.1
10.2
10.2

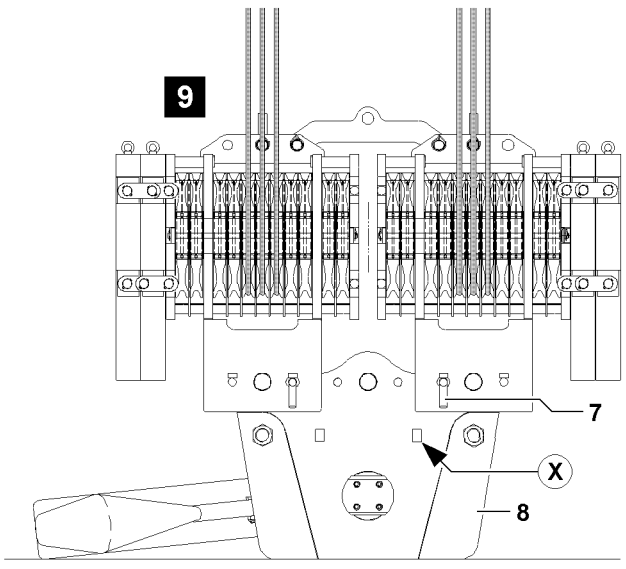
9
7
X
8

B108120

5.1.3 Installing the auxiliary weights

Note

▶ Each auxiliary weight's own weight is marked on the auxiliary weight!

WARNING

Toppling of hook block!

If the auxiliary weights are installed one-sided, the hook block can topple over!

Personnel can be severely injured or killed!

▶ The auxiliary weights may only be placed **individually** and alternating left and right on the pulley blocks of the hook block!

▶ When the required auxiliary weight is installed on the hook block, the difference between the left and right side may never be more than one auxiliary weight!

▶ Asymmetrical installation of auxiliary weights is prohibited!

▶ Do not exceed the maximum permissible own weight of the hook block! The maximum permissible own weight is engraved on ballastable hook blocks. See “Engraving WT max.”.

Make sure that the following prerequisites are met:

– The hook block is placed on the ground.
– The pulley blocks **4** are properly installed and secured.
– The retaining pins **7** are pinned in and secured at point **U**.
– The block connector **1** is properly installed and secured.

WARNING

Falling auxiliary weights!

If the auxiliary weights on the pulley blocks are not properly installed, then they can fall down during installation or during crane operation!

Personnel can be severely injured or killed!

▶ Standing under a suspended auxiliary weight is prohibited!

▶ Make sure that the auxiliary weights are properly installed and secured!

▶ Crane operation with insufficiently secured auxiliary weights is prohibited!

▶ Attach the auxiliary weight **10** on the ring screw **14** on the auxiliary crane.

WARNING

Danger of crushing!

When swinging the auxiliary weights to the pulley block, personnel can be severely injured or killed!

Fingers, hands and arms can be crushed or severed!

▶ It is prohibited for anyone to remain between the pulley blocks and the auxiliary weight!

▶ Swing auxiliary weights in to the pulley block with utmost caution and at the least possible speed!

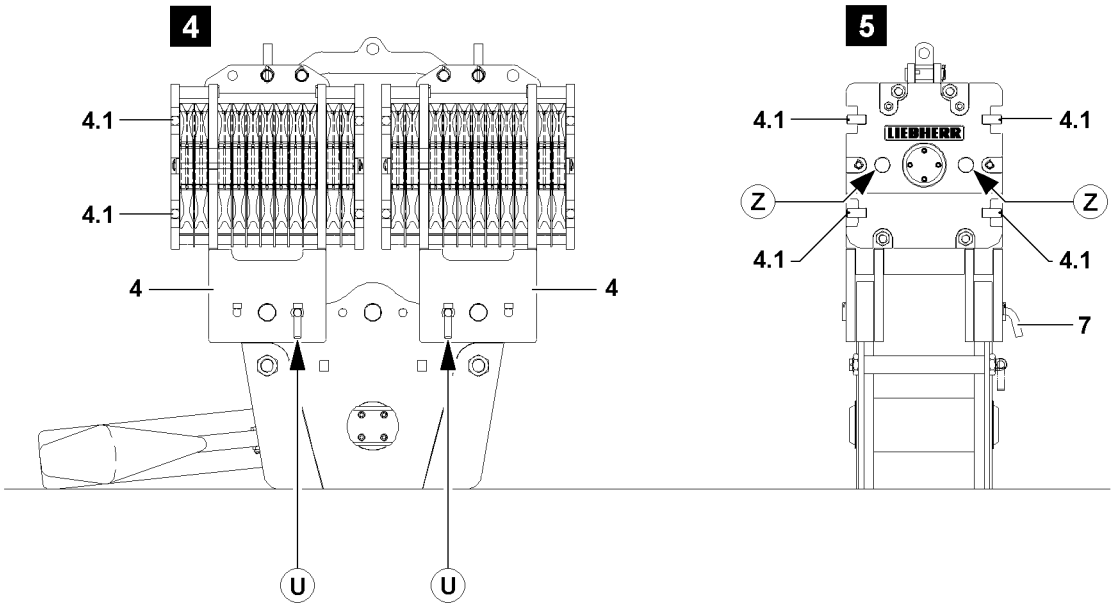
4
4.1
4.1
4
4
U
U
5
4.1
4.1
LIEBHERR
Z
Z
4.1
4.1
7

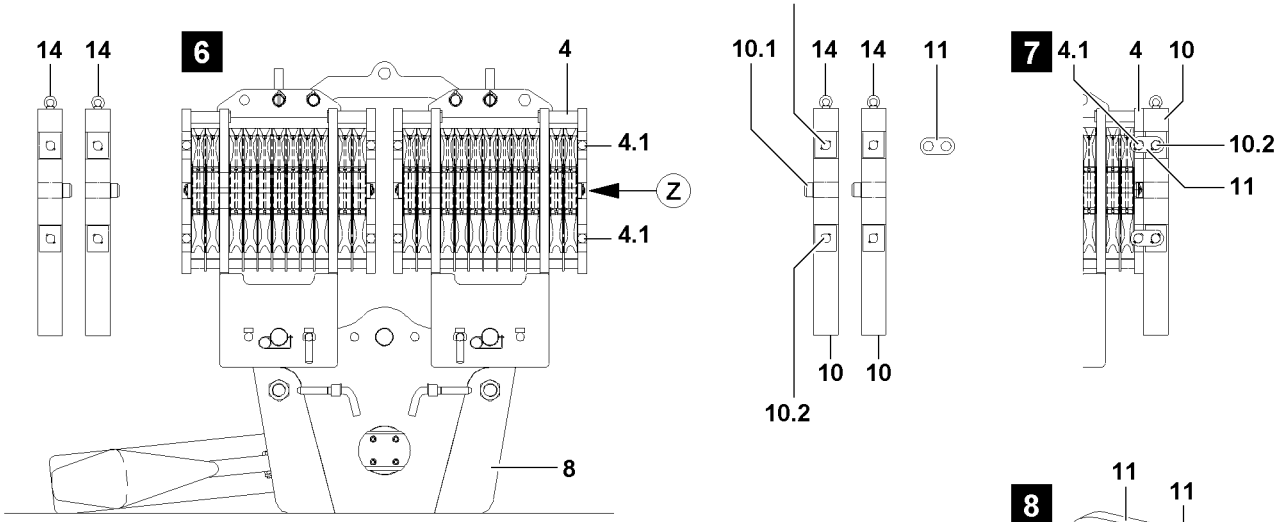
14
14
6
4
4.1
Z
4.1
8
10.2
10.1
14
14
11
10
10
10.2
7
4.1
4
10
10.2
11

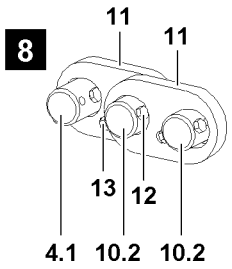
8
11
11
13
12
4.1
10.2
10.2

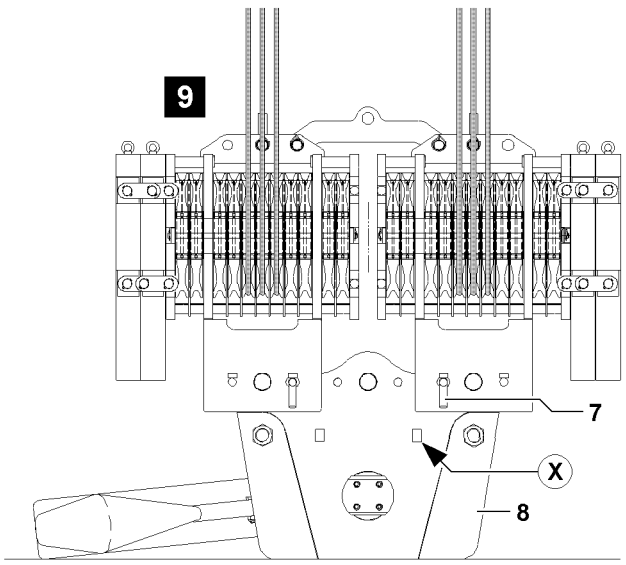
9
7
X
8

B108120

- ▶ Align the auxiliary weight **10** on the pulley block **4**.
- ▶ Move the centering pin **10.1** of the auxiliary weight into the centering bores **Z** on the pulley block **4**, illustration **7**.

WARNING
Falling auxiliary weights!
If all mounting brackets **11** are removed simultaneously on an unsecured auxiliary weight, then the auxiliary weight can fall down!
Personnel can be severely injured or killed!
- ▶ Never remove all mounting brackets **11** of an unsecured auxiliary weight at the same time!
- ▶ Always install or remove the mounting brackets **11** alternately!

- ▶ Install the mounting brackets **11** on the side and connect the pulley block **4** with the auxiliary weight **10**, illustration **8**.
- ▶ Secure the mounting brackets **11** with screws **12** and lock nuts **13**, illustration **8**.

Note
- ▶ Additional auxiliary weights must be connected with the mounting brackets **11**!

WARNING
Falling auxiliary weights!
The auxiliary weights can fall down to the side when the auxiliary crane is removed!
Personnel can be severely injured or killed!
- ▶ Remove the auxiliary crane only when it is ensured that the auxiliary weight **10** is properly secured with the mounting brackets **11**!

- ▶ When the respective auxiliary weight is properly installed and secured:
  Remove the auxiliary crane.

5.1.4 Preparing the hook block for crane operation

Note
- ▶ The reeving of the hook blocks is described in chapter 4.06 of the Crane operating instructions!
- ▶ Observe the “permissible hook block weights” in the erection and take down charts!

- ▶ Reeve the hoist rope according to the instructions in chapter 4.06 of the Crane operating instructions and the reeving plans!

NOTICE
Retaining pins **7** pinned when lifting the load!
If the retaining pins **7** are not unpinned before the crane operation, then the retaining pins **7** may be shorn off when lifting the load!
- ▶ Unpin the retaining pin **7** from the hook block before crane operation!

- ▶ When the hook block is properly reeved and has been lifted off the ground:
  Unpin the retaining pin **7** and pin and secure into the transport receptacle (point **X**), illustration **9**.

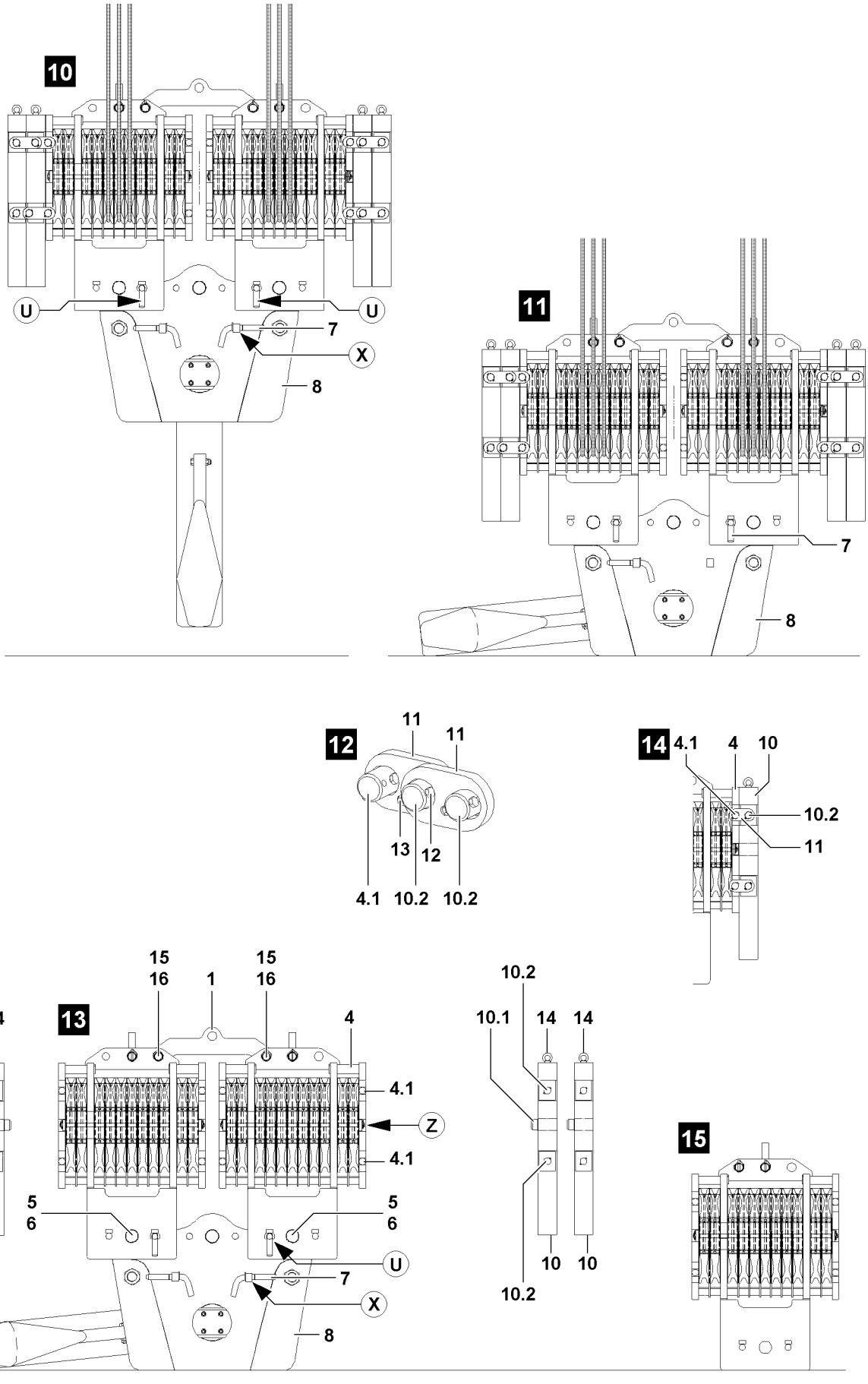
10
U
U
7
X
8
11
7
8
12
11
11
13
12
4.1
10.2
10.2
14
4.1
4
10
10.2
11
13
15
16
1
15
16
4
14
14
4.1
Z
4.1
5
6
5
6
U
7
X
8
10.2
10.1
14
14
10
10
10.2
15

B108143

5.2 Removing the hook block

5.2.1 Preparing the hook block for removal

Note

- ▶ The unreeving of the hook blocks is described in chapter 4.06 of the Crane operating instructions!
- ▶ Observe the “permissible hook block weights” in the erection and take down charts!

NOTICE

Retaining pin **7** unpinned when setting down the hook block!

If the retaining pin **7** - before setting the hook block on the ground - is not pinned, then the pulley blocks tip away to the side when the hoist rope is unreeved!

Personnel can be severely injured or killed!

- ▶ Before setting the hook block on the ground, insert and secure the retaining pins **7** on both pulley blocks at point **U**!

Make sure that the following prerequisites are met:

- – The ground is sufficiently load bearing to take on the weight of the hook block and the auxiliary weights safely.
- – The ground is level and horizontal.

- ▶ Lower the hook block completely to the ground.
- ▶ When the hook block was placed down on the ground properly:
  Unreeve the hoist rope(s) according to chapter 4.06 of the Crane operating instructions!

5.2.2 Removing the auxiliary weights

Note

- ▶ Each auxiliary weight's own weight is marked on the auxiliary weight!

WARNING

Toppling of hook block!

If the auxiliary weights are removed one-sided, the hook block can topple over!

Personnel can be severely injured or killed!

- ▶ The auxiliary weights may only be removed **individually** and alternating left and right on the pulley blocks of the hook block!
- ▶ The difference between the left and the right side at removal of the auxiliary weights may never be more than one auxiliary weight!
- ▶ Asymmetrical removal of auxiliary weights is prohibited!

Make sure that the following prerequisites are met:

- – The retaining pins **7** are pinned and secured on both sides at point **U**.
- – The block connector **1** has been removed.

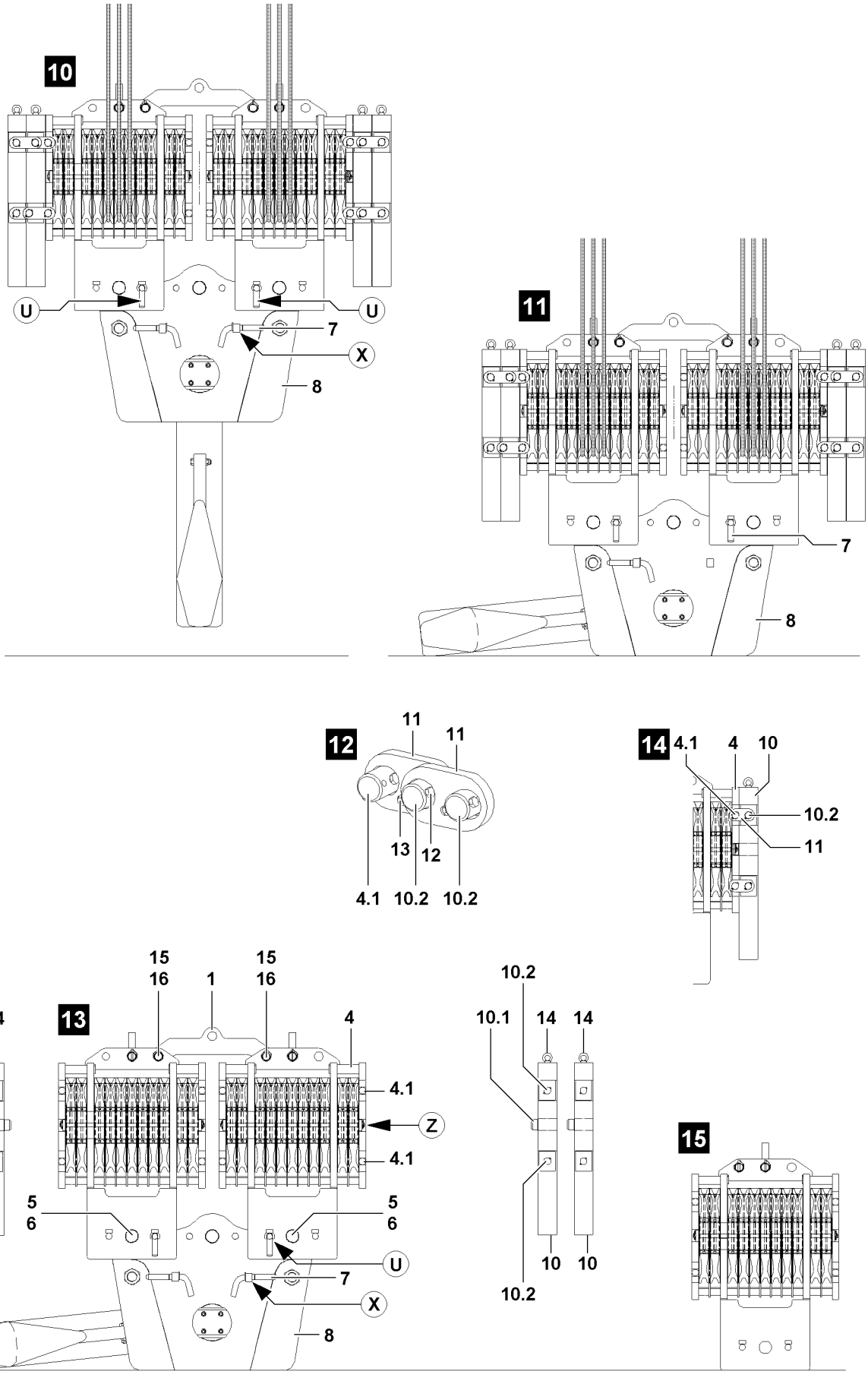
10
U
U
7
X
8
11
7
8
12
11
11
13
12
4.1
10.2
10.2
14
4.1
4
10
10.2
11
15
16
1
15
16
14
14
13
4
4.1
Z
4.1
5
6
5
6
U
7
X
8
10.2
10.1
14
14
10
10
10.2
15

B108143

WARNING
Falling auxiliary weights!
If the auxiliary weights on the pulley blocks are not properly removed, then they can fall down at removal!
Personnel can be severely injured or killed!
- ▶ Standing under a suspended auxiliary weight is prohibited!

- ▶ Attach the auxiliary weight **10** on the ring screw **14** on the auxiliary crane.
- ▶ Tension the tackle carefully.

WARNING
Oscillating auxiliary weights!
During the removal of the auxiliary weights, the auxiliary weights can start to swing back and forth!
Personnel can be severely injured or killed!
- ▶ It is prohibited for anyone to remain in the danger zone!
- ▶ Make sure that the auxiliary weight which is being removed is properly attached on the auxiliary crane before releasing the mounting brackets!
- ▶ Angular pull is prohibited!

- ▶ When the tackle is tensioned on the auxiliary weight:
  Release the screw connection on the mounting brackets of the outermost auxiliary weight and remove the screws.

WARNING
Falling auxiliary weights!
If all mounting brackets **11** are removed simultaneously on an unsecured auxiliary weight, then the auxiliary weight can fall down!
Personnel can be severely injured or killed!
- ▶ Never remove all mounting brackets **11** of an unsecured auxiliary weight at the same time!
- ▶ Always install or remove the mounting brackets **11** alternately!

- ▶ Pull the mounting brackets **11** off to the side.

WARNING
Falling auxiliary weights!
If additional auxiliary weights which are being removed are released, then these auxiliary weights can fall down!
Personnel can be severely injured or killed!
- ▶ Make sure, before removing the outermost auxiliary weight, that the other auxiliary weights are secured with the mounting brackets **11**!

- ▶ If additional mounting brackets **11** must be removed to release the outermost auxiliary weight: Reinstall the mounting brackets again immediately, so that only the auxiliary weight which is being removed is released.
- ▶ Lift the auxiliary weight with the auxiliary crane from the pulley block.
- ▶ Place the auxiliary weight onto the ground.
- ▶ Remove the auxiliary crane.
- ▶ Remove additional auxiliary weights as described above.

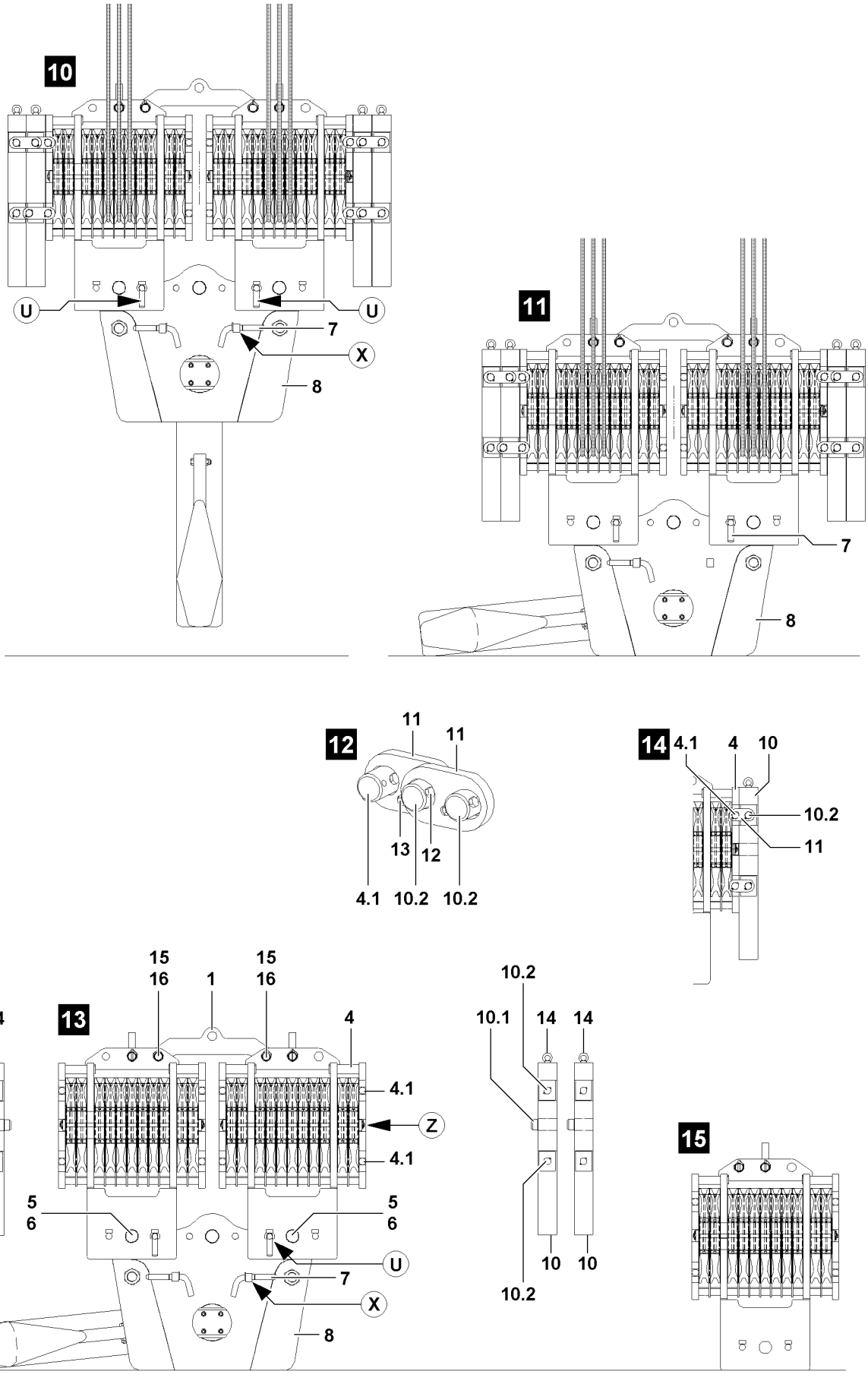
10
U
U
7
X
8
11
7
8
12
11
11
13
12
4.1
10.2
10.2
14
4.1
4
10
10.2
11
15
16
1
15
16
4
13
14
14
4.1
Z
4.1
5
6
5
6
U
7
X
8
10.2
10.1
14
14
10
10
10.2
15

B108143

5.2.3 Removing the block connector

▶ Attach the block connector **1** on the auxiliary crane.

DANGER
Risk of tipping the pulley blocks!
If the retaining pins **7**, during removal of the block connector **1** are not pinned on the pulley blocks, then the pulley blocks tip to the side when the block connector is removed!
Personnel remaining in the danger zone can be severely injured or killed!
▶ Insert the retaining pins **7** into the bores **U** on the hook block!
▶ Make sure before removing the block connector that the pulley blocks are properly pinned and secured!

▶ Release and unpin the pins **15** on both sides on the pulley blocks **4**.
▶ Remove the block connector **1** on the auxiliary crane.
▶ Place the block connector **1** onto the ground.
▶ Remove the auxiliary crane.

5.2.4 Removing the pulley blocks on the cross brace

Note
▶ The removal of two pulley blocks is identical and is described on the example of one pulley block!

Make sure that the following prerequisites are met:
– The auxiliary weights have been removed.
– The block connector has been removed.

▶ Attach the pulley block **4** on the auxiliary crane.
▶ Tension the tackle carefully.
▶ Unpin the retaining pin **7** at point **U** and pin into the transport receptacle on the cross brace, point **X**, illustration **13**.
▶ Release and unpin the pin **5**.
▶ Swing the pulley block **4** out with auxiliary crane.
▶ Place the pulley block **4** on the ground.
▶ Remove the auxiliary crane.
▶ Remove the second pulley block.

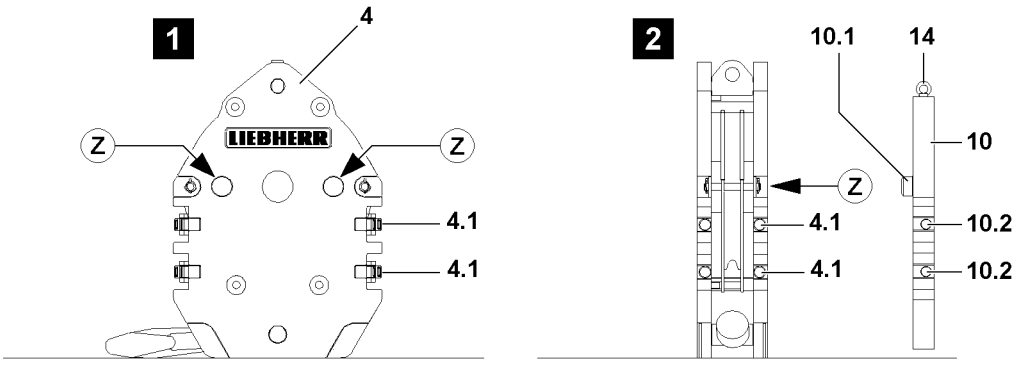
1
4
LIEBHERR
Z
Z
4.1
4.1
2
10.1
14
10
Z
4.1
4.1
10.2
10.2

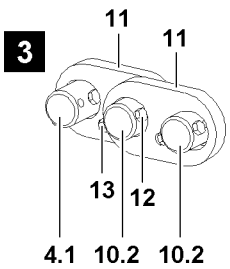
3
11
11
13
12
4.1
10.2
10.2

B108146

6 Single hook blocks

6.1 Installing the single blocks

6.1.1 Installing the auxiliary weights

Note

▶ Each auxiliary weight's own weight is marked on the auxiliary weight!

WARNING

Toppling of hook block!

If the auxiliary weights are installed one-sided, the hook block can topple over!

Personnel can be severely injured or killed!

▶ The auxiliary weights may only be installed **individually** and alternately on the left and right on the hook block!

▶ When the required auxiliary weight is installed on the hook block, the difference between the left and right side may never be more than one auxiliary weight!

▶ Asymmetrical installation of auxiliary weights is prohibited!

▶ Do not exceed the maximum permissible own weight of the hook block! The maximum permissible own weight is engraved on ballastable hook blocks. See “Engraving WT max.”.

Make sure that the following prerequisite is met:

– The hook block is placed on the ground.

WARNING

Falling auxiliary weights!

If the auxiliary weights are not properly installed on the hook block, then they can fall down during installation or in crane operation!

Personnel can be severely injured or killed!

▶ Standing under a suspended auxiliary weight is prohibited!

▶ Make sure that the auxiliary weights are properly installed and secured!

▶ Crane operation with insufficiently secured auxiliary weights is prohibited!

▶ Attach the auxiliary weight **10** on the ring screw **14** on the auxiliary crane.

WARNING

Danger of crushing!

When swinging the auxiliary weights to the hook block, personnel can be severely injured or killed!

Fingers, hands and arms can be crushed or severed!

▶ It is prohibited for anyone to remain between the hook block and the auxiliary weight!

▶ Swing auxiliary weights in to the hook block with utmost caution and at the least possible speed!

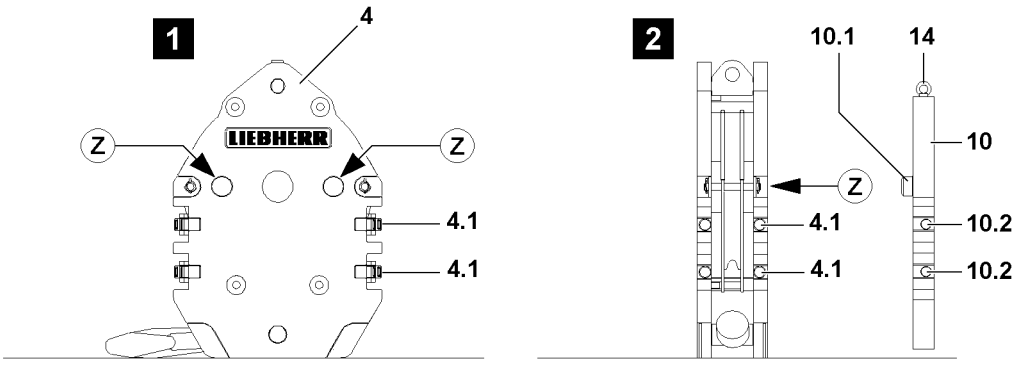
1
4
LIEBHERR
Z
Z
4.1
4.1
2
10.1
14
10
Z
4.1
4.1
10.2
10.2

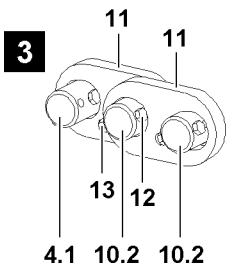
3
11
11
13
12
4.1
10.2
10.2

B108146

- ▶ Align the auxiliary weight **10** on the hook block.
- ▶ Move the centering pin **10.1** of the auxiliary weight into the centering bores **Z** on the hook block.

WARNING
Falling auxiliary weights!
If all mounting brackets **11** are removed simultaneously on an unsecured auxiliary weight, then the auxiliary weight can fall down!
Personnel can be severely injured or killed!
- ▶ Never remove all mounting brackets **11** of an unsecured auxiliary weight at the same time!
- ▶ Always install or remove the mounting brackets **11** alternately!

- ▶ Install the mounting brackets **11** on the side and connect the hook block with the auxiliary weight **10**, illustration **3**.
- ▶ Secure the mounting brackets **11** with screws **12** and lock nuts **13**, illustration **3**.

Note
- ▶ Additional auxiliary weights must be connected with the mounting brackets **11**!

WARNING
Falling auxiliary weights!
The auxiliary weights can fall down by removing the auxiliary crane!
Personnel can be severely injured or killed!
- ▶ Remove the auxiliary crane only when it is ensured that the auxiliary weight **10** is properly secured with the mounting brackets **11**!

- ▶ When the respective auxiliary weight is properly installed and secured:
  Remove the auxiliary crane.

6.1.2 Preparing the hook block for crane operation

Note
- ▶ The reeving of the hook blocks is described in chapter 4.06 of the Crane operating instructions!
- ▶ Observe the “permissible hook block weights” in the erection and take down charts!

- ▶ Reeve the hoist rope according to the instructions in chapter 4.06 of the Crane operating instructions and the reeving plans!

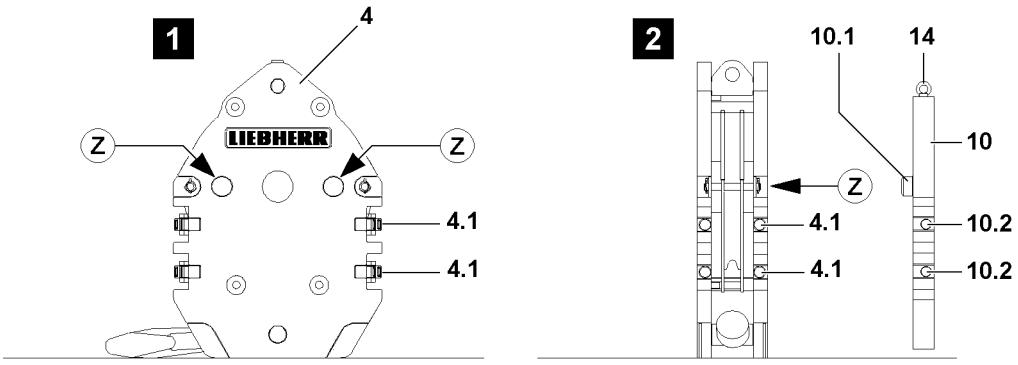
1
4
LIEBHERR
Z
Z
4.1
4.1
2
10.1
14
10
Z
4.1
4.1
10.2
10.2

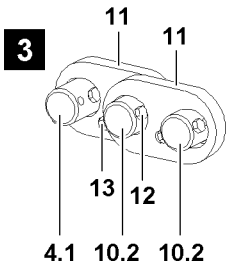
3
11
11
13
12
4.1
10.2
10.2

B108146

6.2 Removing the single blocks

6.2.1 Preparing the hook block for removal

Note

- ▶ The unreeving of the hook blocks is described in chapter 4.06 of the Crane operating instructions!
- ▶ Observe the “permissible hook block weights” in the erection and take down charts!

Make sure that the following prerequisites are met:

– The ground is sufficiently load bearing to take on the weight of the hook block and the auxiliary weights safely.

– The ground is level and horizontal.

- ▶ Lower the hook block completely to the ground.
- ▶ When the hook block was placed down on the ground properly:
  Unreeve the hoist rope according to chapter 4.06 of the Crane operating instructions!

6.2.2 Removing the auxiliary weights

Note

- ▶ Each auxiliary weight's own weight is marked on the auxiliary weight!

WARNING

Toppling of hook block!

If the auxiliary weights are removed one-sided, the hook block can topple over!

Personnel can be severely injured or killed!

- ▶ The auxiliary weights may only be removed **individually** and alternately on the left and right on the hook block!
- ▶ The difference between the left and the right side at removal of the auxiliary weights may never be more than one auxiliary weight!
- ▶ Asymmetrical removal of auxiliary weights is prohibited!

WARNING

Falling auxiliary weights!

If the auxiliary weights on the pulley block are not properly removed, then they can fall down at removal!

Personnel can be severely injured or killed!

- ▶ Standing under a suspended auxiliary weight is prohibited!

- ▶ Attach the auxiliary weight **10** on the ring screw **14** on the auxiliary crane.
- ▶ Tension the tackle carefully.

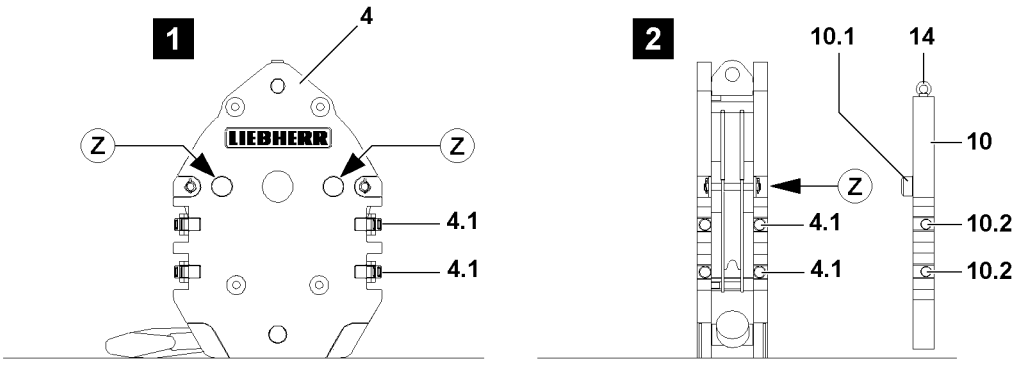
1
4
LIEBHERR
Z
Z
4.1
4.1
2
10.1
14
10
Z
4.1
4.1
10.2
10.2

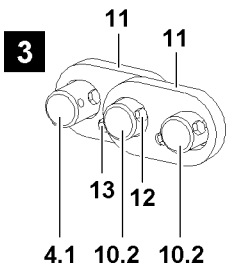
3
11
11
13
12
4.1
10.2
10.2

B108146

WARNING
Oscillating auxiliary weights!
During the removal of the auxiliary weights, the auxiliary weights can start to swing back and forth!
Personnel can be severely injured or killed!
- ▶ It is prohibited for anyone to remain in the danger zone!
- ▶ Make sure that the auxiliary weight which is being removed is properly attached on the auxiliary crane before releasing the mounting brackets!
- ▶ Angular pull is prohibited!

- ▶ When the tackle is tensioned on the auxiliary weight:
  Release the screw connection on the mounting brackets of the outermost auxiliary weight and remove the screws.

WARNING
Falling auxiliary weights!
If all mounting brackets **11** are removed simultaneously on an unsecured auxiliary weight, then the auxiliary weight can fall down!
Personnel can be severely injured or killed!
- ▶ Never remove all mounting brackets **11** of an unsecured auxiliary weight at the same time!
- ▶ Always install or remove the mounting brackets **11** alternately!

- ▶ Pull the mounting brackets **11** off to the side.

WARNING
Falling auxiliary weights!
If additional auxiliary weights which are being removed are released, then these auxiliary weights can fall down!
Personnel can be severely injured or killed!
- ▶ Make sure, before removing the outermost auxiliary weight, that the other auxiliary weights are secured with the mounting brackets!

- ▶ If additional mounting brackets must be removed to release the outermost auxiliary weight:
  Reinstall the mounting brackets **11** again immediately, so that only the auxiliary weight which is being removed is released.
- ▶ Lift the auxiliary weight with the auxiliary crane from the hook block.
- ▶ Place the auxiliary weight onto the ground.
- ▶ Remove the auxiliary crane.
- ▶ Remove additional auxiliary weights as described above.

1

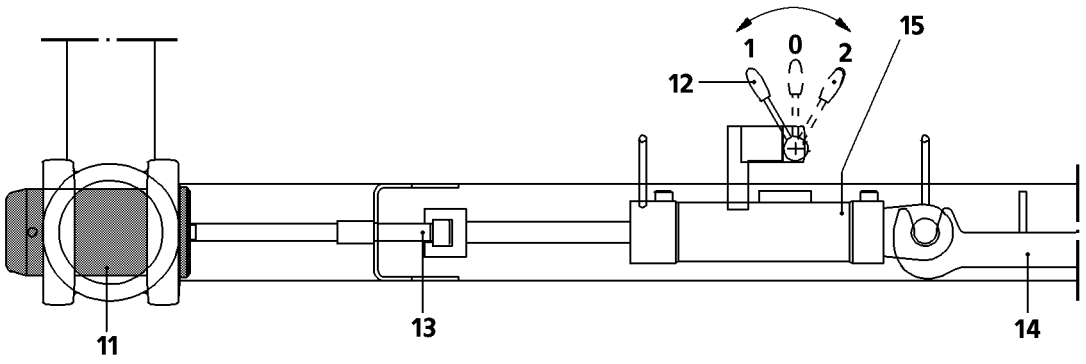

2

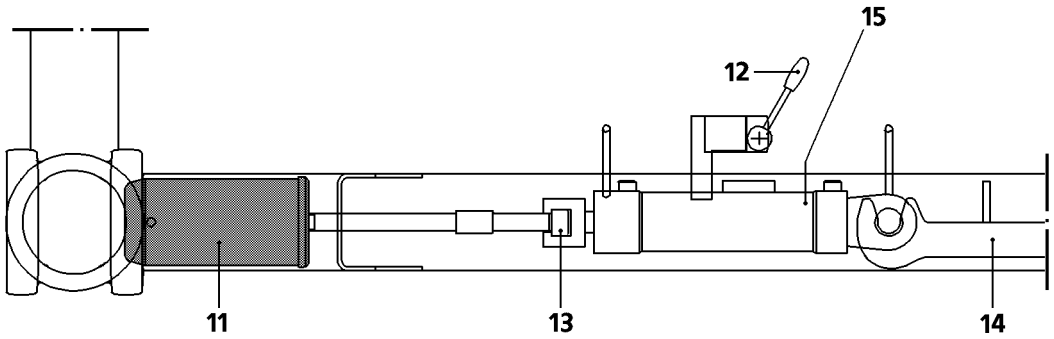

3

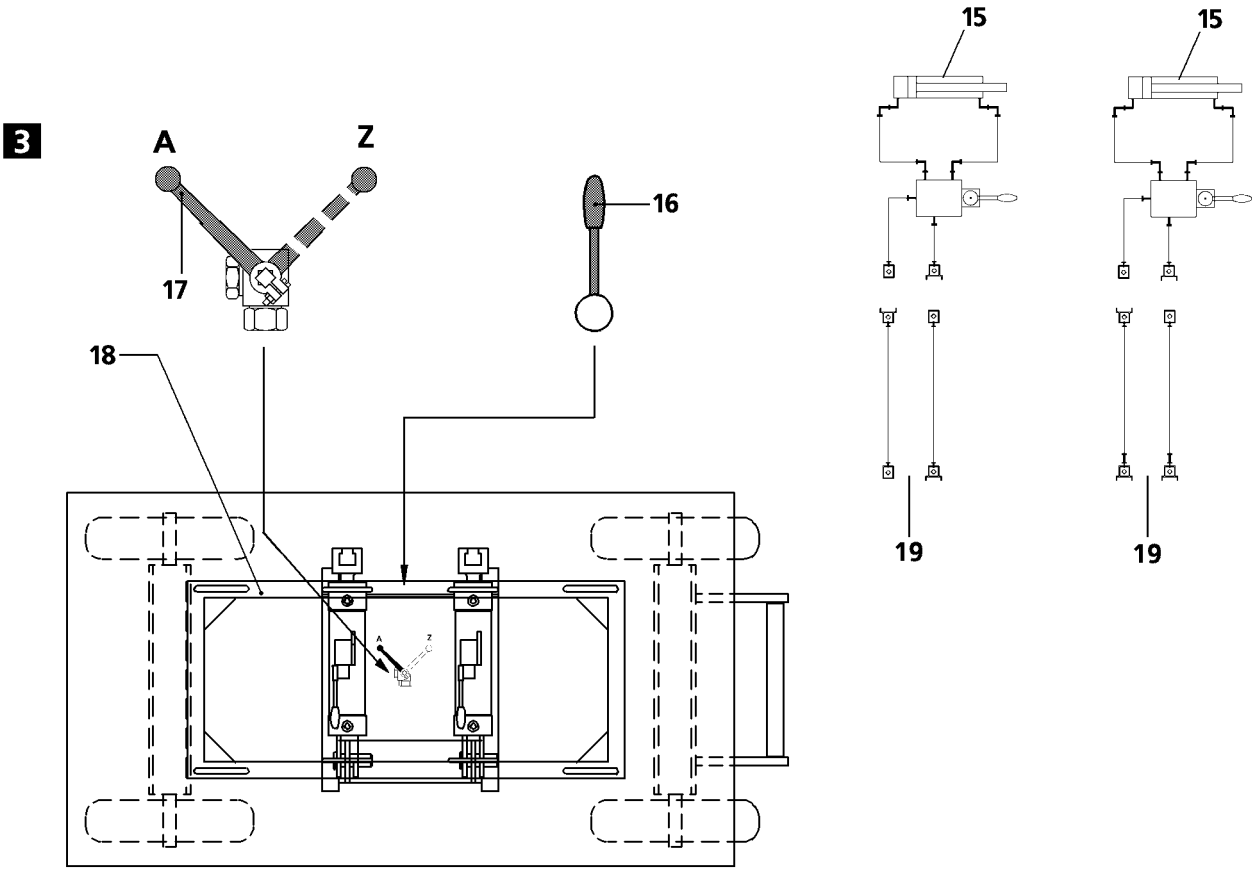

B108585

1 Pin pulling device

The pin pulling device consists of:
– Pin pulling cylinder **15**, see illustration **1**.
– Hydraulic component **18**, see illustration **3**.

1.1 Pinning and unpinning with pin pulling device

WARNING
Falling components!
If unsecured or non-supported crane sections are removed, they can fall down. Personnel can be killed or seriously injured.
▶ During the pinning and unpinning procedure it is prohibited for anyone to remain **under** or **on** the crane sections, as well within the entire danger zone!
▶ During the unpinning procedure, it is prohibited for anyone to remain **under** or **on** unsecured or non-supported crane section!
▶ Before unpinning: Support crane sections and boom.
▶ Do not lean the ladder against the crane part being disassembled!
▶ While pinning / unpinning of boom parts, the pin pulling cylinder **15** must be used with engaged lever **12**.

Note
▶ Observe the information in the Operating and Maintenance manual of the hydraulic aggregate **18**!
▶ The engine RPM can be adjusted using a separate RPM regulator on the hydraulic aggregate **18**.

1.1.1 Pinning and unpinning the pins on the boom components

Make sure that the following prerequisites are met:
– the hydraulic connections **19** from the hydraulic aggregate **18** to the pin pulling cylinders **15** are produced, see illustration **3**,
– the levers **12** on the pin pulling cylinders **15** are set on **position 0**, see illustration **1**.

▶ Fasten pin pulling cylinder **15** between retainer **14** and pull screw **13**, see illustration **1**.
▶ Start motor from hydraulic component **18**, see illustration **3**.
▶ Switch over ball valve **17** on position **Z**, see illustration **3**.

WARNING
Falling components!
When pinning / unpinning the pins on the lattice sections, components can fall down. Personnel can be killed or seriously injured.
▶ During the pinning / unpinning procedure of the lattice sections, do not step into the danger zone!
▶ Actuate pin pulling cylinder **15** exclusively for pinning and unpinning on the hydraulic aggregate **18** with lever **16**, see illustration **3**.

1

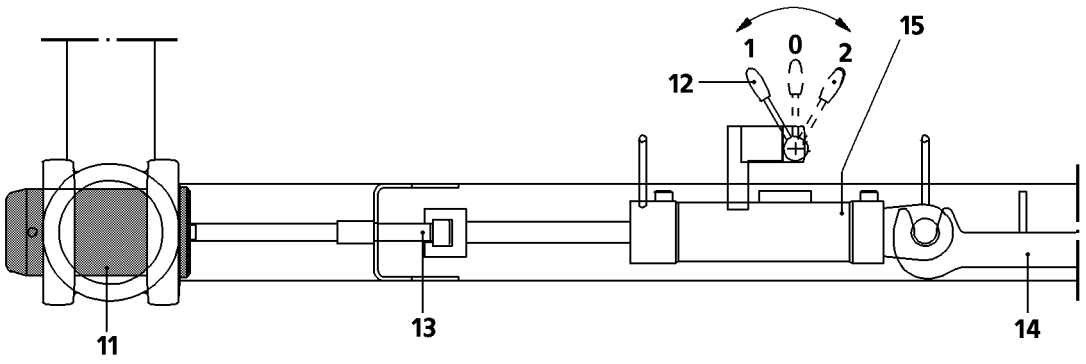

2

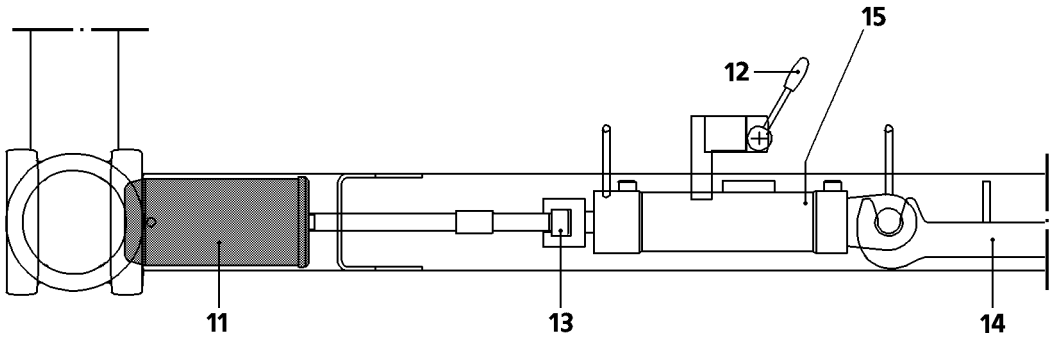

3

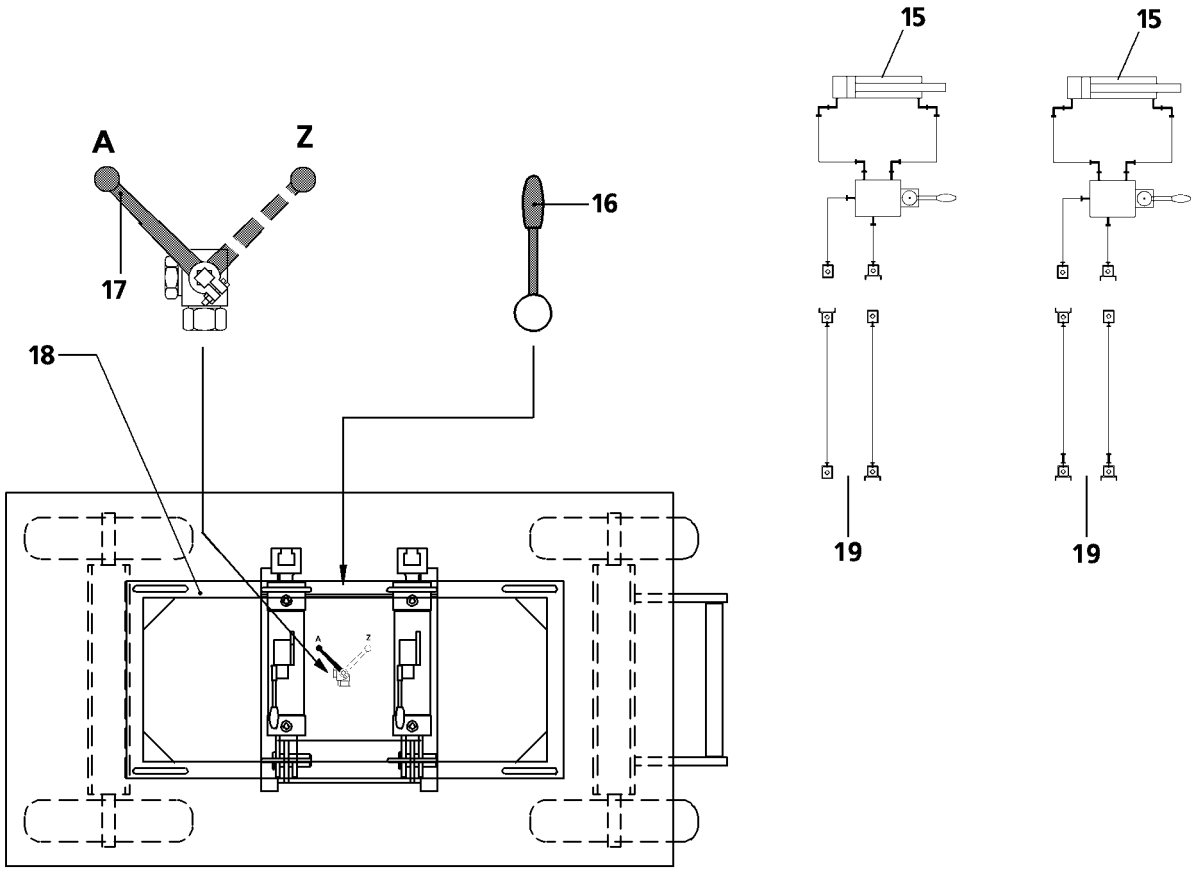

B108585

- ▶ When it should be pinned in (illustration **1**):
  Set the lever **12** on the pin pulling cylinders **15** to **position 1**.
- ▶ When it should be pinned in (illustration **2**):
  Set the lever **12** on the pin pulling cylinders **15** to **position 2**.

Result:

– Pin pulling cylinders **15** are ready for use

Note

- ▶ Ensure that the levers **12** are set on the correct position.

- ▶ Pin / unpin pin **11** with hydraulic aggregate **18**:
  Actuate lever **16** on the hydraulic aggregate **18**, with the right operating mode.

1.2 End operation with pin pulling device

- ▶ The levers **12** on the pin pulling cylinders **15** are set on **position 0**, see illustration **1**.
- ▶ Turn off engine from hydraulic aggregate **18**.
- ▶ Close ball valve **17** on position **A**, see illustration **3**.
- ▶ Remove hydraulic connections **19** and protect connections from contamination.
- ▶ Remove pin pulling cylinder **15** between retainer **14** and pull screw **13**, see illustration **1**.

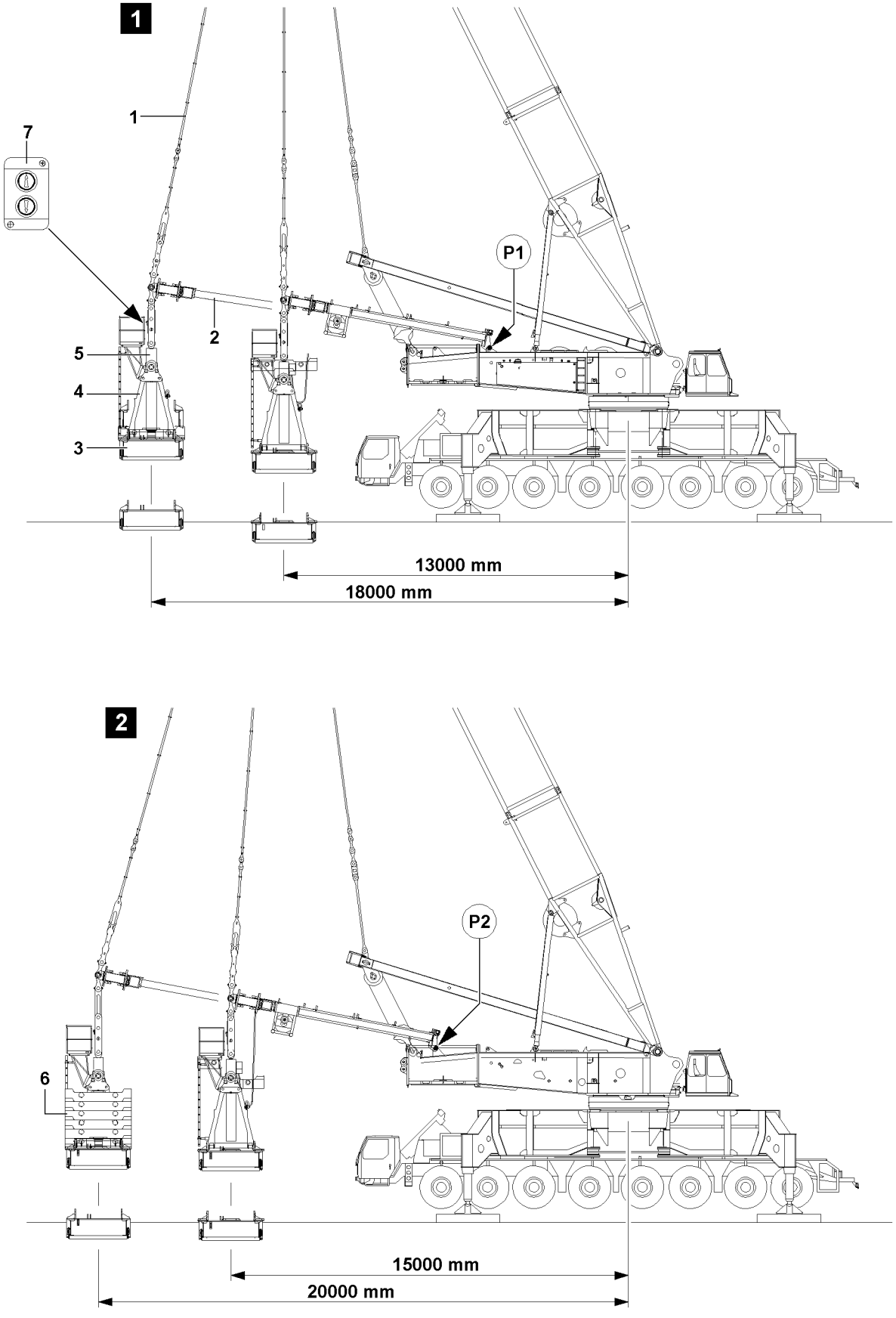

B111374

1 Description and component overview

The hydraulically telescopable suspended ballast guide **2** can be steplessly telescoped out to 5000 mm.
Depending on the pivot point of the guide frame on the turntable, derrick ballast radii between 13.0 m and 18.0 m (pivot point **P1**), and 15.0 m and 20.0 m (pivot point **P2**), are possible.

WARNING
Risk of accident!
- For the 42 m derrick, only derrick ballast radii of 18 m and 20 m are permissible!

Note
- The suspended ballast is described in general as derrick ballast!
- The fixed compensation weight which is assembled on the turntable is generally referred to as the counterweight!

The derrick boom angle, the derrick ballast radius, the derrick ballast weight and the derrick ballast utilization are displayed on LICCON monitor 1.
The derrick ballast is raised for crane operation after assembly on the ground with the pull cylinders **5**, which are installed on the ballast pallet **3**.
For crane operation with derrick ballast, see Crane operating instructions, chapter 4.02.

1.1 Component overview derrick ballast and ballast pallet

See illustration **1** and illustration **2**!

Position	Components
1	Derrick ballast guying
2	Guide
3	Ballast pallet
4	Erection rack
5	Pull cylinder
6	Ballast plates
7	Control panel

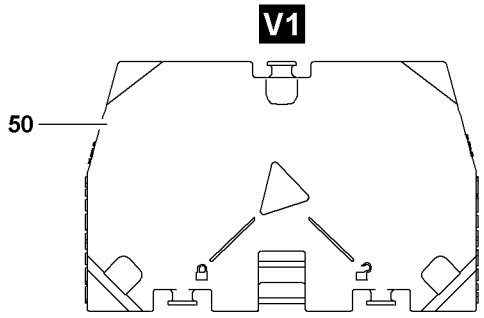
V1
50

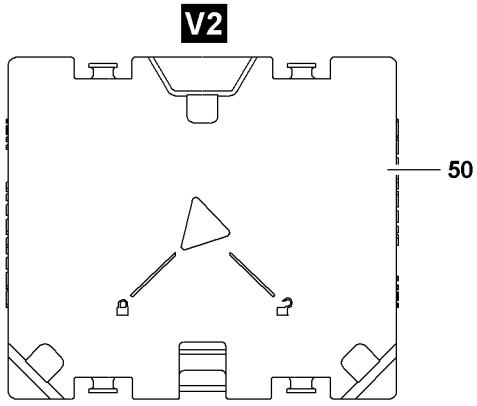
V2
50

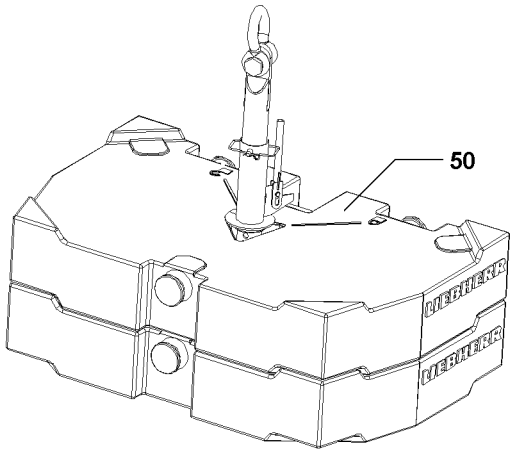
50
LIEBHERR
LIEBHERR

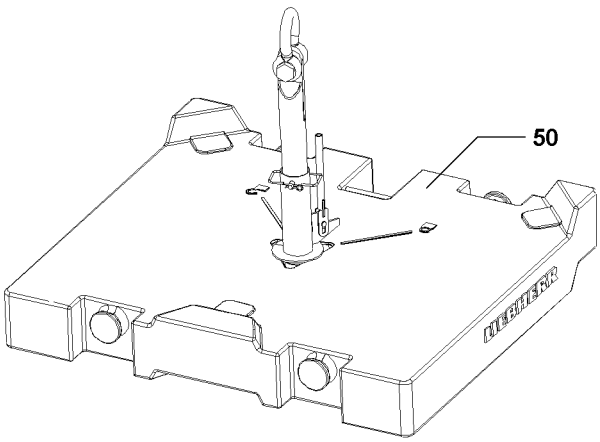
50
LIEBHERR

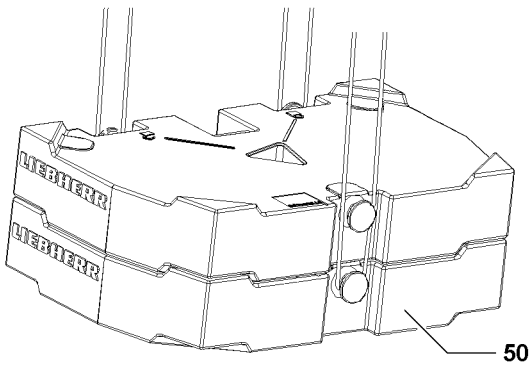
LIEBHERR
LIEBHERR
50

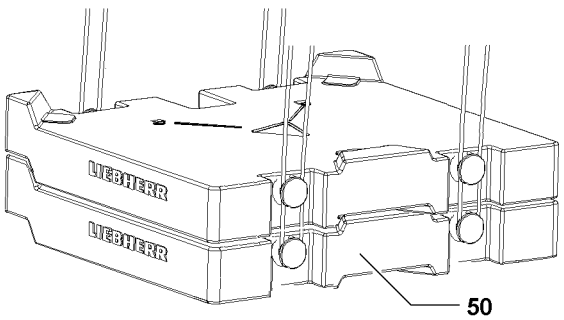
LIEBHERR
LIEBHERR
50

B109419

1.2 Ballast plates

Note
▶ The ballast plates are marked with their own weights!

The ballast plates are placed as a ballast assembly on the suspended ballast pallet.
Ballast plates are available in Variation **V1** and Variation **V2**:

Ballast plate	Weight
Variation **V1**	10 t
Variation **V2**	12.5 t

2 Permissible ballast assemblies

WARNING
Overload fastening points ballast plates!
If more than the permissible number of ballast plates are lifted together, then the attachment points can be overloaded!
The ballast plates and components can fall down!
Personnel can be severely injured or killed!
▶ Attach only the maximum permissible number of ballast plates per lift!

Individual weight	Maximum number of same ballast plates per lift over	
Ballast plate	Twistlock	Bitt
10.0 t	2	2
12.5 t	1	2

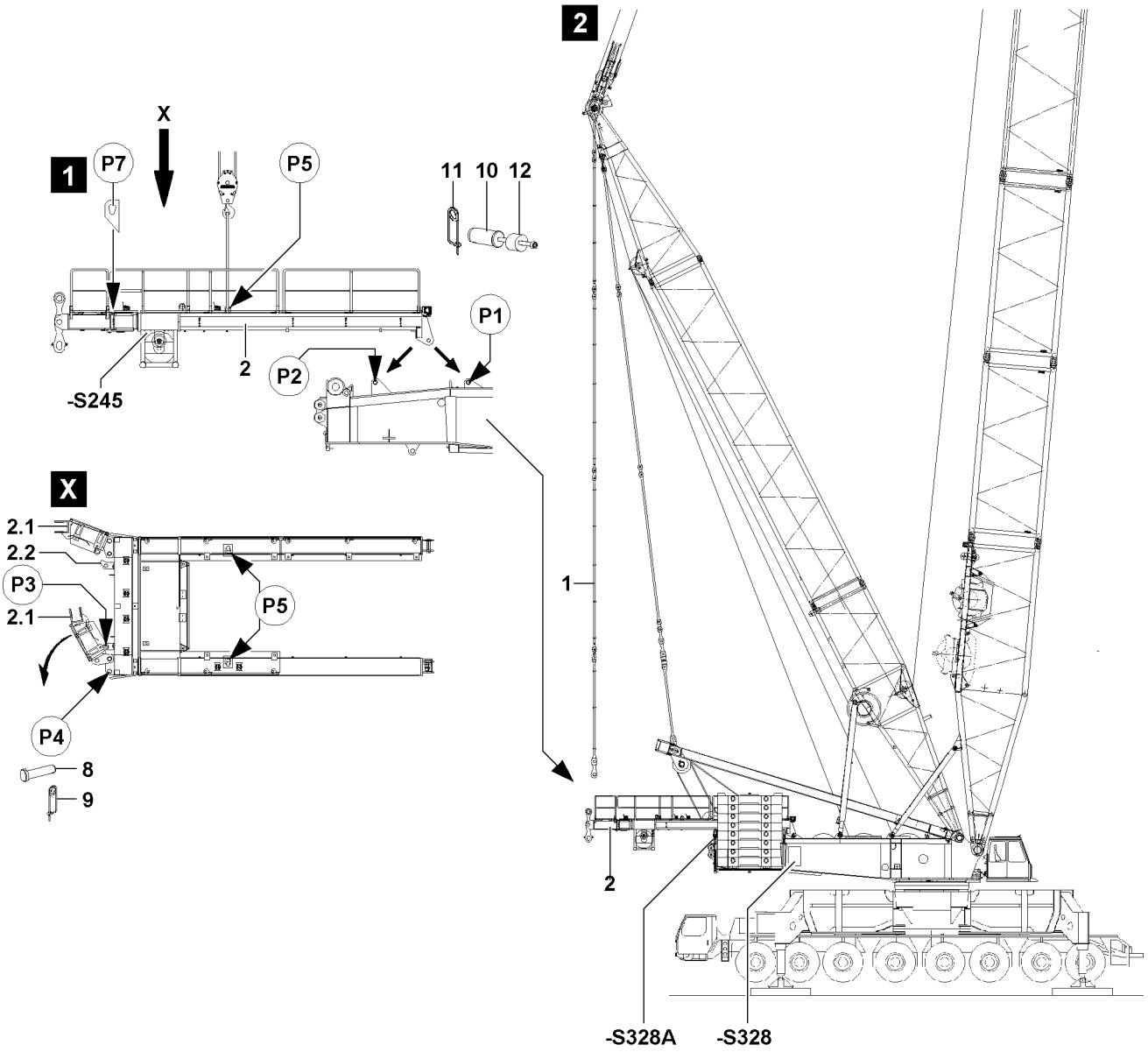

B111375

3 Assembly

WARNING
Risk of falling!
During assembly and disassembly, personnel must be secured with appropriate aids to prevent them from falling. If this is not observed, assembly personnel can fall and suffer life-threatening or fatal injuries!
- ▶ Any work, where there is a danger of falling must be carried out with suitable aids (for example: lifting platforms, scaffoldings, ladders, auxiliary crane)!
- ▶ If the work cannot be carried out with such aids nor from the ground, then the assembly personnel must secure themselves with approved catch systems to avoid falling, see Crane operating instructions chapter 2.04!
- ▶ If railings are present on the components, then they must be brought into the corresponding position and secured for assembly / disassembly work!
- ▶ Step on aids and fall arresters only with clean shoes!
- ▶ Keep aids and fall arresters clean and free from snow and ice!
- ▶ During all assembly and disassembly work, maintenance work and inspections, travel or crane operation is prohibited!

WARNING
Danger of crushing!
While assembling, hands can be crushed or even severed by swing movements of the components!
- ▶ Make sure that the components do not swing back and forth during assembly!

WARNING
Falling crane components!
If a crane component is disengaged from the auxiliary before it is properly assembled and secured, it can fall down!
Personnel can be severely injured or killed!
- ▶ Only disengage the auxiliary crane after the relevant crane component is properly assembled and secured, visual inspection!

Make sure that the following prerequisites are met:
- – The crane is supported and aligned in horizontal direction according to the data in the load chart.
- – The boom and the derrick boom are assembled on the turntable.
- – The derrick boom is erected.
- – The counterweight has been installed to the turntable according to the load chart.
- – The LICCON overload protection has been set according to the data in the load chart.
- – An auxiliary crane is available.

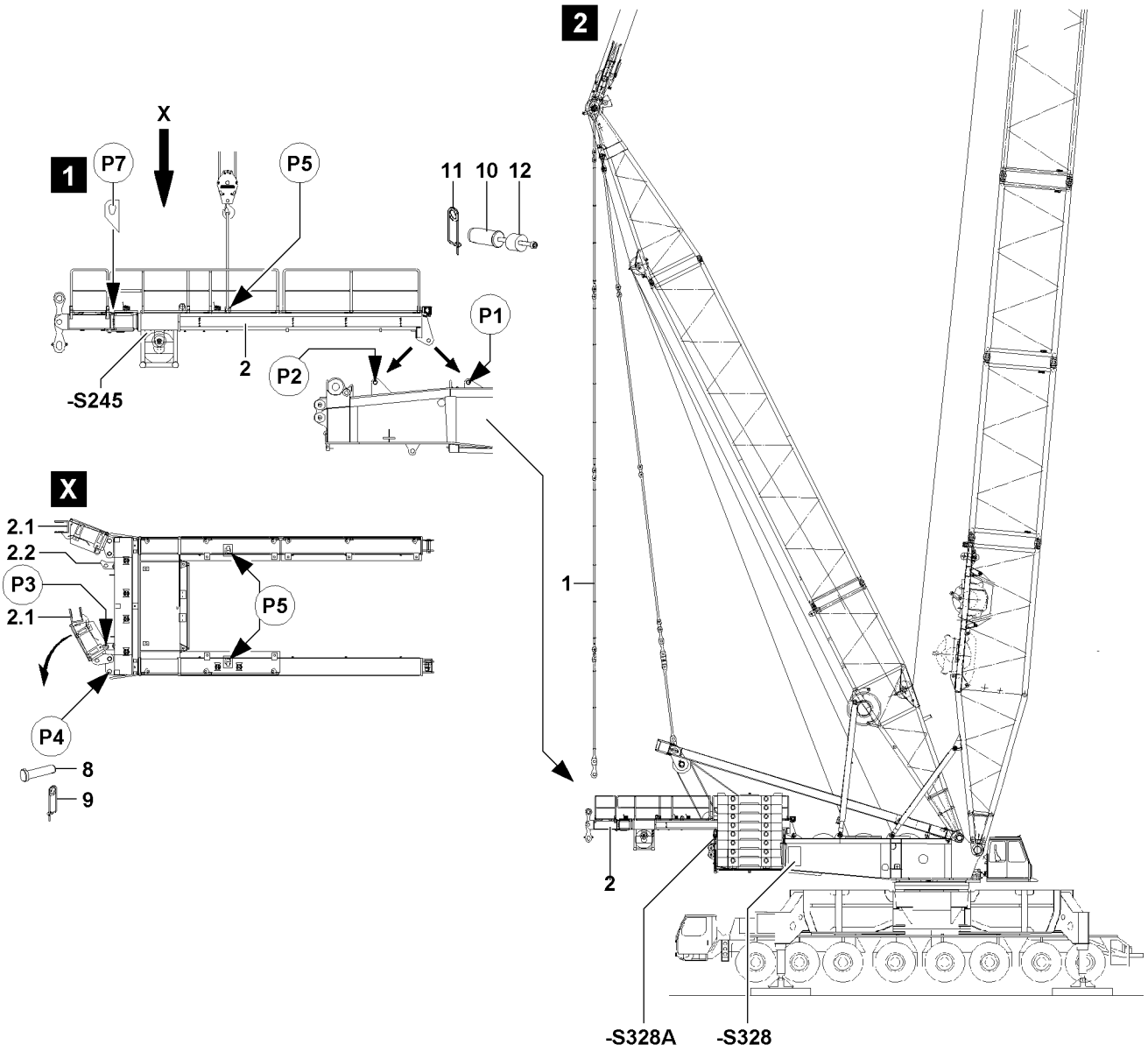

B111375

3.1 Pre-assembling guide frame

To retain the transport width of the guide frame **2**, the swing arms **2.1** are folded in in transport position and secured, see illustration **X**.

Bring the swing arms **2.1** into operating position for crane operation and secure.

- ▶ Release and unpin locking pins **8** on the left and right at point **P3**.
- ▶ Fold the swing arms **2.1** into operating position (direction of the arrow) to the outside.
- ▶ When the swing arms **2.1** are in operating position:
  Insert the locking pin **8** on point **P4** and secure with spring retainer **9**.

NOTICE
Risk of damage to railings!
If the railings are not brought into operating position and secured before installation of the guide frame on the turntable, they can be severely damaged!

- ▶ Bring the railings into operating position and secure before assembly of the guide frame on the turntable!

- ▶ Remove the spring retainers on the railings.
- ▶ Swing the railings upward into operating position.
- ▶ Secure the railings in operating position with spring retainers.

3.2 Installing the guide frame on the turntable

Pin point	Possible derrick ballast radii
P1	13 m to 18 m
P2	15 m to 20 m

Make sure that the following prerequisites are met:

- The swing arms **2.1** are pinned in operating position and secured.
- All guard rails are pinned and secured in operating position.

- ▶ Attach guide frame **2** on the suspension lugs, point **P5**, at auxiliary crane, illustration **1**, illustration **X**.

NOTICE
Risk of property damages!
By swinging in the guide frame to the bolting points on the turntable, the crane components can be substantially damaged!

- ▶ Swinging the guide frame with the auxiliary crane is to be carried out with the greatest possible caution and at the slowest speed!

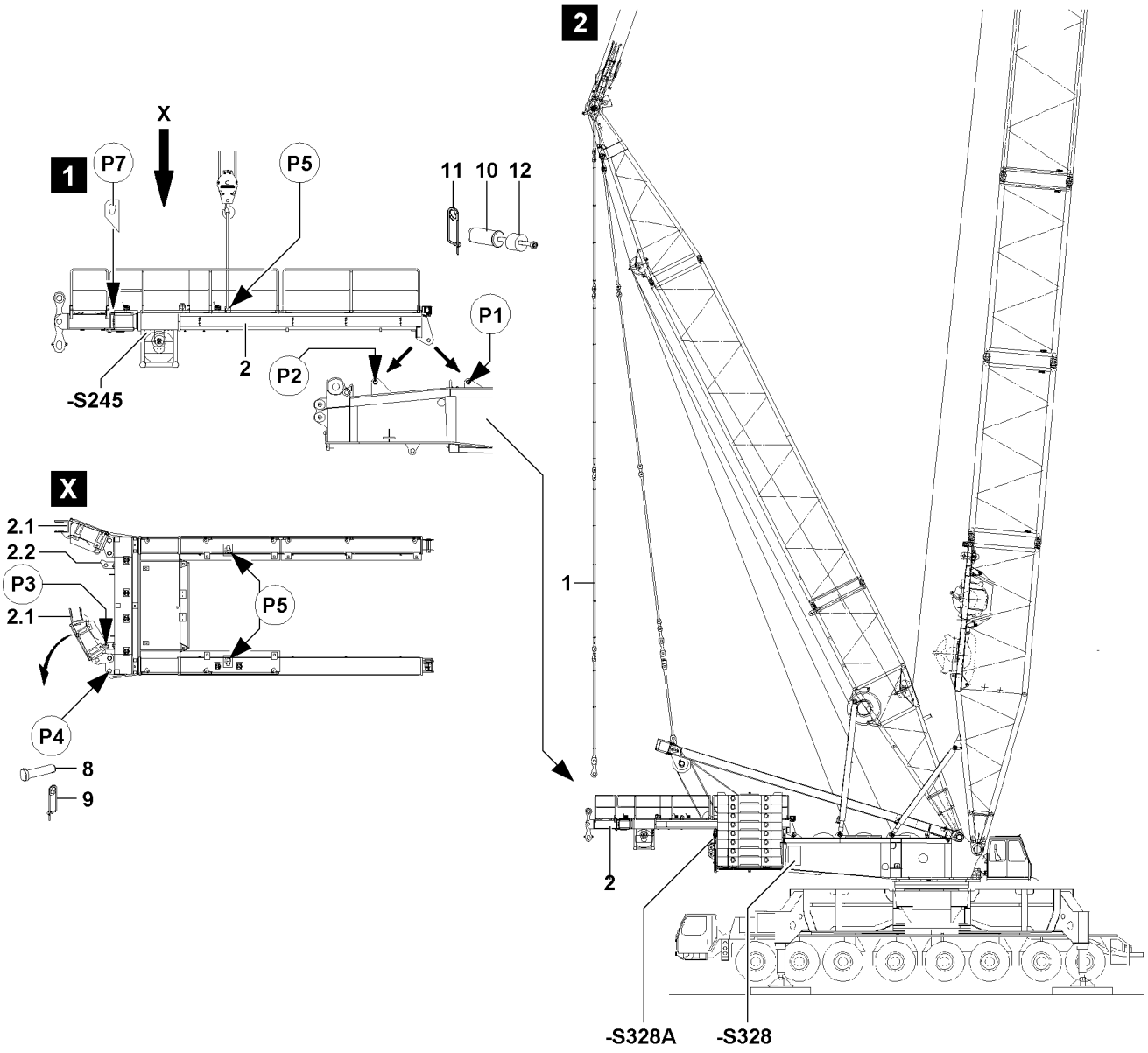

B111375

▶ Slew in guide frame **2** with auxiliary crane for pinning point **P1** on the turntable, illustration **2**.

or

■ Slew in guide frame **2** with auxiliary crane for pinning point **P2** on the turntable, illustration **2**.

▶ When the guide frame **2** is found in the desired pinning point:
Pin in the pins **10** at the corresponding pinning point with the striker **12** from the inside to the outside.

▶ Secure the pin **10** with spring retainer **11**.

▶ When the guide frame is pinned and secured on both sides on the turntable:
Lower guide frame **2** onto the support on the turntable, illustration **2**.

▶ Remove the auxiliary crane.

▶ Fold down lashing lugs, point **P5**, onto the guide frame **2**.

▶ Remove hydraulic hose lines from the guide frame **2**.

3.3 Establishing the hydraulic connection from the guide frame to the turntable

When hydraulic lines are connected and disconnected with quick-release couplings, make ensure that the coupling procedure is being performed correctly.

DANGER
Risk of accident due to loss of pressure or leakage!
Incorrectly coupled or incompletely coupled quick-release couplings (particularly return lines) as well as self-loosening of quick-release couplings can result in serious injury due to component failure!

▶ Check that the quick-release couplings have been properly connected before using the crane!

▶ Release the pressure in the hydraulic system before connecting and disconnecting. Turn the engine off and wait several minutes!

▶ Combine the coupling components (sleeve and connector) and screw them together with the hand-tightened nut!

▶ Tighten hydraulic coupling by hand!

▶ Rotate hand-tightened nut until it reaches a tangible, fixed stop position!

3.4 Establishing the electrical connection from the guide frame to the turntable

Make sure that the following prerequisite is met:

– The guide frame is assembled completely to the turntable, pinned and secured.

Note

▶ To establish the electrical connections, use the separate electrical wiring diagram!

▶ Observe the installation locations for the terminal boxes for the various derrick ballast radii!

▶ If the guide frame is pinned on the pin points **P1**, use the terminal box **-S328** on the turntable!

▶ If the guide frame is pinned on the pin points **P2**, use the terminal box **-S328A** on the turntable!

▶ Plug in the length sensor on the terminal box **-S328** on the turntable.

or

■ Plug in the length sensor on the terminal box **-S328A** on the turntable.

▶ Establish the connection from the terminal box **-S245** on the guide frame to the turntable.

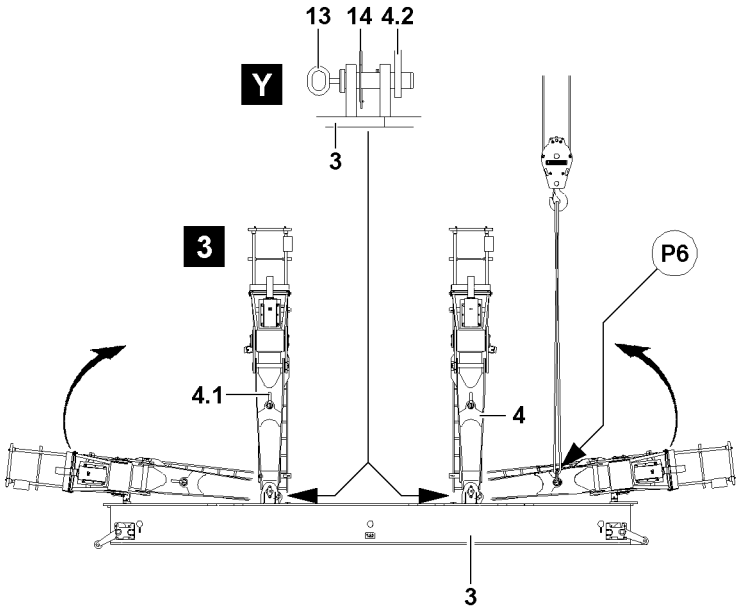

B111376

3.5 Preassembling the ballast pallet

Align the ballast pallet with the auxiliary crane to the crane longitudinal axis and place it down within the turning range of the ballast trailer.
Then erect and secure the erection racks.

3.5.1 Aligning the ballast pallet in assembly position and placing it down

Note
▶ The attachment hooks for transport of the ballast pallet are inside the steel structure!

▶ Attach the ballast pallet on the four attachment hooks on the auxiliary crane.
▶ Align the ballast pallet with the auxiliary crane to the longitudinal axis of the crane or to the turntable.
▶ Place the ballast pallet down within the crane slewing range.
▶ Remove the auxiliary crane.

3.5.2 Setting up the erection racks

Note
▶ Erection of the erection racks **4** is identical for both erection racks and is described using the example of an erection rack!

WARNING
Risk of fatal injury when assembling / disassembling the erection racks!
Using improper assembly / disassembly of erection racks can result in tipping!
Personnel can be severely injured or killed!
▶ Never unpin the retaining pins **13** on unsecured or unsupported erection racks!
▶ Standing under the erection racks **4** as well as within the entire danger zone is prohibited during pinning or unpinning!

Make sure that the following prerequisite is met:
– The retaining pins **13** are in “unpinned” position.

▶ Attach the erection rack on the eye hooks **4.1**, point **P6** an the auxiliary crane.
▶ Erect the erection rack **4** with the auxiliary crane to the vertical position.
▶ When the erection rack **4** is in the desired vertical position:
Insert the retaining pins **13** on the bracket **4.2** and secure with spring retainer **14**, see illustration **Y**.

WARNING
Tipping erection racks!
Through improper securing of the erection racks, they can tip over upon removal of the auxiliary crane!
Personnel can be severely injured or killed!
▶ Ensure that the erection racks with the retaining pins **13** are properly pinned and secured!

▶ When the erection rack **4** is pinned and secured properly:
Remove the auxiliary crane.

Note
▶ Proceed with the erection of the second erection rack, as described above!

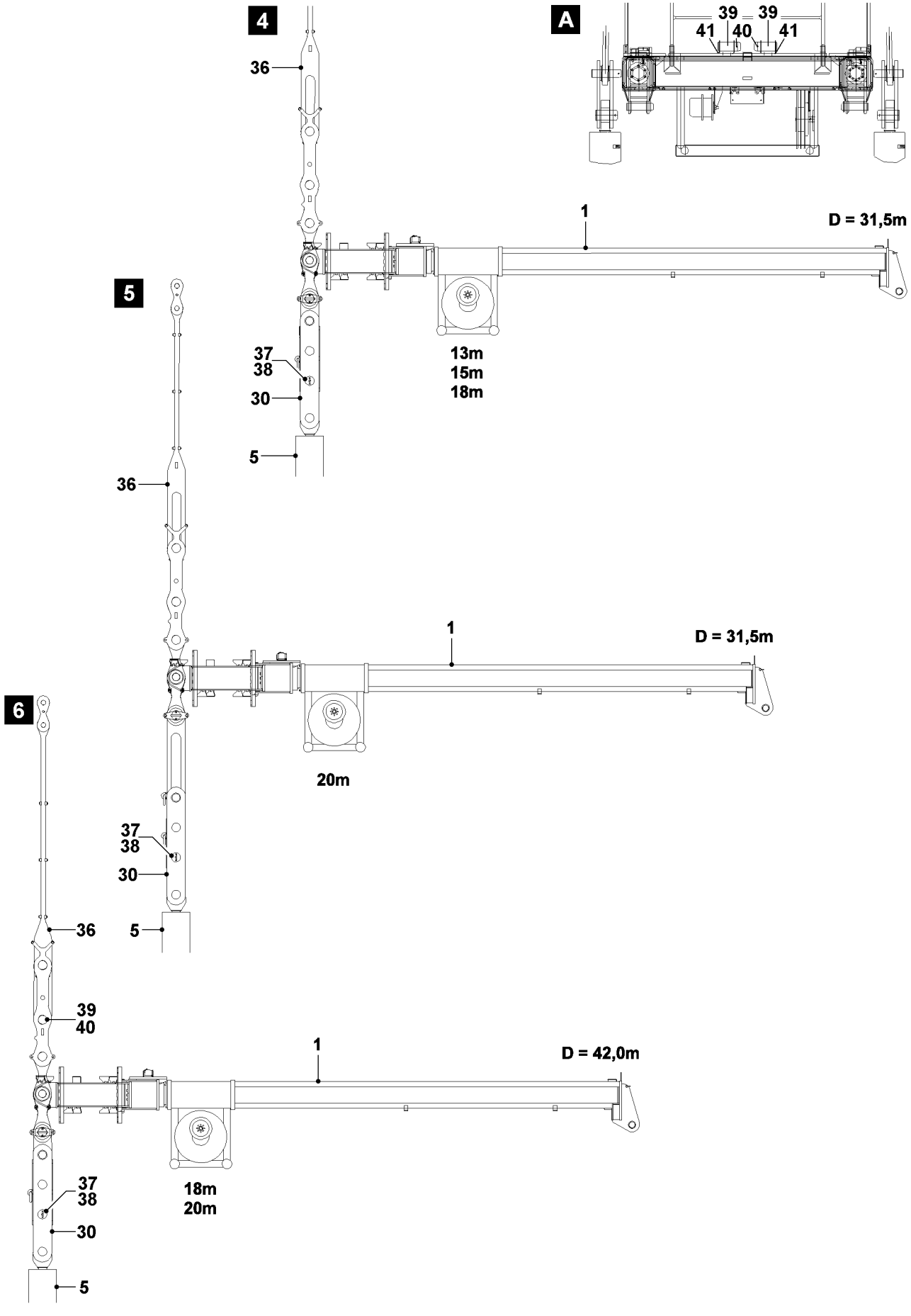
4
36
37
38
30
5
13m
15m
18m
1
D = 31,5m
A
39
39
41
40
41
5
36
37
38
30
5
20m
1
D = 31,5m
6
36
39
40
37
38
30
5
18m
20m
1
D = 42,0m
B109443

3.5.3 Adjusting length of lugs and rods

Note

- During assembly of the ballast pallet lugs **30** and the rods **36** are assembled according to the crane configuration. Decisive is the length of the derrick boom and the required derrick ballast radius for the crane operation.
- The length setting of the lugs **30** and the rods **36** is to be carried out corresponding to the following overview.
- The pins **37** are to be pinned according to the required length of the lugs **30** and to be secured with the spring retainers **38**.
- The pins **39** are to be pinned according to the required length of the rods **36** and to be secured with the spring retainers **40**.
- Before operation with the 31.5 m derrick, park the pins **39** in the retainers **41** on the ballast guide and secure with spring retainers **40** see illustration **A**.

Derrick 31.5 m, see illustration 4

Derrick ballast radius	Rod 36	Lug 30
13 m	Extended	Retracted
15 m	Extended	Retracted
18 m	Extended	Retracted

Derrick 31.5 m, see illustration 5

Derrick ballast radius	Rod 36	Lug 30
20 m	Extended	Extended

Derrick 42.0 m, see illustration 6

Derrick ballast radius	Rod 36	Lug 30
18 m	Retracted	Retracted
20 m	Retracted	Retracted

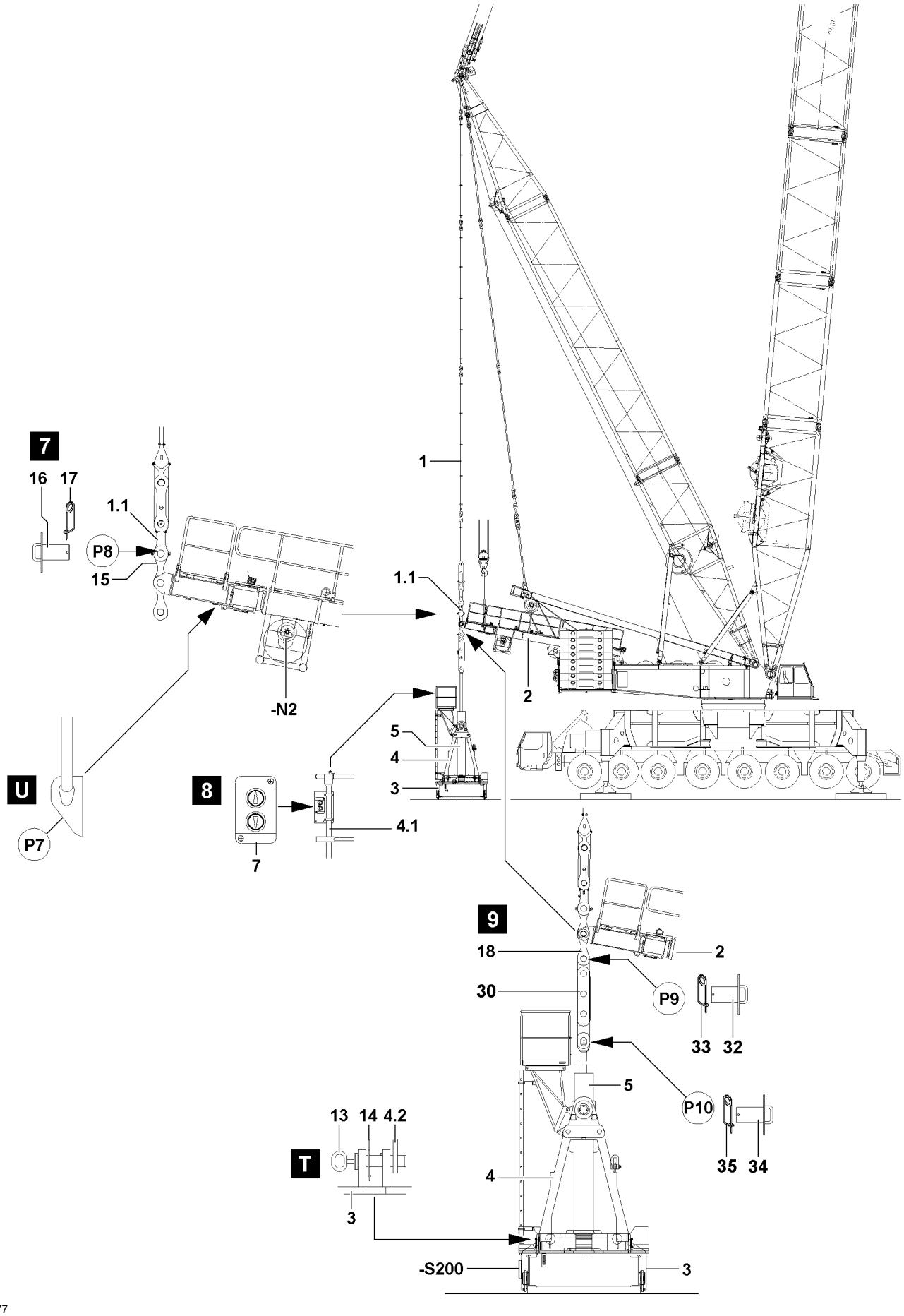
7
16
17
1.1
P8
15
-N2
1
1.1
2
5
4
3
U
P7
8
4.1
7
9
18
2
30
P9
33
32
5
P10
35
34
13
14
4.2
T
4
3
-S200
3
B111377

3.6 Installing the ballast pallet

WARNING
Toppling ballast pallet!
Unlevel ground can cause the ballast pallet to sink into the ground during assembly!
This can lead to toppling of the ballast stack during ballasting of the ballast pallet and can lead to life-threatening injuries or death to personnel!
▶ Ensure that the subsoil is level and sufficiently capable of supporting the load, in order to securely accept the ballast pallet inclusive of the ballast plates!

3.6.1 Installing guide frame to derrick ballast guying

▶ Lower derrick boom backward into operating position.
▶ Attach the auxiliary crane on the attachment points **P7** on the guide frame, see illustration **U**.
▶ Lift the guide frame **2** with the auxiliary crane.

or

■ Guide frame **2** telescope out with reduced speed.
▶ When the pin bore for the lugs **1.1** and the lugs **15** align:
Pin in the pins **16** at point **P8** on both sides and secure with spring retainers **17** see illustration **7**.
▶ If the lugs **1.1** for the derrick ballast guying are securely pinned and secured with the lugs **15**:
Remove the auxiliary crane.

3.6.2 Establishing hydraulic connections from the guide frame to the pull cylinders in the ballast pallet

When hydraulic lines are connected and disconnected with quick-release couplings, make ensure that the coupling procedure is being performed correctly.

DANGER
Risk of accident due to loss of pressure or leakage!
Incorrectly coupled or incompletely coupled quick-release couplings (particularly return lines) as well as self-loosening of quick-release couplings can result in serious injury due to component failure!
▶ Check that the quick-release couplings have been properly connected before using the crane!

▶ Release the pressure in the hydraulic system before connecting and disconnecting. Turn the engine off and wait several minutes!
▶ Combine the coupling components (sleeve and connector) and screw them together with the hand-tightened nut!
▶ Tighten hydraulic coupling by hand!
▶ Rotate hand-tightened nut until it reaches a tangible, fixed stop position!

3.6.3 Establishing the electrical connection from the guide frame to the ballast pallet

Note
▶ For establishing the electrical connections, the separate electrical diagram is to be employed!

▶ Produce connection from the terminal box **-S200** on the ballast pallet for the cable drum **-N2** on the guide frame.

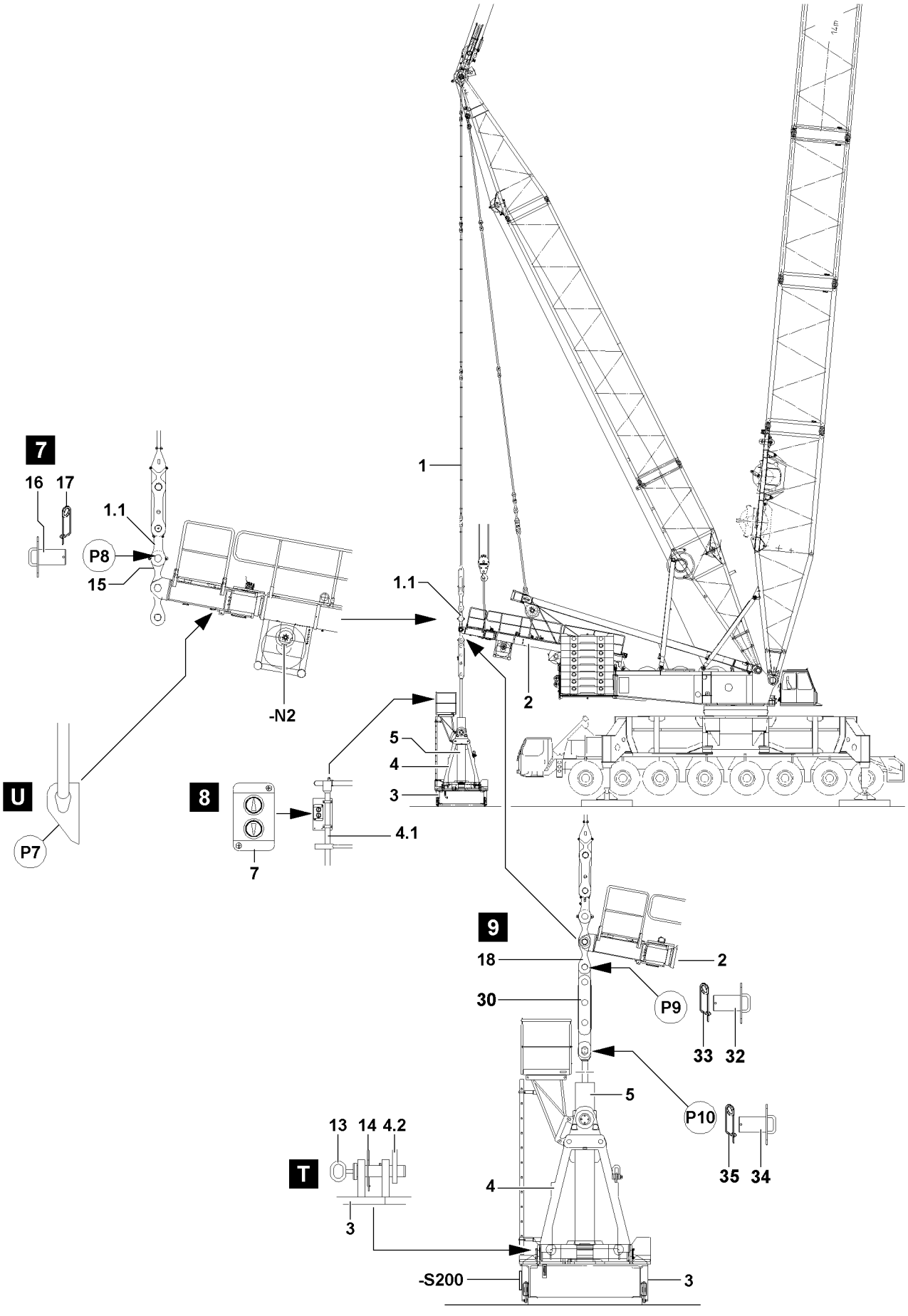
7
16
17
1.1
P8
15
-N2
1
1.1
2
5
4
3
U
P7
8
4.1
7
9
18
2
30
P9
33
32
5
P10
35
34
13
14
4.2
T
4
3
-S200
3
B111377

3.6.4 Installing ballast pallet to guide frame

Make sure that the following prerequisites are met:

– The guide frame is pinned and secured to the derrick ballast guying.
– The ballast pallet is in assembly position.
– The erection racks are erected, properly pinned and secured.
– The hydraulic connections to the ballast pallet are established.
– The electrical connections to the ballast pallet are established.

▶ Start the crane engine.
▶ Pin lugs **18** at point **P9** with the lugs **30**:
Pin in the pins **32** at point **P9** on both sides and secure with spring retainers **33** see illustration **9**.

Extend piston rods for the pull cylinder **5** and pin with the lugs **30** on the guide frame.

Note

▶ The piston rods for the pull cylinder **5** can be operated from the crane operator's cab as well as directly on the corresponding control panel **7** of the ballast pallet, see illustration **8**!
▶ The control panel **7** may be found on the pedestal **4.1** of the erection blocks **4**!
▶ The respectively associated pull cylinder can be operated on the control panels **7**!

▶ Extend piston rods for the pull cylinder **5**, see illustration **9**.
▶ When the piston rod pin borings align with the pin borings of the lugs **30**:
Pin in the pins **34** at point **P10** on both sides and secure with spring retainers **35** see illustration **9**.

NOTICE

Damage to the ballast pallet!

If the retaining pins **13** are not unpinned before taking up crane work, it can lead to property damages in the area of the ballast pallet **3** and the erection racks **4**!

▶ Only unpin retaining pins **13** when it is ensured that the piston rods for the pull cylinder **5** are securely pinned and secured with the lugs **30** on the guide frame **2**, see illustration **9**!

▶ Release retaining pins **13** and unpin up to the stop.
▶ Secure retaining pins **13** in position “unpinned” with spring retainer **14**.

B195219

3.7 Functional control before lifting the derrick ballast

Make sure that the following prerequisites are met:

– The hydraulic connections from the derrick ballast and the turntable are established.
– The electrical connections from the derrick ballast to the turntable are established.
– The ground contact rollers must move easily.

WARNING

Risk of fatal injury if the derrick ballast touches the ground!

If the crane movement “turn turntable” is not switched off upon derrick ballast ground contact, the ballast stacks or individual ballast plates can topple!

Personnel can be severely injured or killed!

▶ Make sure that at least one ground contact switch is actuated upon the derrick ballast touching the ground, and the crane movement “turntable turn” switches off, visual inspection!
▶ There may be no persons, objects or obstacles within the slewing range of the derrick ballast!

3.7.1 Limit switch “Derrick ballast on ground”

▶ Manually actuate the ground contact switch individually.

Result:

– “Turntable turning” switch off.
– The warning light lights up.

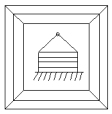

B104666

Warning lights “Derrick ballast on ground”

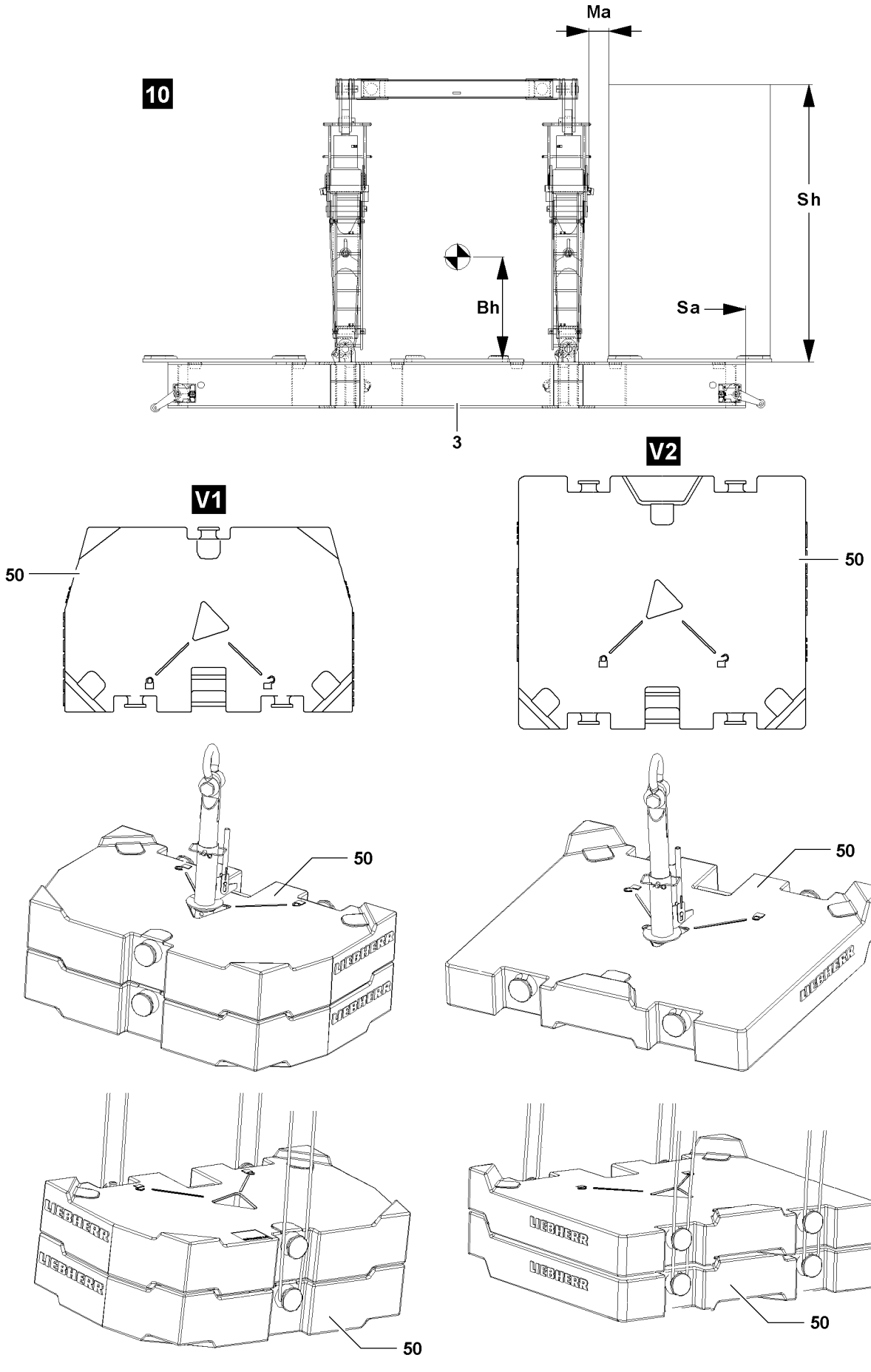

B109416

3.8 Ballasting the ballast pallet

WARNING
The crane can topple over!
If the following danger notes are not observed, the ballast plates or the ballast stack can slip on the ballast pallet and fall down!
The crane can topple over and personnel can be severely injured or killed!

- ▶ The ground on which the ballast pallet is ballasted must be level and have adequate load-bearing capacity!
- ▶ Place the ballast plates always symmetrically, in reference to the longitudinal axis!
- ▶ Always ballast the center ballast stacks in suspended condition first and remove these ballast stacks last!
- ▶ The outer ballast stacks must weigh the same and be the same height after ballasting!
- ▶ The permissible weight difference between right and left ballast stack may not more then a maximum 20.0 t when ballasting up and down!
- ▶ The maximum permissible ballast center of gravity height **Bh** of 2000 mm may not be exceeded!
- ▶ The maximum permissible stack height **Sh** of 4500 mm, measured from the upper edge of the ballast pallet, may not be exceeded!
- ▶ The maximum permissible weight of the ballast plates of 390 t may not be exceeded!
- ▶ The ballast plates must be secured to prevent them from moving or falling down!
- ▶ The distances of the center of gravity of the outer ballast stacks must be maintained and must be identical between left and right stack!
- ▶ Replace damaged ballast plates immediately with new ballast plates!

NOTICE
Damage to the pull cylinder!
If the minimum clearance of the ballast stacks to the pull cylinders is exceeded, the pull cylinders can be substantially damaged!

- ▶ The minimum clearance **Ma** of the ballast stacks to the pull cylinders must amount to at least 300 mm!

	Maximum permissible ballast weight per stack (left/right)		
Center of gravity distance **Sa**	152 t	160 t	170 t
800 mm	**X**		
865 mm		**X**	
1000 mm			**X**

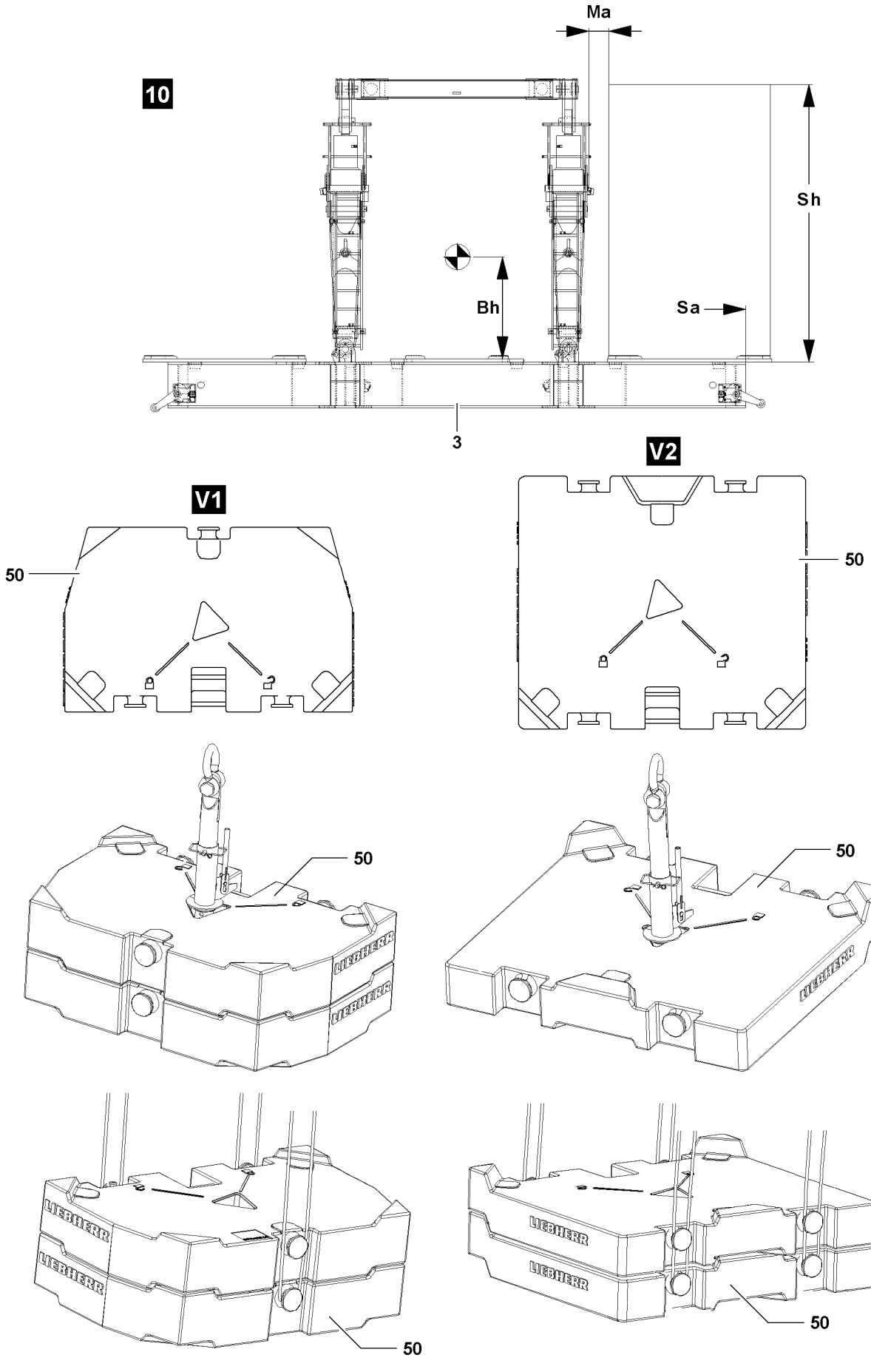
10
Ma
Sh
Bh
Sa
3
V1
50
V2
50
50
50
50
50
B109416

WARNING
Damaged ballast plates!
Damage on the ballast plates can cause the tackle to release!
The ballast plates and components can fall down!
Personnel can be severely injured or killed!
▶ Do not use damaged ballast plates and replace them immediately!

WARNING
Suspended ballast too low / too high!
If the placed suspended ballast deviates from the specified data in the load charts or the assembly conditions, then the crane can be damaged or topple over!
Personnel can be severely injured or killed!
▶ Make sure that the suspended ballast is placed according to the load chart!

WARNING
Asymmetrical ballast distribution!
If the suspended ballast is not distributed evenly on the ballast pallet, then this can lead to overload!
The crane can be damaged and components can fall down!
Personnel can be severely injured or killed!
▶ Make sure that the suspended ballast is distributed evenly on the ballast pallet!

WARNING
Toppling ballast assembly!
Lopsided stacked ballast plates create instability in the ballast stack!
The ballast plates can tip from the ballast pallet and cause the crane to topple over!
Personnel can be severely injured or killed!
▶ Make sure that the ballast plates are placed correctly in the centerings!

WARNING
Impermissible combination of ballast plates!
Combining ballast plates of Variation **V1** and Variation **V2** creates instability in the ballast stack!
The ballast plates can tip from the ballast pallet and cause the crane to topple over!
Personnel can be severely injured or killed!
▶ Only ballast plates of the same variation may be stacked on each other!

Make sure that the following prerequisites are met:
– The ballast pallet is assembled on the guide frame and is lowered onto the ground.
– An auxiliary crane is available.

11

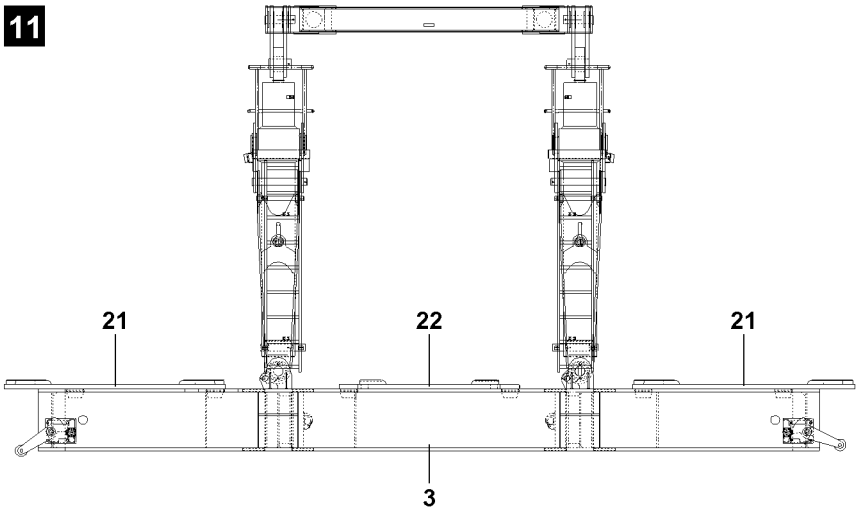

12

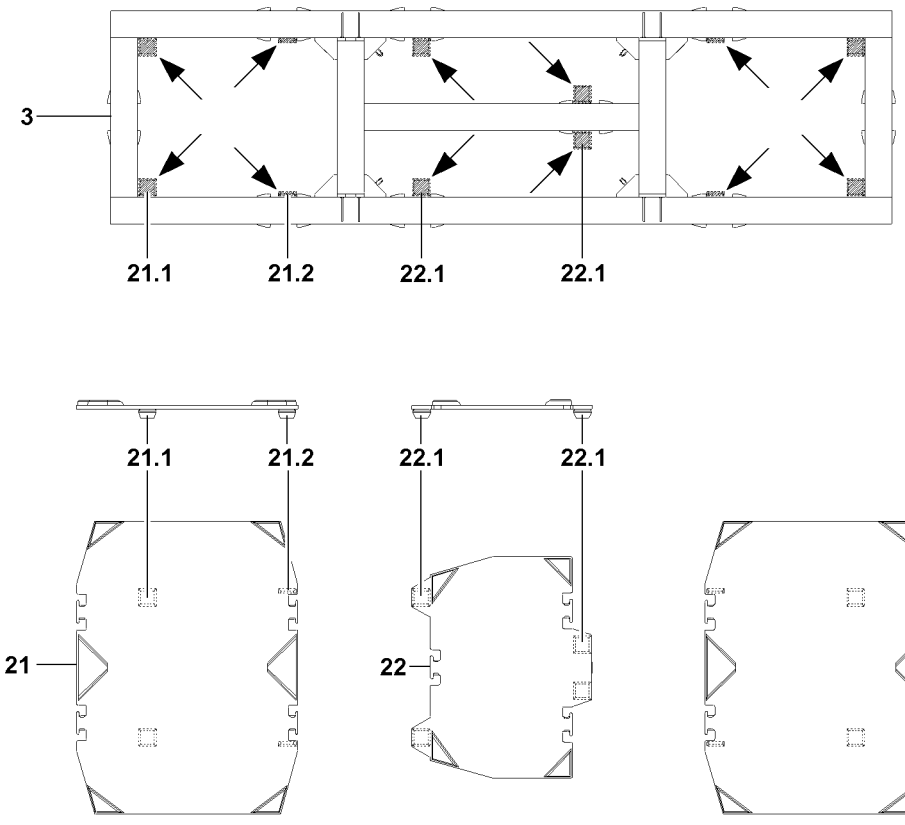

B107530

3.8.1 Ballasting the 10.0 t ballast plates

Note

▶ The ballast plates are marked with their own weights!

WARNING

Danger of toppling the ballast stack!

Personnel can be severely injured or killed by toppling ballast stacks!

▶ Before ballasting the ballast pallet, it must be properly placed on the ground!
▶ During ballasting observe even distribution of the ballast plates!
▶ Observe correct centering of the ballast plates!
▶ First, establish the ballast stack in the middle of the ballast pallet, then distribute the ballast stacks left and right uniformly!

Note

▶ For determining the correct ballast weight, use the LICCON job planner!

Note

▶ The ballast plates may only be distributed in layers on the ballast stacks, always left and right!
▶ The ballast stacks must have the identical stack heights left and right according to ballasting and have the identical ballast weight!

11

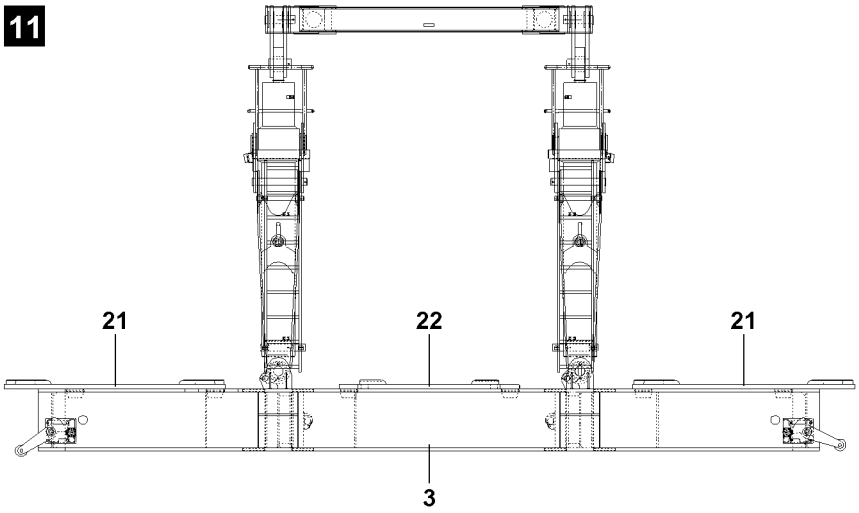

12

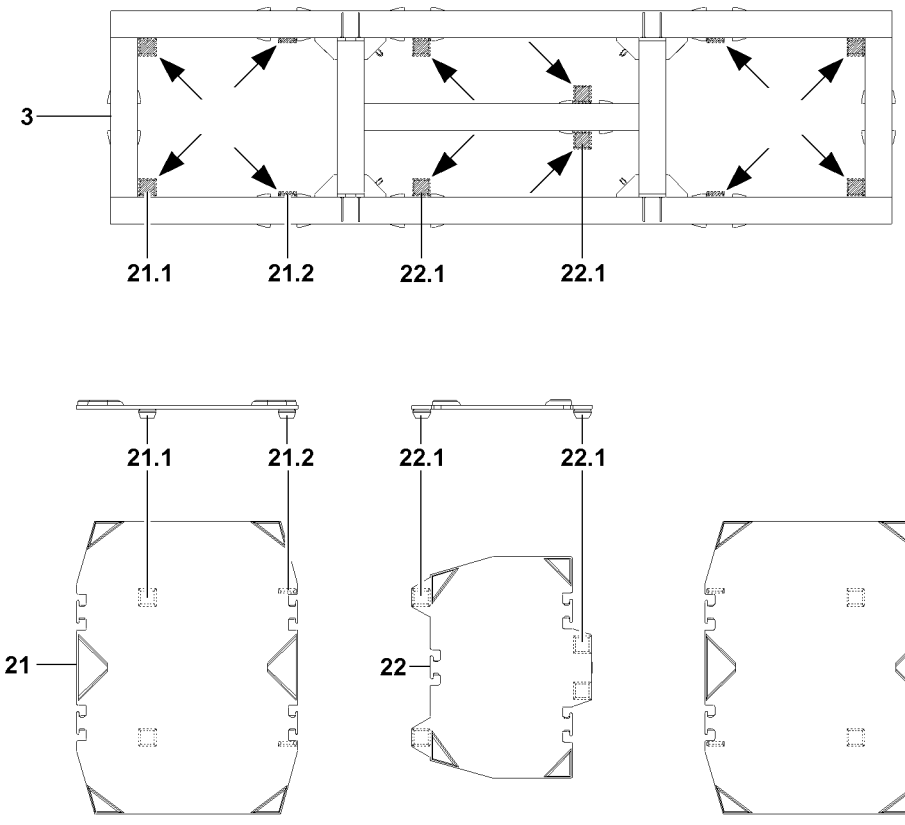

B107530

Placing the centering plates* on the ballast pallet

When using the 10.0 t ballast plates, the centering plates **21** and the centering plate **22** must be used. The centering plates are used to take up the 10.0 t ballast plates securely in order to prevent slipping during crane operation.

WARNING
The crane can topple over!
Through improperly placed centering plates, individual ballast plates or the ballast stacks can slip or fall down and cause the crane to topple over!
Personnel can be severely injured or killed!
- ▶ Place the centering plates properly on the ballast pallet, visual inspection!
- ▶ Crane operation with improperly placed centering plates is prohibited!

Placing the center centering plate

- ▶ Attach the centering plate **22** on the auxiliary crane.

Note
- ▶ Observe correct installation position of the centering plate, see illustration **11**!
- ▶ The centerings **22.1** must be positioned according to illustration **12** on the frame of the ballast pallet **3**, visual inspection!

- ▶ Position centering plate **22** and place into the frame of the ballast pallet **3**.
- ▶ Lower the centering plate **22** onto the frame of the ballast pallet **3**.
- ▶ When the centering plate is placed flat on the frame of the ballast pallet: Remove the auxiliary crane.

Placing the outer centering plates

Note
- ▶ Placing of the two outer centering plates **21** on the ballast pallet **3** is identical and is only described on the basis of a centering plate!

- ▶ Attach the centering plate **21** on the auxiliary crane.

Note
- ▶ Observe correct installation position of the centering plate, see illustration **11**!
- ▶ The centerings **21.1** and the centerings **21.2** must be positioned according to illustration **12** on the frame of the ballast pallet **3**, visual inspection!

- ▶ Position centering plate **21** and place into the frame of the ballast pallet **3**.
- ▶ Lower the centering plate **21** onto the frame of the ballast pallet **3**.
- ▶ When the centering plate is placed flat on the frame of the ballast pallet: Remove the auxiliary crane.

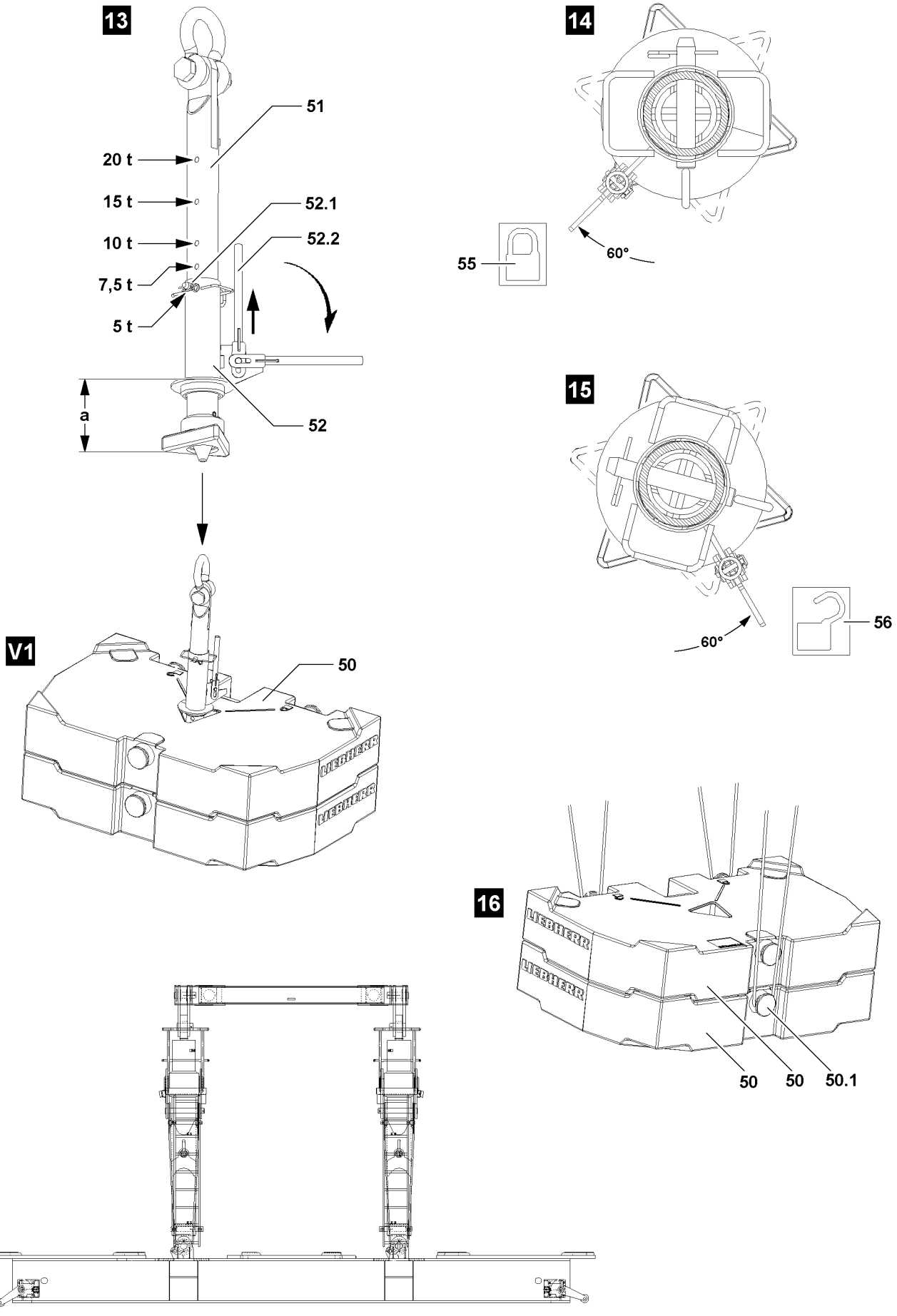
13
51
20 t
15 t
52.1
10 t
52.2
7,5 t
5 t
a
52
V1
50
14
55
60°
15
60°
56
16
50
50
50.1

B109417

Placing 10.0 t ballast plates, attachment system: “Twistlock”

WARNING
Overload of receptacle stud and ballast plates!
If more than the permissible number of ballast plates are lifted with the receptacle stud **51**, the receptacle stud **51** and the ballast plates can be overloaded and damaged!
The ballast plates can fall down!
Personnel can be severely injured or killed!
▶ Observe the section “Permissible ballast assemblies” in this chapter!

WARNING
Damage of receptacle stud and ballast plates!
If two ballast plates are lifted which do not lay correctly in their centerings, the receptacle stud **51** and the ballast plates can be damaged!
Damage can cause the ballast plates to fall down!
Personnel can be severely injured or killed!
▶ Make sure that the ballast plates to be lifted are placed correctly in the centerings!

WARNING
The twist lock system opens by itself!
If the receptacle stud **51** is not correctly locked, the Twist lock system can open by itself!
The ballast plates can fall down!
Personnel can be severely injured or killed!
▶ Make sure, when initiating a lift, that the lever **52.2** points directly on the symbol “Locked” **55** of the ballast plates **2**!

Note
▶ During a lift, the locked Twist lock system cannot release by itself due to its gravitational retention!
▶ During a lift, the locked Twist lock system cannot be released by hand due to its gravitational retention!

Note
▶ For ballast plates Variation **V1**, use the adjustable receptacle stud **51** in illustration **13**!

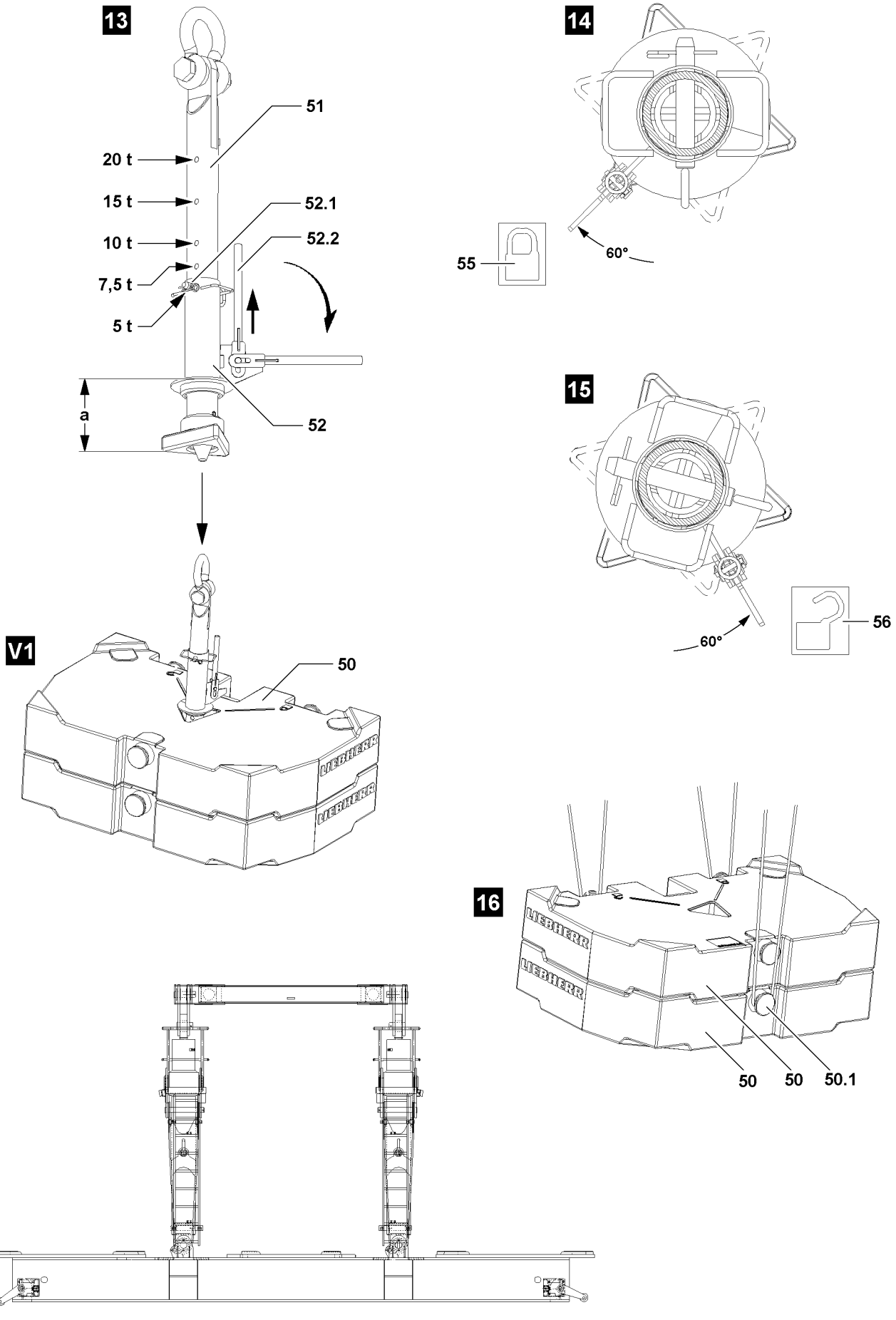
13
51
20 t
15 t
52.1
10 t
52.2
7,5 t
5 t
a
52
V1
50
14
55
60°
15
60°
56
16
50
50
50.1

B109417

Before the receptacle stud **51** is guided in the ballast plates Variation **V1**, it must be ensured that the insertion length **a** of the receptacle stud **51** is set correctly.
The insertion length **a** of the receptacle stud **51** for ballast plates Variation **V1** can be adjusted by hand.

- ▶ If the insertion length **a** of the receptacle stud **51** is to be adjusted:
  Release and unpin the pin **52.1**.
- ▶ Adjust the insertion length **a** by moving the guide sleeve **52** to the desired insertion length **a**, observe the stages in illustration **13**.
- ▶ Insert and secure pin **52.1**.

Result:

– The receptacle stud **51** is adjusted.

Note

▶ The receptacle stud **51** in illustration **13** is set to 5 t!

- ▶ Attach the receptacle stud **51** on the auxiliary crane and guide it into the ballast plate(s).
- ▶ Pull the lever **52.2** up and fold it down.
- ▶ Turn the receptacle stud **51** with the lever **52.2** by 60° until it points to the symbol “Locked” **55** of the ballast plate, see illustration **14**.
- ▶ Lift the ballast plate(s) or the ballast assembly with the receptacle stud **51** and place it carefully on the centerings on the ballast pallet or on another ballast plate in the ballast assembly.
- ▶ When the ballast plates are placed down:
  Turn the receptacle stud **51** with the lever **52.2** by 60° to the stop in direction of the symbol “unlocked” **56** of the ballast plate, see illustration **15**.

Result:

– The receptacle stud **51** is unlocked.

- ▶ Carefully pull out the receptacle stud **51**.

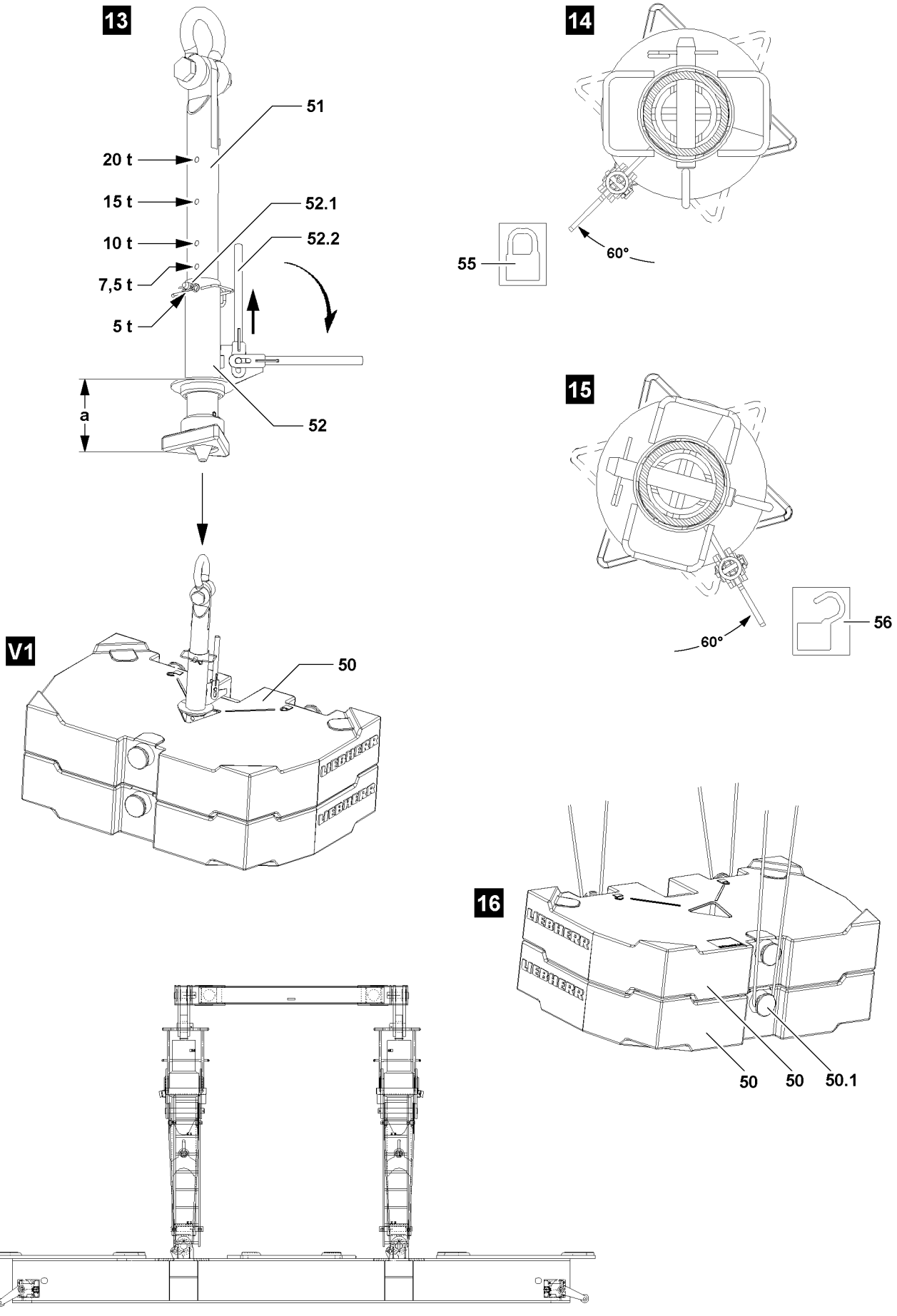
13
51
20 t
15 t
52.1
10 t
52.2
7,5 t
5 t
a
52
14
55
60°
15
60°
56
V1
50
16
50
50
50.1

B109417

Placing the ballast plates, fastening points: Bitt

WARNING
Overloaded ballast plates!
If more than the permissible loads are lifted, the bitts **50.1** are overloaded!
The ballast plates can be damaged and fall down!
Personnel can be severely injured or killed!
▶ Observe the section “Permissible ballast assemblies” in this chapter!

WARNING
Incorrect handling of the fastening equipment!
If tackle cannot be attached correctly and / or if it is not secured sufficiently to prevent it from loosening up, the ballast plates can fall down!
Personnel can be severely injured or killed!
▶ Make sure that the fastening equipment is correctly attached on the bitts **50.1** and that it is secured sufficiently to prevent it from loosening up!

▶ Attach the ballast plates or ballast assembly, illustration **16** on the auxiliary crane.
▶ Lift the ballast plates or the ballast assembly and place it carefully on the centerings on the ballast pallet or on another ballast plate in the ballast assembly.

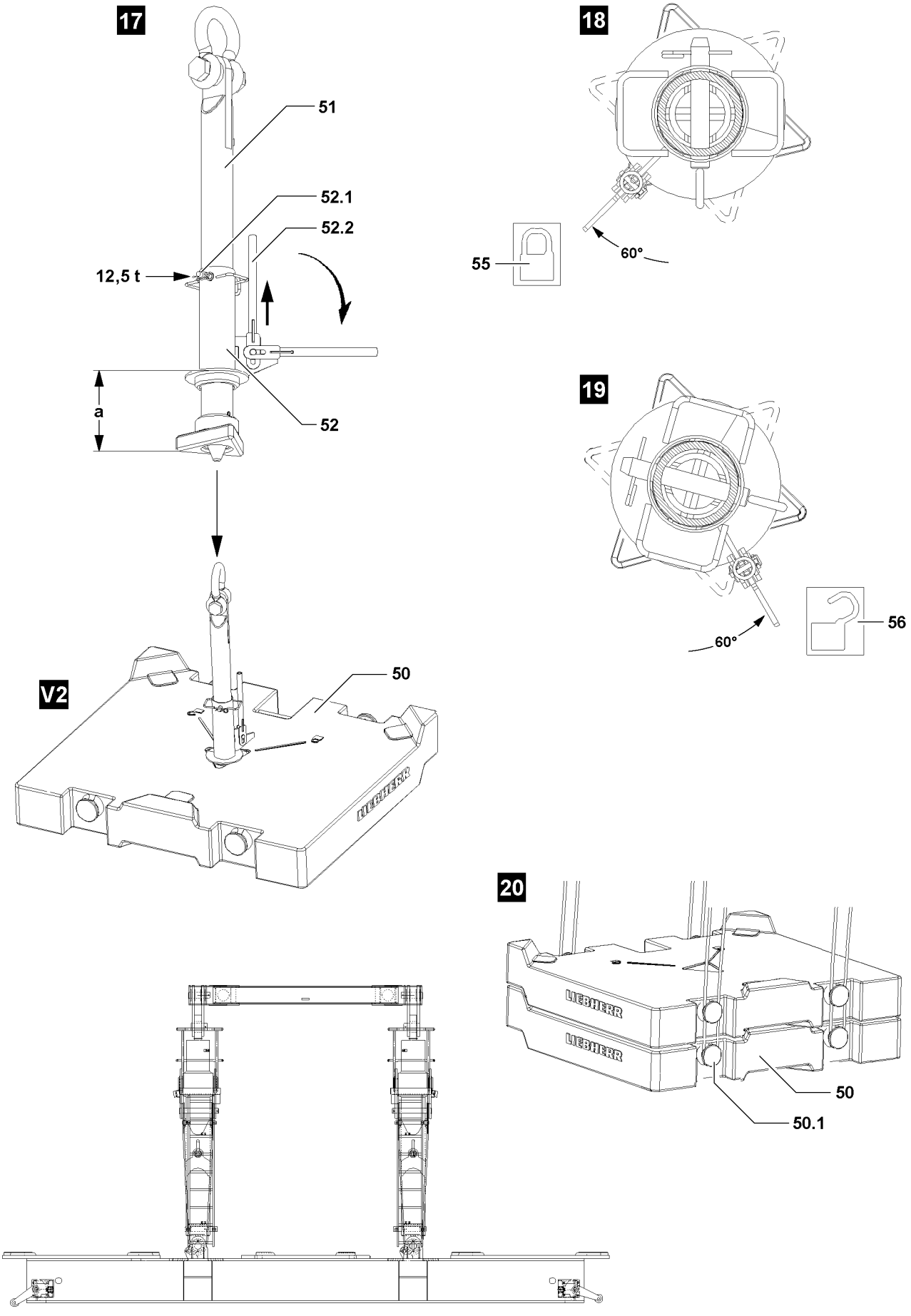
17
51
52.1
52.2
12,5 t
a
52
18
55
60°
19
56
60°
V2
50
20
50
50.1
B109418

3.8.2 Ballasting the 12.5 t ballast plates

Note
- ▶ The ballast plates are marked with their own weights!
- ▶ The ballast plates are placed directly on the centerings on the ballast pallet frame!

Placing 12.5 t ballast plates, attachment system: “Twistlock”

WARNING
Overload of receptacle stud and ballast plates!
If more than one 12.5 t ballast plate are lifted with the receptacle stud **51**, the receptacle stud **51** and the ballast plates can be overloaded and damaged!
The ballast plates can fall down!
Personnel can be severely injured or killed!
- ▶ Observe the section “Permissible ballast assemblies” in this chapter!

WARNING
The twist lock system opens by itself!
If the receptacle stud **51** is not correctly locked, the Twist lock system can open by itself!
The ballast plates can fall down!
Personnel can be severely injured or killed!
- ▶ Make sure, when initiating a lift, that the lever **52.2** points directly on the symbol “Locked” **55** of the ballast plates!

Note
- ▶ During a lift, the locked Twist lock system cannot release by itself due to its gravitational retention!
- ▶ During a lift, the locked Twist lock system cannot be released by hand due to its gravitational retention!

Note
- ▶ For ballast plates Variation **V2**, use the receptacle stud **51** in illustration **17**!

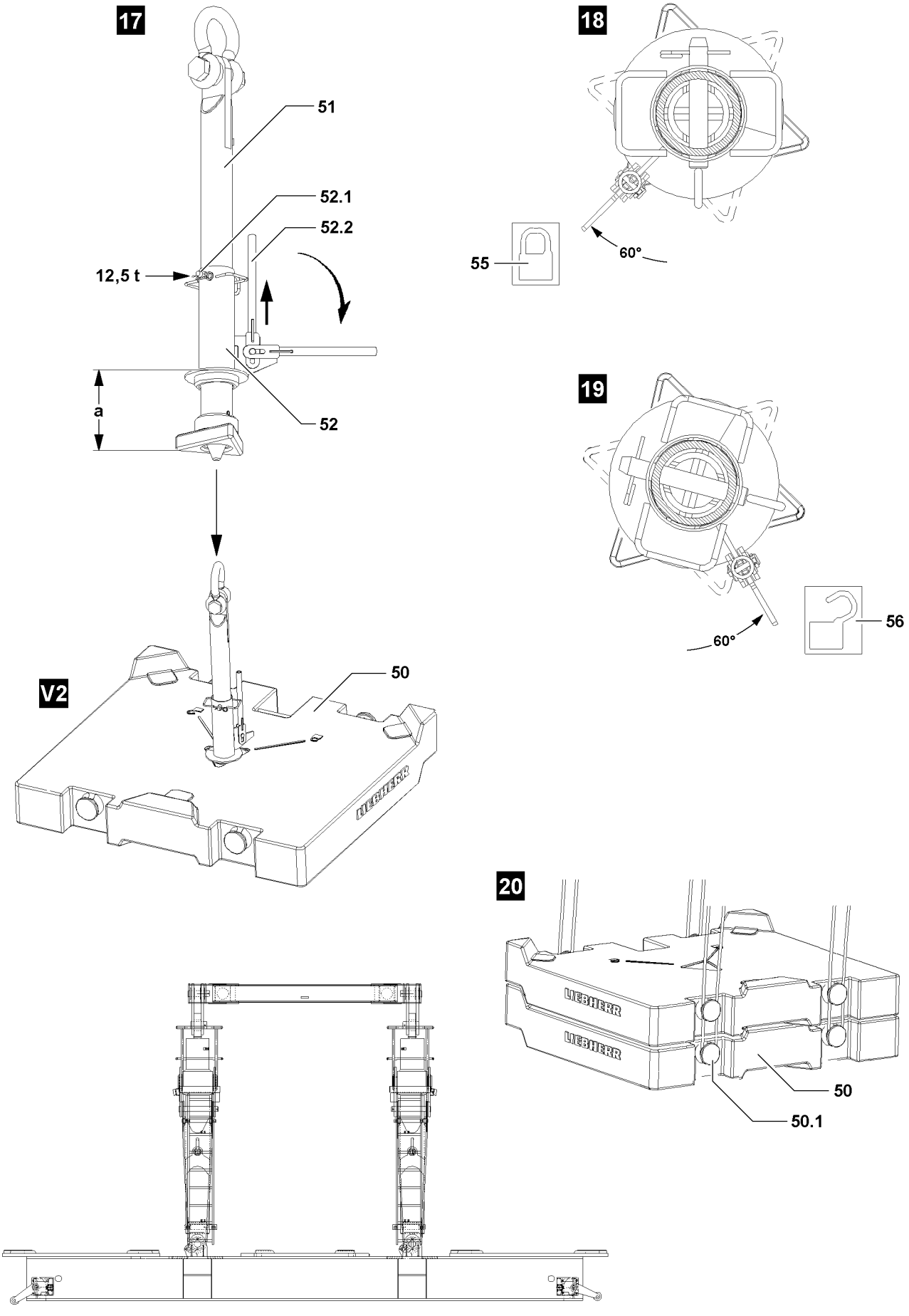
17
51
52.1
52.2
12,5 t
a
52
18
55
60°
19
56
60°
V2
50
20
50
50.1
B109418

Before the receptacle stud **51** is guided in the ballast plate Variation **V2**, it must be ensured that the insertion length **a** of the receptacle stud **51** is set correctly.
The insertion length **a** of the receptacle stud **51** for ballast plates Variation **V2** can be adjusted by hand.

- ▶ If the insertion length **a** of the receptacle stud **51** is to be adjusted:
  Release and unpin the pin **52.1**.
- ▶ Adjust the insertion length **a** by moving the guide sleeve **52** to the desired insertion length **a**, observe the stages in illustration **17**.
- ▶ Insert and secure pin **52.1**.

Result:

– The receptacle stud **51** is adjusted.

Note

- ▶ The receptacle stud **51** in illustration **17** is set to 12.5 t!

- ▶ Attach the receptacle stud **51** on the auxiliary crane and guide it into the ballast plate.
- ▶ Pull the lever **52.2** up and fold it down.
- ▶ Turn the receptacle stud **51** with the lever **52.2** by 60° until it points to the symbol “Locked” **55** of the ballast plate, see illustration **18**.
- ▶ Lift always the ballast plate with the receptacle stud **51** and place it carefully on the centerings on the ballast pallet or on another ballast plate in the ballast assembly.
- ▶ When the ballast plates are placed down:
  Turn the receptacle stud **51** with the lever **52.2** by 60° to the stop in direction of the symbol “unlocked” **56** of the ballast plate, see illustration **19**.

Result:

– The receptacle stud **51** is unlocked.

- ▶ Carefully pull out the receptacle stud **51**.

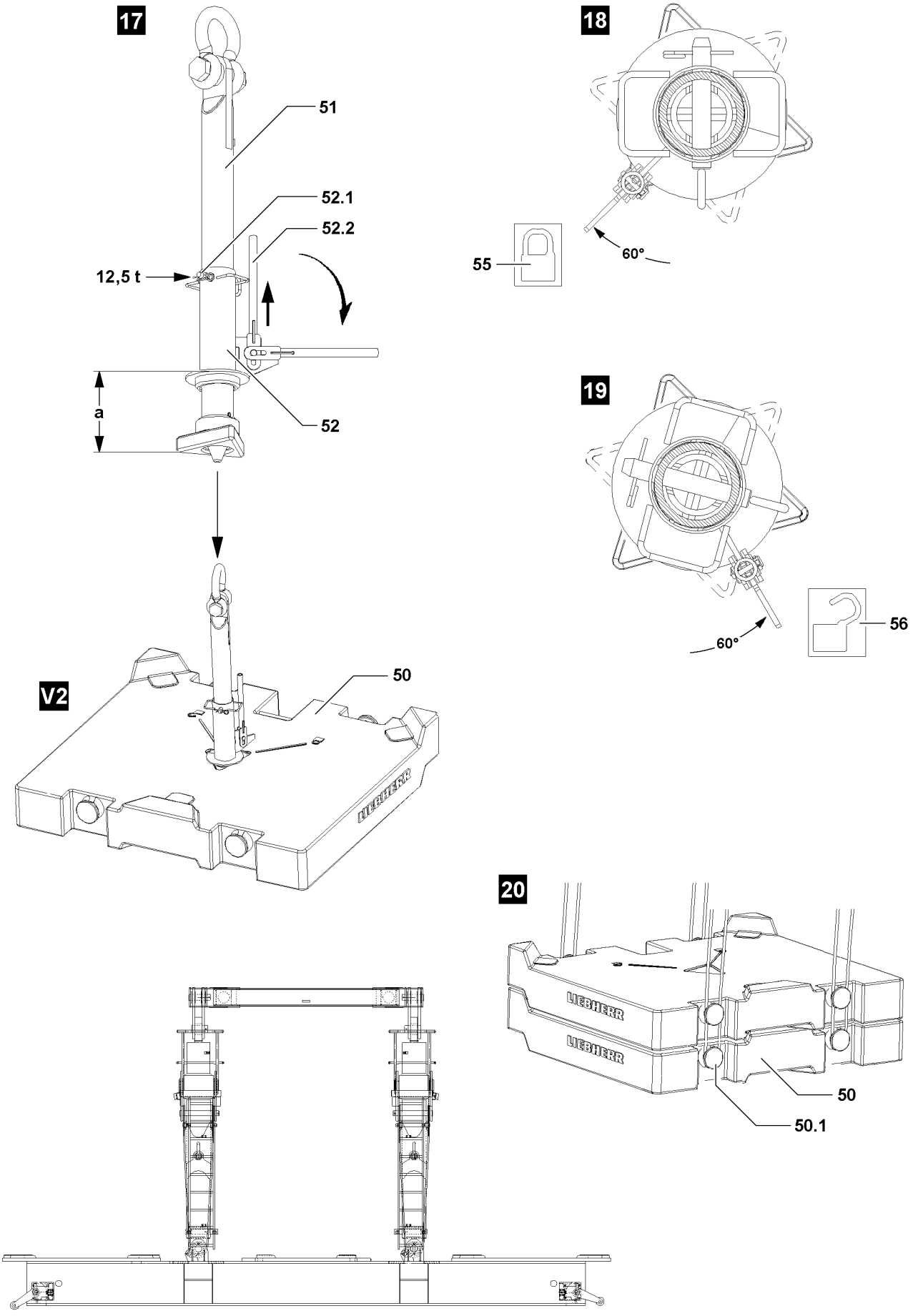
17
51
52.1
52.2
12,5 t
a
52
18
55
60°
19
56
60°
V2
50
20
50
50.1
B109418

Placing 12.5 t ballast plates, attachment points: Bitt

WARNING
Overloaded ballast plates!
If more than the permissible loads are lifted, the bitts **50.1** are overloaded!
The ballast plates can be damaged and fall down!
Personnel can be severely injured or killed!
▶ Observe the section “Permissible ballast assemblies” in this chapter!

WARNING
Incorrect handling of the fastening equipment!
If tackle cannot be attached correctly and / or if it is not secured sufficiently to prevent it from loosening up, the ballast plate can fall down!
Personnel can be severely injured or killed!
▶ Make sure that the fastening equipment is correctly attached on the bitts **50.1** and that it is secured sufficiently to prevent it from loosening up!

▶ Attach the ballast plate, see illustration **20** on the auxiliary crane.
▶ Lift the ballast plate and place it carefully on the centerings on the ballast pallet or on another ballast plate in the ballast assembly.

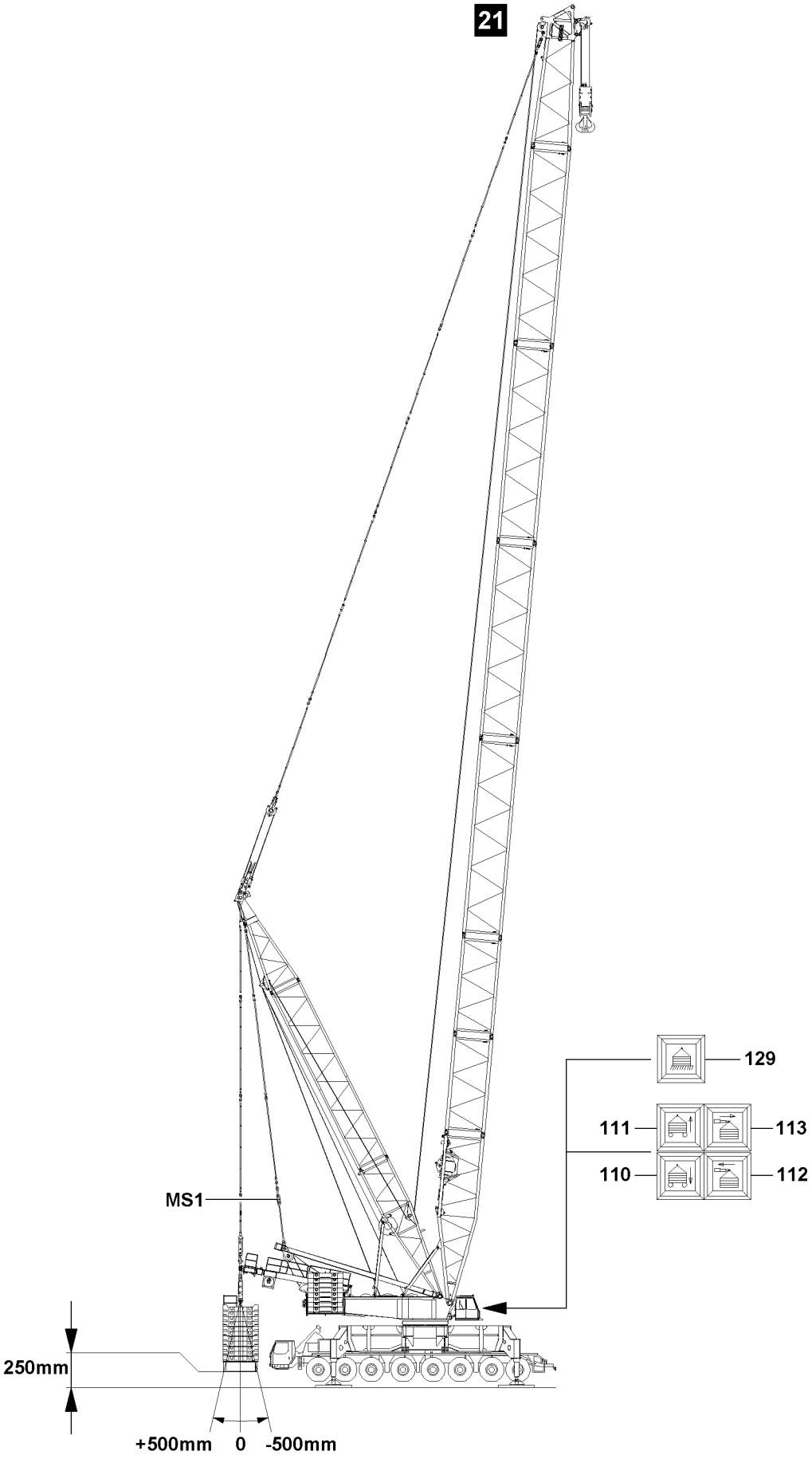

B109445

3.9 Lifting the derrick ballast off the ground

WARNING
The crane can topple over!
If the derrick ballast is lifted up by the **maximum permissible** 250 mm from the ground, the crane can be topple over to the rear f the load rips off!
If the following notes are not observed, personnel can be severely injured or killed!
- ▶ There may be no personnel, objects or obstacles within the entire slewing range of the crane, derrick ballast and the load!
- ▶ Do not lift derrick ballast more than 250 mm from the ground!
- ▶ The subsoil in the entire working area of the crane - including the derrick ballast and the load - must be even and of sufficient load carrying capacity, in order to be able to securely accept the encountered ground pressures and weight loads!

Note
- ▶ Lifting of the derrick ballast is to be observed by a guide!

WARNING
The crane can topple over!
If the minimal force F1-min, with derrick ballast turned off on the ground and derrick guying without power, is fallen below, the boom system can abruptly move forward with increasing load moment and suddenly lift the derrick ballast from the ground!
This will result in the load swinging violently, whereby the crane can topple or be severely damaged!
Personnel can be severely injured or killed!
- ▶ The guying between the SA frame and the derrick end section, test point 1 **MS1**, may never be without power!
- ▶ The minimal force F1-min may not be fallen below!
- ▶ When taking on the load, the guying of the derrick ballast to the derrick end section must be without force or slightly tensioned, so that the minimum force F1-min on test point 1 **MS1**, is exceeded!

▶ Press the button **111** in the crane operator's cab.

Result:
– The derrick ballast is lifted off the ground.
– The warning light **129** “suspended ballast on the ground” turns off.

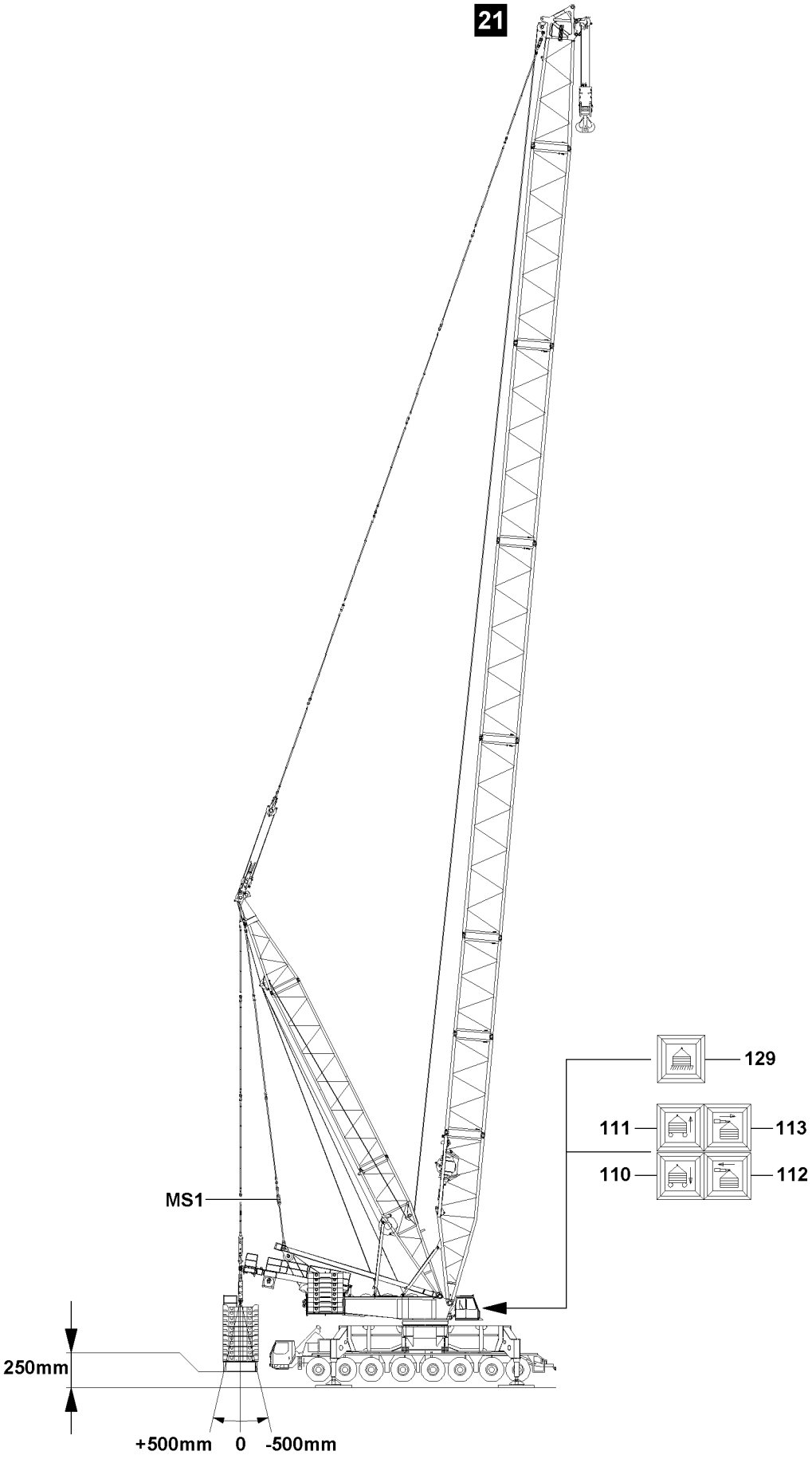

B109445

3.10 Telescoping the derrick ballast to the required derrick ballast radius

WARNING
Risk of fatal injury!
By remaining in the danger zone of the derrick ballast, personnel can be severely injured or killed!
- ▶ Remaining in the crane danger zone, particularly in the derrick ballast danger zone is forbidden!
- ▶ Ensure that there are no people, objects or obstacles within the crane danger zone!
- ▶ The derrick ballast must turn off be lifted off the ground before telescoping and the warning light **111** “suspended ballast on the ground” be turned off!

WARNING
The crane can topple over!
A false length path measurement of the derrick ballast radius can lead to toppling the crane!
Personnel can be severely injured or killed!
- ▶ The derrick ballast radius display on LICCON-Monitor 1 is to be observed continuously during telescoping!
- ▶ The crane operator may not simply rely on the derrick ballast radius measurement, instead he should also be pro-active and check whether the measurement is still working correctly, see section “Checking the length sensor value on the derrick ballast”!

Note
- ▶ The derrick ballast radius display on LICCON-Monitor 1 and the telescoping cylinder is to be observed continuously during telescoping!

3.10.1 Hydraulically telescoping out the guide frame

Make sure that the following prerequisite is met:
– The derrick ballast has been lifted off the ground.

▶ Press the button **113** in the crane operator's cab.

Result:
– The telescoping cylinder on the guide frame extends.

▶ When the required derrick ballast radius is reached:
Release the button **113** in the crane operator's cab.

3.10.2 Hydraulically telescoping in the guide frame

Make sure that the following prerequisite is met:
– The derrick ballast has been lifted off the ground.

▶ Press the button **112** in the crane operator's cab.

Result:
– The telescoping cylinder on the guide frame retracts.

▶ When the required derrick ballast radius is reached:
Release the button **112** in the crane operator's cab.

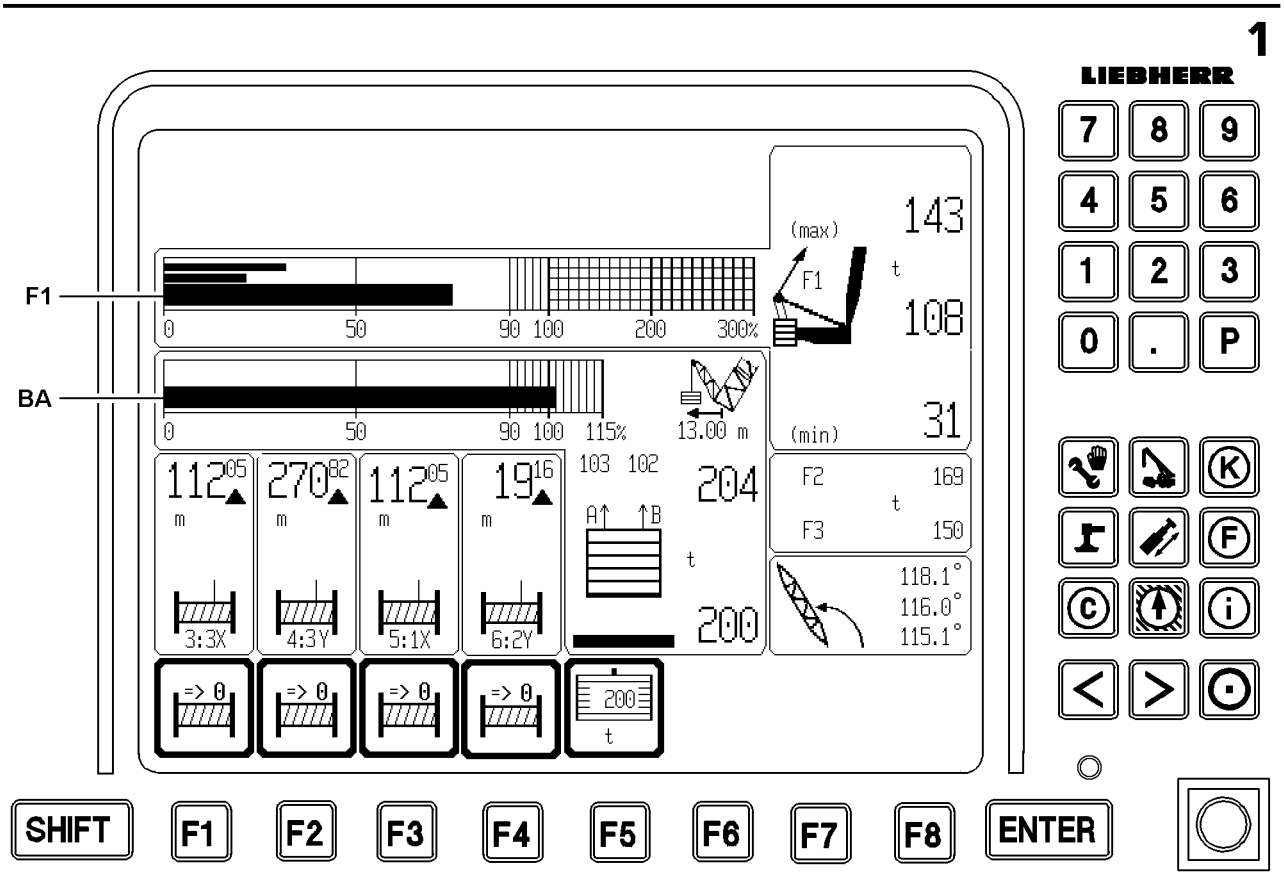
1
LIEBHERR
F1
BA
SHIFT
F1
F2
F3
F4
F5
F6
F7
F8
ENTER

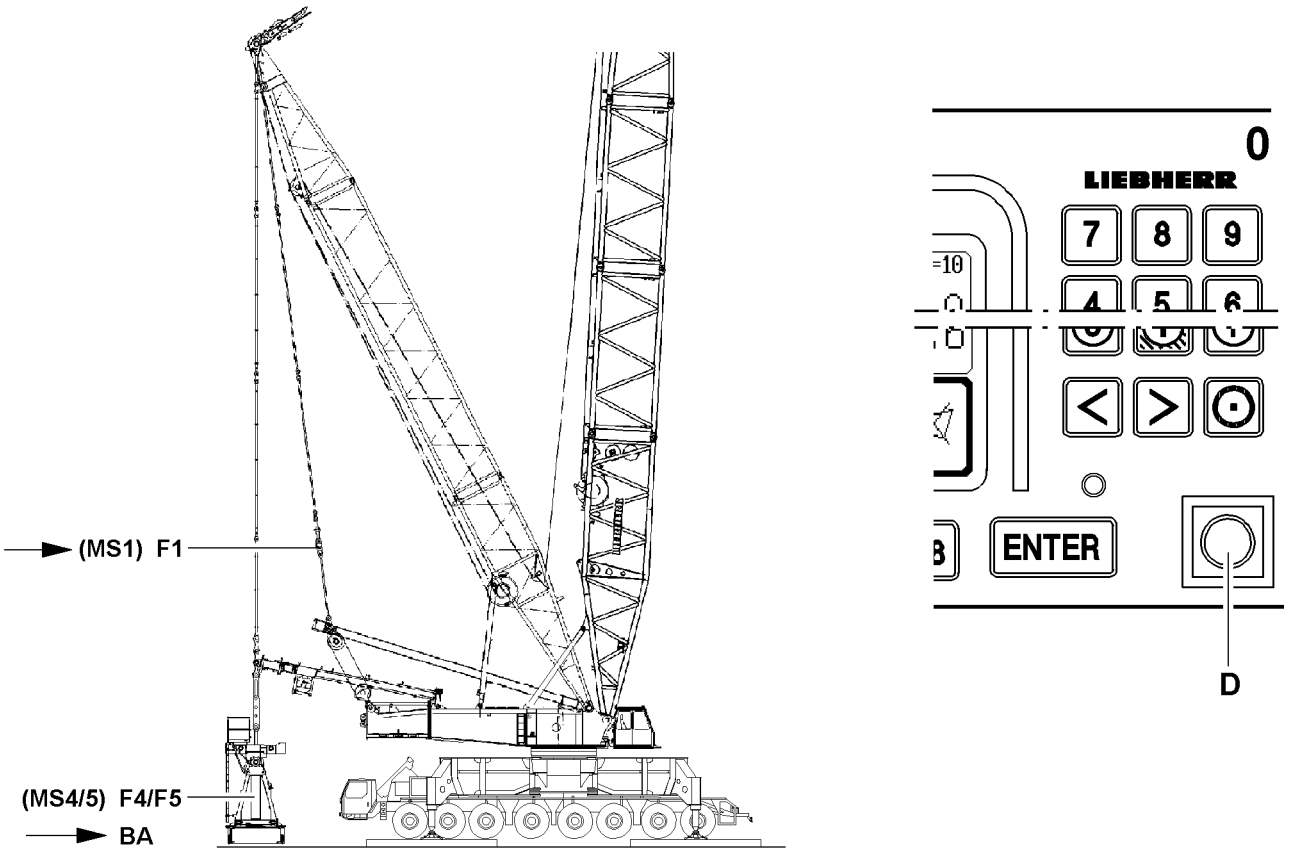
(MS1) F1
(MS4/5) F4/F5
BA
0
LIEBHERR
ENTER
D

B111371

4 Crane operation with derrick ballast

Make sure that the following prerequisites are met:
- The test points are checked for function.
- The crane is supported and aligned in horizontal direction according to the data in the load chart.
- The weight of the load to be lifted is known.
- The required derrick ballast is placed according to the load chart.
- The derrick boom is in operating position.

4.1 Settings

▶ Set and confirm the load chart for the upcoming crane operation on the LICCON monitor.

▶ Set and confirm the weight of the actually placed derrick ballast on the LICCON monitor.

Note

▶ To set the derrick ballast, see Crane operating instructions, chapter 4.03!

▶ The required derrick ballast must be recorded according to the data in the load chart or by the crane job planner!

WARNING

The crane can topple over!

Incorrect ballast weight entry can lead to dangerous operating situations!

▶ The set derrick ballast must match the actually placed derrick ballast!

▶ Compare the set derrick ballast against the actual derrick ballast!

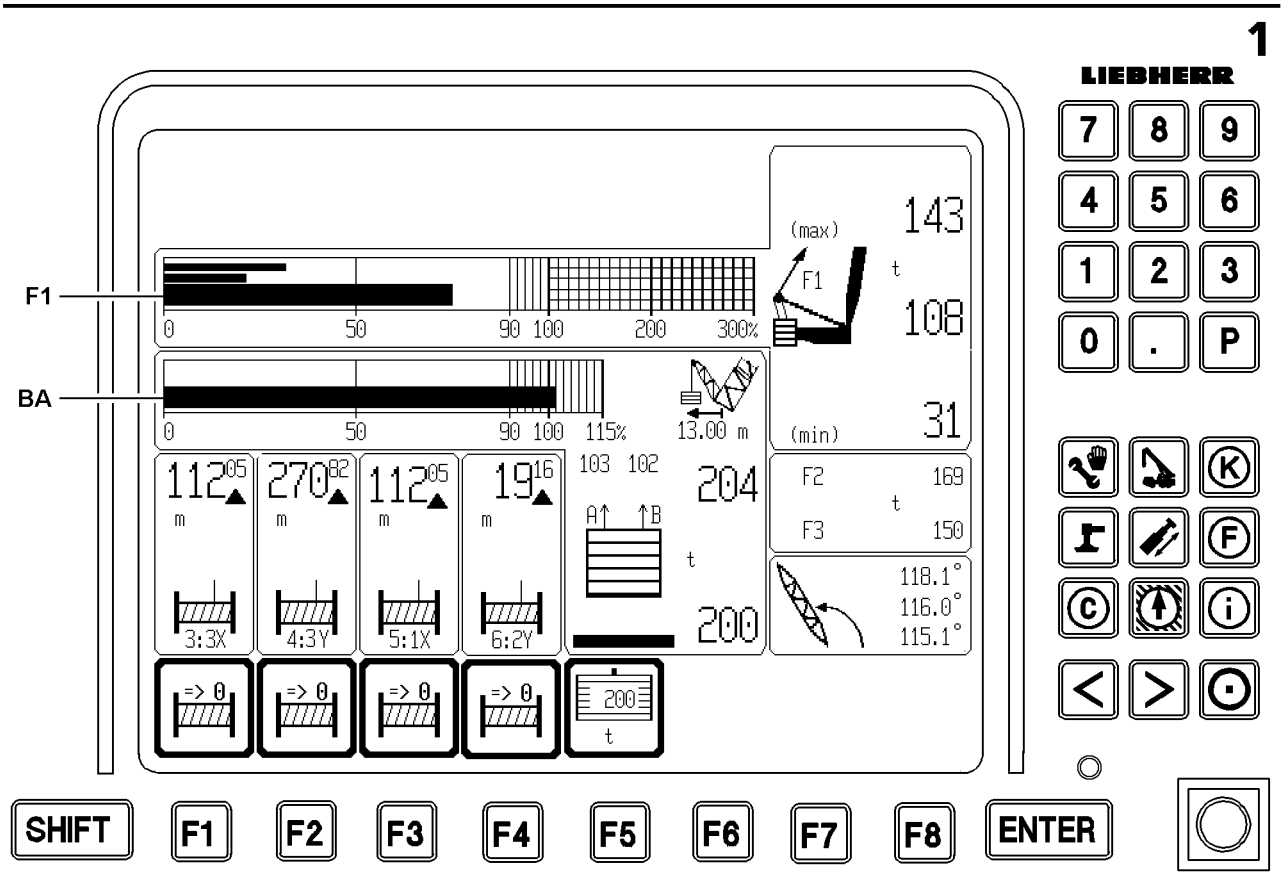
1
LIEBHERR
F1
BA
143
(max)
108
31
(min)
13.00 m
204
200
F2 169
F3 150
118.1°
116.0°
115.1°
SHIFT
F1
F2
F3
F4
F5
F6
F7
F8
ENTER

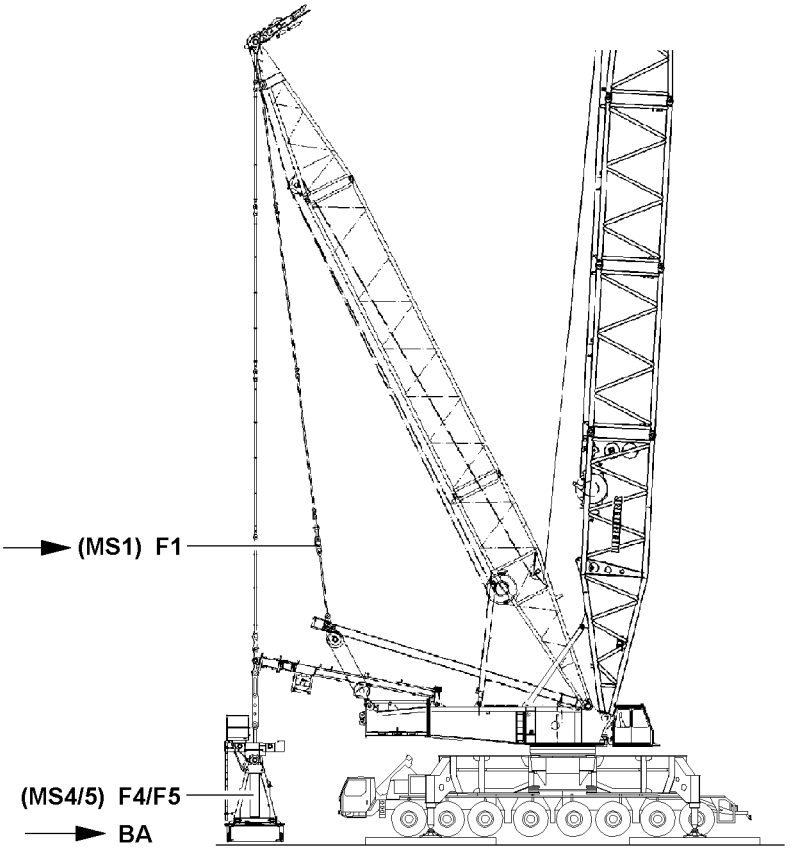
(MS1) F1
(MS4/5) F4/F5
BA

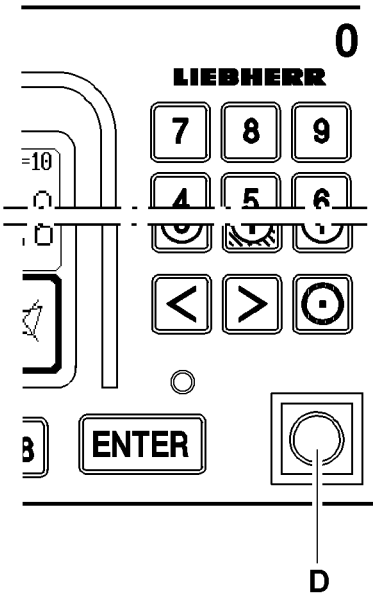
0
LIEBHERR
ENTER
D

B111371

4.2 Crane operation

Note

- For crane operation with derrick ballast, the data in the Crane operating instructions, chapter 4.02 must be observed and adhered to!

WARNING

The crane can topple over!

The jerky execution / braking of turning maneuvers can cause the load or suspended derrick ballast to lead to swinging!

This can lead to severe property damages or cause the crane to topple over!

Personnel can be severely injured or killed!

- There may be no persons, objects or obstacles within the slewing range of the derrick ballast!
- During the turn, a guide must monitor the boom, derrick boom and derrick ballast for any danger of collision.
- When turning with a load and suspended derrick ballast, the turning movement must be initiated or slowed down extremely carefully!
- Do not lift derrick ballast more than 250 mm from the ground!

Note

- If the suspended derrick ballast has to swing above any obstructions or be set down at a different level to the crane, it is possible to raise or lower the suspended derrick ballast using the pull cylinders!
- The pull cylinders are operated from the crane operator's cab!

WARNING

The crane can topple over!

If the derrick ballast in the crane operation operates via the control panels on the ballast pallet, important crane data cannot be viewed!

The crane can topple over and personnel can be severely injured or killed!

- It is prohibited to operate the derrick ballast in crane operation from the control panels!
- The derrick ballast must always be maintained in a horizontal position when it is raised or lowered using the pull cylinders!

- The crane operator must ensure that the pull cylinders extend / retract uniformly!

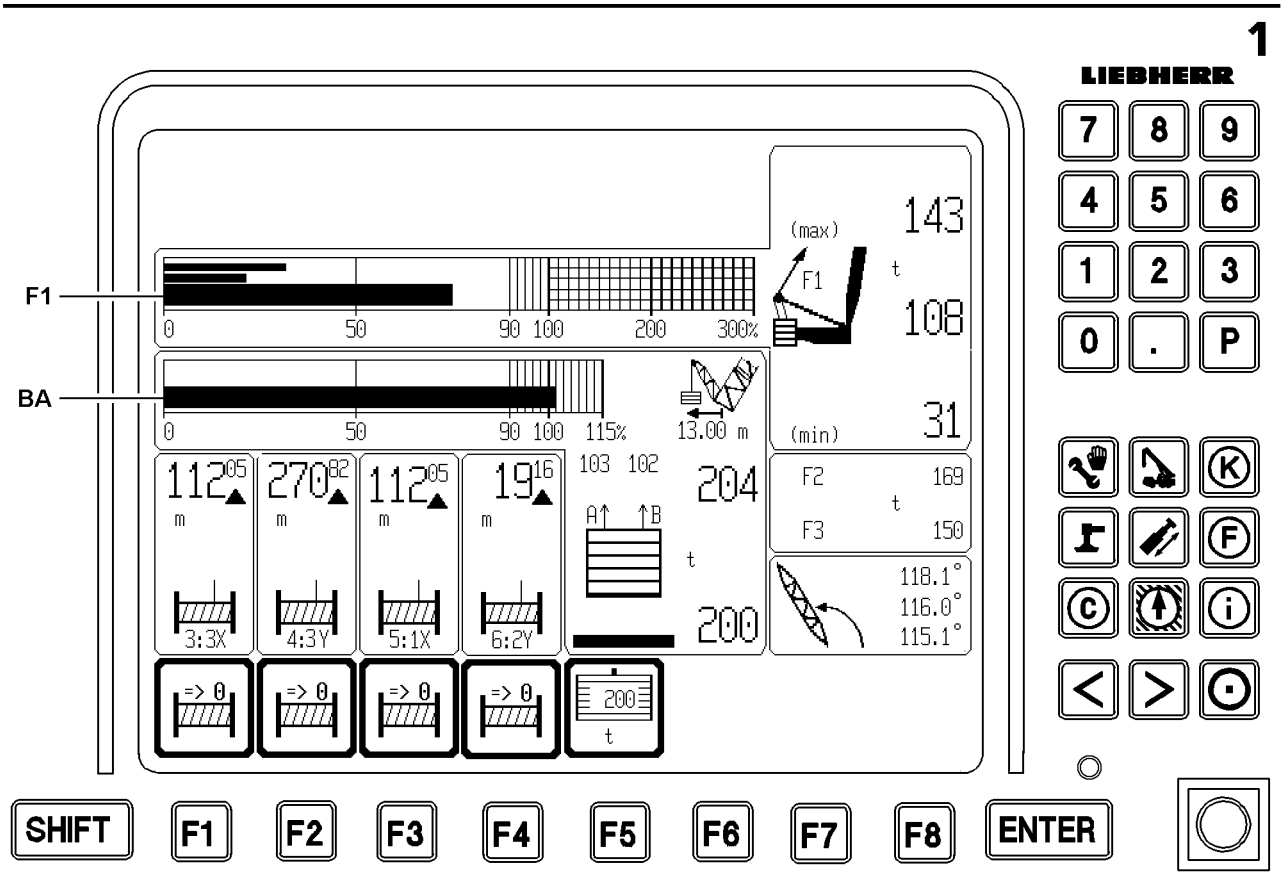
1
LIEBHERR
F1
BA
SHIFT
F1
F2
F3
F4
F5
F6
F7
F8
ENTER

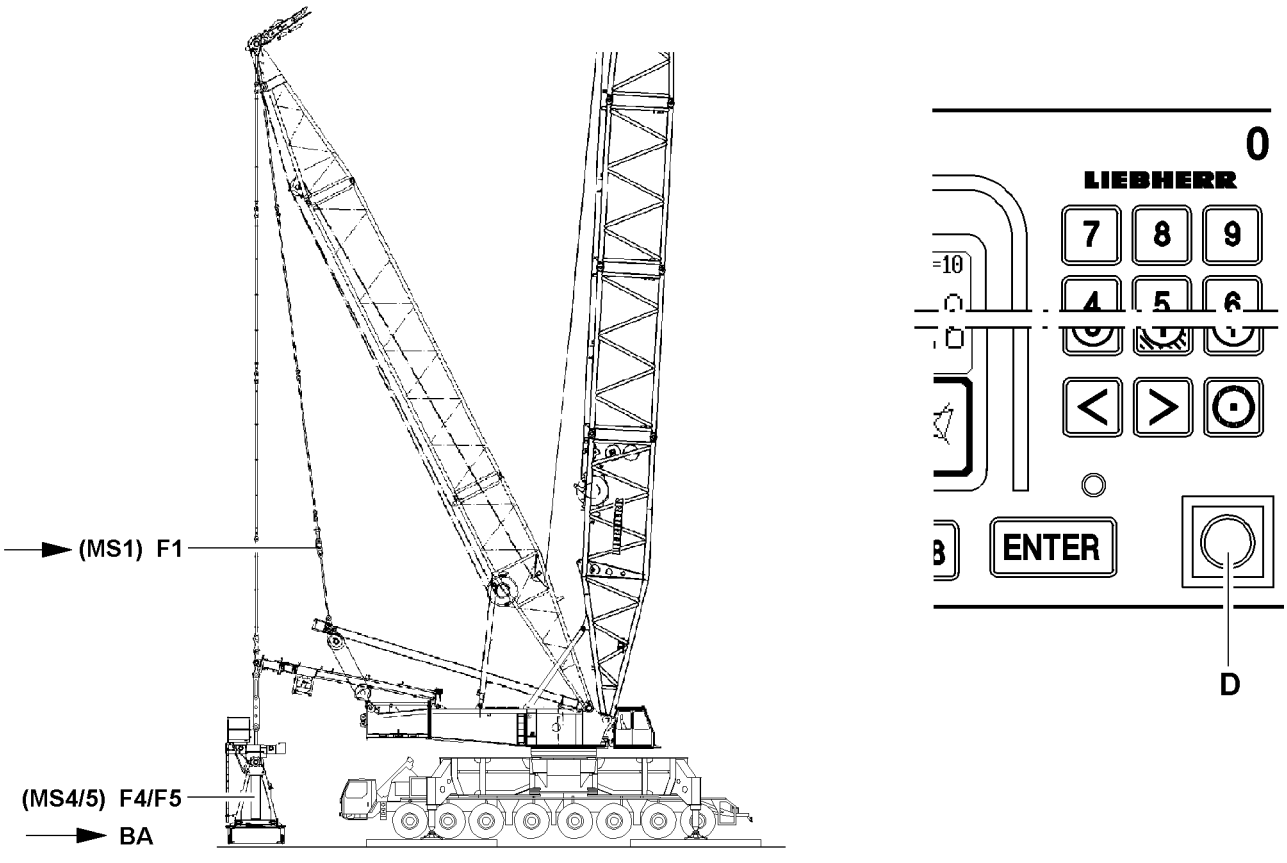
(MS1) F1
(MS4/5) F4/F5
BA
0
LIEBHERR
ENTER
D

B111371

4.3 Crane operation with derrick ballast

In all operating modes with derrick ballast, the load is divided between the guy rods from the derrick head to the SA-frame – test point 1 **MS1** (F1) – and to the derrick ballast **MS4/MS5**.
The load of the crane is monitored by test point 1 **MS1** (F1), in the guying from the SA-frame to the derrick head. If the force becomes too high, then all movements, which increase the load momentum are turned off.
The force distribution can change due to the following procedures:

– Taking on the load: by flexing of the turntable
– by raising or lowering the derrick ballast with the pull cylinders
– by ballasting the derrick ballast plates on or off

WARNING
Risk of accident!
▶ Before setting down the load and suspended derrick ballast, the crane operator must make sure that it can be safely set down!

– Make sure that there are no persons, objects or obstacles within the slewing range of the crane, ballast trailer, suspended derrick ballast and load.
– When picking up the load, **make sure** to avoid diagonal pull, i.e. the derrick ballast, the center of rotation of the turntable and the load must be in one line! To ensure this, operate the cylinder to lift and set down the derrick ballast (ballast pallet) before adding any ballast plates.

4.4 Monitoring of minimum force F1

If more than fifty percent of the set derrick ballast is drawn (ballast utilization bar shows a ballast utilization of greater than fifty percent) and if the minimum force F1-min **MS1** (F1) is too low, if all load moment increasing crane movements are switched off.

DANGER
The crane can topple over!
▶ It is prohibited to let the minimum force F1-min **MS1** (F1) fall below if more than 50 % of the derrick ballast is pulled. If this is not observed, guying without force from test point 1 **MS1** (F1) and “derrick ballast on the ground” by increasing the load torque of the derrick ballast suddenly by lifting from the ground!
▶ Simultaneously, the boom system can move suddenly forward!
▶ This causes the load to swing strongly!
▶ The crane can topple over and personnel can be severely injured or killed!

If more than ninety percent of the set derrick ballast is drawn (ballast utilization bar shows a ballast utilization of greater than ninety percent) and if the minimum force F1-min **MS1** (F1) is too low, if all load moment increasing crane movements are switched off. The hoist gear “down” movement is also turned off.

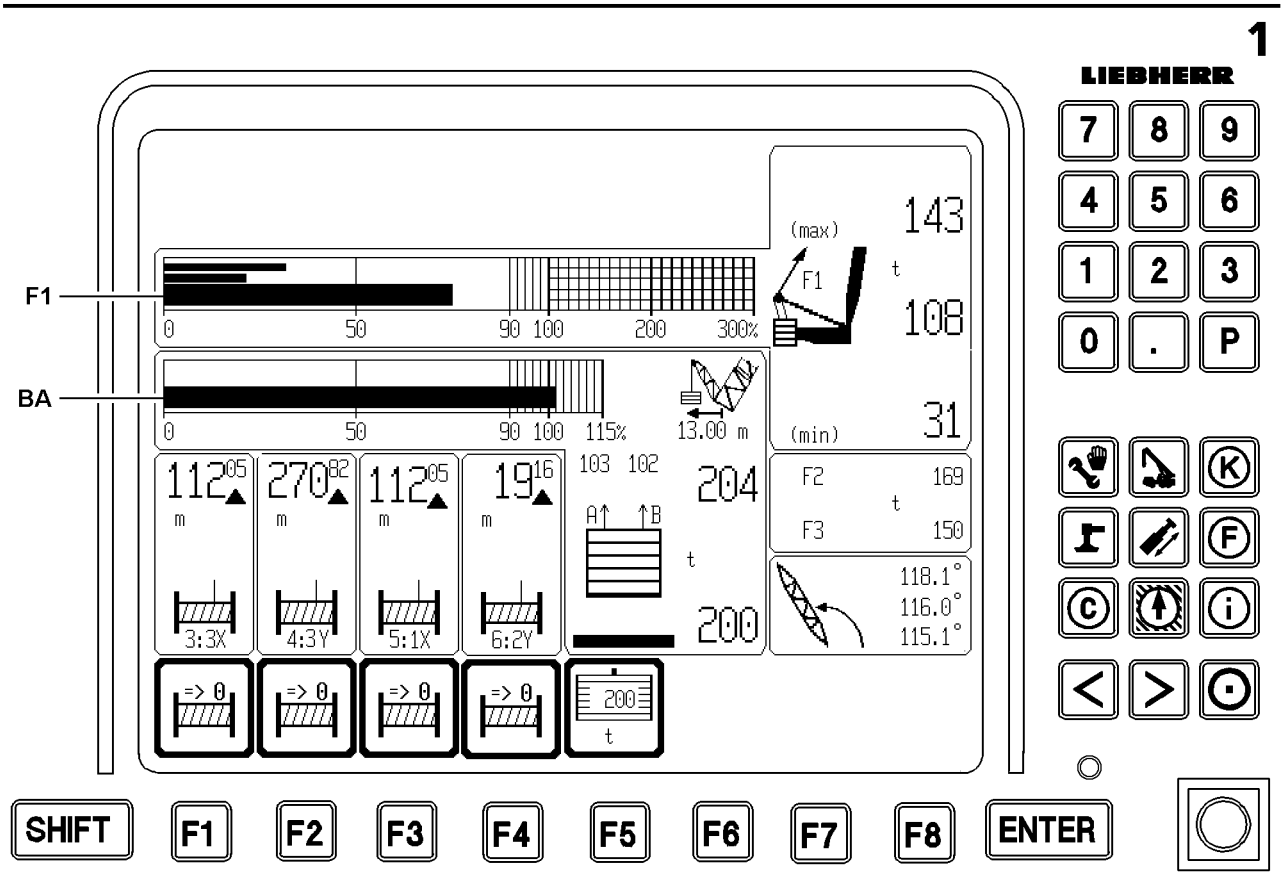
1
LIEBHERR
F1
BA
SHIFT
F1
F2
F3
F4
F5
F6
F7
F8
ENTER

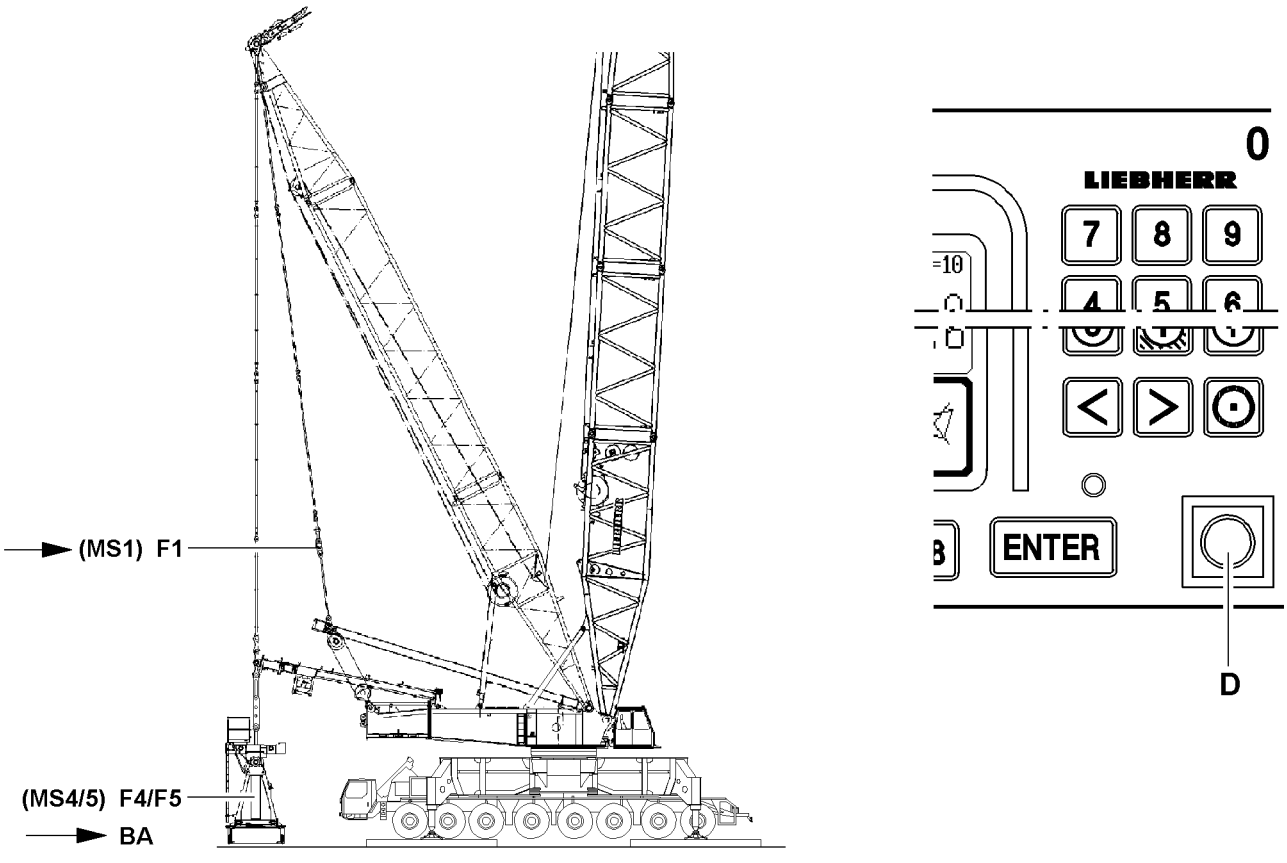
(MS1) F1
(MS4/5) F4/F5
BA
0
LIEBHERR
ENTER
D

B111371

DANGER
The crane can topple over!
- ▶ It is prohibited to fall below the minimum force F1 min **MS1** (F1) if more than 90 % of the derrick ballast is pulled. If this is not observed,the slack guying from measuring point **MS1** (F1) and the “suspended derrick ballast”, drops by reducing the load torque of the derrick ballast suddenly to the ground, and the boom system suddenly lurches backward!
- ▶ Thereby the relapse cylinders can be pressed on block and be overloaded!
- ▶ The relapse cylinders on the boom and derrick may become damaged!
- ▶ This causes the load to swing strongly!
- ▶ The crane can topple over and personnel can be severely injured or killed!

This danger condition can only be overcome :
– By lowering the suspended derrick ballast to the ground using the pull cylinders

or:
– Ballast plates are unloaded in order to reduce the derrick ballast utilization and to increase the load at test point 1 **MS1** (F1)

DANGER
The crane can topple over!
Due to deliberate improper use of the set up key **D**, the crane can collapse, the boom can break off or the crane can topple over!
Personnel can be severely injured or killed!
- ▶ The crane operator must have understood the function and effects of an actuation before actuating the set up key **D**, see Crane operating instructions, chapter 4.20!

4.5 Force F1 (Test point 1) between guying SA-frame - Derrick end section

The force F1 **MS1** is determined in the guy rods from the SA-frame to the derrick head via 2 force test boxes and is shown on the LICCON monitor as total force of the guying.
From the operating force F1 and the force F1-operational maximum force results the F1 utilization. This is shown on the LICCON monitor in the utilization bar **F1** (in %).

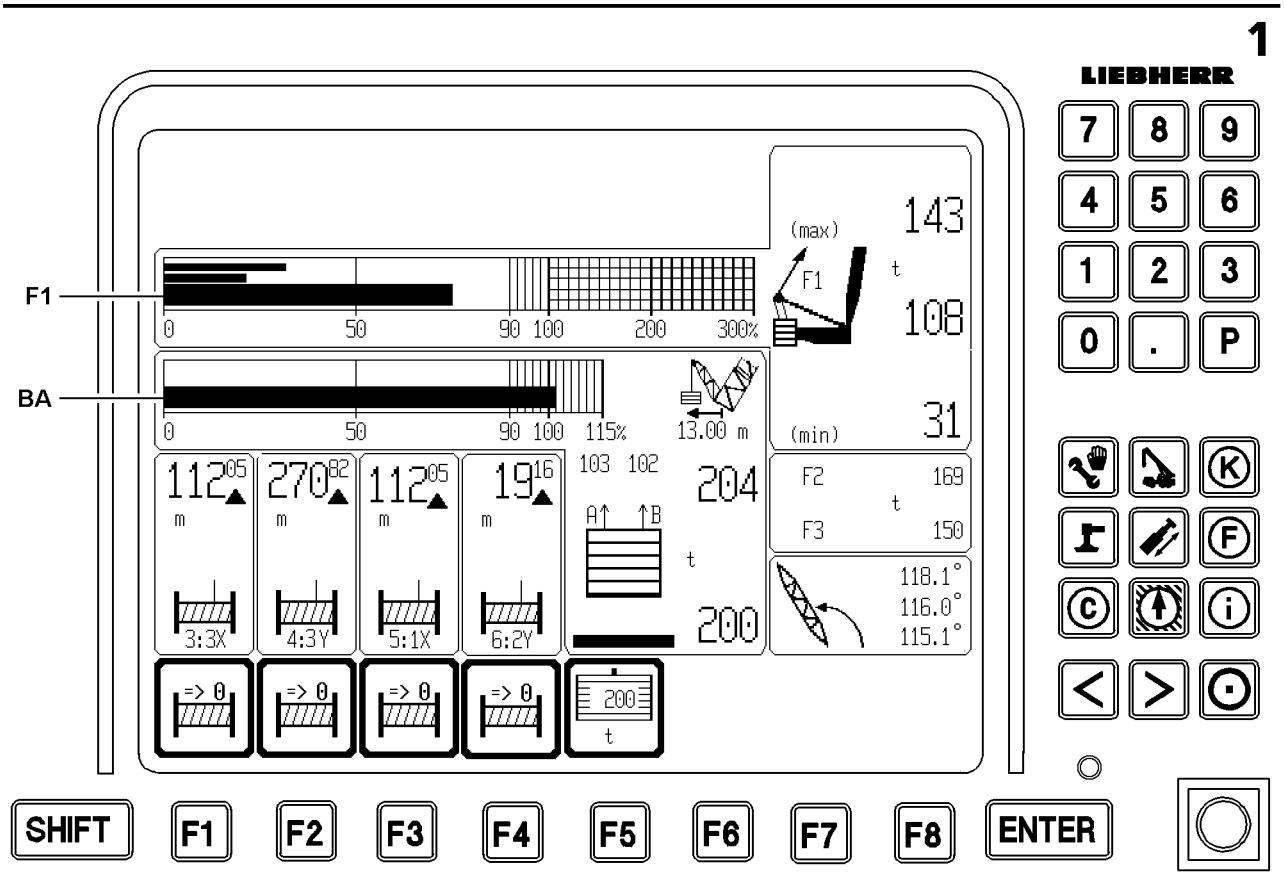
1
LIEBHERR
F1
BA
SHIFT
F1
F2
F3
F4
F5
F6
F7
F8
ENTER

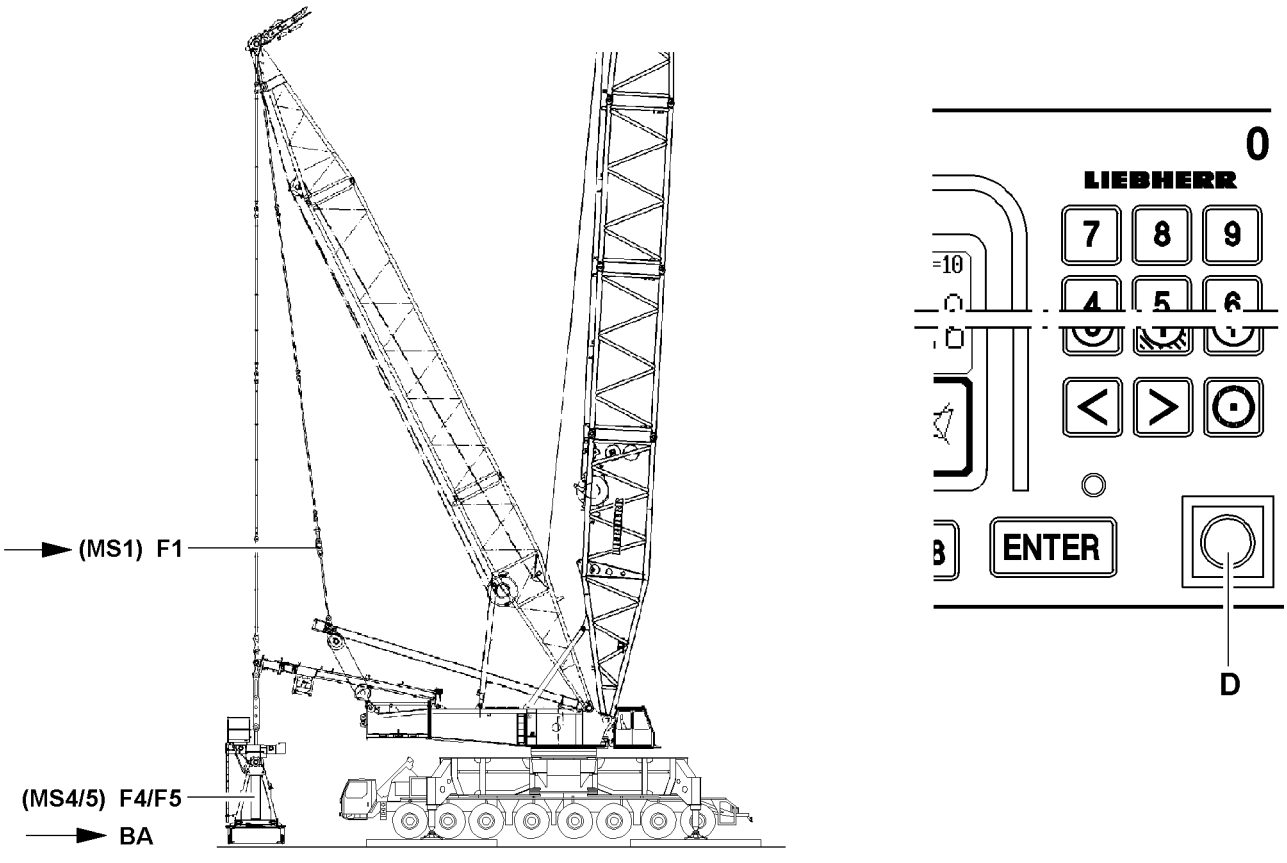
(MS1) F1
(MS4/5) F4/F5
BA
0
LIEBHERR
ENTER
D

B111371

4.6 Force F4/F5 (MS4/MS5) guying derrick ballast - Derrick end section

The forces F4 **MS4** and F5 **MS5** exert in the guy rods from the derrick ballast to the derrick head.
The existing forces in the guy rods (**A** = left and **B** = right) are calculated from the three pressure sensors, which are installed on the pull cylinders and shown in the LICCON monitor as individual forces.
The pulled derrick ballast is calculated from the forces of the individual guying, which means the part of the derrick ballast pulled upward by the guying. The remaining part is on the ground. The derrick ballast utilization results from the pulled ballast and the placed ballast.
This is shown on the LICCON monitor in the utilization bar **BA** (in %).

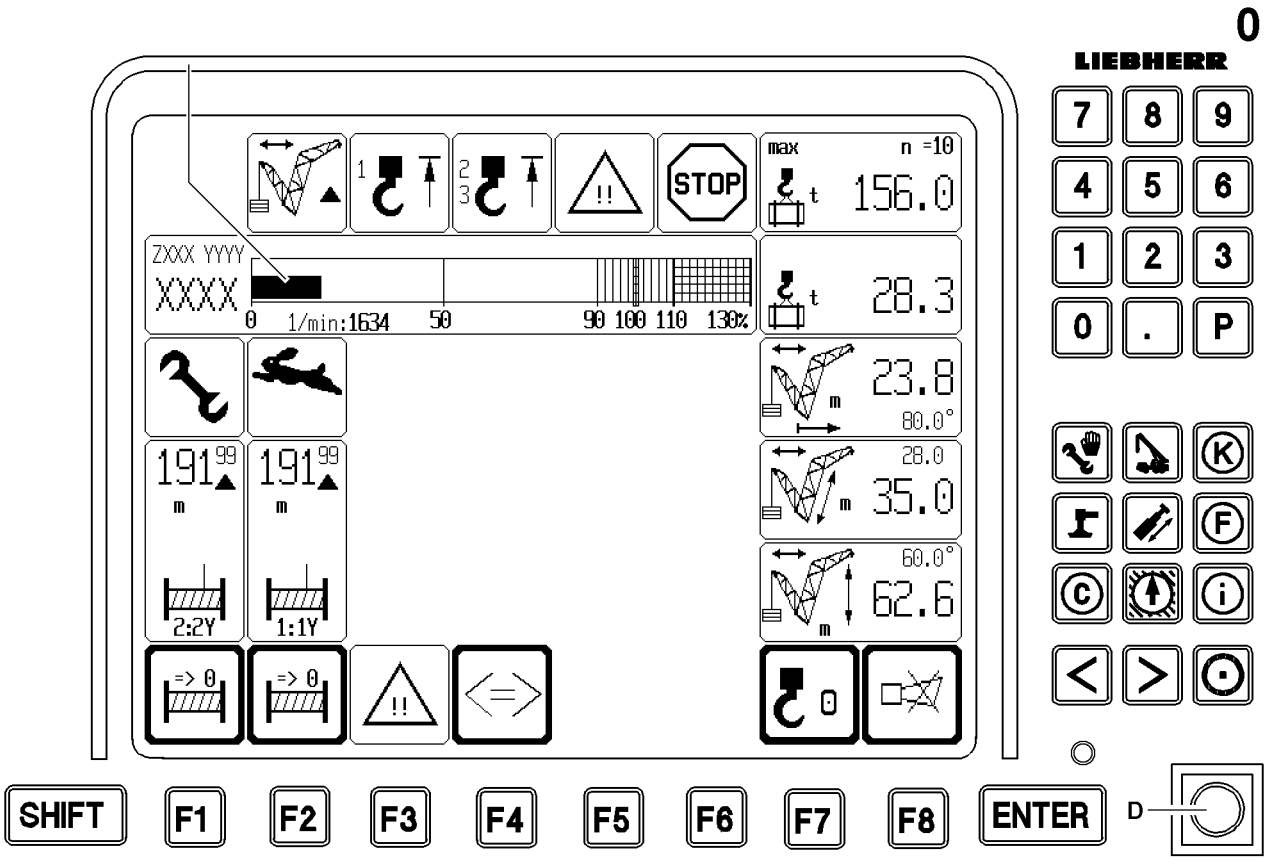
0
LIEBHERR
7 8 9
4 5 6
1 2 3
0 . P
STOP
max n =10
156.0
28.3
23.8
80.0°
28.0
35.0
60.0°
62.6
191
2:2Y
1:1Y
SHIFT F1 F2 F3 F4 F5 F6 F7 F8 ENTER D

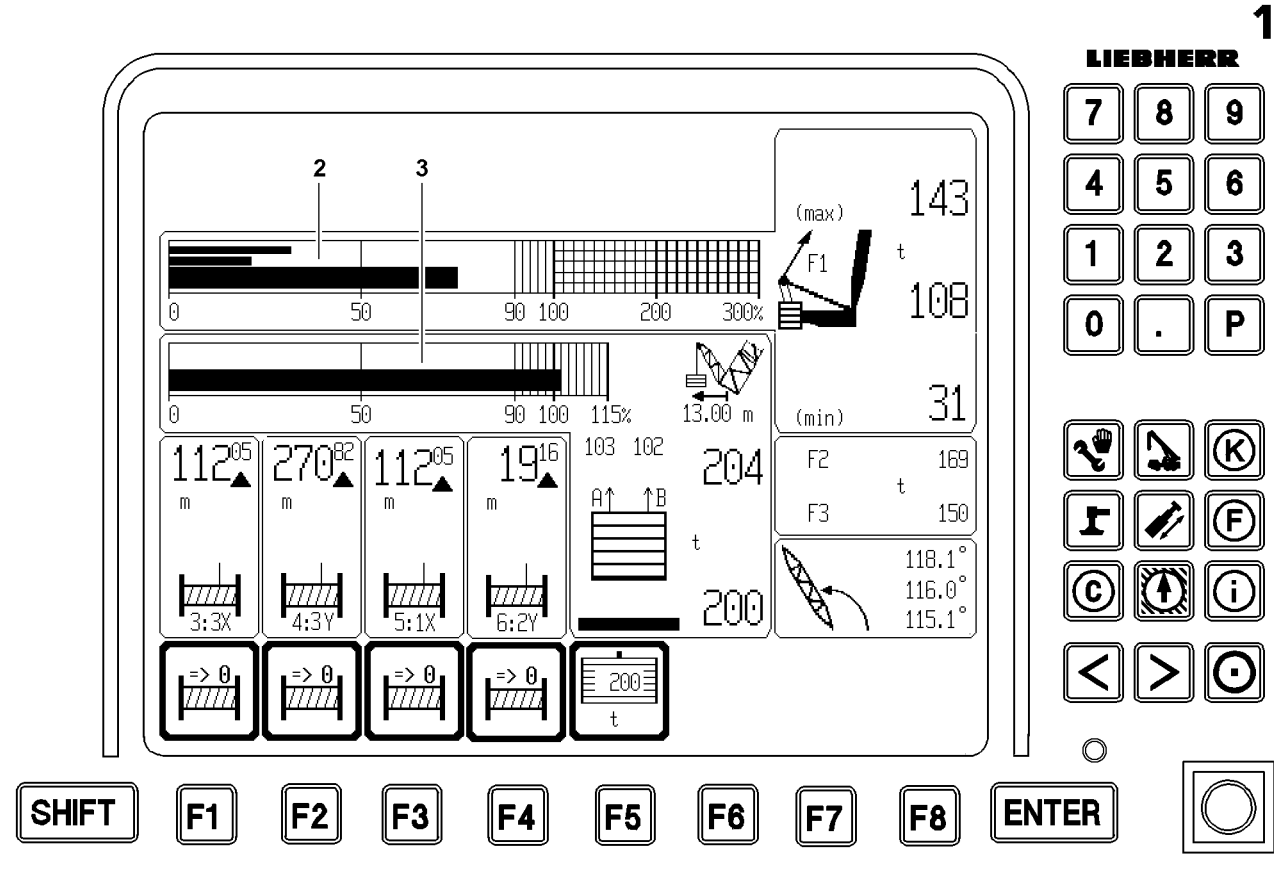
1
LIEBHERR
7 8 9
4 5 6
1 2 3
0 . P
143
108
31
(max)
(min)
F1
F2 169
F3 150
204
200
13.00 m
118.1°
116.0°
115.1°
112
270
19
3:3X
4:3Y
5:1X
6:2Y
SHIFT F1 F2 F3 F4 F5 F6 F7 F8 ENTER

B111372

4.7 Overload monitoring in operating mode with derrick ballast

In operating modes with derrick ballast, the “maximum load for the current crane condition” is monitored two ways:

1.) Monitoring of maximum load on the LICCON monitor 0
2.) Monitoring of test point 1-operational maximum force LICCON monitor 1

4.7.1 Monitoring of maximum load on the LICCON monitor 0

It monitors the “maximum load according to load chart and reeving”.
In operating modes with derrick ballast, this is the maximum load of the current crane condition. It is shown on LICCON monitor 0. The current utilization of the crane results from the load utilization bar **1** on LICCON monitor 0.
If the load utilization bar reaches 90 %, an advance warning is given in the form of a “caution icon” and a “SHORT HORN” on monitor 0.
At 100 % on the load utilization bar, the shut off of all load moment increasing movements with the “stop icon” and the acoustic warning “HORN” occurs on LICCON monitor 0.

Note

▶ The “maximum load of the current crane condition” can possibly be increased further, refer to section utilisation conditions!

4.7.2 Monitoring of test point 1-operational maximum force (= F1 max)

It is displayed on monitor 1.
At ninety percent $F1_{max}$-utilization **2** an advance warning is given in the form of a caution icon and a “SHORT HORN” on LICCON-Monitor 1.
At hundred percent $F1_{max}$-shut off of all load moment increasing movements take place with the “Stop-icon” and the acoustic warning “HORN” on LICCON-Monitor 1.
If the “maximum load according to the load chart and the reeving” is not reached (utilization bar **1**), then the “maximum load of the current crane condition” can still be increased by:

– Pulling up the derrick ballast, if the derrick ballast is not already suspended and the currently pulled derrick ballast is still smaller than the optimum derrick ballast
– Telescoping out the derrick ballast if the placed derrick ballast is still smaller than the optimum derrick ballast
– Increasing the derrick ballast by adding additional ballast plates if the placed ballast is still smaller than the optimum ballast

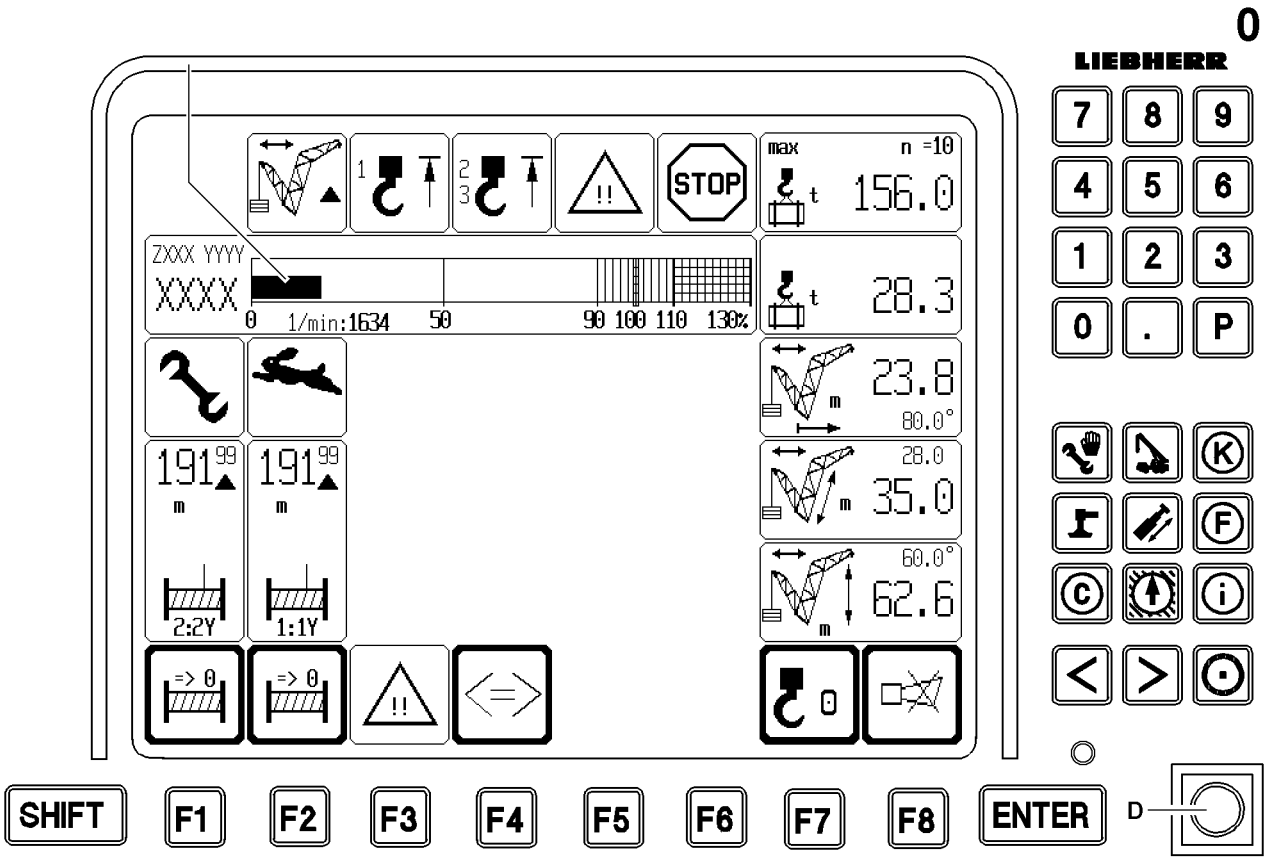
0
LIEBHERR
7 8 9
4 5 6
1 2 3
0 . P
STOP
max n =10
156.0
28.3
23.8
80.0°
28.0
35.0
60.0°
62.6
SHIFT F1 F2 F3 F4 F5 F6 F7 F8 ENTER D

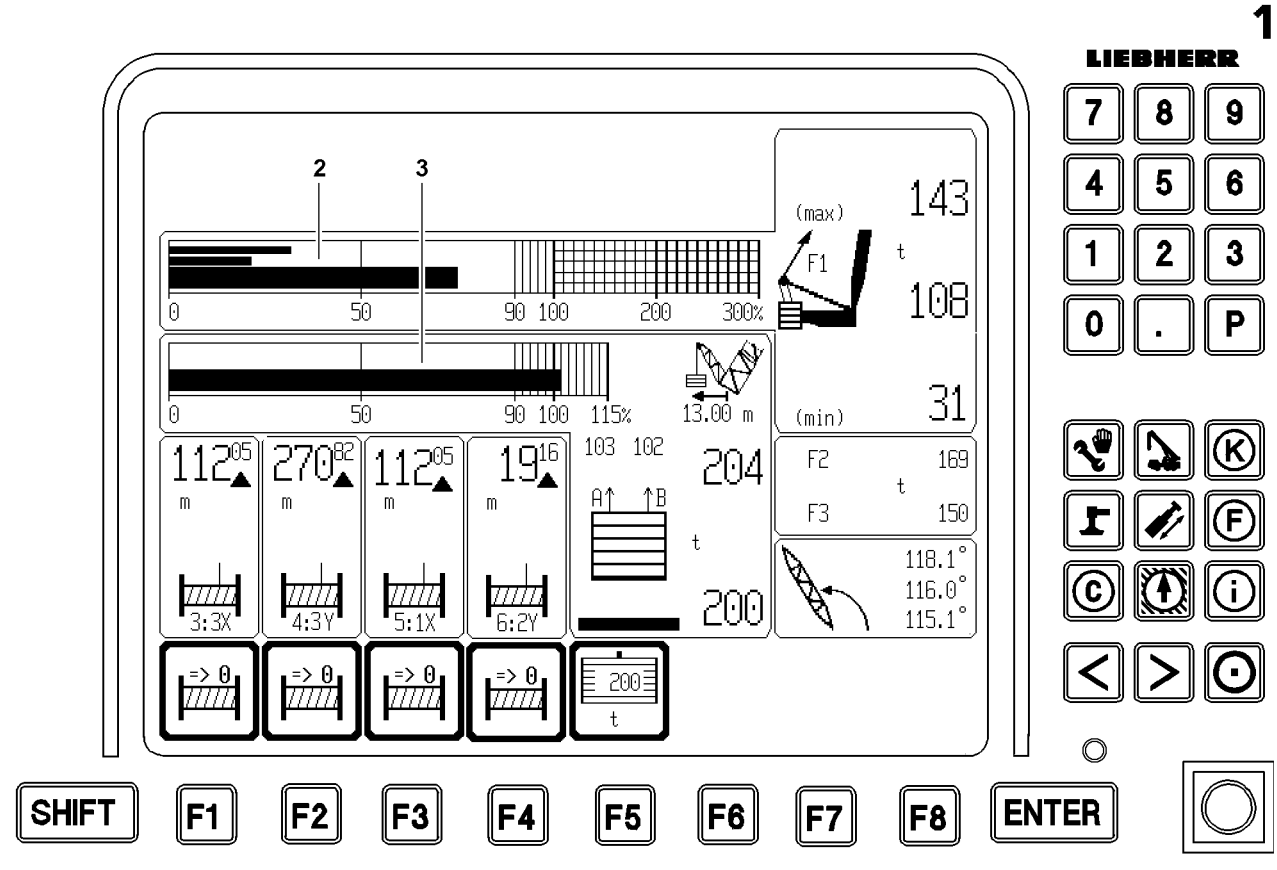
1
LIEBHERR
7 8 9
4 5 6
1 2 3
0 . P
(max)
143
108
(min)
31
204
200
F2 169
F3 150
118.1°
116.0°
115.1°
SHIFT F1 F2 F3 F4 F5 F6 F7 F8 ENTER

B111372

4.8 Utilization conditions

The current utilization of the crane results from the load utilization bar **1** on LICCON monitor 0 and the F1-utilization bar **2** on LICCON monitor 1.

The “maximum load of the current **crane condition** ” is reached when the load utilization bar **1** has reached 100 % or when the F1- utilization bar **2** has reached 100 %.

The “maximum load of the current **crane equipment** ” is reached when the load utilization bar **1** has reached 100 % or when the F1- utilization bar **2** has reached 100 % and the derrick ballast is suspended (ballast utilization bar **3** at 100 %, if the ballast input value and the ballast weighing are correct).

The “maximum load according to the load chart and the reeving” (100 % limit of load utilization bar) and the maximum load according to $F1_{max}$ operation (100 % limit of the F1 utilization bar) can be bypassed by the following measure:

– Set up key **D** on LICCON monitor 0:
  For function and effects of the set up key **D**, see Crane operating instructions, chapter 4.20.

DANGER

The crane can topple over!

Due to deliberate improper use of the set up key **D**, the crane can collapse, the boom can break off or the crane can topple over!

Personnel can be severely injured or killed!

▶ The crane operator must have understood the function and effects of an actuation before actuating the set up key **D**, see Crane operating instructions, chapter 4.20!

Note

▶ The movement “raise ballast” or “lower ballast” requires utmost attention by the crane operator!

0

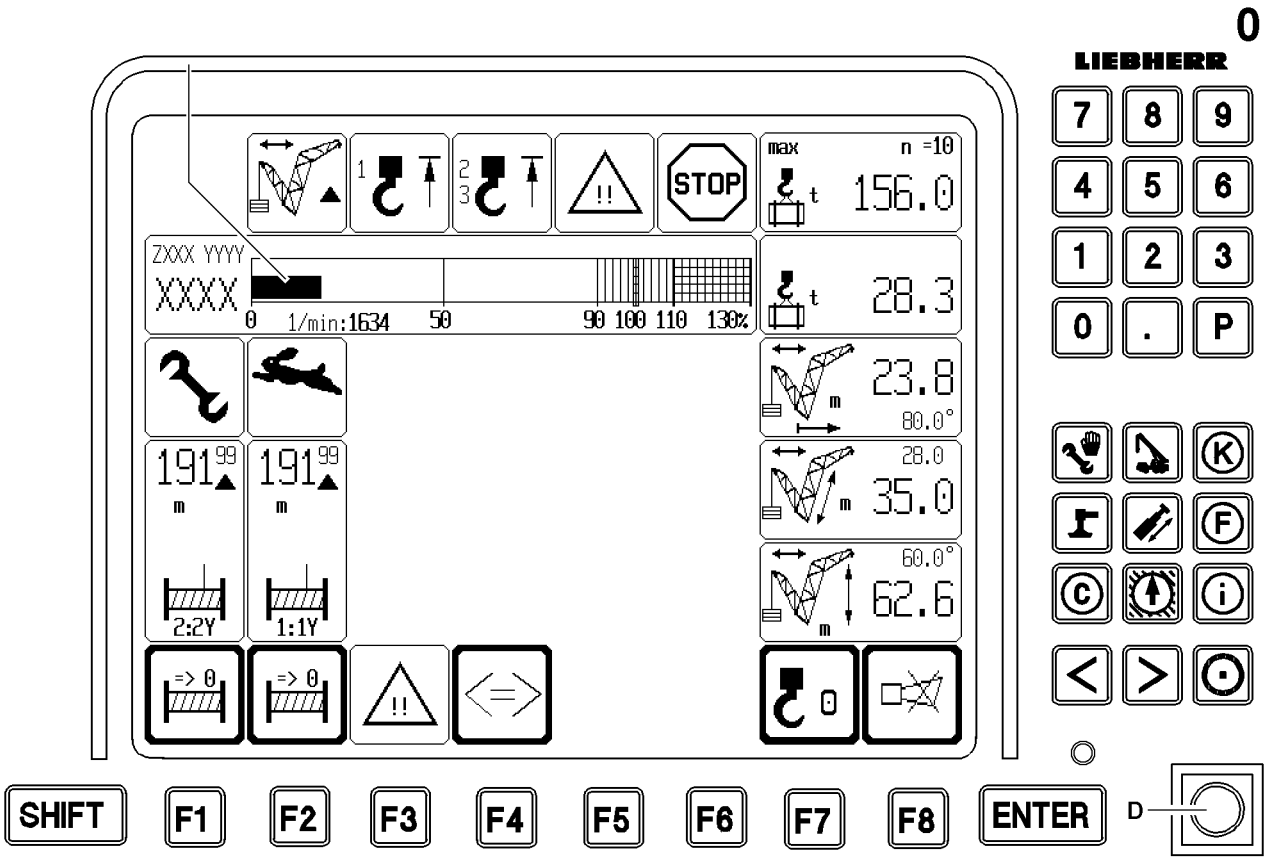
LIEBHERR
7 8 9
4 5 6
1 2 3
0 . P
STOP
max n =10
156.0
ZXXX YYYY
XXXX
0 1/min:1634 50 90 100 110 130%
28.3
23.8
80.0°
28.0
35.0
60.0°
62.6
191 99
2:2Y
1:1Y
=> 0
SHIFT F1 F2 F3 F4 F5 F6 F7 F8 ENTER
D

1

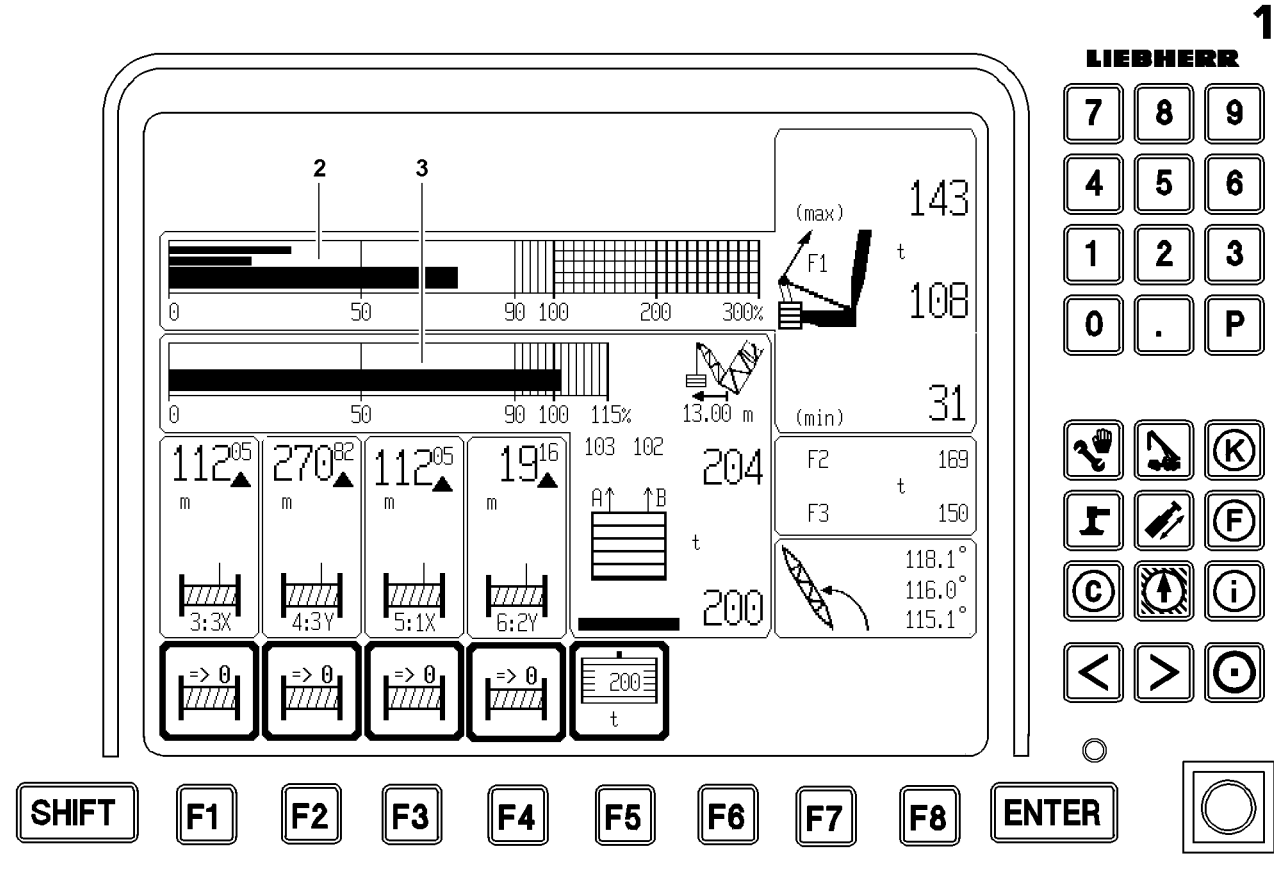
LIEBHERR
7 8 9
4 5 6
1 2 3
0 . P
2
3
(max)
143
F1
t
108
0 50 90 100 200 300%
0 50 90 100 115%
13.00 m
(min)
31
112 05
270 82
112 05
19 16
3:3X
4:3Y
5:1X
6:2Y
103 102
204
A B
t
200
F2 169
F3 150
118.1°
116.0°
115.1°
=> 0
SHIFT F1 F2 F3 F4 F5 F6 F7 F8 ENTER

B111372

4.9 Checking the length sensor value on the derrick ballast

CAUTION
Risk of accident!
If the derrick ballast radius is measured incorrectly, due to the incorrect radius, a maximum load capacity and a F1-operational-max load force which are too large will be calculated!
The crane will be overloaded unnoticed and can topple!
Personnel can be severely injured or killed!

- ▶ The crane driver may not rely blindly on the derrick ballast radius measurement, but he must think for himself and check, if the measurement is still working correctly!
- ▶ With completely telescoped in / out derrick ballast, the display “derrick ballast radius” must approximately show the corresponding end position!

Note

- ▶ When telescoping the suspended ballast guide, the indicator must change the display “derrick ballast radius” on the LICCON monitor corresponding to the movement of the derrick ballast! If this is not the case, the crane operator can immediately notice if the length sensor rope drum jams when spooling in or out!

- ▶ When telescoping the derrick ballast in and out, the “derrick ballast radius” display must be observed carefully on the LICCON monitor.

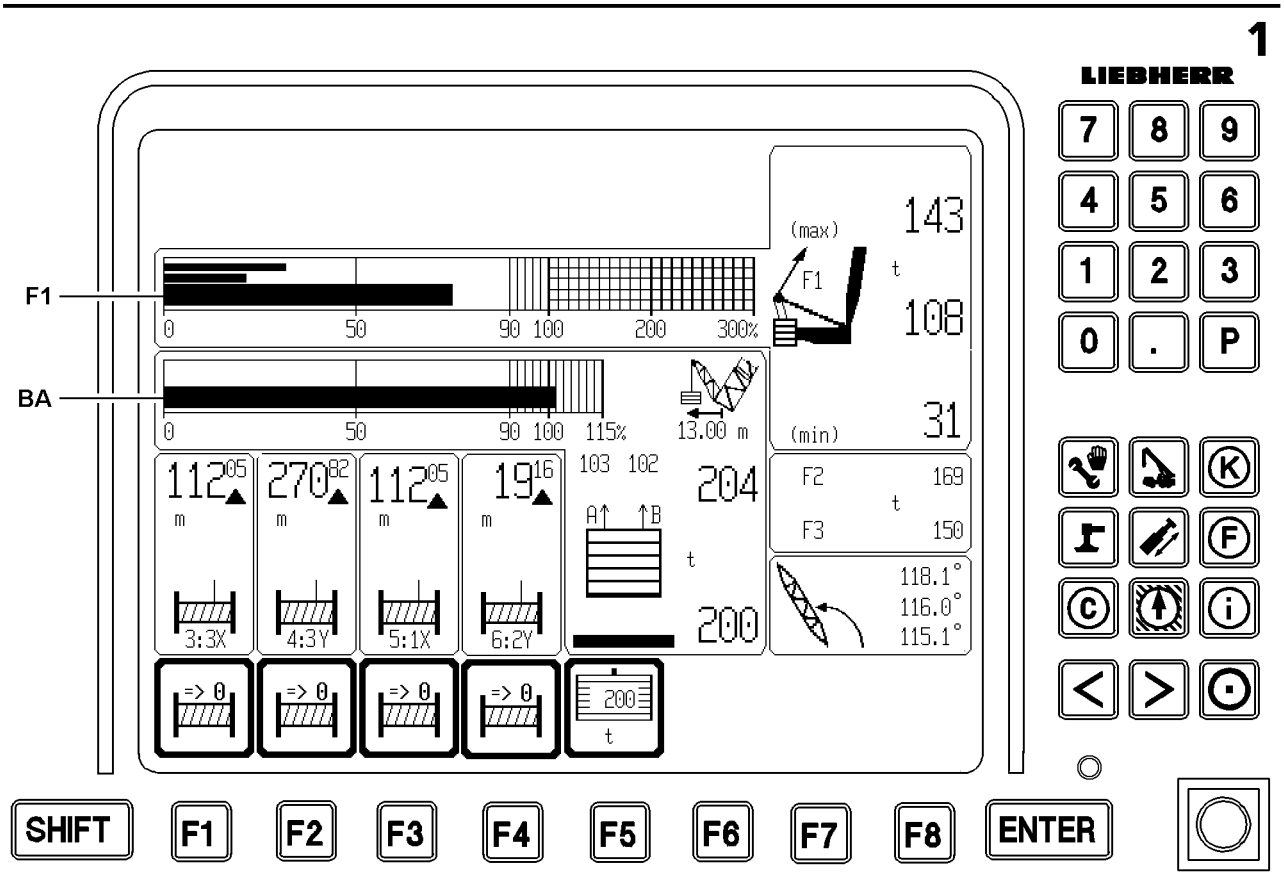
1
LIEBHERR
F1
BA
SHIFT
F1
F2
F3
F4
F5
F6
F7
F8
ENTER

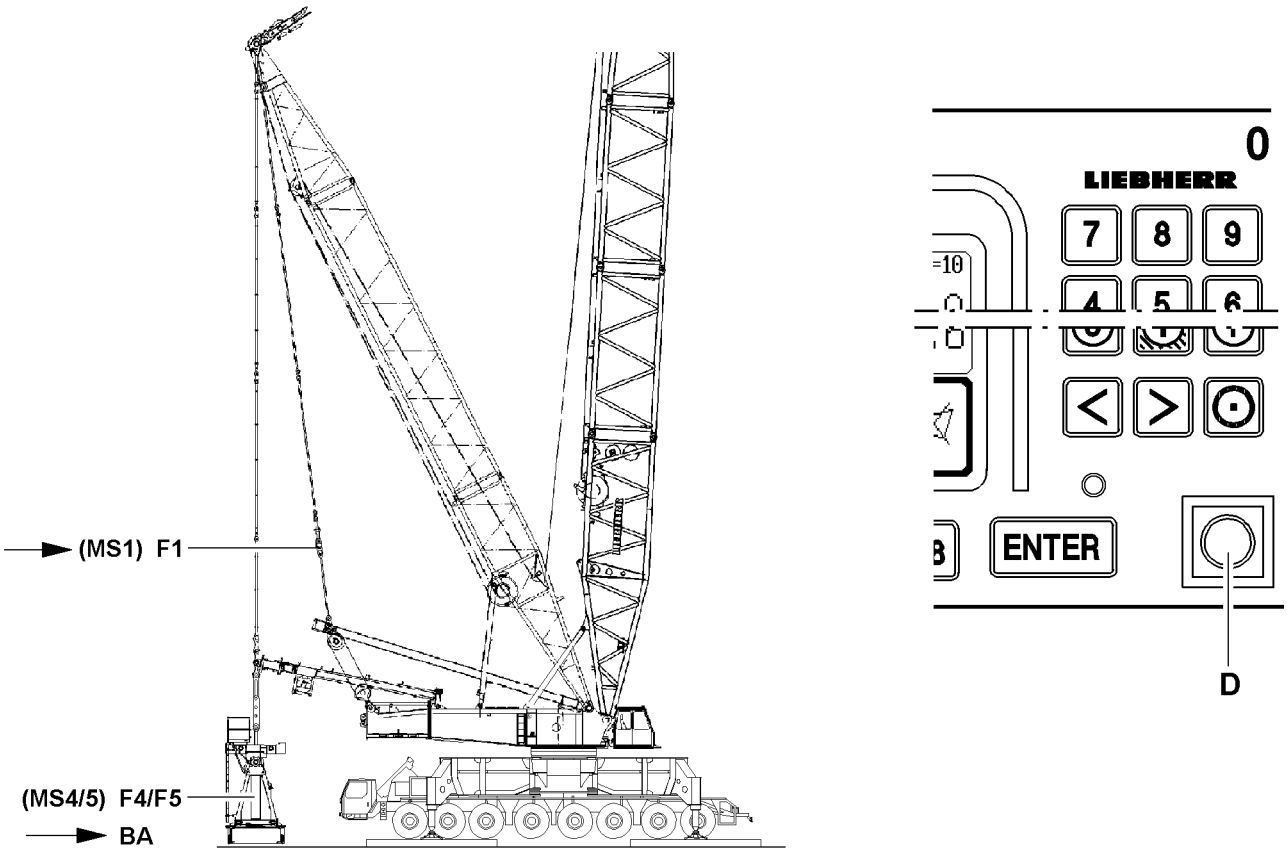
(MS1) F1
(MS4/5) F4/F5
BA
0
LIEBHERR
ENTER
D

B111371

4.10 Differential force monitoring for derrick ballast guying

In operating modes with derrick ballast, the difference between the forces on derrick guyings A and B is monitored on LICCON monitor 1. If the difference exceeds a permissible value, an acoustic warning is issued and the two force values blink.

WARNING
Risk of accident from damaged crane components!
Too high a difference in the derrick ballast guying A and B can have the result that the derrick ballast arrives in an impermissible inclined position, and thereby the derrick end section, the ballast guide or other crane components may be damaged!
Personnel can be severely injured or killed!

- ▶ The forces in the derrick ballast guying A and B are to be carefully observed on LICCON monitor!
- ▶ If the specified limit value is exceeded, there occurs **no shut off** of crane movements!
- ▶ The maximum permissible length difference A and B, in relation to the extension conditions on the pull cylinders, may not exceed 40 mm!

Exceeding the limit value can have the following causes:

- – Flexing on the turntable.
- – The ground under the derrick ballast is uneven.
- – The crane is leaning to one side.
- – The derrick ballast has been loaded one-sided.
- – The force measurement in one derrick ballast guying is incorrect.

The crane driver must recognize the correct cause and take countermeasures:

- – Error message appears.
- – The error, which caused the one-sided force, must be remedied.
- – In case of small ground unevenness only, the following measure is permissible:
  Lock one pull cylinder and with the other pull cylinder lift the derrick ballast or “derrick ballast lower” activate until the difference between the forces A and B is smaller.
- – In case of implausible sensor values: Check whether the ballast weighing pressure sensors or inputs for the ballast weighing are faulty. If necessary, pull out the sensor or replace the CPU.

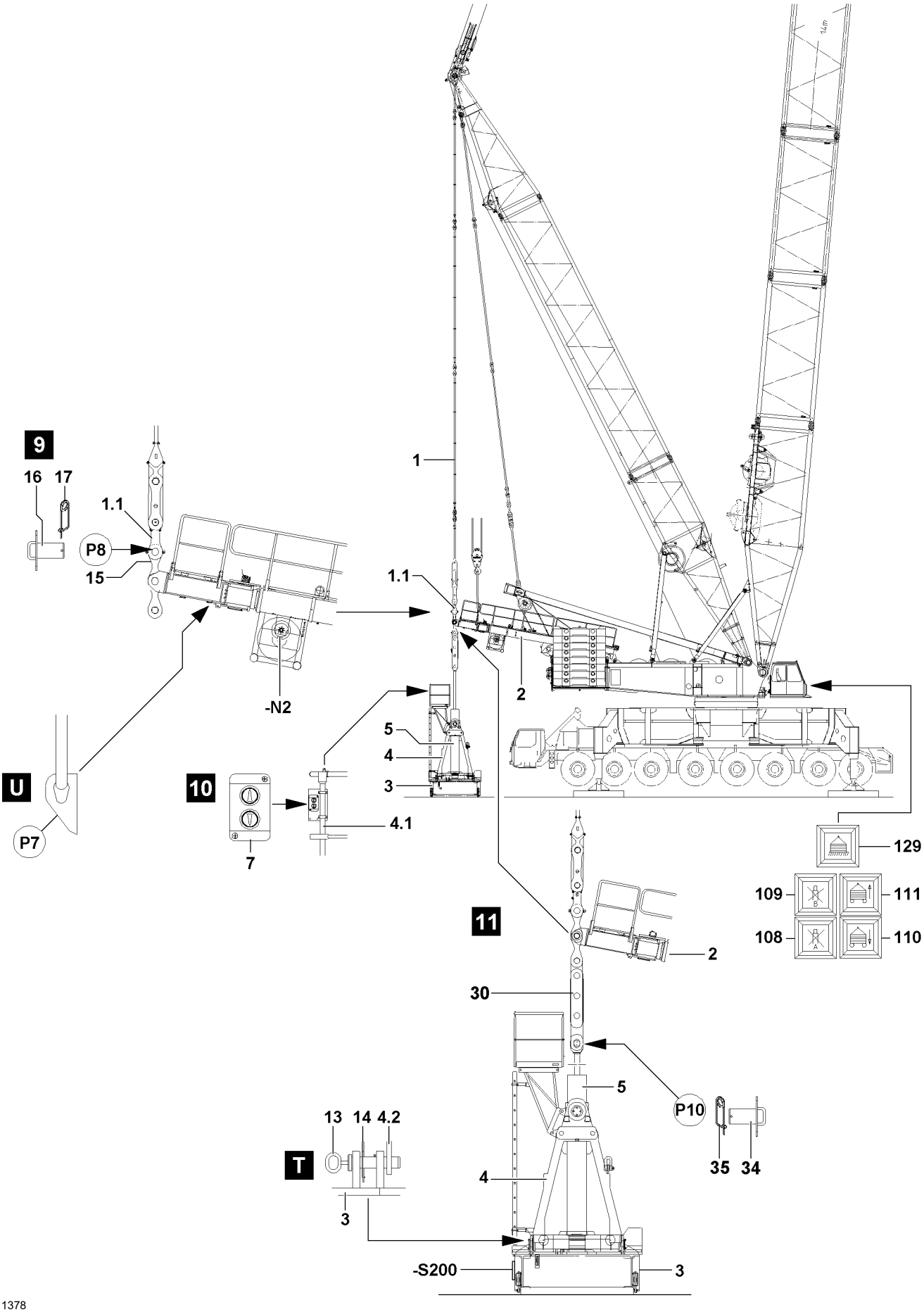
9
16
17
1.1
P8
15
-N2
U
P7
10
7
4.1
1
1.1
2
5
4
3
129
109
111
108
110
11
2
30
5
P10
35
34
13
14
4.2
T
3
4
-S200
3

B111378

5 Disassembly

WARNING
Danger of crushing!
While assembling, hands can be crushed or even severed by swing movements of the components!
▶ Make sure that the components do not swing back and forth during assembly!

Make sure that the following prerequisite is met:
– The placement surface for the derrick ballast must be level, horizontal and of sufficient load carrying capacity.

DANGER
The crane can topple over!
The placement surface for the derrick ballast must be level, horizontal and of sufficient load bearing capacity, otherwise the ballast stacks can tip over!
Personnel can be severely injured or killed!
▶ Check the horizontal position of the crane during the set down procedure!
▶ Check the horizontal position of the derrick ballast during the set down procedure!
▶ Constantly check the differential forces in the guying on the LICCON monitor!
▶ It is strictly prohibited for anyone to stand under the derrick ballast or in any part of the danger zone during the set down procedure!

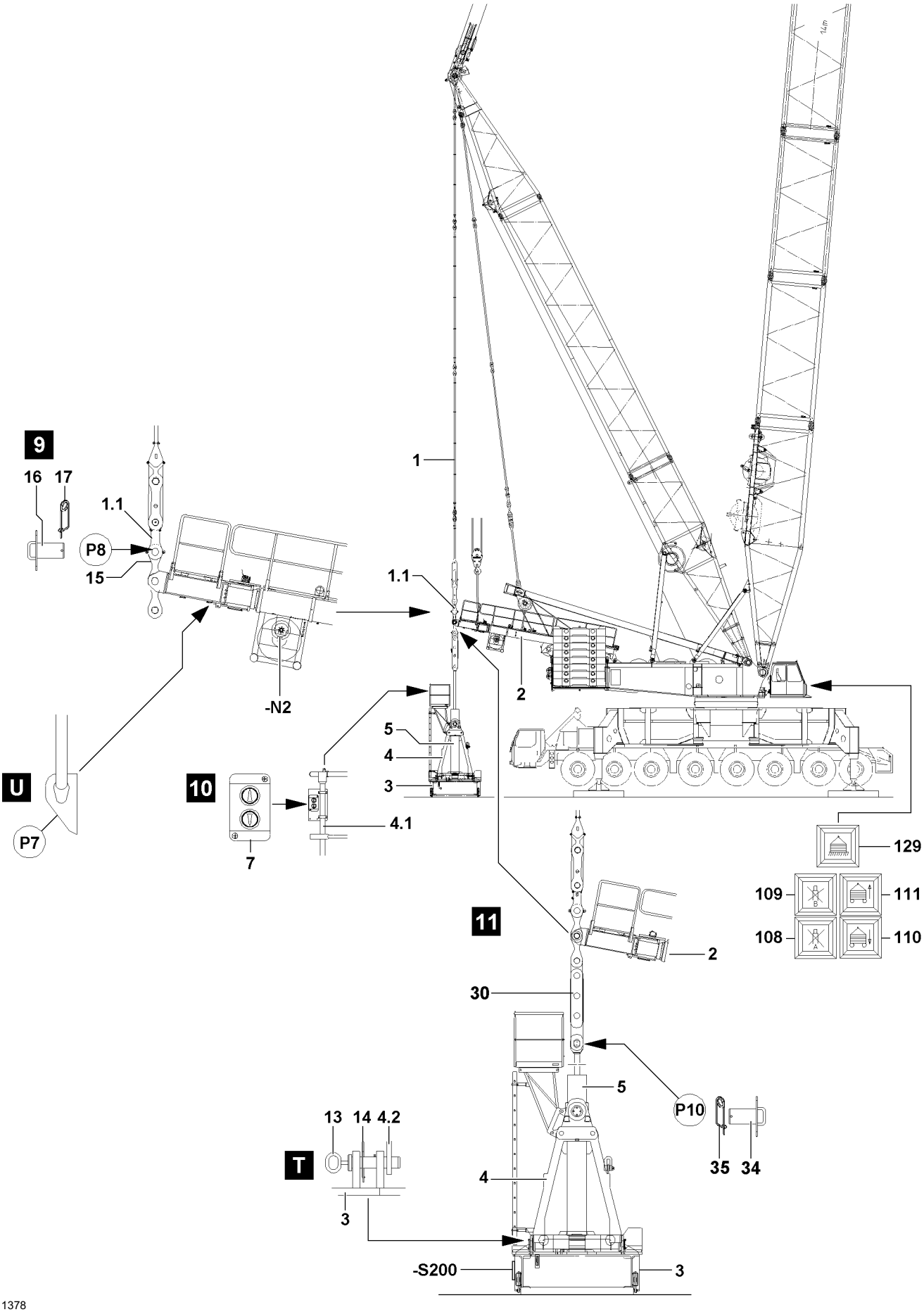
9
16
17
1.1
P8
15
-N2
1
1.1
2
5
4
3
U
P7
10
7
4.1
129
109
111
108
110
11
2
30
5
P10
35
34
13
14
4.2
T
4
3
-S200
3

B111378

5.1 Setting the ballast pallet down

Note

▶ The guide frame must be completely telescoped in before setting down the ballast pallet onto the ground. For each pin point on the turntable, the derrick ballast radius stands at 13 m or at 15 m!

▶ The derrick ballast radius and the derrick boom radius must be identical!

Make sure that the following prerequisites are met:

– The guide frame is fully telescoped in.
– The derrick boom radius and the derrick ballast radius are identical.
– The placement of the derrick ballast and the load is observed by a guide.

▶ Press the button **110**.

Result:

– The piston rods of the pull cylinders move out.
– The derrick ballast is lowered.

Note

▶ If the ballast pallet leans at an angle and if there is a difference in the forces in the derrick ballast guying, re-align the ballast pallet until it is horizontal!

▶ Press the button **108**.

or

■ Press the button **109**.

Result:

– The corresponding pull cylinder is blocked.

▶ Extend or retract unblocked pull cylinder by pressing button **110** or button **111** until the ballast pallet is oriented horizontally.

▶ When the ballast pallet is horizontally aligned:
Press button **110** and lower ballast pallet with the pull cylinders onto the ground, until the warning light **129** lights up.

Result:

– The crane movement **“turntable turn”** switches off.
– The crane movement “**Derrick ballast down** ” turns off.

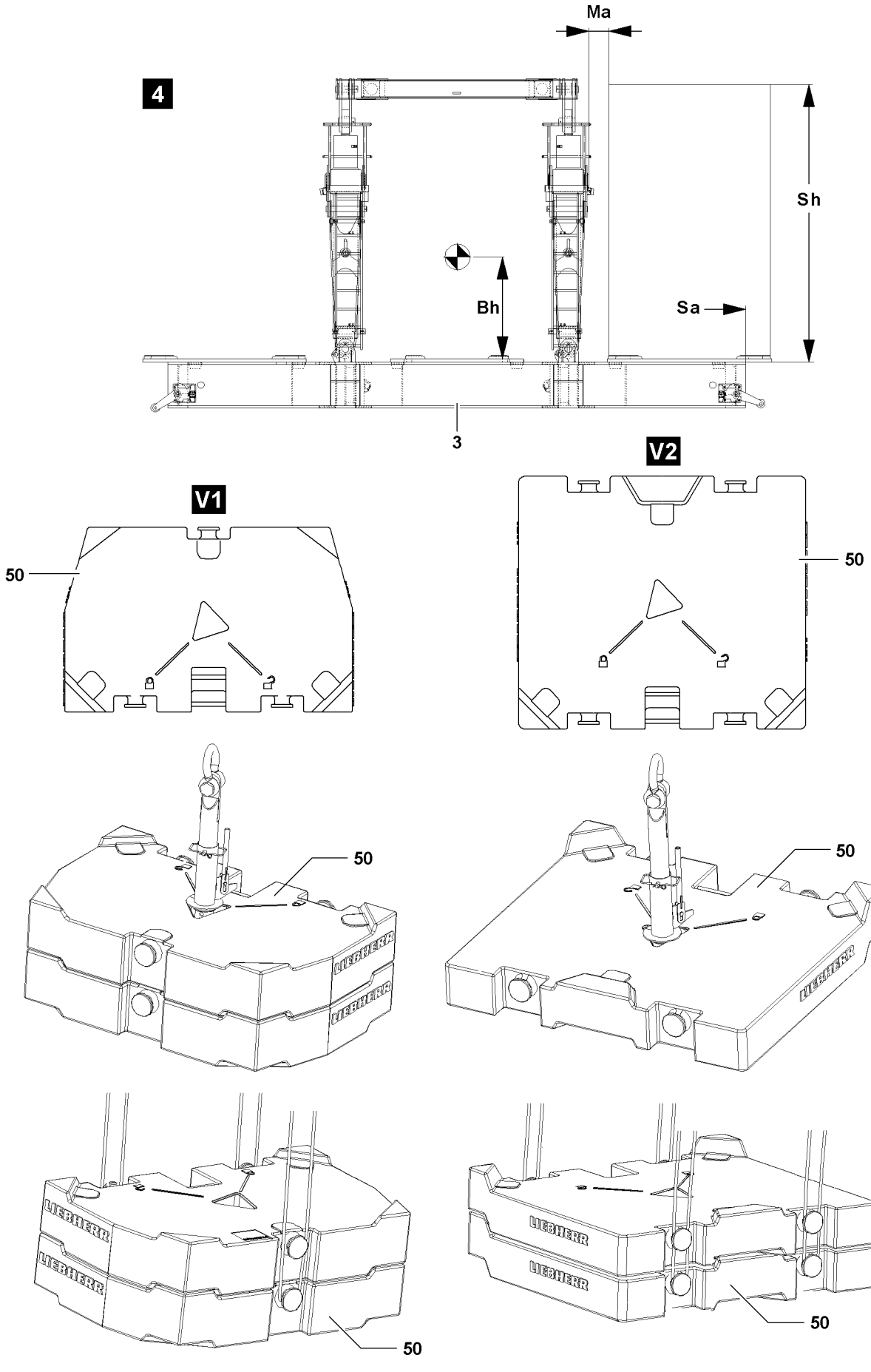
4
Ma
Sh
Bh
Sa
3
V1
50
V2
50
50
50
50
50
B109453

5.2 Taking the ballast pallet down

WARNING
Damaged ballast plates!
Damage on the ballast plates can cause the tackle to release!
The ballast plates and components can fall down!
Personnel can be severely injured or killed!
▶ Do not use damaged ballast plates and replace them immediately!

WARNING
Toppling ballast assembly!
Lopsided stacked ballast plates create instability in the ballast stack!
The ballast plates can tip from the ballast pallet and cause the crane to topple over!
Personnel can be severely injured or killed!
▶ Make sure that the ballast plates are placed correctly in the centerings!

Make sure that the following prerequisites are met:
– The ballast pallet is placed on the ground.
– An auxiliary crane is available.

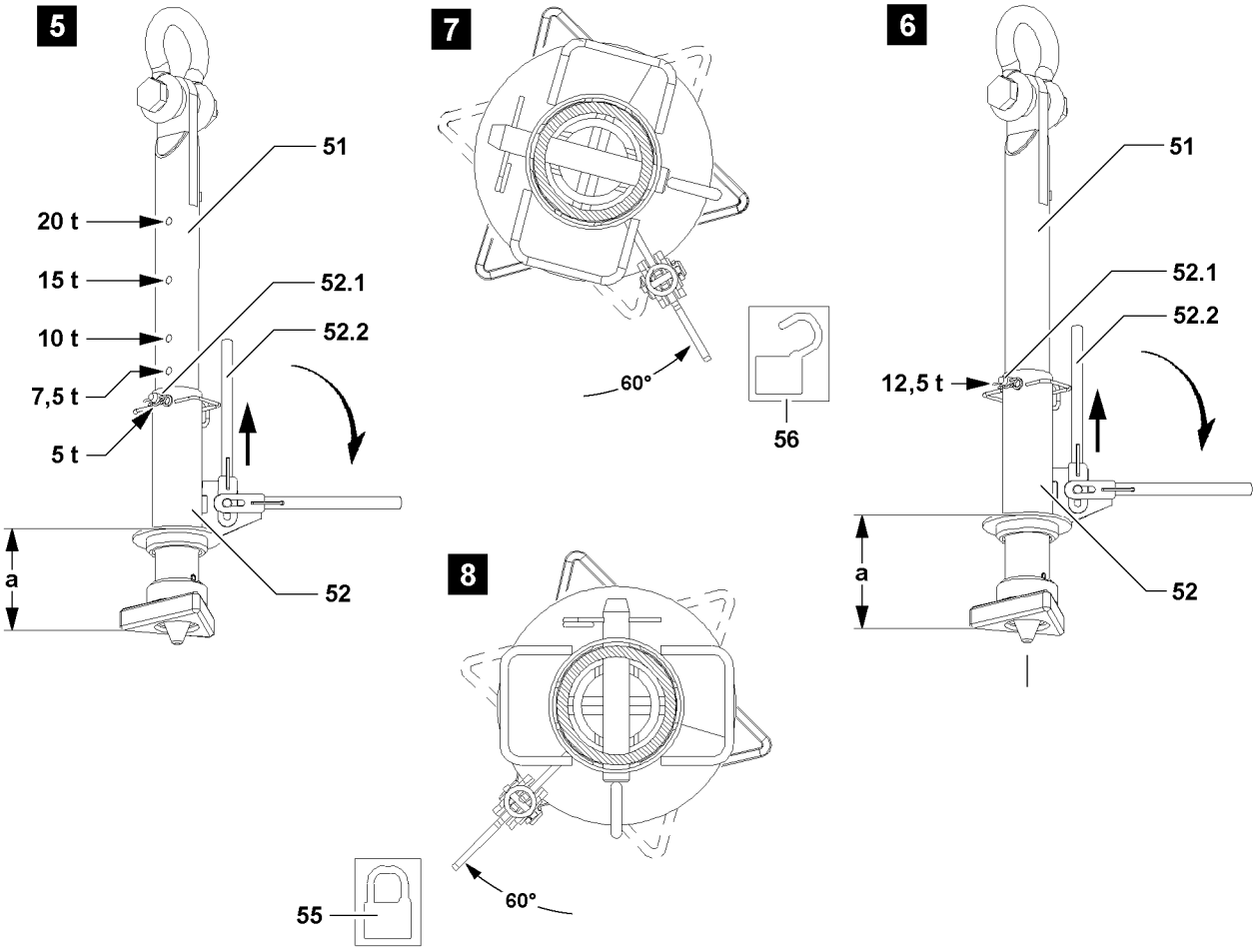
5
51
20 t
15 t
52.1
10 t
52.2
7,5 t
5 t
a
52
7
60°
56
6
51
52.1
52.2
12,5 t
a
52
8
55
60°

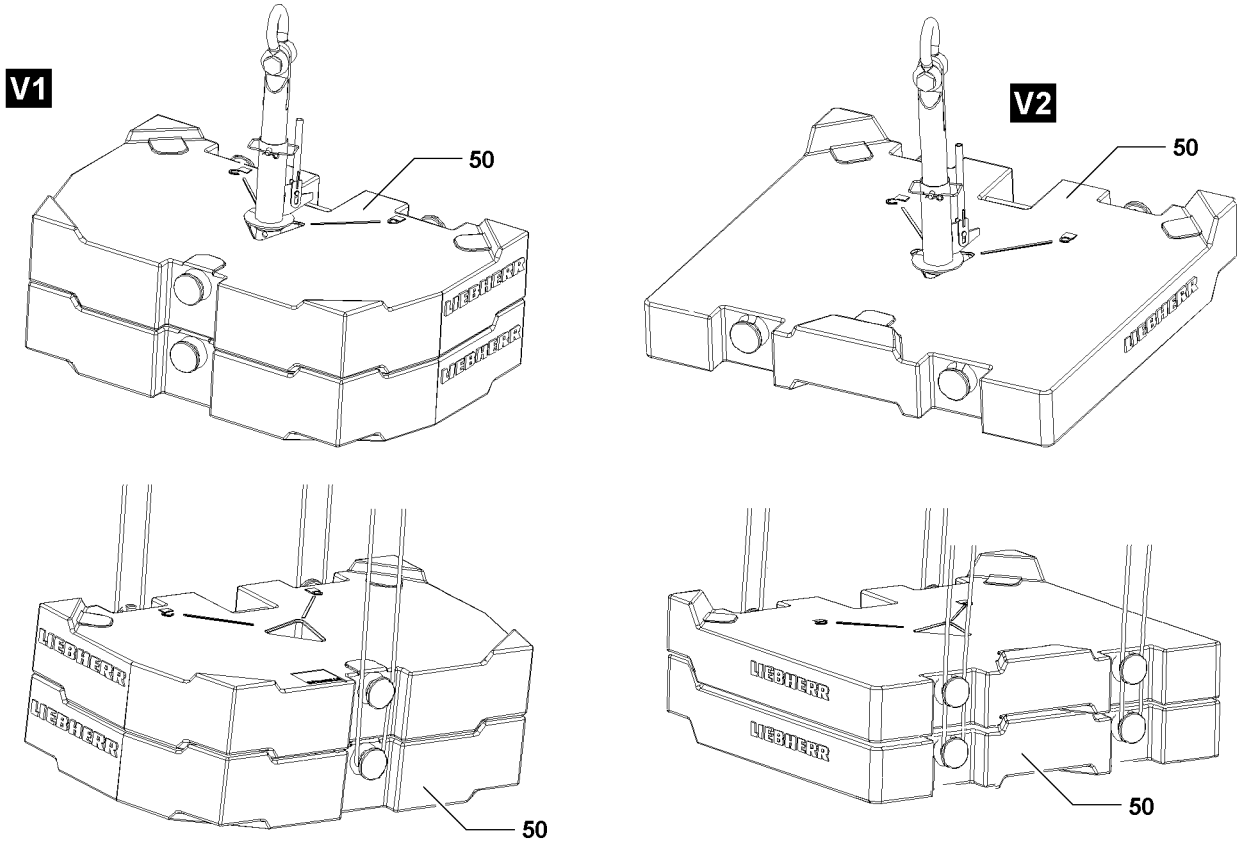
V1
50
V2
50
50
50

B109420

5.2.1 Removing the ballast plates

Note
- ▶ The ballast plates are marked with their own weights!

WARNING
Danger of toppling the ballast stack!
Personnel can be severely injured or killed by toppling ballast stacks!
- ▶ Before unballasting the ballast pallet, it must be properly placed on the ground!
- ▶ Remove ballast plates simultaneously from the ballast pallet!
- ▶ First take the left and right ballast assembly off evenly, the remove the ballast assembly in the middle of the ballast pallet!

Removing the ballast plates, fastening system: “Twistlock”

WARNING
Overload of receptacle stud and ballast plates!
If more than the permissible number of ballast plates are lifted with the receptacle stud **51**, the receptacle stud **51** and the ballast plates can be overloaded and damaged!
The ballast plates can fall down!
Personnel can be severely injured or killed!
- ▶ Observe the section “Permissible ballast assemblies” in this chapter!

WARNING
Damage of receptacle stud and ballast plates!
If two ballast plates are lifted which do not lay correctly in their centerings, the receptacle stud **51** and the ballast plates can be damaged!
Damage can cause the ballast plates to fall down!
Personnel can be severely injured or killed!
- ▶ Make sure that the ballast plates to be lifted are placed correctly in the centerings!

WARNING
The twist lock system opens by itself!
If the receptacle stud **51** is not correctly locked, the Twist lock system can open by itself!
The ballast plates can fall down!
Personnel can be severely injured or killed!
- ▶ Make sure, when initiating a lift, that the lever **52.2** points directly on the symbol “Locked” **55** of the ballast plates **50**!

Note
- ▶ During a lift, the locked Twist lock system cannot release by itself due to its gravitational retention!
- ▶ During a lift, the locked Twist lock system cannot be released by hand due to its gravitational retention!

Note
- ▶ For ballast plates Variation **V1**, use the adjustable receptacle stud **51** in illustration **5**!
- ▶ For ballast plates Variation **V2**, use the receptacle stud **51** in illustration **6**!

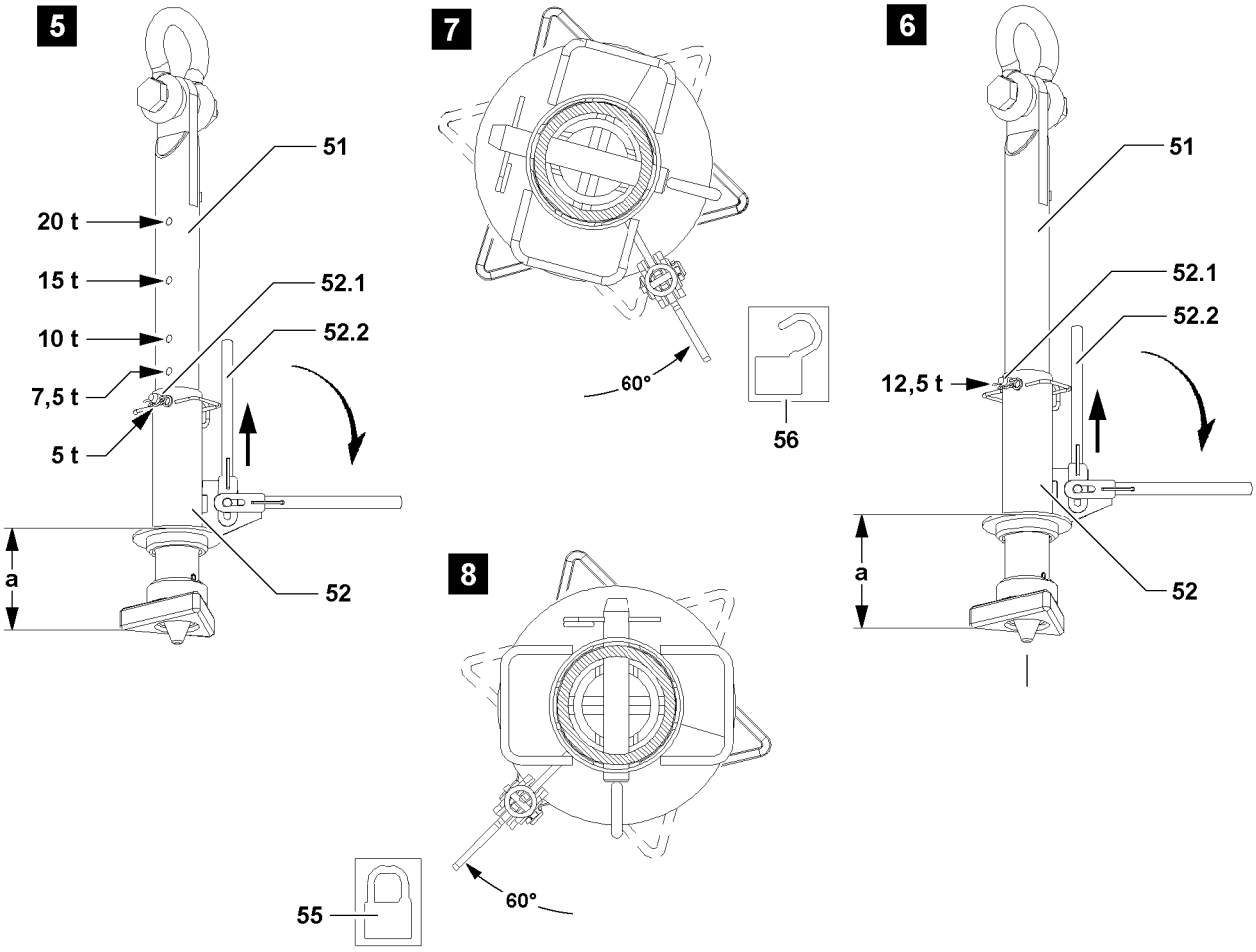
5
51
20 t
15 t
52.1
10 t
52.2
7,5 t
5 t
a
52
7
60°
56
6
51
52.1
52.2
12,5 t
a
52
8
55
60°

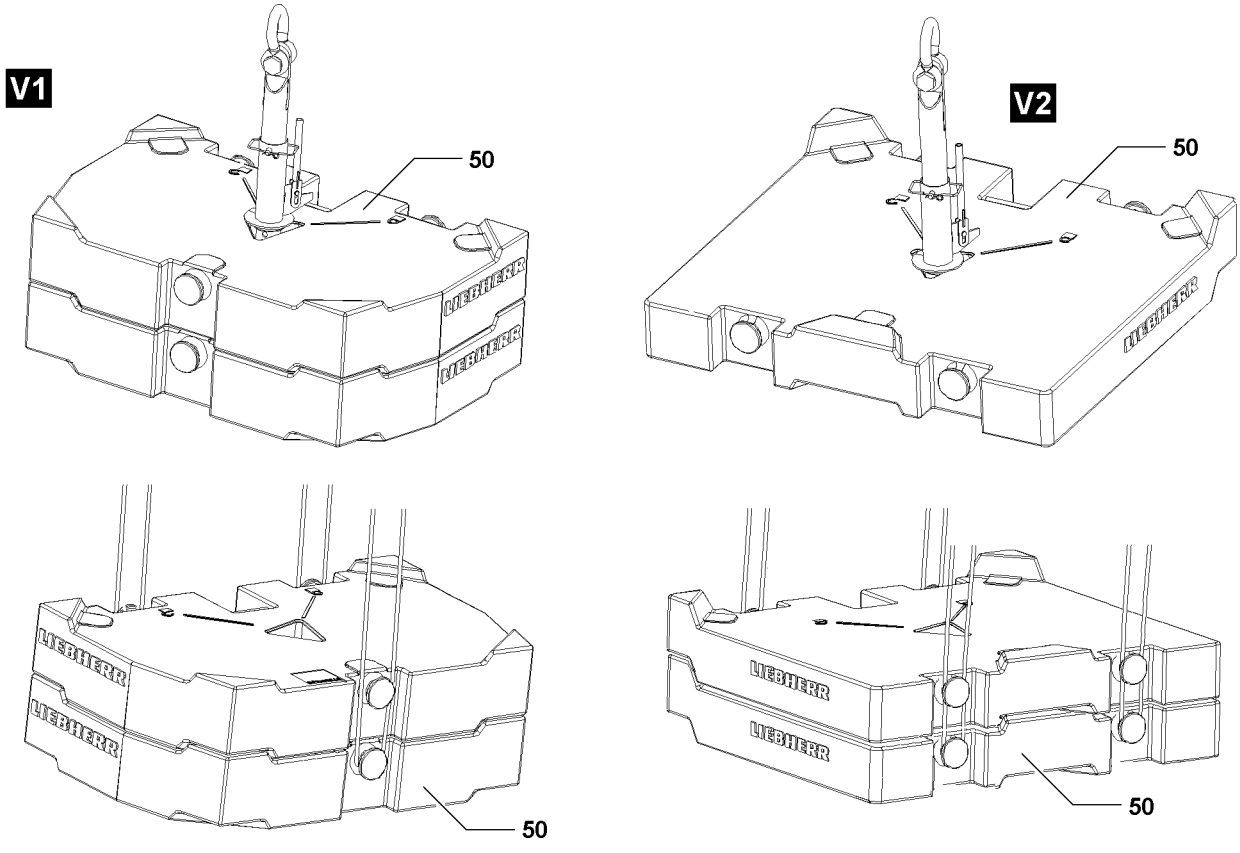
V1
50
V2
50
50
50

B109420

Before the receptacle stud **51** is guided in the ballast plates Variation **V1**, it must be ensured that the insertion length **a** of the receptacle stud **51** is set correctly.
The insertion length **a** of the receptacle stud **51** for ballast plates Variation **V1** can be adjusted by hand.

- ▶ If the insertion length **a** of the receptacle stud **51** is to be adjusted:
  Release and unpin the pin **52.1**.
- ▶ Adjust the insertion length **a** by moving the guide sleeve **52** to the desired insertion length **a**, observe the stages.
- ▶ Insert and secure pin **52.1**.

Result:

– The receptacle stud **51** is adjusted.

- ▶ Attach the receptacle stud **51** on the auxiliary crane and guide it into the ballast plate(s).
- ▶ Pull the lever **52.2** up and fold it down.
- ▶ Turn the receptacle stud **51** with the lever **52.2** by 60° until it points to the symbol “Locked” **55** of the ballast plate, see illustration **8**.
- ▶ Lift the ballast plate(s) or ballast assembly with the receptacle stud **51** from the ballast assembly or from the ballast pallet and place on a suitable storage location.
- ▶ When the ballast plates are placed down:
  Turn the receptacle stud **51** with the lever **52.2** by 60° to the stop in direction of the symbol “unlocked” **56**, see illustration **7**.

Result:

– The receptacle stud **51** is unlocked.

- ▶ Carefully pull the receptacle stud **51** from the ballast plate.

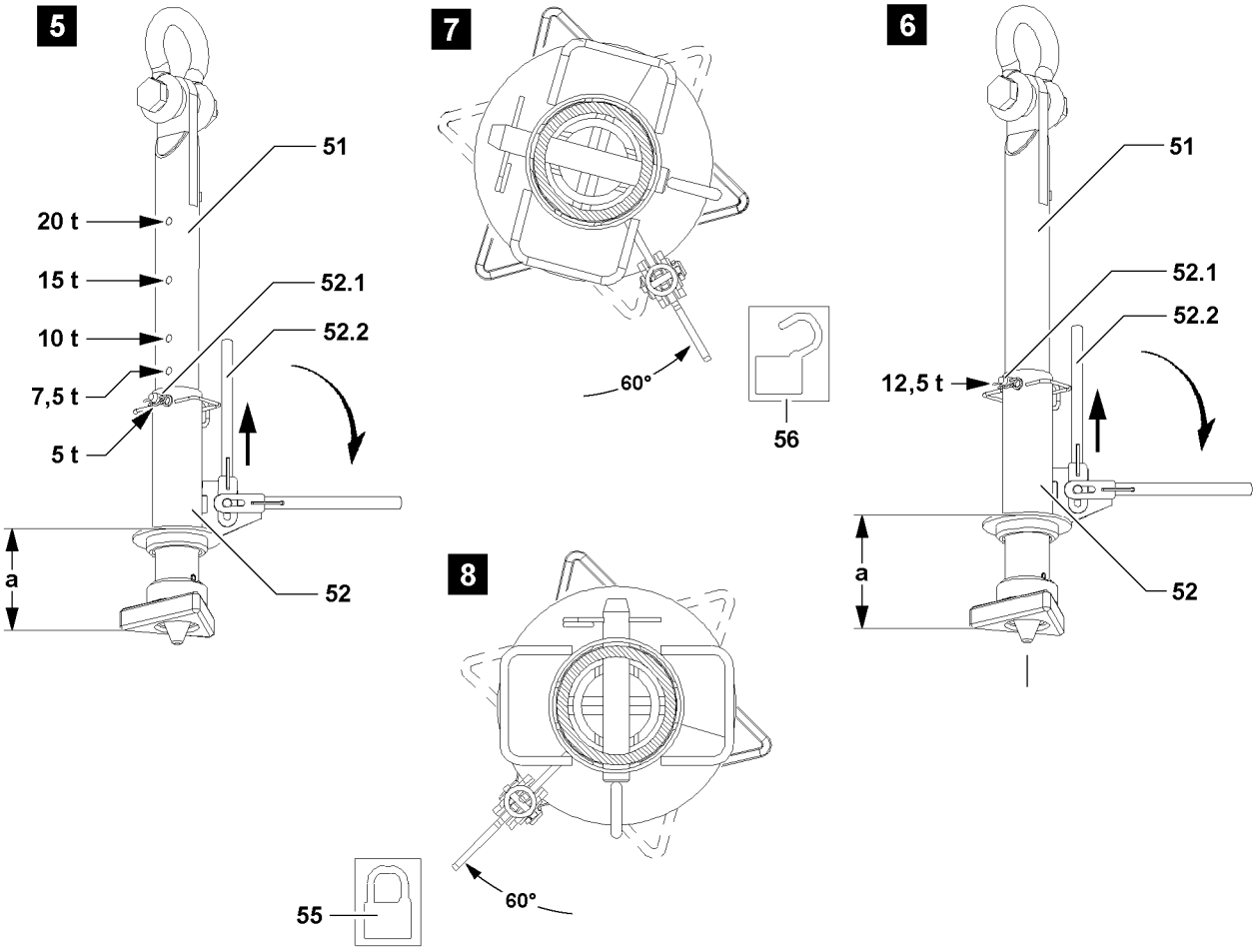
5
51
20 t
15 t
52.1
10 t
52.2
7,5 t
5 t
a
52
7
60°
56
6
51
52.1
52.2
12,5 t
a
52
8
55
60°

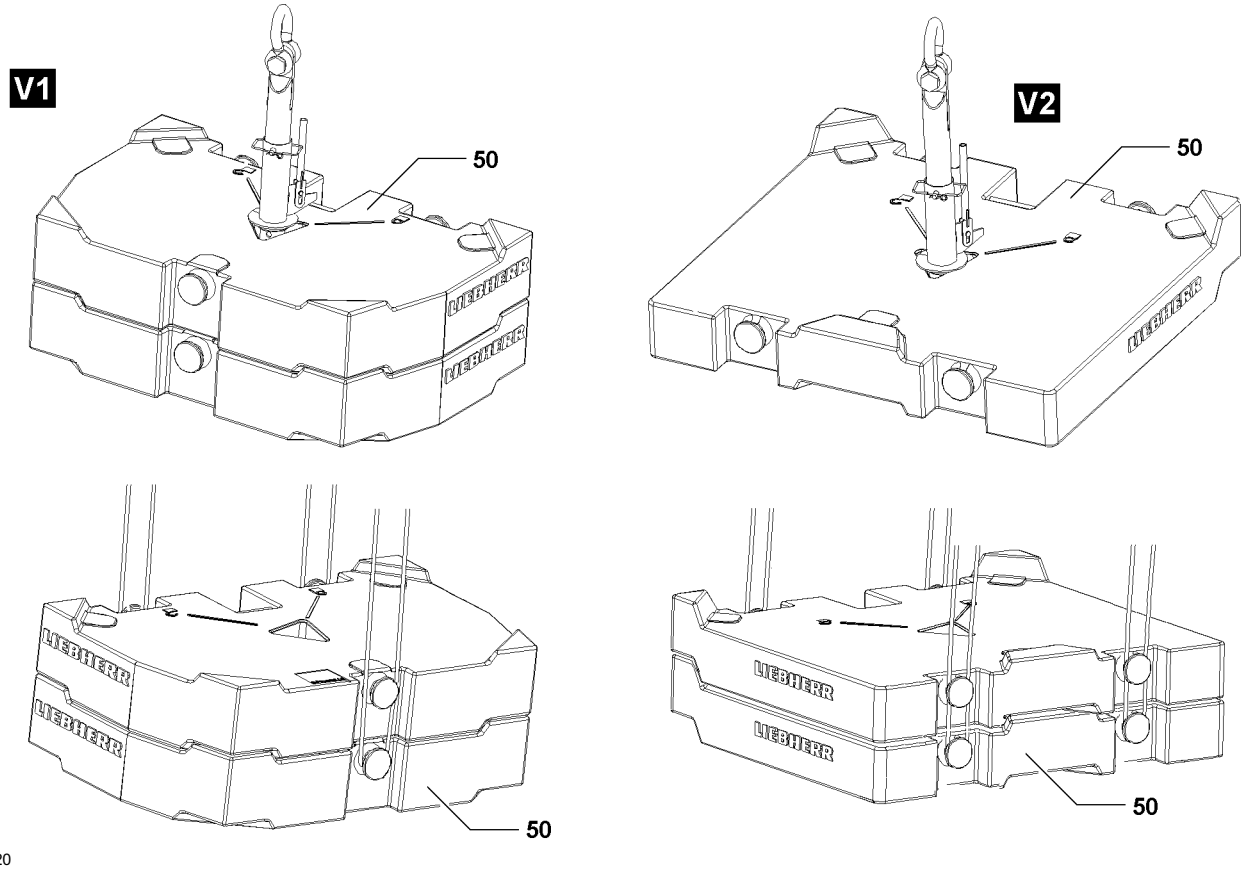
V1
50
V2
50
50
50

B109420

Removing the ballast plates, fastening points: Bitt

WARNING
Overloaded ballast plates!
If more than the permissible loads are lifted, the bitts **50.1** are overloaded!
The ballast plates can be damaged and fall down!
Personnel can be severely injured or killed!
▶ Observe the section “Permissible ballast assemblies” in this chapter!

WARNING
Incorrect handling of the fastening equipment!
If tackle cannot be attached correctly and / or if it is not secured sufficiently to prevent it from loosening up, the ballast plates can fall down!
Personnel can be severely injured or killed!
▶ Make sure that the fastening equipment is correctly attached on the bitts **50.1** and that it is secured sufficiently to prevent it from loosening up!

▶ Attach the ballast plates or ballast assembly on the auxiliary crane.
▶ Lift the ballast plate(s) or ballast assembly from the ballast assembly or from the ballast pallet and place on a suitable storage location.

Removing the centering plates* from the ballast pallet

▶ When all ballast plates have been removed from the ballast pallet:
Attach the centering plates on auxiliary crane and lift the ballast pallet off the ground.

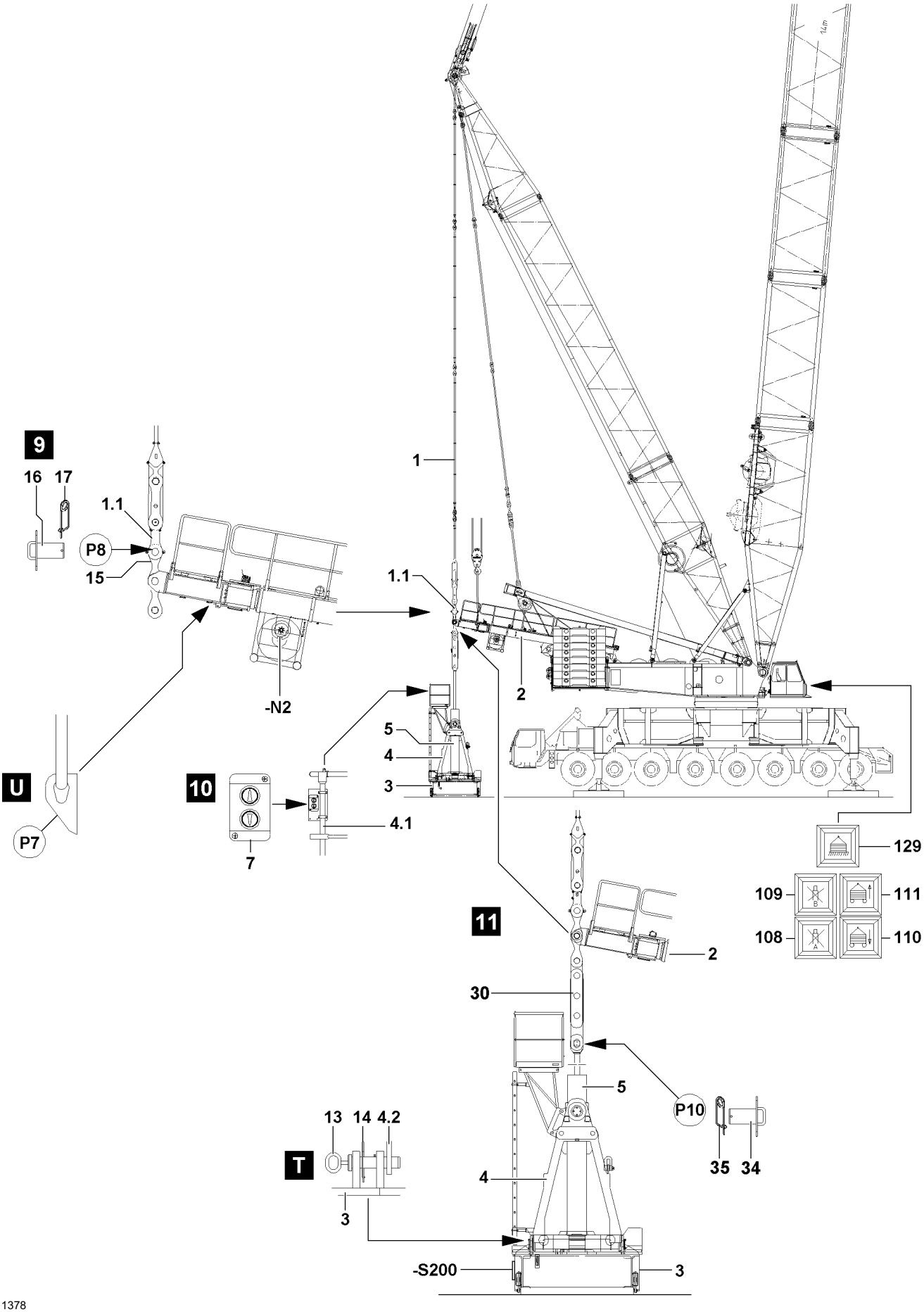
9
16
17
1.1
P8
15
-N2
U
P7
10
7
4.1
1
1.1
2
5
4
3
129
109
111
108
110
11
2
30
5
P10
35
34
13
14
4.2
T
4
3
-S200
3

B111378

5.3 Disassembling the ballast pallet on the guide frame

Make sure that the following prerequisites are met:
- The ballast pallet is ballasted down.
- The ballast pallet is placed on the ground.
- An auxiliary crane is available.

DANGER
Risk of fatal injury due to toppling erection racks!
If the erection racks are **not** secured with the retaining pins **13** before disassembly of the ballast pallet on the guide frame, the erection racks tips!
Personnel can be severely injured or killed!
- ▶ Unpin erection racks before disassembly on the guide frame with retaining pins **13** and secure with spring retainer **14**!
- ▶ Before unpinning the piston rods on the guide frame, perform a visual inspection!

- ▶ Release the spring retainer **35** on the pin **34**, see illustration **11**.
- ▶ Unpin pin **34** at point **P10**.
- ▶ When the pins **34** at point **P10** are unpinned on both sides:
  Retract piston rods for the pull cylinder **5** completely.

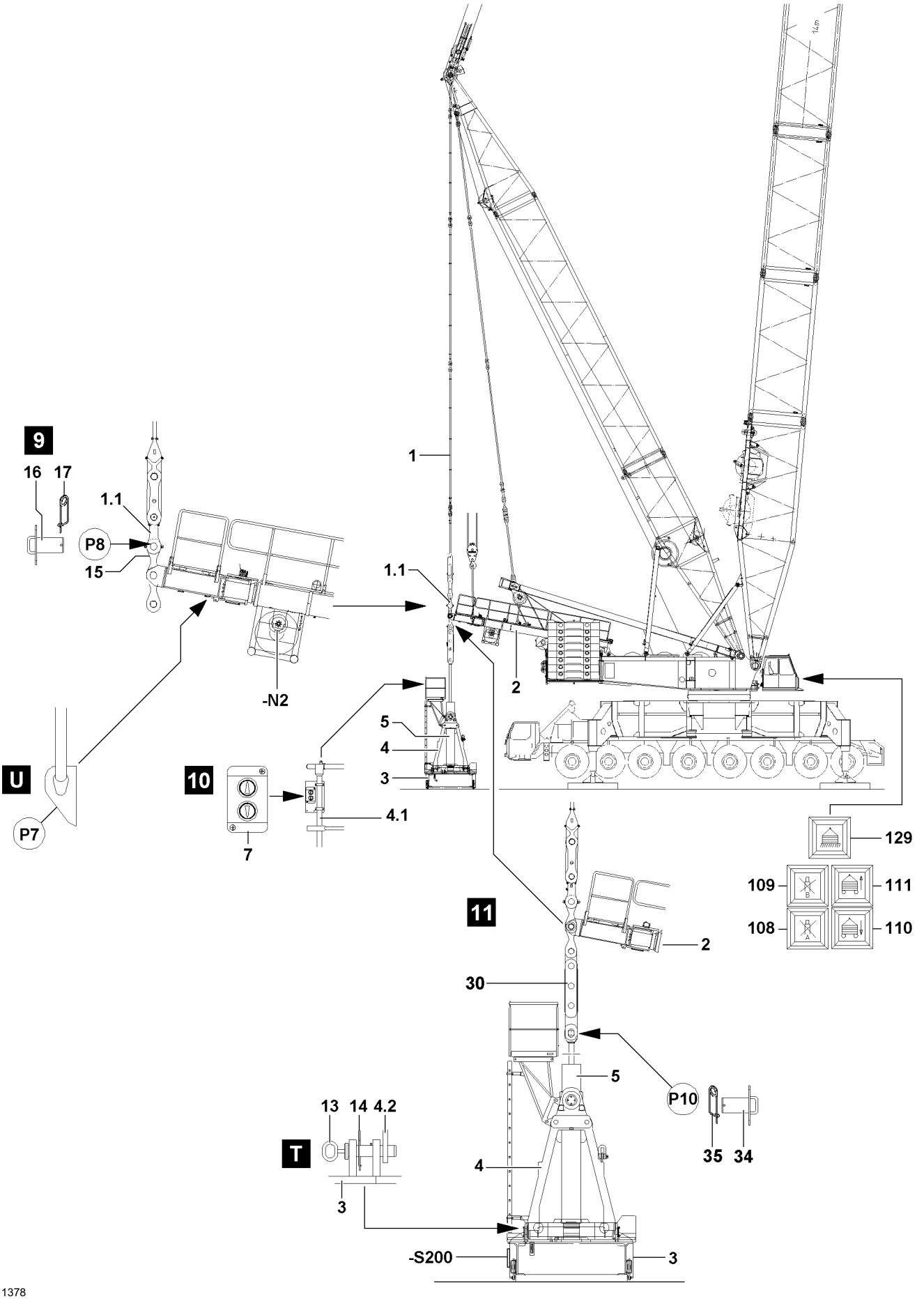
9
16
17
1.1
P8
15
-N2
U
P7
10
7
4.1
1
1.1
2
5
4
3
129
109
111
108
110
11
2
30
5
P10
35
34
13
14
4.2
T
3
4
-S200
3

B111378

5.4 Disconnecting electrical connection from the ballast pallet to the guide frame

Note

▶ Release the electrical connections only when the ballast trailer is completely unpinned on the turntable, which means both pins **34** must be unpinned!

Make sure that the following prerequisite is met:

– The ballast pallet is completely unpinned on the guide frame.

▶ Disconnect the electrical connections and store cable properly.

5.5 Disconnecting electrical connection from the ballast pallet to the guide frame

When hydraulic lines are connected and disconnected with quick-release couplings, make ensure that the coupling procedure is being performed correctly.

DANGER

Risk of accident due to loss of pressure or leakage!

Incorrectly coupled or incompletely coupled quick-release couplings (particularly return lines) as well as self-loosening of quick-release couplings can result in serious injury due to component failure!

▶ Check that the quick-release couplings have been properly connected before using the crane!

▶ Release the pressure in the hydraulic system before connecting and disconnecting. Turn the engine off and wait several minutes.

▶ Unscrew coupling components (sleeve and connector) by using hand-tightened nut.

▶ Disconnect the coupling sections

▶ Store hydraulic hoses on the guide frame correctly.

▶ Install protective caps on the coupling components to protect them from contamination and damage.

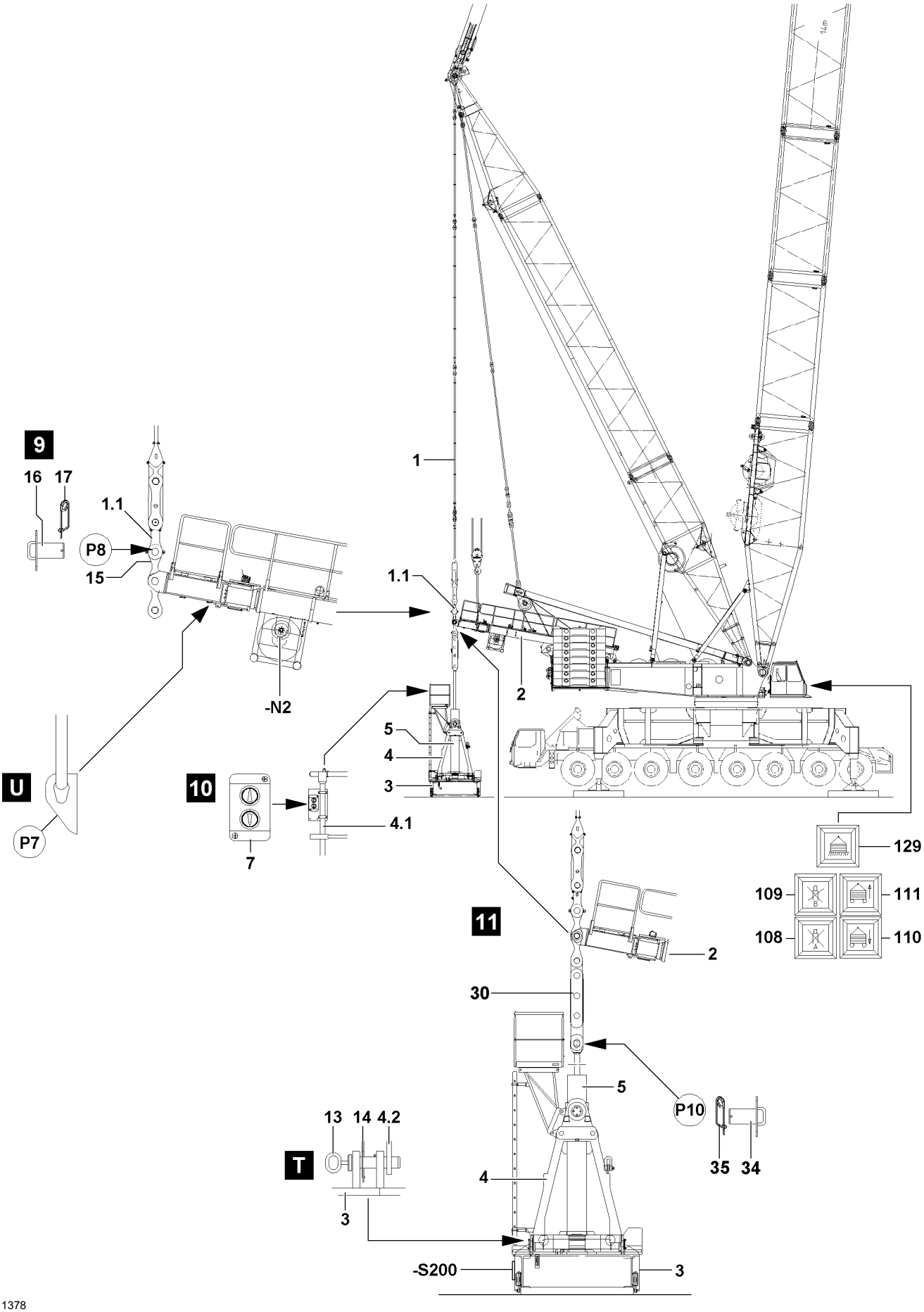
9
16
17
1.1
P8
15
-N2
1
1.1
2
5
4
3
U
P7
10
7
4.1
129
109
111
108
110
11
2
30
5
P10
35
34
13
14
4.2
T
4
3
-S200
3

B111378

5.6 Disassembling the derrick ballast guying on the guide frame

For disassembly of the derrick ballast guying on the guide frame, it is required to raise the guide frame with the auxiliary crane until the derrick ballast guying is relieved and the connection pins can be unpinned.

- ▶ Attach the guide frame **2** onto the lashing lugs **2.3** on the auxiliary crane, see illustration **U**.
- ▶ Lift the guide frame **2** with the auxiliary crane.
- ▶ When the derrick ballast guying **1** is relieved:
  Remove the spring retainer **17** on both sides and unpin the pin **16** at point **P8**.
- ▶ When the pins **16** are completely unpinned:
  Carefully lay down guide frame **2** with auxiliary crane onto the receptacle on the turntable.
- ▶ When the guide frame **2** is laying on the turntable:
  Remove the auxiliary crane.

5.7 Releasing the electrical connection from the guide frame to the turntable

Note

- ▶ Disconnect electrical connections first after the derrick ballast guying is disassembled and the guide frame is completely placed on the turntable!

- ▶ Disconnect the electrical connections and store on the guide frame properly.

5.8 Loosening the hydraulic connections from the guide frame to the turntable

When hydraulic lines are connected and disconnected with quick-release couplings, make ensure that the coupling procedure is being performed correctly.

DANGER

Risk of accident due to loss of pressure or leakage!

Incorrectly coupled or incompletely coupled quick-release couplings (particularly return lines) as well as self-loosening of quick-release couplings can result in serious injury due to component failure!

- ▶ Check that the quick-release couplings have been properly connected before using the crane!

- ▶ Release the pressure in the hydraulic system before connecting and disconnecting. Turn the engine off and wait several minutes.
- ▶ Unscrew coupling components (sleeve and connector) by using hand-tightened nut.
- ▶ Disconnect the coupling sections
- ▶ Store hydraulic hoses on the guide frame correctly.
- ▶ Install protective caps on the coupling components to protect them from contamination and damage.

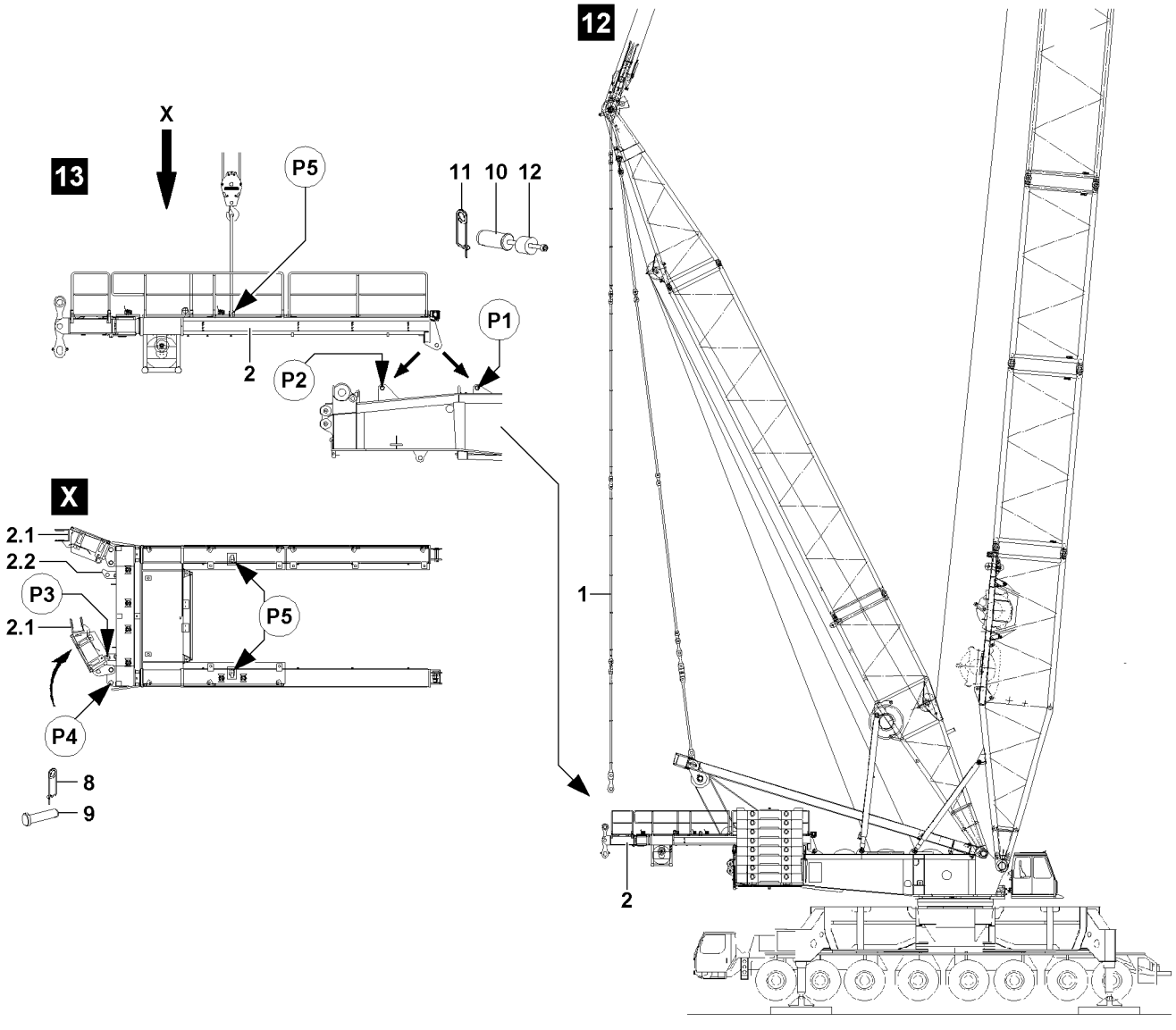

B111379

5.9 Disassembling the guide frame on the turntable

- ▶ Attach guide frame **2** onto the lashing lugs point **P5** on auxiliary crane.
- ▶ Tension the tackle carefully.
- ▶ When the tackle is tensioned:
  Remove spring retainer **11** on both sides and unpin pins **10**.

NOTICE
Damage to crane!
By swinging out the guide frame **2**, there can result severe property damages in the area of the turntable or the guide frame!
- ▶ Swing out guide frame carefully and with the least possible speed!

- ▶ Lift guide frame **2** and swing out on the turntable.
- ▶ Lay down guide frame **2** against toppling.
- ▶ Remove the auxiliary crane.

5.10 Folding the swing arms in on the guide frame

In order to reestablish the transport width after disassembly of the guide frame, bring the swing arms **2.1** - after crane operation - back into transport position and secure.

Bring the swing arms **2.1** into transport position and secure.
- ▶ Release and unpin locking pins **8** on both sides at point **P4**.
- ▶ Fold the swing arms **2.1** in into operating position (direction of the arrow).
- ▶ When the swing arms **2.1** are in transport position:
  Insert the locking pins **8** on the left and right at point **P3** and secure with spring retainers **9**.

1

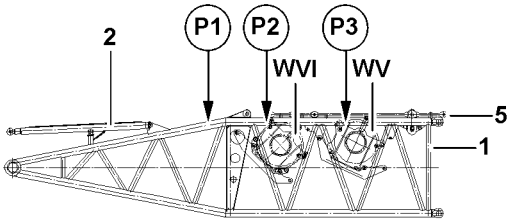

2

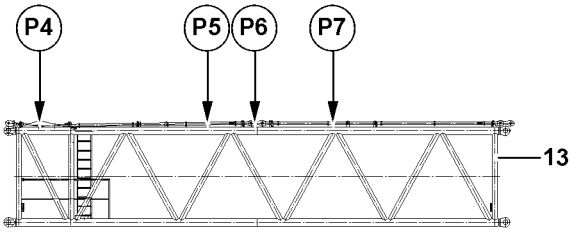

3

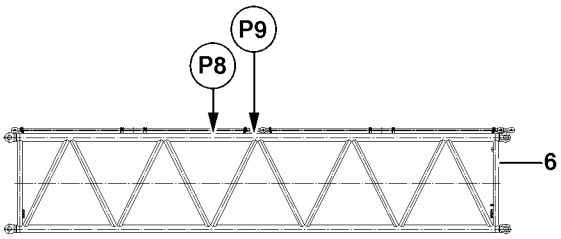

4

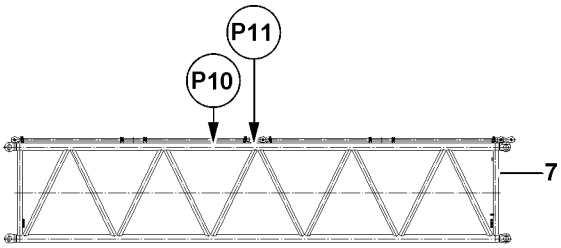

5

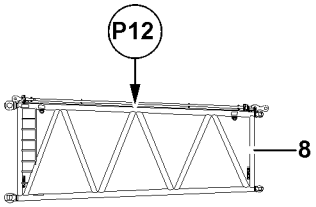

6

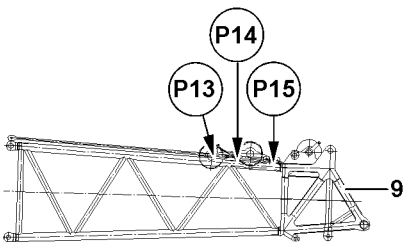

B112549

1 Component overview S-/SL-boom

Examples for components of S-/SL-boom:

1	S-pivot section	• Pivot section with winch 5 **WV**, winch 6 **WVI** and W-guy rods **5**, see illustration **1**
2	S-relapse retainer	• See illustration **1**
13	S-intermediate section 2826.20	• Intermediate section 14 m with guy bracket on point **P4** for flying assembly, see illustration **2**
6	S-intermediate section 2826.30	• Intermediate section 14 m, reinforced intermediate section for S-system, see illustration **3**
7	S-intermediate section 2826.20	• Intermediate section 14 m, standard intermediate section for S-system, see illustration **4**
8	SL-reducer section	• See illustration **5**
9	S-end section	• See illustration **6**

2 Fastening points S-/SL-components

WARNING
Component incorrectly attached!
Life-threatening situations can arise due to improper or incorrect attachment of the corresponding components!
Personnel can be severely injured or killed!
▶ Attach the components only on the intended fastening points on both sides!
▶ Attachment of components and description of fastening points, see Crane operating instructions, chapter 5.01!

Component	Fastening point	Illustration
S-pivot section, without winches	P1 and P2	1
S-pivot section, with winches	P1 and P3	1
S-intermediate section 2826.20 for flying assembly	P5 and P6	2
S-intermediate section, without usage	P7	2
S-intermediate section 2826.30, reinforced	P8 and P9	3
S-intermediate section 2826.20	P10 and P11	4
SL-reducer section	P12	5
S-end section, without pulley set	P13 and P14	6
S-end section, with pulley set	P13 and P15	6

B195219

3 Assembling the S/SL boom

Note

▶ The assembly is described on the example of the S-boom!

WARNING

Danger of falling!

During assembly / disassembly, inspection and maintenance work, personnel must be secured with appropriate aids to prevent them from falling! If this is not observed, assembly personnel could fall and suffer life-threatening or fatal injuries!

- ▶ All work aloft, where there is a danger of falling must be carried out with suitable aids!
- ▶ If fall arrest equipment is available, then it must be used, see Crane operating instructions, chapter 2.06!
- ▶ If aids are not available and work cannot be carried out from the ground, then the assembly personnel must secure themselves with the permissible fall arrest system to prevent falling, see Crane operating instructions, chapter 2.04!
- ▶ The fall arrest system must be fastened on the fastening and hook points as well as on the safety ropes. For safety points, see Crane operating instructions, chapter 2.06!
- ▶ Only step on the aids, ladders and catwalks with clean shoes!
- ▶ Keep aids, ladders and catwalks free of heavy dirt, snow and ice!
- ▶ It is prohibited to walk on the telescopic or an auxiliary boom without suitable protective devices!

WARNING

The lattice sections can fall down!

If the lattice sections are not pinned and secured correctly, then they can fall down and fatally injure personnel!

- ▶ Pin or unpin both pins at the same horizontal level, i.e. **left and right**!
- ▶ Do not stand under the lattice sections or within the entire danger zone during the pinning and unpinning procedure of the boom!
- ▶ Secure the pins in the bearing points and the receptacles!
- ▶ It is prohibited to lean the ladder against the components being disassembled!
- ▶ Do not remove the fastening equipment and the auxiliary crane until each component is pinned on and secured!

WARNING

Danger of impact / crushing!

When installing / removing crane components with the auxiliary crane, crane components can start to swing back and forth!

When lifting / lowering and positioning crane components, there is an increased danger of impacts / crushing!

Personnel can be caught and severely injured or killed!

- ▶ Make sure that personnel cannot be caught by components!
- ▶ Make sure that the crane is aligned in horizontal position to avoid the support beams from swinging by themselves!
- ▶ When working in danger zones: Use aids to protect limbs!
- ▶ Guide components with suitable aids to minimize oscillation!

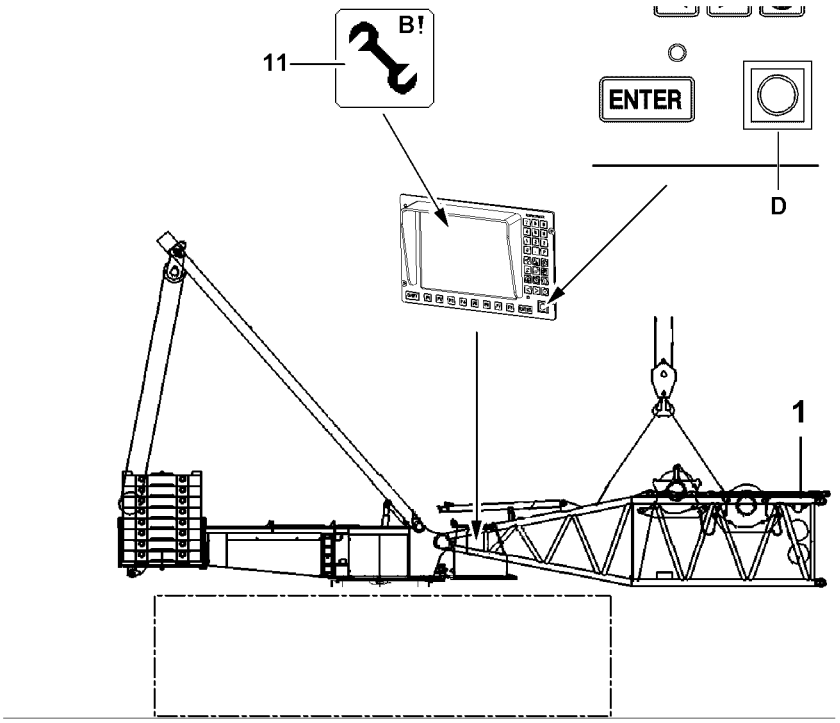

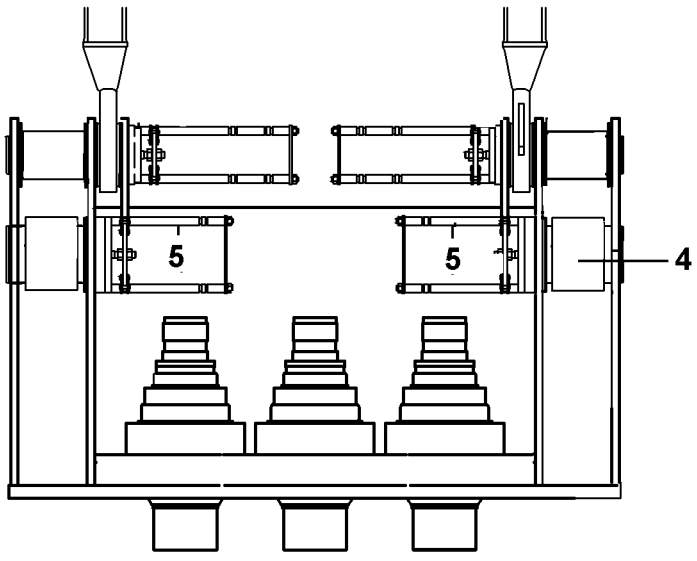

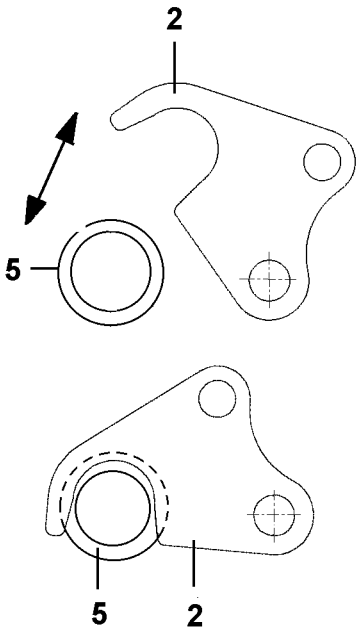

B111616

WARNING
The crane can topple over!
- ▶ The turntable may not be turned during the assembly of the boom!
- ▶ Observe the instructions, see Crane operating instructions, chapter 3.06!

WARNING
Danger of accident!
If the following instructions are not observed, personnel can be severely injured or killed!
- ▶ For assembly of the boom combinations, the rod plan must be observed and adhered to!
- ▶ Depending on the condition of the ground, the boom and the lattice sections must be supported from below for the assembly of the boom!
- ▶ Observe the Safety technical notes, see Crane operating instructions, chapter 5.01!

Make sure that the following prerequisites are met:
- – The crane is aligned in horizontal direction.
- – An auxiliary crane is available.
- – An assembly scaffolding / work platform is available.
- – The central ballast has been attached according to the load chart.
- – The counterweight has been installed on the turntable according to the load chart.
- – The LICCON overload protection has been set according to the data in the load chart.

3.1 Turning the turntable into assembly position

- ▶ Turn the turntable in longitudinal direction of the crawler travel gear or to the side, see Erection and take down charts.

3.2 Exceeding the LICCON overload protection for assembly

WARNING
Assembly with turned on set up key!
When the set up key is engaged, the LICCON overload protection is exceeded!
In the event of deliberate improper use, the crane could collapse, the boom can break off or the crane can topple over!
Personnel can be killed!
This could result in high property damage!
- ▶ The set up key **D** may only be actuated by persons who know the effects of a bypass!
- ▶ Press the set up key **D** only when the set up status was correctly entered into the LICCON computer system!
- ▶ Observe the erection / take down charts!
- ▶ Crane operation with the set up key **D** turned on is strictly prohibited!

- ▶ Turn the set up key **D** to the right.

Result:
- – The LICCON overload protection is exceeded.
- – The assembly icon **11** appears in the LICCON monitor.

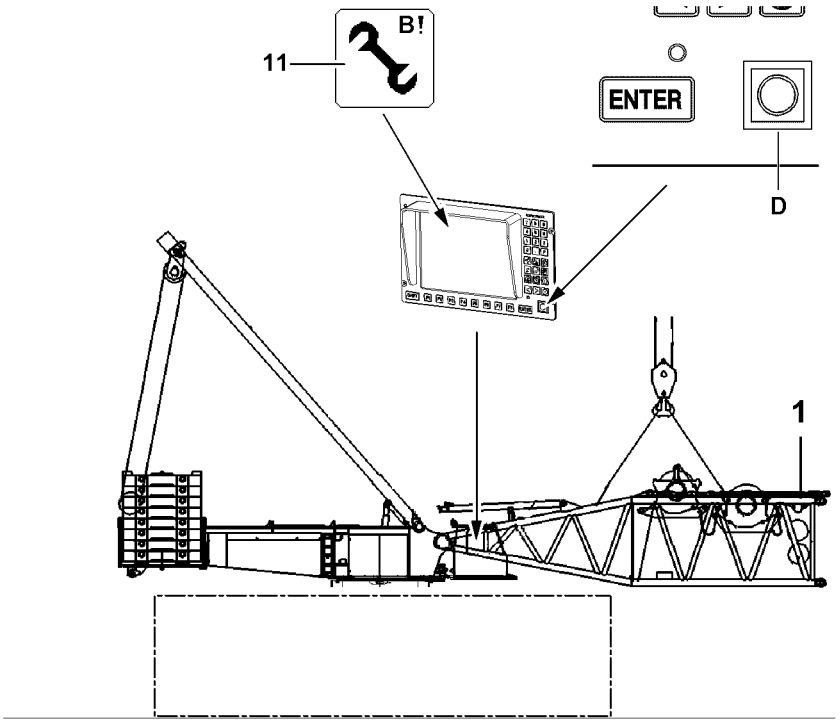

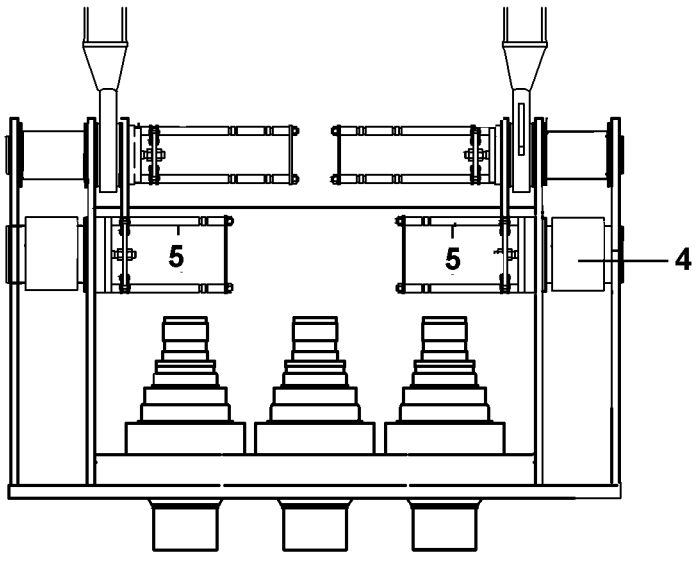

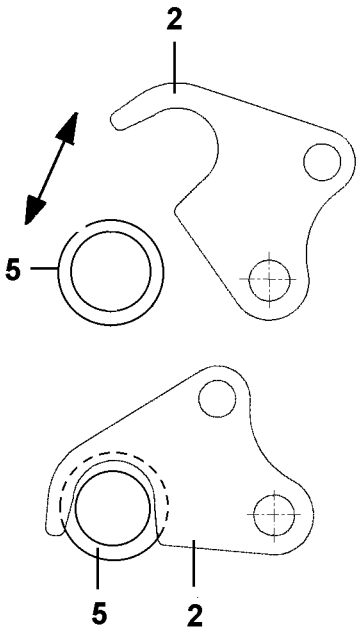

B111616

3.3 Pinning the S-pivot section on the turntable

WARNING
General danger notes!
- ▶ Support the S-boom during assembly with suitable materials!
- ▶ All pins are to be secured after assembly with the intended safety elements!
- ▶ The guy rods must be inspected regularly, see Crane operating instructions, chapter 8.15!

Make sure that the following prerequisite is met:
– The pins **4** are unpinned.

▶ Hang the S-pivot section **1** onto the auxiliary crane and swing in to the pin points on the turntable.

The pin pulling cylinders on the turntable are actuated with the radio remote control (only available for LR-cranes).

Note
- ▶ For operation of the radio remote control, see Crane operating instructions, chapter 6.08!

WARNING
The S-pivot section can fold downward!
Due to non-secured or insufficiently secured connector pins, the S-pivot section can fold down.
Personnel can be severely injured or killed!
- ▶ Secure the pins **4** between the S-pivot section **1** and the turntable after the pinning procedure with the retaining hook **2**!

- ▶ Fold the retaining hook **2** out on the guides **5**.
- ▶ Insert the pins **4** on both sides.
- ▶ When the pins **4** are completely pinned on the left and right on the S-pivot section **1**:
  Secure the pin **4**: Fold the retaining hook **2** in on the left and right on the guides **5**.

NOTICE
Damage to the S-pivot section!
When the installed S-pivot section is placed on the ground, the S-pivot section can be damaged!
- ▶ Slowly place the S-pivot section **1** with the auxiliary crane and at low speed on the ground!
- ▶ Before placing it on the ground, support the S-pivot section **1**!

- ▶ Carefully place the S-pivot section **1** on the support.
- ▶ Remove the auxiliary crane.

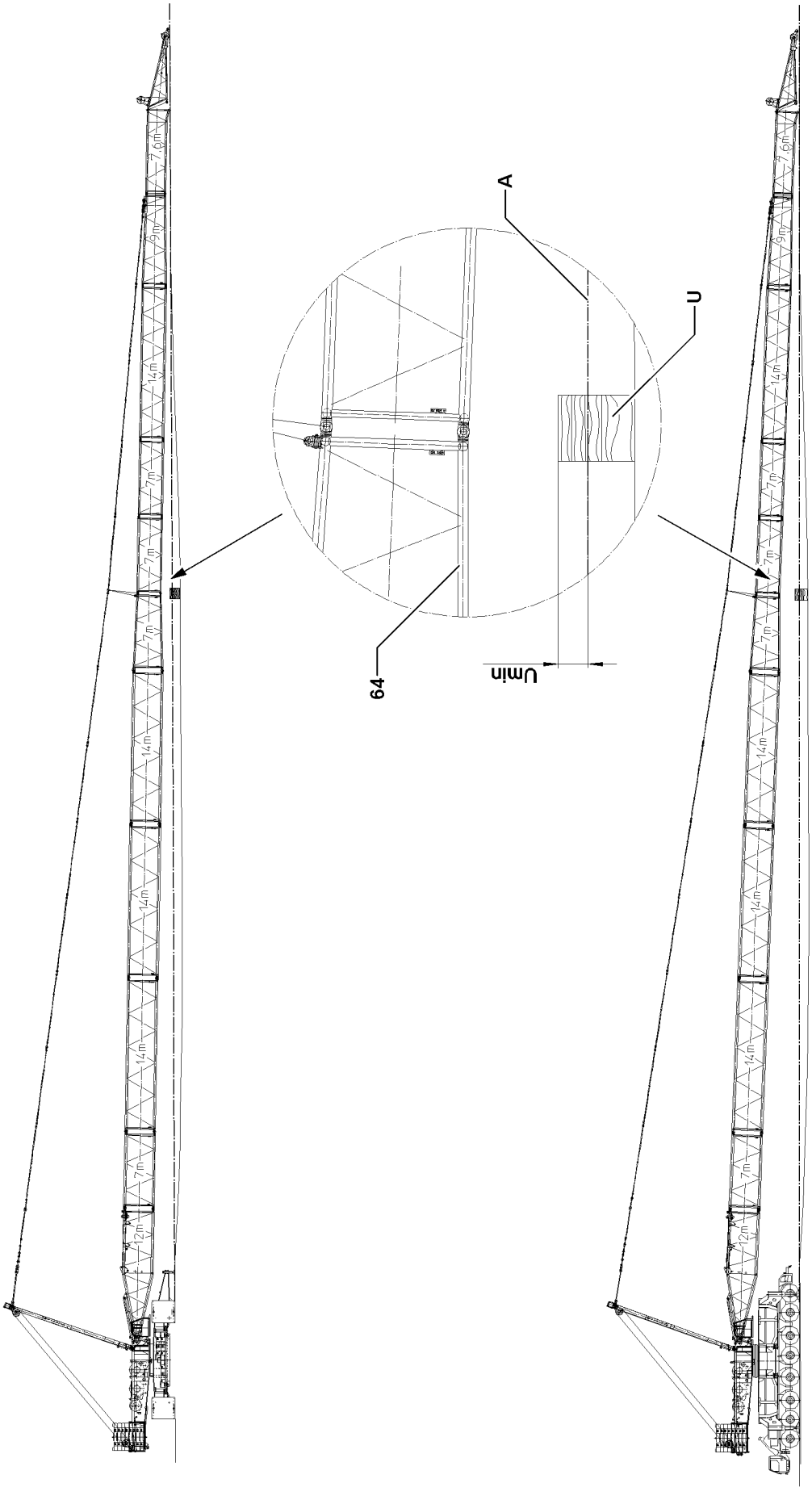

B111626

3.4 Supporting the S/SL-boom combination for erection

NOTICE
Overload of boom!
If the SL-boom is not supported before the erection procedure, then the boom will be overloaded! The crane will be damaged during erection!
- ▶ For boom lengths SL/SL2, larger than 104 m, a support base must be used!
- ▶ Support the boom with suitable material of sufficient load bearing capacity!

Note
- ▶ The alignment level **A** is the placement level of the crane!

Note
- ▶ The boom combination must be supported on the reducer section **64** with the lug for the auxiliary guying until the dimension U_{min} above the alignment level **A**, see illustration and the following charts!

LR-crane	Boom system	U_{min}	Equipment
	SL-105m	0.0 m to 0.3 m	- Adapter 7.6 m - Boom nose 100 t

LG-crane	Boom system	U_{min}	Equipment
	SL-105m	Larger than 1.10 m	- Adapter 7.6 m - Boom nose 100 t
	SL-112m	Larger than 0.90 m	
	SL-115.5 m	Larger than 0.90 m	

- ▶ Make sure that the upper edge of the base support **U** is dimension U_{min} above the alignment level **A**.
- ▶ Place the SL/SL2-boom combination on the supporting base **U**.

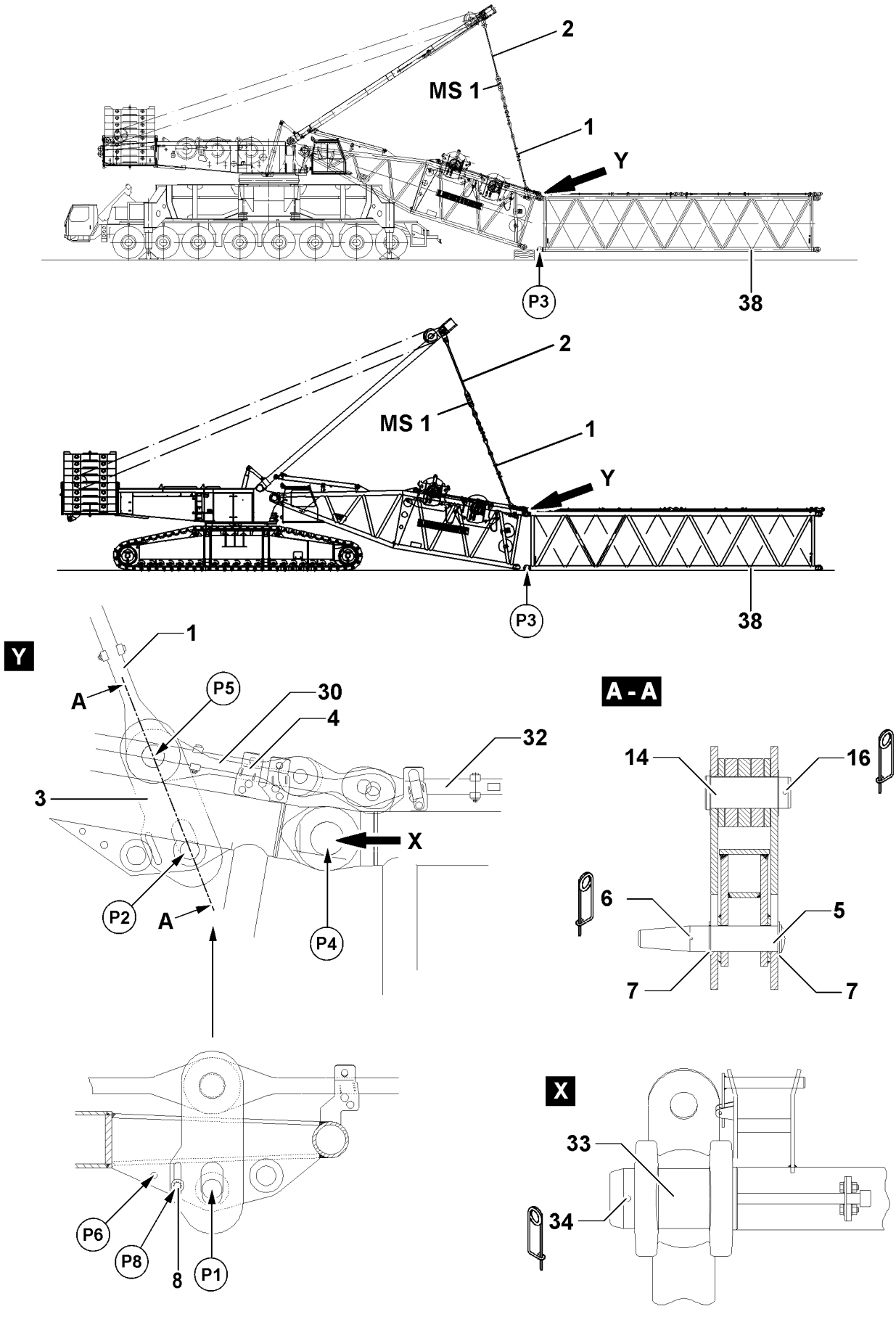
2
MS 1
1
Y
P3
38
2
MS 1
1
Y
P3
38
Y
1
A
P5
30
4
32
3
X
P2
A
P4
A - A
14
16
6
5
7
7
X
33
34
P6
P8
8
P1

B112553

3.5 Assembling the S-lattice sections

The assembly of the lattice sections is carried out in various ways:

– “Closing” the boom.
– Assembling the lattice sections in “Flying mode”.

WARNING

General danger notes!

- ▶ Support the S-boom during assembly / disassembly with suitable materials!
- ▶ All pins are to be secured after assembly with the intended safety elements!
- ▶ The guy rods must be inspected regularly, see Crane operating instructions, chapter 8.15!
- ▶ Secure the boom with support or auxiliary crane, see Crane operating instructions, chapter 5.01!
- ▶ It is prohibited for anyone to remain under the booms or within the complete danger zone during the pinning and unpinning procedure of the lattice section!

Note

- ▶ For weights of intermediate sections with placed guy rods, see Crane operating instructions, chapter 1.03!
- ▶ The intermediate sections are pinned with the aid of the pin pulling device, see Crane operating instructions, chapter 5.30!

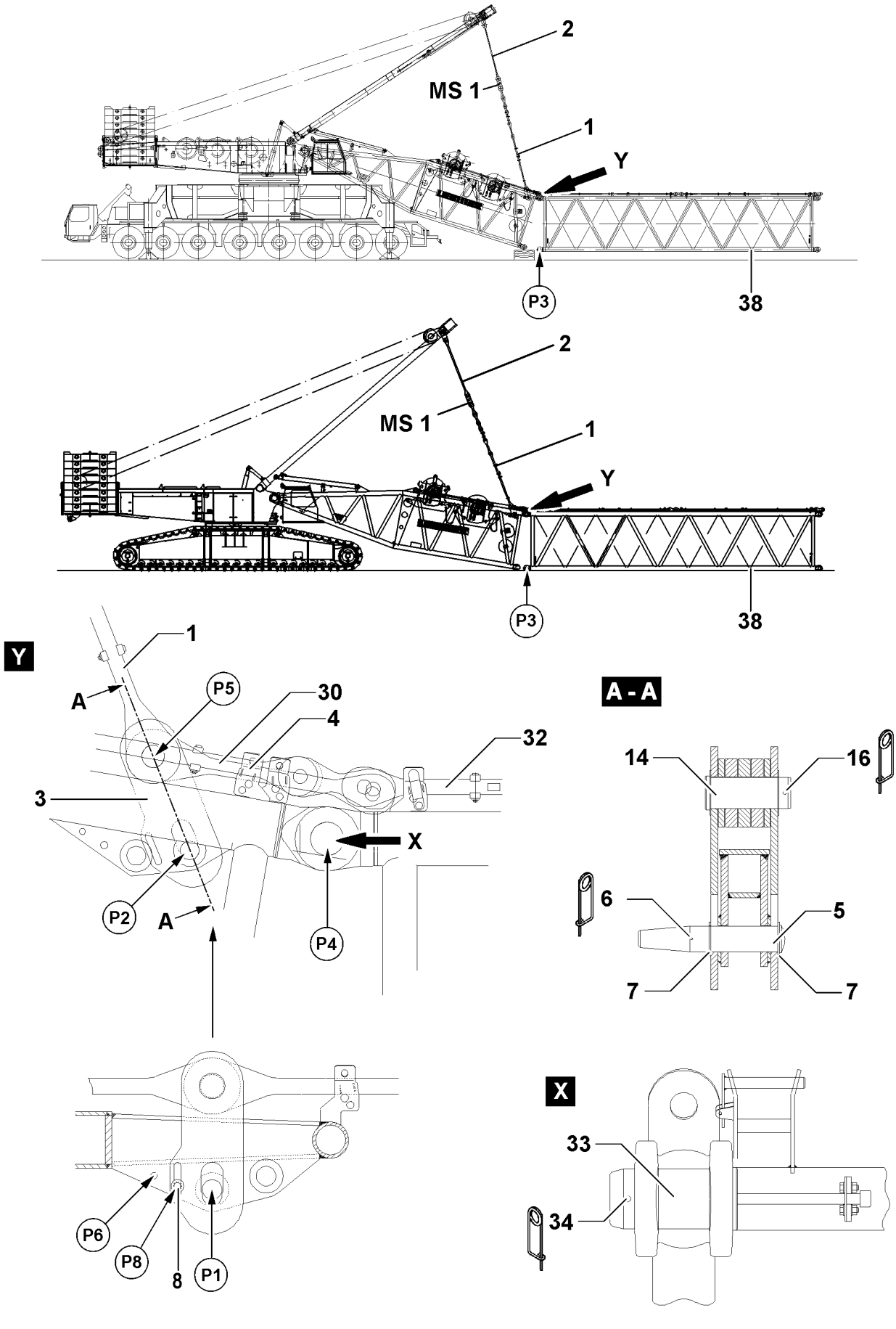
2
MS 1
1
Y
P3
38
2
MS 1
1
Y
P3
38
Y
1
A
P5
30
4
32
3
X
P2
A
P4
A - A
14
16
6
5
7
7
P6
P8
8
P1
X
33
34
B112553

3.5.1 Assembling the S-lattice sections (“close” boom)

Make sure that the following prerequisites are met:
- The S-pivot section is pinned and secured on the turntable.
- The S-pivot section is placed on the ground.
- The auxiliary crane is removed.

Connecting the guy rods SA-frame with the guy rods S-pivot section

NOTICE
Assembly bracket secured in transport position!
When the assembly bracket **3** is secured in transport position at assembly or operation, components will be damaged!
▶ Assemble the transport retainer **8** before assembly and before operation in transport position on point **P6**, see detail **Y**!

Note
▶ Flying assembly with derrick: The assembly bracket **3** is pinned on point **P1**!

▶ Release the assembly bracket **3**: Disassemble the transport retainer **8** on both sides on point **P8** and assemble on point **P6**.
▶ Unpin the assembly bracket **3** on the S-pivot section: Remove the spring retainer **6** and unpin the pin **5** on both sides on point **P1**.

When pinning the pin **5**, you have to use the washers **7**, see sectional **A-A**.
▶ Pin the assembly bracket **3** on the S-pivot section: Insert the pins **5** on both sides on point **P2** and secure.
▶ Unpin the transport retainers **4** for the guy rods.
▶ Lower the SA-frame to the front until the guy rods **2** hang freely over the guy rods **1** of the S-intermediate section.
▶ Pin the guy rods **2** of the SA-frame with the guy rods **1** of the S-pivot section and secure.
▶ Make sure that the guy rod **1**, guy rod **4** and assembly bracket **3** are pinned with each other, point **P5** see detail **D**.
▶ Make sure that the assembly bracket **3** is secured with spring retainer **16**.
▶ Erect the SA-frame to the point where the guy rods are completely tensioned, see illustration.

Pinning the S-intermediate section on the S-pivot section on top
▶ Attach the S-intermediate section on the auxiliary crane and align on the S-pivot section until the pin bores align.
▶ When the pin bores on the S-pivot section and on the S-intermediate section align:
Pin the S-intermediate section on the S-pivot section “on top”: Insert the pin **33** on both sides at point **P4** and secure with spring retainer **34**, see detail **X**.

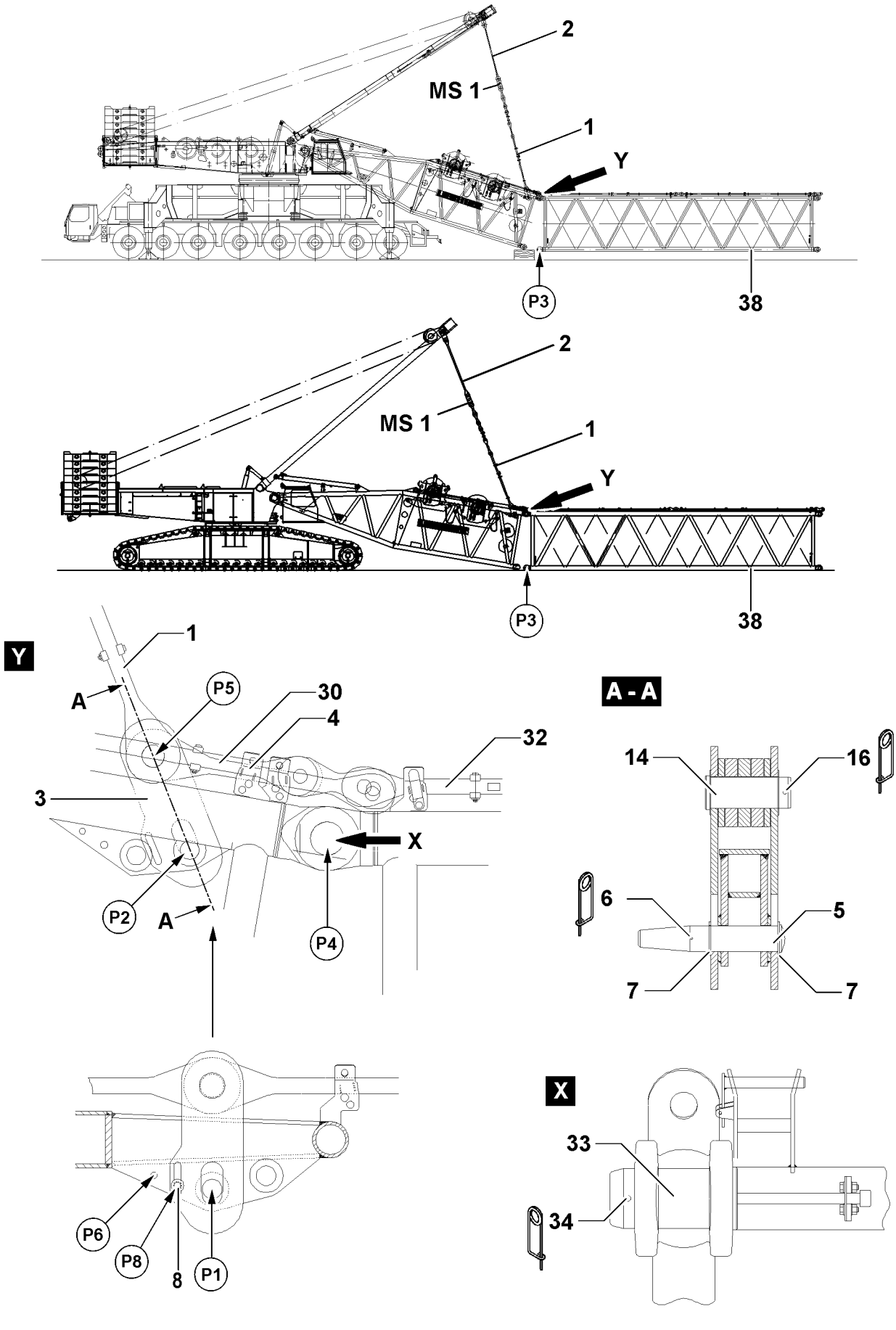
2
MS 1
1
Y
P3
38
2
MS 1
1
Y
P3
38
Y
1
A
P5
30
4
32
3
X
P2
A
P4
A - A
14
16
6
5
7
7
P6
P8
8
P1
X
33
34

B112553

Closing the boom

WARNING
The crane can topple over!
If the following conditions are not met, the crane can topple over or be significantly damaged!
Personnel can be severely injured or killed!

- ▶ The end section of the corresponding S/SL-boom combination may **not** lift off the ground during the “Closing procedure”!
- ▶ Boom combinations only to a certain system length may be closed with the SA-frame, see the following chart!

Crane	Boom system	Maximum system length	Equipment
LR	S	84 m	- with S- and WA-frame II guy rods - base support on S-pivot section and on S-end section
	SL	98 m	- with S-guy rods - base support on S-pivot section and on L-end section
LG	S	91 m	- with S- and WA-frame II guy rods - base support on S-pivot section and on S-end section
	SL	98 m	- with S-guy rods
			- base support on S-pivot section and on L-end section
	SL	105 m	- with S-guy rods - base support on S-pivot section, on L-end section and on the end of the reducer section

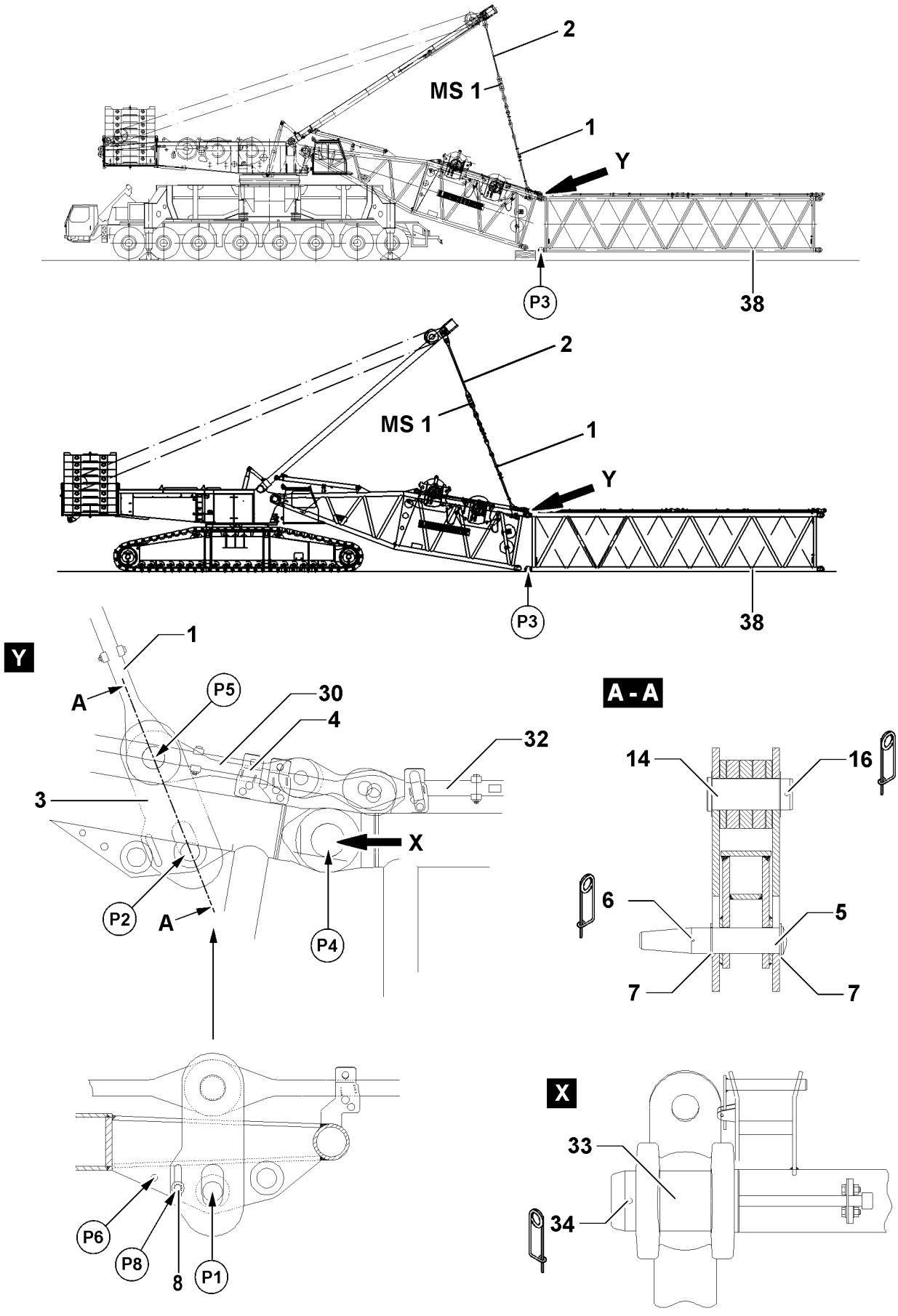
2
MS 1
1
Y
P3
38
2
MS 1
1
Y
P3
38
Y
1
A
P5
30
4
32
3
X
P2
A
P4
A - A
14
16
6
5
7
7
X
33
34
P6
P8
8
P1

B112553

Note

- The actual force on the test point **MS1** - which is exerted during the closing procedure of the boom system - is shown on the LICCON monitor 1!
- The actual force is noted and kept ready for the disassembly of the boom system!
- During the boom disassembly, the guying is tensioned with the noted actual force (assembly) so that the connector pins of the intermediate sections can be unpinned!

Note

- The guy rods of the intermediate sections are only assembled after the closing procedure!
- The brackets **30** and guy rods **32** are not pinned for the closing procedure!

The S-boom must be assembled to the required length before the S-boom can be closed. The assembly is described on the example of an intermediate section.

- Position the S-intermediate section with the auxiliary crane on the S-pivot section until the pin points align.
- Pin the S-lattice sections with each other: Insert the pin **33** on both sides “on top” and secure with spring retainer **34**, see detail **X**.
- Pin the S-lattice sections with each other: Insert the pin **33** on both sides “on the bottom” and secure with spring retainer **34**, see detail **X**.
- When the S/SL-boom combination is assembled to the desired length:
  Lift the S-pivot section **1** with the SA-frame until the pin bores on the “bottom” align at point **P3**.
- Read the actual force of the test point **MS1** on the LICCON monitor and note.
- Pin the S-lattice section on the S-pivot section “on the bottom”: Insert the pin **33** on both sides at point **P3** and secure with spring retainer **34**, see detail **X**.

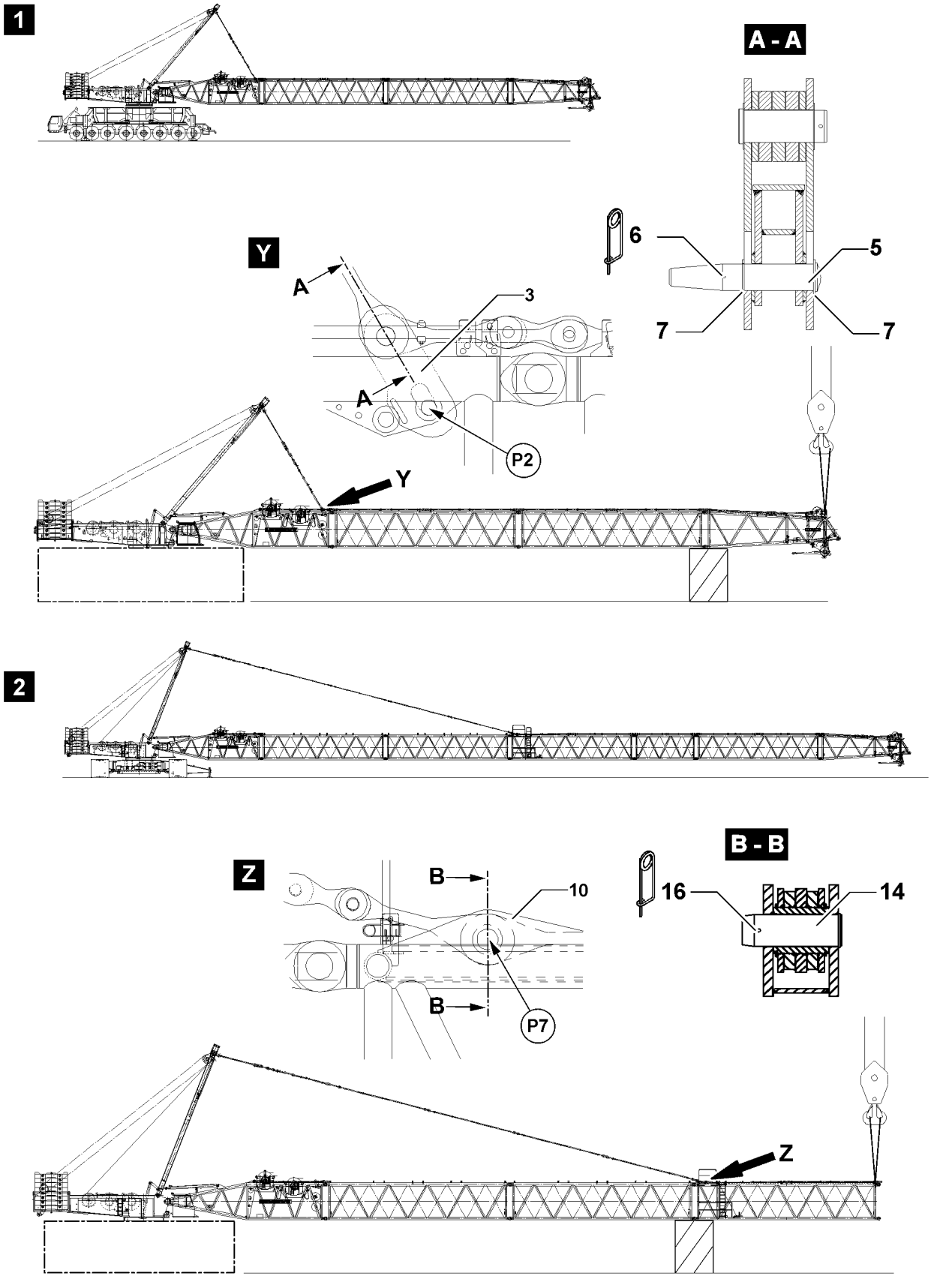

B112554

3.5.2 Assembling the S-lattice sections in “Flying mode”

If spatial prerequisites on the job site are limited for the assembly of the S-boom, or if they are limited by buildings or similar, then the S-boom can be installed in flying mode.
For the flying assembly, a differentiation is made between the guy points on the boom:

– Guying on S-pivot section, see illustrations **1**.
– Guying on the S-intermediate section 14 m 2620.20 for flying assembly, see illustrations **2**.

WARNING
General danger notes!

- ▶ Support the S-boom during assembly / disassembly with suitable materials!
- ▶ All pins are to be secured after assembly with the intended safety elements!
- ▶ The guy rods must be inspected regularly, see Crane operating instructions, chapter 8.15!
- ▶ Secure the boom with support or auxiliary crane, see Crane operating instructions, chapter 5.01!
- ▶ It is prohibited for anyone to remain under the booms or within the complete danger zone during the pinning and unpinning procedure of the lattice section!

WARNING
Impermissible boom lengths guyed!
If impermissible boom lengths are guyed on the assembly brackets, then significant property damage can occur on the crane! Personnel can be severely injured or killed!

- ▶ The maximum permissible boom lengths for the “Flying assembly” may not be exceeded!
- ▶ Pin the guy rods either on the assembly brackets **3**, point **P2**, illustration **1** or the assembly brackets **10**, point **P7**, illustration **2**!
- ▶ The data in the erection and take down charts as well as the load charts must be observed!

Note

- ▶ For weights of intermediate sections with placed guy rods, see Crane operating instructions, chapter 1.03!

Note

- ▶ When guying on the S-pivot section, you have to use the washer **7** when inserting the pin **5**, see illustration **1**, sectional **A-A**!
- ▶ For guying on the S-pivot section, the pin **5** is inserted on both sides on the assembly brackets **3** on point **P2** and secured with the spring retainer **6**!
- ▶ For guying on the S-intermediate section 14 m 2620.20 for flying assembly, the pin **14** is inserted on both sides on the assembly brackets **10** on point **P7** and secured with the spring retainer **16**!

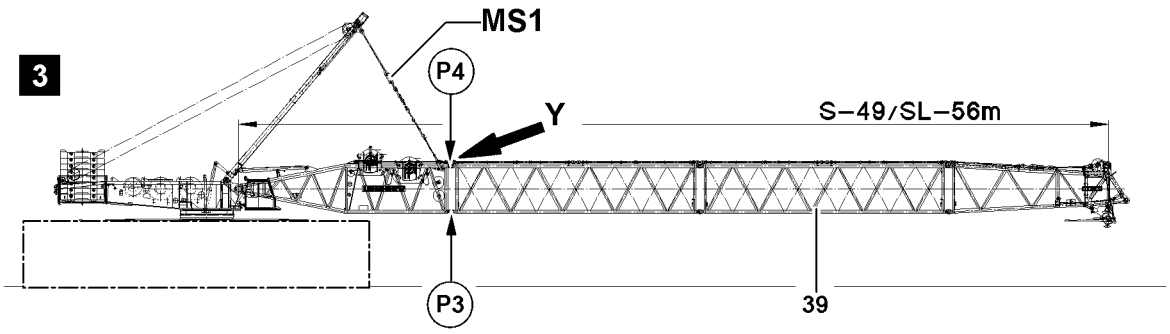
3
MS1
P4
Y
S–49/SL–56m
P3
39

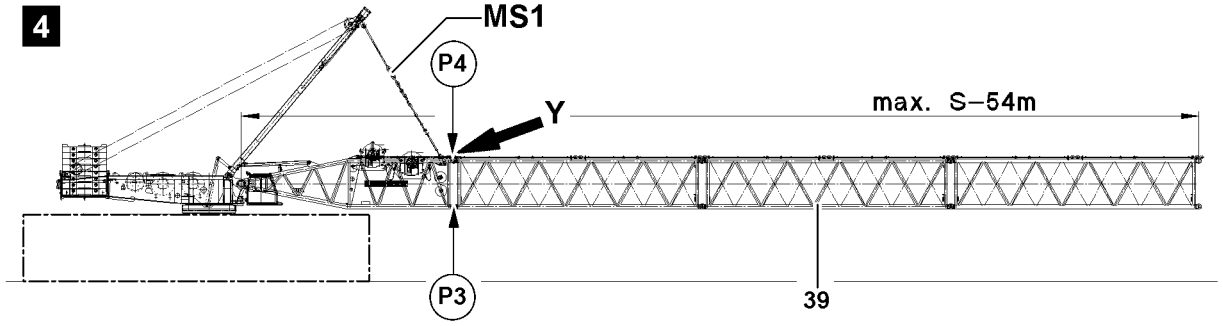
4
MS1
P4
Y
max. S–54m
P3
39

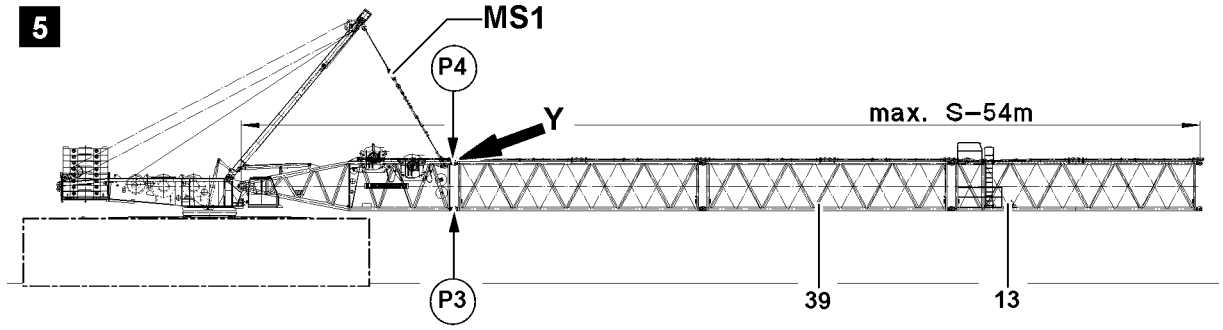
5
MS1
P4
Y
max. S–54m
P3
39
13

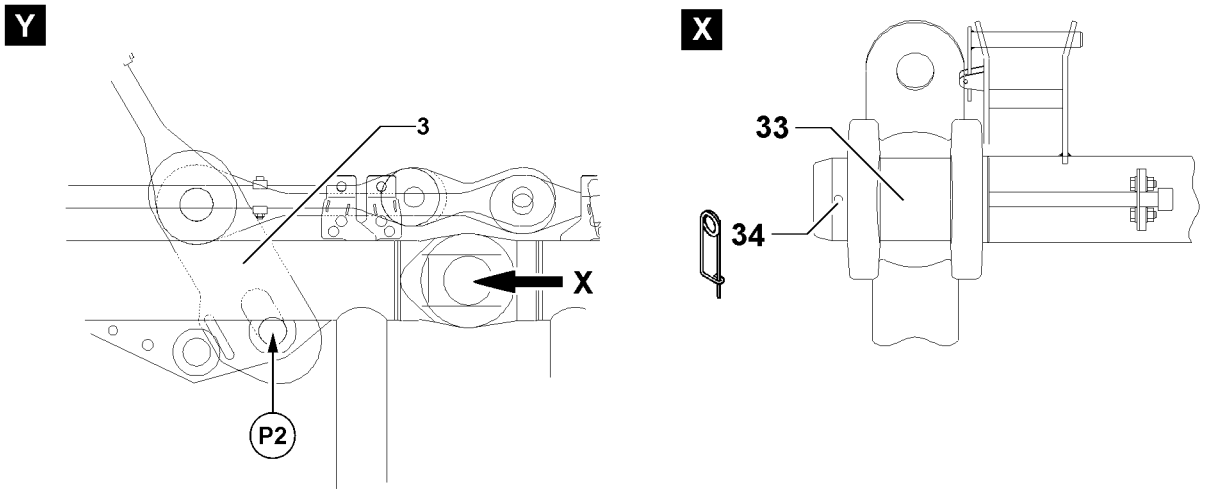
Y
3
X
P2
X
33
34

B112555

Assembling the S-intermediate sections in “Flying mode” on the S-pivot section

WARNING
The crane can topple over!
If the following conditions are not met, the crane can topple over or be significantly damaged!
Personnel can be severely injured or killed!

- ▶ For the “flying” boom assembly, the maximum permissible total force on the test point **MS1** may **not** be exceeded. The “Actual force” is shown on LICCON monitor 1!
- ▶ The “flying” boom assembly is only permissible up to a certain system length, observe the following charts!
- ▶ The data in the erection and take down charts as well as the load charts must be observed!

LR-crane	**Turntable in travel direction, ZB_{min} 2) 45 t**			
Boom system	**Maximum system length**	**Equipment (without hook block)**	**Maximum force MS1**	**Minimum DB_{min} 1)**
S	49 m	- with S- and WA-frame II guy rods - with end section	160 t	120 t
S	54 m	- with S- and WA-frame II guy rods - **with intermediate section 2826.20 with guy brackets** - without end section	160 t	120 t
SL	56 m	- with S-guy rods - with L-end section	160 t	120 t

1) This counterweight must be at least installed on the turntable for “Flying assembly”.
2) This central ballast must be at least installed on the crawler center section for “Flying assembly”.

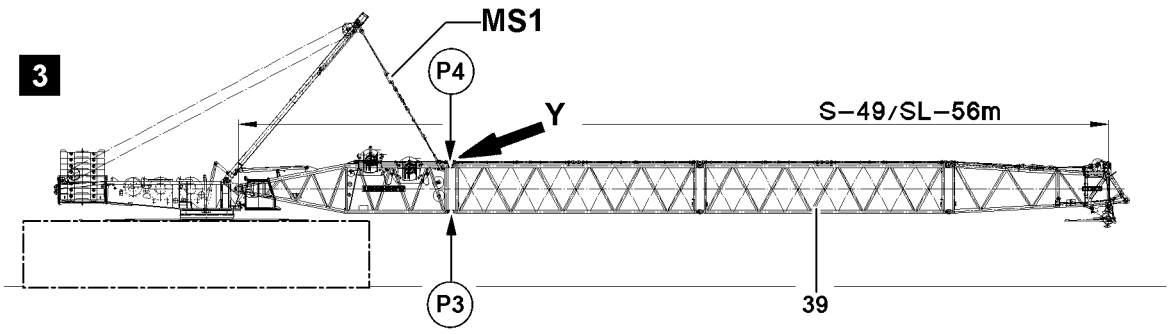
3
MS1
P4
Y
S–49/SL–56m
P3
39

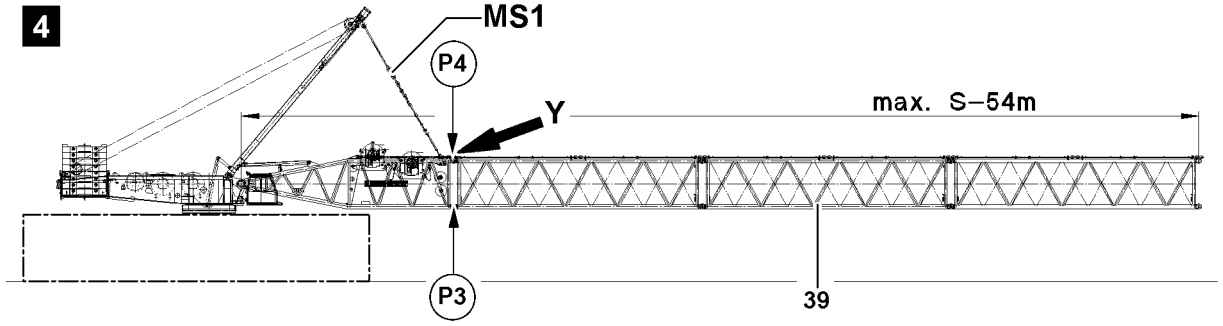
4
MS1
P4
Y
max. S–54m
P3
39

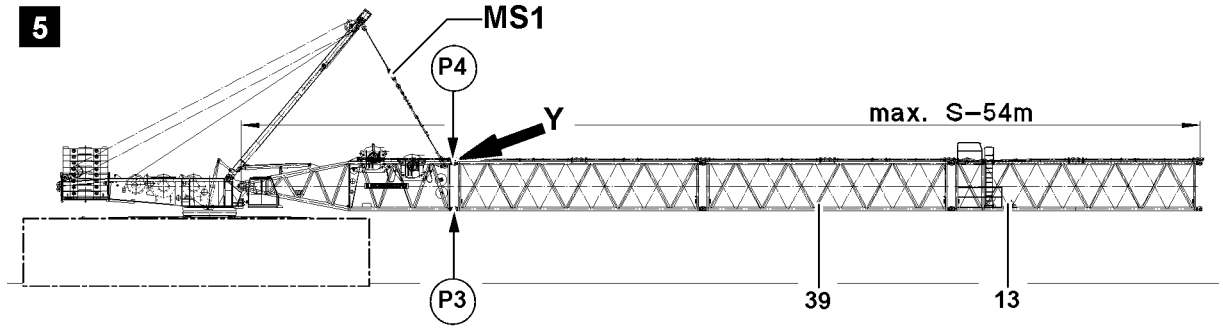
5
MS1
P4
Y
max. S–54m
P3
39
13

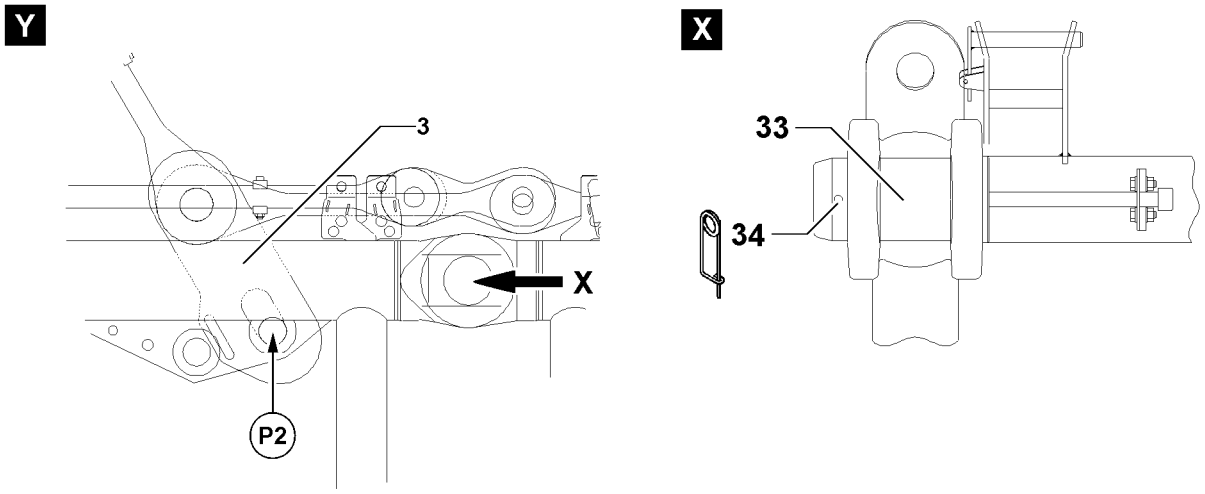
Y
3
X
P2
X
33
34

B112555

LG-crane	Turntable in travel direction				
Boom system	**Maximum system length**	**Equipment (without hook block)**	**Maximum force MS1**	**DB_{min} 1)**	**Support base**
S	49 m	- with S- and WA-frame II guy rods	160 t	70 t	12 m x 12 m
		- with end section		45 t	16 m x 16 m
S	54 m	- **with intermediate section 2826.20 with guy brackets** - with S- and WA-frame II guy rods - without end section	160 t	120 t	12 m x 12 m or 16 m x 16 m
SL	56 m	- with S-guy rods	160 t	70 t	12 m x 12 m
		- with L-end section		45 t	16 m x 16 m

1) This counterweight must be at least installed on the turntable for “Flying assembly”.

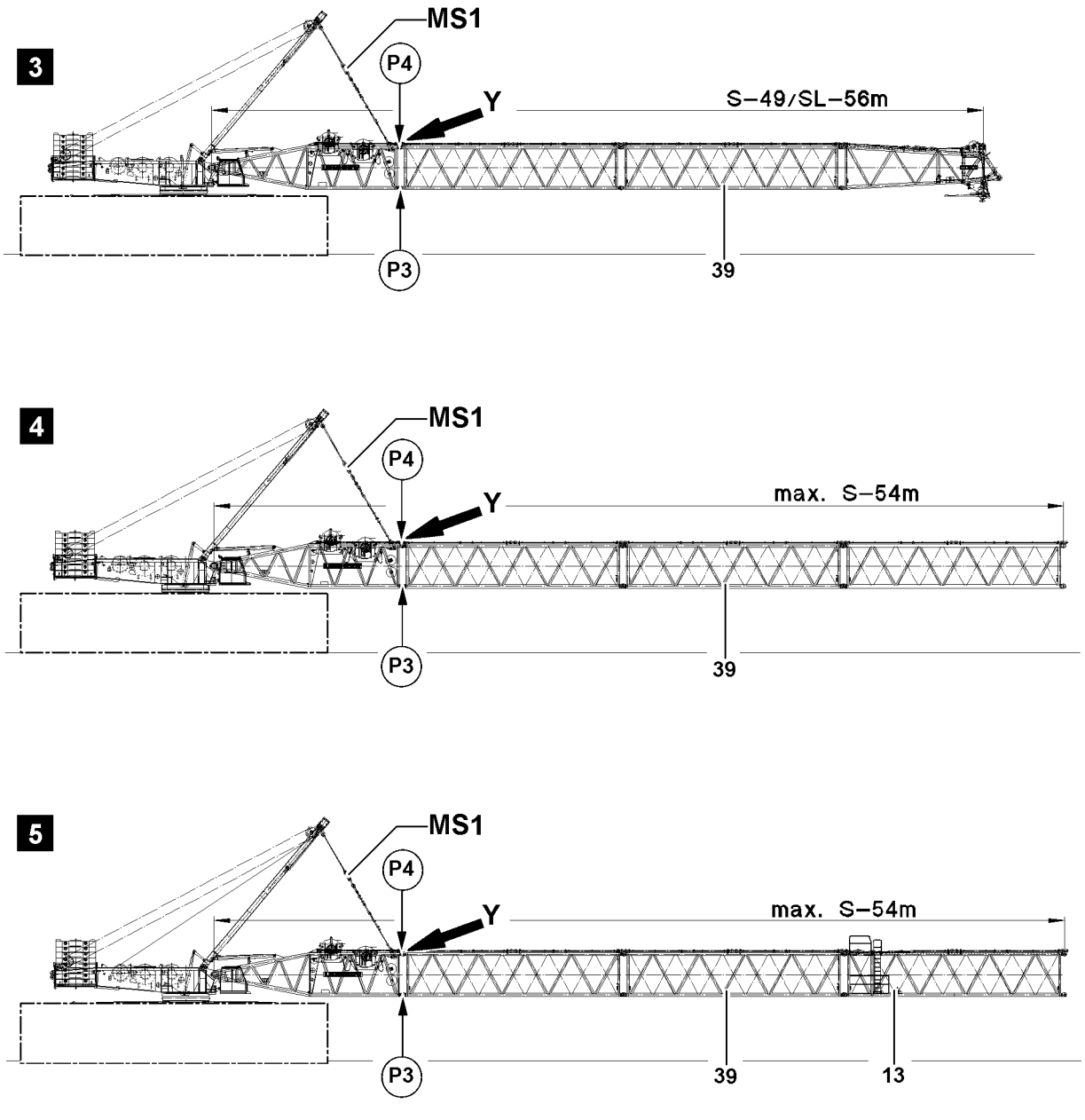
3
MS1
P4
Y
S–49/SL–56m
P3
39
4
MS1
P4
Y
max. S–54m
P3
39
5
MS1
P4
Y
max. S–54m
P3
39
13

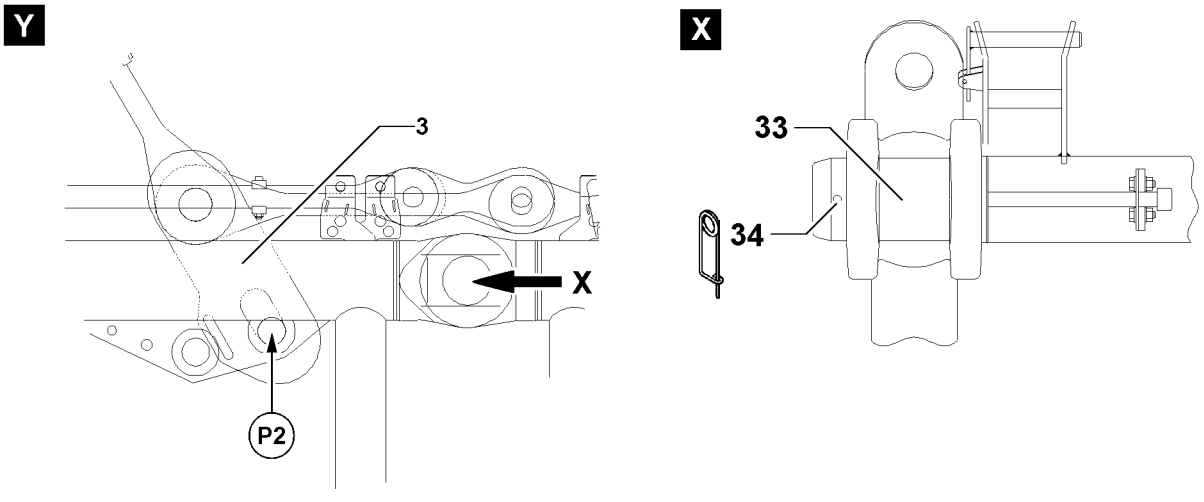
Y
3
X
P2
X
33
34

B112555

Make sure that the following prerequisites are met:
– The S-pivot section is pinned and secured on the turntable.
– The S-pivot section is pinned on the assembly brackets **3** on point **P2** with the guy rods and is in horizontal position, see illustration **3**, detail **Y**.
– An auxiliary crane is available.

WARNING
Falling components!
If unsecured or non-supported components are installed or removed, they can fall down! Personnel can be killed or seriously injured!
- ▶ During pinning and unpinning of the intermediate sections, it is prohibited for anyone to remain **under** or **on** the components as well as within the entire danger zone!
- ▶ Before unpinning: Support crane components and boom!
- ▶ Secure the pins in the bearing points and in the receptacles!
- ▶ It is prohibited to lean a ladder against the crane section which is being disassembled!

Note
- ▶ The “Actual force” is shown on LICCON monitor!
- ▶ The flying assembly of the intermediate sections is made without hook block!

For “flying” assembly of the intermediate sections, they can be installed individually or as preassembled boom unit on the S-pivot section.
- ▶ Attach intermediate sections **39** or preassembled boom unit **39** on the auxiliary crane.
- ▶ Lift the intermediate sections **39** or preassembled boom unit **39** with the auxiliary crane and position on the S-pivot section until the pin points align.
- ▶ When the pin points between the S-pivot section and the intermediate section or the preassembled boom unit align “on top” and “bottom”:
  Pin the intermediate sections “on top”: Insert the pin **33** on both sides at point **P4** and secure with spring retainer **34**, see detail **X**.
- ▶ Pin the intermediate sections “on the bottom”: Insert the pin **33** on both sides at point **P3** and secure with spring retainer **34**, see detail **X**.
- ▶ When the pins are properly pinned and secured on “top” and “bottom” between the S-pivot section and the S-intermediate section or the preassembled boom unit:
  Remove the auxiliary crane.
- ▶ If additional lattice sections are assembled:
  Assemble additional lattice sections the same way as described in this section.

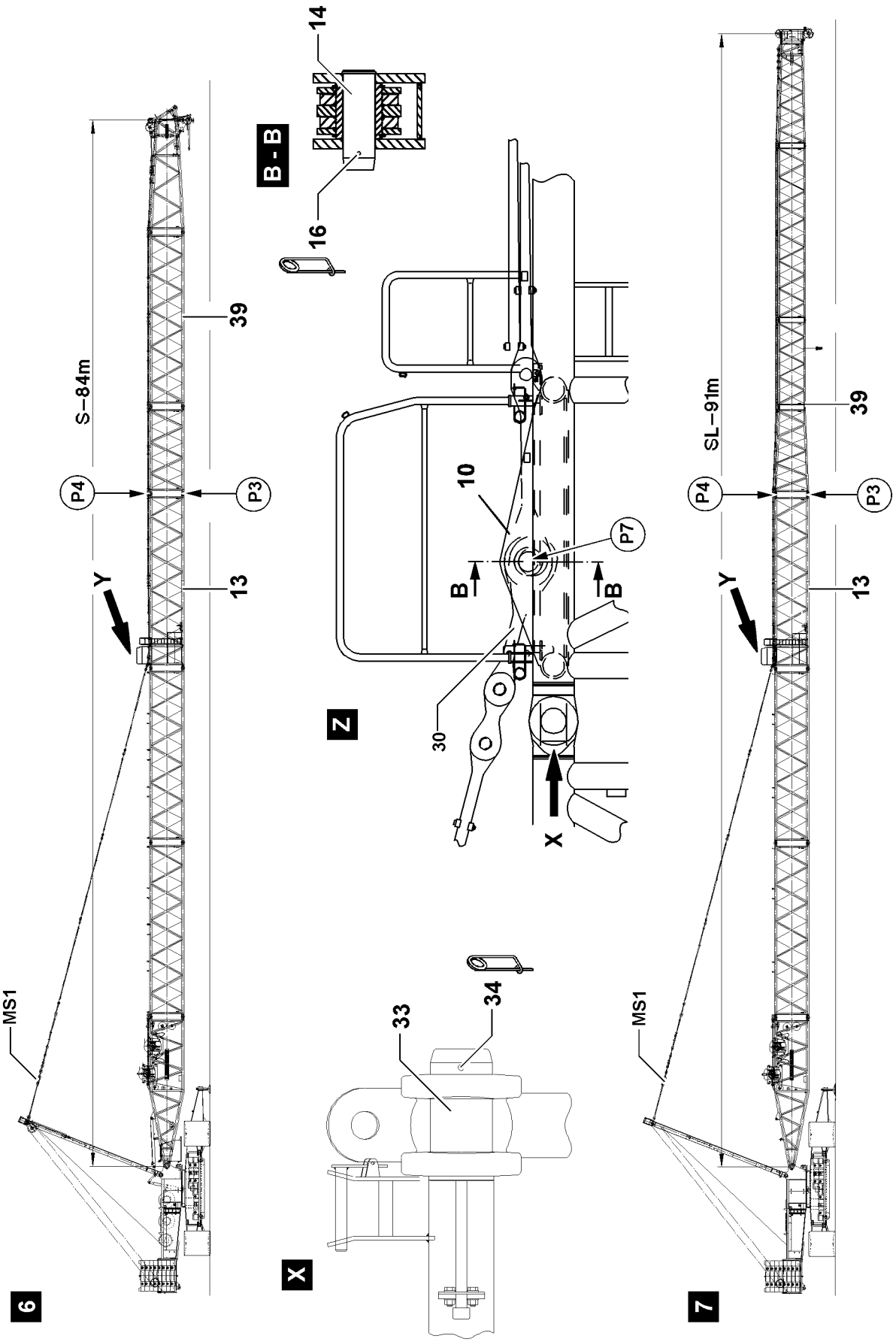
6
S-84m
39
P4
P3
13
Y
MS1
B - B
14
16
Z
10
P7
B
B
30
X
33
34
7
SL-91m
39
P4
P3
13
Y
MS1

B112552

Assembling the S-intermediate sections in “flying” mode on the intermediate section 14 m 2826.20

WARNING
The crane can topple over!
If the following conditions are not met, the crane can topple over or be significantly damaged!
Personnel can be severely injured or killed!
- ▶ For the “flying” boom assembly, the maximum permissible total force on the test point **MS1** may **not** be exceeded. The “Actual force” is shown on LICCON monitor 1!
- ▶ The “flying” boom assembly is only permissible up to a certain system length, observe the following charts!
- ▶ The data in the erection and take down charts as well as the load charts must be observed!

Note
- ▶ The guy rods of the SA-frame are pinned on the intermediate section 2826.20 **13** with the guy brackets **30**!

LR-crane	**Turntable vertical to the travel direction, ZB_{min} 2) 45 t**			
Boom system	**Maximum system length**	**Equipment (without hook block)**	**Maximum force MS1**	**DB_{min} 1)**
S	77 m	- with S- and WA-frame II guy rods	325 t	170 t
S	84 m	- with S-guy rods	325 t	170 t
SL	91 m		290 t	120 t

1) This counterweight must be at least installed on the turntable for “Flying assembly”.
2) This central ballast must be at least installed on the crawler center section for “Flying assembly”.

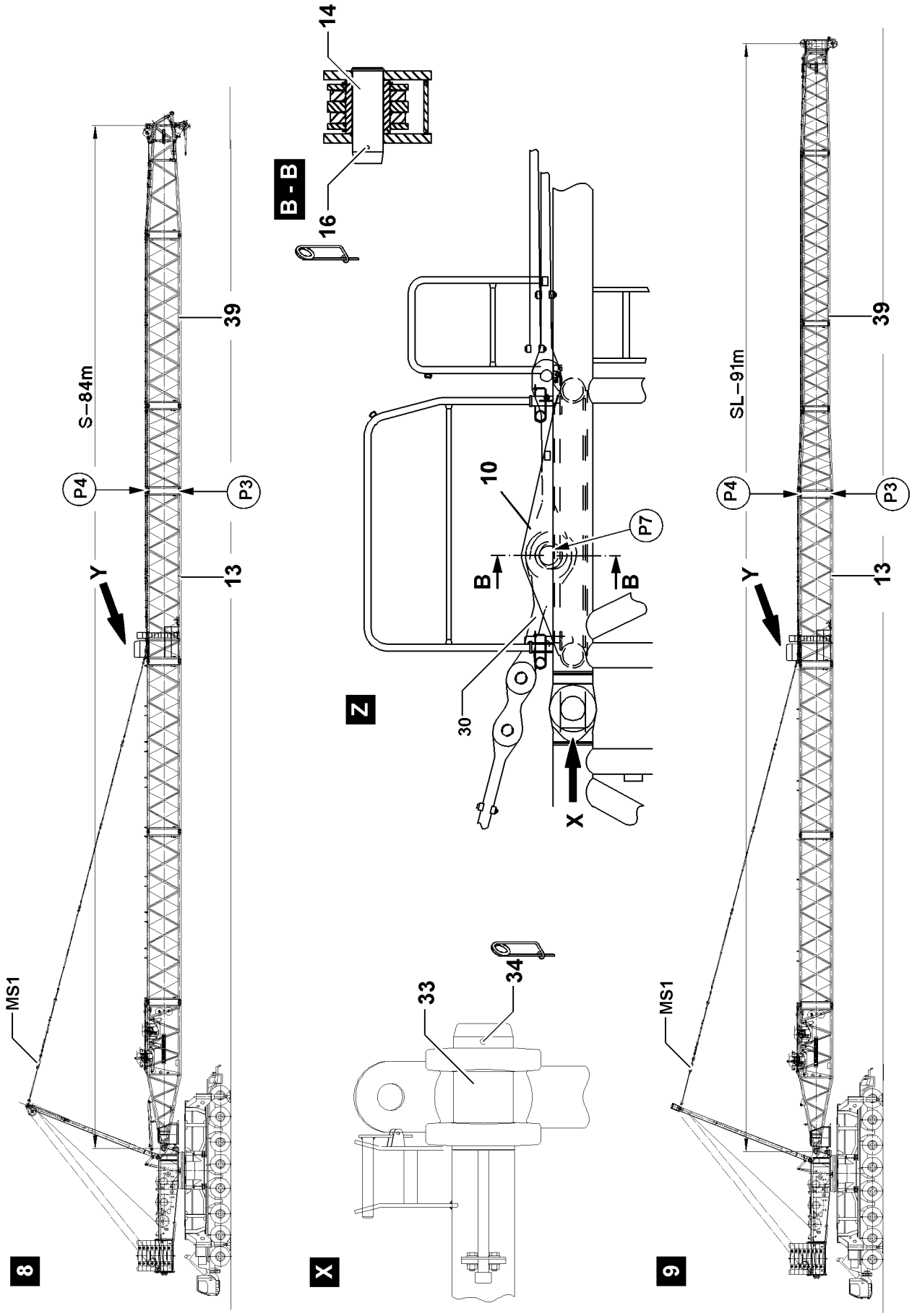
14
B - B
16
S–84m
39
P4
P3
13
Y
MS1
8
10
P7
B
B
30
Z
X
33
34
X
SL–91m
39
P4
P3
13
Y
MS1
9

B112558

LG-crane	Turntable in travel direction				
Boom system	**Maximum system length**	**Equipment (without hook block)**	**Maximum force MS1**	**DB_{min} 1)**	**Support base**
S	77 m	- with S- and WA-frame II guy rods	325 t	195 t	16 m x 16 m
				245 t	12 m x 12 m
S	84 m	- with S-guy rods	325 t	195 t	16 m x 16 m
				245 t	12 m x 12 m
SL	91 m		290 t	170 t	16 m x 16 m
				220 t	12 m x 12 m

1) This counterweight must be at least installed on the turntable for “Flying assembly”.

Make sure that the following prerequisites are met:

– The S-pivot section is pinned and secured on the turntable.
– The intermediate section 14 m 2826.20 with the assembly brackets **10** is pinned on point **P7** with the guy rods **30** on the SA-frame and is in horizontal position, see illustration **8**, detail **Z**.
– An auxiliary crane is available.

WARNING

Falling components!

If unsecured or non-supported components are installed or removed, they can fall down! Personnel can be killed or seriously injured!

▶ During pinning and unpinning of the intermediate sections, it is prohibited for anyone to remain **under** or **on** the components as well as within the entire danger zone!
▶ Before unpinning: Support crane components and boom!
▶ Secure the pins in the bearing points and in the receptacles!
▶ It is prohibited to lean a ladder against the crane section which is being disassembled!

Note

▶ The “Actual force” is shown on LICCON monitor!
▶ The flying assembly of the intermediate sections is made without hook block!

For “flying” assembly of the intermediate sections, they can be installed individually or as preassembled boom unit on the intermediate section **13**.

▶ Attach intermediate sections **39** or preassembled boom unit **39** on the auxiliary crane.
▶ Lift the intermediate sections **39** or preassembled boom unit **39** with the auxiliary crane and position on the S-pivot section until the pin points align.
▶ When the pin points between the S-intermediate section **13** and the intermediate sections **39** or the preassembled boom unit **39** align “on top ” and “bottom”:
Pin the intermediate sections “on top”: Insert the pin **33** on both sides at point **P4** and secure with spring retainer **34**, see detail **X**.
▶ Pin the intermediate sections “on the bottom”: Insert the pin **33** on both sides at point **P3** and secure with spring retainer **34**, see detail **X**.
▶ When the pins are properly pinned and secured on “top” and “bottom” between the S-intermediate section **13** and the intermediate sections **39** or the preassembled boom unit **39**:
Remove the auxiliary crane.
▶ If additional lattice sections are assembled:
Assemble additional lattice sections the same way as described in this section.

10

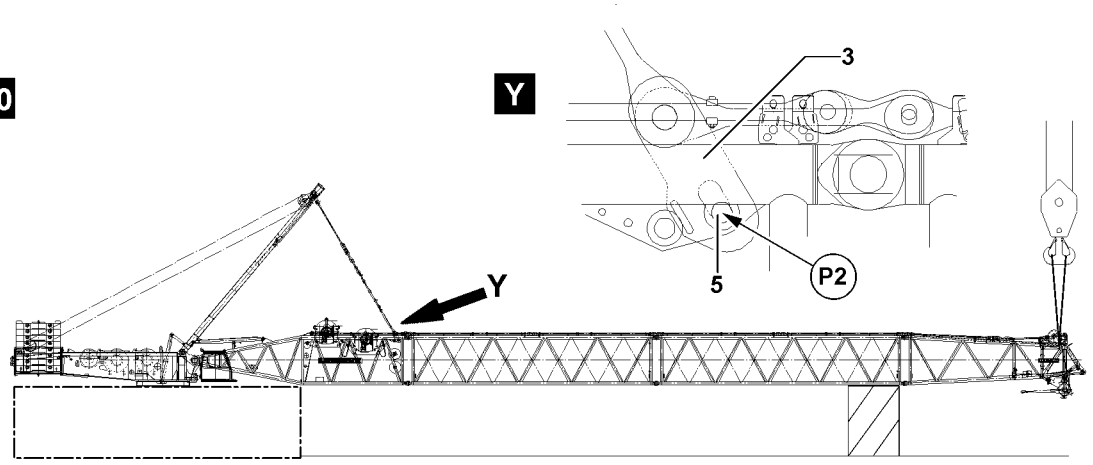

11

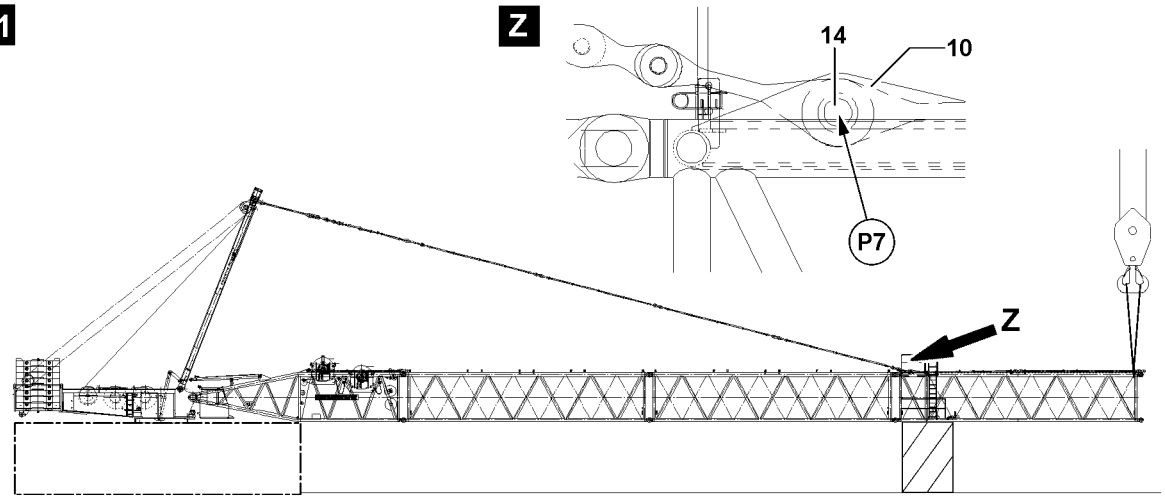

12

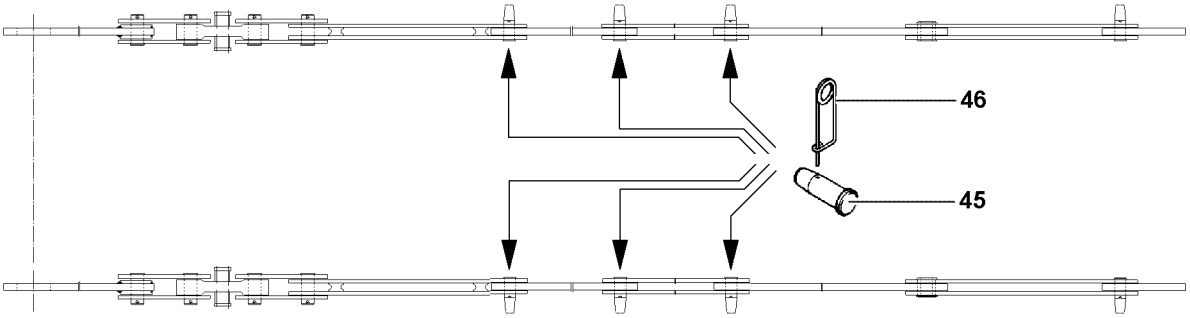

13

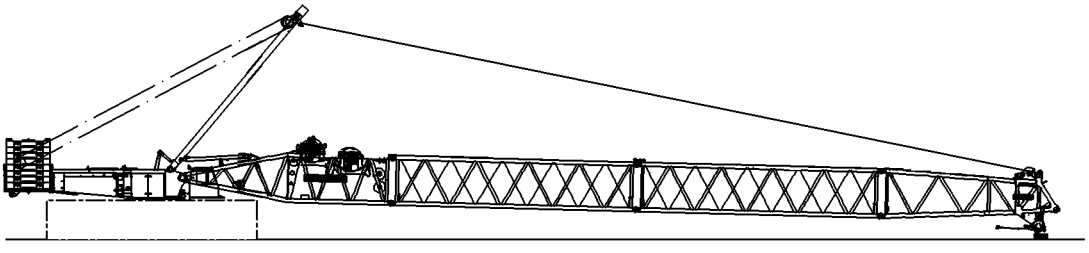

B112556

3.6 Assembling the S-guy rods

WARNING
Neglected inspection and maintenance on guy rods!
If the regular inspection and maintenance of the guy rods is not carried out or is carried out only in irregular intervals, then severe accidents can occur due to existing and unrecognized damage to the guy rods!
Personnel can be severely injured or killed!
- ▶ Check the guy rods before every assembly, see Crane operating instructions, chapter 8.15!
- ▶ The S-guy rods must be assembled and secured, see Rod plan. The numbering in the rod plan must be identical to the numbering on the guy rods!

Make sure that the following prerequisites are met:
- – The boom is guyed on point **P5** on the S-pivot section, see illustration **10**, detail **Y**.
- – **Or** the boom is guyed on point **P7** on the S-intermediate section 14 m 2620.20 for flying assembly, see illustration **11**, detail **Z**.
- – **Or** the boom is laying on the ground with tensioned guy rods, see illustration **13**.

WARNING
Falling components!
If the intermediate sections are incompletely pinned or secured, then components can fall down!
Personnel can be severely injured or killed!
- ▶ Make sure that the intermediate sections or preassembled boom unit are pinned and secured on the S-pivot section!
- ▶ Make sure that the intermediate sections or preassembled boom unit is supported with suitable materials, secured with the auxiliary crane or the boom is placed on the ground!

- ▶ When the boom is **not** laying on the ground:
  Support the boom or secure it with the auxiliary crane.
- ▶ Relieve the guy rods: Lower the SA-frame somewhat to the front.

Result:
- – The guy rods between the SA-frame and the S-pivot section or the S-intermediate section for flying assembly are relieved.

The guy rods are placed and secured for transport on the S-intermediate sections. Before assembly of the guy rods, you must remove the transport retainers.
- ▶ Release and unpin transport retainers for the guy rods.

10

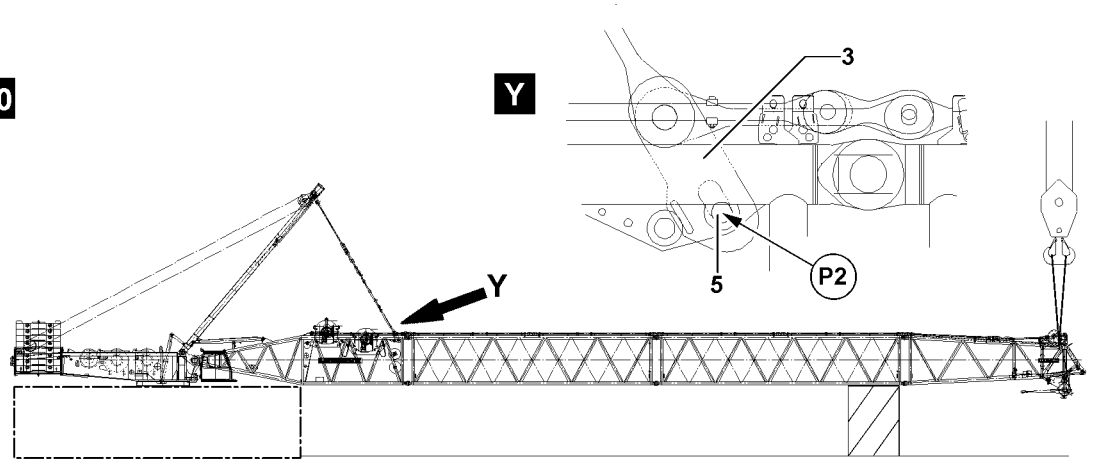

11

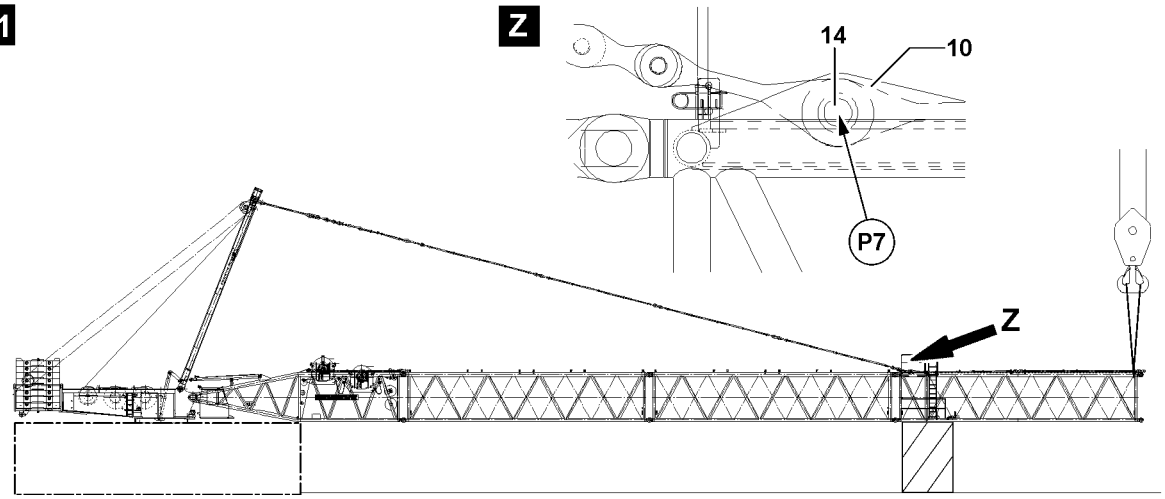

12

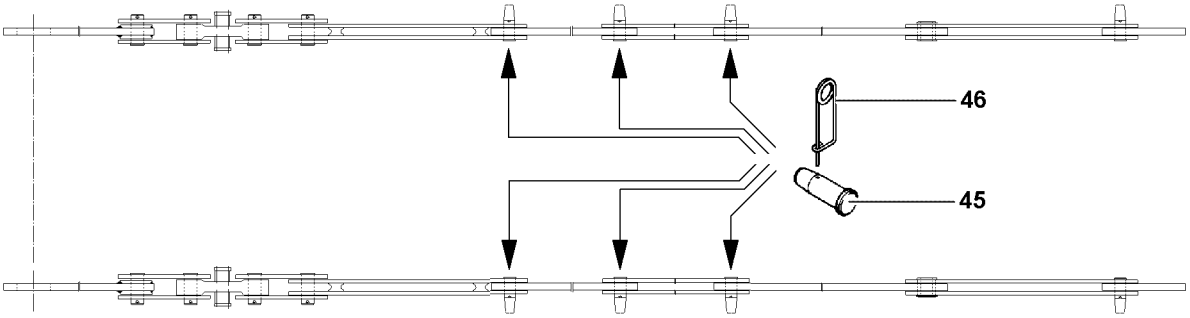

13

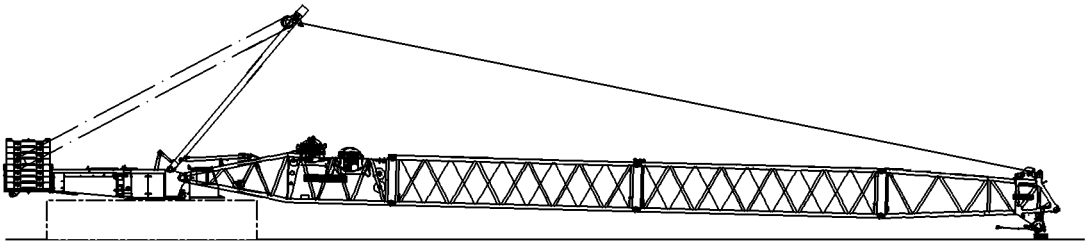

B112556

NOTICE
Property damage!
If the pins of the guy rods are not pinned from the “inside” to the “outside”, the hoist rope can scrape on the pin and be damaged!
▶ Always insert the pins of the guy rods from the “inside” to the “outside”, see Rod plan and illustration **12**!

Note
▶ The guy rods of the S-intermediate sections are pinned to each other starting from the fixed point on the end section of the boom!

▶ Pin the guy rods of all intermediate sections: Insert the pin **45** from the “inside” to the “outside” and secure with spring retainer **46**.

WARNING
The boom can fold downward!
By unpinning the guy rods on the assembly brackets **3** or the assembly brackets **10**, the boom can fold down!
Personnel can be severely injured or killed!
▶ Unpin the guy rods on the assembly brackets **3**, point **P5** or the assembly brackets **7**, point **P7** when it is ensured that the intermediate sections are supported with suitable materials or are held by the auxiliary crane or the boom is placed on the ground!

▶ Make sure that all guy rods of the boom system are pinned and secured.
▶ When the boom is guyed on the S-pivot section:
Release and unpin the pins **5** on the assembly brackets **3**.

or

When the boom is guyed on the S-intermediate section:
■ Release and unpin the pins **14** on the assembly brackets **10**.
▶ Erect the SA-frame until the guy rods between the SA-frame and the S-end section tension, see illustration **13**.
▶ Remove the auxiliary crane.

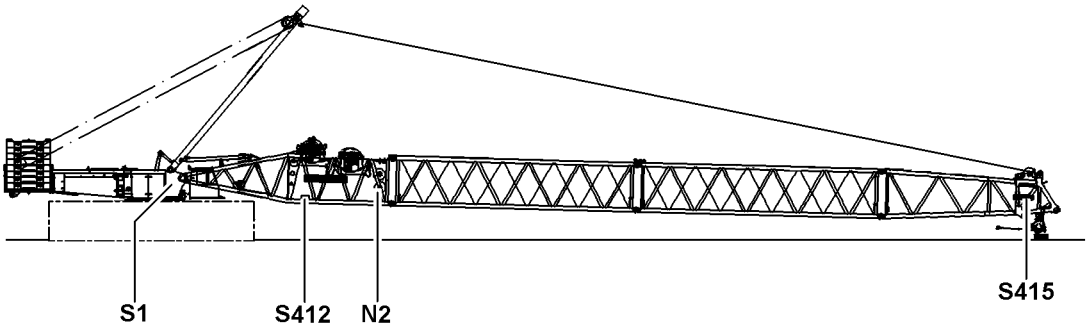

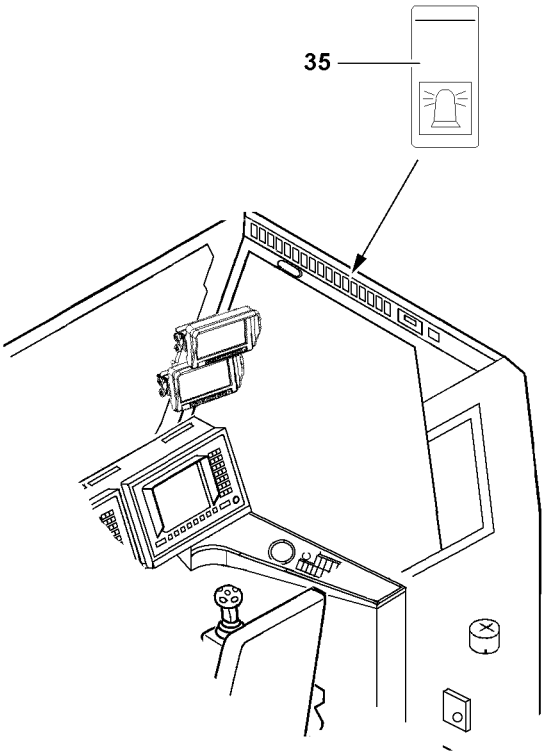

B111624

3.7 Establishing the electrical connections

NOTICE
Damage to the electrical connection on the cable drum!
If the electrical connection from the cable drum on the S-pivot section to the terminal box on the S-pivot section is established first before the connection to the terminal box on the S-end section, the electrical connection can be damaged when spooling out the cable drum!
▶ Establish first the electrical connection from the cable drum in the S-pivot section to the terminal box on the S-end section and then the electrical connection from the terminal box in the S-pivot section to the cable drum!

Note
▶ To establish the electrical connections on the S-boom, see Electric wiring diagram!

Make sure that the following prerequisites are met:
– The S-boom is completely assembled.
– The airplane warning light and the wind speed sensor are assembled.

▶ Establish the electrical connections.
▶ Make sure that all electrical connections on the boom are established.

3.8 Establishing the hydraulic connections to the boom

When connecting hydraulic lines with quick-release couplings, make sure that the coupling procedure is carried out correctly.

WARNING
Pressure in the hydraulic lines!
If the pressure supply is not interrupted before connecting / releasing the hydraulic lines, the hydraulic oil can escape with high pressure!
Personnel can be severely injured or killed!
▶ Release the pressure in the hydraulic system before connecting / disconnecting: Interrupt the pressure supply and wait for a short time!

WARNING
Loss of pressure or leakage!
Incorrectly coupled or self-loosening quick-release couplings (particularly return lines) can result in serious accidents due to component failure!
▶ Check that the quick couplings have been properly connected before using the crane!

▶ Connect the coupling components (sleeve and connector) and screw together with the hand-tightened nut.
▶ Tighten the hydraulic coupling by hand. Rotate the hand-tightened nut until it reaches a tangible, fixed stop position.
▶ Establish the hydraulic connections.

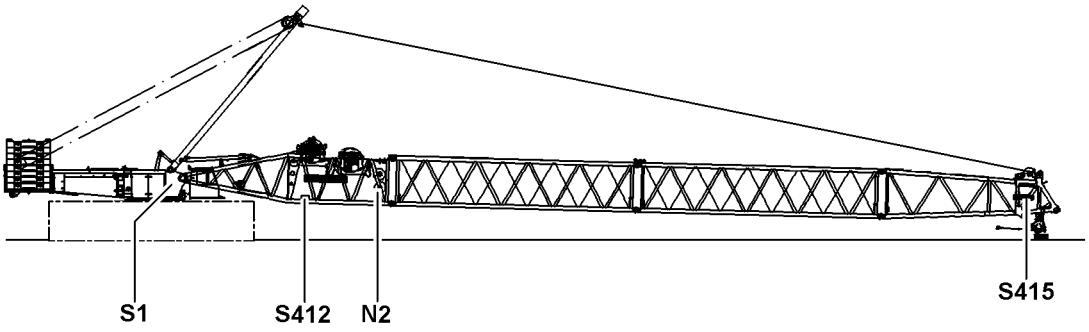

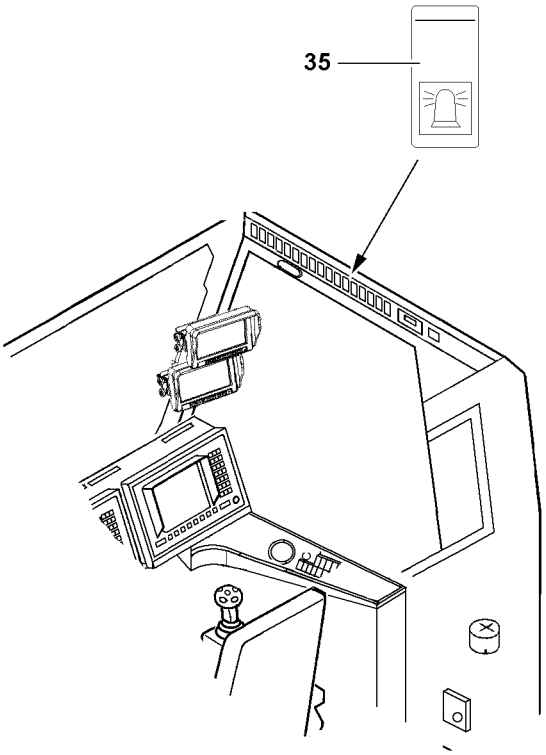

B111624

3.9 Checking the function of the safety devices

WARNING
Non-functioning safety devices!
If the function of the safety devices is defective, personnel can be severely injured or killed!
▶ Crane operation with non-functioning safety devices is **prohibited**!

Note
▶ The function of the individual limit switches must be checked before erection!
▶ The function of the limit switch initiators must be checked in the test system, see Diagnostics manual!

Note
▶ If a function check on the limit switches or on the safety devices does not lead to the desired shut offs, then the plug connections on the connector boxes or the components itself must be checked. If no visible connection errors or component defects can be found, contact Liebherr Service!

Make sure that the following prerequisites are met:
– All electrical connections have been made.
– The crane engine is running.
– The corresponding operating mode is set on the LICCON monitor.

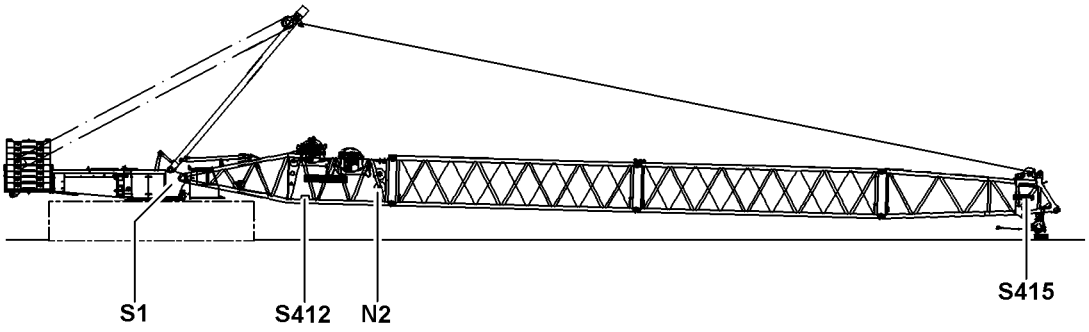

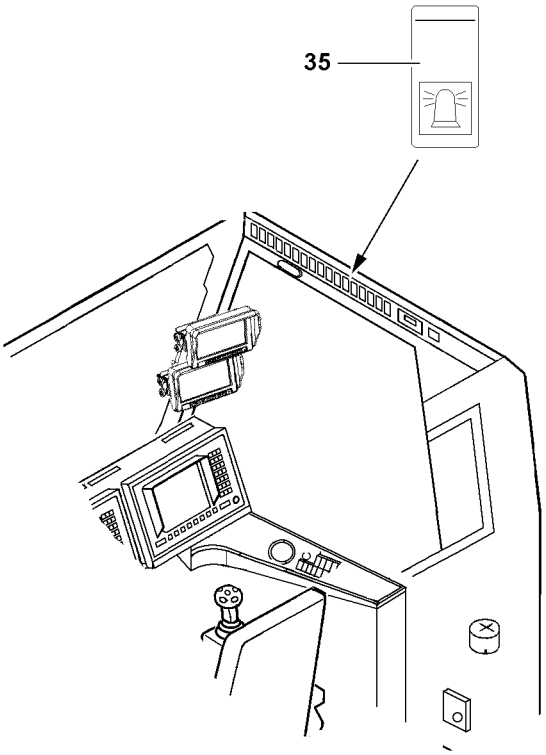

B111624

3.9.1 Checking the wind speed sensor

▶ Test the movement and the function of the wind speed sensor.

3.9.2 Checking the airplane warning light

▶ Turn on the airplane warning light on with the button **382**.

▶ Check the function visually.

3.9.3 Checking the hoist limit switch on the pulley head

Note

▶ When replacing or changing a hoist limit switch (HES), the corresponding hoist limit switch must have the correct bus address and the correct software version in order to be detected again by the bus system (LSB)!

▶ Actuate the hoist limit switch manually on the pulley head.

Result:

– The spool up function of the hoist winch turns off.
– The icon “Hoist top” appears on the LICCON monitor 0.
– The limit switch is functioning.

3.9.4 Checking the limit switch S-boom “steepest position”

Note

▶ The limit switch functions have to be checked individually before erection!

▶ Cover the limit switch initiators on the S-relapse cylinders individually with a metal plate.

Result:

– The limit switch is actuated manually.
– The spool up function of winch IV (control winch) turns off.
– The icon “Boom limitation” appears on the LICCON monitor 0.
– The limit switch is functioning.

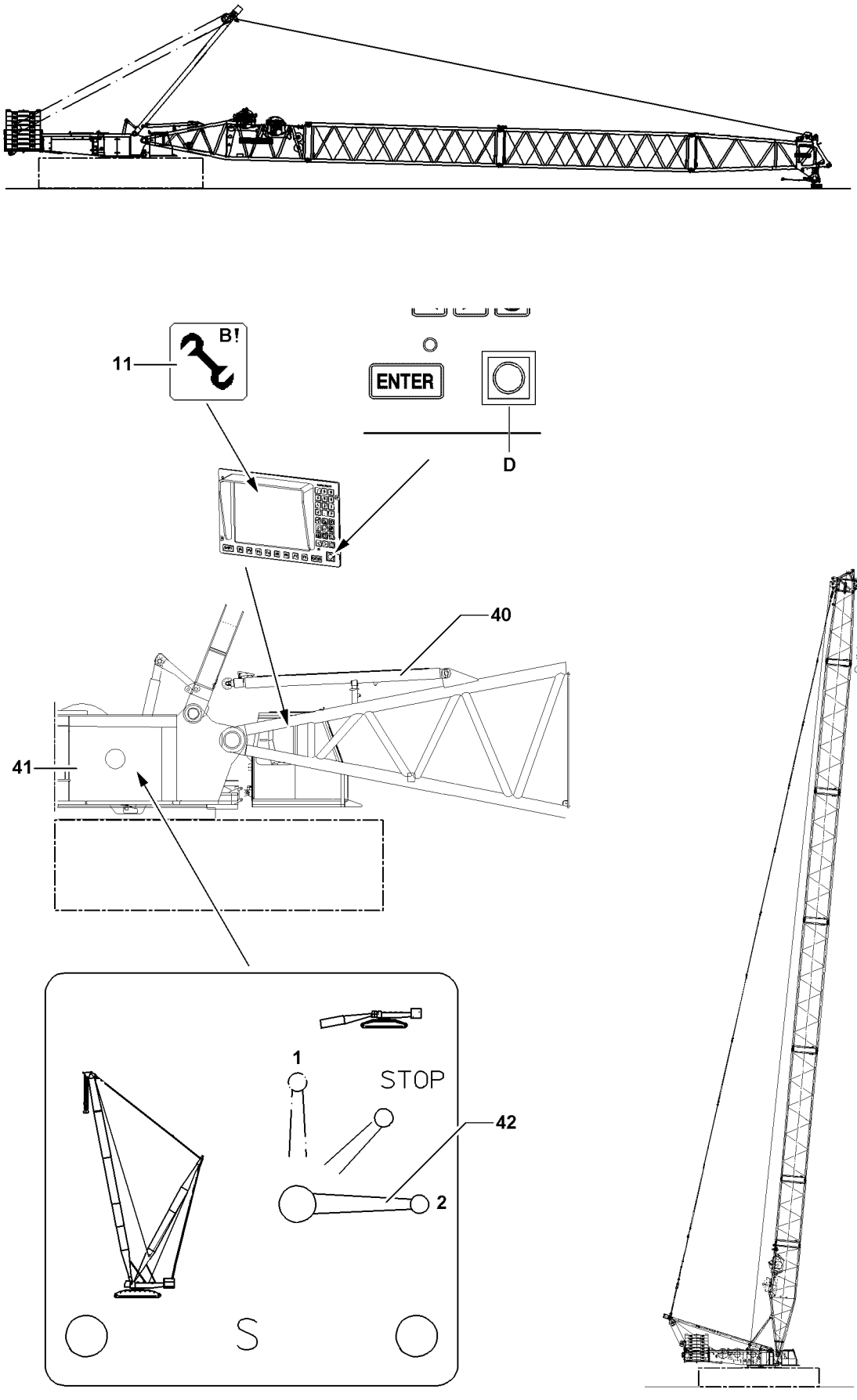

B111625

3.10 Erecting the S-boom

WARNING
The crane can topple over!
If the following conditions are not met before erecting the boom, the crane can topple over! Personnel can be severely injured or killed!
- ▶ It is not permitted to turn the crane during erection procedure!
- ▶ Observe the data in the erection and take down charts!
- ▶ Observe the Safety technical notes, see Crane operating instructions, chapter 5.01!
- ▶ Extend the S-relapse cylinder before erection!
- ▶ Do not allow slack rope to form on the control winch!

WARNING
Unutilized guy rods on boom!
If guy rods are on the lattice sections which are not used for operation, then there is a risk of accidents!
Personnel can be severely injured or killed!
Guy rods can loosen up and fall down!
The load chart is invalid!
The load display of the LICCON computer system shows the incorrect value!
The weight of the boom is too large for erection!
- ▶ Disassemble and remove unutilized guy rods on the transport retainers before erecting the boom!

NOTICE
Overload of boom!
If the SL-boom is not supported before the erection procedure, then the boom will be overloaded! The crane will be damaged during erection!
- ▶ For boom lengths SL/SL2, larger than 104 m, a support base must be used!
- ▶ Support the boom with suitable material of sufficient load bearing capacity!
- ▶ Observe the support height U_{min}, see section “Supporting the S/SL-boom combination for erection”!

Make sure that the following prerequisites are met:
- – The crane is aligned in horizontal direction.
- – All electrical connections have been established.
- – All limit switches are functioning.
- – The central ballast has been attached according to the data in the load chart.
- – The counterweight has been installed to the turntable according to the load chart.
- – All pin connections have been secured.
- – The hoist rope has been correctly placed in the rope pulleys and is prevented from jumping out with the rope retaining pins.
- – There are no loose parts on the boom.
- – The LICCON overload protection has been set according to the data in the load chart.
- – The LICCON overload protection settings have been compared with the actual crane configuration.
- – The LICCON overload protection is exceeded.
- – The assembly icon **11** is visible on the LICCON monitor.
- – No personnel is within the danger zone.

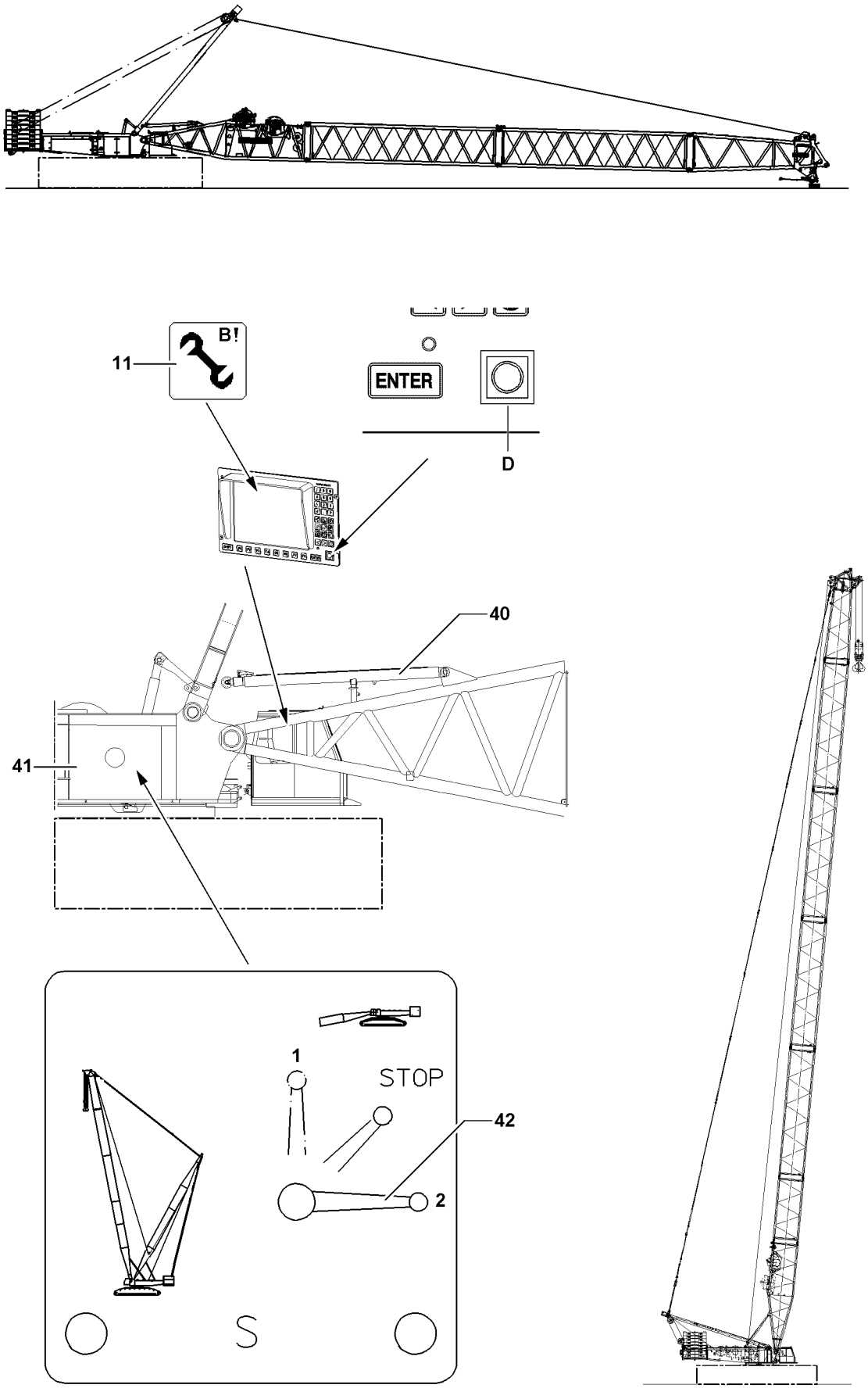

B111625

3.10.1 Extending the S-relapse cylinder

WARNING
The crane can topple over!
If the S-relapse cylinders are not extended before erecting the S-boom, then the S-boom can fall off to the rear in crane operation and the crane can topple over!
Personnel can be severely injured or killed!
- ▶ Extend the S-relapse cylinders **40** before erecting the S-boom!
- ▶ Secure the ball valve **42** during crane operation to prevent inadvertent actuation!

Ball valve positions	
2	Crane operation, extend the piston rod
1	Assembly, retract the piston rod
STOP	The piston rod cannot be retracted / extended

The piston rods on the S-relapse cylinders **40** can be extended with the ball valve **42**.
- ▶ Set the ball valve **42** to **Position 2**.

Result:
– The piston rods of the S-relapse cylinders **40** extend.

Note
- ▶ The ball valve **42** is secured by closing the cabinet door **41** and removing the key!

- ▶ Close the cabinet door **41** and pull the key.
- ▶ Hand the key to an authorized person.

3.10.2 Reeving in the hook block

- ▶ Erect the boom until the end section lifts off the ground.
- ▶ Check the actual load on the LICCON monitor.

Troubleshooting
Actual load on the LICCON monitor is larger than 0.0 t!
- ▶ Observe the notes for input of hook block weight, see Crane operating instructions, chapter 4.02!

Note
- ▶ Hoist rope reevings, see Crane operating instructions, chapter 4.06 and Reeving plan!

- ▶ Reeve in the hook block properly and secure the hoist rope on the rope fixed point, for reeving, see reeving plan.
- ▶ Attach the hoist limit switch weight.
- ▶ Enter the weight of the hook block into the LICCON computer system!

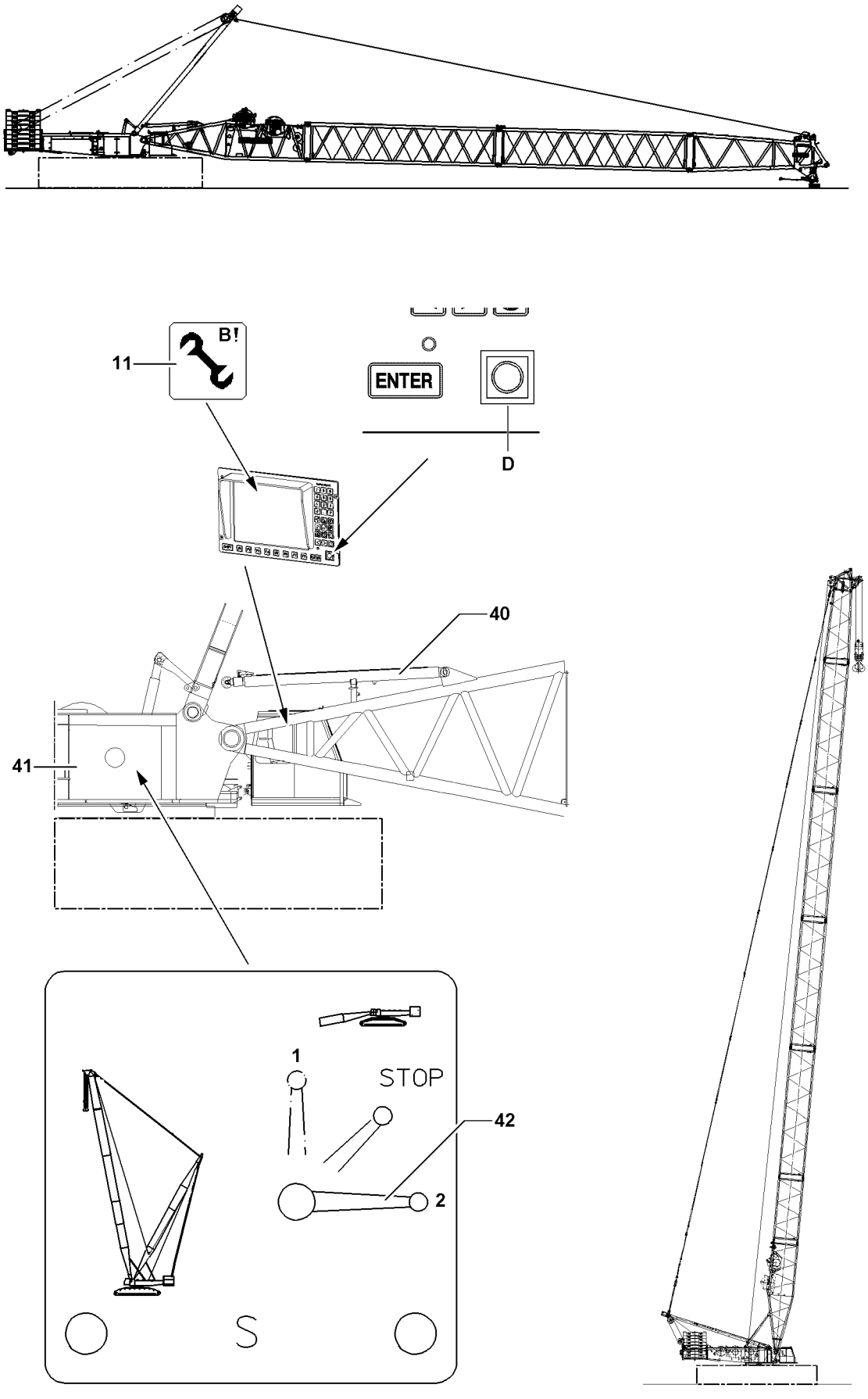

B111625

3.10.3 Erecting the S-boom

WARNING
The crane can topple over!
In crane operation with exceeded LICCON overload protection, the crane can topple over! Personnel can be severely injured or killed!
- ▶ The radii listed in the load chart may not be exceeded or fallen below, even if there is no load on the hook!

If required in the erection and take down chart:
- ▶ Carry the hook block along with the auxiliary crane!

Note
- ▶ When the lowest operating position of the boom is reached, the LICCON overload protection is activated!
- ▶ The displays on the LICCON monitor turn off!
- ▶ In the maximum load icon appears a load number in “t” instead of the display “???”!

- ▶ Luff the boom up to the lowest operating position.
- ▶ When the boom has reached the lowest operating position:
  Make sure that the assembly icon **11** on the LICCON monitor turns off.

Result:
– The LICCON overload protection is active.

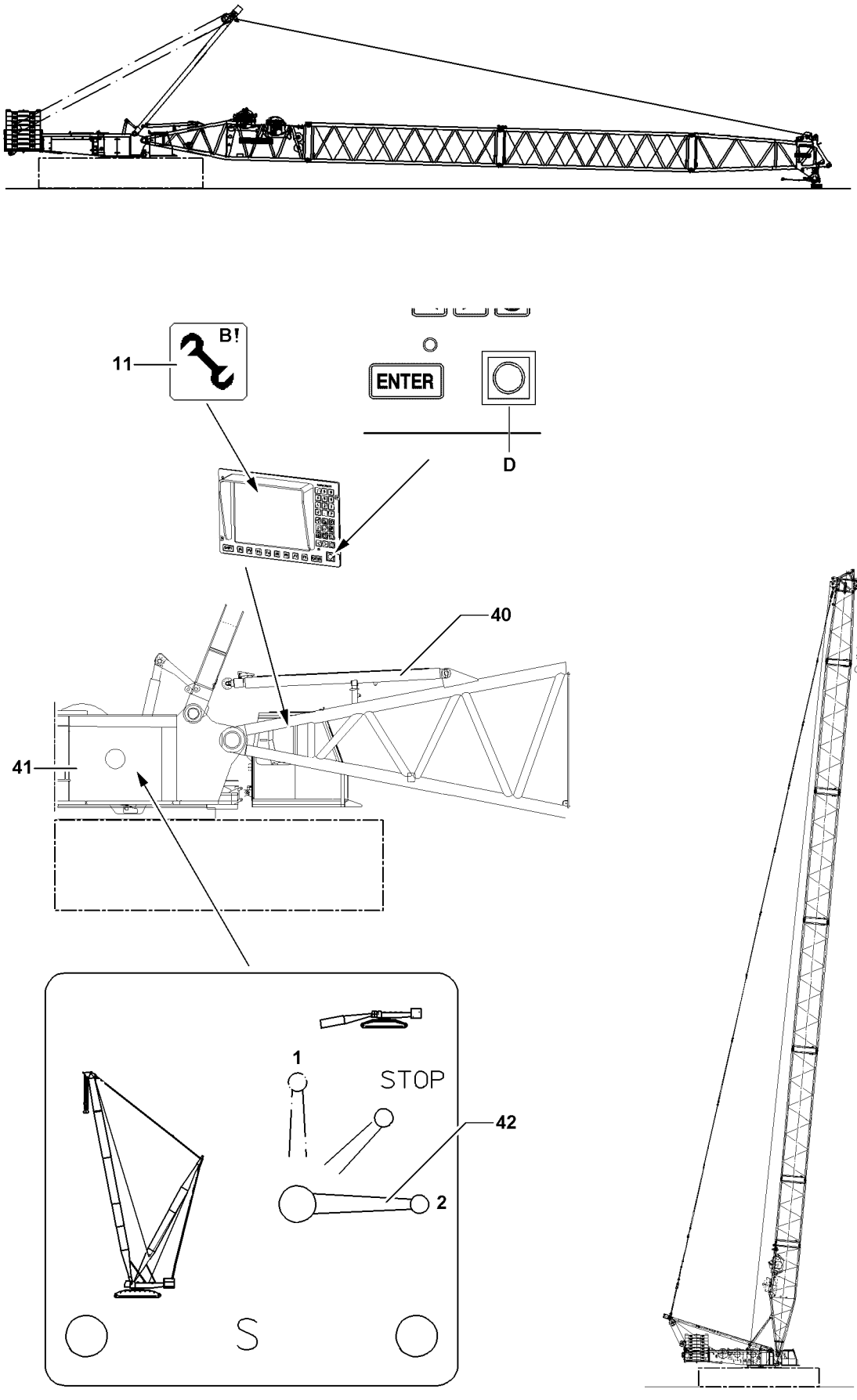

B111625

4 Operating the crane

4.1 Preparing for crane operation

Note

▶ Observe the notes in the chapters, see Crane operating instructions, chapter 4.05, chapter 4.08 and chapter 5.01!

Make sure that the following prerequisites are met:

– The LICCON overload protection is active.
– The LICCON overload protection has been set according to the data in the load chart.

WARNING

The crane can topple over!

▶ Check the horizontal position of the crane before and during operation!
▶ If the crane operator leaves the cab, even for a short time, the operating mode setting must be checked and reset if necessary before resuming crane operation!

4.2 Checking the settings

▶ Check the function of the overload protection by running against the operating positions “on top” and “bottom”.
▶ Check the hoist limit switch by running against the hoist limit switch weight.
▶ Check the function of the limit switches on the relapse cylinders.

B195219

5 Disassembling the S/SL boom

Note

▶ The disassembly is described on the example of the S-boom!

WARNING

Danger of falling!

During assembly / disassembly, inspection and maintenance work, personnel must be secured with appropriate aids to prevent them from falling! If this is not observed, assembly personnel could fall and suffer life-threatening or fatal injuries!

- ▶ All work aloft, where there is a danger of falling must be carried out with suitable aids!
- ▶ If fall arrest equipment is available, then it must be used, see Crane operating instructions, chapter 2.06!
- ▶ If aids are not available and work cannot be carried out from the ground, then the assembly personnel must secure themselves with the permissible fall arrest system to prevent falling, see Crane operating instructions, chapter 2.04!
- ▶ The fall arrest system must be fastened on the fastening and hook points as well as on the safety ropes. For safety points, see Crane operating instructions, chapter 2.06!
- ▶ Only step on the aids, ladders and catwalks with clean shoes!
- ▶ Keep aids, ladders and catwalks free of heavy dirt, snow and ice!
- ▶ It is prohibited to walk on the telescopic or an auxiliary boom without suitable protective devices!

WARNING

The lattice sections can fall down!

If the lattice sections are not pinned and secured correctly, then they can fall down and fatally injure personnel!

- ▶ Pin or unpin both pins at the same horizontal level, i.e. **left and right**!
- ▶ Do not stand under the lattice sections or within the entire danger zone during the pinning and unpinning procedure of the boom!
- ▶ Secure the pins in the bearing points and the receptacles!
- ▶ It is prohibited to lean the ladder against the components being disassembled!
- ▶ Do not remove the fastening equipment and the auxiliary crane until each component is pinned on and secured!

WARNING

Danger of impact / crushing!

When installing / removing crane components with the auxiliary crane, crane components can start to swing back and forth!

When lifting / lowering and positioning crane components, there is an increased danger of impacts / crushing!

Personnel can be caught and severely injured or killed!

- ▶ Make sure that personnel cannot be caught by components!
- ▶ Make sure that the crane is aligned in horizontal position to avoid the support beams from swinging by themselves!
- ▶ When working in danger zones: Use aids to protect limbs!
- ▶ Guide components with suitable aids to minimize oscillation!

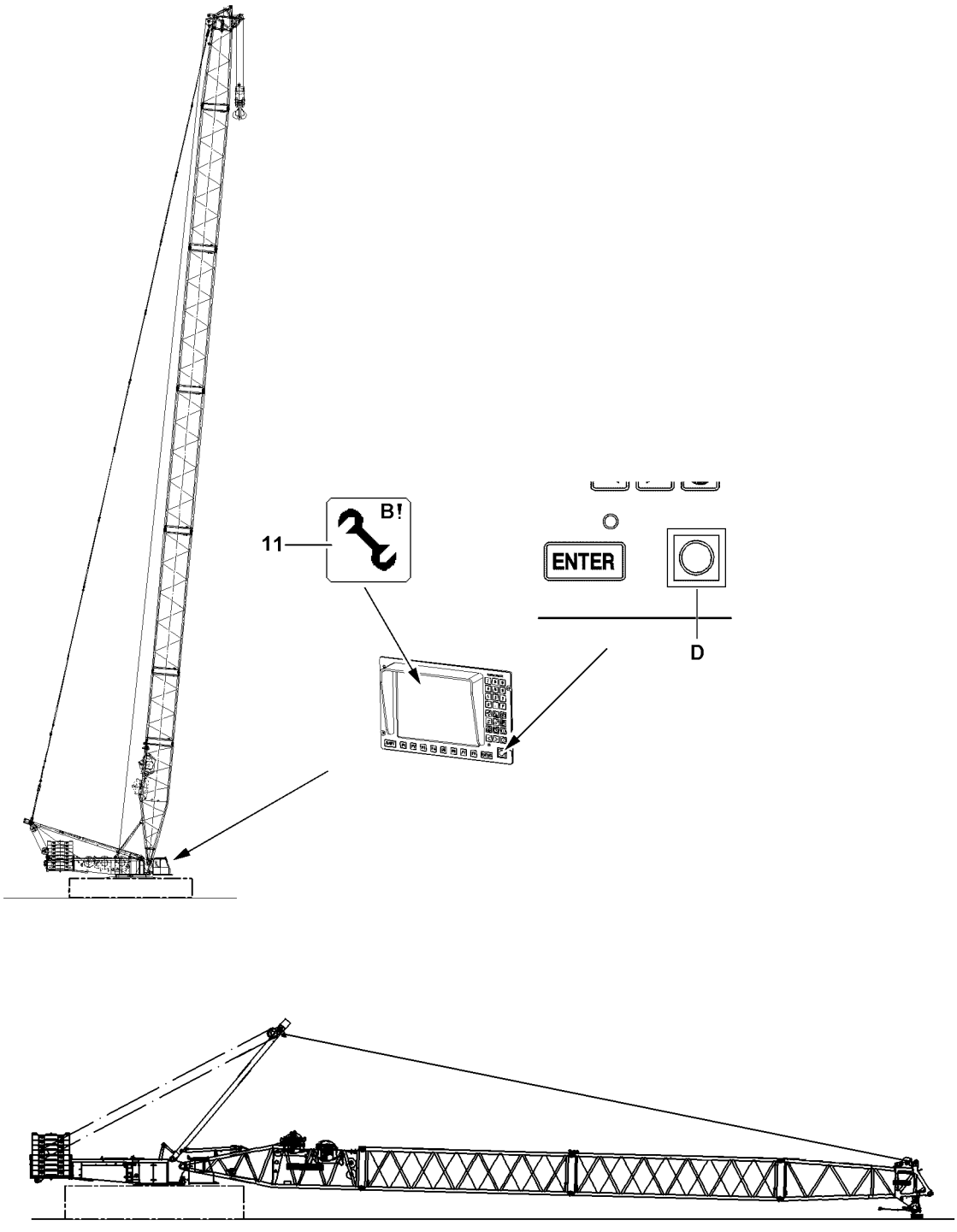

B111627

5.1 Turning the turntable into disassembly position

▶ Turn the turntable in longitudinal axle of the crawler travel gear against the travel direction or vertically to the crawler travel gear, see Erection and take down chart.

5.2 Taking the S-boom down

WARNING
The crane can topple over!
If the following conditions are not met before taking down the boom, the crane can topple over and fatally injure personnel!
▶ The turntable may not be turned during the disassembly of the boom!
▶ Observe the Safety technical notes, see Crane operating instructions, chapter 5.01!
▶ Observe the data in the erection and take down charts!
If required in the erection and take down chart:
▶ Carry the hook block along with the auxiliary crane!

NOTICE
Damage of boom components!
Taking down the boom system can lead to a collision between the hook block and the pulley head. The boom components can be severely damaged!
▶ Luff the boom system down at the same time and spool the hoist winch out!

Note
▶ Depending on the condition of the ground, the boom and the lattice sections must be supported from below for the disassembly of the boom!

Make sure that the following prerequisites are met:
– The crane is aligned in horizontal direction.
– An auxiliary crane is available.
– An assembly scaffolding / work platform is available.
– The central ballast is installed according to the erection and take down charts.
– The counterweight has been installed on the turntable according to the erection and take down chart.
– The LICCON overload protection has been set according to the data in the load chart.

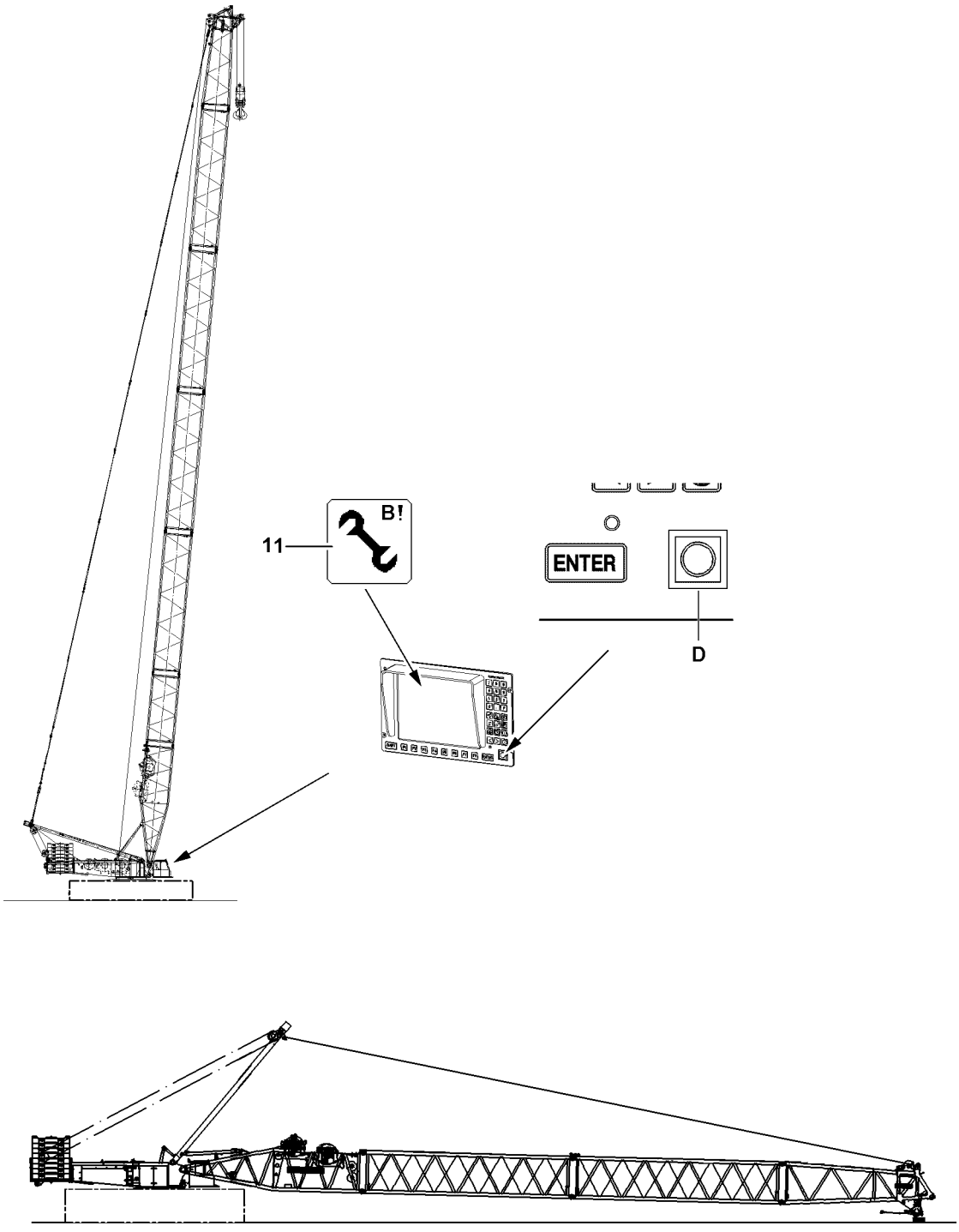

B111627

5.2.1 Luffing the S-boom down

Note

- ▶ The luff down movement is turned off as soon as the lowest operating position is reached!
- ▶ When the lowest operating position of the S-boom is reached, the load display in the maximum load icon turns off and instead of the load display appears the display “???”!
- ▶ In the crane operating screen appear alarm functions!

▶ Luff the S-boom down to the “lowest” operating position.

Result:

– The luff down movement is turned off.
– The “STOP” icon appears on the LICCON monitor.
– The horn icon appears on the LICCON monitor.

WARNING

Assembly with turned on set up key!

When the set up key is engaged, the LICCON overload protection is exceeded!

In the event of deliberate improper use, the crane could collapse, the boom can break off or the crane can topple over!

Personnel can be killed!

This could result in high property damage!

- ▶ The set up key **D** may only be actuated by persons who know the effects of a bypass!
- ▶ Press the set up key **D** only when the set up status was correctly entered into the LICCON computer system!
- ▶ Observe the erection / take down charts!
- ▶ Crane operation with the set up key **D** turned on is strictly prohibited!

▶ When the boom has reached the “lowest” operating position:
Turn the set up key **D** to the right.

Result:

– The LICCON overload protection is deactivated.
– The assembly icon **11** appears on the LICCON monitor.

▶ At the same time, spool the hoist winch out and luff the S-boom down until the hook block touches the ground.

5.2.2 Unreeving the hook block

▶ Remove the hoist limit switch weight and unreeve the hook block.

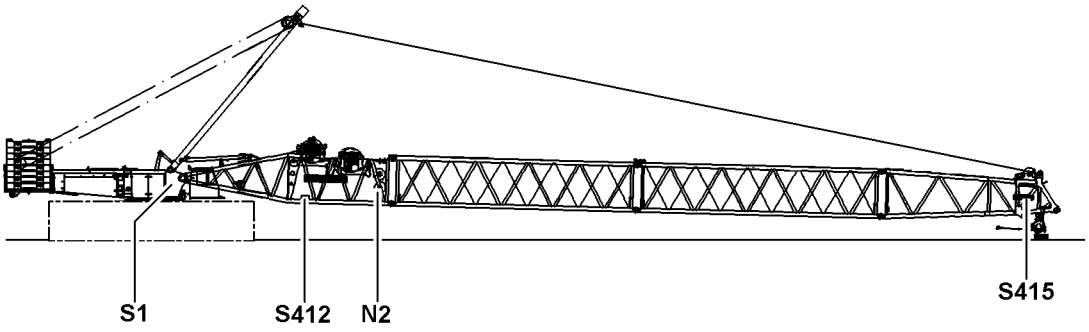

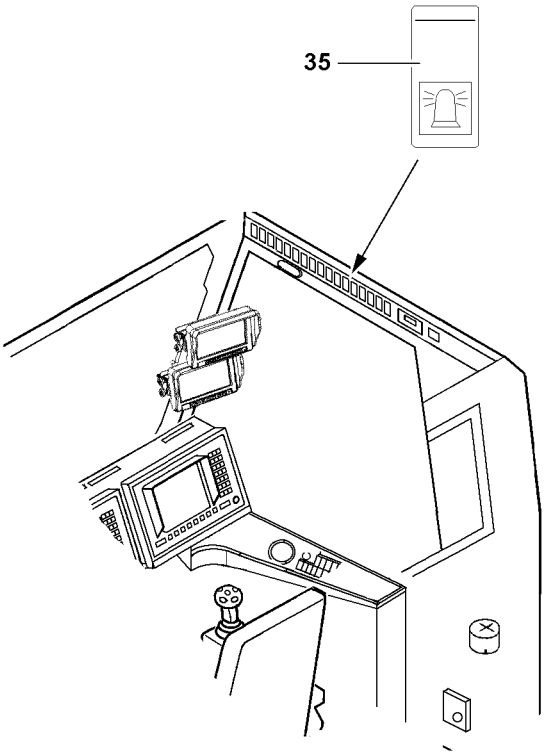

B111624

5.2.3 Spooling the hoist rope up

NOTICE
Overspooled winch!
If the rope is pulled under the winch when spooling up, the settings of the cam limit switch are not longer correct and there is an increased danger of accidents!
As a result, extensive adjustment work on the cam limit switch is required!
- ▶ All rope retaining pins / pipes on the S-boom are removed!
- ▶ Slowly spool up the hoist rope over the rope pulleys back to the winch!
- ▶ Stop the winch in time, with sufficient rope reserve!
- ▶ Do not overspool the winch!

▶ Spool the hoist rope up.

5.3 Disconnecting the electrical connections on the boom

Make sure that the following prerequisite is met:
– The S-boom has been placed down.

NOTICE
Damage to cable drum or cable!
If the cable of the cable drum is not properly spooled up on the cable drum after unplugging the S-end section, then the cable drum or the cable can be significantly damaged!
- ▶ Spool the cable drum up after unplugging!

- ▶ Spool the cable drum up and secure it to prevent inadvertent spooling out.
- ▶ Make sure that all electrical connections on the S-boom have been disconnected.

5.4 Disconnecting the hydraulic connection on the boom

When releasing hydraulic lines with quick-release couplings, make sure that the coupling procedure is carried out correctly.

WARNING
Pressure in the hydraulic lines!
If the pressure supply is not interrupted before connecting / releasing the hydraulic lines, the hydraulic oil can escape with high pressure!
Personnel can be severely injured or killed!
- ▶ Release the pressure in the hydraulic system before connecting / disconnecting: Interrupt the pressure supply and wait for a short time!

- ▶ Install the coupling components (sleeve and connector) with the hand-tightened nut.
- ▶ Disconnect the hydraulic connections.
- ▶ Install dust caps on the quick-release couplings.

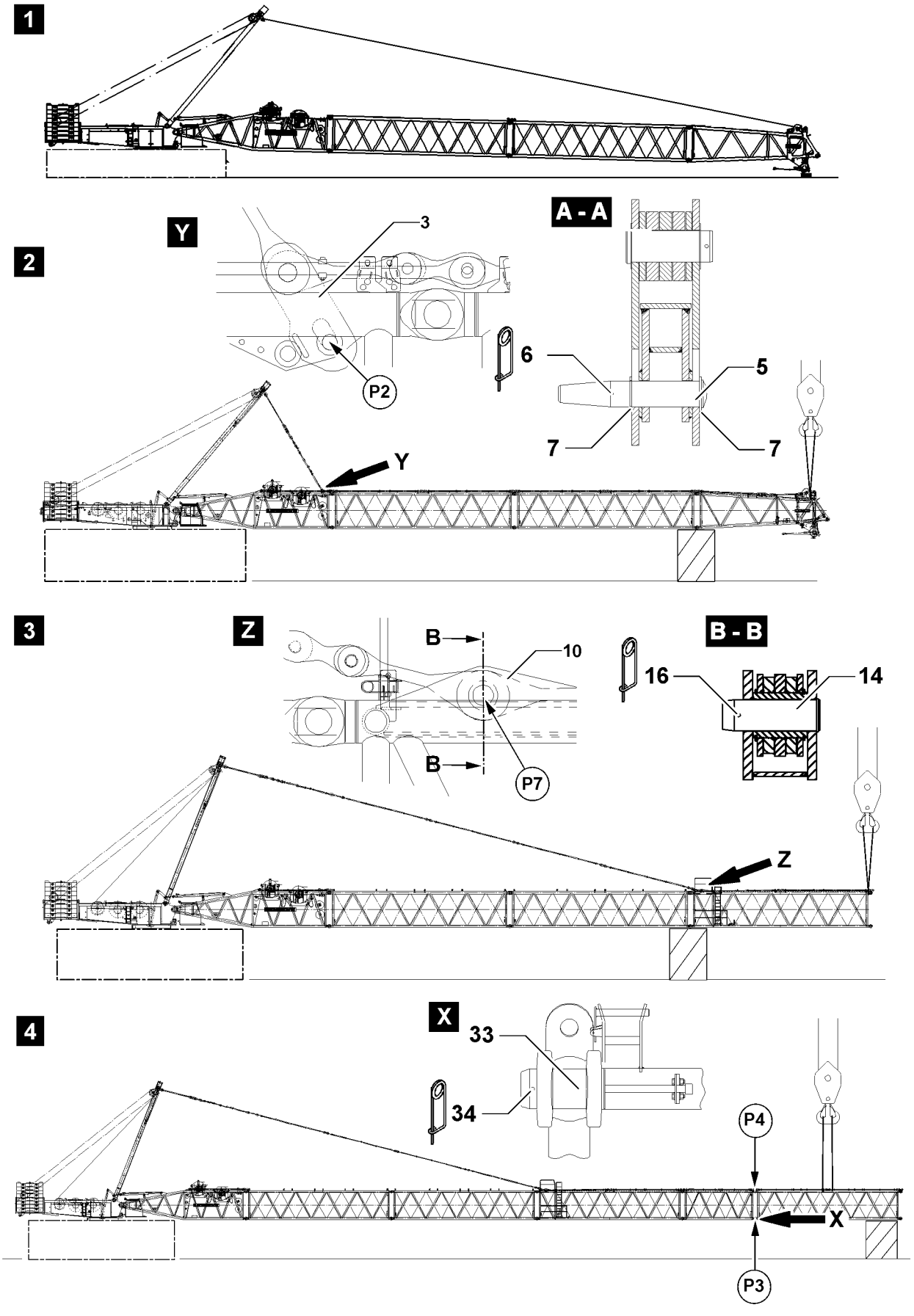

B112557

5.5 Disassembling the S-lattice sections

The disassembly of the lattice sections is carried out in various ways:
– Disassembling the lattice sections in “Flying mode”.
– “Opening” the boom.

WARNING
General danger notes!
- ▶ Support the S-boom during assembly / disassembly with suitable materials!
- ▶ All pins are to be secured after assembly with the intended safety elements!
- ▶ The guy rods must be inspected regularly, see Crane operating instructions, chapter 8.15!
- ▶ Secure the boom with support or auxiliary crane, see Crane operating instructions, chapter 5.01!
- ▶ It is prohibited for anyone to remain under the booms or within the complete danger zone during the pinning and unpinning procedure of the lattice section!

Note
- ▶ For weights of intermediate sections with placed guy rods, see Crane operating instructions, chapter 1.03!
- ▶ The intermediate sections are unpinned with the aid of the pin pulling device, see Crane operating instructions, chapter 5.30!

Make sure that the following prerequisite is met:
– All electrical and hydraulic connections are separated on the boom.

5.5.1 Disassembling the S-intermediate sections in flying mode

If spatial prerequisites on the job site are limited for the disassembly of the S-boom, or if they are limited by buildings or similar, then the S-boom can be removed in flying mode.
For the flying disassembly, a differentiation is made between the guy points on the boom:
– Guying on S-pivot section, see illustration **3**.
– Guying on S-intermediate section for flying assembly, see illustration **4**.

WARNING
Impermissible boom lengths guyed in flying mode!
If impermissible boom lengths are guyed on the assembly brackets, then severe property damage can occur on the crane! Personnel can be severely injured or killed!
- ▶ The maximum permissible boom lengths for the “Flying assembly” may not be exceeded, see section “Assembling the S-lattice sections”!
- ▶ For the “flying” boom assembly, the maximum permissible total force on the test point **MS1** may **not** be exceeded, see section “Assembling the S-lattice sections in flying mode”!
- ▶ Pin the guy rods either on the assembly brackets **3**, point **P2**, or the assembly brackets **10**, point **P7**!
- ▶ The data in the erection and take down charts as well as the load charts must be observed!

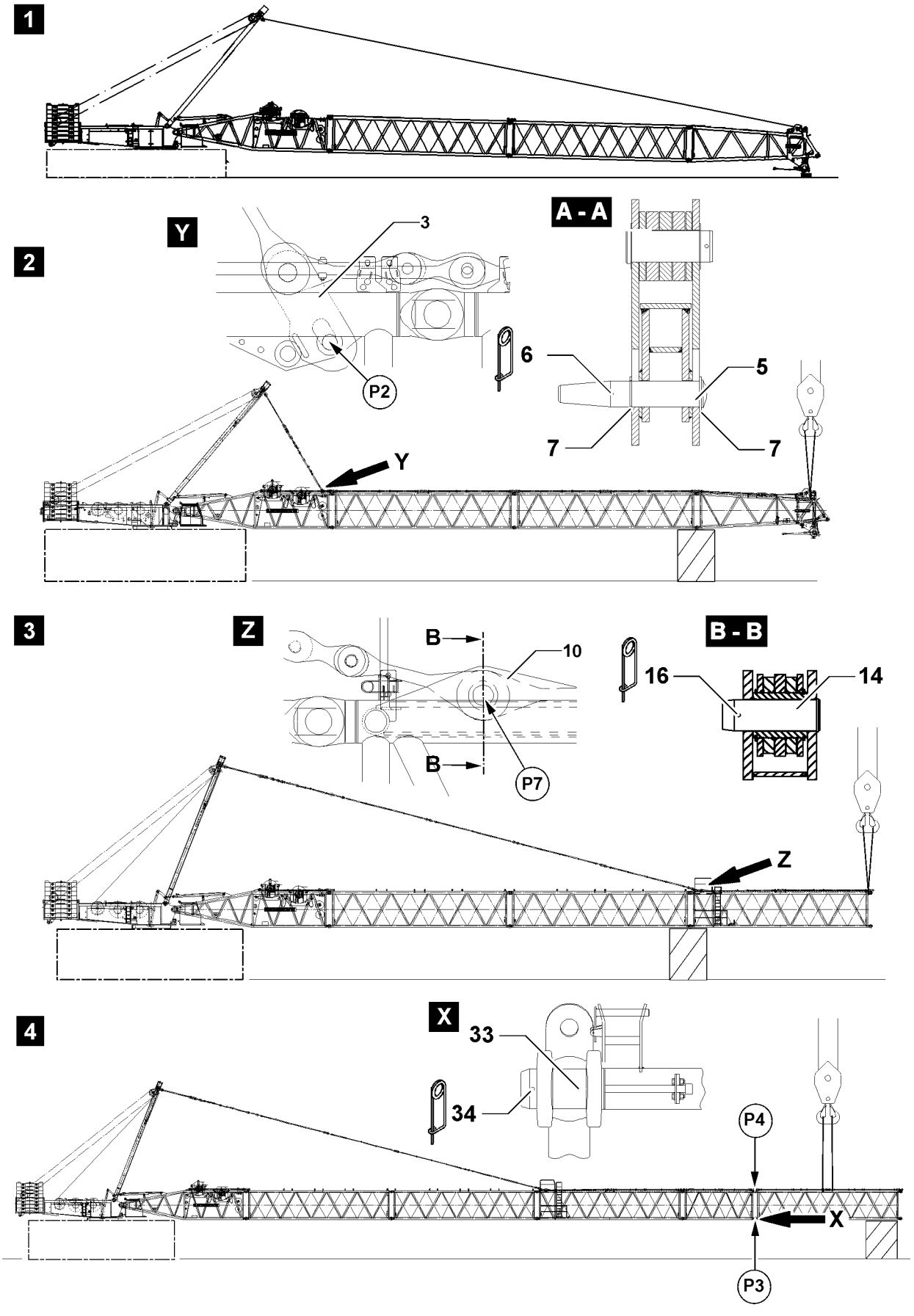

B112557

WARNING
The boom can fold downward!
By unpinning the guy rods on the assembly brackets **3** or the assembly brackets **23**, the boom can fold down!
Personnel can be severely injured or killed!
▶ Unpin the guy rods on the assembly brackets **3**, point **P2** or the assembly brackets **10**, point **P7** when it is ensured that the intermediate sections are supported with suitable materials or are secured with the auxiliary crane or the boom is placed on the ground!

Make sure that the following prerequisites are met:
– The boom is in horizontal position.
– The guy rods are tensioned.
– Suitable materials to support the boom are available.
– An auxiliary crane is available.

Guying the S-boom in “Flying mode”

▶ Support the boom or secure it with the auxiliary crane.

Note
▶ The guy rods must be placed down to the point where the boom can be guyed on the assembly brackets **3** on point **P2** or the assembly brackets **10** on point **P7**!

▶ Make sure that the transport retainers for the guy rods on the intermediate sections are unpinned.
▶ Luff the SA-frame down and place the guy rods on the S-intermediate sections in the transport retainers.

Guying on the S-pivot section: When pinning the pin **5**, you have to use the washers **7**, see illustration **2**, sectional **A-A**.
▶ When the boom is guyed on the S-pivot section:
Pin the guy rods on the assembly brackets **3**: Insert the pin **5** on point **P2** and secure with spring retainer **6**.
▶ When the boom is guyed on the S-intermediate section:
Pin the guy rods on the assembly brackets **10**: Insert the pin **14** on point **P7** and secure with spring retainer **16**.
▶ Disassemble the guy rods, which are laying on the boom and secure them in the transport retainers.

Result:
– The S-intermediate sections can be disassembled.

Disassembling the S-intermediate section

The “flying” disassembly is described on the example of one intermediate section, see illustration **4**.
▶ Secure the S-intermediate section with the auxiliary crane.
▶ Unpin the S-intermediate section on both sides “on the bottom” at point **P3**: Remove the spring retainer **34** and unpin the pins **33**.
▶ Unpin the S-intermediate section on both sides “on top” at point **P4**: Remove the spring retainer **34** and unpin the pins **33**.
▶ Remove the S-intermediate section.
▶ If additional lattice sections are disassembled:
Disassemble additional lattice sections the same way as described in this section.

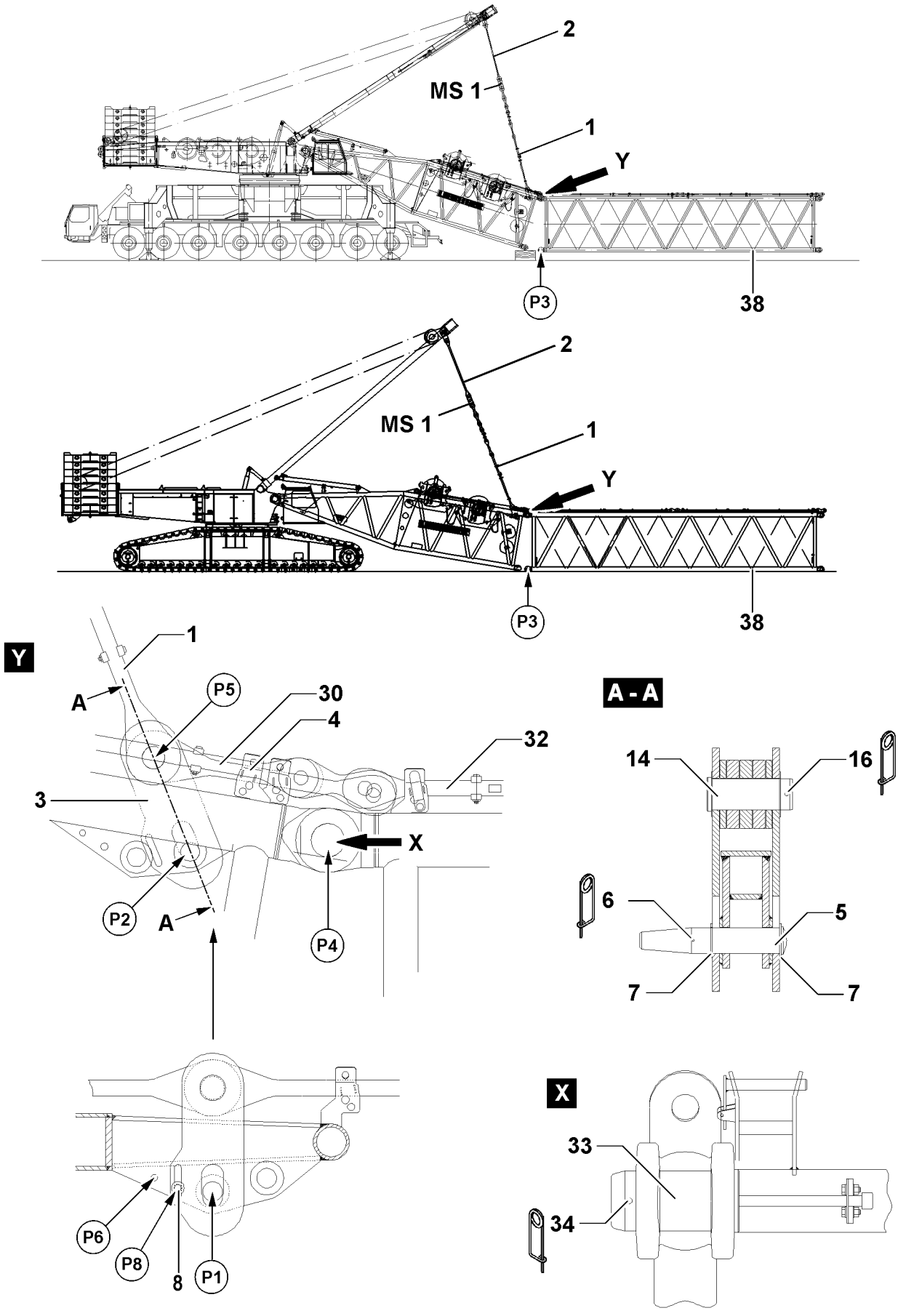
2
MS 1
1
Y
P3
38
2
MS 1
1
Y
P3
38
Y
1
A
P5
30
4
32
3
X
P2
A
P4
A - A
14
16
6
5
7
7
X
33
34
P6
P8
8
P1

B112553

5.5.2 Disassembling the S-lattice sections (“open” boom)

WARNING
The crane can topple over!
If the following conditions are not met, the crane can topple over or be significantly damaged!
Personnel can be severely injured or killed!
- ▶ The end section of the corresponding S/SL-boom combination may **not** lift off the ground during the “Closing procedure”!
- ▶ With the SA-frame, boom combinations only to certain system lengths may be lifted / opened, see section “Assembling S-lattice sections (close boom)”!

Make sure that the following prerequisites are met:
– The guy rods are tensioned.
– Suitable materials to support the boom are available.
– An auxiliary crane is available.

Pinning the guy rods on the S-pivot section

Note
- ▶ The guy rods must be placed down to the point where the guy rods can be pinned on the assembly brackets **3** on point **P2**!

- ▶ Luff the SA-frame down and place the boom on the support on the ground.
- ▶ Make sure that the transport retainers for the guy rods on the intermediate sections are unpinned.
- ▶ Luff the SA-frame down and place the guy rods on the S-intermediate sections in the transport retainers.

When pinning the pin **5**, you have to use the washers **7**, see illustration.
- ▶ Pin the guy rods **1** on the assembly brackets **3** on the S-pivot section: Insert the pin **5** and secure with spring retainer **6**, see detail **Y**.
- ▶ Unpin the guy rods, which are laying on the boom and secure them individually with the transport retainers.

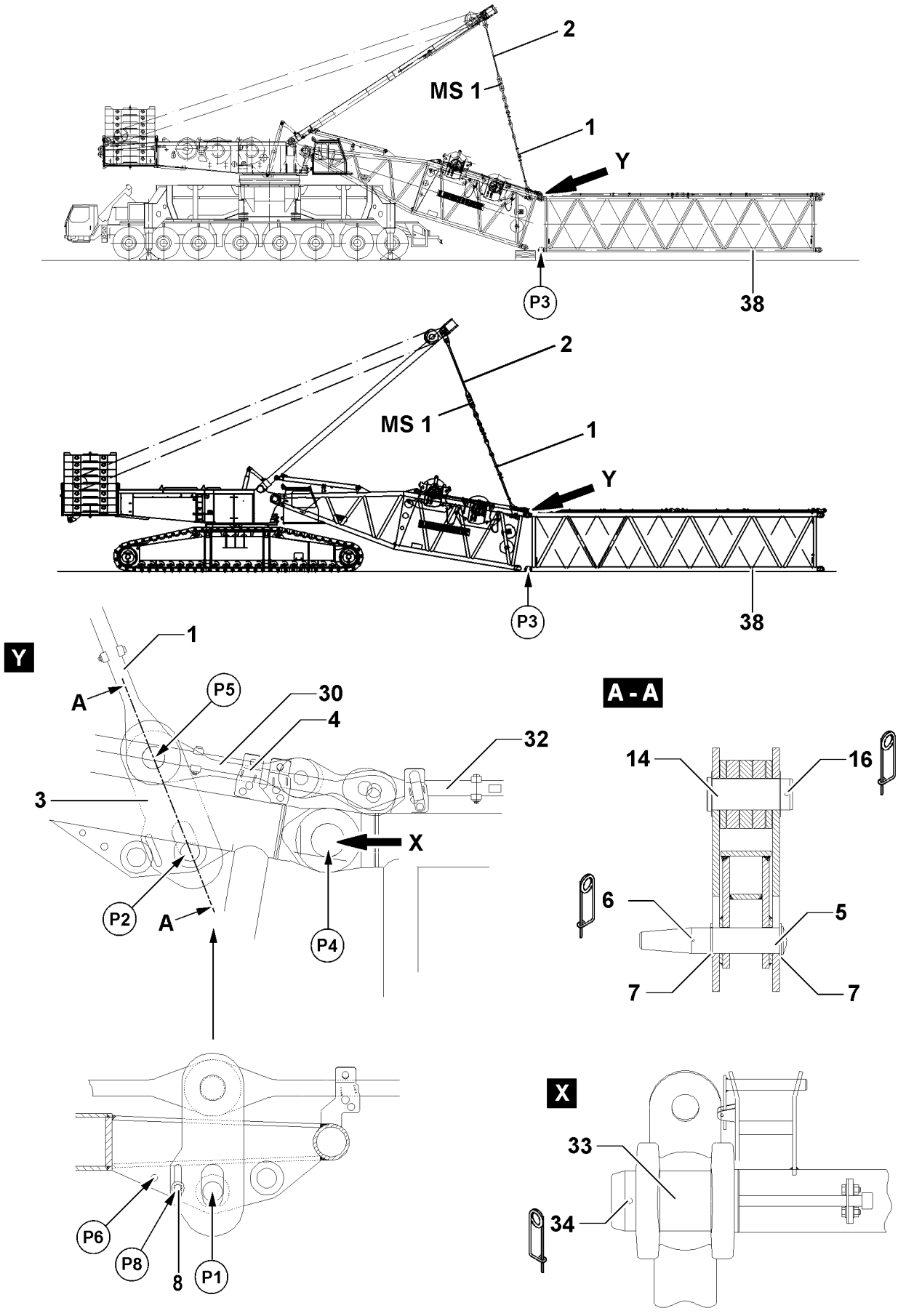
2
MS 1
1
Y
P3
38
2
MS 1
1
Y
P3
38
Y
1
A
P5
30
4
32
3
X
P2
A
P4
A - A
14
16
6
5
7
7
X
33
34
P6
P8
8
P1

B112553

“Opening” the S-boom

Note

- ▶ The ACTUAL force on test point **MS1** is shown on LICCON monitor 1!
- ▶ Tension the guying on the SA-frame with the same force as for assembly, see the actual force which was measured and noted at assembly on test point **MS1**!
- ▶ The pins can be pulled easier and the pins and lugs are therefore not damaged!

- ▶ Lift the SA-frame and tension the guy rods until the force on test point **MS1** corresponds to the force at assembly.
- ▶ Unpin the S-pivot section on both sides “on the bottom” at point **P3**: Remove the spring retainer **34** and unpin the pin **33**, see detail **X**.
- ▶ Lower the S-boom until the intermediate sections and the S-pivot section are laying on the support on the ground.
- ▶ Unpin the S-pivot section on both sides “on top” at point **P4**: Remove the spring retainer **34** and unpin the pin **33**, see detail **Y**.
- ▶ Lower the SA-frame and place the guy rods **1** in the transport retainers on the S-pivot section.
- ▶ Unpin the guy rods **1** on the guy rods **2** of the SA-frame.
- ▶ Secure guy rods **1** in the transport retainers.

NOTICE

Assembly bracket in operating position!

If the assembly bracket **3** is in operating position during transport, components can be damaged!

- ▶ Secure the assembly bracket **3** before transport with the transport retainer **8** on point **P8**, see detail **Y**!

- ▶ Unpin the assembly bracket **3** on the S-pivot section: Remove the spring retainer **6** and unpin the pin **5** on point **P2**, see detail **Y**.

When pinning the pin **5**, you have to use the washers **7**, see sectional **A-A**.

- ▶ Pin the assembly bracket **3** on the S-pivot section: Insert the pin **5** on point **P1** and secure with spring retainer.
- ▶ Secure the assembly bracket **3**: Disassemble the transport retainer **8** on point **P6** and assemble on point **P8**.

Result:

– The S-lattice sections can be disassembled.

Disassembling the S-lattice sections

The disassembly is described on the example of one intermediate section, see detail **X**.

- ▶ Unpin the S-intermediate section on both sides “on the bottom”: Remove the spring retainer **34** and unpin the pins **33**.
- ▶ Unpin the S-intermediate section on both sides “on top”: Remove the spring retainer **34** and unpin the pins **33**.
- ▶ Remove the S-intermediate section.
- ▶ If additional lattice sections are disassembled:
  Disassemble additional lattice sections the same way as described in this section.

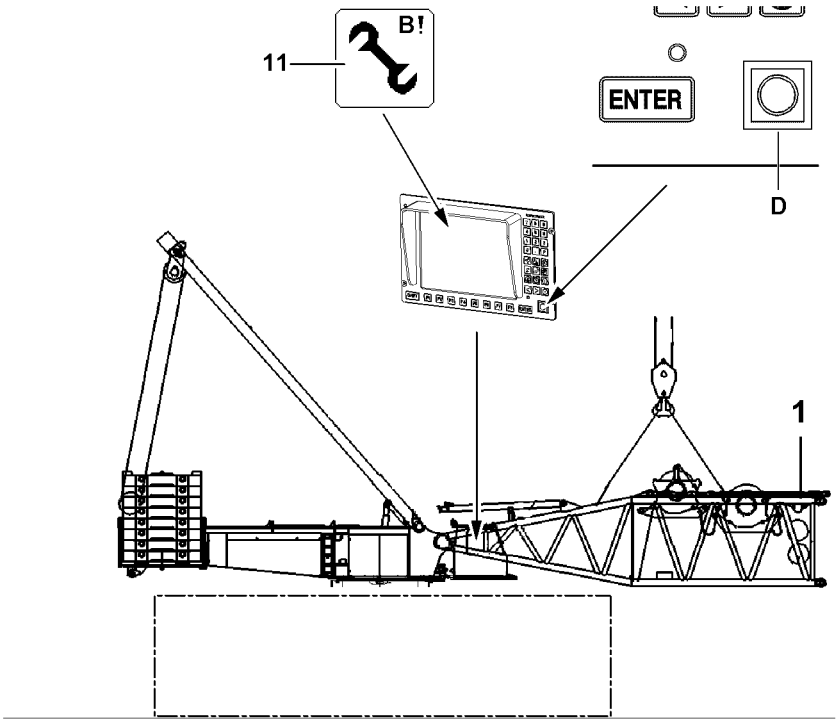

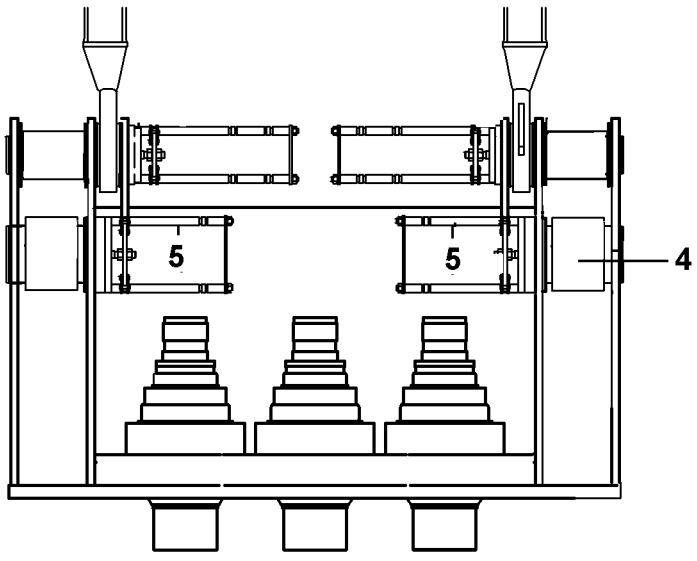

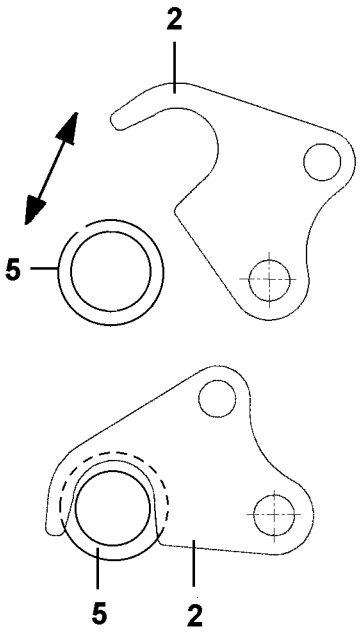

B111616

5.6 Disassembling the S-pivot section

WARNING
General danger notes!
- ▶ Support S-pivot section during disassembly with suitable materials!
- ▶ Insert and secure all pins after disassembly in the intended transport receptacles!
- ▶ The guy rods must be inspected regularly, see Crane operating instructions, chapter 8.15!

Make sure that the following prerequisite is met:
– The SA-frame is erected to the point where the S-pivot section can be disassembled without obstructions.

- ▶ Attach the S-pivot section **1** on the auxiliary crane.
- ▶ Lift the S-pivot section **1** with the auxiliary crane to the horizontal.

The pin pulling cylinders on the turntable are actuated with the radio remote control (only available for LR-cranes).

Note
- ▶ For operation of the radio remote control, see Crane operating instructions, chapter 6.08!

WARNING
The S-pivot section can fold downward!
If the S-pivot section is not secured before unpinning the pins, then it will fold down! Personnel can be severely injured or killed!
- ▶ Make sure that the S-pivot section is secured with the auxiliary crane before unpinning the pin **4**!

- ▶ Release the pin **4**: Fold the retaining hook **2** out on the guides **5**.
- ▶ Unpin the pins **4** on both sides.
- ▶ When the pins **4** are completely unpinned on the left and right on the S-pivot section **1**: Secure the pin **4**: Fold the retaining hook **2** in on the left and right on the guides **5**.

NOTICE
Property damage on the turntable and on the S-pivot section!
- ▶ Slowly swing the S-pivot section out with the auxiliary crane and at low speed on the turntable!

- ▶ Carefully place the S-pivot section **1** down.
- ▶ Remove the auxiliary crane.

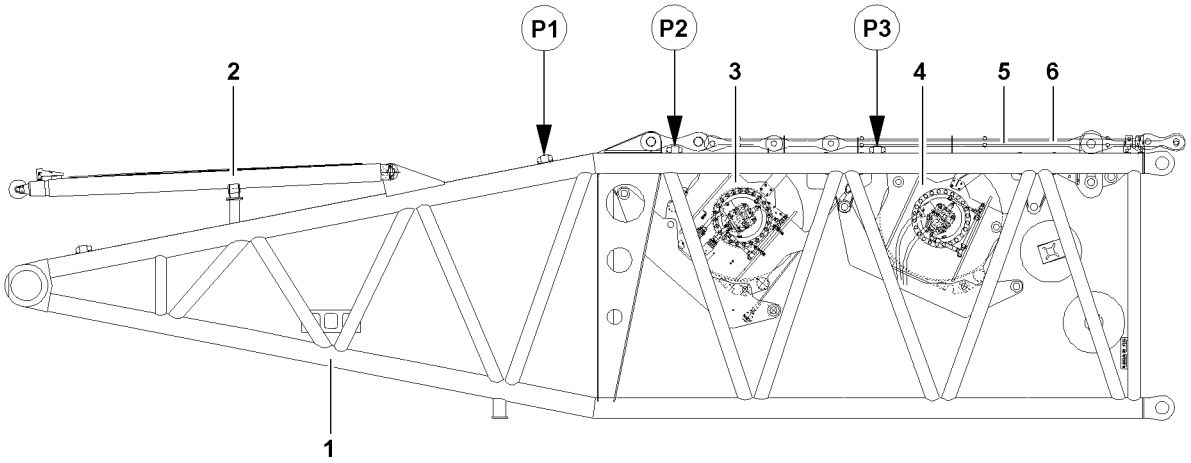

B112044

1 Component overview S-pivot section

Position	Component	Weight
1	S-pivot section	15.05 t
2	S-relapse retainer	1.30 t
3	Winch 6 including rope	6.40 t
4	Winch 5 including rope	9.50 t
5	WA-bracket 2 guy rods	0.66 t
6	S-guy rods	0.67 t
	S-pivot section complete	33.58 t [1)]

1) The stated overall weights are approximate.

2 Fastening points

Fastening points	
P1 + P2	For S-pivot section **without** winches
P1 + P3	For S-pivot section **with** one or two winch(es)

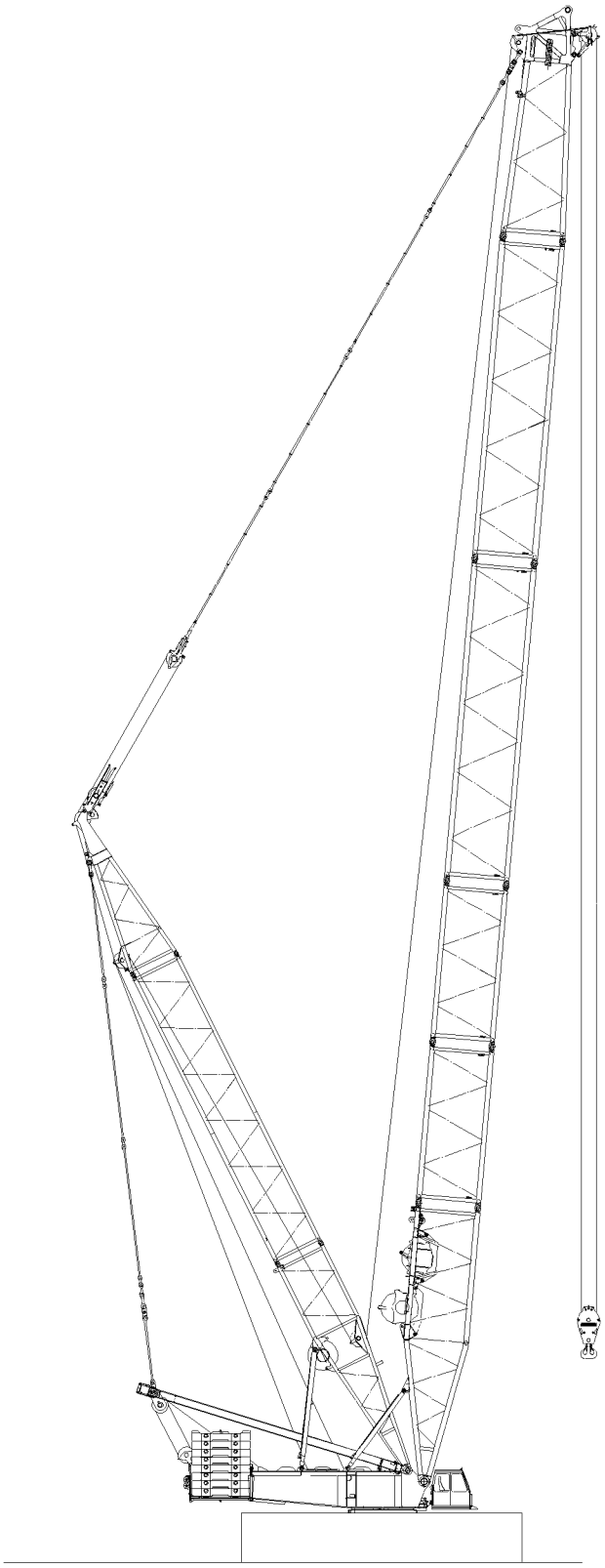

B112046

3 Assembling the SLD/SD-boom

Note

▶ The assembly is described on the example of the S-boom!

WARNING

Risk of falling!

During assembly and disassembly, personnel must be secured with appropriate aids to prevent them from falling. If this is not observed, assembly personnel can fall and suffer life-threatening or fatal injuries!

- ▶ Any work, where there is a danger of falling must be carried out with suitable aids (for example: lifting platforms, scaffoldings, ladders, auxiliary crane)!
- ▶ If the work cannot be carried out with such aids nor from the ground, then the assembly personnel must secure themselves with approved fall arrest systems to avoid falling, see Crane operating instructions chapter 2.04!
- ▶ If railings are present on the components, then they must be brought into the corresponding position and secured for assembly / disassembly work!
- ▶ Step on aids and fall protection equipment only with clean shoes!
- ▶ Keep aids and fall protection equipment clean and free from snow and ice!
- ▶ During all assembly and disassembly work, maintenance work and inspections, travel or crane operation is prohibited!

WARNING

The lattice sections can fall down!

If the lattice sections are not pinned and secured correctly, then they can fall down and fatally injure personnel!

- ▶ Pin or unpin both pins at the same horizontal level, i.e. **left and right**!
- ▶ Do not stand under the lattice sections or within the entire danger zone during the pinning and unpinning procedure of the boom!
- ▶ Secure the pins in the bearing points and the receptacles!
- ▶ It is prohibited to lean the ladder against the component being disassembled!
- ▶ Do not remove the fastening equipment and the auxiliary crane until each component is pinned on and secured!

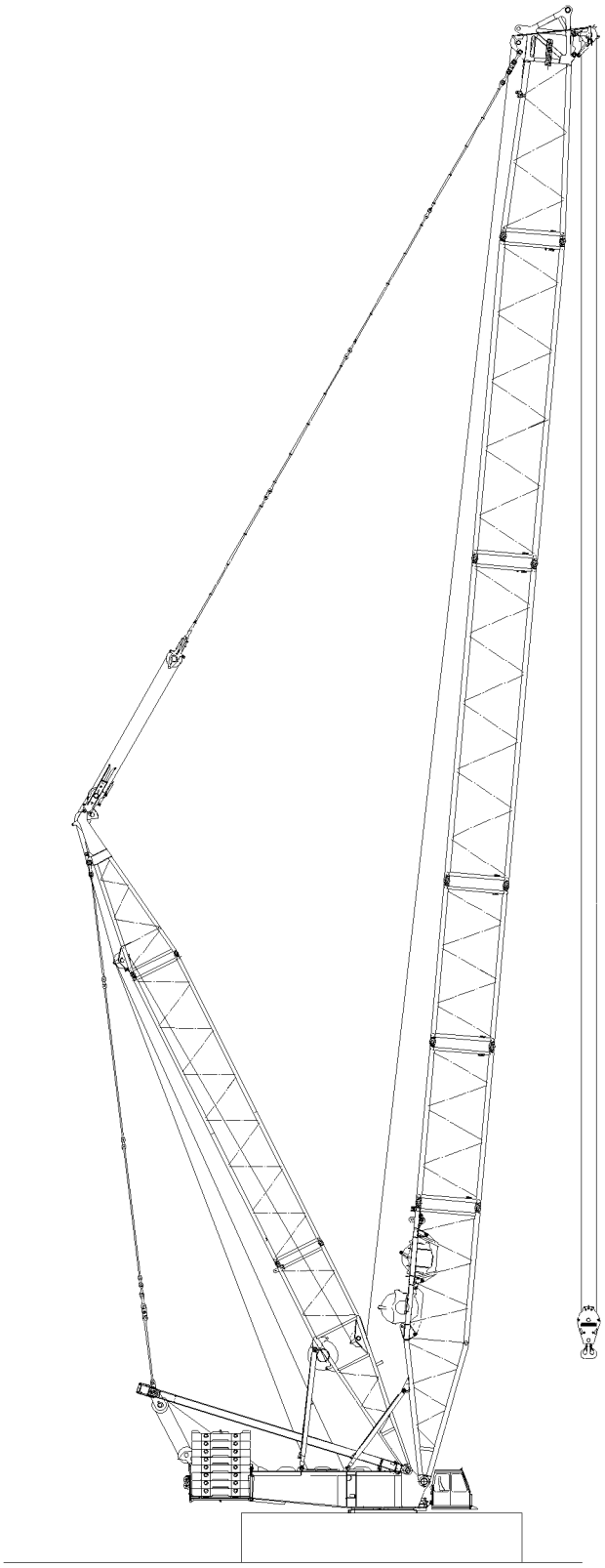

B112046

WARNING
Danger of impact / crushing!
When installing / removing crane components with the auxiliary crane, crane components can start to swing back and forth!
When lifting / lowering and positioning crane components, there is an increased danger of impacts / crushing!
Personnel can be caught and severely injured or killed!
- ▶ Make sure that personnel cannot be caught by components!
- ▶ Make sure that the crane is aligned in horizontal direction to avoid the support beams from swinging by themselves (only on connection with crane support or for the LG-crane)!
- ▶ When working in danger zones: Use aids to protect limbs!
- ▶ Guide components with suitable aids to minimize oscillation!

WARNING
The crane can topple over!
If the turntable is turned during the assembly of the boom, then the crane can topple over and be severely damaged!
Personnel can be severely injured or killed!
- ▶ The turntable may not be turned during the assembly of the boom!

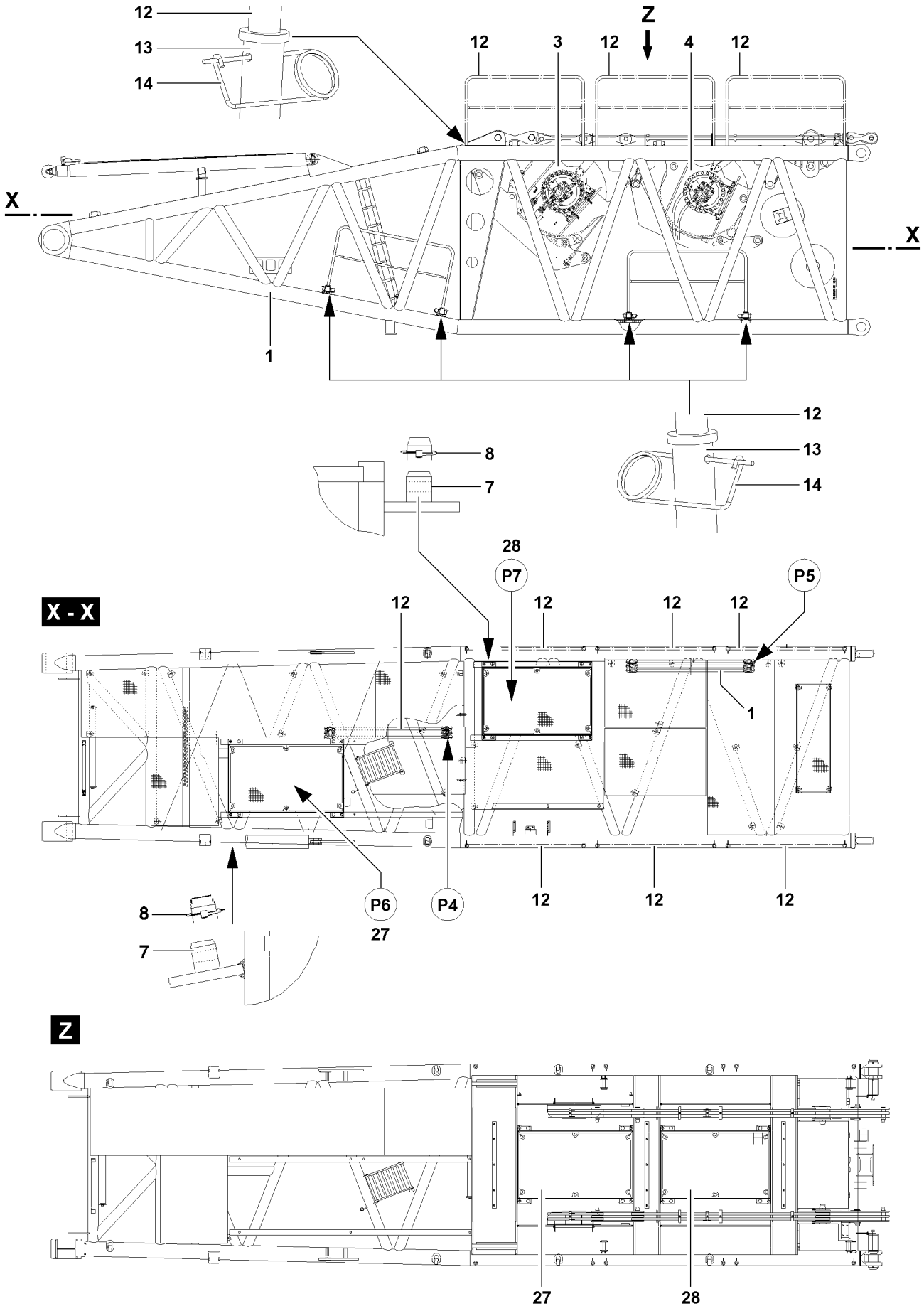
12
13
14
Z
12
3
12
4
12
X
X
1
12
13
14
8
7
28
P7
P5
X - X
12
12
12
12
1
8
7
P6
27
P4
12
12
12
Z
27
28

B112057

3.1 Assembling the railing on the S-pivot section

WARNING
Risk of falling!
During assembly and disassembly of the railings **12**, personnel must be secured with appropriate aids to prevent them from falling (for example: with personal protective equipment)!
Even for assembly of protective devices there is a danger of falling!
Assembly personnel can fall and be severely injured or killed!
- ▶ For assembly and disassembly work, maintenance and inspection work on the S-pivot section, all railings **12** must be assembled and secured!
- ▶ Step on the S-pivot section **1** only with “clean shoes”!

Note
- ▶ See Crane operating instructions, chapter 2.06!

- ▶ Remove the railing **12** on the S-pivot section **1** from the transport position **P4** and transport position **P5** and bring into operating position: Insert the railing **12** into the mounting pipes **13** and secure with spring retainer **14**.

3.2 Assembling the catwalks

WARNING
Disassembled or incompletely assembled catwalks!
If the catwalks are not assembled if the winches are missing or not completely assembled, then personnel can fall and be severely injured or killed!
- ▶ For each non-assembled winch on the S-pivot section: Assemble the catwalk!
- ▶ The catwalks may only be accessed when they are pinned and secured in operation position, check visually!

Catwalks are assigned to the openings for the winches:
– Winch 6 – catwalk **27**
– Winch 5 – catwalk **28**

Note
- ▶ If one or both winches are installed in operation position on the S-pivot section, then the disassembled catwalks must be placed in the respective receptacles and secured!

Make sure that the following prerequisites are met:
– The railings are pinned in operating position and secured.
– The assembly personnel is secured to prevent them from falling.

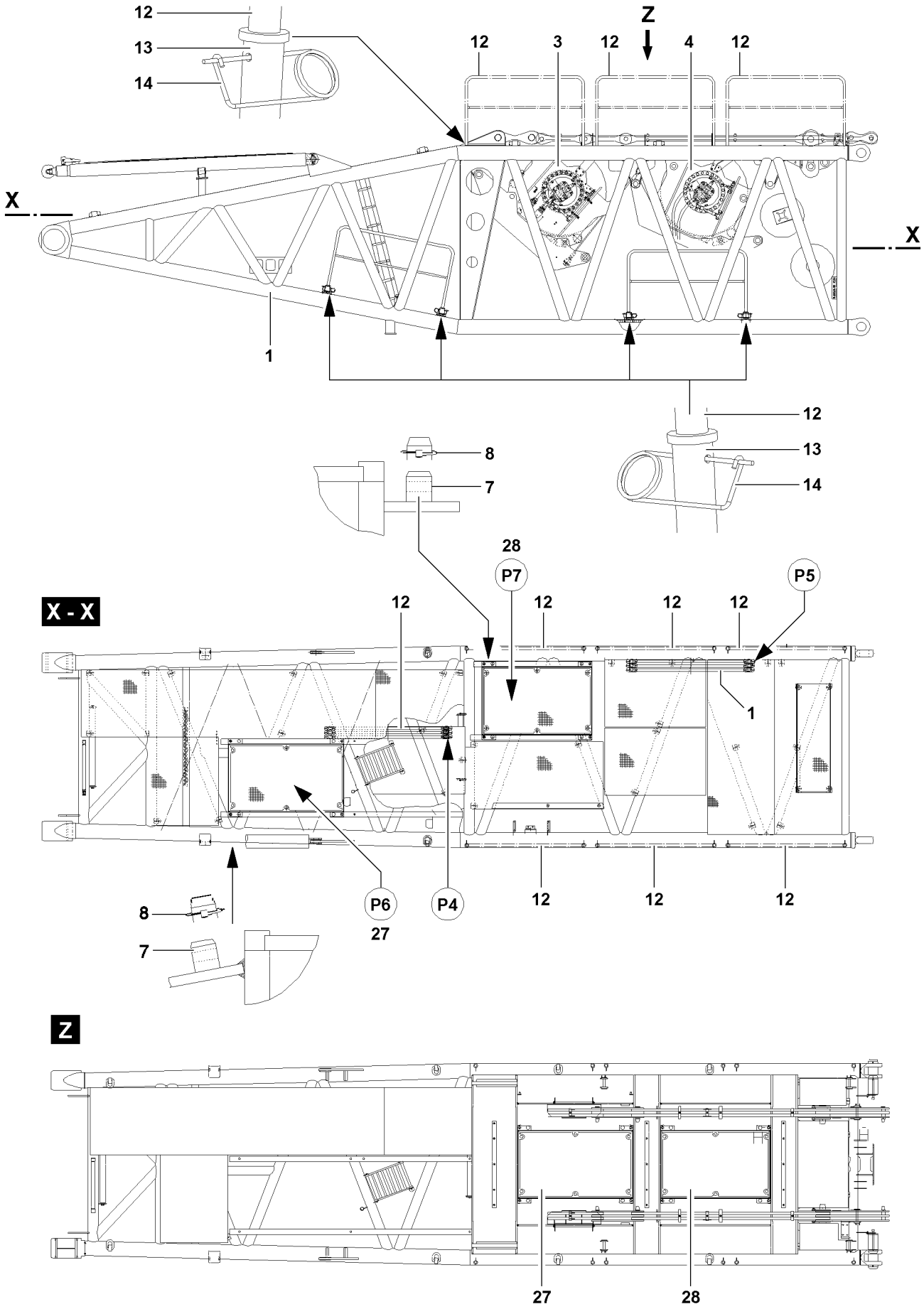
12
13
14
Z
12
3
12
4
12
X
X
1
12
13
14
8
7
28
P7
P5
X - X
12
12
12
12
1
8
7
P6
27
P4
12
12
12
Z
27
28

B112057

3.2.1 S-pivot section without winches

Make sure that the following prerequisite is met:
– The catwalks are in the transport receptacles.

Remove the catwalks with the auxiliary crane from the transport receptacles and installed them individually in operating position.
▶ Remove the catwalk **27** and catwalk **28** with the auxiliary crane from the transport receptacle.
▶ Install and secure the catwalks in operating position - over the installation opening of the respective winch.

3.2.2 S-pivot section before installation of winches

Make sure that the following prerequisites are met:
– Winch 5 is in transport position.
– Winch 6 is in transport position.
– The catwalk **27** and catwalk **28** are pinned and secured in operating position.

▶ Fasten the respective catwalk on the auxiliary crane.
▶ Release the catwalk on the centering pins: Remove the linch pin **8**.
▶ Lift the catwalk with the auxiliary crane from the operating position.
▶ Place the catwalk with the auxiliary crane in transport position **P6** or in transport position **P7** and secure with linch pin **8**.

Result:
– The respective winch can be installed.

3.3 Assembling the winch(es) on the S-pivot section

Make sure that the following prerequisite is met:
– The catwalks are in the transport receptacles.

▶ Fasten the required winch on the auxiliary crane.
▶ Bring the winch into operating position with the auxiliary crane, pin and secure.
▶ When the winch is pinned and secured:
Remove the auxiliary crane.
▶ Establish the electrical connections from the terminal box in the S-pivot section to the winches.
▶ Establish the hydraulic connections to the winches.

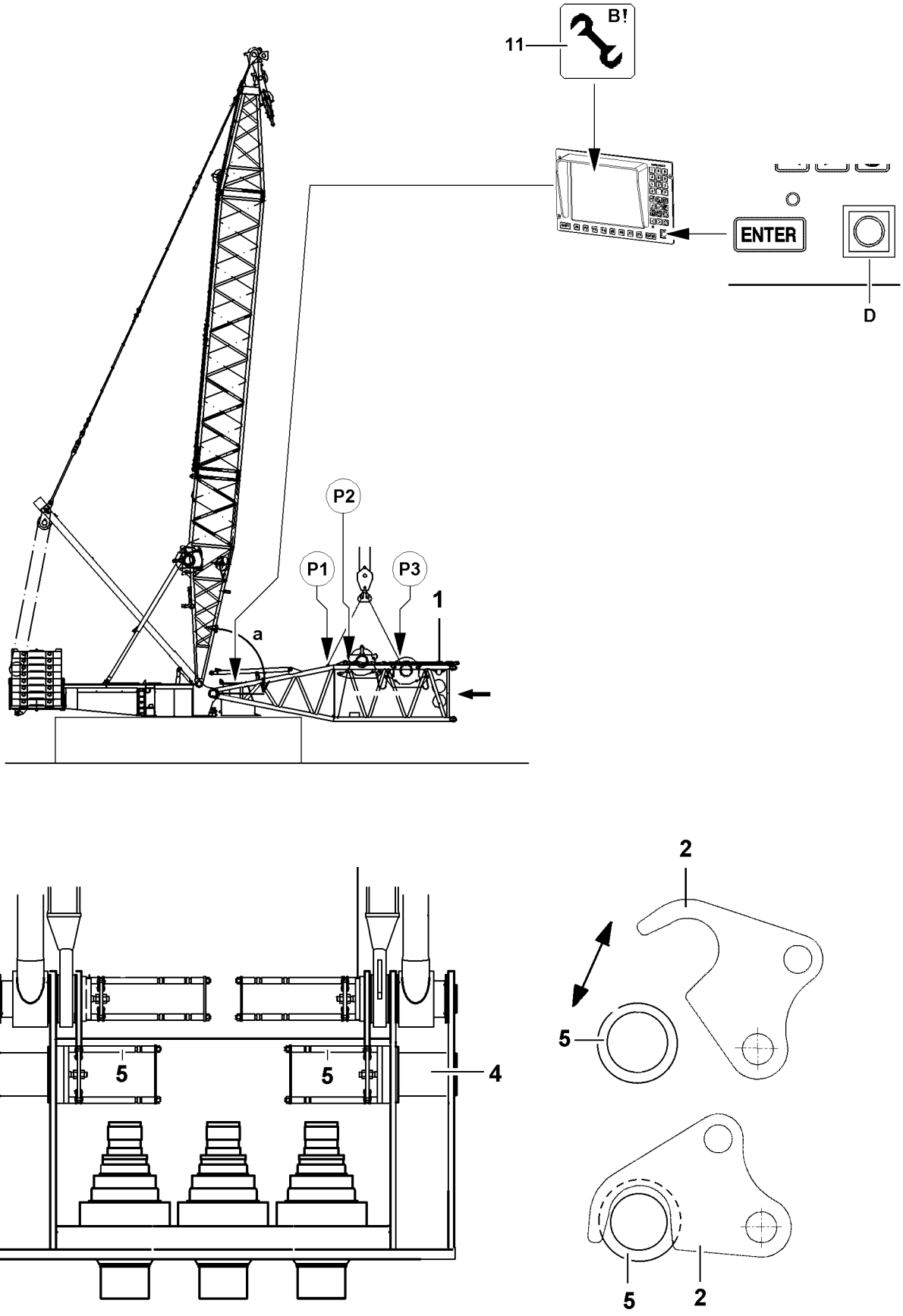

B112047

3.4 Assembling the SLD/SD-boom

Make sure that the following prerequisites are met:

- The crane is supported.
  (only in connection with crane support or for LG-cranes)
- The crane is aligned in horizontal direction.
- An auxiliary crane is available.
- An assembly scaffolding / work platform is available.
- The counterweight has been installed on the turntable according to the load chart.
- The D-boom is completely assembled and erected on the turntable, see Crane operating instructions, chapter 5.05!
- The LICCON overload protection has been set according to the data in the load chart.

3.4.1 Turning the turntable into assembly position

WARNING
The crane can tip over!
If the specifications in the erection and take down charts as well as in the assembly conditions are not observed, the crane can topple over!
Personnel can be severely injured or killed!

- ▶ Observe the instructions, see Crane operating instructions, chapter 3.06!
- ▶ Turn the turntable in longitudinal direction of the crawler travel gear or to the side before installation!
- ▶ Make sure that the specifications in the erection and take down charts are observed!

Note

- ▶ If the turntable is turned to the side for the assembly of the boom, then boom and lattice sections must be supported, depending on the ground condition!

- ▶ Turn the turntable in longitudinal direction of the crawler travel gear or to the side.

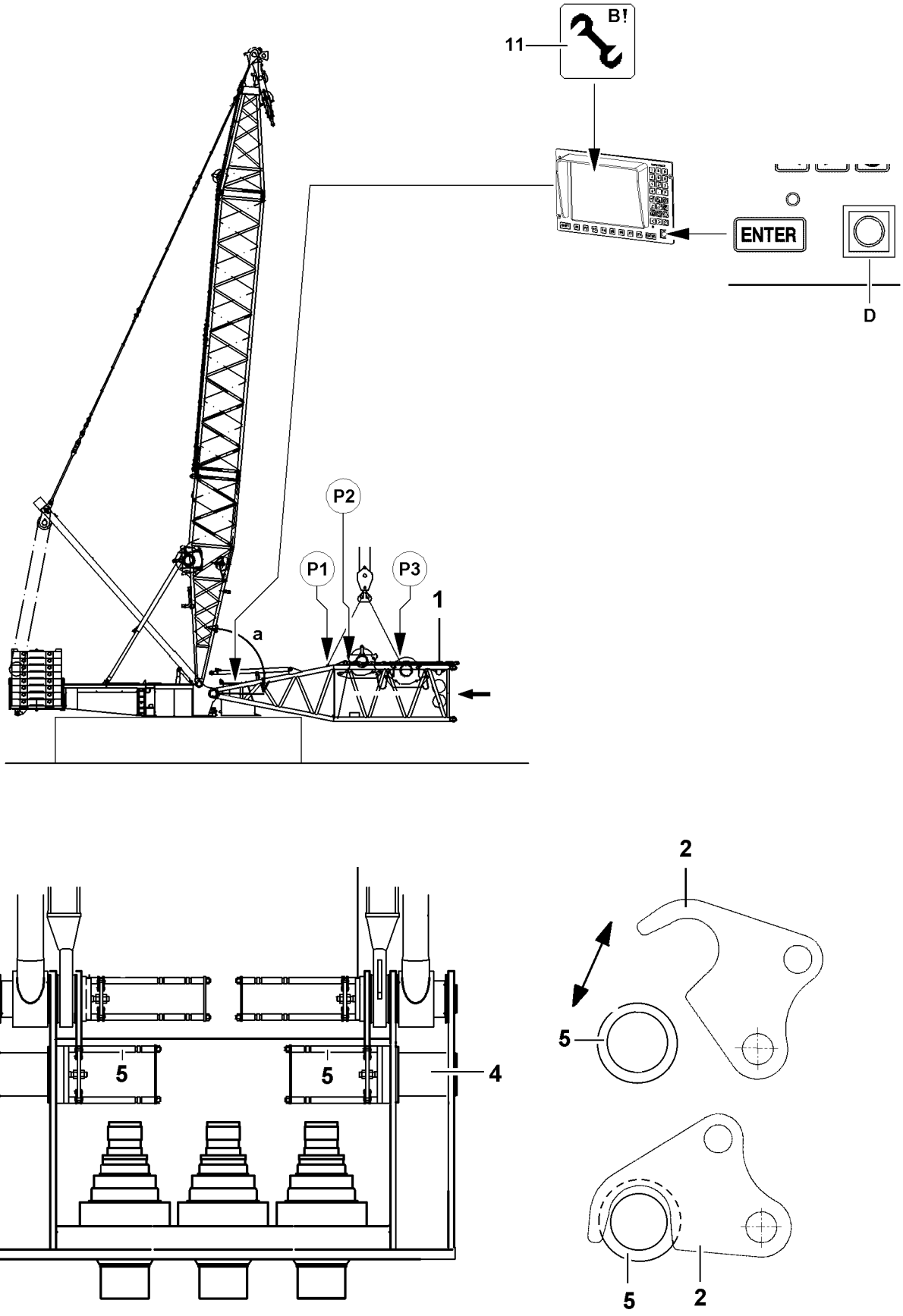

B112047

3.4.2 Exceeding the LICCON overload protection for assembly

WARNING
Assembly with turned on set up key!
When the set up key is turned on, the LICCON overload protection is exceeded!
In the event of deliberate improper use, the crane could collapse, the boom can break off or the crane can topple over!
Personnel can be severely injured or killed!
This could result in high property damage!

- ▶ The set up key **D** may only be actuated by persons who know the effects of a bypass!
- ▶ Press the set up key **D** only when the set up status was correctly entered into the LICCON computer system!
- ▶ Observe the erection / take down charts!
- ▶ Crane operation with the set up key **D** turned on is strictly prohibited!

▶ Turn the set up key **D** to the right.

Result:

– The LICCON overload protection is exceeded.
– The assembly icon **11** appears in the LICCON monitor.

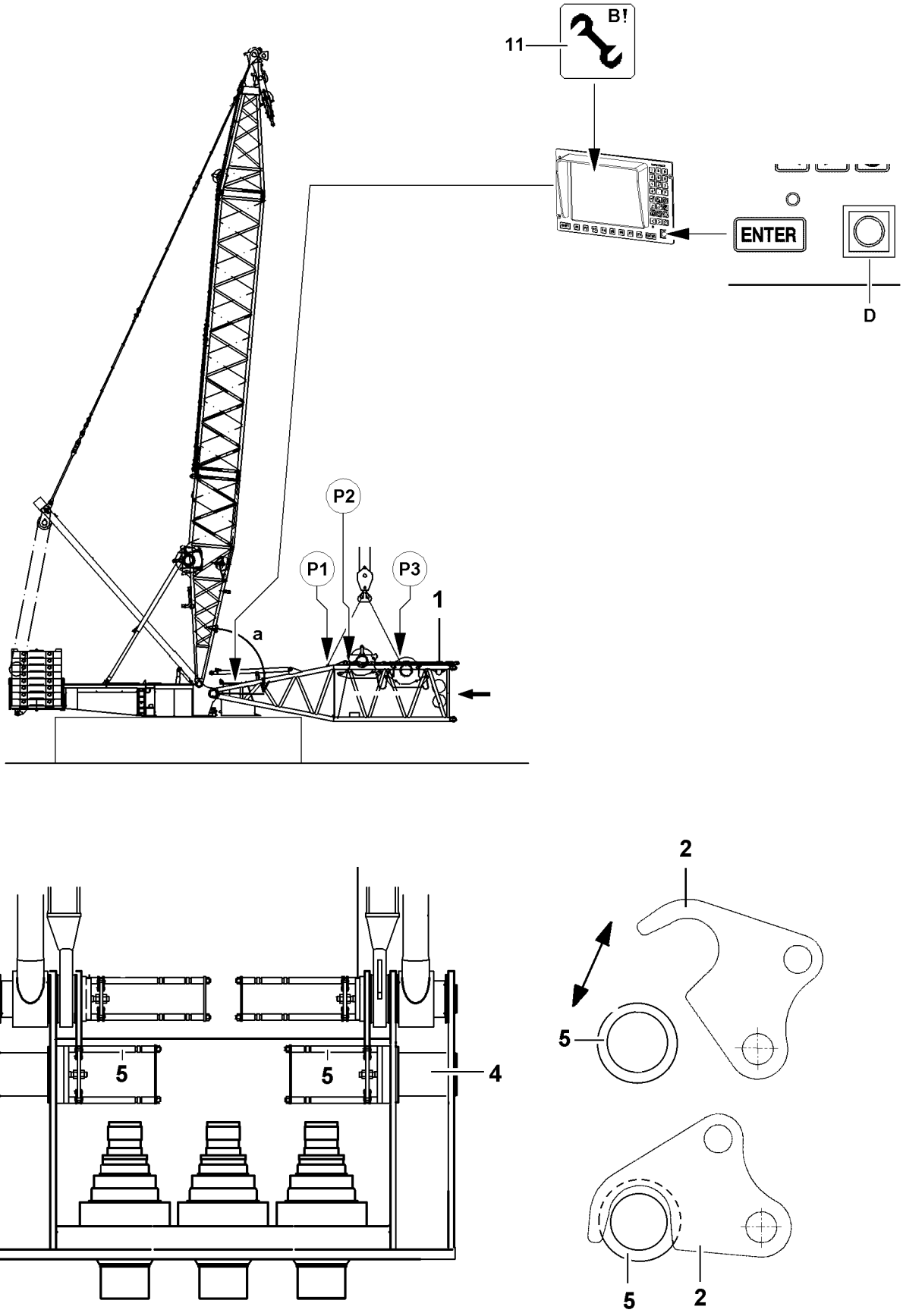

B112047

3.4.3 Pinning the S-pivot section on the turntable

WARNING
General danger notes!
- ▶ Support the S-boom during assembly with suitable materials!
- ▶ All pins are to be secured after assembly with the intended safety elements!
- ▶ The guy rods must be inspected regularly, see Crane operating instructions, chapter 8.15!

Make sure that the following prerequisite is met:
– The connector pins **4** on the turntable are unpinned.

Note
- ▶ Select the fastening points on the S-pivot section in such a way that the S-pivot section hangs horizontally on the auxiliary crane at assembly, see section “Fastening points”!

- ▶ Fasten the S-pivot section **1** on the fastening points **P1** and the fastening points **P2** on the auxiliary crane and swing in to the pin points on the turntable.

or

- ■ Fasten the S-pivot section **1** on the fastening points **P1** and the fastening points **P3** on the auxiliary crane and swing in to the pin points on the turntable.

The pin pulling cylinders are actuated with the radio remote control (only available for LR-crane).

Note
- ▶ For operation of the radio remote control, see Crane operating instructions, chapter 6.08!

WARNING
Falling S-pivot section!
Due to non-secured or insufficiently secured connector pins, the S-pivot section can fall down!
Personnel can be severely injured or killed!
- ▶ Secure the connector pins **4** between the S-pivot section **1** and the turntable after the pinning procedure with the retaining hook **2**.

- ▶ Fold the retaining hook **2** out on the guides **5**.
- ▶ Insert the connector pins **4** on both sides: Actuate the radio remote control.
- ▶ When the connector pins **4** are completely pinned on the left and right on the S-pivot section **1**: Secure the connector pins **4**: Fold the retaining hook **2** in on the left and right on the guides **5**.

NOTICE
Damage to the S-pivot section!
When the installed S-pivot section is placed on the ground, the S-pivot section can be damaged!
- ▶ Before placing the S-pivot section down on the ground, make sure that the S-pivot section cannot collide with the crane components during the take down procedure!
- ▶ Slowly place the S-pivot section **1** with the auxiliary crane and at low speed on the ground!
- ▶ Before placing it on the ground, support the S-pivot section **1**!

- ▶ Carefully place the S-pivot section **1** on the support.
- ▶ Remove the auxiliary crane.

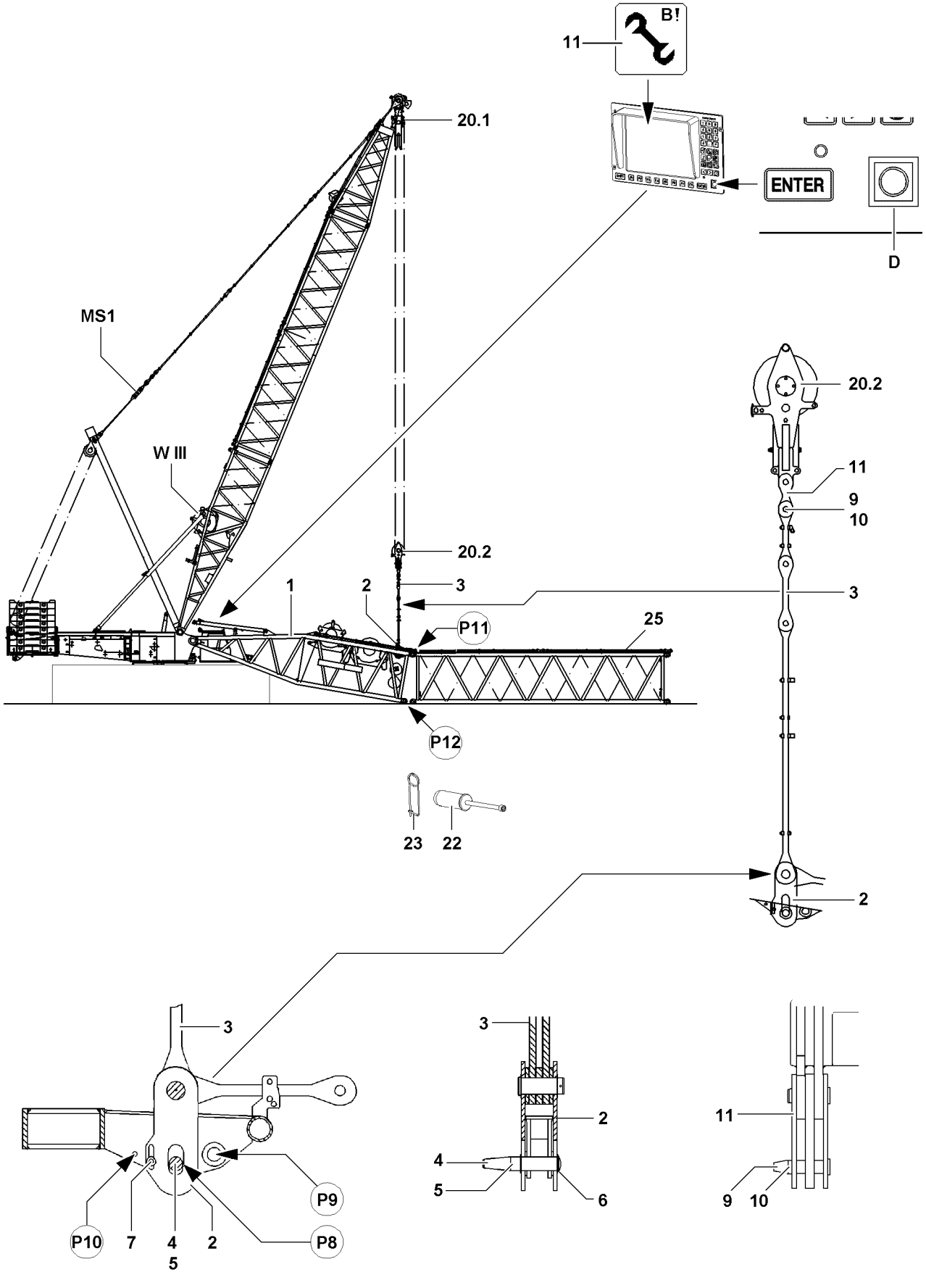
B!
11
20.1
ENTER
D
MS1
W III
20.2
11
9
10
3
1
2
3
P11
25
P12
23
22
2
3
P9
P10
7
4
5
2
P8
3
2
4
5
6
11
9
10

B112048

3.4.4 Pinning the upper pulley block on the S-pivot section

To be able to “close” the S-boom combination after assembly, it is necessary to luff the D-boom down to the front and to lower the upper pulley block via the control winch 3 **W III** to the S-pivot section **1** and to pin with the guy rods.
Make sure that the following prerequisites are met:

– The S-pivot section **1** is pinned and secured on the turntable.
– The S-pivot section **1** is placed on the ground on the support base.
– The auxiliary crane is removed.

NOTICE
Damage of crane components!
During the assembly and crane operation, the transport retaining pin **7** must be unpinned, otherwise crane components can be damaged!

▶ Insert the transport retaining pin **7** in parking position, point **P10**, and secure!

Note

▶ Pin point **P8** for flying assembly of S-boom with derrick!
▶ Pin point **P9** for flying assembly of S-boom with SA-bracket!

▶ Luff the D-boom down to the front until the upper pulley block **20.2** hangs freely over the assembly bracket **2** of the S-pivot section **1**.
▶ Pin and secure the upper pulley block **20.2** with the guy rods **3**: Pin and secure the assembly bracket **2**. Use pin **4**, washer **6** and spring retainer **5**.
▶ Carefully spool up winch 3 **WIII** until the guy rods **3** are slightly tensioned.

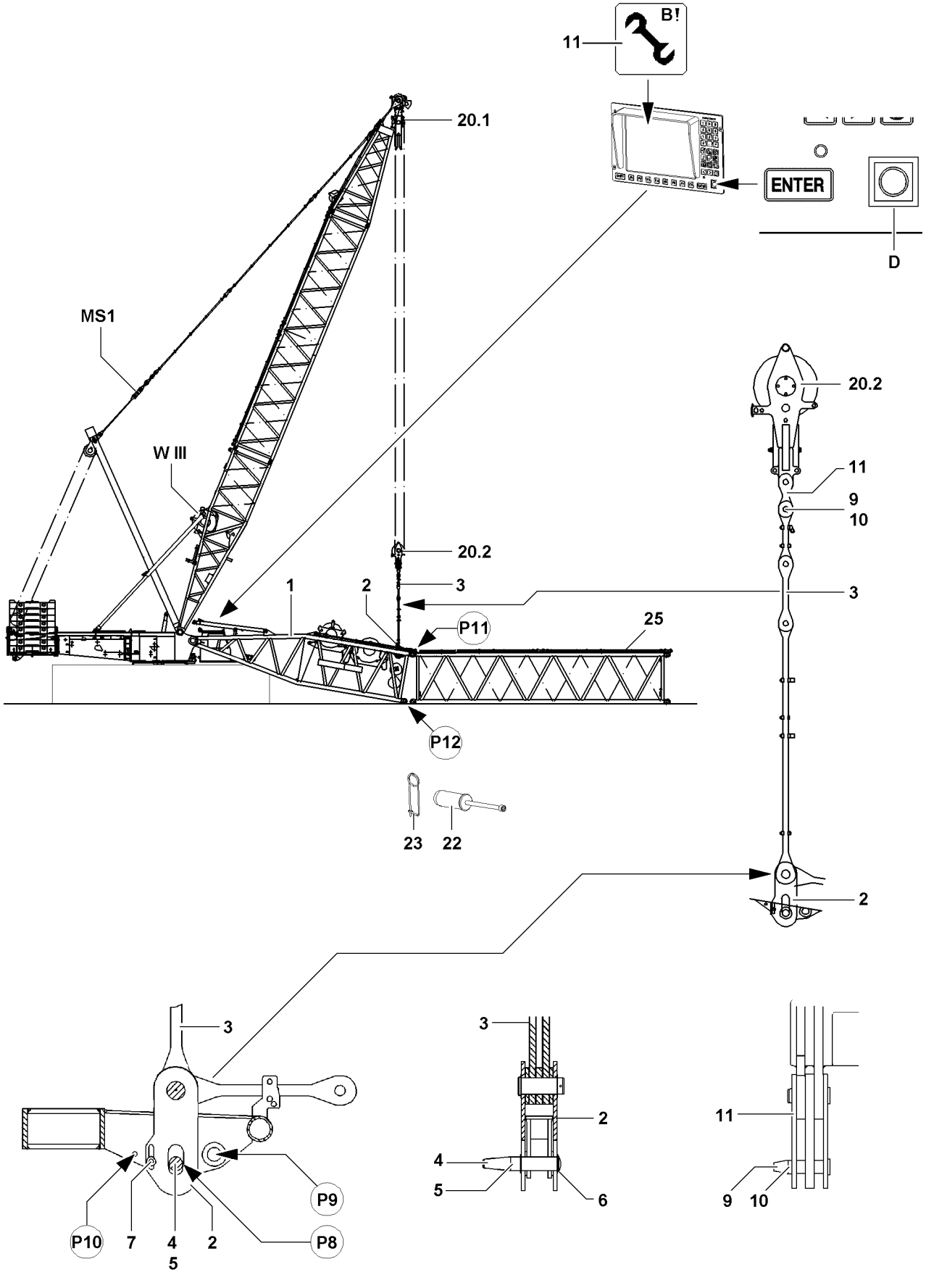
B!
11
20.1
ENTER
D
MS1
W III
20.2
11
9
10
3
1
2
3
P11
25
P12
23
22
2
3
P9
P10
7
4
5
2
P8
3
2
4
5
6
11
9
10

B112048

3.4.5 Installing the S-intermediate section on the S-pivot section

Make sure that the following prerequisites are met:

– The S-pivot section **1** is pinned and secured on the turntable.
– The S-pivot section **1** is placed on the ground on the support base.
– The upper pulley block **20.2** is pinned and secured with the guy rods **3**.
– The auxiliary crane is removed.

Note

▶ The S-intermediate sections are pinned with the pin pulling device, see Crane operating instructions, chapter 5.30!
▶ Support the S-intermediate section from below for easier assembly / disassembly!

WARNING

General danger notes!

▶ All pins are to be secured after assembly of the S-intermediate sections with the intended safety elements!

Pin the S-intermediate section **25** on the S-pivot section **1** “on top”.

▶ Attach the S-intermediate section **25** to the auxiliary crane and align on the S-pivot section **1**.
▶ When the pin bores on the S-pivot section **1** and on the S-intermediate section **25** “on top” (point **P11**) align:
Insert the pin **22** from the inside to the outside and secure with spring retainer **23**.

Assemble the S-boom to the required length and pin and secure the intermediate section “on top” and “bottom”.

▶ Insert the pin **22** from the inside to the outside and secure with spring retainer **23**.

WARNING

The crane can topple over!

If the following conditions are not met, the crane can topple over or be significantly damaged!

Personnel can be severely injured or killed!

▶ With the upper pulley block, with placed S-guy rods, boom length to maximum S140 m or SL98 m may be closed!
▶ With the upper pulley block, in connection with placed WA-bracket 2 and S-guy rods, a maximum boom length of S91 m may be closed!
▶ Non-required guy rods must be removed from the lattice sections, see Crane operating instructions, chapter 5.01!
▶ The end section of the corresponding SL/S-boom combination may **not** lift off the ground during the “Closing procedure”!

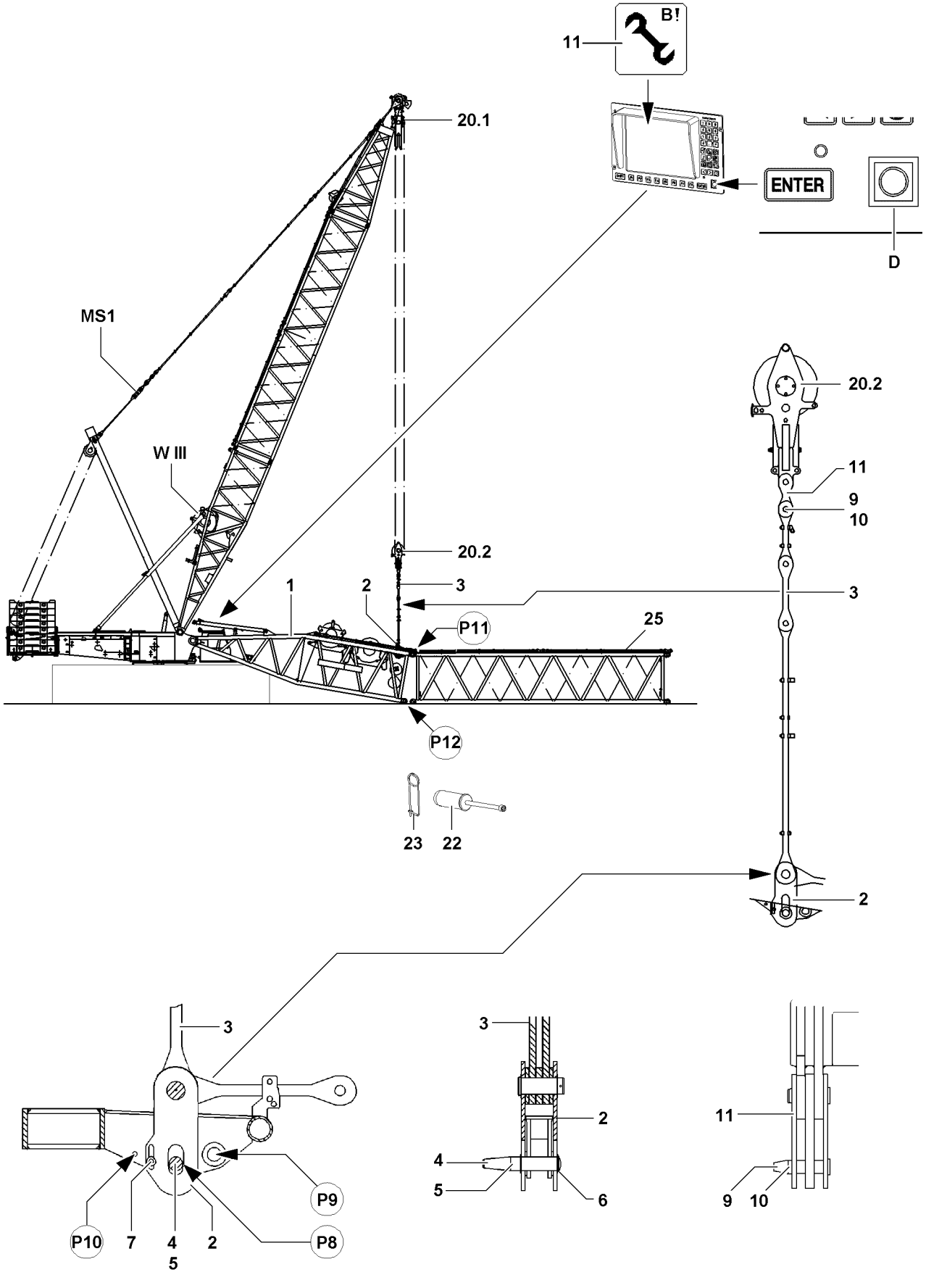
B!
11
20.1
ENTER
D
MS1
W III
20.2
11
9
10
3
1
2
3
P11
25
P12
23
22
2
3
P9
P10
7
4
5
2
P8
3
2
4
5
6
11
9
10

B112048

- When the SL/S-boom combination is assembled to the desired length:
  Lift the S-pivot section **1** with the upper pulley block **20.2** until the pin bores on the “bottom” align at point **P12**.
- Insert the pin **22** from the inside to the outside and secure with spring retainer **23**.

WARNING
Mortal danger due to folding down of boom!
By unpinning the upper pulley block **20.2** on the guy rods **3**, the boom can suddenly fold down if the boom is not pinned at point **P12** “on the bottom”!
Personnel can be severely injured or killed!

- It is prohibited for anyone to remain under the raised boom combination during the pinning / unpinning procedure!
- Unpin the upper pulley block **20.2** only when it is ensured that the S-pivot section **1** is pinned and secured “on top” and “bottom” with the S-intermediate section **25**!

- When the S-boom system is “closed”:
  Slowly lower the upper pulley block **20.2** until the guy rods **3** are relieved.
- Release and unpin the guy rods **3** on the upper pulley block **20.2**.
- Place and secure the guy rods **3** in the transport retainers on the S-pivot section.

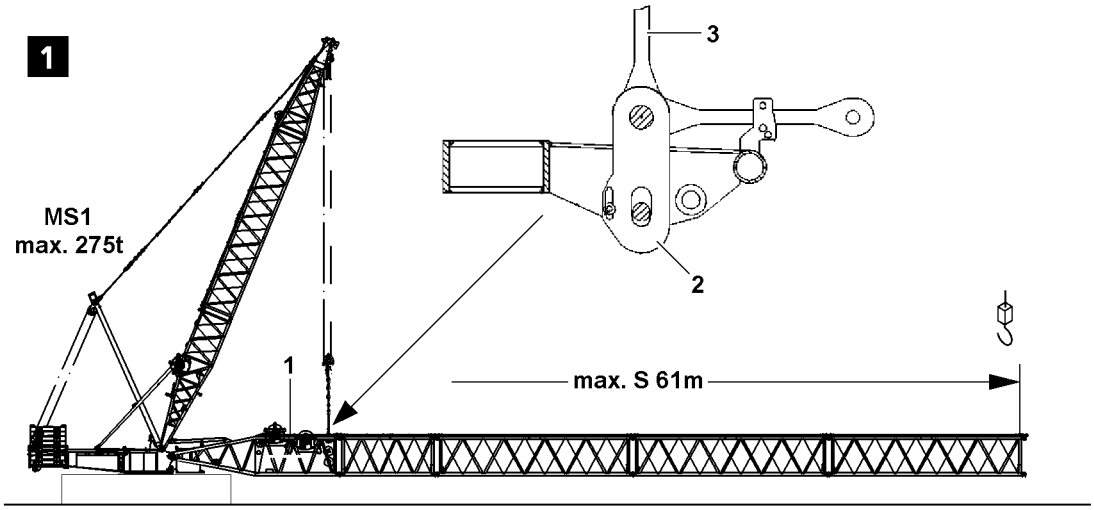
1
MS1
max. 275t
3
2
1
max. S 61m

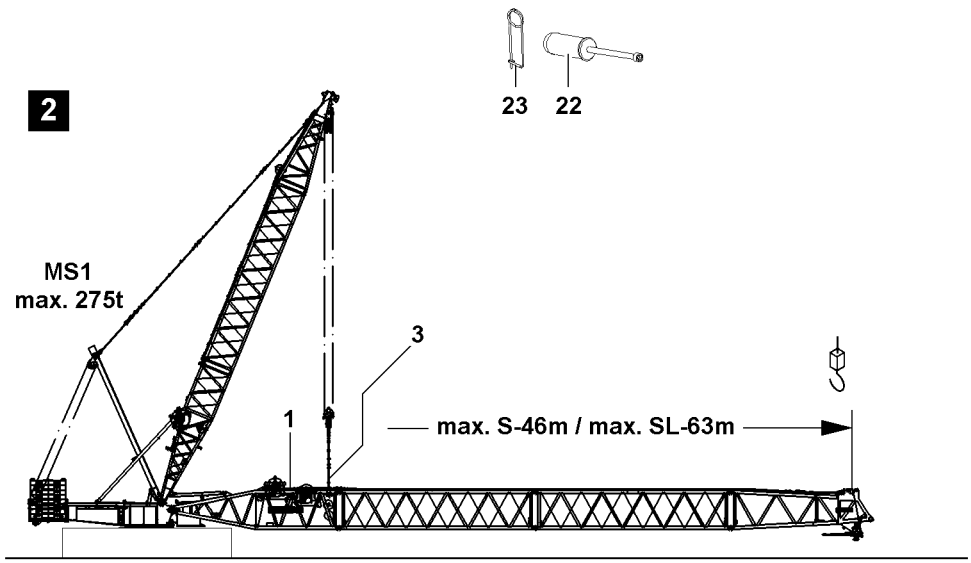
23
22
2
MS1
max. 275t
3
1
max. S-46m / max. SL-63m

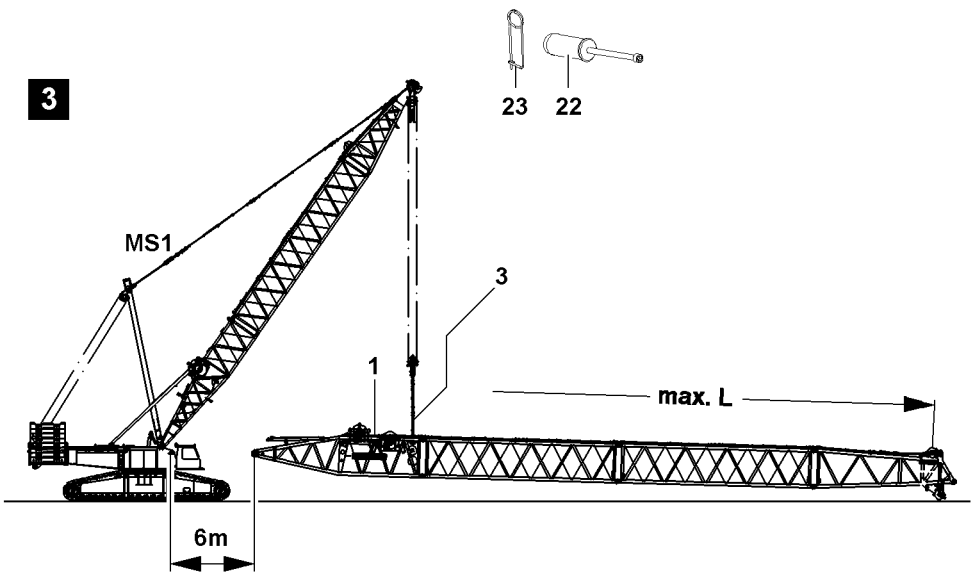
23
22
3
MS1
3
1
max. L
6m

B112572

3.5 Assembling the SL/S-boom in flying mode

If spatial prerequisites on the job site are limited for the assembly of the S-boom, or if they are limited by buildings or similar, then the S-boom can be installed in flying mode.

WARNING
General danger notes!
- ▶ Support the S-boom during assembly with suitable materials!
- ▶ All pins are to be secured after assembly with the intended safety elements!
- ▶ The guy rods must be inspected regularly, see Crane operating instructions, chapter 8.15!

WARNING
The crane can topple over!
If the following conditions are not met, the crane can topple over or be significantly damaged!
Personnel can be severely injured or killed!
- ▶ For the “Flying mode” boom assembly, the maximum permissible total forces on the test point **MS1** may **not** be exceeded. The “Actual forces” are shown on LICCON monitor 1!
- ▶ The “Flying mode” boom assembly is only permissible to certain system lengths!
- ▶ The maximum permissible system lengths may **not** be exceeded, observe the following charts!

Note
- ▶ Weights of the individual lattice sections, see Crane operating instructions, chapter 1.03!

Make sure that the following prerequisites are met:
- – The crane is supported.
  (only in connection with crane support or for LG-cranes)
- – The crane is aligned in horizontal direction.
- – An auxiliary crane is available.
- – An assembly scaffolding / work platform is available.
- – The counterweight has been installed on the turntable according to the load chart.
- – The D-boom is completely assembled and erected on the turntable, see Crane operating instructions, chapter 5.05!
- – The LICCON overload protection has been set according to the data in the load chart.

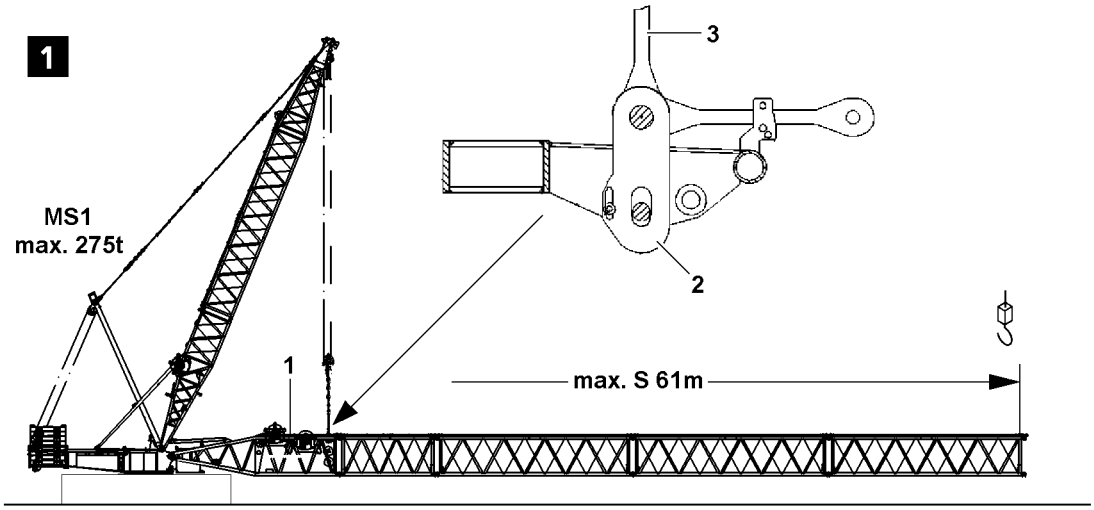
1
MS1
max. 275t
3
2
1
max. S 61m

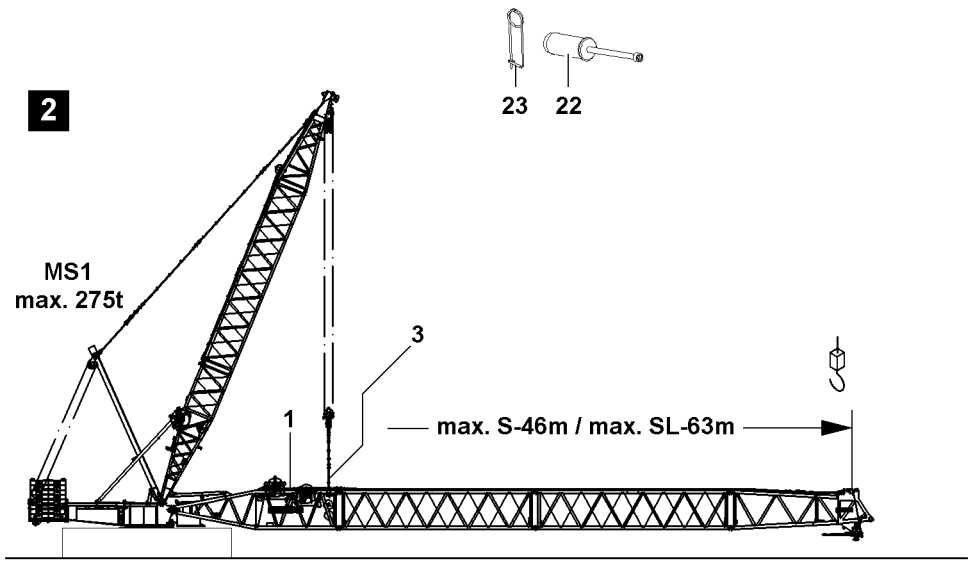
23
22
2
MS1
max. 275t
3
1
max. S-46m / max. SL-63m

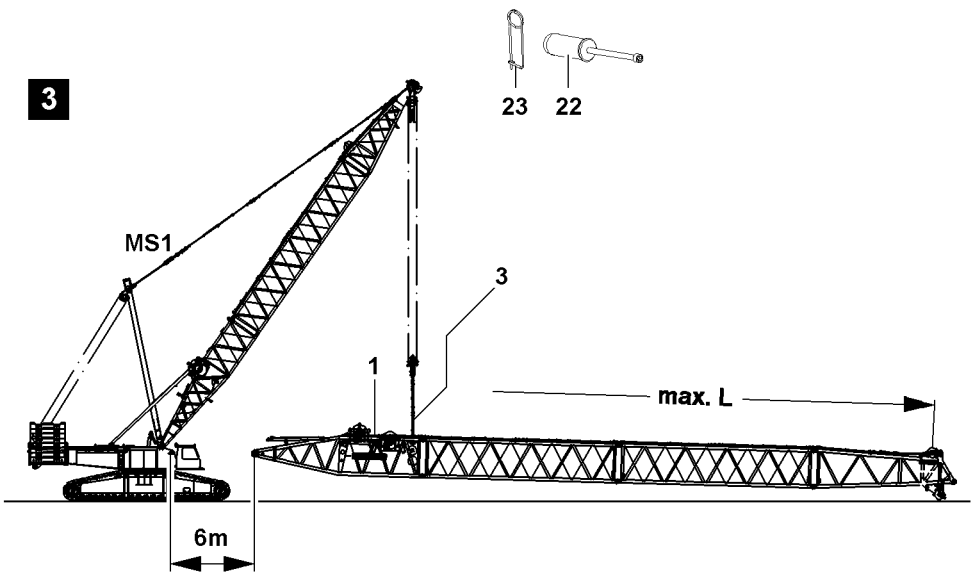
23
22
3
MS1
3
1
max. L
6m

B112572

Maximum permissible system lengths for a maximum total force MS1 of 275 t / 285 t [6]					
Support base 12 m x 12 m or 16 m x 16 m [4]					
Boom system	**Maximum system length**	**Equipment**	**DB_{min} [1]**	**ZB_{min} [2], [3]**	**Illustration**
S(D)	49.0 m	- with end section - without hook block - with S- and WA-bracket 2 guy rods	120 t 70 t [4]	45 t	**2**
	61 m	- without end section - without hook block - with S- and WA-bracket 2 guy rods	120 t 145 t [6]	45 t	**1**
SL(D)	63.0 m	- with S-guy rods	120 t 70 t [4]	45 t	**2**

1) This counterweight must be at least installed on the turntable for “Flying assembly”.
2) This central ballast must be at least installed on the crawler center section for “Flying assembly”.
3) For LG-crane no ZB is possible.
4) Only valid for LG-crane with 31.5 m derrick boom.
6) Only valid for LG-crane with 42 m derrick boom.

Note

▶ The following chart overview is valid only for LR-crane!

Maximum permissible system lengths for a maximum total force MS1 of 175 t / (245 t)					
Boom system	**Maximum system length**	**Equipment**	**DB_{min} [1]**	**ZB_{min} [2]**	**Illustration**
S(D)	91.0 m	- with end section - without hook block - with S- and WA-bracket 2 guy rods	70 t / (120 t)	20 t / (45 t)	**3**
	140 m	- with S-guy rods	70 t / (120 t)	20 t / (45 t)	**3**
SL(D)	98.0 m	- with S-guy rods	70 t / (120 t)	20 t / (45 t)	**3**

1) This counterweight must be at least installed on the turntable for “Flying assembly”.
2) This central ballast must be at least installed on the crawler center section for “Flying assembly”.

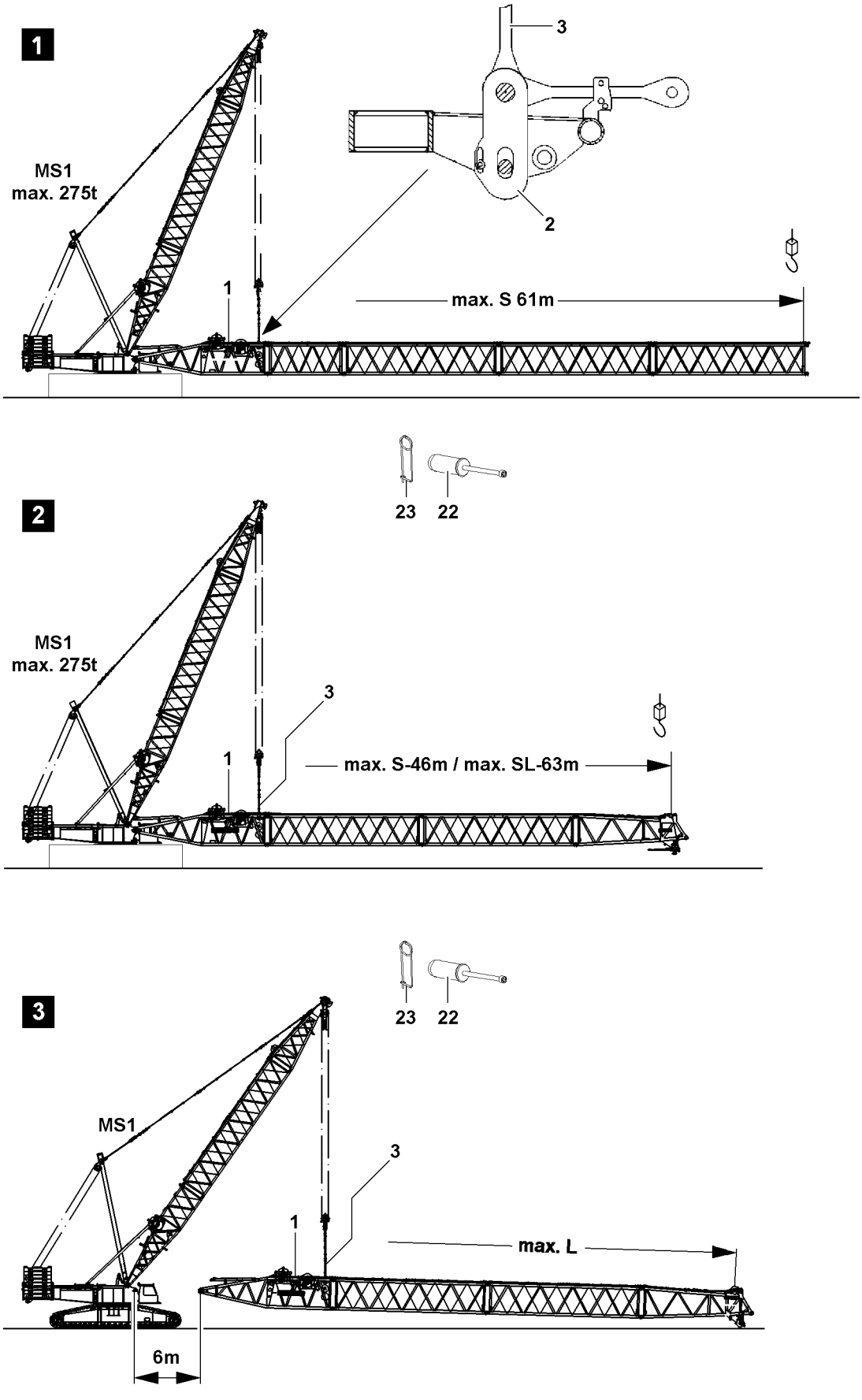
1
MS1
max. 275t
3
2
1
max. S 61m
23
22
2
MS1
max. 275t
3
1
max. S-46m / max. SL-63m
23
22
3
MS1
3
1
max. L
6m

B112572

3.5.1 Assembling the S-intermediate sections in flying mode on the S-pivot section

In “Flying mode” assembly, the intermediate sections can be pinned and secured with the auxiliary crane individually or as a preassembled unit on the S-pivot section.

WARNING
Impermissible boom lengths!
If impermissible boom lengths are assembled on the crane, significant property damage can occur on the crane!
Personnel can be severely injured or killed!
- ▶ The maximum permissible boom lengths for the “Flying assembly” may not be exceeded!
- ▶ The data in the erection and take down charts as well as the load charts must be observed!

Make sure that the following prerequisites are met:
- – The S-pivot section is pinned and secured on the turntable.
- – The S-pivot section is horizontally tensioned.
- – The counterweight is placed according to the specifications.
- – The central ballast is placed according to the specifications.
- – An auxiliary crane is available.

WARNING
Falling components!
If unsecured or non-supported components are installed or removed, they can fall down!
Personnel can be severely injured or killed!
- ▶ During pinning and unpinning of the intermediate sections, it is prohibited for anyone to remain **under** or **on** the components as well as within the entire danger zone!
- ▶ Before unpinning: Support crane components and boom!
- ▶ Secure the pins in the bearing points and in the receptacles!
- ▶ It is prohibited to lean a ladder against the crane section which is being disassembled!

- ▶ Attach the S-intermediate sections or preassembled boom unit on the auxiliary crane.
- ▶ Lift the S-intermediate sections or the preassembled boom unit with the auxiliary crane and position on the S-pivot section **1**.
- ▶ When the pin points between the S-pivot section **1** and the S-intermediate section **or** the S-pivot section **1** and pre-assembled boom unit align on “top” and “bottom”:
  Insert the pins **22** “on top” and “bottom” and secure with spring retainer **23**.
- ▶ When the pins between the S-pivot section **1** and the S-intermediate section **or** the S-pivot section **1** and pre-assembled boom unit are properly pinned and secured “top” and “bottom”:
  Place the boom on the support base.
- ▶ Remove the auxiliary crane.
- ▶ When the boom is safely placed on the support or held by an auxiliary crane:
  Slowly lower the upper pulley block **20.2** until the guy rods **3** are relieved.
- ▶ Release and unpin the guy rods **3** on the upper pulley block **20.2**.
- ▶ Place, pin and secure the guy rods **3** in the transport retainers on the S-pivot section.

Note
- ▶ Assembly of guy rods, see section “Assembling the guy rods”!

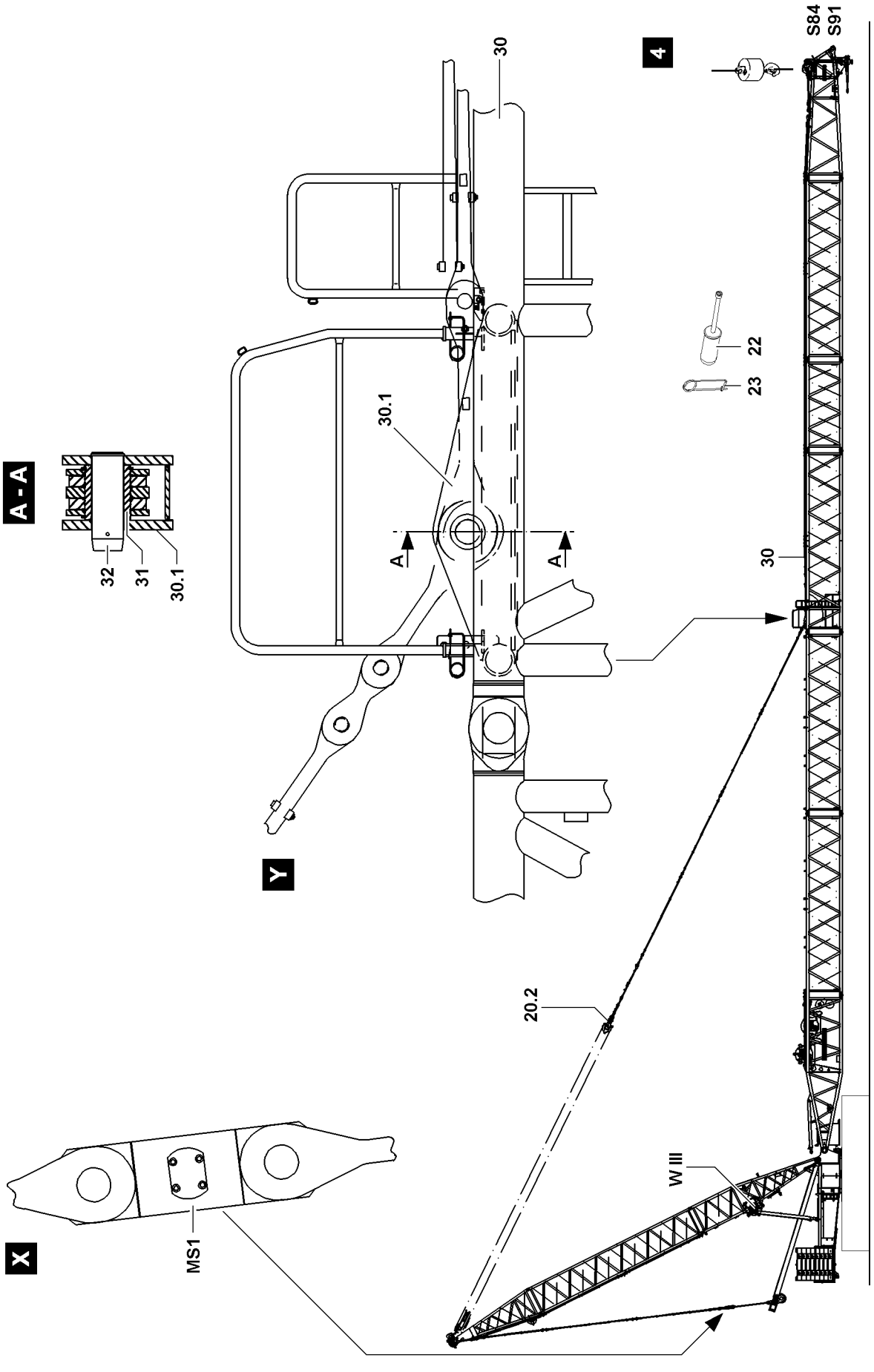

B112050

3.6 Assembling the SL/S-boom 84 m and 91 m in flying mode

If spatial prerequisites on the job site are limited for the assembly of the S-boom, or if they are limited by buildings or similar, then the S-boom can be installed in flying mode.

WARNING
General danger notes!
- ▶ Support the S-boom during assembly with suitable materials!
- ▶ All pins are to be secured after assembly with the intended safety elements!
- ▶ The guy rods must be inspected regularly, see Crane operating instructions, chapter 8.15!

Note
- ▶ Weights of the individual lattice sections, see Crane operating instructions, chapter 1.03!

WARNING
The crane can topple over!
If the following conditions are not met, the crane can topple over or be significantly damaged!
Personnel can be severely injured or killed!
- ▶ For the flying boom assembly, the maximum permissible total force on the test point **MS1** (F1) may **not** be exceeded. The “Actual force” is shown on LICCON monitor 1!
- ▶ The flying boom assembly is only permissible up to a certain system length, observe the following charts!
- ▶ The data in the erection and take down charts as well as the load charts must be observed!

Make sure that the following prerequisites are met:
- – The crane is supported.
  (only in connection with crane support or for LG-cranes)
- – The crane is aligned in horizontal direction.
- – The S-pivot section is pinned and secured on the turntable.
- – The S-pivot section is horizontally tensioned.
- – The counterweight is placed according to the specifications.
- – The central ballast is placed according to the specifications.
- – An auxiliary crane is available.

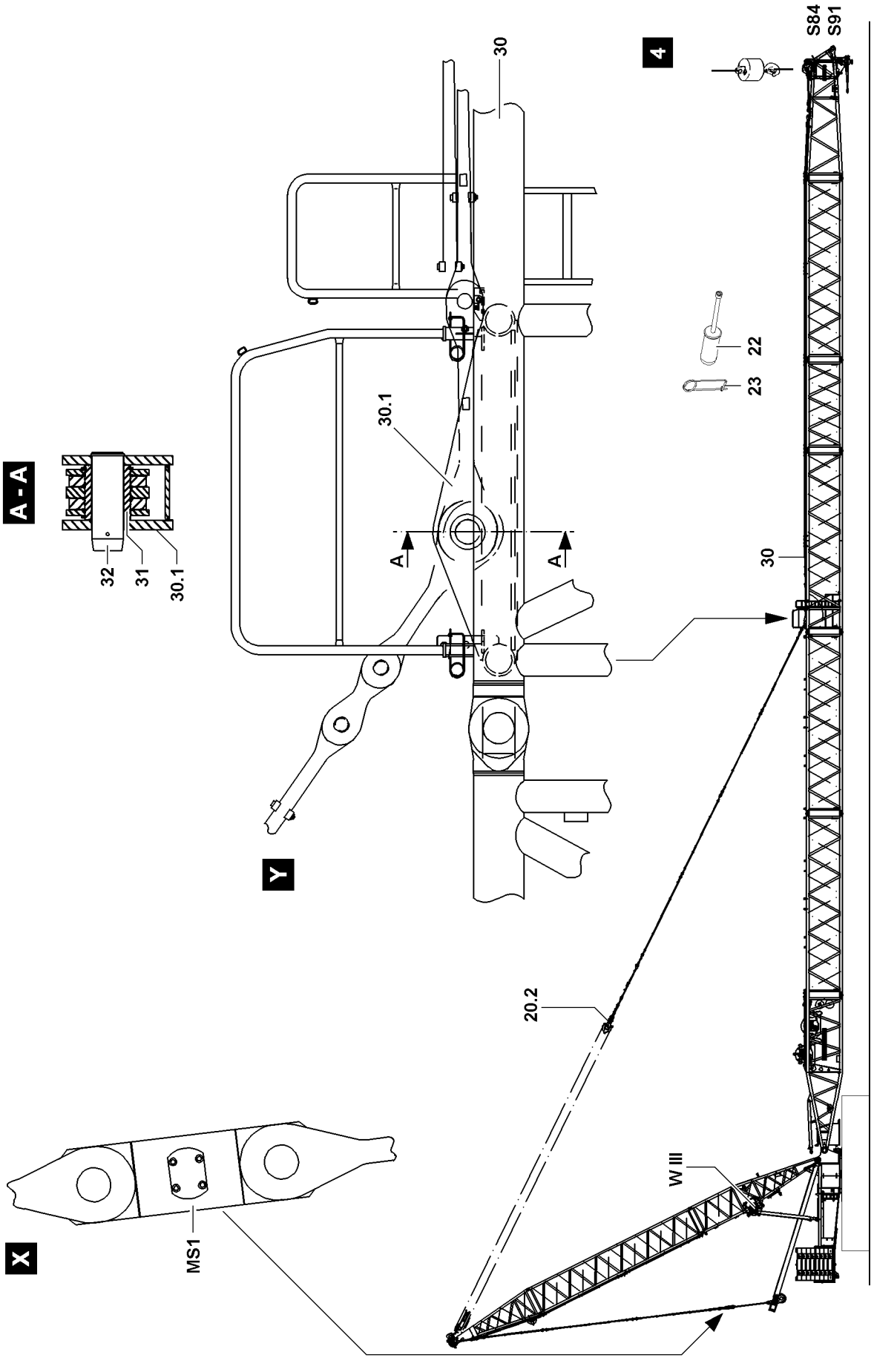

B112050

3.6.1 Assembling the S-intermediate sections in flying mode on the S-pivot section

Maximum permissible system lengths for a maximum total force MS1 of 410 t					
Boom system	**Maximum system length**	**Equipment**	**DB_{min} 1)**	**ZB_{min} 2), 3)**	**Illustration**
S(D)	84.0 m	- support base 12.0 m x 12.0 m 4) - without hook block - with S- and WA-bracket 2 guy rods - with end section	245 t	95 t	4
	91 m	- support base 16.0 m x 16.0 m 4) - without hook block - with S- and WA-bracket 2 guy rods - with end section	220 t	95 t	4
		5) **Note:** A derrick ballast of at least 100 t , at a derrick ballast radius of 13 m is required!			

1) This counterweight must be at least installed on the turntable for “Flying assembly”.
2) This central ballast must be at least installed on the crawler center section for “Flying assembly”.
3) For LG-crane no ZB is possible.
4) Only valid for LG-crane.
5) Only valid for LR-crane.

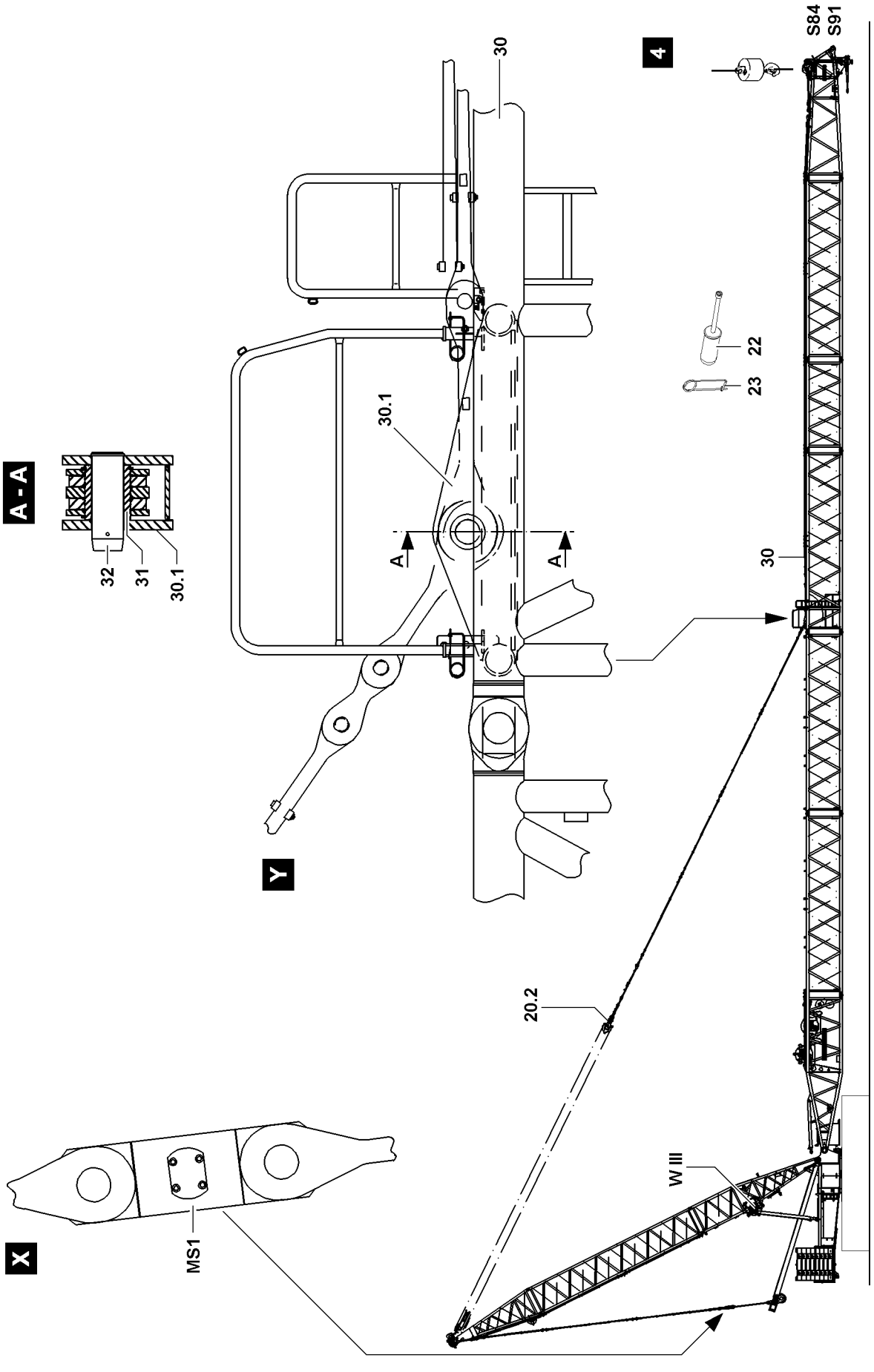

B112050

WARNING
Falling components!
If unsecured or non-supported components are installed or removed, they can fall down!
Personnel can be severely injured or killed!
- ▶ During pinning and unpinning of the intermediate sections, it is prohibited for anyone to remain **under** or **on** the components as well as within the entire danger zone!
- ▶ Before unpinning: Support crane components and boom!
- ▶ Secure the pins in the bearing points and in the receptacles!
- ▶ It is prohibited to lean a ladder against the crane section which is being disassembled!

Note
- ▶ The “Actual force” is shown on the LICCON monitor!
- ▶ The flying assembly of the intermediate sections is made without hook block!

WARNING
The crane can topple over!
If the derrick boom is luffed up to more than 85° to the horizontal, then the crane can topple over!
Personnel can be severely injured or killed!
- ▶ Make sure that the derrick boom at S-boom assembly is not luffed up by more than maximum 85° to the horizontal!

Note
- ▶ To improve accessibility at S-boom assembly, the derrick boom must be luffed up to 75° to maximum 85° to the horizontal!

- ▶ Attach the S-intermediate sections or preassembled boom unit on the auxiliary crane.
- ▶ Lift the S-intermediate sections or the preassembled boom unit with the auxiliary crane and position on the S-pivot section **1**.
- ▶ When the pin points between the S-pivot section **1** and the S-intermediate section **or** the S-pivot section **1** and pre-assembled boom unit align on “top” and “bottom”:
  Insert the pins **22** “on top” and “bottom” and secure with spring retainer **23**.
- ▶ When the pins between the S-pivot section **1** and the S-intermediate section **or** the S-pivot section **1** and pre-assembled boom unit are properly pinned and secured “top” and “bottom”:
  Place the boom on the support base.

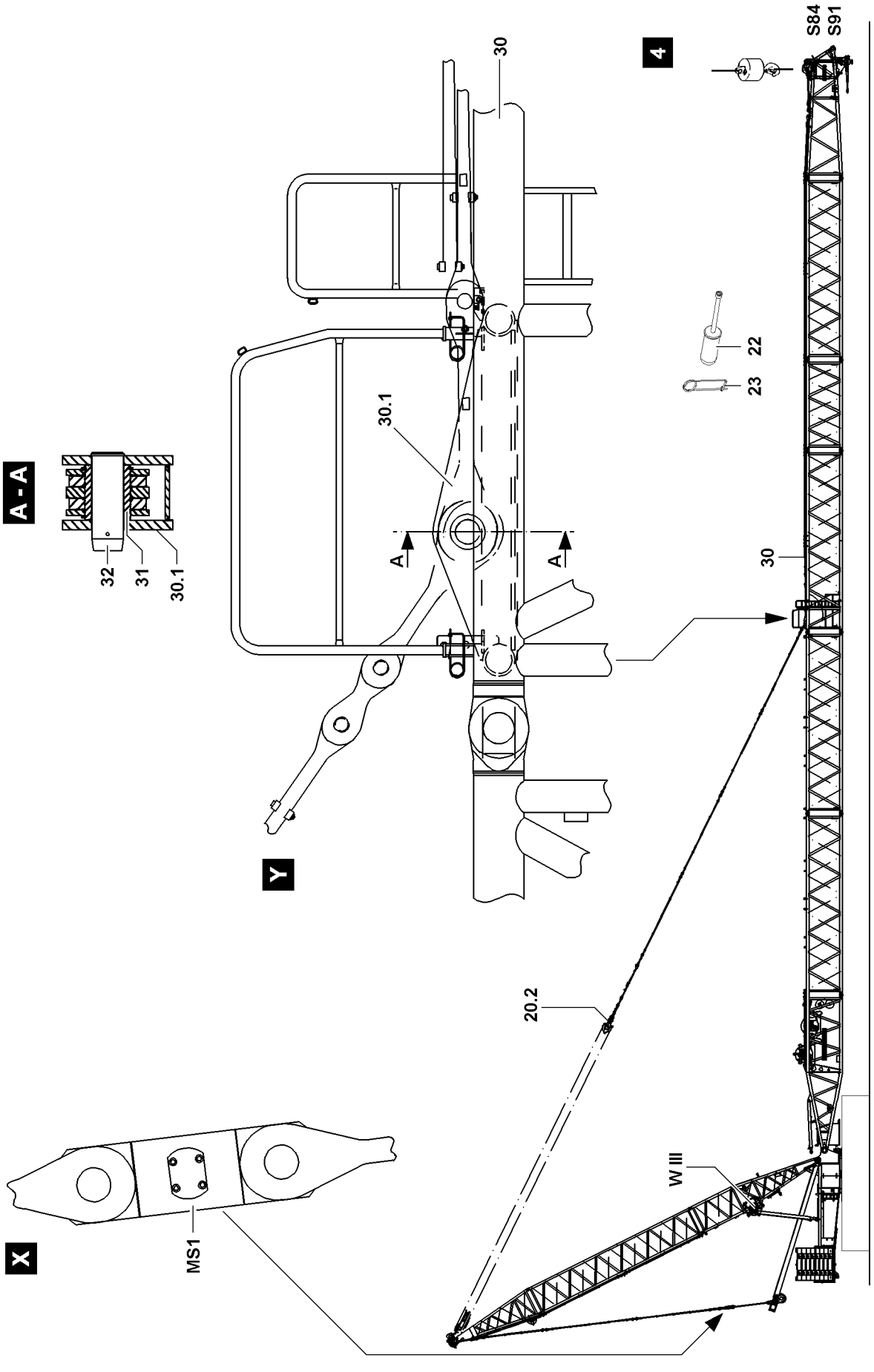

B112050

- ▶ Remove the auxiliary crane.
- ▶ When the boom is safely placed on the support or held by an auxiliary crane:
  Slowly lower the upper pulley block **20.2** to the S-pivot section or to the boom.
- ▶ Pin the guy rods of the intermediate sections with each other.
- ▶ Pin and secure the guy rods on the upper pulley block **20.2** and on the consoles **30.1** through the hollow axle **31**.
- ▶ Insert and secure pin **32**.

WARNING
Overload of crane!
If the guy rods and the rope of winch 3 **W III** are tensioned when luffing up the derrick boom into operating position, then the crane can be overloaded!
- ▶ Make sure, when luffing up the derrick boom into operating position, that the guy rods and the rope of winch 3 **W III** always sag slightly!
- ▶ Make sure that no slack rope forms!

- ▶ Luff the derrick into operating position, 115° to 118°.

Note
- ▶ The S-intermediate section for flying assembly **30** as compared to standard intermediate sections weighs approximately 1.4 t more!
- ▶ The additional weight of the S-intermediate sections for flying assembly **30** is not taken into account in the load charts and must therefore be added to the load to be lifted, as applicable!

- ▶ Spool up winch 3 **W III** until the guying between the upper pulley block **20.2** and the S-intermediate section for flying assembly **30** is tensioned and the auxiliary crane is relieved.
- ▶ Pay attention to the horizontal alignment of the boom.
- ▶ When the boom is tensioned horizontally:
  Remove the auxiliary crane.

Install the additional S-/L-intermediate sections and the respective end section, depending on the permissible boom length, individually or fully preassembled on the S-intermediate section for flying assembly **30**.

Note
- ▶ Note and observe the maximum permissible boom lengths for flying assembly!

- ▶ Assemble the S-intermediate sections or L-intermediate sections on the S-intermediate section for flying assembly **30**: Use pin **22** and spring retainer **23**.

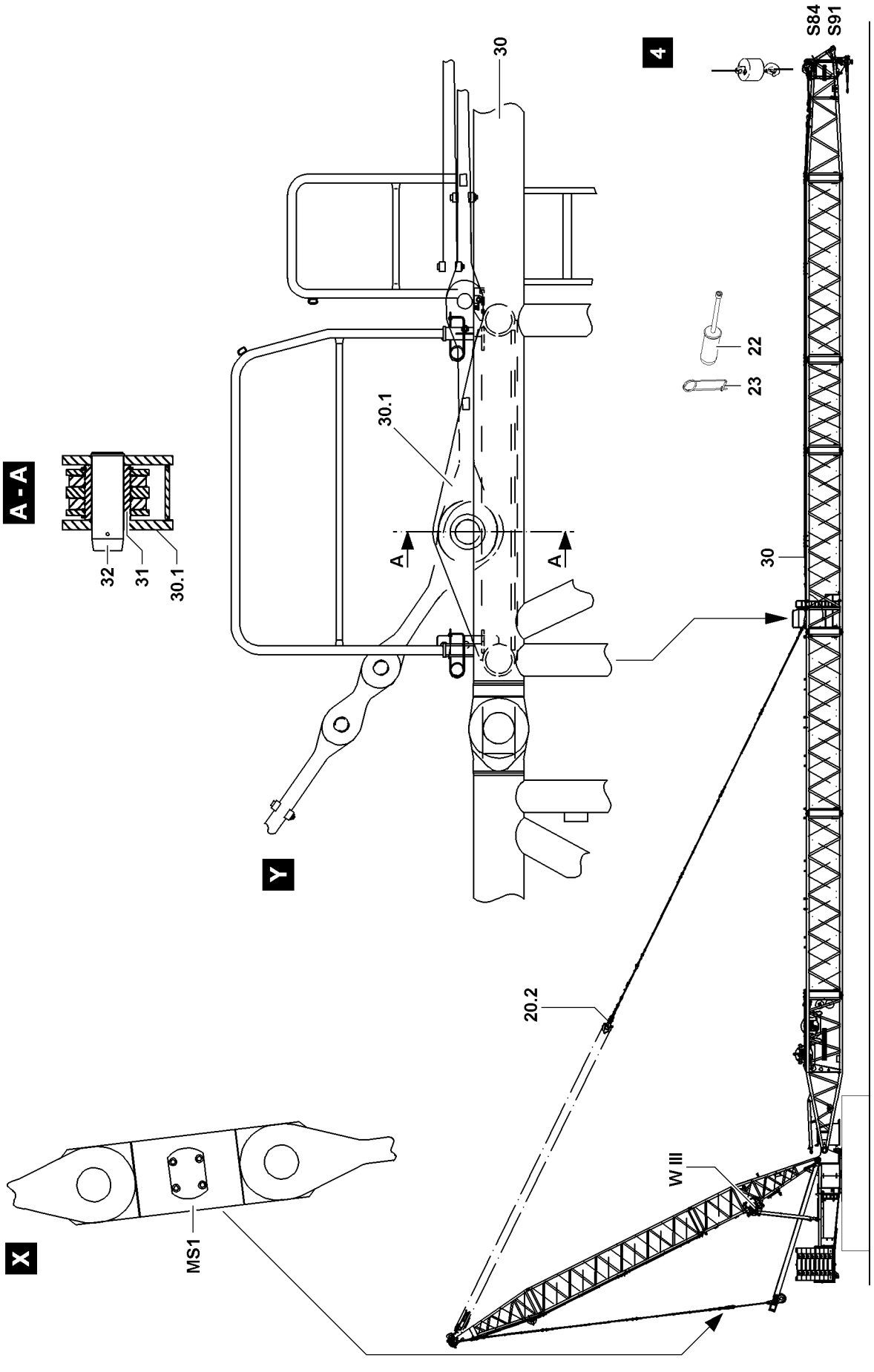

B112050

WARNING
Unutilized guy rods on boom!
If the guy rods, which are not needed for crane operation, are on the lattice sections, then they can release and fall down during crane operation!
Personnel can be severely injured or killed!
The load display of the LICCON computer system shows a value which is too high!
The weight of the boom is too large for erection!
▶ Disassemble and remove unutilized guy rods on the transport retainers before erecting the boom!

▶ Pin and secure the guy rods with each other.
▶ Hang the assembled boom onto the auxiliary crane.

or

■ Support the assembled boom from below with materials of adequate load bearing capacity.
▶ Spool out winch 3 **W III** until the guying between the upper pulley block **20.2** and the S-intermediate section for flying assembly **30** is relieved.

DANGER
The boom can fold downward!
If the pins **32** on the consoles **30.1** are unpinned, then the boom can fold down by itself!
Personnel can be severely injured or killed!
▶ Make sure that the boom is safely held with the auxiliary crane or that it is supported with stable materials before the pins **32** are unpinned!

▶ Unpin the pins **32** from the consoles **30.1**.

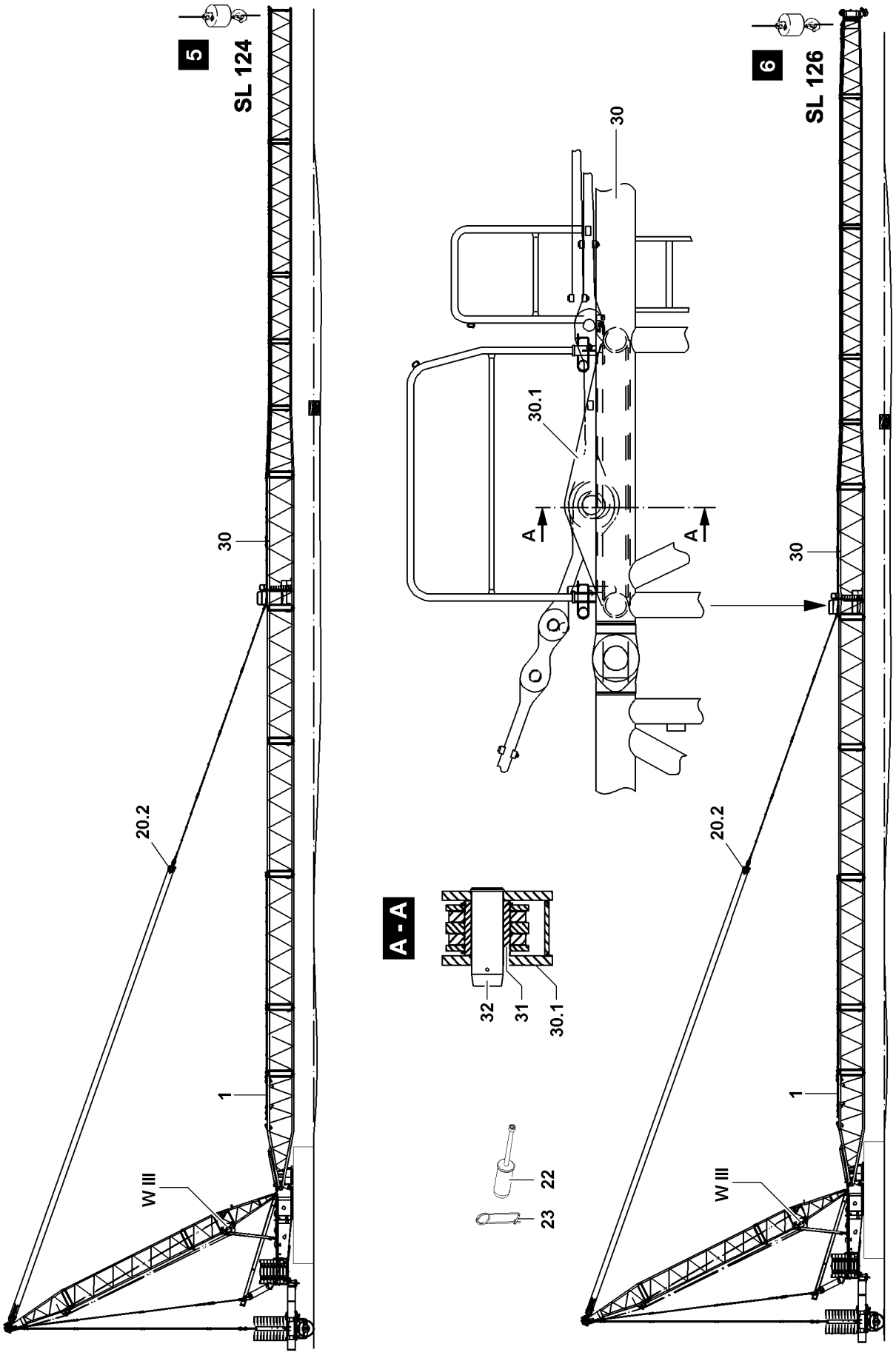
5
SL 124
30
20.2
1
W III
30
30.1
A
A
A - A
32
31
30.1
22
23
6
SL 126
30
20.2
1
W III

B112051

3.7 Assembling the SLD-boom 98 m to 133 m in flying mode

If spatial prerequisites on the job site are limited for the assembly of the S-boom, or if they are limited by buildings or similar, then the S-boom can be installed in flying mode.

WARNING
General danger notes!
- ▶ Support the S-boom during assembly with suitable materials!
- ▶ All pins are to be secured after assembly with the intended safety elements!
- ▶ The guy rods must be inspected regularly, see Crane operating instructions, chapter 8.15!

Note
- ▶ Weights of the individual lattice sections, see Crane operating instructions, chapter 1.03!

WARNING
Impermissible boom lengths guyed!
If impermissible boom lengths are guyed on the assembly brackets, then significant property damage can occur on the crane!
Personnel can be severely injured or killed!
- ▶ The maximum permissible boom lengths for the “Flying assembly” may not be exceeded!
- ▶ The data in the erection and take down charts as well as the load charts must be observed!

Make sure that the following prerequisites are met:
- – The crane is supported.
  (only in connection with crane support or for LG-cranes)
- – The crane is aligned in horizontal direction.
- – The S-pivot section is pinned and secured on the turntable.
- – The S-pivot section is horizontally tensioned.
- – The counterweight is placed according to the specifications.
- – The central ballast is placed according to the specifications.
- – An auxiliary crane is available.

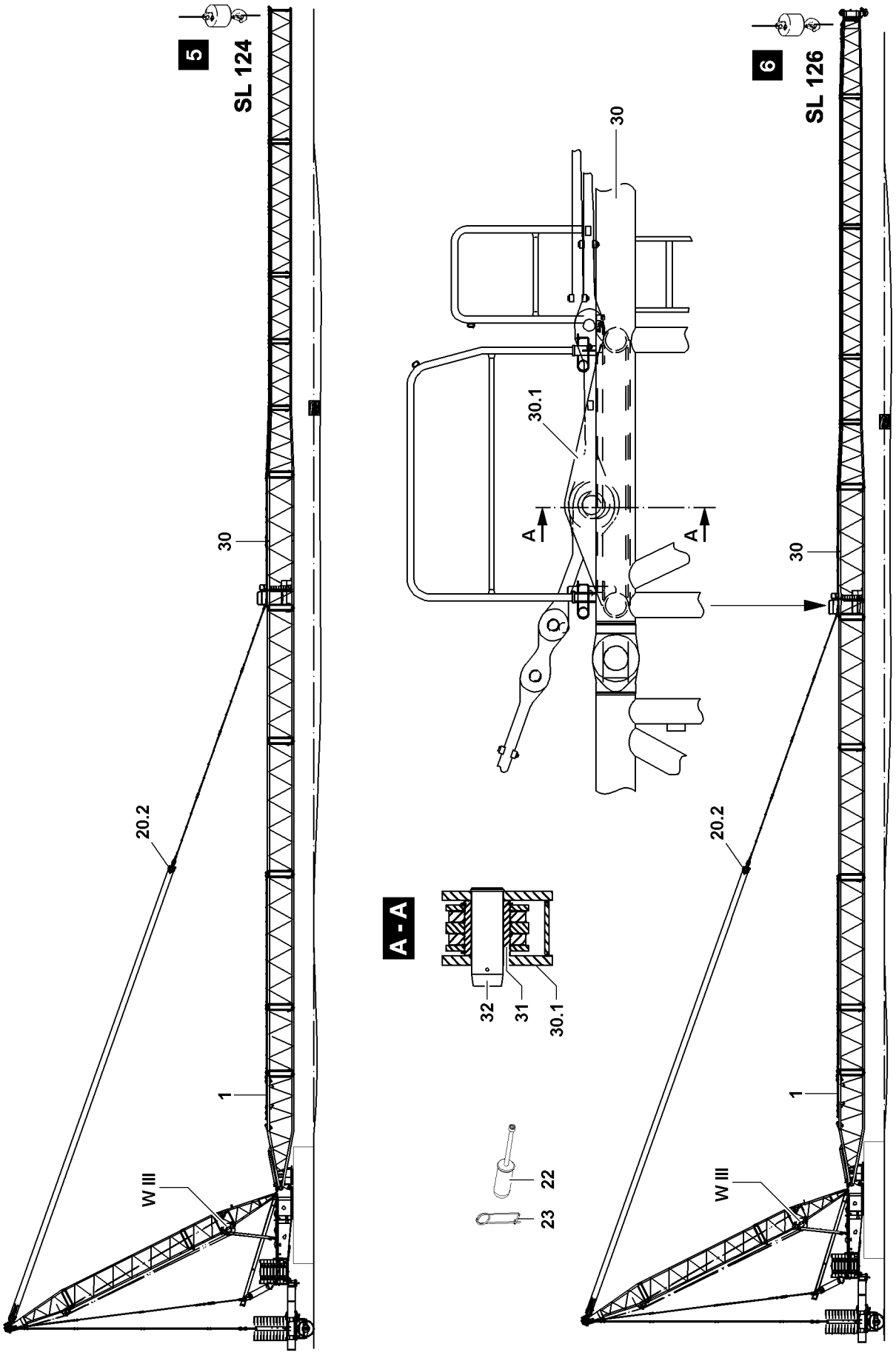
5
SL 124
30
20.2
1
W III
30
30.1
A
A
A - A
32
31
30.1
22
23
6
SL 126
30
20.2
1
W III

B112051

3.7.1 Flying boom assembly without and with end section

Flying assembly without end section

WARNING
The crane can topple over!
If the required minimum derrick ballast is not installed on the crane in the respective derrick ballast radius, then the crane can topple over!
Personnel can be severely injured or killed!
▶ A derrick ballast of at least 200 t, at a derrick ballast radius of 13 m is required!

Maximum permissible system lengths					
Boom system	**Maximum system length**	**Equipment**	**DB_{min} 1)**	**ZB_{min} 2), 3)**	**Illustration**
SL(D)	124.0 m	- without end section - without hook block - with S-guy rods	170 t	45 t	5

1) This counterweight must be at least installed on the turntable for “Flying assembly”.
2) This central ballast must be at least installed on the crawler center section for “Flying assembly”.
3) For LG-crane no ZB is possible.

	Support U_{min} depending on boom length				
	SL-boom length				
	103 m	110 m	117 m	124 m	—
LG-crane	U_{min} = 1.10 m	U_{min} = 0.90 m	U_{min} = 0.80 m	U_{min} = 0.60 m	—
LR-crane	Support U_{min} 0.3 m to 0.7 m over alignment level **Note:** Up to including SL-98 m , the boom does not have to be supported from below!				

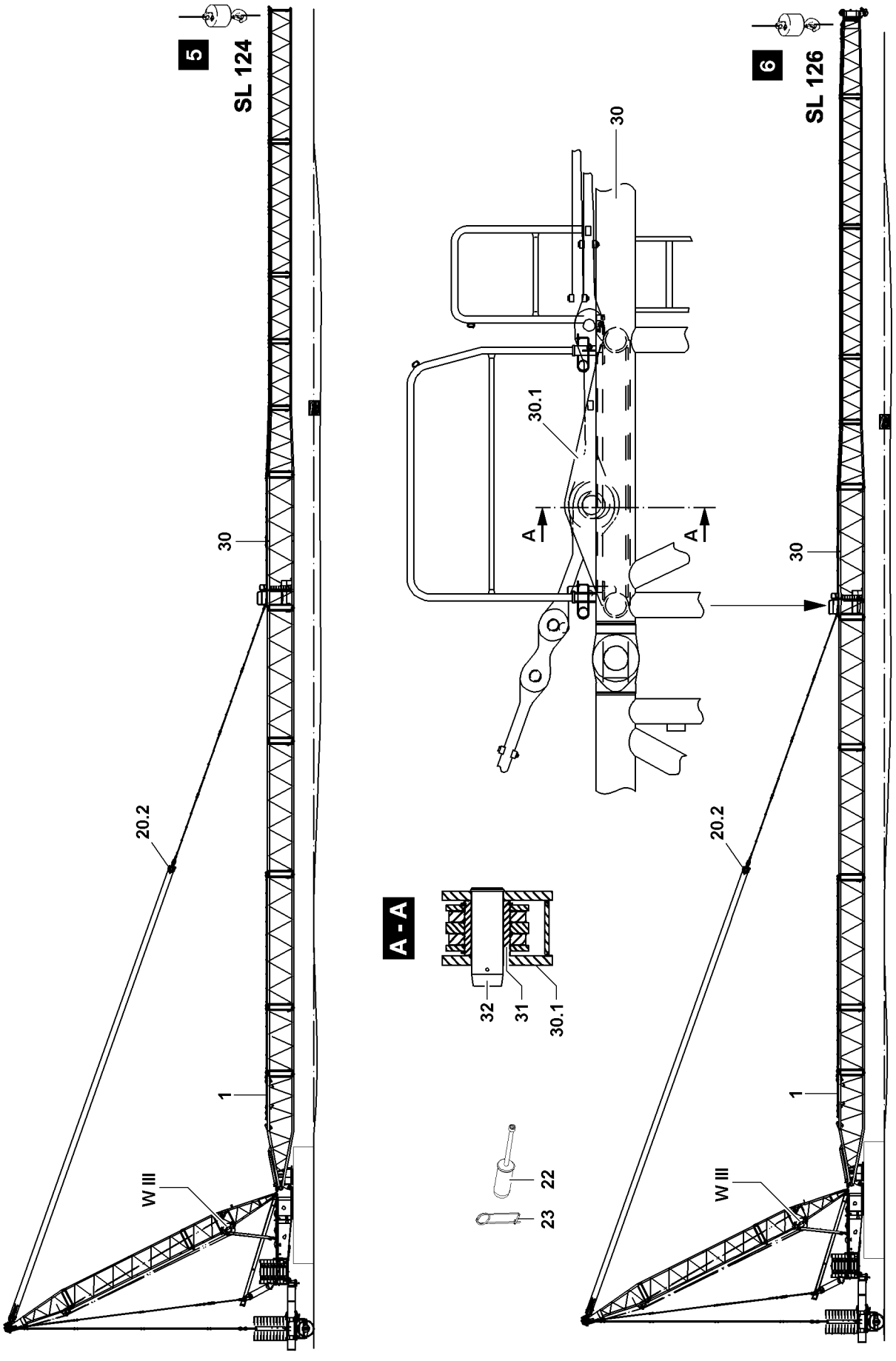
5
SL 124
30
20.2
1
W III
A - A
32
31
30.1
22
23
30
30.1
A
A
6
SL 126
30
20.2
1
W III

B112051

Flying assembly with end section

WARNING
The crane can topple over!
If the required minimum derrick ballast is not installed on the crane in the respective derrick ballast radius, then the crane can topple over!
Personnel can be severely injured or killed!
▶ A derrick ballast of at least 200 t, at a derrick ballast radius of 13 m is required!

Maximum permissible system lengths					
Boom system	**Maximum system length**	**Equipment**	**DB_{min} 1)**	**ZB_{min} 2), 3)**	**Illustration**
	126.0 m	- with end section - without hook block - with S-guy rods	170 t	45 t	6

1) This counterweight must be at least installed on the turntable for “Flying assembly”.
2) This central ballast must be at least installed on the crawler center section for “Flying assembly”.
3) For LG-crane no ZB is possible.

	Support U_{min} depending on boom length				
	SL-boom length				
	105 m	112 m	119 m	126 m	133 m
LG-crane	U_{min} = 1.10 m	U_{min} = 0.90 m	U_{min} = 0.80 m	U_{min} = 0.60 m	U_{min} = 0.50 m
	Note: Up to including SL-98 m , the boom does not have to be supported from below!				
LR-crane	Support U_{min} 0.3 m to 0.7 m over alignment level **Note:** Up to including SL-98 m , the boom does not have to be supported from below!				

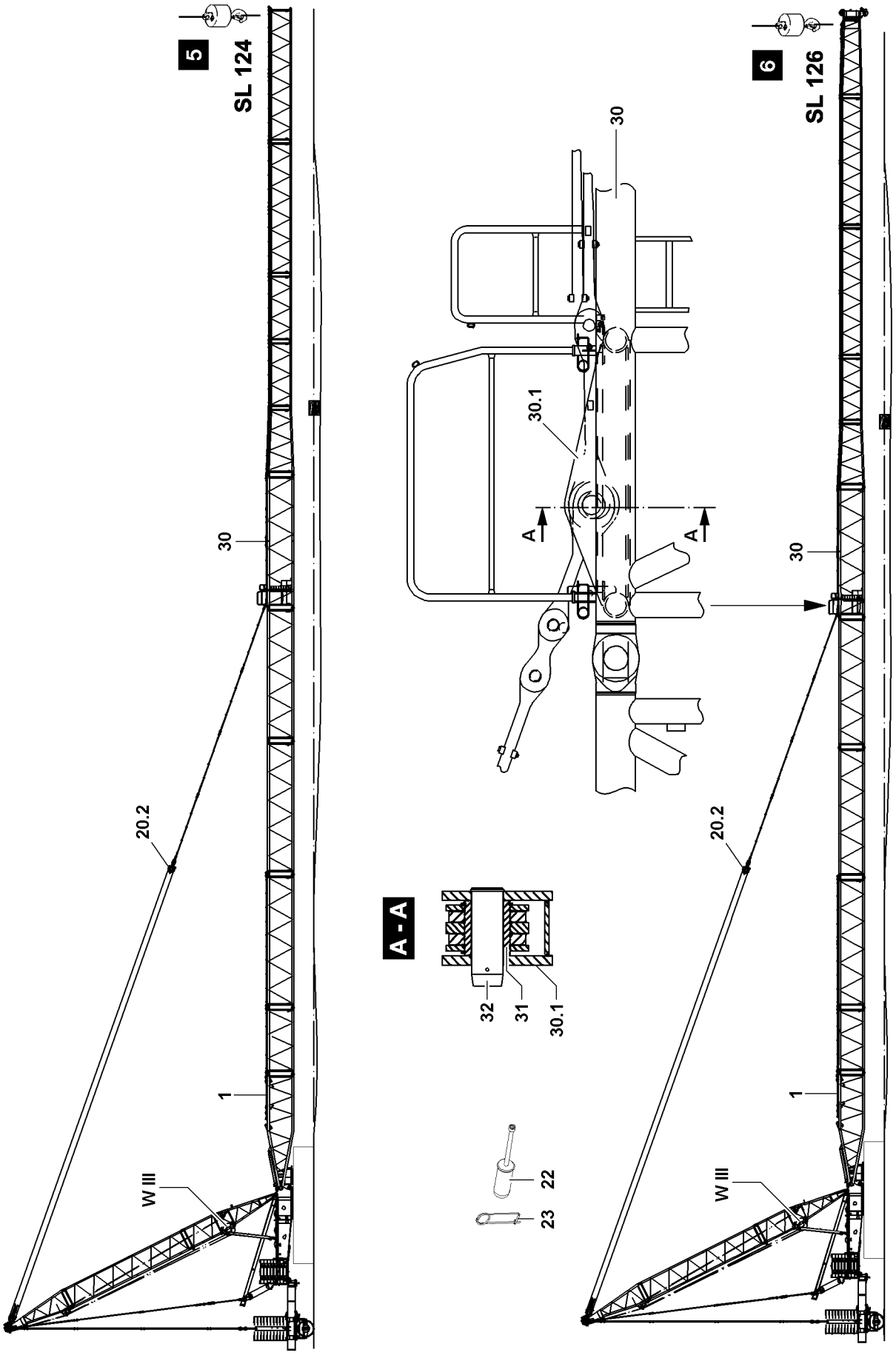
5
SL 124
30
20.2
1
W III
A - A
32
31
30.1
22
23
30
30.1
A
A
6
SL 126
30
20.2
1
W III

B112051

3.7.2 Assembling the boom

WARNING
Falling components!
If unsecured or non-supported components are installed or removed, they can fall down!
Personnel can be severely injured or killed!
- ▶ During pinning and unpinning of the intermediate sections, it is prohibited for anyone to remain **under** or **on** the components as well as within the entire danger zone!
- ▶ Before unpinning: Support crane components and boom!
- ▶ Secure the pins in the bearing points and in the receptacles!
- ▶ It is prohibited to lean a ladder against the crane section which is being disassembled!

Note
- ▶ The “Actual force” is shown on the LICCON monitor!
- ▶ The flying assembly of the intermediate sections is made without hook block!

WARNING
The crane can topple over!
If the derrick boom is luffed up to more than 85° to the horizontal, then the crane can topple over!
Personnel can be severely injured or killed!
- ▶ Make sure that the derrick boom at S-boom assembly is not luffed up by more than maximum 85° to the horizontal!

Note
- ▶ To improve accessibility at S-boom assembly, the derrick boom must be luffed up to 75° to maximum 85° to the horizontal!

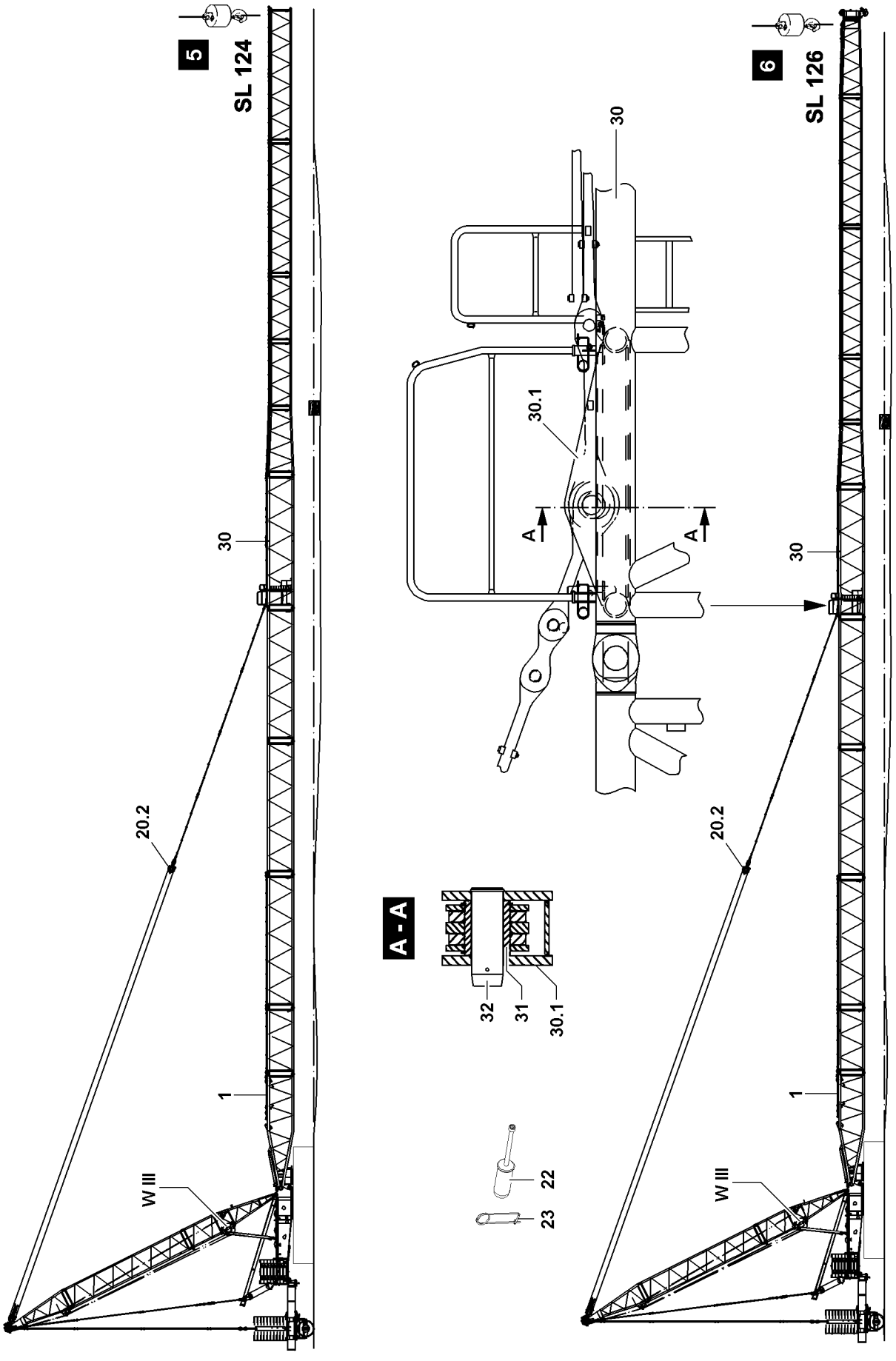
5
SL 124
30
20.2
1
W III
6
SL 126
30
20.2
1
W III
30.1
A
A
A - A
32
31
30.1
22
23

B112051

- ▶ Attach the S-intermediate sections or preassembled boom unit on the auxiliary crane.
- ▶ Lift the S-intermediate sections or the preassembled boom unit with the auxiliary crane and position on the S-pivot section **1**.
- ▶ When the pin points between the S-pivot section **1** and the S-intermediate section **or** the S-pivot section **1** and pre-assembled boom unit align on “top” and “bottom”:
  Insert the pins **22** “on top” and “bottom” and secure with spring retainer **23**.
- ▶ When the pins between the S-pivot section **1** and the S-intermediate section **or** the S-pivot section **1** and pre-assembled boom unit are properly pinned and secured “top” and “bottom”:
  Place the boom on the support base.
- ▶ Remove the auxiliary crane.
- ▶ When the boom is safely placed on the support or held by an auxiliary crane:
  Slowly lower the upper pulley block **20.2** to the S-pivot section or to the boom.
- ▶ Pin the guy rods of the intermediate sections with each other.
- ▶ Pin and secure the guy rods on the upper pulley block **20.2** and on the consoles **30.1** through the hollow axle **31**.
- ▶ Insert and secure pin **32**.

DANGER
The boom can fold downward!
If the pins **32** on the consoles **30.1** are unpinned, then the boom can fold down by itself!
Personnel can be severely injured or killed!

- ▶ Make sure that the boom is safely held with the auxiliary crane or that it is supported with stable materials before the pins **32** are unpinned!

- ▶ Unpin the pins **32** from the consoles **30.1**.

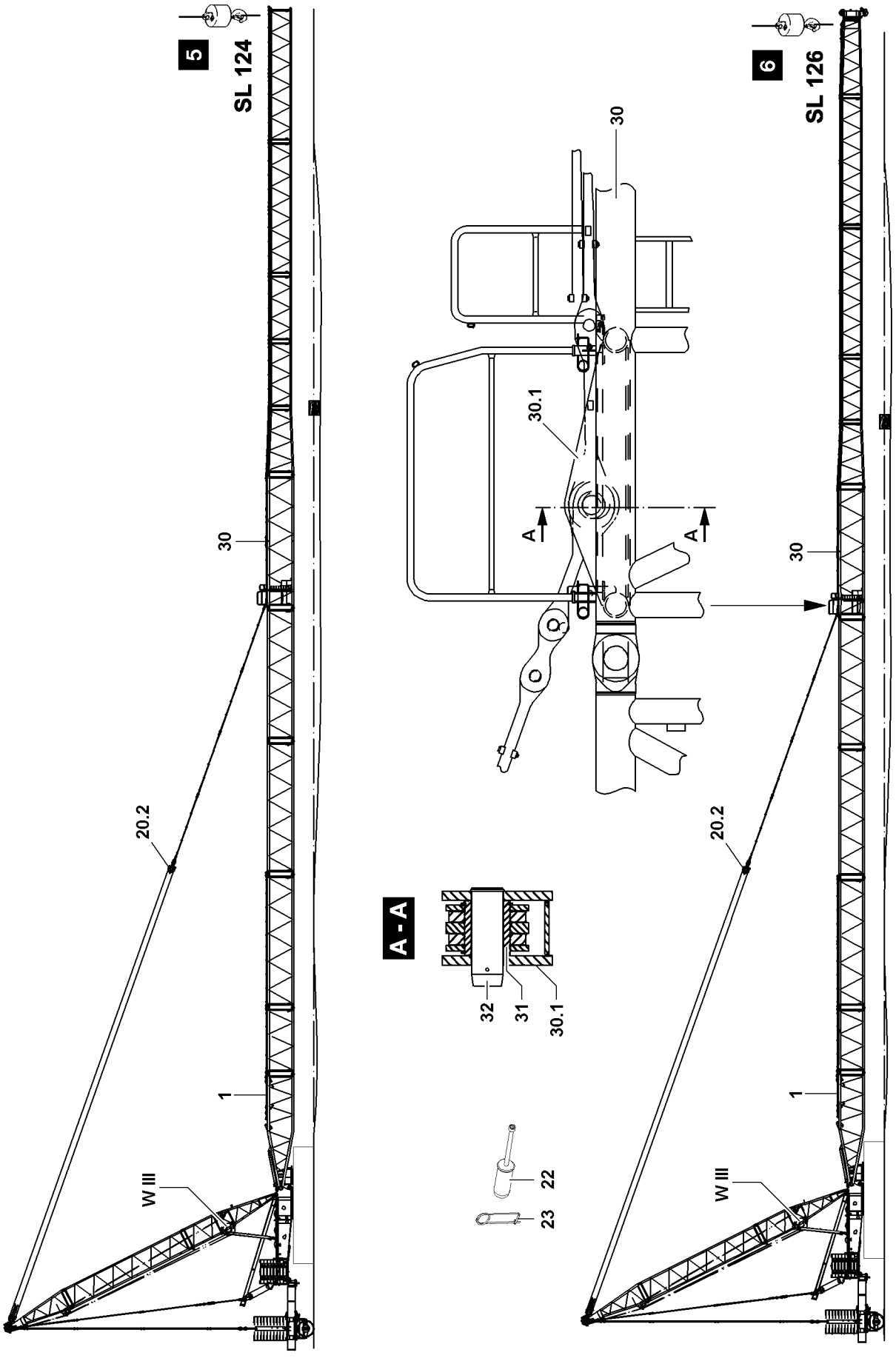
5
SL 124
30
20.2
1
W III
6
SL 126
30
20.2
1
W III
30
30.1
A
A
A - A
32
31
30.1
22
23

B112051

WARNING
Overload of crane!
If the guy rods and the rope of winch 3 **W III** are tensioned when luffing up the derrick boom into operating position, then the crane can be overloaded!
- ▶ Make sure, when luffing up the derrick boom into operating position, that the guy rods and the rope of winch 3 **W III** always sag slightly!
- ▶ Make sure that no slack rope forms!

▶ Luff the derrick into operating position, 115° to 118°.

Note
- ▶ The S-intermediate section for flying assembly **30** as compared to standard intermediate sections weighs approximately 1.4 t more!
- ▶ The additional weight of the S-intermediate sections for flying assembly **30** is not taken into account in the load charts and must therefore be added to the load to be lifted, as applicable!

▶ Spool up winch 3 **W III** until the guying between the upper pulley block **20.2** and the S-intermediate section for flying assembly **30** is tensioned and the auxiliary crane is relieved.

▶ Pay attention to the horizontal alignment of the boom.

▶ When the boom is tensioned horizontally:
Remove the auxiliary crane.

Install the additional S-/L-intermediate sections and the respective end section, depending on the permissible boom length, individually or fully preassembled on the S-intermediate section for flying assembly **30**.

Note
- ▶ Note and observe the maximum permissible boom lengths for flying assembly!
- ▶ The required support (U_{min}) for erection of the boom systems must be adhered to!

▶ Assemble the S-intermediate sections or L-intermediate sections on the S-intermediate section for flying assembly **30**: Use pin **22** and spring retainer **23**.

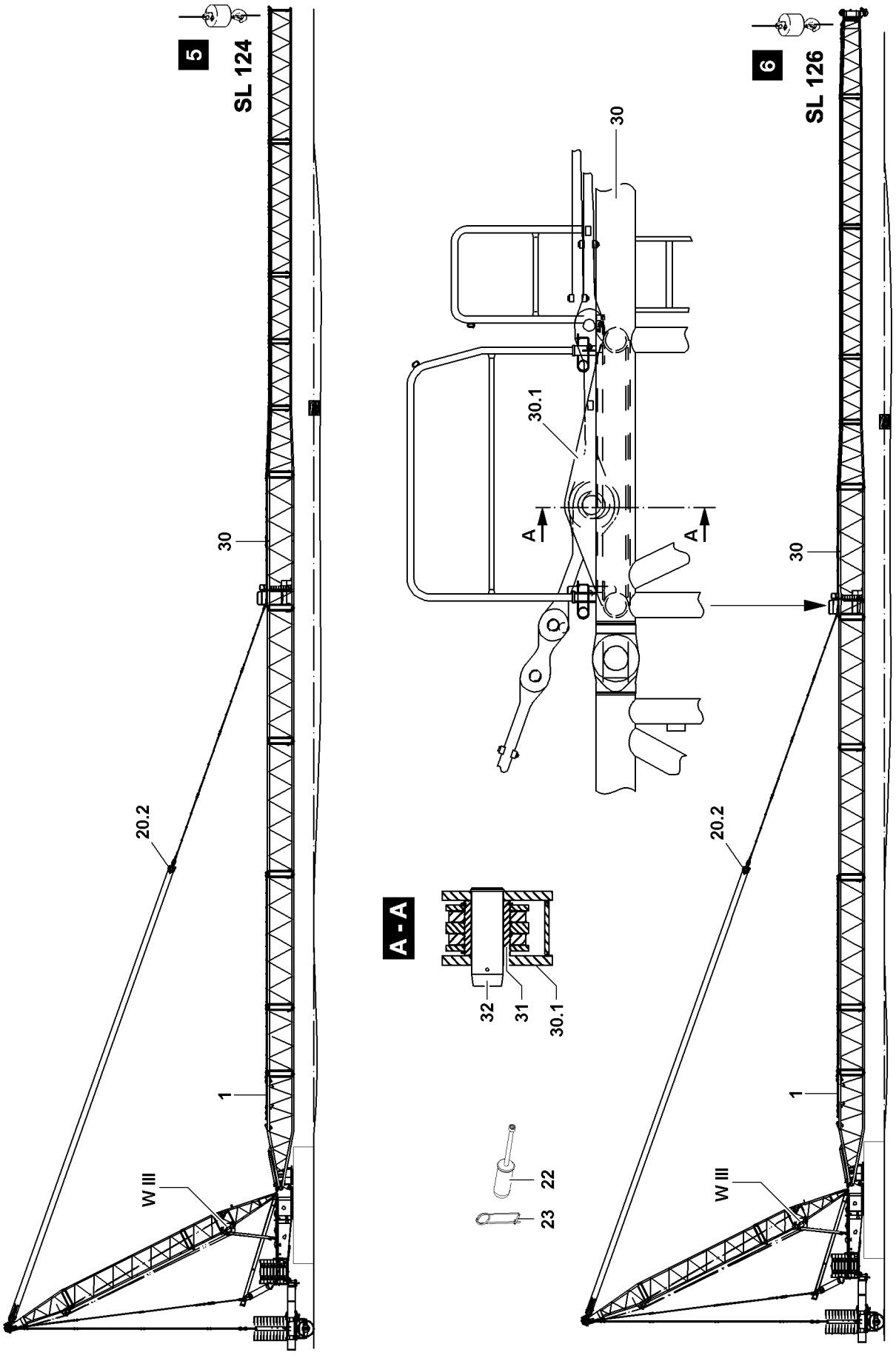
5
SL 124
30
20.2
1
W III
6
SL 126
30
30.1
A
A
A - A
32
31
30.1
22
23
30
20.2
1
W III

B112051

WARNING
Unutilized guy rods on boom!
If guy rods are on the lattice sections which are not used for operation, then there is a risk of accidents!
Personnel can be severely injured or killed!
Guy rods can loosen up and fall down!
The load display of the LICCON computer system shows the incorrect value!
The weight of the boom is too large for erection!
▶ Disassemble and remove unutilized guy rods on the transport retainers before erecting the boom!

▶ Pin and secure the guy rods with each other.
▶ Hang the assembled boom onto the auxiliary crane.

or

■ Support the assembled boom from below with materials of adequate load bearing capacity.
▶ Spool out winch 3 **W III** until the guying between the upper pulley block **20.2** and the S-intermediate section for flying assembly **30** is relieved.

DANGER
The boom can fold downward!
If the pins **32** on the consoles **30.1** are unpinned, then the boom can fold down by itself!
Personnel can be severely injured or killed!
▶ Make sure that the boom is safely held with the auxiliary crane or that it is supported with stable materials before the pins **32** are unpinned!

▶ Unpin the pins **32** from the consoles **30.1**.

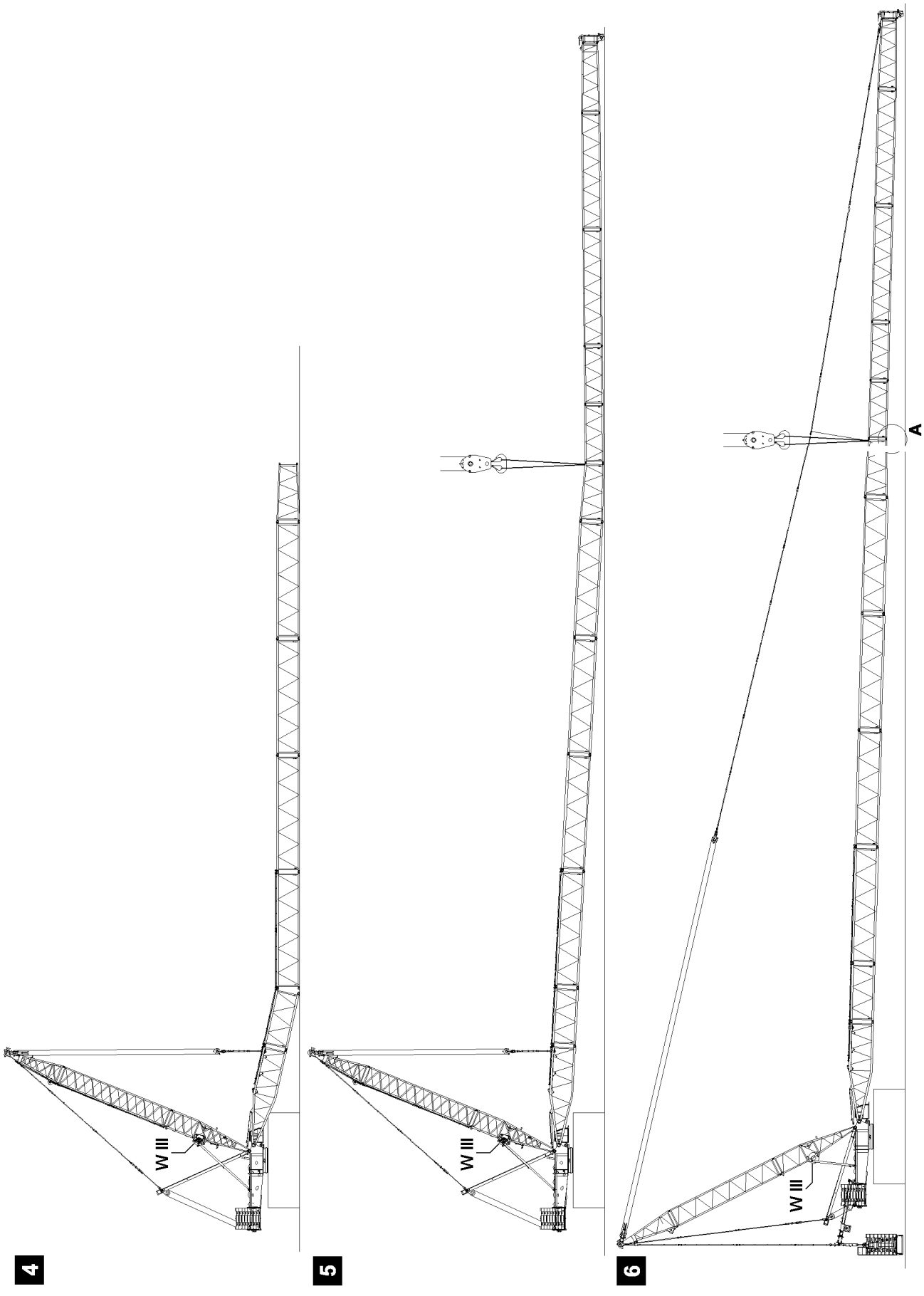

B112059

3.8 Closing boom systems

WARNING
The crane can topple over!
If the crane is not supported and ballasted according to the load chart when closing the respective boom systems, then the crane can topple over!
Personnel can be severely injured or killed!
▶ The following prerequisites must be adhered to!

Make sure that the following prerequisites are met:
– The crane is supported.
(only in connection with crane support or for LG-cranes)
– The crane is aligned in horizontal direction.
– The counterweight is placed according to the specifications.
– The central ballast is placed according to the specifications.
– If required:
The derrick ballast is placed according to the specifications.
The derrick ballast is on the required derrick ballast radius.
– An auxiliary crane is available.

3.8.1 Closing the SLD-boom 105 m to SLD 133 m

Note
▶ Booms up to a boom length of SLD-98 m can be closed without support from below!
▶ Up to a boom length SLD-126 m, the L-end section may lift off the ground when closing the boom!

WARNING
The crane can topple over!
When closing the boom length SLD-133 m and the L-end section lifts off the ground, then the crane can topple over!
Personnel can be severely injured or killed!
▶ Make sure that the L-end section remains on the ground when closing the SLD-133 m boom!

	Support U_{min} depending on boom length				
	SL-boom length				
	105 m	112 m	119 m	126 m	133 m
LG/LR-crane	U_{min} = 1.10 m	U_{min} = 0.90 m	U_{min} = 0.80 m	U_{min} = 0.60 m	U = 0.50 m
	Note: Up to including SL-98 m , the boom does not have to be supported from below!				

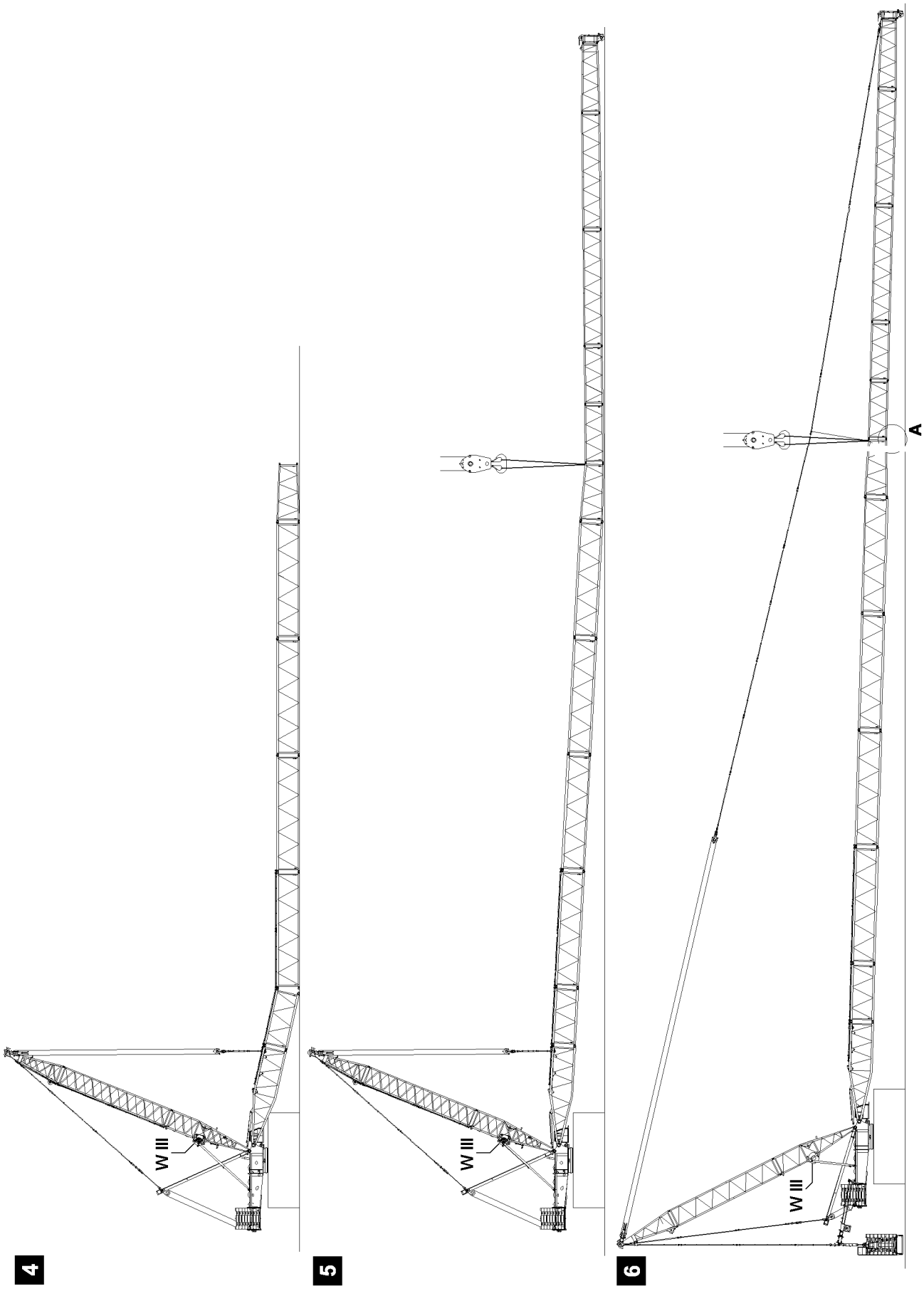

B112059

Illustration 4:

- ▶ Assemble the SL-boom up to the reducer section.
- ▶ Close the partial boom by spooling up winch 3 **W III**.

Illustration 5:

- ▶ Assemble the remaining boom system completely (to maximum SL-133 m).

Note

- ▶ The required auxiliary crane for closing and holding the boom system must have a minimum load carrying capacity of 60 t!

- ▶ Fasten the auxiliary crane on the reducer section.
- ▶ Close the boom system with the auxiliary crane.
- ▶ Hold the boom with the auxiliary crane.
- ▶ Install the guying.
- ▶ Luff the derrick boom up until the SL-boom is safely held by the guying.
- ▶ When the SL-boom is safely held by the guying:
  Remove the auxiliary crane.
- ▶ Erect the boom completely (see section Erection procedure).

Illustration 6:

- ▶ Place the boom down: Before placing the boom down completely, fasten the auxiliary crane on the boom.

NOTICE

Damage to crane!

If the boom is not held by an auxiliary crane when placing it down, then the crane can be overloaded!

Crane components can be damaged!

- ▶ Make sure that the SL-boom is safely held by the auxiliary crane before the L-end section reaches the ground **or** the boom has reached a distance of 0.5 m to 1.1 m to the alignment level **A**!

- ▶ Fasten the auxiliary crane on the SL-boom.

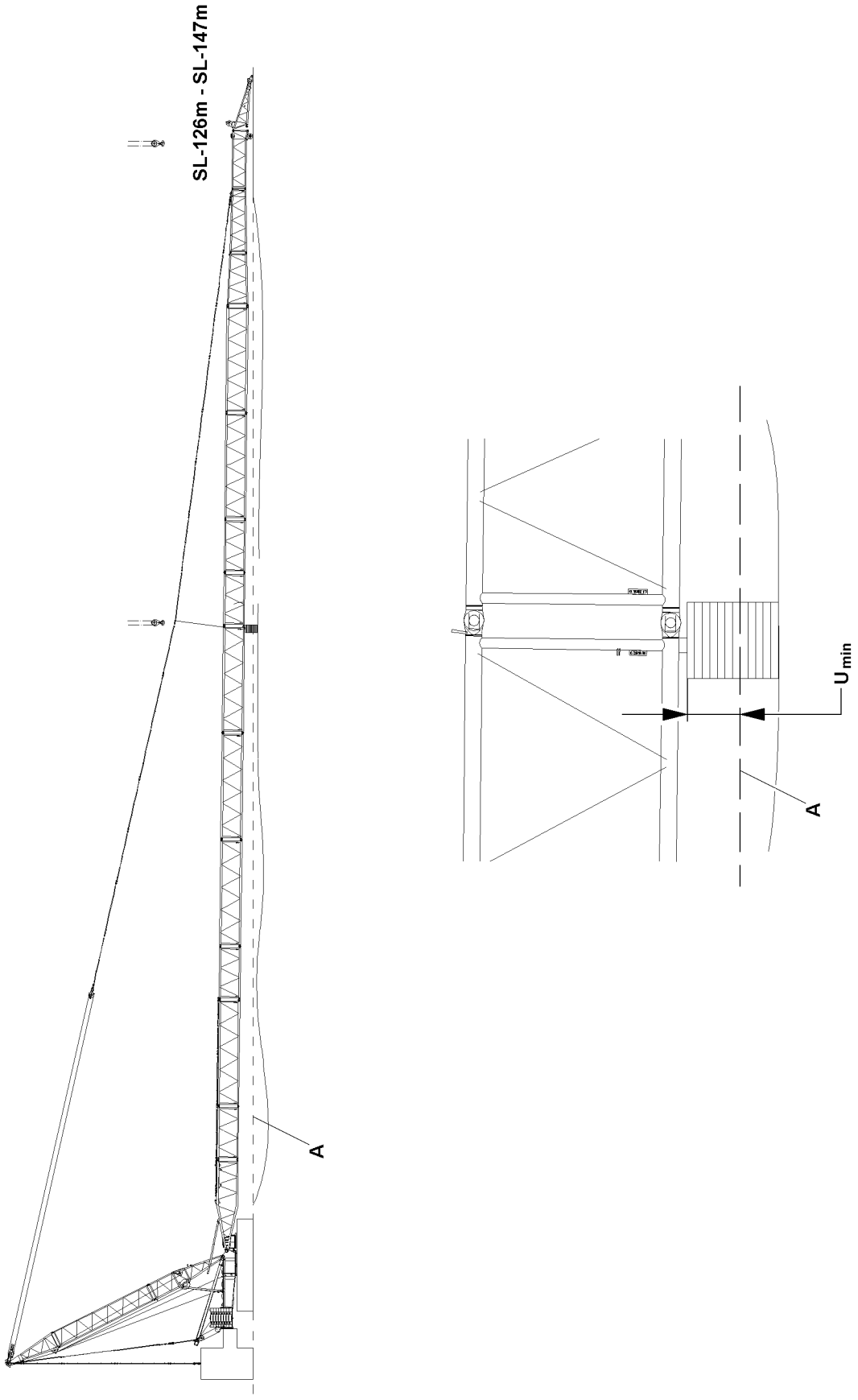

B112061

3.8.2 Closing the SL7DHS 126 m to 147 m

The boom combinations must be erected or taken down according to the erection and take down charts! The boom combinations, depending on the boom lengths, must be supported from below to a certain height, support **Umin**.

	Support U_{min}
LG-crane	1.0 m
	Note: Up to a boom length of SL-119 m erection is possible without support!
LR-crane	0 m to 0.4 m

WARNING
The crane can topple over!
If the following conditions are not met before erecting the boom, the crane can topple over!
Personnel can be severely injured or killed!
- ▶ Observe the safety technical notes, see Crane operating instructions, chapter 5.01!
- ▶ Observe the data in the erection and take down charts!
- ▶ It is not permitted to turn the crane during the erection procedure!
- ▶ Extend the S-relapse cylinders before erecting the boom combination!

▶ Close the boom system with the auxiliary crane.

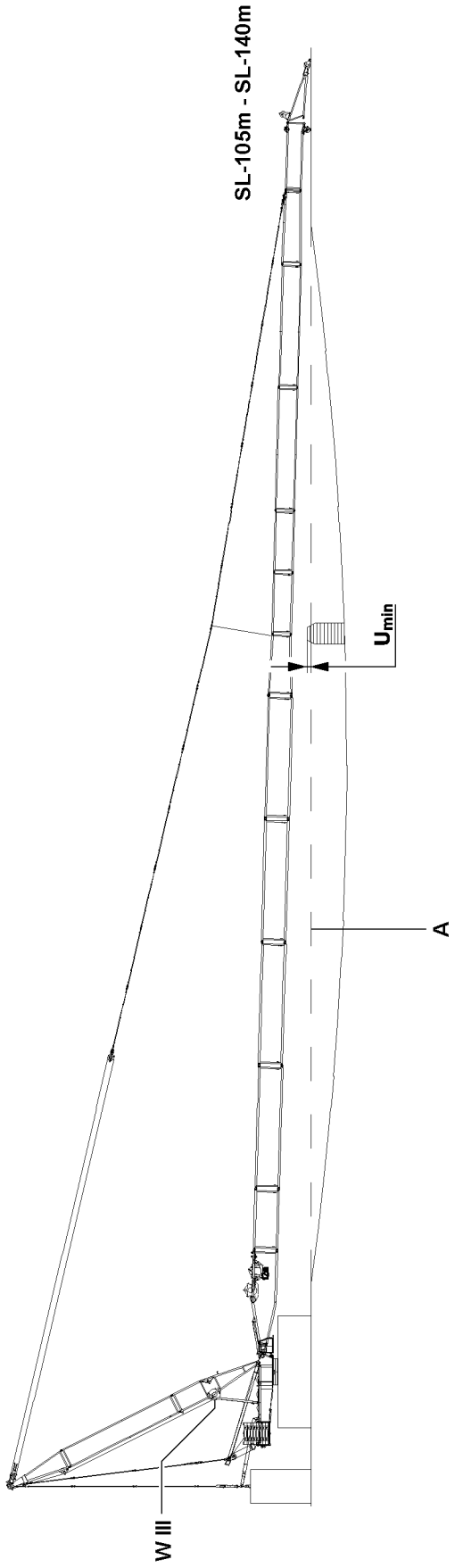

B112060

3.8.3 Closing the SL8DHS 105 m to 140 m

The boom combinations must be erected or taken down according to the erection and take down charts! The boom combinations, depending on the boom lengths, must be supported from below to a certain height, support **Umin**.

Note

▶ Up to a boom length SL8-119 m, the L-end section may lift off the ground when closing the boom!

	Support U_{min}
LG-crane	0.6 m to 1.0 m
LR-crane	0 m to 0.4 m

WARNING

The crane can topple over!

If the following conditions are not met before erecting the boom, the crane can topple over!

Personnel can be severely injured or killed!

▶ Observe the safety technical notes, see Crane operating instructions, chapter 5.01!

▶ Observe the data in the erection and take down charts!

▶ Make sure that the L-end section of the SL8D-boom 126 m does **not** lift off the ground when closing!

▶ It is not permitted to turn the crane during the erection procedure!

▶ Extend the S-relapse cylinders before erecting the boom combination!

▶ Close the boom system with the auxiliary crane.

B195219

3.9 Establishing the electrical connections

NOTICE
Damage to the electrical connection on the cable drum!
If the electrical connection from the cable drum on the S-pivot section to the terminal box on the S-pivot section is established first before the connection to the terminal box on the S-end section, the electrical connection can be damaged when spooling out the cable drum!
▶ Establish first the electrical connection from the cable drum in the S-pivot section to the terminal box on the S-end section and then the electrical connection from the terminal box in the S-pivot section to the cable drum!

Note
▶ To establish the electrical connections on the S-boom, use the Electric wiring diagram!

Make sure that the following prerequisites are met:
– The S-boom is completely assembled.
– The airplane warning light and the wind speed sensor are assembled.

▶ Establish the electrical connections.
▶ Make sure that all electrical connections on the boom are established.

3.10 Establishing the hydraulic connections

When hydraulic lines are connected and disconnected with quick-release couplings, make ensure that the coupling procedure is being performed correctly.

DANGER
Risk of accident due to loss of pressure or leakage!
Incorrectly coupled or self-loosening quick-release couplings (particularly return lines) can result in serious accidents due to component failure!
▶ Check that the quick-release couplings have been properly connected before using the crane!

Note
▶ To connect or release the hydraulic lines with quick couplers, see Crane operating instructions, chapter 5.01!

▶ Release the pressure in the hydraulic system before connecting and disconnecting. Turn the engine off and wait for short time.
▶ Assembling coupling components (sleeve and connector) by using hand-tightened nut.
▶ Combine coupling components.

3.11 Function check

WARNING
Non-functioning safety devices!
If the function of the safety devices is defective, personnel can be severely injured or killed!
▶ Crane operation with non-functioning safety devices is **prohibited**!

Note
▶ The function of the individual limit switches must be checked before erection of the boom system!
▶ The function of the limit switch initiators must be checked in the test system, see Diagnostics manual!

Note

▶ If a function check on the limit switches or on the safety devices does not lead to the desired shut offs, then the plug connections on the connector boxes or the components itself must be checked. If no visible connection errors or component defects can be found, contact LIEBHERR Service!

Make sure that the following prerequisites are met:
– All electrical connections have been made.
– The crane engine is running.
– The corresponding operating mode is set on the LICCON monitor.
– The actuator levers of the limit switches have been checked for easy movement and are lubricated.

3.11.1 Wind speed sensor

▶ Check the movement and the function of the wind speed sensor.

3.11.2 Airplane warning light

▶ Turn the airplane warning light on, see Crane operating instructions, chapter 4.01.
▶ Check the function visually.

3.11.3 Hoist limit switch

▶ Actuate the hoist limit switch manually on the pulley head.

Result:
– The hoist winch turns off in upward movement.
– The hoist top icon on the LICCON monitor 0 blinks.

3.11.4 Checking the limit switch D-boom “Steepest position”

Note

▶ The limit switch functions have to be checked individually before erection!

▶ Cover the limit switch initiators on the D-relapse cylinders individually with a metal plate.

Result:
– The limit switch is actuated manually.
– The spool up function of winch 4 (control winch) turns off.
– The icon “Boom limitation” appears on the LICCON monitor 0.

3.11.5 Checking the limit switch S-boom “Steepest position”

Note

▶ The limit switch functions have to be checked individually before erection!

▶ Cover the limit switch initiators on the S-relapse cylinders individually with a metal plate.

Result:
– The limit switch is actuated manually.
– The spool up function of winch 3 turns off.
– The icon “Boom limitation” appears on the LICCON monitor 0.

blank page!

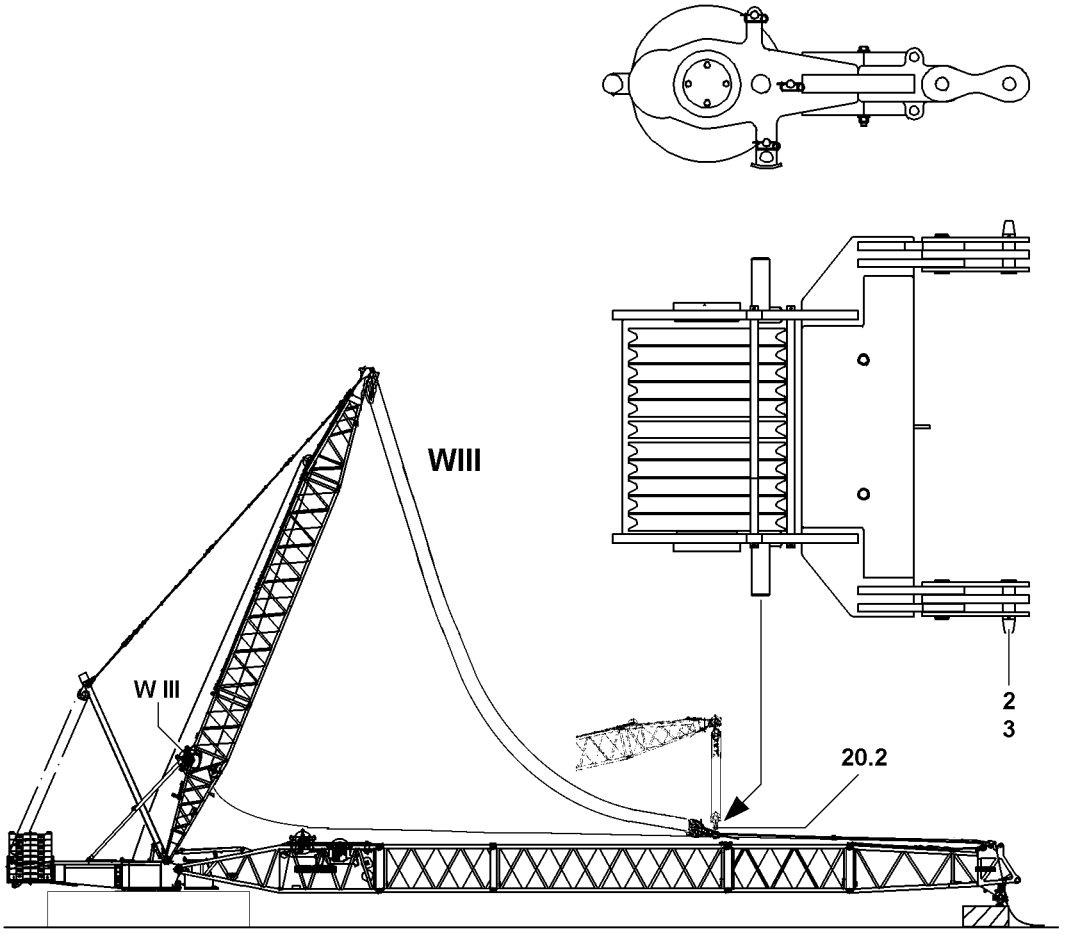

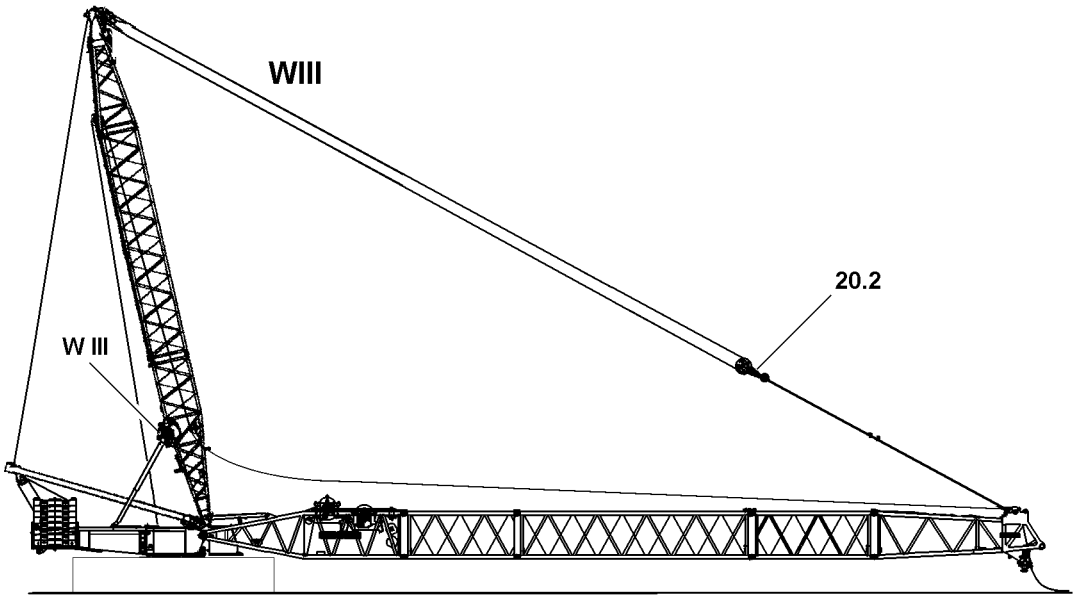

B112062

3.12 Assembling the guy rods

WARNING
Neglected inspection and maintenance on guy rods!
If the regular inspection and maintenance of the guy rods is not carried out or only in irregular intervals, then severe accidents can occur due to existing and not recognized damage on the guy rods!
Personnel can be severely injured or killed!
▶ The guy rods must be checked before every assembly, see Crane operating instructions, chapter 8.15!

Note
▶ The guy rods must be installed and secured according to the separately supplied rod plans. The numbering on the rod plans must be identical to the numbering on the guy rods!

Make sure that the following prerequisites are met:
– The S-boom is completely assembled.
– All lattice sections are properly pinned with each other.
– All pin connections have been secured.
– The upper pulley block **20.2** is unpinned on the S-pivot section.

▶ Luff the D-boom down to the front.
▶ Lower the upper pulley block **20.2** to the boom: Spool out winch 3 **W III**.

The guy rods are placed and secured for transport on the corresponding intermediate sections. Before assembly, the transport retainers must be released.
▶ Release the transport retainers on the guy rods.

NOTICE
Danger of property damage!
If the pins of the guy rods are not pinned from the “inside” to the “outside”, the hoist rope can scrape on the pin and be damaged!
▶ Always insert the pins of the guy rods from the “inside” to the “outside”!
▶ Pay attention to the special rod plan!

Note
▶ The guy rods of the S-/L-intermediate sections are pinned with each other and secured starting from the brackets on the fixed point of the respective end section or starting from the brackets on the L-adapter!

▶ Pin and secure the guy rods for the intermediate sections according to the rod plan.
▶ Pin and secure the guy rods with the upper pulley block **20.2**.

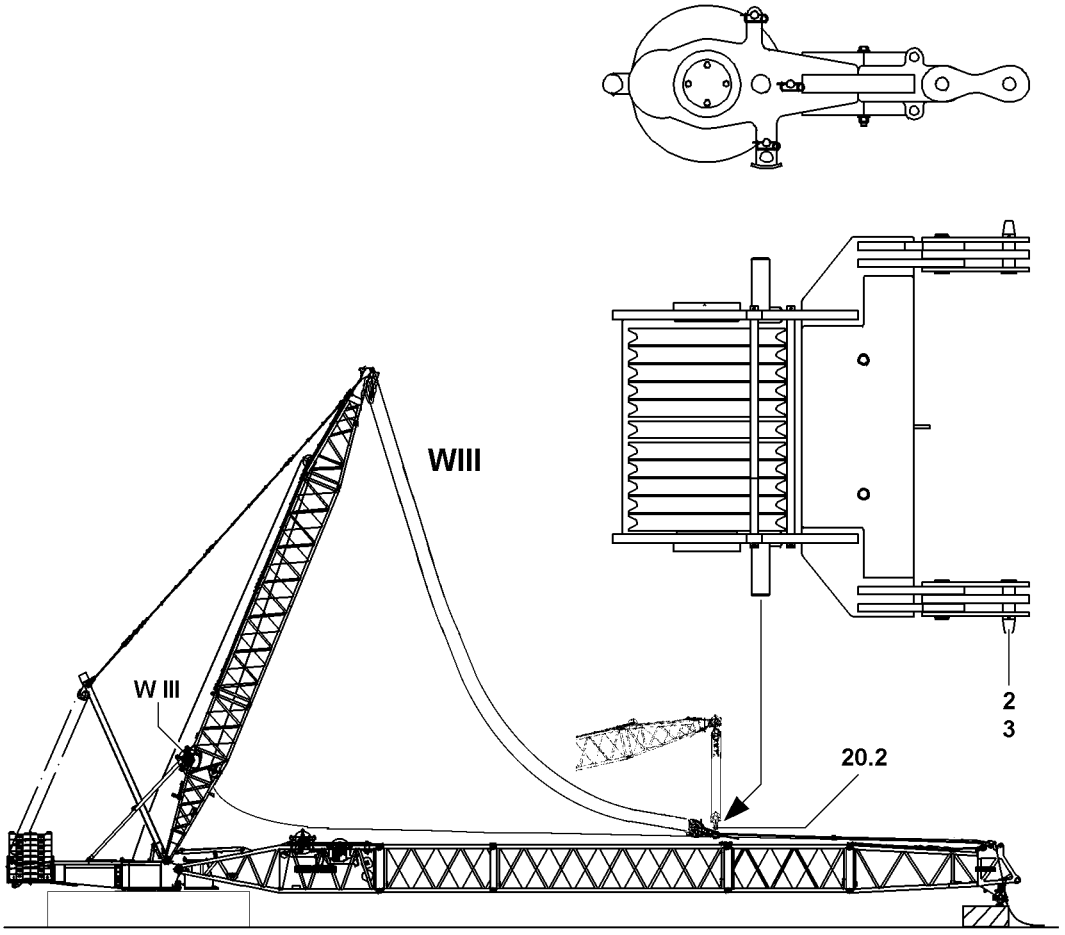

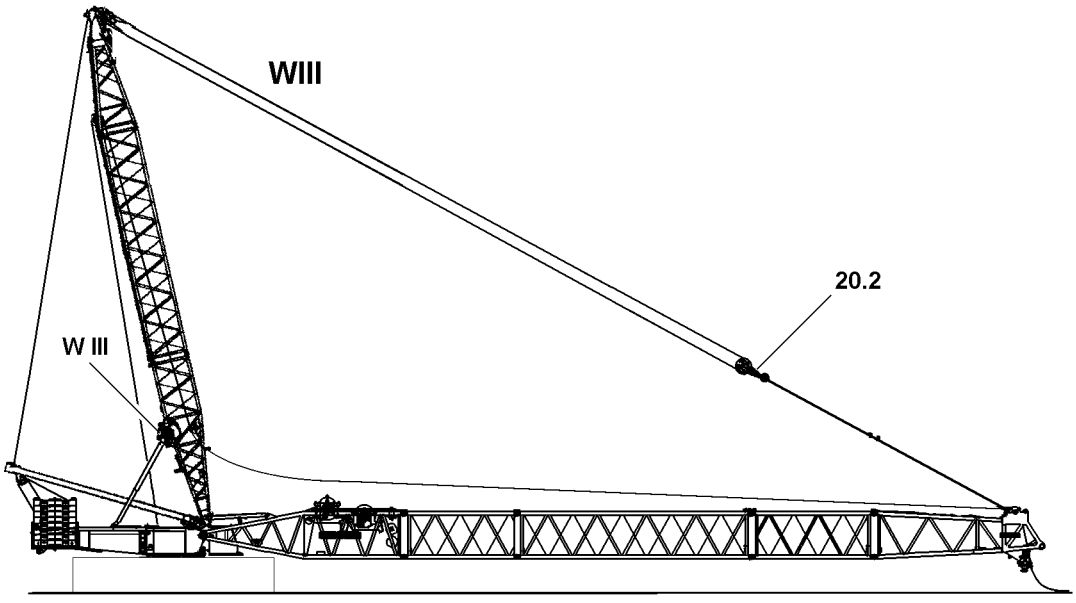

B112062

WARNING
Falling boom!
If the auxiliary guying is not assembled on the boom or not according to the specifications, then the boom can buckle, break off and fall down!
Personnel can be severely injured or killed!
▶ Make sure that the auxiliary guying is assembled correctly, see Rod plan!

▶ Assemble the auxiliary guying.

Note
▶ The S-boom must remain on the ground when erecting the derrick boom and may **not** be pulled up along!

▶ When the guy rods are pinned and secured with the upper pulley block **20.2**:
Erect the D-boom to operating position and at the same time, spool out winch 3 **W III**.
▶ When the D-boom has reached the operating position:
Tension the guying between the D-boom and the boom head or the L-adapter.

WARNING
The boom can suddenly fold down!
If the following notes are not observed, the boom can suddenly fold down when the auxiliary boom or the supporting base is removed!
Personnel can be severely injured or killed!
▶ Remove the auxiliary boom or the supporting base only if it is ensured that the D-boom is in operating position and the S-boom is safely being held by the guying!

▶ When the boom is safely held by the guying:
Remove the auxiliary crane on the boom head or on the L-adapter.

or

■ Remove the support.
▶ Guide the hoist rope over the rope pulley(s) on the boom head, see Reeving plans.

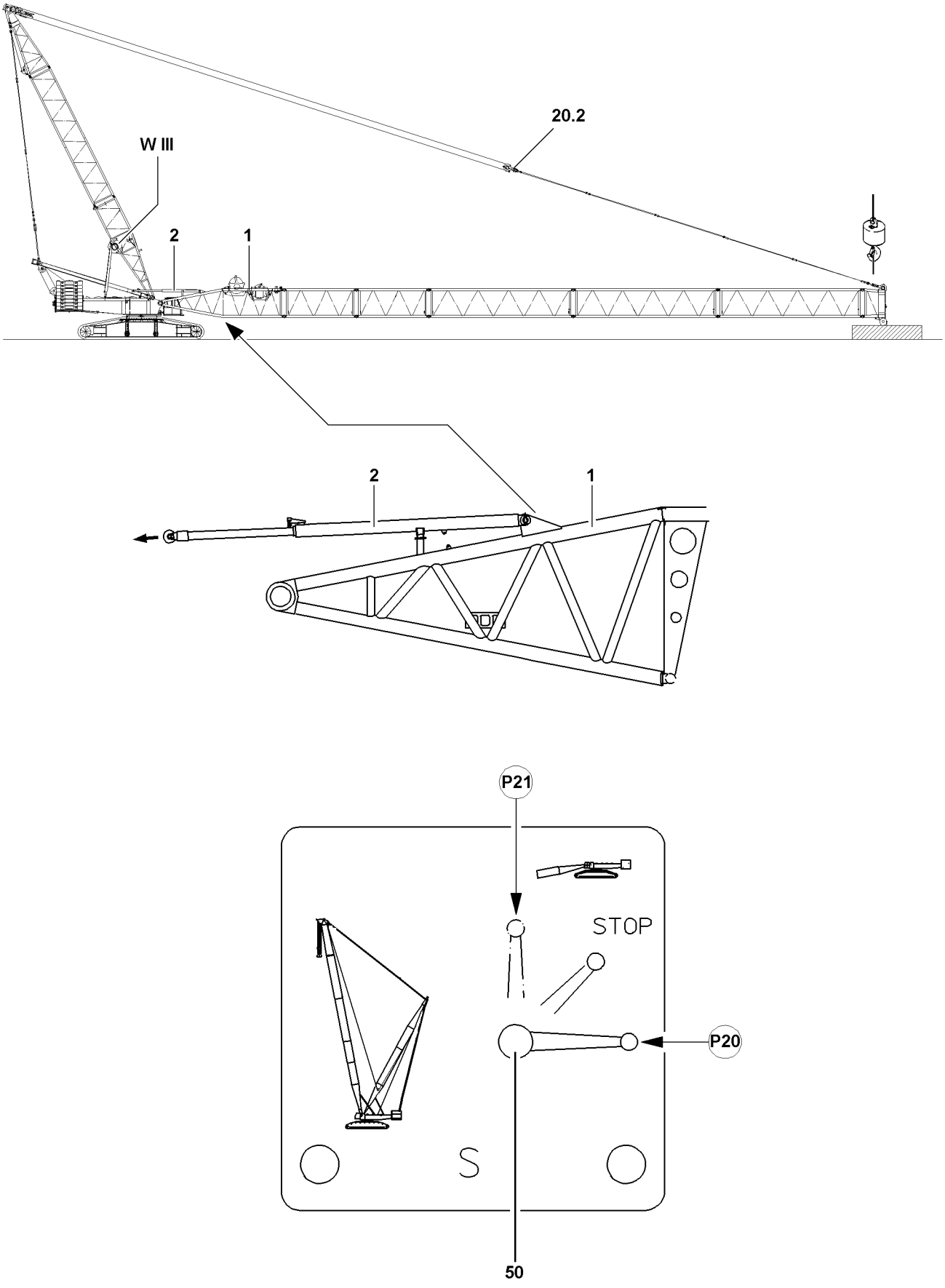

B112054

3.13 Erecting the boom

WARNING
The crane can topple over!
In crane operation with exceeded LICCON overload protection, the crane can topple over! Personnel can be severely injured or killed!
- ▶ The radii listed in the load chart may not be exceeded or fallen below, even if there is no load on the hook!

If required in the erection and take down chart:
- ▶ Carry the hook block along with the auxiliary crane!

WARNING
The crane can topple over!
If the following conditions are not met before erecting the boom, the crane can topple over!
Personnel can be severely injured or killed!
- ▶ Observe the safety technical notes, see Crane operating instructions, chapter 5.01!
- ▶ Extend the S-relapse cylinders before erecting the boom combination!
- ▶ Do not allow slack cable to build up on the control winch!

WARNING
Falling hoist rope!
If the hoist rope is not reeved with the respective length over the S-boom before the erection procedure, then it can fall backward due to its own weight!
Personnel can be severely injured or killed!
- ▶ Reeve in the hoist rope with sufficient length on the S-boom before the erection process!
- ▶ The hoist rope must be constantly monitored during erection!
- ▶ Do not step into the danger zone!

NOTICE
Overload of boom!
If the SL-boom is not supported before the erection procedure, then the boom will be overloaded!
The crane will be damaged during erection!
- ▶ Carry out the support for the different boom lengths always according to the specifications!
- ▶ Support the boom with suitable material of sufficient load bearing capacity!

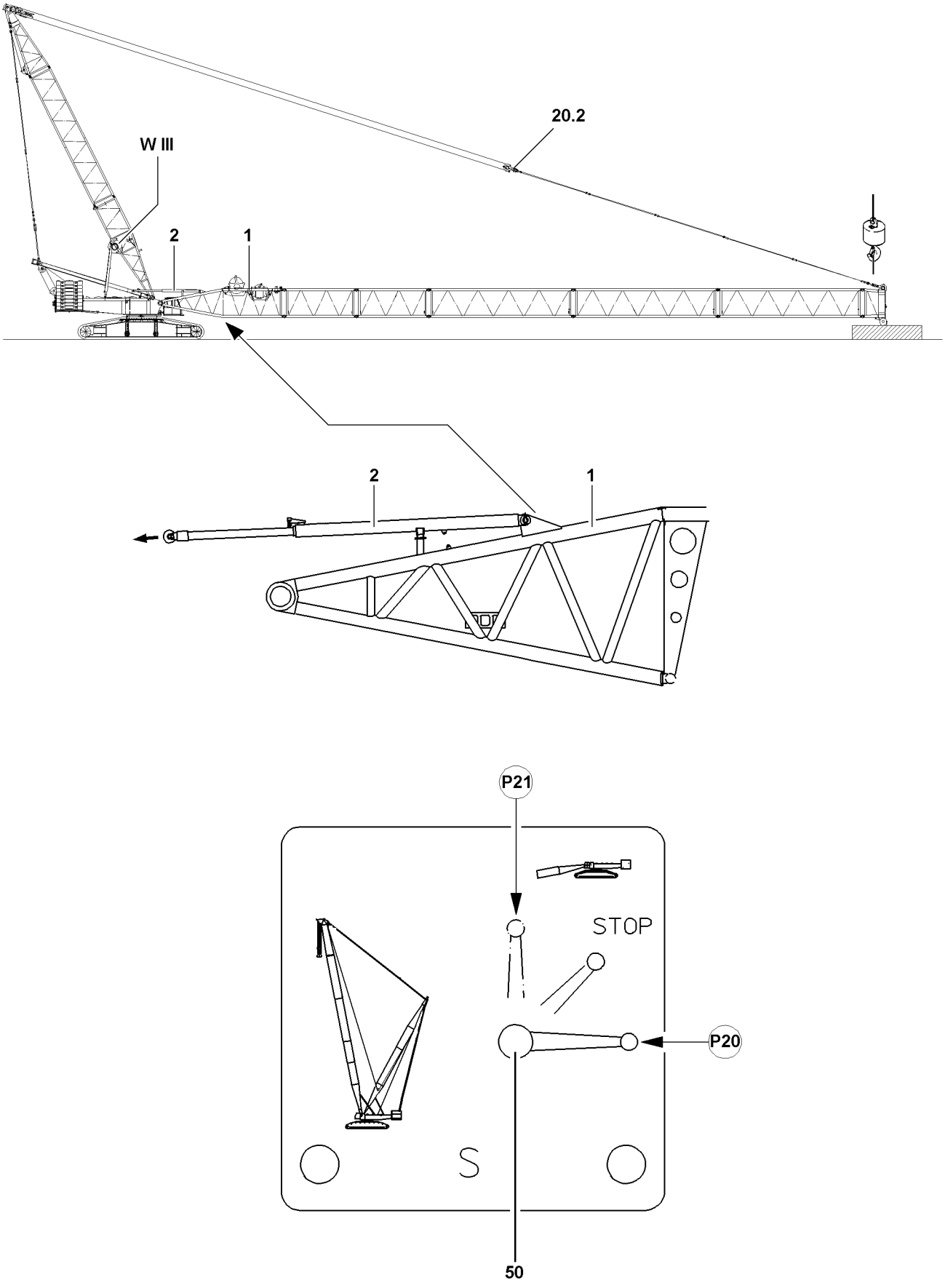

B112054

Make sure that the following prerequisites are met:
- The crane is supported.
  (only in connection with crane support or for LG-cranes)
- The crane is aligned in horizontal direction.
- All electrical connections have been made.
- All limit switches are functioning.
- The central ballast is installed according to the erection and take down charts.
  (not possible for LG-crane)
- The counterweight has been installed on the turntable according to the erection and take down chart.
- All pin connections have been secured.
- The hoist rope has been correctly placed in the rope pulleys and is prevented from jumping out with the rope retaining pins.
- Non-required guy rods are disassembled.
- There are no loose parts on the boom.
- The boom is free of snow and ice.
- The LICCON overload protection has been set according to the data in the load chart.
- The load weighing was carried out on the boom and the hook block weight has been entered on the LICCON monitor, see Crane operating instructions, chapter 4.02.
- The LICCON overload protection settings have been compared with the actual crane configuration.
- The LICCON overload protection is exceeded.
- The assembly icon is visible on the LICCON monitor.
- No personnel is within the danger zone.

3.13.1 Extending the S-relapse cylinder

NOTICE
Damage of the relapse cylinder!
By extending the S-relapse cylinder, a collision with the D-relapse cylinders can occur!
This can result in severe damage on the relapse cylinders!
▶ Extend the S-relapse cylinders only when the D-boom is in operating position!

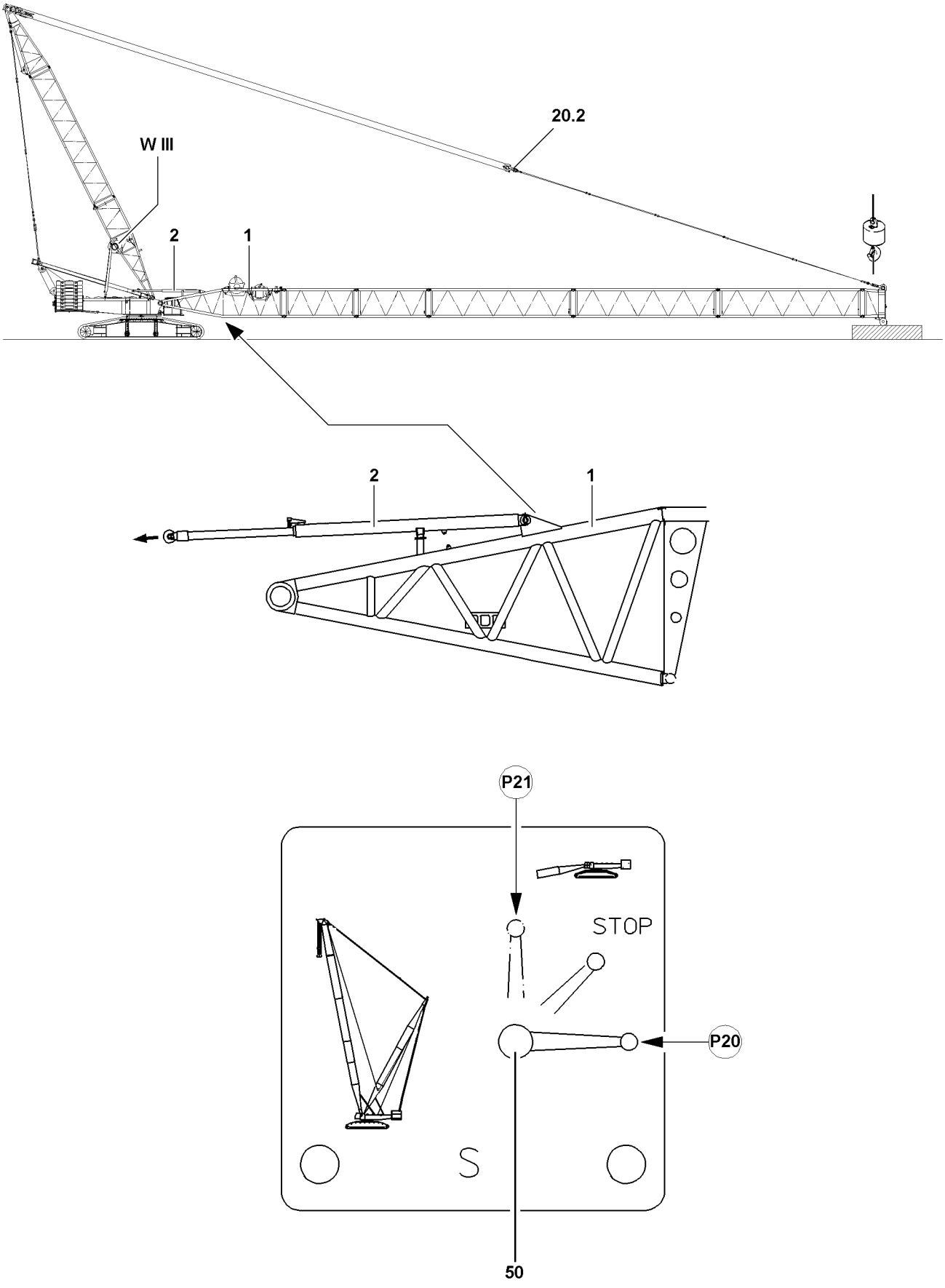

B112054

WARNING
The crane can topple over!
If the S-relapse cylinders are not extended before erecting the boom, then the boom can fall to the rear in crane operation and the crane can topple over!
Personnel can be severely injured or killed!
▶ Extend the S-relapse cylinders before erecting the S-boom!
▶ Secure the ball valve **50** during crane operation to prevent inadvertent actuation!

Ball valve positions	
Position (P)	Function
20	Crane operation, extend the piston rod
21	Assembly, retract the piston rod
STOP	The piston rod cannot be retracted / extended

Make sure that the following prerequisite is met:
– All hydraulic connections have been made.

▶ Set the ball valve **50** to position **P20**.

Result:
– The piston rods of the S-relapse cylinders **2** extend.

Note
▶ The ball valve **50** is secured by closing the cabinet door and removing the key!

▶ When the piston rods of the S-relapse cylinders **2** are fully extended:
Close the cabinet door and pull the key.
▶ Hand the key to an authorized person.

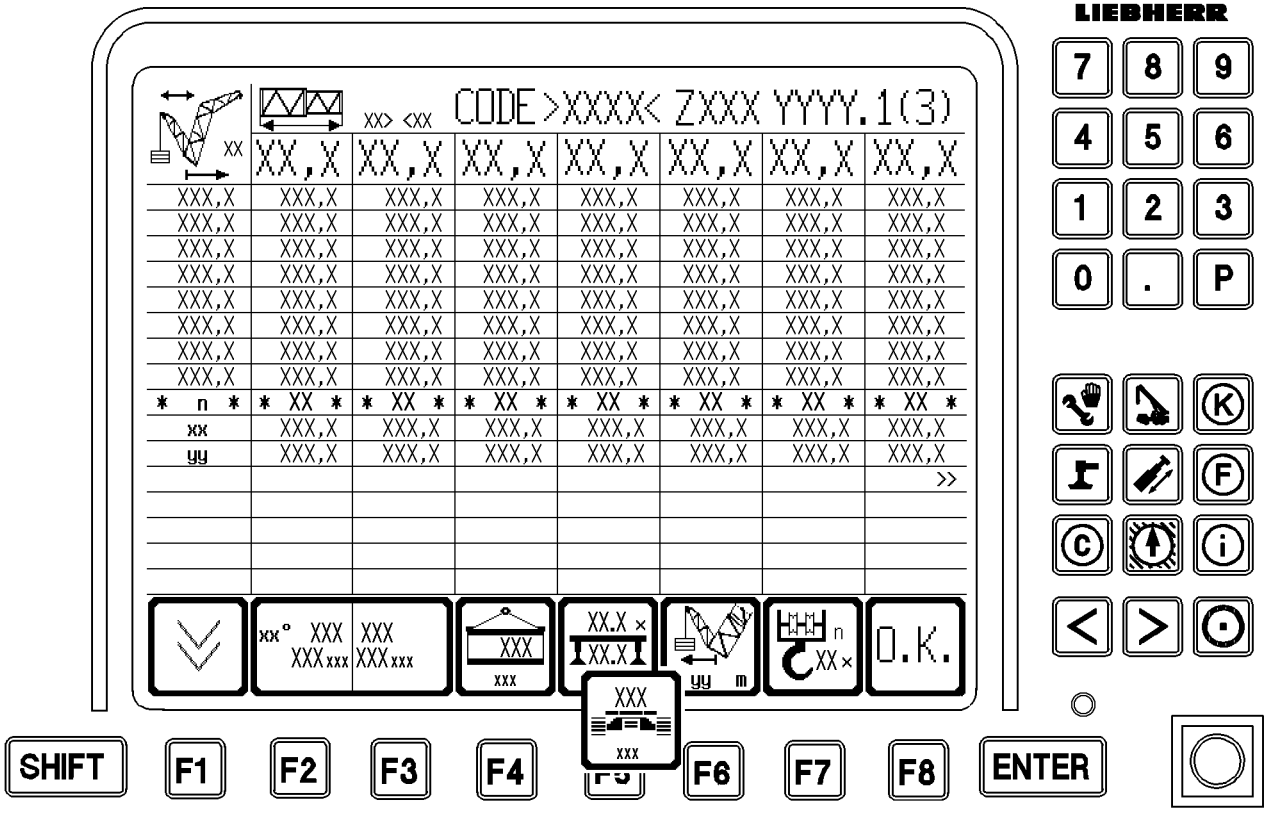
LIEBHERR
CODE>XXXX< ZXXX YYYY.1(3)
O.K.
7 8 9
4 5 6
1 2 3
0 . P
SHIFT F1 F2 F3 F4 F5 F6 F7 F8 ENTER

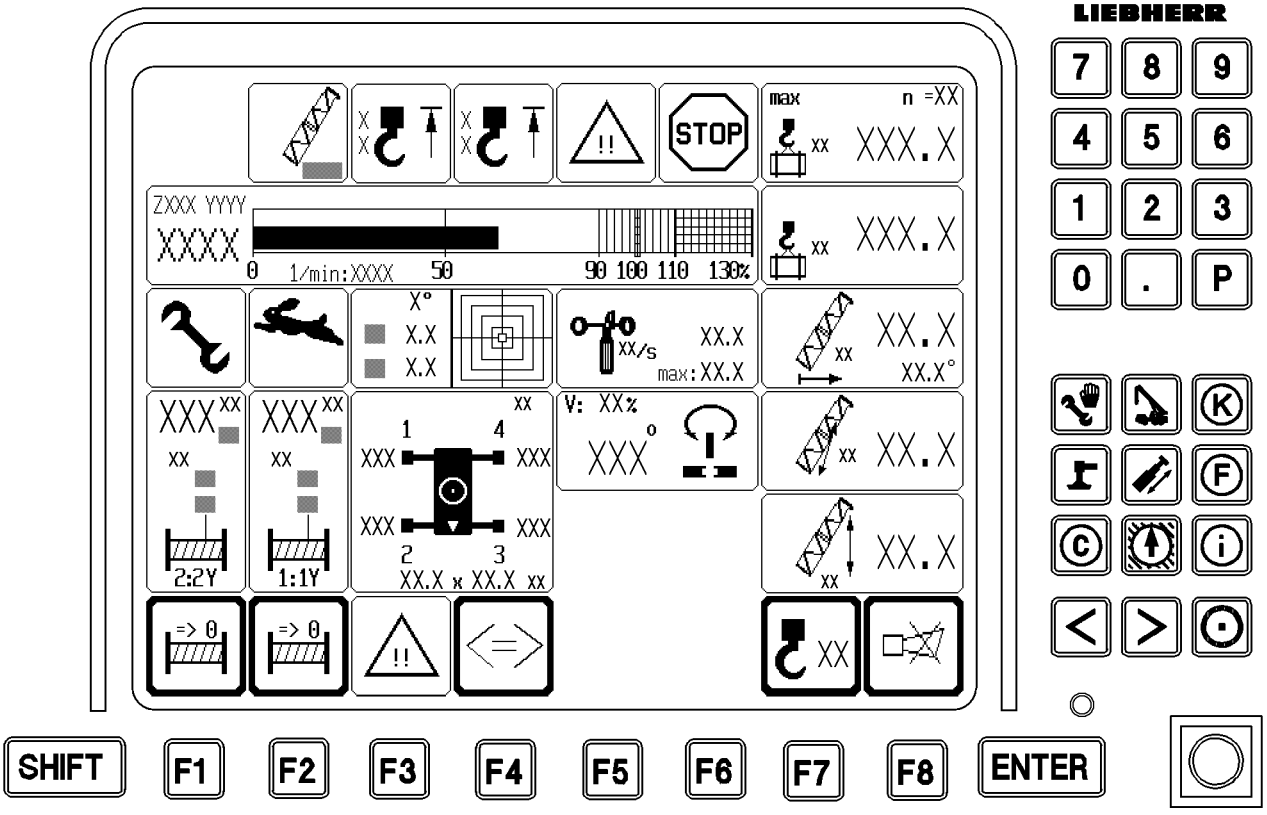
LIEBHERR
STOP
7 8 9
4 5 6
1 2 3
0 . P
SHIFT F1 F2 F3 F4 F5 F6 F7 F8 ENTER

B112055

3.13.2 Erection procedure

DANGER
The crane can topple over!
- ▶ It is prohibited to turn the crane superstructure while erecting the boom!
- ▶ Adhere to the data in the erection and take down charts!

Make sure that the following prerequisite is met:
– The load weighing was carried out on the boom and the hook block weight has been entered on the LICCON monitor, see Crane operating instructions, chapter 4.02.

Reeving in the hook block

- ▶ Erect the boom until the end section lifts off the ground.

WARNING
Falling hoist rope!
If the hoist rope is not reeved with the respective length over the S-boom before the erection procedure, then it can fall backward due to its own weight.
Personnel can be severely injured or killed!
- ▶ Reeve the hoist rope before the erection procedure with sufficient length on the D-boom!
- ▶ The hoist rope must be constantly monitored during erection!
- ▶ Do not step into the danger zone!

- ▶ Reeve in the hoist rope properly and secure on the rope fixed point, for reeving, see Reeving plan.
- ▶ Pin and secure the rope retainers on the rope pulleys.
- ▶ Attach the hoist limit switch weight.

Erecting the boom

WARNING
The crane can topple over!
In crane operation with exceeded LICCON overload protection, the crane can topple over!
There is then no additional protection against crane overload!
Personnel can be severely injured or killed!
- ▶ The radii listed in the load chart may not be exceeded or fallen below, even if there is no load on the hook!
- ▶ Crane operation with deactivated LICCON overload protection is prohibited!

Note
- ▶ When the lowest operating position of the boom is reached, the LICCON overload protection is activated!
- ▶ In the maximum load icon appears a load number in “t” instead of the display “???”!

- ▶ Luff the boom up to the lowest operating position.
- ▶ When the boom has reached the lowest operating position:
  Make sure that the assembly icon on the LICCON monitor turns off.

Result:
– The LICCON overload protection is active.

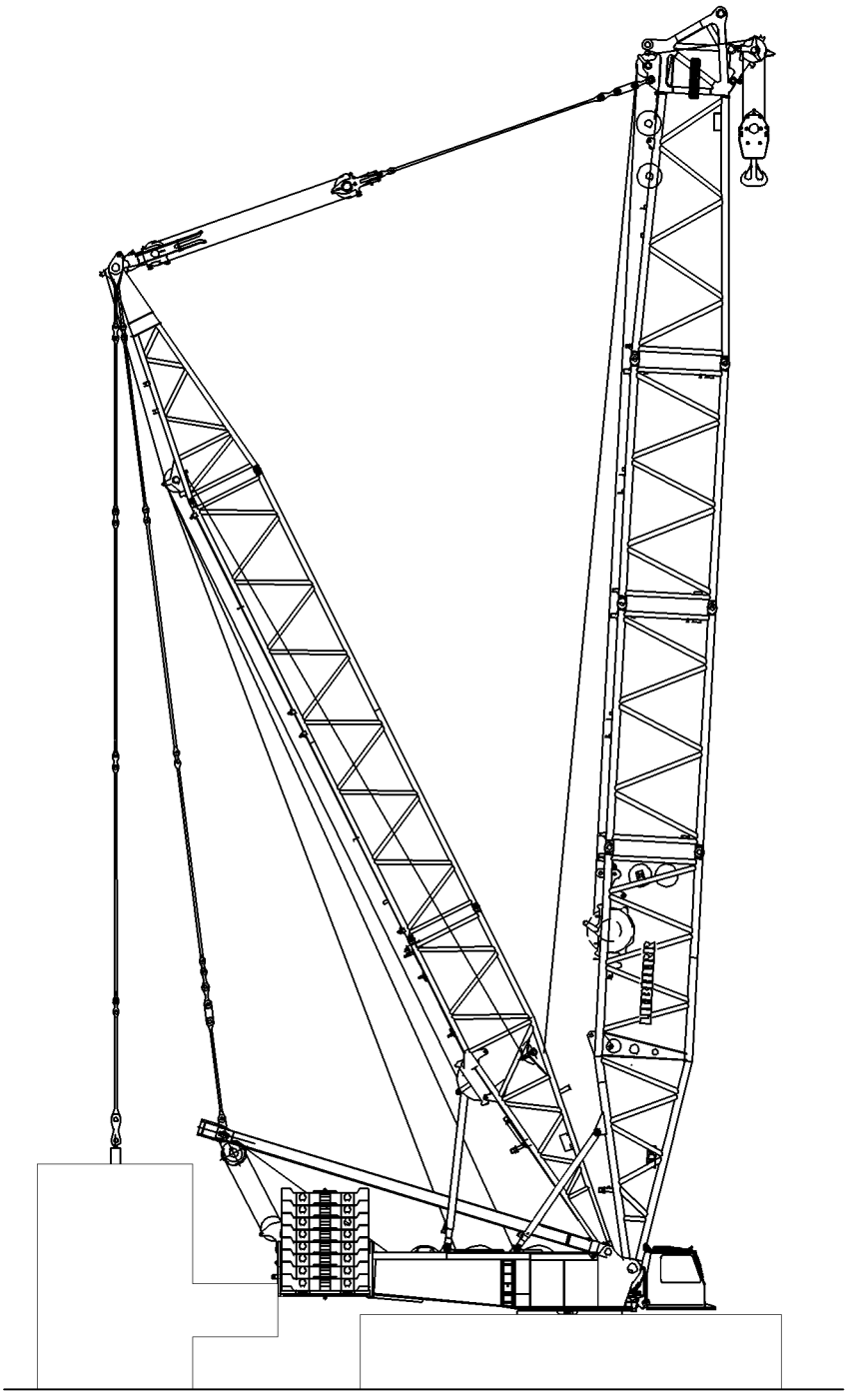

B112063

4 Operating the crane

4.1 Preparing for crane operation

Note

▶ Observe the notes, see Crane operating instructions, chapter 4.02, chapter 4.05, chapter 4.08 and chapter 5.01!

Make sure that the following prerequisites are met:
– The LICCON overload protection is active.
– The LICCON overload protection has been set according to the data in the load chart.

WARNING

The crane can topple over!

▶ Check the horizontal position of the crane before and during operation!
▶ If the crane operator leaves the cab, even for a short time, the operating mode setting must be checked and reset if necessary before resuming crane operation!

4.1.1 Checking the settings

▶ Check the function of the overload protection by running against the operating positions “on top” and “bottom”.
▶ Check the hoist limit switch by running against the hoist limit switch weight.
▶ Check the function of the limit switches “Boom steep” on the relapse cylinders.

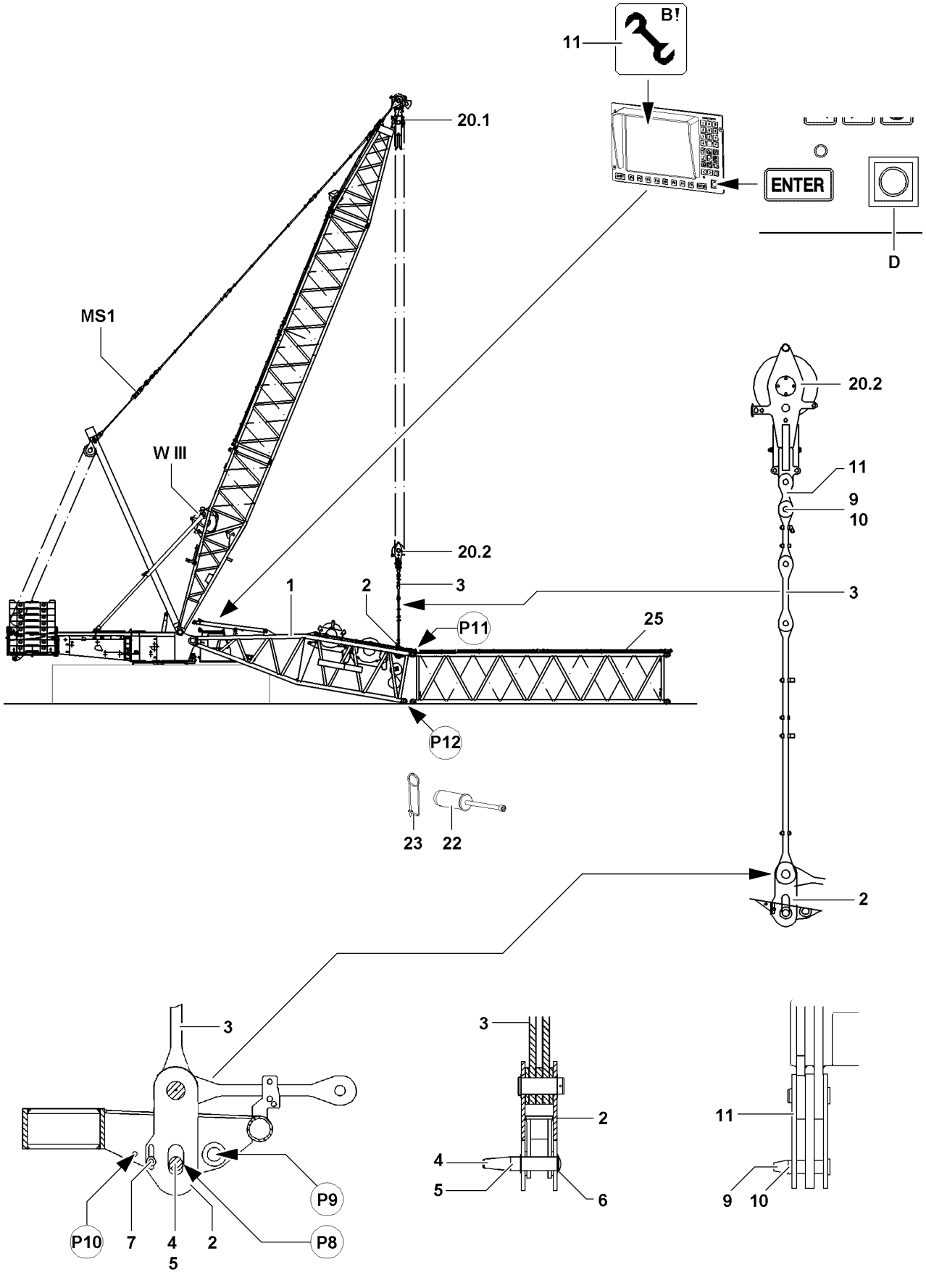
B!
11
20.1
ENTER
D
MS1
W III
20.2
11
9
10
3
1
2
3
P11
25
P12
23
22
2
3
P9
P10
7
4
5
2
P8
3
2
4
5
6
11
9
10

B112048

5 Disassembling the SLD/SD-boom

Note

▶ The disassembly is described on the example of the S-boom!

WARNING

Risk of falling!

During assembly and disassembly, personnel must be secured with appropriate aids to prevent them from falling. If this is not observed, assembly personnel can fall and suffer life-threatening or fatal injuries!

- ▶ Any work, where there is a danger of falling must be carried out with suitable aids (for example: lifting platforms, scaffoldings, ladders, auxiliary crane)!
- ▶ If the work cannot be carried out with such aids nor from the ground, then the assembly personnel must secure themselves with approved fall arrest systems to avoid falling, see Crane operating instructions chapter 2.04!
- ▶ If railings are present on the components, then they must be brought into the corresponding position and secured for assembly / disassembly.
- ▶ Step on aids and fall protection equipment only with clean shoes!
- ▶ Keep aids and fall protection equipment clean and free from snow and ice!
- ▶ During all assembly and disassembly work, maintenance work and inspections, travel or crane operation is prohibited!

WARNING

The lattice sections can fall down!

If the lattice sections are not pinned and secured correctly, then they can fall down and fatally injure personnel!

- ▶ Pin or unpin both pins at the same horizontal level, i.e. **left and right**!
- ▶ Do not stand under the lattice sections or within the entire danger zone during the pinning and unpinning procedure of the boom!
- ▶ Safely secure the pins in the bearing points as well as receptacles!
- ▶ It is prohibited to lean the ladder against the component being disassembled!

WARNING

Danger of crushing!

When disassembling crane components, limbs can be crushed or even severed due to oscillation of components!

- ▶ Make sure that the components do not swing back and forth during disassembly!

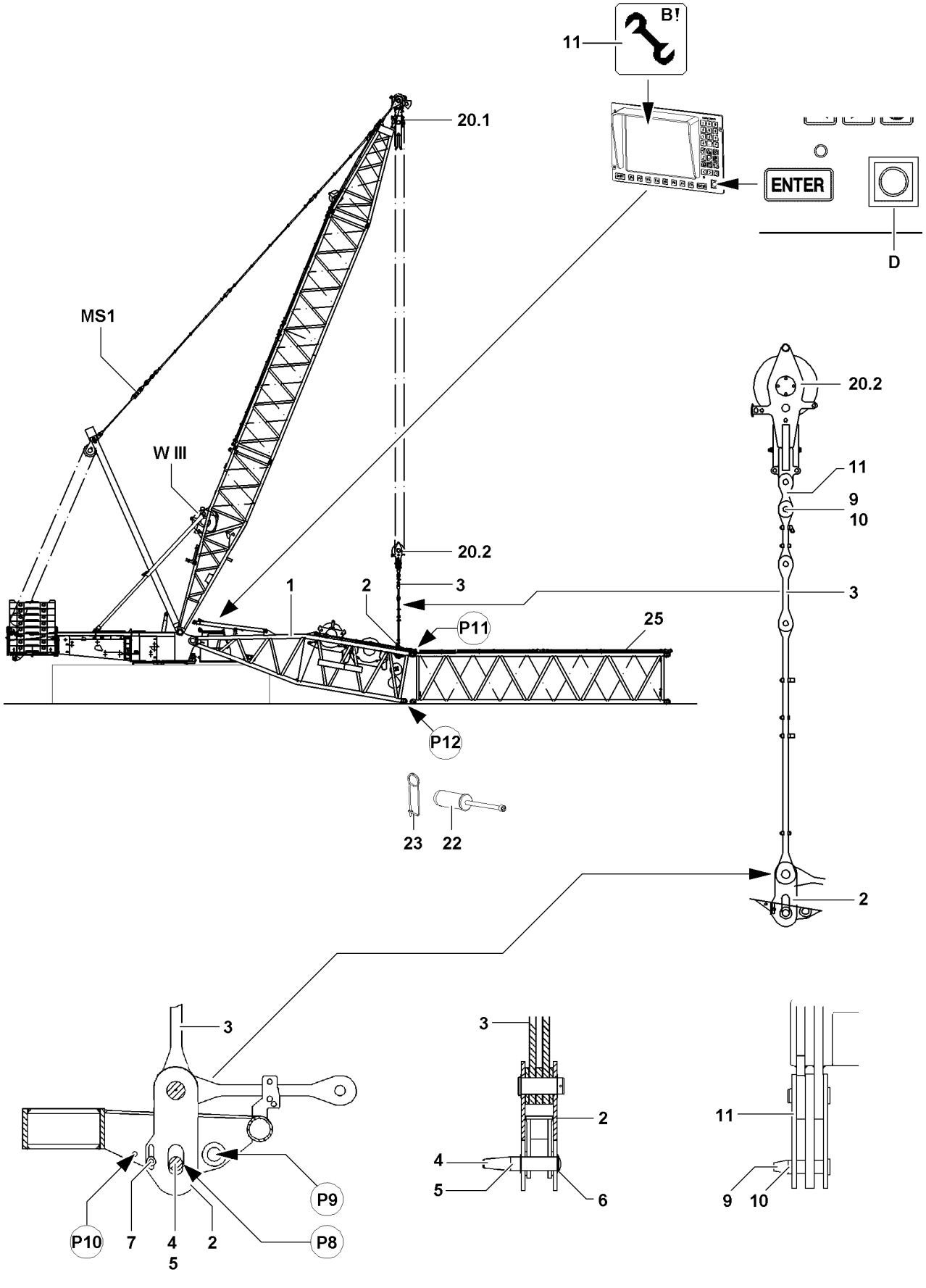
B!
11
20.1
ENTER
D
MS1
W III
20.2
11
9
10
3
1
2
3
P11
25
P12
23
22
2
3
P9
P10
7
4
5
2
P8
3
2
4
5
6
11
9
10

B112048

5.1 Taking the S-boom down

WARNING
The crane can topple over!
If the following conditions are not met before taking down the S-boom, the crane can topple over!
Personnel can be severely injured or killed!
- ▶ Observe the safety technical notes, see Crane operating instructions, chapter 5.01!
- ▶ Observe the data in the erection and take down charts!

NOTICE
Damage of boom components!
Taking down the boom system can lead to a collision between the hook block and the pulley head!
The boom components can be severely damaged!
- ▶ Luff the boom system down at the same time and spool the hoist winch out!
- ▶ When luffing the boom system down, the D-boom must remain in operating position until the S-end section is laying on the ground or on a supporting base or it is safely held by an auxiliary crane!

Note
- ▶ The luff down movement is turned off as soon as the lowest operating position of the S-boom is reached!
- ▶ When the lowest operating position of the S-boom is reached, the load display in the maximum load icon turns off and instead of the load display appears the display “???”!
- ▶ In the crane operating screen appear alarm functions!

- ▶ Luff the boom down to the **lowest** operating position.

Result:
- – The luff down movement is turned off.
- – The “STOP” icon appears on the LICCON monitor.
- – The horn icon appears on the LICCON monitor.

WARNING
Assembly with turned on set up key!
When the set up key is turned on, the LICCON overload protection is exceeded!
In the event of deliberate improper use, the crane could collapse, the boom can break off or the crane can topple over!
Personnel can be severely injured or killed!
This could result in high property damage!
- ▶ The set up key **D** may only be actuated by persons who know the effects of a bypass!
- ▶ Press the set up key **D** only when the set up status was correctly entered into the LICCON computer system!
- ▶ Observe the erection / take down charts!
- ▶ Crane operation with the set up key **D** turned on is strictly prohibited!

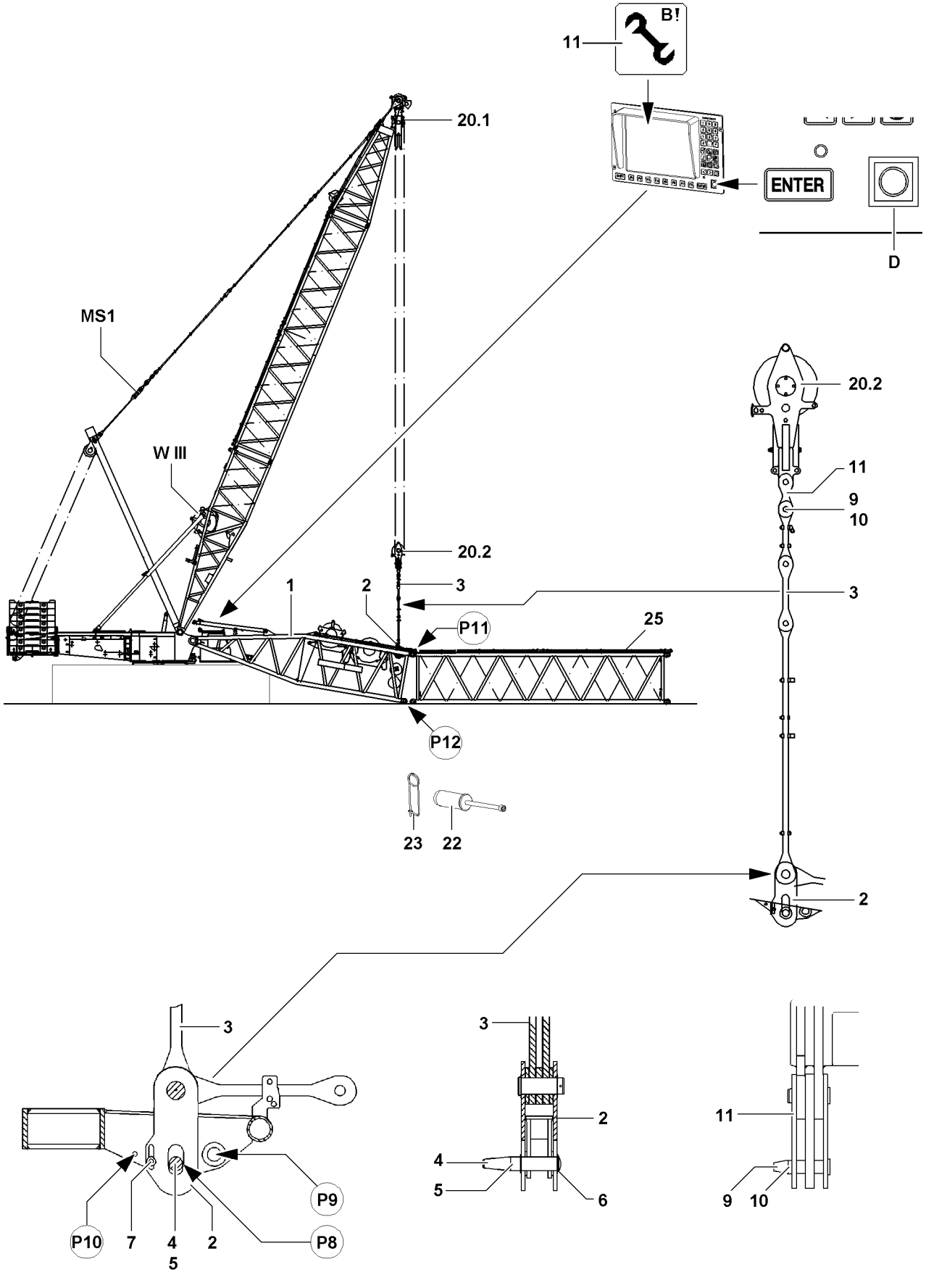
B!
11
20.1
ENTER
D
MS1
W III
20.2
11
9
10
3
1
2
3
P11
25
P12
23
22
2
3
P9
P10
7
4
5
2
P8
3
2
4
5
6
11
9
10

B112048

▶ Turn the set up key **D** to the right.

Result:

– The LICCON overload protection is deactivated.
– The assembly icon appears on the LICCON monitor.

▶ At the same time, spool the hoist winch out and luff the S-boom down until the hook block touches the ground.
▶ Remove the hoist limit switch weight and unreeve the hook block.

WARNING
Overload of boom!
If the boom is not supported in the area of the auxiliary guying according to specification when placing it down, then the crane can be overloaded, the boom can break off and fall down!
Personnel can be severely injured or killed!
▶ Make sure that the boom system is supported according to specification, observe dimension U_{min} for the respective boom system!
▶ The derrick boom must remain in operating position when placing down the S/SL-boom until the S/SL-boom is placed on the support!

▶ Luff the S/SL-boom down until the boom or the boom head is laying on the support.

WARNING
Spooling up of hoist rope!
By spooling the hoist rope up, personnel can be severely injured or killed!
▶ All rope retaining pins / pipes on the S-boom are removed!
▶ Slowly spool up the hoist rope over the rope pulleys back to the winch!
▶ Make sure that no personnel is within the danger zone!

NOTICE
Overspooled winch!
If the hoist rope is pulled under the winch when spooling up, then the adjustment of the cam limit switch can change!
A new adjustment by **Liebherr Service** is required!
▶ Stop the winch in time, with sufficient rope reserve!
▶ Do not overspool the winch!

▶ Spool the hoist rope up.

5.2 Disconnecting the electrical connections

Make sure that the following prerequisite is met:
– The S-boom is placed on the support / supports.

NOTICE
Damage to cable drum or cable!
If the cable of the cable drum is not properly spooled up on the cable drum after unplugging the S-end section, then the cable drum or the cable can be significantly damaged!
▶ Spool the cable drum up after unplugging!

▶ Spool the cable drum up and secure it to prevent inadvertent spooling out.
▶ Disconnect the electrical connections and store the plug and cable properly.

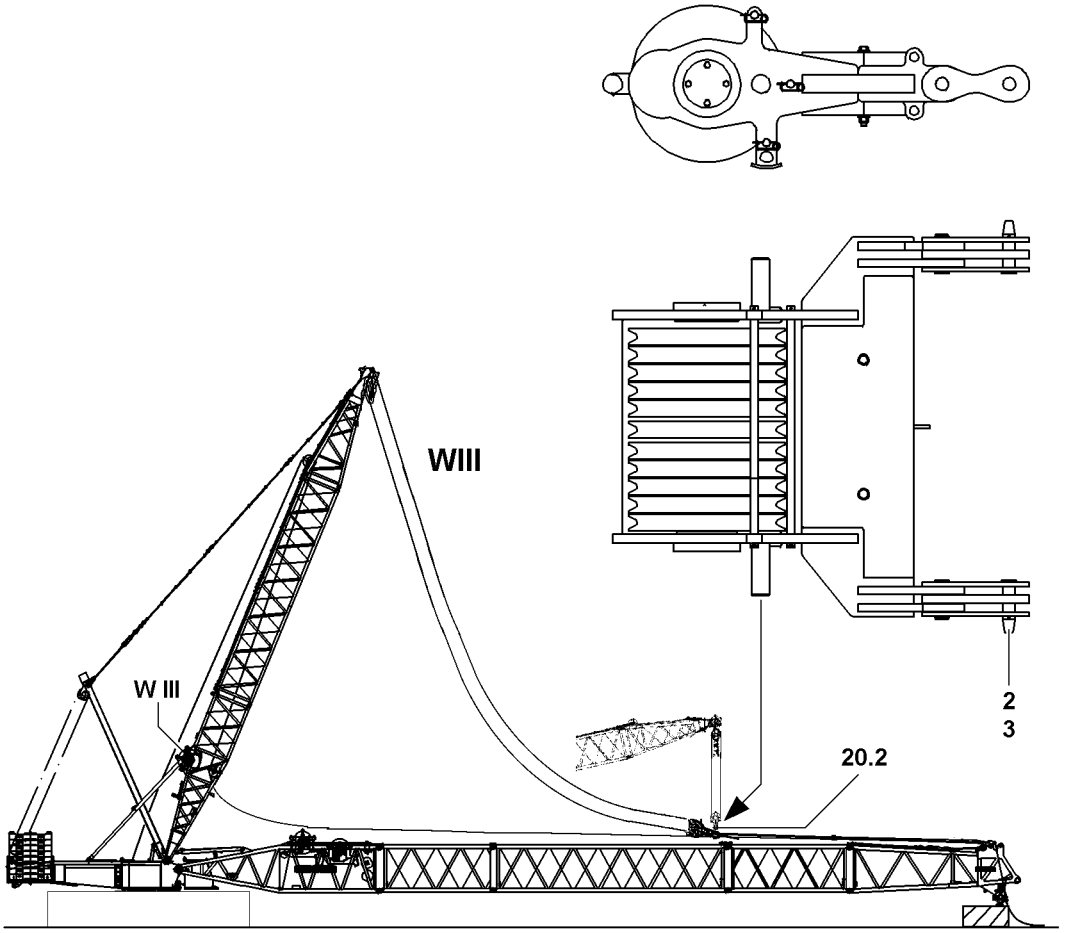

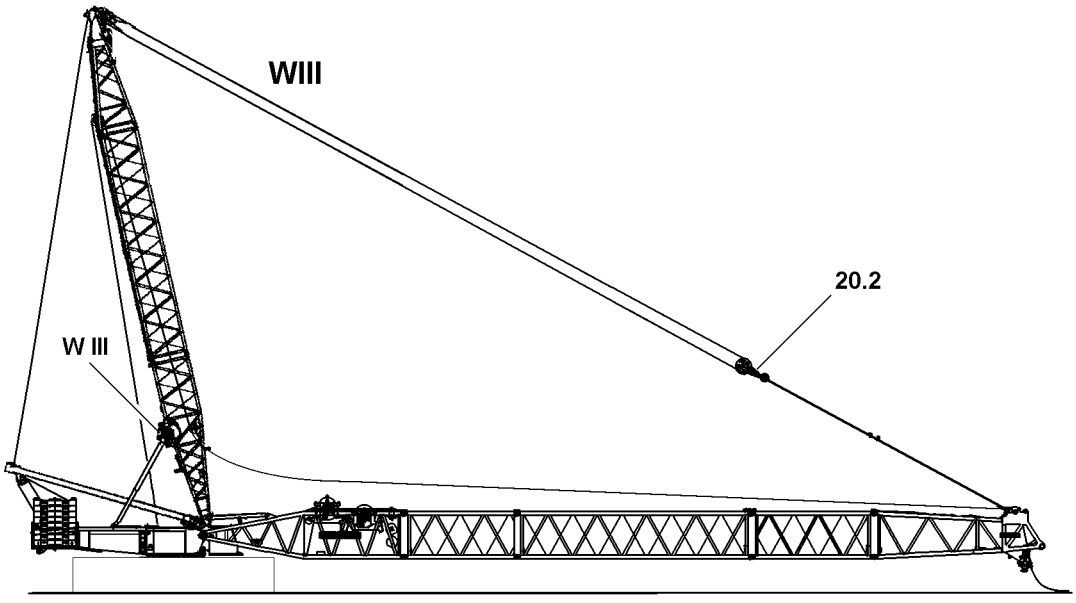

B112062

5.3 Disassembling the guy rods

- ▶ Relieve the guying: Luff the D-boom down to the front and at the same time spool out winch 3.
- ▶ When the guying is relieved:
  Disassemble the auxiliary guying (if present on the boom).
- ▶ Unpin the upper pulley block **20.2** on the guy rods.
- ▶ Place the guy rods on the intermediate sections and secure with transport retainers.
- ▶ Disconnect the guy rods according to their association to the intermediate sections.

NOTICE
Damage to the intermediate sections!

- ▶ Do not pull the upper pulley block **20.2** over the intermediate sections, rather guide them with the auxiliary crane!

- ▶ When the guy rods are placed in the transport retainers and secured:
  Erect the D-boom and spool the hoist rope up at the same time.

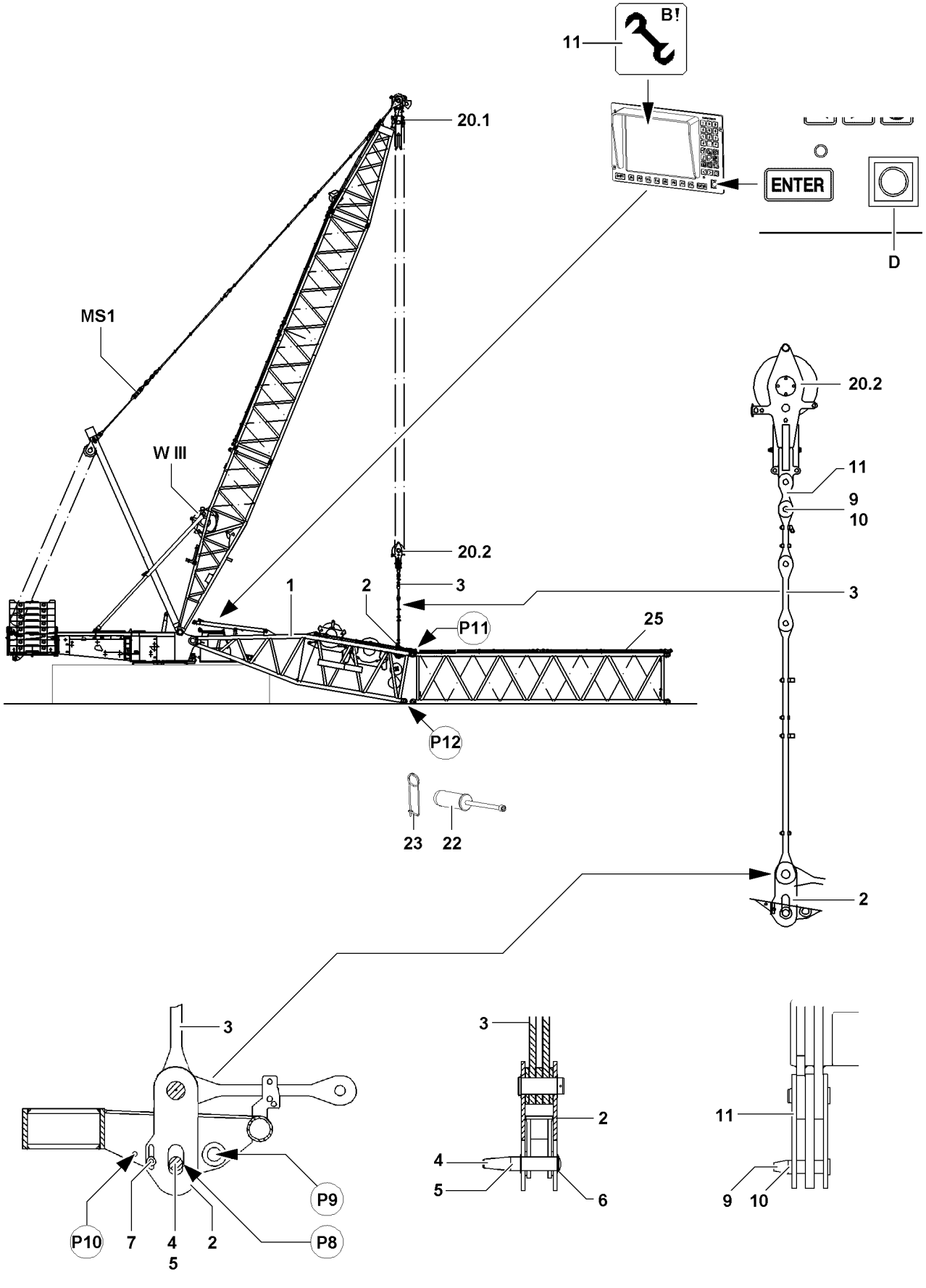
B!
11
20.1
ENTER
D
MS1
W III
20.2
11
9
10
3
1
2
3
P11
25
P12
23
22
2
3
P9
P10
7
4
5
2
P8
3
2
4
5
6
11
9
10

B112048

5.4 Disassembling the S-boom

WARNING
The boom can suddenly fold down!
If the following conditions are not met before disassembling the boom, the boom can fold down!
Personnel can be severely injured or killed!
- ▶ Support the S-boom during disassembly with suitable materials!
- ▶ During pinning and unpinning of the lattice sections, it is prohibited for anyone to remain **under** or **on** the components as well as within the entire danger zone!

Make sure that the following prerequisites are met:
- – All electrical and hydraulic connections have been disconnected.
- – The auxiliary guying is disassembled.
- – The guy rods have been disassembled and placed in the transport retainers.

- ▶ Lower the upper pulley block **20.2** until it is over the assembly brackets **2** on the S-pivot section **1**.
- ▶ Pin and secure the upper pulley block **20.2** with the guy rods **3**: Pin and secure the assembly bracket **2**. Use pin **4**, washer **6** and spring retainer **5**.

WARNING
The crane can topple over!
If the following conditions are not met, the crane can topple over or be significantly damaged!
Personnel can be severely injured or killed!
- ▶ The maximum permissible total force on test point **MS1** may **not** be exceeded!
- ▶ Lifting the following boom length is permissible if the maximum permissible total forces on test point 1 (MS1) are observed, observe the following charts!

Note
- ▶ The ACTUAL force on test point **MS1** is shown on LICCON monitor 1!
- ▶ Tension the guy rods on the SA-bracket with the same force as during the assembly!
- ▶ For this, refer the ACTUAL force at the test point (MS1) measured and recorded during the assembly.
- ▶ The pins can be pulled easier and the pins and lugs are therefore not damaged!

Note
- ▶ Unpin the intermediate sections with the pin pulling device, see Crane operating instructions, chapter 5.30!

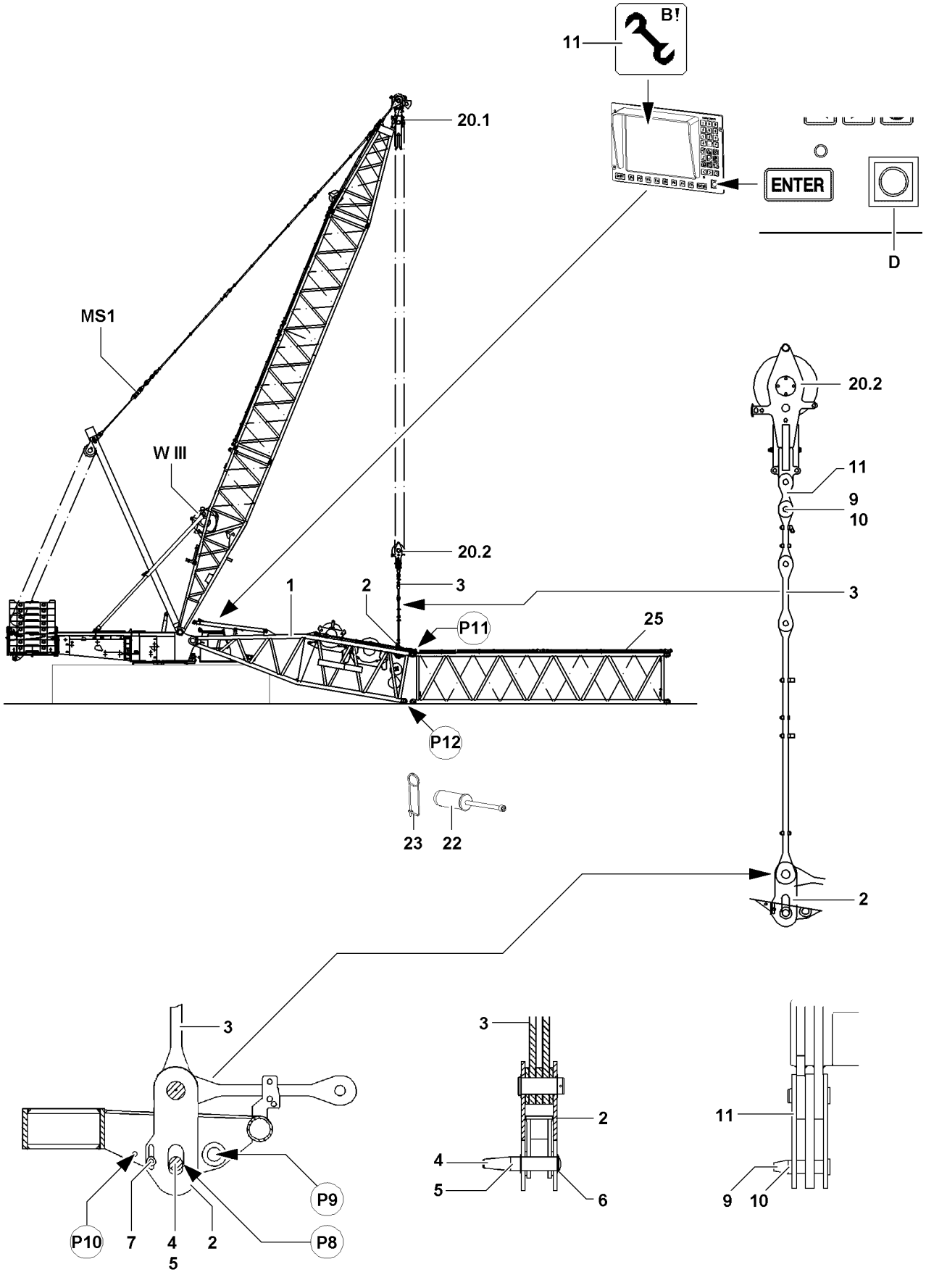
B!
11
20.1
ENTER
D
MS1
W III
20.2
11
9
10
20.2
1
2
3
3
P11
25
P12
23
22
2
3
3
2
4
5
6
11
9
10
P10
7
4
5
2
P8
P9

B112048

NOTICE
Danger of property damage!
If the maximum permissible total forces is not observed when lifting the boom system for disassembly, then crane components can be severely damaged!
- ▶ Reassemble long booms to the required length for flying disassembly on the ground!
- ▶ Do not exceed the maximum permissible total forces!

- ▶ Lift the S-boom from the supporting base or off the ground by spooling up winch 3.
- ▶ When the S-boom has been lifted off the ground and is safely held by winch 3:
  Unpin the S-pivot section **1** and S-intermediate section **25** at point **P12** on both sides: Remove the linch pin **23** and unpin the pin **22**.
- ▶ When the pins **22** are unpinned at point **P12**:
  Carefully place the S-boom on the ground.
- ▶ When the S-boom is laying on the ground:
  Unpin the S-pivot section **1** and S-intermediate section **25** at point **P11** on both sides: Remove the linch pin **23** and unpin the pin **22**.
- ▶ Remove the S-intermediate section **25** with the auxiliary crane.
- ▶ Unpin the upper pulley block **20.2** on the guy rods **3**: Remove the spring retainer **10** and unpin the pin **9**.
- ▶ Place and secure the guy rods **3** in the transport receptacles on the S-pivot section.

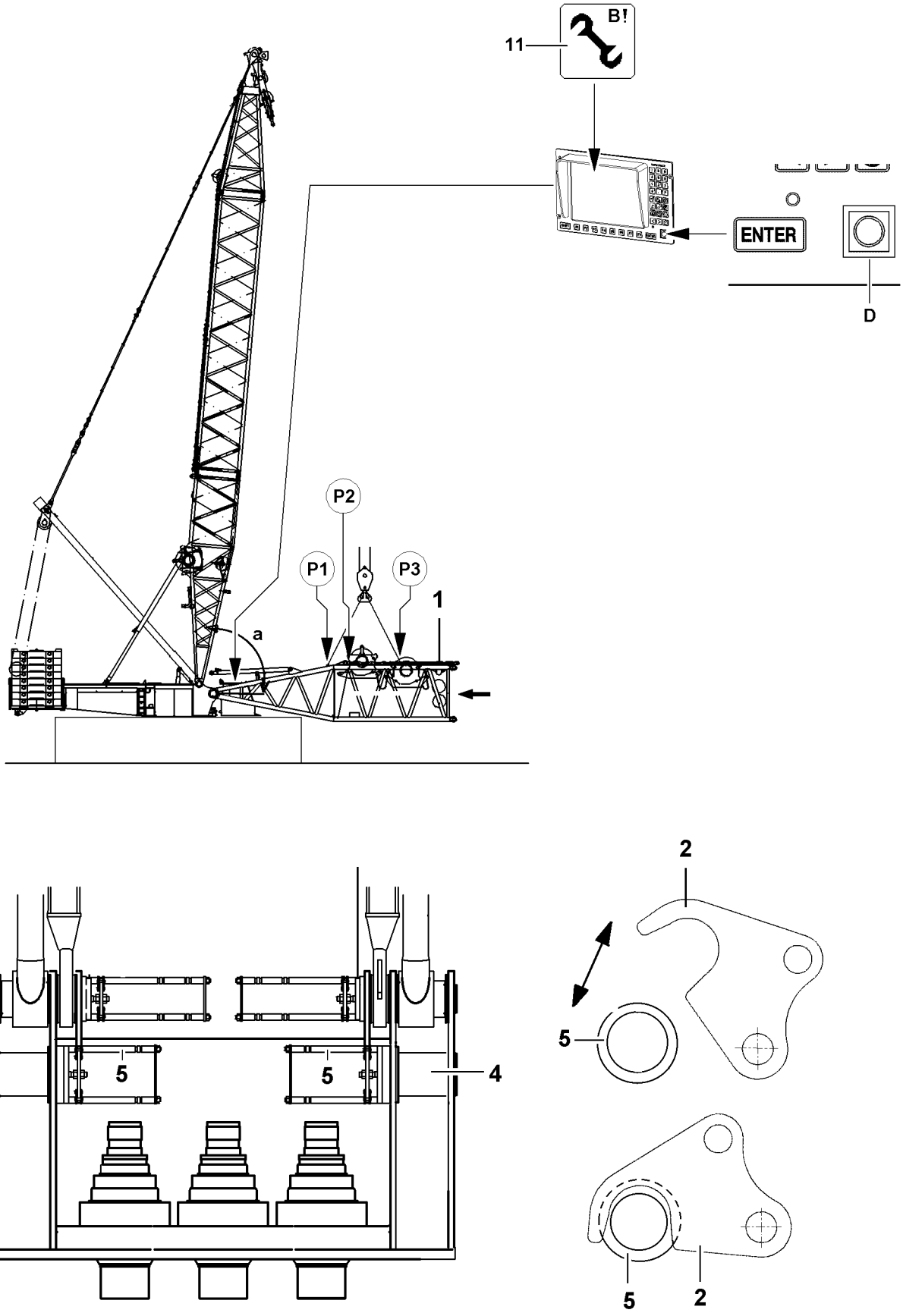

B112047

5.5 Unpinning the S-pivot section on the turntable

WARNING
General danger notes!
▶ Insert and secure all pins after disassembly in the intended transport receptacles!

Make sure that the following prerequisites are met:
– The D-boom is erected to the point where the S-pivot section can be disassembled without obstructions.
– The guy rods are separated from the S-pivot section to the upper pulley block and placed in the transport receptacles and secured.

Note
▶ Select the fastening points on the S-pivot section in such a way that the S-pivot section hangs horizontally on the auxiliary crane at assembly. See paragraph “Attachment points”!

▶ Attach the S-pivot section **1** on the fastening points **P1** and fastening points **P3** on the auxiliary crane.

or

■ Attach the S-pivot section **1** on the fastening points **P1** and fastening points **P2** on the auxiliary crane.
▶ Lift the S-pivot section **1** with the auxiliary crane to the horizontal.
▶ Establish the hydraulic connection to the pin pulling device.

WARNING
Falling pivot section!
▶ Make sure that the S-pivot section is safely held by the auxiliary crane before unpinning the pins **4**!

▶ When the S-pivot section is safely held by the auxiliary crane!
Release the pin **4**: Fold the retaining hook **2** out.
▶ Hook the pin pulling cylinder **6** in the receptacles.

Note
▶ The pin pulling cylinders are actuated with the radio remote control!

▶ Unpin the connector pins **4** on both sides with the hydraulic pin pulling cylinder **6**.
▶ When the connector pins **4** are fully unpinned on both sides:
Secure the connector pins **4**: Fold the retaining hook **2** in on the left and right on the guides.
▶ Disconnect the hydraulic connections to the pin pulling device.

NOTICE
Damage of the turntable and the S-pivot section!
▶ Slowly swing the S-pivot section out with the auxiliary crane and at low speed on the turntable!
▶ Before placing it on the ground, support the S-pivot section!

▶ Place the S-pivot section with the auxiliary crane on the support on the ground.
▶ Remove the auxiliary crane.

Note
▶ Disassemble the D-boom, see Crane operating instructions, chapter 5.05!

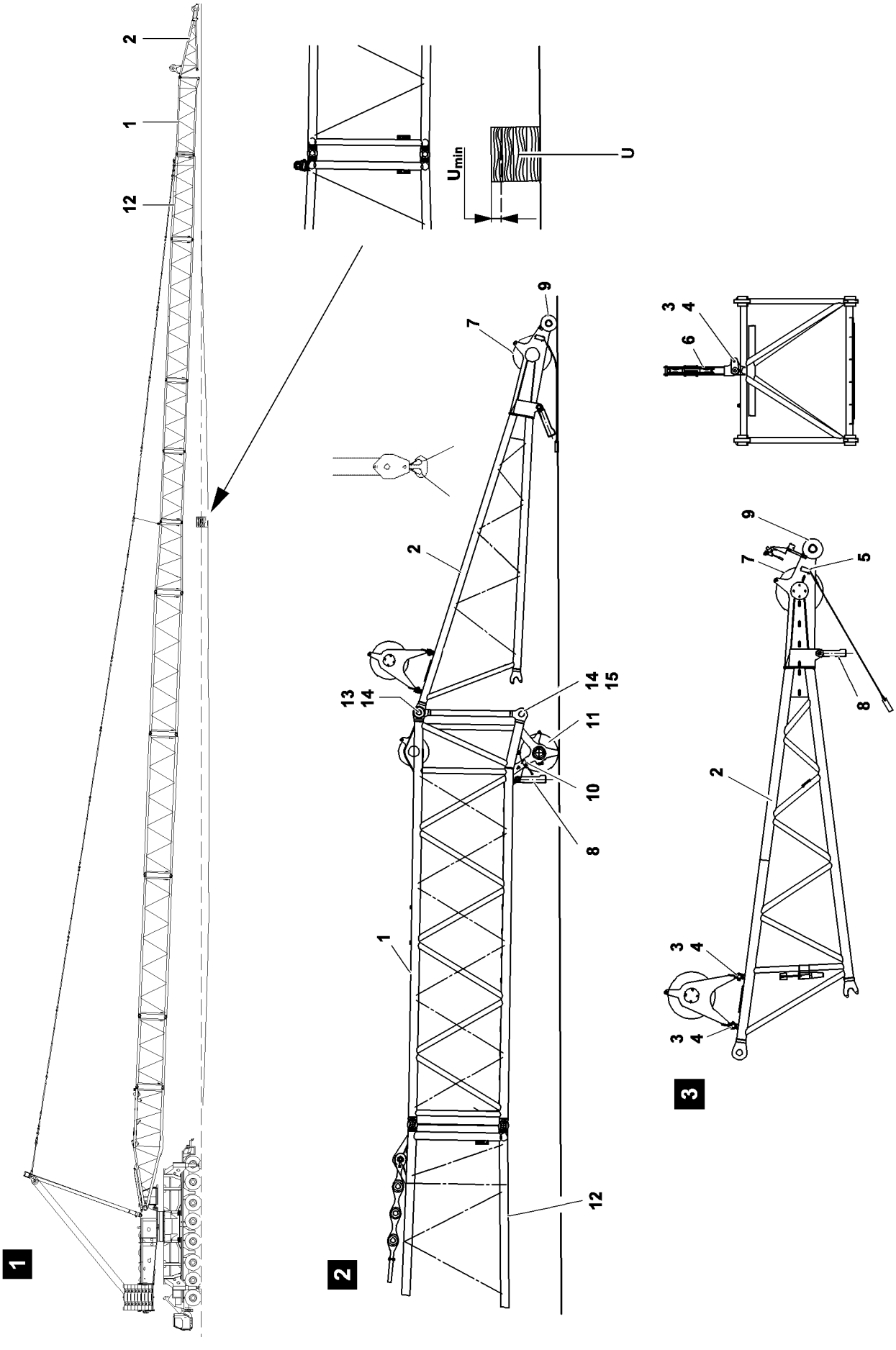

B111675

1 Auxiliary jib “HS”

Note
▶ The auxiliary jib “HS” is installed on the boom system SL8HS on the adapter for the auxiliary jib **1**!

1.1 Component overview of auxiliary jib “HS”

Position	Component	Weight
1	Adapter for auxiliary jib	3.6 t
2	Auxiliary jib “HS”	2.5 t
3	Pin	
4	Spring retainer	
5	Hoist limit switch	
6	Pulley retainer	
7	Pulley set Auxiliary jib HS	
8	Rope fixed point “Rope lock”	
9	Roller	
10	Hoist limit switch	
11	Pulley set adapter	
12	L-adapter	5.3 t
13	Pin	
14	Spring retainer	
15	Pin	

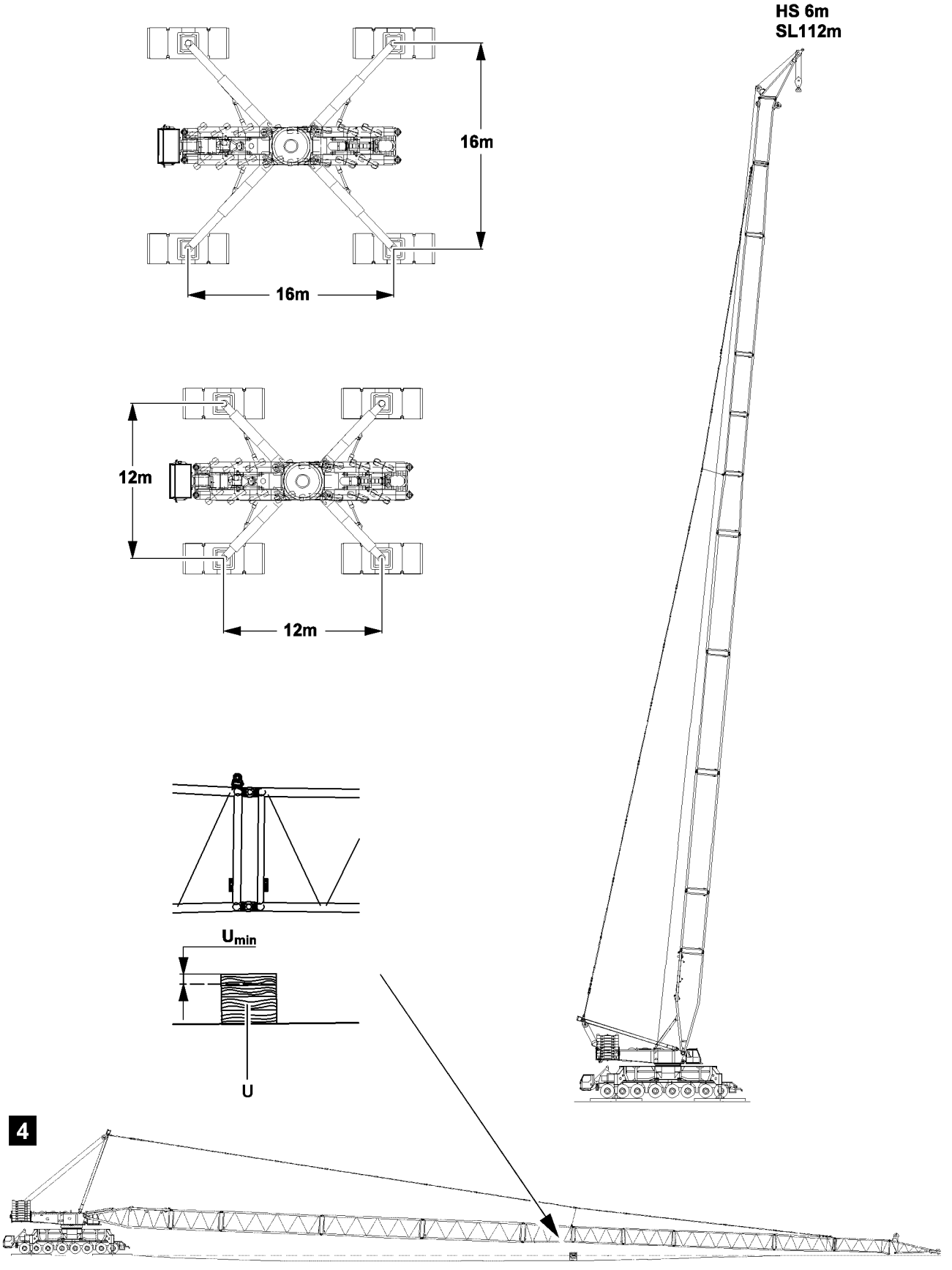

B111674

1.2 Operating mode overview

Operating modes	Equipment	
	Adapter for auxiliary jib with pulley set 120 t	Auxiliary jib “HS” with pulley set 120 t
SL8HS Support base 12 m x 12 m	X	X
SL8HS Support base 16 m x 16 m	X	X

1.3 Support

Note

▶ The different boom lengths must be supported at assembly with suitable material to prevent excessive bending of the boom, see illustration **4**!

Boom	Support U_{min}
SL - 105 m	> 1.1 m
SL - 112 m	> 0.9 m
SL - 115 m	> 0.9 m

B195219

2 Assembly

WARNING
Risk of falling!
During assembly / disassembly work, personnel must be secured with appropriate aids to prevent them from falling. If this is not observed, assembly personnel can fall and suffer life-threatening or fatal injuries!

- ▶ Any work, where there is a danger of falling must be carried out with suitable aids (for example lifting platform, scaffolding, ladder, auxiliary crane)!
- ▶ If the work cannot be carried out with such aids nor from the ground, then the assembly personnel must secure themselves with approved fall arrest systems to avoid falling, see Crane operating instructions, Chapter 2.04!
- ▶ Approved fall arrest systems must be hung into the respective fastening points on the crane, see Crane operating instructions, chapter 2.06!
- ▶ If railings are present on the components, then they must be brought into the corresponding position and secured for assembly / disassembly work!
- ▶ Step on aids and fall protection equipment only with clean shoes!
- ▶ Keep aids and fall protection equipment clean and free from snow and ice!
- ▶ During all assembly and disassembly work, maintenance work and inspections, travel and crane operation is prohibited!

WARNING
Falling components!
If unsecured or non-supported components are assembled or disassembled, they can fall down. Personnel can be killed or seriously injured!

- ▶ During pinning and unpinning of the lattice sections, it is prohibited for anyone to remain **under** or **on** the components as well as within the entire danger zone!
- ▶ Support the boom and components before pinning / unpinning!
- ▶ Pin or unpin both pins that lie in one horizontal level, i.e. **left** and **right**!
- ▶ Secure the pins in the bearing points and in the receptacles!
- ▶ Do not disengage the auxiliary crane until each component is pinned on and secured!
- ▶ It is prohibited to lean a ladder against the component being disassembled!

WARNING
Danger of impact / crushing!
When installing / removing counterweight components with the auxiliary crane, crane components can start to swing back and forth!
When lifting / lowering and positioning crane components, there is an increased danger of impacts / crushing!
Personnel can be caught and severely injured or killed as a result!

- ▶ Make sure that personnel cannot be caught by components!
- ▶ When working in danger zones: Use aids to protect limbs!
- ▶ Guide components with suitable aids to minimize oscillation!

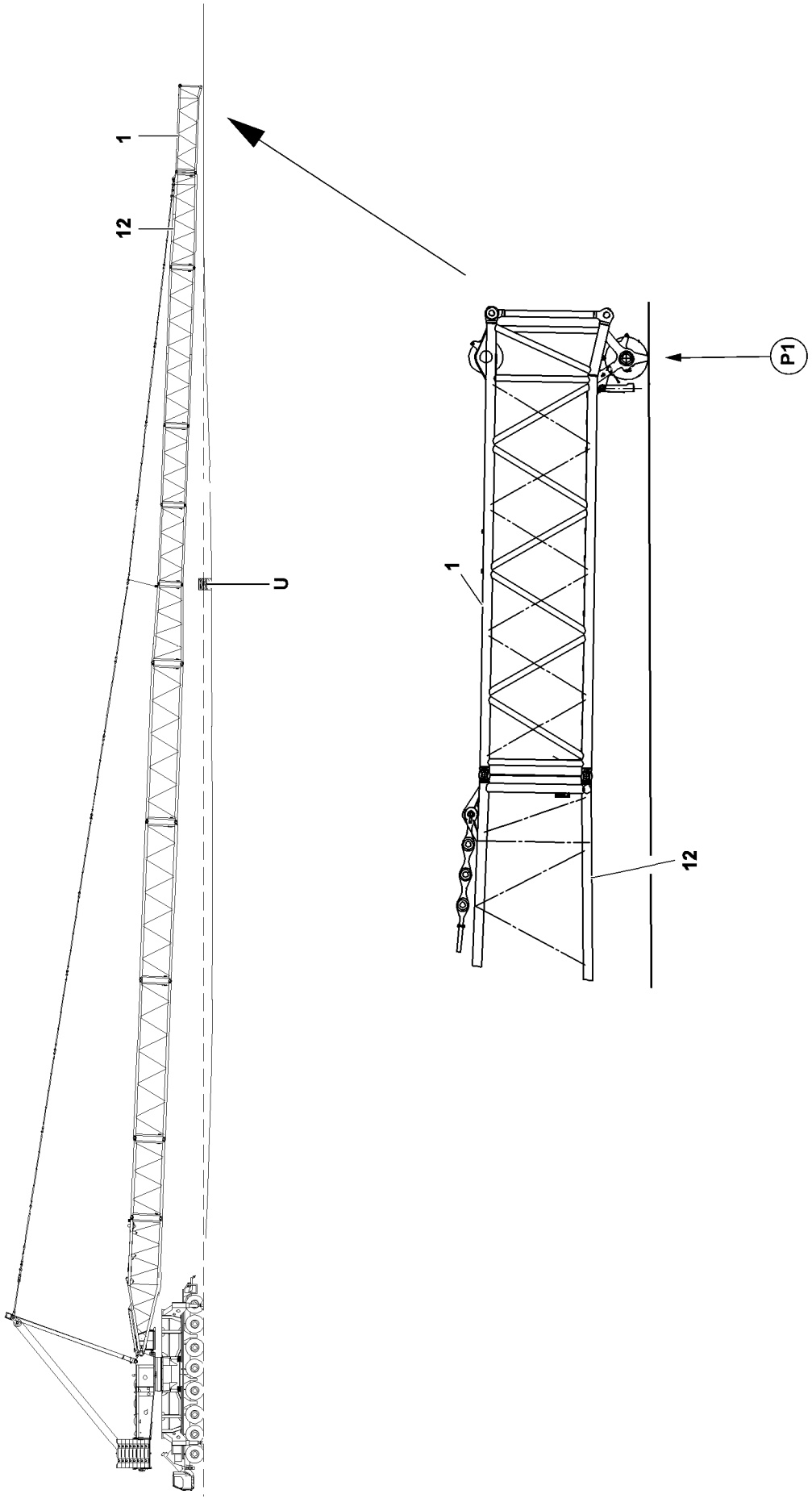

B111676

WARNING
Danger of accidents due to incorrectly assembled intermediate sections!
- ▶ Any other arrangement of the intermediate sections and guy rods than specified in the operating instructions or the rod plans is prohibited!
- ▶ When assembling the boom, it must be ensured that the intermediate sections are installed according to their description, see Crane operating instructions, chapter 5.03!

Note
- ▶ The SL-boom combination in connection with the auxiliary jib “HS” must be installed according to the separately supplied rod and assembly plans!
- ▶ For installation of the SL-boom combination, see Crane operating instructions, chapter 5.38!

Make sure that the following prerequisites are met:
- The crane is supported and aligned in horizontal direction.
- The boom including the adapter **1** are installed.
- The boom is laying on the support legs of the adapter for the auxiliary jib, point **P1**.
- An assembly scaffolding / work platform is available.
- The counterweight has been installed to the turntable according to the load chart.
- The LICCON overload protection has been set according to the data in the load chart.
- The LICCON overload protection settings have been compared with the actual crane configuration.
- The assembly icon is visible on the LICCON monitor.
- An auxiliary crane is available.

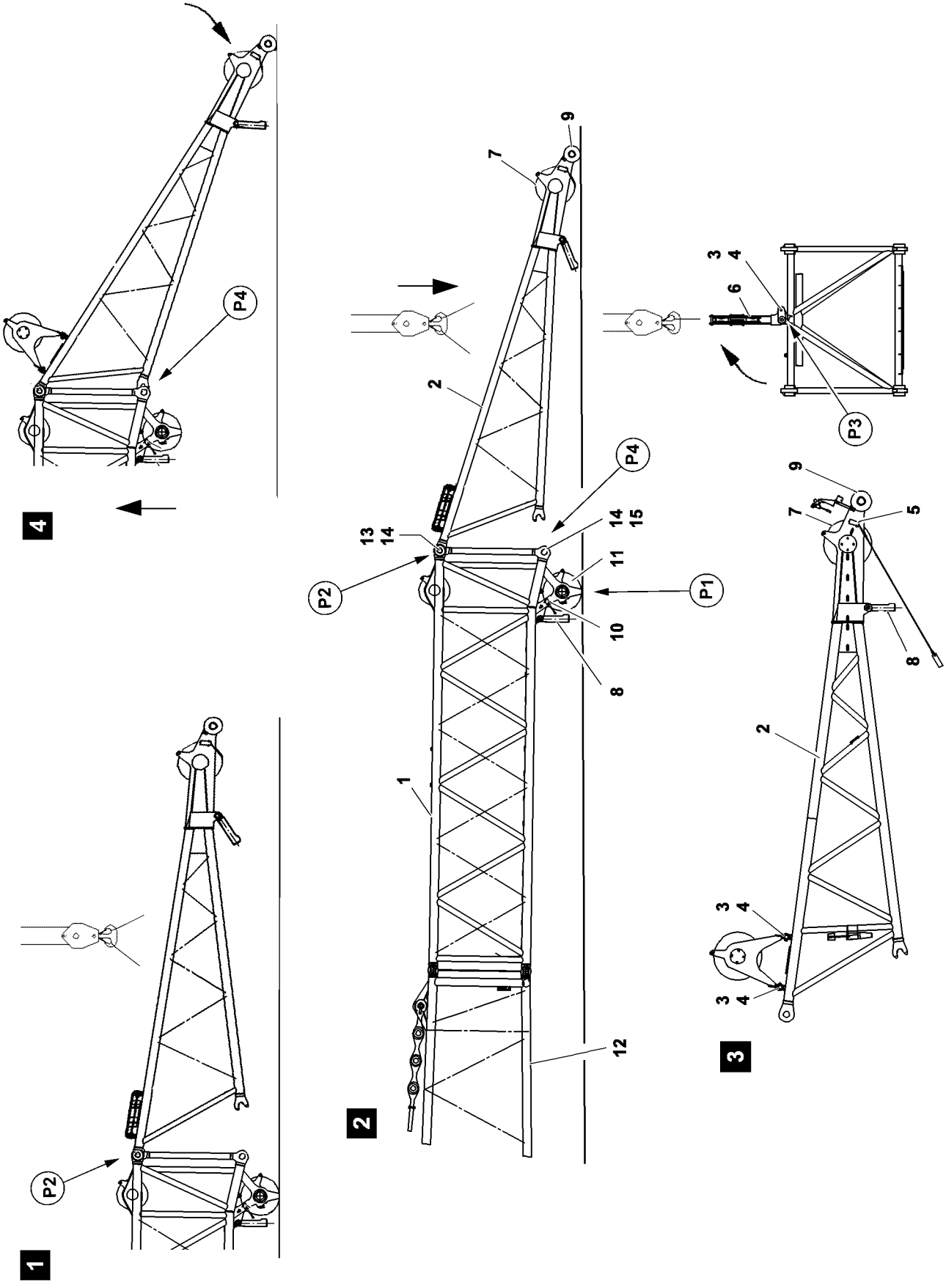

B111677

2.1 Installing the auxiliary jib “HS”

WARNING
Falling components!
If the components are incompletely pinned or secured, then components can fall down!
Personnel can be severely injured or killed!
▶ Make sure that all components are completely pinned and secured!

▶ Swing the auxiliary jib “HS” **2** with the auxiliary crane in to the pin points, point **P2** on the adapter for the auxiliary jib **1**, see illustration **1**.
▶ Pin the auxiliary jib “HS” on the adapter for the auxiliary jib on both sides at point **P2**, see illustration **2**:
Insert the pins **13** on both sides with the pin pulling device and secure with spring retainer **14**.
▶ Place the auxiliary jib “HS” with the auxiliary crane on the ground, see illustration **2**.
▶ Remove the auxiliary crane.
▶ Insert the pin **15** on both sides at point **P4** on the adapter for the auxiliary jib and secure with spring retainer **14**.
▶ Erect the pulley retainer **6** with the auxiliary crane, see illustration **3**.
▶ Pin the pin **3** on point **P3** and secure with spring retainer **4**.
▶ Remove the auxiliary crane.
▶ Pull the hoist rope over the rope pulleys of the auxiliary jib “HS”, see reeving plan.

2.2 Lifting the boom off the ground

WARNING
The crane can topple over!
During erection of the boom, the crane can be overloaded and topple over!
Personnel can be severely injured or killed!
▶ Observe the data in the erection and take down charts!
▶ It is prohibited to turn the crane superstructure while erecting the boom!

NOTICE
Damage of auxiliary jib “HS”!
▶ After the auxiliary jib “HS” **2** is lifted off the ground, the boom combination may be luffed up or placed down only very carefully! The auxiliary jib “HS” folds out automatically when it is placed down and runs on the rollers **9** toward the “outside”!

▶ Luff the boom up carefully.
Result:
– Due to its own weight, the auxiliary jib“HS” **2** runs on the rollers **9** slowly toward the “inside”, see illustration **4**.

▶ Luff up the boom until the auxiliary jib “HS” lifts off the ground.
Result:
– The auxiliary jib“HS” **2** supports itself at point **P4** on the pin **15**.

2.3 Establishing the electrical connections

Make sure that the following prerequisite is met:
– The boom combination is completely assembled.

Note
▶ To establish the electrical connections, see Electric wiring diagram!

▶ Establish the electrical connections.
▶ Make sure that all electrical connections on the boom are established.

2.4 Establishing the hydraulic connections

The hydraulic connections are made with quick couplings.

When connecting hydraulic lines with quick couplings, make sure that the coupling procedure is carried out correctly.

WARNING
Pressure in the hydraulic lines!
If the pressure supply is not interrupted before connecting / releasing the hydraulic lines, the hydraulic oil can escape with high pressure!
Personnel can be severely injured or killed!
▶ Release the pressure in the hydraulic system before connecting / disconnecting: Interrupt the pressure supply and wait for a short time!

WARNING
Loss of pressure or leakage!
Incorrectly coupled or self-loosening quick-release couplings (particularly return lines) can result in serious accidents due to component failure!
▶ Check that the quick-release couplings have been properly connected before using the crane!

▶ Connect the coupling components (sleeve and connector) and screw together with the hand-tightened nut.
▶ Tighten the hydraulic coupling by hand. Rotate the hand-tightened nut until it reaches a tangible, fixed stop position.
▶ Establish the hydraulic connection to the D-relapse cylinders.

2.5 Checking the function of the safety devices

WARNING
Non-functioning safety devices!
If the function of the safety devices is defective, personnel can be severely injured or killed!
▶ Crane operation with non-functioning safety devices is **prohibited**!

Note
▶ The function of the individual limit switches must be checked before erection!
▶ The function of the limit switch initiators must be checked in the test system, see Diagnostics manual!

Note
▶ If a function check on the limit switches or on the safety devices does not lead to the desired shut offs, then the plug connections on the connector boxes or the components itself must be checked!
▶ If no visible connection errors or component defects can be found, contact **LIEBHERR** Service!

Make sure that the following prerequisites are met:
– All electrical connections have been made.
– The crane engine is running.
– The corresponding operating mode is set on the LICCON monitor.

2.5.1 Checking the wind speed sensor

▶ Test the movement and the function of the wind speed sensor.

2.5.2 Checking the airplane warning light

▶ Turn the airplane warning light on.
▶ Visually check functionality.

2.5.3 Checking the hoist limit switch on the pulley head

Note
▶ When replacing or changing a hoist limit switch, the corresponding hoist limit switch must have the correct bus address and the correct software version in order to be detected by the bus system!

▶ Actuate the hoist limit switch manually on the pulley head.

Result:
– The spool up function of the hoist winch turns off.
– The icon “Hoist top” appears on the LICCON monitor 0.
– The limit switch is functioning.

2.5.4 Checking the limit switch SL-boom “steepest position”

Note
▶ The limit switch functions have to be checked individually before erection!

▶ Cover the limit switch initiators on the S-relapse cylinder individually with a metal plate.

Result:
– The hoist limit switch is actuated manually.
– The control winch movement “spool up” turns off.
– The icon “boom limitation” appears on the LICCON monitor 0.
– The limit switch is functioning.

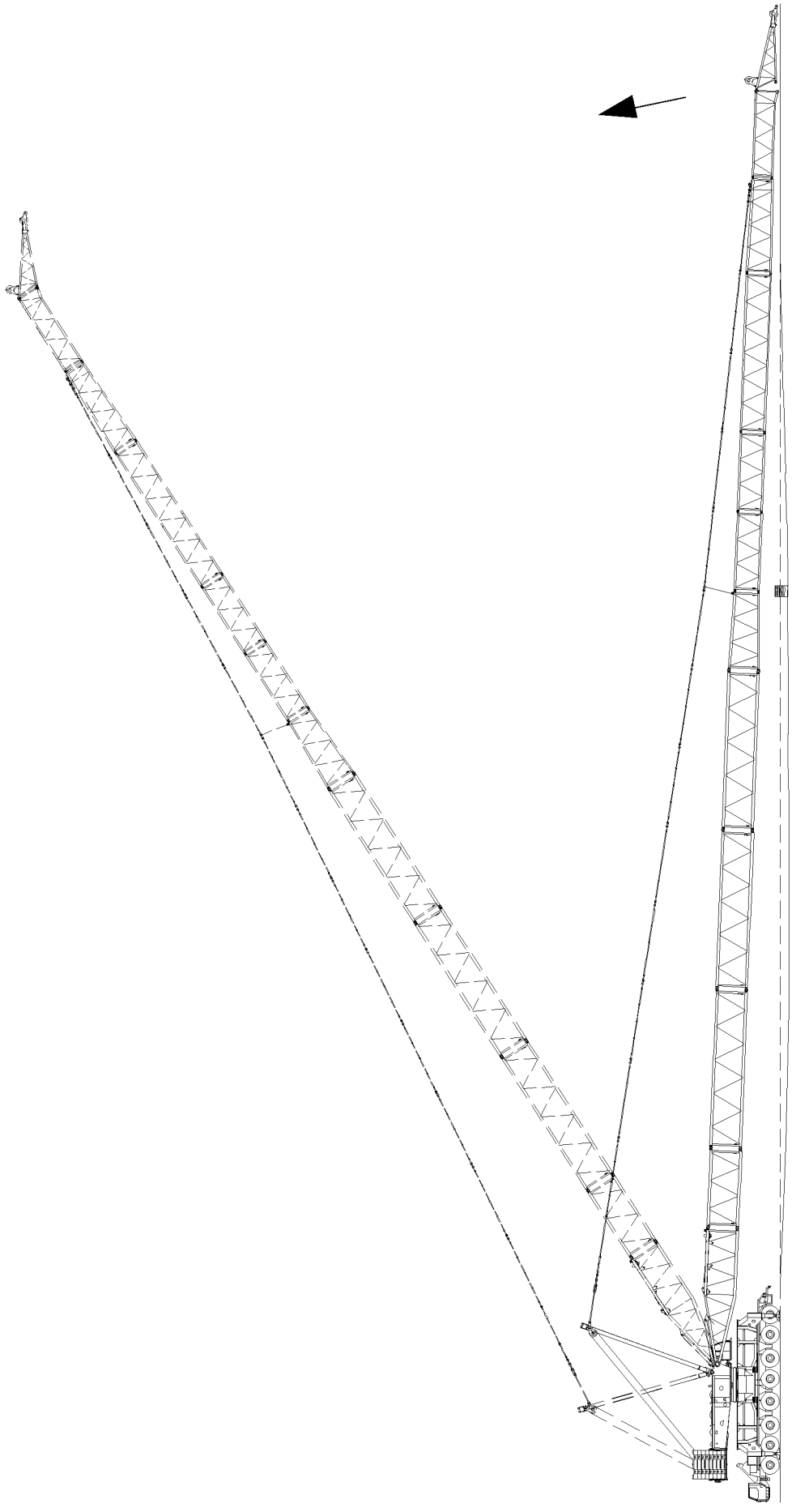

B111678

3 Erecting the boom

DANGER
The crane can topple over!
- ▶ It is prohibited to turn the crane superstructure while erecting the boom!
- ▶ Observe the data in the erection and take down charts!

WARNING
The crane can topple over!
If the following conditions are not met before erecting the boom, the crane can topple over!
Personnel can be severely injured or killed!
- ▶ Observe the Safety technical notes, see Crane operating instructions, chapter 5.01!
- ▶ Extend the S-relapse cylinders before erecting the boom combinations!
- ▶ Do not allow slack cable to build up on the control winch!

WARNING
Falling hoist rope!
If the hoist rope is not reeved before the erection procedure with the corresponding length on the auxiliary jib “HS”, then it can fall down backward due to its own weight!
Personnel can be severely injured or killed!
- ▶ Reeve the hoist rope with sufficient length on the auxiliary jib “HS” before the erection procedure!
- ▶ The hoist rope must be constantly monitored during the erection procedure!
- ▶ Do not step into the danger zone!

3.1 Erection procedure

Erect the boom combination, see Crane operating instructions, chapter 5.38.

Note
- ▶ Observe the data in the erection and take down charts!

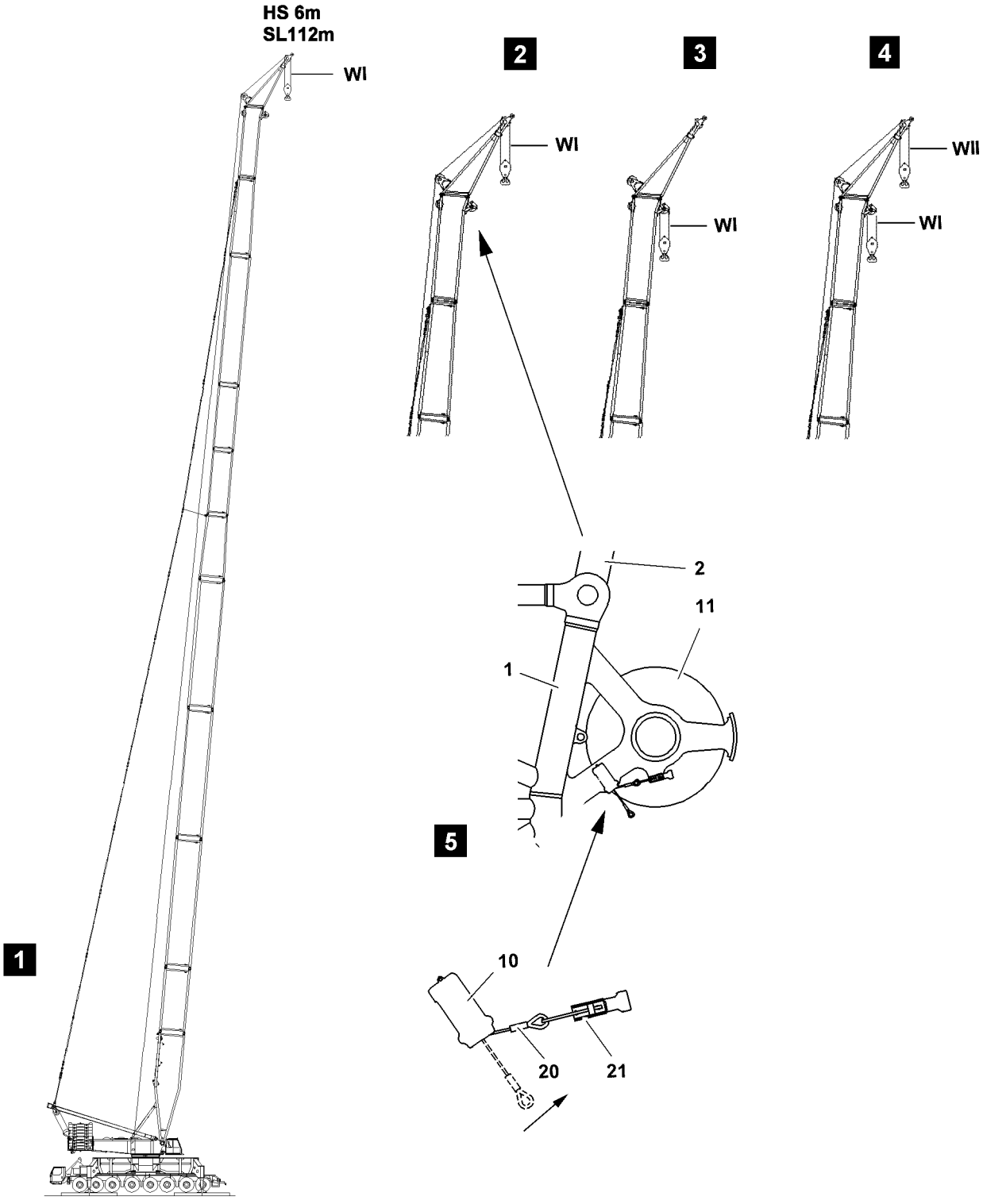

B111679

4 Operating the crane

4.1 Preparing for crane operation

Note

▶ Observe the notes, see Crane operating instructions, chapter 4.05, chapter 4.08 and chapter 5.01!

Make sure that the following prerequisites are met:

– The LICCON overload protection is active.
– The LICCON overload protection has been set according to the data in the load chart.

WARNING

The crane can topple over!

▶ Check the horizontal position of the crane before and during operation!
▶ If the crane operator leaves the cab, even for a short time, the operating mode setting must be checked and reset if necessary before resuming crane operation!

4.2 Checking the settings

▶ Check the function of the overload protection by running against the operating positions “on top” and “bottom”.
▶ Check the hoist limit switch by running against the hoist limit switch weight.
▶ Check the function of the limit switches on the relapse cylinders.

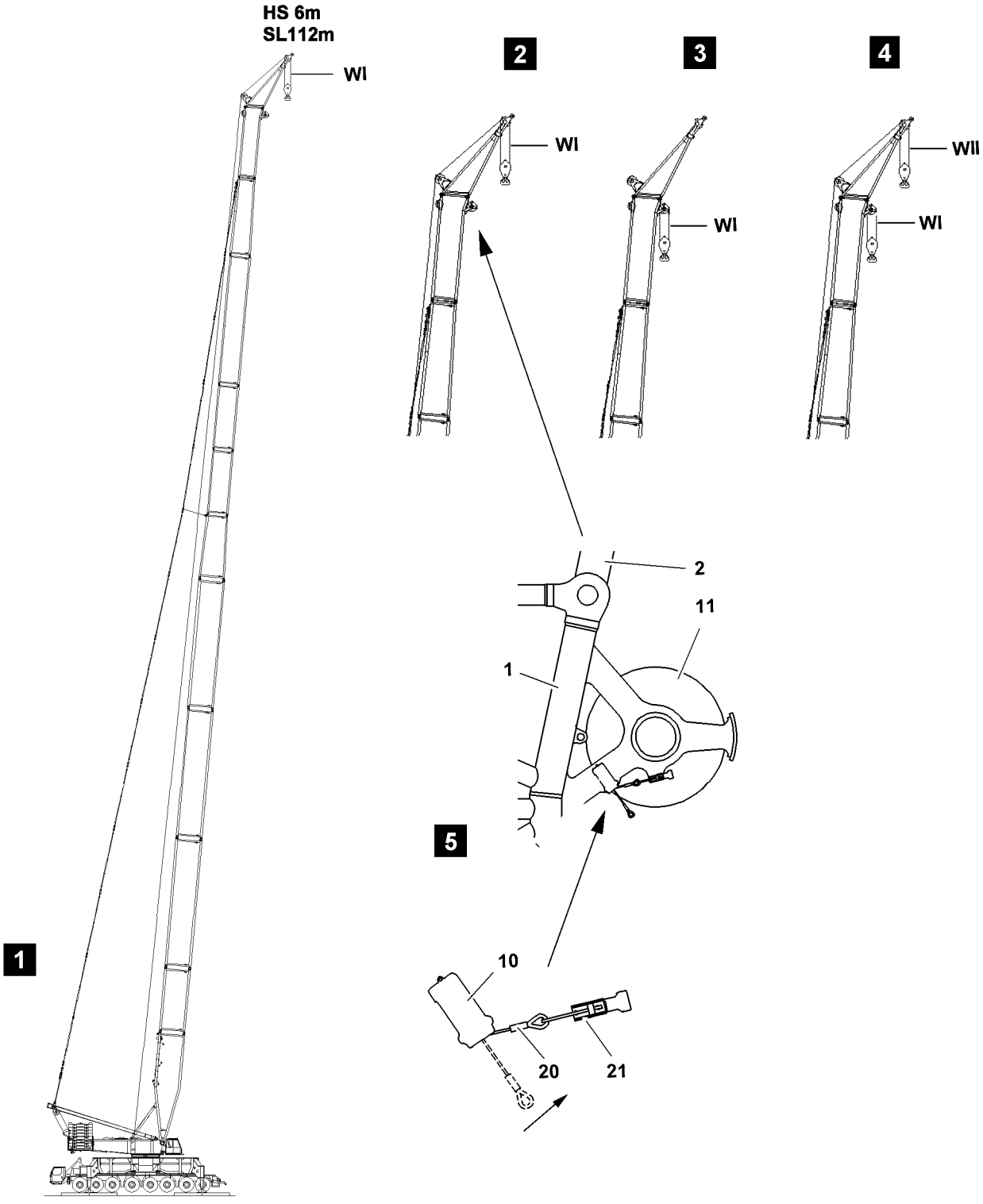

B111679

4.3 Operating mode

Hoist rope reevings, see Crane operating instructions, chapter 4.06 and Reeving plans.

WARNING
Overload of crane!
With reeved winch 2, the load display is smaller than the actual load on the load hook!
The crane can be overloaded and topple over in case of:
- small reevings
- steep boom positions or small radii

▶ Carry out crane movements with special caution!

4.3.1 Crane operation with reeved auxiliary jib “HS”

Note
▶ For crane operation with reeved auxiliary jib “HS” **2**, winch 1 must be reeved!

Reeving of hoist rope, see illustration **2**.

Note
The hoist limit switch **10** on the adapter for the auxiliary jib **1** must always be connected on the LICCON system bus!
For crane operation with reeved auxiliary jib HS **2** no hoist rope is reeved on the adapter for the auxiliary jib **1**!
▶ Make sure that the hoist limit switch **10** is released on the adapter for the auxiliary jib **1**!

▶ Remove the hoist limit switch weight.
▶ Attach the hoist limit switch rope **20** with hook lock **21** under “tension”, see illustration **5**.

Result:
– The hoist limit switch **10** is released.

4.3.2 Crane operation with reeved adapter for the auxiliary jib

Note
▶ For crane operation with reeved adapter for the auxiliary jib **1**, winch 1 must be reeved!

Reeving of hoist rope, see illustration **3**.

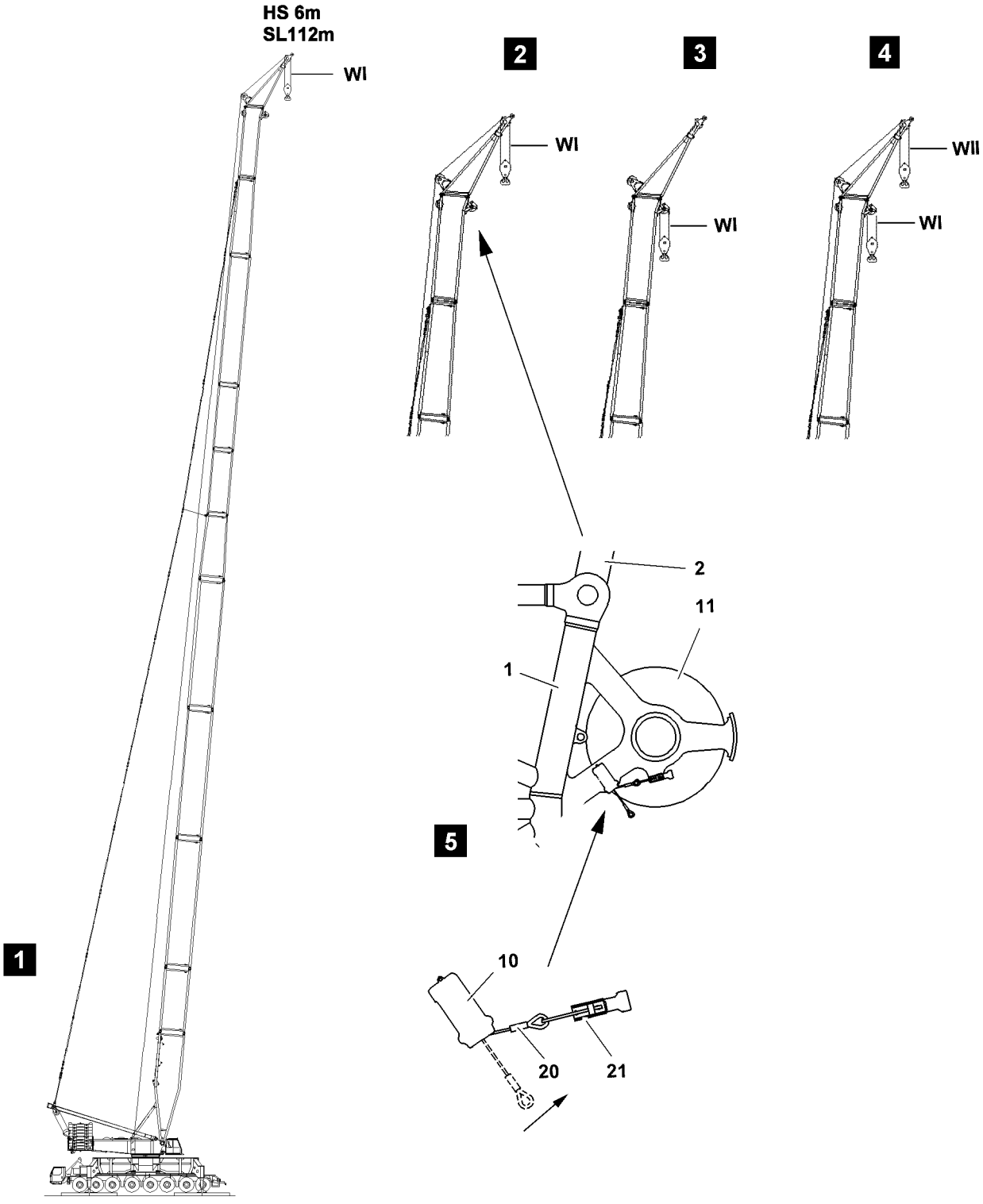

B111679

4.3.3 Two hook crane operation

For two hook operation, there is the possibility to operate the load hook on the auxiliary jib “HS” and the load hook on the adapter for the auxiliary jib simultaneously. This possibility is provided for turning loads.

Note

▶ For two hook operation, winch 1 on the adapter for the auxiliary jib **1** and winch 2 on the auxiliary jib “HS” **2** must be reeved!

Reeving of hoist rope, see illustration **4**.
Make sure that the following prerequisites are met:

– The LICCON overload protection has been set according to the data in the load chart.
– The corresponding operating mode is set on the LICCON monitor.
– The rope reeving is entered on the LICCON monitor according to the actual reeving number.

Note

▶ The load must always be lifted first by 100% with the weakest components, auxiliary jib “HS”!

WARNING
Overload of crane
The reeving on the adapter for the auxiliary jib **1** must be the same or greater than the reeving on the auxiliary jib “HS” **2**!
If this is not observed, the crane can be overloaded!

▶ Make sure that the hoist ropes are correctly reeved!

The maximum total load for two hook operation corresponds to the maximum load permitted in the load chart on the auxiliary jib “HS”.

NOTICE
Load capacity reduction!
The load capacity is reduced by the weights of the load hook and the weights of the fastening equipment!

▶ To the weight of the load to be lifted, the weights of the load hook and the fastening equipment must be added!

Note
Radius display

▶ The radius display is according to the entered auxiliary jib “HS”!
▶ In individual load capacity per hook in two hook operation corresponds to the permissible load in the respective load chart for operation with auxiliary jib “HS”!
▶ In total load capacity in two hook operation corresponds to the permissible load in the respective load chart for operation with auxiliary jib “HS”!

B195219

5 Disassembly

WARNING
Risk of falling!
During assembly / disassembly work, personnel must be secured with appropriate aids to prevent them from falling. If this is not observed, assembly personnel can fall and suffer life-threatening or fatal injuries!

- ▶ Any work, where there is a danger of falling must be carried out with suitable aids (for example lifting platform, scaffolding, ladder, auxiliary crane)!
- ▶ If the work cannot be carried out with such aids nor from the ground, then the assembly personnel must secure themselves with approved fall arrest systems to avoid falling, see Crane operating instructions, Chapter 2.04!
- ▶ Approved fall arrest systems must be hung into the respective fastening points on the crane, see Crane operating instructions, chapter 2.06!
- ▶ If railings are present on the components, then they must be brought into the corresponding position and secured for assembly / disassembly work!
- ▶ Step on aids and fall protection equipment only with clean shoes!
- ▶ Keep aids and fall protection equipment clean and free from snow and ice!
- ▶ During all assembly and disassembly work, maintenance work and inspections, travel and crane operation is prohibited!

WARNING
Falling components!
If unsecured or non-supported components are assembled or disassembled, they can fall down. Personnel can be killed or seriously injured!

- ▶ During pinning and unpinning of the lattice sections, it is prohibited for anyone to remain **under** or **on** the components as well as within the entire danger zone!
- ▶ Support the boom and components before pinning / unpinning!
- ▶ Pin or unpin both pins that lie in one horizontal level, i.e. **left** and **right**!
- ▶ Secure the pins in the bearing points and in the receptacles!
- ▶ Do not disengage the auxiliary crane until each component is pinned on and secured!
- ▶ It is prohibited to lean a ladder against the component being disassembled!

WARNING
Danger of impact / crushing!
When installing / removing counterweight components with the auxiliary crane, crane components can start to swing back and forth!
When lifting / lowering and positioning crane components, there is an increased danger of impacts / crushing!
Personnel can be caught and severely injured or killed as a result!

- ▶ Make sure that personnel cannot be caught by components!
- ▶ When working in danger zones: Use aids to protect limbs!
- ▶ Guide components with suitable aids to minimize oscillation!

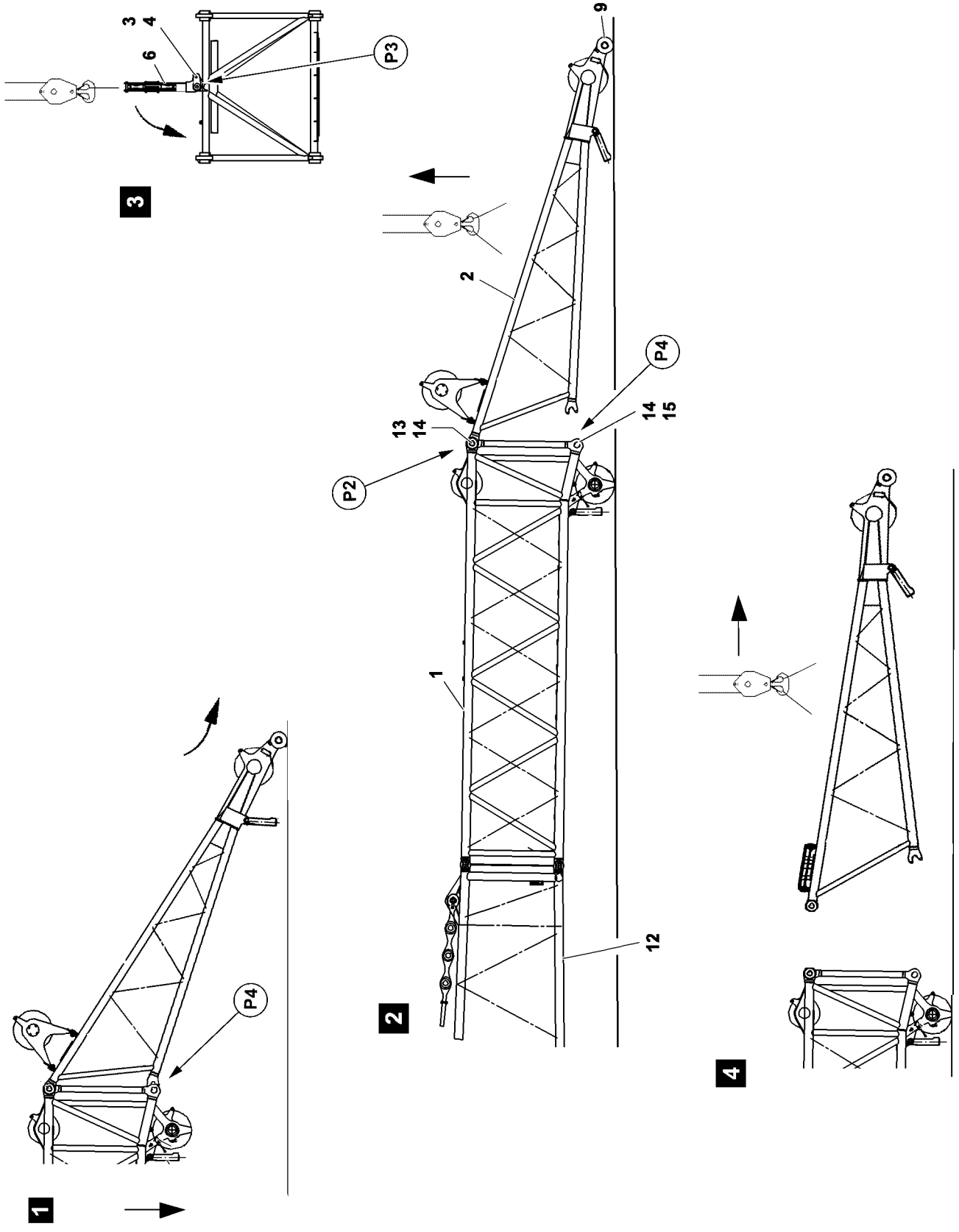

B111680

5.1 Luff the boom down

WARNING
The crane can topple over!
If the following conditions are not met before luffing down the boom, the crane can topple over!
Personnel can be caught and severely injured or killed as a result!
- ▶ Observe the Safety technical notes, see Crane operating instructions, chapter 5.01!
- ▶ Observe the data in the erection and take down charts!

NOTICE
Damage of auxiliary jib “HS”!
When luffing down, place the boom combination very carefully on the ground so that the auxiliary jib “HS” **2** can automatically fold up on the fork connection, see point **P4** and run on the rollers **9** toward the “outside”, see illustration **1**!
If this is not observed, the auxiliary jib “HS” can be damaged!
- ▶ Make sure that the auxiliary jib “HS” **2** can move “out” without any restriction!

- ▶ Luff the boom down, see Crane operating instructions, chapter 5.38!

5.2 Disconnecting the electrical connections

Make sure that the following prerequisite is met:
– The boom has been placed down.

- ▶ Disconnect the electrical connections.
- ▶ Make sure that all electrical connections on the auxiliary jib “HS” have been disconnected.

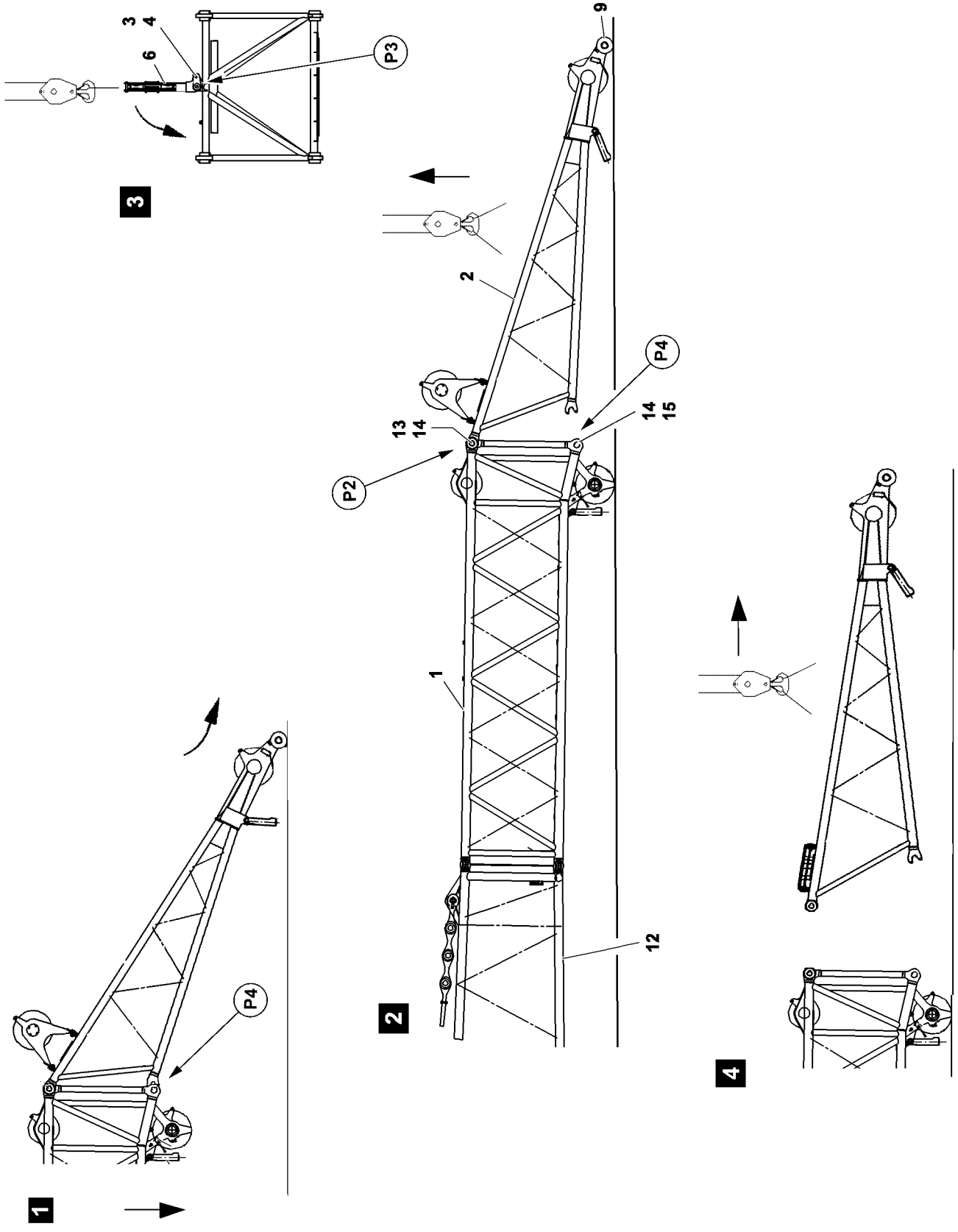

B111680

5.3 Disconnecting the hydraulic connections

When releasing hydraulic lines with quick-release couplings, make sure that the uncoupling procedure is carried out correctly.

WARNING
Pressure in the hydraulic lines!
If the pressure supply is not interrupted before connecting / releasing the hydraulic lines, the hydraulic oil can escape with high pressure!
Personnel can be severely injured or killed!
▶ Release the pressure in the hydraulic system before connecting / disconnecting: Interrupt the pressure supply and wait for a short time!

▶ Release the hydraulic coupling by hand.
▶ Disconnect the hydraulic connection.

5.4 Removing the auxiliary jib “HS”

Make sure that the following prerequisites are met:
– The SL-boom is placed on a load-bearing support.
– The auxiliary jib “HS” **2** is laying on the ground.
– All electrical connections are disconnected.
– All hydraulic connections are disconnected.
– The hoist rope on the auxiliary jib “HS” is unreeved.

DANGER
Risk of injury due to crushing!
The pulley retainer **6** can fold out during the unpinning procedure due to its own weight!
Crushing injuries can occur!
Personnel can be severely injured!
▶ Before unpinning, attach the pulley retainer on the auxiliary crane!

▶ Fold the pulley retainer **6** down with the auxiliary crane, see illustration **3**:
Release and unpin the pin **3**, point **P3**.
▶ Remove the auxiliary crane.
▶ Attach the auxiliary jib “HS” **2** on the auxiliary crane.
▶ Lift the auxiliary jib “HS” with the auxiliary crane until the auxiliary jib “HS” hangs horizontally.
▶ Release the pins **13** on the auxiliary jib “HS” at point **P2** and unpin.
▶ When the pins **13** are unpinned, see illustration **4**:
Remove the auxiliary jib “HS” with the auxiliary crane.

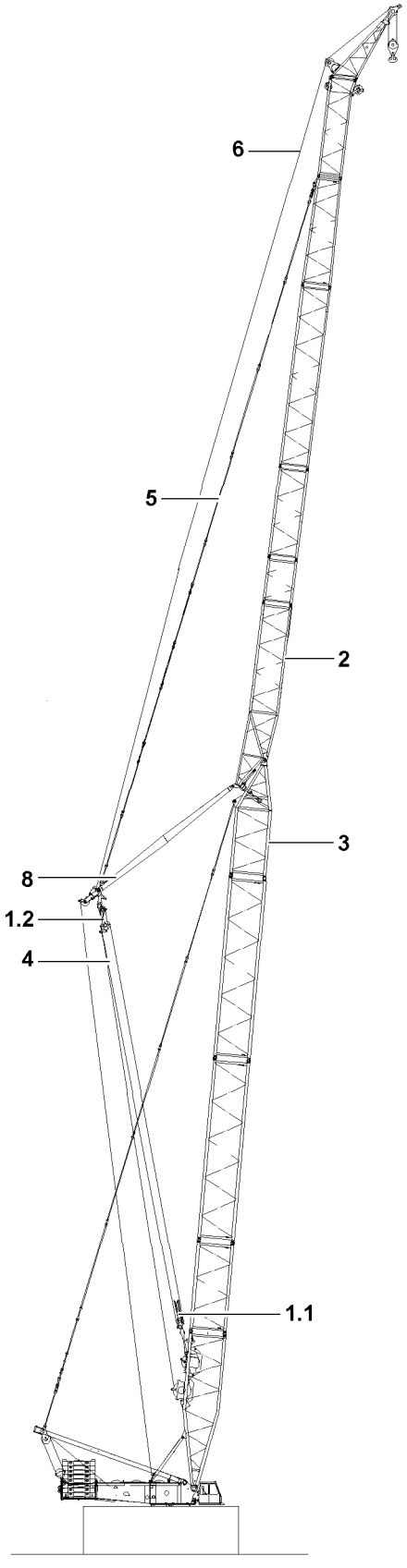

B111791

1 Components

The SLK-articulated boom is in crane operation:
– Guyed with the pulley blocks (lower pulley block **1.1** and upper pulley block **1.2**) via the KA-frame **8** to the S-pivot section.
– Fixed guyed with the guy rods via the KA-frame **8** to the L-adapter.
– Secured with two mechanical relapse supports.

1.1 SLK-boom

Position	Component	Weight[1)]
1	K-pulley block	2.5 t
1.1	Lower pulley block	
1.2	Upper pulley block	
2	K-assembly unit with KA-frame	15.7 t
3	K-adapter	9.0 t
4	K-adjustment	
5	K-guy rods	
6	Hoist rope	

1) The stated weights are approximate

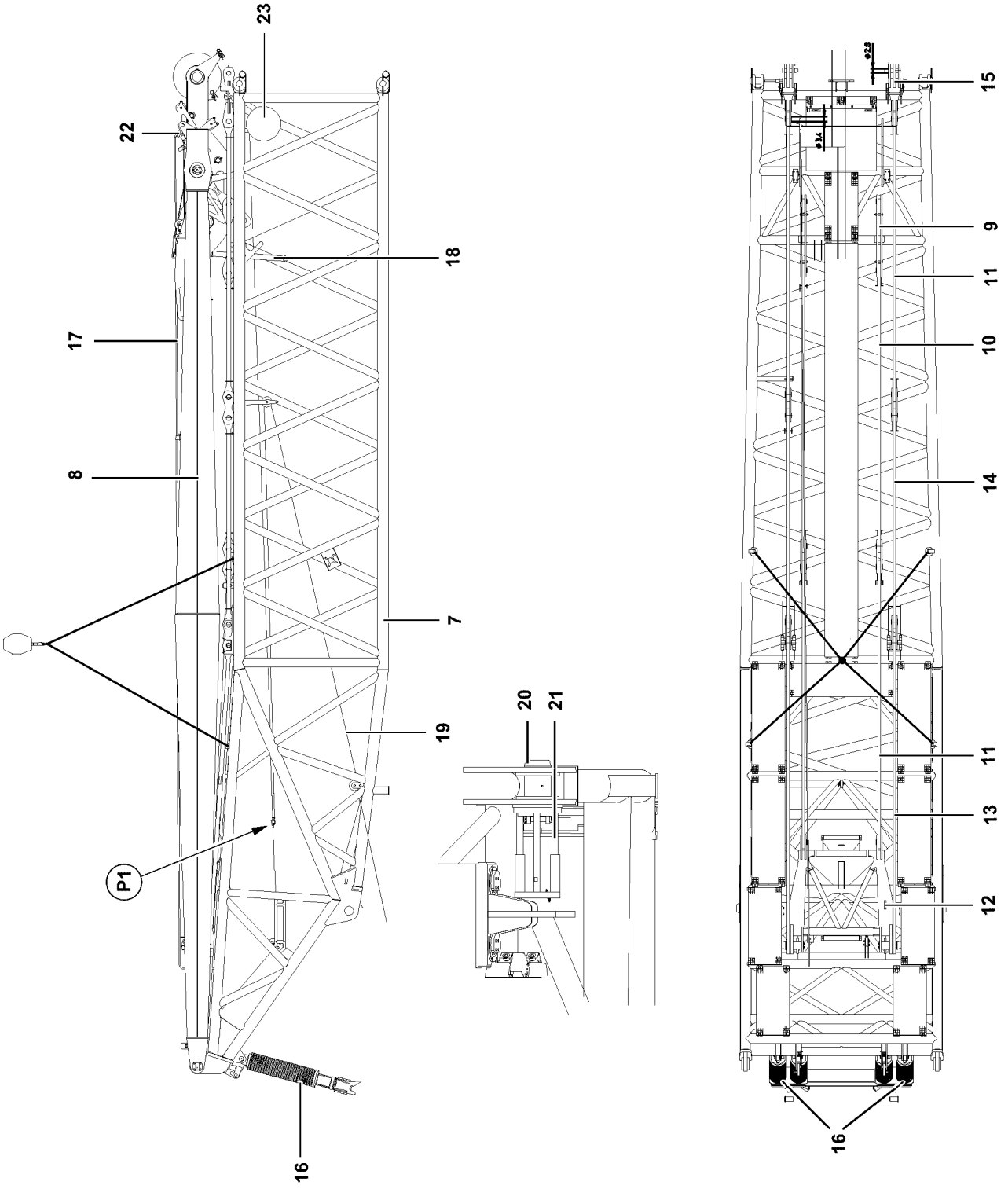

B111793

1.2 K-assembly unit

Position	Component	Weight[1)]
7	K-pivot section	
8	KA-frame	
9	Lug 1.0 m	
10	Guy rod 4.0 m	
11	Guy rod with lug 4.3 m	
12	Cross bar 1.0 m	
13	Guy rod 4.4 m	
14	Guy rod with lug 3.3 m	
15	Lug 0.7 m	
16	K-relapse retainer, mechanical	
17	Fastening rope 24 m	
18	Assembly support	
19	Rope assembly winch	
20	Pin	
21	Pin pulling device	
22	Hook for pulley block lock	
23	Rope drum, spring loaded	
	Total weight:	15.7 t

1) The stated weights are approximate

Note
Connection point **P1**!

- ▶ In crane operation, the rope of the spring loaded rope drum **23** must be connected with the hook adjustment rope!
- ▶ For assembly, the rope from the assembly winch **19** in the turntable must be connected with the hook adjustment rope!

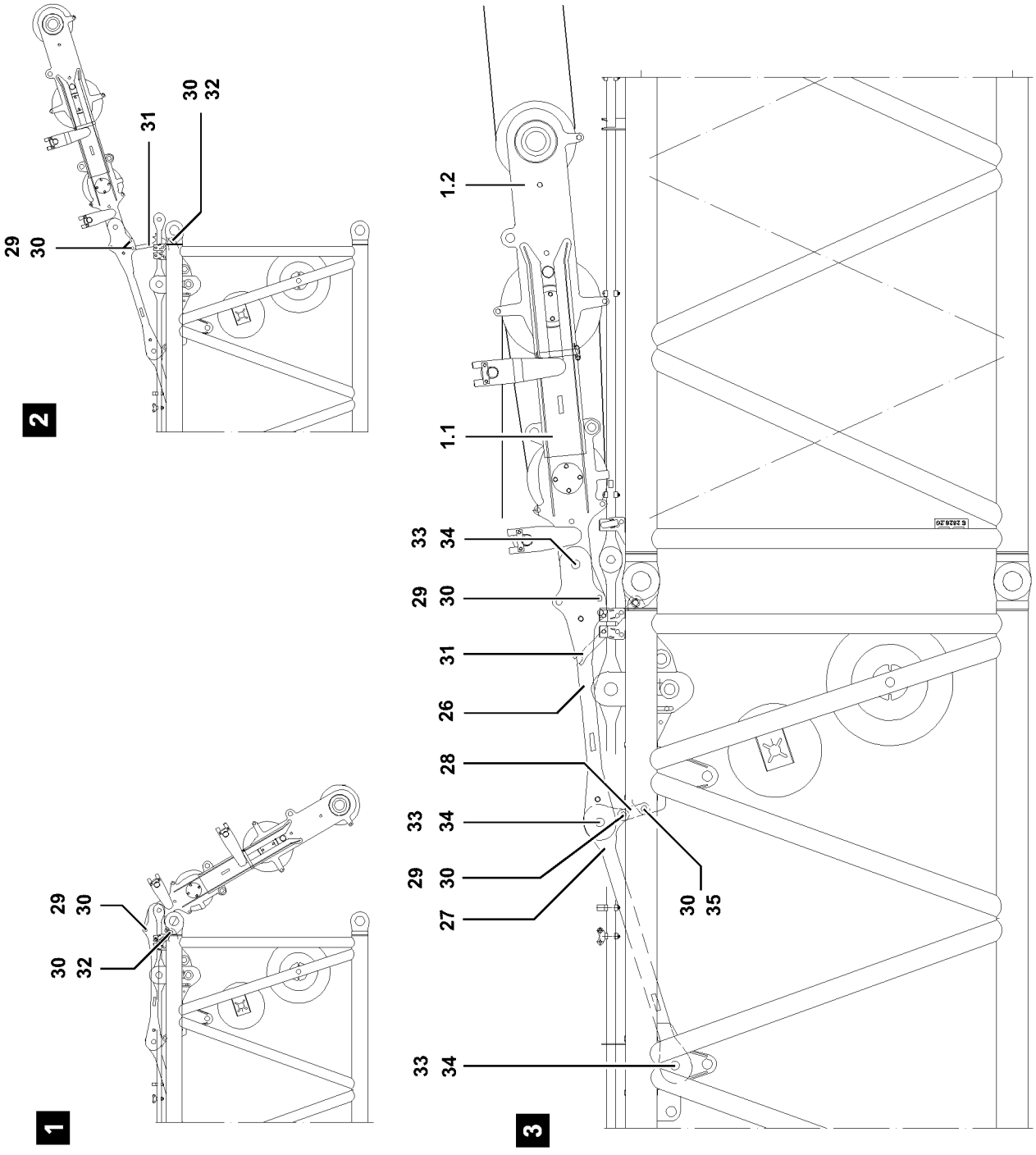
2
29
30
31
30
32
1
29
30
30
32
3
1.2
1.1
33
34
29
30
31
26
28
33
34
29
30
27
30
35
33
34

B111792

1.3 K-pulley block

Position	Component	Weight[1)]
26	Guy rod 1.8 m	
27	Guy rod 1.77 m	
28	Support for guy rods	
29	Pin	
30	Spring retainer	
31	Support assembly position	
32	Pin	
33	Pin	
34	Spring retainer	
35	Pin	
	Total weight:	2.5 t

1) The stated weights are approximate

Note
▶ Pulley block in transport position, see illustration **1**!

Note
▶ Pulley block in assembly position, see illustration **2**!

Note
▶ Pulley block in opeating position, see illustration **3**!

Note
▶ In operating position, the support **31** must be folded in!

B195219

2 Assembly

WARNING
Risk of falling!
During assembly and disassembly, personnel must be secured with appropriate aids to prevent them from falling. If this is not observed, assembly personnel can fall and suffer life-threatening or fatal injuries!
- ▶ Any work, where there is a danger of falling must be carried out with suitable aids (for example: lifting platforms, scaffoldings, ladders, auxiliary crane)!
- ▶ If the work cannot be carried out with such aids nor from the ground, then the assembly personnel must secure themselves with approved catch systems to avoid falling, see Crane operating instructions chapter 2.04!
- ▶ If railings are present on the components, then they must be brought into the corresponding position and secured for assembly / disassembly work!
- ▶ Step on aids and fall protection equipment only with clean shoes!
- ▶ Keep aids and fall protection equipment clean and free from snow and ice!
- ▶ During all assembly and disassembly work, maintenance work and inspections, travel or crane operation is prohibited!

WARNING
Falling components!
If unsecured or non-supported components are installed or removed, they can fall down!
Personnel can be severely injured or killed!
- ▶ During pinning and unpinning of the lattice sections, it is prohibited for anyone to remain **under** or **on** the components as well as within the entire danger zone!
- ▶ Support the boom and components before pinning / unpinning!
- ▶ Pin or unpin both pins laying in a horizontal, i.e. **left** and **right**!
- ▶ Secure the pins in the bearing points and in the receptacles!
- ▶ Do not disengage the auxiliary crane until each component is pinned on and secured!
- ▶ It is prohibited to lean a ladder against the component being disassembled!

WARNING
Danger of impact / crushing!
When installing / removing counterweight components with the auxiliary crane, crane components can start to swing back and forth!
When lifting / lowering and positioning crane components, there is an increased danger of impacts / crushing!
Personnel can be severely injured or killed!
- ▶ Make sure that personnel cannot be caught by components!
- ▶ Make sure that the crane is aligned in horizontal position to avoid the support beams from swinging by themselves!
- ▶ When working in danger zones: Use aids to protect limbs!
- ▶ Guide components with suitable aids to minimize oscillation!

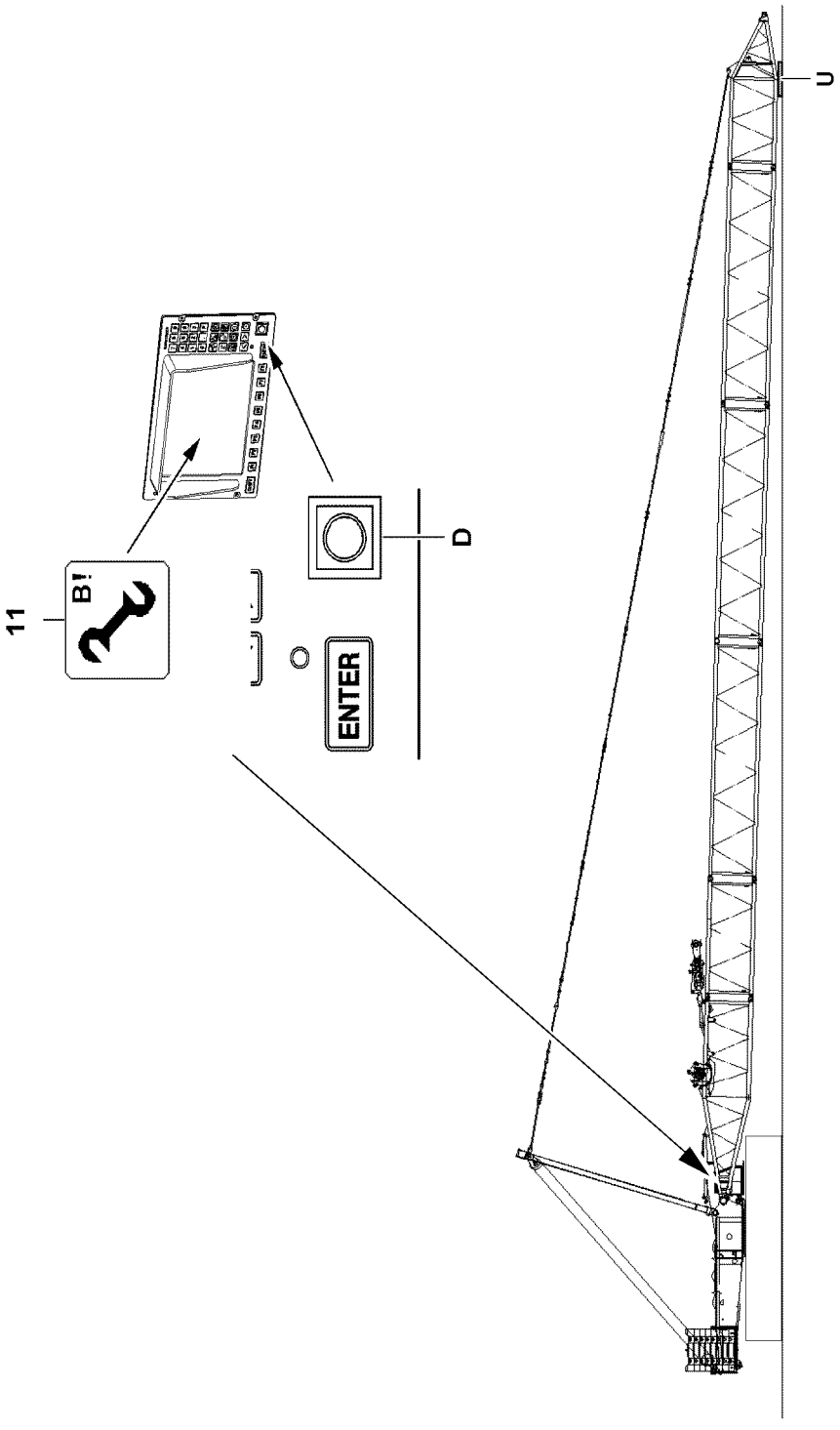

B111794

WARNING
Danger of accident due to incorrect attachment!
Life-threatening situations can arise due to improper or incorrect attachment of the corresponding components!
Personnel can be severely injured or killed!
▶ Attach the components on the intended fastening points!

Make sure that the following prerequisites are met:
– The crane is supported.
  (only in connection with crane support or for LG-cranes)
– The crane is aligned in horizontal direction.
– The S-boom is assembled, see Crane operating instructions, chapter 5.38.
– The K-boom is assembled on the S-boom.
– The upper pulley block is installed on the S-pivot section.
– An auxiliary crane is available.
– An assembly scaffolding / work platform is available.
– The counterweight has been installed to the turntable according to the load chart.
– The LICCON overload protection has been set according to the data in the load chart.
– The LICCON overload protection settings have been compared with the actual crane configuration.
– The S-boom is laying on the support **U**.

2.1 Exceeding the LICCON overload protection for assembly

WARNING
Assembly with turned on set up key!
When the set up key is engaged, the LICCON overload protection is exceeded!
In the event of deliberate improper use, the crane could collapse, the boom can break off or the crane can topple over!
Personnel can be severely injured or killed!
This could result in high property damage!
▶ The set up key **D** may only be actuated by persons who know the effects of a bypass!
▶ Press the set up key **D** only when the set up status was correctly entered into the LICCON computer system!
▶ Observe the erection / take down charts!
▶ Crane operation with the set up key **D** turned on is strictly prohibited!

▶ Turn the set up key **D** to the right.

Result:
– The LICCON overload protection is exceeded.
– The assembly icon **11** appears on the LICCON monitor.

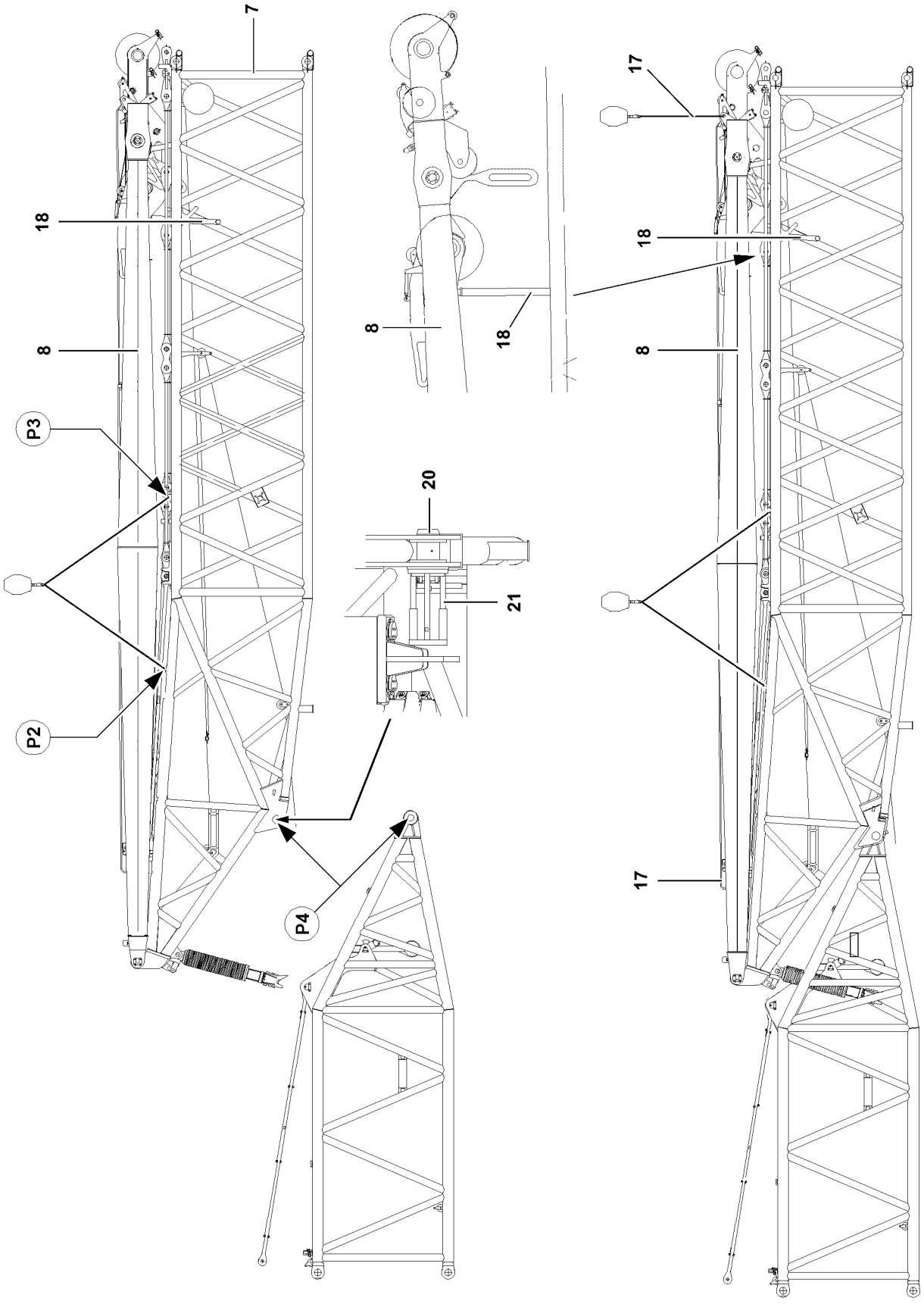

B111795

2.2 Pinning the K-assembly unit on the K-adapter

- ▶ Luff the S-boom up somewhat for better accessibility and assembly of the K-assembly unit.
- ▶ Attach the K-assembly unit with the auxiliary crane on the K-pivot section **7** on both sides on points **P2** and points **P3**.
- ▶ Swing the K-assembly unit with the auxiliary crane in to the pin points **P4** on the K-adapter.

WARNING
Falling components!
If the components are incompletely pinned or secured, then components can fall down!
Personnel can be severely injured or killed!
- ▶ Make sure that all components are completely pinned and secured!

- ▶ Pinning the K-assembly unit with the K-adapter:
  Pin and secure the pin **20** with the hydraulic pin pulling device **21**.
- ▶ Attach the fastening rope **17** on the auxiliary crane.
- ▶ For simpler assembly of the K-lattice jib: Set the KA-frame **8** with the auxiliary crane on the assembly support **18**.
- ▶ When the KA-frame is standing safely on the assembly support **18**:
  Remove the auxiliary crane.

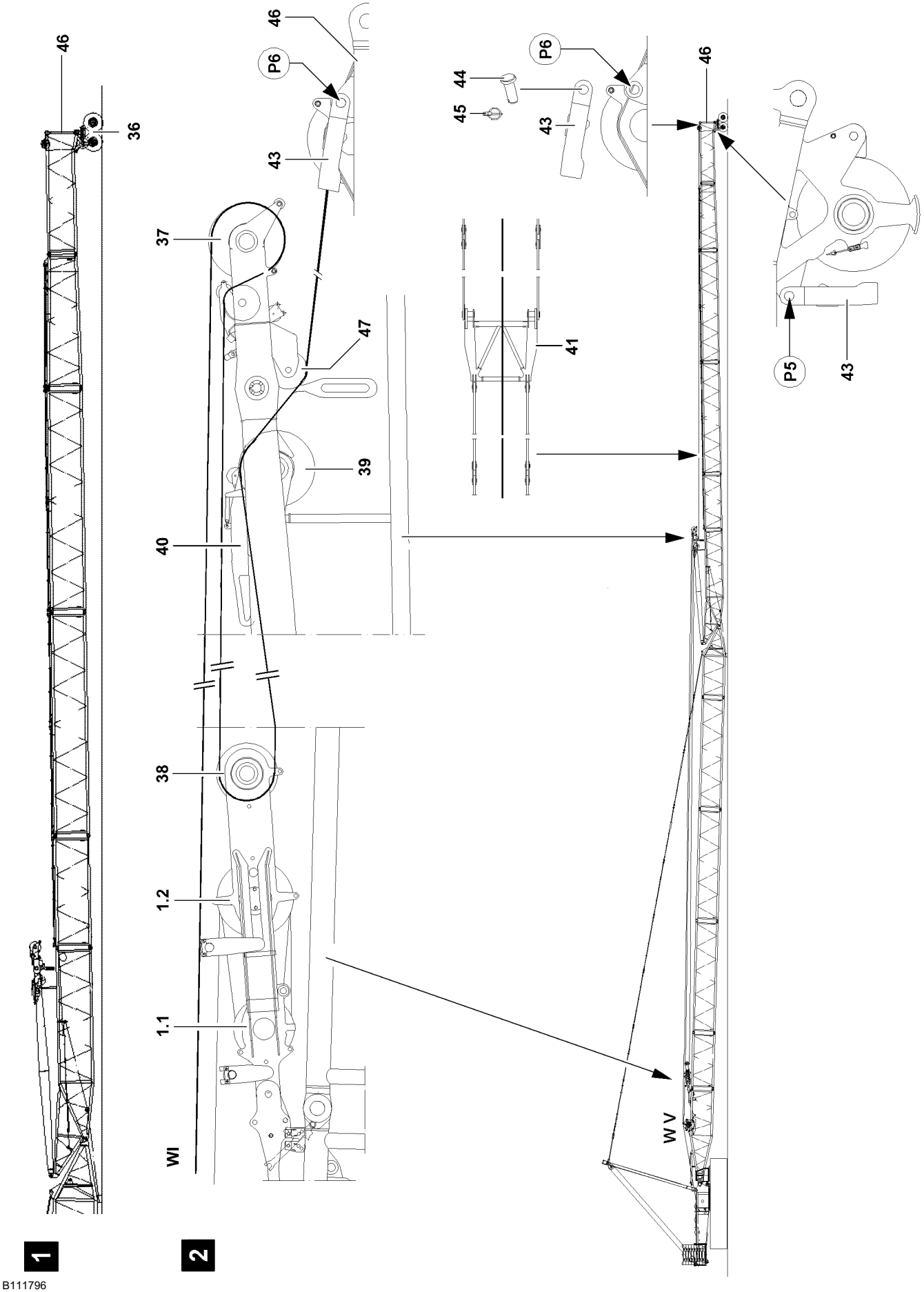

B111796

2.3 Assembling the K-lattice jib

Make sure that the following prerequisite is met:
– The K-assembly unit is pinned and secured with the K-adapter.

Note
▶ Always support the LI-lattice sections sufficiently for easier installation!

▶ Pin the LI-intermediate sections with the pin pulling device:
Insert and secure the pin, see Crane operating instructions, chapter 5.30.
▶ Pin and secure the guy rods.

Note
▶ Install the pulley cart **36**, see Crane operating instructions, chapter 5.61!

▶ Place the K-lattice jib with the K-end section on the pulley cart **36**, see illustration **1**.

2.4 Reeving in the hoist rope

Note
▶ The winch 5 **W V** is operated in SLK-operation on the installation position of winch 6!

Make sure that the following prerequisites are met:
– The K-pulley block is pinned and secured on the S-pivot section.
– The rope of winch 5 **W V** is completely reeved and secured on the K-pulley block, see Crane operating instructions, chapter 4.06 and reeving plans.
– The rope retaining pins on the rope pulley **38** of the upper pulley block **1.2** and on the rope pulleys in the KA-frame are unpinned.

▶ Unpin the rope lock **43** at point **P5** and pin at point **P6** with pin **44**.
▶ Secure the pin **44** with linch pin **45**.
▶ Reeve in the hoist rope of winch 1 **W I** on the K-pulley block and on the KA-frame:
Guide the hoist rope over the front rope pulley **37** on the KA-frame and back to the rope pulley **38** on the upper pulley block **1.2**, see illustration **2**.
▶ From the rope pulley **38** in the upper bock, pull the hoist rope **over** the rope pulley **39** and **under** the rope pulley **47** in the KA-frame to the front.

WARNING
Damage to the hoist rope!
If the hoist rope is not guided at assembly over the protective roller of the cross bar **41**, then the hoist rope can be damaged!
Personnel can be severely injured or killed!
▶ Guide the hoist rope always over the protective roller on the cross bar **41**!

▶ Guide the hoist rope to the rope lock **43** on the rope fixed point **P6**, see illustration **2**.
▶ Hook the hoist rope with the lock clamp on the rope lock **43** properly and secure, see Crane operating instructions, chapter 4.06.

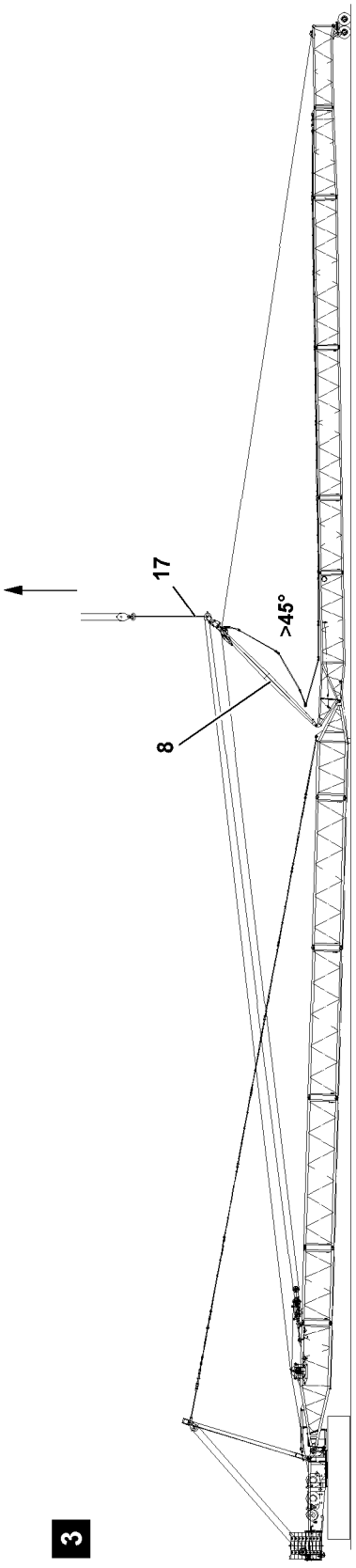

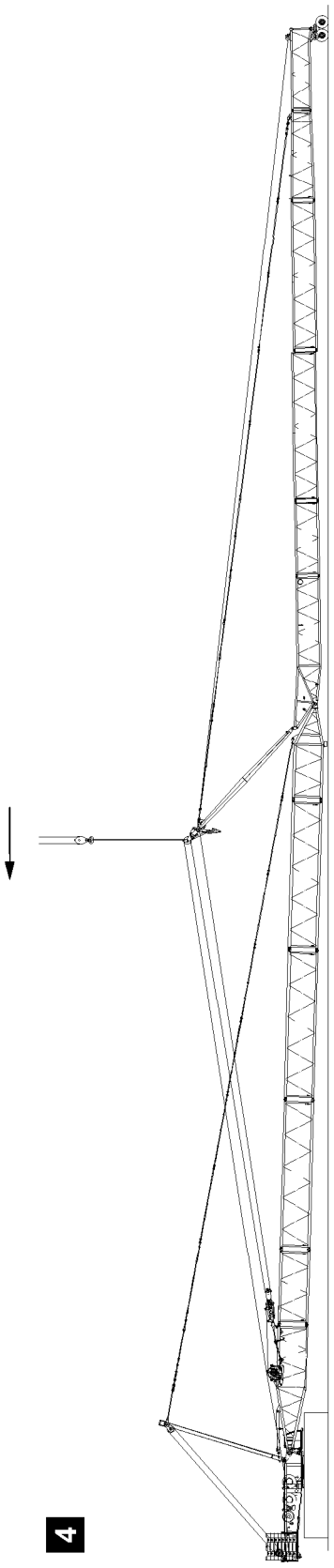

B111797

2.5 Erecting the KA-frame

Make sure that the following prerequisites are met:
– The hoist rope is reeved, pinned and secured.
– The K-guy rods are pinned and secured.

▶ Attach the fastening rope **17** on the auxiliary crane.

NOTICE
Danger of slack rope formation!
▶ When erecting the KA-frame, watch for slap rope formation of the hoist winch!

▶ Spool the hoist winch up at the same time and lift the KA- frame **8** with the auxiliary crane to approximately 45°, see illustration **3**.

WARNING
KA-frame folding downward!
If KA-frame is not held with the auxiliary crane while pulling it back, it can fold downward!
Personnel can be severely injured or killed!
▶ Hold the KA-frame with the auxiliary crane until the guy rods are tensioned!

▶ Pull the KA- frame **8** back with the auxiliary crane while spooling up the hoist winch at the same time.

Result:
– The guy rods are tensioned, see illustration **4**.

▶ Remove the auxiliary crane.

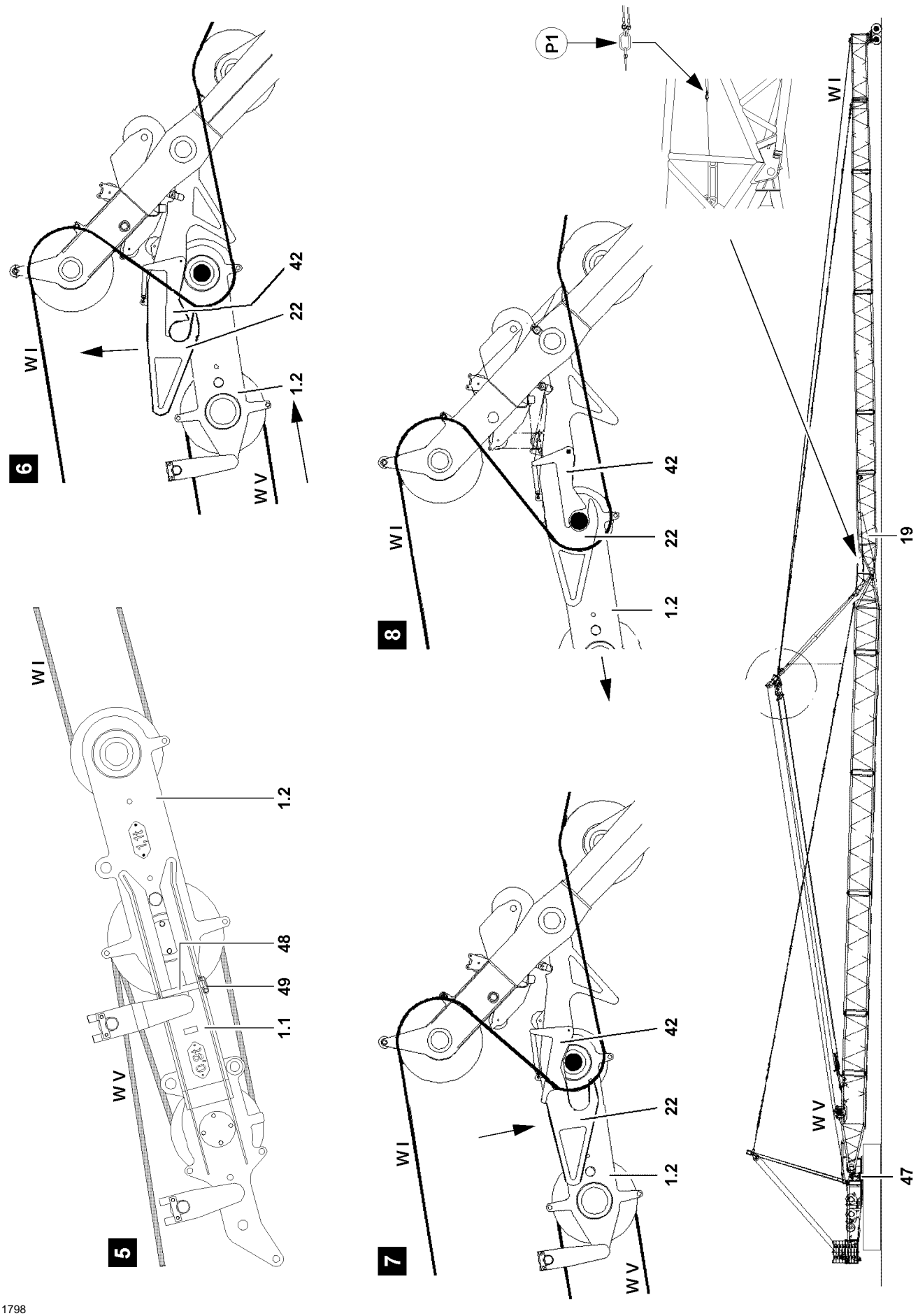
P1
W I
19
W V
47
6
W I
42
22
1.2
W V
8
W I
42
22
1.2
5
W I
1.2
48
49
1.1
W V
7
W I
42
22
1.2
W V

B111798

2.6 Connecting the upper pulley block with the KA-frame

Make sure that the following prerequisites are met:
– The pulley block is completely reeved in (winch 5 **W V**).
– The retaining pins **48** of the lower pulley block **1.1** are unpinned.

▶ Connect the rope of the assembly winch **19** with the hook adjustment rope at point **P1** and pull the hook **22** up with the assembly winch, see illustration **6**.
▶ Pull the upper pulley block **1.2** with the hoist rope **W I** to the hook **22**.
▶ Lower the hook with the assembly winch in such a way that it is laying on the axle of the upper pulley block **1.2**, see illustration **7**.

WARNING
Secure the upper pulley block!
If the locking lever **42** is not correctly engaged after assembly of the upper pulley block on the hook **22**, then the upper pulley block **1.2** can release itself during crane operation from the hook **22**!
Personnel can be severely injured or killed!
▶ Make sure that the locking lever **42** is completely engaged, check visually!

▶ Pull the axle of the upper pulley block **1.2** completely into the hook **22** until the locking lever **42** engages.

Result:
– The upper pulley block **1.2** is secured, see illustration **8**.

▶ Unhook the rope of the assembly winch **19** at point **P1** and hook it in on the K-pivot section.

2.7 Establishing the electrical connections

Make sure that the following prerequisite is met:
– The SLK-boom is fully assembled.

Note
▶ To establish the electrical connections, see Electric wiring diagram!

▶ Establish the electrical connections.
▶ Make sure that all electrical connections on the boom are established.

2.8 Checking the function of the safety devices

WARNING
Non-functioning safety devices!
If the function of the safety devices is defective, personnel can be severely injured or killed!
▶ Crane operation with non-functioning safety devices is **prohibited**!

Note
▶ The function of the individual limit switches must be checked before erection!
▶ The function of the limit switch initiators must be checked in the test system, see Diagnostics manual!

Note

- ▶ If a function check on the limit switches or on the safety devices does not lead to the desired shut offs, then the plug connections on the connector boxes or the components itself must be checked!
- ▶ If no visible connection errors or component defects can be found, contact **LIEBHERR** Service!

Make sure that the following prerequisites are met:

– All electrical connections have been made.
– The crane engine is running.
– The corresponding operating mode is set on the LICCON monitor.

2.8.1 Checking the wind speed sensor

▶ Test the movement and the function of the wind speed sensor.

2.8.2 Checking the airplane warning light

▶ Turn the airplane warning light on.
▶ Visually check functionality.

2.8.3 Hoist limit switch

Note

- ▶ When replacing or changing a hoist limit switch, the corresponding hoist limit switch must have the correct bus address and the correct software version in order to be detected by the bus system!

▶ Manually actuate the hoist limit switch.

Result:

– The spool up function of the hoist winch turns off.
– The icon “Hoist top” appears on the LICCON monitor.
– The limit switch is functioning.

2.8.4 Checking the limit switch K-lattice jib “on top”

▶ Cover the limit switch initiators individually with a metal plate.

Result:

– The limit switch is actuated manually.
– The spool up function of the hoist winch turns off.
– The icon appears on the LICCON monitor.
– The limit switch is functioning.

2.8.5 Checking the limit switch K-lattice jib “on the bottom”

▶ Cover the limit switch initiators individually with a metal plate.

Result:

– The limit switch is actuated manually.
– The spool out function of the hoist winch turns off.
– The icon appears on the LICCON monitor.
– The limit switch is functioning.

2.8.6 Checking the limit switch SL-boom “Steepest position”

Note

▶ The limit switch functions have to be checked individually before erection!

▶ Cover the limit switch initiators on the S-relapse cylinders individually with a metal plate.

Result:

– The limit switch is actuated manually.
– The control winch movement “spool up” turns off.
– The icon appears on the LICCON monitor.
– The limit switch is functioning.

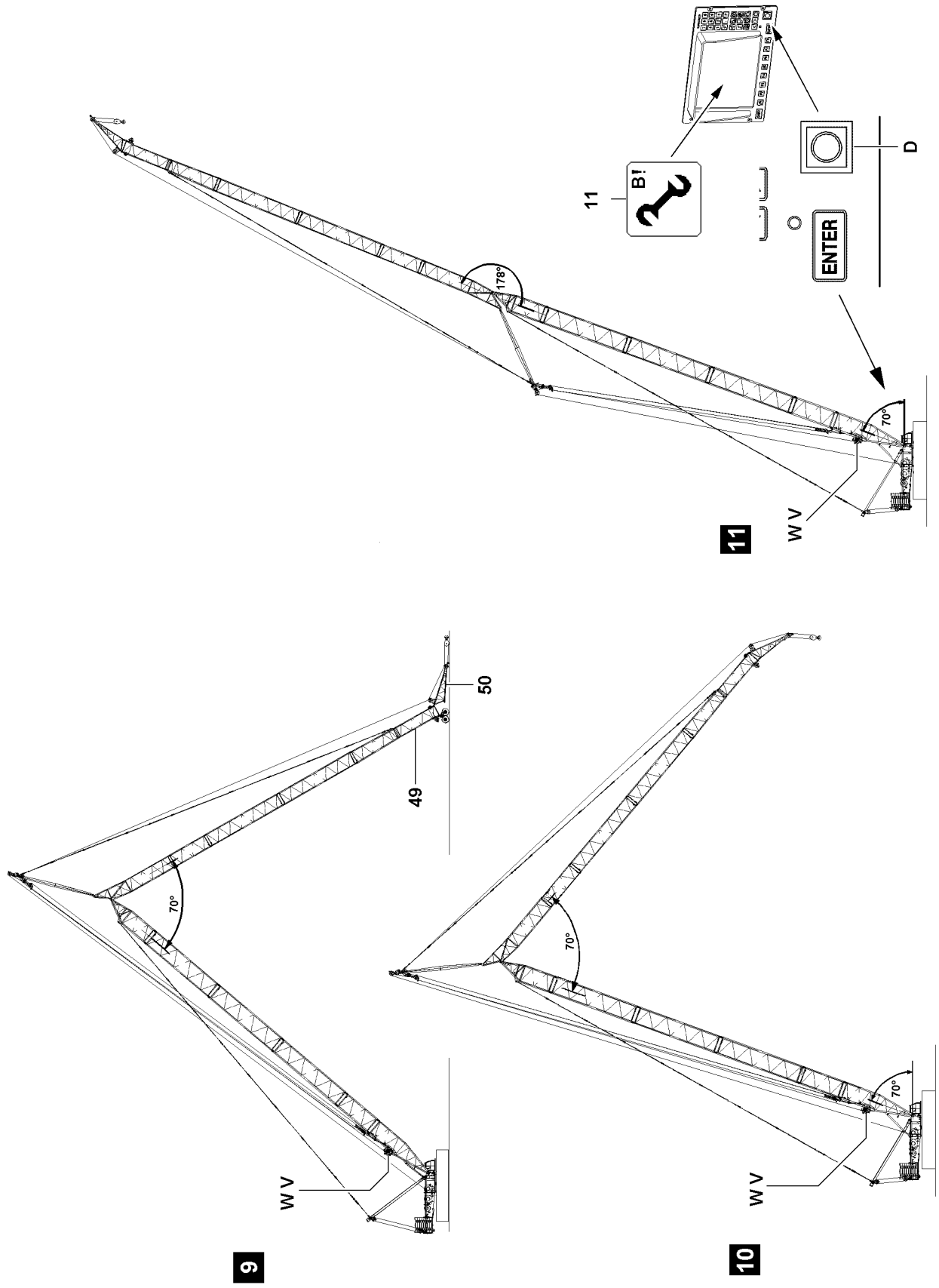

B111799

2.9 Erecting the SLK-boom

WARNING
The crane can topple over!
If the following conditions are not met before erecting the SLK-boom, the crane can topple over!
Personnel can be severely injured or killed!
- ▶ Observe the Safety technical notes, see Crane operating instructions, chapter 5.01!
- ▶ Extend the S-relapse cylinder before erection!
- ▶ Pay attention to slack rope formation!

Make sure that the following prerequisites are met:
- The crane is supported.
  (only in connection with crane support or for LG-cranes)
- The crane is aligned in horizontal direction.
- All electrical connections have been made.
- All limit switches are functioning.
- The counterweight has been installed to the turntable according to the load chart.
- The K-lattice jib is installed according to the load chart.
- All pin connections have been secured.
- The hoist rope has been correctly placed in the rope pulleys and is prevented from jumping out with the rope retaining pins.
- The LICCON overload protection has been set according to the data in the load chart.
- The LICCON overload protection settings have been compared with the actual crane configuration.
- The LICCON overload protection is exceeded.
- The assembly icon **11** is visible on the LICCON monitor.
- There are no loose parts on the boom and the lattice jib.
- No personnel is within the danger zone.

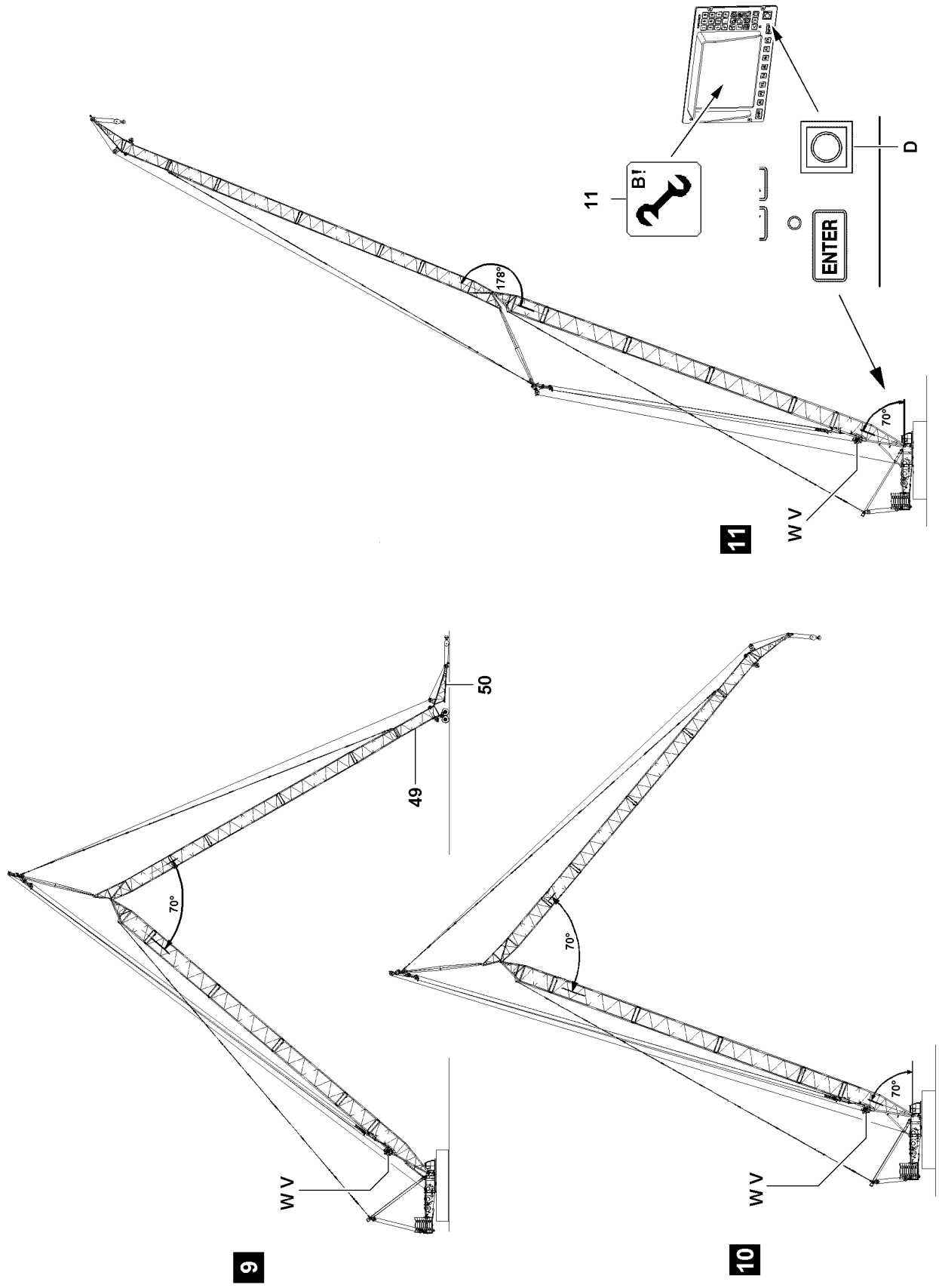

B111799

2.9.1 Erection procedure

DANGER
The crane can topple over!
- ▶ It is not permitted to turn the crane during the erection procedure!
- ▶ Observe the data in the erection and take down charts!

DANGER
The crane can topple over!
In crane operation with exceeded LICCON overload protection, the crane can topple over!
Personnel can be severely injured or killed!
- ▶ The radii listed in the load chart may not be exceeded or fallen below, even if there is no load on the hook!

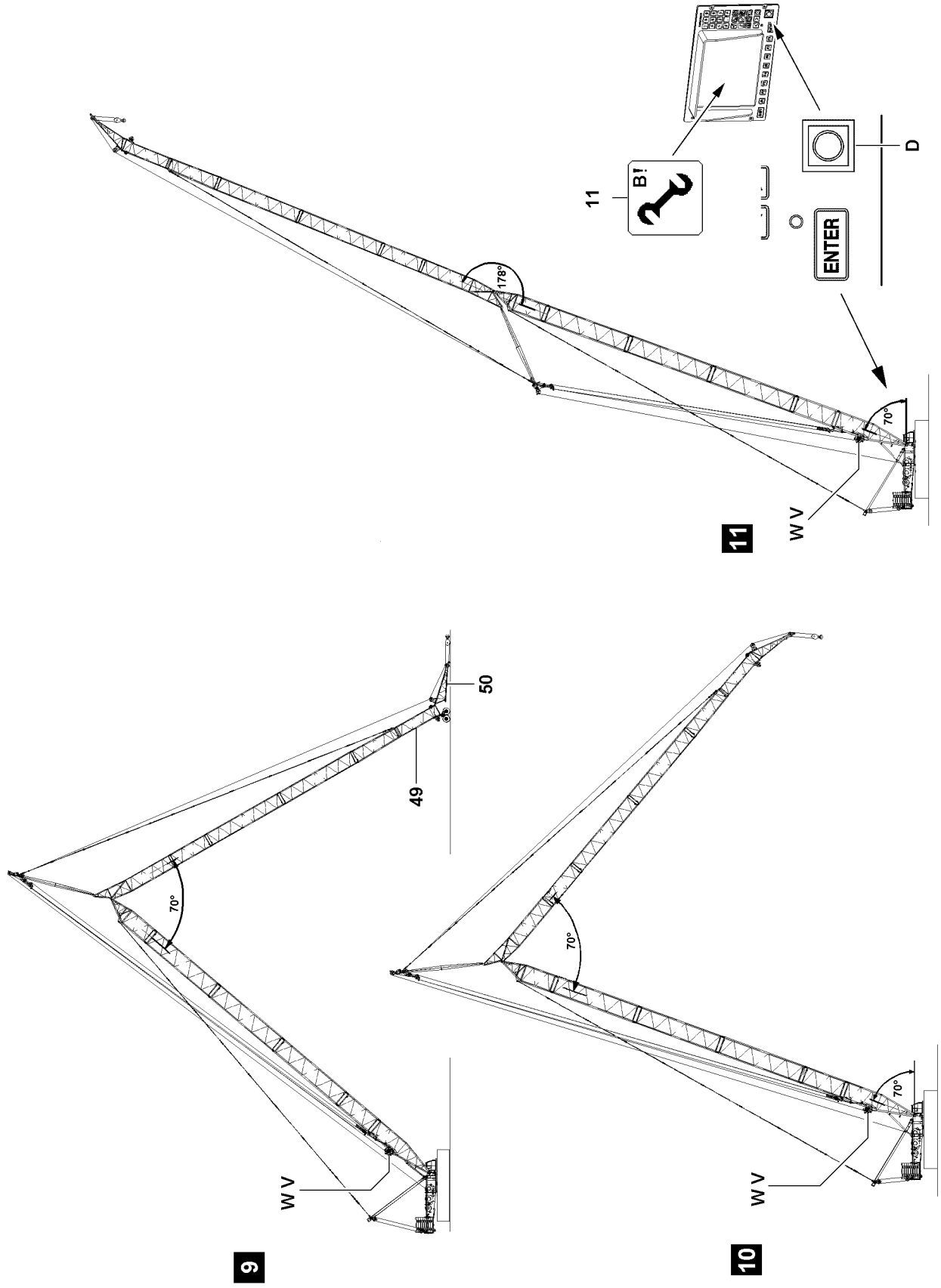

B111799

- ▶ Luff the SL-boom up:
  Actuate the master switch.

WARNING
Overload of crane!
If the lattice jib is lifted off the ground when luffing up and not carried on the ground on the pulley cart with its entire weight, then the crane can be overloaded and topple over!
Personnel can be severely injured or killed!
- ▶ Lower the lattice jib adjustment in such that guy rods always sag slightly!
- ▶ Do not allow slack rope to build up on the winch 5 **W V**!

- ▶ At the same time, spool out winch 5 **W V** to hold the K-lattice jib on the ground with the adapter for the boom nose **49** placed on the pulley cart, see illustration **9**.

WARNING
Lift off of the K-lattice jib from the ground!
If the K-lattice jib lifts off the ground with the pulley cart before the angle between the SL-boom and the K-lattice jib has reached the 70°, dangerous situations can occur!
Personnel can be severely injured or killed!
- ▶ Make sure that the pulley cart is removed before lifting the K-lattice jib off the ground!
- ▶ Never lift the pulley cart off the ground by the K-lattice jib!
- ▶ Remove the pulley cart, see Crane operating instructions, chapter 5.61!

- ▶ Carry out this procedure until the SL-boom and the K-lattice jib form and angle of 70° or the adapter for the boom nose **49** has lifted off the ground first.
- ▶ Remove the pulley cart.
- ▶ When the pulley cart is removed:
  Lift the K-lattice jib off the ground.
- ▶ Continue to luff the SL-boom up.
- ▶ Reeve in the hoist rope between the pulley head on the boom nose 120 t **50** and the hook block, see Reeving plan.
- ▶ Attach the hoist limit switch weight.
- ▶ Luff the SL-boom up to 70° to the horizontal, see illustration **10**.

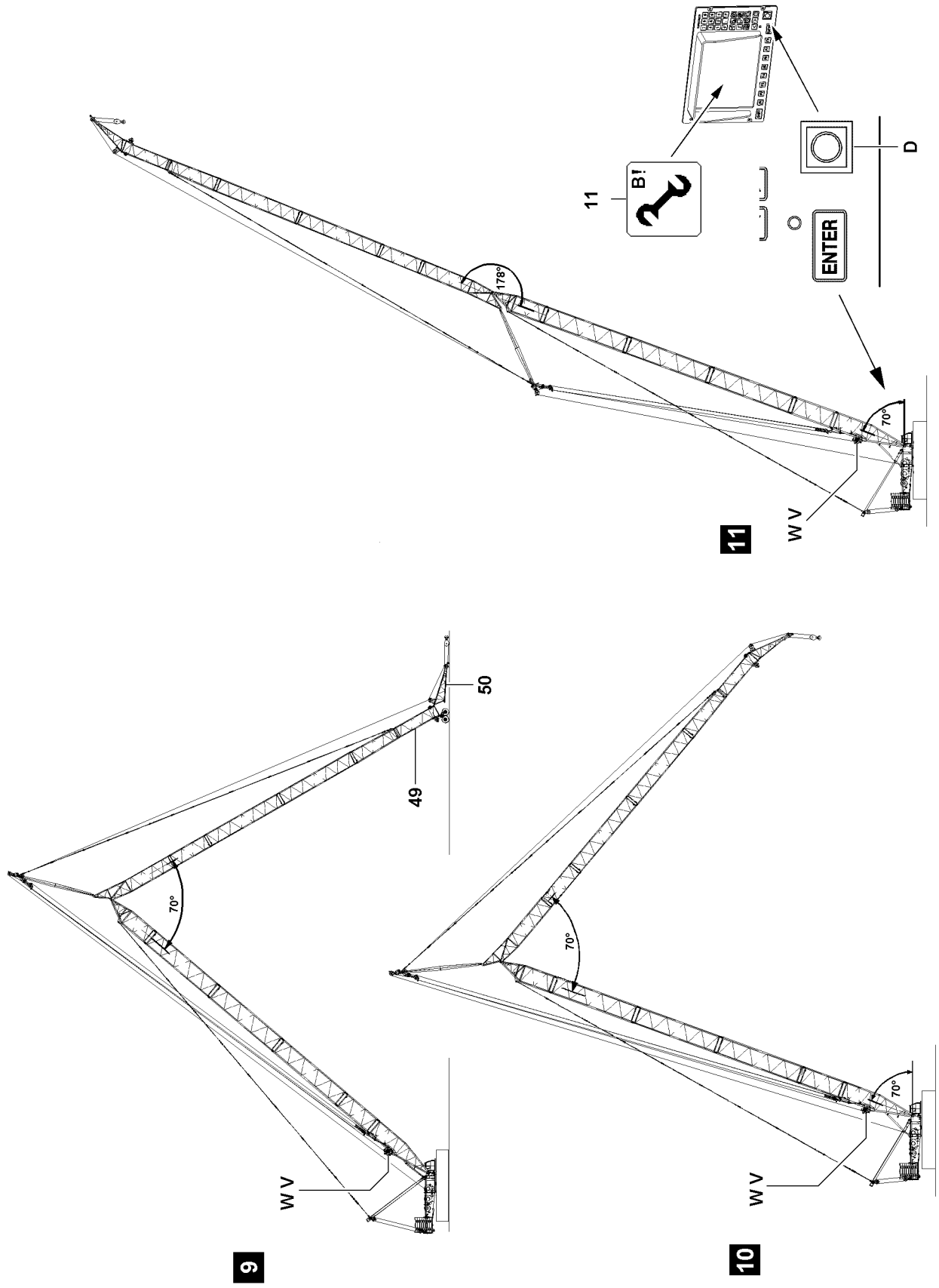

B111799

NOTICE
Release of K-lattice jib!
- ▶ The release to luff up the K-lattice jib is given when the SL-boom is erected to 70°!
- ▶ At a SL-boom angle of more than 72°, the winch 5 **W V** cannot be spooled up any longer and the K-lattice jib cannot be erected!

NOTICE
Collision of hook block!
- ▶ When erecting the boom system, the hoist winch must be spooled up at the same time to prevent a collision of the hook block with the pulley head of the boom nose 120 t **50**!

Note
- ▶ When the lowest operating position of the boom is reached, the LICCON overload protection is activated!
- ▶ In the maximum load icon appears a load number in “t” instead of the display “???”!

- ▶ Luff up the K-lattice jib to the operating position.
- ▶ When the boom has reached the lowest operating position:
  Make sure that the assembly icon **11** on the LICCON monitor turns off.

Result:
– The LICCON overload protection is active.

B112039

3 Crane operation

Note

▶ Observe the notes in the chapters, see Crane operating instructions, chapter 4.05, chapter 4.08 and chapter 5.01!

Make sure that the following prerequisites are met:

– The LICCON overload protection is active.
– The LICCON overload protection has been set according to the data in the load chart.

WARNING

The crane can topple over!

▶ Check the horizontal position of the crane before and during operation!
▶ If the crane operator leaves the cab, even for a short time, the operating mode setting must be checked and reset if necessary before resuming crane operation!

3.1 Checking the settings

▶ Check the function of the overload protection by running against the operating positions “on top” and “bottom”.
▶ Check the hoist limit switch by running against the hoist limit switch weight.
▶ Check the function of the limit switches “Boom steep” on the relapse cylinders.

B195219

4 Disassembly

WARNING
Risk of falling!
During assembly and disassembly, personnel must be secured with appropriate aids to prevent them from falling. If this is not observed, assembly personnel can fall and suffer life-threatening or fatal injuries!
- ▶ Any work, where there is a danger of falling must be carried out with suitable aids (for example: lifting platforms, scaffoldings, ladders, auxiliary crane)!
- ▶ If the work cannot be carried out with such aids nor from the ground, then the assembly personnel must secure themselves with approved catch systems to avoid falling, see Crane operating instructions chapter 2.04!
- ▶ If railings are present on the components, then they must be brought into the corresponding position and secured for assembly / disassembly work!
- ▶ Step on aids and fall protection equipment only with clean shoes!
- ▶ Keep aids and fall protection equipment clean and free from snow and ice!
- ▶ During all assembly and disassembly work, maintenance work and inspections, travel or crane operation is prohibited!

WARNING
Falling components!
If unsecured or non-supported components are installed or removed, they can fall down!
Personnel can be severely injured or killed!
- ▶ During pinning and unpinning of the lattice sections, it is prohibited for anyone to remain **under** or **on** the components as well as within the entire danger zone!
- ▶ Support the boom and components before pinning / unpinning!
- ▶ Pin or unpin both pins laying in a horizontal, i.e. **left** and **right**!
- ▶ Secure the pins in the bearing points and in the receptacles!
- ▶ Do not disengage the auxiliary crane until each component is pinned on and secured!
- ▶ It is prohibited to lean a ladder against the component being disassembled!

WARNING
Danger of impact / crushing!
When installing / removing counterweight components with the auxiliary crane, crane components can start to swing back and forth!
When lifting / lowering and positioning crane components, there is an increased danger of impacts / crushing!
Personnel can be severely injured or killed!
- ▶ Make sure that personnel cannot be caught by components!
- ▶ Make sure that the crane is aligned in horizontal position to avoid the support beams from swinging by themselves!
- ▶ When working in danger zones: Use aids to protect limbs!
- ▶ Guide components with suitable aids to minimize oscillation!

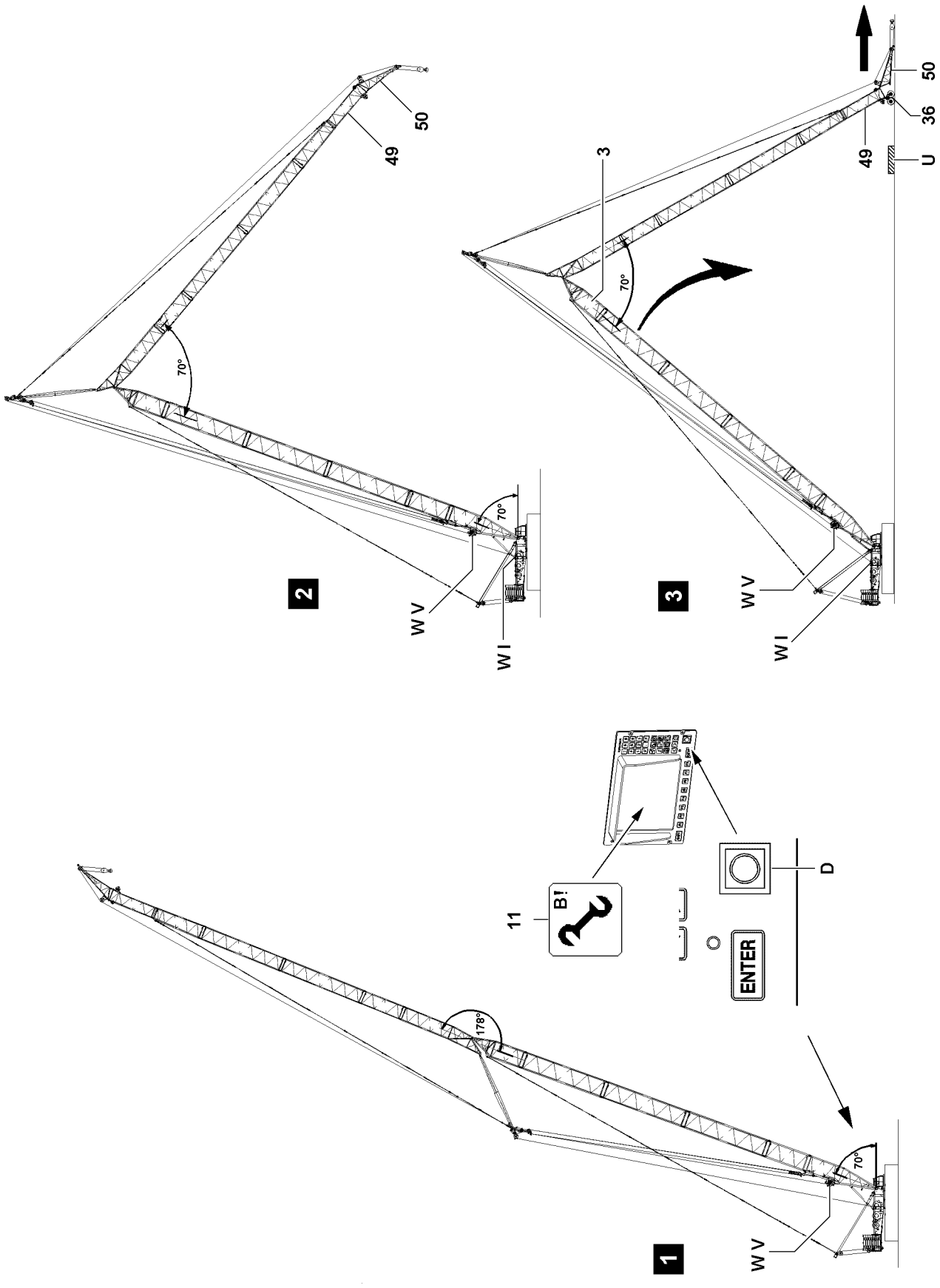

B111801

4.1 Taking down the SLK-boom

WARNING
Risk of accident!
If the following instructions are not observed, personnel can be severely injured or killed!
- ▶ The turntable may not be turned during the disassembly of the boom!
- ▶ Observe the Safety technical notes, see Crane operating instructions, chapter 5.01!
- ▶ Observe the data in the erection and take down charts!

NOTICE
Damage of boom components!
Taking down the boom system can lead to a collision between the hook block and the pulley head!
There is the danger that boom components may be significantly damaged!
- ▶ Upon taking down the boom system, always spool out the hoist winch at the same time!

4.1.1 Take down procedure

Make sure that the following prerequisites are met:
- – The crane is supported.
  (only in connection with crane support or for LG-cranes)
- – The crane is aligned in horizontal direction.
- – An auxiliary crane is available.
- – An assembly scaffolding / work platform is available.
- – The counterweight has been installed on the turntable according to the erection and take down chart.
- – The LICCON overload protection has been set according to the data in the load chart.

Note
- ▶ The luff down movement is turned off as soon as the lowest operating position is reached!
- ▶ When the lowest operating position of the boom is reached, the load display in the maximum load icon turns off and instead of the load display appears the display “???”!
- ▶ In the crane operating screen appear alarm functions!

▶ Luff the SLK-boom down to the “lowest” operating position.

Result:
- – The luffing movement is turned off.
- – The “STOP” icon appears on the LICCON monitor.
- – The “Horn” icon appears on the LICCON monitor.

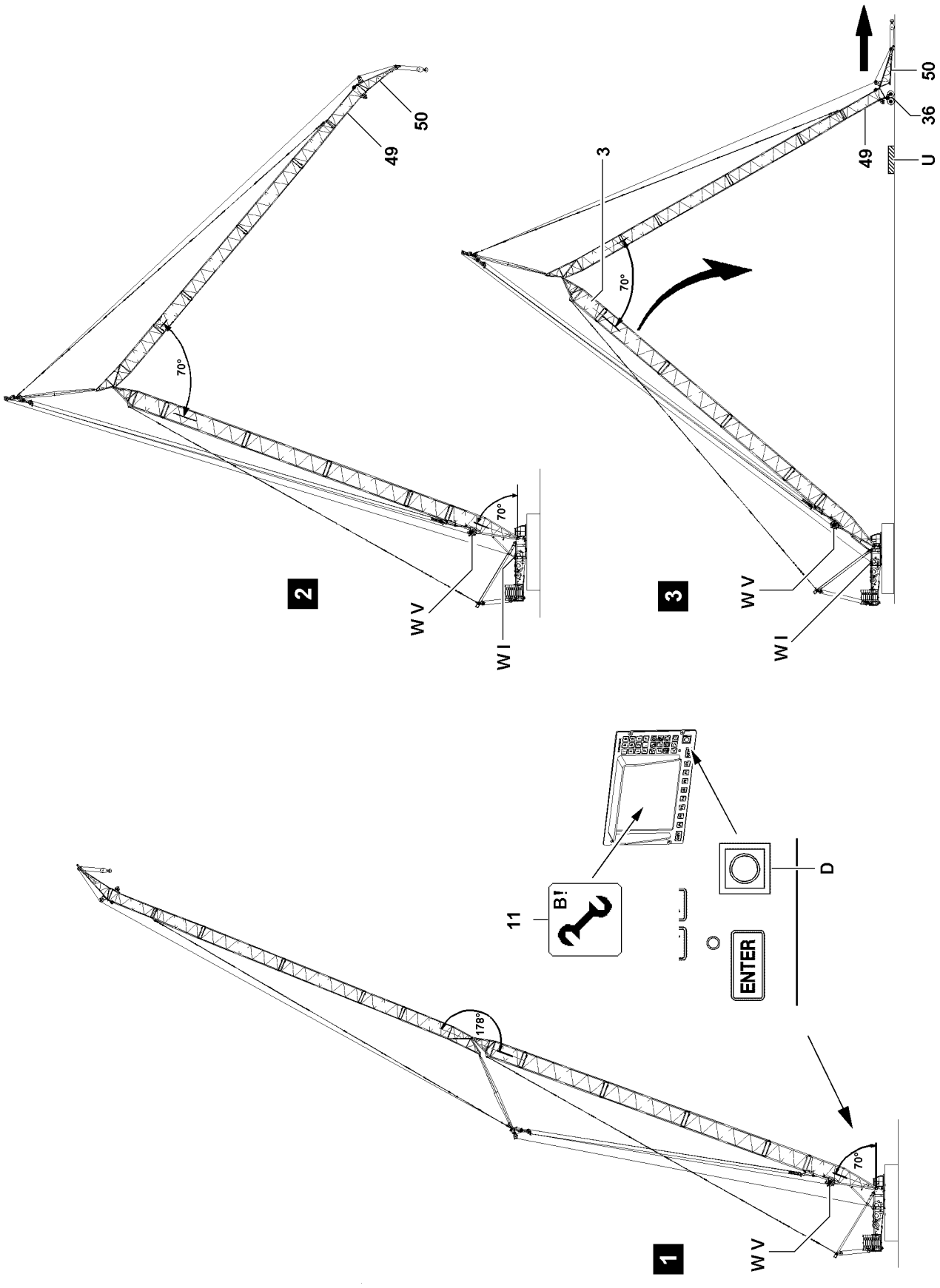

B111801

WARNING
Assembly with turned on set up key!
When the set up key is engaged, the LICCON overload protection is exceeded!
In the event of deliberate improper use, the crane could collapse, the boom can break off or the crane can topple over!
Personnel can be severely injured or killed!
This could result in high property damage!
- ▶ The set up key **D** may only be actuated by persons who know the effects of a bypass!
- ▶ Press the set up key **D** only when the set up status was correctly entered into the LICCON computer system!
- ▶ Observe the erection / take down charts!
- ▶ Crane operation with the set up key **D** turned on is strictly prohibited!

▶ When the SLK-boom has reached the “lowest” operating position:
Turn the set up key **D** to the right.

Result:
– The LICCON overload protection is deactivated.
– The assembly icon **11** appears on the LICCON monitor.

▶ Luff the K-lattice jib down until an angle of approximately 70° is reached between the SL-boom and the K-lattice jib, illustration **2**.

NOTICE
Release of K-lattice jib!
- ▶ The release to luff down the K-lattice jib is given when the SL-boom is luffed down to 70° to the horizontal!
- ▶ At a SL-boom angle of more than 72°, the winch 5 **W V** cannot be spooled out any longer and the K-lattice jib cannot be luffed down!

NOTICE
Collision of hook block!
- ▶ When luffing down the boom system, the hoist winch must be spooled out at the same time to prevent a collision of the hook block with the pulley head of the boom nose 120 t **50**!

- ▶ At the same time, spool the hoist winch out and continue to luff the SLK-boom down until the hook block touches the ground.
- ▶ Disassemble hoisting limit switch weight.
- ▶ Unreeve the hook block.

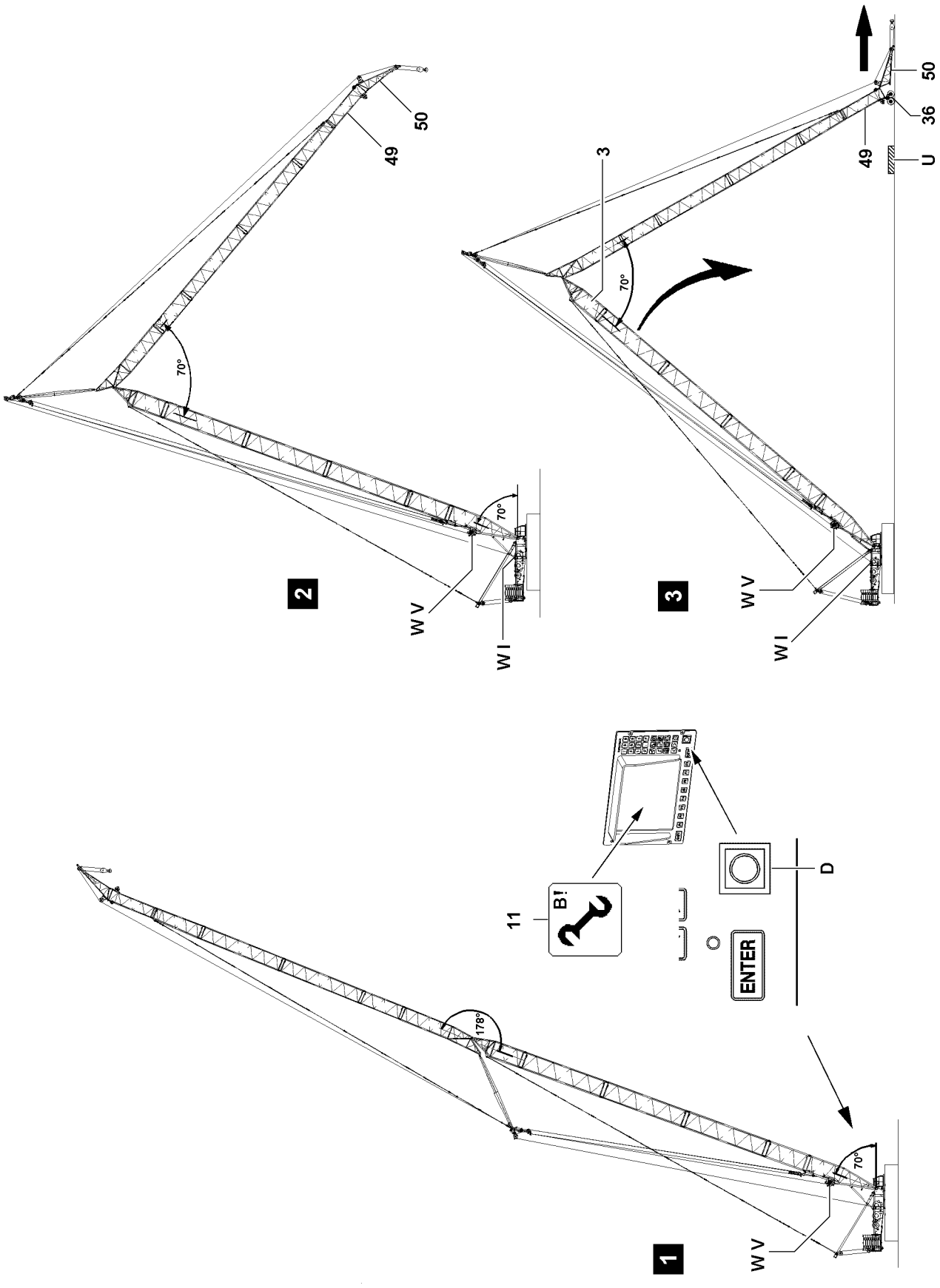

B111801

NOTICE
Damage of the boom nose 120 t **50**!
The boom combination must be placed down on the ground carefully, so that the boom nose 120 t **50** can fold up automatically on the fork connection and move out on the rollers, see illustration **3**.
▶ Lower the boom combination carefully on the ground.

▶ When the boom nose 120 t **50** is folded outward, illustration **3**:
Luff the SL-boom down until the pulley cart can be installed on the adapter for the boom nose **49**.
▶ Install the pulley cart, see Crane operating instructions, chapter 5.61!

Note
▶ When the K-lattice jib is laying on the pulley cart, tension the K-guying somewhat so that the pulley cart can roll forward!

WARNING
Overload of crane!
If the K-lattice jib is carried on the pulley cart with its entire weight when luffing down, then the crane can be overloaded and topple over!
Personnel can be severely injured or killed!
▶ Lower the SL-boom carefully and at slow speed!
▶ Do not allow slack rope to build up on the winch1 **W I** and winch 5 **W V**!

▶ Lower the SL-boom until the K-adapter **3** is laying on the support **U**.
▶ Disassemble the boom nose 120 t **50**.

4.2 Disconnecting the electrical connections

Make sure that the following prerequisites are met:
– The SLK-boom has been placed down.
– The boom nose120 t **50** is disassembled.

▶ Disconnect the electrical connections.

NOTICE
Damage to cable drum or cable!
If the cable of the cable drum is not properly spooled up on the cable drum after unplugging, then the cable drum or the cable can be significantly damaged!
▶ Make sure that the cable drum is completely spooled up after unplugging!

▶ Spool the cable drum up and secure it to prevent inadvertent spooling out.
▶ Make sure that all electrical connections on the boom have been disconnected.

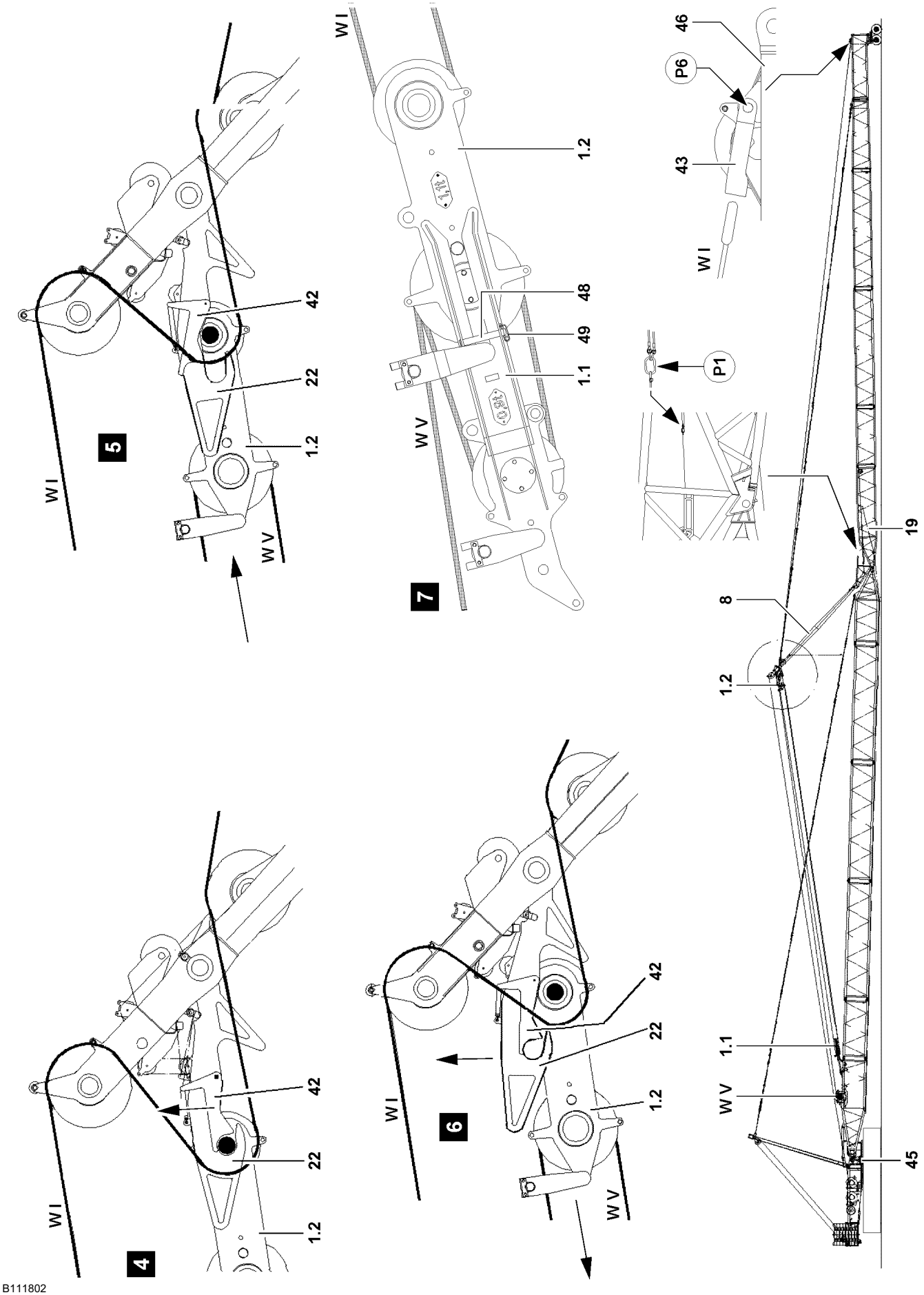
W I
42
22
1.2
5
W V
W I
1.2
48
49
1.1
W V
7
46
P6
43
W I
P1
19
8
1.2
1.1
W V
45
W I
42
22
1.2
4
W I
42
22
1.2
6
W V

B111802

4.3 Disconnecting the upper pulley block from the KA-frame

Make sure that the following prerequisite is met:

– The electrical connections on the K-lattice jib have been separated and are properly stored.

▶ Spool the hoist rope (winch 1 **W I**) up until the lock clamp is approximately at the height of point **P6**.

▶ Hook the hoist rope with the lock clamp on the rope lock **43** at point **P6** and secure.

▶ Tension the hoist rope carefully so that the hoist rope still has a minimum slack.

▶ Release the locking lever **42** for the retention of the upper pulley block **1.2** by pulling it manually.

▶ Pull the locking lever **42** up, see illustration **4**.

Result:

– The axle of the upper pulley block **1.2** is released.

▶ Pull the upper pulley block **1.2** with the hoist rope from the receptacle on the hook **22**, see illustration **5**.

▶ Connect the rope of the assembly winch **19** with the hook adjustment rope at point **P1** and pull the hook **22** up with the assembly winch, see illustration **6**.

NOTICE

Damage of crane components!

When “pulling” the upper pulley block **1.2** back - to the lower pulley block **1.1** in the S-pivot section - crane components can be severely damaged!

It can result in slack rope build-up!

▶ Carry out all movements with utmost caution and at the least possible speed!

▶ A guide must monitor the pull back of the upper pulley block **1.2**!

Note

▶ When pulling the upper pulley block **1.2** back from the KA-frame **8** to the lower pulley block **1.1** on the S-pivot section, the hoist rope (winch 1 **W I**) must be spooled out and the control rope (winch 5 **W V**) must be spooled up simultaneously!

▶ Pull the upper pulley block **1.2** with the control rope (winch 5 **W V**) to the lower pulley block **1.1** in the S-pivot section.

▶ When the upper pulley block **1.2** is centered in bracket of the lower pulley block **1.1** and “moved in” to the stop, see illustration **7**:
Insert the retaining pin **48** and secure with spring retainer **49**.

Result:

– The lower pulley block is pinned with the upper pulley block.

▶ Unhook the rope of the assembly winch **19** at point **P1**.

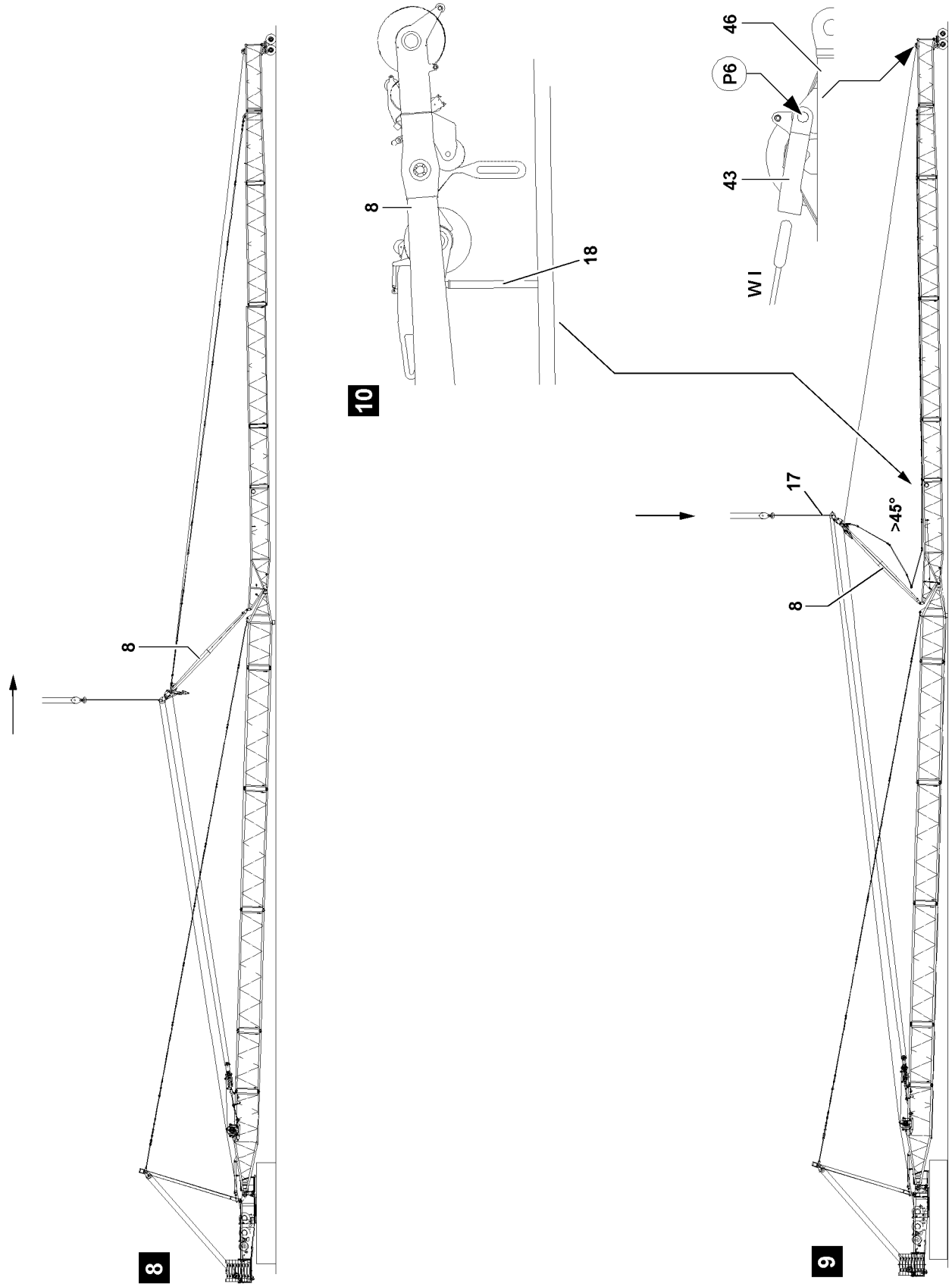

B111803

4.4 Placing the KA-frame down

Make sure that the following prerequisites are met:
– The upper pulley block **1.2** is pinned and secured with the lower pulley block **1.1**.
– An auxiliary crane is available.

▶ Attach the fastening rope **17** on the auxiliary crane.

NOTICE
Danger of slack rope formation!
▶ When erecting and taking down the KA- frame **8**, watch for slap rope formation of the hoist winch!

▶ Spool the hoist winch out and erect the KA- frame **8** simultaneously with the auxiliary crane to the vertical and then lower it to approximately 45°, see illustration **9**.
▶ Unpin the KA-frame guy rods on the guy rods of the K-lattice jib.
▶ Spool the hoist winch out and lower the KA- frame **8** simultaneously with the auxiliary crane on the assembly support **18**, see illustration **10**.
▶ Remove the auxiliary crane.
▶ Unhook the lock clamp of the hoist rope (winch 1 **W I**) on the rope lock **43** of the adapter for the auxiliary jib **46**.

4.5 Disassembling the K-lattice jib

Make sure that the following prerequisites are met:
– The guy rods are separated.
– An auxiliary crane is available.

Note
▶ Always support the LI-lattice sections sufficiently for easier removal!

▶ Unpin the LI-intermediate sections with the pin pulling device:
Unpin the pins, see Crane operating instructions, chapter 5.30.

Note
▶ Remove the pulley cart **36**, see Crane operating instructions, chapter 5.61!

▶ Remove the auxiliary crane.

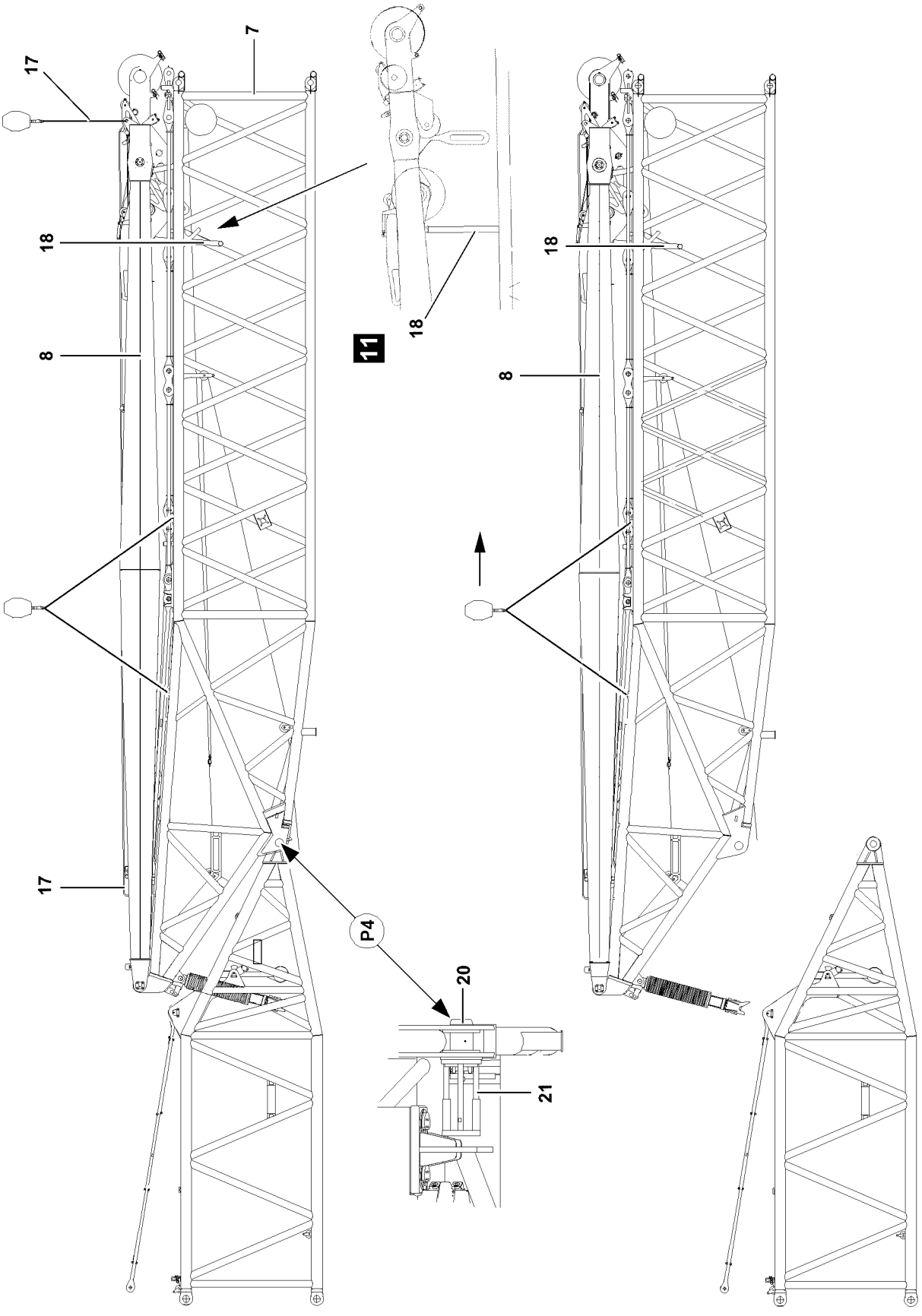

B111804

4.6 Unpinning the K-assembly unit on the K-adapter

Make sure that the following prerequisites are met:
– The lattice sections on the K-boom are disassembled.
– An auxiliary crane is available.

▶ Luff the S-boom up somewhat for easier disassembly of the K-assembly unit.
▶ Attach the fastening rope **17** on the auxiliary crane.
▶ Raise the KA-frame **8**.
▶ Push the assembly support **18** to the side and place the KA-frame completely on the K- pivot section **7**, see illustration **11**.
▶ Fasten the K-assembly unit on the auxiliary crane on the K-pivot section **7**.

WARNING
Falling components!
When unpinning the K-assembly unit on the K-adapter, the K-assembly unit can fall down!
Personnel can be severely injured or killed!
▶ It is prohibited for anyone to remain under the K-assembly unit during the unpinning procedure!
▶ Make sure that the K-assembly unit is safely held by the auxiliary crane!

▶ Unpin the K-assembly unit on the K-adapter on both sides on pin point **P4**:
Release the pins **20** and unpin with the hydraulic pin pulling device **21**.
▶ Swing the K-assembly unit to the side and place it down.
▶ Remove the auxiliary crane.

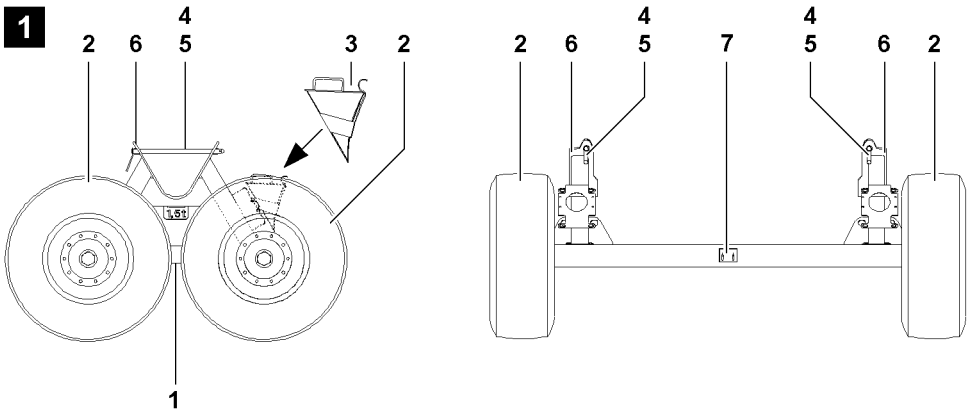

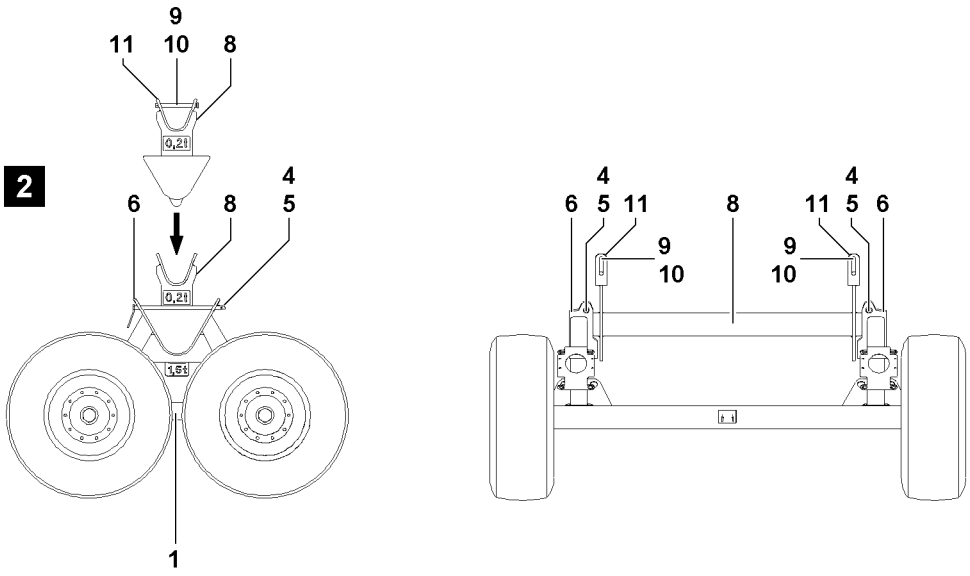

B108265

1 Components of pulley cart

Position	Description
1	Pulley cart
2	Tires
3	Wedge
4	Retaining pin
5	Linch pin
6	Receptacle
7	Axle
8[1)]	Adapter for pulley cart*
9[1)]	Retaining pin
10[1)]	Linch pin
11[1)]	Receptacle

1) Required for SLK-operation

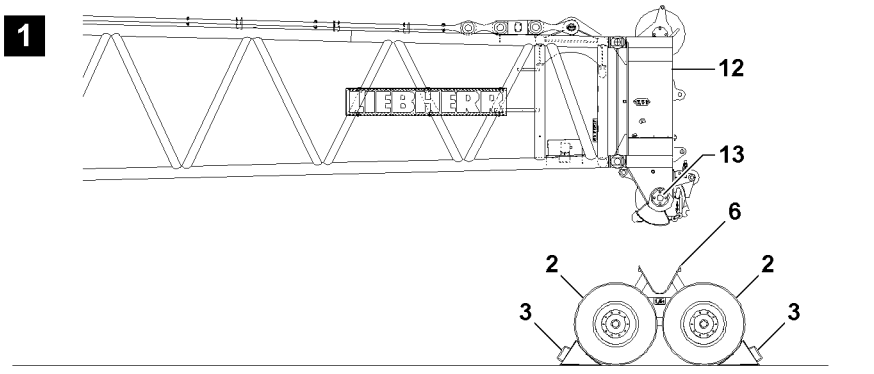

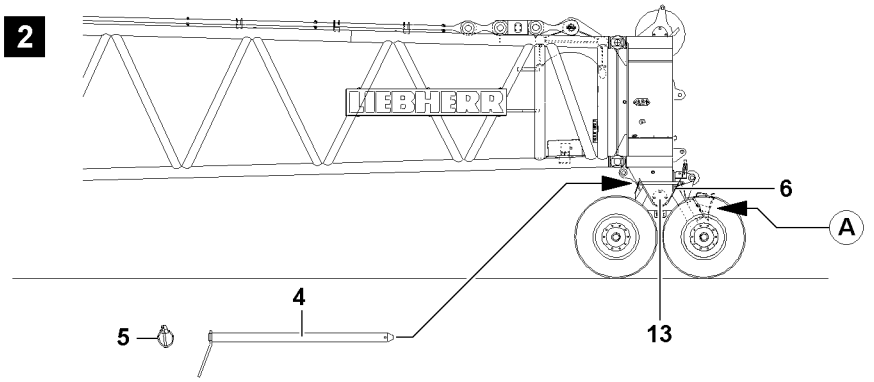

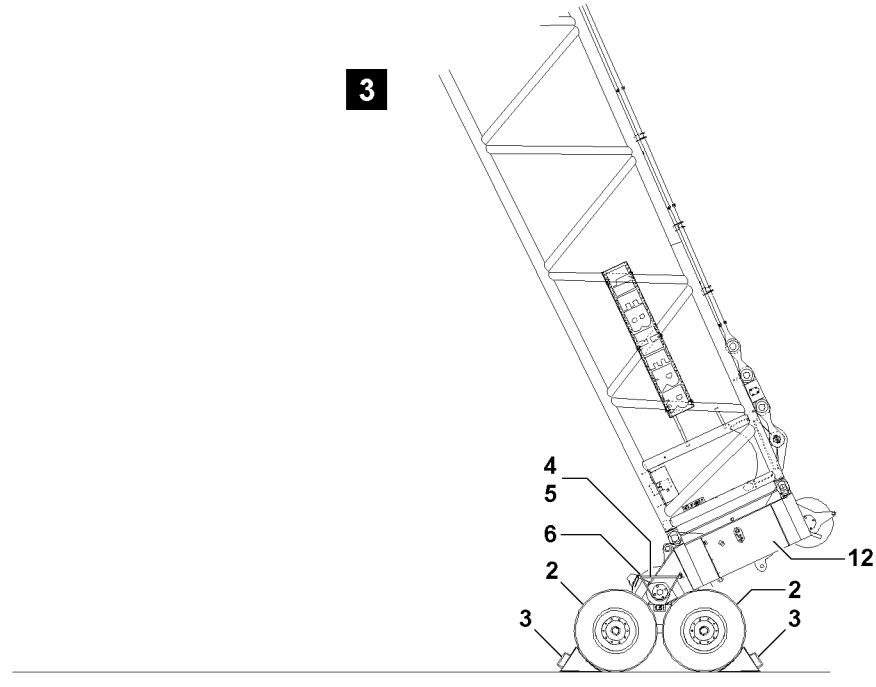

B108264

2 Installing / removing the roller cart from W-boom head

2.1 Installing the pulley cart

Place the pulley cart **1** under the W-end section **12** and affix with wedges **3**.

- ▶ Remove the wedges **3** from the transport retainer (point **A**) on the pulley cart.
- ▶ Secure the pulley cart **1** with wedges **3** to prevent it from rolling off: Push the wedges **3** on the left and right hand side tightly under the wheels **2**, illustration **1**.
- ▶ Release the retaining pins **4** on the receptacles **6** and unpin.
- ▶ Slowly lower the W-boom until the studs **13** of the W-end section **12** are placed in the receptacles **6** of the pulley cart, illustration **2**.

Secure the studs **13** in the receptacles **6** of the pulley cart.

- ▶ Insert the pin **4** at receptacles **6** and secure with linch pin **5**, illustration **2**.
- ▶ Remove the wedges **3** on the wheels.
- ▶ Remove the wedges **3** on the transport receptacle (point **A**) on the pulley cart.

2.2 Removing the pulley cart

When the boom system has reached a certain angle between the S-boom and the W-lattice jib, then the pulley cart is no longer required. Before luffing the boom system all the way up, remove the pulley cart on the W-end section.

WARNING
Overload of crane!
If the pulley cart is not removed before erecting the boom system all the way, the crane can be overloaded and topple over!
Personnel can be severely injured or killed!

- ▶ Remove the pulley cart before lifting the boom system from the ground!

- ▶ Remove the wedges **3** from the transport retainer (point **A**) on the pulley cart.
- ▶ Secure the pulley cart with wedges **3** to prevent it from rolling off: Push the wedges **3** on the left and right hand side tightly under the wheels **2**, illustration **3**.
- ▶ Release the retaining pin **4**: Remove the linch pin **5**.
- ▶ Unpin the retaining pin **4** on the receptacle **6**.
- ▶ Luff the boom system up.
- ▶ When the boom system is luffed up:
  Remove the wedges **3** on the wheels.
- ▶ Remove the wedges **3** on the transport receptacle (point **A**) on the pulley cart.
- ▶ Insert the retaining pin **4** in the receptacle **6** and secure with linch pins **5**.
- ▶ Remove the pulley cart.

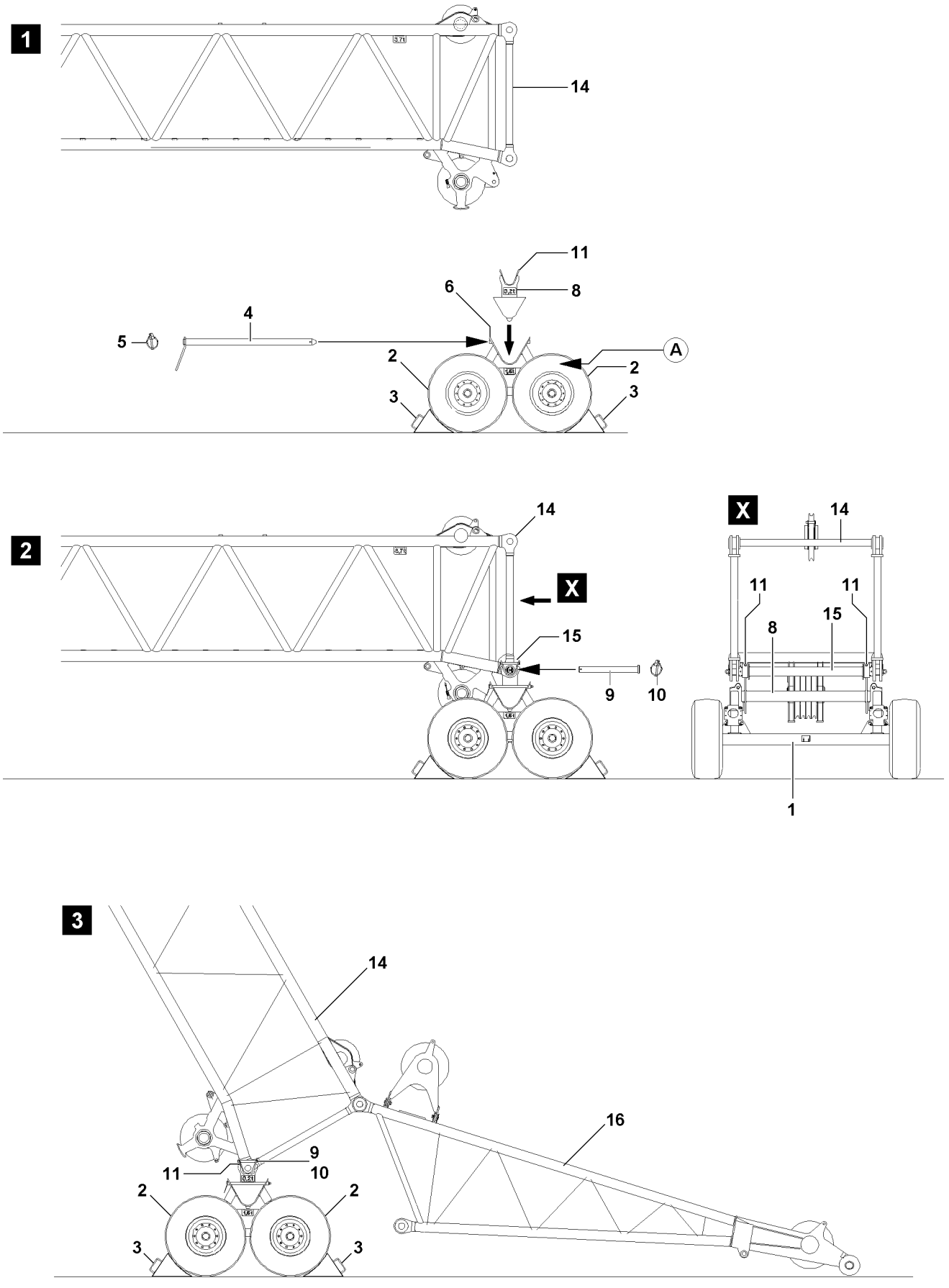

B108275

3 Installing / removing the pulley cart on the adapter for the auxiliary jib

3.1 Installing the “adapter for the pulley cart” on the pulley cart

The adapter for the pulley cart **8** is required to erect the SLK-boom combinations. To prevent the pulley set of the adapter for the auxiliary jib **14** from laying on the steel construction of the pulley cart, the receptacle **6** on the pulley cart must be raised. This elevation can be obtained by installing the adapter for the pulley cart **8**.

- ▶ Attach the adapter for the pulley cart **8** on the auxiliary crane.
- ▶ Release the retaining pins **4** on the pulley cart on both sides and unpin.
- ▶ Align the adapter for the pulley cart **8** on the receptacles **6** on the pulley cart.
- ▶ Lower the adapter for the pulley cart **8** in the receptacles **6** on the pulley cart.
- ▶ When the adapter for the pulley cart **8** is completely lowered in the receptacles **6** on the pulley cart:
  Insert the retaining pin **4** and secure with linch pin **5**.
- ▶ Remove the auxiliary crane.

3.2 Installing the pulley cart on the “adapter for the auxiliary jib”

Make sure that the following prerequisite is met:

– The adapter for the pulley cart **8** is properly installed and secured on the pulley cart.

Place the pulley cart under the adapter for the auxiliary jib **14** and affix with wedges **3**.

- ▶ Remove the wedges **3** from the transport retainer (point **A**) on the pulley cart.
- ▶ Secure the pulley cart with wedges **3** to prevent it from rolling off: Push the wedges **3** on the left and right hand side tightly under the wheels **2**, illustration **1**.
- ▶ Lower the adapter for the auxiliary jib **14** slowly until the pipe **15** is laying in the receptacles **11** on the adapter for the pulley cart **8**, illustration **2**, illustration **X**.

Secure the pipe **15** in the receptacles **11** on the adapter for the pulley cart **8**.

- ▶ Insert the pin **9** at receptacles **11** and secure with linch pin **10**, illustration **2**.
- ▶ Remove the wedges **3** on the wheels.
- ▶ Remove the wedges **3** on the transport receptacle (point **A**) on the pulley cart.

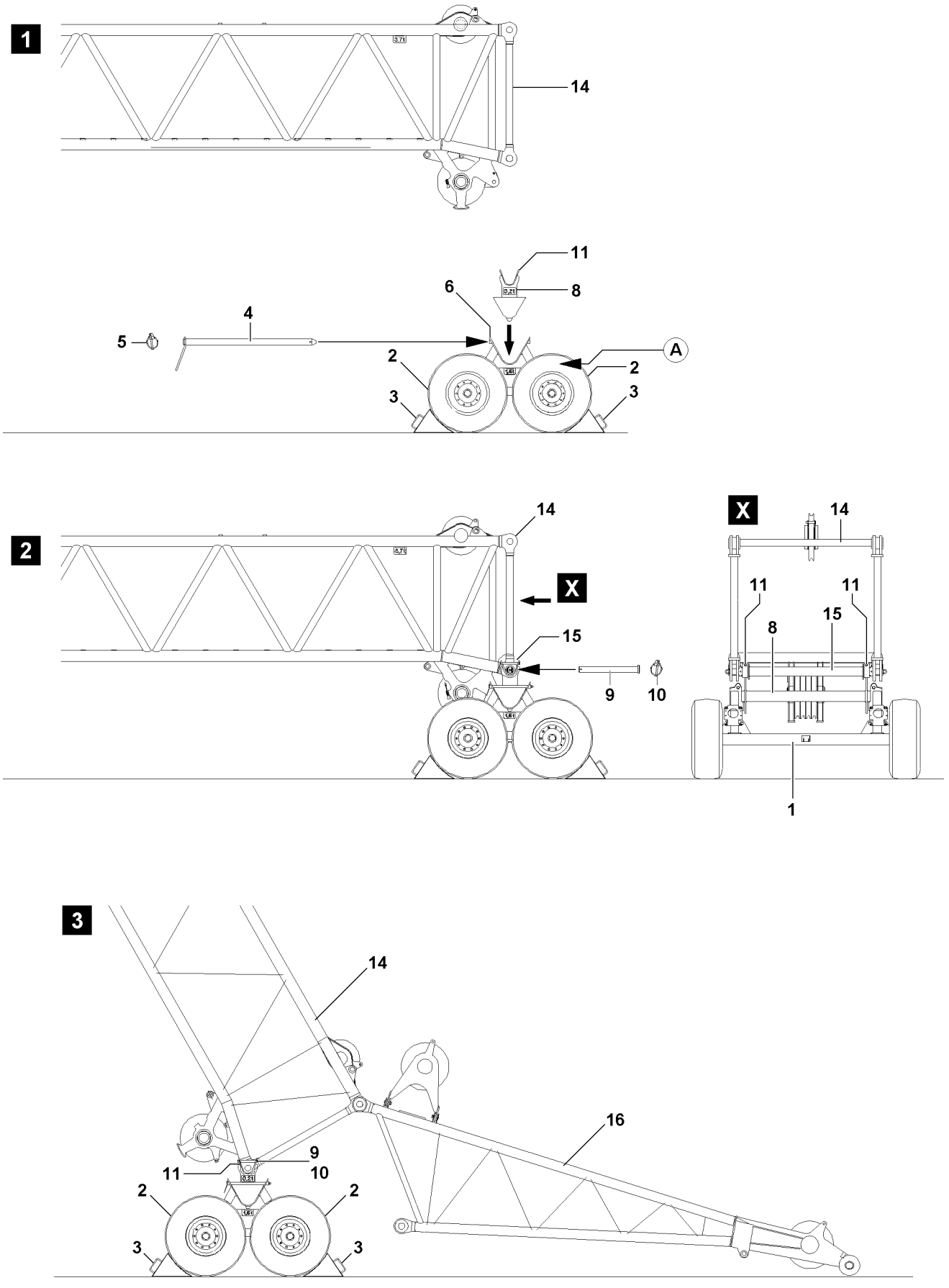

B108275

3.3 Removing the pulley cart on the “adapter for the auxiliary jib”

When the boom system has reached a certain angle between the SL-boom and the K-lattice jib, then the pulley cart is no longer required. Before lifting the boom system off, the pulley cart must be removed on the adapter for the auxiliary jib **14**.

WARNING
Overload of crane!
If the pulley cart is not removed before erecting the boom system all the way, the crane can be overloaded and topple over!
Personnel can be severely injured or killed!
- ▶ Remove the pulley cart before lifting the boom system from the ground!

- ▶ Remove the wedges **3** from the transport retainer (point **A**) on the pulley cart.
- ▶ Secure the pulley cart with wedges **3** to prevent it from rolling off: Push the wedges **3** on the left and right hand side tightly under the wheels **2**, illustration **4**.
- ▶ Release the retaining pin **9**: Remove the linch pin **10**.
- ▶ Release the retaining pin **9** on the receptacle **11** and unpin.
- ▶ Luff the boom system up.
- ▶ When the boom system is luffed up:
  Remove the wedges **3** on the wheels.
- ▶ Remove the wedges **3** on the transport receptacle (point **A**) on the pulley cart.
- ▶ Insert the retaining pin **9** in the receptacle **11** and secure with linch pins **10**.
- ▶ Remove the pulley cart.

3.4 Removing the “adapter for the pulley cart” * on the pulley cart

- ▶ Attach the adapter for the pulley cart **8** on the auxiliary crane.
- ▶ Release the retaining pins **9** on the pulley cart on both sides and unpin.
- ▶ Lift the adapter for the pulley cart **8** and place it on a pallet or a suitable support.
- ▶ Remove the auxiliary crane.
- ▶ Insert the retaining pin **9** in the receptacles **11** and secure with linch pins **10**.

6 Additional equipment

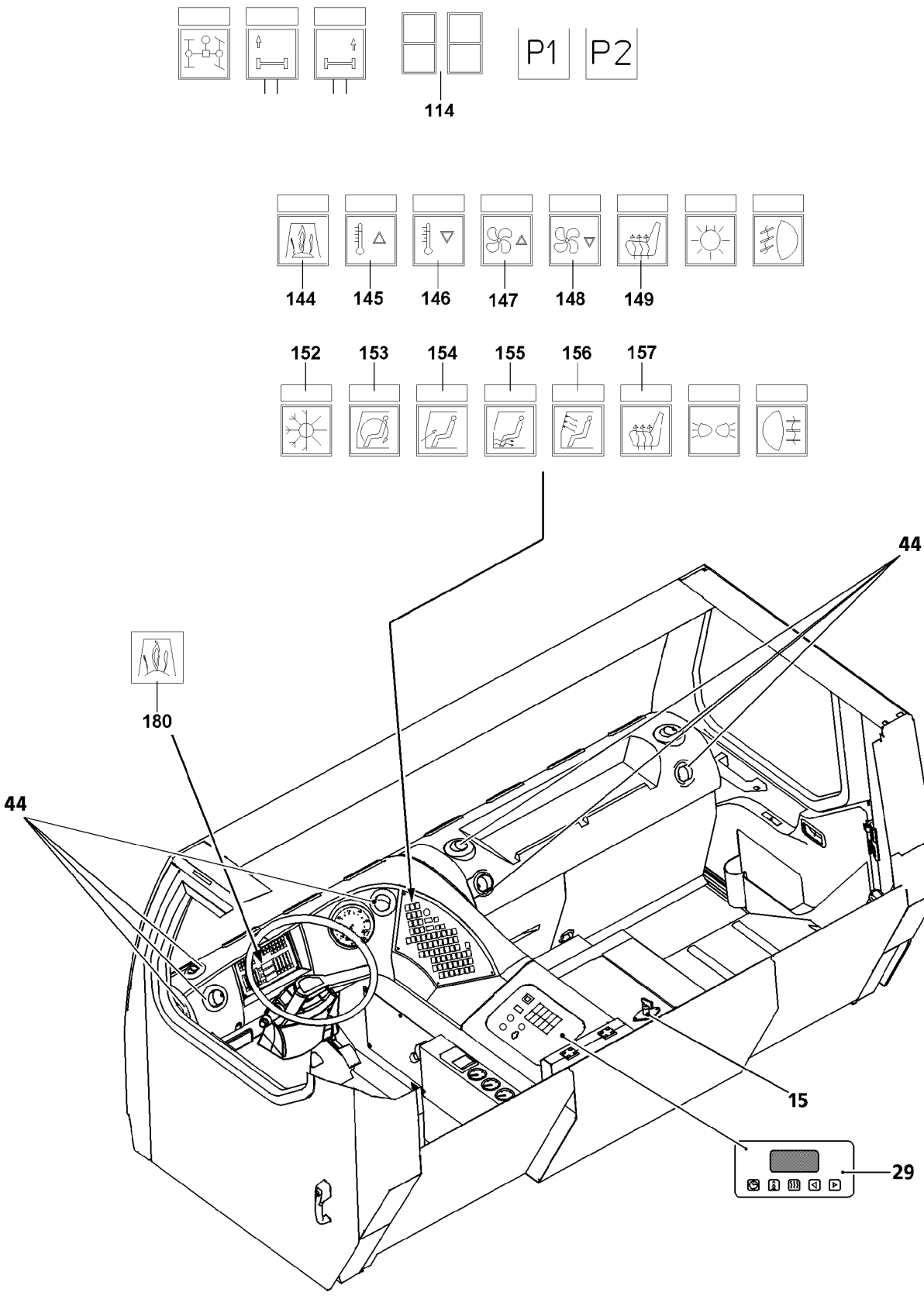
P1
P2
114
144
145
146
147
148
149
152
153
154
155
156
157
180
44
44
15
29

B198440

1 Heating the driver's cab

The driver's cab can be heated using three different types of heaters which are independent of each other:

– Engine-dependent heater.
– Engine-independent auxiliary heater with engine preheating, at ambient temperatures of up to -40 °C, WEBASTO; Thermo 90 S.*
– Engine-independent auxiliary heater with engine preheating, at ambient temperatures of less than -40 °C, WEBASTO; DBW 2020*, Air Top 5000*.

The individual adjustment of the heater (for both engine-dependent and engine-independent auxiliary heaters*) is carried out with the control elements under the crane operator's seat as well as via switches and indicator lights on the instrument panel.

CAUTION
Risk of damage to the heater control units* when carrying out electrical welding work on the crane!
▶ Disconnect the negative and positive cables from the batteries and lay the positive cable to the vehicle ground.

1.1 Heater operation

1.1.1 Adjusting the temperature

The driver's cab is heated using the engine coolant. The temperature may be set in 7 different temperature stages (0=“cold” to 6=“warm”).

Note
▶ The selected settings are maintained after the ignition is turned off.

▶ If you want to increase the temperature:
Press button **145**.

Result:
– The function control on button **145** lights up.
– The display unit **114** briefly displays the temperature level set.

▶ If you want to decrease the temperature:
Press button **146**.

Result:
– The function control on button **146** lights up.
– The display unit **114** briefly displays the temperature level set.

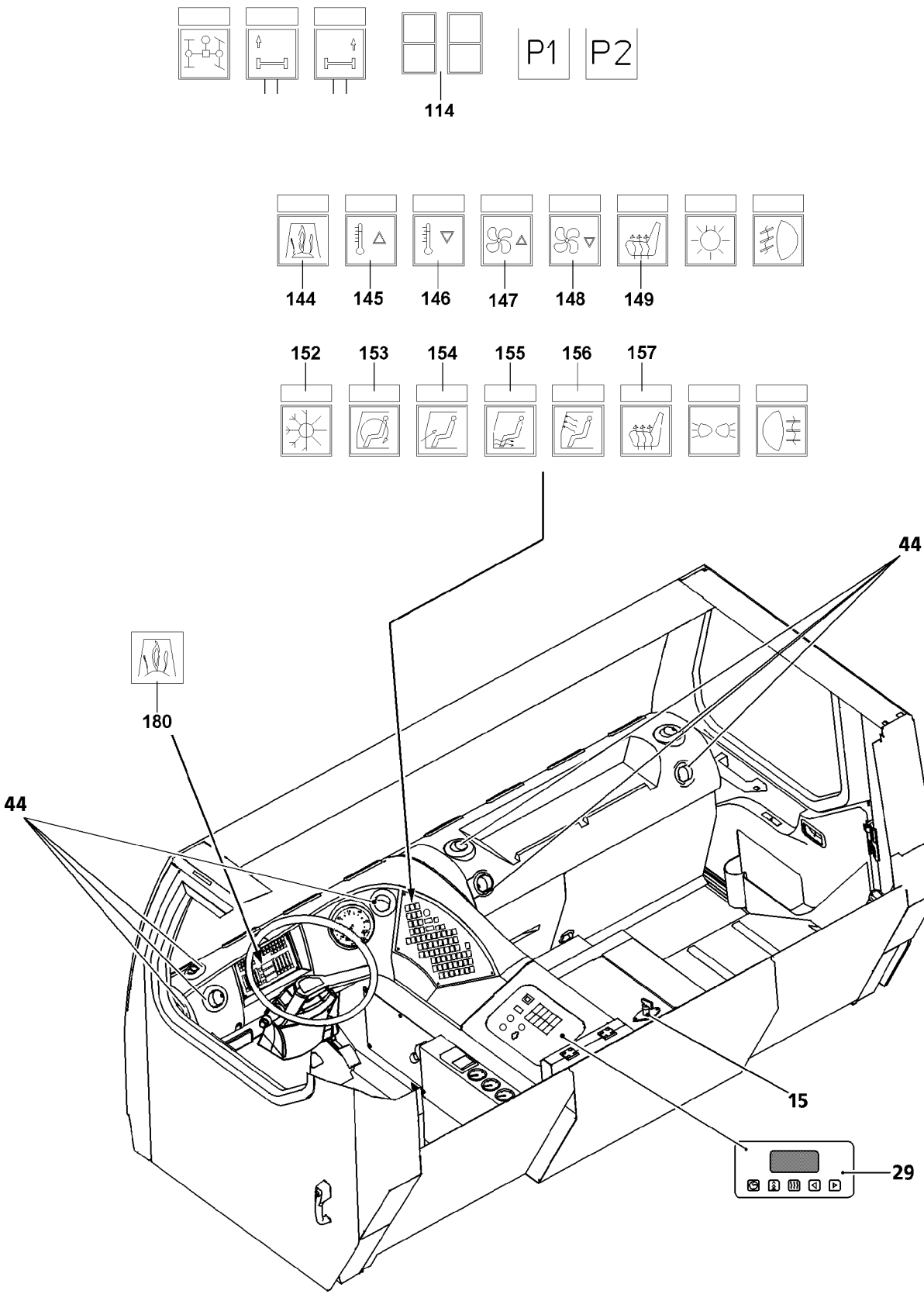
P1
P2
114
144
145
146
147
148
149
152
153
154
155
156
157
180
44
44
15
29

B198440

1.1.2 Adjusting the ventilation

The fan speed can be set in four different stages (0="off" to 3="maximum fan speed").

▶ If you want to increase the fan speed:
Press button **147**.

Result:

– The function control on button **147** lights up.
– The display unit **114** briefly displays the set fan speed.

▶ If you want to decrease the fan speed:
Press button **148**.

Result:

– The function control on button **148** lights up.
– The display unit **114** briefly displays the set fan speed.

1.1.3 Adjusting the recirculated air / fresh air

The supply of fresh air into the cab can be controlled using button **153** and button **154**.

Recirculated air button 153	**Fresh air button 154**	**Air distribution**
On	Off	Recirculated air only
Off	On	Fresh air only
On	On	Approx. 70% recirculated air and 30% fresh air
Off	Off	Approx. 30% recirculated air and 70% fresh air

▶ Press button **153**.

Result:

– The function control on button **153** lights up.
– The button **153** has been turned on.

▶ Press button **154**.

Result:

– The function control on button **154** lights up.
– The button **154** has been turned on.

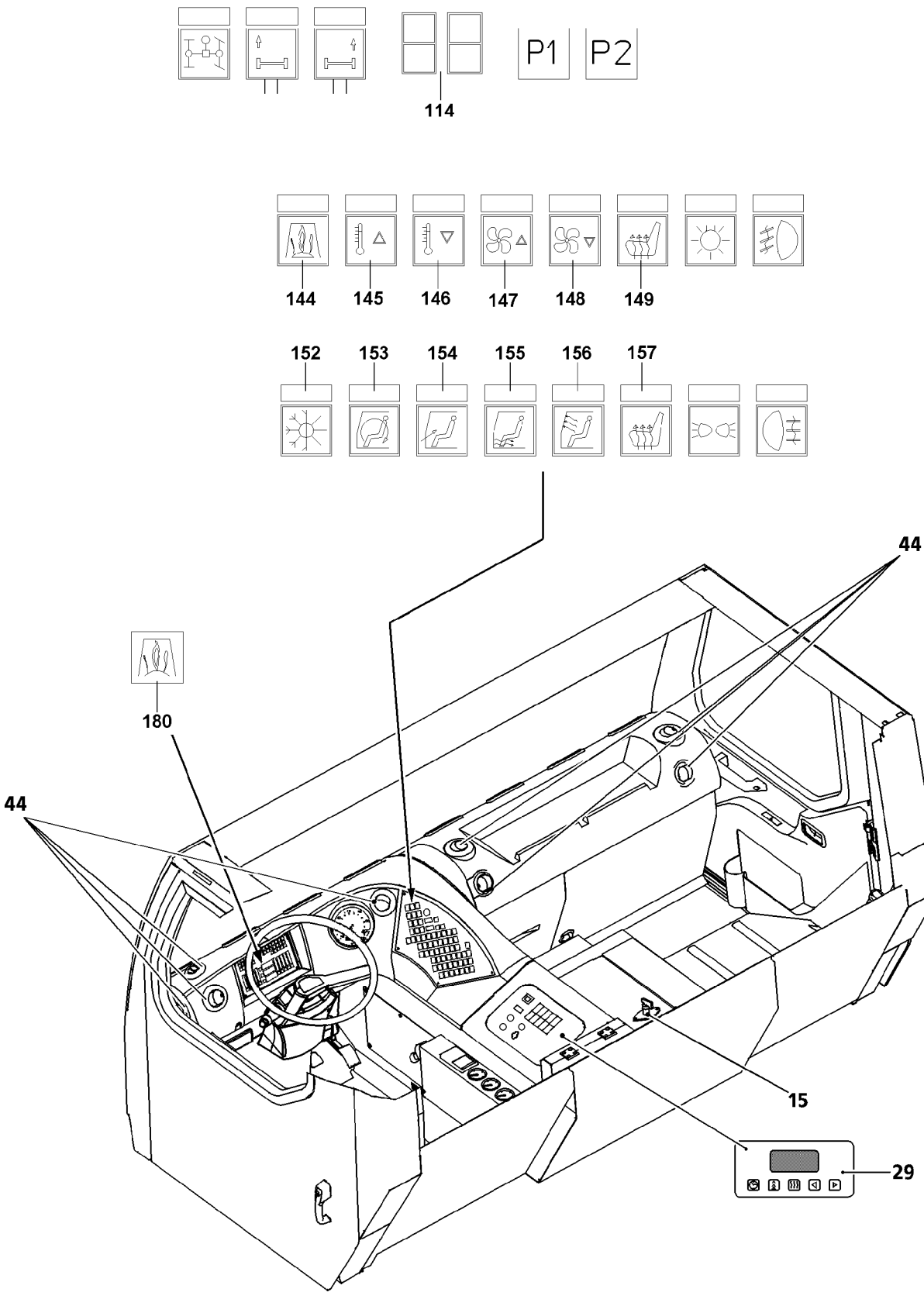
P1
P2
114
144
145
146
147
148
149
152
153
154
155
156
157
180
44
44
15
29

B198440

1.1.4 Ventilating the floorboard area / front windshield

The supply of fresh air into the cab can be controlled using button **155** and button **156**.

Floorboard area button 155	**Front windshield button 156**	**Air distribution**
On	Off	Floorboard area only
Off	On	Front windshield only
On	On	Approx. 70% floorboard area and 30% front windshield
Off	Off	Approx. 30% floorboard area and 70% front windshield

▶ Press button **155**.

Result:

– The function control on button **155** lights up.
– The button **155** has been turned on.

▶ Press button **156**.

Result:

– The function control on button **156** lights up.
– The button **156** has been turned on.

1.1.5 Adjusting the air distribution

▶ Open air vent **44**.

Result:

– Air distribution takes place.

▶ Close the air vent **44**.

Result:

– The air distribution is completed.

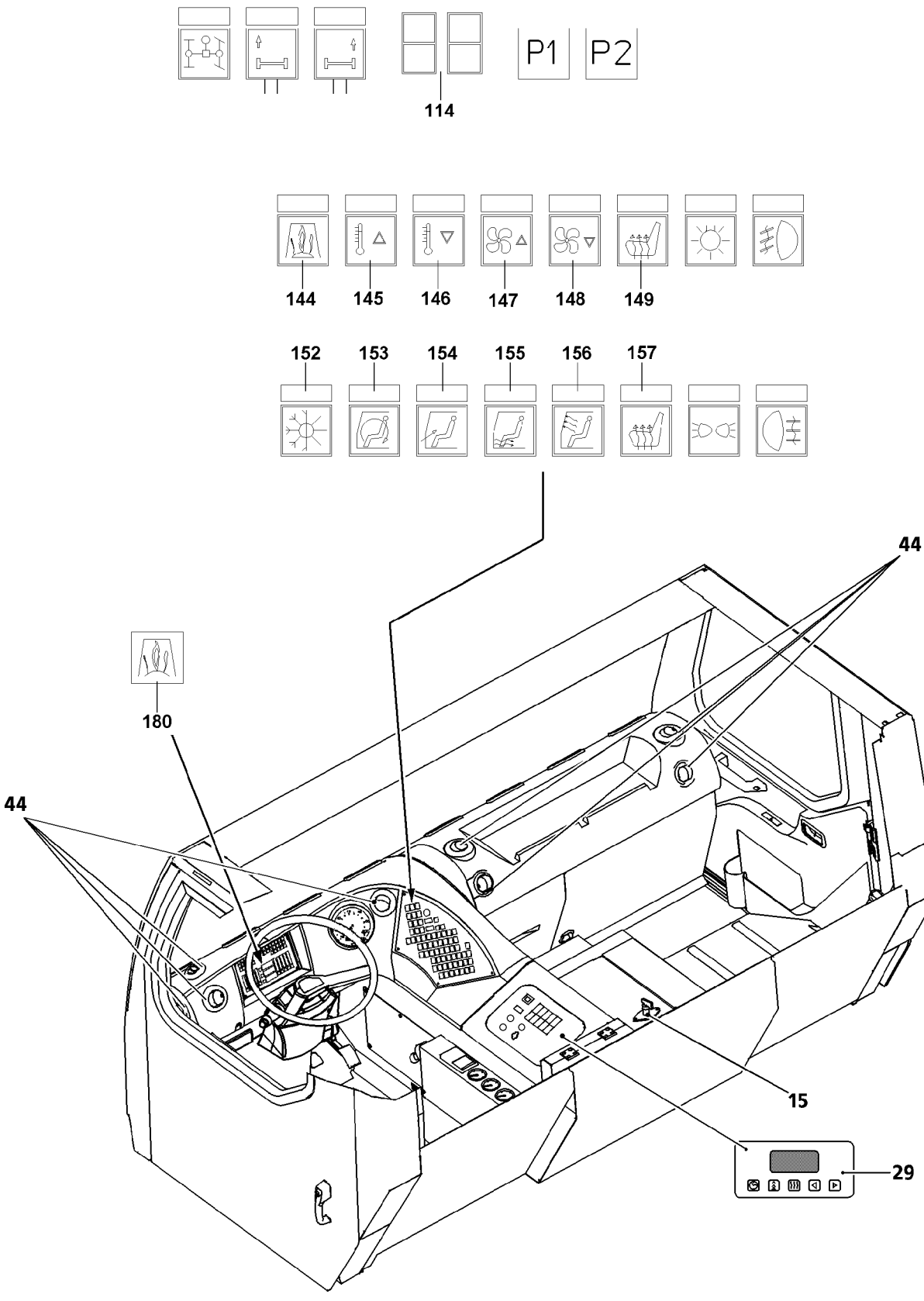
P1
P2
114
144
145
146
147
148
149
152
153
154
155
156
157
180
44
44
15
29

B198440

1.2 Operating the engine-independent auxiliary heater*

The engine-independent auxiliary heater is used to heat the driver cab when the engine is turned off and as auxiliary heat* at low ambient temperatures if the engine-dependent heater is insufficient.
For detailed description of the auxiliary heater* refer to the enclosed manufacturer's operating instructions.
In summer run the auxiliary heater* once a month for approx. 15 to 20 minutes.
Carry out maintenance work on the auxiliary heater* as outlined in the enclosed manufacturer's operating instructions.

1.2.1 Start up

CAUTION
Risk of damage to auxiliary heater!
▶ Fill all units with sufficient service fluids for winter operation, as specified in the lubricant chart.

DANGER
Risk of poisoning and suffocation in enclosed areas!
▶ Operate the heater, even with a timer, only in closed areas such as garages or workshops if an exhaust suction system is present.

DANGER
Risk of explosion!
In areas where combustible fumes or dust could form, such as in the vicinity of storage areas for fuel, coal, wood dust or grain storage or similar and in the vicinity of filling stations or tank depots, there is a risk of explosion.
▶ Turn off the heater.

▶ Press button **144**.

Result:
– The function control on the button **144** lights up.
– The indicator light **180** lights up.
– The fan comes on automatically at level 1 in order to prevent the auxiliary heater from overheating.

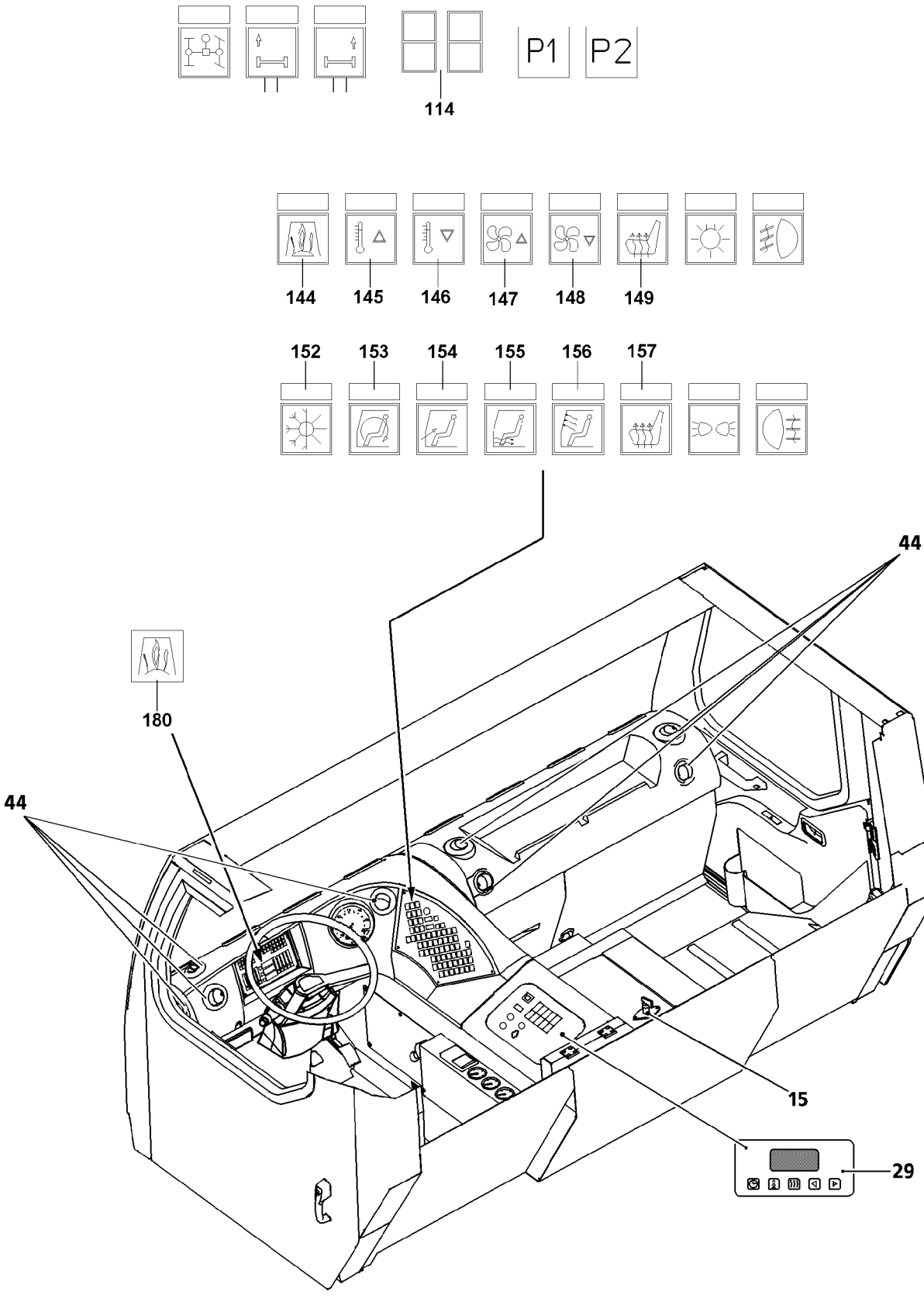
P1
P2
114
144
145
146
147
148
149
152
153
154
155
156
157
180
44
44
15
29

B198440

1.2.2 Turning off

▶ Press button **144**.

Result:

– The function control on the button **144** turns off.
– An afterrun is carried out each time the auxiliary heater is turned off.
The keypad unit remains on even if the ignition key has been removed.

CAUTION
Danger of property damage!
▶ Turn the battery master switch off only when the heater after run is over.

When the after run is over:
– The indicator light **180** turns off.
– The keypad unit turns off automatically.

1.2.3 Operation with timer*

For a detailed description of the timer **29** refer to the enclosed manufacturer's operating instructions.
▶ Set the required turn-on time, temperature and duration of heater operation on the timer **29**.

1.2.4 Venting the system

When draining the engine coolant, the contents of the heating system will also be drained because the engine and heater operate as one circuit. When refilling the system, it should be carefully vented.
▶ Fill the coolant via the expansion tank of the engine cooling circuit as specified in the lubricant chart.
▶ Start the engine as described in chapter 3.04.
▶ Set the button **145** to level 3.
▶ Check the expansion tank for air bubbles.

Result:

– The engine is bled as soon as no more air bubbles rise up.

▶ When no more air bubbles appear in the expansion tank:
Set the button **146** for the driver's cab temperature to level 0.

Result:

– The heating circuit will be bled.

▶ Check the expansion tank for air bubbles.

Result:

– The heater circuit is bled as soon as no more air bubbles rise up.

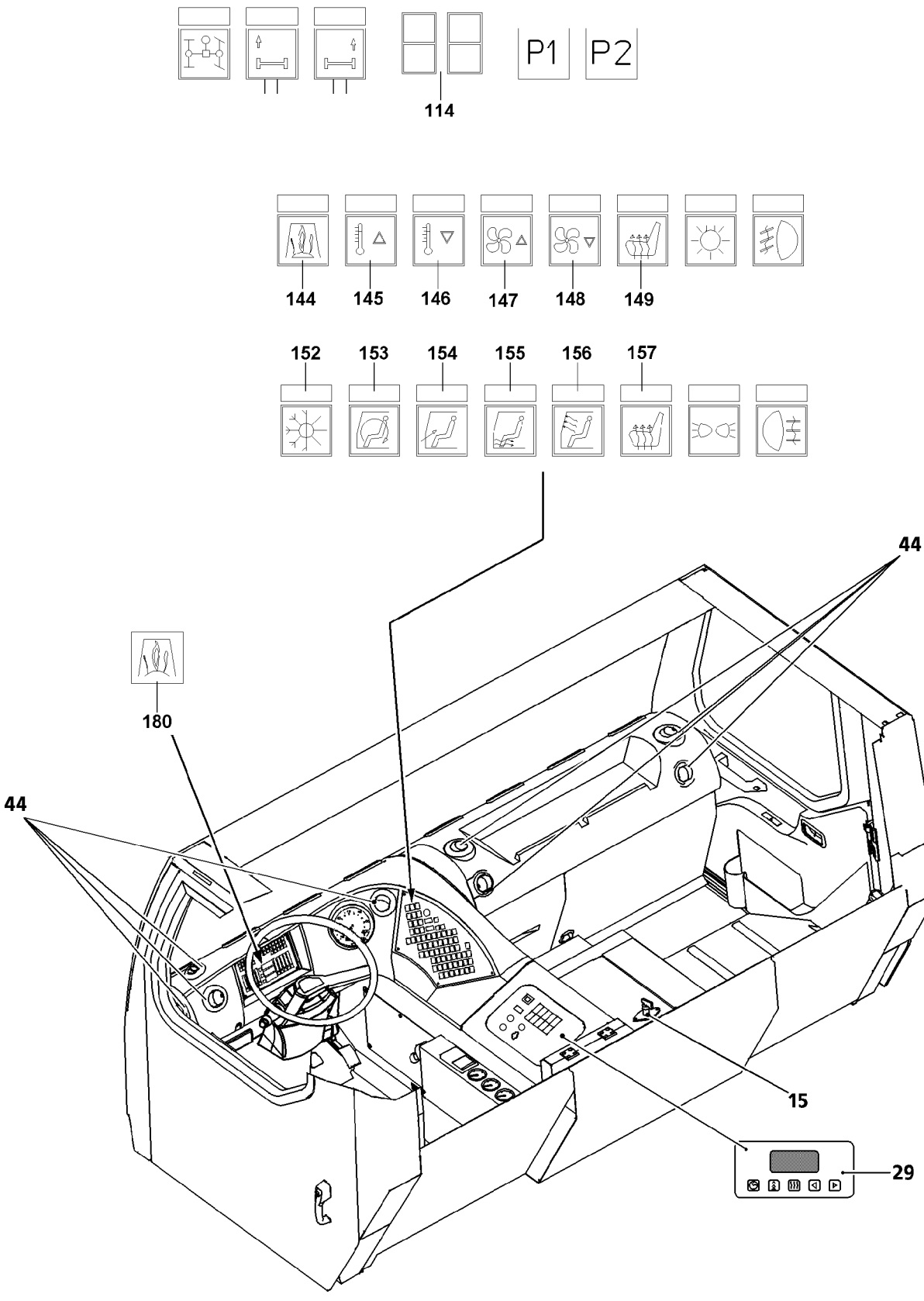
P1
P2
114
144
145
146
147
148
149
152
153
154
155
156
157
180
44
44
15
29

B198440

1.3 Operating the engine-independent auxiliary heater for engine pre-heating*

At ambient temperatures of less than -20 °C, the engine must be pre-heated by the engine pre-heating system.
At ambient temperatures below -40 °C, the engine, the injection pump and the transmission must be preheated with the engine preheating system, which is operated with diesel fuel.
For a detailed description of the engine preheating system, refer to the enclosed manufacturer's operating instructions.

1.3.1 Start up

CAUTION
Risk of damage to auxiliary heater!
▶ Fill all units with sufficient service fluids for winter operation, as specified in the lubricant chart.

DANGER
Risk of poisoning and suffocation in enclosed areas!
▶ Operate the heater, even with a timer, only in closed areas such as garages or workshops if an exhaust suction system is present.

DANGER
Risk of explosion!
In areas where combustible fumes or dust could form, such as in the vicinity of storage areas for fuel, coal, wood dust or grain storage or similar and in the vicinity of filling stations or tank depots, there is a risk of explosion.
▶ Turn off the heater.

▶ Turn the battery master switch **15** on.
▶ Set the temperature selection to stage 0=“cold”.
▶ Press button **144**.

Result:
– The function control on the button **144** lights up.
– The prerun of the engine preheating system turns on and runs for approx. 10 to 25 seconds.
– The engine preheating starts after 10 to 25 seconds.
– The engine preheating runs in automatic regulating mode.

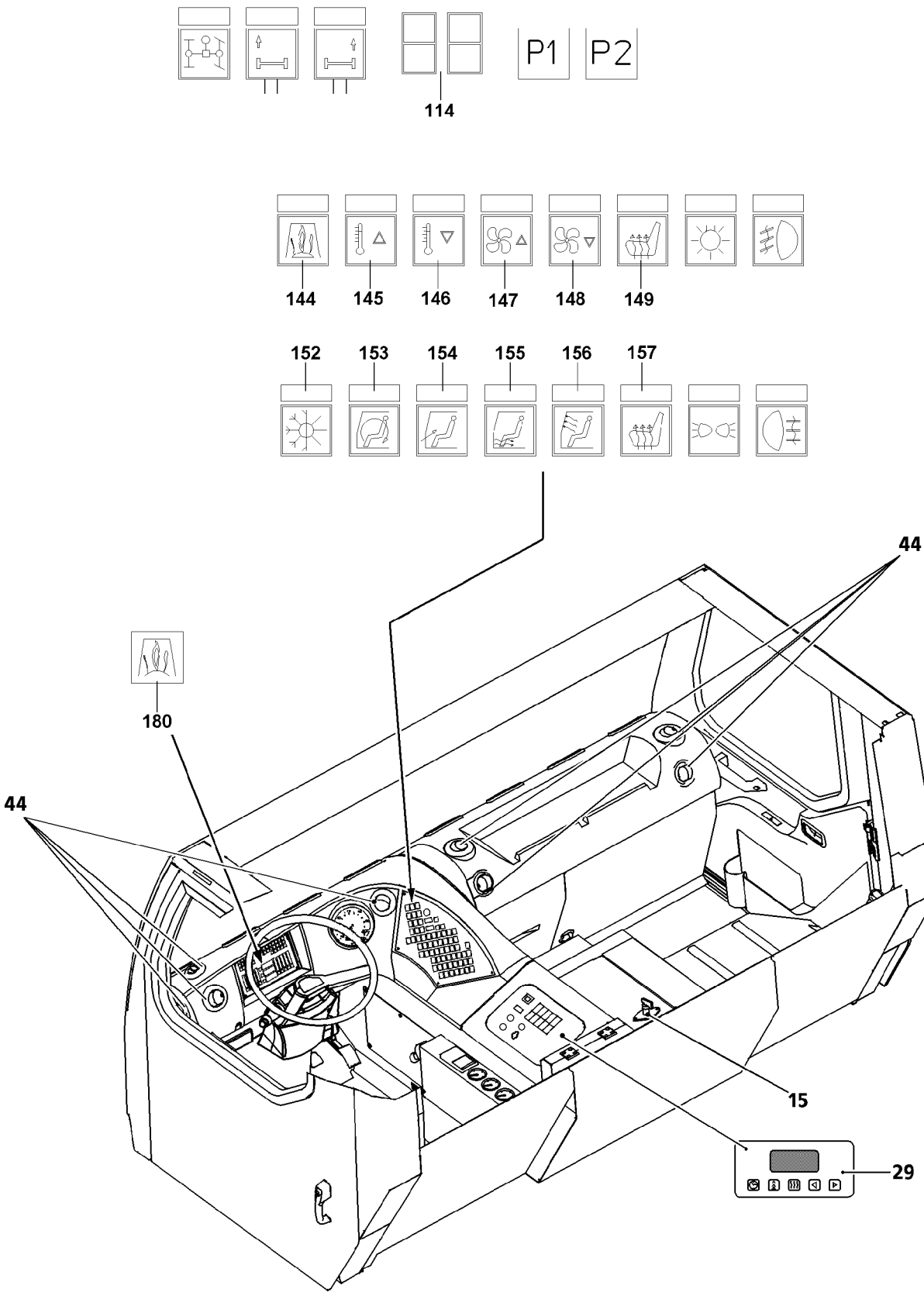
P1
P2
114
144
145
146
147
148
149
152
153
154
155
156
157
180
44
44
15
29

B198440

1.3.2 Turning off

▶ When the preheating period is over:
Press button **144**.

Result:

– The function control on the button **144** turns off.
– Engine preheating is completed.
– An afterrun of the engine preheating will run up to 150 seconds.

1.3.3 Starting up with preselect clock*

For a detailed description of the timer* **29** refer to the enclosed manufacturer's operating instructions.

▶ Turn the battery master switch **15** on.
▶ Before turning off the engine, set the temperature selection to level 0=“cold”.
▶ Use the preselect clock* **29** to switch on the engine preheating.

Result:

– The prerun of the engine preheating system turns on and runs for approx. 10 to 25 seconds.
– The engine preheating starts after 10 to 25 seconds.
– The engine preheating runs in automatic regulating mode.

1.3.4 Turning off with preselect clock*

▶ When the preheating period is over:
Turn off the preselect clock* **29**.

Result:

– An afterrun of the engine preheating will run up to 150 seconds.

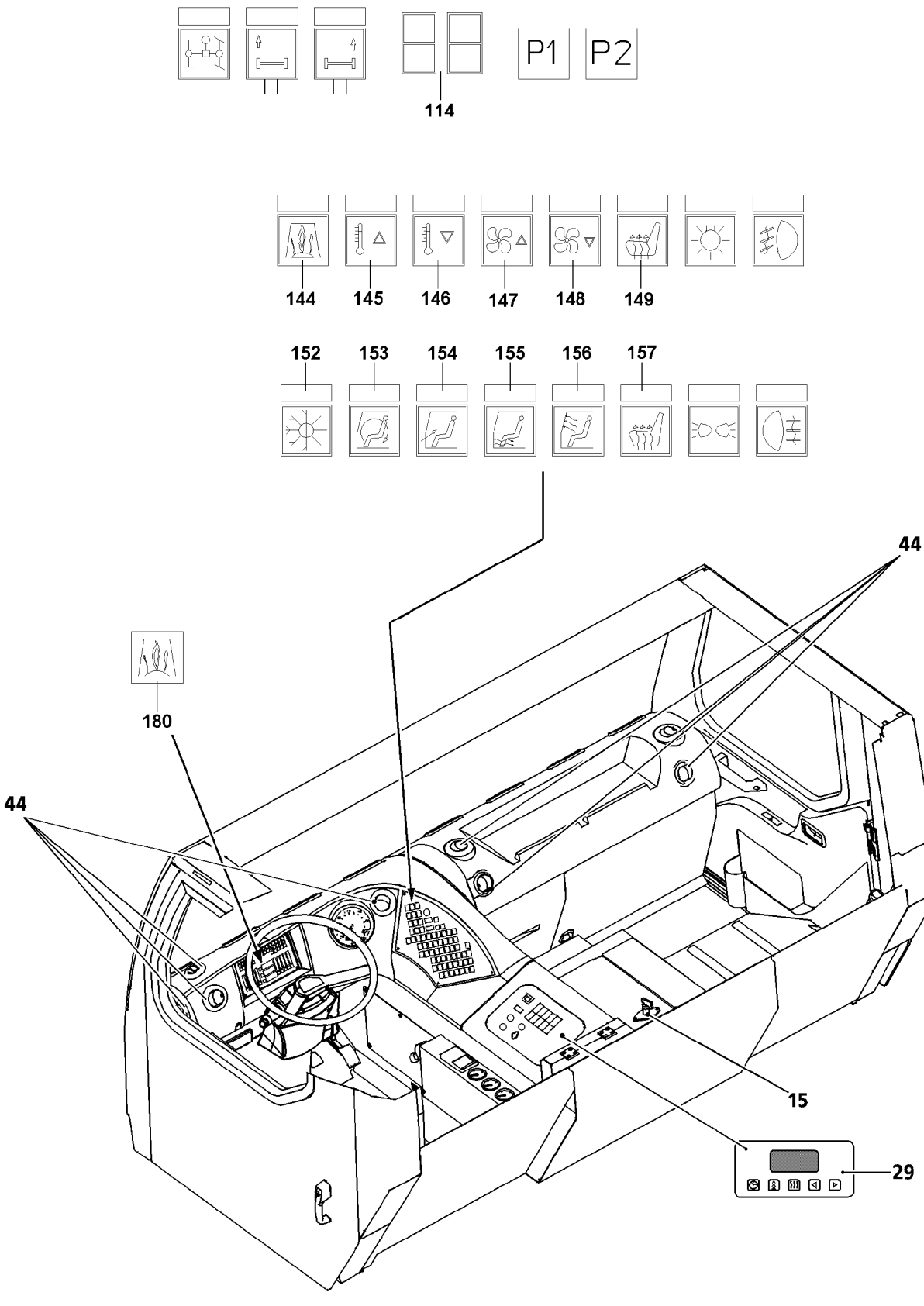
P1
P2
114
144
145
146
147
148
149
152
153
154
155
156
157
180
44
44
15
29

B198440

1.4 Air conditioning system* operation

The cab can be air conditioned.
For a detailed description of the air conditioning system, refer to the enclosed manufacturer's operating instructions.
The air conditioning system* can be operated independent of the auxiliary heater*.
Maintenance work on the air conditioning system* is to be carried out according to the enclosed manufacturer's operating instructions.

1.4.1 Start up

Make sure that the following prerequisites are met:
– the battery master switch is turned on,
– the engine is running.

▶ Close the doors and windows in the driver's cab.

If the temperature of the emitted air is too low, then it can be regulated by turning the heater on.
▶ Set the temperature with the button **146** to stage 0=“cold”.
Result:
– The display **114** shows the selected temperature stage.

▶ Adjust the fan speed using the button **147** or set the button **148** to at least level 1.
Result:
– The display **114** shows the selected fan speed.

▶ Turn on the air conditioning system with the button **152**.
Result:
– The function control on the button **152** lights up.

▶ If you wish to change the air conditioning system's cooling capacity:
Press the button **153** air circulation, button **147** “increase fan speed” or button **148** “decrease fan speed”.

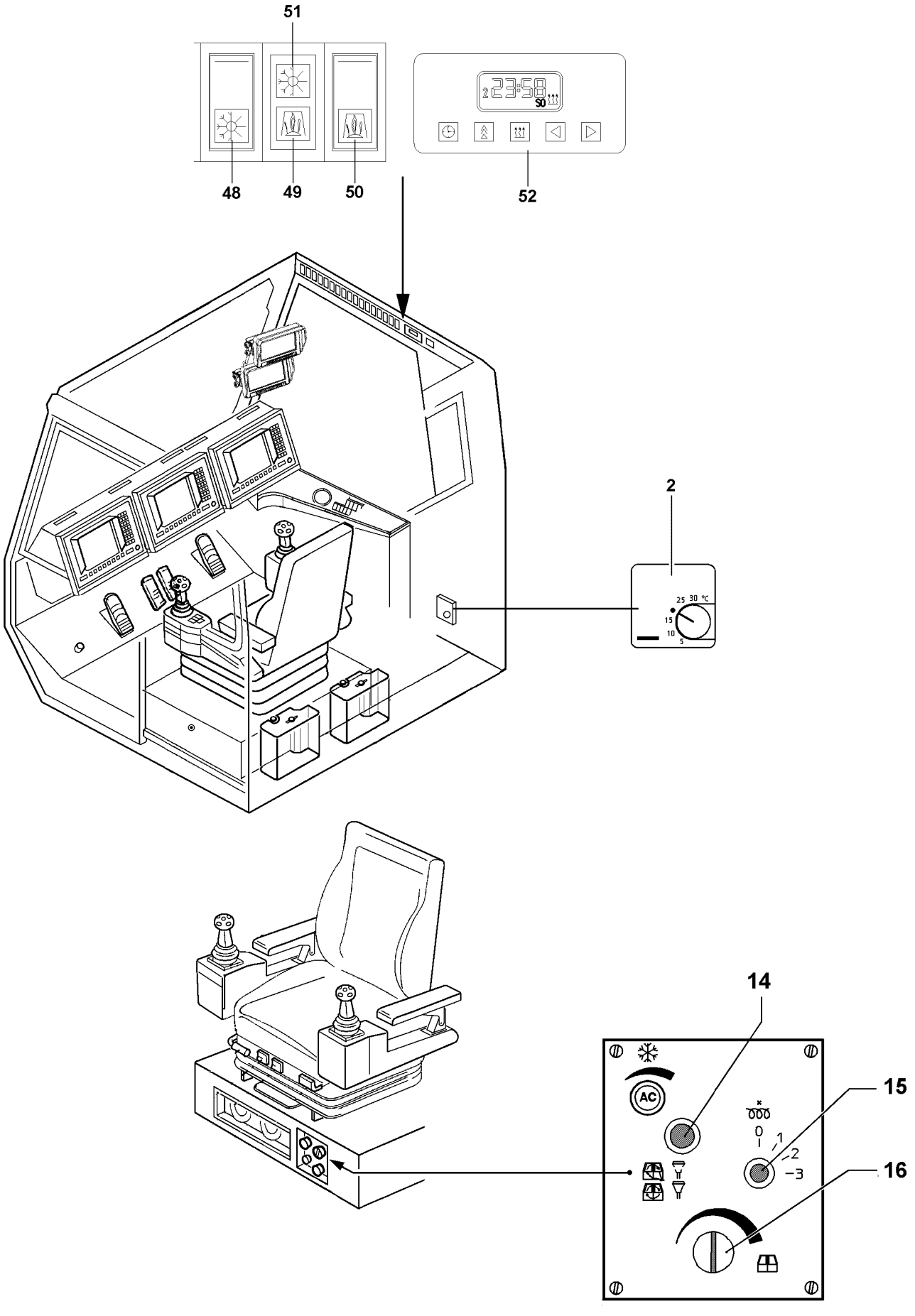

B108314

2 Heating the crane operator's cab

The cab can be heated with two heaters, which are independent of each other:
– Engine-dependent heater.
– Engine-independent auxiliary heater, for outside temperatures of up to -40 °C, WEBASTO; Thermo 90 S.*

The individual adjustment of the heater (for both engine-dependent and engine-independent auxiliary heaters*) is carried out with the control elements under the crane operator's seat as well as via switches and indicator lights on the instrument panel.

NOTICE
Risk of damage to the heater control units* when carrying out electrical welding work on the crane!
▶ Disconnect the negative and positive cables from the batteries and connect the positive cables to the vehicle ground.

2.1 Heater operation

2.1.1 Adjusting the temperature

The cab is heated with the engine coolant.
▶ Set the knob **16**.

2.1.2 Adjusting the ventilation

▶ Set the blower with the 3-stage rotary switch **15**.

Result:
– The air volume will be regulated.

2.1.3 Adjusting the recirculated air / fresh air

▶ Actuate the changeover switch **14**.

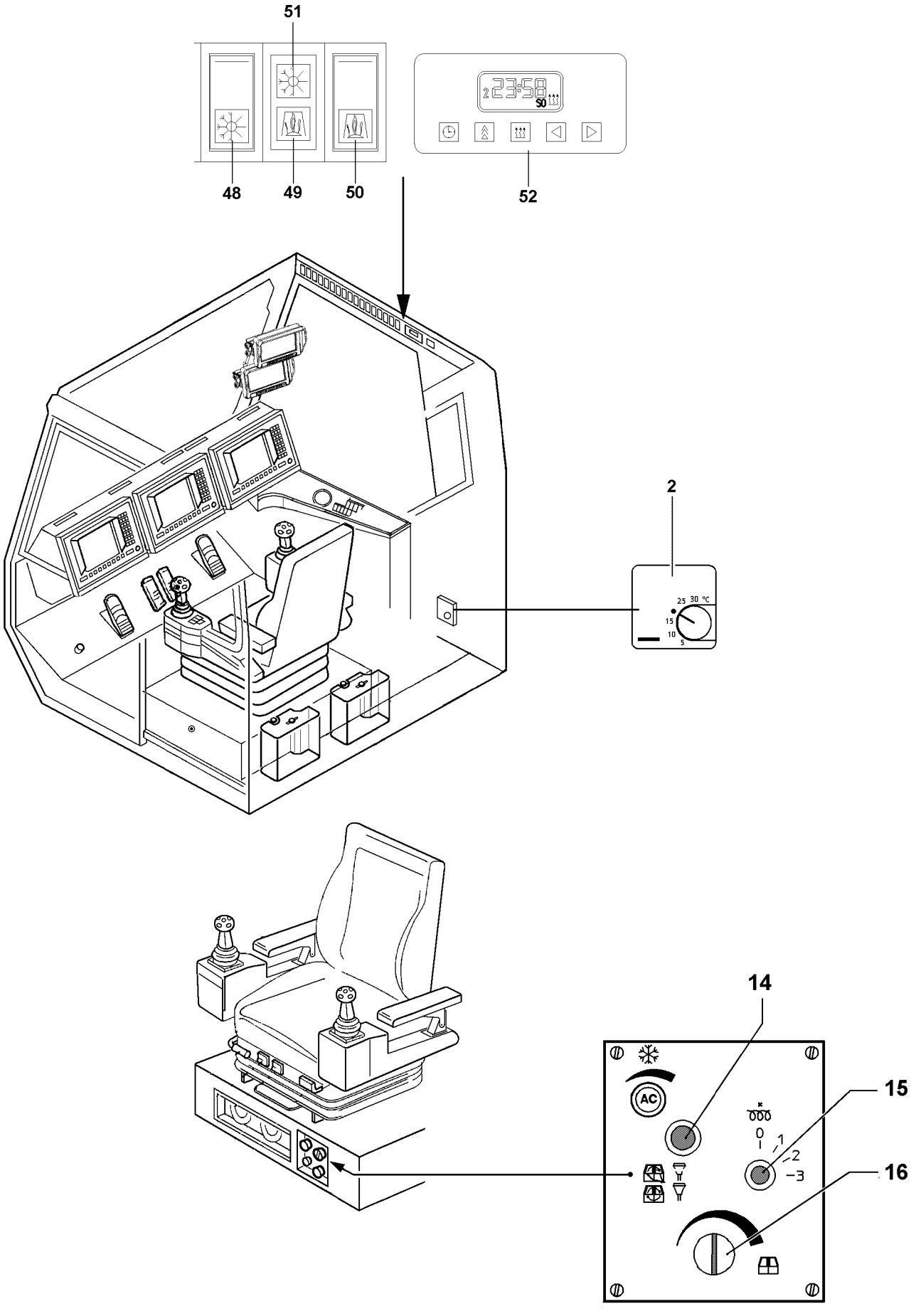

B108314

2.2 Operating the engine-independent auxiliary heater*

The engine-independent auxiliary heater is used to heat the cab when the engine is turned off and as auxiliary heater* at low ambient temperatures, if the engine-dependent heating is insufficient.
For detailed description of the auxiliary heater* refer to the enclosed manufacturer's operating instructions.
In summer run the auxiliary heater* once a month for approx. 15 to 20 minutes.
Carry out maintenance work on the auxiliary heater* as outlined in the enclosed manufacturer's operating instructions.

2.2.1 Start up

NOTICE
Risk of damage to auxiliary heater!
▶ Fill all units with sufficient service fluids for winter operation, as specified in the lubricant chart.

DANGER
Risk of poisoning and suffocation in enclosed areas!
▶ Operate the heater, even with a timer, only in closed areas such as garages or workshops if an exhaust suction system is present.

DANGER
Risk of explosion!
In areas where combustible fumes or dust could form, such as in the vicinity of storage areas for fuel, coal, wood dust or grain storage or similar and in the vicinity of filling stations or tank depots, there is a risk of explosion.
▶ Turn off the heater.

▶ Set the knob **16** to “warm”.
▶ Actuate the switch **50**.
Result:
– The function control on the switch **50** lights up.
– The indicator light **49** lights up.

2.2.2 Turning off

▶ Actuate the switch **50**.
Result:
– The function control on the switch **50** turns off.
– Each time the auxiliary heater is turned off, it continues to run up to 150 seconds longer.

NOTICE
Danger of property damage!
▶ Turn the battery master switch off only when the heater after run is over.

– When the after run is over:
The indicator light **49** turns off.

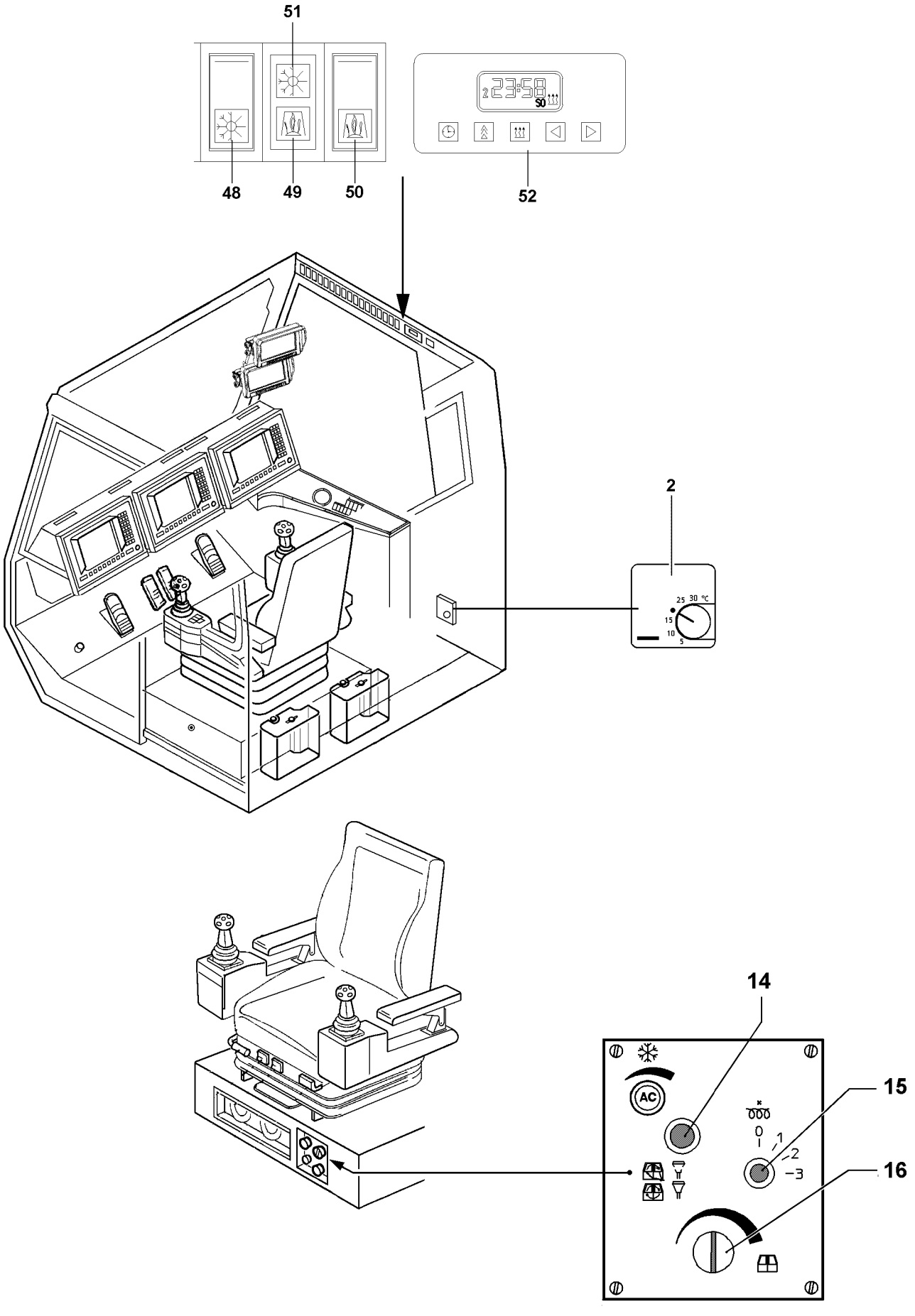

B108314

2.2.3 Operation with timer*

For a detailed description of the timer **52** refer to the enclosed manufacturer's operating instructions.

▶ Set the required turn-on time, temperature and duration of heater operation on the timer **52**.

▶ Open or close the air vents, as desired.

Result:

– Upwards or downwards air distribution will be selected.

▶ Set the knob **16** to “warm”.

2.2.4 Operating the thermostat*

Ensure that the following prerequisite is met:

– the knob **16** is set to “warm”.

▶ Turn the thermostat **2** to the desired temperature.

2.2.5 Venting the system

When refilling the system, it should be carefully vented.

▶ Add coolant into the expansion tank for the heater system according to the lubricant chart.

▶ Start the engine.

▶ Set the knob **16** to “warm”.

▶ Check the expansion tank for air bubbles.

Result:

– The heating system is vented as soon as no more air bubbles rise up.

▶ Set the knob **16** to “cold”.

▶ Check the expansion tank for air bubbles.

Result:

– The circuit is vented as soon as no more air bubbles rise up.

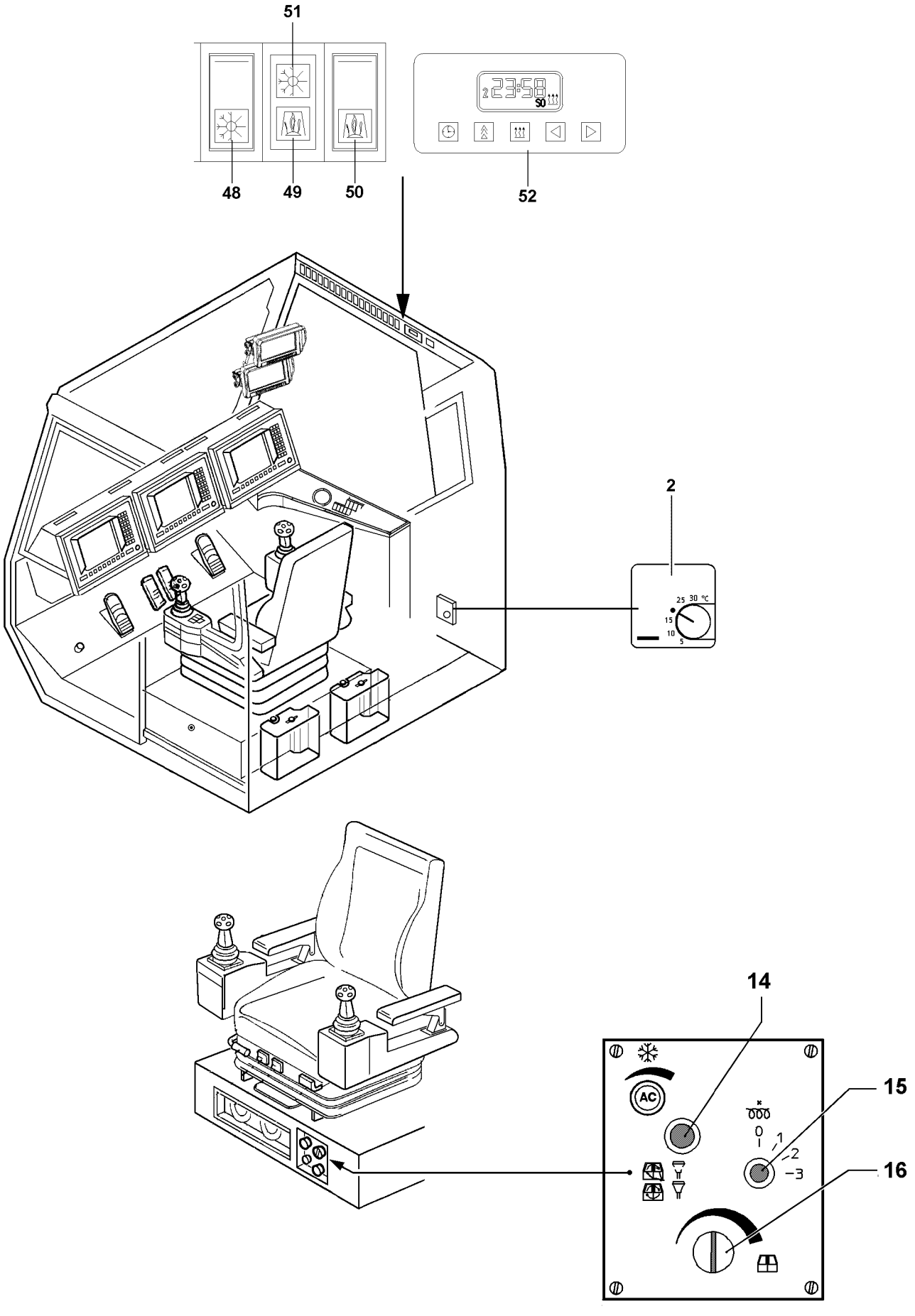

B108314

2.3 Air conditioning system* operation

For a detailed description of the air conditioning system*, refer to the enclosed manufacturer's operating instructions.
Carry out maintenance work on the air conditioning system* according to the enclosed manufacturer's operating instructions.

2.3.1 Start up

Make sure that the following prerequisites are met:
– the battery master switch is turned on,
– the engine is running,
– the air intake opening for recirculated air operation is clear.

▶ Open or close the air vents, as desired.

Result:
– Upwards or downwards air distribution will be selected.

▶ Close both windows and the cab door.
▶ Set the changeover switch **14** for fresh air / recirculated air to recirculated air operation.
▶ Actuate the switch **48**.

Result:
– The indicator light **51** lights up.
– The air conditioning system* is turned on and ready to operate.

▶ Open the appropriate air vent for upward air distribution.
▶ Turn on the fan with the rotary switch **15**.
▶ Regulate the temperature with the knob **16**.

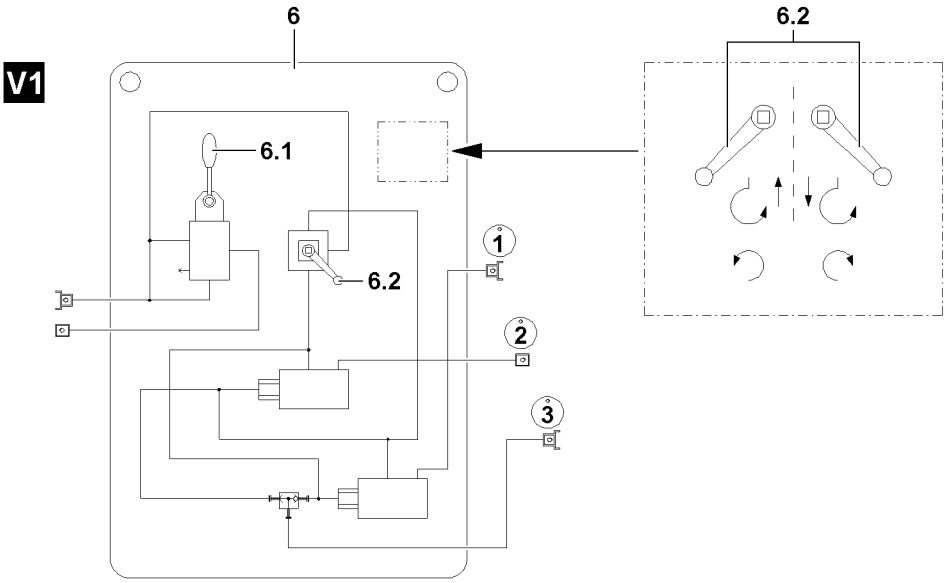

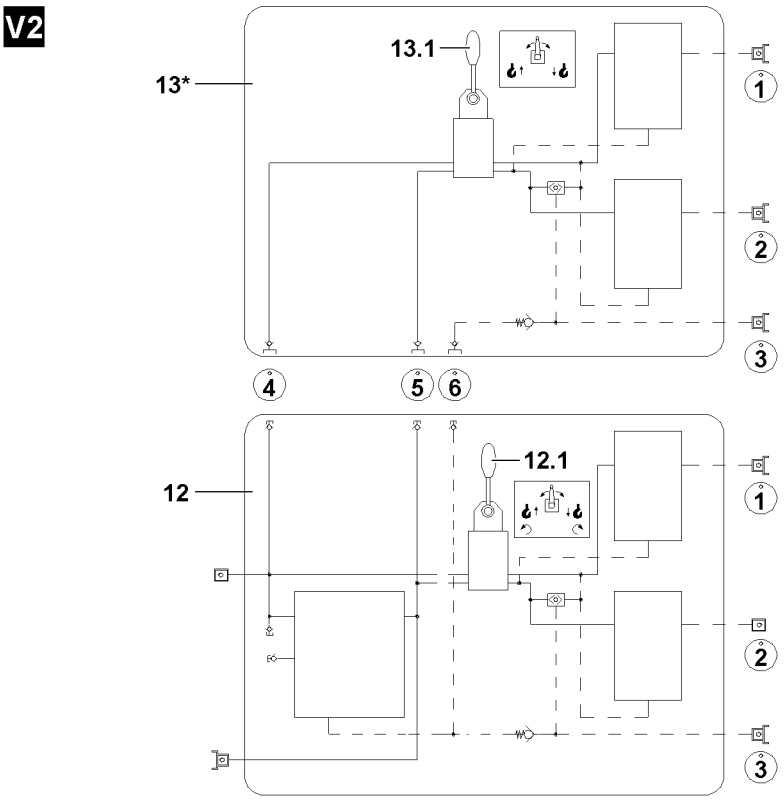

B109407

1 Emergency operation

Note
▶ The illustrations in this chapter are examples and may not apply exactly to your crane!

Note
▶ Before you start with preparations for emergency operation, check which of the following assembly plates you have available to carry out the emergency operation!

There are two **different** variations of assembly plates.
With variation 1 **V1**, all winches, which are equipped with the respective auxiliary hydraulic for emergency operation and the slewing gear can be actuated, each individually.
With variation 2 **V2**, which consists of two assembly plates, all winches, which are equipped with the respective auxiliary hydraulic for emergency operation can be actuated, each individually,
or winch 1 **WI** and winch 2 **WII** can be actuated in parallel operation or the slewing gear can be actuated individually.

Note
▶ Observe the following charts!

	Variation 1 (V1) each in individual operation	**Variation 2(V2)** each in individual operation
Winch 1	X	X
Winch 2	X	X
Winch 1II2[1)]	—	X
Winch 3	X	X
Winch 4	X	X
Winch 5	X	X
Winch 6	X	X
Slewing gear	X	X

1) Parallel operation Winch 1 and winch 2 (1II2)

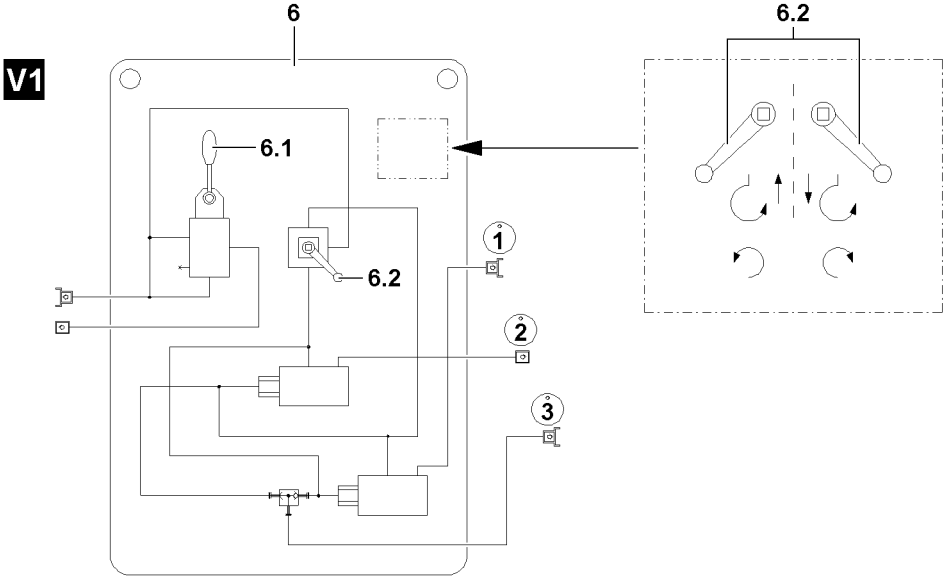

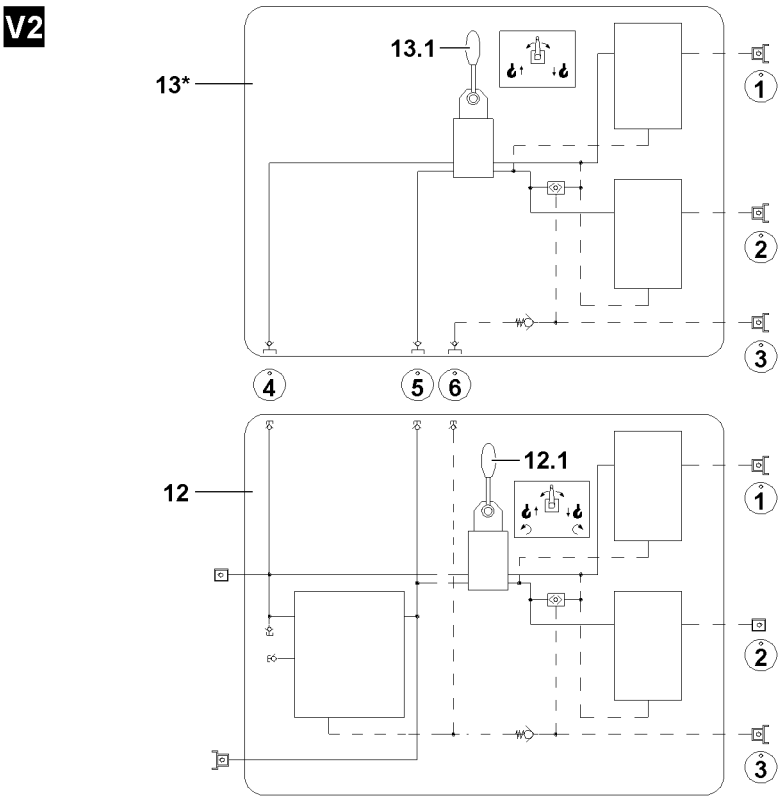

B109407

1.1 General danger notes

DANGER
Significant accident risk during emergency operation!
During an emergency operation, crane movements are no longer monitored by the LICCON computer system!
In the event of improper operation or deliberate misuse, the crane can topple over!
There is an increased risk of accident if the following danger notes are not observed!
Personnel can be severely injured or killed!
This could result in high property damage!
▶ All hazard warnings are to be observed and maintained!

General danger notes!

1.) **Emergency operation of the crane superstructure may only be carried out:**
- **To remove a dangerous situation.**
- **After consultation with customer service at LIEBHERR-Werk Ehingen GmbH.**
- **By authorized personnel who are knowledgeable of the hydraulic circuit diagram, the connection diagram and carrying out emergency operation.**
- **By authorized personnel who are aware of the risks of emergency operation.**
- **To carry out load reducing movements.**

2.) **The danger zone must be blocked off!**
3.) **No persons or objects may remain in the danger zone!**
4.) **If a load is on the hook, then it must first be set down to relieve the boom!**
5.) **During emergency operation, all safety devices, with the exception of "winch spooled out" are automatically bypassed**!
6.) **In the event of a defect or failure of the LICCON computer system, each step must be carried out and monitored with extreme caution and care, since a visual check on the LICCON monitor is no longer possible. Visual check!**
7.) **All crane movements must be travelled with extreme caution and at the lowest speed!**
8.) **The crane operator must be in visual contact with auxiliary personnel or guides person!**

Note
Please note!
▶ The hydraulic supply for the crane can, to the extent that the crane has been equipped, take place through an emergency unit*. If this is not the case, the crane must be taken down by using additional auxiliary cranes!

WARNING
The crane can topple over!
▶ The boom may only be luffed down if the stability of the crane permits this action, observe information in the load tables and maintain them!
▶ When taking down the boom, the information in the erection and take down charts are to be observed and followed!

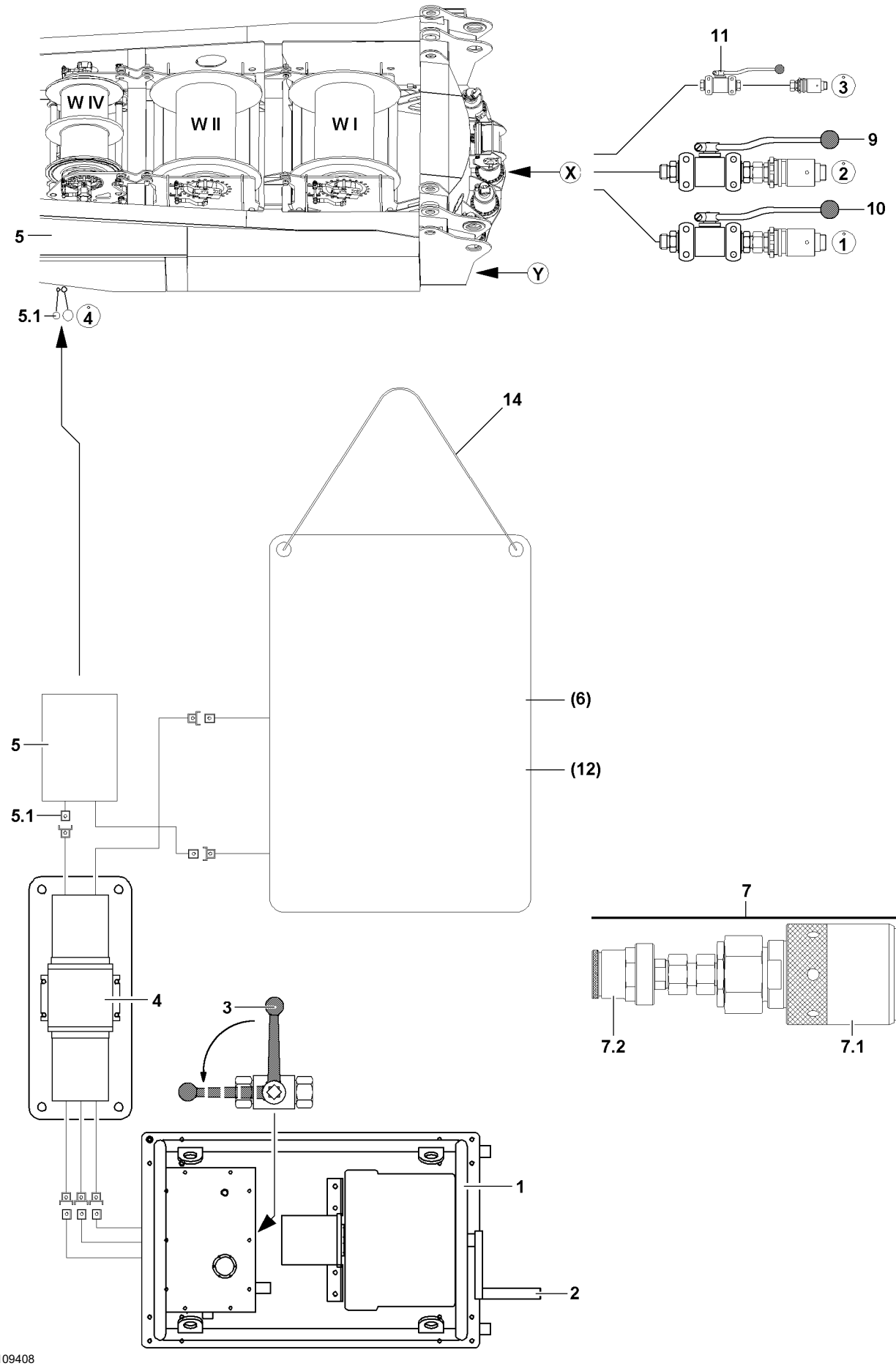
W IV
W II
W I
X
Y
5
5.1
4
11
3
9
2
10
1
14
(6)
(12)
5
5.1
4
3
1
2
7
7.2
7.1
B109408

1.2 Handling of assembly plates

WARNING
Falling assembly plates!
Non-secured assembly plates can fall down when carrying out the emergency operation!
Personnel can be severely injured or killed!
- ▶ For emergency operation, secure the assembly plates with the chains **14** to prevent them from falling down!
- ▶ Do not secure the assembly plates near movable crane components!

1.3 Prerequisites for emergency operation

Note
- ▶ On the basis of different line diameters on the hydraulic lines, false couplings are prevented, additionally the hydraulic connections are identified with numbers!

Make sure that the following prerequisites are met:
- The hydraulic circuit diagram is available.
- The hydraulic system is functioning.
- An emergency operation aggregate **1** is available.
- A “Hydraulic transformer **4** ” is available.
- The assembly plate(s) are available.
- Reducer sections **7** (adapter) are available.
- The dust plugs for the hydraulic connections are removed.

1.4 Establishing the hydraulic connections

WARNING
Danger due to hydraulic pressure!
If the hydraulic lines are pressurized when releasing the connections, it can lead to severe injuries to assembly personnel!
- ▶ Relieve the pressure in the hydraulic lines before releasing!

- ▶ Establish the hydraulic connections from the emergency operation aggregate* **1** to the transformer **4**.
- ▶ Establish the hydraulic connection from the transformer **4** to the (suction line) on the turntable **5** of the crane, connection **5.1**.
- ▶ Hydraulic connection (return line, number **4**) from the turntable of the crane to the assembly plate **6** or to the assembly plate **12**.
- ▶ Establish the hydraulic connection (pressure line) from the transformer **4** to the assembly plate **6** or to the assembly plate **12**.

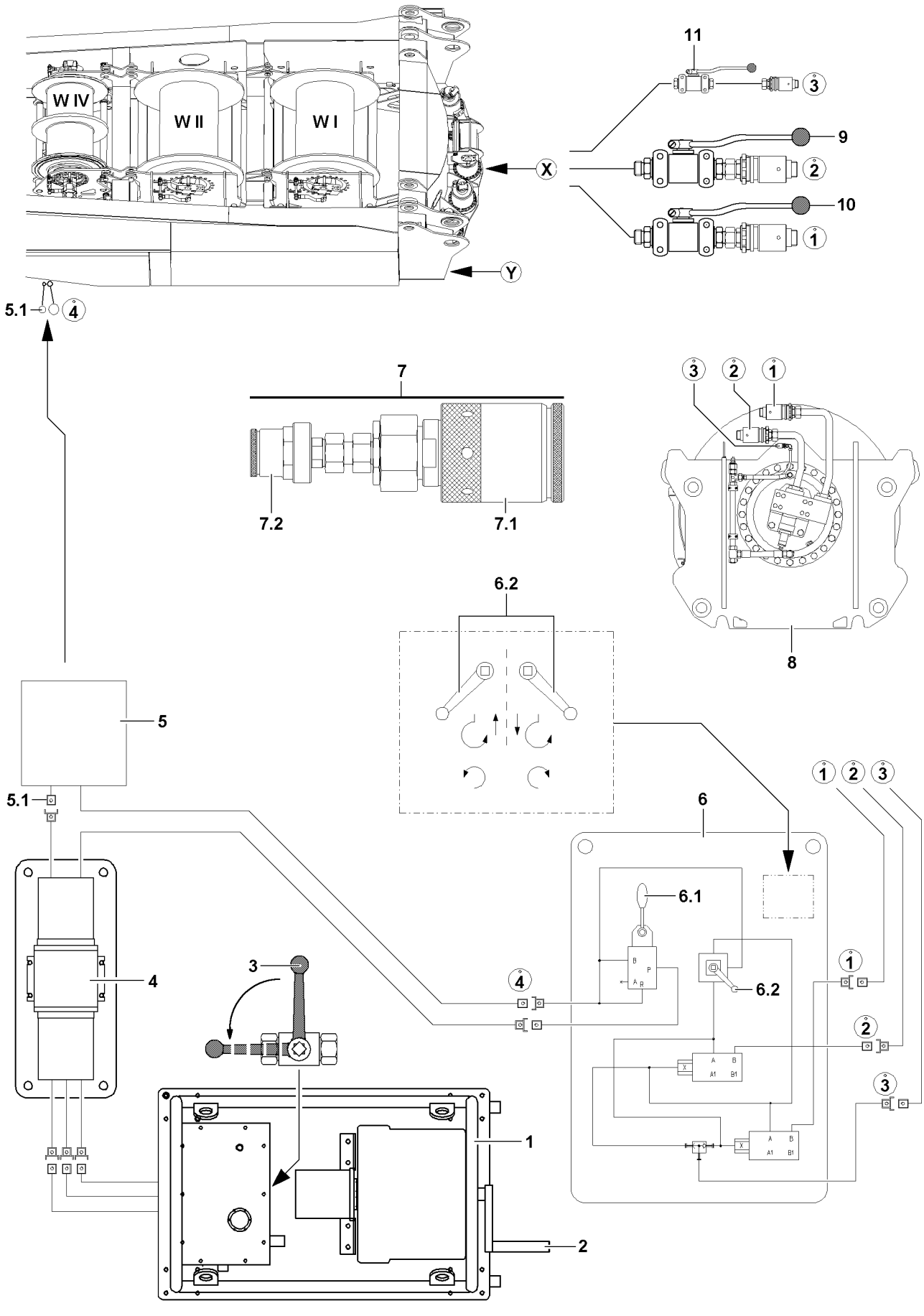

B108301

2 Emergency operation with assembly plate Variation 1 (V1)

Note

▶ The procedure of the emergency operation - except winch 4 on the LR1600/2 and LR1600/2-W - is identical for all winches and is described on the example of one winch!

Exception LR1600/2 and LR1600/2-W:

▶ Before emergency operation of winch 4 **W IV** on the LR1600/2 and LR1600/2-W, in addition to the hydraulic connections to lift, lower and for the control pressure of the brake, a control line must be connected, see section: “Emergency operation of winch 4 **W IV** on the LR1600/2 and LR1600/2-W!”

To carry out the emergency operation, use an emergency operation aggregate **1**, a hydraulic transformer **4** and the assembly plate **6**.

2.1 Functional selection on the assembly plate

With the ball valve **6.2** on the assembly plate **6** the following movements are preselected:
– Lift or lower
– Turn left or right

▶ Preselect crane movement: Activate ball valve **6.2** in the corresponding direction.

Moving the hand lever **6.1** determines the speed of the each crane movement.

▶ Operate the hand lever **6.1** and carry out the respective crane movement carefully.

2.2 Start the emergency operation aggregate

▶ Turn the crank **2** on the emergency operation aggregate* **1**.

▶ Switch the ball valve **3** to “horizontal” position.

Note

▶ The engine rpm on the emergency operation aggregate can be set via a separate speed regulator!

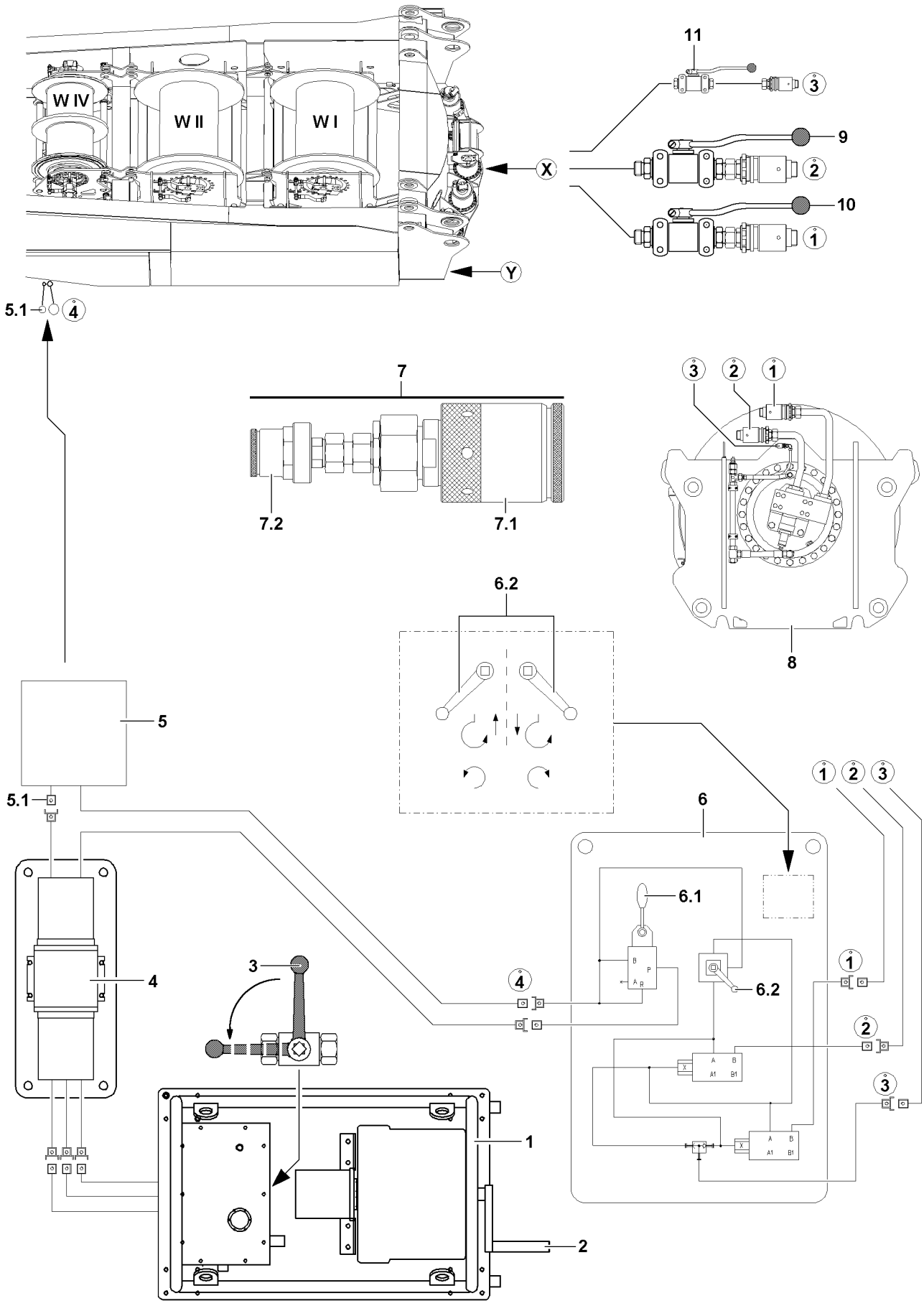
W IV
W II
W I
X
Y
11
3
9
2
10
1
5.1
4
7
7.2
7.1
3
2
1
8
6.2
5
5.1
6
1
2
3
6.1
4
3
4
6.2
1
2
3
1
2

B108301

2.3 Emergency operation of winch 4 on the LR1600/2 and LR1600/2-W

WARNING
Emergency operation winch 4 **W IV**!
▶ Observe the section “Emergency operation of winch 4 (W IV) on the LR1600/2 and LR1600/2-W”!

2.4 Emergency operation winches

2.4.1 Establishing the hydraulic connections to the winch

Make sure that the following prerequisite is met:
– The pressure in the hydraulic system has been relieved.

▶ Release the hydraulic connections on the corresponding winch.
▶ Install the reducer sections **7** (adapter) with coupling sleeve **7.1** on the connection **1** and on the connection **2** of the winch **8**.

Note
▶ Observe the numbering of the hydraulic lines!

▶ Establish the hydraulic connections for the assembly plate **6** (connection **1**, connection **2** and brake **3**) to the winch **8**.

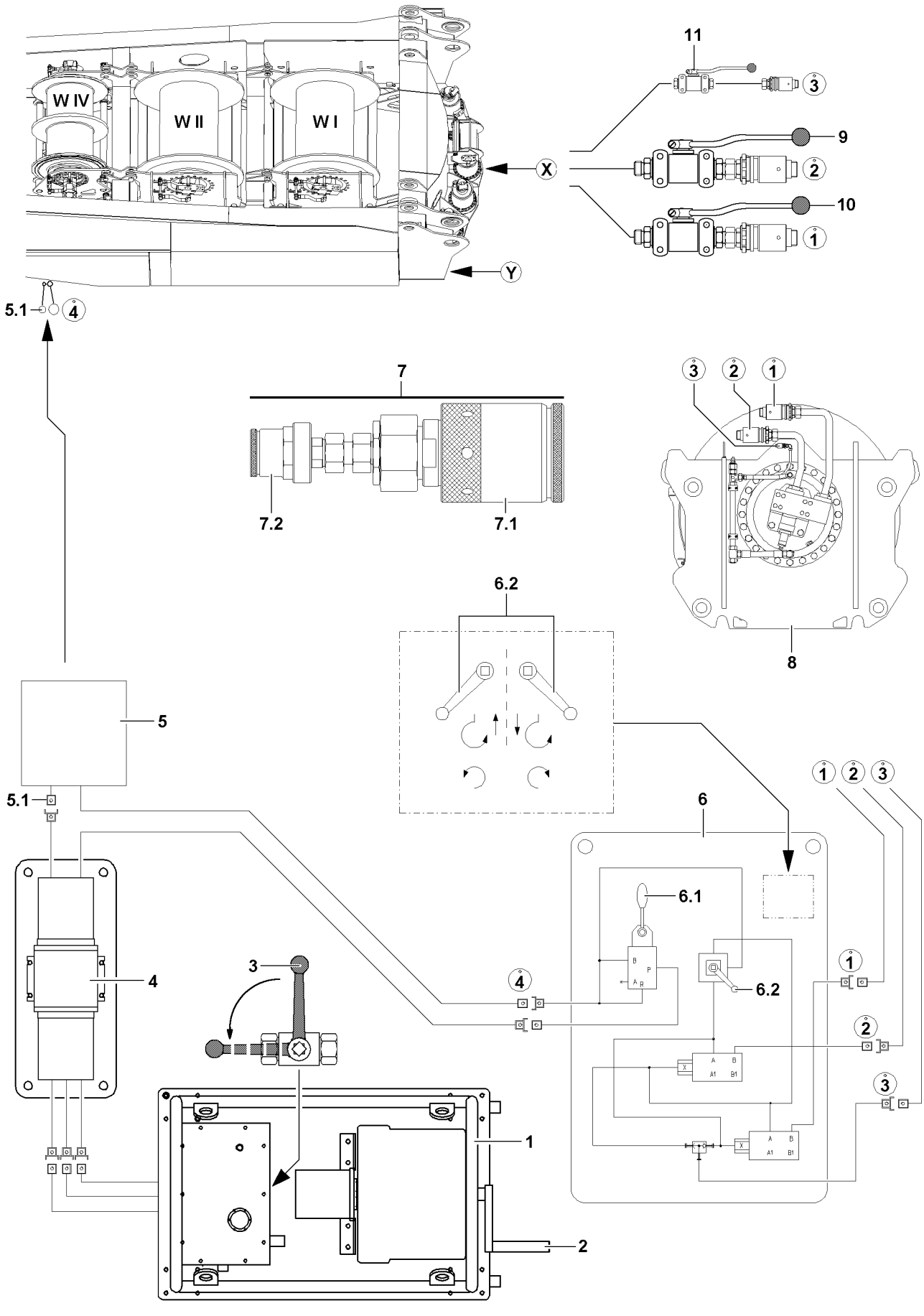

B108301

2.4.2 Spooling the winch out

▶ Set the ball valve **6.2** for the assembly plate **6** on “lower”.

▶ Move the manual lever **6.1** carefully.

Result:

– The winch spools out.

2.4.3 Spooling the winch up

▶ Set the ball valve **6.2** for the assembly plate **6** on “lift”.

▶ Move the manual lever **6.1** carefully.

Result:

– The winch spools up.

2.5 Disconnecting the hydraulic connections

Make sure that the following prerequisites are met:

– The emergency operation is completed.

– The pressure in the hydraulic system has been relieved.

▶ Disconnect the hydraulic connections from the winch **8** to the assembly plate **6**.

▶ Remove the reducer sections **7** (adapter).

▶ Close off the hydraulic connections of the winch **8** with dust caps.

or

■ Reconnect the winch **8** onto the hydraulic system of the crane.

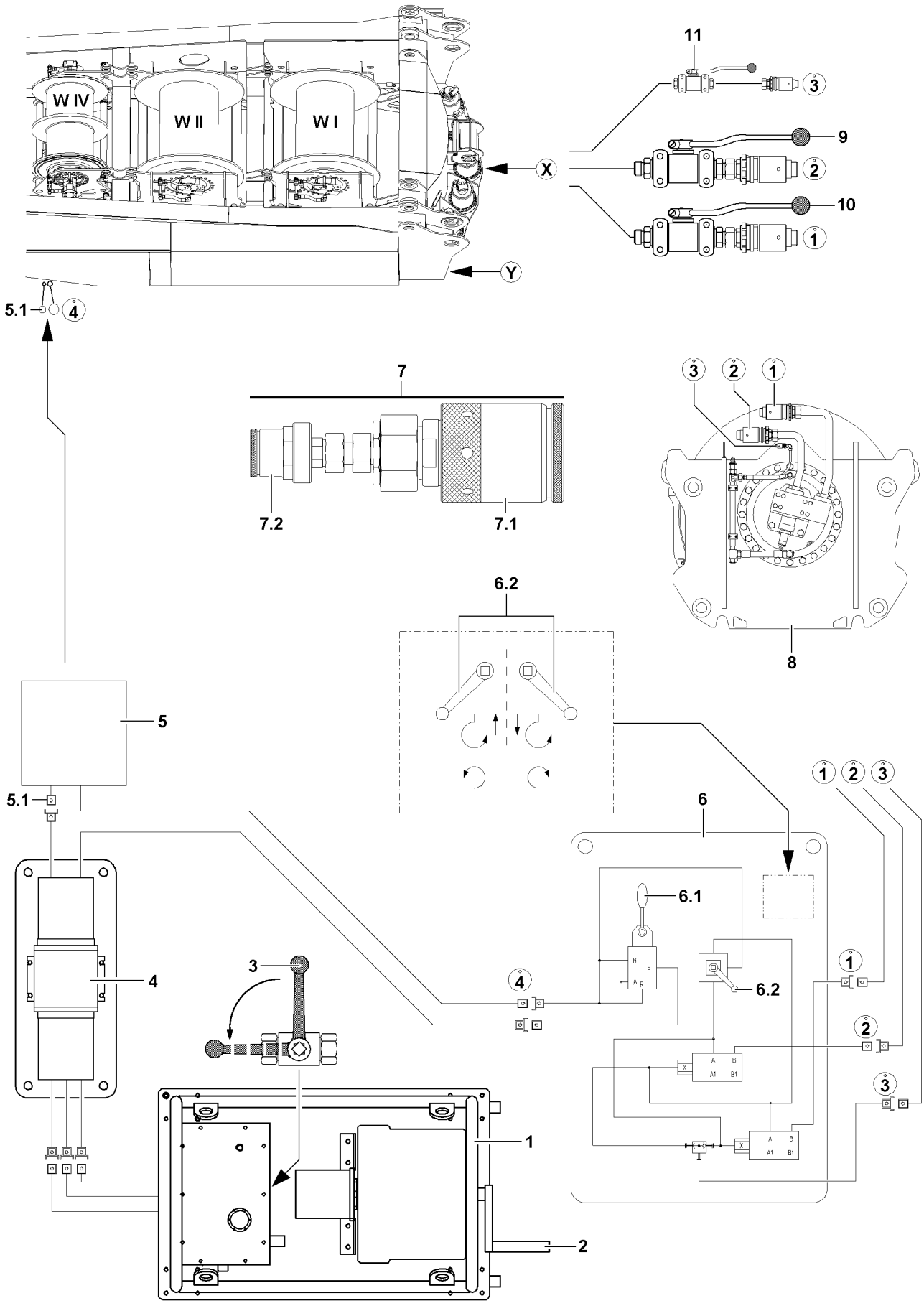

B108301

3 Emergency operation of slewing gear(s) with assembly plate Variation 1 (V1)

WARNING
Danger due to hydraulic pressure!
If the hydraulic lines are pressurized when releasing the connections, it can lead to severe injuries to assembly personnel!
▶ Relieve the pressure in the hydraulic lines before releasing!

Note
▶ For each crane type, the installation position of the ball valves for emergency operation of the slewing gear on the turntable varies!
▶ Possible installation positions of the ball valve: Point **X** or point **Y**!

3.1 Establishing the hydraulic connection to the slewing gears

Make sure that the following prerequisite is met:
– The pressure in the hydraulic system has been relieved.

Note
▶ Observe the numbering of the hydraulic lines!

▶ Establish the hydraulic connections of the assembly plate **6** (connection **1**, connection **2** and brake **3**) to the “Ball valves” on the turntable.

3.2 Turning the turntable to the left

▶ Set the ball valve **9** into emergency operation position.
▶ Set the ball valve **10** into emergency operation position.
▶ Set the ball valve **11** into emergency operation position.
▶ Set the ball valve **6.2** for the assembly plate **6** on “turn left”.
▶ Move the manual lever **6.1** carefully.

Result:
– The turntable turns to the left.

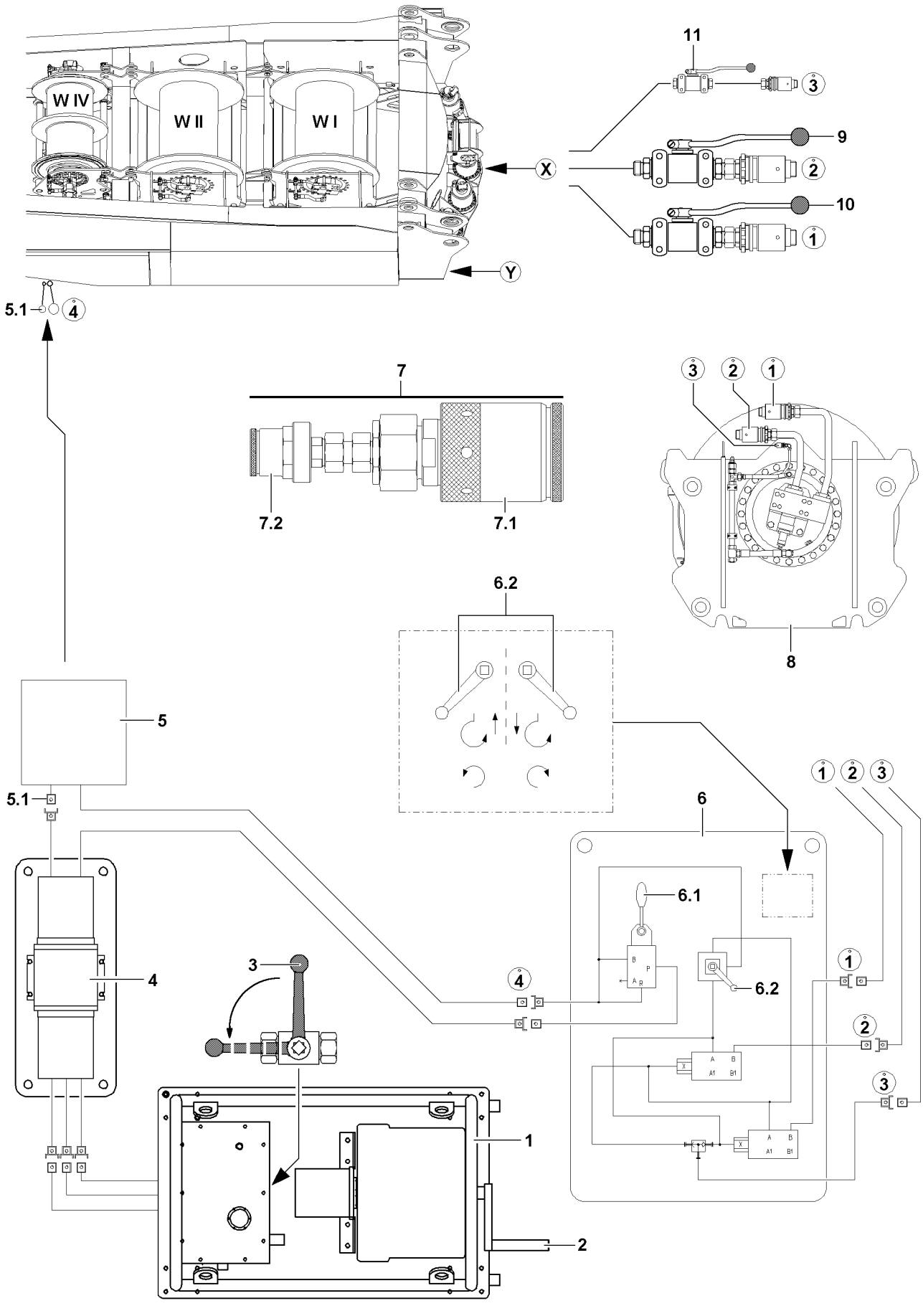
W IV
W II
W I
X
Y
11
3
9
2
10
1
5.1
4
7
7.2
7.1
3
2
1
8
6.2
5
5.1
6
1
2
3
6.1
4
3
4
6.2
1
2
3
1
2

B108301

3.3 Turning the turntable to the right

- ▶ Set the ball valve **9** into emergency operation position.
- ▶ Set the ball valve **10** into emergency operation position.
- ▶ Set the ball valve **11** into emergency operation position.
- ▶ Set the ball valve **6.2** for the assembly plate **6** on “turn right”.
- ▶ Move the manual lever **6.1** carefully.

Result:

– The turntable turns to the right.

3.4 Disconnecting the hydraulic connections

Make sure that the following prerequisites are met:

– The emergency operation is completed.
– The pressure in the hydraulic system has been relieved.

Disconnect the hydraulic connections to the assembly plate **6**.

- ▶ Reposition the ball valve **9** in position for crane operation.
- ▶ Reposition the ball valve **10** in position for crane operation.
- ▶ Reposition the ball valve **11** in position for crane operation.
- ▶ When the ball valve **9**, ball valve **10** and ball valve **11** are repositioned into crane operation position:
  Disconnect the hydraulic connections to the assembly plate **6**.
- ▶ Close off the hydraulic connections with dust plugs.

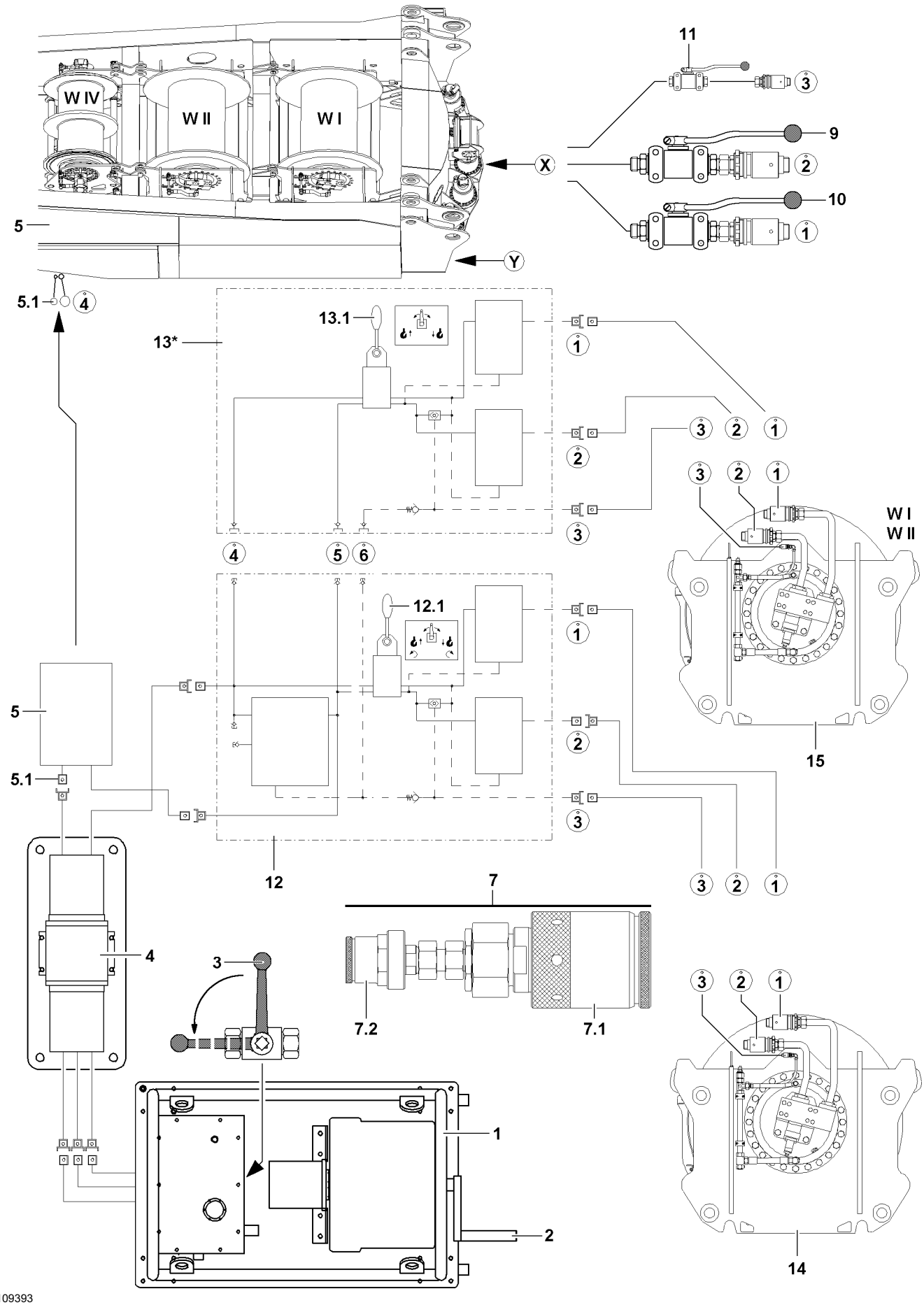
W IV
W II
W I
X
Y
5
5.1
4
11
3
9
2
10
1
13.1
13*
1
2
3
4
5
6
12.1
12
W I
W II
15
7
7.2
7.1
3
1
2
14

B109393

4 Emergency operation with assembly plate(s) Variation 2 (V2)

Note

▶ The procedure of the emergency operation - except winch 4 on the LR1600/2 and LR1600/2-W - is identical for all winches and is described on the example of one winch!

Exception LR1600/2 and LR1600/2-W:

▶ Before emergency operation of winch 4 **W IV** on the LR1600/2 and LR1600/2-W, in addition to the hydraulic connections to lift, lower and for the control pressure of the brake, a control line must be connected, see section: “Emergency operation of winch 4 **W IV** on the LR1600/2 and LR1600/2-W!”

To carry out the emergency operation, use an emergency operation aggregate **1**, a hydraulic transformer **4** and the assembly plate **12**. To carry out the emergency operation from winch 1 **W I** and winch 2 **W II** in parallel operation (1II2), in addition to the assembly plate **12**, the assembly plate **13** is needed. Connect the assembly plate **12** with the assembly plate **13** hydraulically on hydraulic connections 4, 5 and 6.

4.1 Start the emergency operation aggregate

▶ Turn the crank **2** on the emergency operation aggregate* **1**.

▶ Switch the ball valve **3** to “horizontal” position.

Note

▶ The engine rpm on the emergency operation aggregate can be set via a separate speed regulator!

4.2 Emergency operation of winch 4 on the LR1600/2 and LR1600/2-W

WARNING

Emergency operation winch 4 **W IV**!

▶ Observe the section “Emergency operation of winch 4 (W IV) on the LR1600/2 and LR1600/2-W”!

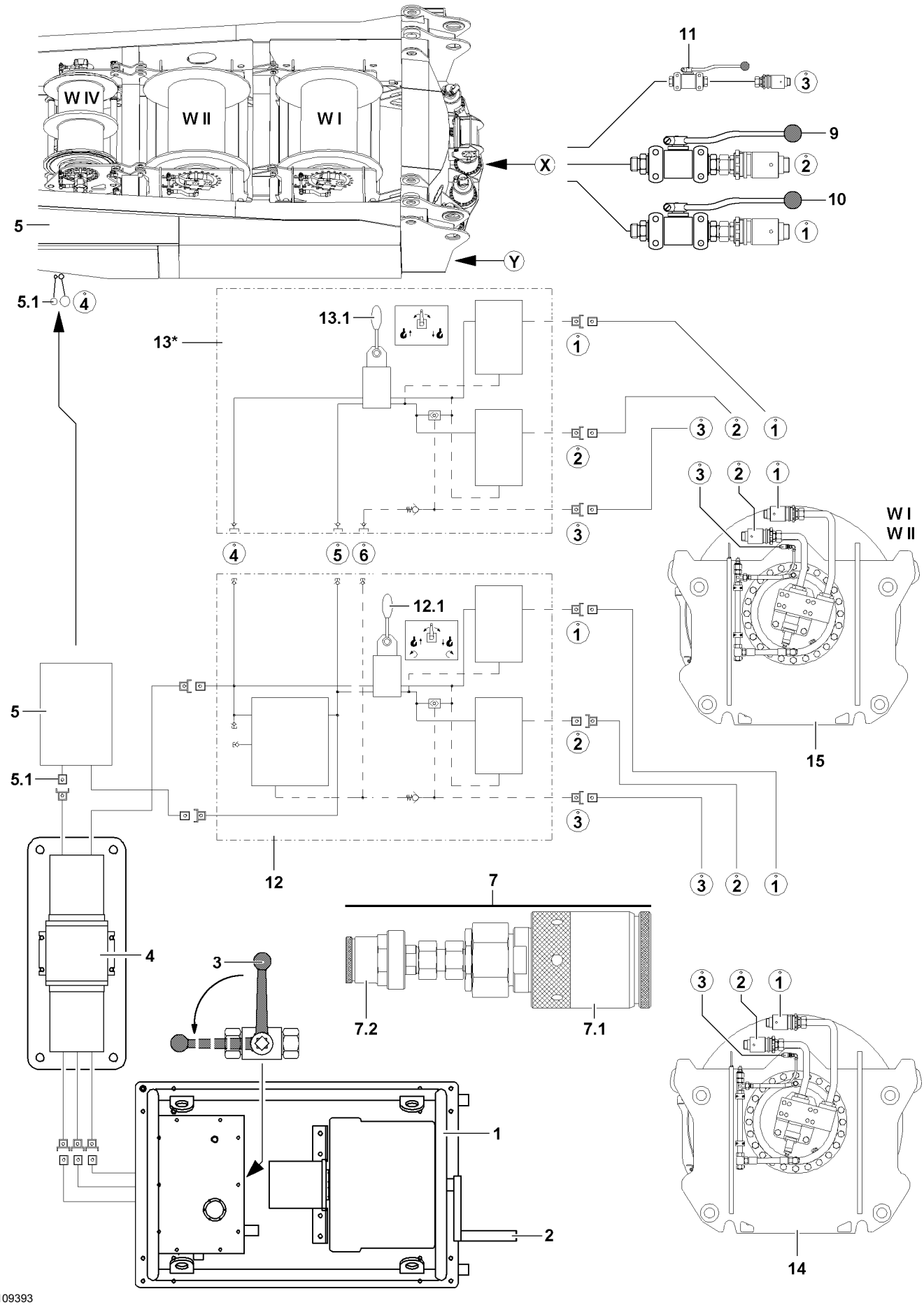
W IV
W II
W I
X
Y
5
5.1
4
11
3
9
2
10
1
13.1
13*
1
2
3
4
5
6
12.1
12
W I
W II
15
7
7.2
7.1
3
1
2
14

B109393

4.3 Emergency operation of winches, individual operation

Note

▶ The crane movements are actuated and the speed of the respective crane movement is determined via the ball valve **12.1** and ball valve **13.1**!

4.3.1 Establishing the hydraulic connections to the winch

Make sure that the following prerequisite is met:

– The pressure in the hydraulic system has been relieved.

▶ Release the hydraulic connections on the corresponding winch.

▶ Install the reducer sections **7** (adapter) with coupling sleeve **7.1** on the connection **1** and on the connection **2** of the respective winch.

Note

▶ Observe the numbering of the hydraulic lines!

▶ Establish the hydraulic connection of the assembly plate **12** (connection **1**, connection **2** and brake **3**) to the respective winch.

4.3.2 Spooling the winch out

▶ Set the ball valve **12.1** for the assembly plate **12** on “lower”.

Result:

– The winch spools out.

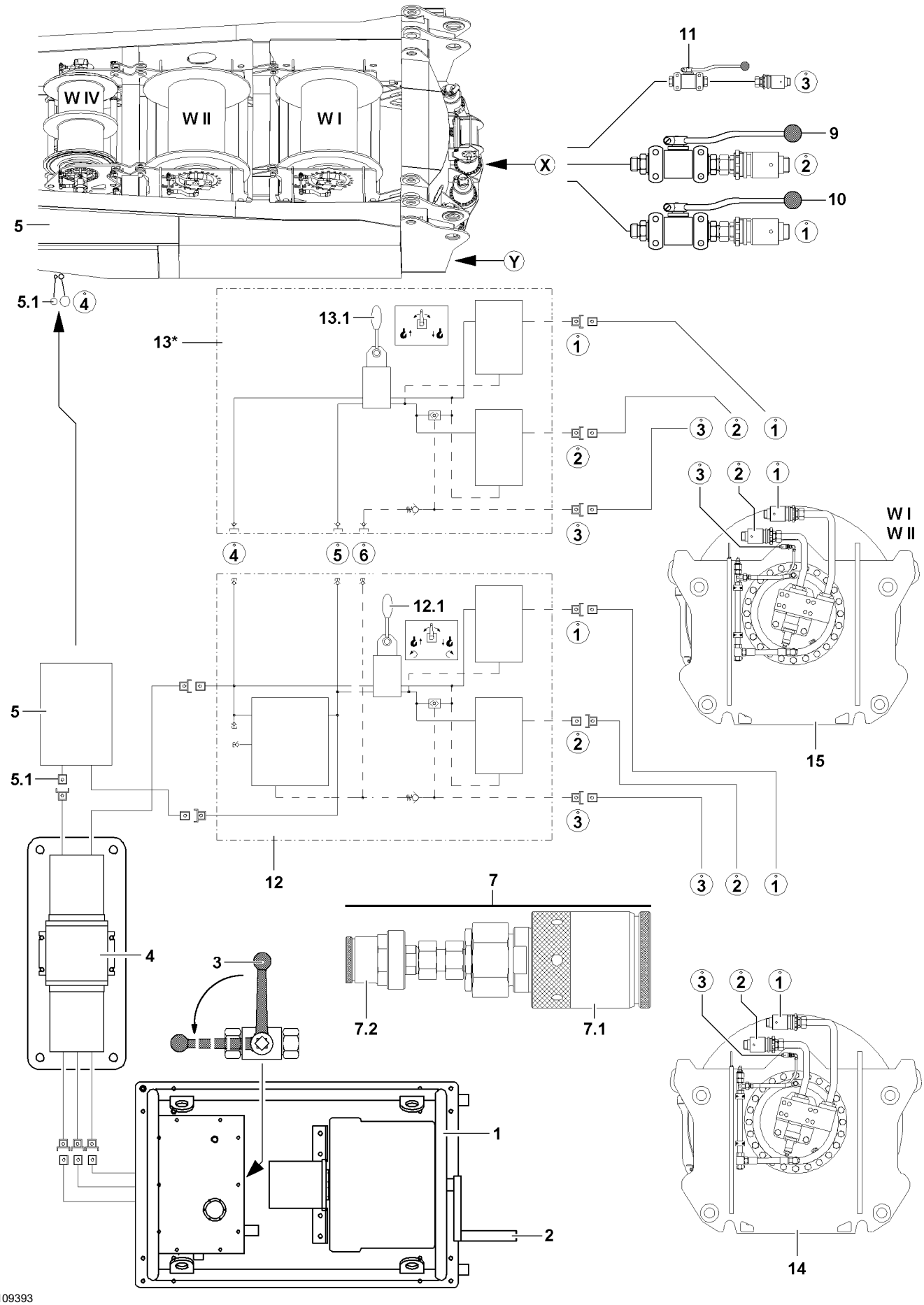
W IV
W II
W I
X
Y
11
9
10
5
5.1
13.1
13*
12.1
12
W I
W II
15
7
7.2
7.1
4
3
1
2
14
B109393

4.3.3 Spooling the winch up

▶ Set the ball valve **12.1** for the assembly plate **12** on “lift”.

Result:

– The winch spools up.

4.3.4 Disconnecting the hydraulic connections

Make sure that the following prerequisites are met:

– The emergency operation is completed.
– The pressure in the hydraulic system has been relieved.

▶ Separate the hydraulic connections from the respective winch to the assembly plate **12**.
▶ Remove the reducer sections **7** (adapter).
▶ Close off the hydraulic connections of the winch with dust plugs.

or

■ Reconnect the winch to the hydraulic system of the crane.

4.4 Emergency operation of winches, parallel operation winch 1II2

Note

▶ The crane movements are actuated and the speed of the respective crane movement is determined via the ball valve **12.1** and ball valve **13.1**!

WARNING

Risk of accident!

If the following notes are not observed, dangerous situations can arise!

Personnel can be severely injured or killed!

▶ If winch 1 and winch 2 are actuated in emergency operation in parallel operation, then it must be ensured that the hook blocks are horizontally aligned!
▶ Always actuate winch 1 and winch 2 simultaneously!

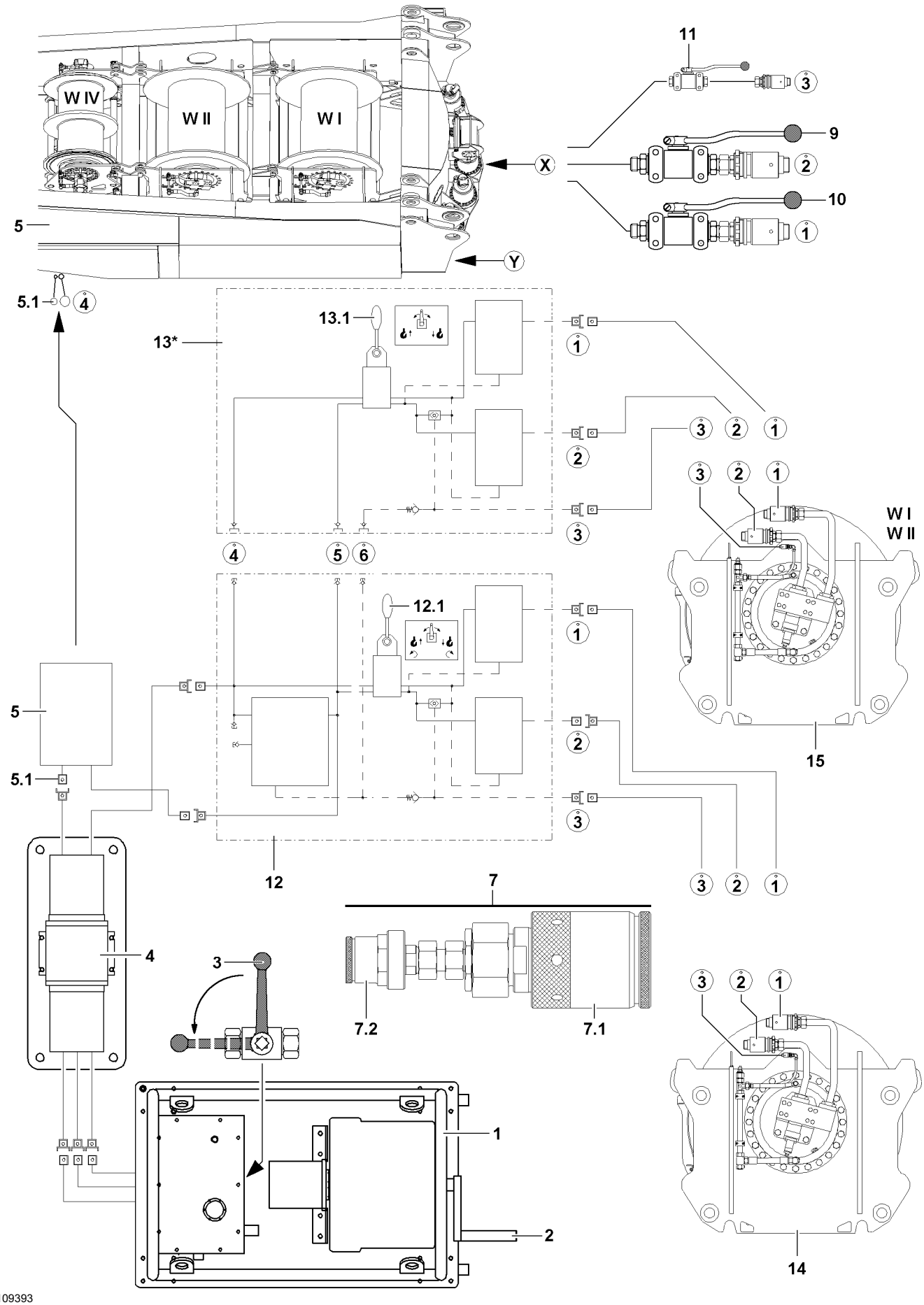
W IV
W II
W I
X
Y
11
9
10
5
5.1
13.1
13*
12.1
12
W I
W II
15
7
7.2
7.1
4
3
1
2
14
B109393

4.4.1 Establishing the hydraulic connections to the winches

Make sure that the following prerequisite is met:

– The pressure in the hydraulic system has been relieved.

▶ Release the hydraulic connections on winch 1 and winch 2.

▶ Install the reducer sections **7** (adapter) with coupling sleeve **7.1** on the connection **1** and on the connection **2** of the respective winch.

Note

▶ Observe the numbering of the hydraulic lines!

▶ Establish the hydraulic connections for the assembly plate **12** (connection **1**, connection **2** and brake **3**) to winch 1.

or

■ Establish the hydraulic connections for the assembly plate **12** (connection **1**, connection **2** and brake **3**) to winch 2.

▶ Establish the hydraulic connections for the assembly plate **13** (connection **1**, connection **2** and brake **3**) to winch 1.

or

■ Establish the hydraulic connections for the assembly plate **13** (connection **1**, connection **2** and brake **3**) to winch 2.

4.4.2 Spooling the winches out

Note

▶ Check which winch you have connected to which assembly plate!

▶ Set the ball valve **12.1** for the assembly plate **12** on “lower”.

Result:

– Winch 1 **or** winch 2 spools out.

▶ Set the ball valve **13.1** for the assembly plate **13** on “lower”.

Result:

– Winch 2 **or** winch 1 spools out.

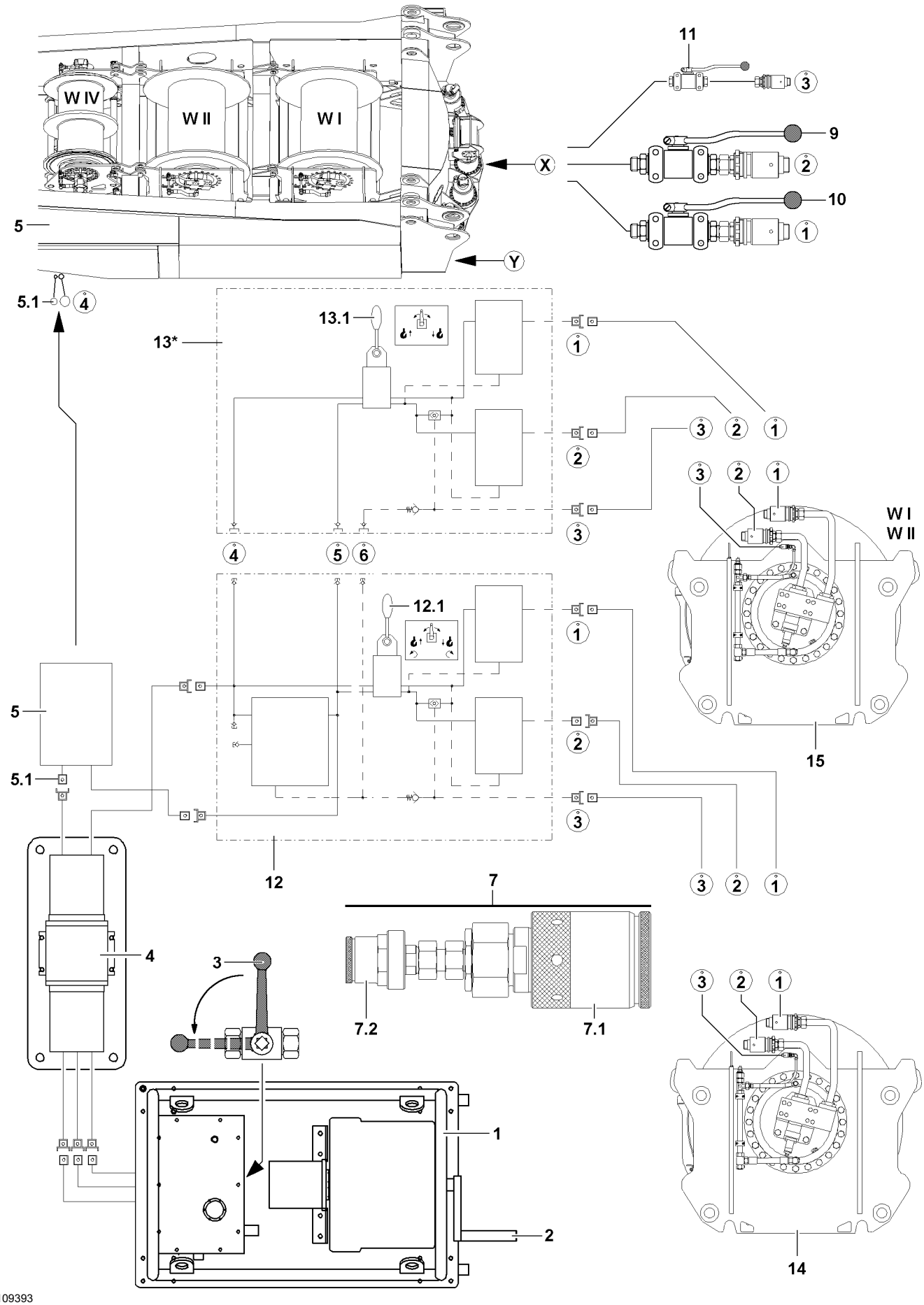

B109393

4.4.3 Spooling the winches up

▶ Set the ball valve **12.1** for the assembly plate **12** on “lift”.

Result:

– Winch 1 **or** winch 2 spools up.

▶ Set the ball valve **13.1** for the assembly plate **13** on “lift”.

Result:

– Winch 2 **or** winch 1 spools up.

4.4.4 Disconnecting the hydraulic connections

Make sure that the following prerequisites are met:

– The emergency operation is completed.
– The pressure in the hydraulic system has been relieved.

▶ Disconnect the hydraulic connections of winch 1 and winch 2 to the respective assembly plates.
▶ Remove the reducer sections **7** (adapter).
▶ Close off the hydraulic connections of the winches with dust plugs.

or

■ Reconnect the winches to the hydraulic system of the crane.

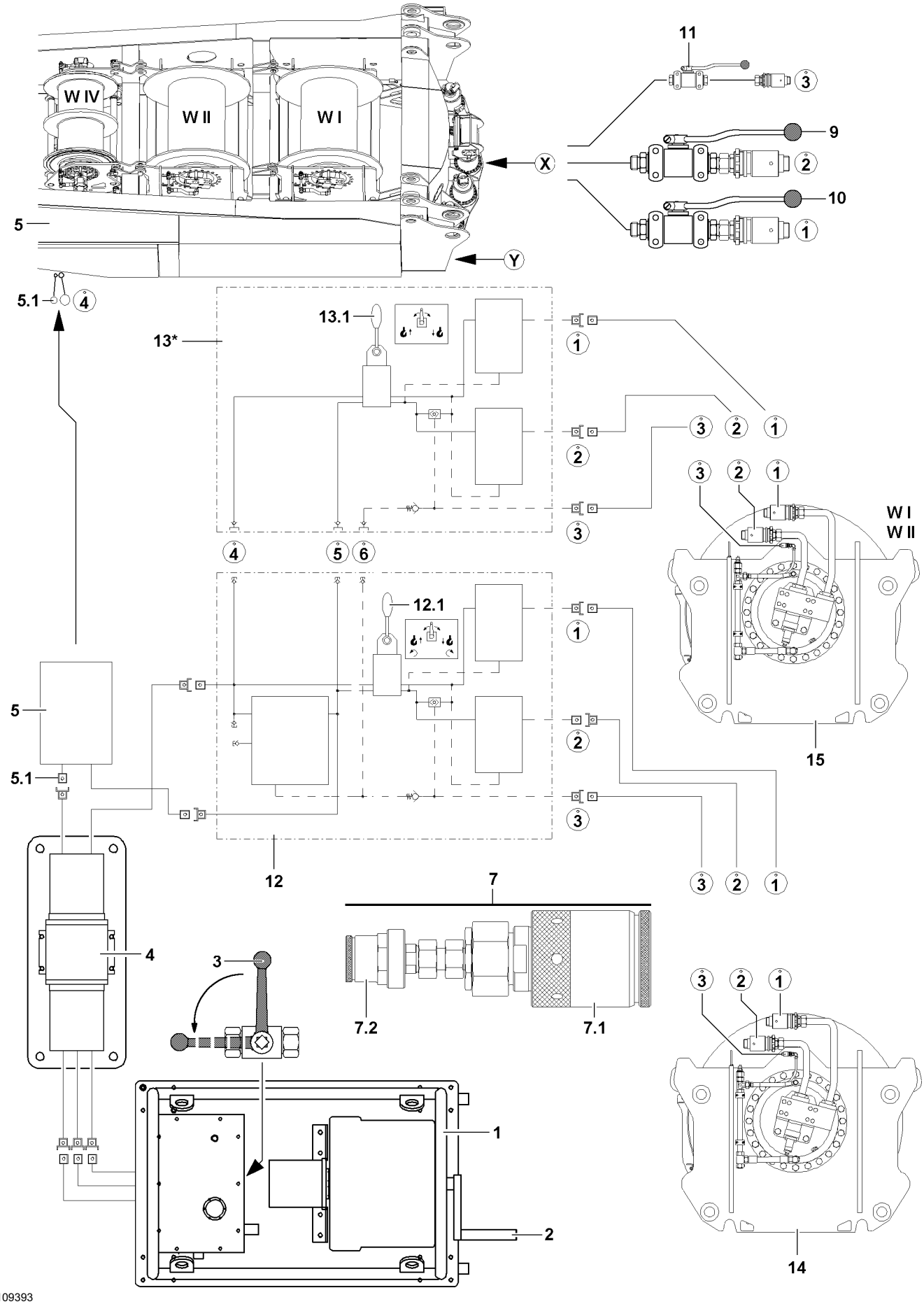
W IV
W II
W I
X
Y
5
5.1
4
11
3
9
2
10
1
13.1
13*
1
2
3
4
5
6
12.1
12
W I
W II
15
7
7.2
7.1
3
1
2
14

B109393

5 Emergency operation slewing gear(s) with assembly plate(s) Variation 2 (V2)

WARNING
Danger due to hydraulic pressure!
If the hydraulic lines are pressurized when releasing the connections, it can lead to severe injuries to assembly personnel!
▶ Relieve the pressure in the hydraulic lines before releasing!

Note
▶ For each crane type, the installation position of the ball valves for emergency operation of the slewing gear on the turntable varies!
▶ Possible installation positions of the ball valve: Point **X** or point **Y**!

Note
▶ The slewing movement is actuated and the speed of the slewing movement is determined via the ball valve **12.1**!

5.1 Establishing the hydraulic connection to the slewing gears

Make sure that the following prerequisite is met:
– The pressure in the hydraulic system has been relieved.

Note
▶ Observe the numbering of the hydraulic lines!

▶ Establish the hydraulic connections of the assembly plate **12** (connection **1**, connection **2** and brake **3**) to the “Ball valves” on the turntable.

5.2 Turning the turntable to the left

▶ Set the ball valve **9** into emergency operation position.
▶ Set the ball valve **10** into emergency operation position.
▶ Set the ball valve **11** into emergency operation position.
▶ Set the ball valve **12.1** for the assembly plate **12** on “turn left”.

Result:
– The turntable turns to the left.

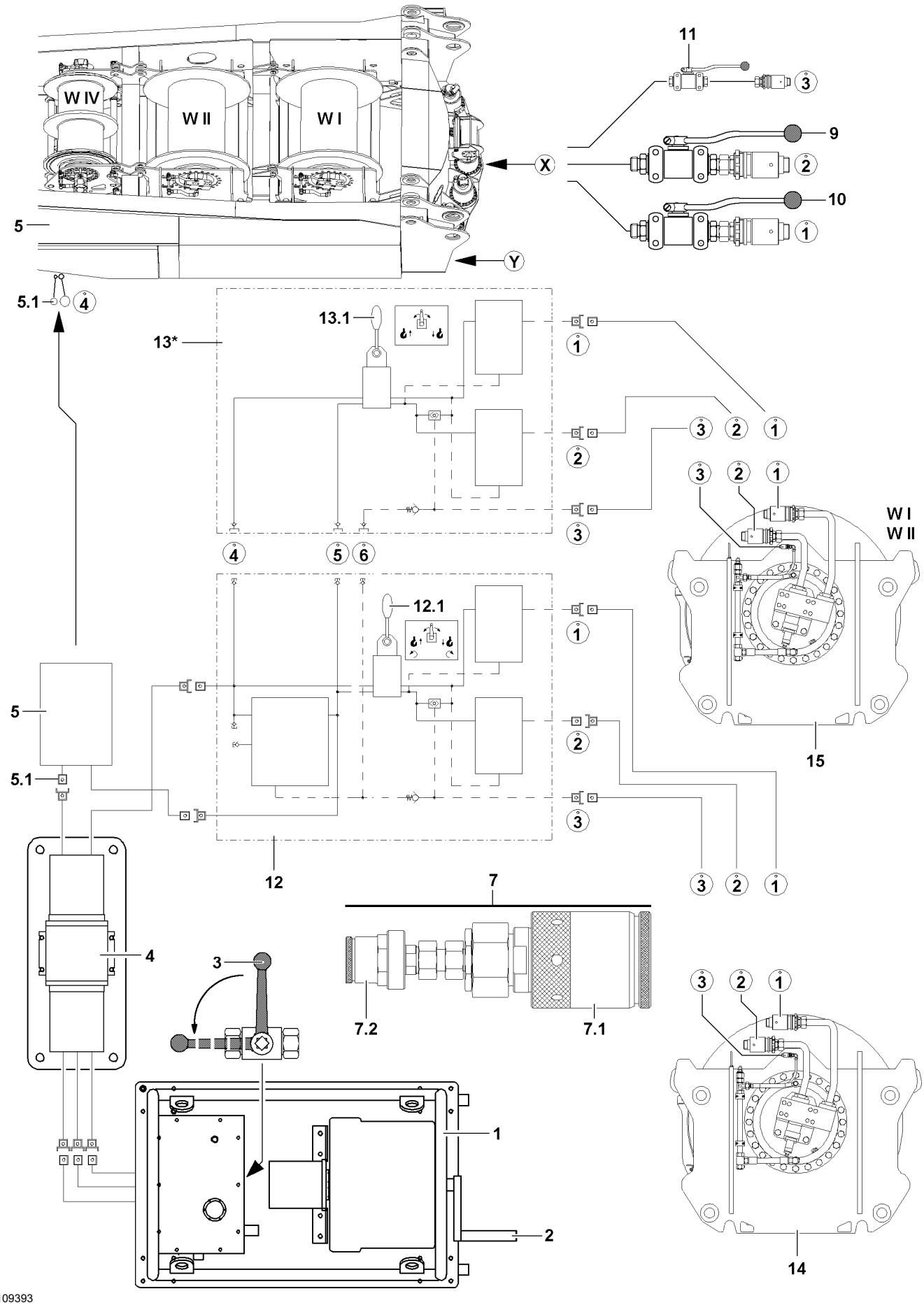
W IV
W II
W I
X
Y
11
9
10
5
5.1
13.1
13*
12.1
12
W I
W II
15
7
7.2
7.1
4
3
1
2
14
B109393

5.3 Turning the turntable to the right

- ▶ Set the ball valve **9** into emergency operation position.
- ▶ Set the ball valve **10** into emergency operation position.
- ▶ Set the ball valve **11** into emergency operation position.
- ▶ Set the ball valve **12.1** for the assembly plate **12** on “turn right”.

Result:

– The turntable turns to the right.

5.4 Disconnecting the hydraulic connections

Make sure that the following prerequisites are met:

– The emergency operation is completed.
– The pressure in the hydraulic system has been relieved.

Disconnect the hydraulic connections to the assembly plate **12**.

- ▶ Reposition the ball valve **9** in position for crane operation.
- ▶ Reposition the ball valve **10** in position for crane operation.
- ▶ Reposition the ball valve **11** in position for crane operation.
- ▶ When the ball valve **9**, ball valve **10** and ball valve **11** are repositioned into crane operation position:
  Disconnect the hydraulic connections to the assembly plate **12**.
- ▶ Close off the hydraulic connections with dust plugs.

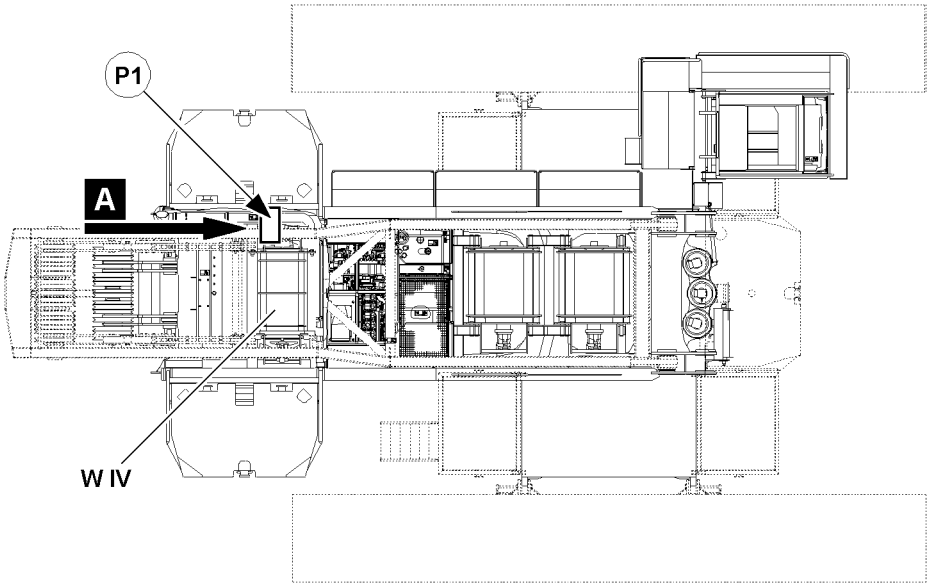
P1
A
W IV

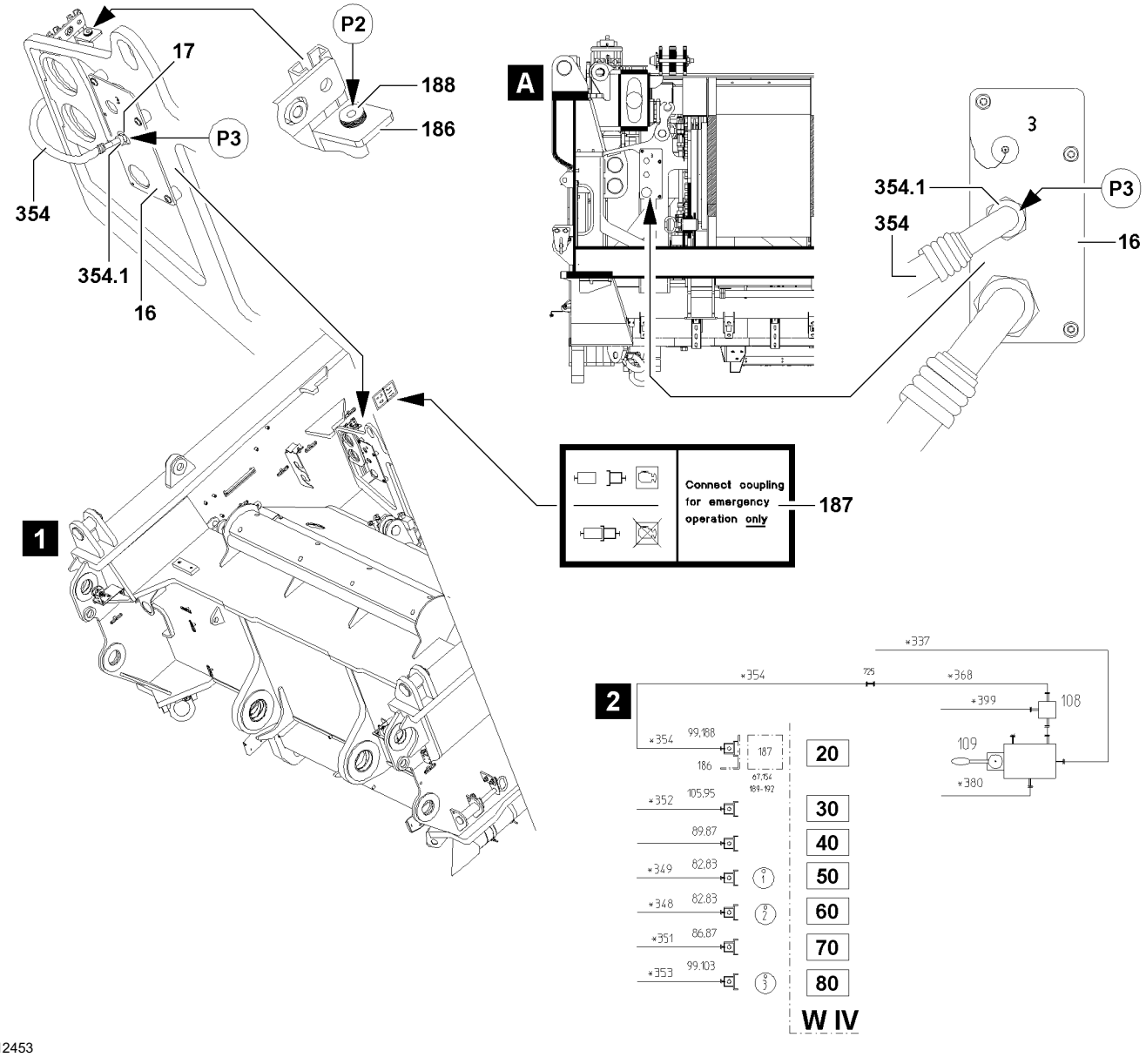
P2
17
188
P3
186
354
354.1
16
A
3
354.1
P3
354
16
1
Connect coupling for emergency operation only
187
2
*337
*354
725
*368
*399
108
109
*380
99,188
*354
186
187
67,154
189-192
105,95
*352
89,87
82,83
*349
82,83
*348
86,87
*351
99,103
*353
20
30
40
50
60
70
80
W IV

B112453

6 Emergency operation of winch 4 (W IV) on the LR1600/2 and LR1600/2-W

NOTICE
Damage of crane components!
If the hydraulic hose (control line) **354** for the emergency operation is not connected properly, then hydraulic parts or crane components can be damaged!
▶ Make sure, before starting the emergency operation, that the hydraulic hose **354** is properly connected!

6.1 Emergency operation winch 4 (WIV)

6.1.1 Establishing the hydraulic connections to winch 4 (WIV)

Note
▶ The hydraulic connections to winch 4 - connection 1, connection 2 and brake - have been established, see section “Emergency operation of winches”!
▶ Pay attention to the different variations of the assembly plates!

Before emergency operation of winch 4 **W IV**, in addition to the hydraulic connections for the emergency operation of the winch, the hydraulic hose **354** must be connected.
Make sure that the following prerequisites are met:
– The hydraulic connections to winch 4 are established.
– The hydraulic hose **354** is in park position, point **P2**.

▶ Release the hydraulic hose **354** with the fitting **354.1** on the plug **188** (park position), point **P2**.
▶ Guide the hydraulic hose **354** to the front to the connector plate **16**.
▶ Connect the hydraulic hose **354** with the fitting **354.1** on the supply line **17**, point **P3**, of the connector plate **16**.

Note
▶ Observe the notes in the sections “Emergency operation of winches”!

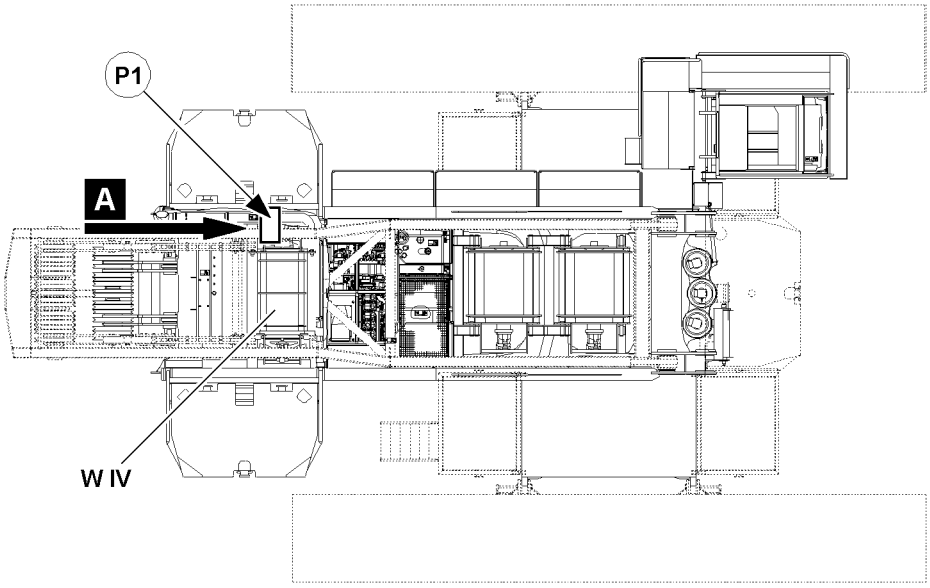
P1
A
W IV

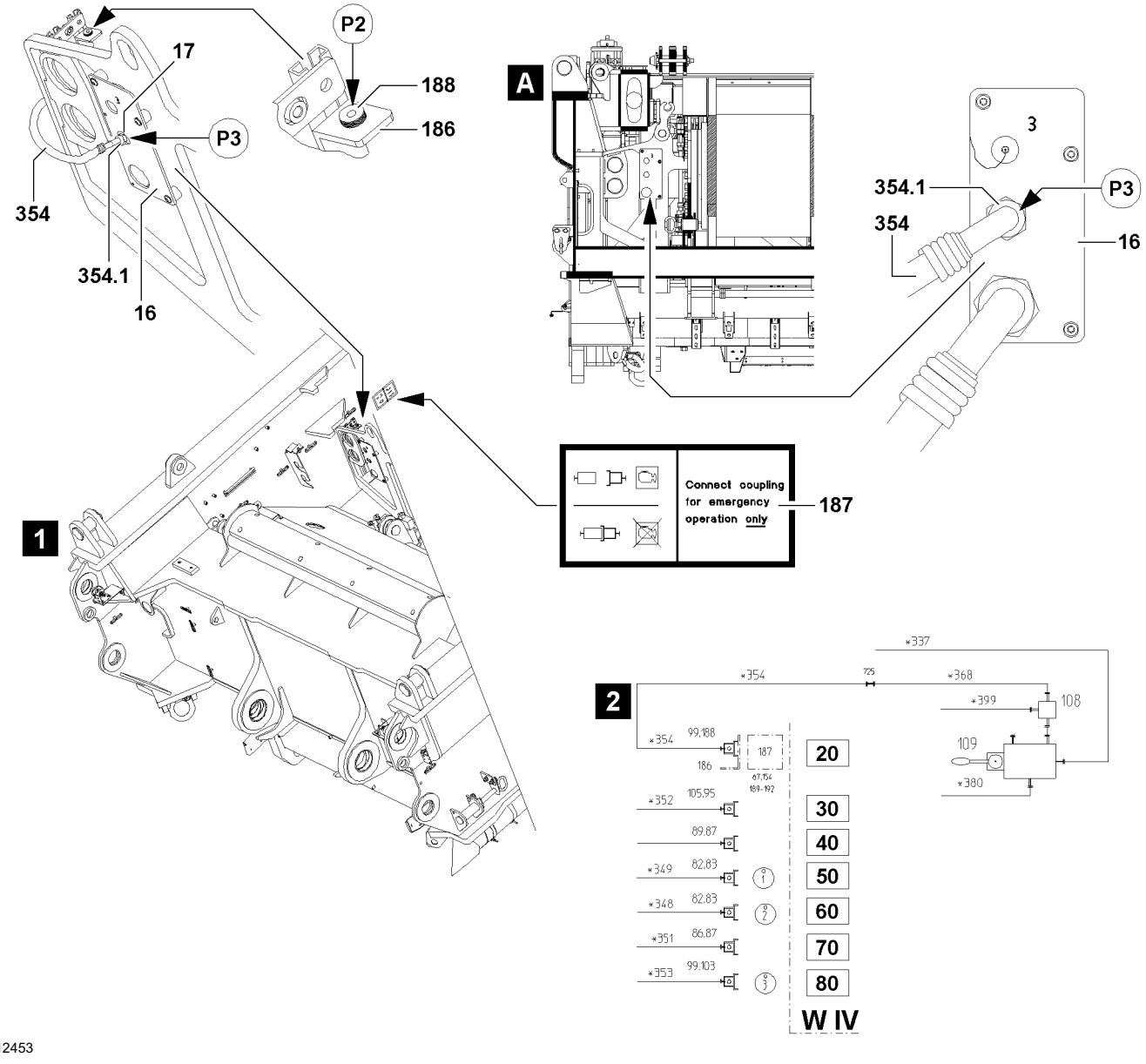
P2
17
188
P3
186
354
354.1
16
A
3
354.1
P3
354
16
1
Connect coupling for emergency operation only
187
2
*337
*354
725
*368
*399
108
109
*380
*354 99,188
186
187
67,154 189-192
20
*352 105,95
30
89,87
40
*349 82,83
50
*348 82,83
60
*351 86,87
70
*353 99,103
80
W IV

B112453

6.1.2 Spooling the winch out

▶ See section: “Emergency operation with assembly plate Variation 1 (V1)”

or

■ See section: “Emergency operation with assembly plate Variation 2 (V2)”

6.1.3 Spooling the winch up

▶ See section: “Emergency operation with assembly plate Variation 1 (V1)”

or

■ See section: “Emergency operation with assembly plate Variation 2 (V2)”

6.2 Disconnecting the hydraulic connections

Make sure that the following prerequisites are met:

– The emergency operation is completed.
– The pressure in the hydraulic system has been relieved.

▶ Disconnect the hydraulic connections from the winch 4 to the assembly plate.
▶ Remove the reducer sections (adapter).
▶ Close off the hydraulic connections of the winch 4 **W IV** with dust caps.

or

■ Reconnect the winch 4 **W IV** onto the hydraulic system of the crane.
▶ Disconnect the hydraulic hose **354** at point **P3**.
▶ Bring the hydraulic hose **354** in parking position: Install the fitting **354.1** onto the plug **188**.

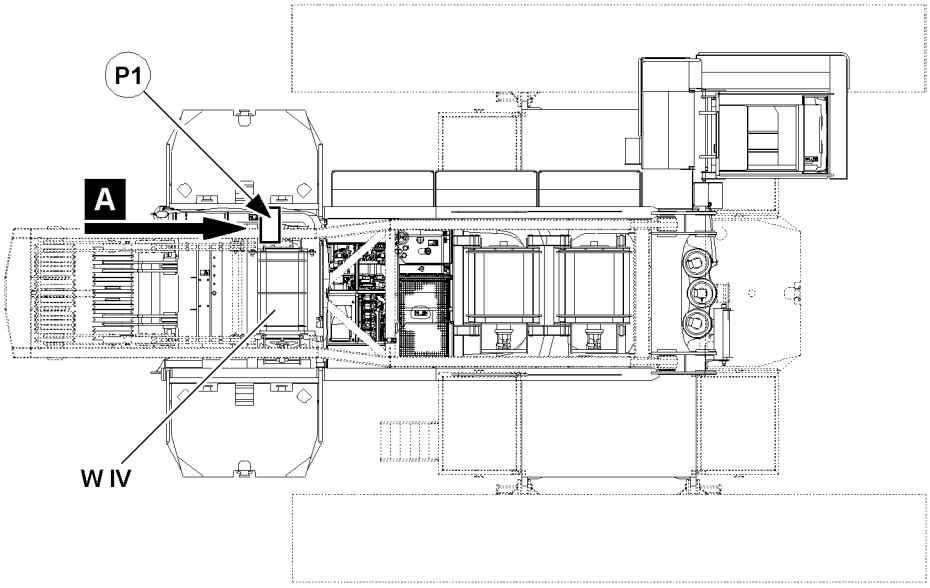
P1
A
W IV

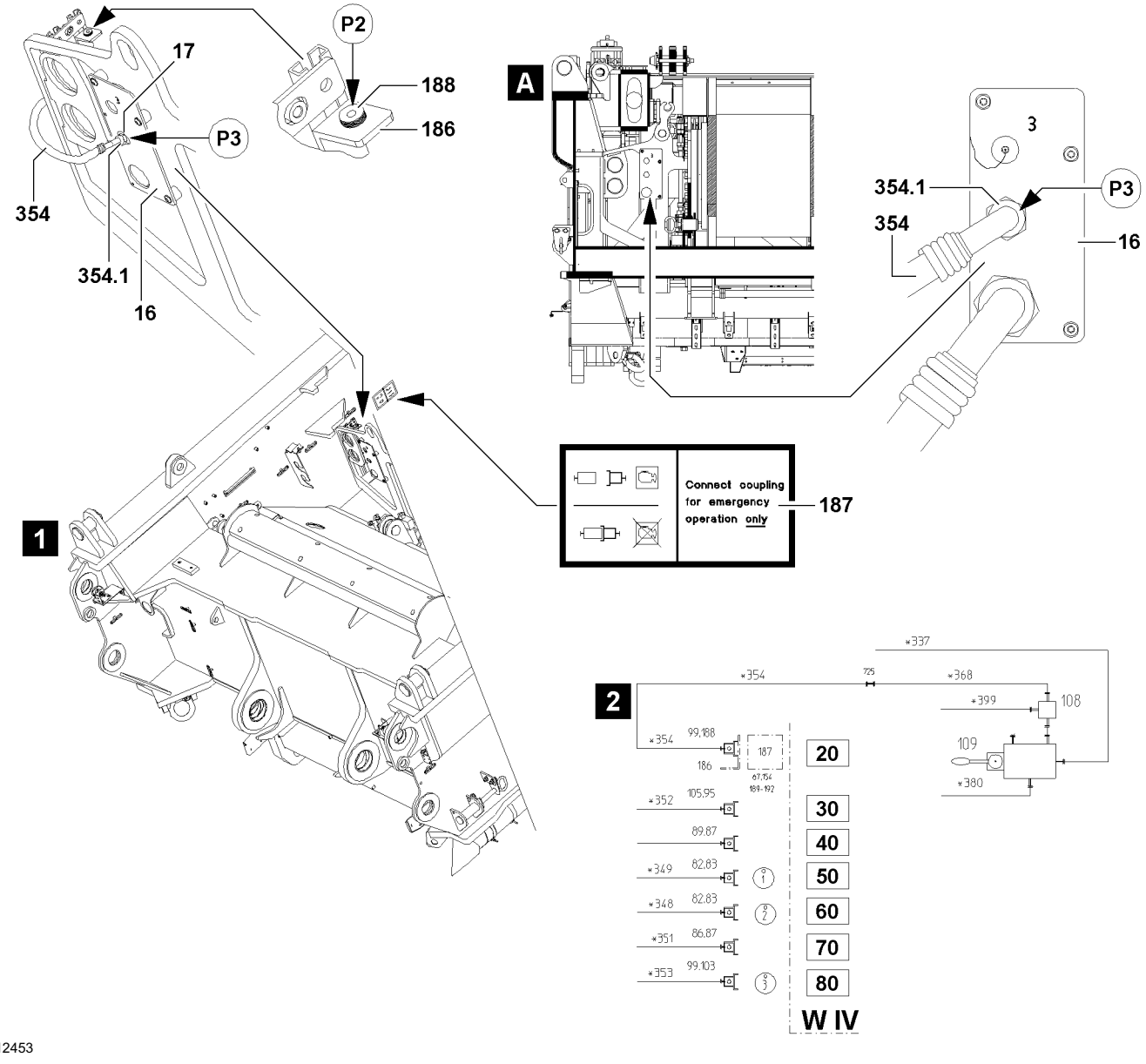
P2
17
188
P3
186
354
354.1
16
A
3
354.1
P3
354
16
1
Connect coupling for emergency operation only
187
2
*337
*354
725
*368
*399
108
109
*380
*354 99,188
186
187
67,154
189-192
20
*352 105,95
30
89,87
40
*349 82,83
50
*348 82,83
60
*351 86,87
70
*353 99,103
80
W IV

B112453

6.3 Connection schematic for emergency operation, illustration 2

Note
▶ See also Hydraulic schematic!

Position	Connection / description
20	Control pressure SA-frame
50	Lifting
60	Lowering
80	Replenishing pressure brake

7 Ending emergency operation

7.1 Procedure

▶ Turn the emergency operation aggregate* **1** off.
▶ Close the ball valve **3**.
▶ Disconnect the hydraulic connections and close them off with dust plugs.

7 Service and maintenance

B195219

1 Liebherr Service

Liebherr mobile cranes, whether truck-mounted, mobile or crawler cranes - are technically advanced products, which prove their worth daily even under tough conditions.
The high technical standards of these cranes provide functional security, resistance to failure and ease of maintenance.
Liebherr is continuously developing the drive and control components. The combination of well proven units and modern manufacturing methods produces cranes that are safe to operate and easy to maintain.
Several hundred cranes are built every year for the international market, supported by international service.
Liebherr's “After Sales Service” plays an important role at Liebherr, in ensuring operational readiness and high crane availability.
With Liebherr, service begins when the crane is handed over. Your crane operators will be professionally trained in line with their level of knowledge, and we devote much time to this.
We also train your workshop staff in all crane-specific matters, because we know that they can deal with more than just minor repairs themselves. Often there are specialists who can quickly and reliably carry out crane repairs.
We have special service advisers available who will solve any problems you may have. This phone contact saves time and money. You should take advantage of it as soon as possible.
Our service technicians are specialists with years of experience, who can be deployed from local support points. Naturally these experts have specialized knowledge and special tools.
But before you call these specialists, it is worth making use of the facilities for getting advice mentioned above.
Check the antislip coverings before stepping on them regarding their antislip properties and cleanliness. If dirty, clean antislip coverings with a strong brush to retain the antislip properties. For cleaning the surfaces, use commercially available cleaners. Flush with water.

2 General specifications

Note
Customers claims for warranties and refunds!
The buyer only has a claim to warranties and possible refund if only original Liebherr replacement parts, Liebherr service items and Liebherr lubricants are used for the Liebherr crane!
▶ Only original Liebherr replacement parts have been tested for crane operational use, and may be used without risking safety!

Note
Exclusion of liability!
In the event that replacement parts are used that are **not** Original Liebherr replacement parts and **not** Original Liebherr service items and lubricants, Liebherr-Werk Ehingen GmbH disclaims all liability for system functionality as well as for the parts!
▶ Use only original Liebherr spare parts!

WARNING
Danger of fatal injury due to damaged crane components!
If crane components, which were damaged, for example due to maintenance errors, are not replaced immediately, personnel can be fatally injured!
▶ Maintain mobile crane components according to the data in the maintenance intervals, the maintenance notes and the lubrication chart!
▶ Replace damaged crane components immediately!

NOTICE
Damage of crane components!
If mobile crane components are not maintained according to the maintenance intervals and maintenance guidelines in the individual chapter, or if other lubricants are used than specified in the lubrication chart, the respective crane components can be damaged and/or functionally fail!
The warranty for the respective crane components are voided!
▶ Maintain mobile crane components according to the data in the maintenance intervals, the maintenance notes and the lubrication chart!

What does “checking” mean
The term “checking” includes all required work,such as:
– Determining a specified value
– Cleaning
– Adjusting
– Refilling
– Replacing

3 Cleaning and care of the crane

3.1 Care instructions for sound insulation (soundproofing)

Sound insulation in the area of engines and other noise sources is an integral part of the total construction. It is your task to limit the noise generation of vehicles and the sound level in the workplace to the legally specified values in connection with sound insulation and the design of the equipment. They are therefore an integral part for the construction permits for the machines. They may not be removed, and if damaged, they must be replaced by original Liebherr replacement parts.
From a construction point of view, they have been designed to be maintenance-free. They have been equipped with surfaces that repel dirt, oil and water. They are very flame-resistant and some of them, depending on application, are fireproof.
For these reasons, these parts need minimal care. Any small dirt deposits can be disregarded, as the acoustic effectiveness of the parts is not reduced.

NOTICE
Sound insulation (soundproofing) damage!
By using unsuitable tools or cleaning methods, sound insulation can be destroyed or damaged during cleaning!
▶ Remove severe contamination with suitable tools, for example with soft plastic scrapers!
▶ Do not use tools with sharp edges!
▶ Only use steam cleaners with extreme care and with a sufficient distance to the sound insulation and with low water pressure!
▶ Do **not** use **solvents** for cleaning!

WARNING
Impurities from solvents or foreign substances!
For example, if sound insulation is polluted by solvents, motor oils, gear oils, hydraulic oils or fuels, such substances can ignite and significantly detrimentally change the fire performance of the sound insulation!
▶ If such contamination of the sound insulation occurs, **remove immediately** and replace it immediately with **original parts**!

3.2 Care instructions for the driver's cab and the crane cab

Note

- The steering wheel, center console, instrument panel cover, floor covering and dirty upholstery in the driver's cab and the crane cab should only be cleaned with warm water mixed with dishwashing detergent!
- Do not use any scouring agents!

3.3 Care instructions for cleaning the crane

NOTICE

Damage to exhaust system on engines with exhaust aftertreatment SCR!

If water gets into the exhaust pipe, sensors of the exhaust aftertreatment can be destroyed and the coating of the SCR catalytic converter can be washed out!

- Make sure that no water gets into the exhaust pipe!
- During cleaning, keep sufficient distance to the exhaust pipe!

4 Measures for work interruption or transport

4.1 Hydraulic cylinder

NOTICE

Corrosion danger to the hydraulic cylinders!

When using cranes under aggressive environmental conditions, for example at places with maritime climates and particularly salty air, hydraulic cylinders can corrode and thereby be destroyed or severely damaged!

Expensive and extensive repairs can result!

If the crane is taken out of operation for an extended period of time:

- Disassemble the crane!
- Fully retract all crane hydraulic cylinders! If the hydraulic cylinders can not be completely retracted, protect exposed areas of the piston rod from corrosion, for example by applying grease!
- Grease any exposed areas on the piston rods, for example on luffing cylinders and ballasting cylinders, especially carefully!

5 Maintenance work on gear components

The gear oils in travel, slewing and winch gears must be checked regularly through an oil or lubricant analysis. For interval data, check the Crane operating instructions, chapter 7.02 and 7.03. The intervals must be adhered to.

Through the oil analysis, degrees of wear of gear components, the composition of the mechanical wear debris, the viscosity of the oil, the degree of oil contamination and additional relevant properties of the oil can be determined. The oil analysis results therefore allow for a technical evaluation about the continued use of the gear or the oil.

Advantages of oil or lubricant analysis:

- The gear oil change intervals can be matched according to the operating conditions and the results of the oil analysis, without risk, effectively and economically.
- A just starting gear damage can be recognized in time and as a result, the correct time of gear replacement can be determined.
- Operating times or repairs can be planned more effectively.
- Am earlier repair of gear components protects from larger and unforeseen damage.
- Subsequent damage can therefore be avoided to the greatest possible extent.

NOTICE
Danger of property damage!
If oil analysis and oil change intervals are not adhered to, there is the danger of gear damage!
If the analysis results and possibly resulting recommendations for an earlier oil change or further maintenance work are not observed, there is the danger of gear damage!
- ▶ The oil analysis and oil change intervals must be strictly observed.
- ▶ If an earlier oil change is required due to oil analysis results: Change the oil.

5.1 Recommendations for taking oil samples

WARNING
Danger of burns!
When working on crane components at operating temperature, there is a danger of burns due to components or service fluids!
Personnel can be severely injured or killed!
- ▶ Carry out all work with upmost caution!
- ▶ Wear protective clothing!

Take oil sample:
- – Immediately after stopping the gear.
- – At normal operating temperature.
- – Always take oil on the same location of the gear.
- – Take oil always according to the same method.
- – On gears with double slipring seal, also take sample from the slipring seal area.
- – Take oil not right after an oil change.
- – Take oil not right after adding larger amounts of oil.
- – Fill oil only in a clean and dry sample container (recommendation: Fill oil into original sample containers!)

6 Maintenance work on the crane superstructure or boom

WARNING
Danger of falling!
During maintenance work on the crane superstructure or boom, personnel must be secured with appropriate safety measures to prevent them from falling! If this is not observed, working personnel can fall and be killed or severely injured!
- ▶ For all work on the crane where there is a danger of falling, take suitable safety measures!
- ▶ The crane superstructure or boom may not be accessed without suitable aids!
- ▶ Suitable aids are, for example: Lifting platforms, scaffoldings, ladders, assembly platforms, auxiliary crane.
- ▶ If railing are present on the crane superstructure, then they must be swung into operating position and secured for all work, see Crane operating instructions, chapter 2.06!
- ▶ Only step on such aids with clean shoes!
- ▶ Keep aids clean and free of snow and ice!
- ▶ If the work cannot be carried out with such aids nor from the ground, then the maintenance personnel must secure themselves with approved catch systems to avoid falling, see Crane operating instructions, chapter 2.04!
- ▶ It is prohibited to step on the driver's cab or cab roof and specially marked surfaces, see Crane operating instructions, chapter 2.05!

7 Maintenance and inspection guidelines

Note

- ▶ Carry out the maintenance and inspection work on the crane chassis according to operating hours or kilometers driven!
- ▶ Carry out the maintenance and inspection work on the crane superstructure according to operating hours!

Observe the following chapters for maintenance and inspection of the crane:

- Chapter 7.02: Maintenance intervals - Crane chassis [1)]
- Chapter 7.03: Maintenance intervals - Crane superstructure [1)]
- Chapter 7.04: Maintenance guidelines - Crane chassis [2)]
- Chapter 7.05: Maintenance guidelines - Crane superstructure [2)]
- Chapter 7.06: Fill quantities, lubrication chart
- Chapter 7.07: Service items and lubricants

[1)] These chapters contain a list of service intervals for all maintenance work. Only the relevant work is to be carried out.
[2)] For individual components, the manufacturer's specifications must be observed.

WARNING

Danger of accidents during maintenance and inspection of crane components!
During maintenance and inspection work on crane components, there exists increased danger of accidents if maintenance and inspection guidelines are not observed!
Personnel can be severely injured or killed!

- ▶ Observe and adhere to the following listed warning notes and the generally applicable safety rules!

7.1 Warning notes

7.1.1 Preparatory work

WARNING

Fatal injury when driving or operating the crane during maintenance, inspection or repair work!
If the mobile crane is operated during maintenance, inspection or repair work, then personnel can be killed or severely injured!
This could result in high property damage!

- ▶ During maintenance, inspection or repair work, it is strictly prohibited to drive or operate crane!
- ▶ Show clearly with signs that maintenance, inspection or repair work is being carried out on the mobile crane!
- ▶ Use signs which show without a doubt that it is prohibited to drive and operate the crane! The national regulations regarding labeling on mobile cranes and on the signs must be observed!
- ▶ Carry out maintenance, inspection or repair work only with authorized and trained expert personnel.
- ▶ It is prohibited for unauthorized personnel to remain in the danger zone!

- ▶ Turn the engine on the crane superstructure and the crane chassis off!
- ▶ Apply the “parking brake crane chassis”.
- ▶ If possible:
  Lock the driver's cab and the crane cab.
- ▶ Hand the ignition key from the crane superstructure and the crane chassis to an authorized person.

7.1.2 Warning notes on risk of burns

WARNING
Risk of burns during maintenance or inspection work!
While carrying out maintenance or inspection work, you can get severe burns on hot surfaces of the crane components! This applies especially for the exhaust system or the travel gear!
- ▶ Let any components to be maintained or inspected cool off!
- ▶ Do not spill any service fluids over the hot components!
- ▶ Avoid short circuits in the electrical system, especially on the battery!
- ▶ Replace or change missing or defective protective insulation!

7.1.3 Warning notes for rotating parts

WARNING
Risk due to rotating parts!
If inspection work must be carried out while the engine is running, a significant danger exists due to rotating parts and the ignition system!
Personnel can be severely injured!
- ▶ Proceed especially careful!
- ▶ Never reach into rotating parts!
- ▶ Never reach into the cooler fan when the engine is warm! The cooler fan could turn on suddenly!

7.1.4 Warning notes for scalding risk

WARNING
Risk of scalding during maintenance or inspection work!
The cooling system is under pressure!
When the coolant reservoir is opened, hot coolant can escape explosively!
The most severe scalding on the entire body can result!
When the engine is warm:
- ▶ Do not open the cover of the coolant reservoir!
- ▶ To protect face, hands and arms from hot steam of hot coolant, cover the cap with a large rag when opening!

7.1.5 Warning notes on fire danger

DANGER
Danger of fire!
When working on fuel systems or on electrical systems, an increased danger of fire exists if the general safety rules are not observed!
Personnel can be severely injured or killed!
This can result in increased property damage!
- ▶ Disconnect the battery from the power supply!
- ▶ Do not smoke!
- ▶ Do not work near open flames!
- ▶ Keep a functioning fire extinguisher ready!

7.1.6 Improper maintenance

NOTICE
Damage of components!
In case of incorrect maintenance, severe functional defects and damage on the components can occur!
- ▶ Add correct and sufficient service fluids during maintenance!
- ▶ For all maintenance work, observe utmost cleanliness to prevent dirt from entering the inside of the components!
- ▶ Check components for leaks!
- ▶ Have leaking components sealed immediately and properly!

7.2 Checking the battery voltage

Note
If a crane is taken “out of service” and a user, such as the airplane warning light is turned on:
- ▶ Check the battery voltage in regular intervals. If necessary, recharge the battery.

7.3 Checking the antislip coverings

Check the antislip coverings before stepping on them regarding their antislip properties and cleanliness. If dirty, clean antislip coverings with a strong brush to retain the antislip properties. For cleaning the surfaces, use commercially available cleaners. Flush with water.

WARNING
Danger of falling!
If the following measures are not observed, personnel can fall down and be killed or severely injured!
- ▶ Keep antislip coverings clean and free of snow and ice!
- ▶ Only step on antislip coverings with clean shoes!
- ▶ Replace or renew missing or damaged antislip coverings!

7.4 Refueling

WARNING
Danger of fire!
Fuel is easily flammable and can cause fatal accidents in case of fire or open flames!
This could result in high property damage!
- ▶ Before refueling, turn the auxiliary heater or the engine preheating off!
- ▶ Fire, open flames and smoking are prohibited during the refueling procedure!

WARNING
Danger of poisoning!
Fuel is poisonous and hazardous to health!
- ▶ Do not allow for fuel to come in contact with skin, eyes or clothing!
- ▶ Do not breathe in fuel vapors!
- ▶ Keep children away from fuel!

If persons did come in contact with fuel:
- ▶ In case of eye contact, flush out the eyes immediately and consult a physician if necessary!
- ▶ Clean affected skin areas with clear water!

If fuel was swallowed:
- ▶ Go to a physician immediately!

NOTICE
Engine damage!
When using incorrect fuel, the engine and the fuel system can be severely damaged!
- ▶ Do not use gasoline on vehicles with Diesel engine!
- ▶ Do not mix Diesel fuel with gasoline!

If you have added incorrect fuel inadvertently:
- ▶ Do not turn the ignition on, have the fuel tank and fuel lines emptied completely by qualified expert personnel!

7.5 Refueling fuel tanks*

Note
- ▶ See danger notes in section “Refueling”.

7.6 Adding Urea solution

WARNING
Skin irritation and eye injuries!
Urea can cause skin irritation and eye injuries at contact!
- ▶ Do not allow for Urea to come in contact with skin, eyes or clothing!

If persons did come in contact with Urea:
- ▶ In case of eye contact, flush out the eyes immediately and consult a physician if necessary!
- ▶ Clean affected skin areas with clear water!

If Urea was swallowed:
- ▶ Flush the mouth with a lot of water! Then drink a lot of water and consult a physician, if necessary!

WARNING
Irritation of eyes and mucous membranes!
If the Urea tank cover is opened at high temperatures, ammonia vapors can emerge! If ammonia vapors are breathed in, then it can cause burning eyes, nose, throat and coughing!
- ▶ Do not breathe in ammonia vapors!

NOTICE
Danger of corrosion!
If Urea is spilled during refueling, affected surfaces can corrode!
- ▶ Flush affected areas immediately with lots of water!
- ▶ Do not overfill the tank!

If possible:
- ▶ Refuel on a gas pump with nozzle!

blank page!

B195219

1 Crane chassis maintenance and inspection schedule

Note

- Carry out maintenance work after reaching the specified driven mileage, operating hours or calendar intervals. The interval which occurs first is the deciding factor!
- The maintenance intervals complement each other. If a higher interval is coming up, then carry out the work according to the lower interval also!

First maintenance after	Operating hour intervals or driven mileage			Calendar intervals			Work to be carried out
	250 h 5000 km	500 h 10000 km	1000 h 20000 km	Daily	Weekly	Annually	
Safety systems							
						X	Personal protective equipment Follow the instructions of the manufacturer
						X	Height rescue system Follow the instructions of the manufacturer
Fall protection equipment							
						X	Check protection points
						X	Check safety ropes
						X	Check the ladders for technically immaculate condition
						X	Check railings, steps and pedestals for safe function
						X	Check catwalks and open mesh flooring for safe function
Crane surface							
					X		Check accessible surfaces for cleanliness
						X	Check accessible surfaces for completeness and slip resistance
						X	Check labels for completeness and legibility
Diesel engine							
				X			Check the oil level

First maintenance after	Operating hour intervals or driven mileage			Calendar intervals			Work to be carried out
	250 h 5000 km	500 h 10000 km	1000 h 20000 km	Daily	Weekly	Annually	
							For all other maintenance tasks, observe the instructions of the engine manufacturer
				X			Check the coolant level in the equalising reservoir
						Every 2 years	Replace coolant
SCR Exhaust after treatment							
			4500 h			Every 2 years	Replace foam and filter element of urea pump
Air filter							
				X			Check monitoring device
						X	Clean, change the filter insert Observe the instructions of the engine manufacturer
Receptacle frame telescoping boom							
	X						Lubricate
Hydraulic system							
					X		Check hydraulic system for leaks
					X		Check hydraulic tank oil level
500 h			X			X	Check hydraulic oil, required degree of purity: 20/18/15 Take oil sample and have it tested by oil supplier
100 h		X					Replace bleeder filter of hydraulic tank
100 h		X					Replace the return filter
100 h		X					Replace oil filter insert
			X				Check hydraulic pressure, readjust, if necessary
Hydraulic hose lines							
				X			Check for leaks and damage

First maintenance after	Operating hour intervals or driven mileage			Calendar intervals			Work to be carried out
	250 h 5000 km	500 h 10000 km	1000 h 20000 km	Daily	Weekly	Annually	
						X	Have safe working condition checked by expert
Steering							
	X						Check that steering gear and tie rods are firmly attached, check cotter pin
				X			Check hydraulic steering system for leaks
				X			Check hydraulic hoses for leaks and damage
	X[1)]						Check track alignment, readjust, if necessary
100 h		X					Replace pressure filter insert
			X				Check hydraulic steering stop, adjust if necessary
					X		Check steering using test program
					every 2 weeks		Spray steering uncoupling LTC 1045-3.1
Hydraulic fan							
100 h		X					Replace pressure filter insert of hydraulic fan
Hydraulic supports							
	X						Check sliding beam for ease of movement, grease
	X						Check sliding beam cables
					X		Grease sliding beam cylinder mounting pins
						X	Lubricate bearing points of the swingable swing beams (folding beams)
					X		Check sight gauge, adjust if necessary
Axle suspension							
	X						Function test as blocking cylinder
			X[4)]			X[4)]	Check pressure accumulator pretension pressure (nitrogen)
Automatic transmission							
				X			Check the oil level
				X			Check oil pressure

First maintenance after	Operating hour intervals or driven mileage			Calendar intervals			Work to be carried out
	250 h 5000 km	500 h 10000 km	1000 h 20000 km	Daily	Weekly	Annually	
				X			Check operating temperature
					X		Check for leaks
	X						Check mounting screws, retighten if necessary
100 h			X			X	Oil change
100 h			X			X	Replace oil filter
Powershift transmission							
					X		Check the oil level
					X		Check for leaks
100 h		X				X	Oil change
100 h		X				X	Replace oil filter
Automatic gear box AS-Tronic, AS-Tronic HD							
					X		Check the oil level
					X		Check for leaks
						Every 3 years[5)]	Oil change
						Every 3 years[5)]	Replace oil filter
Torque converter transmission TC 2							
					X		Check the oil level
					X		Check for leaks
						X	Oil change
						X	Replace oil filter
Torque converter transmission TC HD							
					X		Check the oil level
					X		Check for leaks
						X	Oil change
						X	Replace suction filter
						X	Replace pressure filter
Offset gear / drop box							
					X		Check for leaks

First maintenance after	Operating hour intervals or driven mileage			Calendar intervals			Work to be carried out
	250 h 5000 km	500 h 10000 km	1000 h 20000 km	Daily	Weekly	Annually	
	X						Check mounting
1000 km			X			X	Oil change
Transfer gear							
1000 km			X			X	Oil change
					X		Check the oil level
				X			Check for leaks
	X						Check mounting screws, retighten if necessary
					X		Check on on road / off road gear transfer function
					X		Check all-wheel drive enabling function
				Every 2 years			Have tachograph / trip recorder checked
			X			X	Clean breather nipple
Hydrostatic travel drive							
				X			Check hydraulic hoses for leaks and damage
100 h		X					Clean filter unit
			X				Replace filter insert
Pump distributor gear							
					X		Check for leaks
	X						Check mounting
200 h			X			X	Oil change
Gear shafts and bearing block							
100 km			25000 km			Every 6 months	Check flange bolts, retighten if necessary
			25000 km			Every 6 months	Visual inspection of gear shafts
			25000 km			Every 6 months	Visually check the intermediate shaft bearing and bearing block

First maintenance after	Operating hour intervals or driven mileage			Calendar intervals			Work to be carried out
	250 h 5000 km	500 h 10000 km	1000 h 20000 km	Daily	Weekly	Annually	
			100000 km			Every 2 years	Lubricate gear bearings, if they can be lubricated
			100000 km			Every 2 years	Lubricate length compensation, if it can be lubricated
Drive shafts between the engine and gearbox or gearbox and distributor gear **Caution:** These checks should only be carried out by authorized and trained expert personnel!							
			100000 km			Every 2 years	Check resistance or play in joint by manually bending it after removal
			100000 km			Every 2 years	Check length compensation for impermissible bending play after removal. Replace the drive shaft if the bending play exceeds 0.17 mm .
Axle, driven							
				X			Check for leaks
	X						Oil level checks at axle housing, differential housing and wheel hubs
			10000 km			X	Grease steering knuckle bearings
	X						Check mounting
1000 km			X			Every 2 years	Oil change
						Every 2 years	Replace wheel bearing grease filling, if lubricated with grease
			X			X	Clean breather nipple on axle housing
Axles, non-driven							
			10000 km			X	Grease steering knuckle bearings
	X						Check mounting
			X			X	Replace wheel hub grease filling
			X			X	Adjust wheel bearings
Electrical system							
				X			Check vehicle lighting for function

First maintenance after	Operating hour intervals or driven mileage			Calendar intervals			Work to be carried out
	250 h 5000 km	500 h 10000 km	1000 h 20000 km	Daily	Weekly	Annually	
						X[3)]	Check cable connections and battery acid levels
Fuel system							
				X			Check for leaks
		X				X	Check condition and mounting
		X				X	Drain off water and sediments
		X				X	Clean preliminary filter for auxiliary fuel pump
	Every 50 h						Check fuel preliminary filter, drain off water if necessary
			X				Replace preliminary fuel filter
Tires							
					X		Check for external damage
					X		Check tire pressure
				X			Check profile wear and depth Observe the regulations as stipulated by law
100 km	X						Check lug nuts for tight seating, retighten if necessary
Brake system							
						X	Check brake system
	X						Check brake lining thickness
	X						Brakes, readjust if necessary
	X						Brake pads, replace if necessary
	X						Check the brake discs
	X						Check the brake drums
				X			Check function of parking brake and service brake
Eddy current retarder							
5000 km		X					Check mechanical and electrical parts Follow the instructions of the manufacturer
Air pressure system							

First maintenance after	Operating hour intervals or driven mileage			Calendar intervals			Work to be carried out
	250 h 5000 km	500 h 10000 km	1000 h 20000 km	Daily	Weekly	Annually	
					X		Check for leaks
				X			Check operating pressure of brake system
				X			Check cut-off pressure
						X	Drain air pressure tank
						X	Replace air drier granular cartridges
						X	Clean air drier preliminary filter
Driver's cab							
				X			Check instruments for function
				X			Check indicator lights for function
				X			Check engine brake actuation
				X			Check retarder operation
					every 2 weeks		Grease glide shoes of cab guide on vehicle frame LTC 1045-3.1
Emergency control							
						X	Check for correct function
Support plates with equalization							
						X	Replace grease filling
						X	Perform function test

[1] Every 500 km to 2000 km for frequent off-road driving
[2] At least 1x a year for frequent off-road driving
[3] In hot climates 2 x a year
[4] Note chapter 7.04, Maintenance guidelines - Crane chassis
[5] Only when using ZF-Ecofluid M, otherwise every 2 years

blank page!

B195219

1 Crane superstructure maintenance and inspection schedule

Note

- Carry out maintenance work after reaching the specified operating hours or calendar intervals. The interval which occurs first is the deciding factor!
- The maintenance intervals complement each other. If a higher interval is coming up, then carry out the work according to the lower interval also!

First maintenance after	Operating hour intervals			Calendar intervals			Work to be carried out
	250 h	500 h	1500 h	Daily	Weekly	Annually	
Safety systems							
						X	Personal protective equipment Follow the instructions of the manufacturer
						X	Height rescue system Follow the instructions of the manufacturer
Fall protection equipment							
						X	Check protection points
						X	Check safety ropes
						X	Check the ladders for technically immaculate condition
						X	Check railings, steps and pedestals for safe function
						X	Check catwalks and open mesh flooring for safe function
Crane surface							
					X		Check accessible surfaces for cleanliness
						X	Check accessible surfaces for completeness and slip resistance
						X	Check labels for completeness and legibility
Fire extinguishing system							
						X	Carry out a visual inspection of the system For all other maintenance tasks, observe the instructions of the fire extinguisher manufacturer.

First maintenance after	Operating hour intervals 250 h	500 h	1500 h	Calendar intervals Daily	Weekly	Annually	Work to be carried out
						Every 5 years	Replace trigger elements and extinguisher tank.
Diesel engine							
				X			Check the oil level For all other maintenance tasks, observe the instructions of the engine manufacturer
				X			Check the coolant level in the expansion tank
						Every 2 years	Replace coolant
SCR Exhaust after treatment							
			4500 h			Every 2 years	Replace foam and filter element of urea pump
Engine independent heater							
				X			Check the fluid level in the expansion tank
					Monthly		operate for 10 minutes with cold engine and lowest fan setting
						X	Carry out service work before and after every heating period
						Every 2 years	Replace the fluid for the heating system
Air filter							
					X		Check monitoring device
						X	Clean, change the filter insert Observe the instructions of the engine manufacturer
Slewing ring connection							
	X						Lubricate the gears
						X[1)]	Lubricate the slewing ring connection
250 h			X			X	Check the mounting screws for tight seating
						X	Check the tilt play
Rope winches							
250 h						X	Check the mounting screws for tight seating
				X			Check for leaks

First maintenance after	Operating hour intervals			Calendar intervals			Work to be carried out
	250 h	500 h	1500 h	Daily	Weekly	Annually	
					X		Check the oil level
			200 h			X	Check the condition of the tooth flanks; determining factor is operating hours of the winch. (only LR 13000)
		X					Check the gear oil via oil analysis
			3000 h			Every 4 years	Replace the gear oil
						X	Check the remaining theoretical utilization life by a technical expert
						Every 4 years	Check the remaining theoretical utilization life by authorized specialist
Hoist gear brakes							
				X			Check for leaks
Lattice sections							
						X	Check cracks, damage and distortion
						X	Check protection points
						X	Check safety ropes
						X	Check railings and pedestals for safe function
						X	Check catwalks and open mesh flooring for safe function
Guy rods							
						X	Check for cracks, damage and distortion by a technical expert
						Every 4 years	Check for cracks, damage and distortion by an authorized inspector
						X	Checking the retaining elements
Relapse supports							
		X				X	Lubricate bearings
X[2), 6)]							Check the oscillation guard for easy movement
Relapse cylinder							
X[2), 6)]					X		Check for leaks
X[2), 6)]		X				X	Check pretension pressure (nitrogen)

First maintenance after	Operating hour intervals			Calendar intervals			Work to be carried out
	250 h	500 h	1500 h	Daily	Weekly	Annually	
X[2), 6)]		X				X	Check the oil quantity
Pneumatic springs							
X[2), 5), 6)]		X				X	Check for correct function
A-bracket							
		X					Lubricate bearing
X[2), 6)]						X	Check the lever for the limit switch on the A-frame 3 for easy movement and reset of spring
X[2), 6)]						X	Check the rods with guide rail on the A-frame 2 and A-frame 3 for easy movement and distortion
Counterweight							
1,000 km		or 10,000 km				X	Check tightening torque of mounting screws
Concrete ballast plates (ballast container) (only LR 13000)							
				X			Check for damage
						Every 5 years	Check by licensing agency
Ballasting							
	X					X	Lubricate bearings
Press on pulleys of rope winches							
	X					X	Grease guides
Rope pulleys							
			X			X	Check for wear, damage, cracks and easy movement
			X			X	Lubricate
Crane ropes							
				X			Check cracks, damage and distortion
					Monthly		Check, grease by expert personnel
						X	Check by technical expert

First maintenance after	Operating hour intervals			Calendar intervals			Work to be carried out
	250 h	500 h	1500 h	Daily	Weekly	Annually	
						Every 4 years	Check by authorized inspector
Hook blocks							
		X				X	Grease hook
						X	Check distance dimension (y)
Crane operator's cab							
				X			Check instruments for function
				X			Check indicator lights for function
						X	Replace filter insert in water heater
				X			Check fluid level in expansion tank of engine control
Crane cab, extendable or inclinable							
		X				X	Check for correct function
		X				X	Lubricate bearings
Overload protection							
				X			Check for correct function
		X				X	Check length sensor for function
		X				X	Check length sensor rope for damage
Remote diagnostics device							
						X	Check for correct function
						X	Check the validity of the SIM card
Electrical system							
						X[3)]	Check cable connections and battery acid levels
Fuel system							
				X			Check for leaks
						X	Check condition and mounting
						X	Drain off water and sediments
						X	Clean preliminary filter for auxiliary fuel pump
	Every 50 h						Check fuel preliminary filter, drain off water if necessary
		Every 1000 h					Replace preliminary fuel filter

First maintenance after	Operating hour intervals			Calendar intervals			Work to be carried out
	250 h	500 h	1500 h	Daily	Weekly	Annually	
Slewing gear							
250 h						X	Check the mounting screws for tight seating
				X			Check for leaks
					X		Check the oil level
		X					Check the gear oil via oil analysis
			4000 h			Every 4 years	Replace the gear oil
Turntable lock							
		X				X	Lubricate
		X				X	Check for correct function
Bearings							
						X	Checking the retaining elements
Pump distributor gear							
				X			Check for leaks
					X		Check the oil level
500 h			X			X	Replace the gear oil
Hydraulic hose lines							
				X			Check for leaks and damage
						X	Check for safe condition by expert
Hydraulic system							
				X			Check the oil level
					X		Check for leaks
250 h		X				X	Replace the servo pressure and replenishing pressure filter inserts
250 h		X				X	Replace return filter inserts (only for cranes with open hydraulic circuit)
250 h		X				X	Replace bleeder filter of hydraulic tank
500 h			X			X	Check hydraulic oil, required degree of purity: 20/18/15 Take oil sample and have it tested by oil supplier
Hydraulic cylinder							
					X		Check for leaks

First maintenance after	Operating hour intervals			Calendar intervals			Work to be carried out
	250 h	500 h	1500 h	Daily	Weekly	Annually	
Hydraulic pressure accumulator (nitrogen)							
		X[4)]				X[4)]	Check pretension pressures
Air pressure system							
					X		Check for leaks
					X		Check operating pressure
					X		Check shut off pressure
					X		Check operation of automatic drain valve
						X	Replace air drier granular cartridges
						X	Clean air drier preliminary filter
Central lubrication system							
		X					Check for correct function
					X		Check the grease container fill level
Emergency control							
						X	Check for correct function
Lattice mast boom system							
X[6)]						X	Grease lube points of lattice sections
Telescopic boom with rope mechanism							
						X	Check telescopic boom for distortions and cracks
	X					X	Grease the sliding surfaces of the telescopic boom bearing
			X			X	Check change over pulleys of push out mechanics for damage and cracks
	X					X	Lubricate change over pulleys of telescoping mechanism
	X					X	Check mounting screws on change over pulleys for tight seating
250 h		X					Check, adjust rope mechanism
			20000 h			Every 10 years	Disassemble and check the boom
Telematik telescopic boom system							

First maintenance after	Operating hour intervals			Calendar intervals			Work to be carried out
	250 h	500 h	1500 h	Daily	Weekly	Annually	
						X	Check telescopic boom system for distortion, damage and cracks
						X	Check hydraulic components for leaks and damage
		X				X	Check telescoping cylinder for proper condition
						X	Check pull knob retainer and mounting screws for tight seating
						X	Check mounting screws of push out cylinder for tight seating
						X	Check twist guard of cylinder pinning and telescopic boom pinning
		X				X	Check push out gripper for proper condition
		X				X	Check locking pins and locking bores for proper condition
		X				X	Check inner and outer sliding surfaces for proper condition
						X[5)]	Lubricate the gliding surfaces
						X[5)]	Grease guide rails on telescope cylinder
			20000 h			Every 10 years	Disassemble and check the boom
Telescopic boom guying							
						X	Check for distortions and cracks
					Every 3 months [5), 6)]		Lubricate the TA/TY-guying on the grease fittings
				X			Check guy winch for leaks
					Every 6 months		Check the oil level on the guy winch
250 h		X				X	Check the mounting screws for tight seating

First maintenance after	Operating hour intervals			Calendar intervals			Work to be carried out
	250 h	500 h	1500 h	Daily	Weekly	Annually	
						X[4]	Check the rope connection between the guy rope and the auxiliary rope (only LTM 1400-7.1)
						Every 4 years	Replace gear oil of guy winch
Derrick ballast							
						X	Check frame, suspension and guide section for distortion and cracks

[1] every 3 months if the crane is not moved
[2] carry out a visual inspection before every start up.
[3] in hot climates 2 x a year
[4] note chapter 7.05, Crane superstructure maintenance instructions
[5] and as necessary
[6] during assembly

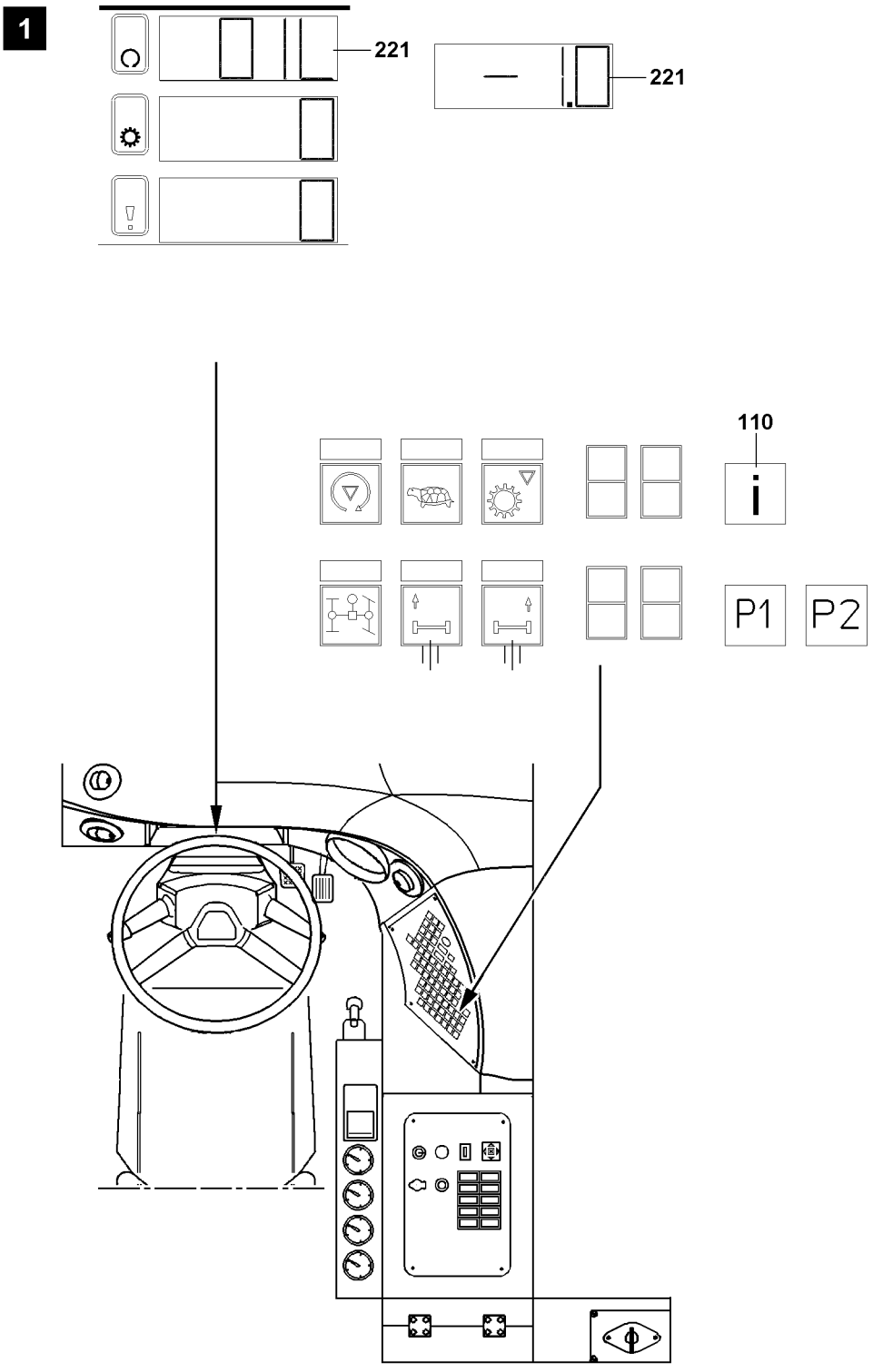

B115446

1 Diesel engine

Never step on fuel lines during maintenance or repair work in the engine area!

DANGER
Danger of fire!
- ▶ Make sure that the engine area is kept free of diesel fuel.
- ▶ Extreme cleanliness is vital, particularly during filter changes and bleeding. Wipe up any spilled fuel!
- ▶ When changing the filter it is advisable to place some cotton rags underneath to absorb the fuel before removing the filter.

1.1 Engine oil

1.1.1 Checking the oil level on the display in the driver's cab

Make sure that the following prerequisites are met:
- – The crane is in horizontal position.
- – The diesel engine is turned off and the ignition is turned on.
- – The oil has collected in the oil pan.

Note
- ▶ The display* **225** of the engine oil level shows how much engine oil is to be added or drained.
- ▶ Example, illustration **1**: If “-1.0” is shown, then 1 liter of engine oil must be drained. If “+1.5” is shown, then 1.5 liter of engine oil must be added.
- ▶ The measurement is made when the engine is at a standstill. When filling or draining the engine oil, wait for a few minutes until the engine oil has collected in the oil pan.

- ▶ Press the button* **110** until display* **225** engine oil level shows “OIL”, see illustration **1**.

NOTICE
Danger of damaging the engine!
If the diesel engine is operated with too much or not enough engine oil, the diesel engine can be severely damaged!
- ▶ If too much engine oil is shown on the display* **225**, drain engine oil according to the display* **225**!
- ▶ If not enough engine oil is shown on the display* **225**, add engine oil according to the display* **225** and the lubrication chart!

- ▶ Check the engine oil level on the display* **225**.

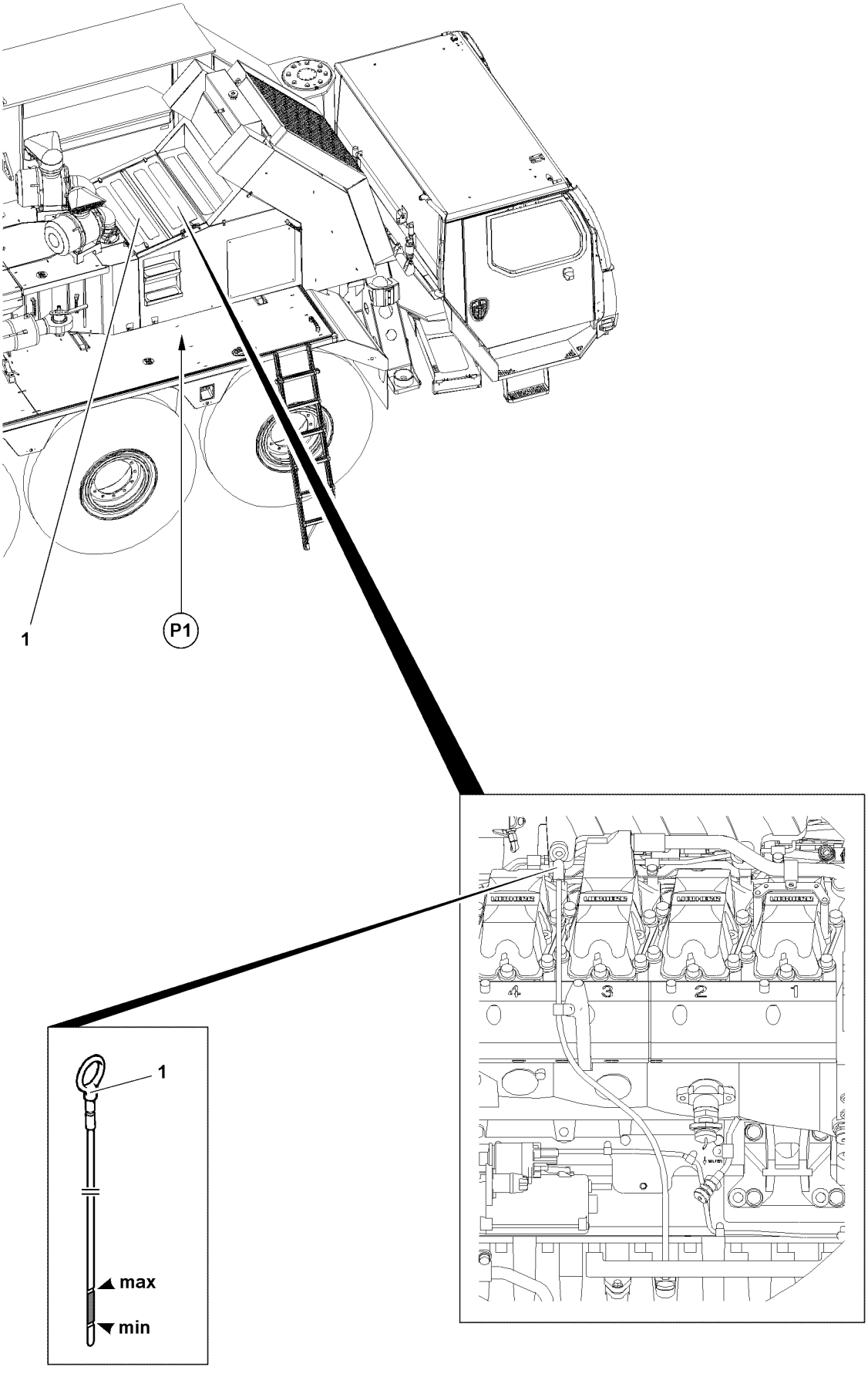

B116780

1.1.2 Checking the oil level with the dipstick

Make sure that the following prerequisites are met:

– The crane is in horizontal position.
– The diesel engine is turned off and the oil has collected in the oil pan.
– The cover **1** of the engine covering is open.
– The maintenance person is at position **P1**.

▶ Remove the dipstick **1** and wipe it off.
▶ Reinsert the dipstick **1** and pull it out again.

The oil level must be between the min. and max. marks on the dipstick **1**.
▶ Check the oil level.

NOTICE
Danger of damaging the engine!
If the oil level has dropped below the minimum mark, add engine oil as specified in the lubrication chart until the oil level is between the minimum and maximum marks.
▶ Add engine oil and check again.

▶ Reinsert the dipstick **1**.

1.1.3 Changing the oil

See separate engine manufacturer's operating instructions.

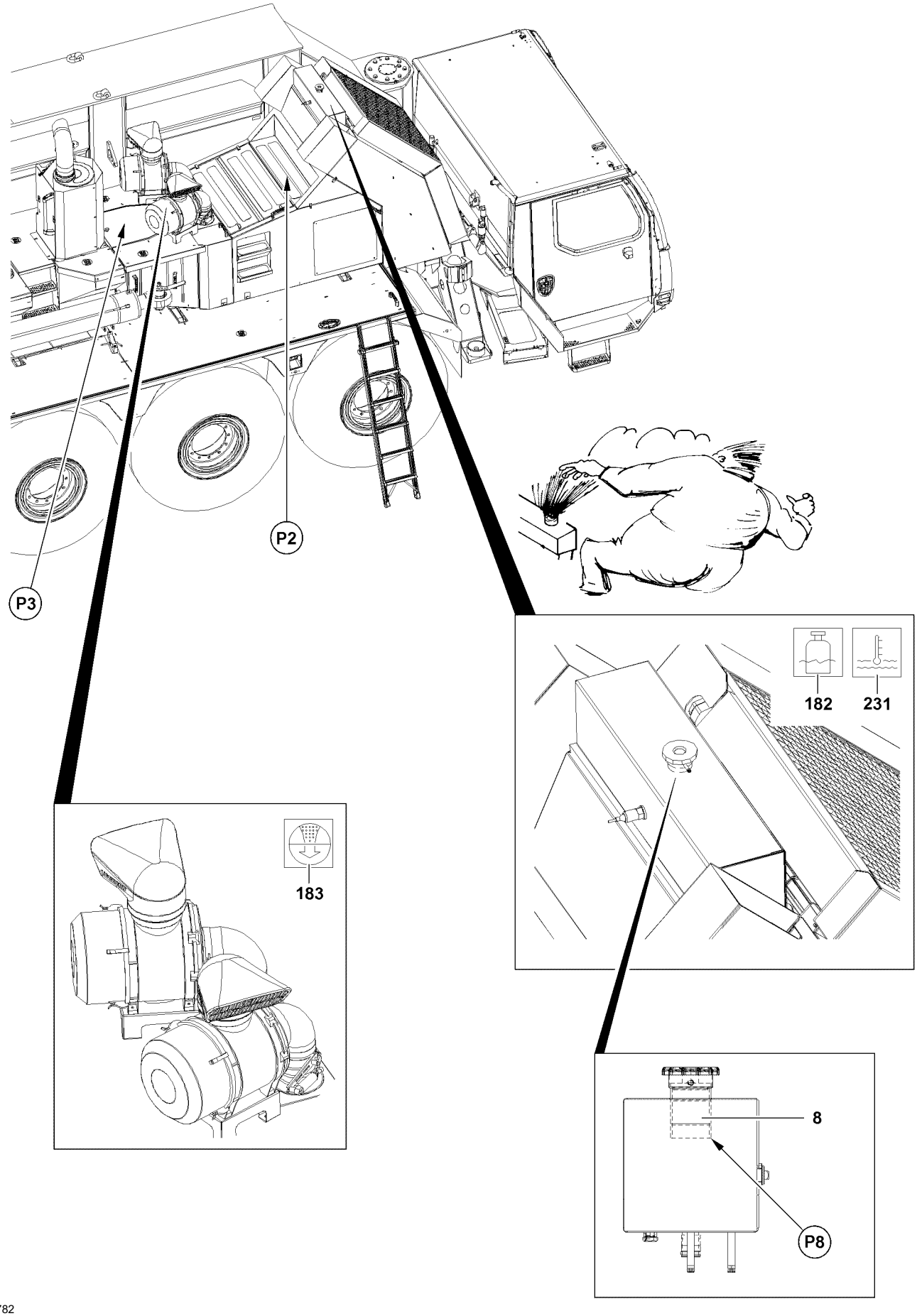

B116782

1.2 Coolant Engine cooling

The coolant level on the expansion tank is monitored with a water level probe. If the coolant level is too low, the warning light **182** “Diesel engine coolant level too low” lights up on the display unit.
The coolant temperature of the diesel engine can be read on the display unit on the bar chart via the warning light **231**.
Make sure that the following prerequisites are met:
– The crane is in horizontal position.
– The maintenance person is at position **P2**.

WARNING
Danger of burns due to hot coolant!
If the coolant reservoir is opened when the engine is at operating temperature, explosive hot steam or hot coolant can emerge and cause severe skin burns!
Personnel can be severely injured!
▶ The cooling system is under pressure.
▶ Never open the cap on the coolant reservoir as long as the engine is warm.
▶ To protect from skin burns caused by hot steam or hot coolant, place a large rag over the cover of the coolant reservoir when opening it.

▶ Turn the cap on the filler neck of the water cooler expansion tank to the 1st notch.
▶ Release excess pressure.
▶ Remove the cap.
▶ Check the coolant level.

Add coolant as specified in the lubrication chart only on the filler neck of the water cooler expansion tank.
▶ If necessary, add coolant to the starting point **P8** on the riser tube **8**.

1.3 Air filter

The air filter is monitored electronically. If the vacuum in the intake pipe has increased because of dirty air filter inserts, the warning light **183** in the driver's cab display unit lights up.
Make sure that the following prerequisite is met:
– The maintenance person is at position **P3**.

▶ If the warning light **183** lights up:
Clean or replace filter insert.

1.4 Diesel particle filter*

DANGER
Danger of igniting the diesel particle filter*!
▶ The diesel particle filter* may only be regenerated under the supervision of operating personnel!

Carry out the operation and maintenance of the diesel particle filter* according to the separate operating instructions of the diesel particle filter* manufacturer.

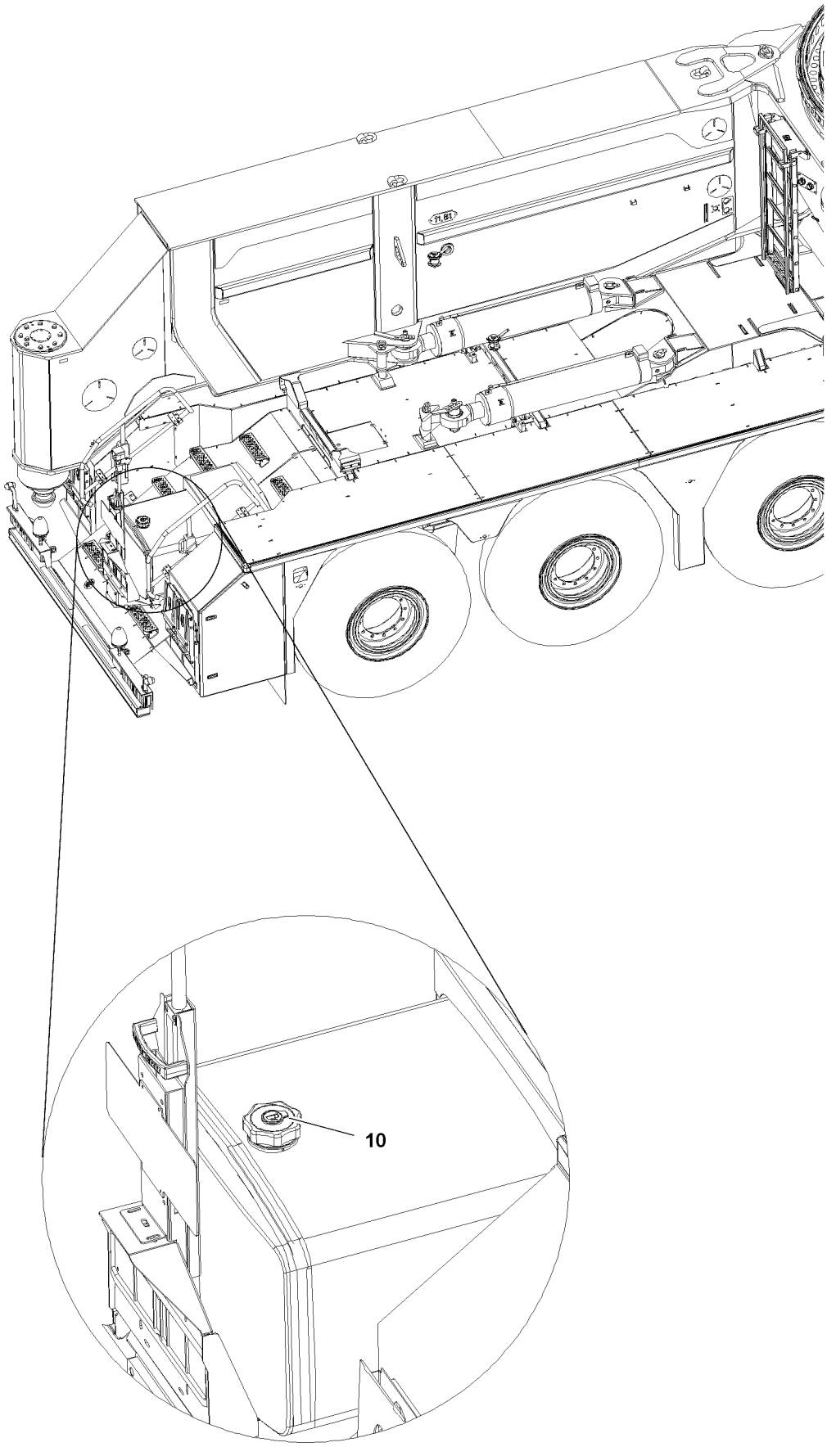

B116781

2 Fuel system

2.1 Refueling

Make sure that the following prerequisites are met:
- The crane vehicle is at the level for on-road driving.
- The auxiliary heater is turned off.
- The parking brake is applied.
- The Diesel engine and the ignition are turned off.

Note

▶ Also observe the danger notes in the Crane operating instructions, chapter 7.01.

The refueling procedure is carried out by the maintenance personnel either from the ground or from a permanently integrated side rear access.

▶ Open the tank cover **10**.

▶ Insert the fuel nozzle **11** in the filler neck.

▶ Refuel the vehicle.

▶ Close the tank cover **10**.

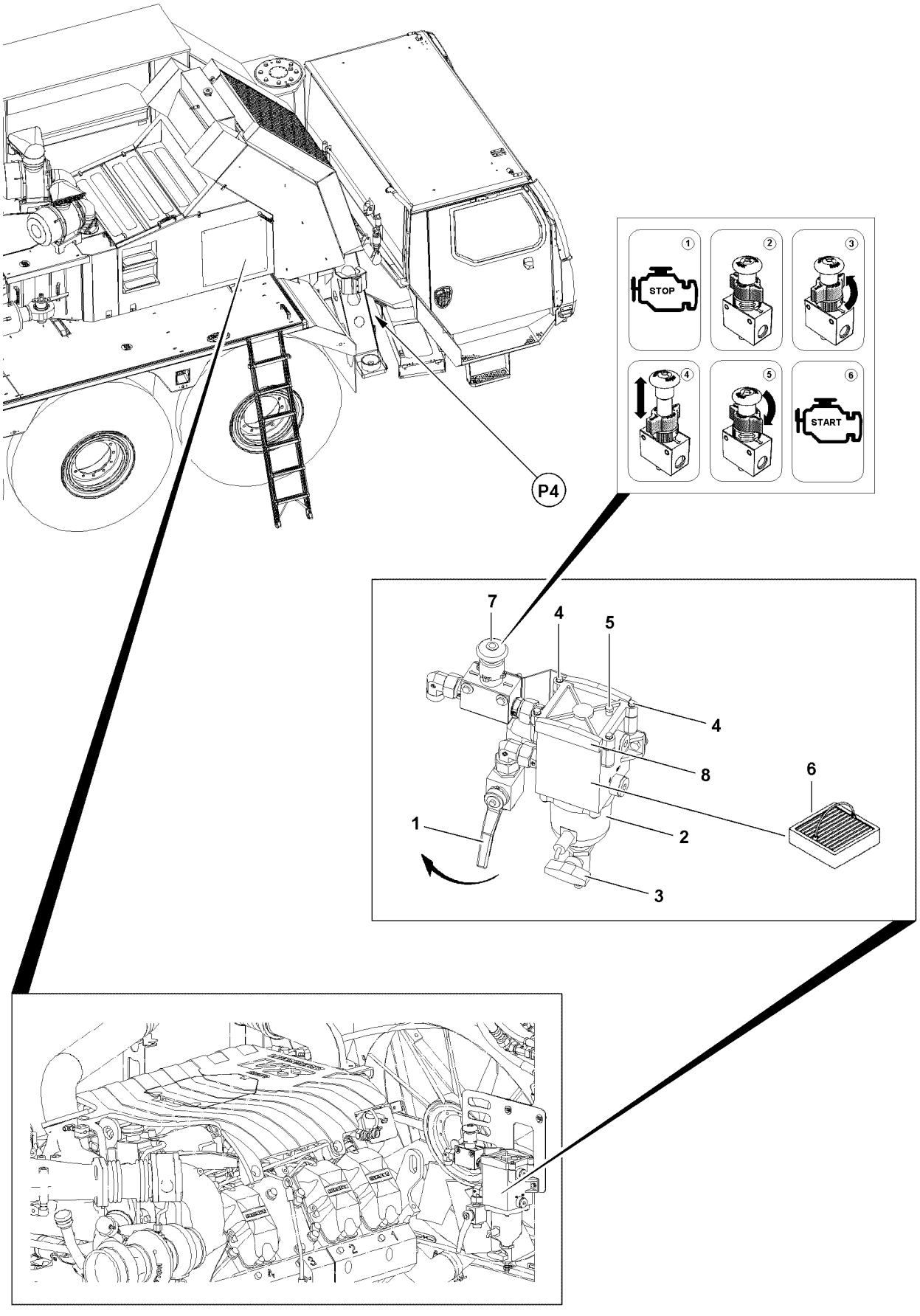

B116783

2.2 Fuel preliminary filter*

2.2.1 Draining the fuel preliminary filter

Note
- ▶ Fuel preliminary filter only for Diesel engines with exhaust aftertreatment system SCR (Selective Catalytic Reduction).
- ▶ The water separator **2** on the fuel preliminary filter must be drained according to the maintenance intervals or when an error message is shown.

Make sure that the following prerequisites are met:
- – The telescopic boom is luffed up.
- – The maintenance person is at position **P4**.

- ▶ Turn the diesel engine off.
- ▶ Place a catch basin under the water separator.
- ▶ Close the ball valve **1**.
- ▶ Open the drain valve **3** and drain water until fuel emerges.
- ▶ Close the drain valve **3**.
- ▶ Open the ball valve **1**.
- ▶ Remove the catch basin and dispose of the fluid.

2.2.2 Cleaning the filter strainer

Note
- ▶ The filter strainer **6** on the fuel preliminary filter must be cleaned according to the maintenance intervals or when an error message is shown.

DANGER
Danger of fire and explosion!
- ▶ Do not smoke!
- ▶ Avoid open flames!
- ▶ Work only when the diesel engine is turned off!
- ▶ Maintain extreme cleanliness during all work!

- ▶ Turn the diesel engine off.
- ▶ Place a catch basin under the fuel preliminary filter.
- ▶ Close the ball valve **1**.
- ▶ Open the drain valve **3** until no more fuel emerges.
- ▶ Remove the catch basin and dispose of the fluid.
- ▶ Remove the screws **4** and remove the cover **8**.
- ▶ Remove the filter strainer **6** and clean it properly.
- ▶ Insert the cleaned filter strainer **6** properly.
- ▶ Install the cover **8** with seals properly.
- ▶ Properly tighten the screws **4**.
- ▶ Open the ball valve **1**.
- ▶ Open the breather screw **5**.
- ▶ Operate the hand pump **7** and properly bleed the fuel filter.
- ▶ Properly tighten the breather screw **5**.
- ▶ Start the diesel engine and check the fuel preliminary filter for leaks.

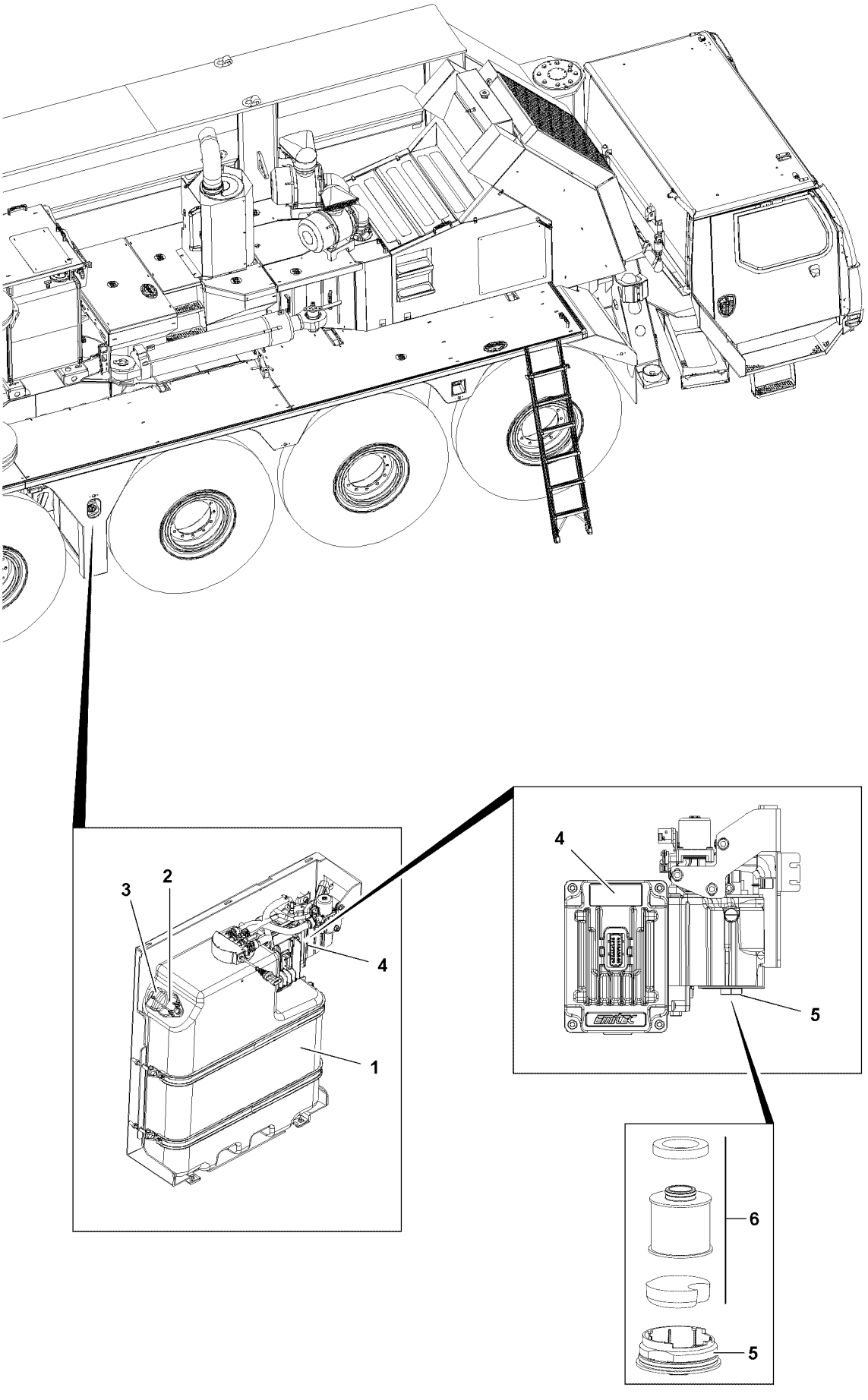

B116784

3 Urea system*

Note
- ▶ Urea system only for Diesel engines with exhaust aftertreatment system SCR (Selective Catalytic Reduction).

3.1 Adding Urea solution

Make sure that the following prerequisites are met:
- – The auxiliary heater is turned off.
- – The parking brake is applied.
- – The Diesel engine and the ignition are turned off.

Note
- ▶ Also observe the danger notes in the Crane operating instructions, chapter 7.01.

- ▶ Open the tank cover **3** on the Urea tank **1**.
- ▶ Insert the fuel nozzle in the filler neck **2** of the Urea tank **1**.
- ▶ Refuel the vehicle.
- ▶ After the refueling procedure:
  Remove the fuel nozzle and close the tank cover **3**.

3.2 Changing the urea filter

NOTICE
Danger of corrosion!
If urea is spilled, affected surfaces can corrode!
- ▶ Absorb the spilled urea and flush the affected areas immediately with a large amount of water!
- ▶ When handling urea, observe the general cautionary and sanitary protective measures!

Note
- ▶ Change the filter insert **6** for the urea pump **4** according to the data in the maintenance intervals, see Crane operating instructions, chapter 7.02!
- ▶ Also observe separate engine manufacturer's operating instructions.
- ▶ Change the filter insert **6** only when the pressure is relieved!

- ▶ Turn the diesel engine off.
- ▶ Remove the cover.
- ▶ Open the housing cover **5** and replace the filter insert **6**.
- ▶ Close the filter housing with the housing cover and tighten with a tightening torque of 15 Nm.
- ▶ If applicable, remove spilled urea and clean affected areas with plenty of water.

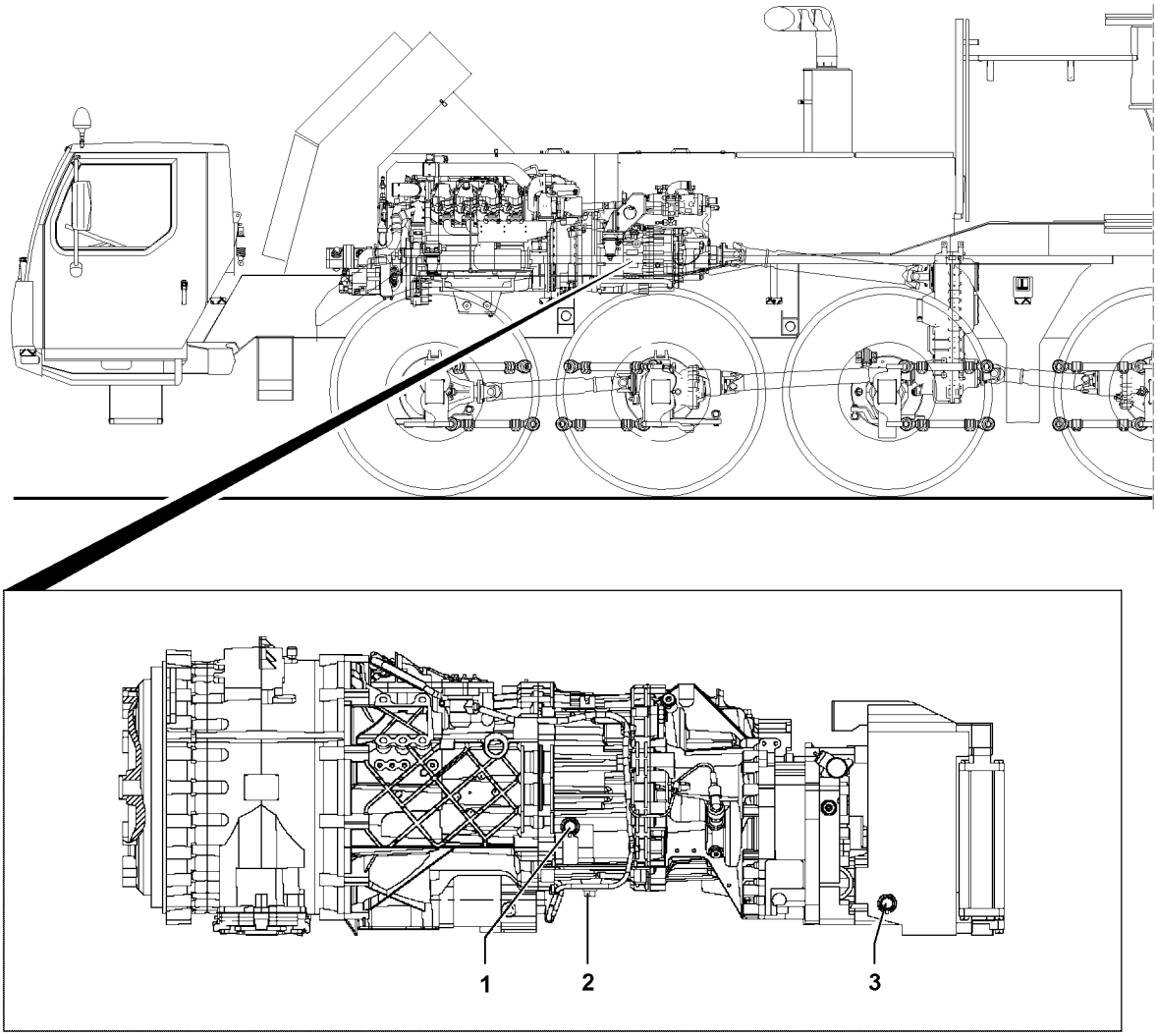

B117117

4 Automatic transmission with torque converter coupling

NOTICE
Danger of damaging the transmission!
- ▶ Maintain utmost cleanliness during all work to prevent any dirt from getting into the transmission!
- ▶ Check the transmission for leaks at regular intervals!
- ▶ Have a leaking transmission sealed immediately and professionally!

4.1 Checking for leaks

- ▶ Check visually if there are any leaks on the automatic transmission and the torque converter coupling.

4.2 Checking the oil level on the automatic transmission

Make sure that the following prerequisites are met:
- The crane vehicle is in horizontal position.
- The parking brake is applied.
- The gear oil has cooled down (less than 40 °C).
- The covers for the automatic transmission are removed.

- ▶ Remove the oil filler plug **1**.

The oil level must reach the edge of the bore.
- ▶ Perform a visual inspection.

NOTICE
Danger of gear damage!
Too little oil causes lubricating problems and reduces the service life of the gear.
Too much oil causes more displacement work and overheats the gear!
- ▶ Add oil as specified in the lubrication chart up to the overflow on the oil filler plug **1** and re-check the level.
- ▶ The deciding factor for exact oil quantity is always the correct procedure for adding oil and checking the oil level after a trial run!

- ▶ Install the oil filler plug **1** with new seal and tighten.

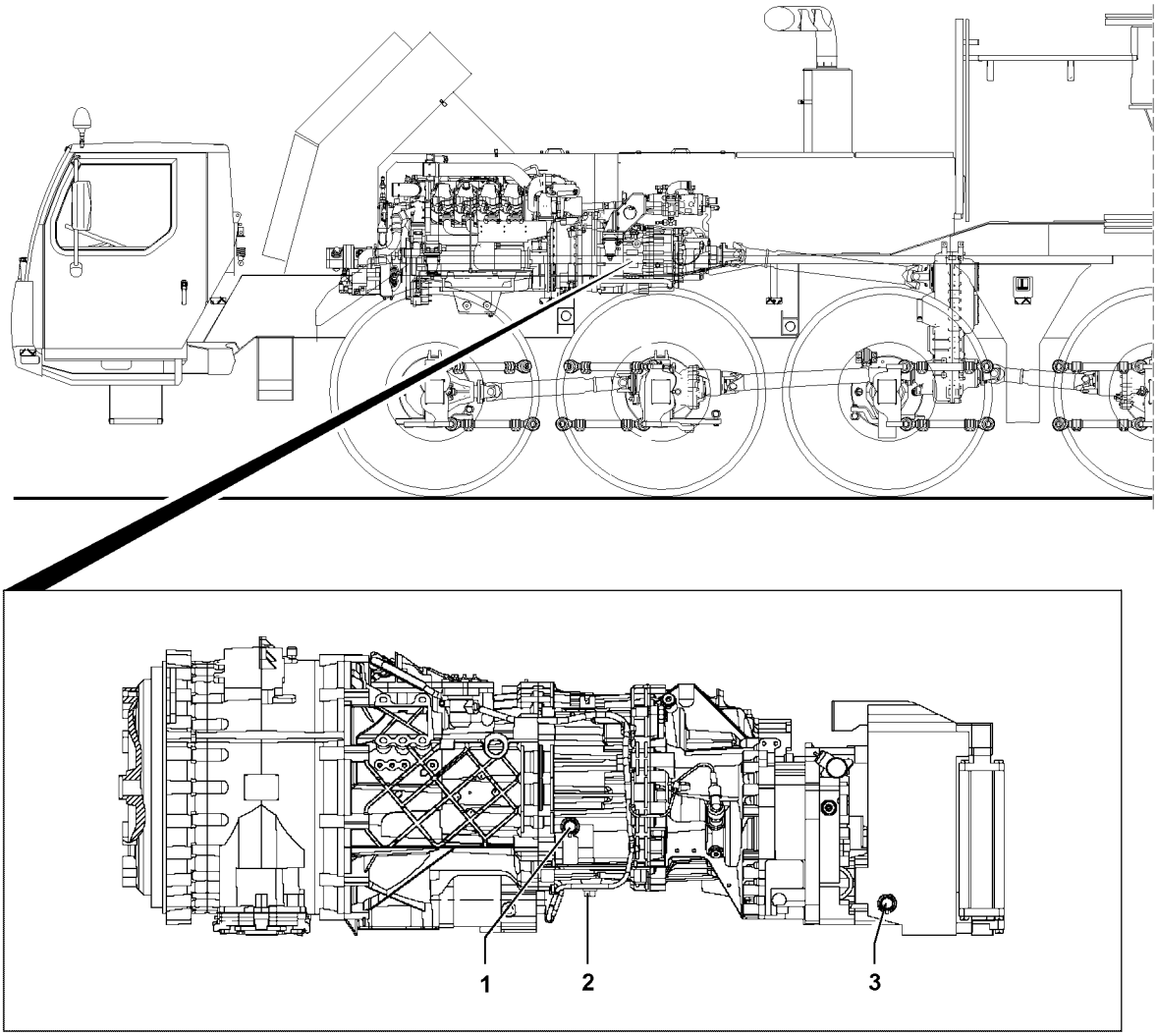

B117117

4.3 Replacing the oil in the automatic transmission

Make sure that the following prerequisites are met:
- The crane vehicle is in horizontal position.
- The parking brake is applied.
- The transmission is warmed up and ready for operation.
- The covers for the automatic transmission are removed.

Note
- When selecting the oil collecting container, make sure that the oil collecting container is of sufficient size to hold all the used oil.
- For fill quantity of automatic transmission, see Crane operating instructions, chapter 7.06.

- Remove the oil filler plug **1**.
- Remove the oil drain plug **2** and the oil drain plug **3** and drain the gear oil.
- Clean the magnet on the oil drain plugs.
- Reinstall the oil drain plug **2** and the oil drain plug **3** with a new seal and tighten.
- Add oil according to the lubrication chart on the bore of the oil filler plug **1** until it starts to run over.
- After adding the oil, install the oil filler plug **1** with a new seal and tighten.
- Test drive the vehicle.
- Check the oil level and add oil, if necessary.

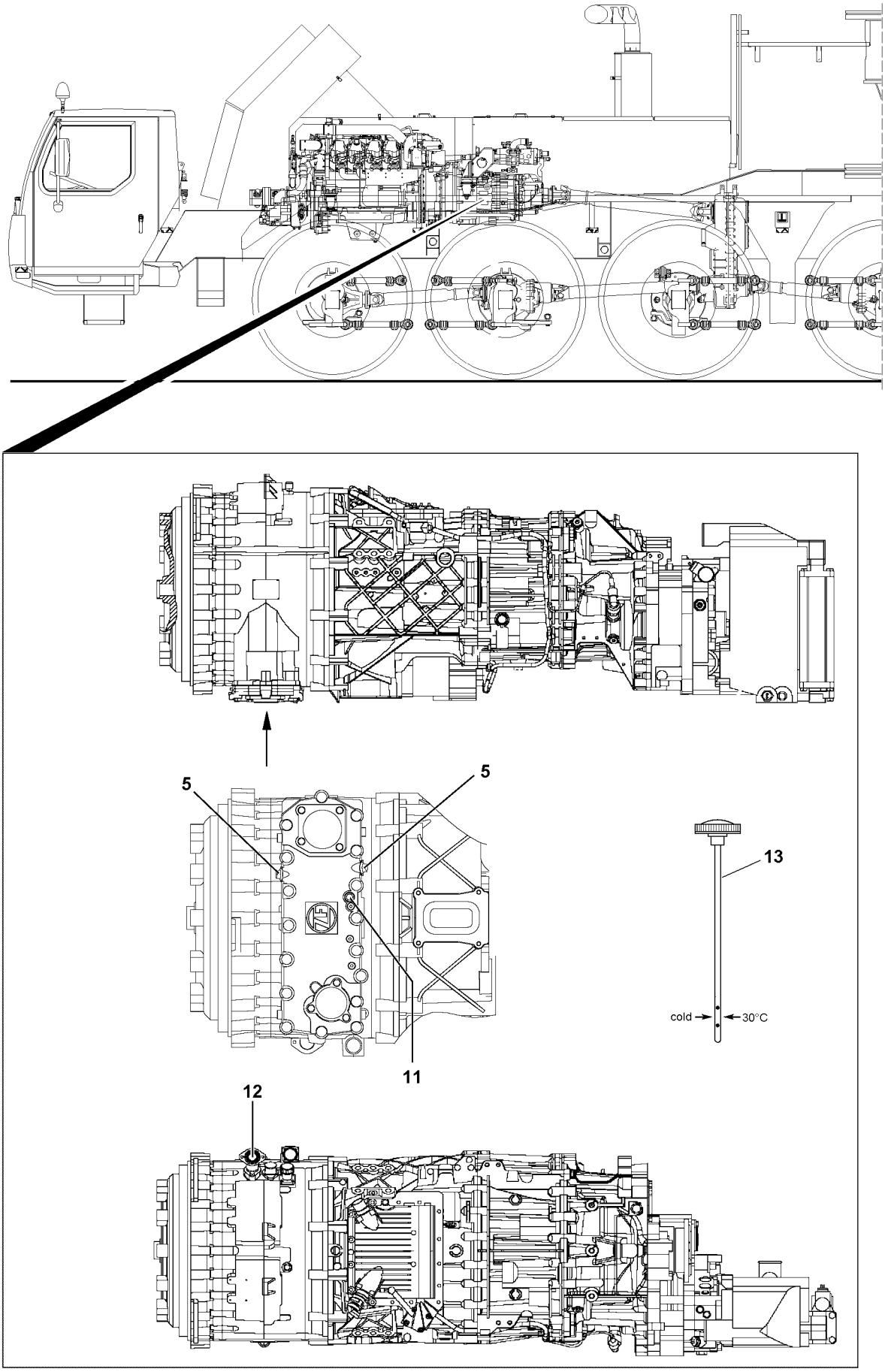

B117116

4.4 Checking the oil level of torque converter coupling

Make sure that the following prerequisites are met:
- The crane vehicle is in horizontal position.
- The oil temperature is 30 °C.
- The engine is running at idling speed.
- The transmission is in neutral position.

The retarder may not be operated while checking the oil level.

▶ Remove the dipstick **13** and check the oil level.

If the oil level has dropped below the permissible minimum mark “cold”, then oil must be added.
If there is too much oil in the system, it must be drained via the drain plug.

Note
Important checking note!
The oil on the dipstick **13** must be transparent. Milky oil means that foam is forming in the system.

▶ Let the engine run at idling speed until the oil on the entire dipstick is clear. This procedure can take several minutes.

▶ Perform a visual inspection.

NOTICE
Danger of gear damage!
Too little oil causes lubricating problems and reduces the service life of the gear. Too much oil causes more displacement work and causes the gear to overheat. If too much oil is added, oil may escape during retarder operation and / or during extended downtime!

▶ Add oil as specified on the lubricant chart and re-check!

▶ Insert the dipstick **13**.

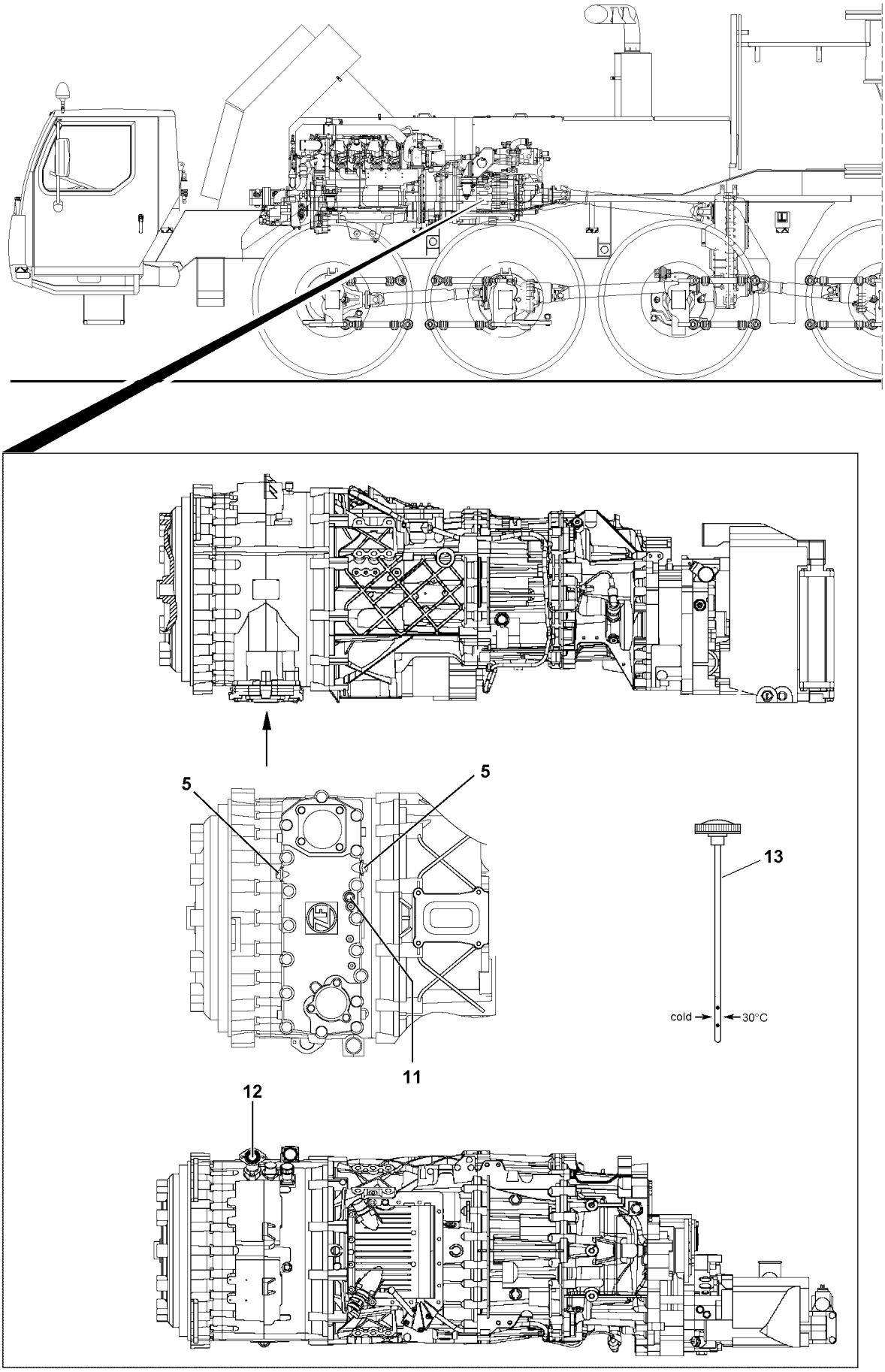

B117116

4.5 Changing the oil on the torque converter coupling

Make sure that the following prerequisites are met:
- The parking brake is applied.
- The transmission is in neutral position.
- The oil is hot and is thin.

Note
Important safety instructions!
- ▶ Do not drive against converter when at a standstill!
- ▶ Do not actuate the retarder at a standstill. The retarder must be turned off.

Note
- ▶ When selecting the oil collecting container, make sure that the oil collecting container is of sufficient size to hold all the used oil.
- ▶ For fill quantities of torque converter coupling, see Crane operating instructions, chapter 7.06.

- ▶ Remove the dipstick **13**.
- ▶ Remove the oil drain plugs **5** and the torque converter discharge plug **11** and drain the oil.

Note
- ▶ The oil in the torque converter cannot be drained completely. The oil remaining in the torque converter is approx. 9 l. Depending on the version and location, a certain amount of oil, which cannot be drained, also remains in the connector lines.

- ▶ Clean the magnet on the oil drain plugs **5**.
- ▶ Reinstall the oil drain plugs **5** and torque converter discharge plug **11** with new seal ring and tighten.
- ▶ Add oil as specified on the lubrication chart on the oil filler tube **12** (approx. 20 l).
- ▶ Start the diesel engine.
- ▶ With the engine running at idling speed, check the oil level constantly and add oil until the oil level on the oil dipstick **13** remains steadily in the range of the 30 °C cold mark.

NOTICE
Danger of damage!
- ▶ If too much oil has been added, then it must be drained!

The oil should be at approx. 30 °C, allow oil to cool down if necessary.
- ▶ Check oil level at 30 °C cold mark with the engine at idling speed.
- ▶ Replenish oil if necessary.

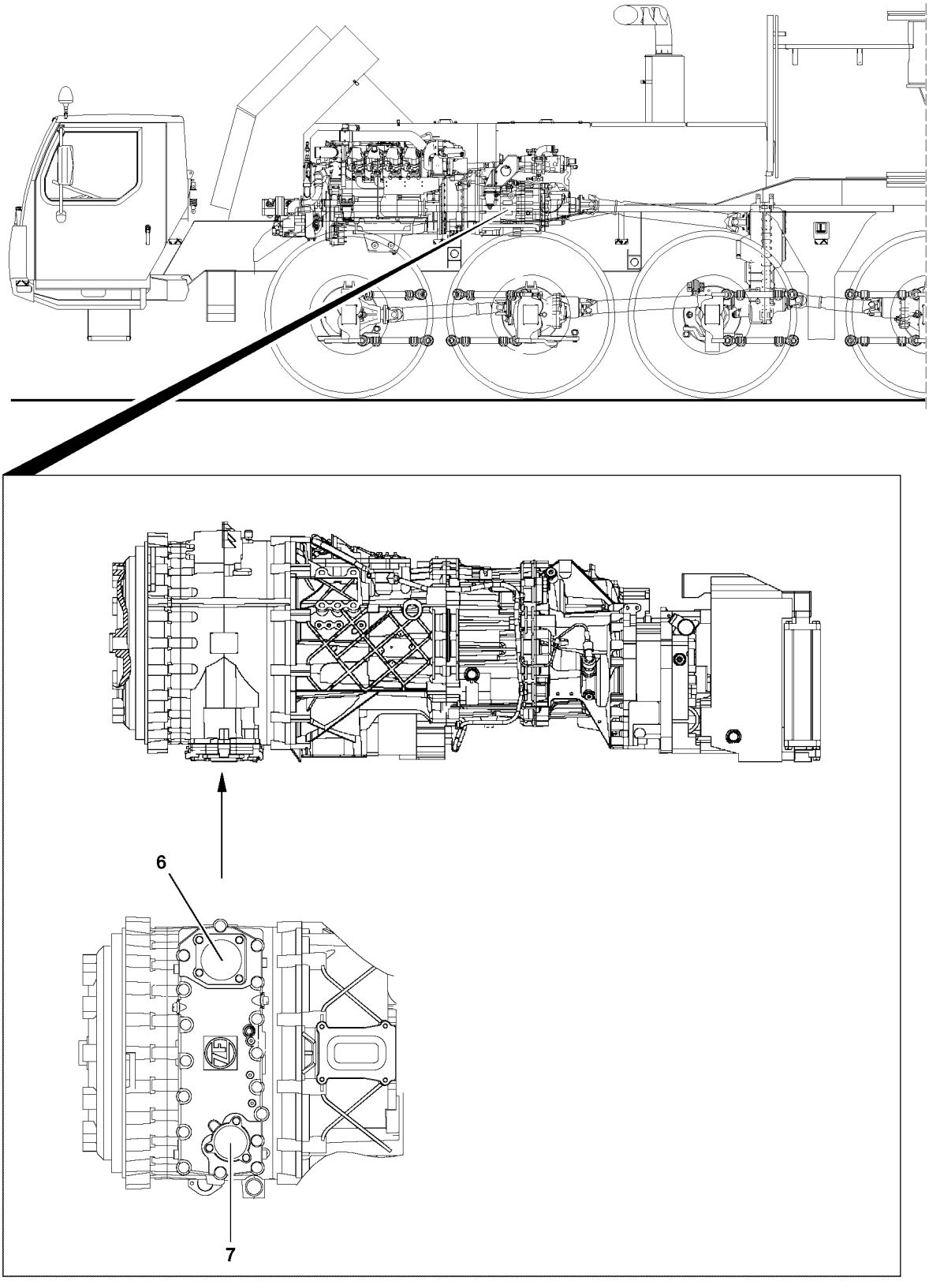

B117118

4.6 Replacing the suction filter

The suction filter **6** must be replaced at every oil change.

- ▶ Remove the old suction filter **6**.
- ▶ Install the new suction filter **6** properly.

4.7 Changing the pressure filter

The pressure filter **7** must be replaced at every oil change.

- ▶ Remove the old pressure filter **7**.
- ▶ Install the new pressure filter **7** properly.

4.8 Bleeding the gear

The gear oil heats up while the vehicle is being driven. This creates overpressure which is continuously released via a breather valve.

Ensure that the bleeder valve is operating at all times. The vent must be clean and the plastic cover must be removed.

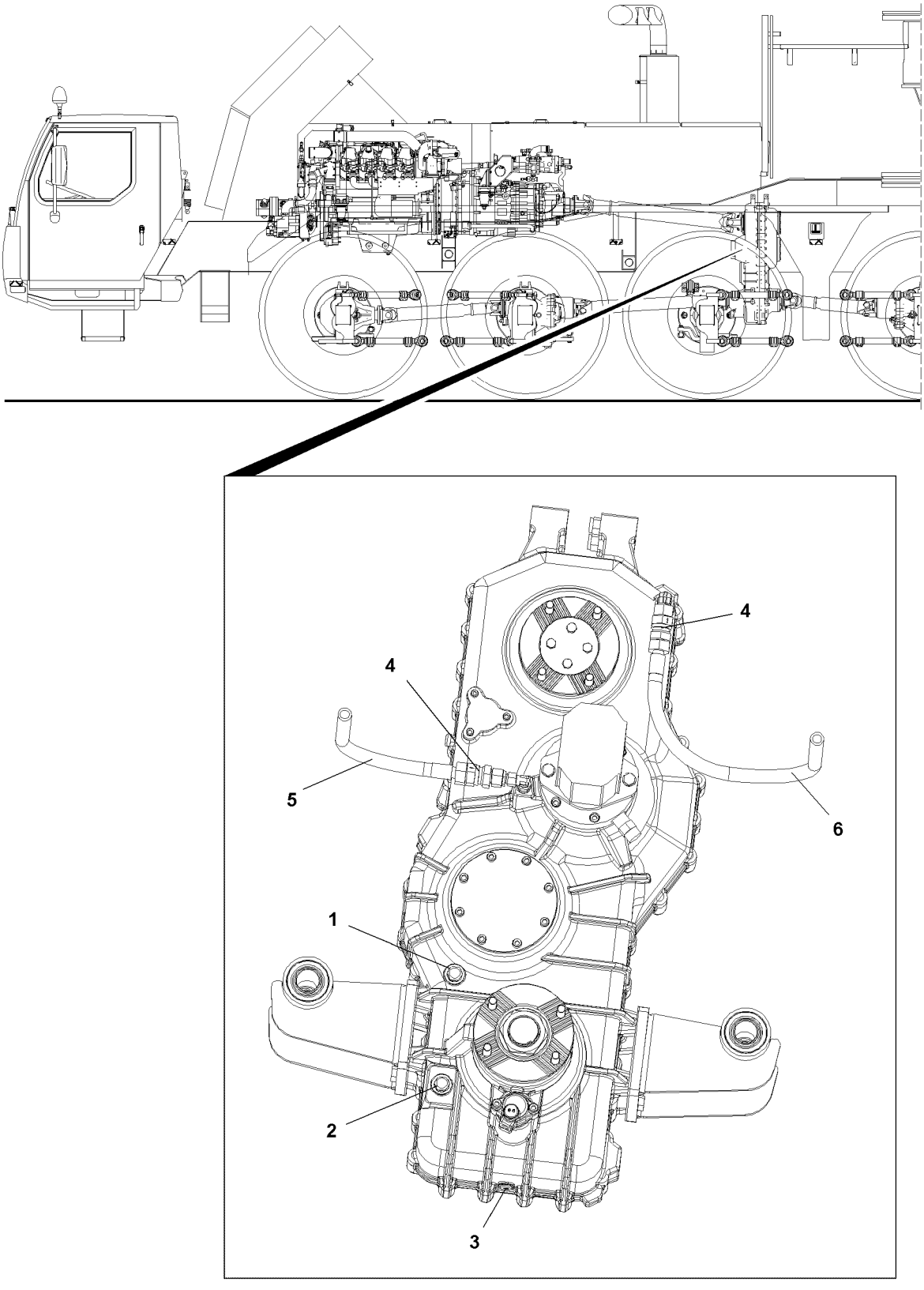

B117119

5 Distributor gear

Maintain utmost cleanliness during all work to prevent any dirt from entering the inside of the gear.

5.1 Checking for leaks

▶ Check visually if there are any leaks on the distributor gear.

5.2 Checking the oil level

Make sure that the following prerequisite is met:
– The crane vehicle is in horizontal position.

▶ Remove the level control plug **2**.

The oil level must be up to the edge of the bore for the level control plug **2**.
▶ Perform a visual inspection.

NOTICE
Danger of gear damage!
If more than 0.5 l runs out on the bore edge of the level plug **2**, then this is a sign of a defect in the oil circuit!
▶ Contact Customer Service at Liebherr-Werk Ehingen!

NOTICE
Danger of gear damage!
Too little oil causes lubricating problems and reduces the service life of the gear. Too much oil causes more displacement work and overheats the gear!
▶ Add oil up to the overflow level of the level plug **2**, as specified in the lubrication chart, and recheck the level!

▶ Reinstall the level control plug **2** with new seal and tighten.

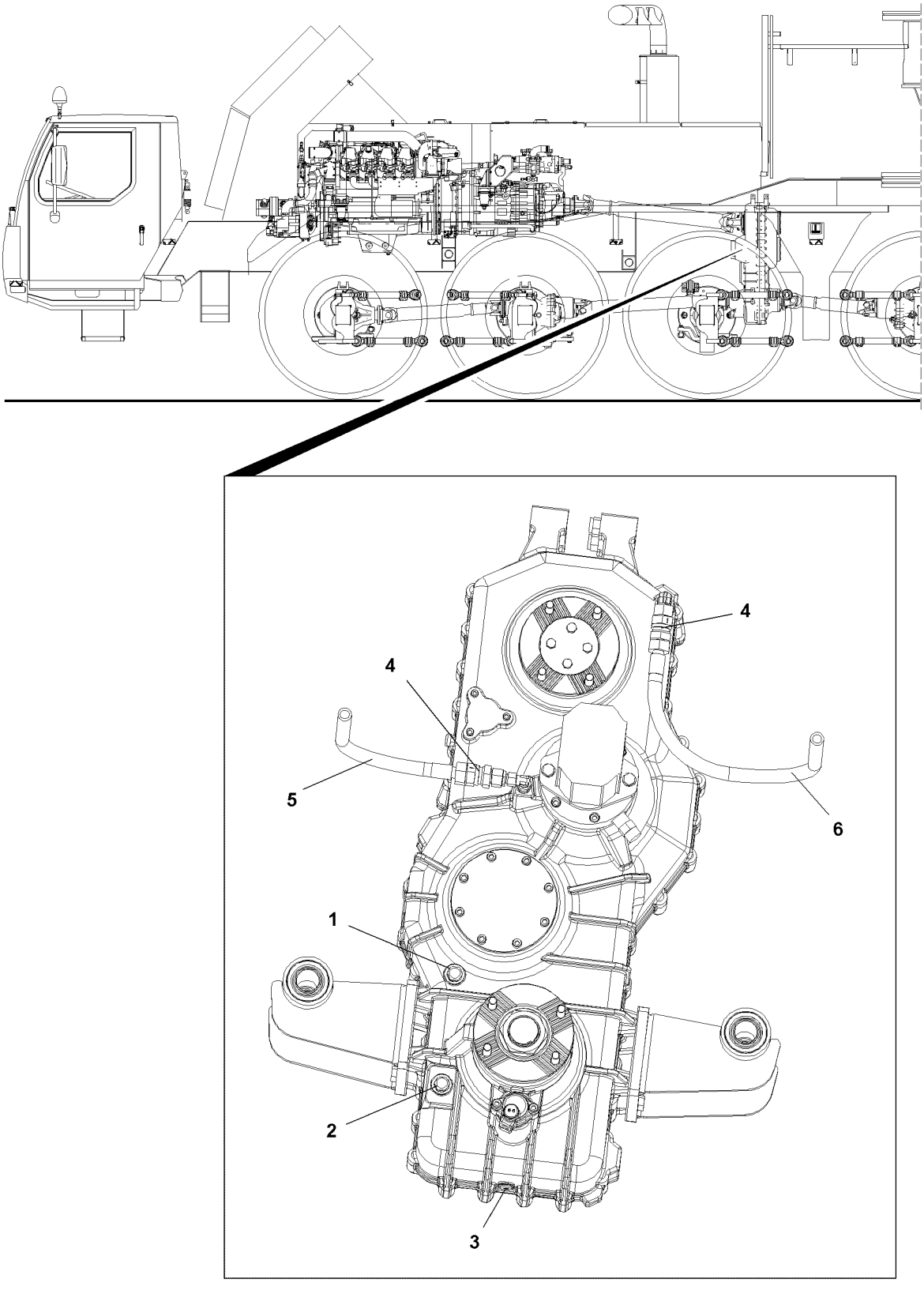

B117119

5.3 Changing the oil

WARNING
Risk of burning due to hot oil!
If the oil drain plug is opened when the distributor gear is too hot, hot oil can cause severe burns on hand, skin or eyes!
- ▶ Let the distributor gear cool down until hand warm!
- ▶ Wear suitable protective gloves.

Make sure that the following prerequisites are met:
– The crane vehicle is in horizontal position.
– The distributor gear has cooled down until it is hand warm.

Note
- ▶ When selecting the oil collecting container, make sure that the oil collecting container is of sufficient size to hold all the used oil.
- ▶ For fill quantity of distributor gear, see Crane operating instructions, chapter 7.06.

- ▶ Remove the oil filler plug **1** and the level control plug **2**.
- ▶ Remove the oil drain plug **3**, drain the oil and determine the oil quantity.

Note
- ▶ During removal, the check valves **4** must remain on the supply line **5** and the return line **6** on the distributor gear.

- ▶ Remove the supply line **5** and the return line **6** on the distributor gear, drain the oil and determine the oil quantity.
- ▶ If necessary:
  Carefully blow out the oil lines with maximum 4 bar to drain all the oil.

Note
- ▶ If the determined oil quantity is significantly less that the oil quantity specified in chapter 7.06, then this is a sign that there is a leak in the oil circuit. Find the reason for the leaky oil circuit and fix it.

- ▶ Check the supply line **5** and the return line **6** for damage.
- ▶ Install the supply line **5** and the return line **6** properly.
- ▶ Install the oil drain plug **3** and the level plug **2** with a new seal and tighten.
- ▶ Add the complete oil quantity for the distributor gear with oil cooler and lines as specified in the lubrication chart on the oil filler plug **1**. See chapter 7.06 and 7.07.
- ▶ Install the oil filler plug **1** with new seal and tighten.
- ▶ Drive the mobile crane about 10 km.

Note
- ▶ After about 10 km, the oil cooler is filled with oil.

- ▶ Check the oil level as described in paragraph “Checking the oil level” and add more oil or drain oil, as necessary.

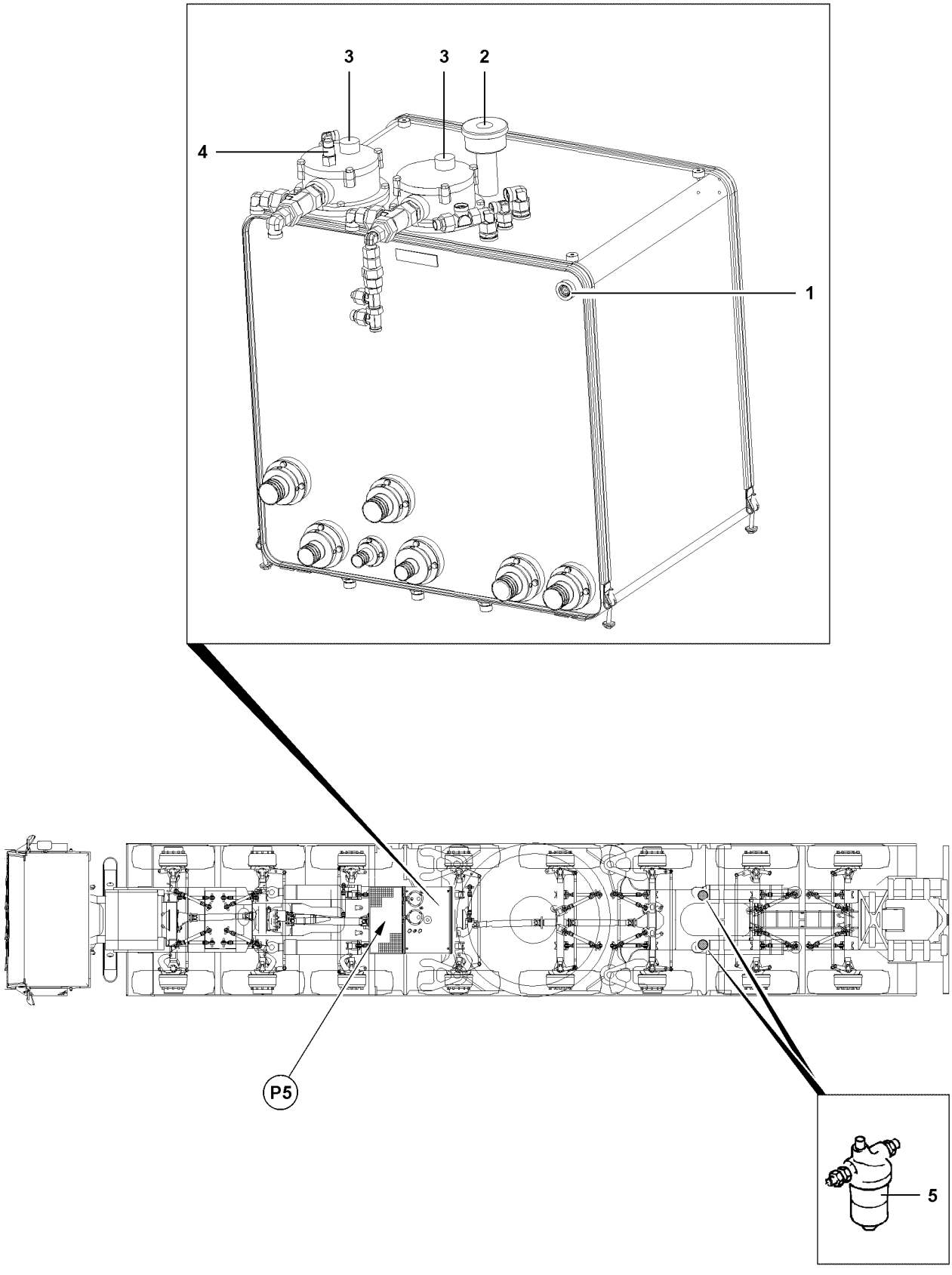

B117120

6 Hydraulic system

Extreme cleanliness must be maintained when adding oil.

6.1 Hydraulic tank

6.1.1 Checking the oil level

Make sure that the following prerequisites are met:
- The crane vehicle is in horizontal position.
- The support cylinders and sliding beams have been fully retracted.
- The vehicle has been lowered to the lowest axle suspension level.
- The maintenance personnel is at position **P5**.

NOTICE
Danger of accident due to defective hydraulic pump!
If the oil level is too low, the hydraulic pump may be damaged, which will increase the risk of accident because of incapacity to steer the crane!
The cylinders cannot be fully extended and the vehicle cannot be levelled!
▶ Check oil level and add oil, if necessary.

The oil level must be in the center of the oil level sight gauge **1**.
▶ Check the oil level on the oil level sight gauge **1** of the hydraulic oil tank.

Troubleshooting
No oil is visible in the oil level sight gauge **1**?
▶ Add oil as specified in the lubrication chart using a fine-meshed filter until the oil level is visible in center of oil level sight gauge **1**.

6.1.2 Checking the vent / breather filter

▶ Open the cover with turn lock.
▶ Check the filter **2** for impurities (visual inspection).
▶ In the event of heavy contamination:
Replace the filter **2**.
▶ Close the cover with the turn lock again.
▶ Start the diesel engine.
▶ Slowly run through all crane movements.
▶ Check the oil level again and add oil if necessary.

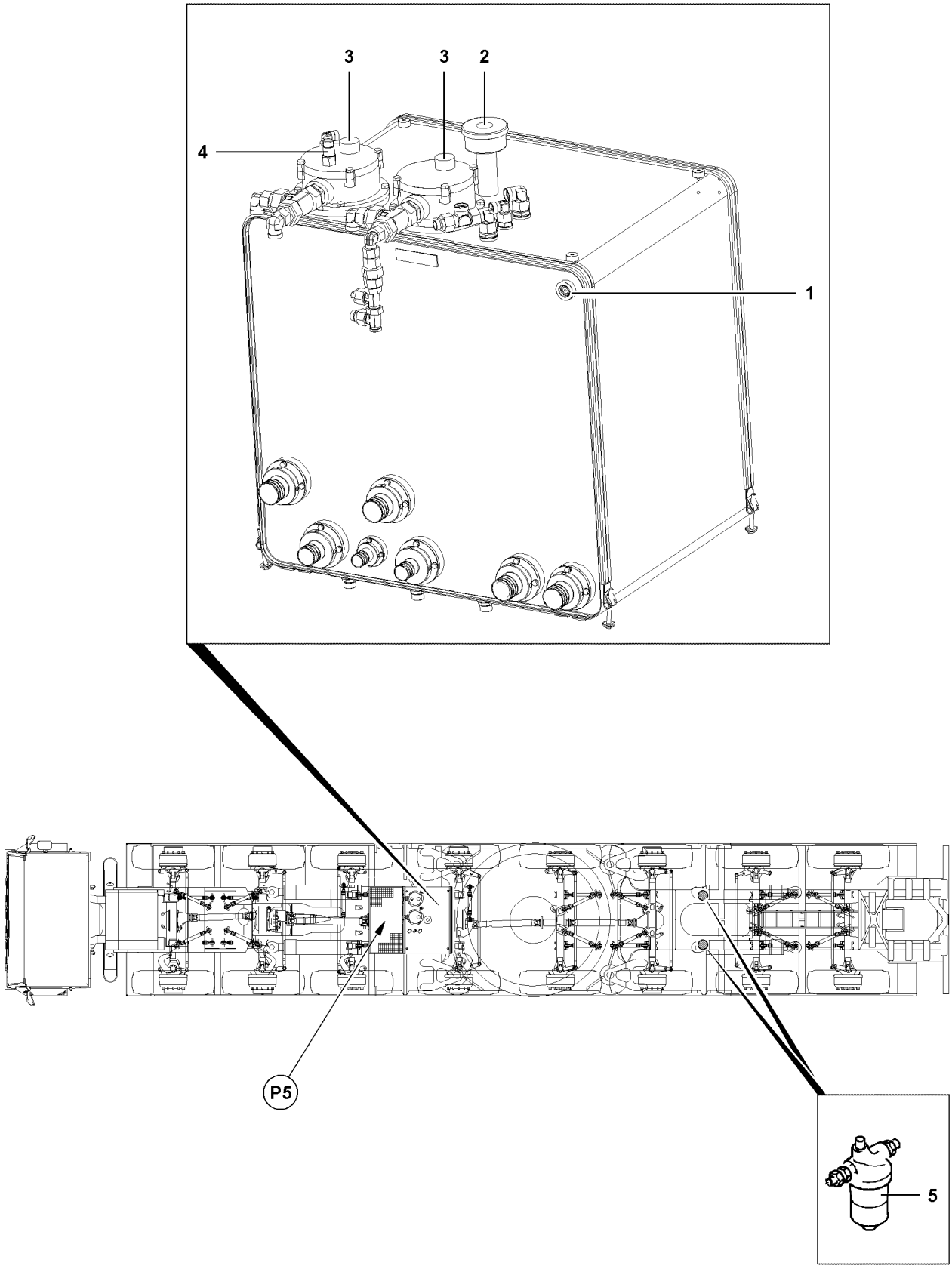

B117120

6.1.3 Checking and replacing return filters

The return filter **3** is equipped with a maintenance indicator **4**. If the red bar indicator is visible when the oil is warmed up and ready for operation, the filter cartridges in both return-line filters **3** must be replaced.

- ▶ Unscrew and remove both filter covers on the return filter **3**.
- ▶ Remove the filter units.
- ▶ Rinse out the filter housing.
- ▶ Clean the sealing surfaces on the covers and filter housings.
- ▶ Insert new filter units.
- ▶ Lubricate the rubber seal rings in the covers with oil.
- ▶ Place both filter covers and tighten.
- ▶ Start the diesel engine and check the filters for leaks.
- ▶ Check the oil level again and add oil, if necessary.

6.1.4 Pressure filters

The pressure filters **5** are equipped with a maintenance indicator. If the red bar indicator is visible when the oil is at operating temperature, then the filter cartridge must be replaced.

- ▶ Turn the diesel engine off.
- ▶ Release the filter cartridge and collect any escaping oil in a suitable container.
- ▶ Remove and dispose of the filter cartridge.
- ▶ Clean the sealing surface on the filter bracket.
- ▶ Lubricate the rubber seal ring on the new filter cartridge with oil.
- ▶ Install a new filter cartridge and tighten.
- ▶ Start the diesel engine and check the filters for leaks.

Result:

– This bleeds the hydraulic system.

- ▶ Check the oil level again and add oil, if necessary.

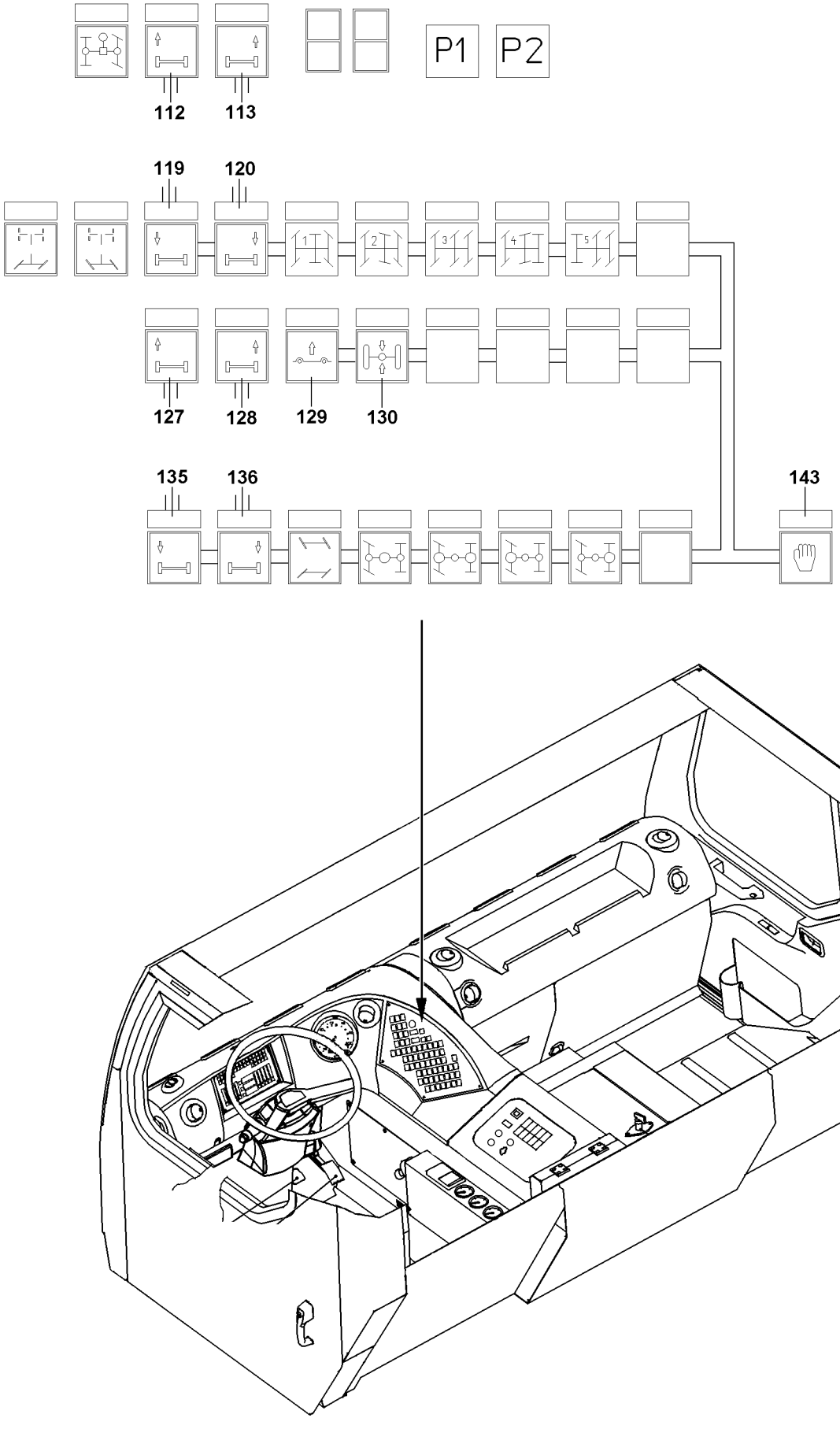

B108134

6.2 Diaphragm reservoirs of axle suspension / axle blocking system

Diaphragm reservoirs have been installed in the hydraulic system. The pretension pressures are specified in the hydraulic circuit diagram as well as on the individual diaphragm reservoirs. The pretension pressure must be measured separately in each diaphragm reservoir.

NOTICE
Risk of travel gear damage!
If the outside temperature fluctuates considerably, e.g. after transport to extremely hot or cold countries or in countries with considerable differences between the summer and winter temperatures, the gas accumulator pressures may change. Inadequate gas pretension may cause the reservoir diaphragms to be overstressed. If the pretension is too high, the spring action in the axle suspension if no longer guaranteed.
▶ Check the gas accumulator pressures and correct if necessary.

Make sure that the following prerequisites are met:
– The axle suspension / axle blocking system is in the suspended position.
– The function control on button **130** does not light up.

▶ Lower vehicle down as far as possible using button **119**, button **120**, button **135**, button **136** and enter **143** until the oil has drained from the diaphragm reservoirs.

WARNING
Danger of explosion!
The pressure in the nitrogen cylinder must be less than the maximum permitted operating pressure of the reservoir or the pressure gauge. Otherwise install a pressure reducer between the cylinder and the filling device.
▶ Do not use air or oxygen to fill the diaphragm reservoir!

The pretension pressure in the hydraulic reservoirs may only be checked by an expert with appropriate training and equipment. In addition, the national regulations for pressurized container inspections must also be observed.
▶ Check the pretension pressure with a testing and filling device and correct it, if necessary.
▶ Press level button **129** and ENTER **143** until the function control on the level button **129** blinks.
Result:
– The vehicle is at the level setting for road driving.

6.3 Hydraulic hose lines

The hydraulic hose lines must be checked according to ISO 9927-1 by an **experienced technician** or **expert mechanic**, as required, depending on the duration of use and the operating conditions, but at least once a year.
Experienced technicians are persons who:
– possess sufficient knowledge about cranes due to their professional background and experience.
– are familiar with the relevant settings to detect any abnormal deviations from the nominal condition.
– have undergone special training.

Expert mechanics are mechanics, who:
– are experienced in the design, construction or maintenance of cranes.
– possess sufficient knowledge about the relevant settings and standards.
– are fully equipped to perform inspections.
– are able to assess the safety status of the crane.
– can decide which action needs to be taken to ensure the crane can continue to be operated safely.

Note
▶ The applicable national regulations must also be complied with!

6.3.1 Checking the hydraulic hoses within area of responsibility of the German employer's liability insurance associations

At least once a year, an **expert** must inspect the hydraulic hoses to ensure they are in operationally safe condition. The crane must be inspected by an **authorized inspector** every four years from the day it was first licensed. After the 12th year of operation, the crane must be inspected annually by an authorized inspector.
The **expert** or **authorized inspector** must document the fact that the hydraulic hoses can continue to be used in the crane!
An expert is someone:
– whose technical training and experience means that he has adequate knowledge in the field of hydraulic hoses and hose systems.
– who is familiar with the relevant occupational health and safety regulations.
– who is familiar with the relevant accident prevention guidelines.
– who is familiar with the directives and generally accepted technical regulations (e.g. DIN standards, VDE regulations, technical regulations of other EU member states or other countries that have signed the European Economic Community agreement).
– who can properly assess whether hydraulic hoses and hose systems are deemed safe in accordance with the guidelines and regulations stated above.

Authorized inspector(s) is / are :
– an authorized expert employed by the technical supervisory authorities.
– in Hamburg this is the Amt für Arbeitsschutz (office for occupational health and safety).
– in Hessen these are the technical supervisory offices.
– an authorized expert appointed by the professional associations.

6.3.2 Examples of possible defects in hose lines

WARNING
Risk of fire or accident!
If problems are discovered during inspections, then they must be remedied immediately or suitable measures are to be taken. Failure to do this can result in serious injury to persons, death or damage to property.
▶ Remedy problems or take suitable measures!

– Damage to the outer layer as far as the intermediate later (e.g. chafing, cuts and cracks).
– Outer layer brittleness (hose material cracking).
– Deformation that differs from the natural shape of the hose or hose system when depressurized or pressurized or when the hose is bent (e.g. layer separation, bubbling, crushing or kinking).
– Leaks.
– Failure to follow installation instructions.
– Damage or deformation of hose fittings that inhibit the operation and strength of the fitting or the hose / fitting connection.
– Hose slipping out of fitting.
– Fitting corrosion that inhibits operation and strength.
– Storage time or usage period exceeded.

6.3.3 Maintaining hose lines

- We recommend to check all hoses, hose lines and screw fittings daily, but at least every two weeks for leaks and externally recognizable signs of damage.
- Damaged parts must be replaced immediately! Oil spray can lead to injuries and fires.
- Hydraulic lines and hoses may not be repaired.
- Hoses that have already been used as a part of a hose line may not be reinstalled in hose lines.
- Always use original LIEBHERR spare parts when replacing hoses and hose lines.
- Always ensure that the hoses are routed free of torsion. If high pressure hoses are being used, attach the screws of the half clamps or full flange at both ends of hose and then tighten.
- When using high pressure hoses with a bent fitting, tighten the end with the bent fitting first when tightening the flanges, then the end with the straight fitting.
- Any mounting clamps in the hose center may be attached and tightened only thereafter.
- Route the hoses in such a way that chafing with other hoses or other structures is prevented. Maintain minimum clearance of approximately ½ the outer diameter of the hose from other parts. The clearance should never be less than 10 mm - 15 mm.

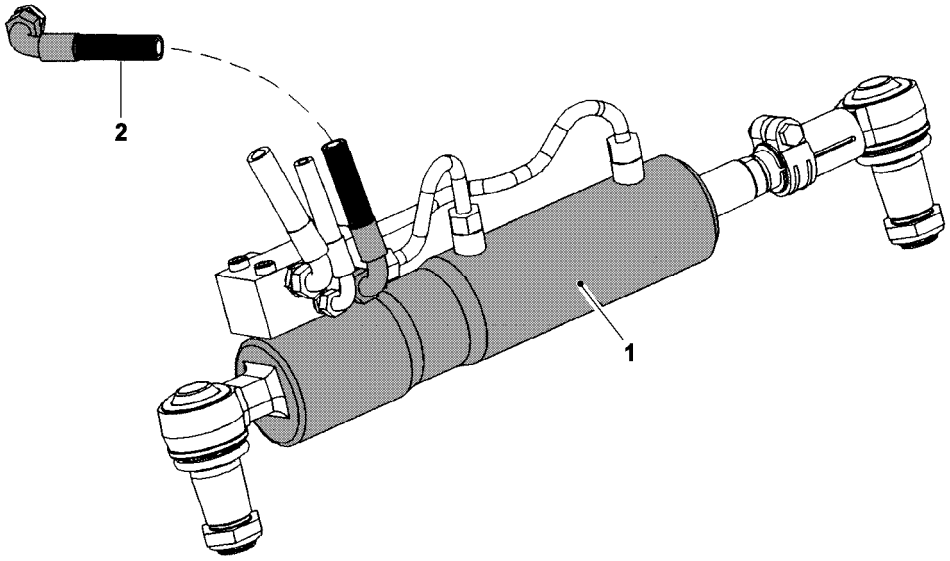

B198423

6.3.4 Changing hose lines for active rear axle steering

WARNING
Risk of fire or accident!
If the hose lines are not changed at proper intervals, personnel can be severely injured or killed. In addition, property damage can occur on the crane.
▶ Replace hose lines according to appropriate intervals!

This must be documented in the crane's inspection log by the **expert** or the **authorized inspector**.

Note
▶ Deviating from the data in section “Checking the hose lines within the area of responsibility of the German employer's liability insurance associations”, the following replacement intervals apply for hose lines for the active rear axle steering!

The service life of a hose system may not exceed six years, including a storage period of a maximum of two years. (Pay attention to manufacturing date of hose.) The duration of use can also be defined by the **expert** or **authorized inspector** in accordance with existing test and experience data in the individual application areas, taking the usage conditions into consideration.

Steering

NOTICE
Danger of accident!
▶ Damaged or leaking hydraulic hoses must be replaced immediately.

Check hydraulic hoses **2** from the steering centring cylinder **1** to control block of second and third axles for cracks, damage and leaks.

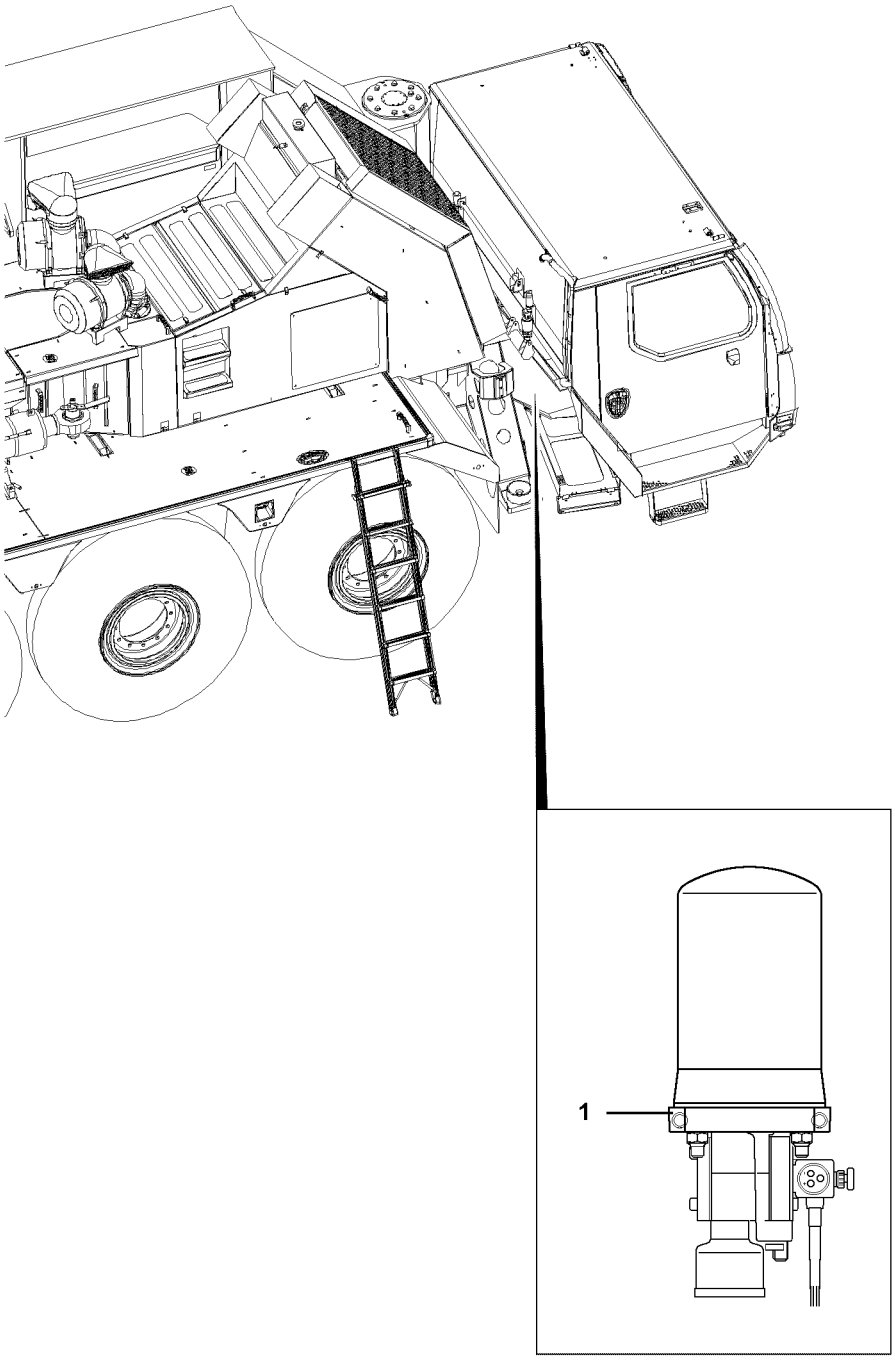

B117121

7 Compressed air and brake system air dryer

7.1 Replacing the granular cartridge

WARNING
Risk of accident due to pretensioned granular cartridge!
The granular cartridge of the air dryer **1** is under spring tension!
Personnel can be severely injured!
▶ Caution when replacing the granular cartridge.

▶ Replace the granular cartridge once a year.

8 Tires / wheels

Note
▶ See Crane operating instructions, chapter 8.01.

8.1 Checking the tires

While doing this, also check the spare tire*.

DANGER
Danger of accident!
▶ Regularly check the tires for damage, depth of tread and foreign particles, as well as checking the tire pressures.

8.2 Changing the wheel

Note
▶ See Crane operating instructions, chapter 9.02!

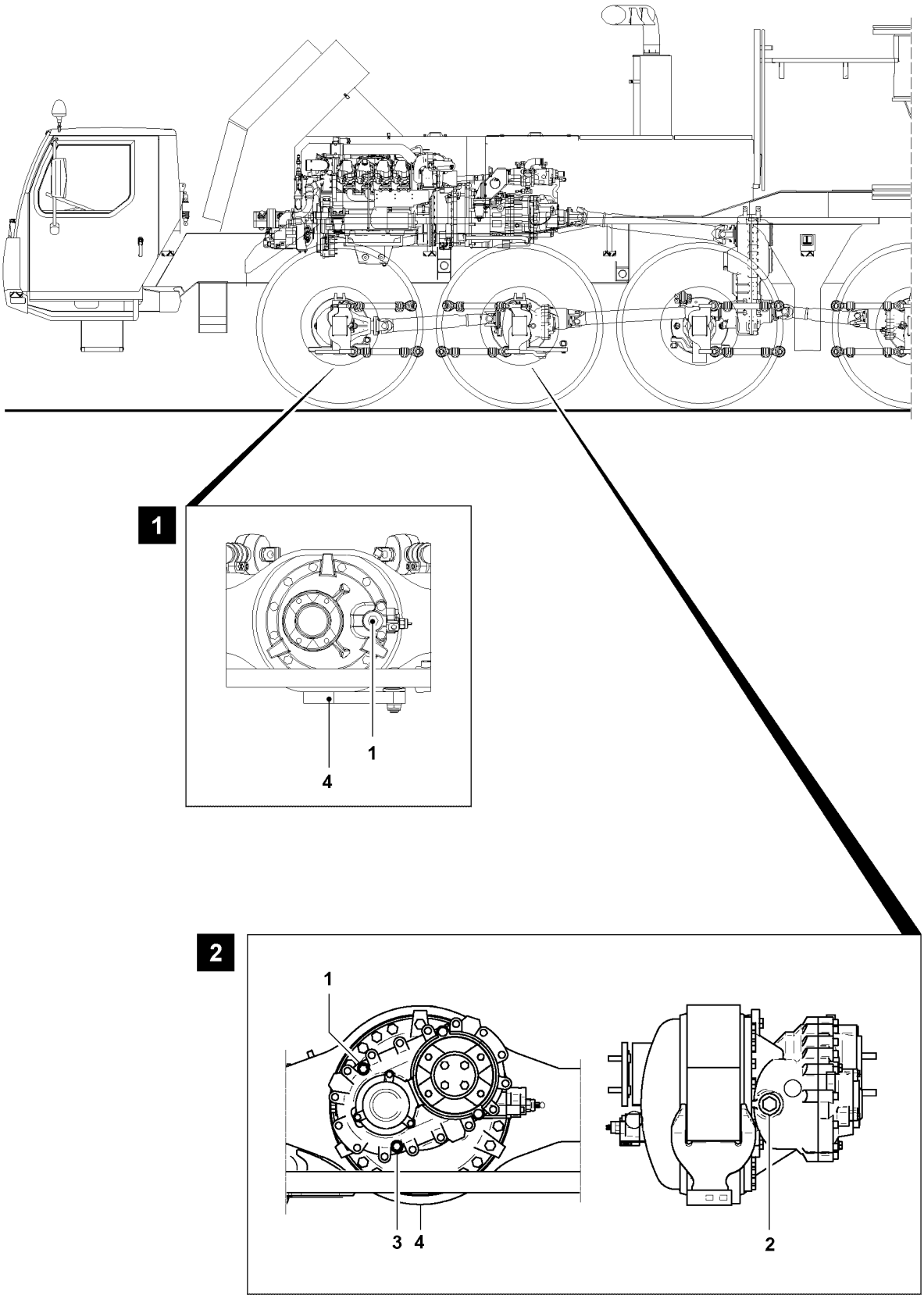

B117122

9 Axles

Maintain extreme cleanliness during all work to prevent dirt from entering the interior of the axle casings.

9.1 Axle casings

The position of oil filler plug **1**, oil filler plug **2** as well as the position of oil drain plug **3** and oil drain plug **4** depends on the type of axle.
Make sure that the following prerequisite is met:
– The crane vehicle is in horizontal position.

9.1.1 Checking the oil level

▶ Remove the oil filler / control plug **1**, see illustration **1**.
▶ Remove the oil filler plug **2**, see illustration **2**.

The oil level must reach the edge of the bore.
▶ Perform a visual inspection.

NOTICE
Damage to the axles!
If the oil level has dropped, add oil according to the lubrication chart until it runs over on the oil filler / control plug **1** (illustration **1**) or oil filler plug **2** (illustration **2**)!
▶ Add oil and check again!

▶ Install the oil filler / control plug **1** with new seal ring and tighten, see illustration **1**.
▶ Install the oil filler plug **2** with new seal ring and tighten, see illustration **2**.

9.1.2 Changing the oil (illustration 1)

▶ Remove the oil filler / control plug **1**.
▶ Remove the oil drain plug **4** and drain the oil.
▶ Install the oil drain plug **4** with new seal ring and tighten.
▶ Add oil as specified in the lubrication chart on the oil filler / control plug **1** until it starts to overflow at the edge of the bore for the oil filler / control plug **1**.
▶ Install the oil filler / control plug **1** with new seal ring and tighten.

9.1.3 Changing the oil (illustration 2)

▶ Remove the oil filler plug **1** and the oil filler plug **2**.
▶ Remove the oil drain plug **4** and drain the oil.
▶ Reinstall the oil drain plug **4** with new seal ring and tighten.
▶ Add oil as specified in the lubrication chart on the oil filler plug **1** or the oil filler plug **2** until it starts to overflow on the bore edge of the oil filler plug **2**.
▶ Reinstall the oil filler plug **2** with new seal ring and tighten.
▶ Reinstall the oil filler plug **1** with new seal ring and tighten.

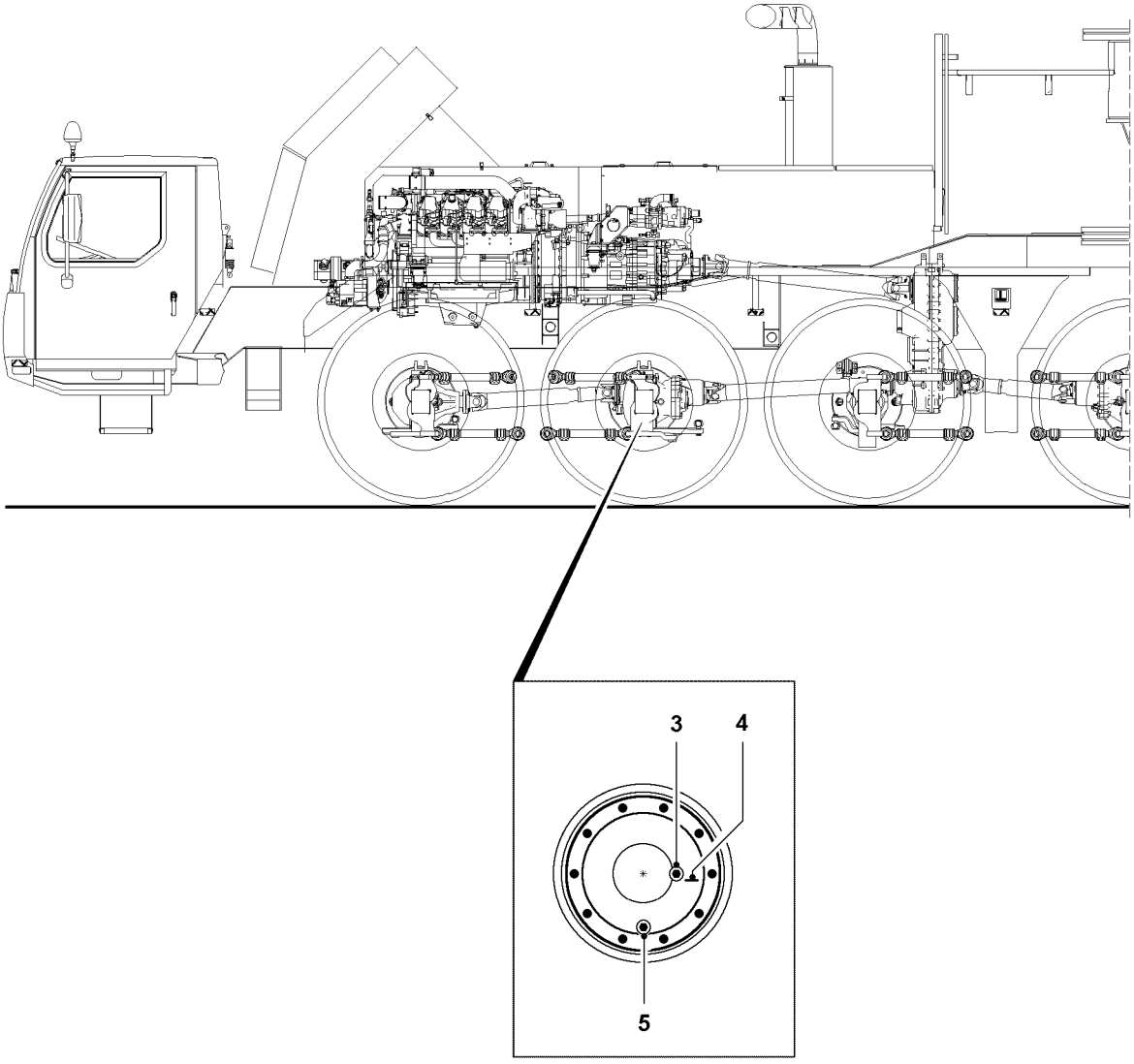

B117123

9.2 Wheel hubs

Make sure that the following prerequisites are met:
– The crane vehicle is in horizontal position.
– The crane vehicle is supported.

9.2.1 Checking the oil level

▶ Turn each driven wheel until the oil drain plug **5** reaches its lowest point and the line **4** is exactly horizontal.
▶ Remove the oil filler plug **3**.

The oil level must reach the edge of the bore.
▶ Perform a visual inspection.

NOTICE
Danger of damage!
If the oil level has dropped, always add oil as specified in the lubrication chart up to the overflow of the oil filler plug **3**.
▶ Add oil and check again.

▶ Reinstall the oil filler plug **3** with new seal ring and tighten.

9.2.2 Changing the oil

▶ Turn each driven wheel until the oil drain plug **5** reaches its lowest point and the line **4** is exactly horizontal.
▶ Remove the oil filler plug **3**.
▶ Remove the oil drain plug **5** and drain the oil.
▶ Install the oil drain plug **5** with new seal ring and tighten.
▶ Add oil as specified in the lubrication chart on the oil filler plug **3** until it starts to overflow at the edge of the bore.
▶ Reinstall the oil filler plug **3** with new seal ring and tighten.

10 Wheel alignment

10.1 Checking the wheel alignment

The wheel alignment must be checked at regular intervals. Failure to perform this check can result in increased tire wear. If extremely high stress has occurred such as driving against curbs, it is extremely important to check the wheel alignment.
▶ Always have the wheel alignment checked by a trained expert.

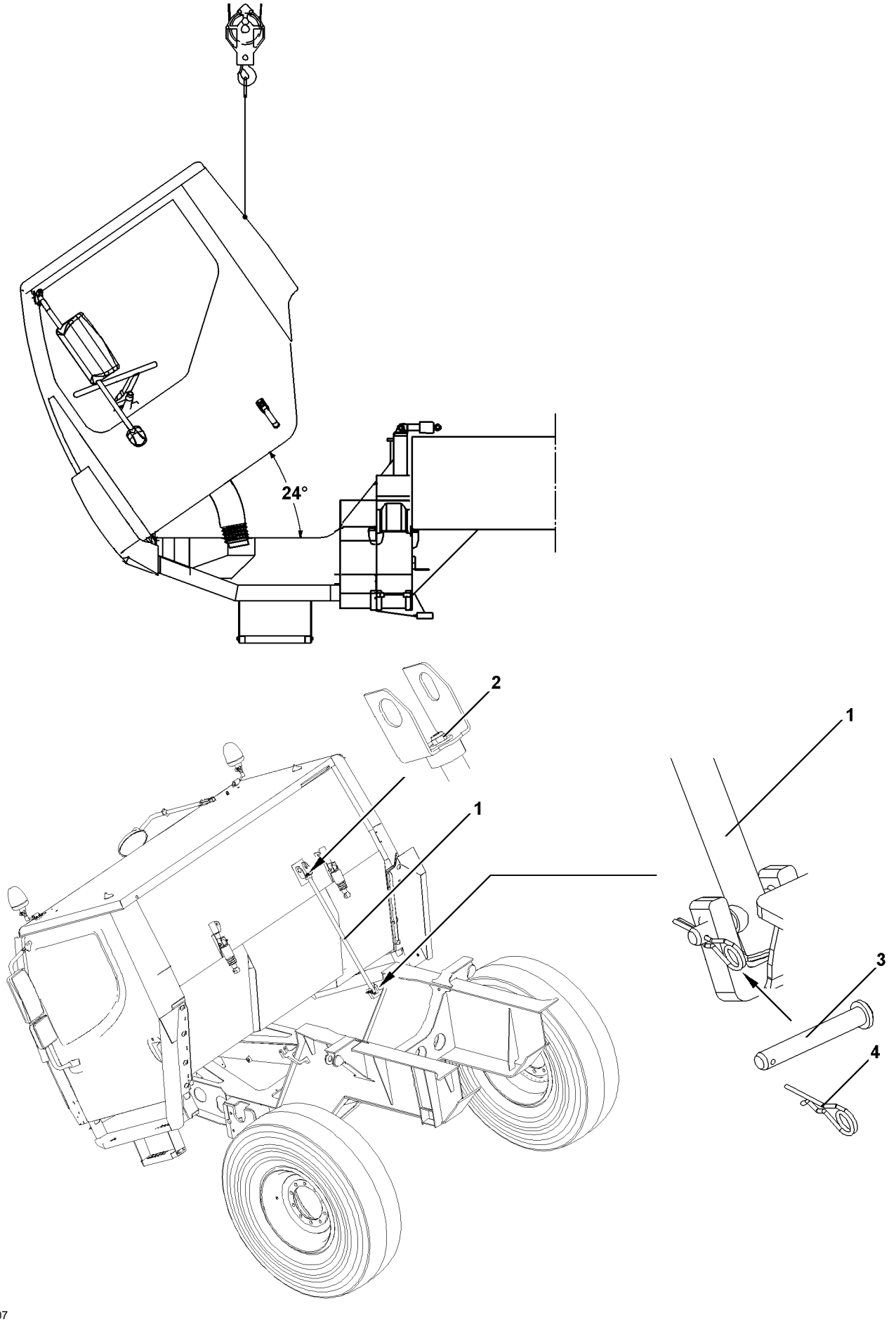

B107607

11 Tilting the driver's cab

The driver's cab can be tilted forward for assembly or disassembly purposes to max. 24°.

11.1 Measures before tilting

Before the driver's cab may be tilted forward over the front bearing, the following measures must be taken, depending on the version.

- ▶ Mark the position of drive shaft in relation to the miter gear.
- ▶ Unscrew the drive shaft from the miter gear to the steering gear on the flange.
- ▶ Remove the shock absorbers and stabilizers (if necessary) from rear wall of driver's cab.

Pay attention to cables and hoses on underside of driver's cab.

- ▶ Loosen any mountings, if necessary.

WARNING
Danger of accident if cab tilts forward in an uncontrolled manner!

- ▶ The maximum angle that the driver's cab may be tilted forward is 24°.
- ▶ The driver's cab must be properly supported in the tilted position and secured with a support rod **1**.
- ▶ Screw and secure the support rod **1** with a nut M10 **2** and washer on top on the driver's cab.
- ▶ Pin the support rod **1** on the bottom with pins **3** on the vehicle frame and secure with cotter pin **4**.

- ▶ Remove front bumper completely (depending on model) or loosen it, pull it out and tilt it downward.

11.2 Reinstalling the drive shaft after tilting the driver's cab

- ▶ Check the drive shaft for ease of movement and operation of joints and slider.
- ▶ If the drive shaft is damaged, replace it with a new drive shaft.
- ▶ Attach the drive shaft with assistance of markings that were made.

12 Electrical system - Lighting

Note

- ▶ Service the electrical system and lighting in the crane superstructure according to the maintenance data in chapter 7.04 of the Crane operating instructions!

B195219

1 Carrying out maintenance work

WARNING
Danger of falling!
During assembly / disassembly, inspection and maintenance work, personnel must be secured with appropriate aids to prevent them from falling!
If this is not observed, assembly personnel could fall and suffer life-threatening or fatal injuries!

- The assembly personnel must always move carefully and anticipatory on the crane, the crane components or lattice sections!
- Any work, where there is a danger of falling, must be carried out with suitable aids (for example: lifting platforms, scaffoldings, ladders, auxiliary crane)!
- If fall protection equipment is available, then it must be used!
- If the work cannot be carried out with such aids nor from the ground, then the assembly personnel must secure themselves with approved fall arrest systems to avoid falling, see Crane operating instructions chapter 2.04!
- Before any assembly / disassembly work, maintenance and inspection work it must be ensured that all obstacles below the work place have been removed and that there is sufficient clearance in case of a fall!
- During all assembly / disassembly work, maintenance work and inspections, travel or crane operation is prohibited!
- Only step on the aids, ladders and catwalks with clean shoes!
- Keep aids, ladders and catwalks free of heavy dirt, snow and ice!

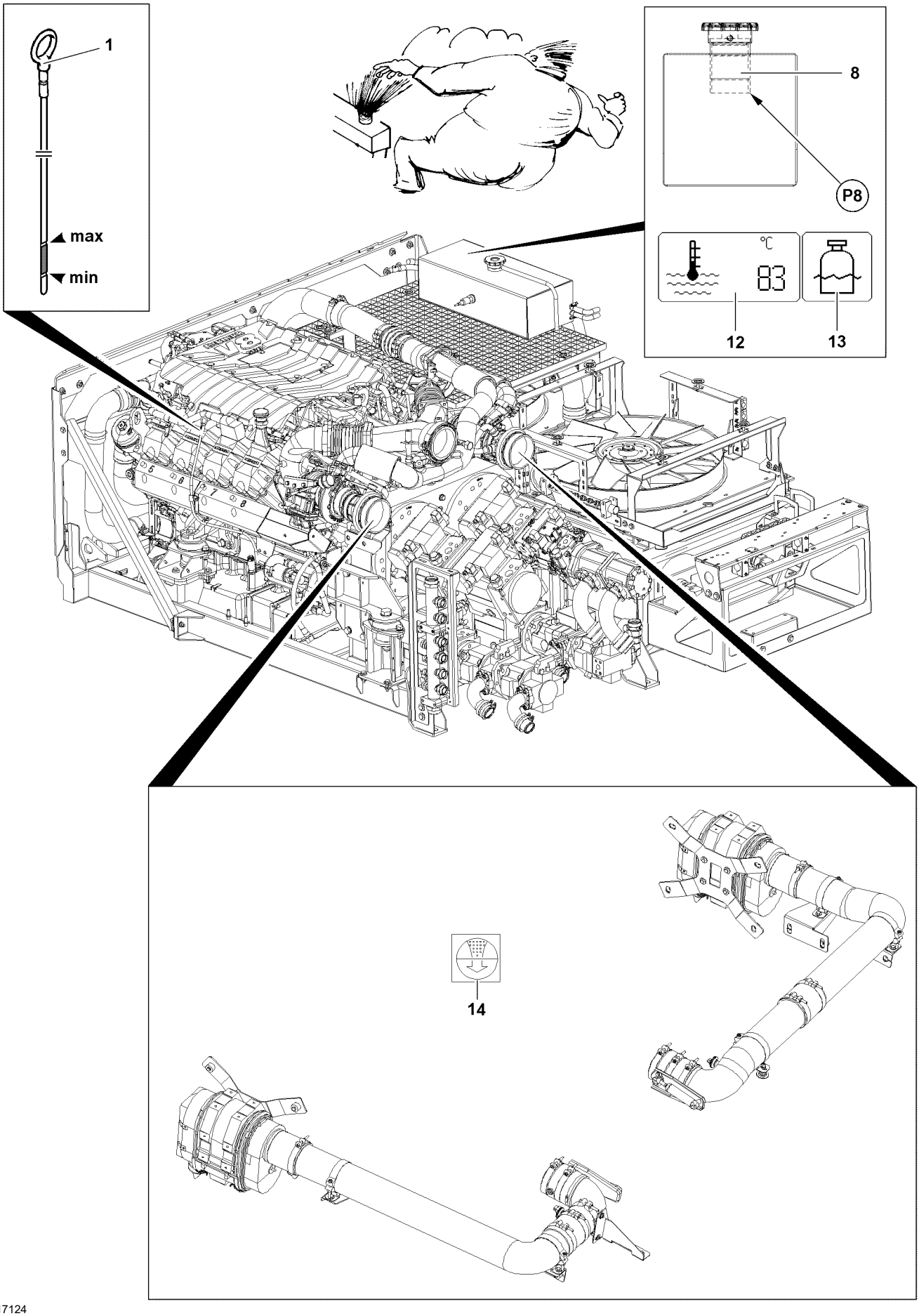

B117124

2 Diesel engine

Never step on fuel lines during maintenance or repair work in the engine area!

DANGER
Danger of fire!
- ▶ Make sure that the engine area is kept free of diesel fuel!
- ▶ Extreme cleanliness is vital, particularly during filter changes and bleeding. Wipe up any spilled fuel!
- ▶ When replacing the filter, it is recommended to put down cleaning rags before removing the filter in order to absorb fuel!

2.1 Engine oil

2.1.1 Checking the oil level

Make sure that the following prerequisites are met:
- – The crane is in horizontal position.
- – The diesel engine is turned off.
- – The oil has collected in the oil pan.

- ▶ Remove the dipstick **1** and wipe it off.
- ▶ Reinsert the dipstick **1** and pull it out again.

The oil level must be between the min. and max. marks on the dipstick **1**.
- ▶ Check the oil level.

NOTICE
Danger of damaging the engine!
If the oil level has dropped below the minimum mark, add engine oil according to the lubrication chart until the oil level is between the minimum and maximum marks!
- ▶ Add engine oil and check again!

- ▶ Reinsert the dipstick **1**.

2.1.2 Changing the oil

Refer to separate operating instructions for “Liebherr Diesel engines”.

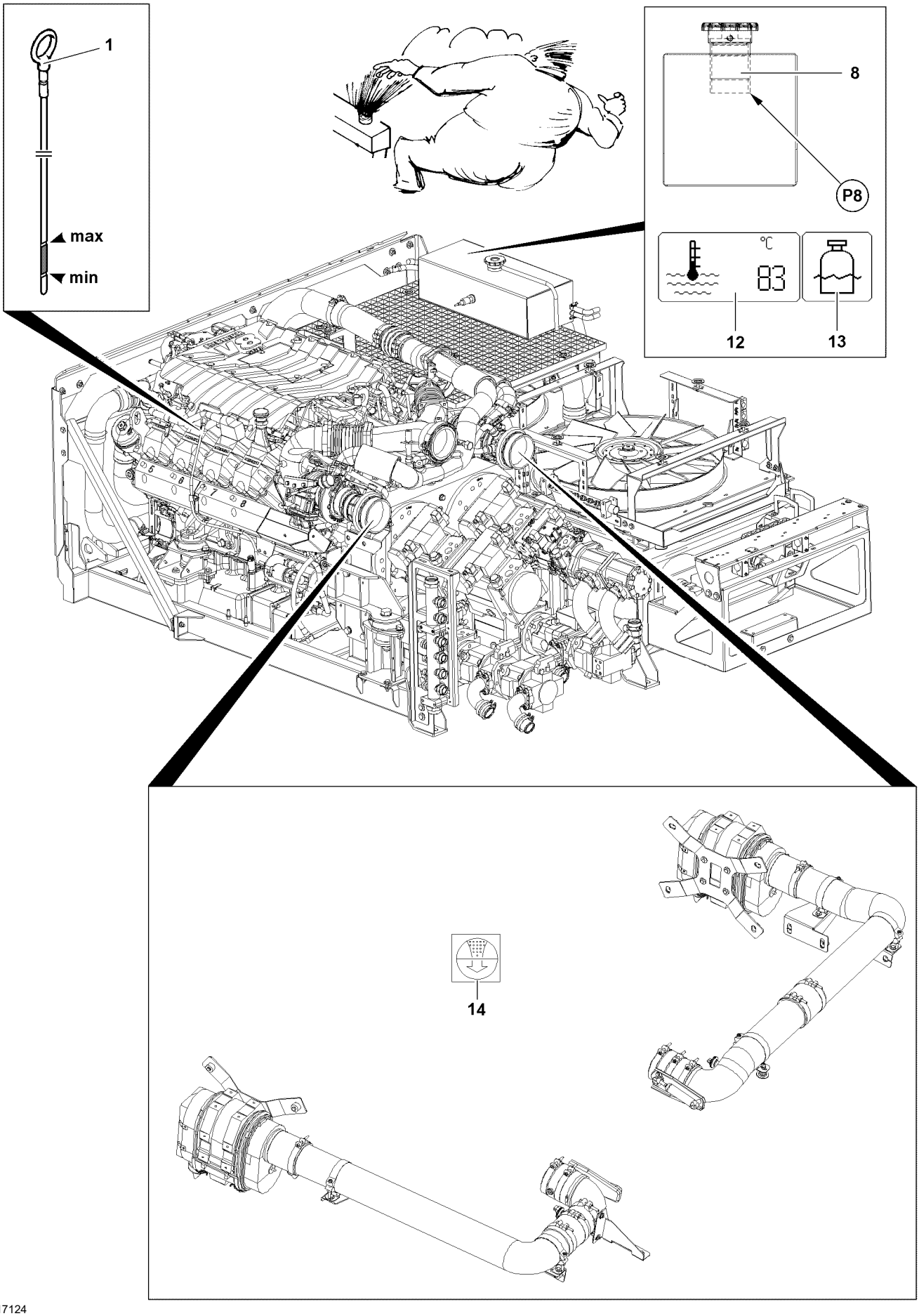
1
max
min
8
P8
°C
83
12
13
14
B117124

2.2 Coolant Engine cooling

The coolant level is monitored by the LICCON computer system. If the coolant level is too low the “Low coolant level” **13** icon appears on the LICCON monitor.
The crane's engine coolant temperature can be read on the LICCON monitor in [°] on the “Engine coolant temperature” icon.

WARNING
Danger of skin burns!
▶ Check the coolant only when the engine is cold!

- ▶ Turn the cap **2** on the filler neck of the water cooler expansion tank to the 1st notch.
- ▶ Release excess pressure.
- ▶ Remove the cap **2**.
- ▶ Check the coolant level.

Add coolant as specified in the lubrication chart only on the filler neck of the water cooler expansion tank.
▶ Add coolant to overflow level if necessary.

2.3 Air filter

The air filter **1** is monitored by the LICCON computer system. If the vacuum increases in the intake line due to dirty filter units, the “Air filter contaminated” **14** icon is displayed on the LICCON monitor.
▶ If the “Air filter contaminated” **14** icon appears:
Clean or replace the filter insert.

2.4 Diesel particle filter*

DANGER
Danger of igniting the diesel particle filter*!
▶ The diesel particle filter* may only be regenerated under the supervision of operating personnel!

Carry out the operation and maintenance of the diesel particle filter* according to the separate operating instructions of the diesel particle filter* manufacturer.

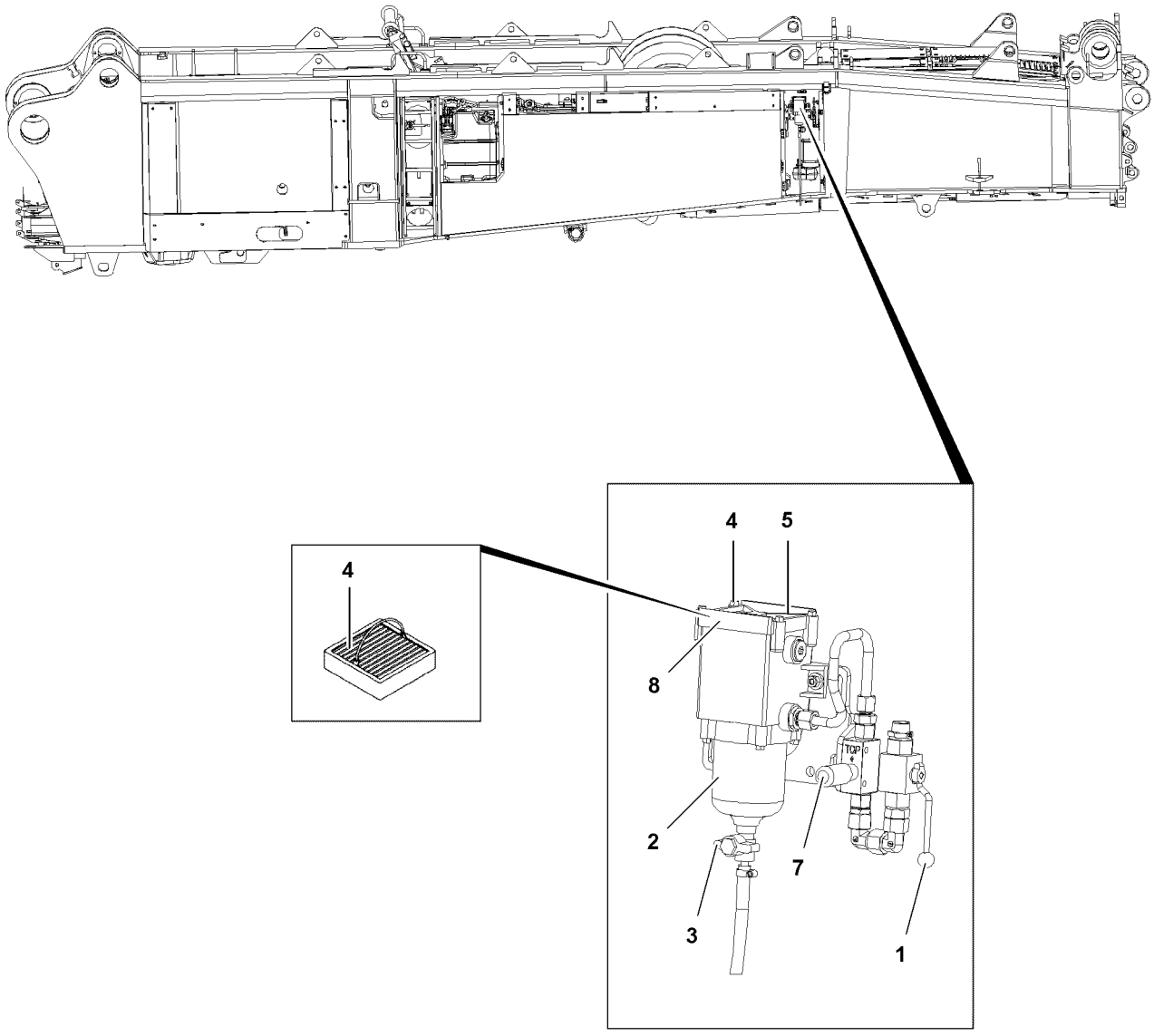

B117125

2.5 Fuel preliminary filter

2.5.1 Draining the fuel preliminary filter

Note

▶ The water separator **2** on the fuel pre-filter must be drained at regular intervals!

▶ Turn the engine off.
▶ Place a catch basin under the water separator.
▶ Close the ball valve **1**.
▶ Open the drain valve **3** and drain water until fuel emerges.
▶ Close the drain valve **3**.
▶ Open the ball valve **1**.
▶ Remove the catch basin and dispose of the fluid.

2.5.2 Cleaning the filter strainer

DANGER

Danger of fire and explosion.

▶ Do not smoke!
▶ Avoid open flames!
▶ Work only when the diesel engine is turned off!
▶ Maintain extreme cleanliness during all work!

▶ Turn the engine off.
▶ Place a catch basin under the fuel preliminary filter.
▶ Close the ball valve **1**.
▶ Open the drain valve **3** until no more fuel emerges.
▶ Remove the catch basin and dispose of the fluid.
▶ Remove the screws **4** and remove the cover **8**.
▶ Remove the filter strainer **6** and clean it properly.
▶ Insert the cleaned filter strainer **6** properly.
▶ Install the cover **8** with seals properly.
▶ Properly tighten the screws **4**.
▶ Open the ball valve **1**.
▶ Open the breather screw **5**.
▶ Operate the hand pump **7** and properly bleed the fuel filter.
▶ Properly tighten the breather screw **5**.
▶ Start the engine and check the fuel preliminary filter for leaks.

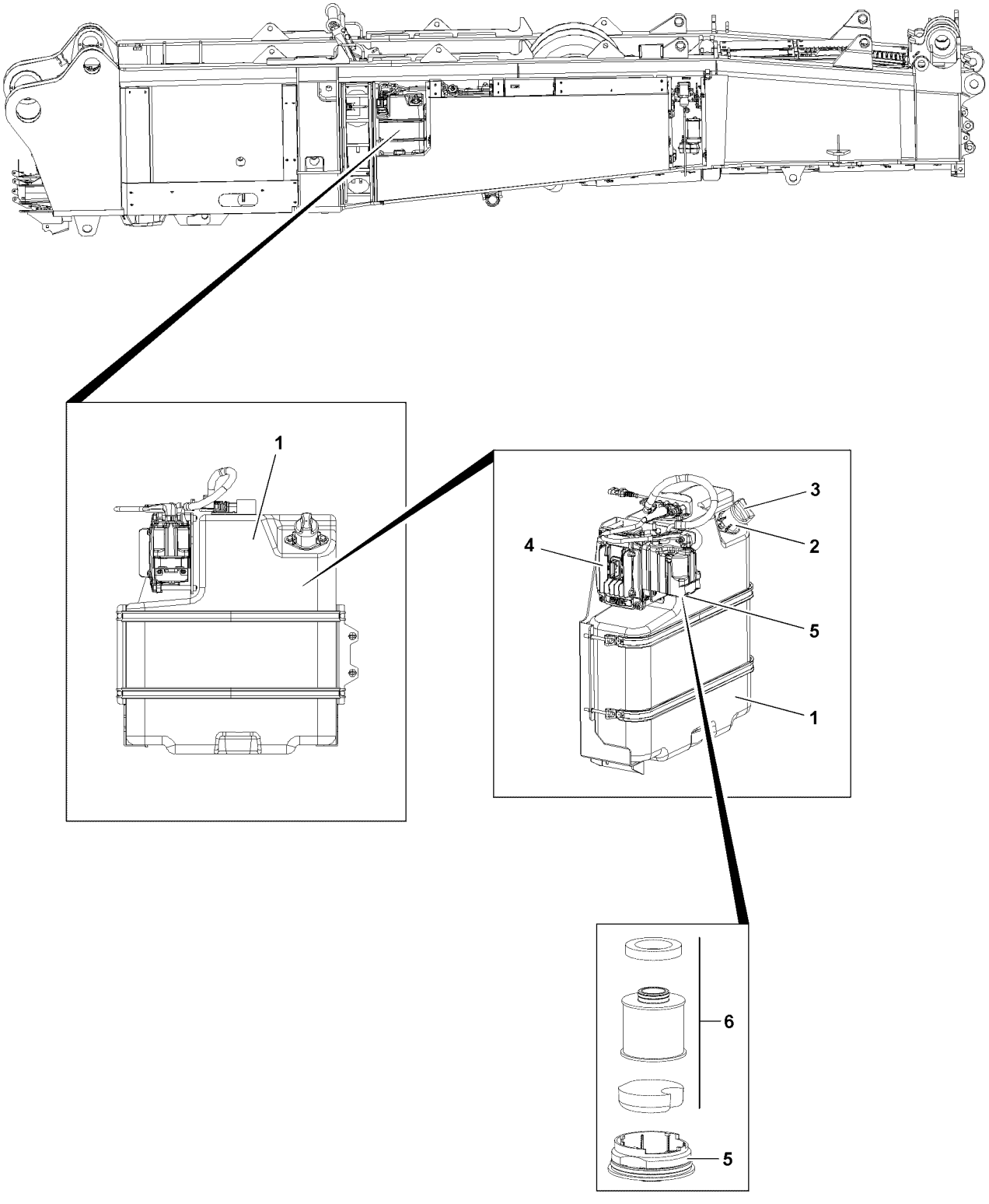

B117136

3 Urea system*

Note
- Urea system only for Diesel engines with exhaust aftertreatment system SCR (Selective Catalytic Reduction).

3.1 Adding Urea solution

Make sure that the following prerequisites are met:
– The auxiliary heater is turned off.
– The Diesel engine and the ignition are turned off.

Note
- Also observe the danger notes in the Crane operating instructions, chapter 7.01.

- Open the tank cover **3** on the Urea tank.
- Insert the fuel nozzle in the filler neck **2** of the Urea tank.
- Refuel the vehicle.
- After the refueling procedure:
  Remove the fuel nozzle and close the tank cover **3**.

3.2 Changing the urea filter

NOTICE
Danger of corrosion!
If urea is spilled, affected surfaces can corrode!
- Absorb the spilled urea and flush the affected areas immediately with a large amount of water!
- When handling urea, observe the general cautionary and sanitary protective measures!

Note
- Change the filter insert **6** for the urea pump **4** according to the data in the maintenance intervals, see Crane operating instructions, chapter 7.03.
- Also observe separate engine manufacturer's operating instructions.
- Change the filter insert **6** only when the pressure is relieved!

- Turn the diesel engine off.
- Remove the cover.
- Open the housing cover **5** and replace the filter insert **6**.
- Close the filter housing with the housing cover and tighten with a tightening torque of 15 Nm.
- If applicable, remove spilled urea and clean affected areas with plenty of water.

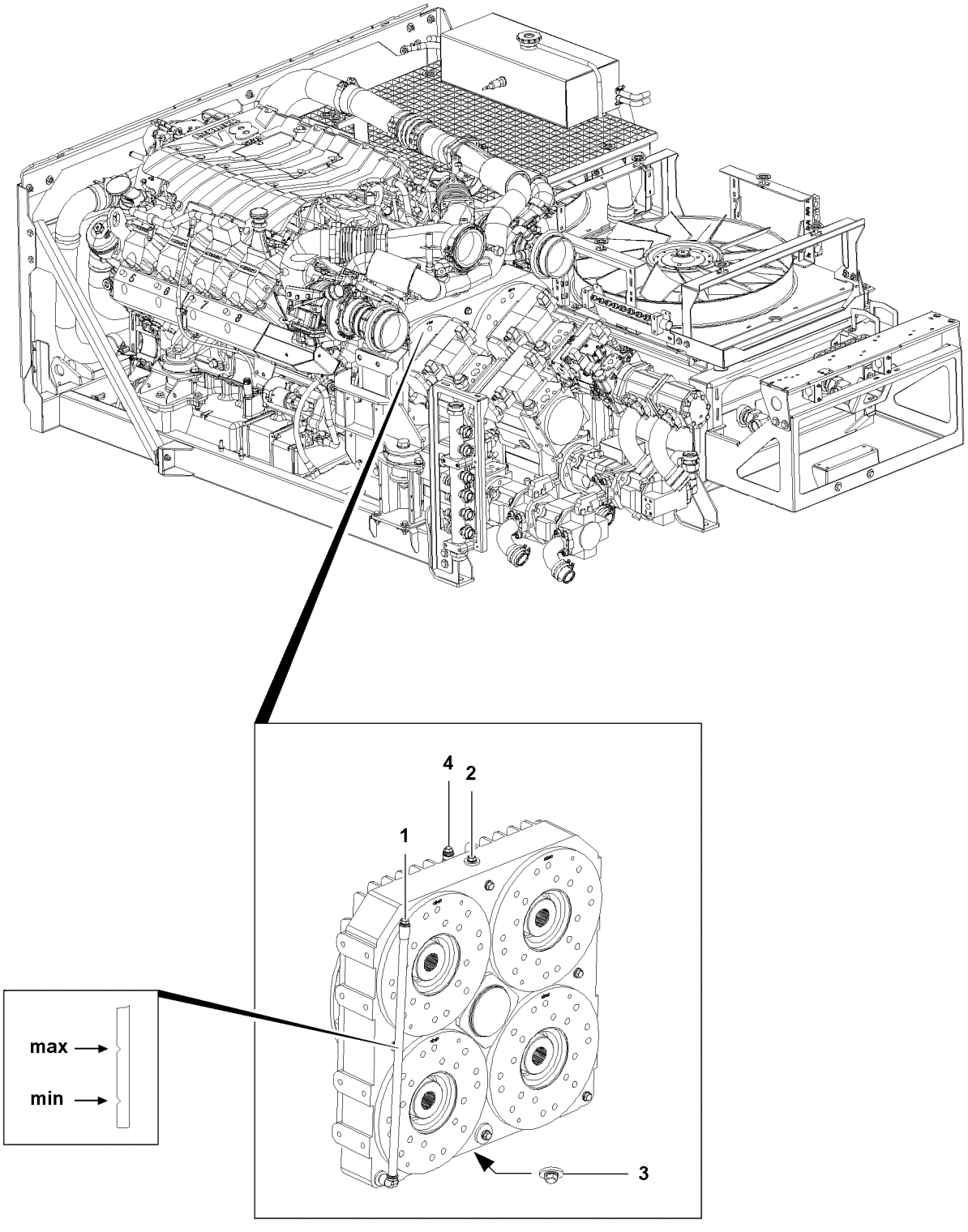

B117126

4 Pump distributor gear

Maintain utmost cleanliness during all work to prevent any dirt from entering the inside of the gear.

4.1 Checking the oil level

Note

▶ Make sure that the crane is in horizontal position!

▶ Remove the dipstick **1** and wipe it off.

▶ Reinsert the dipstick **1** and pull it out again.

The oil level must be between the min. and max. marks on the dipstick **1**.

▶ Check the oil level.

NOTICE

Danger of gear damage!

If the oil level has dropped below the minimum mark, add engine oil as specified in the lubrication chart until the oil level is between the minimum and maximum marks!

▶ Add oil and check again!

▶ Reinsert the dipstick **1**.

4.2 Changing the oil

Make sure that the following prerequisites are met:

– The crane is in horizontal position.

– The gear is warm.

▶ Remove the oil filler plug **2** and the breather screw **4**.

▶ Remove the oil drain plug **3** and drain the oil.

▶ Install the oil drain plug **3** with new seal and tighten.

▶ Add oil as specified in the lubrication chart on the oil filler plug **2** until the oil level is between the min. and max. marks on the dipstick **1**.

▶ Install the oil filler plug **2** and the breather screw **4** with new seal.

▶ Check the oil level.

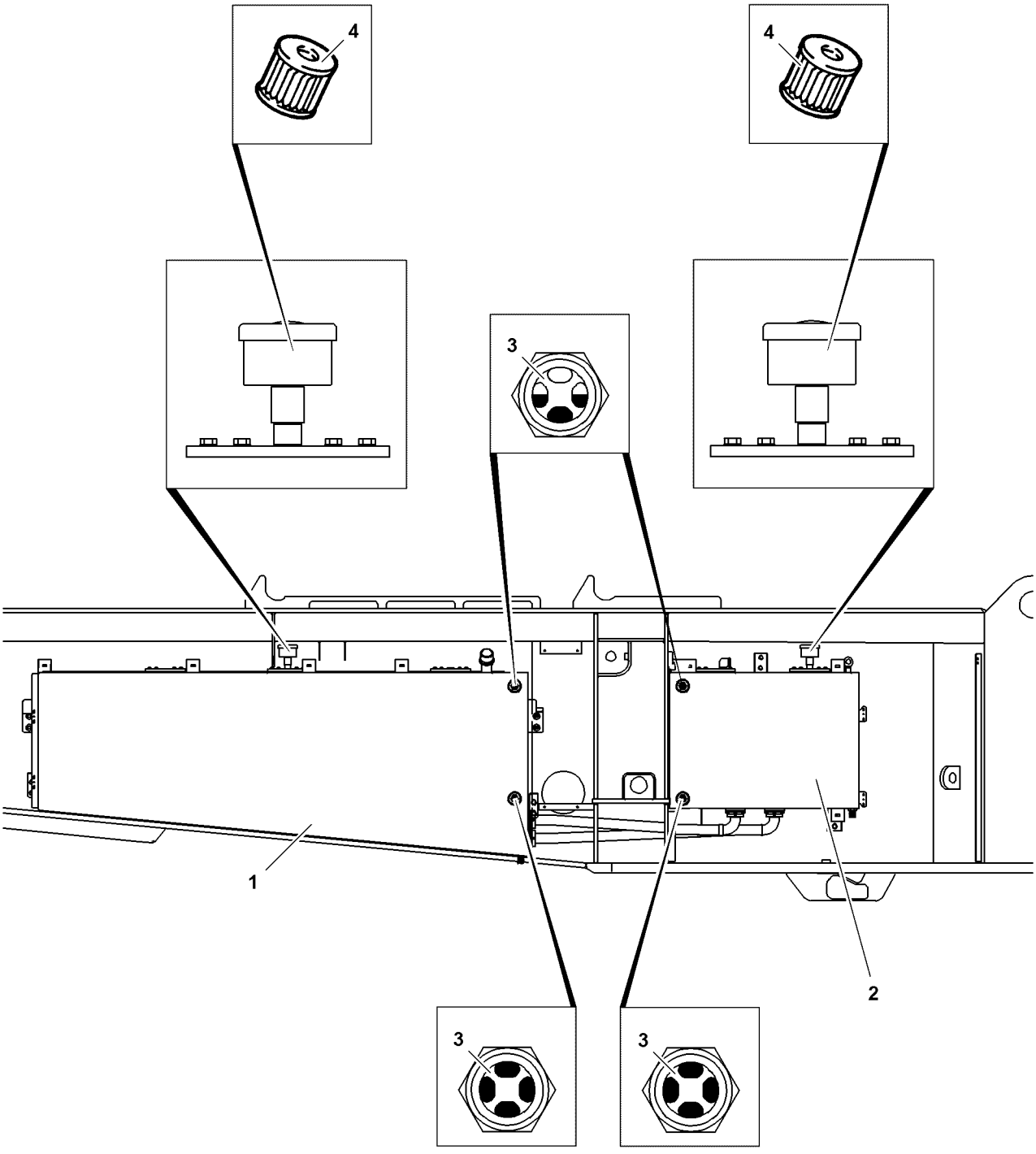

B117127

5 Hydraulic system

When adding oil, observe utmost cleanliness.

5.1 Hydraulic oil tank / auxiliary oil tank*

5.1.1 Checking the oil level

NOTICE
Damage to the hydraulic oil tank!
If the hydraulic cylinders are not completely retracted when checking the oil level, there is a danger of overfilling!
When retracting the hydraulic cylinders, excess oil is discharged via the tank breather!
If the hydraulic cylinders are retracted too quickly, the hydraulic oil tank can be destroyed!
▶ Make sure that all hydraulic cylinders are completely retracted before checking the oil!

Make sure that the following prerequisites are met:
– The crane is in horizontal position.
– All hydraulic cylinders are fully retracted.

The oil level must be in the center of the oil level sight gauge **3**.
▶ Check the oil level on the oil level sight gauge **3** of hydraulic oil tanks.

Troubleshooting
No oil is visible in the oil level sight gauge **3**?
▶ Add oil as specified in the lubrication chart with a fine mesh filter until the oil level on the hydraulic oil tank **1** is visible in the center of the oil level sight gauges **3**.

Note
▶ After adding oil, wait for approx. two minutes until the oil is distributed evenly in the hydraulic oil tank **1** and in the auxiliary oil tank **2**!
▶ If necessary, check oil level again!

5.1.2 Checking the vent / breather filter

▶ Open the cover on the hydraulic oil tank **1** and on the auxiliary oil tank **2** with the turn lock.
▶ Check the filter **4** for impurities (visual inspection).
▶ In the event of heavy contamination:
Replace the filter **4**.
▶ Close the cover with the turn lock again.

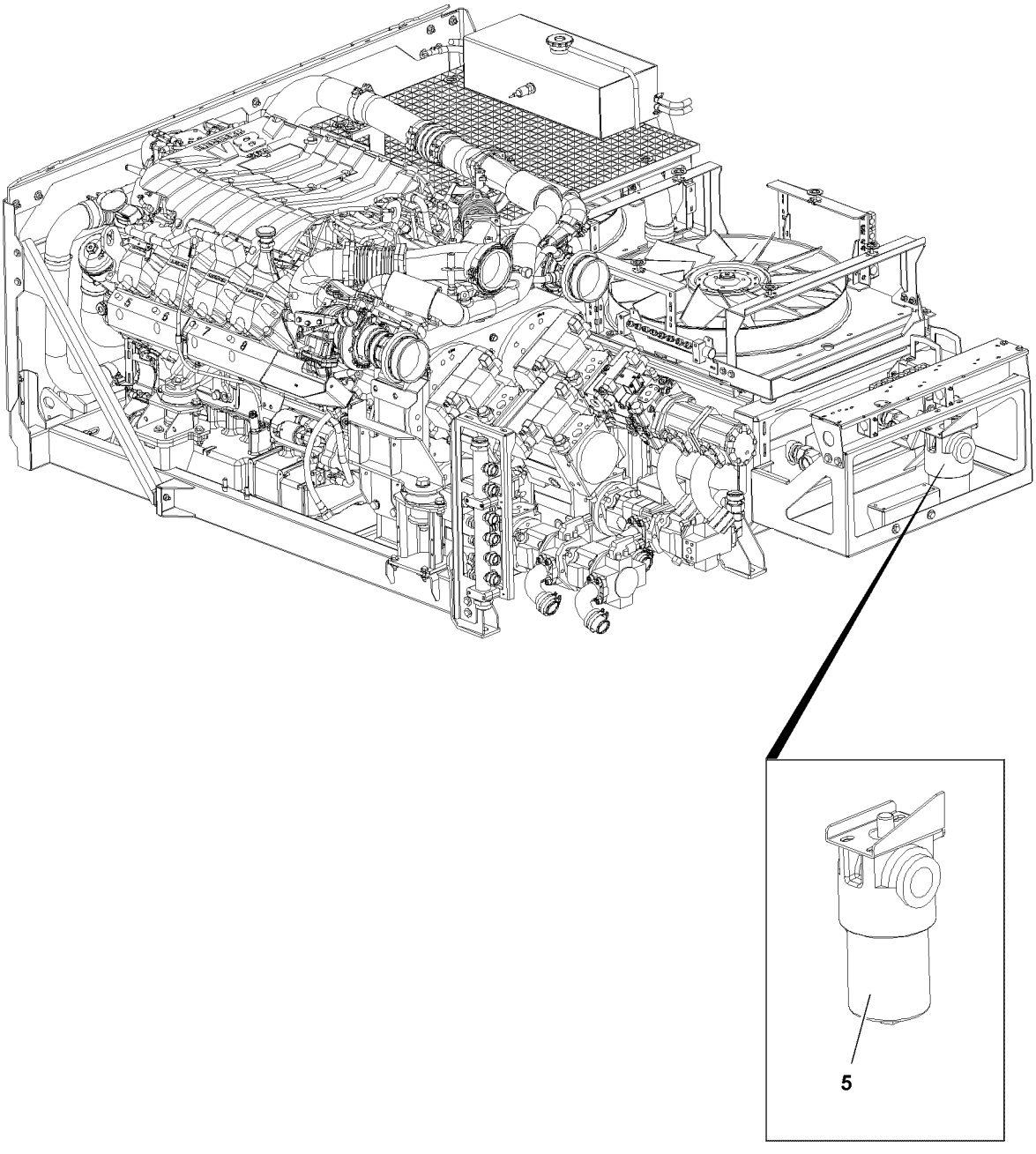

B117128

5.2 Pressure filters in the crane hydraulic

The pressure filter **5** is equipped with a maintenance indicator. If the red bar indicator is visible when the oil is at operating temperature, then the filter cartridge must be replaced.

- ▶ Turn the engine off.
- ▶ Release the filter cartridge and collect any escaping oil in a suitable container.
- ▶ Remove and dispose of the filter cartridge.
- ▶ Clean the sealing surface on the filter bracket.
- ▶ Lubricate the rubber seal ring on the new oil filter cartridge with oil.
- ▶ Install a new filter cartridge and tighten.
- ▶ Start the engine and check for leaks.
- ▶ Slowly run through all crane movements.

Result:

– This bleeds the hydraulic system.

- ▶ Check the oil level again and add oil if necessary.

5.3 Diaphragm reservoirs

Various diaphragm reservoirs are installed in the hydraulic system. The pretension pressures are specified in the hydraulic circuit diagram as well as on the individual diaphragm reservoirs. The pretension pressure must be measured separately in each diaphragm reservoir.

NOTICE

Risk of damaging the hydraulic system!

If the outside temperature fluctuates considerably, e.g. after transport to extremely hot or cold countries or in countries with considerable differences between the summer and winter temperatures, the accumulator pressures may change!

- ▶ Check the accumulator pressures and correct if necessary!

Make sure that the following prerequisite is met:

– The crane engine is turned off.
  This relieves the diaphragm reservoir at the fluid side.

DANGER

Danger of explosion!

The pressure in the nitrogen cylinder must be less than the maximum permissible operating pressure of the accumulator or the pressure gauge. Otherwise install a pressure reducer between the cylinder and the filling device!

- ▶ Do not use air or oxygen to fill the diaphragm reservoir!

The pretension pressure in the hydraulic reservoirs may only be checked by an expert with appropriate training and equipment. In addition, the national regulations for pressurized container inspections must also be observed.

- ▶ Check the pretension pressure with a testing and filling device and correct, if necessary.

5.4 Hydraulic hose lines

The hydraulic hose lines must be checked according to ISO 9927-1 by an **experienced technician** or **expert mechanic**, as required, depending on the duration of use and the operating conditions, but at least once a year.

Experienced technicians are persons who:

– possess sufficient knowledge about cranes due to their professional background and experience.
– are familiar with the relevant settings to detect any abnormal deviations from the nominal condition.
– have undergone special training.

Expert mechanics are mechanics, who:

– are experienced in the design, construction or maintenance of cranes.
– possess sufficient knowledge about the relevant settings and standards.
– are fully equipped to perform inspections.
– are able to assess the safety status of the crane.
– can decide which action needs to be taken to ensure the crane can continue to be operated safely.

Note

▶ The applicable national regulations must also be complied with!

5.4.1 Checking the hydraulic hoses within area of responsibility of the German employer's liability insurance associations

At least once a year, an **expert** must inspect the hydraulic hoses to ensure they are in operationally safe condition. The crane must be inspected by an **authorized inspector** every four years from the day it was first licensed. After the 12th year of operation, the crane must be inspected by the authorized inspector annually.

The **expert** or **authorized inspector** must document the fact that the hydraulic hoses can continue to be used in the crane!

An expert is someone:

– whose technical training and experience means that he has adequate knowledge in the field of hydraulic hoses and hose systems.
– who is familiar with the relevant occupational health and safety regulations.
– who is familiar with the relevant accident prevention guidelines.
– who is familiar with the directives and generally accepted technical regulations (e.g. DIN standards, VDE regulations, technical regulations of other EU member states or other countries that have signed the European Economic Community agreement).
– who can properly assess whether hydraulic hoses and hose systems are deemed safe in accordance with the guidelines and regulations stated above.

Authorized inspector(s) is / are :

– an authorized expert employed by the technical supervisory authorities.
– in Hamburg this is the Amt für Arbeitsschutz (office for occupational health and safety).
– in Hessen these are the technical supervisory offices.
– an authorized expert appointed by the professional associations.

5.4.2 Examples of possible defects in hose lines

DANGER
Risk of fire or accident!
If problems are discovered during inspections, then they must be remedied immediately or suitable measures are to be taken. Failure to do this can result in serious injury to persons, death or damage to property!
▶ Remedy problems or take suitable measures!

- Damage to the outer layer as far as the intermediate later (e.g. chafing, cuts and cracks).
- Outer layer brittleness (crack formation of the hose material).
- Deformation that differs from the natural shape of the hose or hose line, in depressurized as well as in pressurized condition or in bends, for example layer separation, bubbling, crushing or kinking.
- Leaks.
- Failure to follow installation instructions.
- Damage or deformation of hose fittings that inhibit the function and strength of the fitting or the hose / fitting connection.
- Hose slipping out of fitting.
- Fitting corrosion that inhibits function and strength.
- Storage time or usage period exceeded.

5.4.3 Maintenance of hose lines

- We recommend to check all hoses, hose lines and screw fittings daily, but at least every two weeks for leaks and externally recognizable signs of damage.
- Damaged parts must be replaced immediately! Oil spray can lead to injuries and fires!
- Hydraulic lines and hoses may not be repaired!
- Hoses that have already been used as a part of a hose line may not be reinstalled in hose lines.
- Always use Original Liebherr spare parts when replacing hoses and hose lines.
- Always ensure that the hoses are routed free of torsion. If high pressure hoses are being used, attach the screws of the half clamps or full flange at both ends of hose and then tighten.
- When using high pressure hoses with a bent fitting, tighten the end with the bent fitting first when tightening the flanges, then the end with the straight fitting.
- Any mounting clamps in the hose center may be attached and tightened only thereafter.
- Route the hoses in such a way that chafing with other hoses or other structures is prevented. Maintain a minimum clearance of approximately ½ the outer diameter of the hose to other parts. The clearance should never be less than 10 mm to 15 mm.

5.4.4 Replacing the hose lines

DANGER
Risk of fire or accident!
Failure to replace the hose lines at appropriate intervals can cause serious injury to persons, death or damage to property!
▶ Replace hose lines according to appropriate intervals!

This must be documented in the crane's log book by the **expert** or the **authorized inspector**.
The service life of a hose line may not exceed six years, including a storage period of a maximum of two years (pay attention to the manufacturing date on the hoses). The duration of use can also be defined by the **expert** or **authorized inspector** in accordance with existing test and empirical data in the individual application areas, taking the usage conditions into consideration.

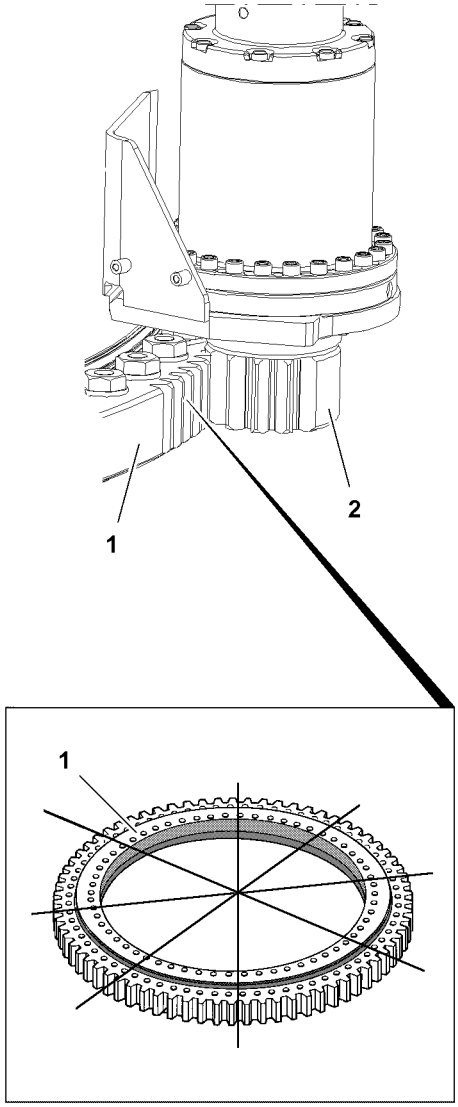

B117129

6 Slewing ring connection

6.1 Lubricating the slewing ring connection

Perform lubrication with extreme care before and after long operating intervals, particularly before and after any winter break, in order to provide the best possible corrosion protection.
If the crane has not been moved for more than 3 months, then it must be lubricated every 3 months with an external grease pump until grease emerges on all sealing lips, see also section of “Central lubrication system”. Then the relevant crane movement must be repeated several times and the lubrication procedure must be carried out again.

▶ Lubricate the slewing ring connection.

6.2 Lubricating the gear ring and the slewing gear pinion

Before and after extended breaks in service, grease the gear ring **1** and the slewing gear pinion **2** to ensure the best possible protection from corrosion.

▶ Grease the gear ring **1** and the slewing gear pinion **2** externally.

6.3 Tilt play of roller ring connection

The wear of the roller ring connection is determined by measuring the “tilt play” with the ring installed.

Note

▶ The determination of the “Tilt play” must be carried out according to the **test instructions** of **Liebherr-Werk Ehingen GmbH**!

▶ Contact the Service Dept. at **Liebherr-Werk Ehingen GmbH** for **test instructions**!

DANGER

Danger of accident if tilt play of roller ring connection is too large!

If the permissible tilt play of 2.0 mm is exceeded, then safe crane operation is no longer possible.

▶ Replace the roller ring connection if the tilt play is larger than 2.0 mm!

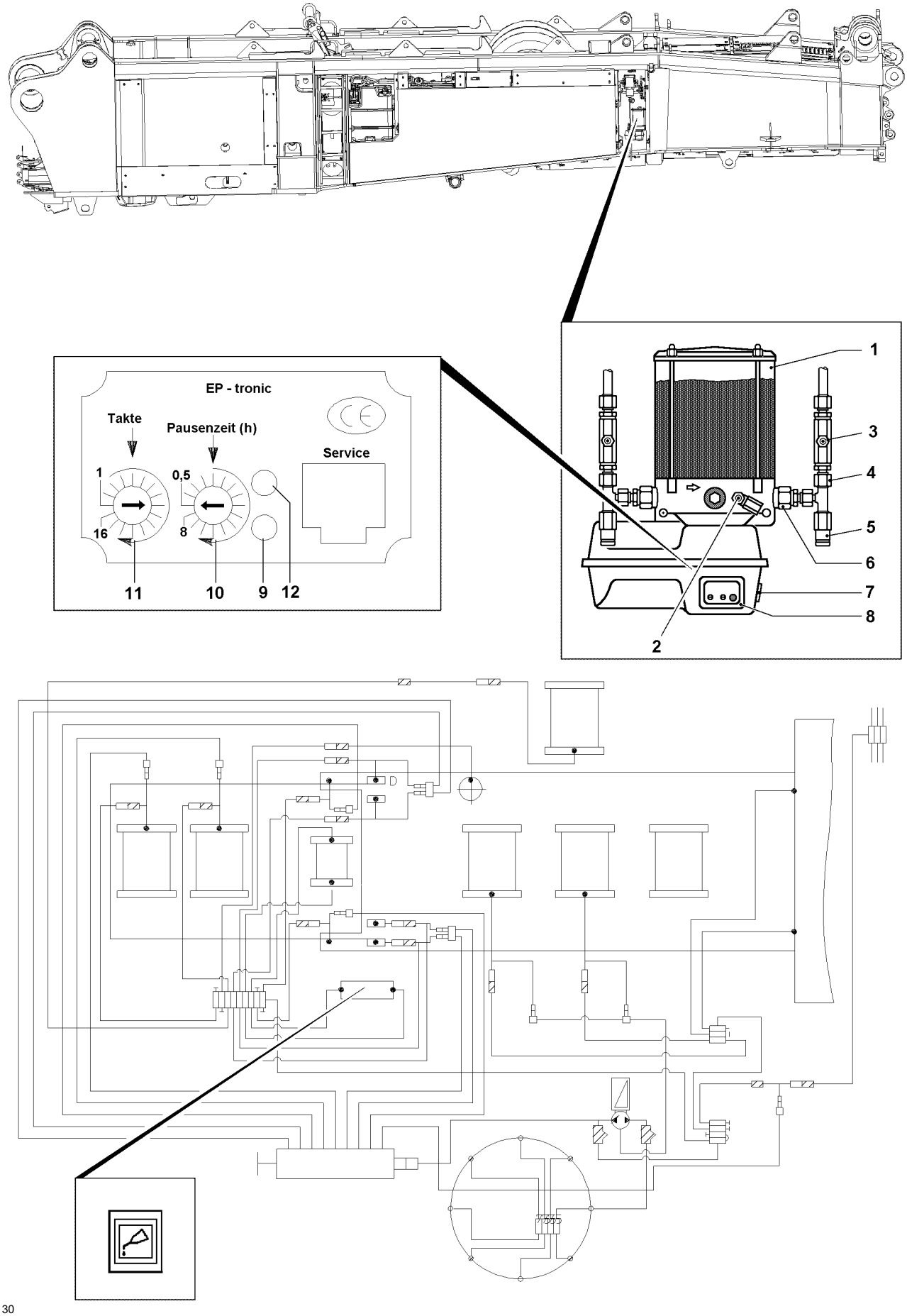
EP - tronic
Takte
Pausenzeit (h)
Service
1
16
0,5
8
11
10
9
12
1
3
4
5
6
7
8
2
B117130

7 Central lubrication system

The crane superstructure is equipped with a central lubrication system. All grease points (refer to the overview on the left), the bearing of the pivot section, the bearings of the luffing cylinders and the winches are automatically supplied with the correct amount of grease.
If the crane has not been moved for more than 3 months, then it must be lubricated every 3 months with an external grease pump on the grease fitting **3** until grease emerges from all grease points. Then the relevant crane movement must be repeated several times and the lubrication procedure must be carried out again.

Note
▶ Cleaning is permitted in washing bays or with steam cleaners!

7.1 Pump operating period of central lubrication system - Crane superstructure

– Pump operation period: 9 cycles
– Break period: 0.5 h

7.2 Components of the system

– Grease container **1**
– Grease fitting **2**: Fill the central lubrication pump
– Grease fitting **3**: Fill the lube lines
– Pump outlet **4**
– Pressure relief valve **5**
– Pump element **6**
– Push button **7**
– Control **8**
– Green LED **9**: Function display
– Latched switch **10**: Pause time (h)
– Latched switch **11**: Cycles
– Red LED **12**: Fault display

7.3 Setting the lubrication and break periods

The LED **9** on the engine protection housing blinks in a 0.5 second cycle during the lubrication process. The lubrication and pause time is set at the factory. The times can possibly be changed by using the latched switch **10** and latched switch **11**.
▶ Turn on the engine ignition.

Result:
– When turning the ignition on, the green LED **9** lights up for approximately 2 seconds and shows the operation readiness of the control **8**.

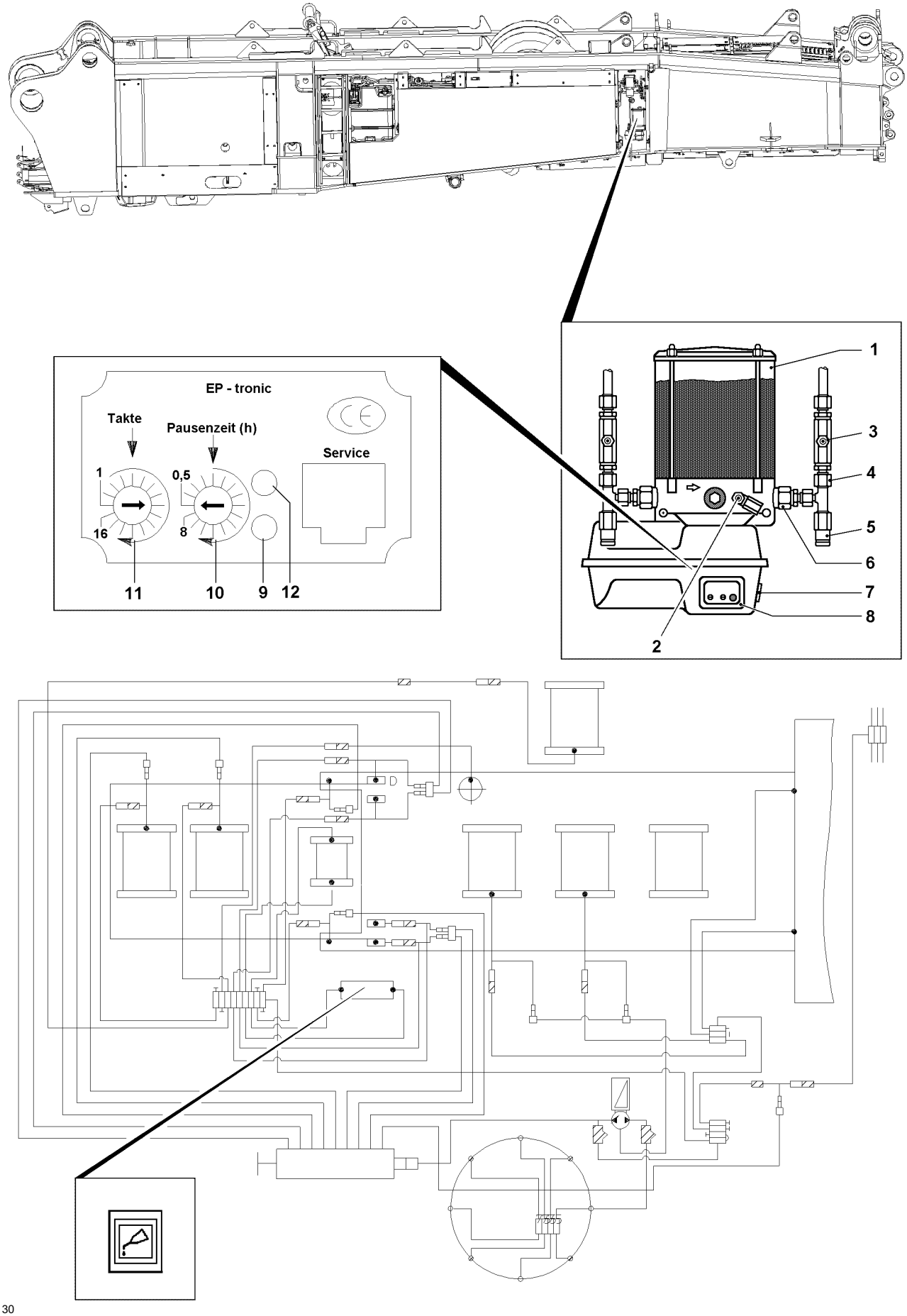
EP - tronic
Takte
Pausenzeit (h)
Service
1
16
0,5
8
11
10
9
12
1
3
4
5
6
7
8
2
B117130

7.4 Function check

▶ Start the engine.

▶ Trigger 2 or 3 grease pulses using the push button **7**.

Result:

– Grease emerges on the lube points.

– If the system is blocked but the electric pump is properly functioning, the grease emerges through the pressure relief valve **5**.

7.5 Cycle control

The central lubrication system is progressively monitored. This means that a proximity switch converts the piston strokes of the central lubrication system distributor into electric control signals and relays them to the control unit. If the control signals are not present or incomplete, the indicator light **363** displays a malfunction or a problem by blinking.

7.5.1 Blinker code - cycle control

During operation

– Ignition on, ready for operation:
The indicator light **363** lights up orange for 1.5 s and turns off.
The green LED **9** and the red LED **12** light up for 1.5 s and turn off.

– Lubrication active:
The indicator light **363** lights up yellow during the lubrication period.
The green LED **9** lights up during the lubrication period.

In case of a problem

– Error of monitoring period of cycle input, lubrication time larger monitoring period cycle input.
The indicator light **363** lights up orange for 2 s and is off for 2 s etc.
The green LED **9** and the red LED **12** light up for 1 s and are off for 1 s etc.

– Error CPU, Error memory
The indicator light **363** lights up red for 1 s and is off for 1 s etc.
The red LED **12** lights up for 0.5 s and is off for 0.5 s etc.

7.6 Access to the automatic lubrication (intermediate lubrication)

After washing the crane, carry out intermediate lubrication processes or fill the grease lines with grease again after a repair.

▶ With the ignition turned on, press the red button **7** on the engine protection housing of the pump.

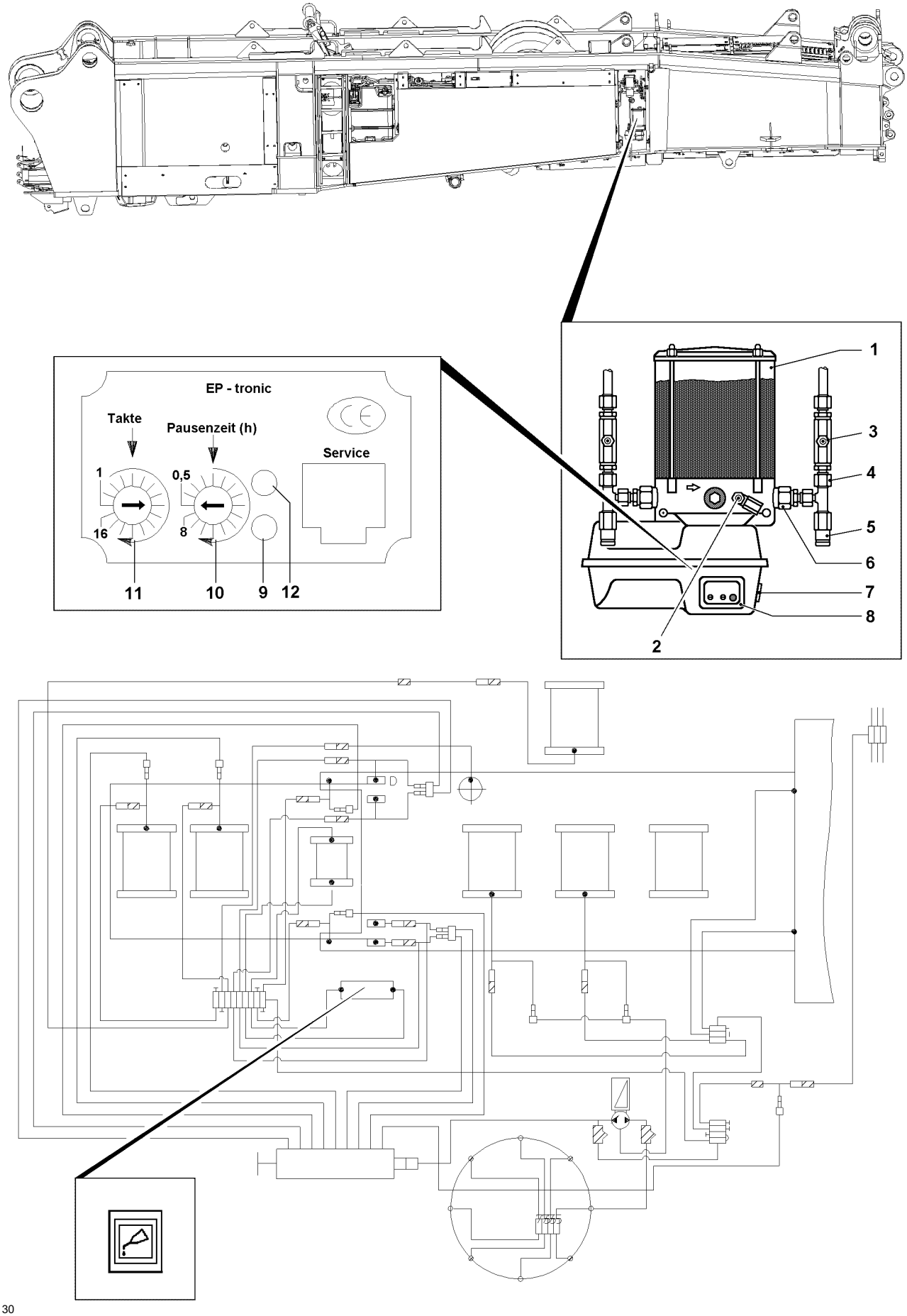
EP - tronic
Takte
Pausenzeit (h)
Service
1
16
0,5
8
11
10
9
12
1
3
4
5
6
7
8
2
B117130

7.7 Filling the grease container

NOTICE
Risk of damage due to insufficient lubrication!
- ▶ There must always be sufficient grease in the grease container **1**!
- ▶ Observe utmost cleanliness when filling the grease container **1**!

- ▶ Fill the grease container **1** with a grease pump via the grease fitting **2** on the central lubrication pump.

7.8 Bleeding the central lubrication system

If the grease container **1** has been emptied, then it may be necessary to bleed the central lubrication system.
- ▶ Fill the grease container **1**.
- ▶ Unscrew the main line from the pump outlet **4**.
- ▶ Trigger additional lubricating pulses until there are no more air bubbles in the emerging grease at the pump outlet **4**.
- ▶ Reconnect the main line.
- ▶ Trigger an additional lubricating process.

7.9 Filling the lubrication lines

NOTICE
Risk of damage due to insufficient lubrication!
The lubrication lines must be refilled after any repair on components, which are lubricated with grease. If this is not observed, the component may run dry!
- ▶ Sufficient grease must be available in the grease lines after every repair on greased components!
- ▶ Observe utmost cleanliness when filling the grease lines!

- ▶ Add grease with an external grease pump via the grease fitting **3**.

or

- ■ With the ignition turned on, press the red button **7** on the engine protection housing of the pump.

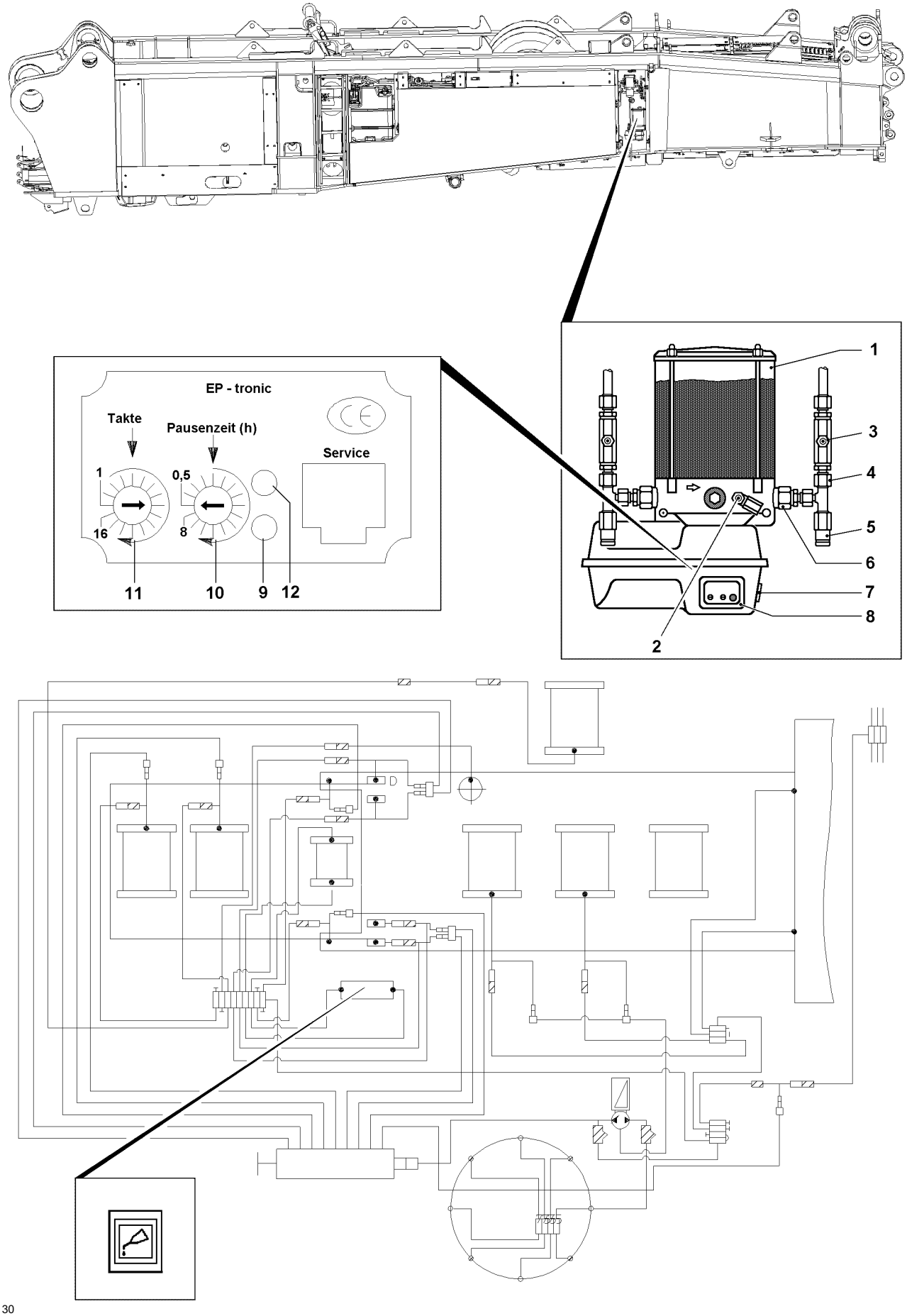
EP - tronic
Takte
Pausenzeit (h)
Service
1
16
0,5
8
11
10
9
12
1
3
4
5
6
7
8
2
B117130

7.10 Troubleshooting on the central lubrication system

Problem	Cause	Remedy
The grease pump does not work	Integrated electronic control defective, electrical line interrupted, grease pump defective	Replace lower part of motor protection housing, replace electrical line, replace grease pump
Grease pump operates, but does not deliver	Air cushion in delivery piston, minimum fill level fallen below, grease pump element defective	Bleed grease pump, fill reservoir, replace grease pump element
No grease collar on all lube points	Grease pump not operating, interval time too high or cycle time too short, system blocked	See “Grease pump not operating” , reduce interval time or increase number of cycles, refer to “Grease emerges on pressure relief valve”
No grease collar on several lube points	Supply lines to secondary distributors broken or leaking, screw connections leaking	Replace lines, tighten or replace screw connections
No grease collar on one lube point	Associated lube line broken or leaking, screw connection leaking	Replace line, tighten or replace screw fitting
Grease pump speed reduced	High system pressure, low ambient temperature	Check system / bearing points, no damage: Grease intermediately once or twice, if necessary
Grease escapes at the pressure relief valve	System pressure too high, progressive distributor blocked, system blocked, defective valve spring	Check system, replace distributor, repair blocked / seized bearing point, replace pressure relief valve
The red LED blinks very fast	Error CPU / memory	Consult Liebherr Service
The red LED and the indicator light blink fast	Error in the monitoring period from cycle start	The proximity switch is defective, consult Liebherr Service

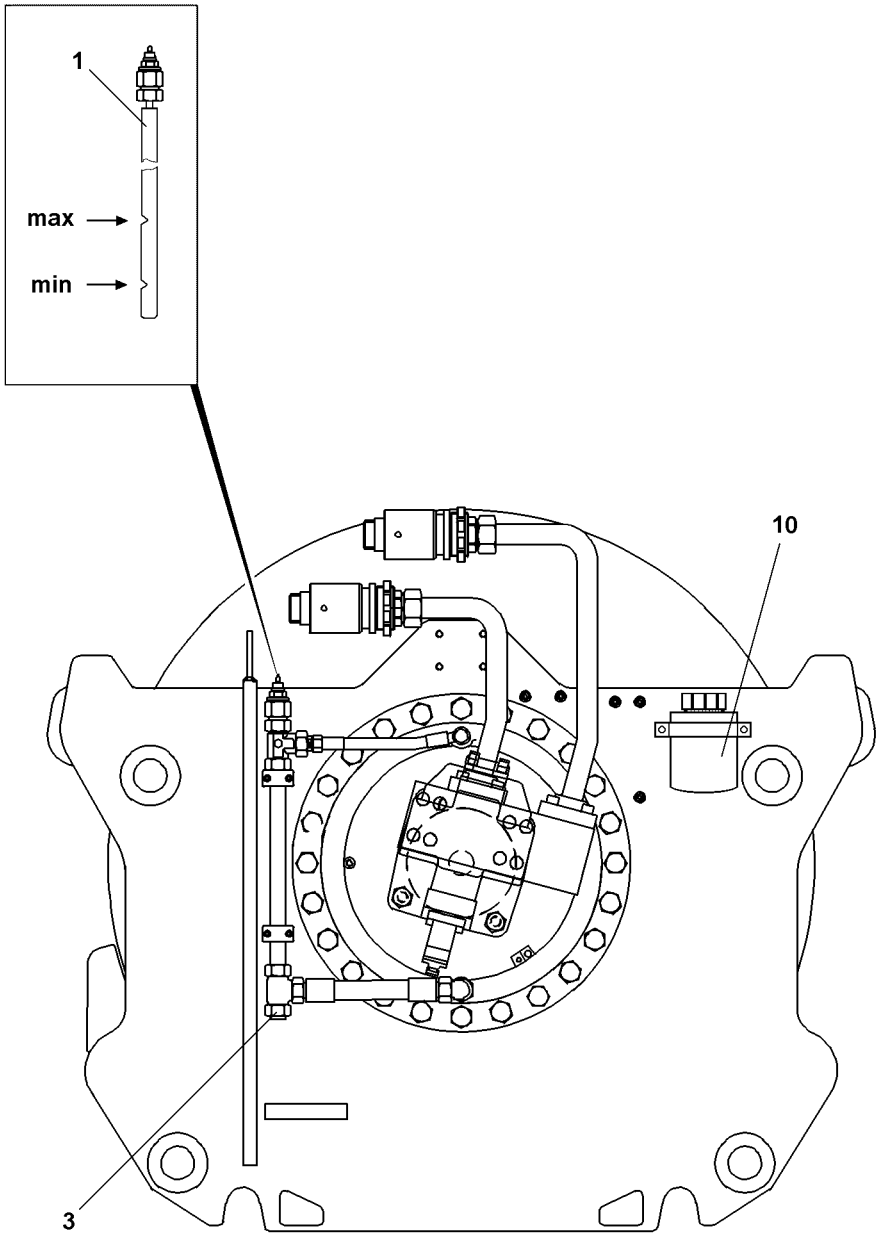

B117131

8 Hoist gear 1 to 6

Maintain utmost cleanliness during all work to prevent any dirt from entering the inside of the gear.

8.1 Overflow container

When the oil heats up in the hydraulic motor for the winches, the oil can enter the overflow container **4** via a check valve, but cannot flow back into the hydraulic system after cooling off. For this reason the oil that has collected in the overflow container **4** must be disposed of at regular intervals.

8.2 Winch

Make sure that the following prerequisites are met:
– The winch is inactive.
– The crane is in horizontal position.

8.2.1 Checking the oil level

▶ Unscrew, remove and wipe off the dipstick **1**.

Note
▶ Do not insert the dipstick **1** to measure!

▶ Reinsert the dipstick **1** and pull it out again.

The oil level must be between the min. and max. mark on the dipstick **1**.
▶ Check the oil level.

NOTICE
Danger of gear damage!
If the oil level has dropped below the minimum mark, add oil as specified in the lubrication chart until the oil level is between the minimum and maximum mark!
▶ Add oil and check again!

▶ Reinsert the oil dipstick **1**.

8.2.2 Oil change

▶ Turn the dipstick **1** and pull it out.
▶ Remove the oil drain plug **3** and drain the oil into a suitable container.
▶ Install the oil drain plug **3** with new seal and tighten.
▶ Add oil as specified in the lubrication chart at the oil filler port until the oil level is between the minimum and maximum mark on the dipstick **1**.
▶ Install the dipstick **1** and tighten.
▶ Check the oil level as described above.

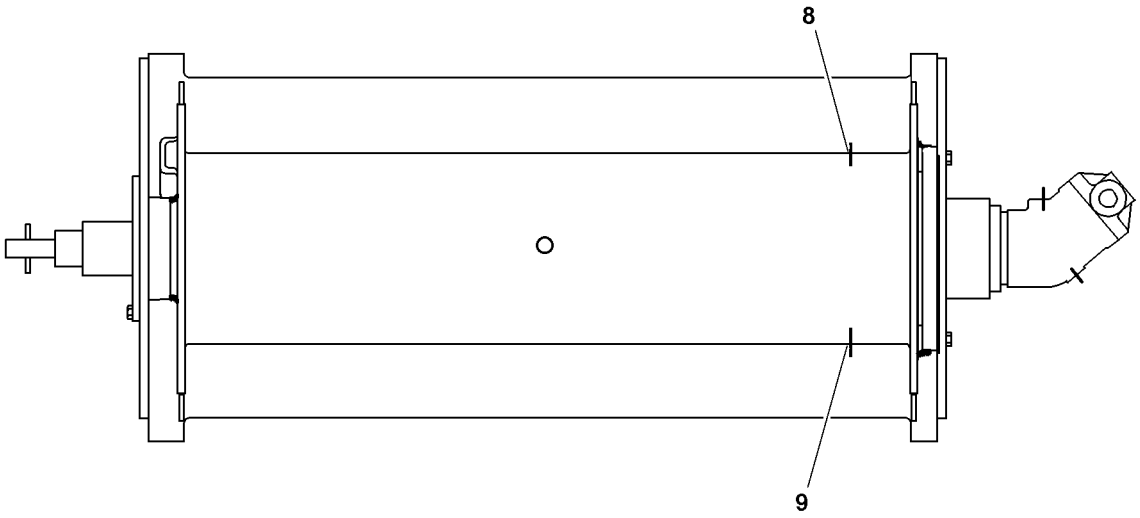

B117132

9 Assembly winch

9.1 Oil change

Note

▶ Make sure that the assembly winch has been spooled out!

▶ Remove the oil filler plug **8**.
▶ Remove the oil drain plug **9** and drain the oil into a suitable container.
▶ Install the oil drain plug **9** with new seal and tighten.
▶ Add oil as specified on the lubrication chart on the oil filler plug **8**.
▶ Install the oil filler plug **8** with new seal and tighten.

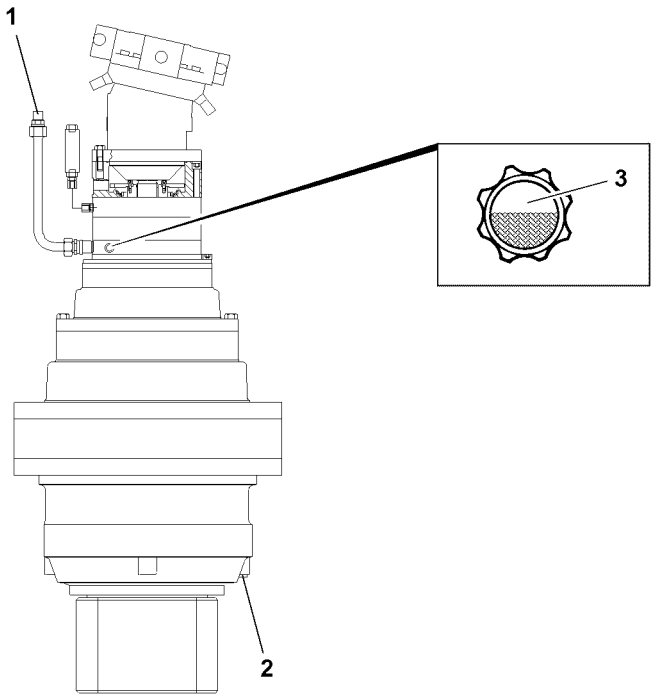

B117133

10 Slewing gear

Maintain utmost cleanliness during all work to prevent any dirt from entering the inside of the gear.

10.1 Checking the oil level

Make sure that the following prerequisites are met:
- The crane is in horizontal position.
- The slewing gear is inactive.
- The slewing gear is warm.

Note
▶ The oil level must be in the center of the oil level sight gauge **3**!

▶ Check the oil level on the oil level sight gauge **3**.

NOTICE
Danger of gear damage!
If the oil level on the oil level sight has dropped to the point that it is no longer recognizable, then oil as specified on the lubrication chart must be added until the oil level is again in the center of the oil level sight gauge!
▶ Add oil and check again!

▶ Check the oil level on the oil level sight gauge **3**.

10.2 Changing the oil

Make sure that the following prerequisites are met:
- The crane is in horizontal position.
- The slewing gear is inactive.
- The gear is warm.

▶ Remove the oil filler plug / breather screw **1**.
▶ Remove the oil drain plug **2** with the seal ring and drain the oil.
▶ Clean the oil drain plug **2** and sealing surface on the housing.
▶ Install the oil drain plug **2** with new seal ring and tighten.
▶ Add oil as specified on the lubrication chart on the oil filler port **1** until the oil is in the center of the oil level sight gauge **3**.
▶ Install the oil filler plug / breather screw **1**.
▶ Check the oil level as described above.

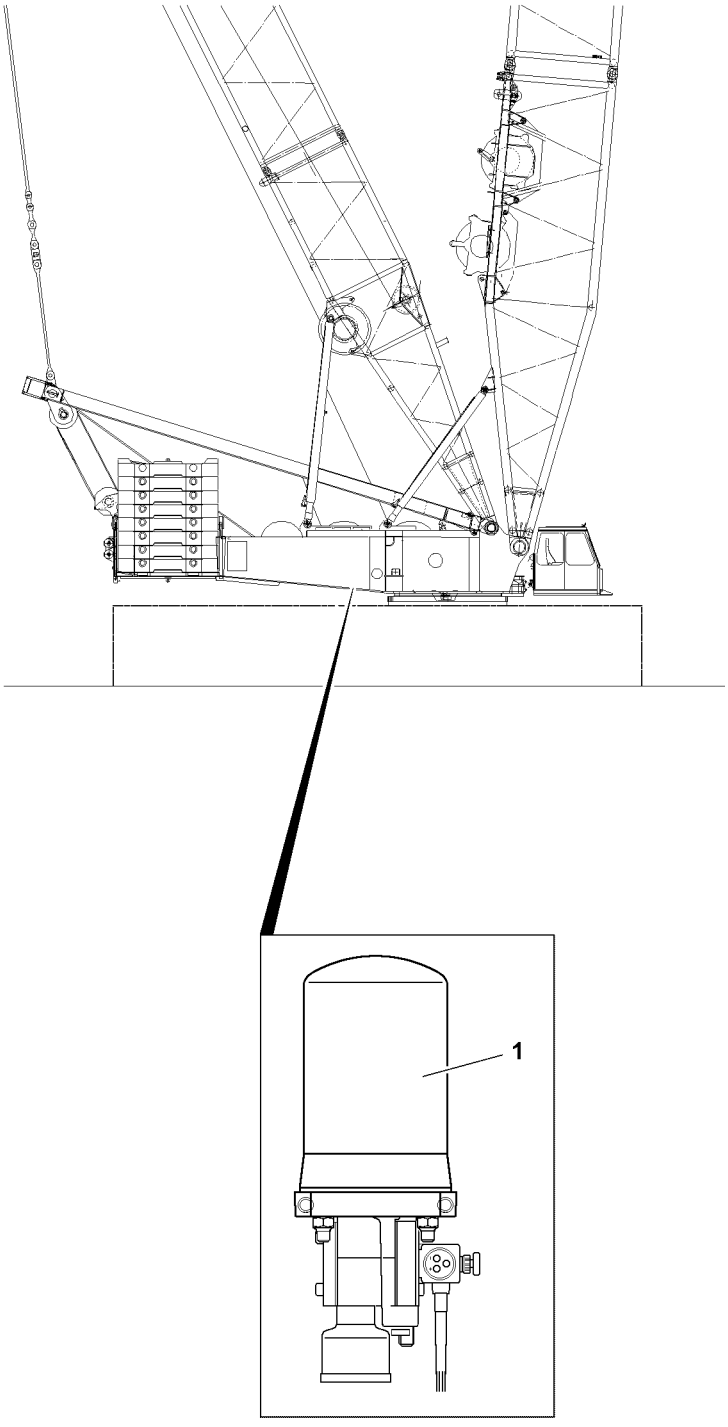

B117135

11 Air dryer of the compressed air system of the crane superstructure

11.1 Replacing the granular cartridge

CAUTION
Danger of accident due to pretensioned granular cartridge!
The granular cartridge **1** is under spring tension!
▶ Caution when replacing the granular cartridge!

▶ Replace the granular cartridge **1** once per year.

12 Electrical system - Lighting

The maintenance of the electrical system is essentially limited to replacing defective fuses and bulbs and maintaining the batteries.

NOTICE
Damage to electrical system!
Never short circuit defective fuses with wire or similar items!
▶ Always replace defective fuses with fuses of the same amperage!
▶ If there is a repeat problem with the same fuse, check the electrical system!

12.1 Battery maintenance

DANGER
Danger of fatal injury!
▶ Always disconnect the batteries from the power circuits when working on the electrical system of the crane and during all welding work!

▶ Keep batteries dry and clean.
▶ Do not bring oil, grease, fuel or solvents into contact with the battery casting compound.
▶ Release dirty terminals, clean and grease them with an acid-free and acid-resistant grease.
▶ Check the acid levels in batteries at least once a year. In summer and in hot climate zones, check it at least twice a year.
▶ On conventional batteries, check electrolyte level at regular intervals and add distilled water to the specified “max mark”, if necessary.
▶ When adding distilled water:
Measure the acid concentration only after 30 minutes. The acid temperature for measuring should be + 20 °C if possible.

Proceed as follows when checking the battery charge:

Specific weight	Charge condition
1,28/1,23*	Well charged
1,20/1,16*	Semi-charged, recharge
1,12/1,08*	Discharged, recharge immediately

* in tropical countries

Reduced battery performance requires greater power requirements.

▶ Ensure that batteries are well charged, particularly during the colder months.

12.2 Mixing battery acid

▶ Ensure that work area is well ventilated.

DANGER

Danger of explosion!

▶ When mixing battery acid, always pour distilled water into the container first, then the concentrated sulphuric acid!

▶ Observe this order, otherwise explosions and spattering can occur!

▶ Stir the mixture with an acid-proof stick (glass or plastic).

Desired acid concentration kg/l	1,23	1,24	1,25	1,26	1,27	1,28
Volume ratio of concentrated sulphuric acid (96 %) to distilled water	1:3,8	1:3,6	1:3,4	1:3,2	1:3,0	1:2,8

When adding the battery acid, the acid level should be 15 mm above the top edge of the battery plates and the temperature of the acid should be approximately 15 °C.

▶ Add battery acid to battery.

Wait approximately 20 minutes before connecting the battery. By that time, it will be balanced out.

▶ Connect the battery after approximately 20 minutes.

12.3 Removing and recharging the battery

WARNING

Danger of injuries!

▶ Do not place tools on batteries and keep open flames away!

12.3.1 Removing the battery

Make sure that the following prerequisites are met:

– The engine is turned off.

– All electrical users are turned off.

NOTICE

Damage to alternator!

▶ Do not disconnect batteries unless the engine has been turned off!

▶ Carry out work in well ventilated rooms and avoid sparks.

▶ Disconnect the negative terminal first (ground cable), then the positive terminal.

- ▶ Remove the battery.
- ▶ Avoid spark formation caused by electrostatic charge. To avoid this, touch the ground support point in the driver's cab.
- ▶ Do not tilt or shake the battery.

12.3.2 Recharging the battery

NOTICE
Damage to battery!
- ▶ Recharge only with direct current, the strength of which does not exceed 1/10 of the battery capacity!

Recharging example: A battery with 170 Ah should be charged with a maximum charging current of 17.0 A.
- ▶ Frozen batteries must be thawed out before charging.
- ▶ Remove all plugs before charging.
- ▶ Provide ventilation during charging (risk of oxyhydrogen gas explosion!).
- ▶ Connect the battery to a battery charger (positive to positive and negative to negative).
- ▶ Turn on the battery charger after connecting the battery.

Stop charging immediately if:
- The acid temperature exceeds 55 °C (casing more than warm to the touch).
- The battery starts to give off gas.
- The acid concentration or the charging voltage has not changed for 2 hours.

- ▶ Turn the battery charger off after charging, then remove the connector cables individually from battery and battery charger.

12.3.3 Installing the battery
- ▶ Reinstall the battery tightly in the vehicle.
- ▶ Avoid spark formation caused by electrostatic charge. To avoid this, touch the ground support point in the driver's cab.
- ▶ Connect the positive terminal to the battery first, then the negative terminal (ground cable).
- ▶ Check that the terminals are tightly seated (low transfer resistance).
- ▶ Grease the terminals and terminal posts with acid-free and acid-resistant grease (use corrosion protection even for modern maintenance-free batteries).

B195219

1 Fill quantities

Note
- ▶ The crane chassis, the crane superstructure and the equipment must be filled with the respective service fluids according to the data in the separately supplied service list.
- ▶ The specified fill quantities (change quantities) are orientation values. The marks on the dipsticks, inspection ports and sight gauges are decisive for filling.
- ▶ The equipment depends on the crane and may not be on some cranes.

Note

Oil level check on the hydraulic tank!
- ▶ When checking the oil level on the hydraulic tank, all hydraulic cylinders must be completely retracted.

On mobile cranes:
- ▶ The level regulation of the vehicle must be lowered all the way.
- ▶ The oil level must be at 20 °C hydraulic temperature in the center of the sight gauge. At lower hydraulic oil temperature: Warm up the hydraulic oil. At higher hydraulic oil temperature: Cool off the hydraulic oil.

NOTICE

Danger of property damage!
- ▶ Do not mix synthetic oils with mineral oils!

2 Lubrication schedule

Note
- ▶ The crane chassis, the crane superstructure, the boom and the equipment must be lubricated with the respective lubricants according to the separately supplied drawings and parts lists.
- ▶ The equipment depends on the crane and may not be on some cranes.

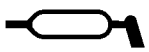

B107729

Note
- ▶ The lube points are marked with this icon.

B195219

1 Specified service items and lubricants for Liebherr cranes

1.1 Service items and lubricants

Note

- To improve the cold start ability of the diesel engine at an ambient temperature below -10 °C, we recommend the use of the following engine oil:
- Viscosity grade SAE 5W-30 according to specification ACEA E6.
- Liebherr Motoroil 5W-30 low ash, **LWE Id. No.: 11100934**!

Line	Usage	Ambient temperature for driving and crane operation	
		-25 °C to +50 °C	**-40 °C to +30 °C**
1	Diesel engine	**LWE Id. No.: 10663796** **Liebherr Motoroil 10W-40 low ash** SAE 10W-40 low ash and ACEA E6 Observe the instructions of the engine manufacturer **Below -20 °C** with pre-heating	**LWE Id. No.: 11100934** **Liebherr Motoroil 5W-30 low ash** SAE 5W-30 low ash and ACEA E6 Observe the instructions of the engine manufacturer **Below -20 °C** with pre-heating
2	Drive axle With differential locks, Planetary gear and Installed distributor gear	**LWE Id. No.: 861901008** **Liebherr Gear Hypoid 90 EP** SAE 90 and API GL 5	**LWE Id. No.: 10425142** **Liebherr Syntogear Plus 75W-90** SAE 75W-90 and API GL 5
3	Axle drive ZF DK-7	**LWE Id. No.: 861901008** **Liebherr Gear Hypoid 90 EP** ZF TE-ML 05	**LWE Id. No.: 10425142** **Liebherr Syntogear Plus 75W-90** ZF TE-ML 05
4.1	Vehicle distributor gear KESSLER VG 1800, VG 2400, VG 2550, VG 2600, VG 3750 W 3750	**LWE Id. No.: 861901008** **Liebherr Gear Hypoid 90 EP** SAE 90 and API GL 5	**LWE Id. No.: 10425142** **Liebherr Syntogear Plus 75W-90** SAE 75W-90 and API GL 5

1.2 Service items and lubricants (continuation)

Line	Usage	Ambient temperature for driving and crane operation	
		-25 °C to +50 °C	**-40 °C to +30 °C**
4.2	Vehicle distributor gear ZF Passau, STEYR PUCH VG 1200, VG 1600, VG 2000, VG 3800	**LWE Id. No.: 861901008** **Liebherr Gear Hypoid 90 EP** ZF TE-ML 19	**LWE Id. No.: 10425142** **Liebherr Syntogear Plus 75W-90** ZF TE-ML 19
5	Offset gear (drop box) ZF Passau, STEYR PUCH	**LWE Id. No.: 861901008** **Liebherr Gear Hypoid 90 EP** ZF TE-ML 19	**LWE Id. No.: 10425142** **Liebherr Syntogear Plus 75W-90** ZF TE-ML 19
6.1	Pump distributor gear Filled with **mineral** gear oil	**LWE Id. No.: 861901008** **Liebherr Gear Hypoid 90 EP** SAE 90 and API GL 5	**LWE Id. No.: 10425142** **Liebherr Syntogear Plus 75W-90** SAE 75W-90 and API GL 5
6.2	Pump distributor gear Filled with **synthetic** gear oil	**LWE Id. No.: 861901208** **Liebherr Gear PG 220** CLP PG 220, DIN 51517-3 **WARNING: May not be mixed with other oils!**	**LWE Id. No.: 10664125** **Liebherr Gear PG 150** CLP PG 150, DIN 51517-3 **WARNING: May not be mixed with other oils!**
6.3	Pump distributor gear LTC 1055-3.1	**LWE Id. No.: 10425142** **Liebherr Syntogear Plus 75W-90** SAE 75W-90 and API GL 5	**LWE Id. No.: 10425142** **Liebherr Syntogear Plus 75W-90** SAE 75W-90 and API GL 5

1.3 Service items and lubricants (continuation)

Line	Usage	Ambient temperature for driving and crane operation	
		-25 °C to +50 °C	-40 °C to +30 °C
7.1	Powershift transmission ZF Torque converter transmission WG 120, WG 150, WG 180, WG 181, WG 200, WG 201	**LWE Id. No.: 8610240** **Liebherr Motoroil 10W-40** ZF TE-ML 03 **Below -20 °C** run until warm according to operating instructions	**LWE Id. No.: 861900608** **Liebherr Hydraulic-Gear ATF** ZF TE-ML 03 **Below -20 °C** run until warm according to operating instructions
7.2	Powershift transmission ZF torque converter WG 251* ZF ERGOPOWER WG 210, WG 260, WG 310 * also for ambient temperatures above -10 °C	**LWE Id. No.: 861900608** **Liebherr Hydraulic-Gear ATF** ZF TE-ML 03 **Below -20 °C** run until warm according to operating instructions	**LWE Id. No.: 861900608** **Liebherr Hydraulic-Gear ATF** ZF TE-ML 03 **Below -20 °C** run until warm according to operating instructions
8	Powershift transmission CLARK	**LWE Id. No.: 8610240** **Liebherr Motoroil 10W-40** SAE 10W-40 and ACEA E4 **Below -20 °C** run until warm according to operating instructions	**LWE Id. No.: 861900608** **Liebherr Hydraulic-Gear ATF** ATF Dexron II D and ALLISON C4 **Below -20 °C** run until warm according to operating instructions
9	Offset gear (drop box) ALLISON	**LWE Id. No.: 8610240** **Liebherr Motoroil 10W-40** SAE 10W-40 and API CF, ACEA E4 **Below -20 °C** run until warm according to operating instructions	**LWE Id. No.: 861900608** **Liebherr Hydraulic-Gear ATF** ATF Dexron II D or ALLISON C4 **Below -20 °C** run until warm according to operating instructions

1.4 Service items and lubricants (continuation)

Line	Usage	Ambient temperature for driving and crane operation	
		-25 °C to +50 °C	-40 °C to +30 °C
10.1	Automatic transmission ALLISON CLBT 740, 750, 754, 755 HT 755, HD 4560	**LWE Id. No.: 861900608** **Liebherr Hydraulic-Gear ATF** ATF Dexron III or ALLISON C4 **Below -20 °C** run until warm according to operating instructions	**LWE Id. No.: 861903708** **CASTROL Transynd** ATF Dexron III or ALLISON C4 **Below -20 °C** run until warm according to operating instructions
10.2	Automatic transmission ZF	**LWE Id. No.: 861900608** **Liebherr Hydraulic-Gear ATF** ZF TE-ML 14 **Below -20 °C** run until warm according to operating instructions	**LWE Id. No.: 861900608** **Liebherr Hydraulic-Gear ATF** ZF TE-ML 14 **Below -20 °C** run until warm according to operating instructions
11	Automatic transmission ZF AS-Tronic ZF TC-Tronic (basic gear) ZF TC-Tronic HD (basic gear)	**LWE Id. No.: 10218305** **ZF-Ecofluid M** ZF TE-ML 02	**LWE Id. No.: 10218305** **ZF-Ecofluid M** ZF TE-ML 02 **below -20 °C** preheat gear according to operating instructions
12.1	Converter clutch unit ZF TC HD	**LWE Id. No.: 10218305** **ZF-Ecofluid M** ZF TE-ML 02	**LWE Id. No.: 10218305** **ZF-Ecofluid M** ZF TE-ML 02 **below -20 °C** preheat gear according to operating instructions
12.2	Converter clutch unit ZF TC 2	**LWE Id. No.: 861900608** **Liebherr Hydraulic-Gear ATF** ZF TE-ML 14	**LWE Id. No.: 861900608** **Liebherr Hydraulic-Gear ATF** ZF TE-ML 14
13	Gearbox ZF ECO-Split	**LWE Id. No.: 10218305** **ZF Ecofluid M** ZF TE-ML 02	**LWE Id. No.: 10218305** **ZF Ecofluid M** ZF TE-ML 02

1.5 Service items and lubricants (continuation)

Line	Usage	Ambient temperature for driving and crane operation	
		-25 °C to +50 °C	-40 °C to +30 °C
14	Slewing gear	**LWE Id. No.: 861901208** **Liebherr Gear PG 220** CLP PG 220, DIN 51517-3 **WARNING: May not be mixed with other oils!**	**LWE Id. No.: 861901208** **Liebherr Gear PG 220** CLP PG 220, DIN 51517-3 **WARNING: May not be mixed with other oils!**
15.1	Rope winch	**LWE Id. No.: 861901208** **Liebherr Gear PG 220** CLP PG 220, DIN 51517-3 **WARNING: May not be mixed with other oils!**	**LWE Id. No.: 861901208** **Liebherr Gear PG 220** CLP PG 220, DIN 51517-3 **WARNING: May not be mixed with other oils!**
15.2	Rope winch LR 13000	**LWE Id. No.: 11000948** **Liebherr Universalfett 9900** KPF2N-25, DIN 51502	
16	Winch of Telescopic boom guying	**LWE Id. No.: 861901208** **Liebherr Gear PG 220** CLP PG 220, DIN 51517-3 **WARNING: May not be mixed with other oils!**	**LWE Id. No.: 861901208** **Liebherr Gear PG 220** CLP PG 220, DIN 51517-3 **WARNING: May not be mixed with other oils!**
17.1	Crane hydraulics Crane chassis and crane superstructure	**LWE Id. No.: 861903508** **Liebherr Hydraulic 37** HVLP, DIN 51524-3	**LWE Id. No.: 10293807** **Liebherr Hydraulic Plus Arctic** HVLPD HC, DIN 51524-3
17.2	Crane hydraulics Crane chassis and crane superstructure LTM 11200-9.1 LTR 11200 LR 13000, LR 1600/2, LR 1600/2-W LTC 1055-3.1	**LWE Id. No.: 10293807** **Liebherr Hydraulic Plus Arctic** HVLPD HC, DIN 51524-3	**LWE Id. No.: 10293807** **Liebherr Hydraulic Plus Arctic** HVLPD HC, DIN 51524-3

1.6 Service items and lubricants (continuation)

Line	Usage	Ambient temperature for driving and crane operation	
		-25 °C to +50 °C	**-40 °C to +30 °C**
18	Brake system if hydraulically actuated	**LWE Id. No.: 861000108** **DOT 4** SAE J 1703e	**LWE Id. No.: 861000108** **DOT 4** SAE J 1703e
19	Clutch actuator	**LWE Id. No.: 861000108** **DOT 4** SAE J 1703e	**LWE Id. No.: 861000108** **DOT 4** SAE J 1703e
20	King pin bearing Drive shaft if **not** maintenance-free	**LWE Id. No.: 861301308** **Liebherr Spezialfett 9610 Plus** KP2K-20, DIN 51502	**LWE Id. No.: 10296825** **Liebherr Universalfett Arctic** KPFHC1N-60, DIN 51502
21	Slide and roller bearing roller bearing joint	**LWE Id. No.: 861301308** **Liebherr Spezialfett 9610 Plus** KP2K-20, DIN 51502	**LWE Id. No.: 10296825** **Liebherr Universalfett Arctic** KPFHC1N-60, DIN 51502
22	Central lubrication system	**LWE Id. No.: 861301308** **Liebherr Spezialfett 9610 Plus** KP2K-20, DIN 51502	**LWE Id. No.: 10296825** **Liebherr Universalfett Arctic** KPFHC1N-60, DIN 51502
23	Boom lock	**LWE Id. No.: 861301308** **Liebherr Spezialfett 9610 Plus** KP2K-20, DIN 51502	**LWE Id. No.: 10296825** **Liebherr Universalfett Arctic** KPFHC1N-60, DIN 51502
24.1	Slewing ring connection Roller bearing	**LWE Id. No.: 861301308** **Liebherr Spezialfett 9610 Plus** KP2K-20, DIN 51502	**LWE Id. No.: 10296825** **Liebherr Universalfett Arctic** KPFHC1N-60, DIN 51502
24.2	Slewing ring connection LR 13000	**LWE Id. No.: 11000948** **Liebherr Universalfett 9900** KPF2N-25, DIN 51502	**LWE Id. No.: 10296825** **Liebherr Universalfett Arctic** KPFHC1N-60, DIN 51502

1.7 Service items and lubricants (continuation)

Line	Usage	Ambient temperature for driving and crane operation	
		-25 °C to +50 °C	-40 °C to +30 °C
25	Support pad with equalization Glide shoes of cab guide on vehicle frame LTC 1045-3.1	**LWE Id. No.: 861303608** **Liebherr Teleskopfett 9613 Plus** KP2K-30, DIN 51502	**LWE Id. No.: 861303608** **Liebherr Teleskopfett 9613 Plus** KP2K-30, DIN 51502
26	Sliding beam Plastic slide bearing Beam for track adjustment	**LWE Id. No.: 861303608** **Liebherr Teleskopfett 9613 Plus** KP2K-30, DIN 51502	**LWE Id. No.: 861303608** **Liebherr Teleskopfett 9613 Plus** KP2K-30, DIN 51502
27.1	Telescopic boom Plastic slide bearing	**LWE Id. No.: 861303608** **Liebherr Teleskopfett 9613 Plus** KP2K-30, DIN 51502	**LWE Id. No.: 861303608** **Liebherr Teleskopfett 9613 Plus** KP2K-30, DIN 51502
27.2	Telescopic boom Outer slide bearing	**LWE Id. No.: 861303308** **Liebherr Spezialfett 1336** KP2K-30, DIN 51502 Spray grease	**LWE Id. No.: 861303308** **Liebherr Spezialfett 1336** KP2K-30, DIN 51502 Spray grease
27.3	Telescopic boom Inner slide bearing (only during assembly)	**LWE Id. No.: 861303308** **Liebherr Spezialfett 1336** KP2K-30, DIN 51502 Spray grease	**LWE Id. No.: 861303308** **Liebherr Spezialfett 1336** KP2K-30, DIN 51502 Spray grease
28	Telescopic boom LTC 1045-3.1	**LWE Id. No.: 11491399** **Bechem Berulub PAL 1**	**LWE Id. No.: 11491399** **Bechem Berulub PAL 1**
29	Guide rail on Telescoping cylinder	**LWE Id. No.: 861303308** **Liebherr Spezialfett 1336** KP2K-30, DIN 51502 Spray grease	**LWE Id. No.: 861303308** **Liebherr Spezialfett 1336** KP2K-30, DIN 51502 Spray grease

1.8 Service items and lubricants (continuation)

Line	Usage	Ambient temperature for driving and crane operation	
		-25 °C to +50 °C	-40 °C to +30 °C
30	Gear ring rotary connection Slewing gear drive pinion	**LWE Id. No.: 861007708** **RHS-Fluid** OGPFOS-20, DIN 51502	**LWE Id. No.: 861007708** **RHS-Fluid** OGPFOS-20, DIN 51502
31	Running rope	**LWE Id. No.: 10173371** **Liebherr WR-Lube SC** Adhesive grease	**LWE Id. No.: 10173371** **Liebherr WR-Lube SC** Adhesive grease
32	Radiator fluid Diesel engine and heating system	**LWE Id. No.: 11001829** **Liebherr Antifreeze Mix** Pre-mixed corrosion inhibitor / antifreeze **WARNING: May not be diluted and / or mixed with other corrosion inhibitors / antifreeze!**	**LWE Id. No.: 11001829** **Liebherr Antifreeze Mix** Pre-mixed corrosion inhibitor / antifreeze **WARNING: May not be diluted and / or mixed with other corrosion inhibitors / antifreeze!**
33.1	Travel gears Crawler crane	see data tag	see data tag
33.2	Travel gear LTR 1060 LTR 1100	**LWE Id. No.: 861901008** **Liebherr Gear Hypoid 90 EP** SAE 90 and API GL 5	**LWE Id. No.: 10425142** **Liebherr Syntogear Plus 75W-90** SAE 75W-90 and API GL 5
33.3	Travel gear LTR 11200	**LWE Id. No.: 861901208** **Liebherr Gear PG 220** CLP PG 220, DIN 51517-3 **WARNING: May not be mixed with other oils!**	**LWE Id. No.: 861901208** **Liebherr Gear PG 220** CLP PG 220, DIN 51517-3 **WARNING: May not be mixed with other oils!**
34	Recovery winch	See data tag and manufacturer's instructions	See data tag and manufacturer's instructions
35	Recovery winch rope	See manufacturer's instructions	See manufacturer's instructions
36	Steering uncoupling LTC 1045-3.1	**LWE Id. No.: 10800345** **Teflon-Spray**	**LWE Id. No.: 10800345** **Teflon-Spray**

blank page!

B197077

1 Procedure to follow in case of a problem

This chapter answers the following questions:
- What to do in case of a problem?
- Which data is important for communication with Liebherr Service?
- Which displays and component groups are relevant for error diagnostics?
- Which measures are to be taken in clear problem cases?
- How to proceed in case of error messages of the LICCON computer system?
- How can an error diagnostics be carried out?
- Which measures are to be taken for defective components?

WARNING
Incorrect operation!
Incorrect operation of the crane can result in death or serious injuries!
▶ The crane may only be operated by authorized expert personnel trained on mobile cranes by Liebherrwerk Ehingen!

WARNING
Measures without the help of Liebherr Service!
Measures in case of a problem, which are carried out without consulting Liebherr Service can cause damage to the crane. Personnel can be severely injured or killed!
▶ If problems remain or in case of error messages, consult Liebherr Service to determine the cause of the problem and further procedure.

Note
Error diagnostics without the help of Liebherr Service!
▶ For information regarding error diagnostics and error remedy, see “Diagnostics manual”.

Note
▶ The monitor illustrations in this section are only examples. The error codes shown in the monitor illustrations and the corresponding error descriptions might not exactly match the crane.

1.1 Procedure to follow in case of a problem

▶ Observe and adhere to the notes and instructions in this chapter.
▶ Before contacting Liebherr Service: Determine relevant data about the problem.
▶ Carry out the error diagnostics with the aid of Liebherr Service or the “Diagnostics manual”.
▶ Follow the instructions given by Liebherr Service.
▶ After error diagnostics: Replace defective components, which are supplied as spare parts.

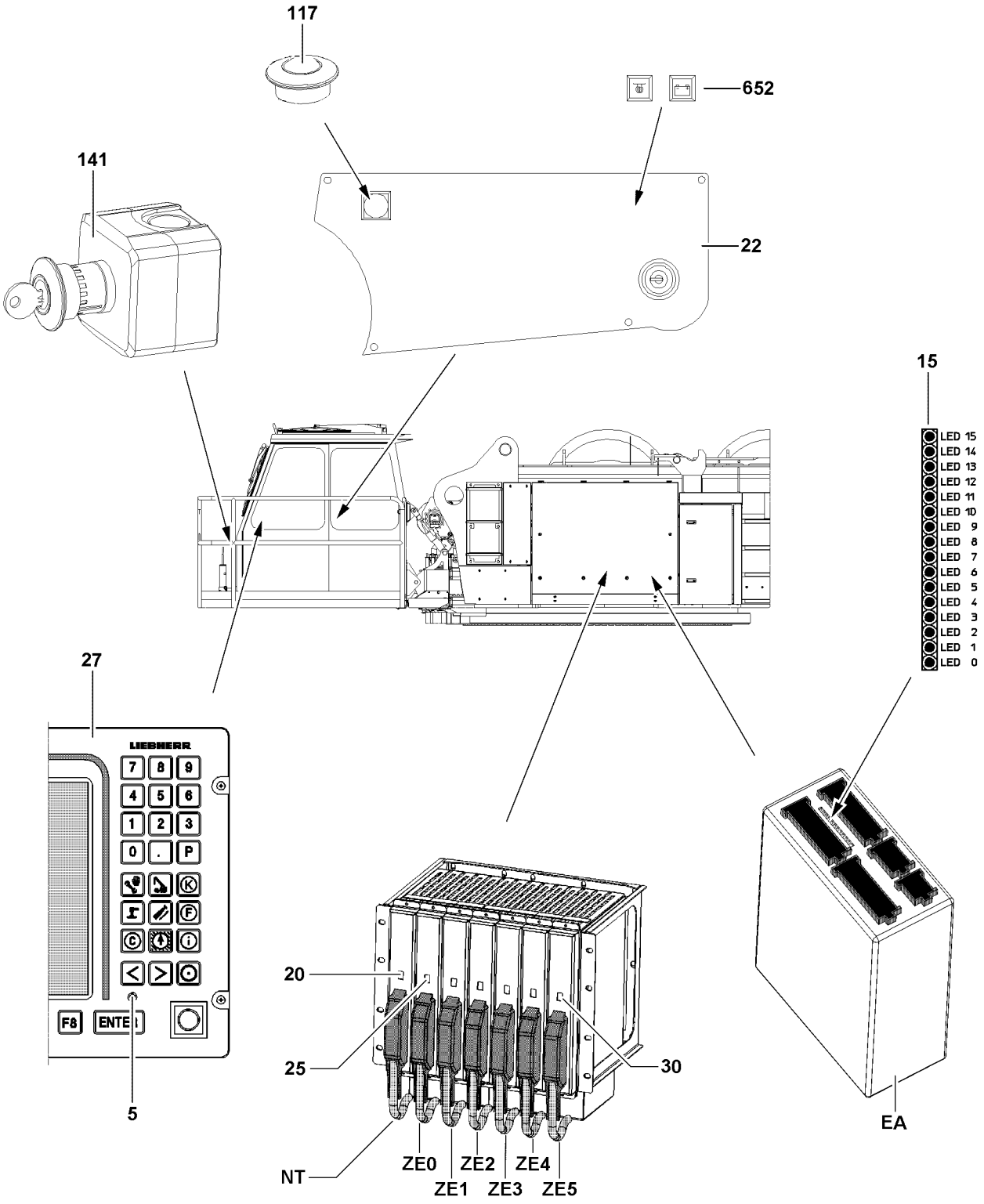
117
652
141
22
15
LED 15
LED 14
LED 13
LED 12
LED 11
LED 10
LED 9
LED 8
LED 7
LED 6
LED 5
LED 4
LED 3
LED 2
LED 1
LED 0
27
LIEBHERR
7 8 9
4 5 6
1 2 3
0 . P
F8
ENTER
5
20
25
30
NT
ZE0
ZE1
ZE2
ZE3
ZE4
ZE5
EA

B108791

1.2 Overview of displays and component groups for error diagnostics

Various displays and component groups allow the crane driver:
- To localize error messages
- To communicate quicker and more precise with Liebherr Service
- With the aid of the “Diagnostics manual”: Diagnostics and remedy errors

Note
Error diagnostics without the help of Liebherr Service!
▶ For information regarding error diagnostics and error remedy, see “Diagnostics manual”.

5	LED	
15	LED display I / O module	
20	LED display power supply	
22	Instrument panel	
27	LICCON monitor	
117	EMERGENCY OFF switch in the crane operator's cab	
141	EMERGENCY OFF switch on the crane operator's cab	
EA	I / O module	
NT	Power supply	
ZE	CPUs	• CPU 0 **ZE0** to CPU 5 **ZE5**
	LED displays CPU	• LED display CPU0 **25** to LED display CPU5 **30**

1.3 Which data is required by Liebherr Service?

If the assistance of Liebherr Service is required, always provide the following information:
- Crane type
- Crane number
- Complete error number and any error message displayed on the LICCON monitor **27**
- For certain errors: LED displays of power supply **NT** and CPUs **ZE**
- Application conditions of the crane
- Action during which the error occurs
- Frequency of error

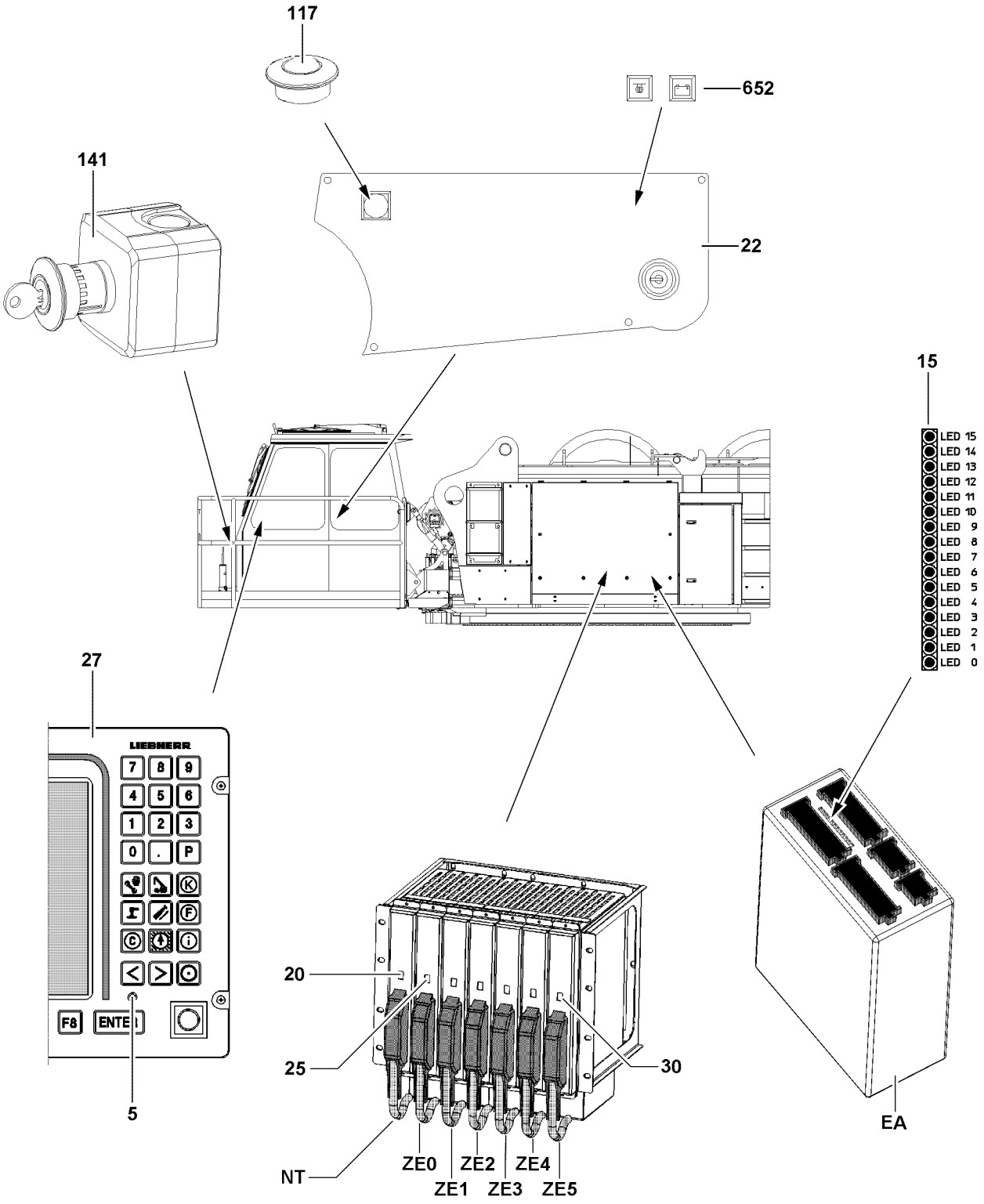
117
652
141
22
15
LED 15
LED 14
LED 13
LED 12
LED 11
LED 10
LED 9
LED 8
LED 7
LED 6
LED 5
LED 4
LED 3
LED 2
LED 1
LED 0
27
LIEBHERR
7 8 9
4 5 6
1 2 3
0 . P
F8
ENTER
5
20
25
30
NT
ZE0
ZE1
ZE2
ZE3
ZE4
ZE5
EA

B108791

2 Measures in clear problem cases

Measures, which are taken in clear problem cases, are described in this section.

Note
- ▶ If a problem occurs, which is not described in this chapter:
- ▶ Contact Liebherr Service to determine the cause of the problem and further procedure.

Clear problem cases are:
- – Engine does not start.
- – Hydraulic, electric or engine failed.
- – An alarm function occurs.
- – LICCON computer system shows an error message.

2.1 The engine does not start?

- ▶ Make sure that the EMERGENCY OFF switch **117** and the EMERGENCY OFF switch **141** are not actuated.
- ▶ Make sure that the crane driver is seated on the crane driver's seat.
- ▶ Turn the ignition off.
- ▶ Start the engine again.
- ▶ If the engine still cannot be started:
  Monitor the indicator lights **652** on the instrument panel **22**.

Note
- ▶ For Problem remedy, see chapter 4.03, section “Starting the engine and turning it off”.

- ▶ If the error cannot be remedied:
  Contact Liebherr Service to determine the cause of the problem and further procedure.

2.2 Have the hydraulic, electric or engine failed?

Note
- ▶ Is the equipment for hydraulic emergency control part of the scope of delivery, the crane can be taken down when the crane hydraulic, crane electric and crane engine failed.
- ▶ For emergency control, see chapter 6.05.

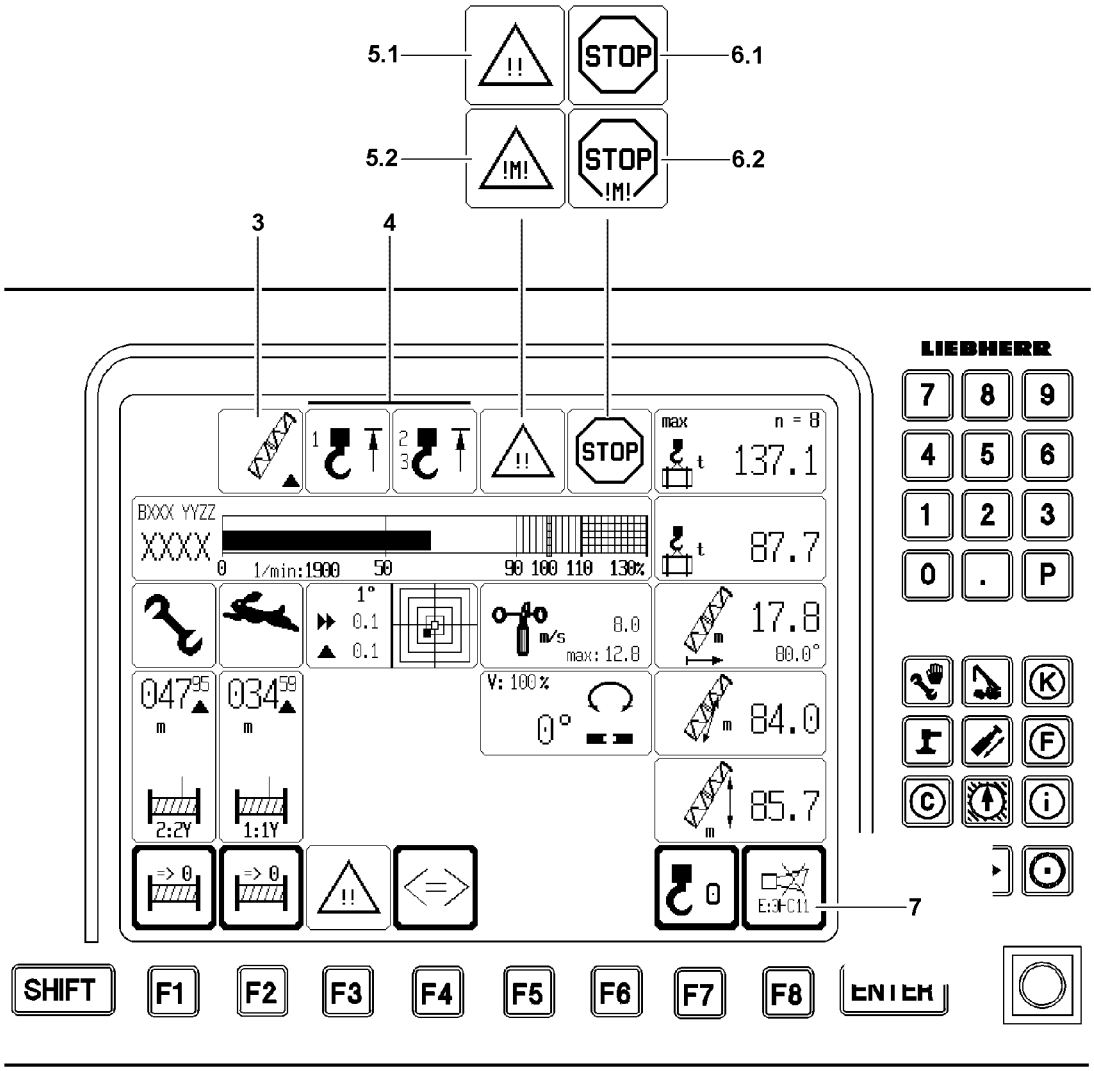
5.1
5.2
6.1
6.2
3
4
STOP
!!
!M!
LIEBHERR
max
n = 8
137.1
87.7
17.8
84.0
85.7
7
SHIFT
F1
F2
F3
F4
F5
F6
F7
F8
ENTER

B109972

2.3 Did an alarm function occur?

Note

- ▶ For a detailed description of alarm functions, see chapter 4.02.
- ▶ In case of an alarm function, an error message **7** with LICCON error code appears at the same time.

The following alarm functions are indicated by blinking icons on the LICCON monitor 0:

- Boom limitation **3**
- Hoist top limit switch **4**
- Advance warning load **5.1** / Advance warning engine **5.2**
- Stop load **6.1** / Stop engine **6.2**

The limit ranges of the crane movements are monitored by:

- Hoist limit switch
- Angle sensors
- Pressure sensors
- Pull test brackets (force measuring boxes)
- Wind sensor
- Inductive sensors

If the limit ranges for these sensors are exceeded, the crane movements are turned off (LMB-STOP). The load moment limiter (LMB) is a program of the LICCON computer system to monitor the permissible load moment. If the permissible load moments of the load chart are exceeded, the LMB-STOP turns the crane movements off.

Note

- ▶ In case of certain shut offs, you can only continue to work by bypassing the safety devices.

WARNING

Risk of accident!

Personnel can be severely injured or killed!

- ▶ All instructions and data in chapter 4.04 must be observed and adhered to!

DANGER

Bypassing the overload protection!

If the overload protection is bypassed, there is no further protection against crane overload!

In the event of deliberate improper use, the crane could collapse, the boom can break off or the crane can topple over!

Personnel can be severely injured or killed!

This could result in high property damage!

- ▶ It is only permitted to bypass the overload safety device during assembly or in emergencies!
- ▶ The bypass may only be carried out by persons who are aware of the effects of their acts regarding the bypass of the overload protection!
- ▶ Bypassing the overload protection requires the presence of the crane supervisor and must be performed with utmost caution!
- ▶ Crane operation with bypassed overload safety device is prohibited!
- ▶ Contact Liebherr Service to determine the cause of the problem and further procedure.

- ▶ If a LMB-STOP occurs due to boom limitation:
  Carry out load moment reducing crane movements.

1

LIEBHERR
LICCON
LIEBHERR
COMPUTED
CONTROLLING
=> DATA LINE CHECK PASSED -- O.K. !!
SYSTEM CHECK .....FAILED !!
ERROR 02 : INCORRECT MODUL-CHECKSUM -> E 0: B=000 ADR=4000H CH=FFH
1
LIEBHERR
7 8 9
4 5 6
1 2 3
0 . P
SHIFT F1 F2 F3 F4 F5 F6 F7 F8 ENTER

2

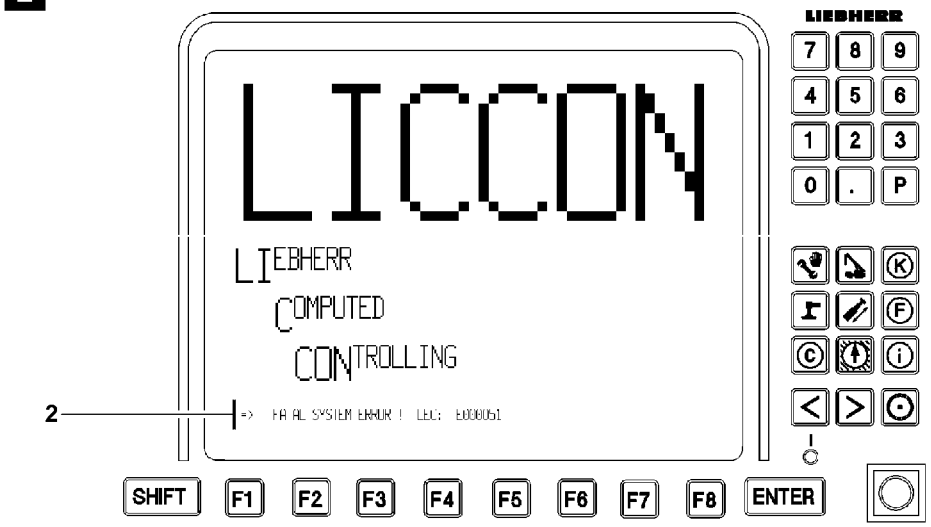
LIEBHERR
LICCON
LIEBHERR
COMPUTED
CONTROLLING
=> FATAL SYSTEM ERROR ! LEC: E0000b1
2
LIEBHERR
7 8 9
4 5 6
1 2 3
0 . P
SHIFT F1 F2 F3 F4 F5 F6 F7 F8 ENTER

3

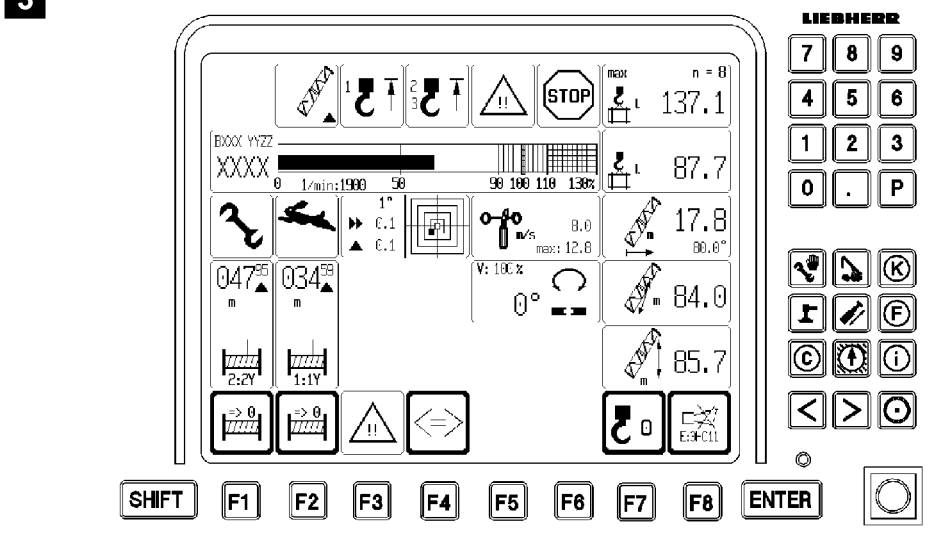
LIEBHERR
STOP
n = 8
137.1
87.7
17.8
84.0
85.7
XXXX
047
034
LIEBHERR
7 8 9
4 5 6
1 2 3
0 . P
SHIFT F1 F2 F3 F4 F5 F6 F7 F8 ENTER

B109973

2.4 LICCON computer system shows an error message?

WARNING
Risk of accident!
Personnel can be severely injured or killed!
The crane can be severely damaged or destroyed!
▶ All instructions and data in chapter 4.04 must be observed and adhered to!

Examples of error messages:
– While the LICCON computer system starts up, see error display illustration **1**, example **1**.
– During operation, see error display illustration **2**, example **2**.
– During operation, see operating screen illustration **3**, example **3**.

Differentiation of error messages on the LICCON monitor:
– Error without LICCON Error Code (LEC), see example **1**.
– Error with LICCON Error Code (LEC), see example **2** and example **3**.

Differentiation of errors in crane operation:
– Errors which lead to shut down: The shut down icon is shown.
– Errors which do not lead to shut down: The crane operator is warned.

2.4.1 Remedying temporary errors during system start

Note
▶ While the LICCON computer system starts, temporary errors can occur, see illustration **1**.

Errors, which occur temporarily, can have the following causes:
– Loosen contact
– Fluctuations in the power supply
– Error message can be a subsequent error

▶ Turn the LICCON computer system off and restart it after waiting for at least 5 s.
▶ Repeat this procedure up to three times (wait 2 min after 3 start attempts).
▶ If the same error view appears several times:
Turn the LICCON computer system off.
▶ Call up the test system, see section “Calling up the test system program”.
▶ Contact Liebherr Service to determine the cause of the problem and further procedure.

1

LICCON
LIEBHERR
COMPUTED
CONTROLLING
=> DATA LINE CHECK PASSED -- O.K. !!
SYSTEM CHECK .....FAILED !!
ERROR 02 : INCORRECT MODUL-CHECKSUM -> E 0: B=000 ADR=4000H CH=FFH
1
LIEBHERR
7 8 9
4 5 6
1 2 3
0 . P
SHIFT F1 F2 F3 F4 F5 F6 F7 F8 ENTER

2

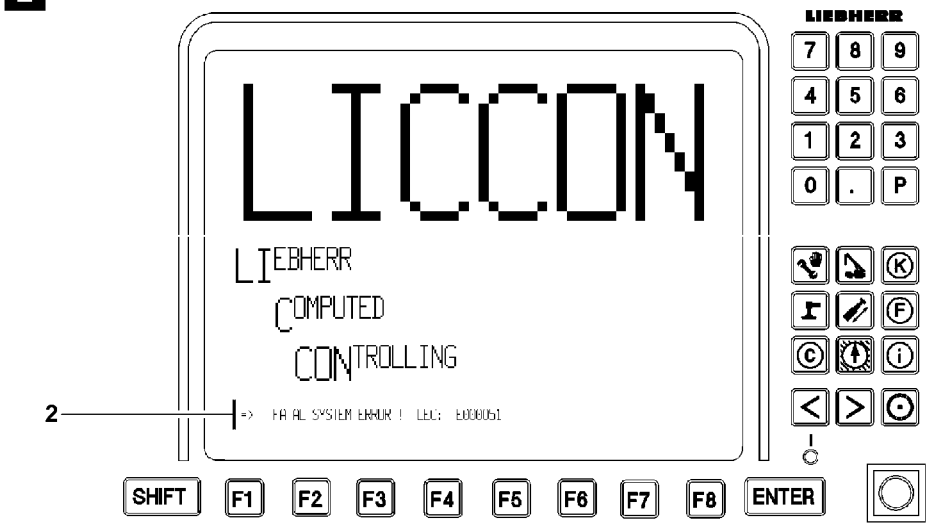
LICCON
LIEBHERR
COMPUTED
CONTROLLING
=> FATAL SYSTEM ERROR ! EEC: E0000b1
2
LIEBHERR
7 8 9
4 5 6
1 2 3
0 . P
SHIFT F1 F2 F3 F4 F5 F6 F7 F8 ENTER

3

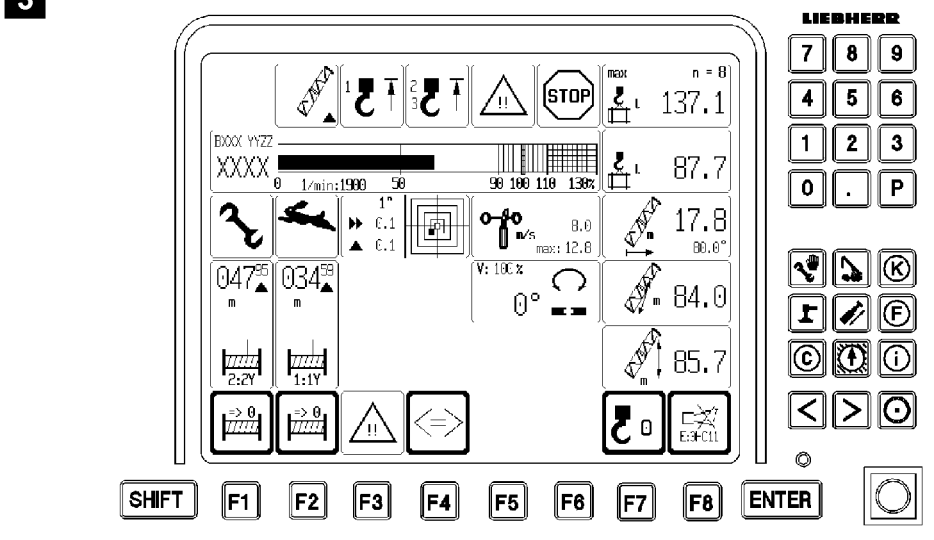
STOP
n = 0
137.1
87.7
17.8
84.0
85.7
LIEBHERR
7 8 9
4 5 6
1 2 3
0 . P
SHIFT F1 F2 F3 F4 F5 F6 F7 F8 ENTER

B109973

2.4.2 Procedure in case of error messages with LEC

Two different types of errors are differentiated with the LEC:

– Operating errors - Error code starts with a “B”.
– System errors / application errors - Error code starts with an “E”.

A LEC is always 6-digit.

Example of an error code: E:OHC11	
Element	**Description**
E:	Error class
0	CPU
HC11	I / O module and number, or processor of CPU

▶ If an error code starts with a “B”:
Correct the operating error.
▶ If an error code starts with an “E”:
Call up the test system, see section “Calling up the test system program”.
▶ Contact Liebherr Service to determine the cause of the problem and further procedure.

4

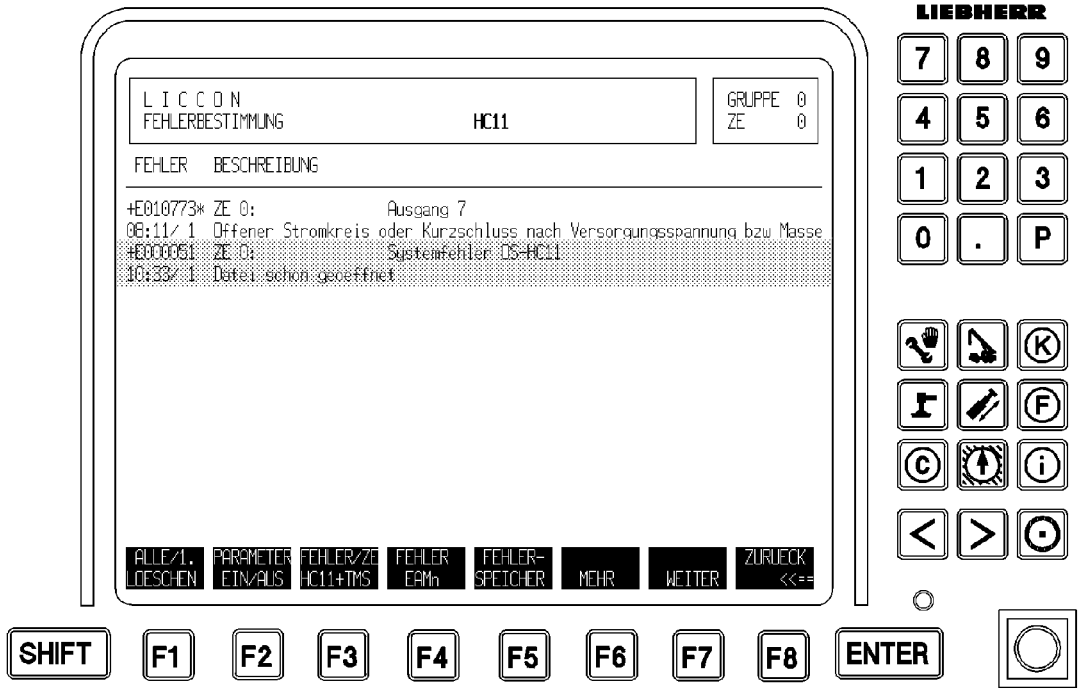
LIEBHERR
L I C C O N
FEHLERBESTIMMUNG
HC11
GRUPPE 0
ZE 0
FEHLER BESCHREIBUNG
+E010773* ZE 0: Ausgang 7
08:11/ 1 Offener Stromkreis oder Kurzschluss nach Versorgungsspannung bzw Masse
+E000051 ZE 0: Systemfehler DS-HC11
10:33/ 1 Datei schon geoeffnet
ALLE/1. LOESCHEN
PARAMETER EIN/AUS
FEHLER/ZE HC11+TMS
FEHLER EAMn
FEHLER-SPEICHER
MEHR
WEITER
ZURUECK <<==
7 8 9
4 5 6
1 2 3
0 . P
K
F
C
i
SHIFT
F1
F2
F3
F4
F5
F6
F7
F8
ENTER

B106381

2.4.3 Calling up the “Test system” program

Error messages of the LICCON computer systems with LEC are described in the error determination screen, illustration **4**. To do so, change into the test system program.
Listed errors in the error determination screen are differentiated by:
– Active errors - Error code starts with a “+” .
– Inactive errors - Error code starts with a “-” .

Note
▶ Active errors have higher priority than inactive errors and must be taken care of.

Calling up the “Test system” from the operating screen

Make sure that the following prerequisites are met:
– Error message visible in the icon element “Horn”, see illustration **3**.
– Warning signal “Horn” is audible.

▶ Press function key **F8** once.

Result:
– Horn is turned off.

▶ Press function key **F8** twice.

Result:
– Change into the error determination screen.
– Listing of errors with LEC and error text.

Calling up the “Test system” after an error screen

Make sure that the following prerequisites are met:
– The operating screen changes into the error screen (system error), see illustration **2**.
– Crane functions are interrupted.

or:
– Error screen, while the LICCON computer system starts up, see illustration **3**.

▶ Turn the LICCON computer system off.
▶ Turn the LICCON computer system back on after approx. 5 s.

Result:
– Change into the error determination screen.
– Listing of errors with LEC and error text.

1

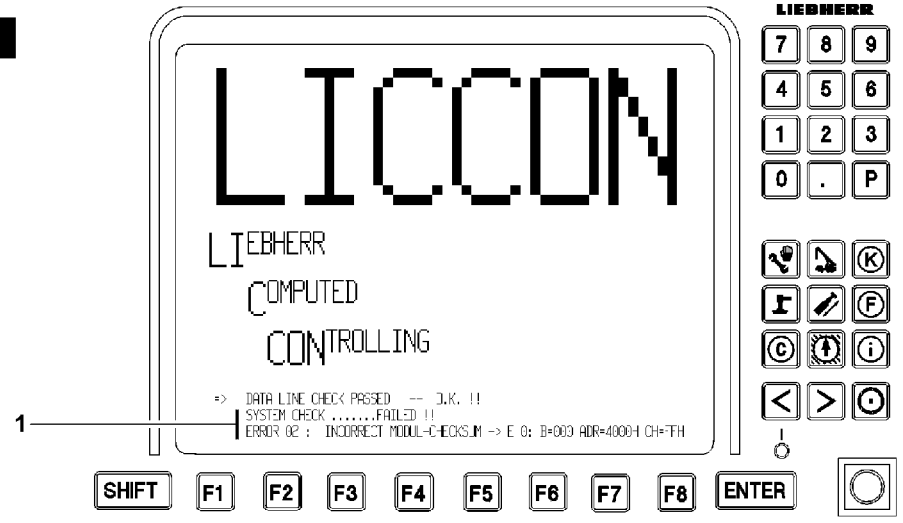
LIEBHERR
LICCON
LIEBHERR
COMPUTED
CONTROLLING
=> DATA LINE CHECK PASSED -- O.K. !!
SYSTEM CHECK .....FAILED !!
ERROR 02 : INCORRECT MODUL-CHECKSUM -> E 0: B=000 ADR=4000H CH=FFH
1
SHIFT F1 F2 F3 F4 F5 F6 F7 F8 ENTER

2

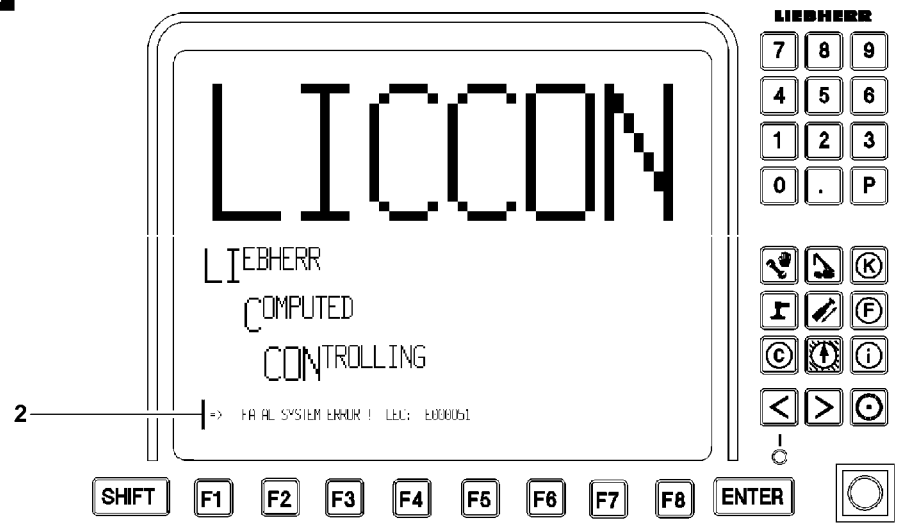
LIEBHERR
LICCON
LIEBHERR
COMPUTED
CONTROLLING
=> FATAL SYSTEM ERROR ! LEC: E0080b1
2
SHIFT F1 F2 F3 F4 F5 F6 F7 F8 ENTER

3

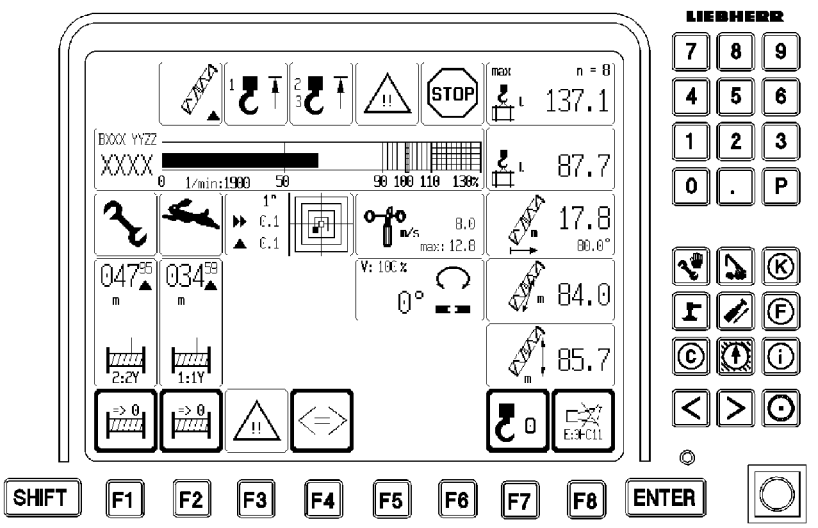
LIEBHERR
STOP
n = 0
137.1
87.7
17.8
84.0
85.7
SHIFT F1 F2 F3 F4 F5 F6 F7 F8 ENTER

B109973

3 Carrying out an error diagnostics

Several possibilities exist for an error diagnostics:
– With the help of Liebherr Service.
– With the help of Liebherr Service via remote diagnostics.
– Without the help of Liebherr Service.

3.1 Error diagnostics with the help of Liebherr Service

3.1.1 Error diagnostics by phone

▶ Contact Liebherr Service to determine the cause of the problem and further procedure.
▶ Follow the instructions given by Liebherr Service.

3.1.2 Remote diagnostics

The remote diagnostics makes it possible for Liebherr Service to check Liebherr cranes from a remote location in case of problems.

Activation of the remote diagnostics device is first carried out by Liebherr Service.
Make sure that the following prerequisites are met:
– The crane operator has a valid SIM-card (telephone card for mobile telephones) from a current mobile network operator.
– The telephone number of the data service is known.
– The PIN code request of the SIM-card is deactivated.
– The SIM-card is installed in the GSM module.
– For information for remote diagnostics, see “Diagnostics manual”.
– Follow the instructions given by Liebherr Service.

Note
▶ For information for remote diagnostics, see “Diagnostics manual”.

▶ Follow the instructions given by Liebherr Service.

3.2 Error diagnostics without the help of Liebherr Service

WARNING
Measures without the help of Liebherr Service!
Measures in case of a problem, which are carried out without consulting Liebherr Service can cause damage to the crane. Personnel can be severely injured or killed!
▶ If problems remain or in case of error messages, consult Liebherr Service to determine the cause of the problem and further procedure.

Note
Error diagnostics without the help of Liebherr Service!
▶ For information regarding error diagnostics and error remedy, see “Diagnostics manual”.

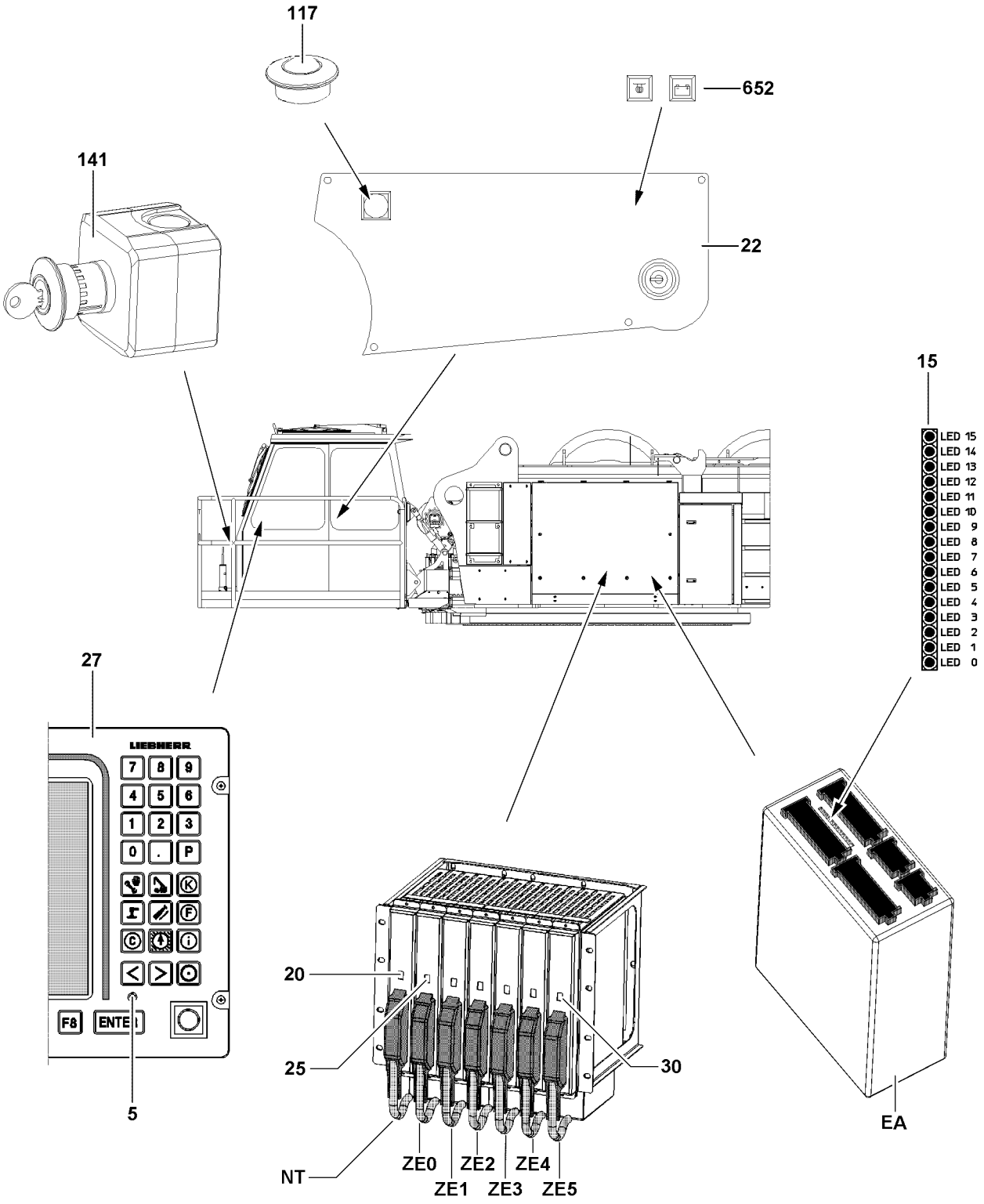
117
652
141
22
15
LED 15
LED 14
LED 13
LED 12
LED 11
LED 10
LED 9
LED 8
LED 7
LED 6
LED 5
LED 4
LED 3
LED 2
LED 1
LED 0
27
LIEBHERR
7 8 9
4 5 6
1 2 3
0 . P
F8
ENTER
5
20
25
30
NT
ZE0
ZE1
ZE2
ZE3
ZE4
ZE5
EA

B108791

4 Measures for defective components

The following components are part of the scope of delivery as spare parts:
– LICCON monitor **27**
– Power supply **NT**
– CPU **ZE**

WARNING
Danger to life if original attachment parts are **not** used!
If the crane is operated with attachment parts, which are **not** original, then the crane can fail and cause fatal accidents!
Crane components can be damaged!
▶ Operate the crane only with original attachment parts!
▶ Crane operation with attachment parts, which do **not** belong to the crane is prohibited!

DANGER
The crane permit and the manufacturer's warranty will become void!
If any original installed parts are modified, manipulated or replaced (e.g. removal of parts, installation of non-original Liebherr parts), both the crane permit and the manufacturer's warranty will become void.
▶ Leave installed original parts unchanged!
▶ Do not remove installed original parts!
▶ Use only Original Liebherr spare parts!

Note
▶ For instructions describing the replacement of a defective LICCON monitor, a defective power supply **NT** or a defective CPU **ZE**, see “Diagnostics” manual.

Make sure that the following prerequisites are met:
– Error diagnostics has been carried out.
– Defective component has been determined.

4.1 Is the LICCON monitor defective?

▶ Replace LICCON monitor with a functioning substitute monitor.

4.2 Is the power supply defective?

Note
▶ When replacing the power supply unit **NT**, transfer the Common memory of the removed power supply **NT**.
▶ A spare power supply unit is located in the switch cabinet crane control.
▶ The power must be turned off when replacing the power supply **NT**. When pulling out the power supply unit plug from the socket, the stand-by power supply of the module will be interrupted. In other words, a cold start results. The stored set-up state data and the adjusting events will be lost.

▶ Replace the power supply **NT** with a functioning power supply.

4.3 Is the CPU defective?

Note

- When replacing the central processing unit **ZE**, transfer the program memory of the removed central processing unit **ZE**.
- A spare central processing unit is located in the switch cabinet crane control.
- The power must be turned off when replacing the central processing unit **ZE**. When pulling out the central processing unit **ZE** from the module carrier, the stand-by power supply of the module will be interrupted. In other words, a cold start results. The stored set-up state data and the adjusting events will be lost.

- Replace the CPU **ZE** with a functioning spare CPU.

4.4 Is the electrical connection of a cable drum interrupted?

WARNING

Interrupted electrical connection!

If the electrical connection of a cable drum is interrupted, then this causes a shut off (LMB STOP). No further crane movements are possible.

- Contact Liebherr Service to determine further procedure.

4.5 Is a sensor or limit switch defective?

Certain crane functions are monitored with two sets of sensors and limit switches.

Note

- For double version: If only one of the two limit switches or sensor defective, then work can continue with the crane.

- Replace the defective limit switch or sensor.

Note

- For single version: If a limit switch or sensor is defective, then this causes a shut off (LMB STOP).
- For double version: If both limit switches or sensors are defective, then this causes a shut off (LMB STOP).

WARNING

Bypassing the overload protection!

If the overload protection is bypassed, there is no further protection against crane overload!

In the event of deliberate improper use, the crane could collapse, the boom can break off or the crane can topple over!

Personnel can be severely injured or killed!

This could result in high property damage!

- It is only permitted to bypass the overload protection for assembly or in emergencies!
- The bypass may only be carried out by persons who are aware of the effects of their acts regarding the bypass of the overload protection!
- Bypassing the overload protection requires the presence of the crane supervisor and must be performed with utmost caution!
- Missing values must be monitored manually and must match the load chart.
- Crane operation with bypassed overload safety device is prohibited!
- Contact Liebherr Service to determine the cause of the problem and further procedure.
- All instructions and data in chapter 4.04 must be observed and adhered to!

- Contact Liebherr Service to determine further procedure.

8 Inspections of cranes

B195219

1 General

This crane was tested at the manufacturer's facilities prior to shipment in accordance with the valid ISO, FEM and DIN Standards and BGV D6 (BGG 905).
The safety level achieved during initial commissioning may not be attainable during operation.
Examples of the root cause of such deviations include; e.g., wear and tear, corrosion, effects of external forces, changes in the environment and changes to the mode of operation.
The operator is responsible for taking the necessary steps to ensure that the level of safety is maintained.
The crane operator is therefore obligated to have the crane inspected by an **expert**, at intervals depending on the operational conditions but at least once per year, from the first day of vehicle registration.
The crane must be inspected by an **authorized inspector** every four years after it has been licensed.
The crane must be annually inspected by an **authorized inspector** after its twelfth year of operation.
To ensure the high safety standard of the crane, we recommend - no later than the 12th year, in the 20th year, in the 26th year and then every 4 years - to have the crane undergo a general inspection by an **authorized inspector**. At that time, in addition to the usual scope of inspection, all load carrying parts of the crane - the complete steel structure with all welding seams as well as all components and connecting devices - are to be subjected to a complete visual inspection. The following procedural notes for repeat inspections are to be observed for that.

WARNING
There is a risk of weakening the supporting components when major changes or repairs are made to the crane!
▶ In this case, the operator must have the crane reinspected by an authorized inspector before placing it back into service!

In addition, all respective local and national regulations also apply.
Expert: Is a person whose technical training and experience means that he has adequate knowledge in the field of inspecting technical equipment. They must be familiar with regulations on safety at work, as well as guidelines and standards that allow them to assess the safe condition of technical equipment (e.g. cranes). Potential experts are workshop staff and customer service engineers.

Note
▶ Experts are not authorized inspectors!

Authorized inspector: Is a person whose technical training and experience means that he has explicit knowledge in the field of inspecting technical equipment. They must be familiar with regulations on safety at work, as well as guidelines and standards that allow them to assess the safe condition of technical equipment (e.g. cranes). They are responsible for testing technical equipment and giving an expert opinion. Authorized inspectors can be active engineers.

Note
▶ Authorized inspectors are legally recognized experts who have received special training!

Periodic inspection are principally a visual inspection, where the inspector (either type) appraises the condition of the crane and its components.
The purpose of the inspections is to avoid accidents by detecting deficiencies early on. Any deficiencies determined by the inspector must be documented, corrected, and subsequently reinspected.
A number of important examples of items that are particularly important during the periodic crane inspections are listed in the following. We wish to advise that the authorized inspectors / experts take sole responsibility for the crane inspections that they carry out.

Note

- The inspection may not be solely limited to the following positions shown in the sample construction illustrations. Rather the **entire** crane structure must be subjected to a careful inspection!

A checklist for periodic inspections recommended for Liebherr mobile and crawler cranes is included in the appendix to assist the inspectors.
If the inspector has any questions they should be directed through our Service Department to Liebherr-Werk Ehingen GmbH's technical departments.

WARNING
Danger of accident!

- Adhere to the following inspection guidelines and intervals.

2 Inspection of carrying crane structures, especially steel structures

DANGER
Danger of fatal injury!
The crane structures, particularly steel constructions have to be checked by an expert or authorized inspector at least once a year. If this is not the case, they could fail and cause fatal injury or seriously damage the crane!

- Crane structures, particularly steel structures must be checked by an expert or an authorized inspector at least once a year!
- Shorten the inspection intervals when the crane is subjected to above-average load spectrums, for example when handling large material quantities or frequently erecting long boom systems.
- When the crane was subjected to excessive operating loads; e.g., due to an unusual impact, the crane structure, especially the steel structures must be inspected immediately!

Crane structures, especially steel structures, such as booms, turntables, chassis, support equipment (e.g., sliding beams or folding outriggers) must be carefully inspected, at the very least during the annual recommended crane inspections. Inspect welding seams especially through an intensive visual inspection.
If paint damage with corrosion (rust) is found on load carrying parts of the crane structure, especially on telescopic booms, lattice booms, lattice jibs, pull rods etc., then the rust must be removed, primed and painted.
During an electrolyte process, such as corrosion in combination with water, an atomic hydrogen is created, which causes to hydrogen induced corrosion with resulting cracks on high tensile fine grain construction steel.
If disassembly and assembly work on the crane is required to carry out the inspections, then they must be carried out by taking the manufacturer's data into account or in coordination with the crane manufacturer.
We would like to point out that the framework of mobile cranes is designed for a limited number of stress work cycles. This also determines the utilization or service life of the framework. The service life is not determined solely by the number of stress cycles. It also depends on the loads (load spectrum) applied during the time in operation.
Liebherr mobile and crawler cranes are designed for specific characteristics and movements, such as constant deployment of drive forces, only occasional operation and load conditions according to EN 13000:2010.
Liebherr mobile and crawler cranes are designed for assembly operation and - according to EN 13000:2010, chapter 4.1.2.1 - they can only take on a limited number of work cycles (N = 32000) when grouping them into collective class Q_1 = light (k_p = 0.125).
Example of a load collective according to grouping in collective class Q_1 = light (k_p = 0.125).

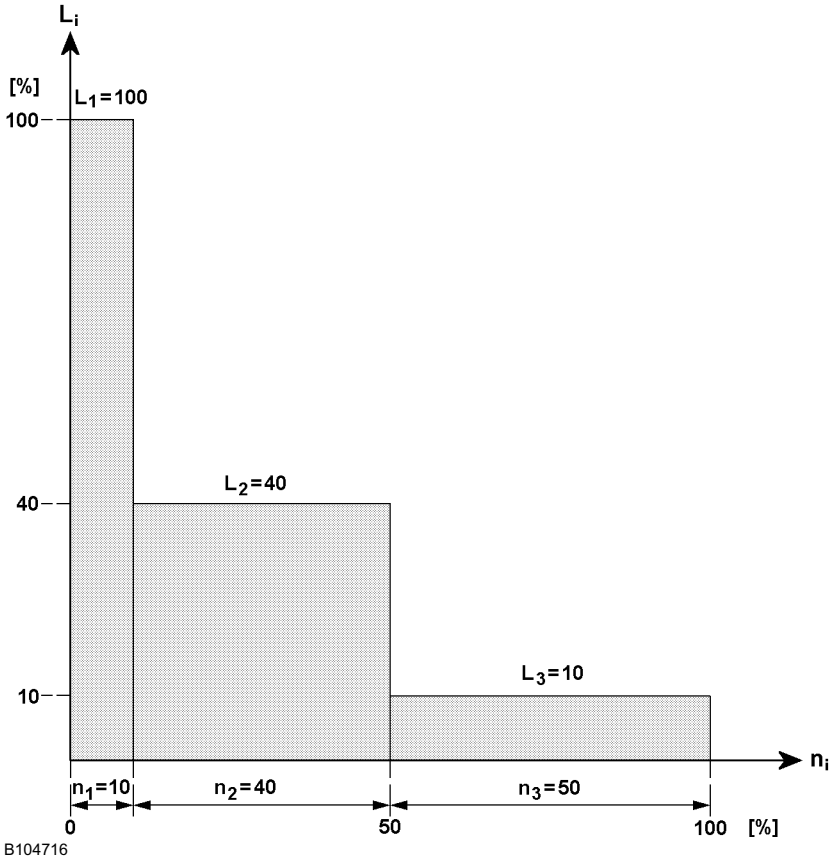

L_i: Load proportion in relation to maximum load [%]
n_i: Load cycles in relation to maximum number [%]

Note

- The service life of Liebherr mobile and crawler cranes can be drastically reduced, for example when used in magnet, grapple or material handling applications!
- Repeated inspection of crane structure, especially the steel structure and the welding seams must then be carried out in shorter intervals than specified.

For that reason, the steel structures and the welding joints must be subjected to an visual intensive inspection by the expert during the specified periodic inspections.

If any damage (such as cracks or suspicion of cracks) are apparent on any part of the steel structure, the total extent of the damage must be determined by qualified specialists using appropriate material testing methods, such as magnetic crack detection, ultrasound or x-rays. Thereafter, the qualified personnel must determine whether or not the damaged area can be repaired by welding or by other means.

The following basic sketches are samples of the load-bearing welding structures. The welding joints or seams or steel structural zones that require inspection may be present more than once and in various forms. The joints or zones must be inspected all around at the locations identified by arrows.

Note

- The scope and extent of all inspections remain the sole responsibility of the inspectors!
- The scope and results of tests should be documented to permit reproducibility. This documentation forms part of the crane records and should be safely stored during the entire service life of the crane!
- The following basic sketches are provided to assist the inspector. The diagrams are only examples and are not necessarily 100 % complete!

2.1 Repair welds

If defects such as cracks or permanent deformation are detected on load-bearing steel components, they should be immediately reported to the Service Department at **Liebherr-Werk Ehingen GmbH** (hereinafter called LWE).
Furthermore, the defect must immediately be appraised by an authorized inspector in accordance with standard welding technology rules. The inspector must immediately ascertain whether or not the crane can continue to be safely operated until the time of the repair.
The following items apply to the repair weld:

– Repair welds may only be carried out by **LWE** personnel or third party personnel contracted by **LWE**, with appropriate welding qualifications according to EN 287-1 for the subject material and welding method!
– The repair weld must be carried out in accordance with the latest revision of **LWE's** internal welding guideline ISR B 010!
– The repaired structural component must subsequently be subjected to a load test.
  The required test loads and boom configurations are to be determined by **LWE** Service!
  Successful test results are to be documented in the crane inspection log!
– We also refer to observing the accident prevention regulations “Principles for testing cranes by authorized inspectors or experts in accordance with UVV **Cranes** BGV D6 and BGG 905”!

WARNING
Danger of accidents in case of defective repair welds!
Due to defective repair welds, severe personnel and property damage can result!
▶ Observe and adhere to the instructions and welding regulations!

Note
Exclusion of liability!
For repair welds, which are not made by **LWE** personnel or by personnel authorized by **LWE**, Liebherr-Werk Ehingen GmbH excludes liability for the system functionality as well as for the parts!
▶ Have repair welds only made by **LWE** personnel or by personnel authorized by **LWE**!

blank page!

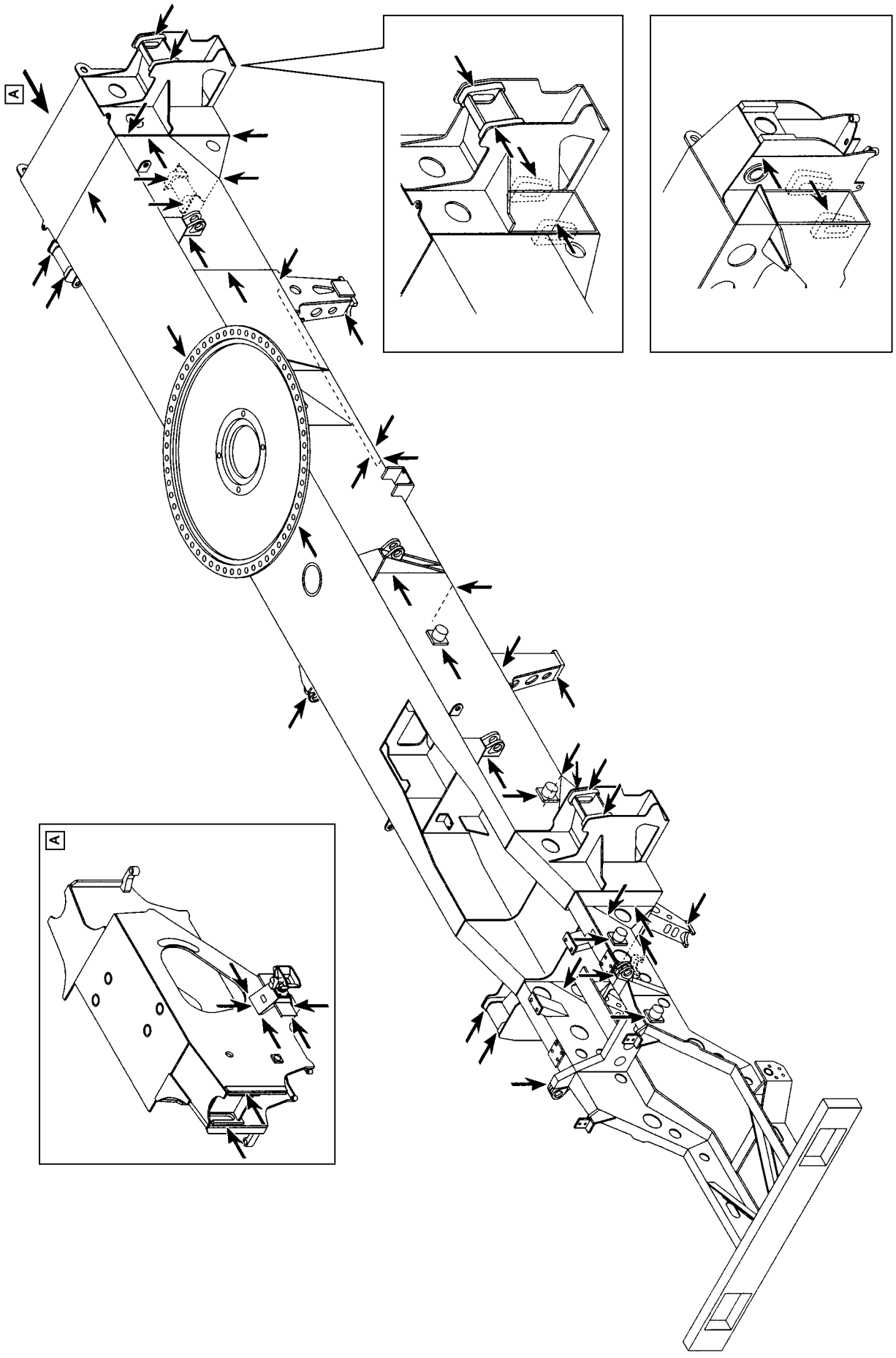

B185046

Example for vehicle frames

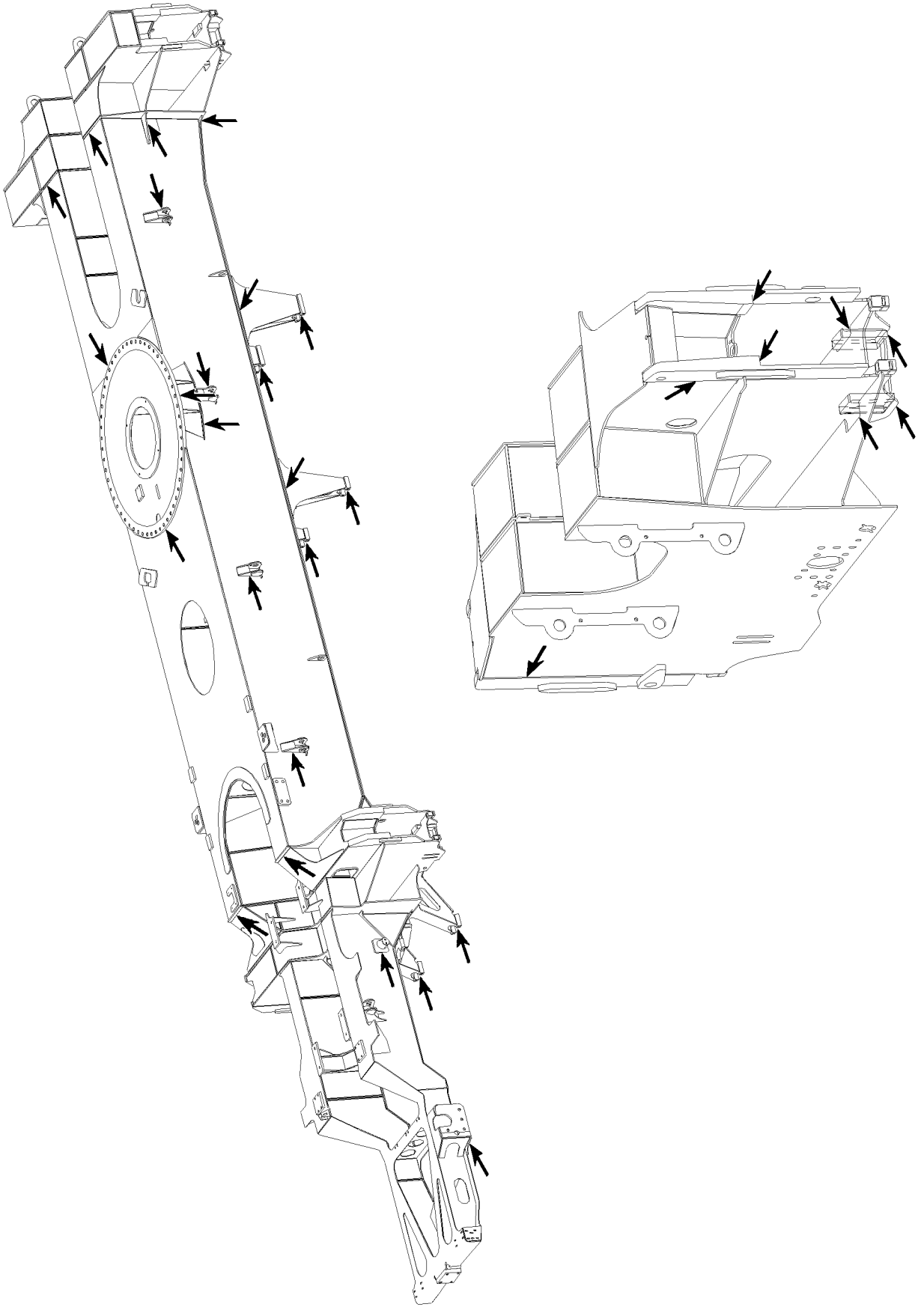

B105702

Example for vehicle frames

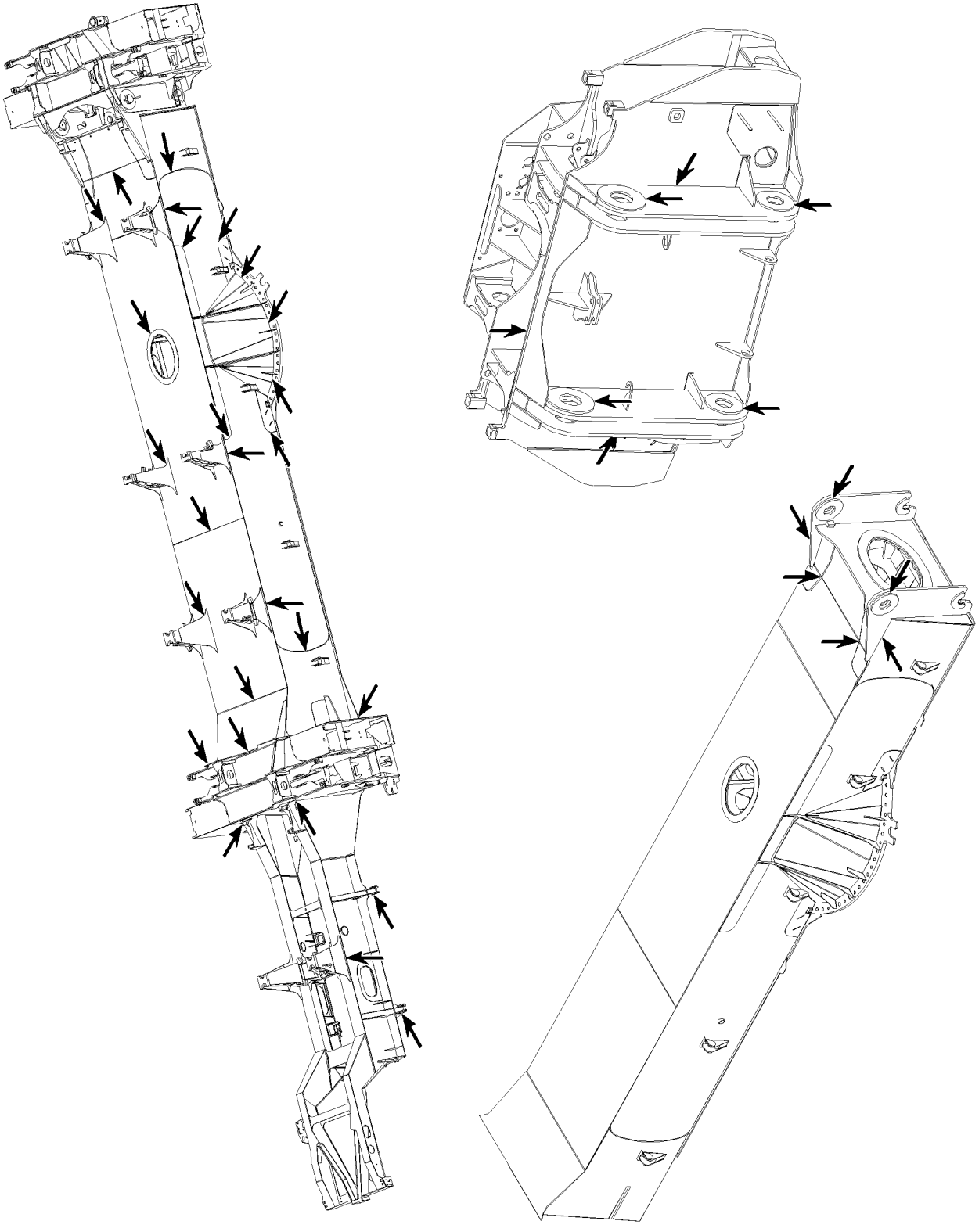

B105719 *Example for vehicle frames*

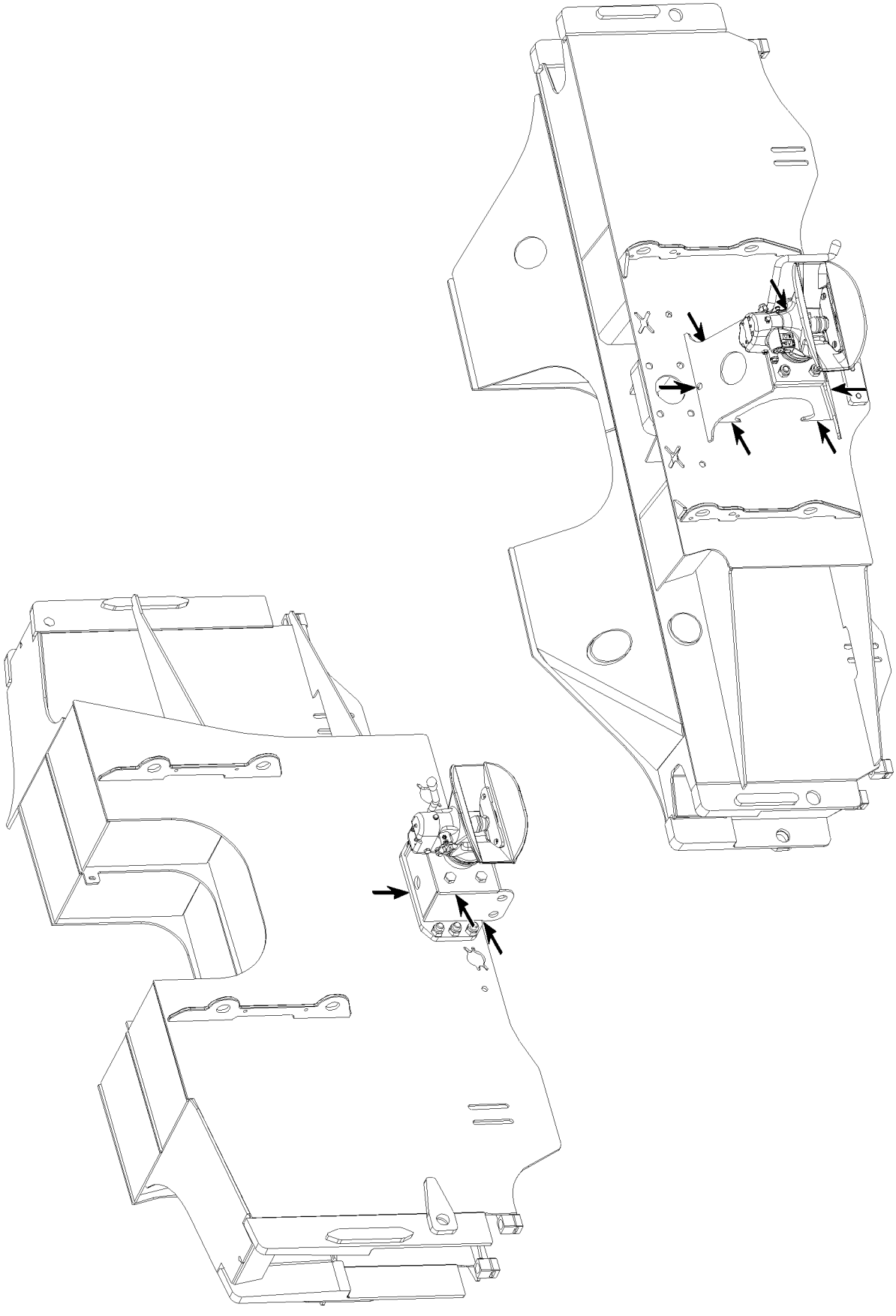

B105687

Example for tow coupling

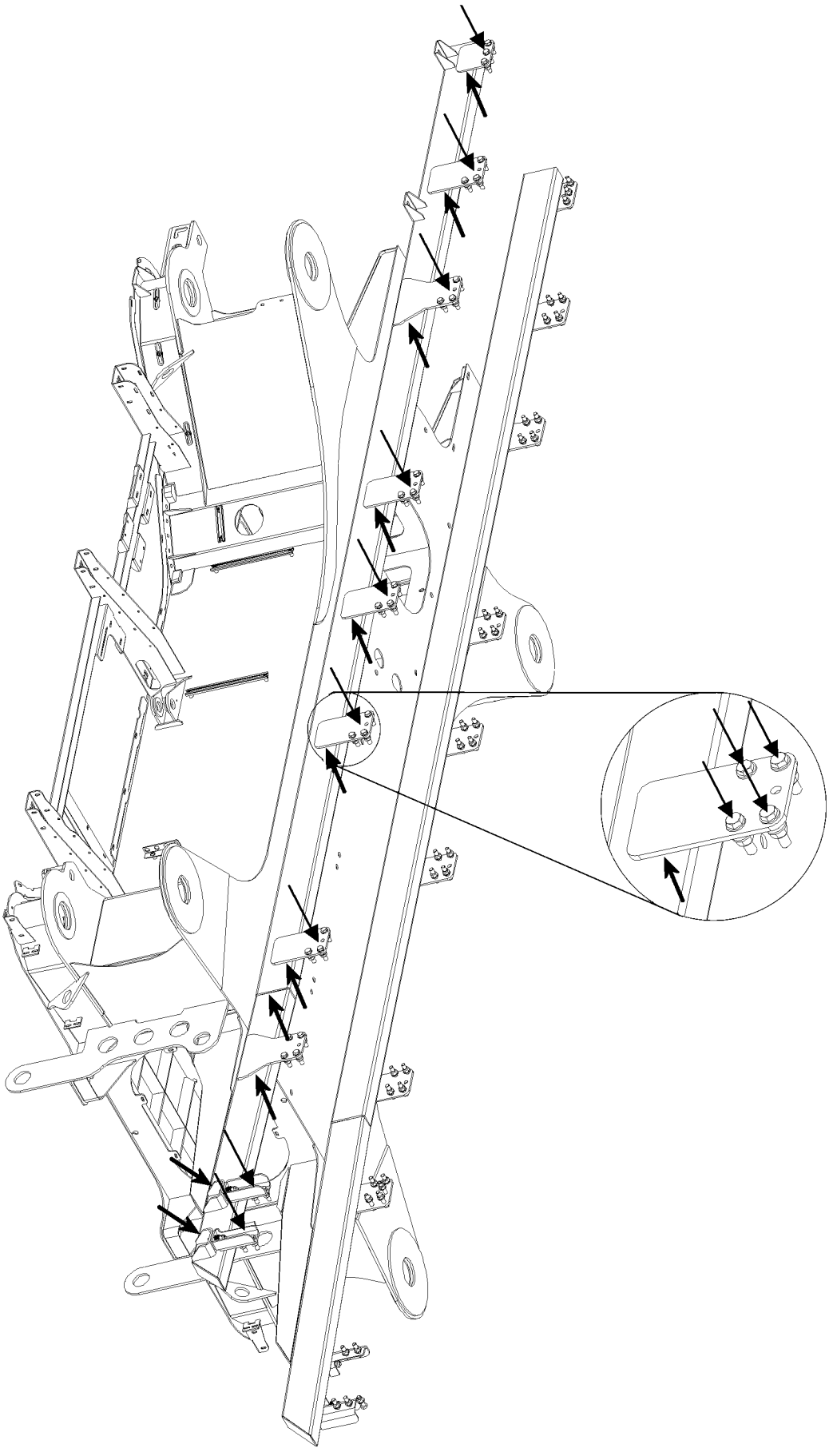

B113940

Example for intermediate frame

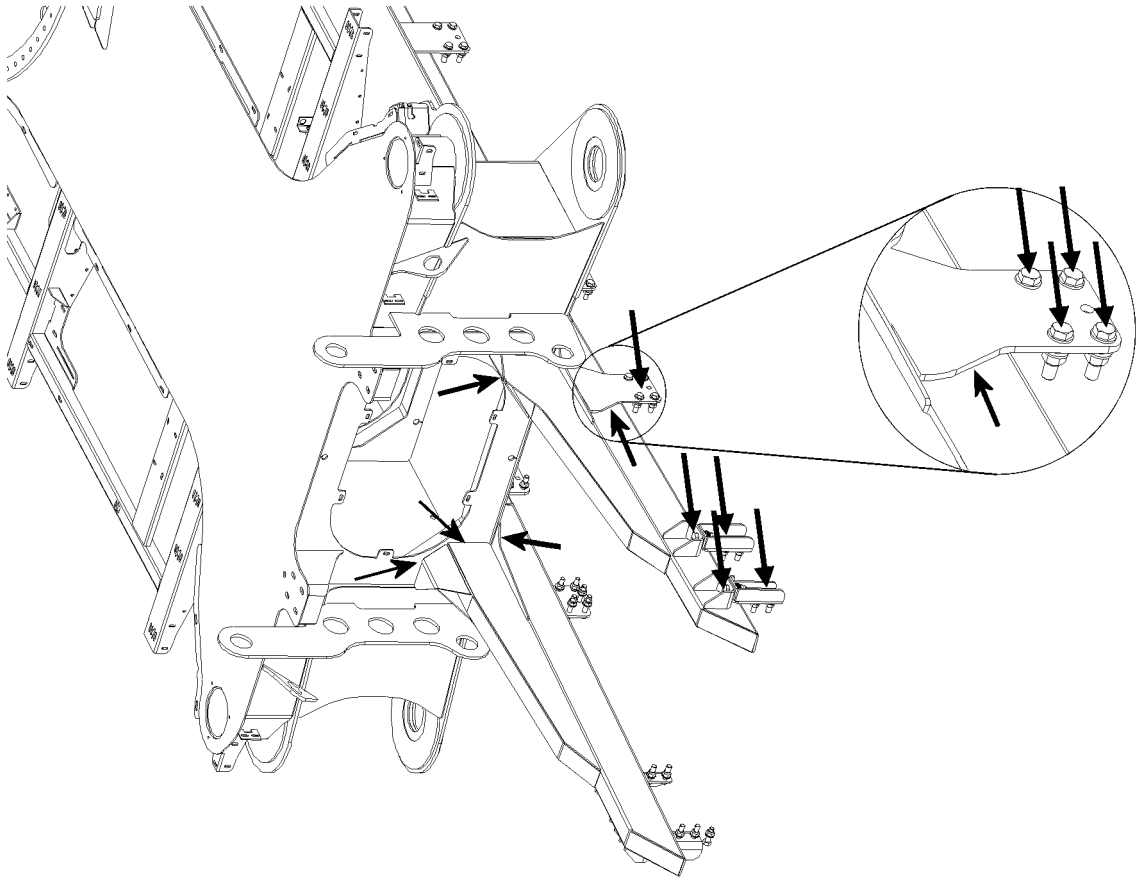

B114000 *Example for intermediate frame*

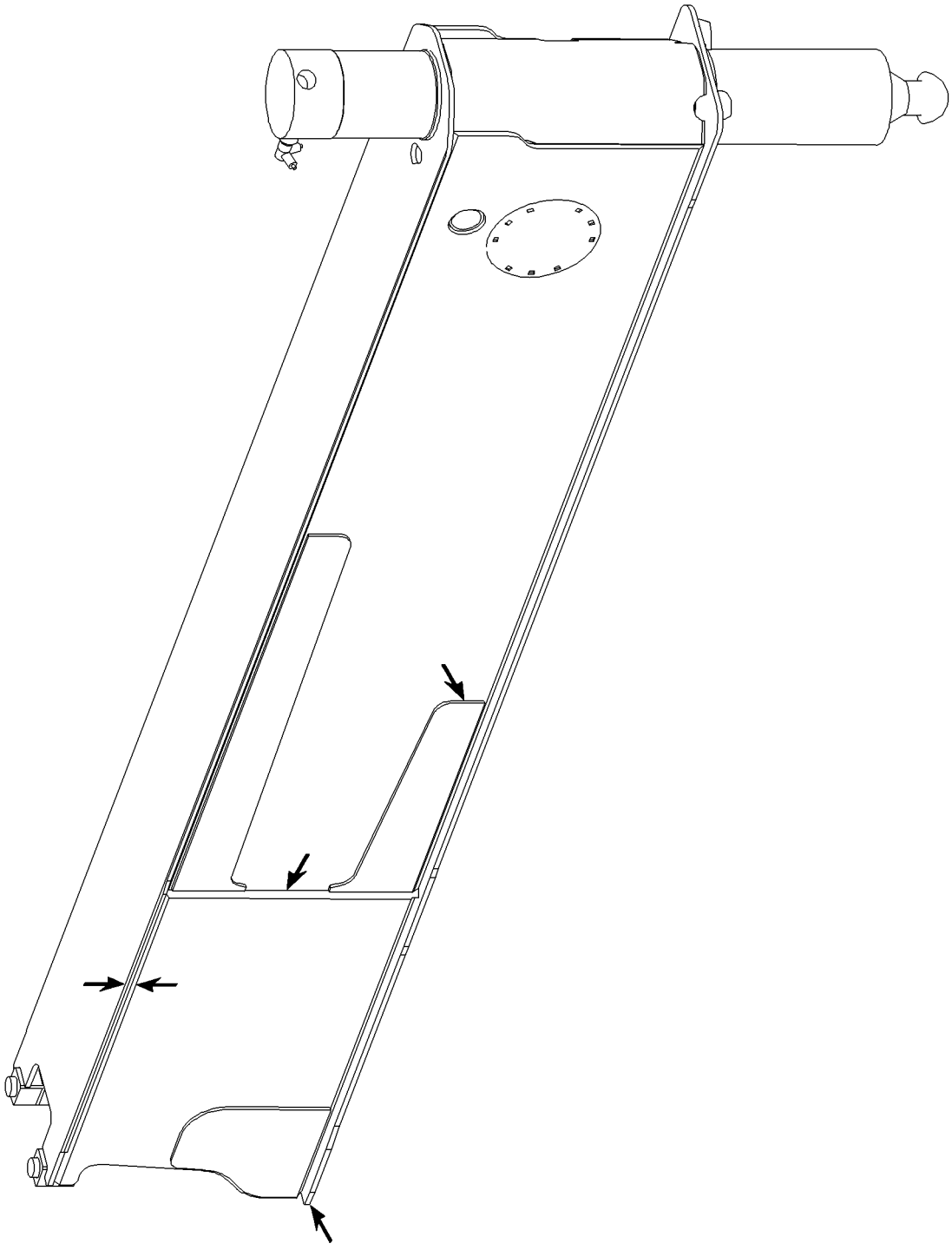

B105698 *Example for sliding beam*

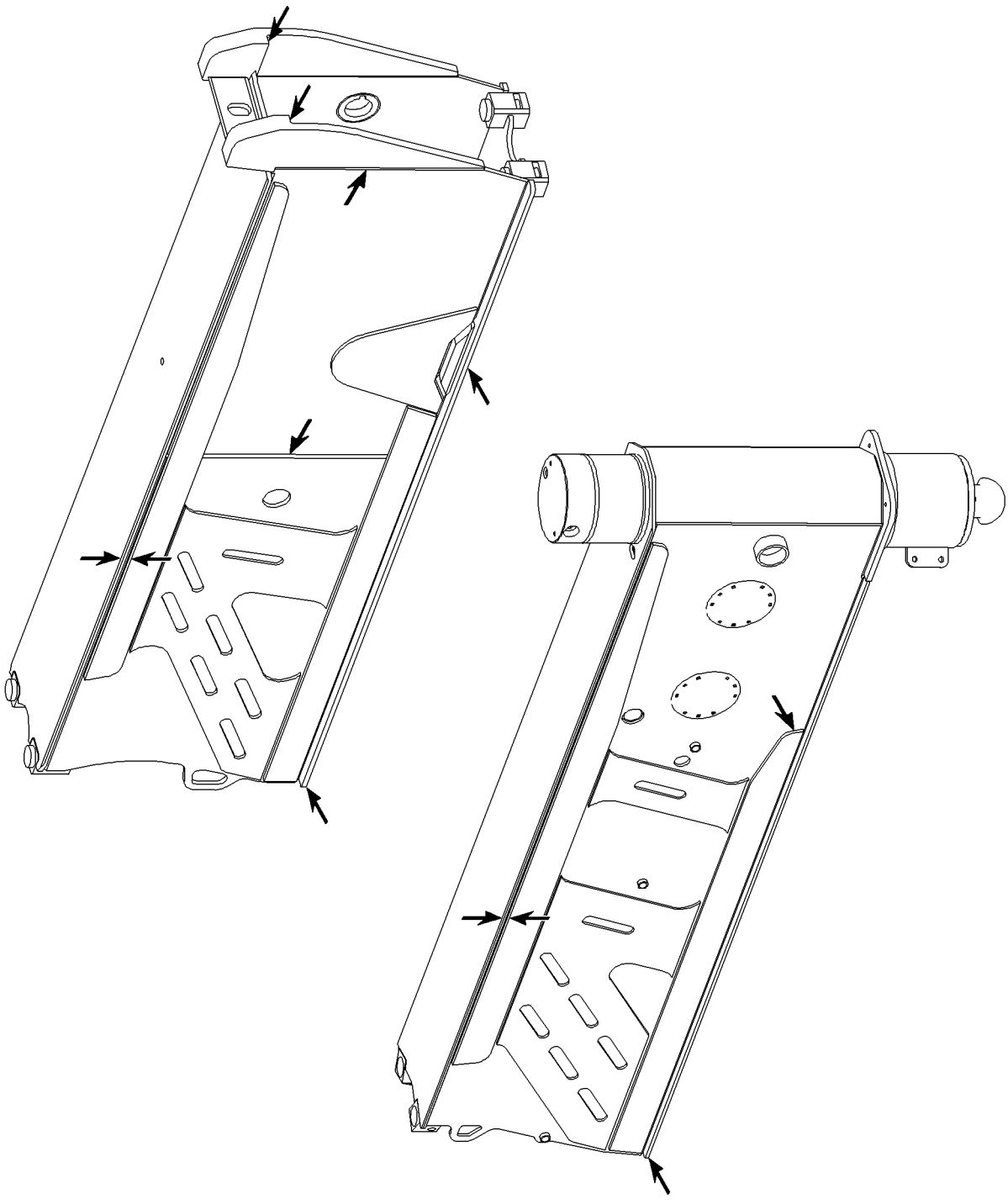

B105717 *Example for sliding beam*

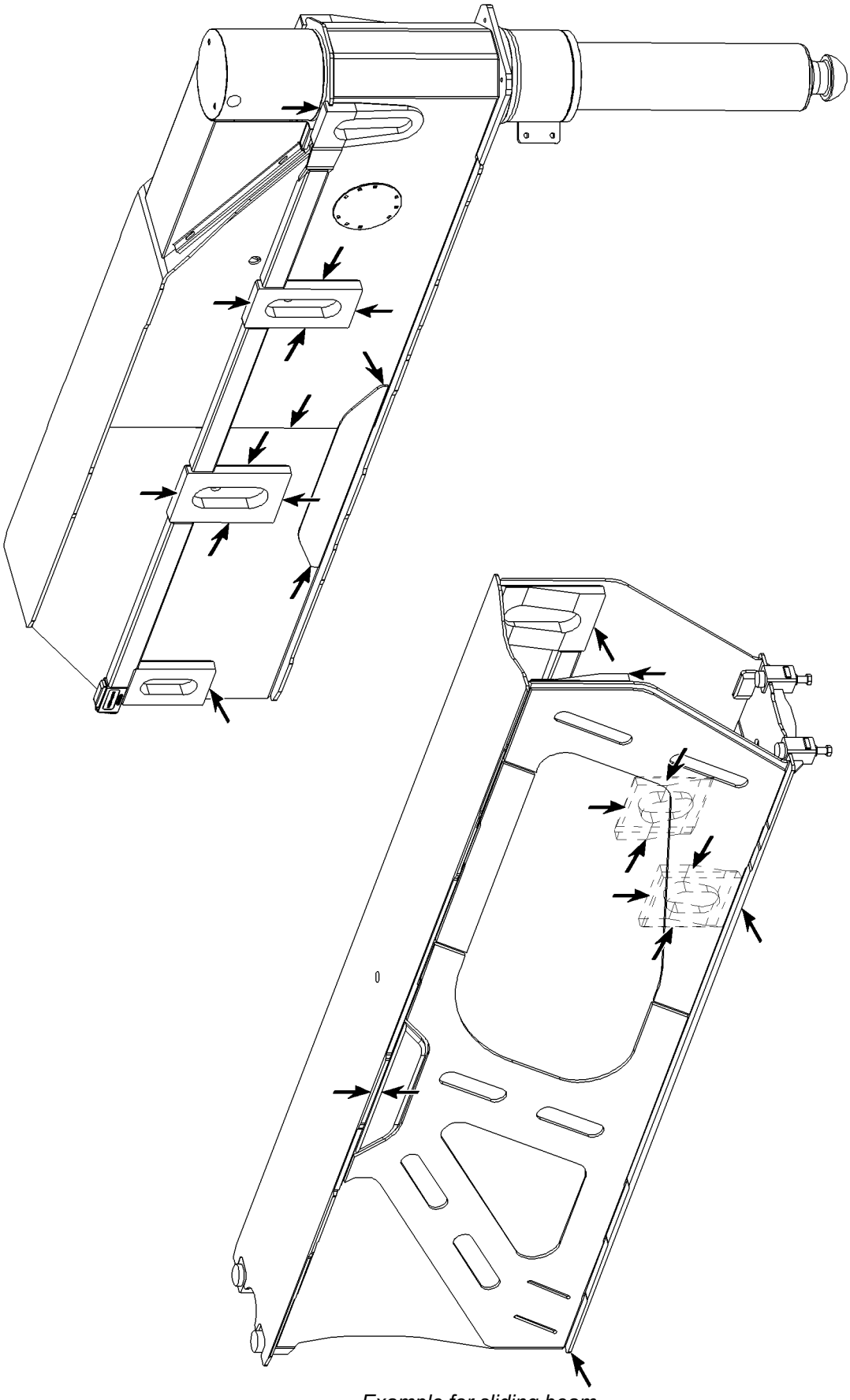

B105718

Example for sliding beam

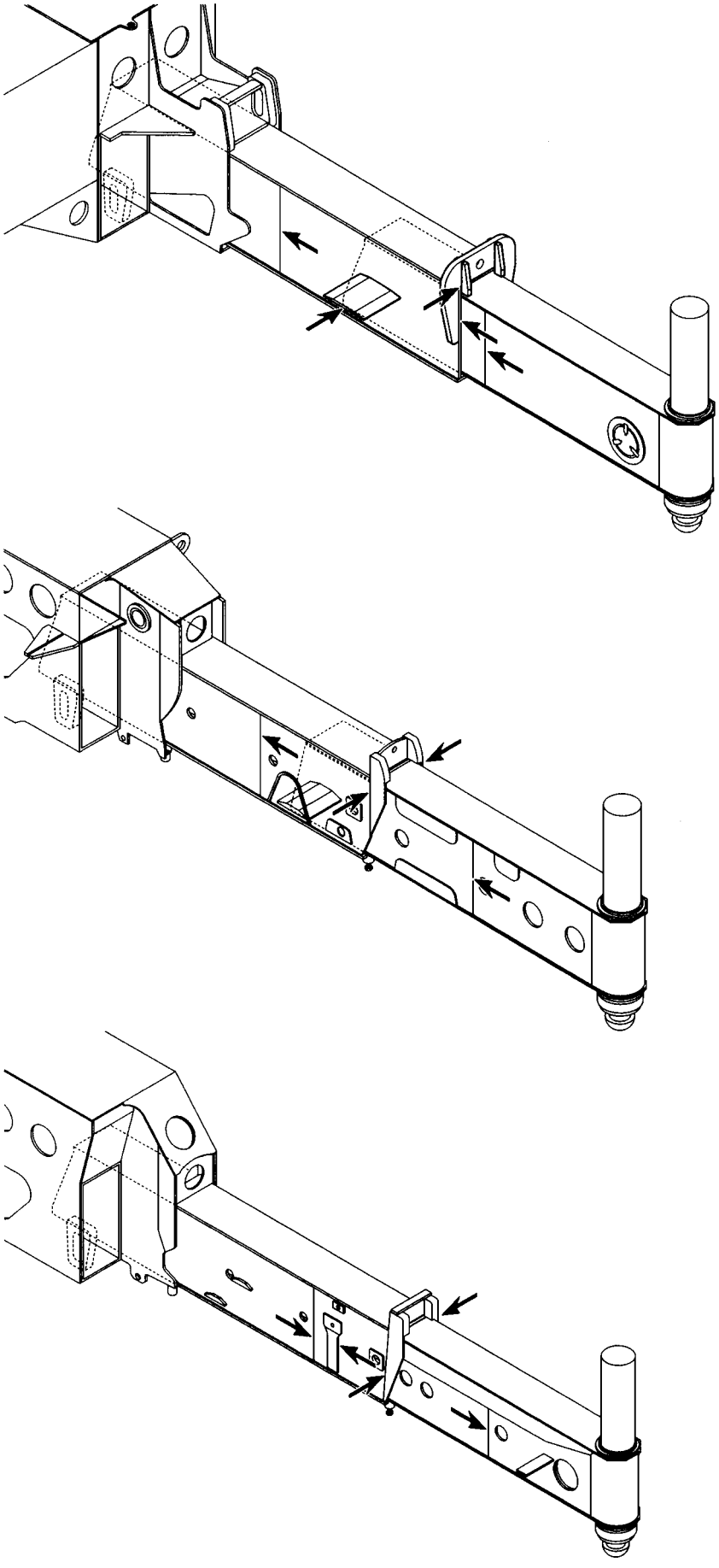

B185047

Example for sliding beam

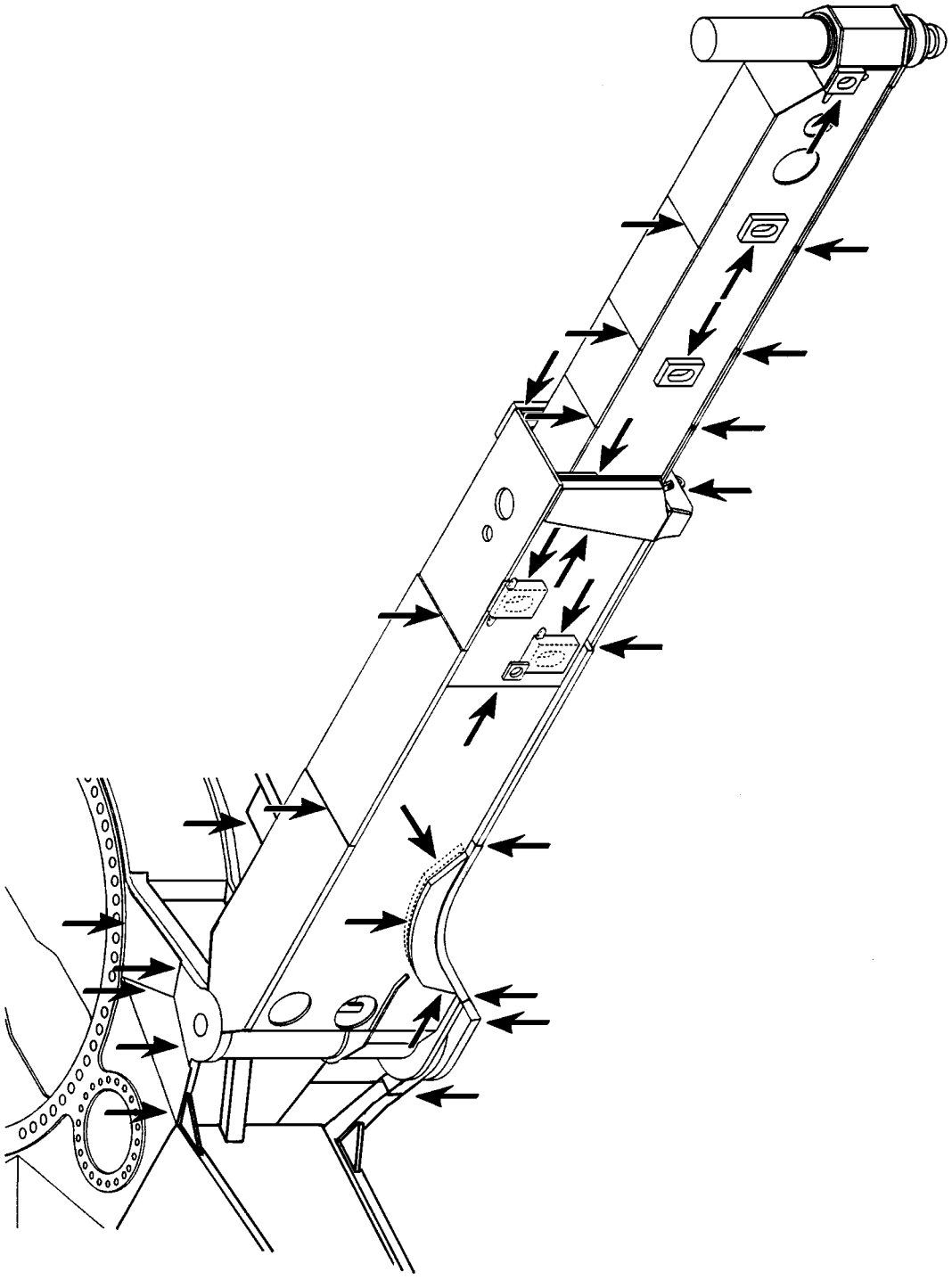

B185060 *Example for swingable sliding beam*

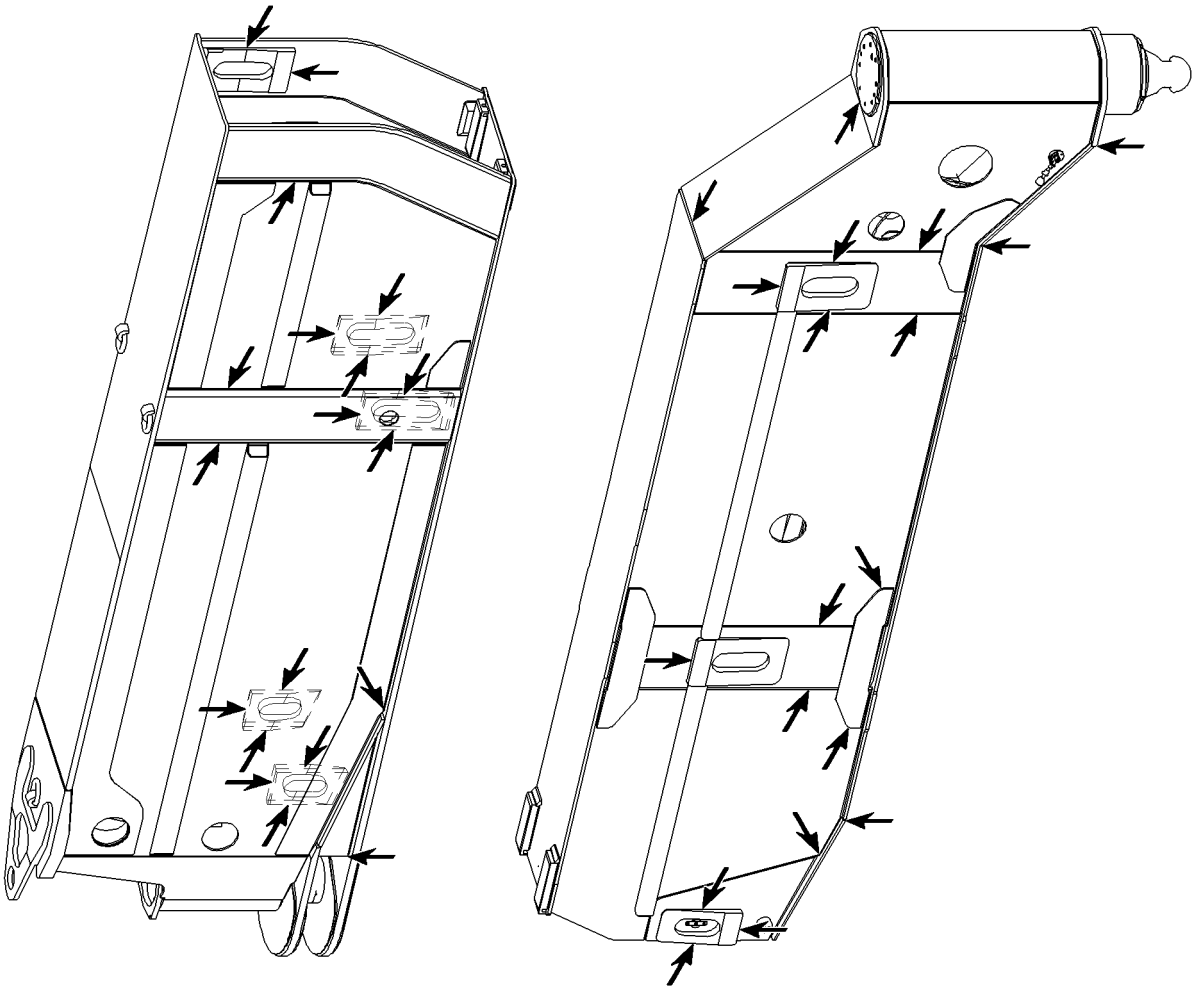

B105690 *Example for swingable sliding beam*

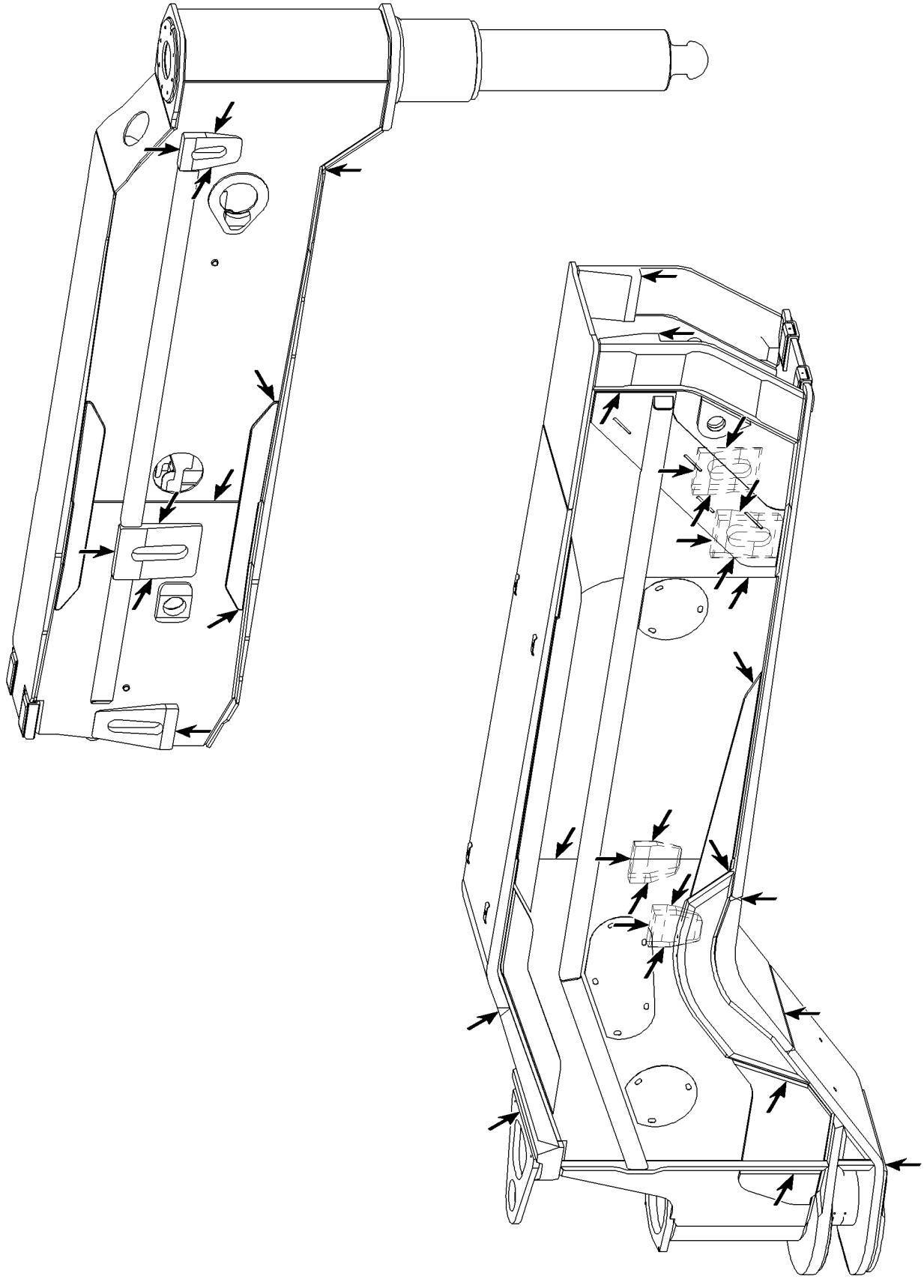

B105704

Example for swingable sliding beam

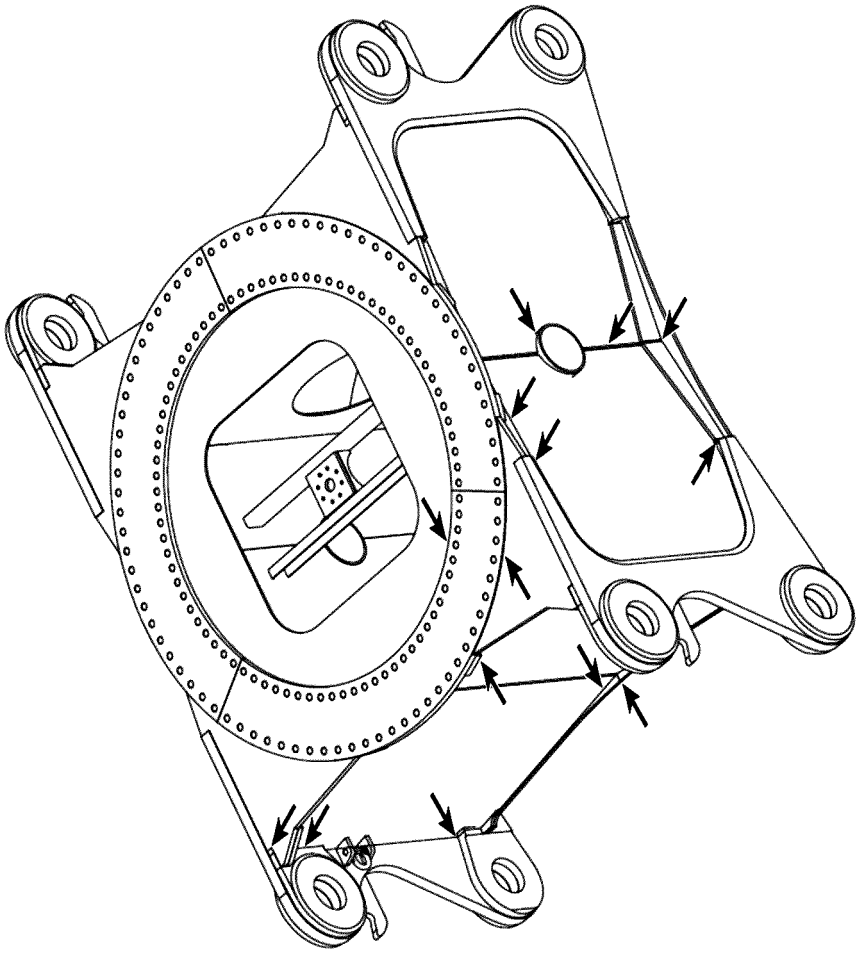

B105725 *Example for crawler center section*

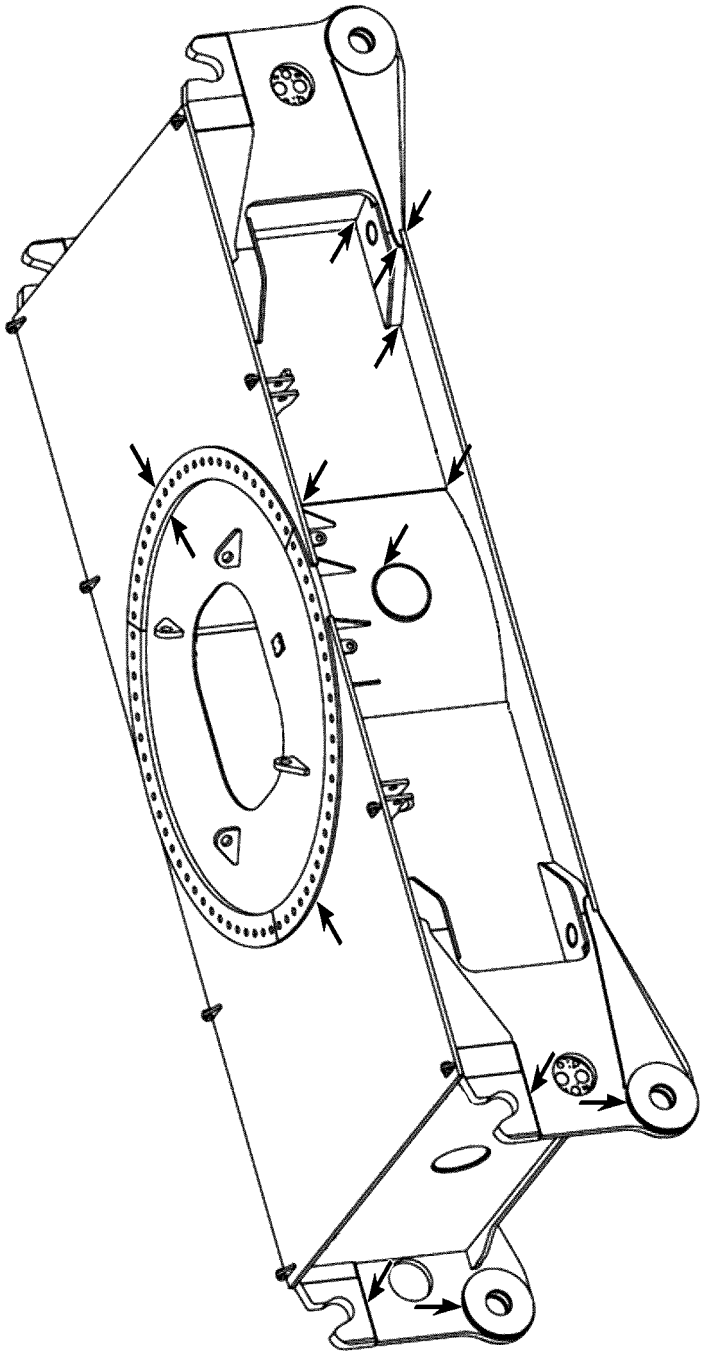

B105726 *Example for crawler center section*

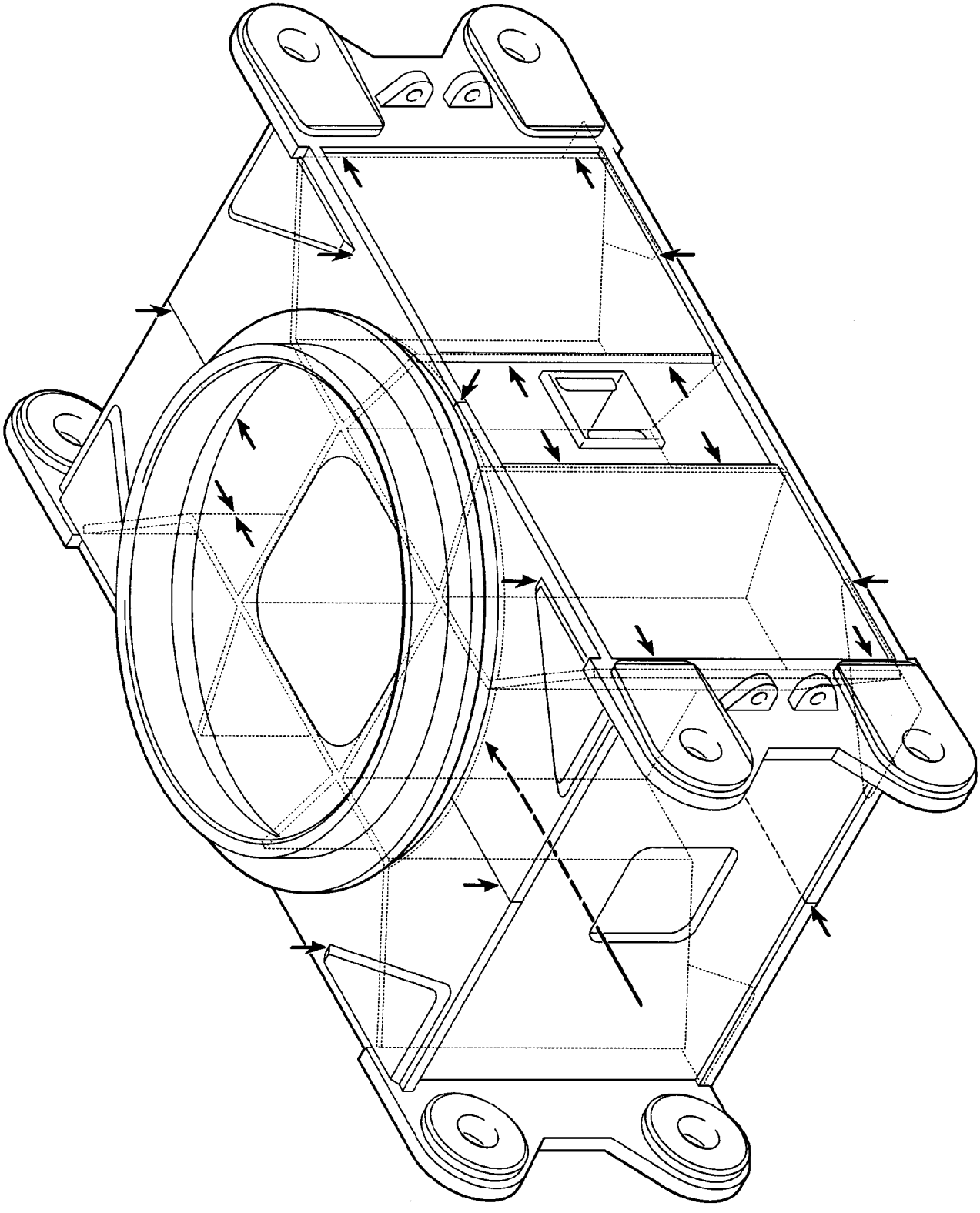

B187347 *Example for crawler center section*

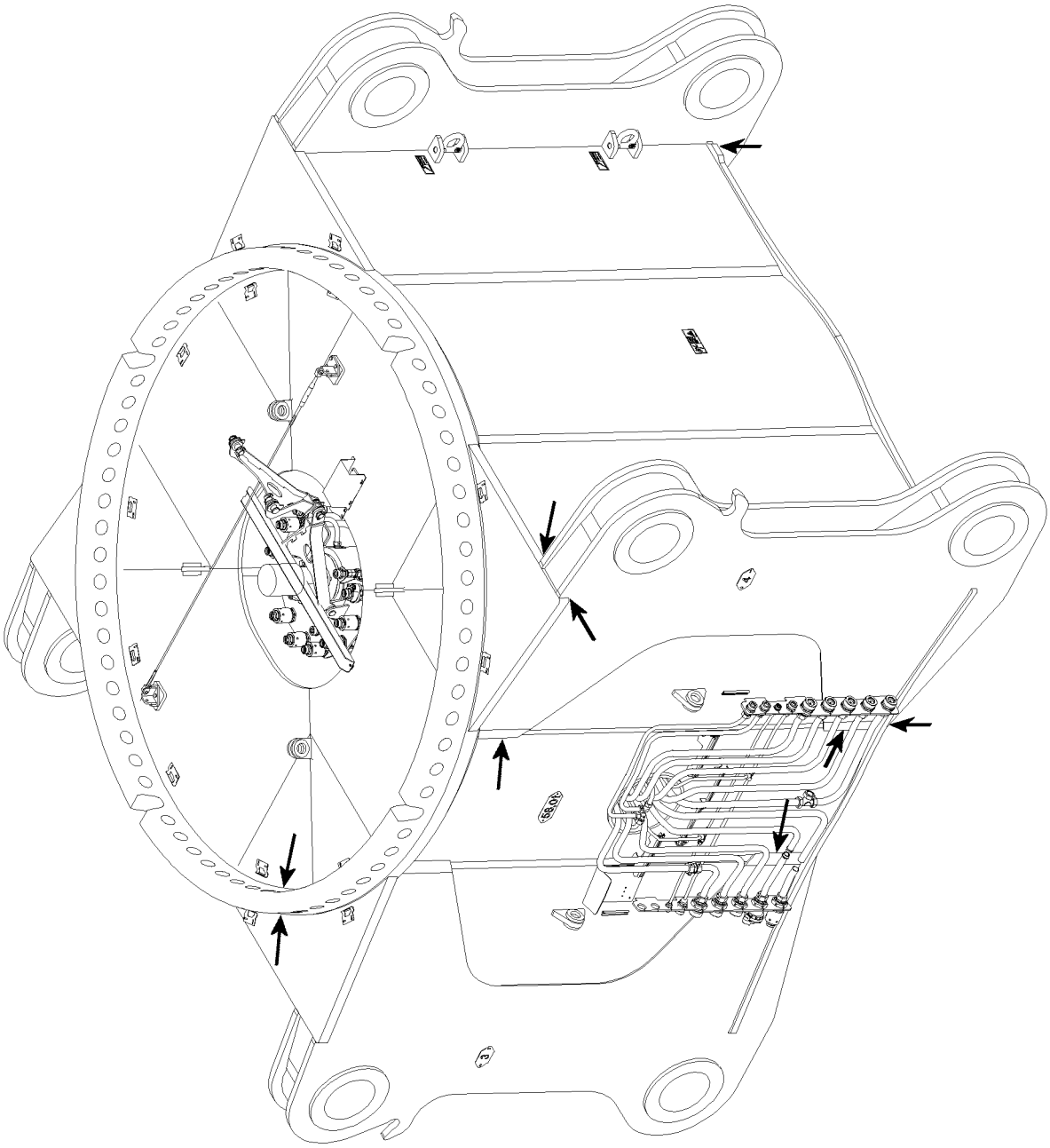

B115920 *Example for crawler center section*

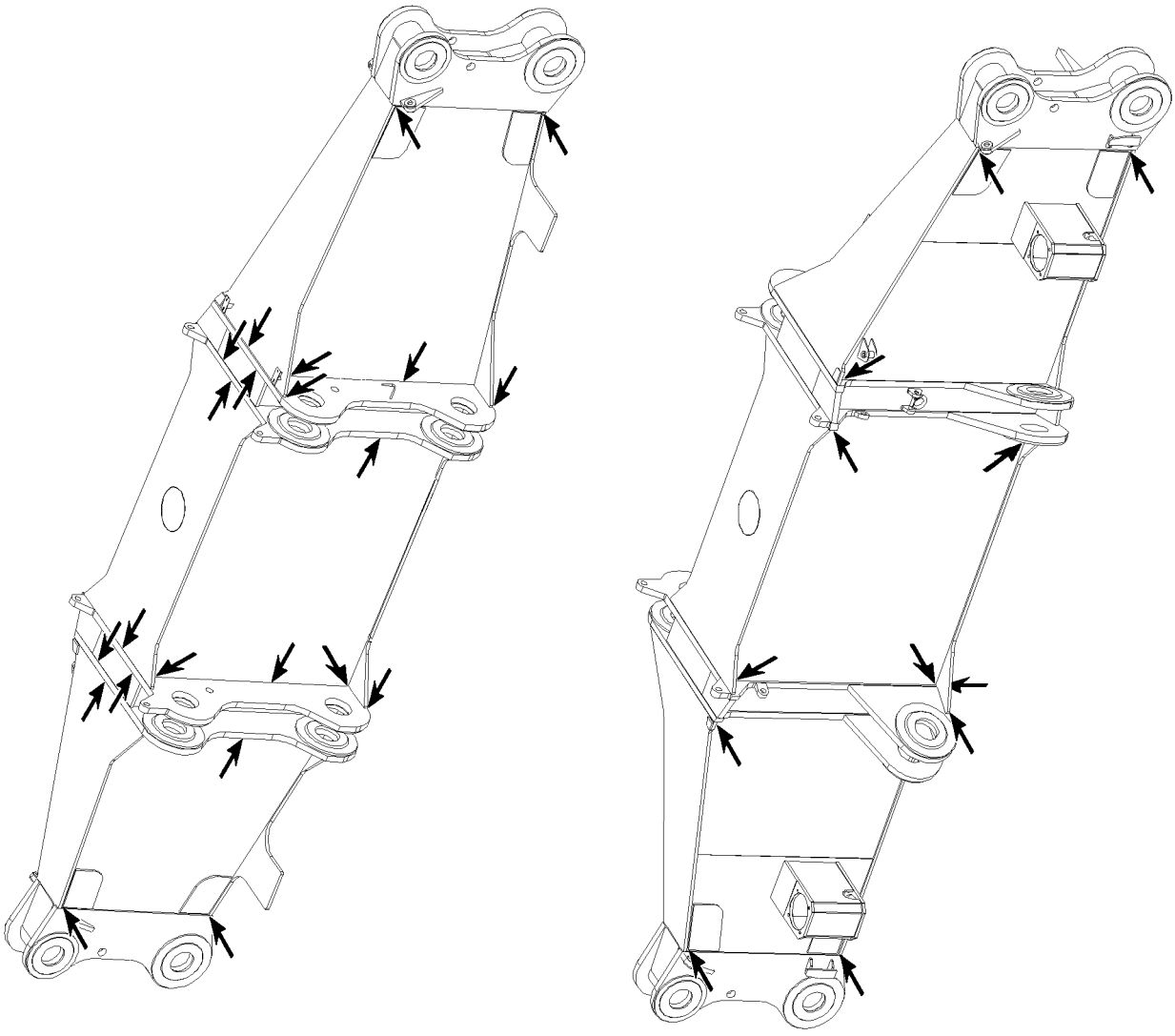

B105727 *Example for cross carrier*

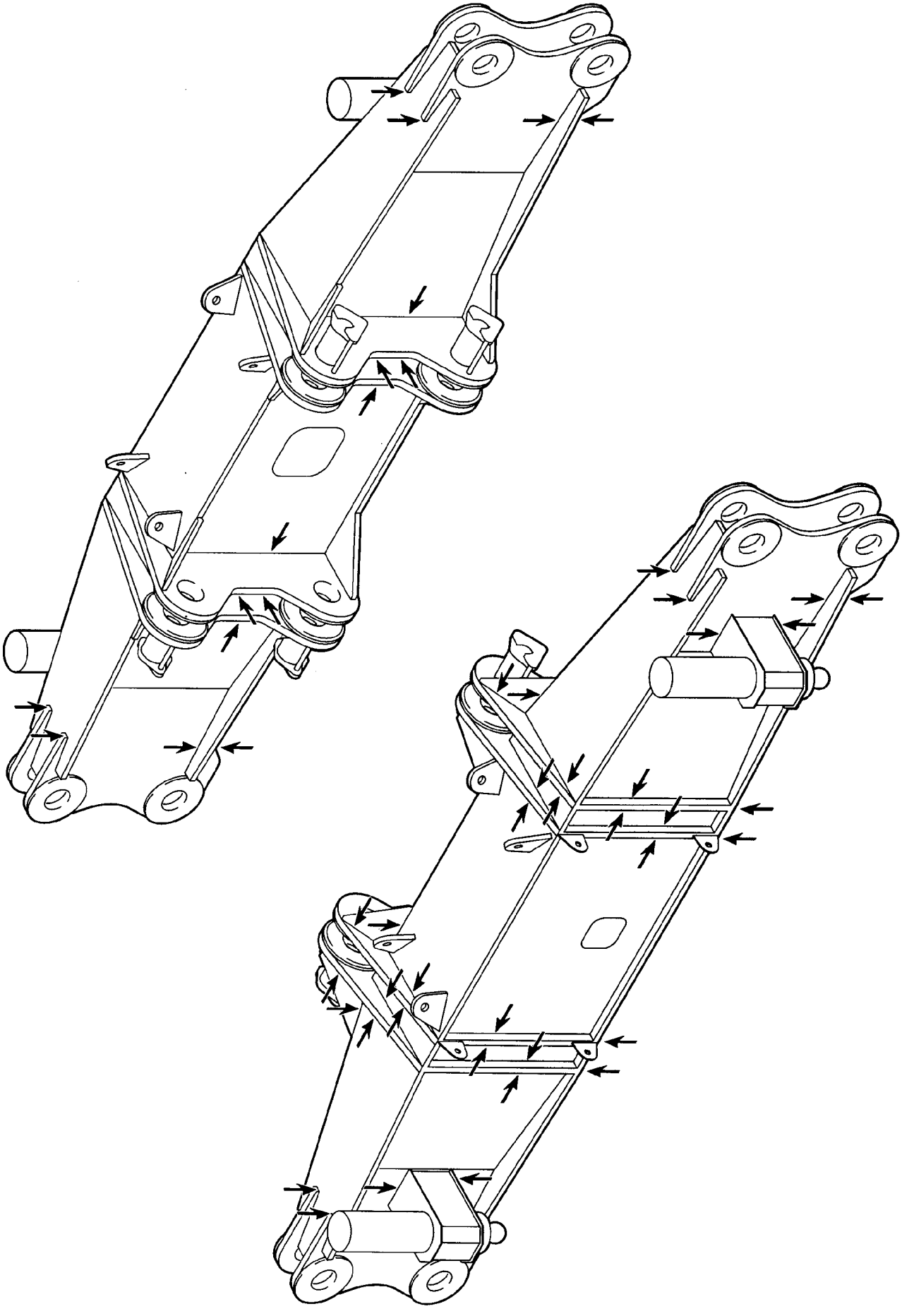

B187348

Example for cross carrier

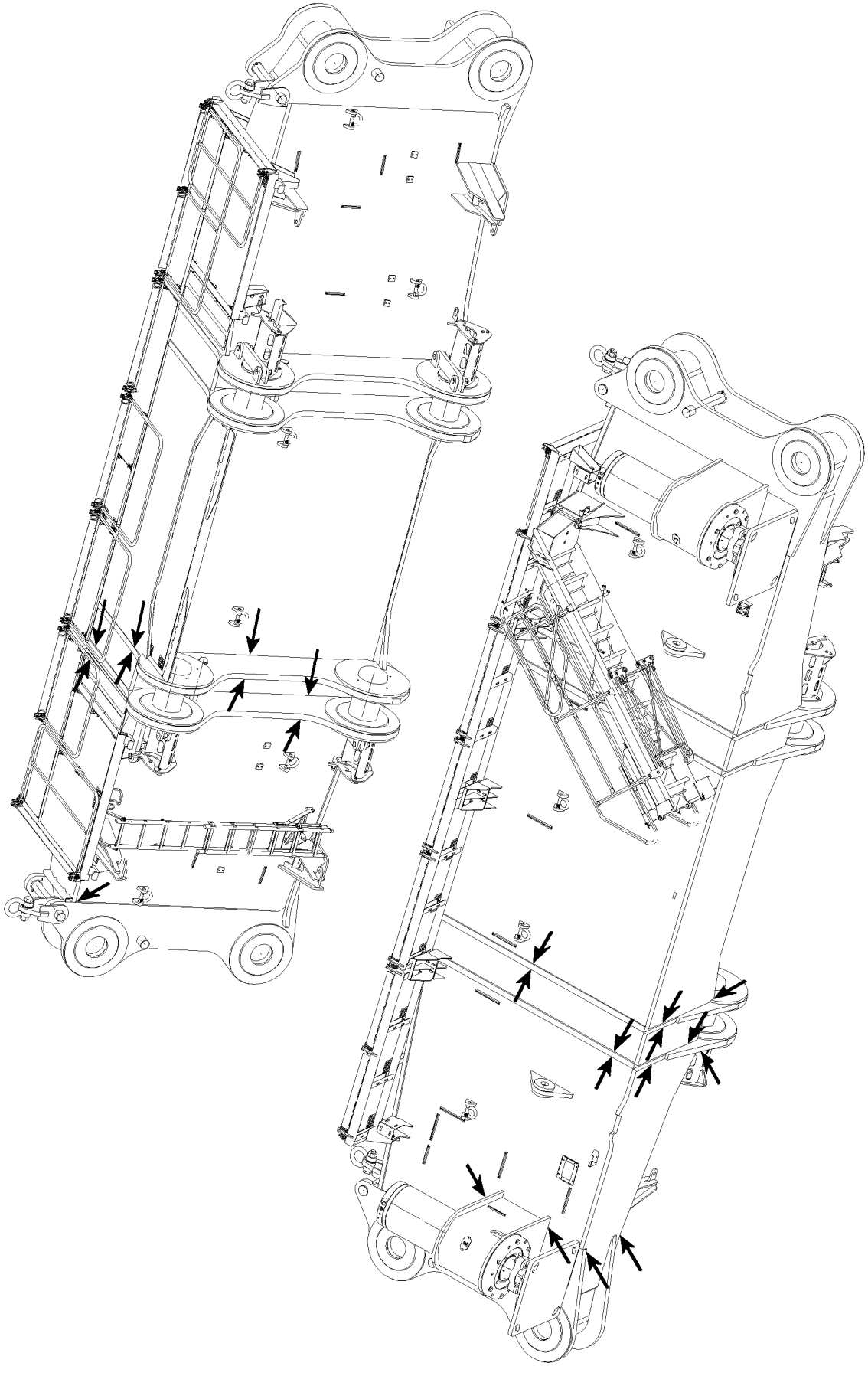

B115921

Example for cross carrier

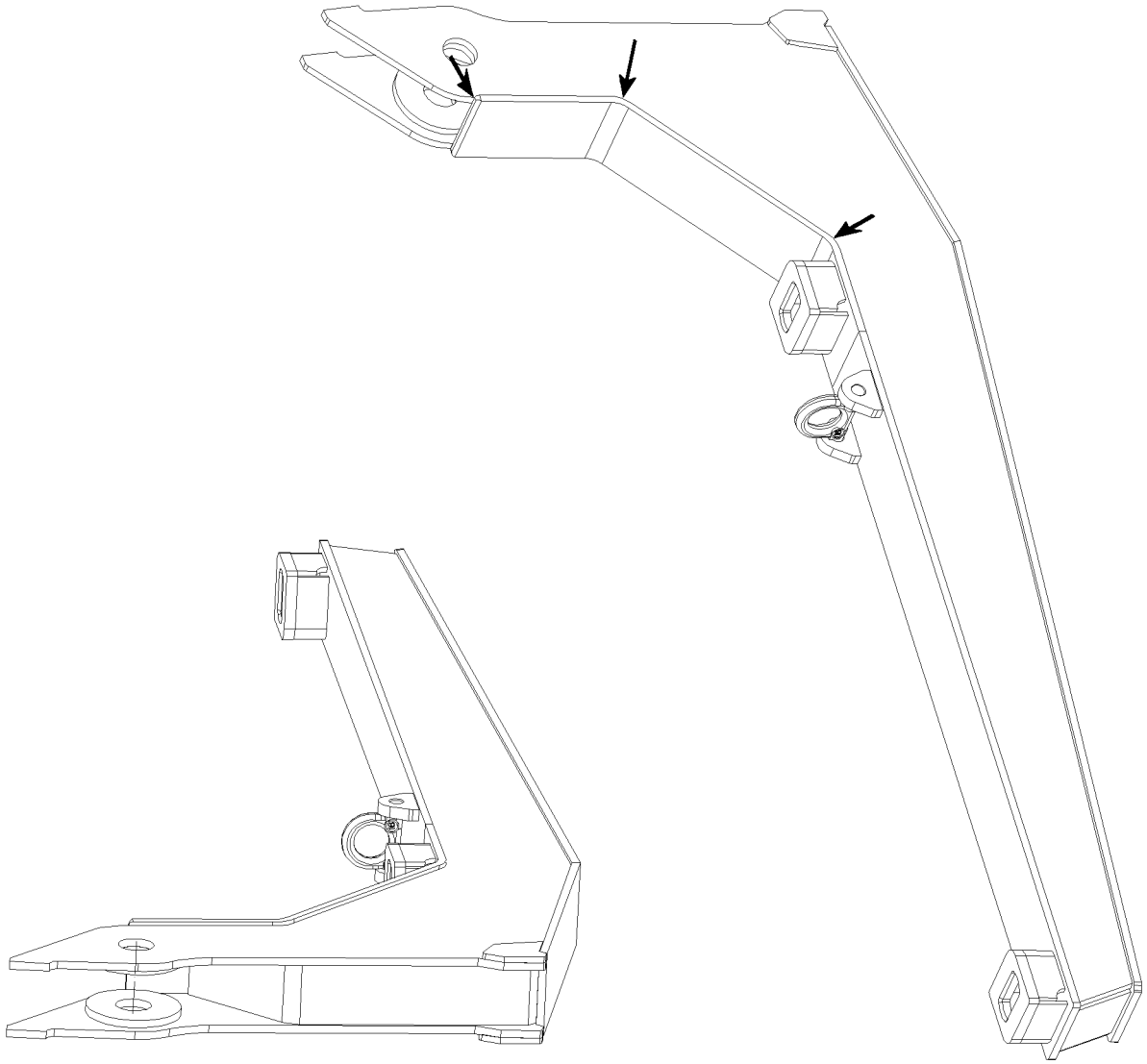

B115919 *Example for carrier for central ballast*

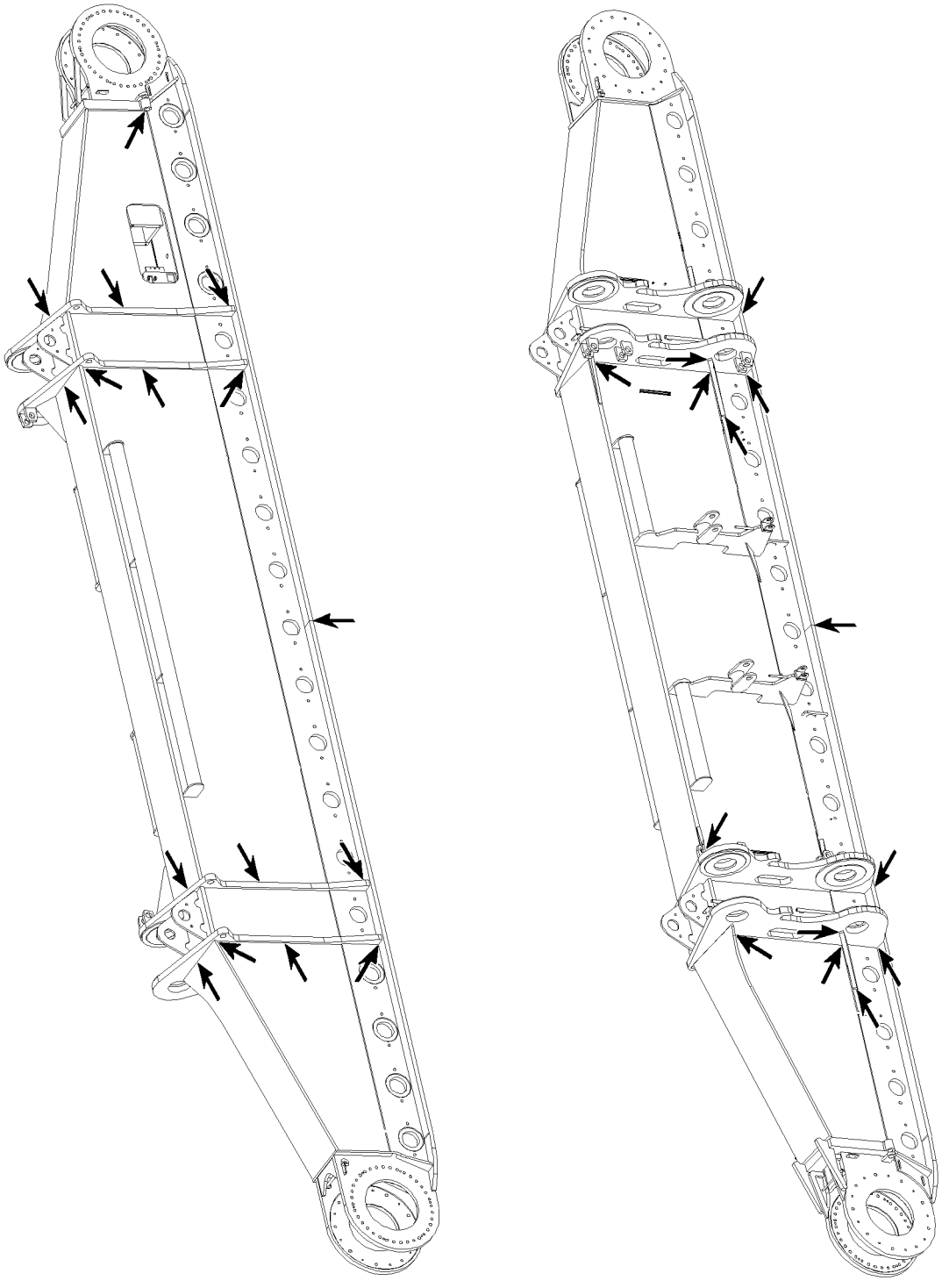

B105728

Example for crawler carrier

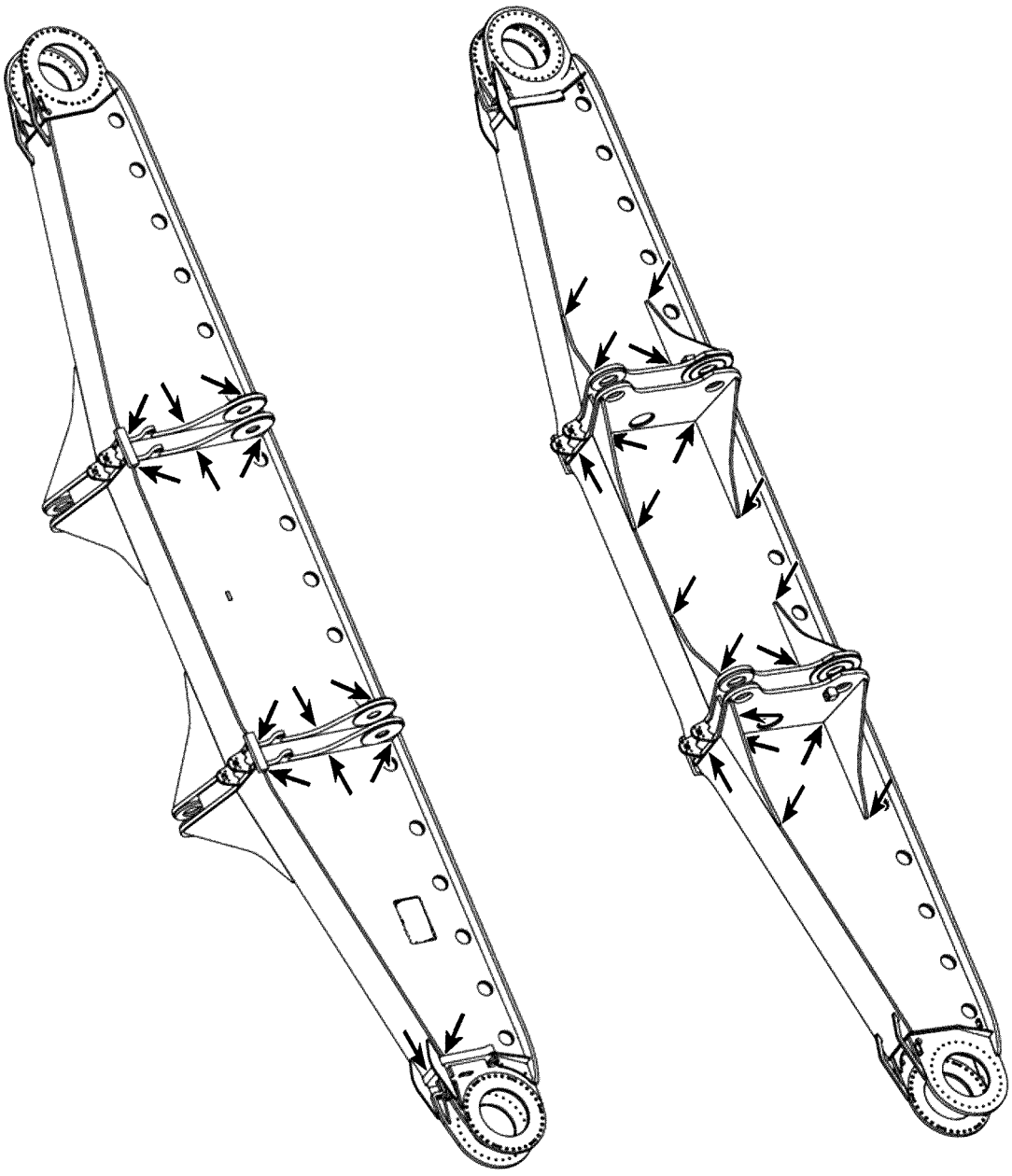

B105729 *Example for crawler carrier*

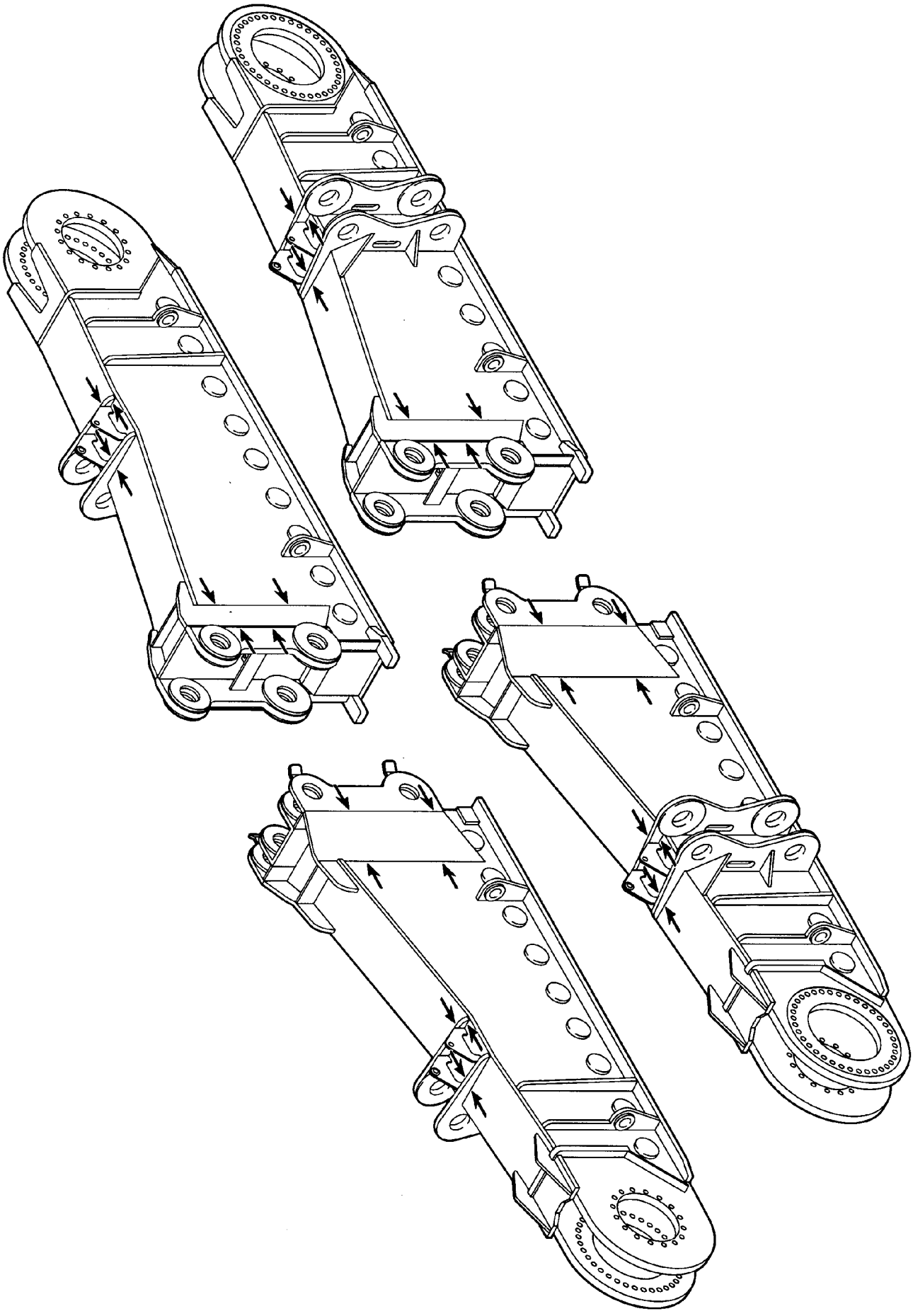

B187349

Example for crawler carrier

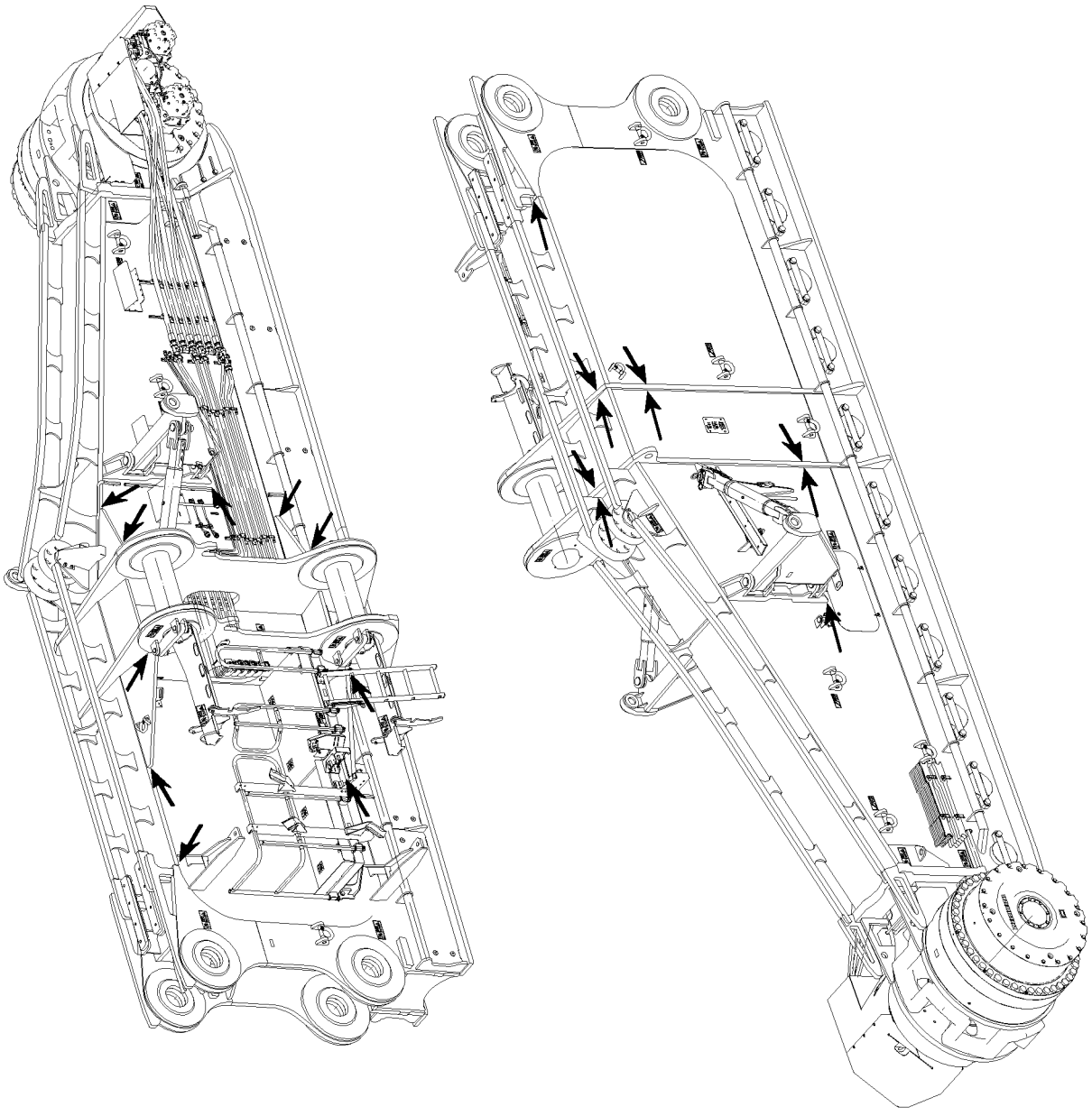

B115917

Example for crawler carrier

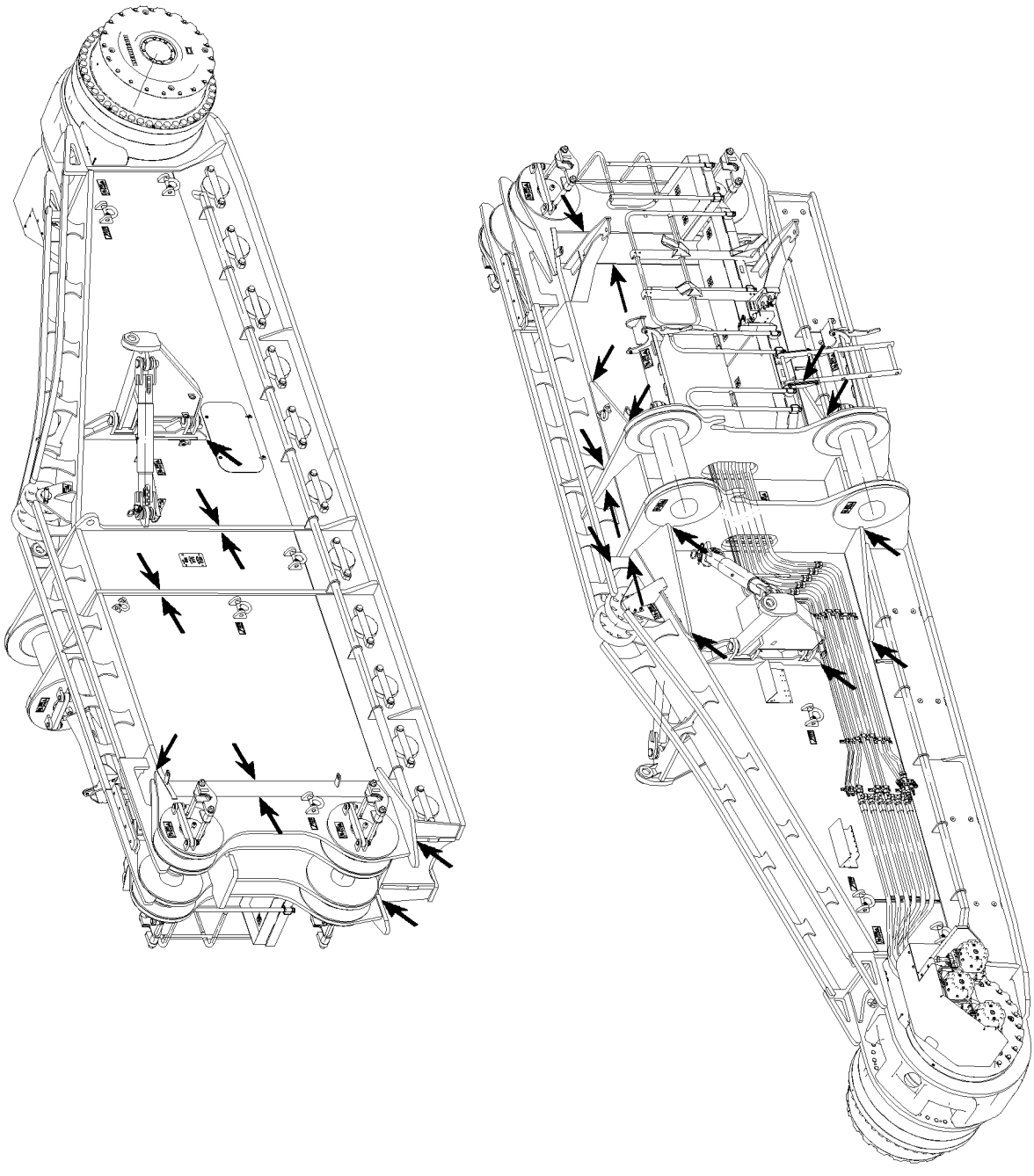

B115918

Example for crawler carrier

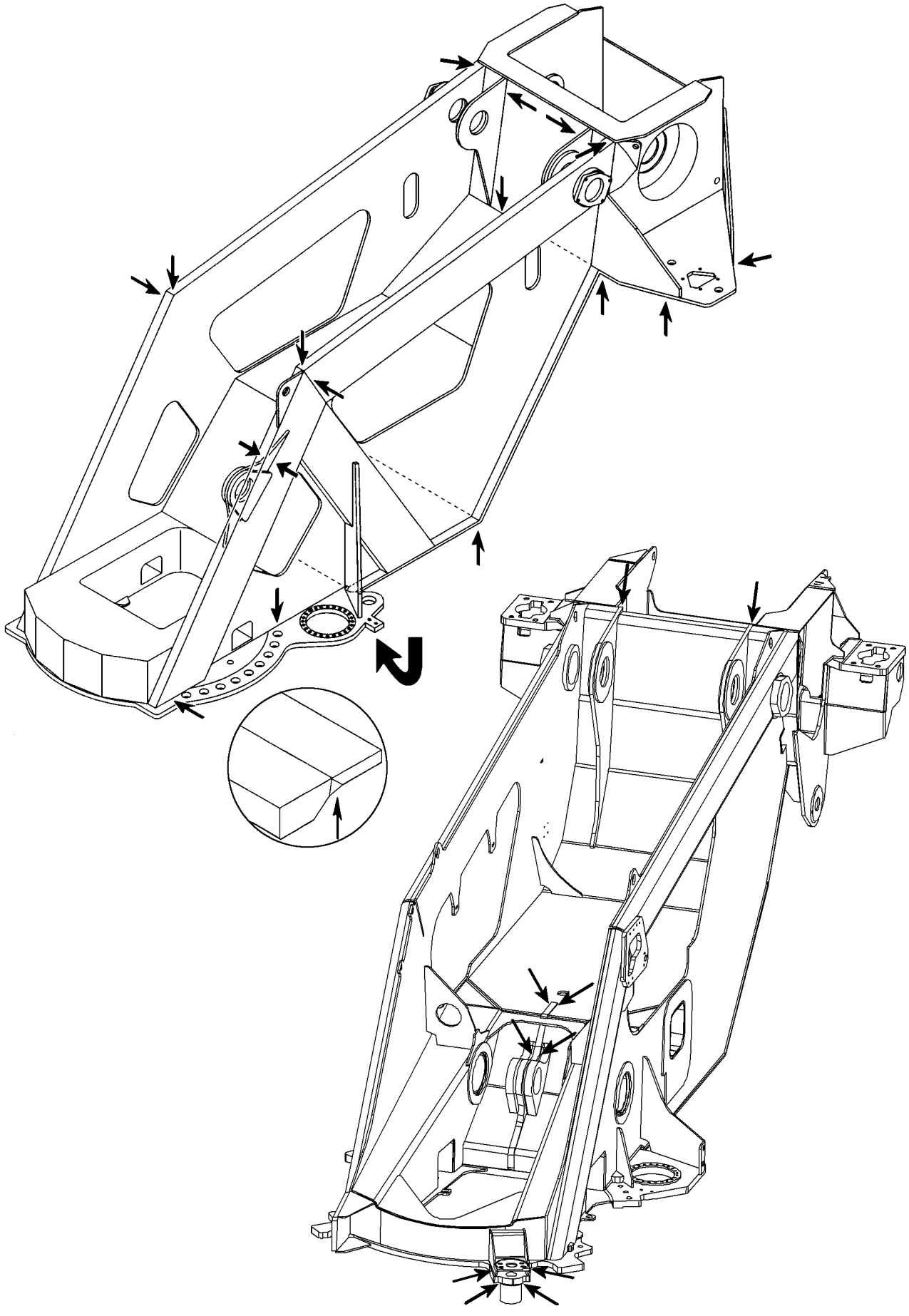

B185048

Example for turntable frame

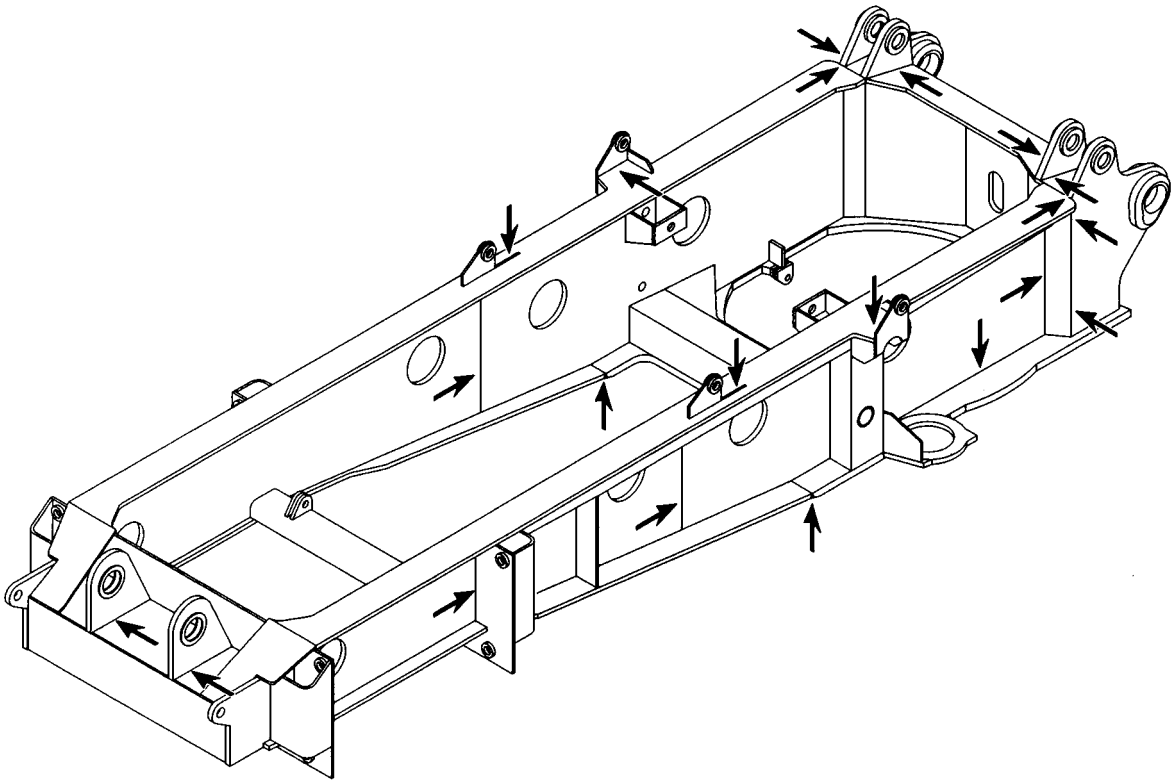

B185049 *Example for turntable frame*

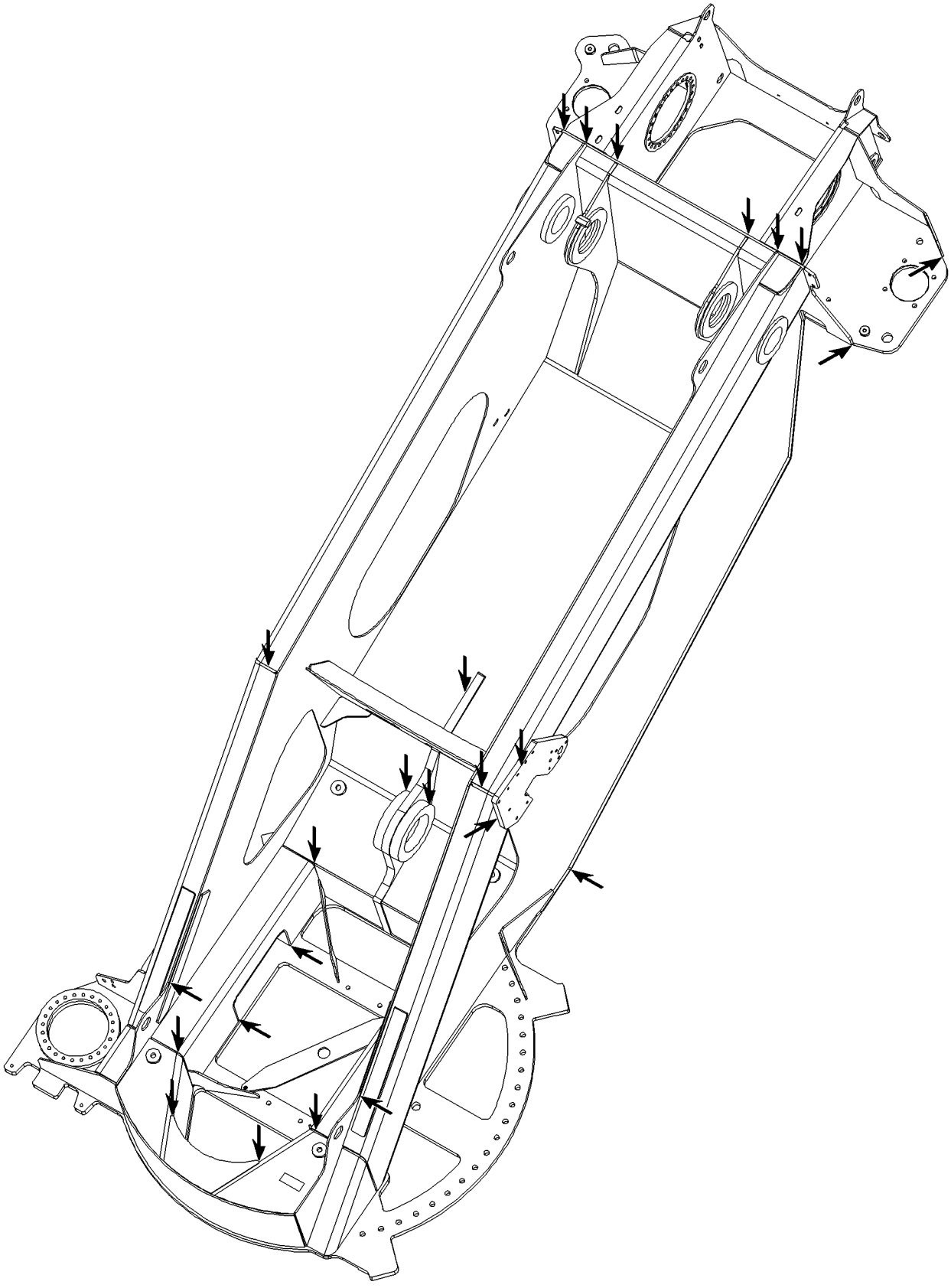

B105700

Example for turntable frame

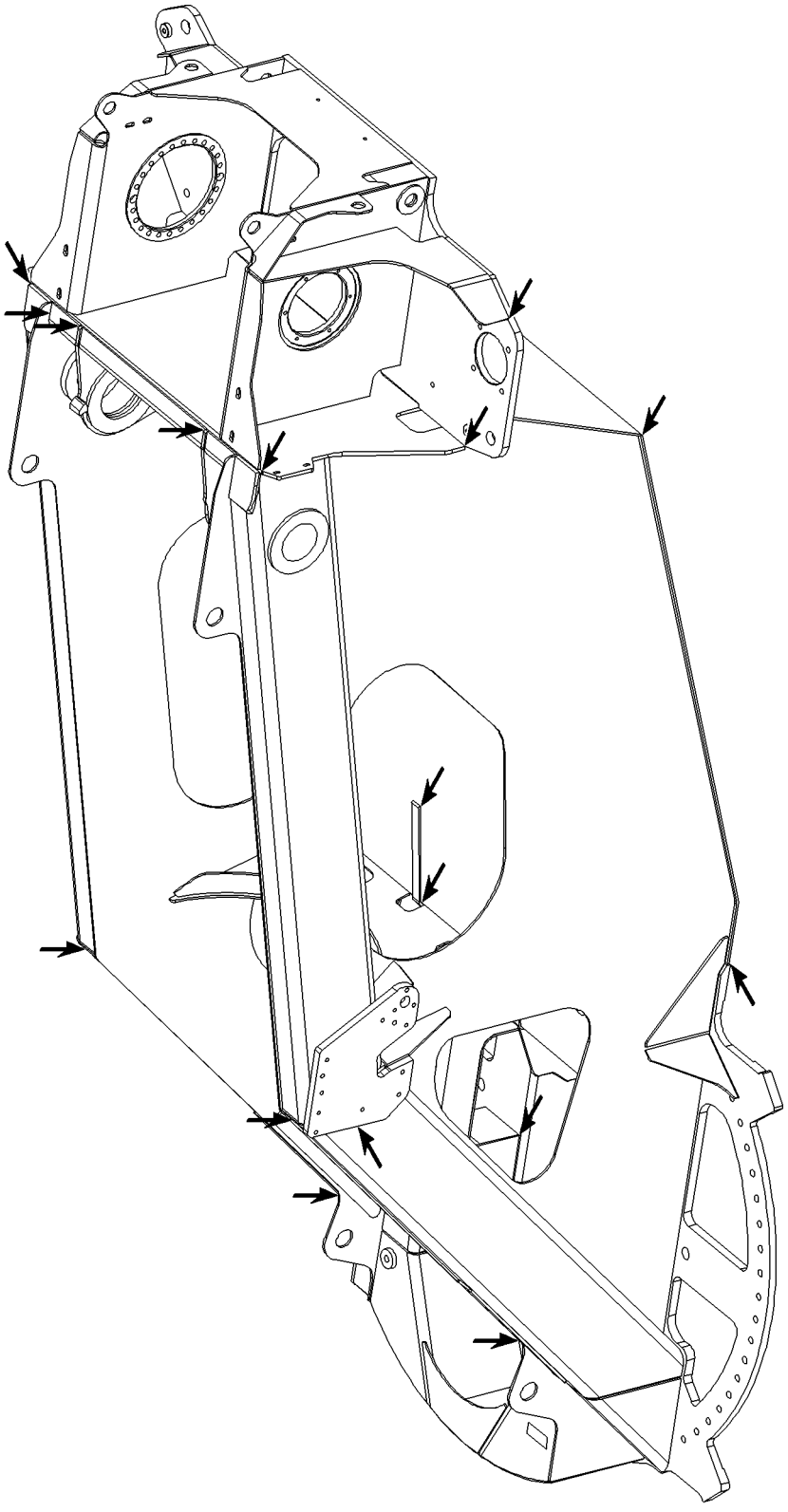

B105701 *Example for turntable frame*

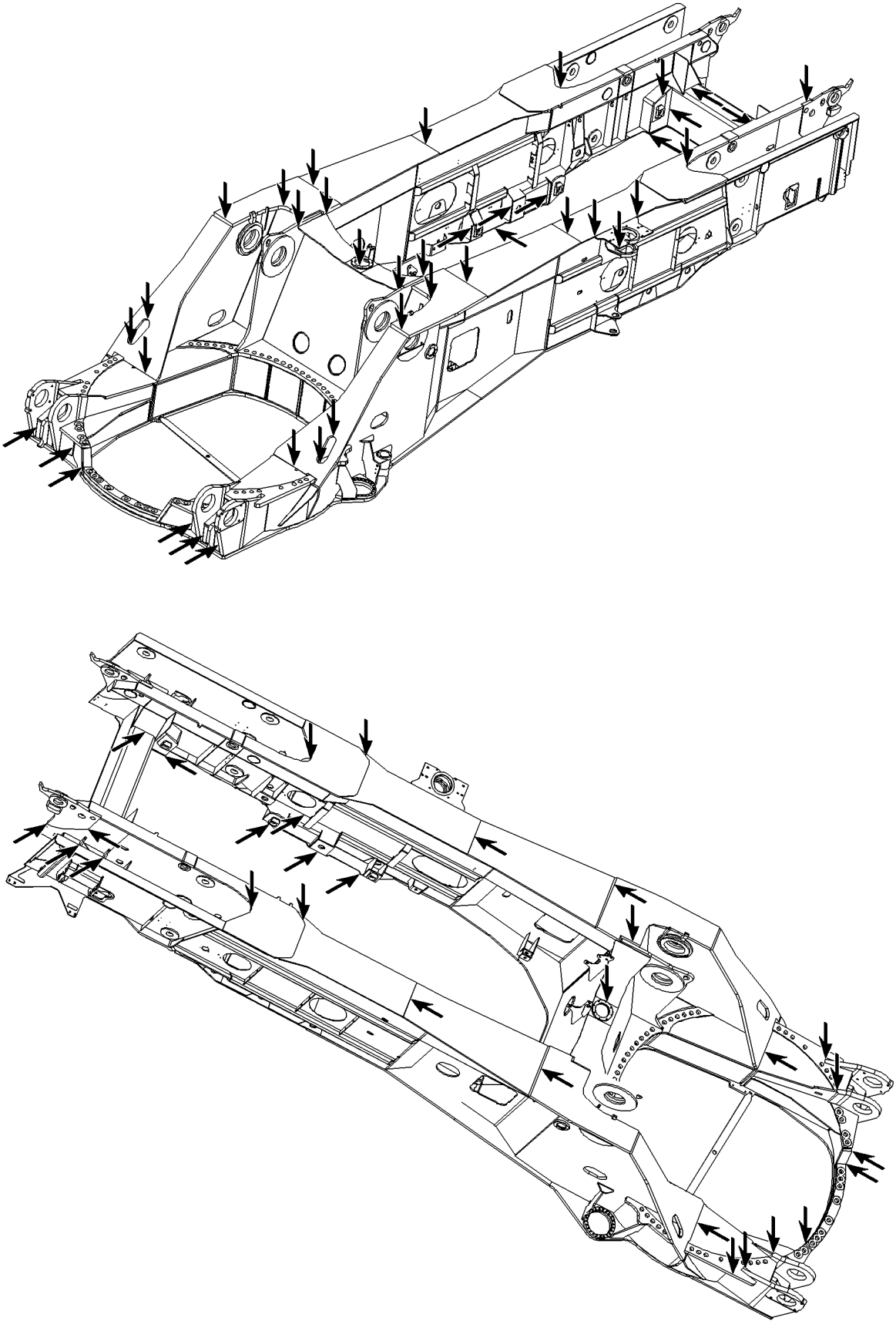

B105706 *Example for turntable frame*

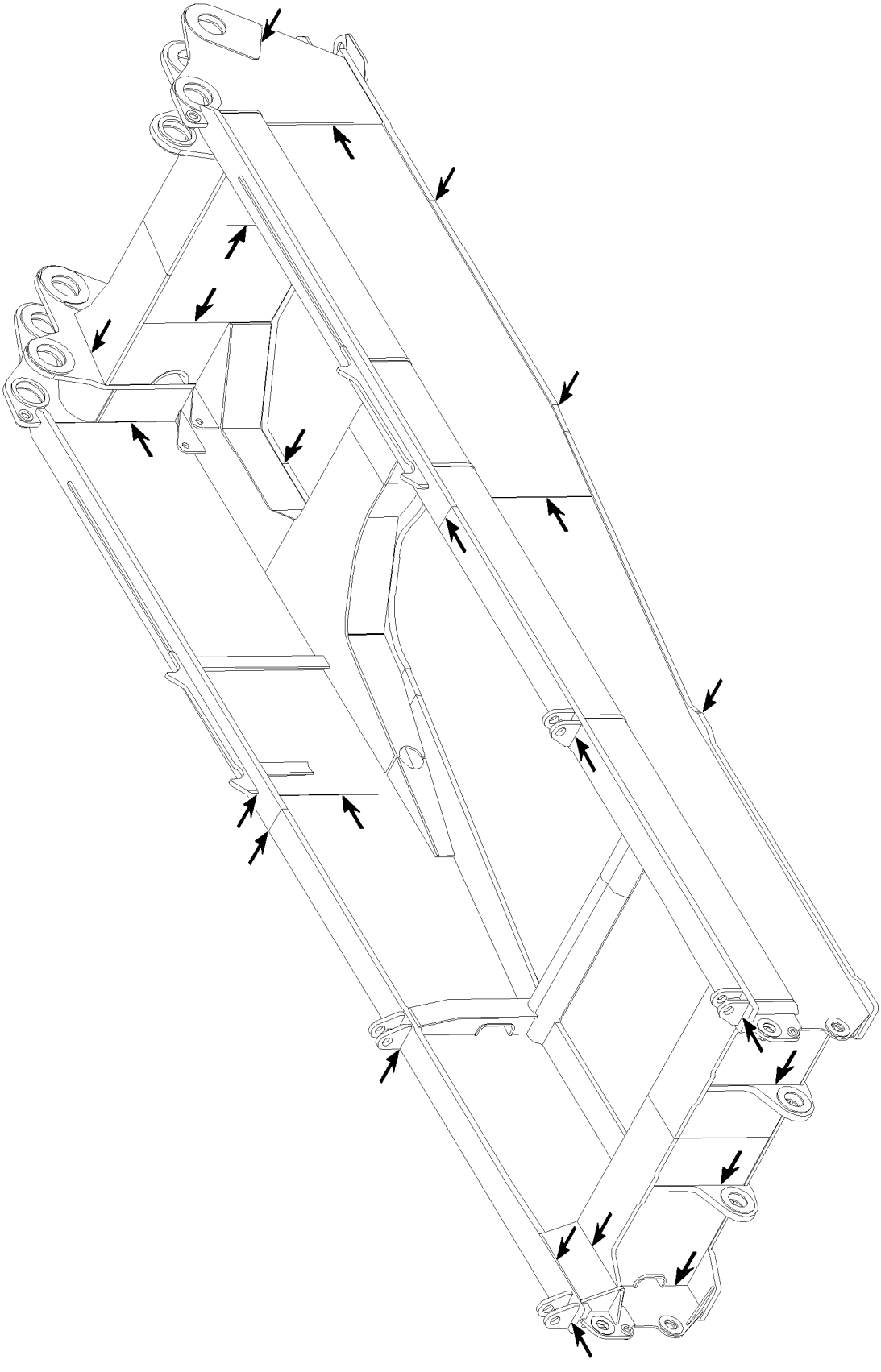

B105694

Example for turntable frame

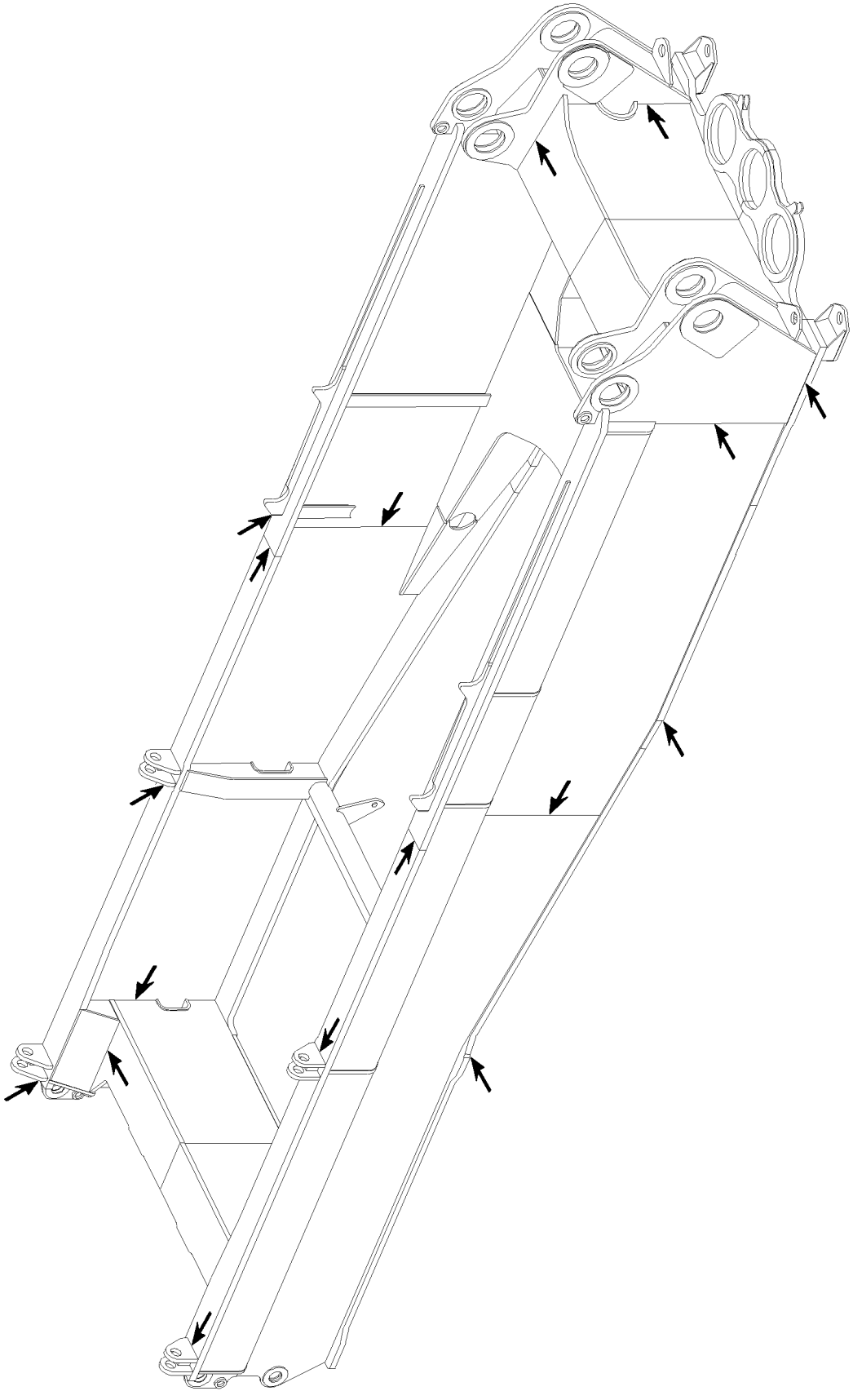

B105695

Example for turntable frame

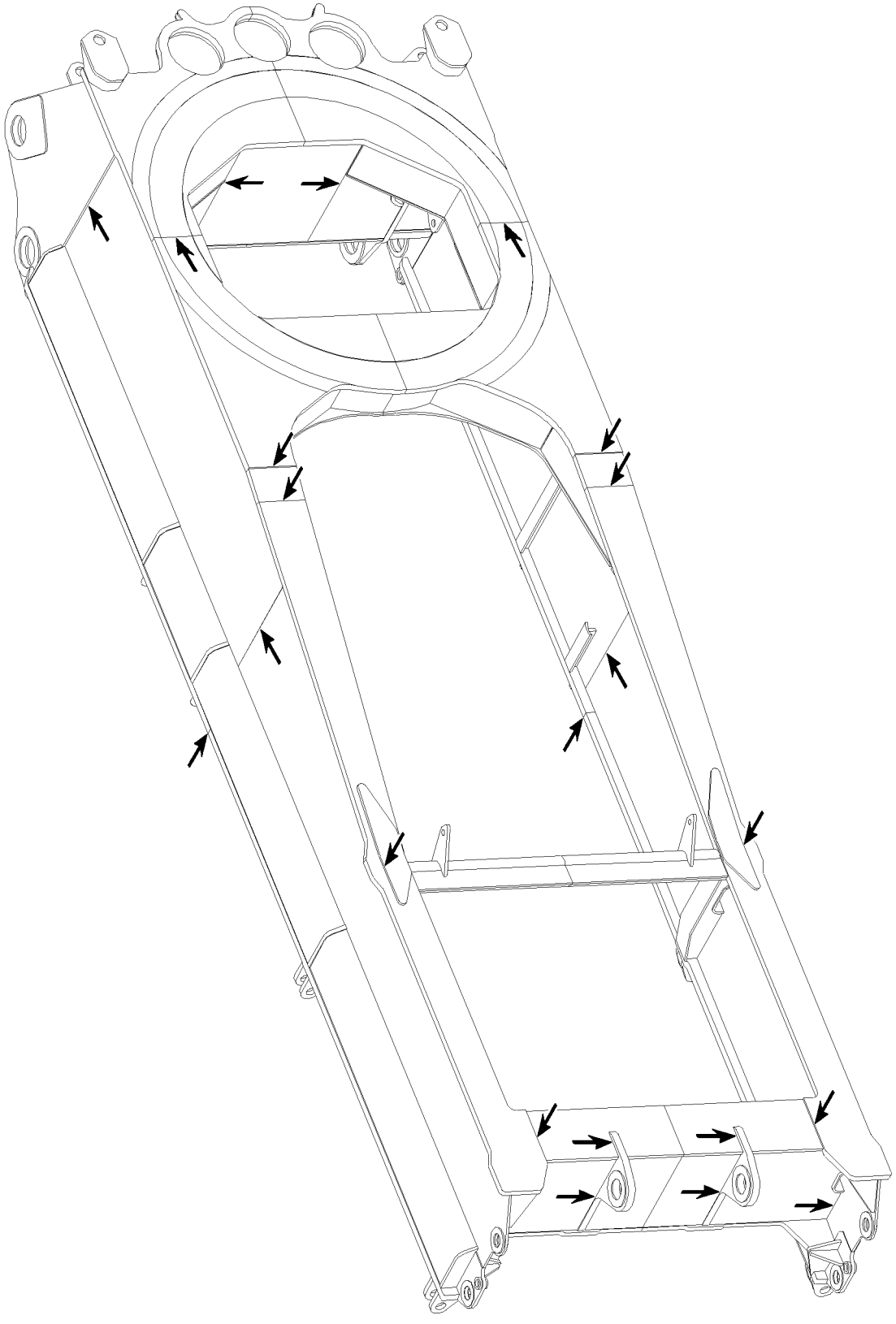

B105696 *Example for turntable frame*

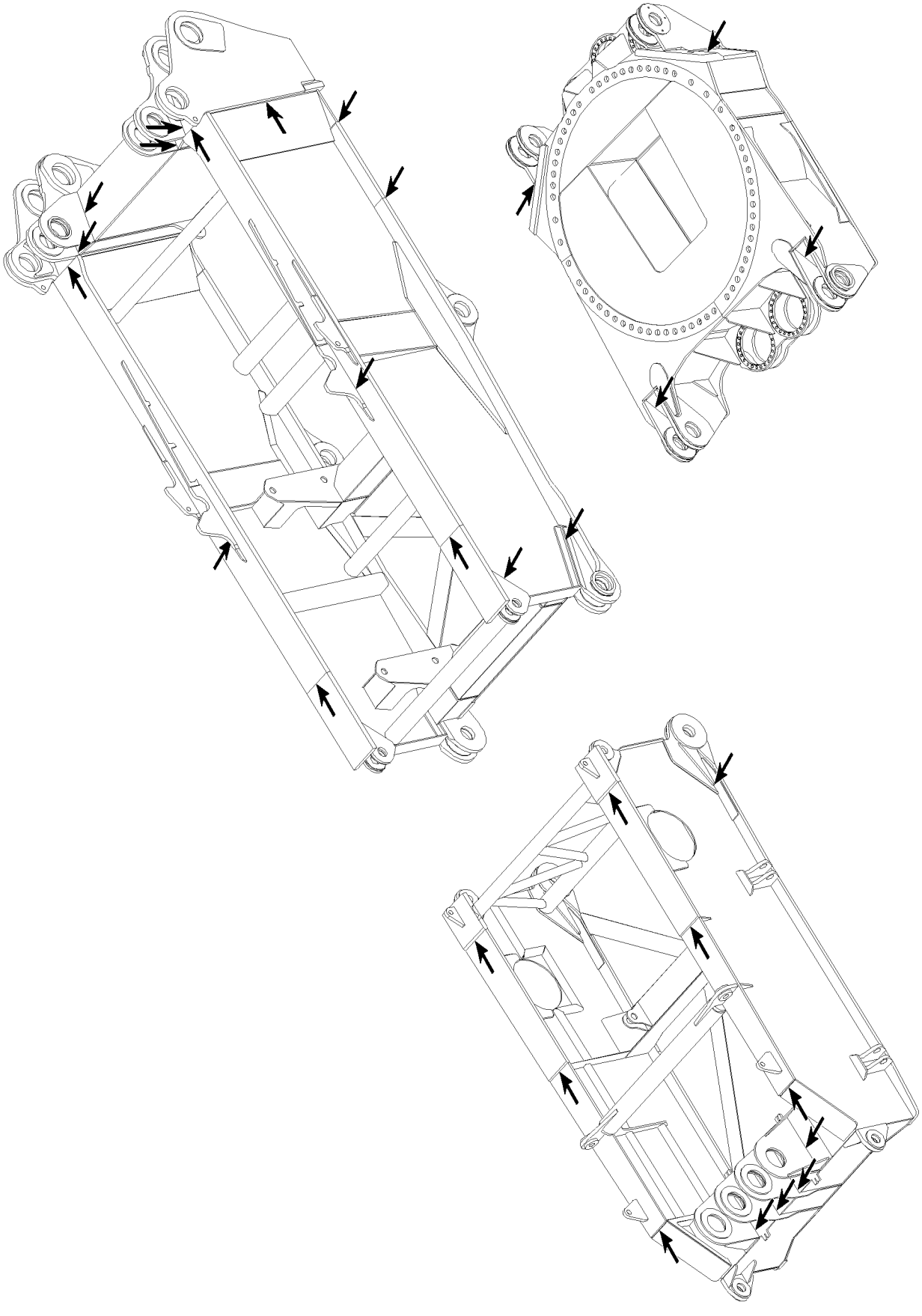

B105691

Example for turntable frame

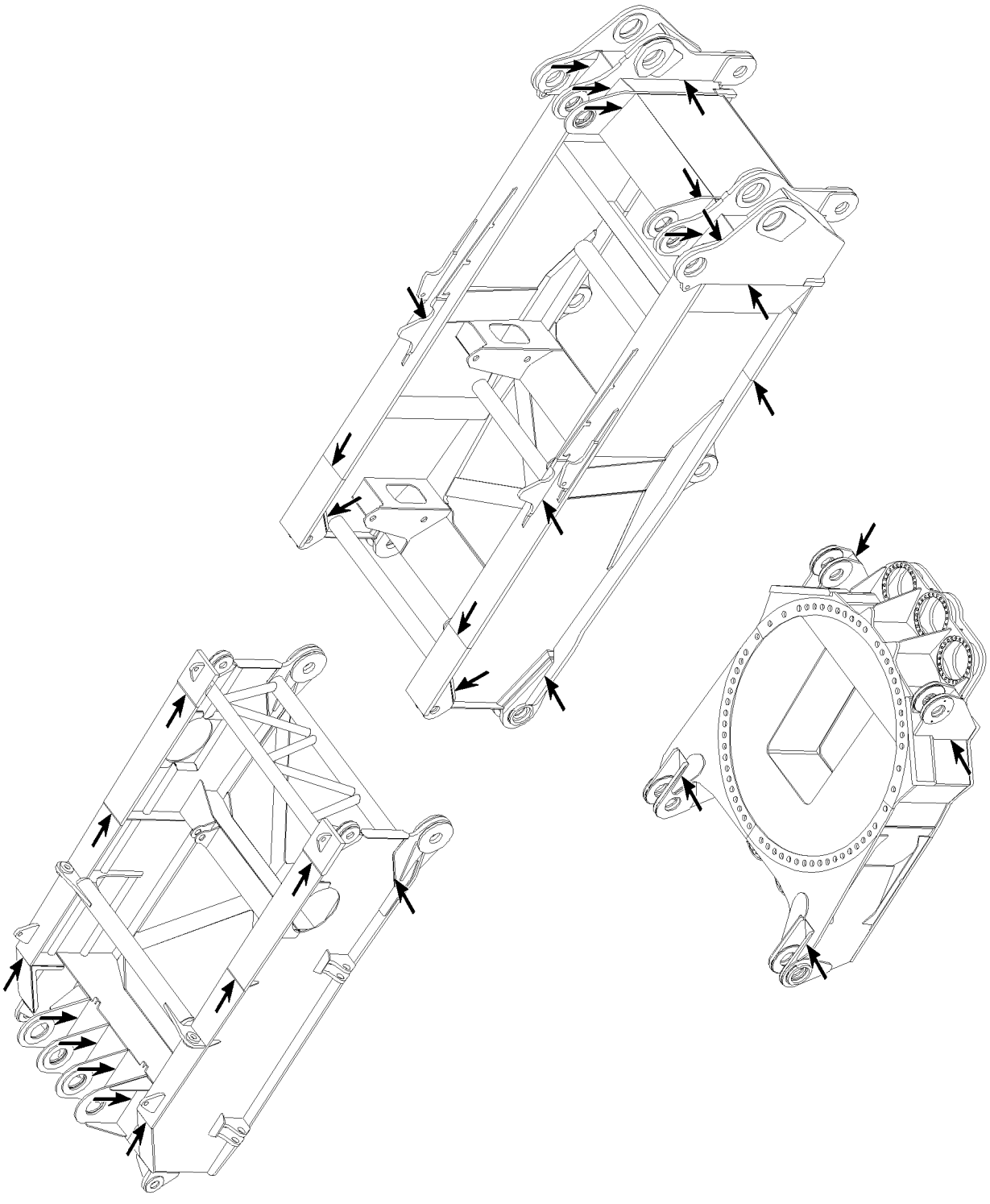

B105692 *Example for turntable frame*

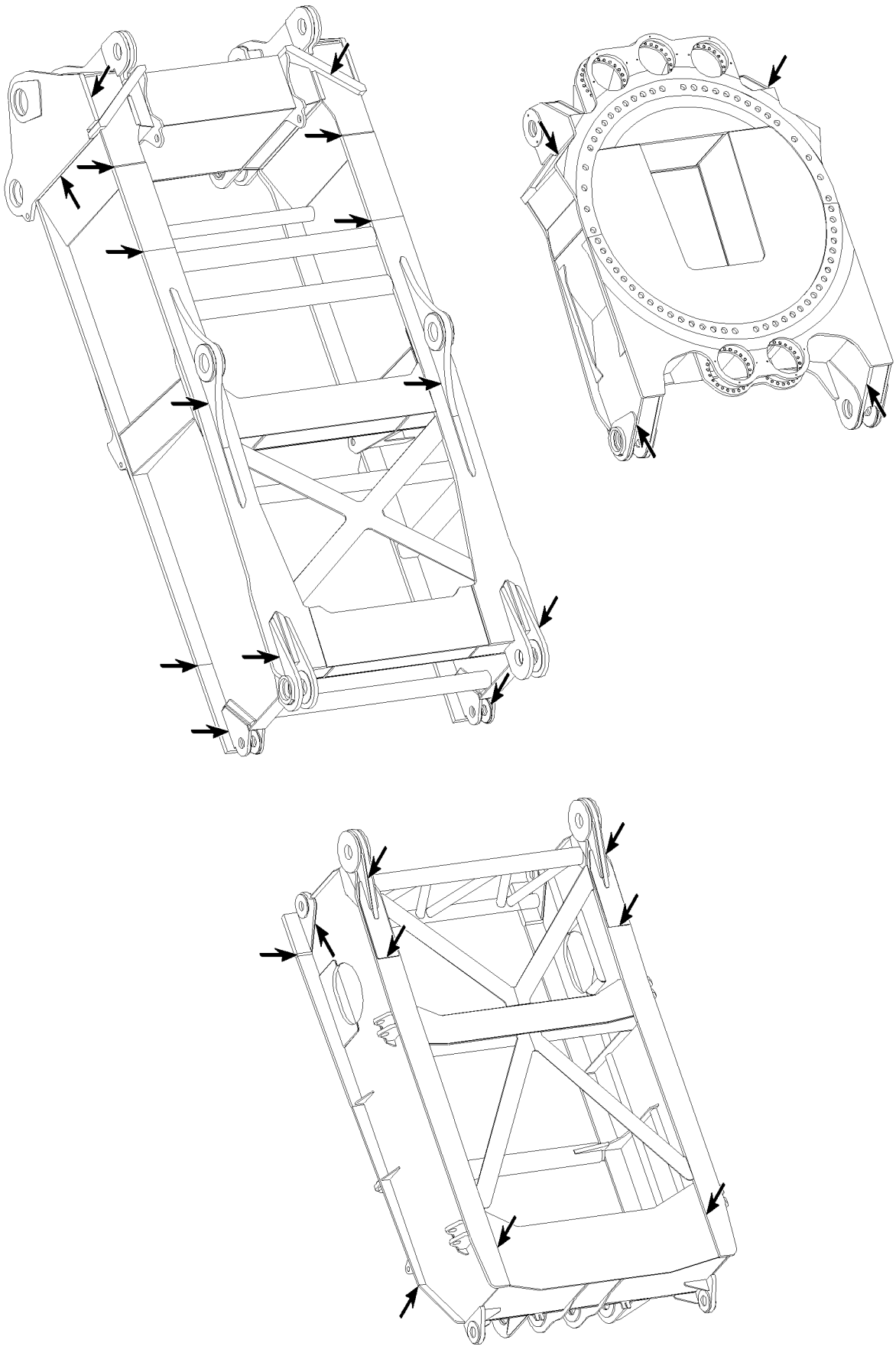

B105693

Example for turntable frame

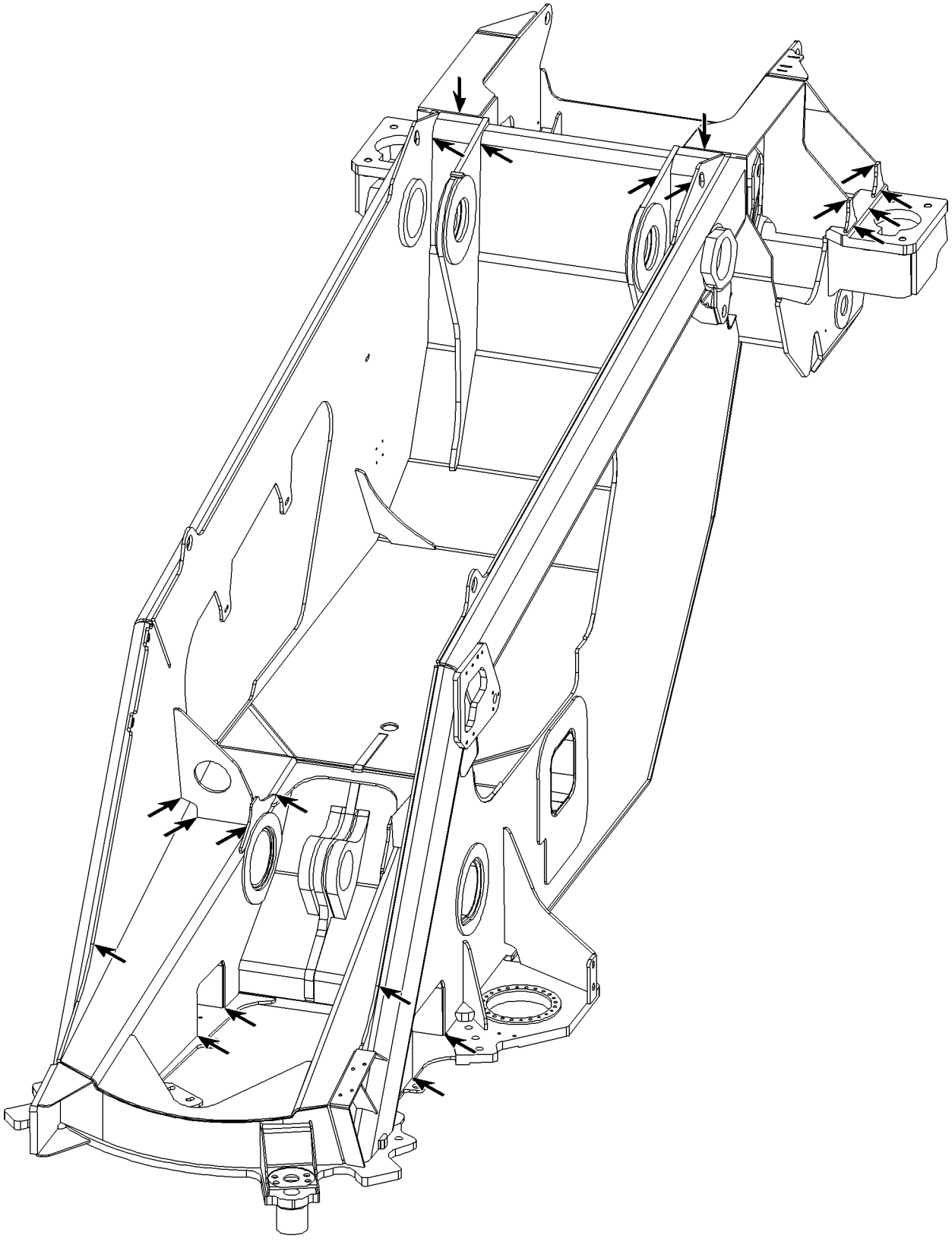

B105722

Example for turntable frame

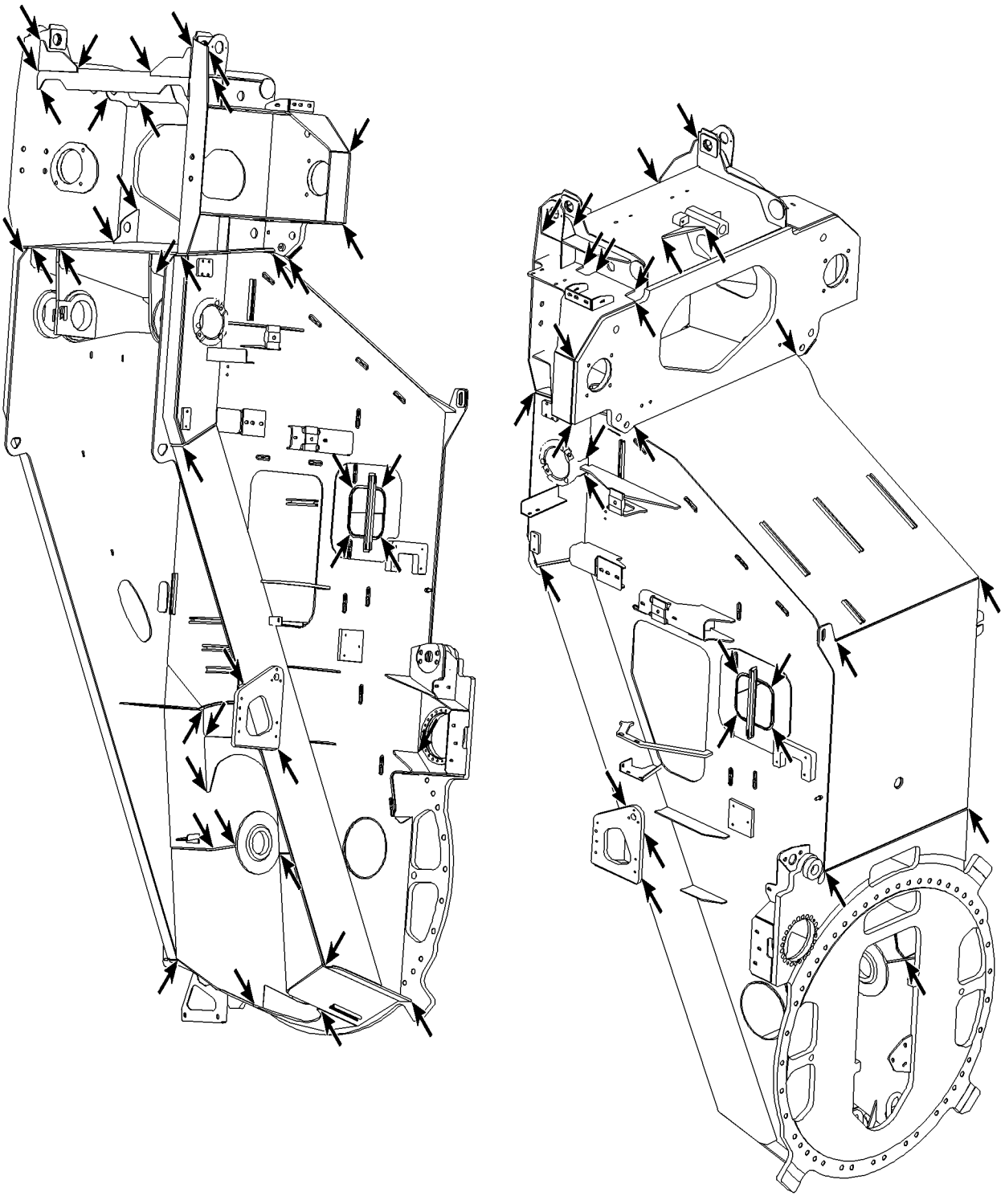

B105932 *Example for turntable frame*

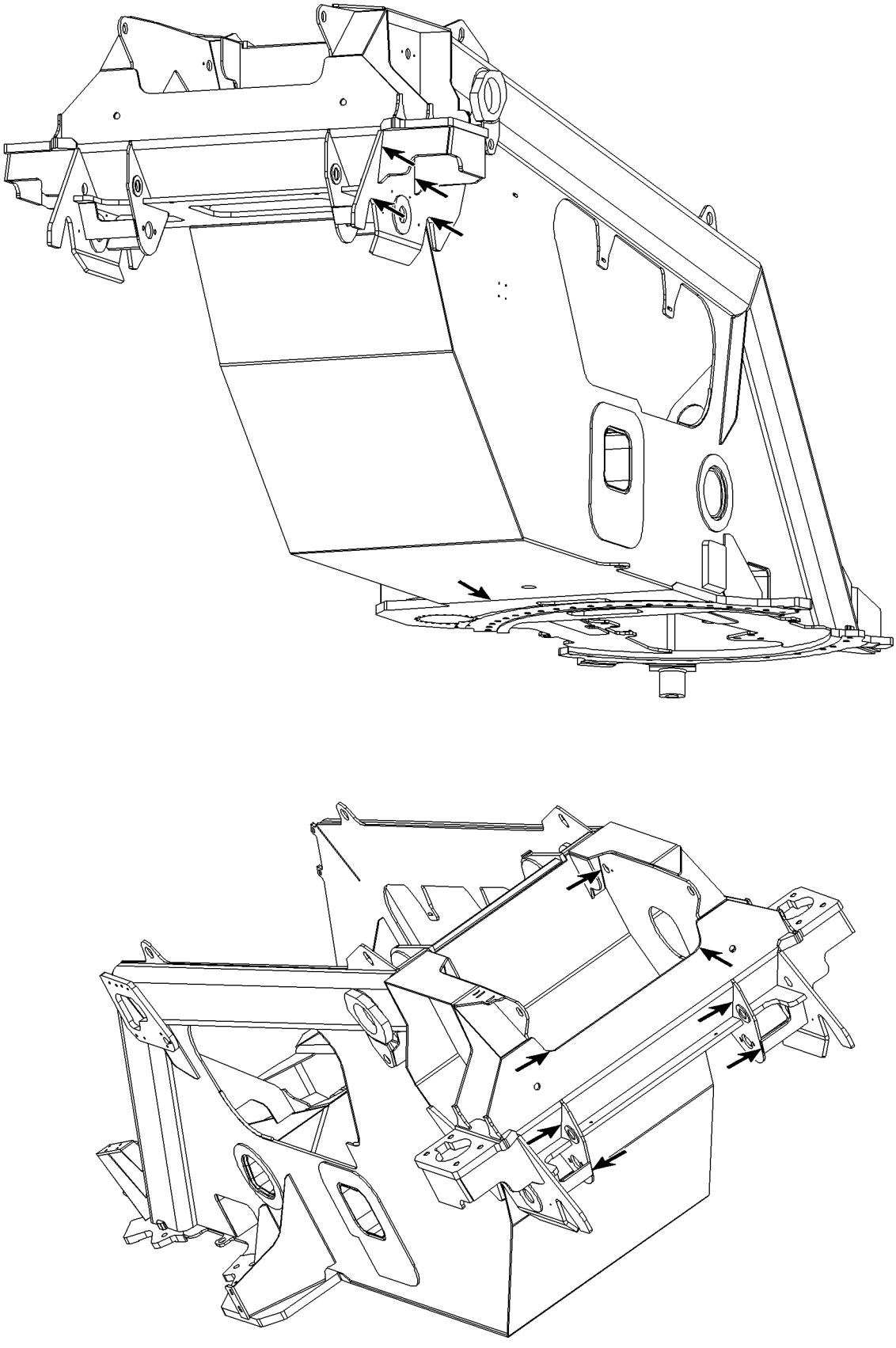

B105723

Example for turntable frame

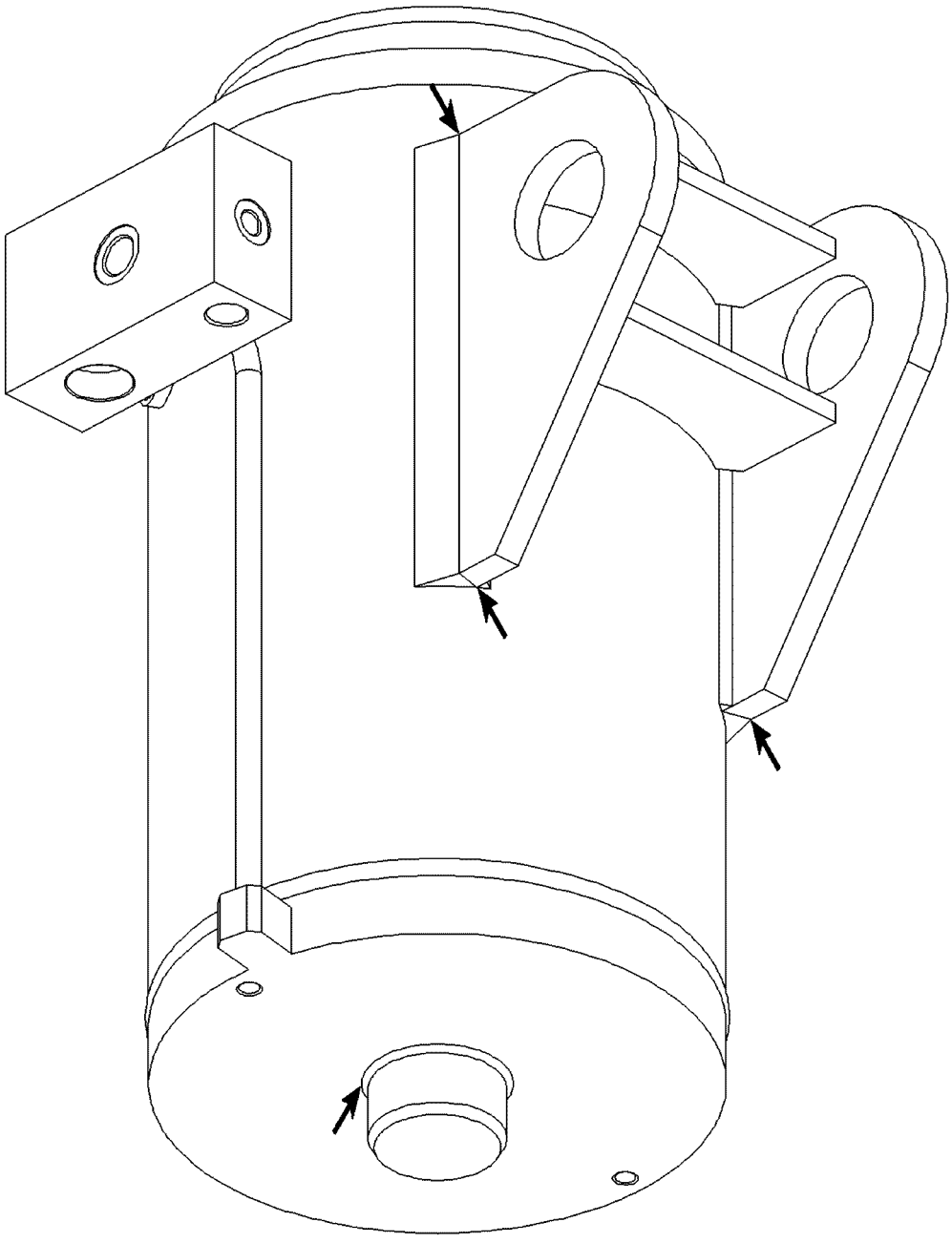

B105801 *Example for ballasting cylinder*

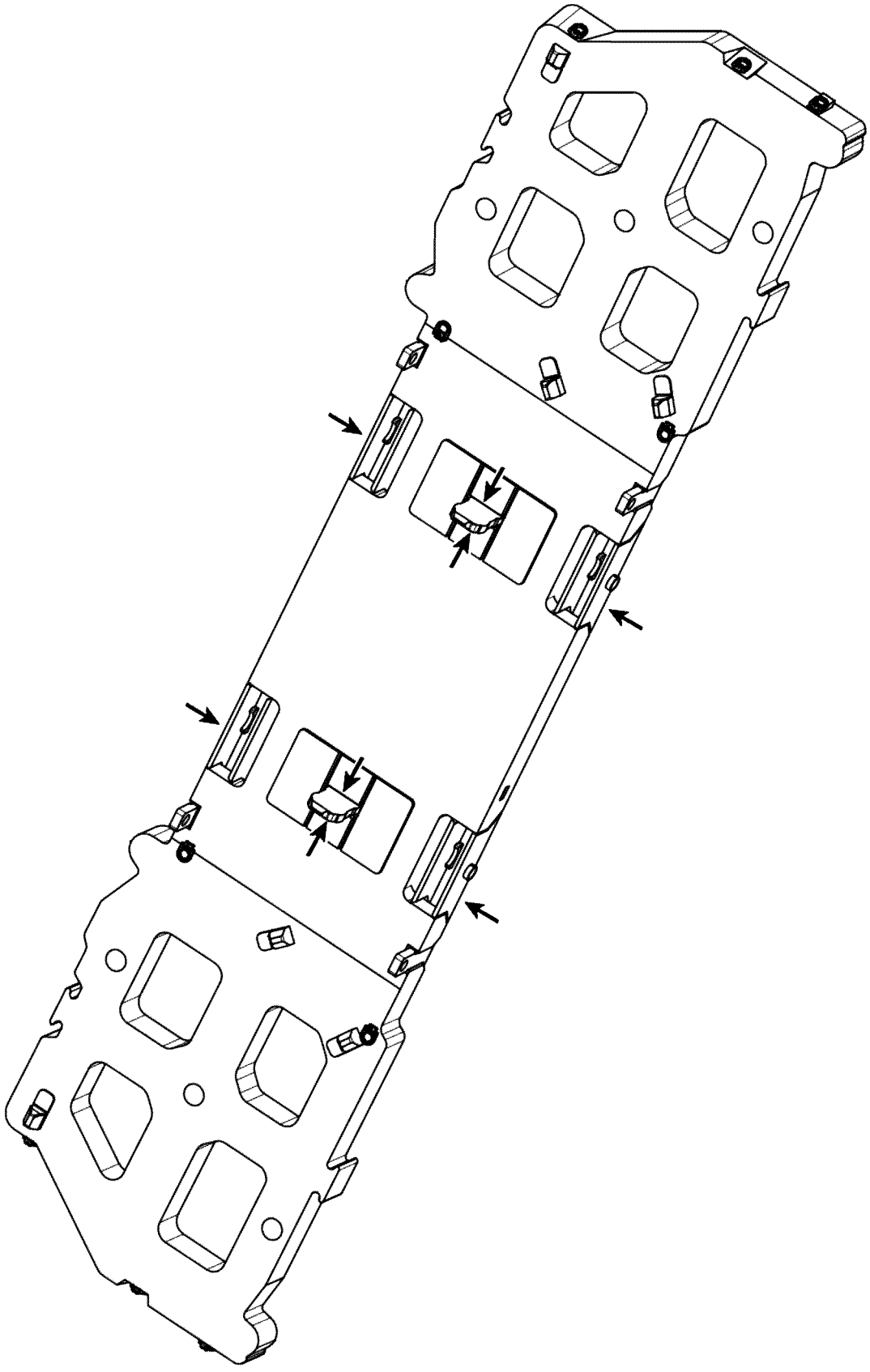

B105705

Example for mounting plate

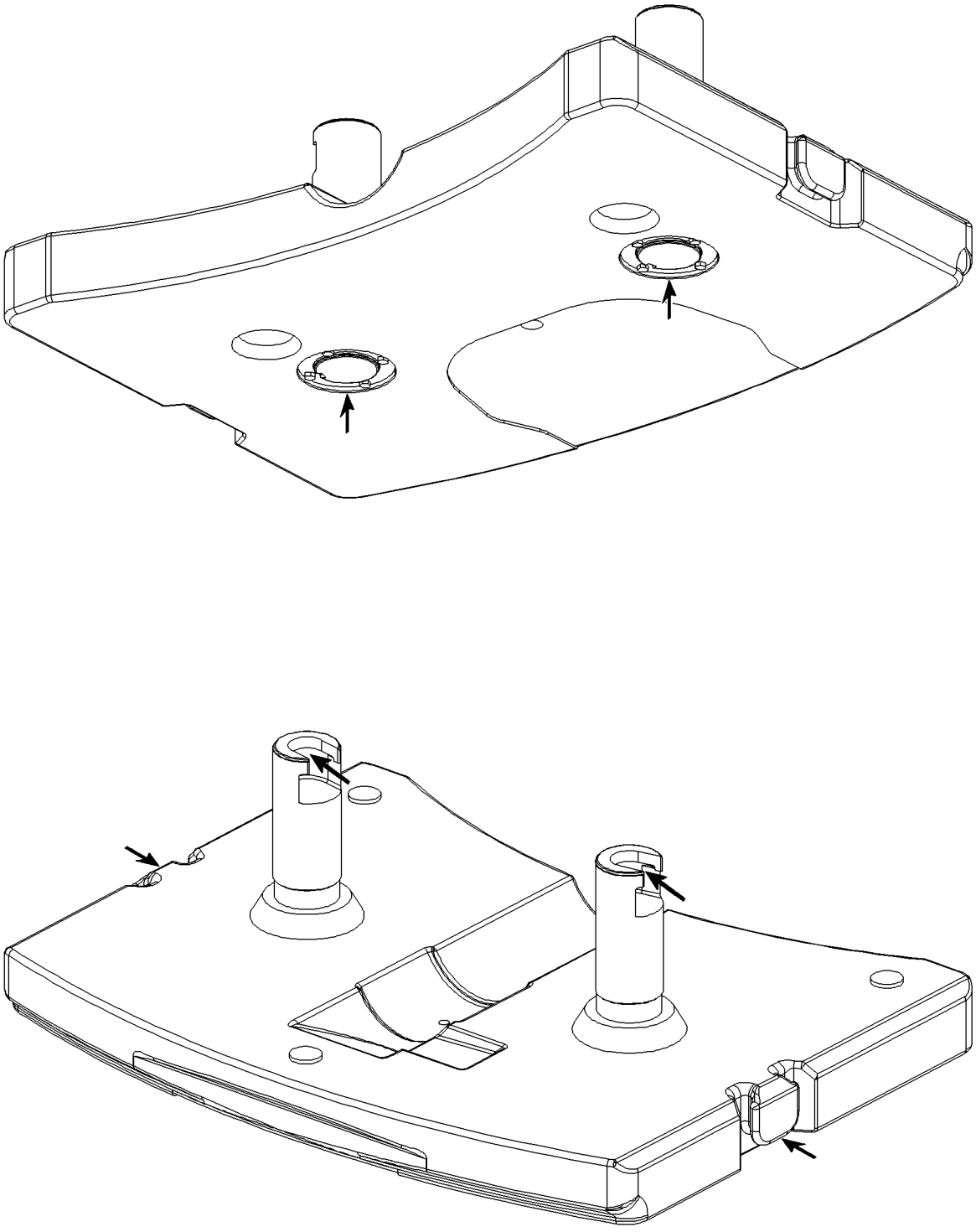

B105807

Example for base plate

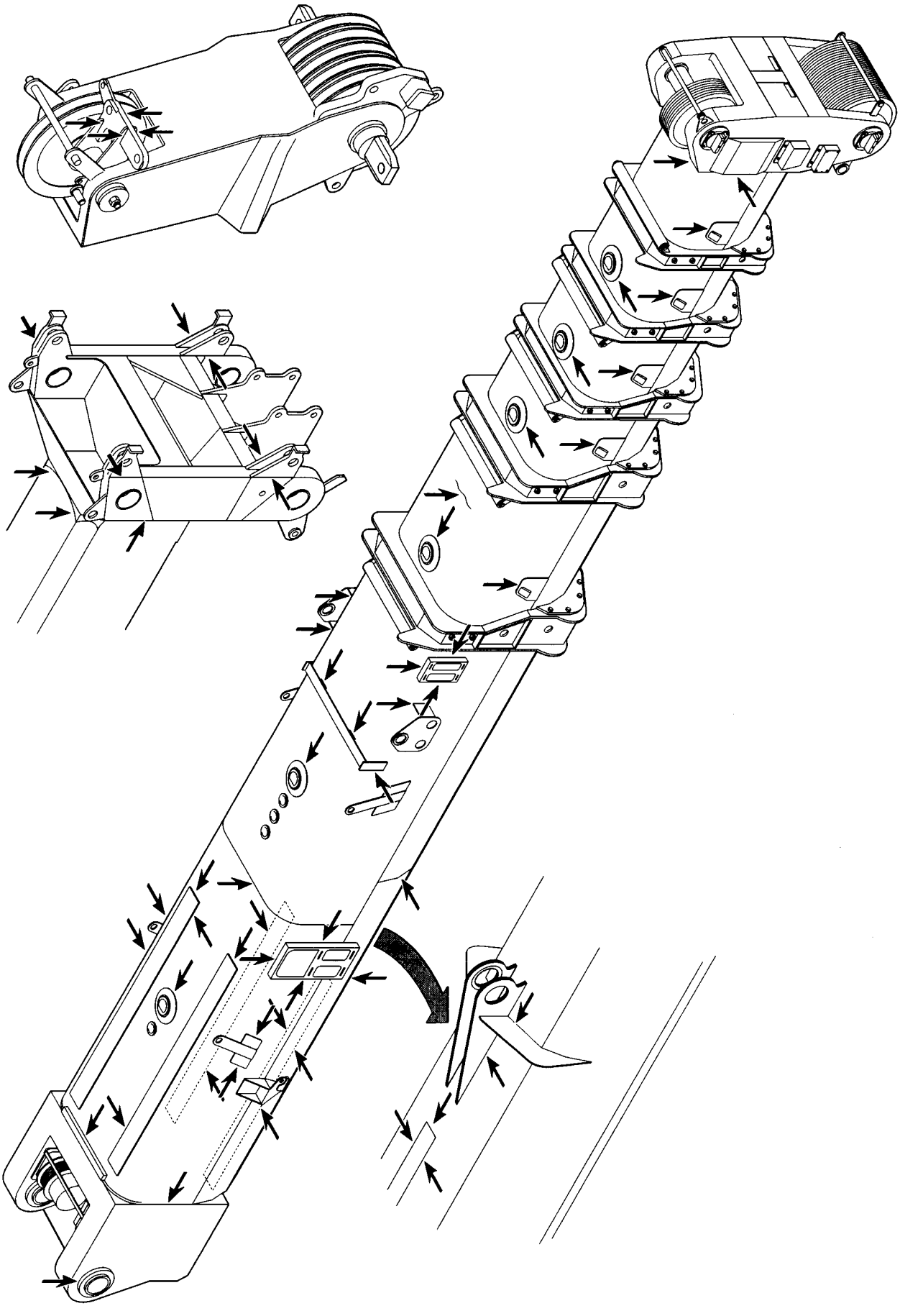

B185050

Example for telescopic boom

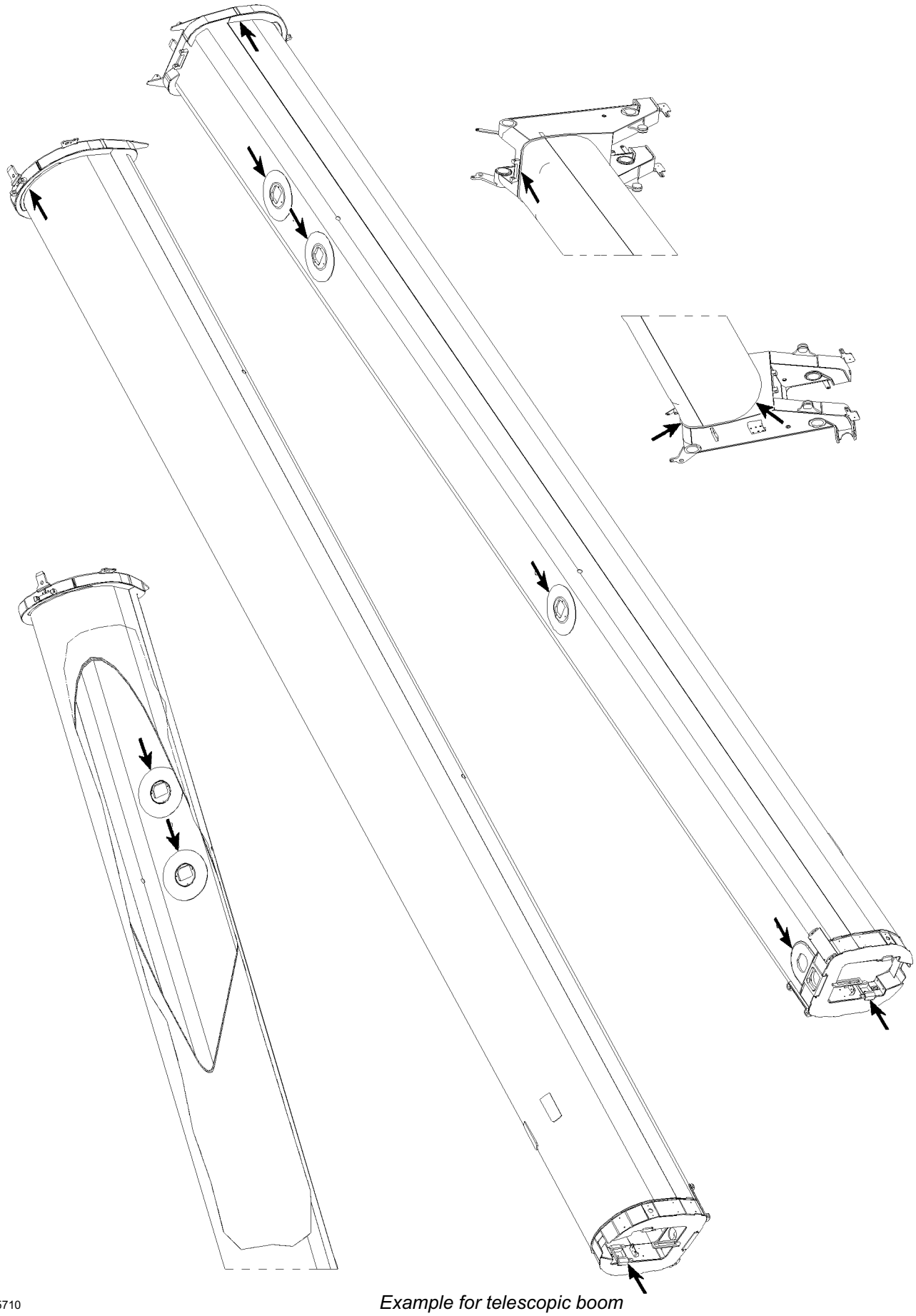

B105710

Example for telescopic boom

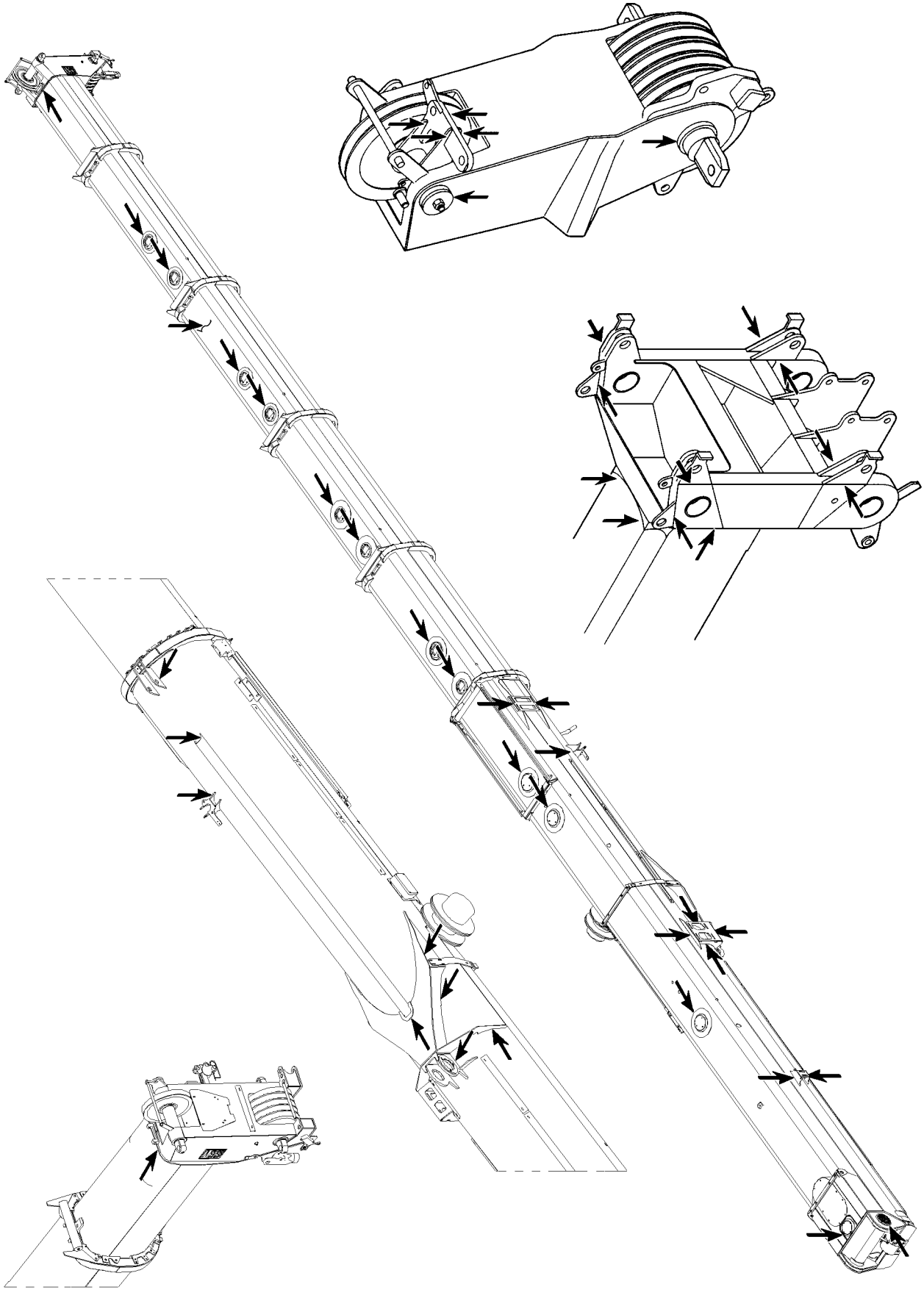

B105711

Example for telescopic boom

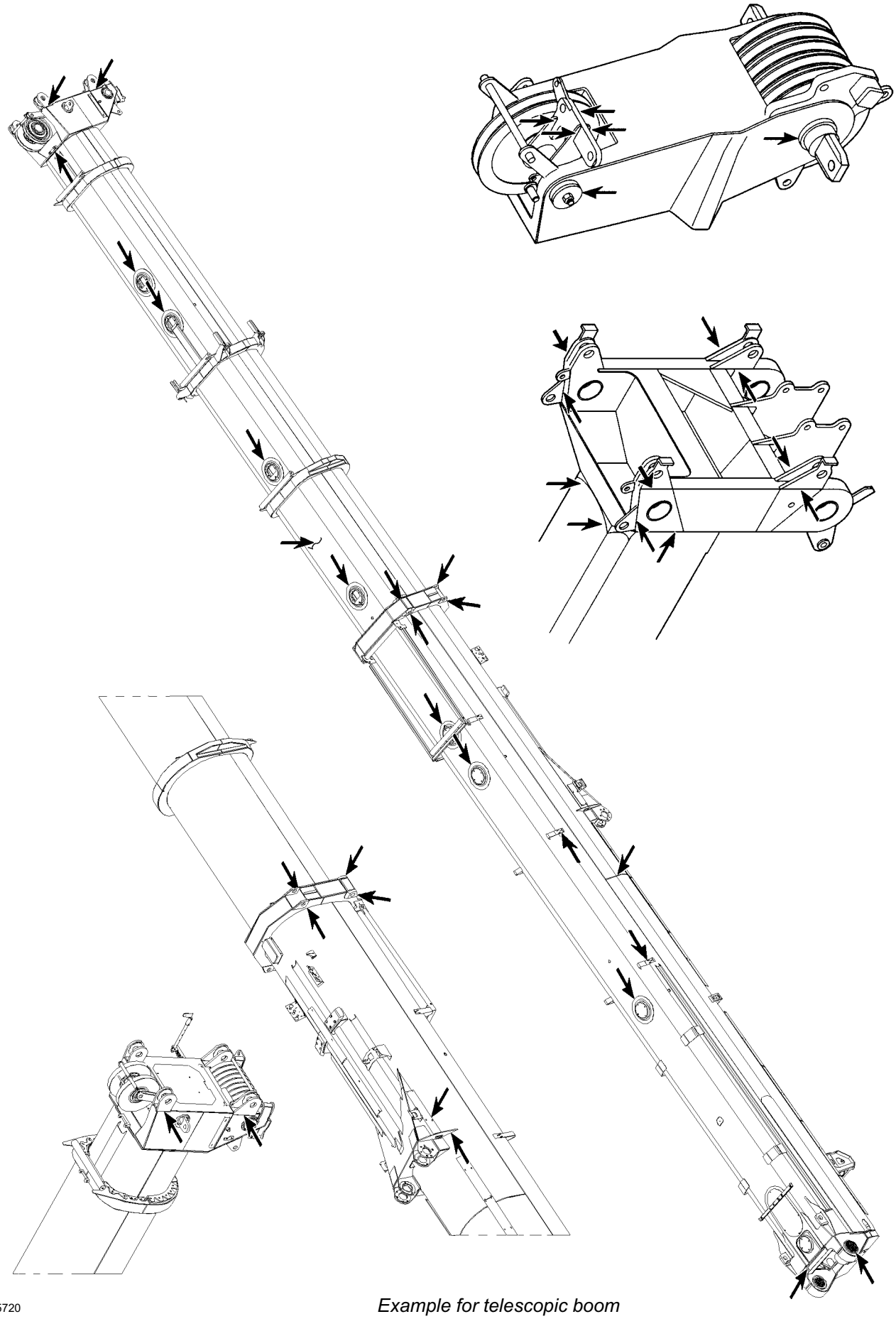

B105720

Example for telescopic boom

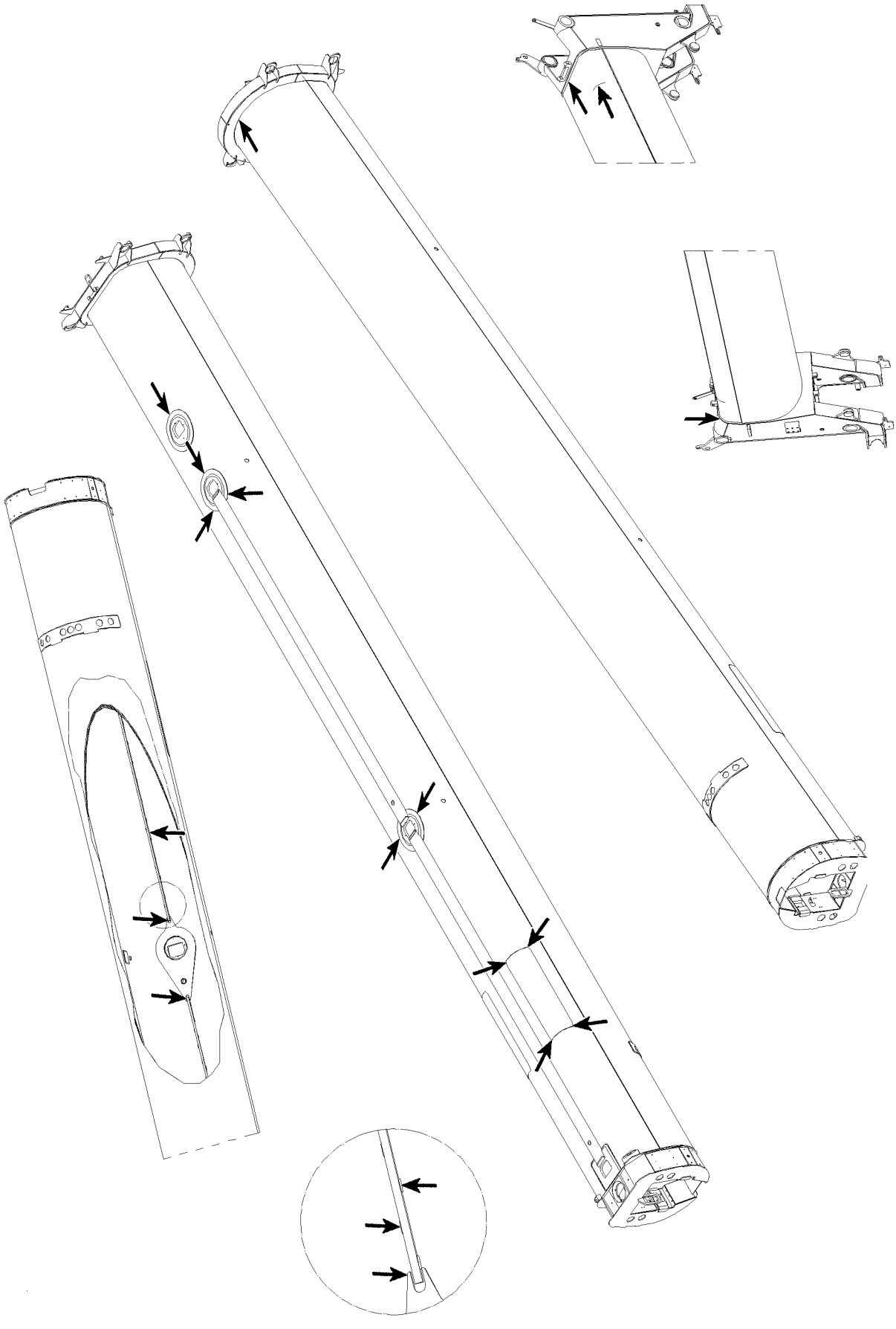

B105721

Example for telescopic boom

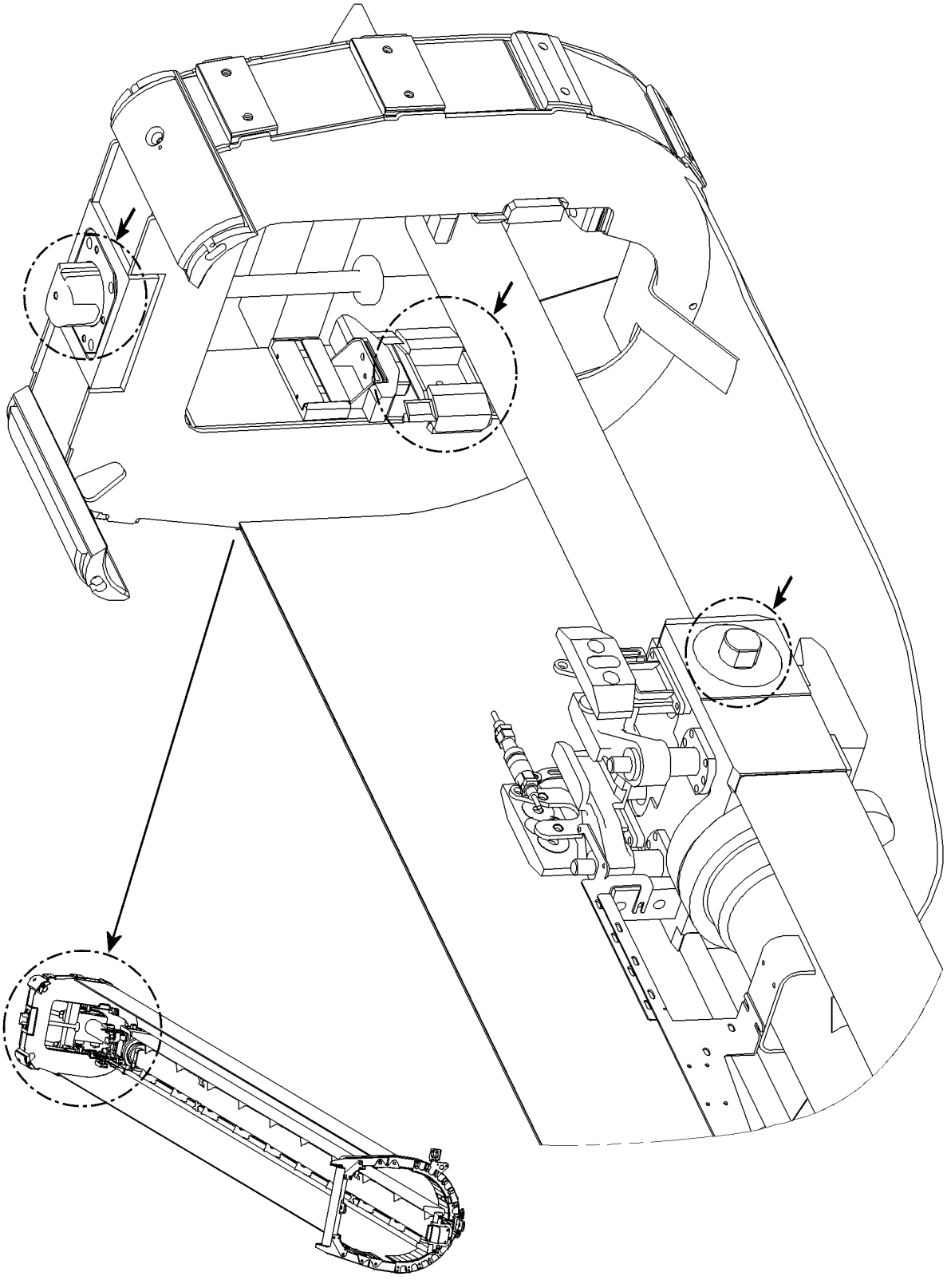

B105891 *Example for push out mechanics telescopic boom*

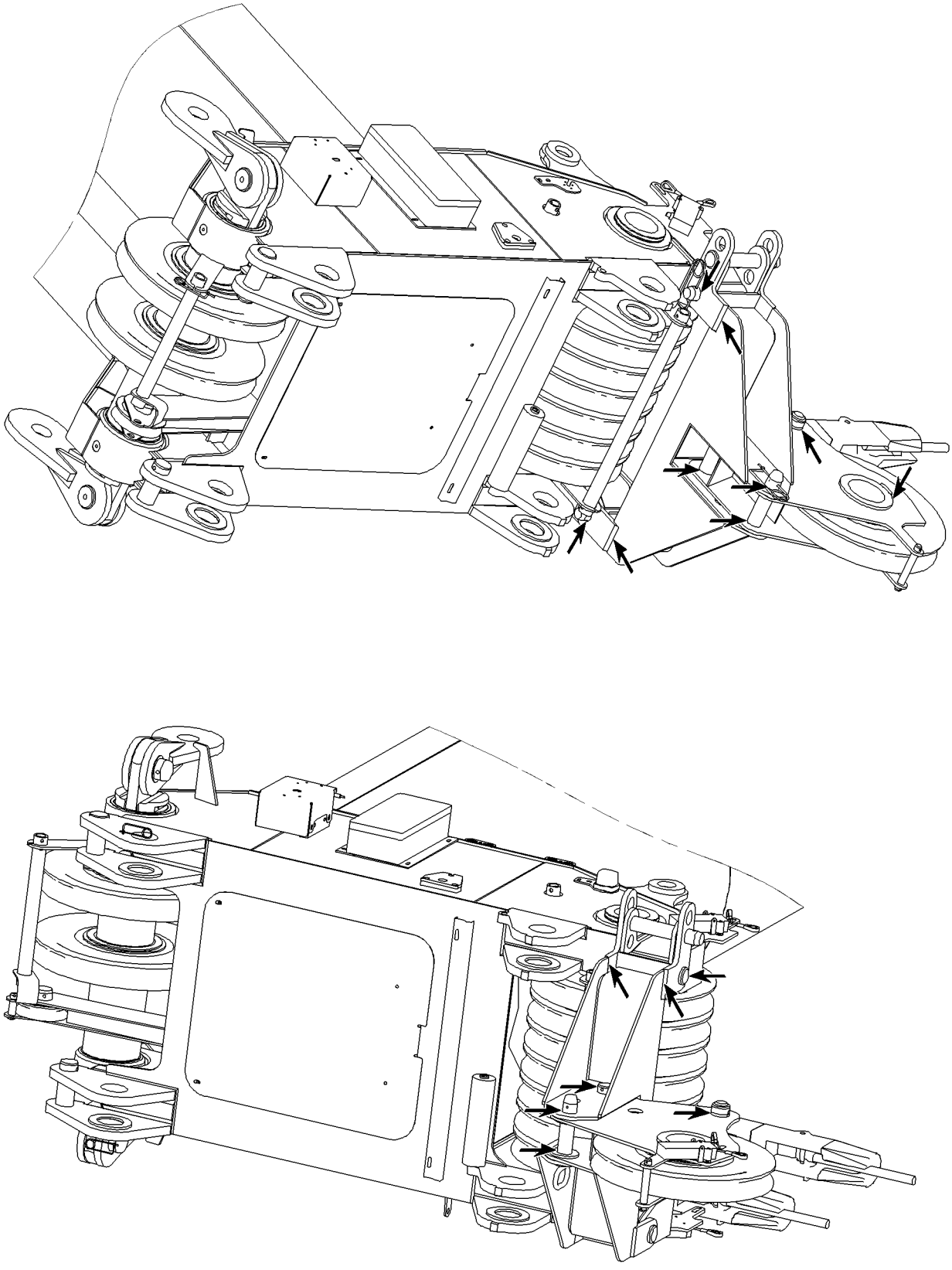

B105892 *Example for boom nose*

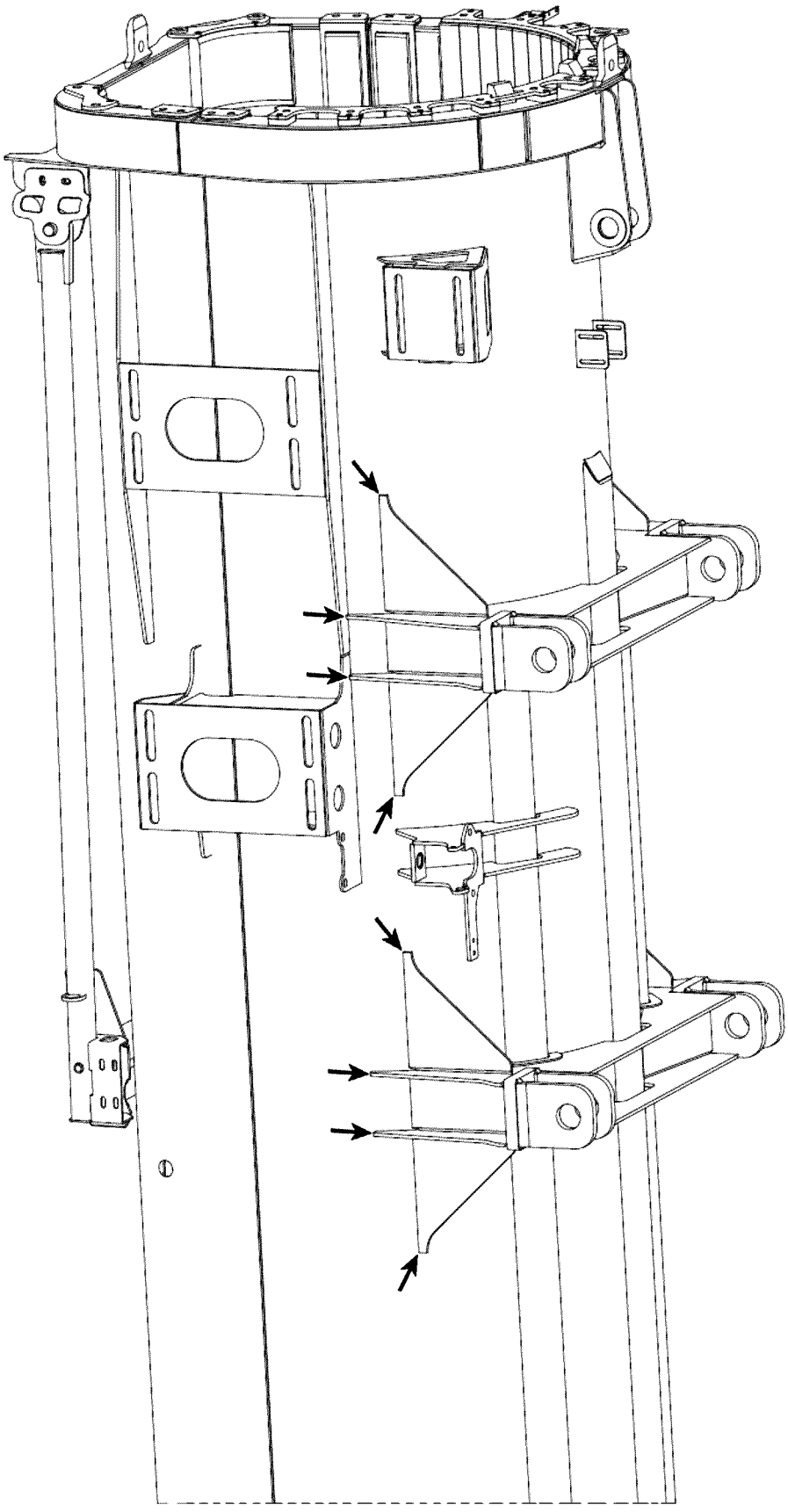

B105689

Example for dolly console

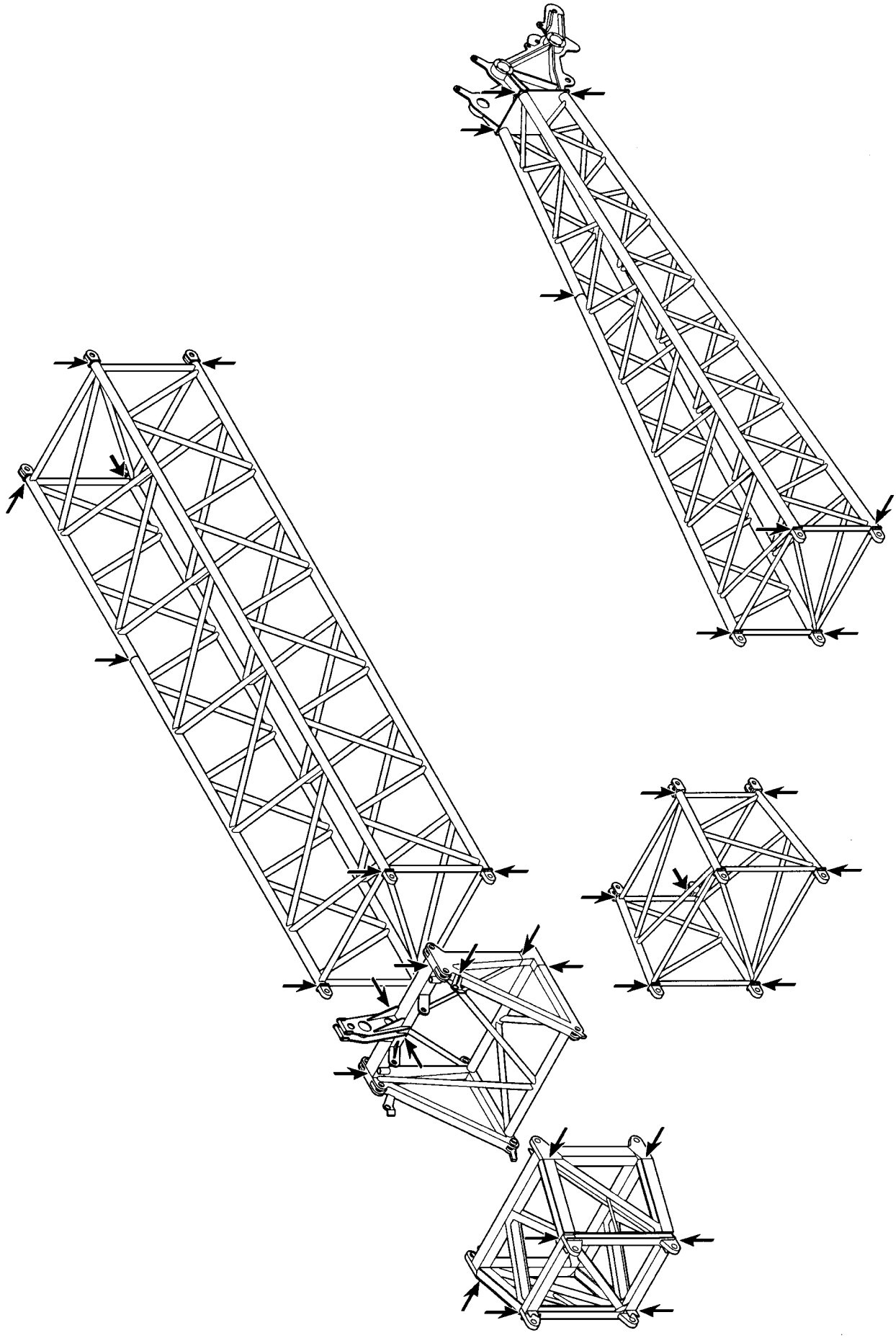

B185051

Example for lattice jib

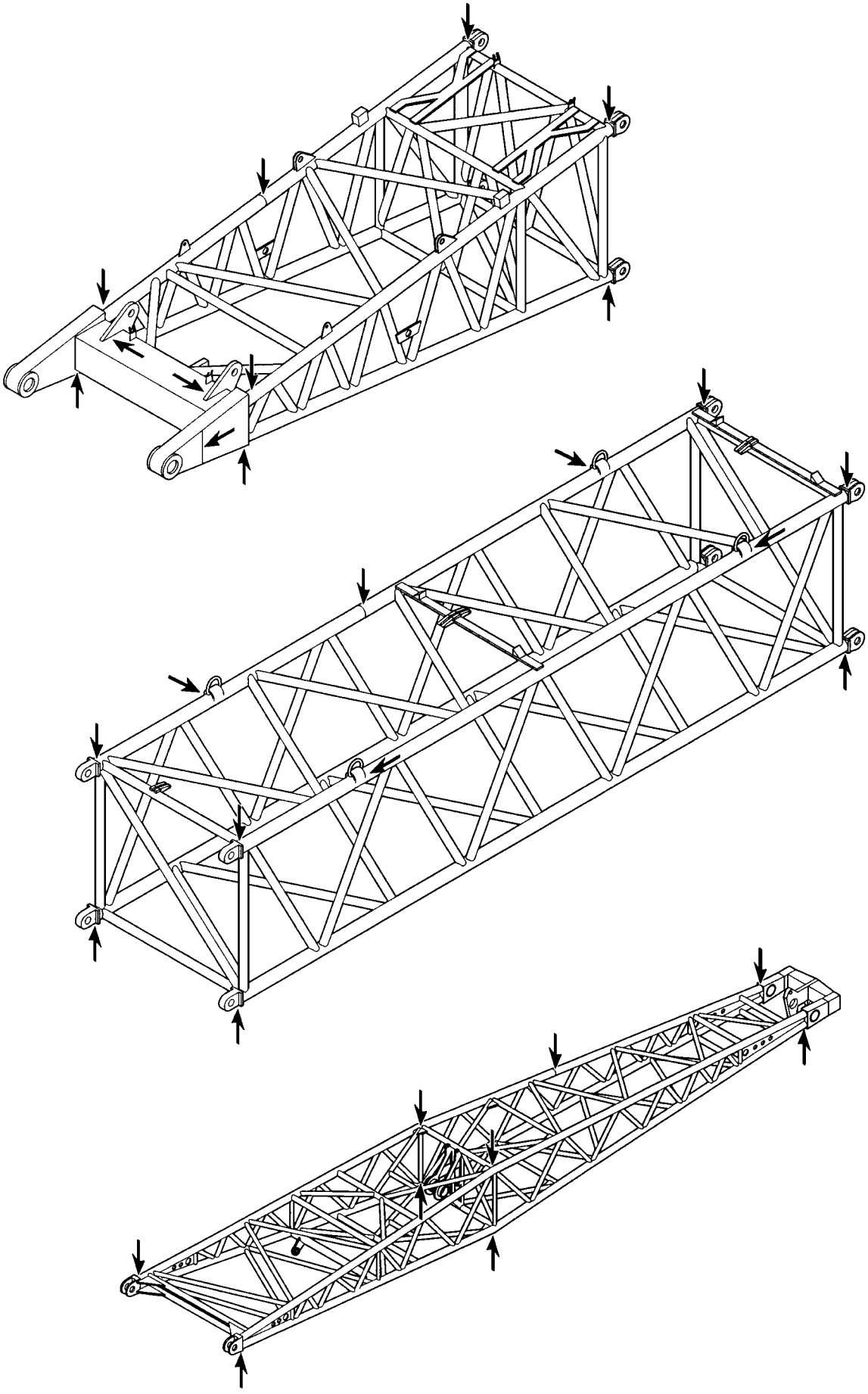

B185052

Example for NA / WA-frame

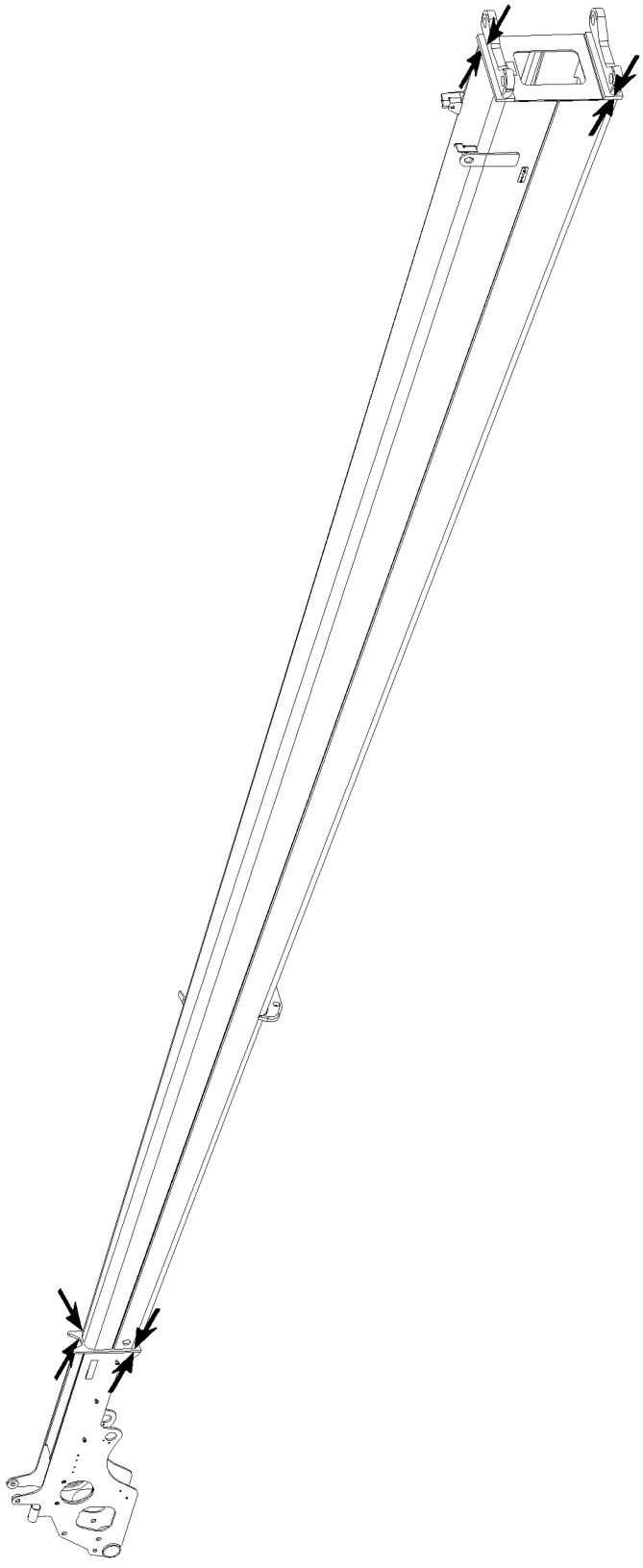

B105713

Example for end section

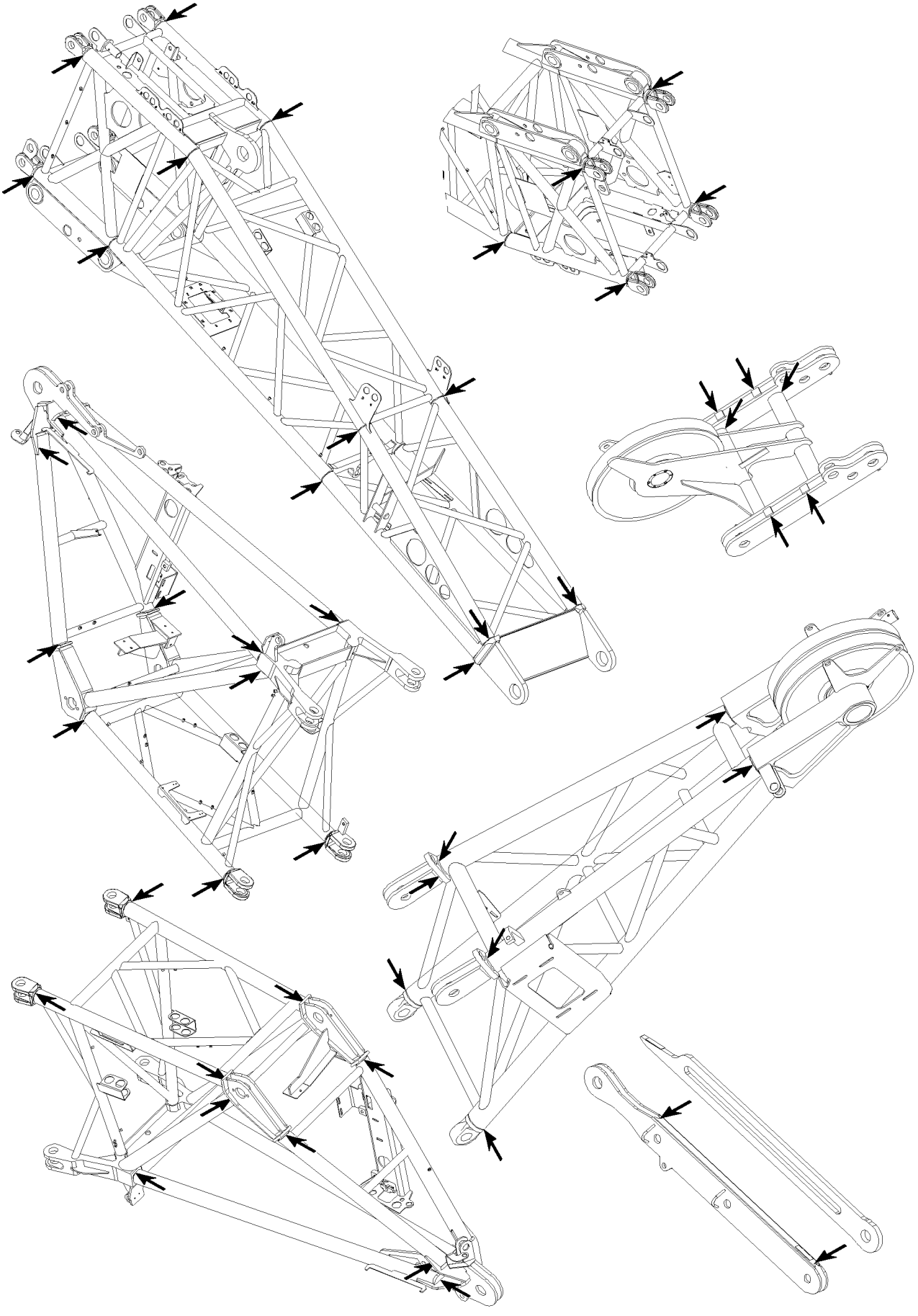

B105836

Example for pivot section, adapter and boom nose

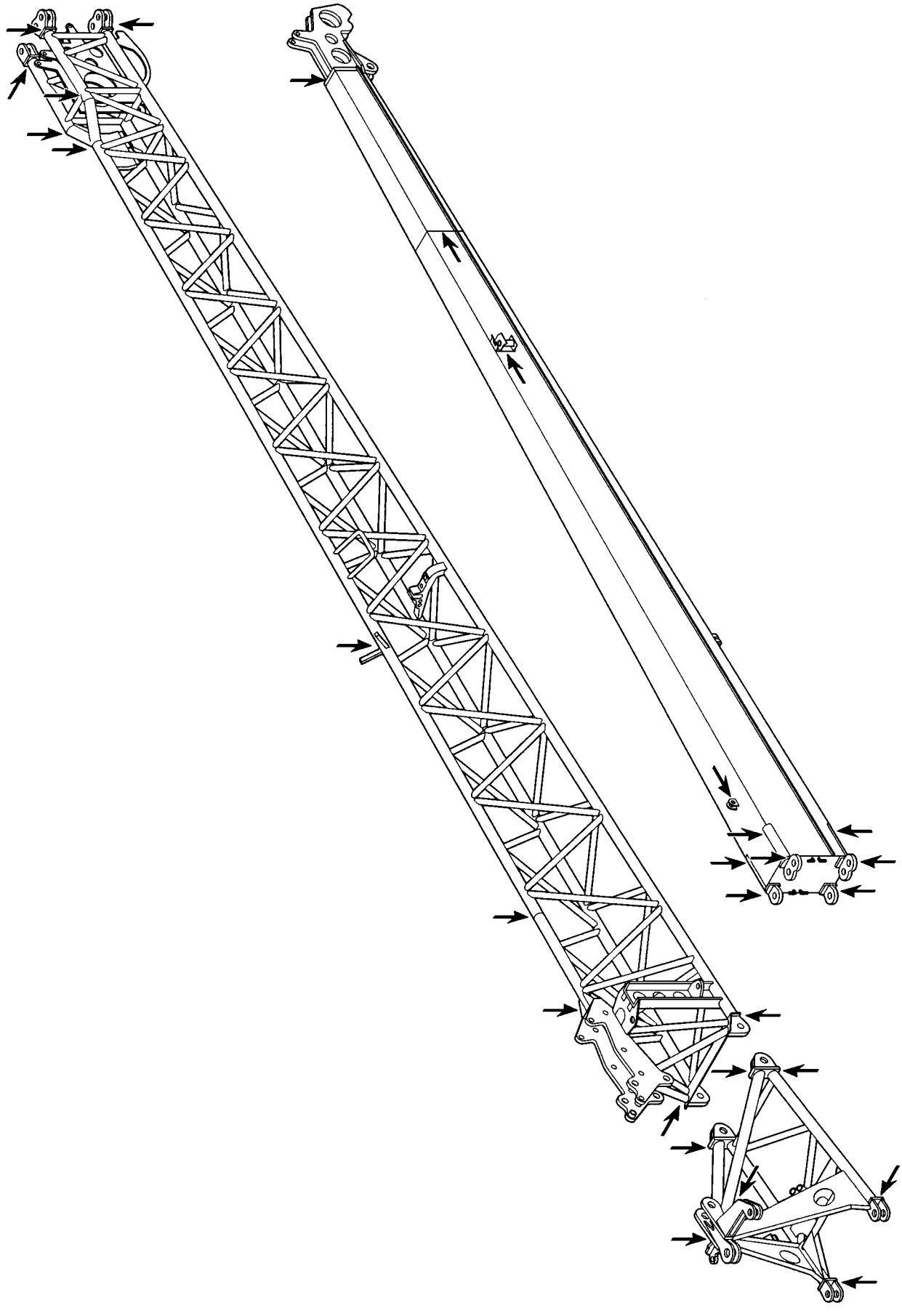

B185058

Example for folding jib

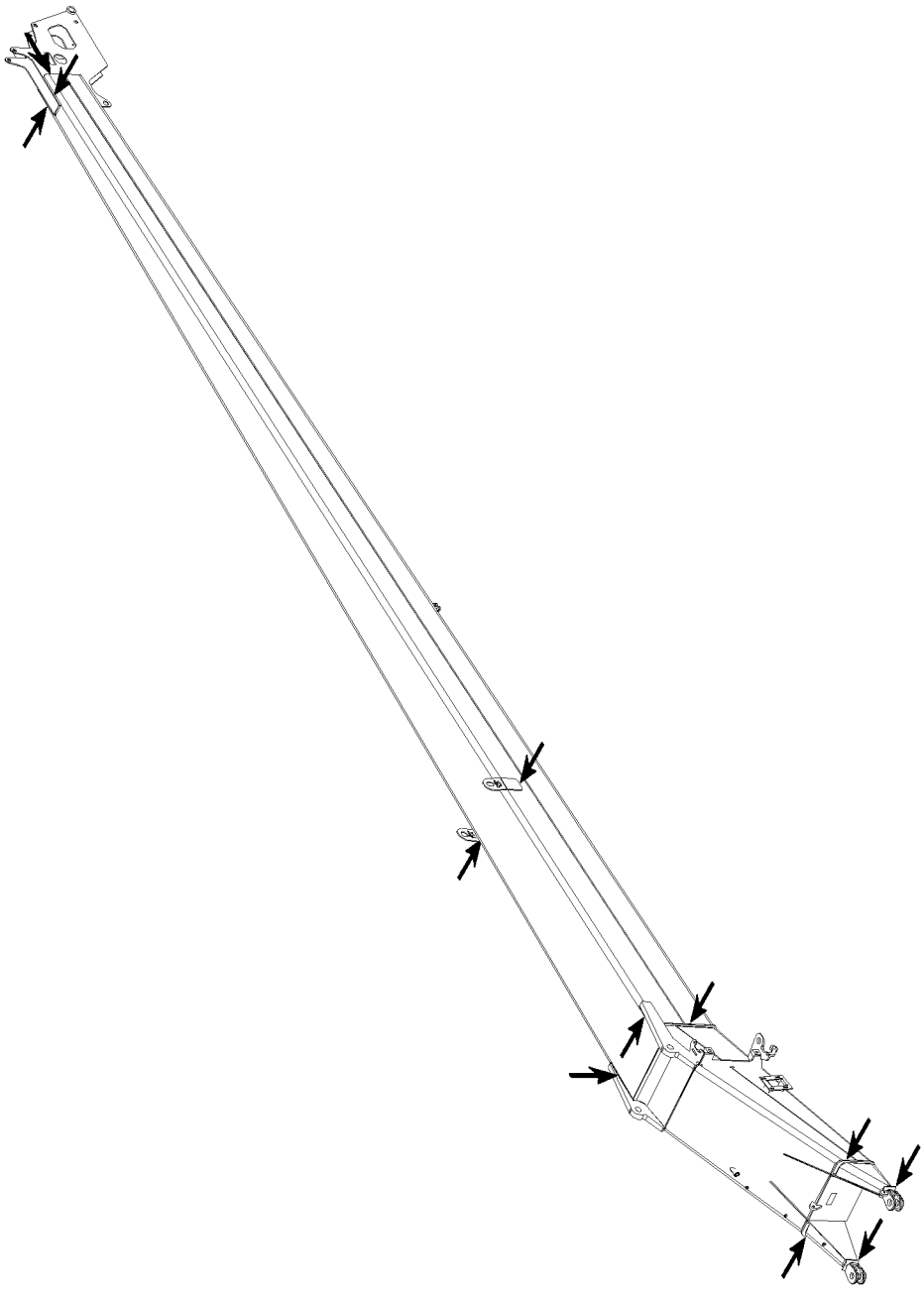

B105697

Example for folding jib

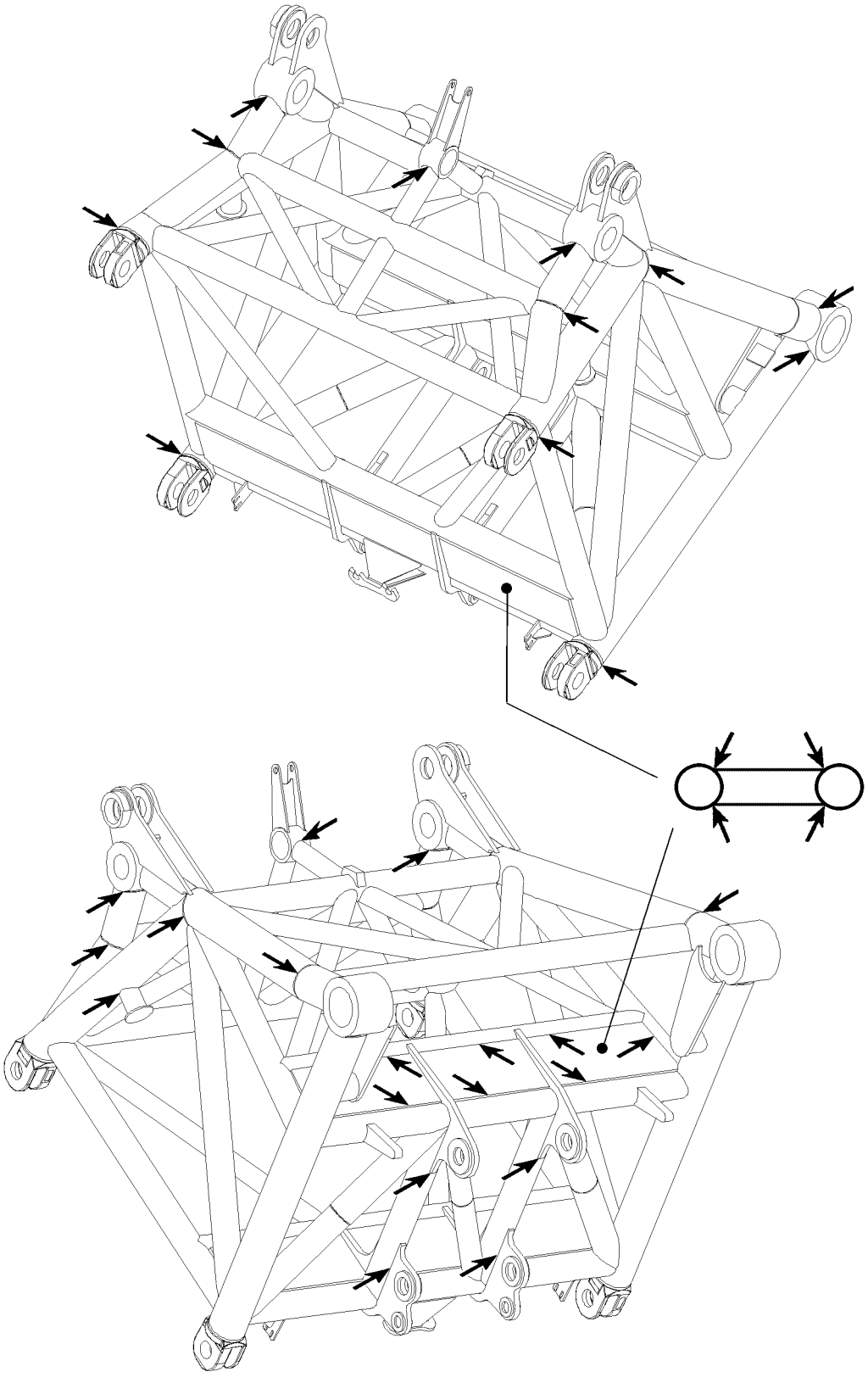

B105732

Example for W-connector head

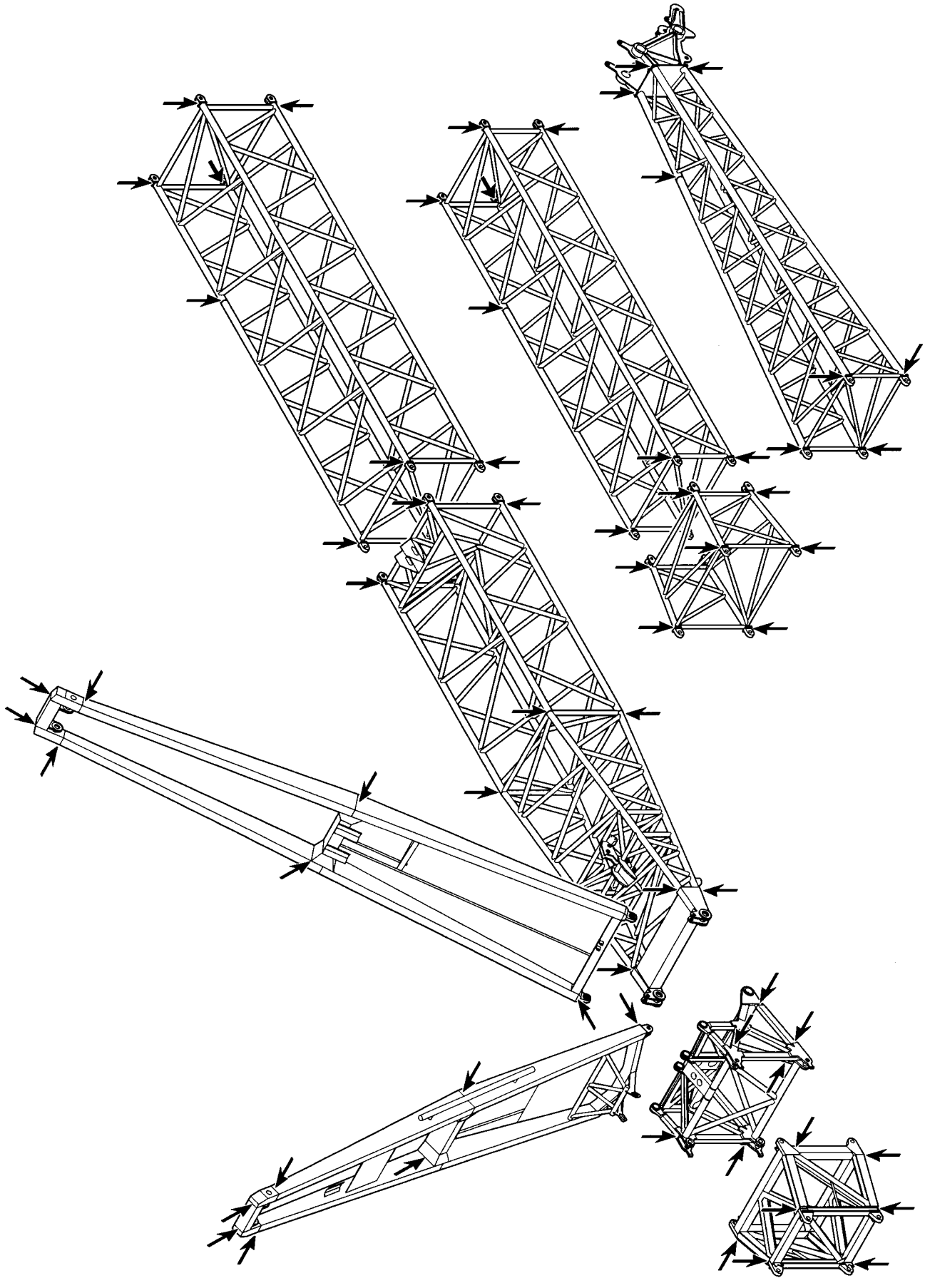

B185053

Example for assembly unit with lattice jib

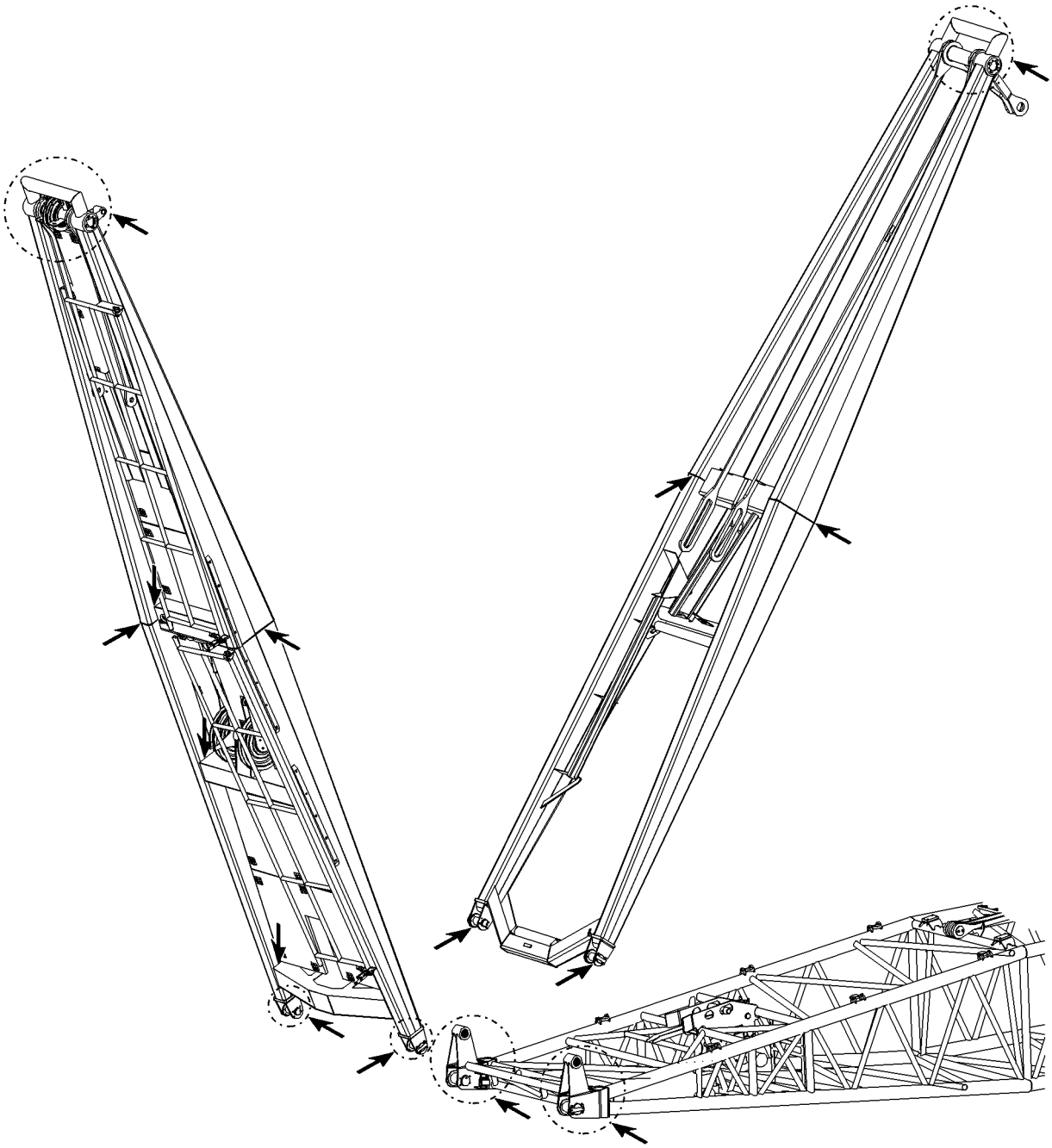

B105838

Example for NA frames

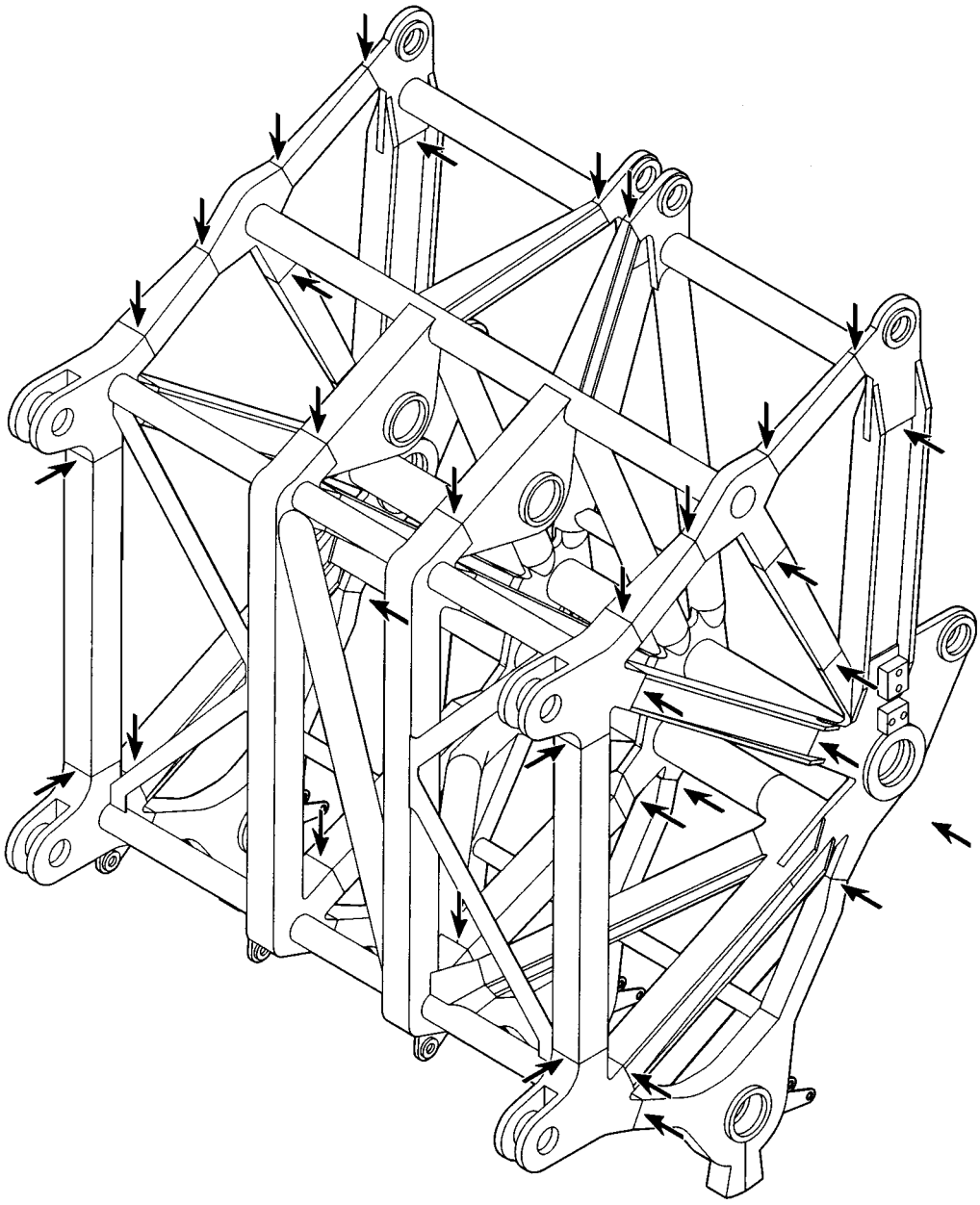

B185054 *Example for pulley head*

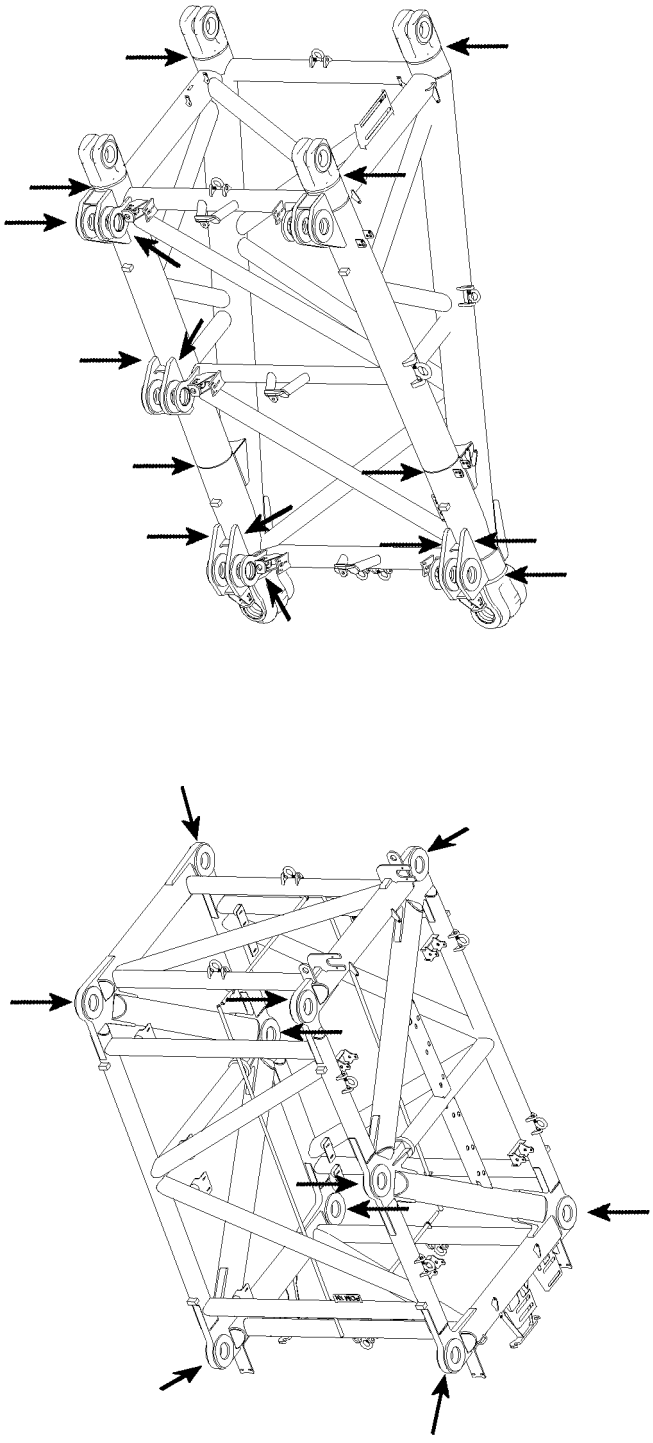

B116609 *Example for P-adapter*

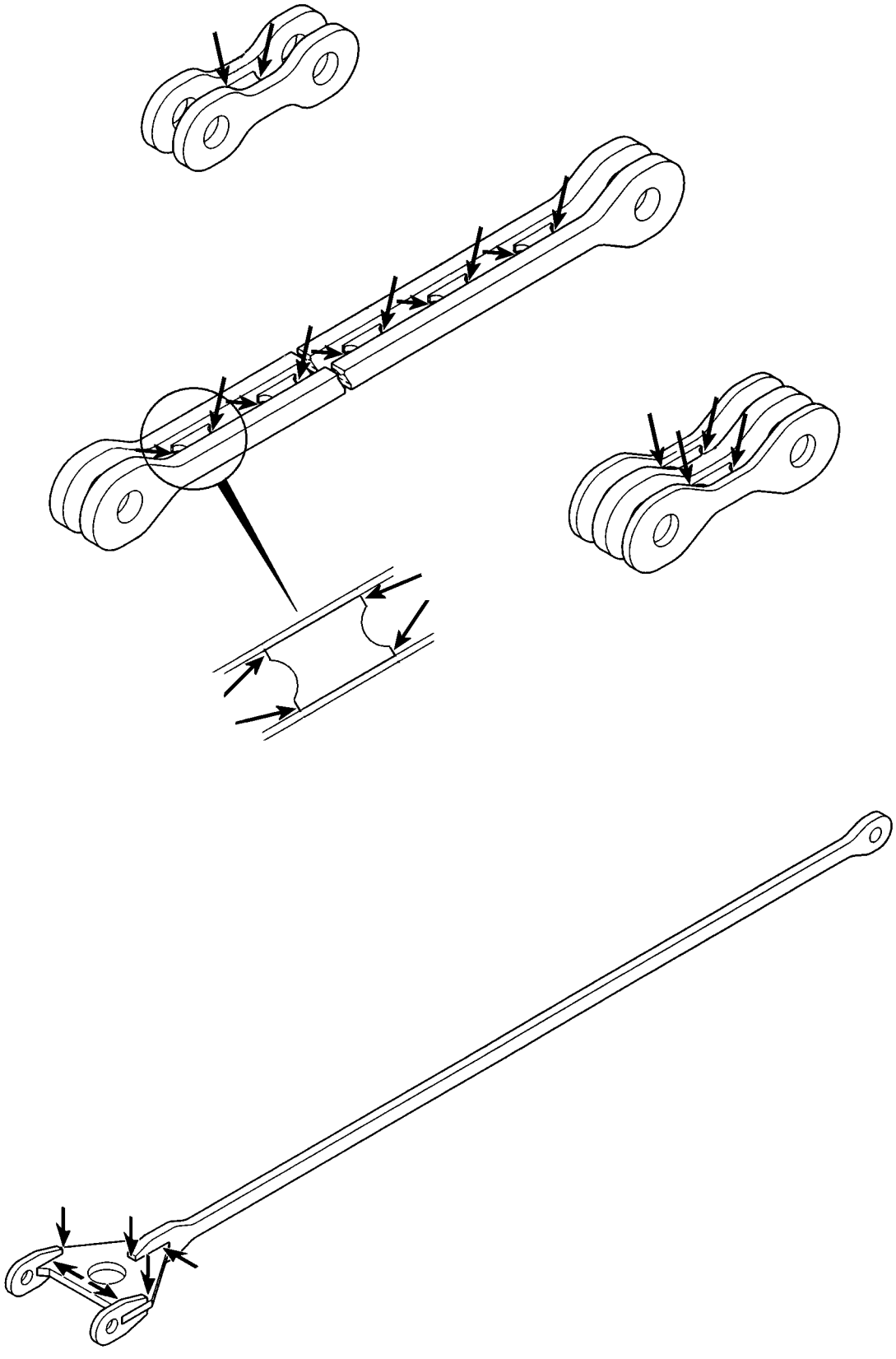

B185055

Example for guy rod

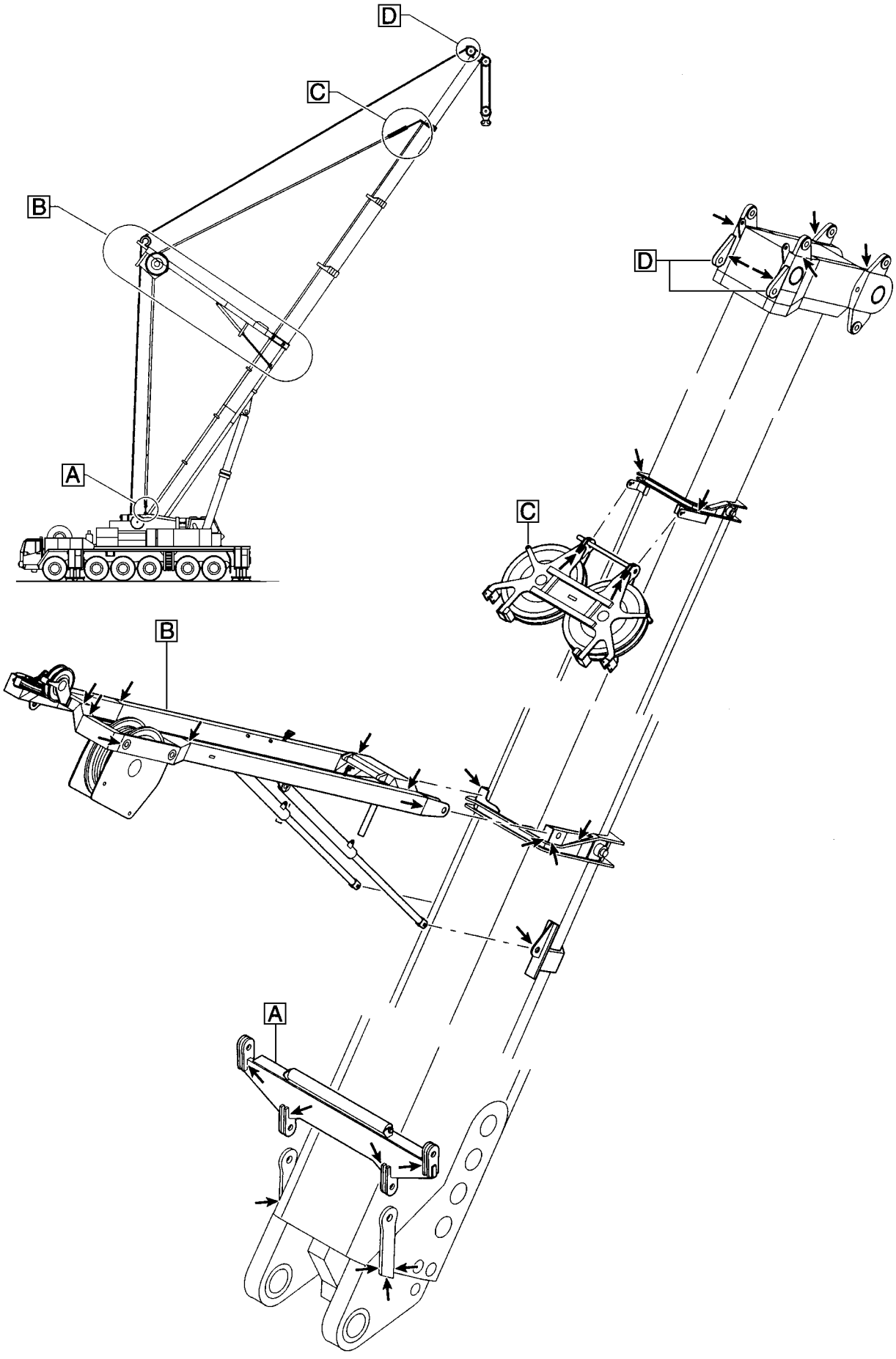

B185059

Example for TA-guying

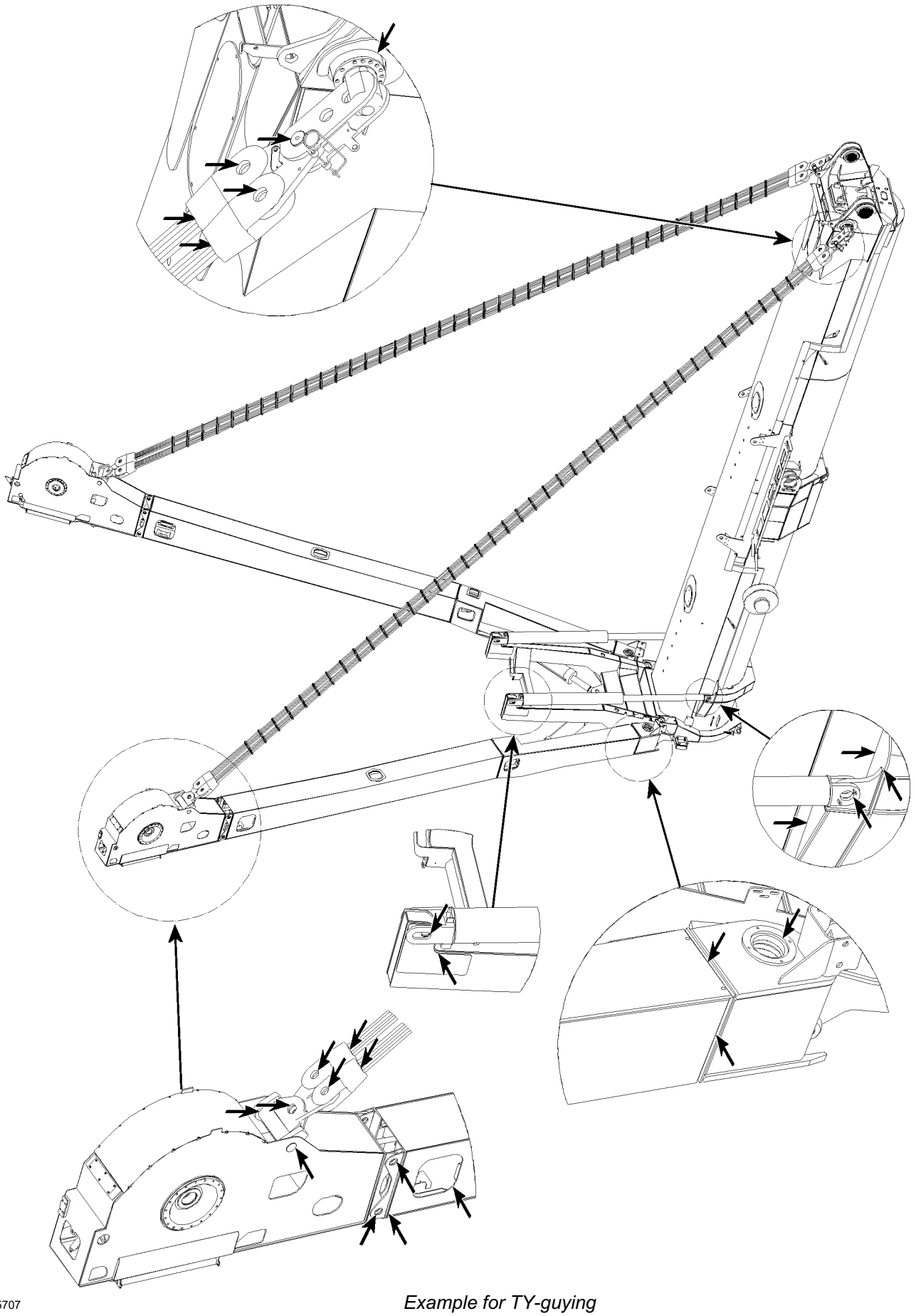

B105707

Example for TY-guying

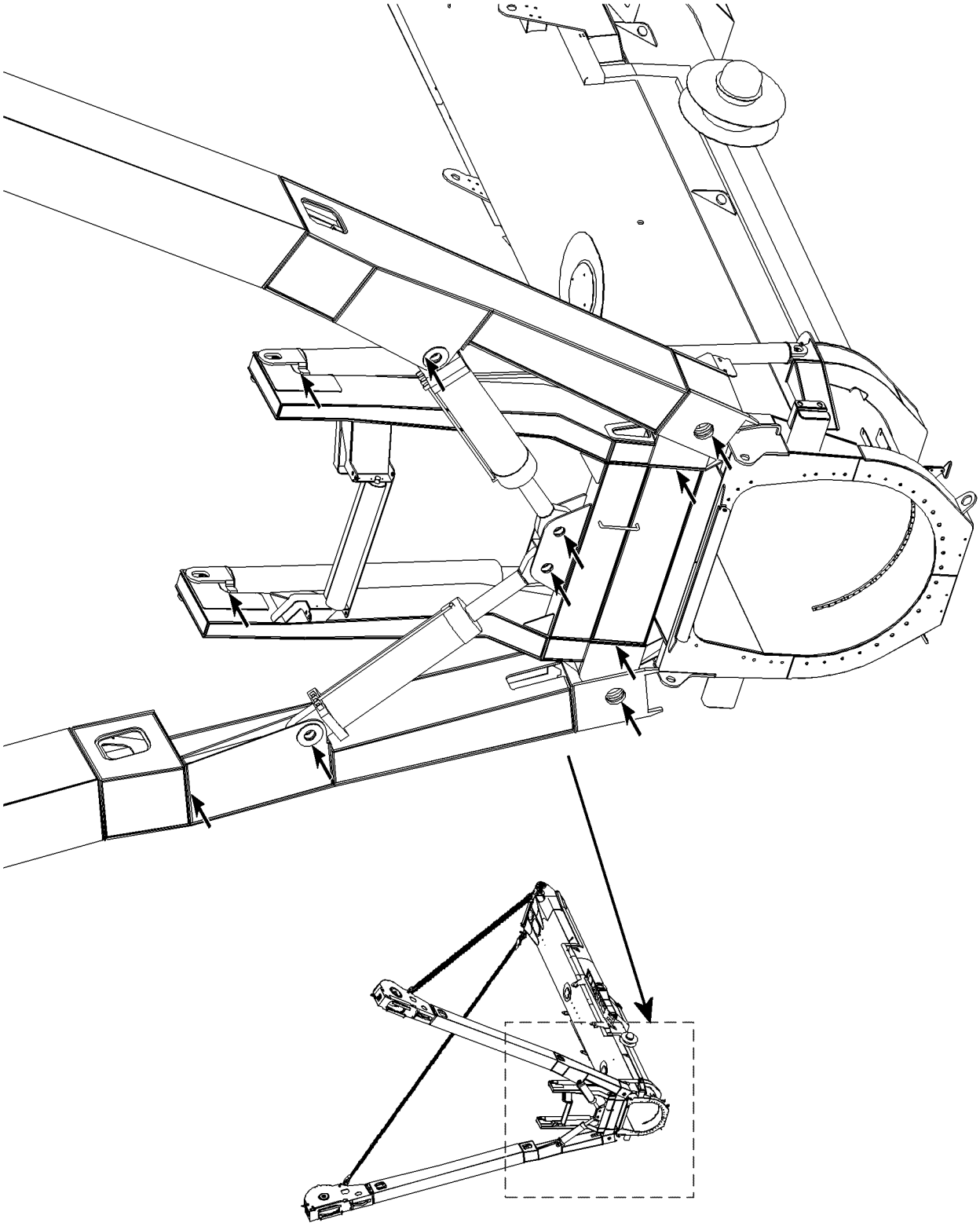

B105708

Example for TY-guying

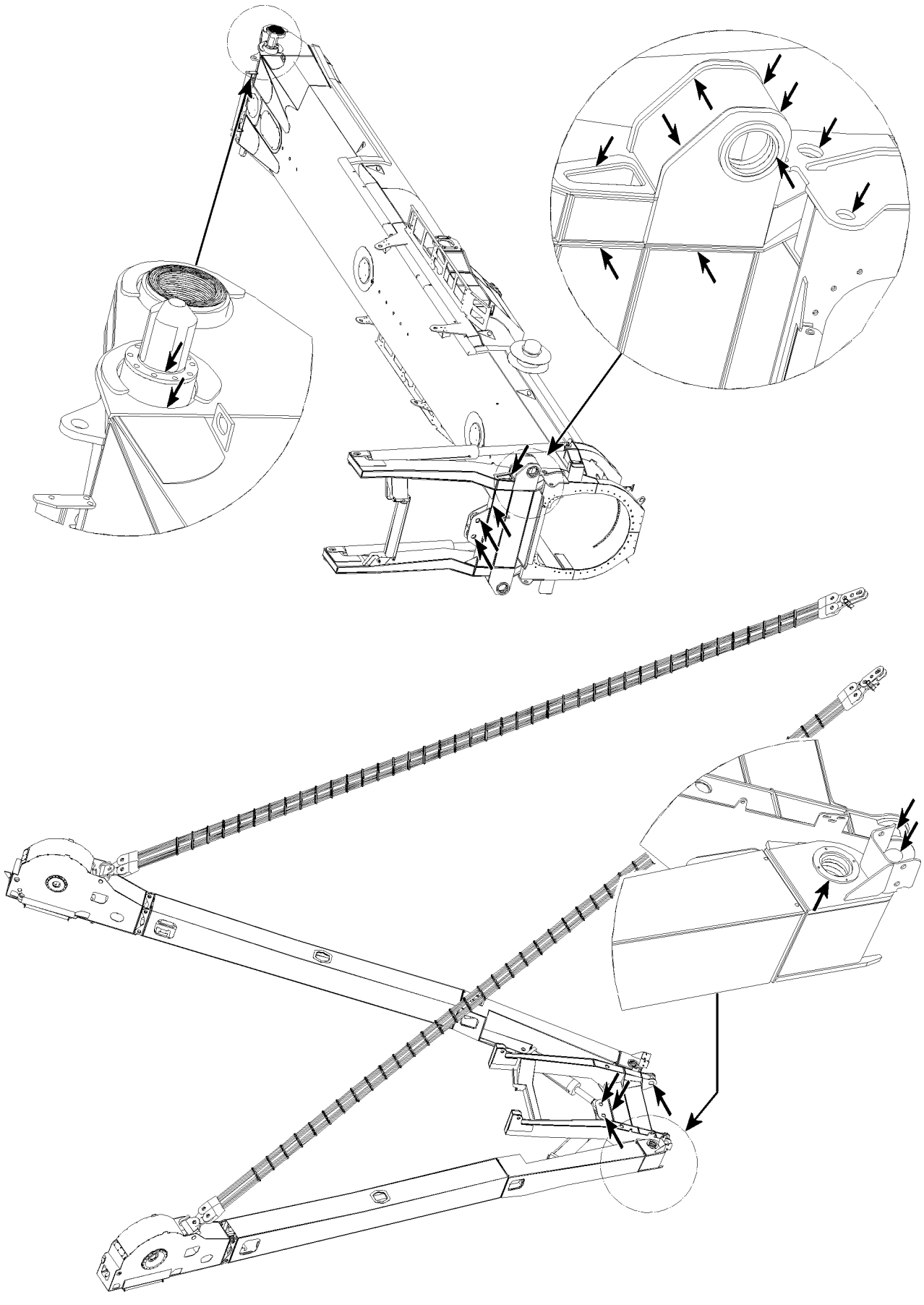

B105709

Example for TY-guying

2.2 Inspection of lattice sections

Note

- The illustration is only an example and is valid for all lattice sections!
- Check all diagonal and frame pipe connections!

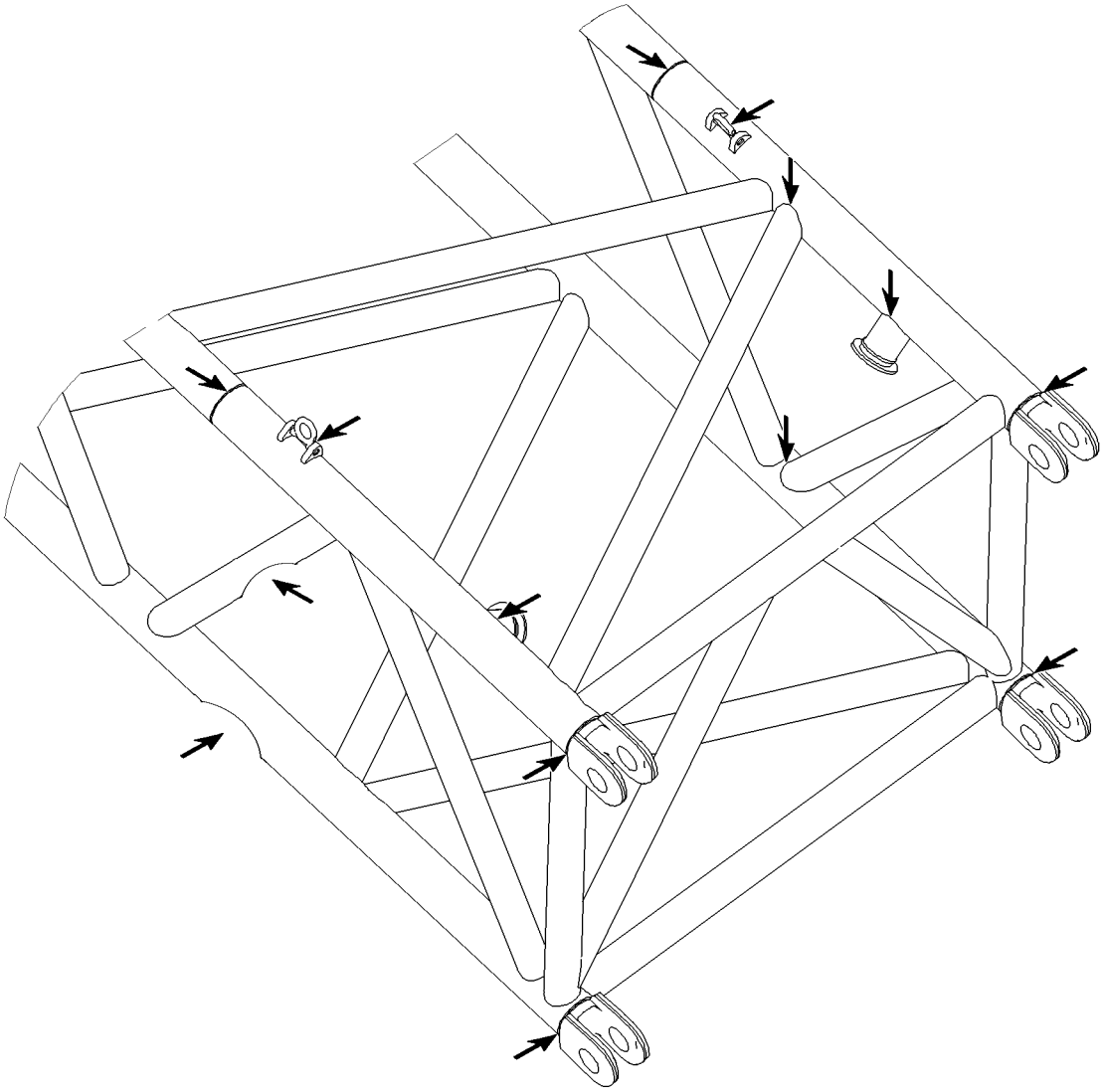

B105688

Example for lattice sections

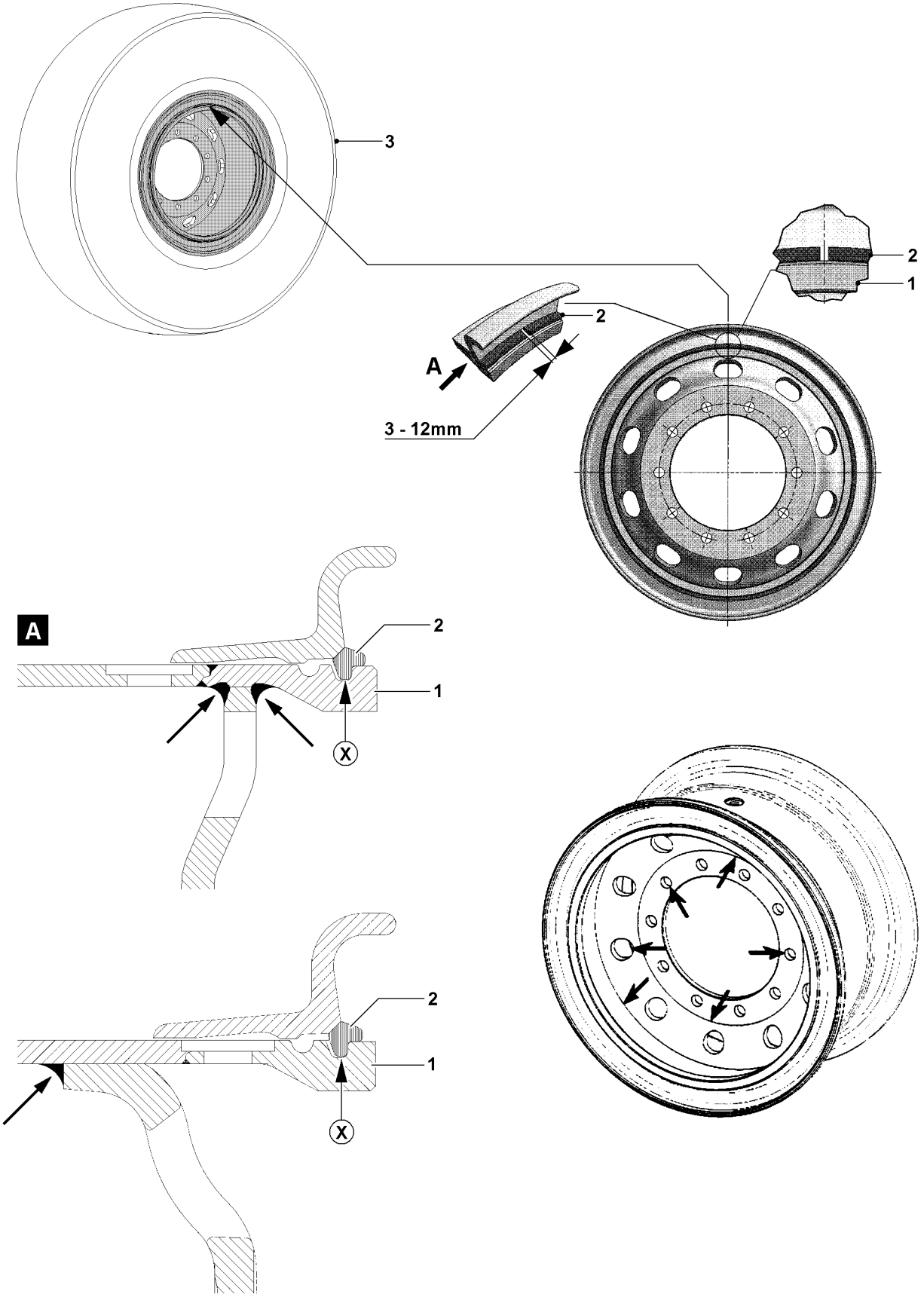

B107378

3 Inspection of tires and disk wheels

3.1 Inspection of tires

WARNING
Risk of accident if incorrect tires are used!
The use of improper tires and tires which do **not** meet the license permits may result in serious accidents with fatal injuries!
- ▶ Only tire types and sizes approved for this crane may be assembled on the crane.
- ▶ Regularly check the tires for damage, tread depth, foreign particles and tire pressures!
- ▶ Carefully remove any foreign particles stuck or wedged in the tire tread before starting to travel (for example: rocks)!

The tread depth of the tire may not fall below the legally specified minimum value.
- – Check the tread depth.
- – Check the tires for damage.
- – Make sure that the tire **3** is correctly seated on the disk wheel **1**. The tire bead must touch the inside and outside of the disk wheel evenly.

WARNING
Risk of fatal injury if the lock ring **2** is not properly seated!
Personnel can be severely injured or killed due to an incorrectly assembled lock ring **2**!
- ▶ Check to ensure that the lock ring is correctly seated!
- ▶ Consult with authorized and trained specialists if there is any doubt whether a lock ring **2** has been correctly assembled!

Indications of an incorrectly installed lock ring are present if:
- – The lock ring **2** is not completely seated with its entire circumference in the groove (point **X**) of the disk wheel, see illustration **A**.
- – The gap of the installed lock ring **2** is outside the permissible tolerance range of 3 mm to 12 mm.

3.2 Inspection of tire pressure

Make sure that the following prerequisites are met:
- – The tire **3** is correctly seated on the disk wheel.
- – The lock ring **2** correctly sits in the groove (point **X**) on the disk wheel, see illustration **A**.
- – The gap on the lock ring **2** is between 3 mm and 12 mm.

WARNING
Danger of fatal injury!
When checking the tire inflation pressure on the vehicle or after assembling tires, make sure that the lock ring **2** is correctly installed on the disk wheel.
If the tire pressure has dropped below 3 bar and the tires are improperly inflated, there is a risk of fatal injury if the lock ring **2** jumps off explosively.
- ▶ If the tire pressure is below 3 bar, the tire may only be inflated by authorized and trained specialists!
- ▶ If the lock ring **2** is not correctly seated on the disk wheel, it is essential that authorized and trained personnel are called in. Do **not** attempt to change the tire pressure yourself!
- ▶ Adhere to the specified tire pressure!

The tire pressure may not exceed or fall below the permitted range, otherwise the body of the tire could be damaged and tire failure may occur.

Note
- ▶ Always check the tire pressure when the tires are cold!
- ▶ The specified tire pressure must be within the tolerance range of ±0.2 bar!

Observe the tire pressure, which is approved for the tire installed on the crane. See Crane operating instructions, chapter 1.03.
– Check the tire pressure.

3.3 Inspection of disk wheels

The disk wheel is one of the most important safety relevant components on the vehicle.
The disk wheel is a welded steel structure and must be checked according to section 2.
In addition, at least during the annual specified inspection of cranes, the outside and the inside of the disk wheel must be visually inspected, taken the below listed points into account.
If cracks on the outside in the paint of the disk wheel can be seen, also recognizable by rust lines in the paint, then the disk wheel must be inspected closely for cracks. The “color penetration procedure” is recommended for this crack inspection.
In particular, the disk wheels must be inspected for cracks that are developing in the base material, as well as at the locations indicated by the arrows.
Any disk wheels that show evidence of cracks or crack formation must be replaced immediately.
After a mileage of maximum 40,000 km, the operator must routinely inspect the disk wheel regardless of the actual load spectrum.
The following safety and maintenance guidelines are the manufacturer's recommendations for avoiding safety risks caused by damaged disk wheels. In addition, the manufacturer can only provide a warranty in case of a claim if these guidelines have been observed.

Note
- ▶ Tires may only be changed by authorized and trained specialists!
- ▶ This applies both to dismounting and mounting of the tire on the disk wheel **1**!

Workshop personnel or authorized and trained specialists should check the wheels at the rim and the disk wheel for the following when changing the tires:
– Excessive rust or corrosion.
– Bent rim flanges.
– Cracks in the disk wheel.
– Cracks on the fastening circle to the brake drum on the inside or outside of the disk wheel.
– Welding seam connection on inside or outside of disk wheel.
– Damage to side and locking rings.
– Damaged wheel lugs or nuts.
– Worn out pin holes.
– Matching disk wheel parts.

WARNING
Risk of overload breakage!
Disk wheels with worn pin holes must be scrapped immediately. Repairing these highly-stressed disk wheel components causes structural changes in the material, which can lead to premature overload breakage!
- ▶ No welding work is permitted on rims and disk wheels, particularly repairs to worn bolt bores!

– If damaged disk wheel parts are discovered during the inspection:
  Remove and replace any damaged disk wheel components.
– If paint damage or minor rust formation is found:
  Recondition the wheels with commercially available paint after removing the rust. Pay special attention to a perfect surface on the tire seating surfaces.

4 Inspecting the hoist and retracting winches

The hoist and retracting winches are designed in sealed planetary gear version. These gears are sized for long service life and the drive shafts and gears are rated for endurance.
Even though the hoist and retracting winches are designed for long life, an external visual inspection is not adequate, since their life can be significantly affected by bad maintenance (insufficient oil), using oil that does not meet specification requirements, defective seals, improper operation or overloading.
The annual inspection must therefore be carried out by an **expert** in accordance with the following requirements.
The winches must be inspected by an **authorized inspector** every four years after the initial license.
Within the territorial validity of the BGV D6, after the 10th year in operation, counted from the first day of initial license, when the theoretical utilization time is not over, the winches must be checked annually by an **authorized inspector**.

4.1 Inspections

4.1.1 Inspection intervals

At least once a year, see Crane operating instructions, chapter 7.03.

4.1.2 Checking the oil level

Check the oil level with the dipstick.
For hoist and retracting winches **without** a dipstick, we recommend that the oil is drained and the amount compared to the specified oil quantity.

4.1.3 Evaluating oil color

Assume that the oil has been overheated if it is black and / or a burnt oil smell is detected. Change the oil.

4.1.4 Checking for solid foreign substances

As a rule, a qualified laboratory should carry out an oil analysis.
For simple testing, the following procedure can be used:
Drip the used oil on a specified filter fleece. Visual inspection with a magnifying glass may reveal coarse particles. If particles are detected, all the oil's properties must be examined by a qualified laboratory.

Note

- ▶ The evaluation of the foreign particles found in the oil must be made by a qualified laboratory!
- ▶ The maximum permissible quantity of foreign material measured by weight is 0.15 % of total oil weight!
- ▶ Maximum permissible foreign particle size from fine abrasion is 0.25 microns!
- ▶ If the above value have been exceeded, remove the gear and search for the cause of the increased abrasion!
- ▶ Damaged components must be replaced and the gear refilled with fresh oil!

NOTICE
Risk of property damage!

- ▶ Repairs may only be carried out by specialists with appropriate technical knowledge!

4.1.5 Visual inspection for leaks

The gears must be checked for leaks, since oil losses - in addition to polluting the environment - can lead to gear failure.

4.1.6 Inspecting the gear brakes

Check the brakes each time the gears are inspected.
In order to do so, proceed as follows:

– Attach a load, which creates 40 % of the maximum rope pull in the uppermost layer of the coil and raise it just off the ground.
– Remove the plug on the brake vent magnet.
  This means the brake remains applied when activated.
– Activate the winch in the lowering direction.

Note

▶ The brake may not slip, in other words, the winch may not turn. If the brake slips, contact the Service department at Liebherr-Werk Ehingen GmbH!
▶ Only operate the crane after it has been checked and approved for use by the Service department at Liebherr Werk Ehingen GmbH!

NOTICE

Risk of property damage!
▶ Only qualified personnel with specialized knowledge may be used to evaluate gears and brakes!

4.1.7 Documenting the completed inspection

The results of the annual inspections and maintenance work, including the steps taken, must be documented by the competent or authorized inspector, including attachments from the inspection labs and qualified service companies if applicable.
This documentation must be filed in the crane inspection log under the heading "Periodic inspections".

4.2 Requirements for monitoring the winches

4.2.1 Theoretical service life

The designer of your crane used a theoretical total operating time when designing and sizing the winches. This resulted in the theoretical service life of the equipment.
The winches of your crane are classified according to ISO 4301/1 as follows:

Winches	Classification
Power train group:	M3
Load spectrum:	L1
Load spectrum factor Km:	0,125
Theoretical service life D:	3200 h

Note

▶ The “theoretic service life” is not equal to the real (true) service life of a winch!

The actual life of the winch is affected by many additional outside factors; for example:

– Overloads caused by unapproved use of the crane.
– Inadequate maintenance: Oil is not changed in a timely manner.
– Improper operation:
  • Extreme acceleration or deceleration of the load.
  • Load falling into the ropes.
– Maintenance errors:
  • Using the wrong type of oil.
  • Too much or too little oil.
  • Contamination during oil change.
– Assembly errors during repair and maintenance.
– Undetected leakage.
– Incorrectly set safety devices.
– Hidden damage from accidents.
– Extreme environmental conditions:
  • Extreme low or high temperatures.
  • Corrosive atmosphere.
  • Dust and dirt.

4.2.2 Actually used part of the Service life

The crane operator is obligated to carry out an inspection of the crane at least once a year.
At this time, the actually used part of the theoretical service life must also be calculated. If necessary, the crane operator must contract an authorized inspector.
For the determination of the used part of the theoretical service life, the actual operating conditions (load spectrum) and the hoist gear operating hours for each inspection interval are to be determined.
The operator is responsible for the documentation in the crane inspection log.

Determining the operating conditions (load spectrum)

The load spectrum of the crane is divided into groups, please refer to ISO 4301/1.
Select one of the following load spectrums and record it in the crane inspection log for the respective inspection interval based on the actual operating conditions. A more precise determination of the load spectrum is permissible.

Load spectrum class: Light L1

Definition:

Power train or parts thereof are subjected to maximum stress only in exceptional cases, but normally only operate at very light loads.

Operating time rates:

10 % of the time at maximum load (dead load and 1/1 working load)
40 % of the time with dead load and 1/3 working load
50 % of the time only with dead load

Factor of load spectrum:

Km = 0.125

Graphic view:

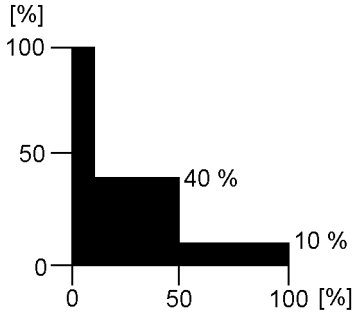

B195234

Note

▶ Load spectrum L1 with load spectrum factor Km = 0.125 is normally applied to cranes used for assembly operations!

Load spectrum class: Medium L2

Definition:

Power train or parts thereof are subjected to maximum load relatively often, but normally only operate at light load.

Operating time rates:

1/6 of the time at maximum load (dead load and 1/1 working load).

1/6 of the time with dead load and 2/3 working load.

1/6 of the time with dead load and 1/3 working load.

50 % of the time only with dead load

Factor of load spectrum:

Km = 0.25

Graphic view:

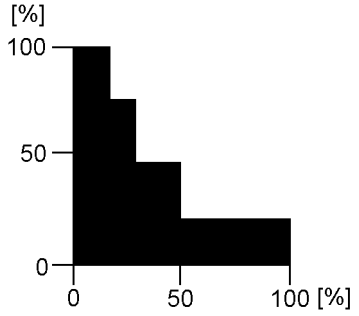

B195235

Load spectrum class: Heavy L3

Definition:

Power train or parts thereof are frequently subjected to maximum load and normally operate at medium load.

Operating time rates:

50 % of the time at maximum load (dead load and 1/1 working load)

50 % of the time only with dead load

Factor of load spectrum:

Km = 0.5

Graphic view:

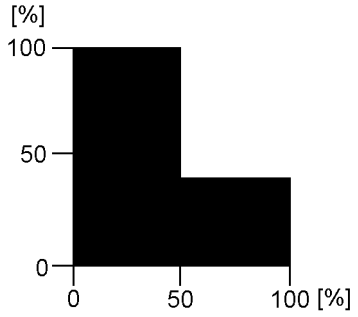

B195236

Load spectrum class: Very heavy L4

Definition:

Power train or parts thereof are regularly subjected to near maximum loads.

Operating time rates:

90 % of the time at maximum load (dead load and 1/1 working load)

10 % of the time only with dead load

Factor of load spectrum:

Km = 1

Graphic view:

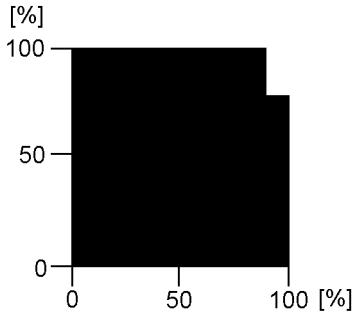

B195237

Determining the effective operating hours T_i

The effective operating hours calculated as follows must be entered into the crane inspection log for the respective inspection interval.
There are four different scenarios:

1.) Operating hour meter installed on every winch.
If an operating hour meter is installed on every winch, the effective operating hours T_i can be read directly during each inspection.

2.) Operating hour meter installed for the overall crane drive.
The winch proportion of the total superstructure operating hours must be estimated.
For cranes used in assembly operations, the operating time for the hoist winches can be estimated generally at 20 % of the total operating hours of the superstructure.

3.) One operating hours meter is used for both the crane engine and the crane drive
The winch proportion of the total crane operating hours must be estimated.
For cranes used in assembly operations, the operating time for the superstructure can be estimated at 60 % of the total operating hours of the crane. If the hoist winch proportion is estimated at 20 % of the superstructure operating hours (see previous item), then the result in relation to the **total** operating hours of the crane is: 12 %.

4.) No operating hour meter installed.
In this case, the operator must estimate and document the actual operating hours of the winch.
The approximate percentages stated above normally apply to main hoist winches. For auxiliary hoist winches or boom control winches, the proportion of the total operating hours can be significantly less and should therefore be estimated by the operator.

Determining the used proportion of the theoretical service life

For an inspection interval i (max. 1 year), the actually used proportion S_i of the theoretical Service life is derived from the formula:

$$S_i = \frac{Km_i}{Km} \times T_i$$

B195230

Abbreviation	Explanation
S_i	Used proportion of the theoretical service life.
Km	Load spectrum factor that was used to calculate the winch rates. This factor is provided in the Operating instructions.
Km_i	Load spectrum factor for inspection interval i according to section “Determining the operating conditions” .
T_i	Effective operating hours for inspection interval i according to section “Determining the effective operating hours T_i” .

The actually used proportion is subtracted from the remaining theoretical service life D_i after each inspection interval (see example).
If the remaining theoretical service life is not long enough to cover the next projected operating period, a general overhaul of the winch is required.

If the theoretical service life D has been reached (see chapter on “Theoretical service life”), then the winch may only be operated after conducting a general overhaul.
A general overhaul of the winch is required not later than 10 years after commissioning.
The general overhaul must be arranged by the operator and carried out by the manufacturer or the manufacturer's authorized representatives and must be documented in the inspection log. After the general overhaul, the manufacturer or the manufacturer's authorized representative will define a new theoretical service life D.
When the design life has not been reached after 10 years, continued operation of the winch without a general overhaul is acceptable, when the crane's authorized inspector has confirmed the accuracy of the actual usage calculation by signing the crane inspection log at each authorized inspection interval. In such a case, the authorized crane inspector must thoroughly inspect the winch. This comprises at least:

– External visual inspection (leakage, damage, deformation, etc.).
– Oil check, especially for metal residues.
– Load test at minimum and maximum rope tension and at maximum possible speed in both cases. At least one layer must be spooled up. Pay particular attention to any unusual noises during this load test.

The authorized crane inspector must confirm this inspection in the crane inspection log and must make a statement regarding suitability of the winch for continued operation. The next inspection must take place at the end of the 12th operating year and annually thereafter.

4.2.3 Example

According to the manufacturer's operating manual, a mobile crane with a separate operating hour meter for the crane engine and the crane drives is classified as follows:

– Power train group: M3
– Load spectrum: Light L1
– Factor of load spectrum: Km = 0.125
– Theoretical service life: D = 3200 h

Actual usage proportion S of the theoretical service life is calculated using the individual inspection intervals as follows:

First inspection (first year)

The crane was used for assembly work during the past year:
Load spectrum L1, in other words $Km_1 = 0.125$.
The superstructure hour meter indicates 800 h. The winch was operated about 20 % of the time; i.e. $T_1 = 160$ h.
The actual usage proportion S of the theoretical service life at the time of the first inspection is therefore:

$$S_1 = \frac{0{,}125}{0{,}125} \times 160\ \text{h} = 160\ \text{h}$$

B195231

Remaining theoretical service life:
$D_1 = 3200\ \text{h} - 160\ \text{h} = 3040\ \text{h}$
The above values are recorded in the crane inspection log.

Second inspection (second year)

The crane was used at a harbor for unloading work:
Load spectrum L3, in other words $Km_2 = 0.5$.
The superstructure hour meter indicates 2000 h; i.e., during this period:
2000 h – 800 h = 1200 h (800 h were used in the first year of operation)
The winch was operated about 40 % of the time; i.e. $T_2 = 480$ h.
The actual usage proportion S_2 of the theoretical service life at the time of the second inspection is therefore:

$$S_2 = \frac{0,5}{0,125} \times 480\ h = 1920\ h$$

B195232

Remaining theoretical service life:
$D_2 = 3040\ h - 1920\ h = 1120\ h$

Third inspection (third year)

The crane was used for assembly work and occasionally at a harbor for unloading work:
Load spectrum L2, in other words $Km_3 = 0.25$.
The superstructure hour meter indicates 3000 h; i.e., during this period:
3000 h – 2000 h = 1000 h (2000 h were used in the first two years of operation)
The winch was operated about 30 % of the time; i.e. $T_3 = 300\ h$.
The actual usage proportion S_3 of the theoretical service life at the time of the third inspection is therefore:

$$S_3 = \frac{0,25}{0,125} \times 300\ h = 600\ h$$

B195233

Remaining theoretical service life:
$D_3 = 1120\ h - 600\ h = 520\ h$

4.2.4 Chart for determining the theoretically remaining service life

Chart 1 includes an example.
The remaining theoretical service life is to be documented in chart 2.

blank page!

B102588

Chart to determine the remaining theoretical service life of winch No. 1 (Main hoist winch)

Crane type: LTM 1050
Fabrication No.: 0010 540 08
Put in service : 12345
Serial number of winch according to data tag: 0815
Last general overhaul performed on: .....
Configuration data of winch (see Operating Manual):
Drive gear group: M 3
Load collective: Q 1 (L1)
Factor of load collective Km: 0.125
Theoretical service life D: 3200 hrs.

S_i = Used part of theoretical service life since last inspection
D_i = Remaining theoretical service life
D_{i-1} = Remaining theoretical service life after previous inspection
Km = Factor of load collective, which was taken for calculation of winch. This factor is to be taken from the Operating Manual
Km_i = Factor of load collective in inspection interval i
T_i = Effective operating hours in inspection interval i

(*) In the following pages, carry over the last line from the previous page.

Inspection interval No. (max. annually) i	Date of initial service / data of inspection	Operating conditions since last inspection (load collective)	Factor of load connective Km_i	Total crane operating hours [h]	Operating hours of super-structure [h]	Operating hours of super-structure since last inspection [h]	Operating hours of winch [h]	Operating hours of winch since last inspection T_i [h]	Used part of theoretical service life D: $S_i = \frac{Km_i}{Km} \times T_i$ [h]	Remaining theoretical service life $D_i = D_{i-1} - S_i$ [h]	Name of inspector	Signature	Remarks	Name of expert	Signature
(*) 0	10.06.90	-	-	-	0				0	3200					
1	05.06.91	L1	0,125	-	800	800	-	160 (20 % of 800)	160	3040	Müller				
2	20.05.92	L3	0,5	-	2000	1200	-	480 (40 % of 1200)	1920	1120	Huber				
3	18.05.93	L2	0,25	-	3000	1000	-	300 (30 % of 1000)	600	520	Maier				
4															

C A U T I O N : Perform general overhaul at least once every 10 years. In case of deviation, see guidelines in this chapter.

General overhaul last performed on : .....

B102589

Chart to determine the remaining theoretical service life of winch No. ....

Crane type: .....
Fabrication No.: .....
Put in service: .....
Serial number of winch according to data tag: .....
Last general overhaul performed on: .....
Configuration data of winch (see Operating Manual): .....
Drive gear group: M.....
Load collective: Q.....(L.....)
Factor of load collective Km: .....
Theoretical service life D: .....

S_i = Used part of theoretical service life since last inspection
D_i = Remaining theoretical service life
D_{i-1} = Remaining theoretical service life after previous inspection
Km = Factor of load collective, which was taken for calculation of winch. This factor is to be taken from the Operating Manual
Km_i = Factor of load collective in inspection interval i
T_i = Effective operating hours in inspection interval i

*) In the following pages, carry over the last line from the previous page.

Inspection interval No. (max. annually) i	Date of initial service data of inspection	Operating conditions since last inspection (load collective)	Factor of load connective Km_i	Total crane operating hours [h]	Operating hours of super-structure [h]	Operating hours of super-structure since last inspection [h]	Operating hours of winch [h]	Operating hours of winch since last inspection T_i [h]	Used part of theoretical service life D: $S_i = \frac{Km_i}{Km} \times T_i$ [h]	Remaining theoretical service life $D_i = D_{i-1} - S_i$ [h]	Name of inspector	Signature	Remarks	Name of expert	Signature
(*)															

C A U T I O N : Perform general overhaul at least once every 10 years. In case of deviation, see guidelines in this chapter.

General overhaul last performed on : .....

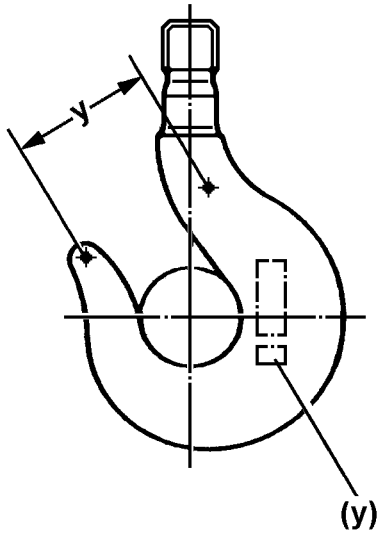

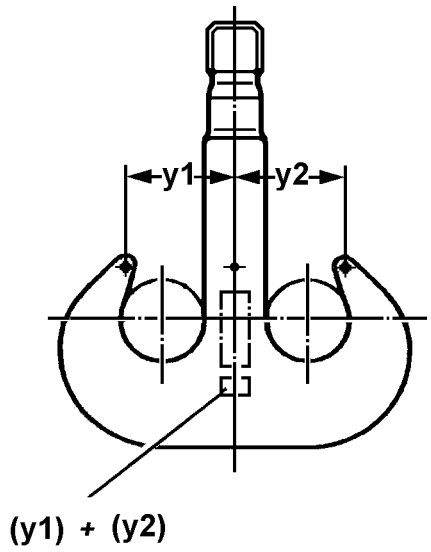

B195239

5 Inspecting load hooks

The load hooks must be visually inspected annually by a competent inspector.
This inspection must be carried out by an authorized expert every 4 years.
The purpose of the inspections is to avoid accidents by detecting deficiencies early on.
Any deficiencies found by the expert must be documented, corrected and subsequently reinspected.

5.1 Inspection and monitoring procedure

5.1.1 Deformation

The hook should be inspected for distortion as required, but at least once a year; for example at the hook jaw.
The original dimensions, (y) or (y1) and (y2), are marked on the load hook itself.
Measure between the punch marks.

DANGER
Danger of accident!
Hook jaw distortion may not exceed 10 % of the original dimensions (y) or (y1) and (y2)!
▶ Do not use a load hook that exhibits greater expansion!
▶ Contact the Service department at Liebherr-Werk Ehingen GmbH!

5.1.2 Corrosion

DANGER
Risk of accidents due to corrosion and wear on the threads!
▶ Stop using the load hook!
▶ Contact the Service department at Liebherr-Werk Ehingen GmbH!

Unscrew the nut from the hook shank so that the threads can be checked for corrosion and wear every 4 years by an authorized expert.

6 Inspection of the rope feed mechanism in the telescopic boom

6.1 Checking the ropes of the rope feed mechanism

– For inspection of rope end mounts, see Crane operating instructions, chapter 7.05.
– For inspection of the pretension on the retraction ropes, see Crane operating instructions, chapter 7.05.
– Inspection of ropes for damage according to ISO 4309, see Crane operating instructions, chapter 8.04.

6.2 Checking the change over pulleys of the rope feed mechanism

DANGER
Danger of accident in case of damage or cracks!
▶ Replace the change over pulley immediately!

Check the entire change over pulley assemblies for damage and cracks once a year.
Also check for wear in the rope groove. Replace the change over pulley if the bottom of the rope groove has been run down up to 1/4 of the rope diameter.

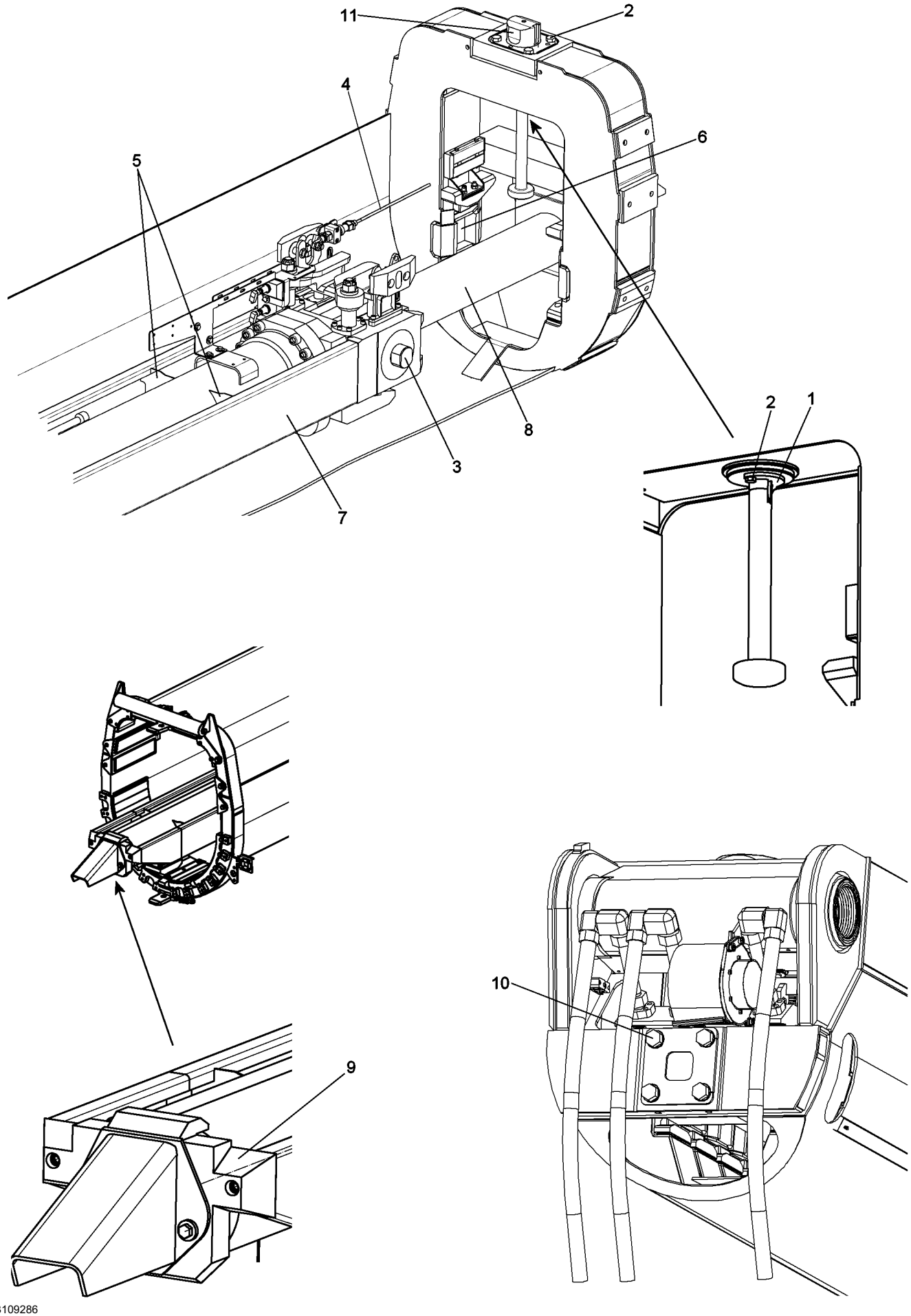
11
2
4
6
5
8
3
7
2
1
9
10
B109286

7 Inspection of locking system of telescopic boom

7.1 For cranes with pneumatic boom locking system

- To check the function, see Crane operating instructions, chapter 8.11.
- To check the pin wear pattern, see Crane operating instructions, chapter 8.11.
- To check the wear, see Crane operating instructions, chapter 8.11.
- To check the safety control, see Crane operating instructions, chapter 8.11.

7.2 For cranes with telescopic boom system Telematik

- Inspection of the pull knob safety **1** and all mounting screws **2** for tight seating
- Inspection of twist guards of cylinder pinning **3** and the telescopic boom pinning **11**
- Inspection of the length sensor rope **4** for damage
- Inspection of the cylinder barrel in the area of all welding seams **5** for crack formation
- Inspection of the locking pockets **6** for damage
- Grease the guide rail **7**
- In case of leakage: Inspection of the piston rod **8** for grooves
- Inspection of the wear pattern on the cylinder pinning **3** and the telescopic boom pinning **11**
- Inspection of guide rail **7** for distortion of contour
- Inspection of plastic guide **9** on cylinder bottom for damage
- Inspection of all mounting screws **10** on the push out cylinder for tight seating

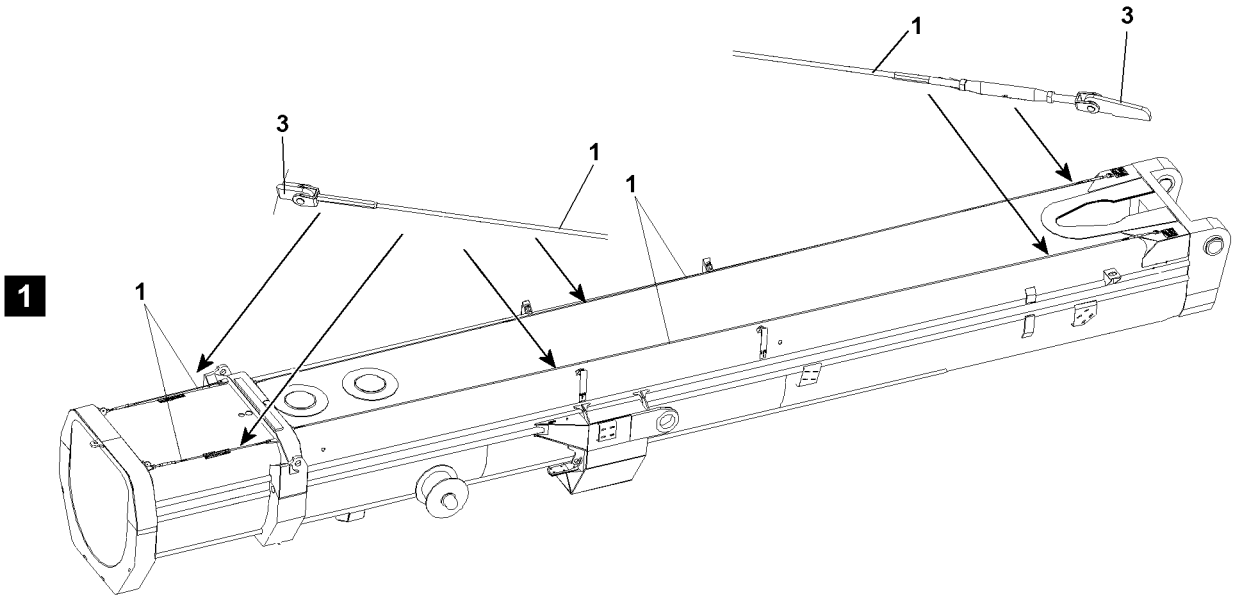

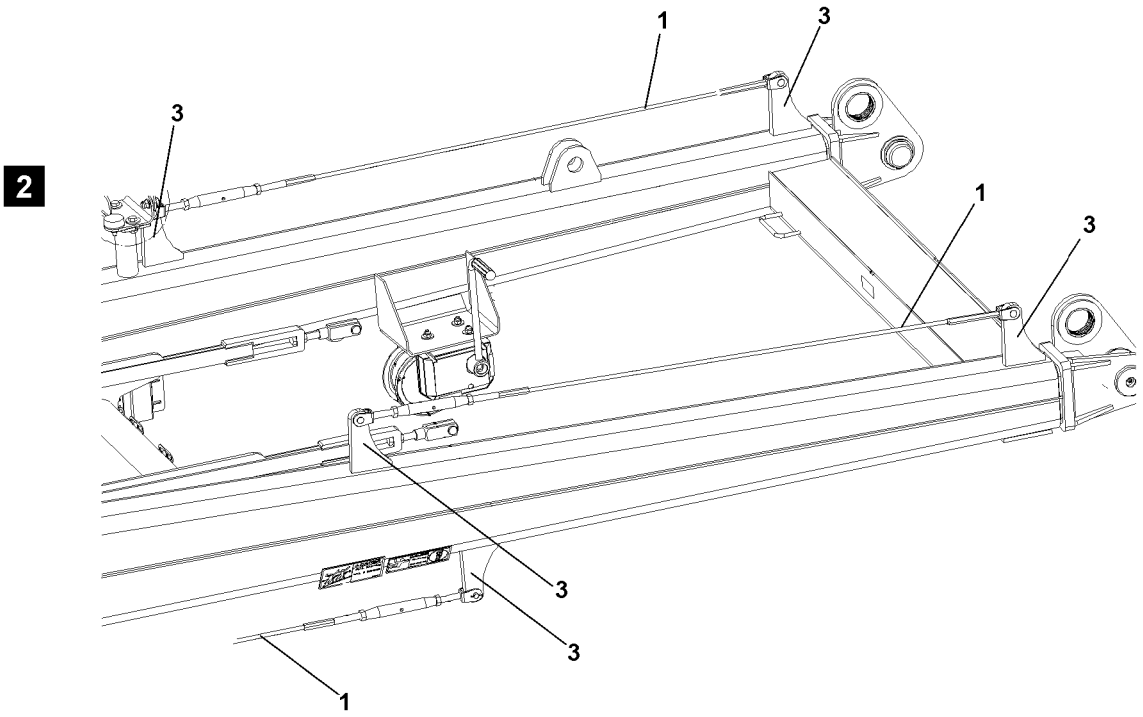

B112739

8 Inspection of retaining ropes and anchor points

WARNING
Danger of falls due to damaged retaining ropes or anchor points!
The retaining ropes **1** and anchor points **3** must be checked **at least once a year** by **expert personnel** for safety and damage!
If any defects are found on the retaining ropes **1** or anchor points **3** during the inspections, then the retaining ropes **1** or anchor points **3** must be replaced immediately by **expert personnel**! If this is not observed, assembly personnel could be killed or fatally injured in a fall!
- ▶ The rope pretension on the retaining ropes must be 800 N!
- ▶ Have damaged retaining ropes **1** or anchor points **3** replaced immediately by **expert personnel**!

Note
Document the inspections in writing!
- ▶ The scope and results of tests should be documented to permit reproducibility. This documentation forms part of the crane records and should be safely stored during the entire service life of the crane.

8.1 Inspection of rope pretension

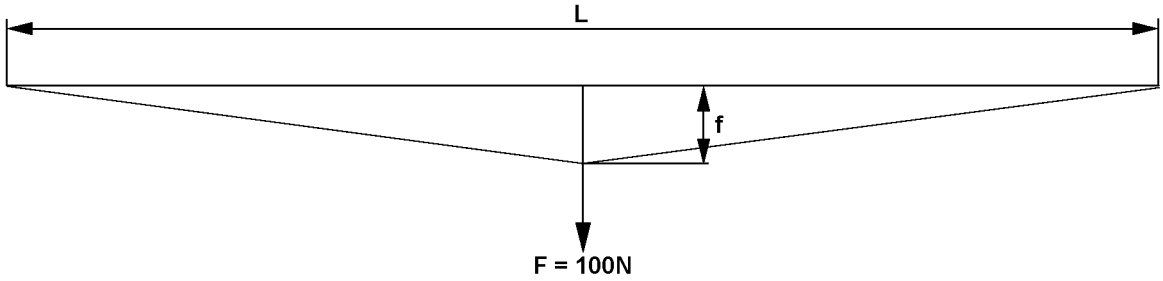

B112738

The rope pretension must be 800 N. This can be checked with the aid of a spring balance, which is pulled centered on the retaining rope. If the specified deflection (f) depending on the rope length (L) according to the following charts results for the raised load F = 100 N then the rope pretension of 800 N is set correctly.

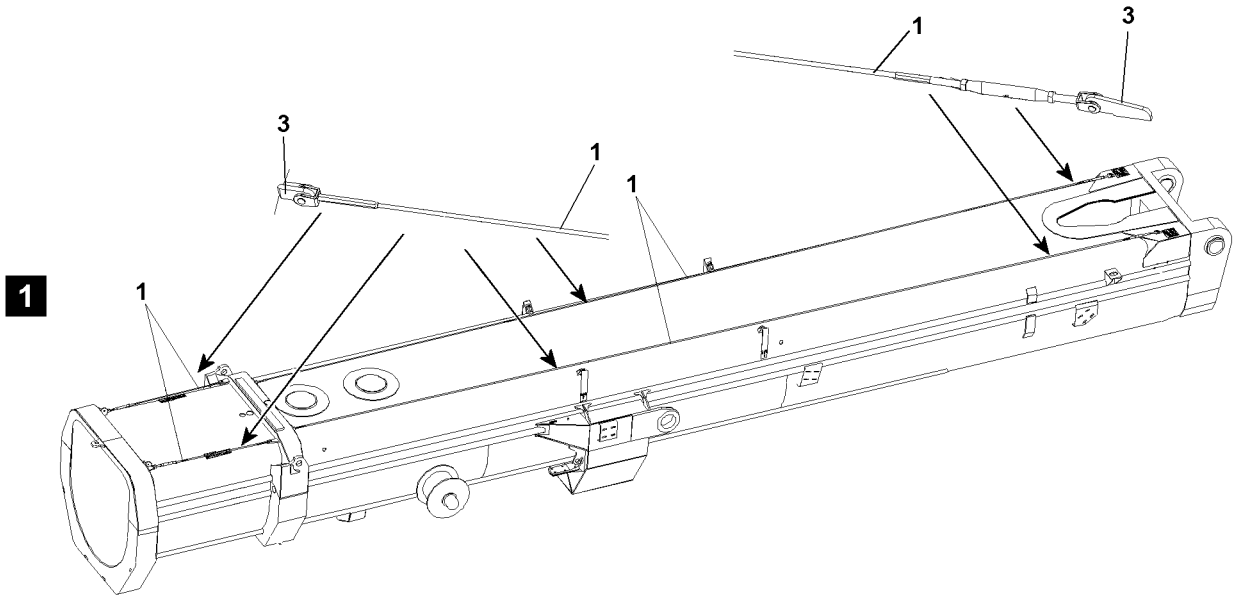

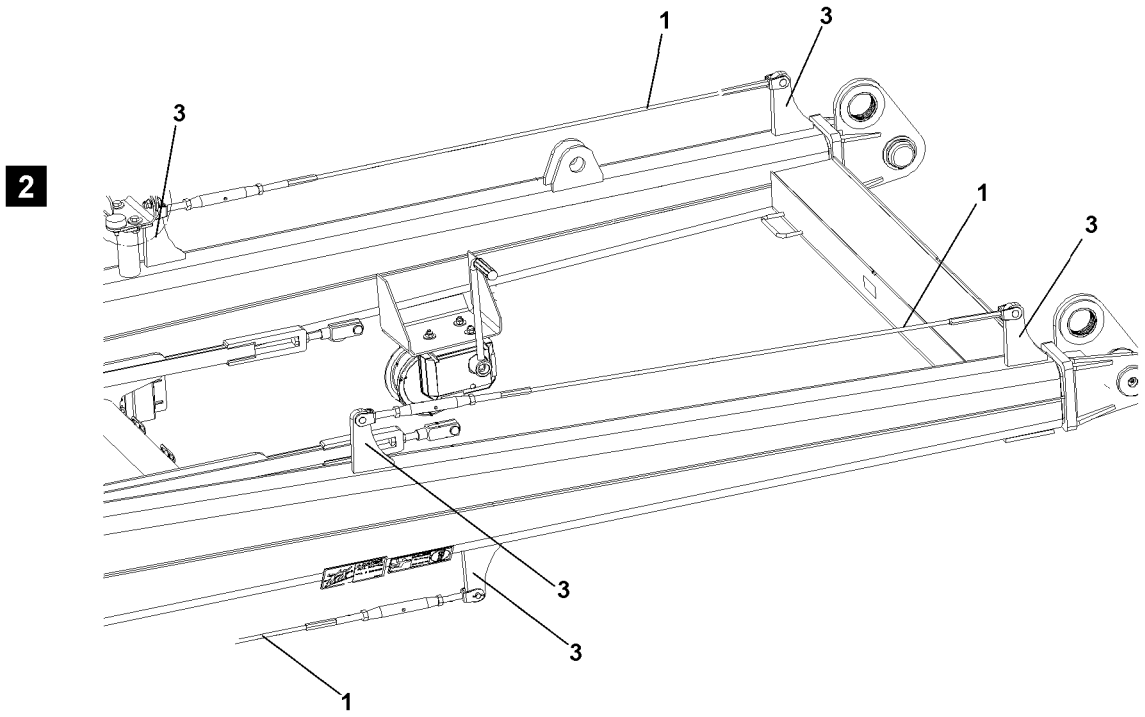

B112739

8.1.1 Retaining ropes on telescopic booms, illustration 1

The rope pretension is 800 N, if a sag (f) according to the chart is present on the retaining rope according to the rope length (L).

Rope pretension is 800 N if:					
Rope length (L)	1.0 m	1.5 m	2.0 m	2.5 m	3.5 m
Deflection (f)	15 mm	25 mm	30 mm	40 mm	55 mm

Rope pretension is 800 N if:					
Rope length (L)	5.5 m	7.5 m	9.5 m	11.5 m	13.5 m
Deflection (f)	85 mm	115 mm	145 mm	180 mm	215 mm

8.1.2 Retaining ropes on lattice sections, illustration 2

The rope pretension is 800 N, if a sag (f) according to the chart is present on the retaining rope according to the rope length (L).

Rope pretension is 800 N if:					
Rope length (L)	1.0 m	1.5 m	2.0 m	2.5 m	3.5 m
Deflection (f)	0	1 mm	2 mm	3 mm	6 mm

Rope pretension is 800 N if:					
Rope length (L)	5.5 m	7.5 m	9.5 m	11.5 m	13.5 m
Deflection (f)	15 mm	28 mm	45 mm	66 mm	90 mm

9 Inspection of membrane accumulator

Note

▶ The national regulations for pressurized container inspection must be observed!

The inspection of the membrane accumulators for specified gas pressure must be carried out by authorized and trained expert personnel, see Crane operating instructions, chapter 7.04, 7.05.

10 Inspection of relapse cylinders

10.1 Check the relapse cylinders for visible defects

WARNING
Defective relapse cylinders!
The relapse cylinders can be damaged due to loss of oil or corrosion and a safe crane operation can no longer be ensured! This could result in serious accidents!
Personnel can be severely injured or killed!
- ▶ Before any operation, visually check the relapse cylinders for leaks, damage and corrosion!
- ▶ If any defects are found, the relapse cylinders must be inspected by the cylinder manufacturer!

10.2 Checking the gas pressure and oil fill

10.2.1 Checking the gas pressure

Note
- ▶ The gas pressure may only be checked by an expert for pressurized containers!

10.2.2 Check the oil quantity

Note
- ▶ The oil fill may only be checked by an expert for pressurized containers!

11 Inspection of the safety controls on the relapse cylinders

For inspection of the safety control or limit switches on the relapse cylinders and the boom A-frames, see Crane operating instructions, chapter 8.12.

12 Inspection of rope pulleys

DANGER
Danger of accident in case of damage or cracks!
- ▶ Replace rope pulley immediately!

Check the entire rope pulley assemblies for damage and cracks once a year.
If rope pulleys are subjected to any impacts (e.g., with buildings) or are otherwise overloaded, they must be visually inspected for damage or cracks immediately.
Also check for wear in the rope groove. Replace the rope pulley if the bottom of the rope groove has been run down up to 1/4 of the rope diameter.

13 Inspecting the function of the overload protection

Position the longest boom at minimum and maximum radius: Check the load indicator, using the hook block as a test load.
The indicator reading may not deviate by more than 10 % off the true load value at these two extreme positions.
Measure the indicated radius for the longest boom at its minimum radius and at a boom angle of 45°.
The indicator readings may not deviate more than 10 % off the measured radius.

14 Inspecting the roller slewing ring connection

For tilt play measurement, see Crane operating instructions, chapter 7.05

15 Inspection of the mounting of the load bearing equipment

Check that the mounting bolts for the roller slewing ring, winches, slewing gears and hitch are properly seated.
The slewing ring connection mounting bolts are pre-stressed at the factory, so that no loosening of the screw connections will occur during normal crane operation.
However, the screw connection may become overloaded and the bolts may be permanently stretched if the crane is overloaded or if the load is pulled free. It is therefore important to check these screws for tight seating during the annual crane inspection or after an overload.
Remove loose screws completely as well as the two adjacent screws on the right and left and check them for damage closely. Inspect the screws especially for cracks or permanent distortion. If a screw has been stretched by more than 0.2 % (in relation to its original length) or if cracks or other damage are detected, then the damaged screws must be replaced. If the screws have been stretched or there is other damage, then the adjacent screws must also be replaced.

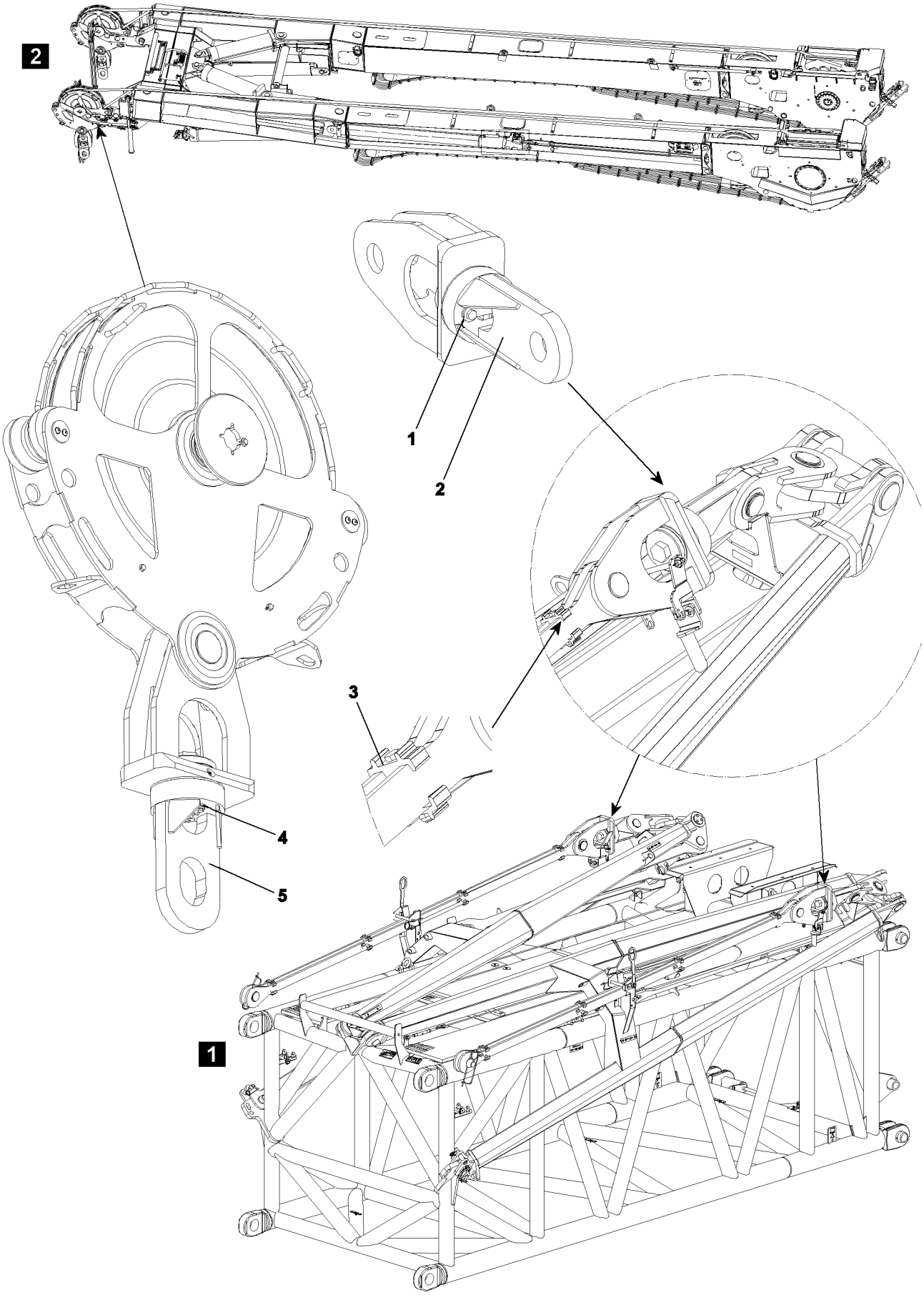

B109096

16 Inspection of the tele extension with eccentric, illustration 1

– Inspection of twist guard **1** for damage and loose screw connection.
– Inspection of rotator **2** for easy turnability.
– Inspection of all clamps **3** for damage and function.

17 Inspection of change over pulleys, illustration 2

– Inspection of twist guard **4** for damage and loose screw connection.
– Inspection of rotator **5** for easy turnability.

18 Inspection of the oil and fuel reservoirs

Visually check the oil and fuel tanks at least once a year for leaks and safe mounting.
Repairs may only be carried out by trained and knowledgeable specialists.
Improper repairs; e.g., welding, hard or soft soldering is not permitted, particularly if the Service department at Liebherr-Werk Ehingen GmbH has not been consulted!

19 Inspection of the auxiliary reeving winch, recovery winch and spare gear winch

Determine the service life of the auxiliary reeving winch, recovery winch and spare wheel winches from their respective original manufacturer.

20 Appendix

The following is a checklist to assist the inspector during the periodic inspections of Liebherr mobile and crawler cranes.

20.1 Inspection recommendations for periodic inspections of Liebherr mobile and crawler cranes

Company:	**Inspector:**
Crane manufacturer: LIEBHERR	**Crane type:**
Serial number:	**Stock number:**
Construction year:	**Date:**
Inspector's signature for No. 1 to 22:	

1. Inspection category: Crane document						
Component inspected	**A**	**B**	**C**	**D**	**E**	**Comments**
Crane inspection log						
Operating and installation instructions						
Crane control log						
Load chart manual						
Job planner						

2. Inspection category: Signs / identification						
Component inspected	**A**	**B**	**C**	**D**	**E**	**Comments**
Factory tag						
Load data						
Operating specifications label						
Prohibition and command signs						
Other safety signs						

3. Inspection category: Travel gear[1]						
Component inspected	**A**	**B**	**C**	**D**	**E**	**Comments**
Frame[2]						
Supports[3]						
Axles						
Wheels						

3. Inspection category: Travel gear[1]						
Component inspected	**A**	**B**	**C**	**D**	**E**	**Comments**
Tires						
Bearings						
Transmission						
Universal drive shaft						
Leaf springs / springs						
Shock absorbers						
Steering						
Brakes						
Hydraulic axle suspension						

4. Inspection category: Chassis[1]						
Component inspected	**A**	**B**	**C**	**D**	**E**	**Comments**
Coverings						
Treads						
Counterweight holders[2]						
Suspension equipment						
Accesses, ladders						
Hook block mounting[2]						
Boom support[2]						

5. Inspection category: Chassis - driver's cab[1]						
Component inspected	**A**	**B**	**C**	**D**	**E**	**Comments**
Doors						
Windows / windshields						
Windshield wipers						
Mirrors						
Seat						
Heater						
Ventilation						
Sound absorber						
Trip recorder						
First aid kit						

5. Inspection category: Chassis - driver's cab[1]						
Component inspected	**A**	**B**	**C**	**D**	**E**	**Comments**
Spare bulbs						
Hazard warning triangle						
Safety vest						

6. Inspection category: Chassis - drive[1]						
Component inspected	**A**	**B**	**C**	**D**	**E**	**Comments**
Combustion engine						
Exhaust system						
Fuel tank						
Filters						
Sound absorber						
Engine mount						
Oil levels						
Fuel lines						

7. Inspection category: Chassis - hydraulics[1]						
Component inspected	**A**	**B**	**C**	**D**	**E**	**Comments**
Oil reservoir						
Filters						
Pumps						
Motors						
Valves						
Lines						
Hoses						
Cylinder						
Pressure limiting valves						

8. Inspection category: Chassis - pressurized air system[1]						
Component inspected	**A**	**B**	**C**	**D**	**E**	**Comments**
Compressor						
Filters						
Air tanks						
Valves						

8. Inspection category: Chassis - pressurized air system[1]						
Component inspected	**A**	**B**	**C**	**D**	**E**	**Comments**
Lines						
Hoses						
Cylinder						

9. Inspection category: Chassis - electrical system[1]						
Component inspected	**A**	**B**	**C**	**D**	**E**	**Comments**
Motors						
Generators						
Battery						
Switch						
Lines						
Fuses						
Resistors						
Lighting						
Brake lights						
Indicator lights						
Tail lights						
Working lights						
Signaling systems						
Indicator lights						
Battery switch						
Limit switches: Transmission, steering, drive train						
Support pressure indicator[2]						

10. Inspection category: Chassis - control devices[1]						
Component inspected	**A**	**B**	**C**	**D**	**E**	**Comments**
Engine regulation						
Transmission						
Couplings						
Circuits						
Brakes						
Steering						
Indicator displays						
Engine shut off line						

10. Inspection category: Chassis - control devices[1]						
Component inspected	**A**	**B**	**C**	**D**	**E**	**Comments**
Control of supports[2]						
Axle suspension						
Crane leveling						
Rear axle steering						

11. Inspection category: Superstructure						
Component inspected	**A**	**B**	**C**	**D**	**E**	**Comments**
Frame						
Coverings						
Treads						
Bearings						
Counterweights						
Relapse retainer						
Slewing ring connection: Tilt play						
Slewing ring connection: Mounting screws						
Slewing ring connection: Gears						
Slewing gear: Mounting screws						
Slewing gear: Gears						

12. Inspection category: Superstructure - crane operator's cab						
Component inspected	**A**	**B**	**C**	**D**	**E**	**Comments**
Doors						
Windows / windshields						
Windshield wipers						
Mirrors						
Seat						
Heater						
Ventilation						
Sound absorbers						
Joystick for working functions						
Gear shifts						
Safety: Crushing / shear locations						

13. Inspection category: Superstructure - Retaining and protection devices						
Component inspected	**A**	**B**	**C**	**D**	**E**	**Comments**
Accesses, ladders						
Handles						
Coverings						
Covers						
Hatches						
Treads						

14. Inspection category: Superstructure - drive train						
Component inspected	**A**	**B**	**C**	**D**	**E**	**Comments**
Combustion engine						
Exhaust system						
Fuel tank						
Filters						
Sound absorber						
Engine mount						
Fuel lines						

15. Inspection category: Superstructure - hydraulic system						
Component inspected	**A**	**B**	**C**	**D**	**E**	**Comments**
Oil reservoir						
Filters						
Pumps						
Motors						
Valves						
Lines						
Hoses						
Cylinder						
Pressure limiting valves						
Lowering brake valves						
Brake control: Hoist gear						
Brake control: Slewing gear						

16. Inspection category: Superstructure - electrical system						
Component inspected	**A**	**B**	**C**	**D**	**E**	**Comments**
Motors						
Generators						
Batteries						
Switch						
Lines						
Fuses						
Resistors						
Lighting						

17. Inspection category: Superstructure - control systems						
Component inspected	**A**	**B**	**C**	**D**	**E**	**Comments**
Engine regulation						
Transmission						
Flexible couplings						
Circuits						
Engine shut off line						
Monitoring indicators						

18. Inspection category: Superstructure - rope drives						
Component inspected	**A**	**B**	**C**	**D**	**E**	**Comments**
Winch 1[3]						
Winch 2[3]						
Winch 3[3]						
Winch 4[3]						
Rope pulleys						
Rope end connection						
Rope for winch 1						
Rope for winch 2						
Rope for winch 3						
Rope for winch 4						
Guy ropes						

19. Inspection category: Superstructure - hook						
Component inspected	**A**	**B**	**C**	**D**	**E**	**Comments**
Pulleys						
Rope guards on pulleys						
Axle support						
Load hook						
Load hook mounting						
Hook retention						

20. Inspection category: Superstructure - safety and switch systems						
Component inspected	**A**	**B**	**C**	**D**	**E**	**Comments**
Hoist emergency limit switch I						
Hoist emergency limit switch II						
Lowering emergency limit switch I						
Lowering emergency limit switch II						
Boom emergency limit switch I						
Boom emergency limit switch II						
Luffing jib: Boom limit switch I						
Luffing jib: Boom limit switch II						
Load moment limiter						
Angle display: Boom						
Angle display: Luffing jib						
Angle display: Slewing gear						
Safety devices: Control						
Working range limitation						
Pressure sensors						
Speed sensor						
Wind sensor						
Sliding beam monitoring						
Support pressure indicator						
Incline display						
Length indicator: Radius, boom length						
Emergency off system						
Engine stop						

21. Inspection category: Boom						
Component inspected	**A**	**B**	**C**	**D**	**E**	**Comments**
Weld structure						
Rope pulleys						
Change over pulleys feed mechanism						
Luffing cylinder						
Telescoping cylinder						
Boom extension ropes						
Boom retraction ropes						
Boom bearings						
Boom pinning						
Guy rods						
Relapse cylinders						

22. Inspection category: Equipment						
Component inspected	**A**	**B**	**C**	**D**	**E**	**Comments**
Weld structure						
Rope pulleys						
Relapse cylinder						
Relapse support						
Oscillation guard						
A-frame bearings						
Pinning of components						
Guy rods with pinning						
Rods with guide rail on A-frame 2 and A-frame 3						
All limit switches with switch mechanism						

Inspection criteria:
A = present / complete
B = condition / maintenance
C = function
D = repair / replace
E = reinspection required

Evaluation:
Satisfactory = x
Unsatisfactory = -
Not required = 0

Comments:
[1] Inspection of the crane carrier vehicle road worthiness is also fulfilled if it has already been certified by the road traffic department certification authority. For cranes that are not certified for use on public roads, an expert or authorized inspector must conduct the required tests to validate the vehicle's road worthiness.
[2] These inspections must be carried out by an authorized inspector even if it has passed the road traffic department test and is certified.
[3] Inspection of the winches regarding the used portion of the theoretical service life.

B195219

1 Introduction

DANGER
Danger of fatal injury due to defective crane ropes!
▶ Please observe the following criteria.

The rope should be considered to be a wear part, which must be replaced if the inspection shows that its strength has reduced to such an extent that continued use may be dangerous.
Regular inspection of the rope is required in order to safely carry loads with correctly deployed equipment, meaning that the rope must be taken out of service at an appropriate point in time.
The take-down criteria with regard to wire breaks, wear, corrosion and deformation can be applied immediately under all application conditions. The different factors are dealt with in ISO 4309, which is intended to serve as a guideline to competent experts who are involved in the maintenance and inspection of cranes.
We recommend to carry out an annual inspection by an **expert** according to the following standard (ISO 4309).
The ropes should be inspected every 4 years by an **authorized inspector**.
The scope of the inspection and the inspection results must be traceably documented, see addendum 2. This documentation must be retained as part of the crane records!
The criteria that are covered here are intended to provide an appropriate safety margin for movement of loads with cranes until the rope is taken down.

2 Wire rope

2.1 Condition before installing

The rope is usually replaced with a rope that is of the same type as the original. If the spare part is of another type, the user must ensure that the rope characteristics are at least as good as those of the rope that was taken down.
Before installing a new wire rope, the grooves of the rope drums and pulleys must be checked in order to ensure that the spare ropes is placed correctly in the rope grooves (see section entitled “Inspection”).

2.2 Installation

When the rope is removed from the spool or unwound from a reel, it must be ensured that the rope is not twisted, otherwise loops, reverse bends or kinks could originate in the rope.
If the rope is looped over any part of the system when it is not under strain, these areas must be protected accordingly.
Before starting to use the rope on the system, the user must ensure that all components that are functionally associated with the wire rope in connection with the standing components have been set up in such a way that they will operate correctly.
To stabilize the wire rope, a few lifting procedures should be carried out at approximately 10 % of the normal load.

2.3 Maintenance

The maintenance of the wire ropes depends on the type of lifting device, its application, the environment as well as the type of rope that is used. If no other instructions from the crane or rope manufacturer are provided, the wire rope should be cleaned, if possible, and lubricated with grease or oil, particularly in areas in which the rope is subjected to bending when it runs over pulleys.
The kind of grease that is used must be suitable for steel ropes.
Lack of maintenance will reduce the service life of the rope, particularly if the crane is used in a corrosive environment and if re-lubricating is not possible because of the nature of the respective crane application.

2.4 Inspection according to ISO 4309

2.4.1 Frequency

Daily inspection

If possible, all visible parts of the ropes must be checked for general wear and distortion every working day. Special attention must be paid to the rope end connections. Any suspected changes in the condition of the rope must be reported and the rope must be inspected by a trained expert inspector in accordance with the section “Points to check on the rope”.
If the lower rope layers on the drum are used infrequently or not at all, periodically unwind and rewind the entire drum under pretension. A rope is most cost-effective if it is used over its entire length. For that reason, it is recommended to use an appropriate rope length when operating the crane over longer periods.

Note

▶ If a rope is newly placed, then it must be pretensioned and placed with a pretension of at least 10 % of the maximum rope pull.

Special inspection as described in section “Points to check on the rope”

The rope must be checked after any events that may have led to damage to the rope and / or the rope ends and whenever the rope is taken back into service after being taken down and then re-installed.

2.4.2 Checking the spooling behavior of the rope on the cable drum

To avoid spooling errors and associated rope damage, it is necessary to check the spooling behavior daily. If spooling errors are determined, the rope must be reeled off until there are only 3 rope coils on the winch. Thereafter, the rope is to be tensioned with a pretension of at least 10 % of the maximal rope pull and then placed again.

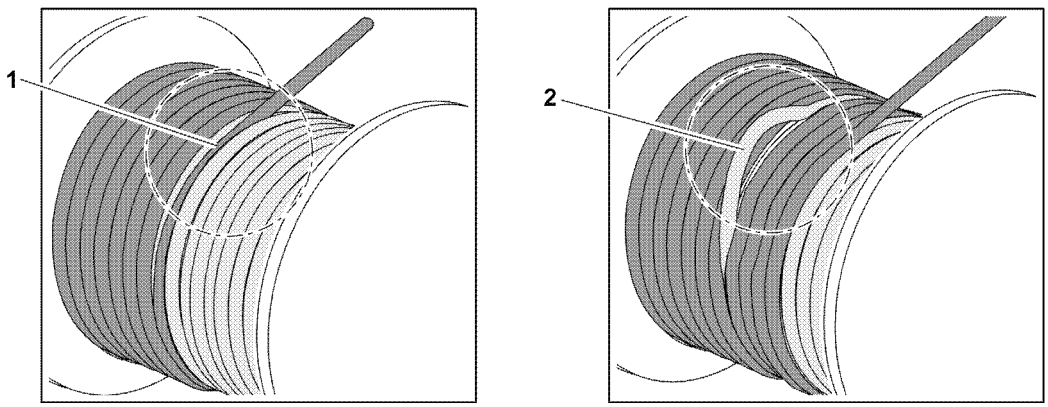

B103456

Possible spooling errors:
– Cutting into the lower rope layers **1**
– Loop formation in the lower rope layers **2**

2.4.3 Points to check on the rope

General

Although the entire length of the rope must be checked, particular attention must be paid to checking the following areas:

– At the rope end points on both sides, for movable as well as fixed ropes.
– The part of the rope that runs through the block or over rope pulleys; particular attention must be paid to parts of the rope that are on rope pulleys when under load (see appendix 1) in systems that carry out repeated movements.
– Parts of the rope that run over a compensation pulley.
– All parts of the rope that can be subjected to wear caused by external elements (e.g. protruding hatch surrounds).
– All parts of the rope that are subjected to the effects of heat.
– On the contact positions of the ropes when spooling up.
– Check the inside of the rope for corrosion and material fatigue.

The results of the inspection must be entered in the inspection log for the system (for typical example see section entitled “Rope inspection log” and appendix 2).

Checking the rope in the uphill pitch zones of the rope coil for flat sections

In the cross area of the coiled up rope layers, the rope is under more strain and can therefore be flattened. To void flat sections, the rope can be shortened on the rope drum fixed point.

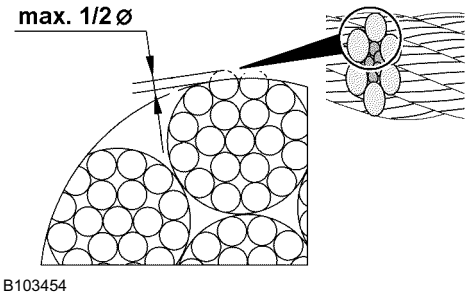

If the wires in the outer braids are flattened to no more than maximum half the wire diameter:

– Shorten the rope by a length of 1/3 of the rope drum circumference and reset.

DANGER

Rope breakage!

If the following measures are not observed, the rope can break, the load can fall down and fatally injure personnel!

▶ Take the rope down when the take down criteria is reached, as described in section “Take down criteria”!
▶ Take the rope down when the wires in the outer braids are flattened by more than half the wire diameter!

Rope suspension and connection systems - except loops

The rope must be examined at the exits of the rope suspension and connection system, since this area is particularly susceptible to initial signs of material fatigue (wire breaks) and corrosion. The rope suspension and connection systems must also be examined for signs of deformation or wear.
Rope suspension and connection systems with pressure sleeves must undergo the same checking, and the sleeve must be checked for cracks in the sleeve material and possible slippage of the rope in the sleeve.
Detachable rope suspension systems (cotters, rope clamps) must be checked for wire breaks inside and beneath the mount or fastening; it must also be examined whether the cotters and screwed-on rope clamps are firmly connected to the rope. This check should also ensure that the requirements of the rope suspension and connection systems standards and procedural guidelines are complied with.

2.5 Take-down criteria

The safe use of the rope is assessed in accordance with the following criteria:

1.) Number of wire breaks
2.) Broken wire nests
3.) Wire break increase rate
4.) Strand breaks
5.) Rope diameter reduction, including the reduction caused by damage to the rope core
6.) External and internal wear
7.) External and internal corrosion
8.) Deformation
9.) Damage caused by the effects of heat or arc welders

These individual factors must be taken into consideration in accordance with the relevant criteria during all examinations. However, rope quality deterioration frequently results from a combination of the individual factors, meaning that a worsening effect occurs that must be detected by an expert and that influences the decision as to whether the rope has reached its rope removal limit and whether it can continued to be used.
The inspector must investigate if the deterioration has been caused by a fault in the system; if this is the case remedial action should be recommended before placing a new rope.

2.5.1 Number of wire breaks

The number of wire breaks must be determined by visually inspecting the entire length of the rope. When a wire break is found, sections that are 30 × d (d = nominal rope diameter) in length are marked at both sides of this point. These sections must be examined extremely carefully. All wire breaks are now carefully counted in each section. Please compare the number of visible wire breaks with appendix 4. If the number of visible wire breaks is less than the number specified in the chart, then the area in which the most broken wires are found is marked over a length of 6 × d. Count the number of visible wire breaks again and compare the result with appendix 4. If the number of visible wire breaks is less than the number specified in the chart, then the rope does not have to be taken down yet.

Note
Defining the interval until the next inspection
▶ The interval until the next inspection is set depending on the number of visible wire breaks.

2.5.2 Broken wire nests

If the wire breaks are extremely close together and form wire nests, the rope must be taken down. If the frequency of such wire breaks occurs over a rope length of less than **6d** or is concentrated on one strand, taking the rope down is recommended, even if the number of wire breaks is less than the maximum number specified in the tables.

2.5.3 Wire break increase rate

For applications in which the main reason for damage to the rope is material fatigue, the first wire breaks will not occur until a certain time has elapsed, but the number of wire breaks will increase rapidly at ever-decreasing intervals.
Careful checking and logging of the increased number of wire breaks over time is recommended in these cases.

2.5.4 Strand breaks

If an entire strand breaks, the rope must be taken down.

2.5.5 Reduction in rope diameter caused by damage to core rope

The rope diameter can be reduced as a result to damage to the core because of:

1.) Internal wear and notching
2.) Internal wear due to friction between individual strands and wires in the rope, particularly if it is subjected to bending
3.) Steel core breakage
4.) Break in internal layers of multi-strand ropes

If the rope diameter (average of two diameter measurements) is reduced by 3 % of the nominal diameter (rotation resistant ropes) or 10 % of the nominal diameter of other ropes due to these factors, the ropes must be taken down, even if no wire breaks are visible.

Note
Diameter of new ropes
▶ New ropes can have an actual diameter that is greater than the nominal diameter, meaning that proportionally greater wear is possible.

2.5.6 External wear

Abrasion of outer wires of outer rope strands as a result of rubbing contact under pressure with the grooves in the rope reels and drums. This condition is particularly evident in moving ropes in the areas in which they come into contact with rope pulleys when the load is being moved and braked, and manifest themselves as flattened surfaces on the outer wires. Abrasion is exacerbated by a lack of or incorrect lubrication as well as the effects of dust.
Wear reduces the breaking strain of steel ropes because the cross section of the steel is reduced. The rope must be taken down if the actual rope diameter has reduced by 7 % or more because of outer wear, even if no wire breaks are visible.

2.5.7 External and internal corrosion

Corrosion is a particular problem in maritime climates and atmospheres that are polluted by industrial emissions, reducing breaking strain and accelerating material fatigue because of the reduction in the rope material cross section, leading to irregular surfaces which are the starting point for stress cracks. Extreme corrosion can reduce the elasticity of the rope.

1.) External corrosion
Corrosion of the outer rope wires can be determined by visual inspection.
2.) Internal corrosion
This condition is more difficult to detect than external corrosion.

Note
Internal corrosion
▶ If there are any signs of internal corrosion the rope must be checked by a competent expert.

DANGER
Occurrence of internal corrosion!
▶ If the suspicion of extreme internal corrosion is confirmed, the rope must be taken down immediately.

2.5.8 Rope deformations

A visible change to the rope structure is referred to as “rope deformation” and can cause a change at the deformation point that results in irregular rope tension.
A distinction is made between the following important types of cable deformation on the basis of the cable appearance (see following sections):

1.) Corkscrew-like deformation
2.) Basket formation
3.) Strands protruding from the rope
4.) Wire loop formation
5.) Flattening
6.) Reverse bends or knots
7.) Kinks

Corkscrew-like deformation (see appendix 3, table 1)

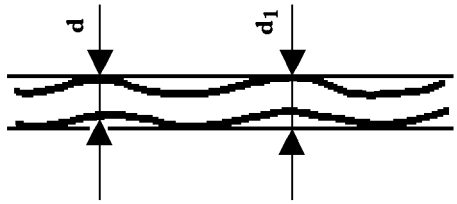

B195723

Corkscrew-like deformation

If there is any corkscrew-like deformation the rope must be taken down if the following condition is net:

$$d_1 > \frac{4\,d}{3}$$

B195722

d = nominal diameter of rope
d_1 = rope sheath diameter of the distorted rope

Basket formation (see appendix 3, table 2)

If there are kinks in the rope, it must be replaced immediately.

Strands protruding from the rope (see appendix 3, table 3)

The rope must be replaced immediately if this kind of deformation occurs.

Wire loop formation (see appendix 3, tables 4 and 5)

In this case, certain wires or groups of wires protrude from the rope at the side facing the rope pulley in the form of loops - this is normally the result of sudden strain. If serious deformation occurs, the rope must be taken down.

Flattening (see appendix 3, tables 8 and 9)

Flattening is the result of mechanical damage; if it is pronounced the rope must be replaced.

Reverse bends or knots (see appendix 3, tables 6 and 7)

If the rope has any reverse loops or knots it must be taken down immediately.

Kinks (see appendix 3, table 10)

Kinks are angled deformations in the rope caused by external influences. If there are kinks in the rope, it must be replaced immediately.

2.5.9 Damage caused by the effects of heat or arc welders

Steel ropes that have been subjected to extremely high temperatures, which can be detected externally because of the coloring that it causes, must be taken down.

2.5.10 Distortion on non-rotation resistance control ropes

Note

▶ The erection and control procedure must be carried out with a pretension of at least 10 % of the maximum rope pull.

For crane types with control winches for the boom control, especially the first rope layer of the control winch must be checked for rope dents and / or rope distortions.

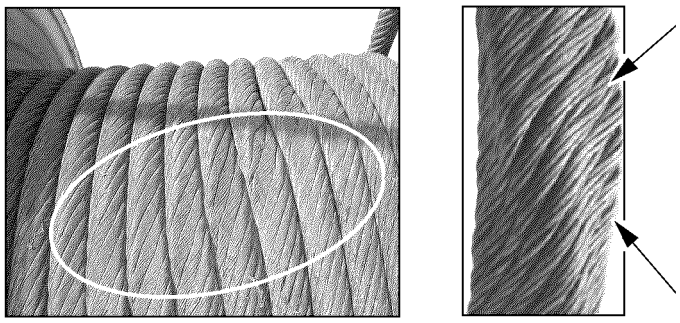

B114002

Distortions on control ropes

– At a distortion of more than 5 %, the control rope must be checked before every assembly and erection procedure and the distortion must be documented. Example for inspection protocol: See Addendum 2.

– At a distortion of more than 10 %, the control rope must be taken down.

Calculation formula for rope distortion

$$[V]\,\% = \frac{(d_{max} - d_{min})}{d} \times 100$$

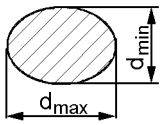

B114001

[V] % = rope distortion in %
d = control rope nominal diameter
$\mathbf{d_{max}}$ = largest diameter of distortion area
$\mathbf{d_{min}}$ = smallest diameter of distortion area

3 Operating behavior of steel ropes

Exact logging of information by the checker can be useful for predicting the behaviour of a certain type of steel rope on a crane. This information is useful for planning and adapting maintenance instructions and controlling the stocking of spare ropes. The use of such a prediction system should not cause the examinations to be less strict or the rope usage time to be extended beyond the criteria that are specified in the previous sections of this guideline for monitoring and taking down of crane ropes.

4 Condition of equipment that is functionally associated with the rope

Note
Groove radius
▶ The radius must not be smaller than the actual diameter of the rope.

Rope drums and pulleys must be checked at regular intervals in order to ensure that all these components rotate correctly in their bearings. Stiff or blocked rope pulleys wear rapidly and unevenly and cause serious rope abrasion. Ineffective compensation pulleys can lead to irregular rope tension. The radius at the bottom of the rope grooves of all rope pulleys and the drum must be suitable for the nominal diameter of the rope. If the radius has become too big or too small the rope groove must be reworked or the rope pulley replaced.

5 Rope inspection log

The user must provide a log for each of the regular inspections in which all rope inspection information is recorded. Typical example of a log - see appendix 2.

6 Rope storage and marking

Clean, dry rope storage facilities must be provided in order to prevent damage to ropes that are not in use; it must also be ensured that the ropes can be clearly and unambiguously assigned to their checking logs.

7 Wire ropes and rope end connections

DANGER
Risk of accident!
▶ Correct choice and use of the wire rope and the rope end connections are a decisive precondition for proper and accident-free crane operation.

The wire ropes and rope end connections selected in accordance with their usage. It must be determined whether a rotation-resistant or non-rotation free rope is required. The type of rope that is selected then determines the type of rope end connections that are used.

7.1 Rotation-resistant ropes and their rope end connections

Rotation-resistant ropes are special ropes that produce extremely little torque and twisting at the rope end connection when they are under strain.

Note
▶ Rotation-resistant ropes are used as **hoist ropes**.

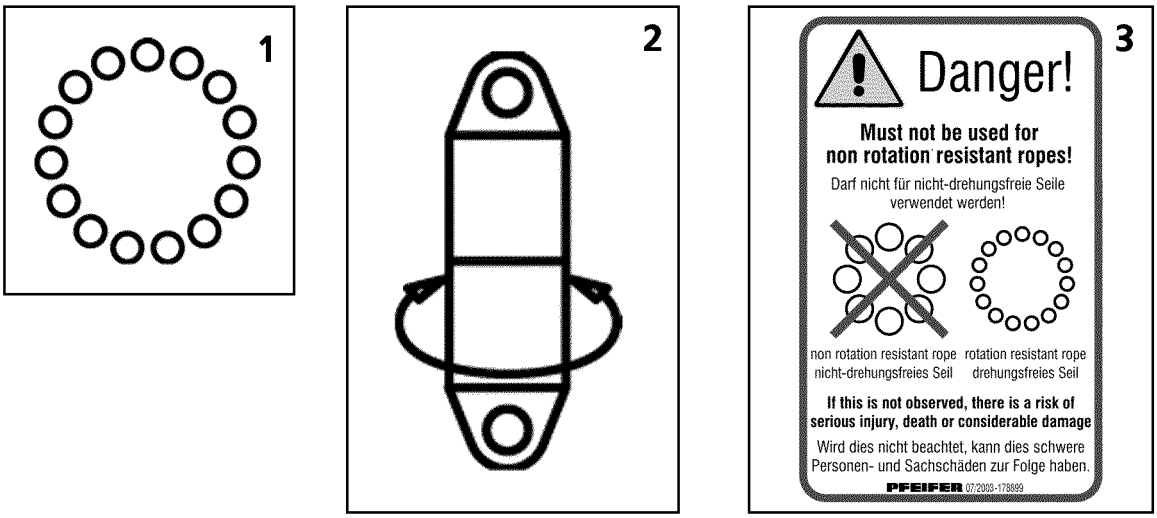

B195653

Typical rotation-resistant wire rope structures are ropes with 15 to 18 outer strands. Rotation-resistant ropes are symbolically depicted with 15 outer strands (circles) (see table **1**).
Rotation-resistant ropes can be optionally used with the following rope end connections:

– Rope end connection **rotating** in the form of a PFEIFER link **with** swivel or spin stabiliser / swivel.
– Rope end connection **non-rotating** in the form of a PFEIFER link **without** swivel or gib and cotter.

If possible, preference should be given to the use of a twisting rope end connection to reduce torsional stress with **rotation-resistant ropes** (see table **2**).

DANGER
Danger of severe injuries to personnel and property damage!
▶ **Never** use rotating rope end connections with non-rotation free ropes!

Note
Usage warning notes
▶ The usage warning notes on the rotating PFEIFER link with pulley indicates that this rope end connection may **not** be used for non-rotation free ropes (see table **3**)!

7.2 Non-rotation free ropes and their rope end connections

Non-rotation free ropes generate high torque levels at the rope end connection when they are under load. For this reason, the rope ends must be protected from twisting using an appropriate rope end connection to prevent the rope from unscrewing under strain!

Note
▶ Non-rotation free ropes are used as **guy ropes** or **control ropes**.

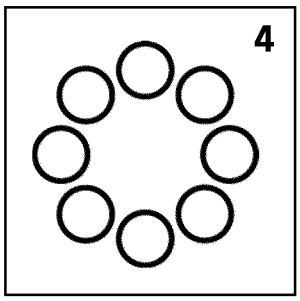

B195654

Typical non-rotation free wire rope structures are ropes with 8 to 10 outer strands. Twisting ropes are symbolically depicted with 8 outer strands (circles) (see table **4**).
Non-rotation free ropes can only be used with the following rope end connections:

– Rope end connection **non-rotating** in the form of a PFEIFER link **without** swivel or gib and cotter.
  A non-rotating rope end connection is also the mount of the rope on the fixed point of the winch drum.

DANGER
Danger of severe injuries to personnel and property damage!

- ▶ **Never** use rotating rope end connections with non-rotation free ropes!
- ▶ Never install a twist compensator / swivel!

Note
Usage warning notes

- ▶ The usage warning note on PFEIFER links without swivel and cotter indicates that this rope end connection may **not** be used for non-twist free ropes **in combination** with a twist compensator / swivel (see table **5**)!

blank page!

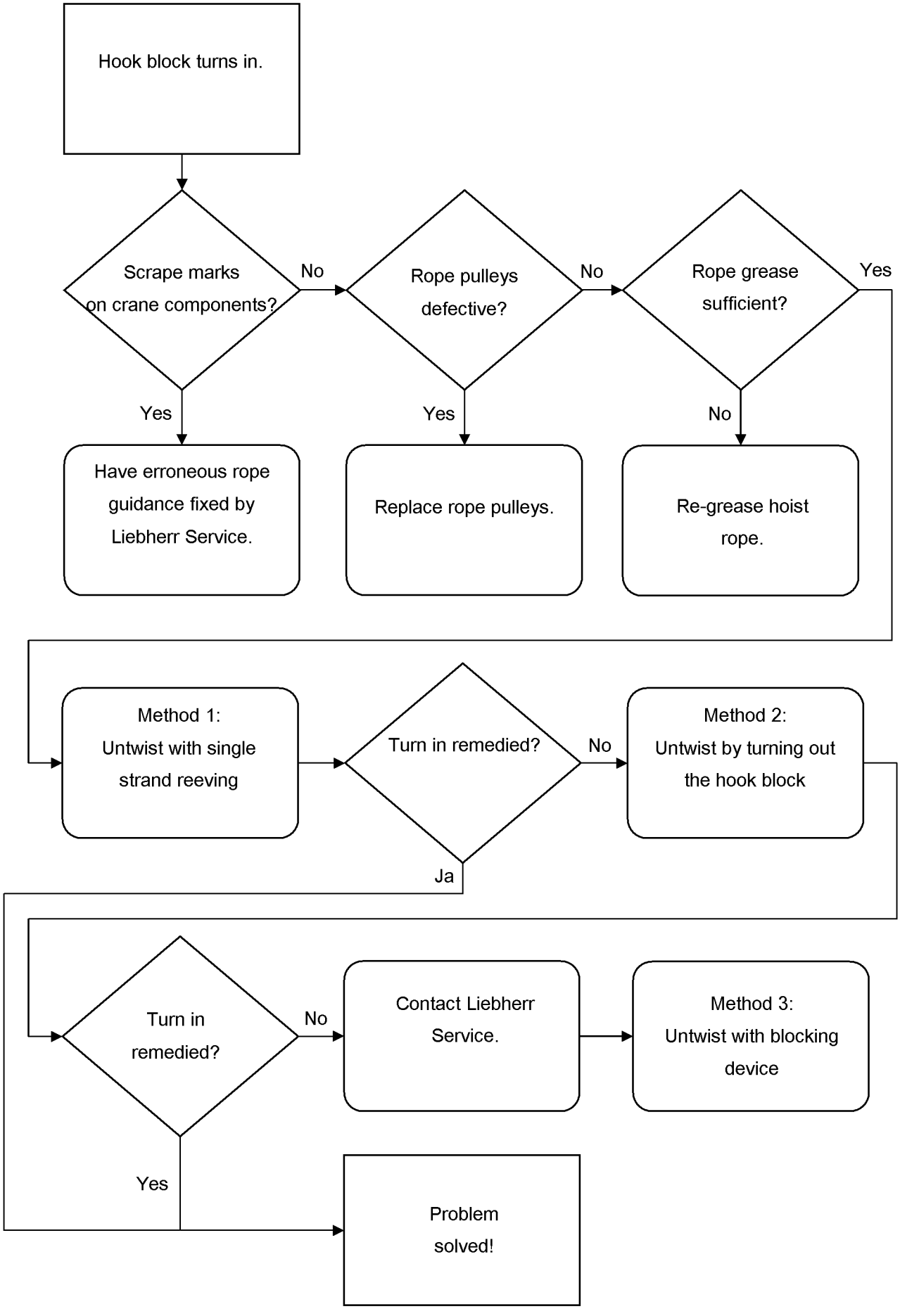
Hook block turns in.
Scrape marks on crane components?
No
Rope pulleys defective?
No
Rope grease sufficient?
Yes
Yes
Yes
No
Have erroneous rope guidance fixed by Liebherr Service.
Replace rope pulleys.
Re-grease hoist rope.
Method 1: Untwist with single strand reeving
Turn in remedied?
No
Method 2: Untwist by turning out the hook block
Ja
Turn in remedied?
No
Contact Liebherr Service.
Method 3: Untwist with blocking device
Yes
Problem solved!

B106181

8 Twisting caused by stretching in rotation-resistant ropes and its remedy

For procedure, see illustration opposite.

WARNING
Damage to the rope!
▶ Please proceed with extreme caution when performing the following actions.
▶ Observe the following instructions exactly.

8.1 General

The cause for the turn-in of the hook block can have various reasons. For that reason, check the crane first for the following peculiarities:

– Scrub marks: Are hoist rope scrub marks present on the crane components? If scrub marks are present, check the hoist rope pathway and rectify.
– Rope pulleys: Has the groove diameter become too small, or do the rope pulleys exhibit a negative profile?
  • Groove diameter dimensional stability must be present.
  • The rope groove must be uniformly smooth without a hoist rope negative profile.
  • If this is not the case, the rope pulley must be exchanged.
– Rope greasing: Has the hoist rope been sufficiently greased? If the rope surface is dry, the hoist rope must be re-greased.

If the crane does not display other features, the hoist rope must be spun out. Following, two methods are described by which the hoist rope can be spun out. The methods must be applied in the described sequence.

8.2 Turning out extremely rotation-resistant hoist ropes

8.2.1 Method 1: Spinning out with one strand reeve

1.) Reeve in the one strand hoist rope.
2.) Extend the boom to the maximal boom length and hook height.
3.) Lower hooks to approximately 1 m above the ground and allow the hoist rope to spin out.
4.) With an empty hook block, carry out one complete hoist cycle.
5.) Lower the hook again to approximately 1 m above the ground and allow the hoist rope to spin out again.
6.) Reeve the number of strands of hoist rope carefully and spin free where the twisting of the hook block is largest.
7.) Carry out at least two complete hoist cycles at maximum boom length and hook height, in order to divide the spin out onto the entire rope length.

If the hook block turns in further, method 2 must be used.

8.2.2 Method 2: Spinning out by turning out the hook block

1.) The hook block is reeved with the largest number of strands are twisted.
2.) Extend the boom completely and lower the hook block.
3.) Attach a load of approximately 10 % of the nominal rope pull on the hook block.
4.) Before lifting the load, an assistant must carry out the following measures: Rotate the twisted hook block to a straight position by hand until the rope strands no longer touch each other.
5.) Rotate the hook block further by a complete revolution, the rope strands touch each other again.
6.) Hold the hook block in the prescribed position until the load lifts off the ground.
   - **CAUTION:**
     When the hook block comes under load, it will attempt to rotate back to a straight position. Release the hook block.
7.) Move the load until approximately 15 m before the uppermost hook position of the completely extended boom.
8.) Lower load and set it down. The twisting should now be remedied.

If the hook block turns in further, then the process must be repeated. If this does not remedy the problem, contact Liebherr Service.

blank page!

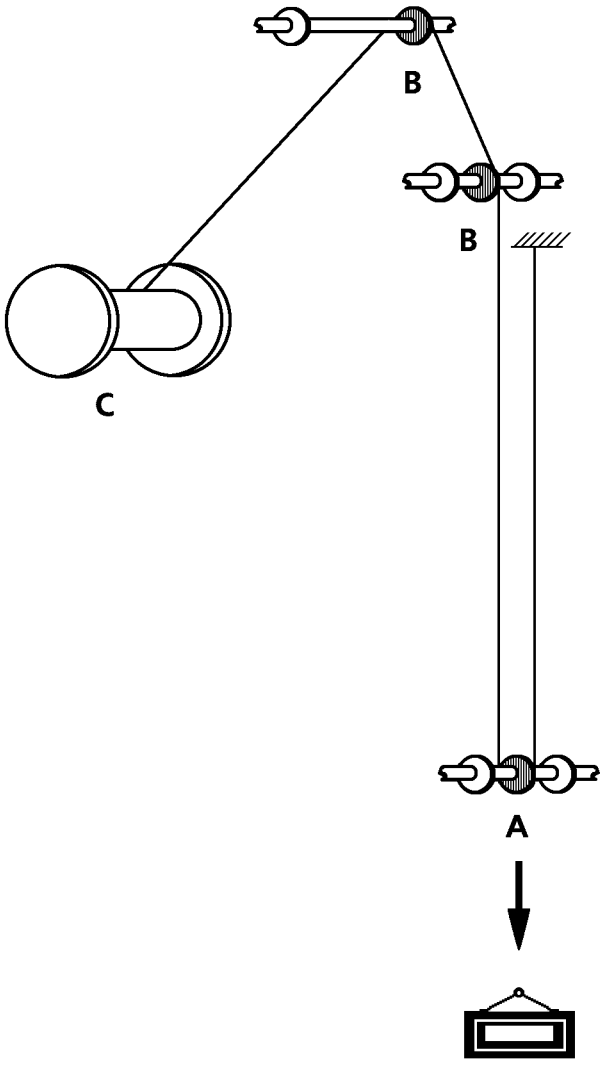

Fig. 1

B193940

A Hook block **B** Rope pulley **C** Rope drum

9 Appendix 1

Diagram of possible defects, with reference to different areas that must be considered during inspection:

1.) Check rope end connection at rope drum
2.) Examine for incorrect spooling up, which causes deformation (crushing) and wear, which can have serious consequences at rope crossing points
3.) Examine for wire breaks
4.) Examine for corrosion
5.) Look for deformation as a result of hook block loading
6.) Inspect parts of rope that run over rope pulleys for wire breaks and wear
    - Rope suspension and rope mountings:
    - Check for wire breaks and corrosion
    - Also inspect parts of rope that run on or next to compensating pulleys
7.) Look for deformation
8.) Check rope diameter
9.) Carefully check length of rope that runs through the hook block, particularly the part that rests on the rope pulley under load
10.) Check for wire breaks and surface wear
11.) Check for corrosion

Datasheet for ropes	Machine: ..... Application: .....
Construction:	Date fitted: .....
Direction of rope lay: RH / LH [1]	Date discarded: .....
Type of lay: Ordinary / Langs [1]	
Nominal diameter:	Minimum breaking load: .....
Tensile grade:	Working load: .....
Quality: ungalvanized / galvanized [1]	
Type of core:	Diameter measured: .....
steel / natural or synthetic textile / mixed [1]	under a load of: .....
Preformation:	
Length of rope:	
Type of termination:	

Visible broken wires		**Abrasion of outer wires**	**Corrosion**	**Reduction of rope diameter**	**Positions measured**	**Overall assessment**	**Damage and deformations**
Number in length of **6 d**	Number in length of **30 d**	Degree of deterioration [2]	Degree of deterioration [2]	%		Degree of deterioration [2]	Nature

	Date: ..... Signature: .....
Rope supplier:	Number of working hours: .....
Other observations:	Reasons for discard: .....

[1] Delete as applirope
[2] In these columns, describe the latter as: slight, medium, high, very high, discard.

B105034

10 Appendix 2

Typical example for an inspection log

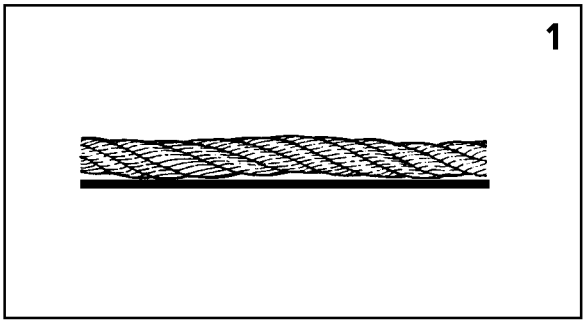

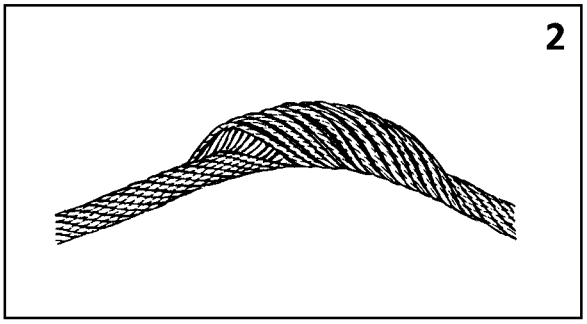

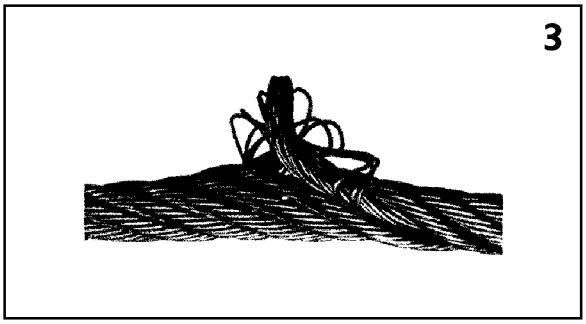

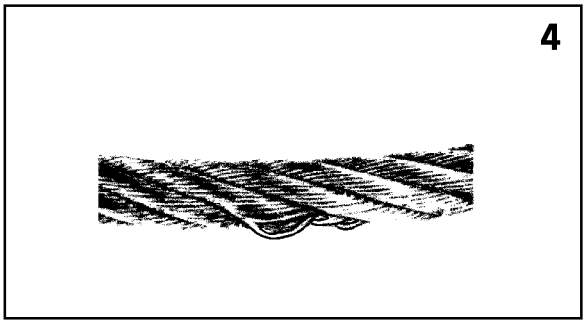

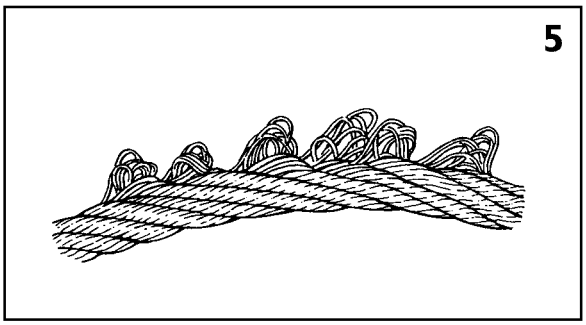

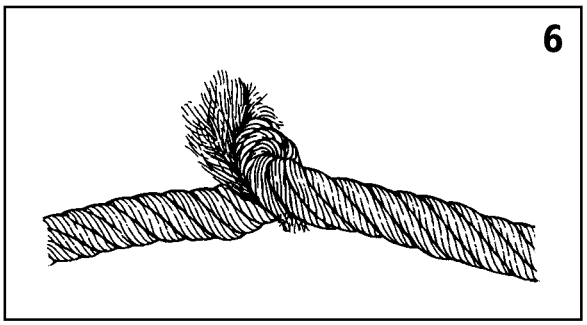

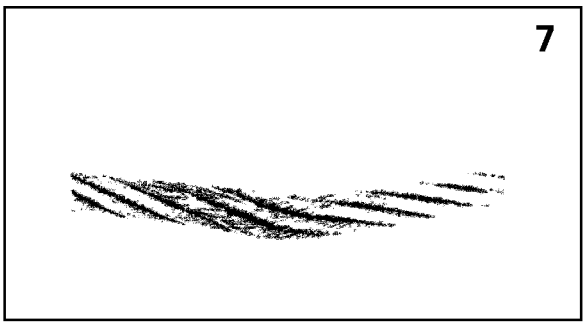

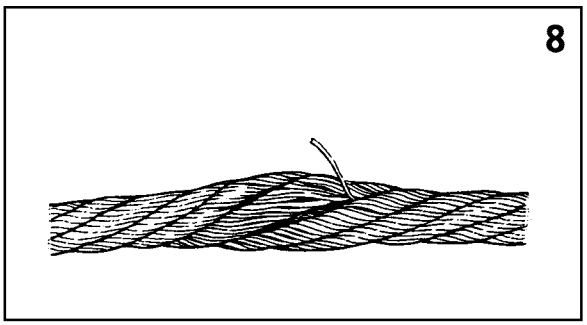

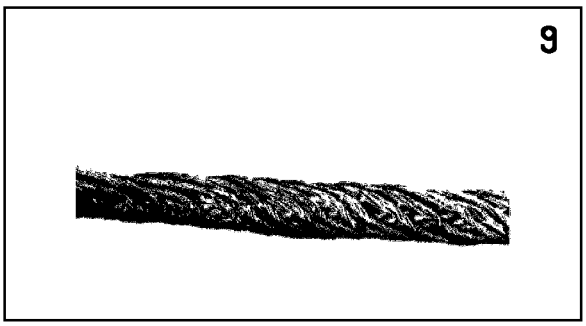

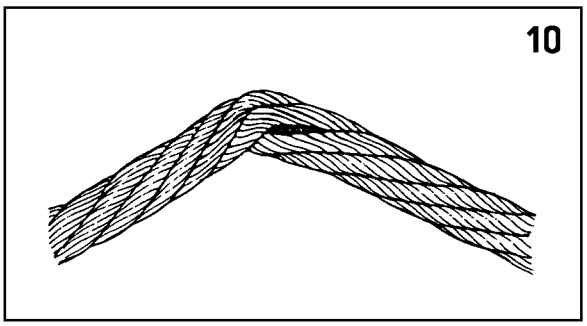

B194071

11 Appendix 3

Note
Depiction of deformation
The deformation that is depicted on many pictures is exaggerated in order to show it more clearly.
▶ The ropes that are shown would have had to be taken down long before they reached this stage.

Typical examples of damage that can occur to wire ropes:

– Picture **1**:
Corkscrew-like deformation: deformation where rope is in the form of a spiral along its longitudinal axis.
The rope must be taken down if the deformation exceeds the value that is mentioned in chapter "Take-down criteria", section entitled "Corkscrew-like deformation".
– Picture **2**:
Basket formation on a multi-strand rope.
Reason for immediate rope take-down.
– Picture **3**:
Steel core rope exit, generally in combination with basket formation in the immediate vicinity.
Reason for immediate rope take-down.
– Picture **4**:
Only one strand is affected by loop formation, although the examination of a longer section of rope shows that the deformation is visible at regular intervals; normally deformation along the length of a lay.
Reason for immediate rope take-down.
– Picture **5**:
Serious worsening of the previous problem (see picture **4**) (typical of hoist rope in a ram system).
Reason for immediate rope take-down.
– Picture **6**:
A serious reverse bend or knot.
Note the destroyed lay that leads to the exit of the fibre layer.
Reason for immediate rope take-down.
– Picture **7**:
A wire rope that has been kinked during installation but still taken into operation, and now suffers from localised wear and substandard rope tension.
Reason for rope take-down.
– Picture **8**:
Crushing as a result of local mechanical damage causing imbalance beneath the strands, resulting in wire breaks.
Reason for rope take-down.
– Picture **9**:
Crushing of a multi-strand rope caused by incorrect spooling up on the rope drum.
Note increase in length of outer strands of lay. Here too, imbalance would occur under load.
Reason for rope take-down.
– Picture **10**:
Example of serious kinking.
Reason for rope take-down.

12 Appendix 4

Guideline for number of wire breaks in accordance with ISO 4309
for power train classification groups M1, M2, M3 and M4

12.1 Wire ropes

12.1.1 Hoist ropes

Rope diameter	Number of visible broken wires requiring rope removal, over a length of	
	6 x rope diameter	30 x rope diameter
See chapter 1.03	2	4

Note
- ▶ If a rotation resistant hoist rope is placed on winch 5, then it can be used for the jib adjustment or as a hoist rope for the boom nose!

WARNING
Use of hoist rope as control rope!
Frequent jib adjustment movements with a rotation resistant hoist rope lead to significant wear and require premature take down of the hoist rope!
If it is not recognized in time that the rope needs to be taken down, the hoist rope can rip!
The crane can topple over and personnel can be severely injured or killed!
- ▶ In case of frequent jib adjustment movements, a non-rotation free control rope must be placed!
- ▶ Make sure that no spin stabilizer / swivels are used as rope end connections when using a non-rotation free control rope!
- ▶ Remove spin stabilizer or swivels!

12.1.2 Telescoping ropes

Note
- ▶ Installed in cranes with telescopic boom with rope mechanism!

Rope diameter	Number of visible broken wires requiring rope removal, over a length of	
	6 x rope diameter	30 x rope diameter
See chapter 1.03	7	14

12.1.3 Boom retraction ropes

Note
- ▶ Installed in cranes with telescopic boom with rope mechanism!

Rope diameter	Number of visible broken wires requiring rope removal, over a length of	
	6 x rope diameter	30 x rope diameter
See chapter 1.03	6	13

12.1.4 Assembly ropes

Note

▶ Installed in cranes with auxiliary winch!

Rope diameter	Number of visible broken wires requiring rope removal, over a length of	
	6 x rope diameter	30 x rope diameter
See chapter 1.03	2	4

12.1.5 Guy ropes, control ropes

Note

▶ Installed in cranes with boom guying and / or luffing lattice jib!

Rope diameter	Number of visible broken wires requiring rope removal, over a length of	
	6 x rope diameter	30 x rope diameter
See chapter 1.03	6	13

WARNING

Non-rotation free control ropes can rip off!

If a non-rotation free control rope is used in connection with a rotating rope end connection, the rope damage can occur or the control rope can rip off!

The crane can topple over and personnel can be severely injured or killed!

▶ Make sure that no spin stabilizer / swivels are used as rope end connections when using a non-rotation free control rope!

▶ Remove spin stabilizer or swivels!

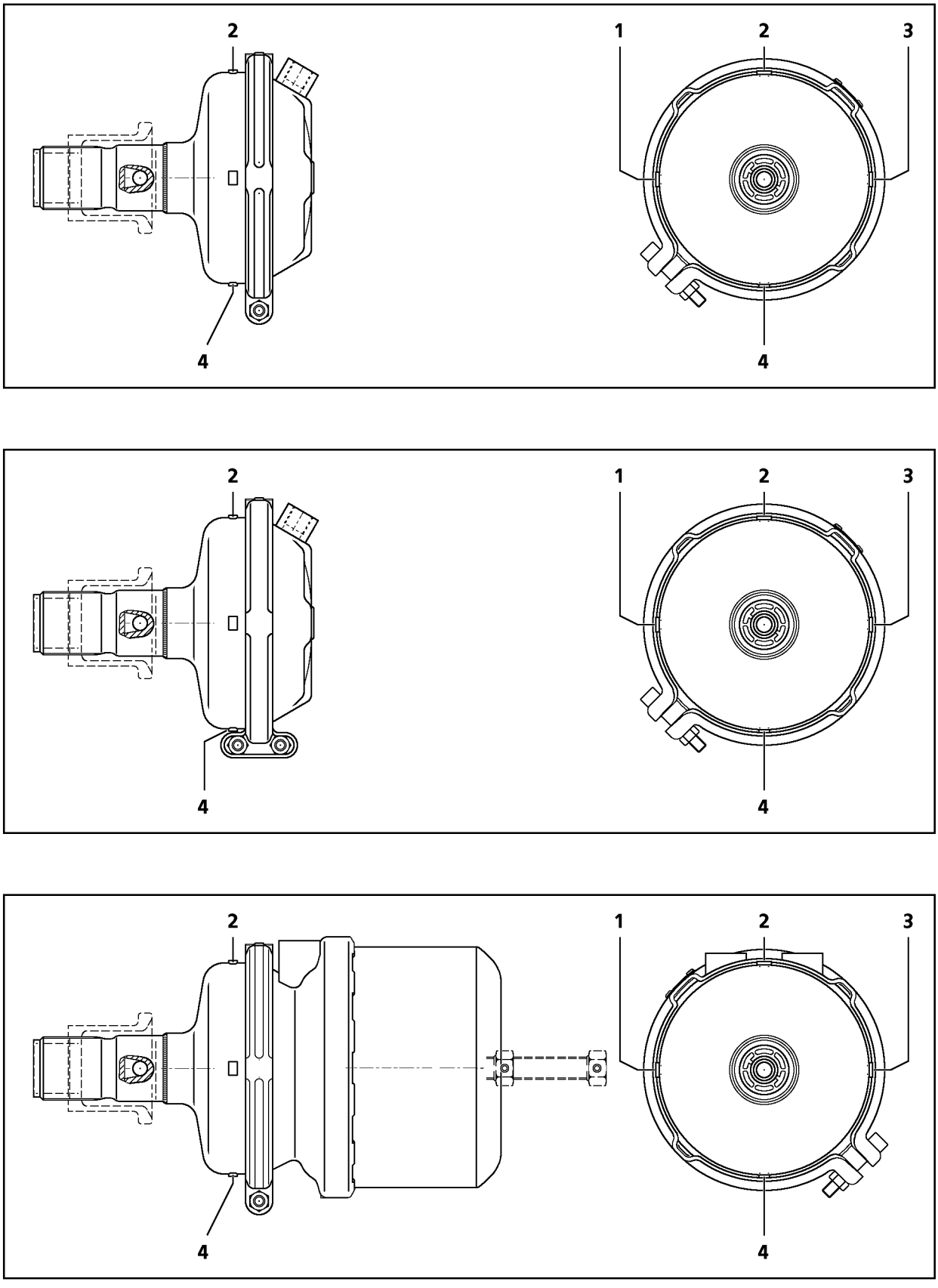

B190108

1 General

Air braking systems on mobile cranes must be inspected annually.
In Germany, the main inspection and safety tests must be conducted in accordance with section 29 of STVZO.
Local national laws apply in other countries.

2 Visual inspection

Check that the following requirements are met:
- Piping and hoses are not damaged, not corroded and are properly installed
- Devices are properly installed and fastened
  Ensure that the breathing holes **4** on the diaphragm cylinders are not blocked (plugs removed). If this is not done, the membrane bellows may twist. The spring loaded-brake will then not be completely released and the brake will run hot.
  The breathing holes **1** breathing holes **2** and breathing holes **3** must nevertheless be closed by plugs.
- The air pressure tank is not damaged and no corrosion is visible on the outside.
  The tank is labeled as specified.
  No welding may be done nor heat be applied to the tank walls.
- Pressure tank is drained
- Dust seals are not damaged
- Joints are properly secured, operate freely and are properly seated
- Rods have not been repaired by welding, are not bent, move freely and are not otherwise damaged
- The wheel brakes are properly adjusted (brake lining clearance, brake cylinders stroke, lining thickness, slack adjuster)

3 Operation and performance test

3.1 Operation test

- **Pressure regulator**, **Air compressor**: Test low and high pressure settings and delivery rate
- **Pressurized air system**: Check for sealing and supply pressure
- **Multi-circuit safety valve**, **spill valve** and **warning system**: Check operation

3.2 Performance test

Note
▶ The following values are valid for an axle load of 12 t.

Brake action can be checked using the observation ports located in the metal covers:
- Press on the brake pedal: Both brake shoes contact the drum
- Release the brake pedal: Brake shoes immediately return to their starting position

Check brake performance:
- Measure the retarding force
- Measure stopping distance
- Determine braking performance using brake stands

Determine retarding force using a retarding force measuring instrument
When applying a pressure of 6.5 bar, the measured average retarding force d_m should be greater than 4.5 m/s^2 .
Measure stopping distance
When applying a pressure of 6.5 bar, the stopping distance, s, should be less than the value given in the charts.

Test speed v [km/h]	Stopping distance s [m]
20	6.5
30	12.5
40	19.8
50	29.0

Measure the braking performance using a brake stand
When braking forces are measured at the vehicle axles, braking performance shall be determined as follows:

$$z = \frac{F_1 \times i_1 + F_2 \times i_2 \ldots F_n \times i_n}{G_z} \times 100\,\%$$

B195327

$$i_1 = \frac{p_{N1} - 0{,}4}{p_1 - 0{,}4}$$

B195328

$$i_n = \frac{p_{Nn} - 0{,}4}{p_n - 0{,}4}$$

B195329

Gz = allowable total vehicle weight [N]
z = braking performance [%]
F_1 = braking force at the first axle, which was determined at pressure p_1 [N]
F_2 = braking force at the second axle, which was determined at pressure p_2 [N]
F_n = braking force at the last axle, which was determined at pressure p_n [N]
$p_{N1...n}$ = max. braking pressure at the respective axle [bar]
$p_{1...n}$ = braking pressure actually transmitted to the wheel cylinder at the respective axle [bar]

4 Internal inspection of the wheel brakes

DANGER
Risk of accident!
▶ All brake maintenance and repair work shall be carried out only by authorized and trained personnel.

Check the brake lining condition every three months using the inspection ports in the metal covers.
Perform an internal inspection of the individual brake components by removing the brake drum every 12 months.

WARNING
Risk of damaging the brakes!
▶ Do **not** activate the brakes while the brake drum is removed!

When brake linings measure 5.5 mm (new brake lining thickness 18 mm), not including metal shoes, replace the linings. Burned, shiny or oil-covered linings must also be replaced.

DANGER
Risk of accident!
▶ Always replace brake linings on both wheels of each axle.

Only the following brake linings may be used for replacement purposes **Jurid 546**, **Bremskerl 6275** and **Beral 1549** .
Thoroughly turn down the brake drums. When turning down the brake drums, do not exceed the permissible turn-down measurement of 0.75% of nominal diameter.
Example:
Nominal diameter: 500.00 mm
Permissible turn-down measurement: 3.75 mm
Permissible inner diameter: 503.75 mm

DANGER
Risk of accident!
▶ Replace the brake drum when the inner diameter is larger than 503.75 mm.

The brake is equipped with an automatic adjustment device, that corrects for brake lining wear and centers the brake.
The automatic adjustment mechanism is maintenance-free.

DANGER
Risk of accident!
▶ If any individual components are damaged, replace the complete adjustment assembly.
▶ Use the “Adjustment” repair kit.

Replace the pressure and tension springs, as well as sealing rings, protection covers and bellows at least every two years.
Repeat the visual, functional and performance tests after reassembly.

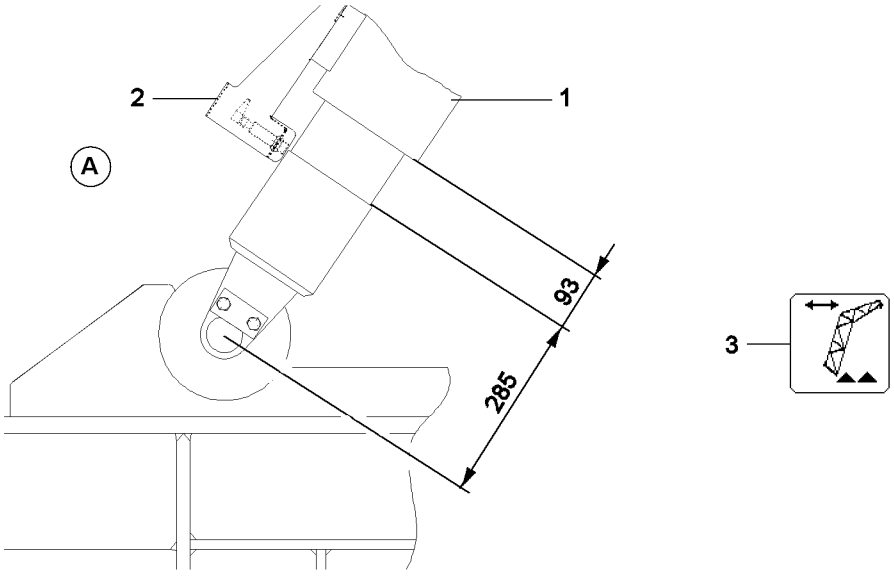

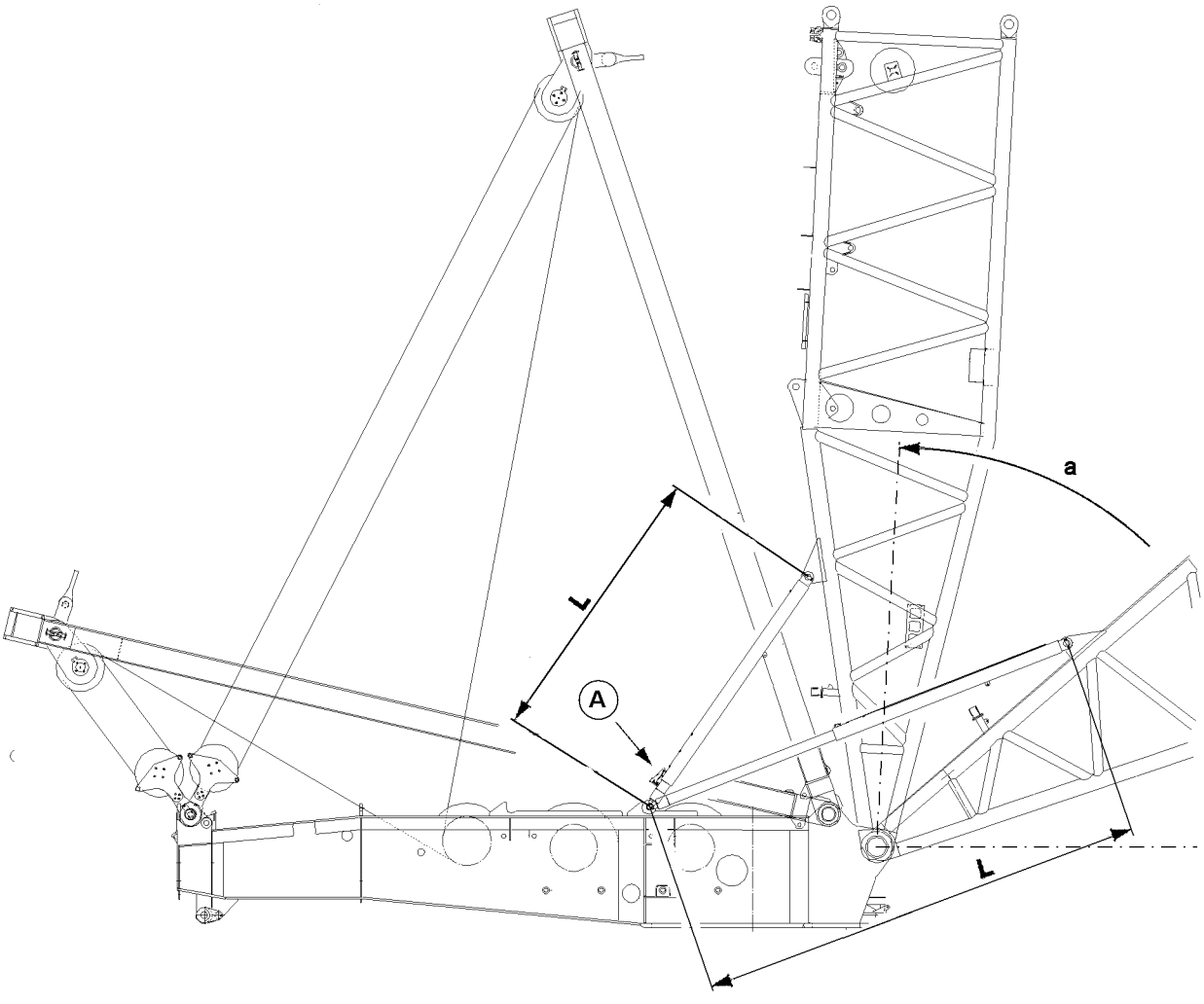

B107959

1 S-boom relapse retainer

Two hydraulic cylinders prevent the boom from falling backward.
They are controlled on high or low pressure, depending on the operating mode or boom length.

Note

▶ In the steepest boom position, the luffing up movement is turned off by activating the limit switches on the cylinders **1**.

1.1 Checking limit switch initiators for function

Limit switch initiators are individually covered with a metal plate **2** on the S-relapse cylinder **1**.

– The S-boom movement “luff up” must switch off.
– The icon **3** must appear on the LICCON monitor.

	Angle a	**Cylinder length L**
Steepest position	87°	4051 mm
Electric switch position	88°	3998 mm
Block position	89°	3940 mm
Cylinder extended	29.7°	6490 mm

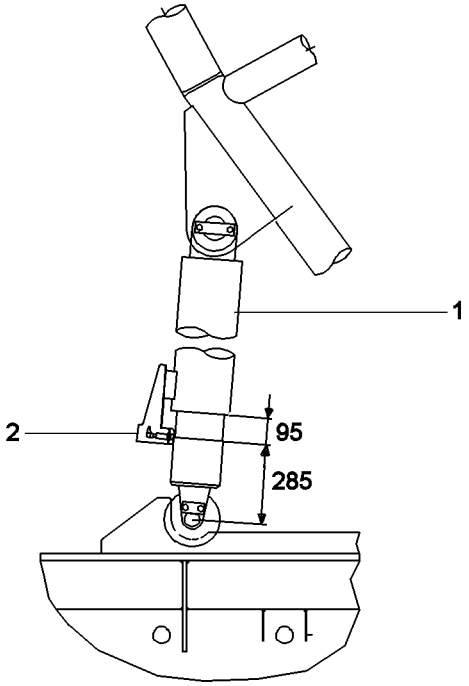

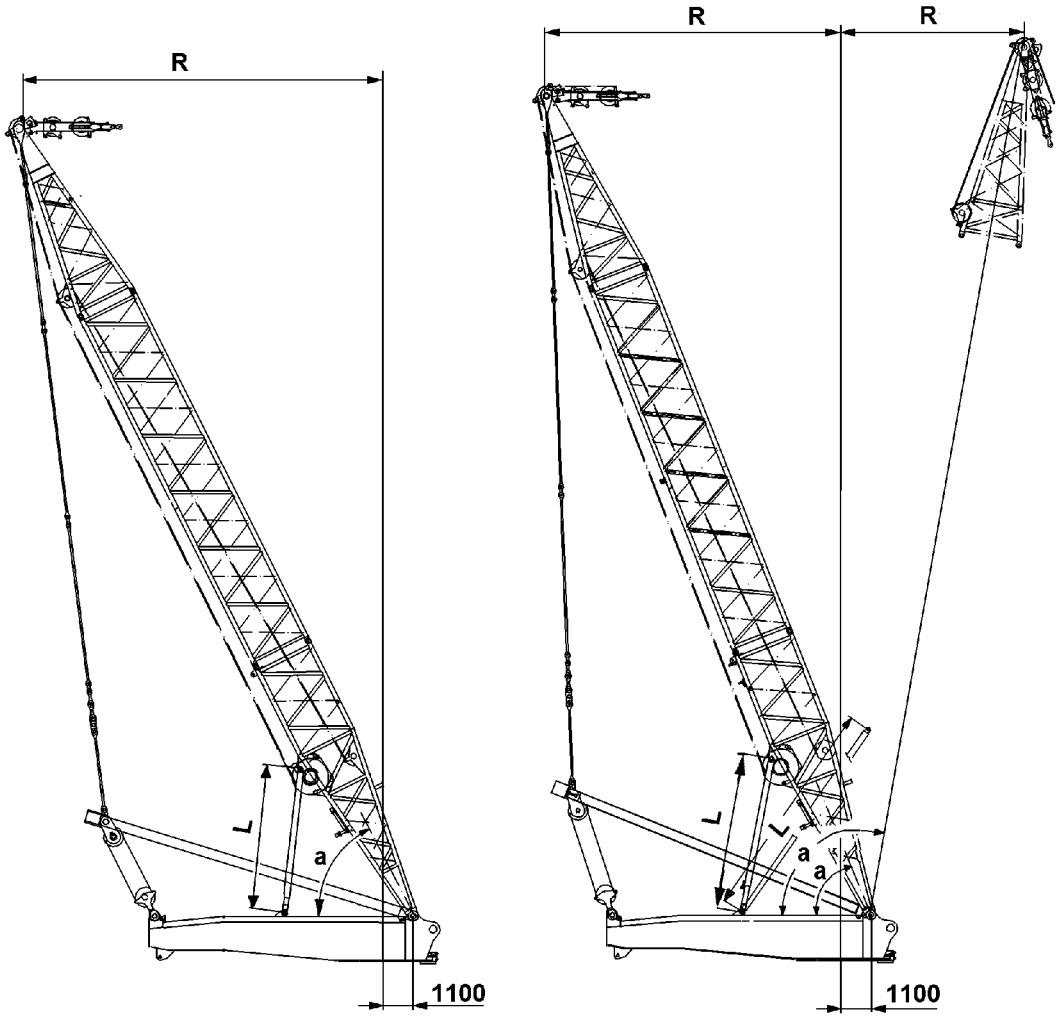

B190844

2 Derrick relapse retainer

Two hydraulic cylinders prevent the derrick from falling backward.

Note

▶ Upon activating the limit switches on the cylinders **1**, winch 4 “spool up” is turned off.

2.1 Checking limit switch initiators for function

Individually cover limit-switch initiators **2** on the D-relapse cylinder **1** with a metal plate.

Note

▶ Derrick movement,“luff up,” spool out winch 4, must switch off.

	Slewing radius R	**Angle a**	**Cylinder length L**
Cylinder extended	6.6 m	100°	7920 mm
R min. only LD,SLD,SD	10.5 m	68.4°	5582 mm
Nominal position	13.0 m	63.4°	5185 mm
Electric switch position	14.0 m	61.4°	5020 mm
Block position	14.4 m	60.5°	4950 mm

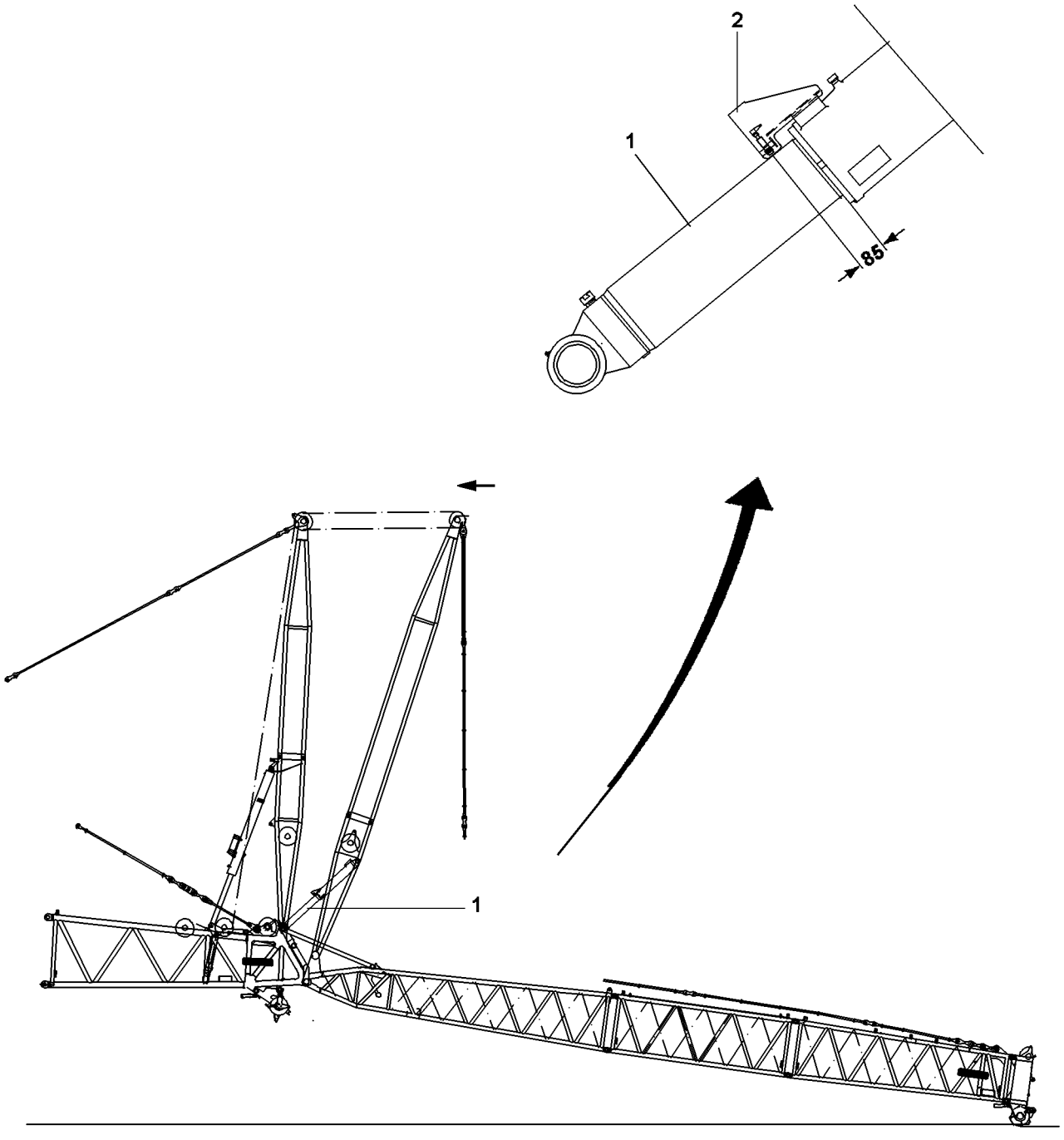

B192157

3 W-lattice jib

3.1 Checking limit switch initiators for function

Individually cover Limit switch initiators **2** on the W-relapse cylinder **1** with a metal plate.

Note

▶ The movement, W-adjusting winch “spool out,” must switch off.

3.2 Checking limit switch initiators on switch point “steepest position”

Before erecting the boom, check the function of the limit switch initiators **2** in installed condition. Pull up both WA-frames to the specified dimension until the switch contact opens, see illustration.

– The W-control winch “spool up” movement must turn off.
– The icon must appear on the LICCON monitor.

After successful test, reset the WA-frames to set up condition.

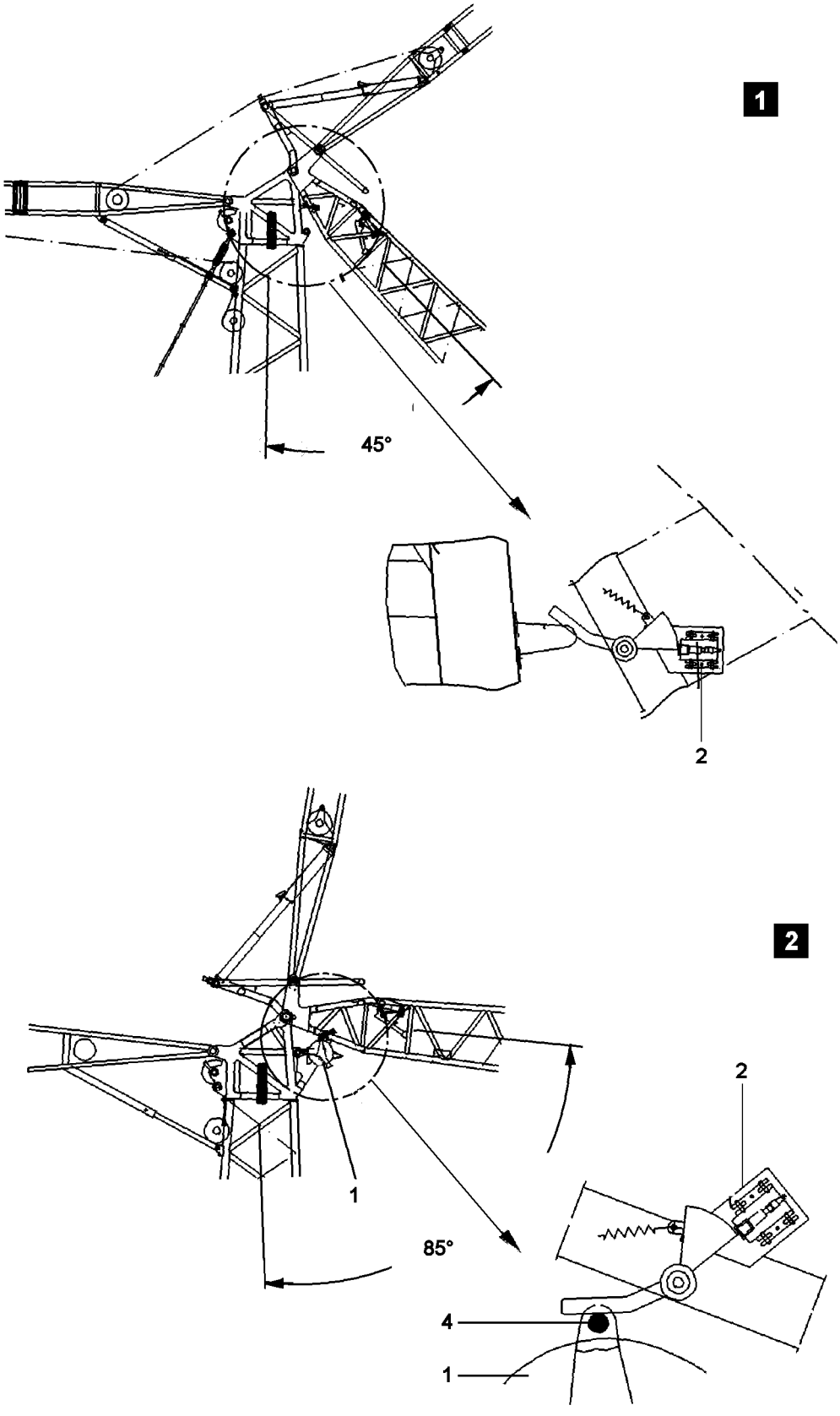

B192739

3.3 W-lattice jib “downward, without pulley set, illustration 1”

Note

- ▶ Switch setting, W-lattice jib “downward”, approximately 45°!
- ▶ The movement, W-adjusting winch “spool out” must switch off!

3.4 W-lattice jib “downward, with pulley set, illustration 2”

Note

- ▶ Switch setting, W-lattice jib “downward”, approximately 85°!
- ▶ The movement, W-adjusting winch “spool out” must switch off!

WARNING

Collision danger while the rope guard **4** is not assembled on the pulley set **4**!

While the rope guard **4** is not assembled, no turning off of movement takes place, W-adjusting winch “spool out”!

- ▶ Crane operation without rope guard **4** on the pulley set **4** is prohibited!
- ▶ Before erection, the rope guard **4** must be assembled and inspected!

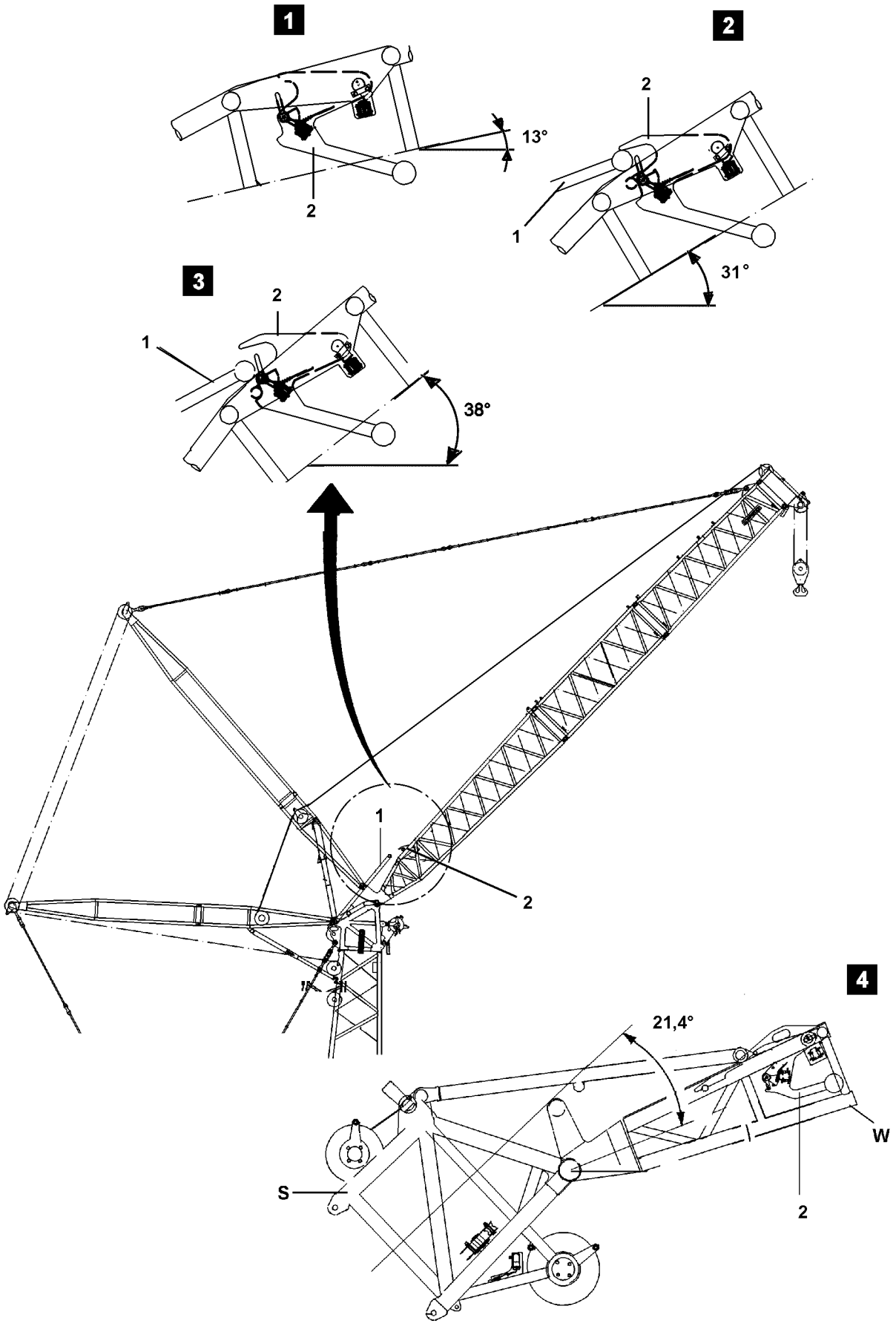

B198383

3.5 Function check of limit switch initiators on the mechanical relapse retainer

Mechanical relapse support **1**.
Oscillating safety **2** for mechanical relapse support.

In addition to the relapse cylinders, the lattice jib is also secured by a mechanical relapse support **1**, which engages in steepest lattice jib position into the flap of the oscillating safety **2**. The luffing up movement is turned off by the actuated limit switches on the oscillation guard.

WARNING
Danger of tipping over if the oscillation guard is hard to move!
If the oscillation guard **2** is hard to move, the mechanical relapse retainer will no longer function. The W-lattice jib can tip backwards uncontrolled and cause the crane to topple over!
- ▶ Crane operation with hard to move oscillation safety **2** is prohibited!
- ▶ Before erection, the pendulum of the mechanical relapse retainer must be checked for easy movement over the complete swing range of the pendulum.

Depending on the lattice jib position (boom position = 87°), the flap on the oscillation safety is swung out by the weight of the pendulum:
- 13° the flap is swung in, see illustration **1**.
- 31° the flap can be pushed open, see illustration **2**.
- 38° the flap is swung out, see illustration **3**.
- 21.4° the flat is at collision, see illustration **4**.

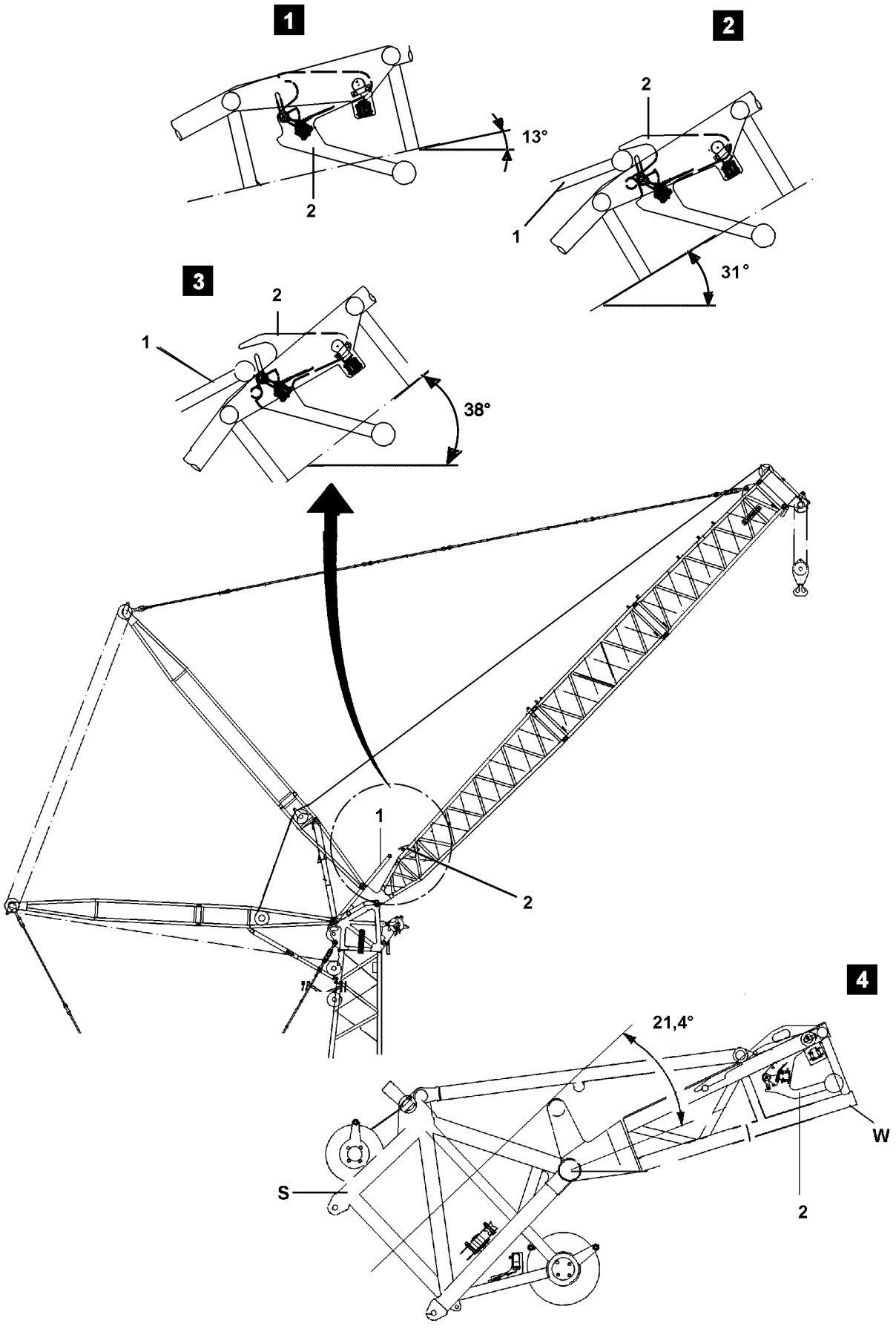

B198383

3.6 Flap of oscillating safety 2 on collision with mechanical relapse support 1

WARNING
Risk of collision!
If the angle between boom and lattice jib is smaller than or equal to 21.4°, the mechanical relapse support collides **1** with the flap on the oscillation guard **2**. The lattice jib can tip backward uncontrolled and cause the crane to topple over!
Personnel can be killed!
- ▶ Never exceed the angle 21.4° when luffing up!
- ▶ Carry out visual inspection!

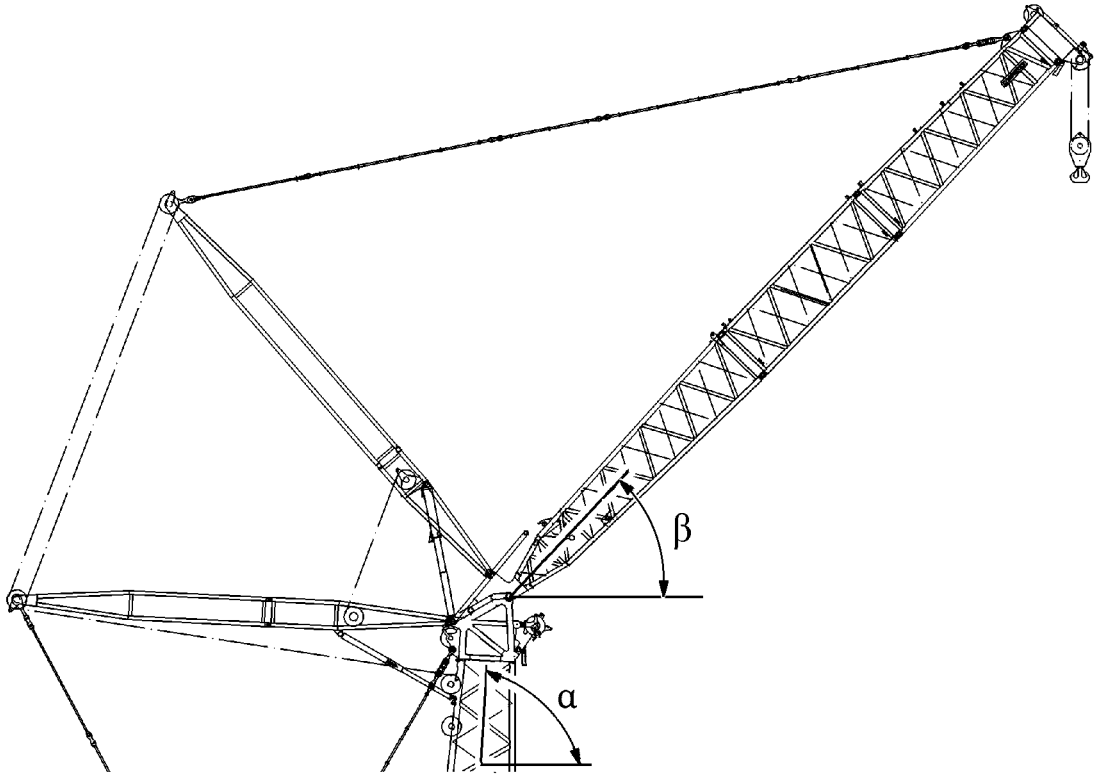
β
α

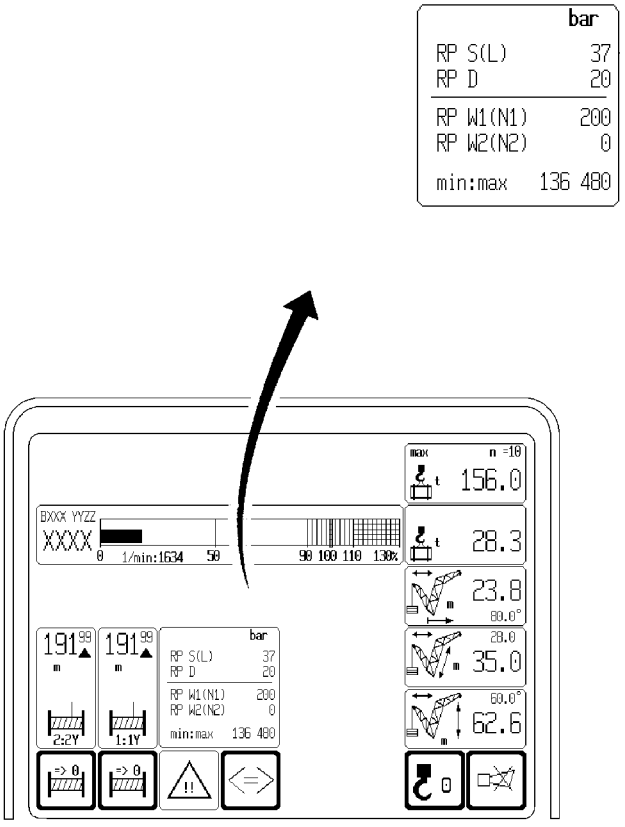
bar
RP S(L) 37
RP D 20
RP W1(N1) 200
RP W2(N2) 0
min:max 136 480
max n =10
156.0
28.3
23.8
80.0°
28.0
35.0
60.0°
62.6
BXXX YYZZ
XXXX
0 1/min:1634 50
90 100 110 130%
191 99
2:2Y
1:1Y
bar
RP S(L) 37
RP D 20
RP W1(N1) 200
RP W2(N2) 0
min:max 136 480

B190804

1 Checking jib stop cylinder pressure

The jib stop cylinder pressure must be checked using the LICCON operation display before and after crane operation, “see diagnosis”.
The actual pressure displayed on the LICCON operation display must correspond with the target pressure in the table.

Note
- ▶ The specified target pressure depends on the outside temperature.
- ▶ The maximum permitted difference between the target pressure and the actual pressure is +/- 10 bar.

The jib stop cylinder pressure is checked as follows:
– Checking cylinder pressure with “jib stop extended to maximum limit”
– Checking cylinder pressure with “jib stop in test position”

1.1 Checking cylinder pressure with “jib stop extended to maximum limit”

– Set main boom and lattice jib to angles specified in table.
– Compare target pressure in table with actual pressure in LICCON operation display.

“Extend jib stop to maximum limit”								
Boom angle α	**Lattice jib angle β**	**Cylinder length**	**Stroke**	**Target pressure**				
				-40° C	**-20° C**	**0° C**	**20° C**	**40° C**
87°	44,6°	5050 mm	0 mm	107,3 bar	116,5 bar	125,7 bar	134,9 bar	144,1 bar

1.2 Testing cylinder pressure with “jib stop in test position”

– Set main boom and lattice jib to angles specified in table.
– Compare target pressure in table with actual pressure in LICCON operation display.

“Jib stop in test position”								
Boom angle (α)	**Lattice jib angle (β)**	**Cylinder length mm**	**Stroke mm**	**Target pressure**				
				-40° C	**-20° C**	**0° C**	**20° C**	**40° C**
87°	46°+2°	4997 mm	53 mm	110,0 bar	119,5 bar	129,0 bar	138,4 bar	147,9 bar

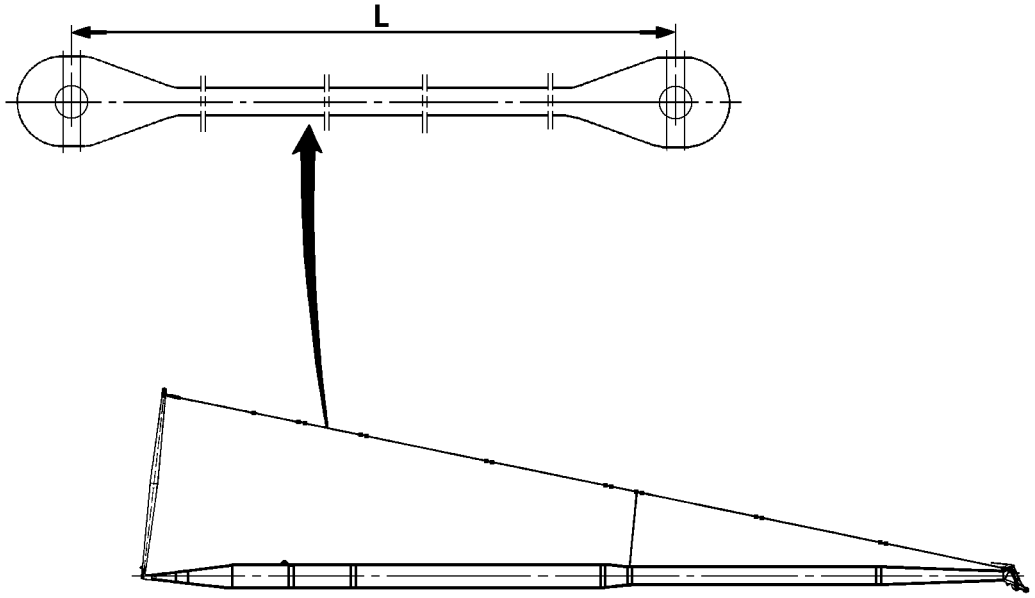

B180875

1 General

Always check the entire length of the guy rods before every assembly.
Also check the concealed bearing surfaces and bores.

2 Repeat inspection of guy rods

The guy rods must be checked at least once a year by an expert according to VGB D6.
The inspection must be carried out by an authorized expert every 4 years.
If a load was dropped or if the crane was overloaded, an additional inspection by an expert is required.
The inspections must be documented.

DANGER
Risk of accident in case of guy rod failure!
▶ If the following damage is found, the guy rods may no longer be used and must be replaced immediately!

2.1 Cracks and dents

The guy rods must be thoroughly inspected visually for cracks and dents.
If cracks are present, the guy rods must be replaced. Repairs are not permitted.

Note
▶ In case of doubt, the relevant areas must be carefully examined, for example with magnetic crack detection!

2.2 Stretching

Check for guy rod stretching by measuring the guy rods.
The stretch may be no more than max. 0.2 %, for example 14 mm, for an initial dimension (L) of 7000 mm.

Note
▶ The initial dimension (L) of the guy rods is noted in the separate rod diagram!

2.3 Wear

Check the bores, pins and pin retainers for signs of wear.

2.4 Damaged paint

Check the paint on the guy rods at regular intervals (signs of corrosion).
Repair damaged paint.

Note
▶ The guy rods may not be stored in aggressive media, such as salt water!

2.5 Ductile distortion

After a ductile distortion, such as bending, the guy rods must be replaced.

9 General notes

B195219

1 Checks before start up

We recommend to carry out the following visual inspections in the engine compartment before start up:

- Check if all oil and fuel lines are leak-free and dry.
- Check if the injection pump, fuel and oil filters are leak-free.
- Check if the hydraulic units, the hydraulic motors for the fan drives and their supply lines are leak-free.
- Check if the exhaust system and exhaust flange are leak-free.
- Check if the exhaust flap retention flap is moveable.
  The return springs that open the exhaust flaps must function properly, because seized (therefore closed) exhaust flaps during engine operation will result in considerable overheating.
- Inspect electrical wiring and ensure that there is sufficient clearance to hot exhaust system piping and that it is properly fastened and that there is no insulation damage.
- Inspect the soundproofing mats for soiling from solutions and large quantities of oil or fuel, as well as other damage.
  Immediately remove any soundproofing mats that are excessively damaged or soiled and replace them with original parts.
  When cleaning the engine and gear compartments, observe the care instructions for the sound insulation, see Crane operating instructions, chapter 7.01!

2 Repair and maintenance tasks

Note

▶ Repair and maintenance tasks are to be carried out carefully!

Take particular precautions regarding cleanliness when replacing diesel and oil filters. Remove any diesel fuel or oil that has leaked. Perform a test run on the systems to ensure that there are no leaks.
The diesel engine V-room must be inspected regularly, and any oil or diesel fuel must be cleaned up, particularly after repairs and servicing. Any fuel that has collected in V-room can spread throughout the engine room while the crane is travelling on the road and can ignite if it comes into contact with hot surfaces.
We stress that all electrical wiring must be installed according to the regulations and must be properly fastened. Immediately repair any wiring insulation that exhibits signs of chafing or brittleness as a result of operational activities. Any wiring that is not in perfect condition is to be immediately and professionally replaced.
We would like to particularly emphasize that over time fuel and oil lines can become brittle or porous as they age. Any hoses that appear to be excessively porous should be replaced immediately, see crane maintenance chapter.

3 Important service tasks

The following service tasks are to be carried out regularly:

- Grease drive shafts with LIEBHERR special grease.
- Regularly check that the drive shaft bolts are properly seated.
- Check gearbox and engine oil levels regularly.
  Replace any oil used in normal operation. If oil consumption or loss is unusually high, determine the cause and correct.

4 Maintenance notes for replacement parts

The following is to be considered when replacing drive components such as engine, gearbox or axles:

– Before start up, be sure to refill with the correct type of oil to the center of the min. - max. marks. For type of oil, refer to the data tag and service items and lubricants.
– Conduct initial maintenance according to chapter “Maintenance intervals”; thereafter, maintain in accordance with the specified periodic maintenance intervals.
– Observe break-in instructions, see chapter 2.02.

5 Recommendations for travel operation

NOTICE
Risk of engine damage!
If the permissible engine speed in exceeded, the engine can be seriously damaged!
▶ Do not exceed the permissible engine rpm!

6 Disposal of fuels and lubricants

Note
Engine, gearbox and hydraulic oils, brake fluids, grease and fuels are dangerous waste materials!
▶ These materials must be disposed of separately!
▶ These materials may not be disposed of in the ground or in any bodies of waters: wastewater systems, sewers or groundwater!
▶ Comply with the regulations specified by local authorities before disposing of any of these items or substances!

Note
Radiator fluid for diesel motors and heating systems are dangerous waste materials!
▶ Undiluted antifreeze / anti-corrosion agents must be handled as dangerous waste materials!
▶ Follow the regulations of the local authorities when disposing of used cooling fluids (mixture of antifreeze / anti-corrosion agents solution and tap water).

7 Tires

For EM-tires (Earthmover tires) there is no legal specification for tire replacement due to tire aging either from the tire manufacturer or by law. The tires must be replaced when the legally specified minimum tire tread depth is reached.
To ensure that the tires on the crane vehicle obtain a long service life, we recommend to proceed as follows:
Observe the axle loads specified by law!
Keep the respective travel conditions specified by **LIEBHERR-Werk Ehingen GmbH**!
Check in regular intervals:

- The tire pressure
- The tire tread depth
- The tire surface for cracks, damage or foreign particles
- The tire outer wall for cracks to damage
- The track adjustment for all axles

Note

▶ These inspections cannot ensure that the EM-tires do not have internal, non-visible damage and that the EM-tire cannot be used further.

The crane operator must monitor the externally recognizable condition and any changes of dynamic behavior, such as increasing noise or vibrations. If any of these features decrease, that could be a sign that the tire must be taken out of service.

Note

▶ We recommend after 8 to 10 years, even if the EM-tire does not show any external damage, to have the tires check by an authorized expert personnel of the respective tire manufacturer and to observe the recommendations regarding continued use of the tire.

7.1 Wheel checks

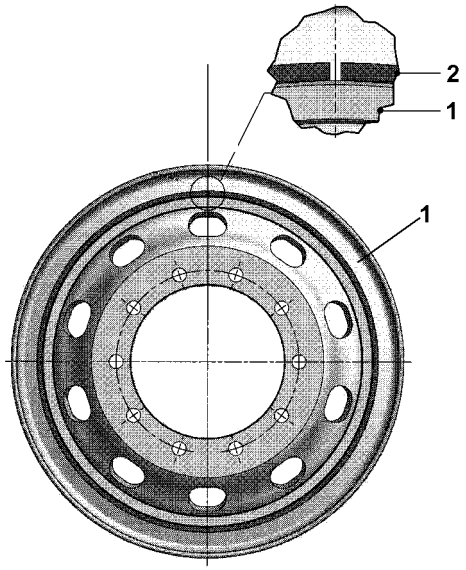

B104925

DANGER

High risk of accident!

If the lock ring **2** is not properly seated in the groove, it can be violently ejected when the tire is inflated and fatally injure personnel!

▶ If the lock ring **2** is not correctly seated in the groove, please obtain the assistance of an authorized and trained expert personnel!

▶ Do not make any alteration to the tire pressure!

▶ Visually check the side ring and lock ring **2** for correct seating!

DANGER

High risk of accident!

▶ In the event of insufficient profile or damage to the tires, exchange tires for new ones!

▶ Maintain correct tire pressure! See chapter 1.03.

▶ If the tire pressure has dropped below 3 bar, the tire may only be pumped up by qualified and trained personnel!

▶ Replace damaged disk wheels **1** with new ones immediately!

▶ Check depth of tread.

- ▶ Check tires for damage.
- ▶ Check the tire pressure.
- ▶ Check wheel disks **1** for damage.

7.2 Tire changes

WARNING
Mortal danger when using non-approved tires and disk wheels!
By using tires and disk wheels which are not explicitly approved by **LIEBHERR-Werk Ehingen GmbH**, unforeseeable, dangerous operating conditions can occur!
Personnel can be killed or seriously injured!
The tires and the disk wheels can be destroyed and the mobile crane and the environment can be severely damaged!
- ▶ Use only spare tires and disk wheels which have been approved in writing by **LIEBHERR-Werk Ehingen GmbH**!
- ▶ Using spare tires and disk wheels which have been not explicitly approved in writing by **LIEBHERR-Werk Ehingen GmbH** is prohibited!

Note
- ▶ Tires may only be changed by authorized and trained specialist personnel!
- ▶ This applies both to dismounting and mounting of the tire on the disk wheel **1**!

7.3 Wheel changes

7.3.1 In event of tire failure

Note
The following is to be considered in the event of tire failure!
- ▶ Pay attention to road traffic when stopping!
- ▶ The steering wheel could judder. Hold on to the steering wheel tightly with both hands!
- ▶ Select the flattest possible surface for undertaking a wheel change! Select the site in such a way that the road traffic is obstructed as little as possible and you will not be endangered when changing the wheel!
- ▶ Secure the vehicle and the breakdown site!
- ▶ “Free-standing” crane operation is absolutely prohibited!

WARNING
Toppling wheel!
The wheel can topple over when changing the wheel and seriously injure personnel!
- ▶ Secure the wheel against toppling!
- ▶ Only operate the support when no wheels are leaned against a sliding beam or support cylinder!
- ▶ Step away quickly if a wheel threatens to topple!
- ▶ Change the wheel with the help of a second person if possible!

- ▶ Apply the parking brake, see chapter 3.04.
- ▶ Lock the axle suspension, see chapter 3.03.
- ▶ Loosen wheel lugs on the defective wheel.

DANGER
The crane can topple over!
- ▶ Select a support base where the mobile crane cannot topple over!

- ▶ Support the mobile crane until the wheels can be changed, see chapter 3.05.

Wheels that are on their side are extremely difficult to lift up. For this reason, do not place wheels down when changing a wheel.

- ▶ Lift the spare wheel using the crane, set it down next to defective wheel and prevent it from rolling away or toppling over.
- ▶ Unscrew wheel lugs and remove defective wheel.

DANGER
Defective spare wheel!
- ▶ Before mounting, visually inspect the disk wheel **1**, the side ring, the clamp collar **2** and the tire!
- ▶ Never mount a defective spare wheel!
- ▶ Only mount wheels that are approved for the vehicle!

- ▶ Mount the spare wheel.

WARNING
Risk of accident if wheel lugs are overtightened!
- ▶ The tightening torque is 600 Nm!
- ▶ Do not overtighten wheel lugs!
- ▶ Only use wheel lugs approved by **LIEBHERR-Werk Ehingen**!

- ▶ Reinstall the wheel lugs and tighten them crossways with 600 Nm.
- ▶ After the first 50 and the first 100 travelled kilometres:
  Ensure that wheel lugs are tight, re-tighten if necessary.

7.3.2 Rotating the wheels

Crane vehicle tires are subjected to differing loads during operation.
Tire rotation is recommended to ensure that all the vehicle's tires wear uniformly. Tires should be rotated as soon as uneven wear patterns are detected. We recommend intervals in the range of 5000 km and 10000 km. Tires should be rotated in a crosswise pattern (see following illustrations). The location should also be selected so that tires that are evenly worn are installed in locations where the wear pattern is uneven.
This process has a positive impact on driving comfort and tire performance.

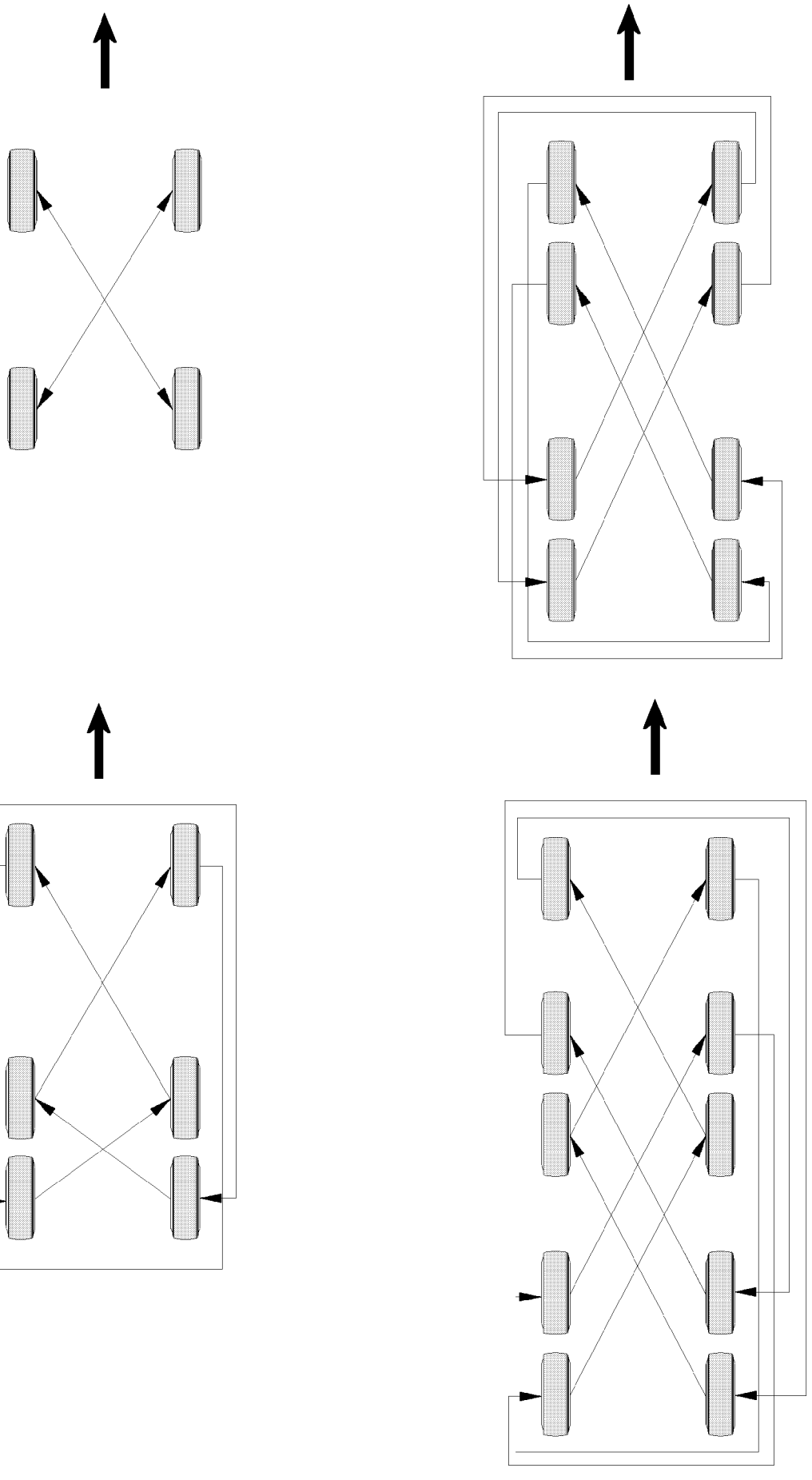

B108267

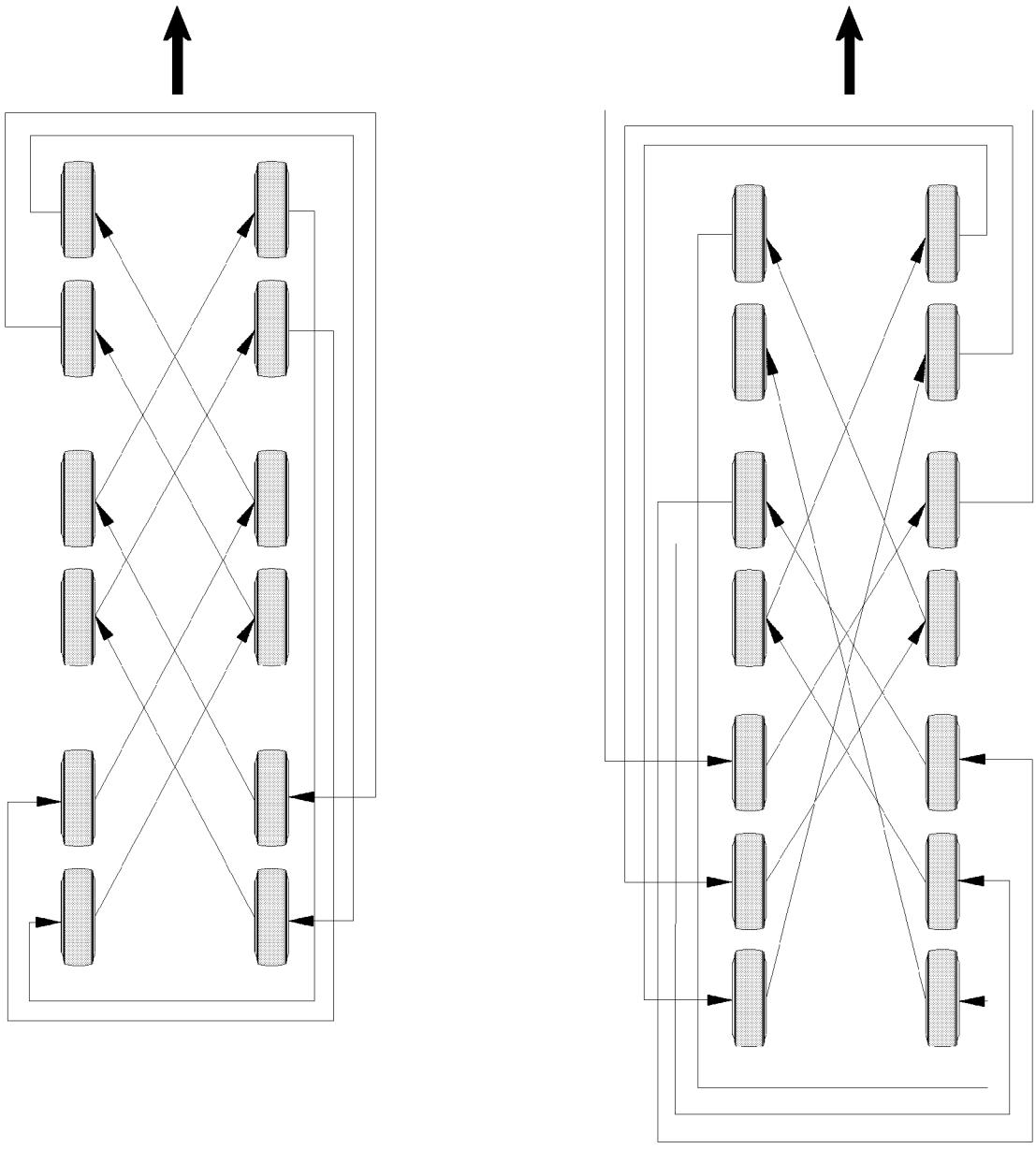

B108268

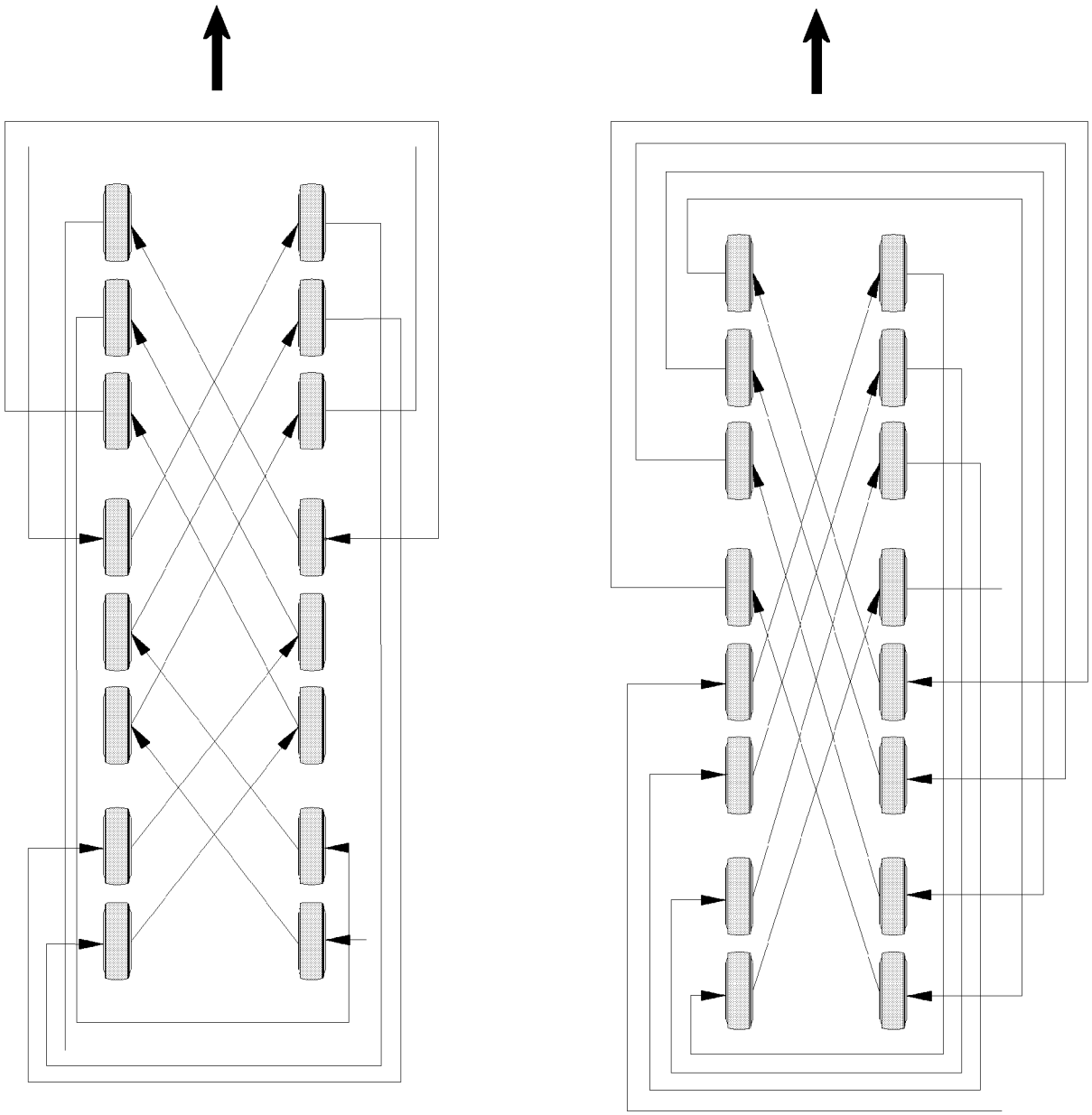

B108269

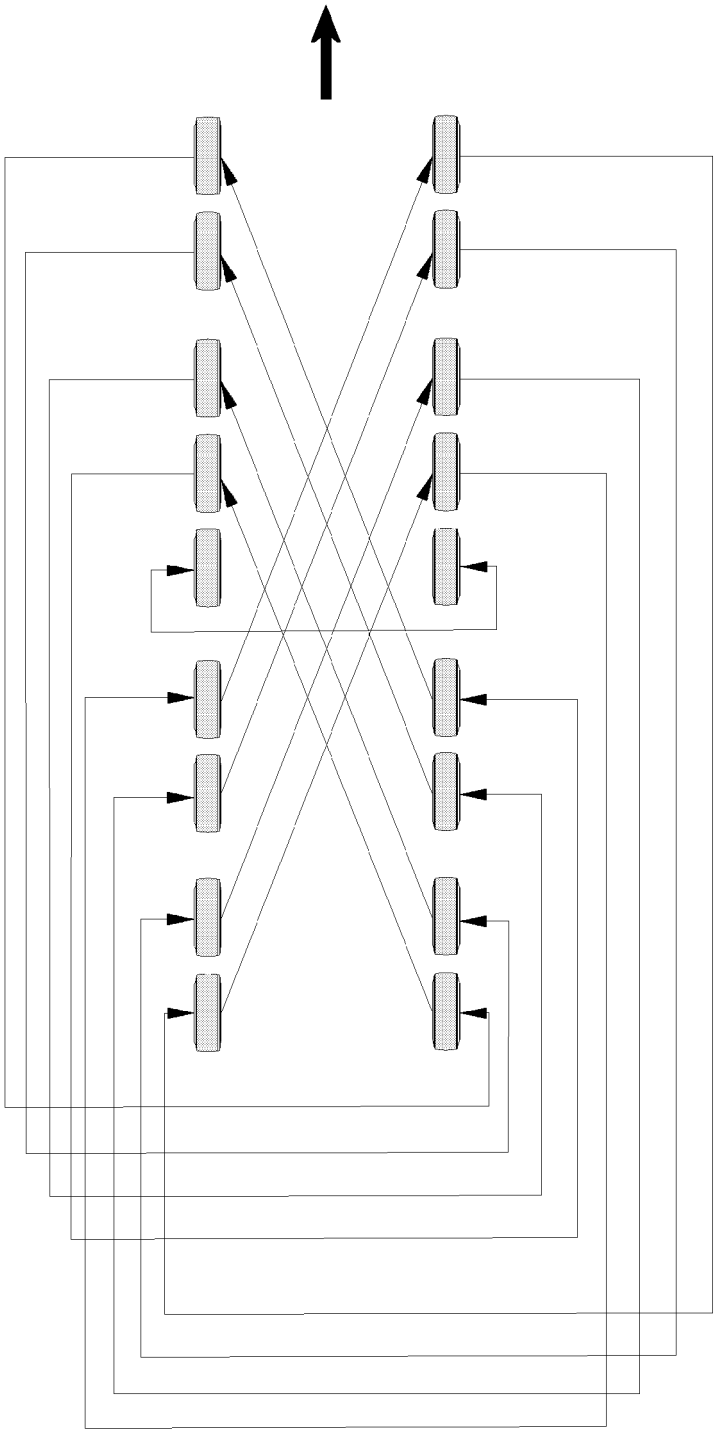

B108270

90 Appendix

blank page!

B195219

1 Preface

This crane may only be used in flawless technical condition and according to its mission as well as with constant awareness of safety and dangers. Any problems, which could affect safety must be fixed immediately.

Note

▶ Modifications on the crane may only be made with written approval by Liebherr-Werk Ehingen GmbH.

1.1 Changes and updates for Operating instructions

Changes and updates for Operating instructions, which you receive in the circular as Customer information, must be filed in the Operating instructions for the respective crane under chapter 90.05.

Note

Procedure after receiving customer information!

▶ Attach the decals **1**, which are enclosed in the customer information to the footer of the respective chapter. See following example.

▶ Fill out the update confirmation form in chapter 90.05 of the operating instructions,

▶ Insert changes and updates under chapter 90.05 of the operating instructions.

B113870

Example:

A change or update affects the Crane operating instructions, chapter 2.04.

▶ Attach the decal **1** in the footer of chapter 2.04.

B195219

1 Update confirmation

Chapter	Change / update	Completed	
		on	by

2 Customer information

Index

1

1 Description of crane **27**

2

2.General traffic regulations **85**
2.National traffic regulations **89**
2 Safety **81**

3

3 Crane chassis operation **273**

4

4 Operation of crane superstructure **511**

5

5 Equipment **1017**

6

6 Additional equipment **1665**

7

7725039 - Warning of high voltage **175**
772564008 – Swing range **175**
772580408 – Limitation of maximum travel speed **175**
7 Service and maintenance **1727**

8

8 Inspections of cranes **1871**

9

90 Appendix **2039**
9412158 – Read operating instructions **176**
97003109 – Access of step ladder **180**
97003110 – Fold the step ladder in and out **181**
97003112 – Maximum suspended load **186**
97004046 – Safety harness, maximum two persons **177**
97006167 – Identification of support base **181**
97008514 – Warning of head injuries **182**
97009799 – Data logger **182**
97011336 - Permissible transport weights of the compone **195**
97011689 – Warning of crushing danger **183**
97011690 – Overload of cab is prohibited **183**
97012095 – Maximum load **183**
97012737 – Danger of accident **185**
97012949 – Maximum load **182**
97016304 – Notice sign for refueling **184**
97016392 - Crushing danger for feet **184**
97023034 – Disassembly **185**
97027147 – Overloading of combi box is prohibited **177**
97036733 – Access via 3-point support **185**
97036733 – Fastening point **177**
97036734 – Rigging point **193**
97036735 – Fastening point for lattice section **179**
97036736 – Fastening point for lattice sections **179**
97036917 – Maximum suspended load **186**
97037383 – Notice sign for urea **186**
97037871 – Fastening points for lattice sections **180**
97037952 – Warning of fatal electric shock **187**
97038442 – Fastening point for lattice section **179**
97038452 – Fastening point for lattice sections **179**
97038454 – Fastening point for lattice sections **180**
97041305 – Warning of overload of components **187**
971494208 – Limitation of maximum travel speed **188**
971539808 – Warning notice for unpinning the auxiliary **188**
971539908 – Warning notice for unlocking the auxiliary **189**
973974408 - Permissible transport weights of the compon **195**
973974608 - Permissible transport weights of the compon **195**
976624808 – Fasten the load **197**
977055908 – Fastening point for swingable sliding beam **188**
978673908 - Warning of suspended load **189**
978674008 - Access for unauthorized personnel prohibite **190**
978674108 – Warning of crushing danger **190**
978674308 – Radio remote control **190**
978674408 – Danger of burning hands **191**
978674508 – Warning of rotating parts **191**
978674608 - Crushing danger for hands! **191**
978674808 – Personal protective equipment **192**
978674908 - Walking on the area is prohibited **192**
978675008 – Access prohibited **192**
978687408 – Rigging point **193**
978867108 – Warning of fatal electric shock **193**
979383308 – Notice sign for oil change **194**
979561108 - Counterweight **194**
9 General notes **2027**

A

Adapter for boom nose 100 t **71**
Adapter for boom nose 120 t **73**
Accessible walking and stepping surfaces **257**
Access to lattice sections or booms **118**
Access to the automatic lubrication (intermediate lubric **1825**
Access to the crane **246**
Acoustic and optical warning devices **791**
Acoustic warning on monitor 1 **701**
After engine start: Checking the instruments on LICCON m **765**
Adding the transverse differential lock for axle 4 and a **385**

Adding Urea solution **1736, 1769, 1811**
Air conditioning system* operation **1681, 1689**
Air filter **1763, 1807**
Air dryer of the compressed air system of the crane superstructure **1837**
Additional controls for certain crawler cranes **1022**
Additional controls for cranes with crane support **1022**
Additional controls for cranes with derrick boom **1022**
Additional controls for cranes with luffing auxiliary bo **1022**
Additional controls for freestanding crane operation (on **1022**
Adjusting the control parameters **773**
Adjusting the crane operator's seat **751**
Adjusting the derrick ballast **773**
Adjusting the mirrors **317**
Adjusting the driver's seat **313**
Adjusting the steering wheel **317**
Adjusting the winches **773**
Adjusting the winches **774**
Adjusting winch 4 **775**
Adjustment positions **775**
Adjust the winches, not winch 4 **774**
Alarm functions **607, 687**
Aligning the crane **133**
All wheel steering **395**
Angle sensors **801**
Angular pulling **903**
Antifall guards on the crane **198**
Appendix 1 **1999**
Appendix 2 **2001**
Appendix 3 **2003**
Appendix 4 **2003**
Appendix **1972**
Arrangement of intermediate sections **1071**
Arrangement of intermediate sections on the boom **1069**
Ascent and descent on level I **249**
Ascent and descent on level II **251**
Ascent and descent on level III **255**
Ascent and descent on the chassis **247**
Assembling catwalks onto the turntable **223**
Assembling / disassembling the wedge lock **853**
Assembling / disassembly of hydraulic lines **1059**
Assembling left catwalk **225**
Assembling SA-frame **485**
Assembling the catwalk on the right and front **227**
Assembling the catwalks and railings on the extension* **231**
Assembling the catwalks **1501**
Assembling the D-boom **1083**
Assembling the F-auxiliary jib **1255**
Assembling the F-jib **1249**
Assembling the guy rods **1559**
Assembling the guy rods WA-frame 2 **1135, 1193**
Assembling the K-lattice jib **1625**
Assembling the railing on the S-pivot section **1501**
Assembling the railings and grating **233**
Assembling the S-guy rods **1459**
Assembling the S-lattice sections **1439**
Assembling the SL-boom **1253**
Assembling the SLD-boom 98 m to 133 m in flying mode **1533**
Assembling the SLD/SD-boom **1497**
Assembling the SLD/SD-boom **1505**
Assembling the SLF-boom with support **1253**
Assembling the SL/S-boom 84 m and 91 m in flying mod **1523**
Assembling the SL/S-boom in flying mode **1517**
Assembling the S/SL boom **1431**
Assembling the W-boom system **1123**
Assembling the wedge lock **853**
Assembling the winch(es) on the S-pivot section **1503**
Assembling the W-lattice jib **1141, 1183**
Assembling the W-lattice jib in flying mode **1145**
Assembling the W-transport units **1129, 1193**
Assembling the WV-boom system **1189**
Assembling the WV-lattice jib **1193, 1213**
Assembling winch 1 **449**
Assembly and disassembly of winch 1 **461**
Assembly conditions **442**
Assembly conditions **443**
Assembly **1079, 1351, 1591, 1619**
Assembly head 47 t **75**
Assembly hoist winches **446**
Assembly / disassembly **1029**
Assembly / disassembly of booms **1031**
Assembly / disassembly of electrical lines **1060**
Assembly of lattice sections for lattice mast cranes **1047**
Assembly of lattice sections for telescopic cranes **1035**
Assembly of SA frame **482**
Assembly prerequisites for boom nose(s) **1217**
Assembly drawings **1030**
Assembly rope **80**
Assembly winch **1833**
Attaching / removing the hoist limit switch weight **849**
Attaching the hoist limit switch weight **849**
Attaching the load **899**
Attachment points SA-frame **483**
Automatic slewing range change **591**
Automatic transmission **353**
Automatic transmission with torque converter coupling **1771**
Auxiliary equipment **44**
Auxiliary guying **1025, 1073**
Auxiliary jib “HS” **1587**
Axle casings **1797**
Axle loads above 12 t **333**
Axle loads **47, 87**
Axle loads up to 12 t **331**
Axles **1797**

Axles **41**
Axle suspension system **322**

B

Ballast / counterweight **55**
Ballasting the ballast pallet **1367**
Ballast pallet suspended ballast* **53**
Ballast plates **1349**
Battery maintenance **1837**
Before leaving the jobsite **441**
Before starting to travel **304**
Bleeding the central lubrication system **1827**
Bleeding the gear **1779**
Blocking the axle suspension **323**
Block position of relapse cylinders when setting down th **1022**
Boom combinations **37**
Boom components **1069**
Boom nose 100 t for L-end section / L-adapter **73**
Boom nose 120 t for L-end section / L-adapter **73**
Boom nose 60 t for L-end section / L-adapter **73**
Boom nose 60 t for S-end section **73**
Boom nose 60 t on S-end section **1219**
Boom nose 60 t on the L- / W-end section **1221**
Boom nose 60 t on the SW-adapter **1223**
Boom nose* **88**
Boom nose lattice boom **1214**
Boom noses **45**
Boom systems **1068**
Boom systems **44**
Bracket counterweight **855**
Brakes **42**
Breaking away fixed loads **905**
Breaking in the brake linings **93**
Break-in instructions **92**
Break-in instructions **93**
Bringing the hook ladder into operating position **217**
Bringing the hook ladder into transport position **217**
Bringing the ladder on the pot into operating position **219**
Bringing the ladder on the pot into transport position **219**
Bringing the support beams into transport position **1303**
B-suspended ballast **44**
Bypass for assembly and disassembly **1057**
Bypassing the hoist top shut off **1027**
Bypassing the overload protection **1025**
Bypassing the overload protection **1026**
Bypassing during crawler assembly **1058**
Bypass of overload protection **785**
Bypass of the hoist top shut off **955, 1003**

C

Calculating the minimum required hook block weight **1305**
Calculation examples **1308**
Calculation examples installation location: Turntable ex **863**
Calculation examples installation location: Turntable **861**
Care instructions for cleaning the crane **1731**
Care instructions for sound insulation (soundproofing) **1730**
Care instructions for the driver's cab and the crane cab **1731**
Carrying out an error diagnostics **1867**
Carrying out crane movements **805**
Carrying out maintenance work **1803**
Central lubrication system **1823**
Changes and updates for Operating instructions **2043**
Changing between operating modes **395**
Changing from crane operation to travel mode **403**
Changing from travel mode to crane operation **401**
Changing the idling speed **345**
Changing the maximum rotation speed of slewing gear **725**
Changing the oil **1783, 1813, 1835**
Changing the oil on the torque converter coupling **1777**
Changing the pressure filter **1779**
Changing the set up configuration and hoist rope reeving **771**
Changing the urea filter **1769, 1811**
Changing the wheel **1795**
Checking cylinder pressure with “jib stop extended to ma **2023**
Checking for leaks **1771, 1781**
Checking jib stop cylinder pressure **2023**
Checking limit switch initiators for function **2011, 2013, 2015**
Checking limit switch initiators on switch point “steepe **2015**
Checking the antislip coverings **1735**
Checking the battery voltage **739, 1735**
Checking the central lubrication system **741**
Checking the change over pulleys of the rope feed mechan **1961**
Checking the coolant level **305, 739**
Checking the fuel level **739**
Checking the fuel reserve **306**
Checking the function of the safety devices **1226**
Checking the function of the safety devices **1099, 1149, 1193, 1261, 1465, 1596, 1629**
Checking the gas pressure and oil fill **1968**
Checking the general condition of the crane **741**
Checking the general transport condition **309**
Checking the horn **757**
Checking the important operating instruments **321**
Checking the instruments after starting the engine **339**
Checking the length sensor value on the derrick ballast **1405**
Checking the lights **311**
Checking the oil level and filters **305, 739**
Checking the oil level **1781, 1813, 1835**

Checking the oil level of torque converter coupling **1775**
Checking the oil level on the automatic transmission **1771**
Checking the retaining elements **1019**
Checking the rigging and fastening points **109**
Checking the rigging points **503**
Checking the ropes **1019**
Checking the ropes of the rope feed mechanism **1961**
Checking the safety devices **1226**
Checking the safety measures **134**
Checking the settings **1159, 1201, 1235, 1271, 1475, 1601, 1641**
Checking the tires **306, 1795**
Checking the urea reserve* **306**
Checking the wheel alignment **1799**
Checking the window cleaning fluid **306**
Checks before starting to work with the crane **896**
Checks before start up **737, 2029**
Checks to be performed **441**
Check the relapse cylinders for visible defects **1968**
Cleaning and care of the crane **1730**
Cleaning the roller ring connection **469**
Closing boom systems **1547**
Component overview derrick ballast and ballast pallet **1347**
Component overview **447, 1247**
Component overview **1287**
Component overview of auxiliary jib “HS” **1587**
Component overview SA-frame **483**
Component overview S-pivot section **1495**
Component overview S-/SL-boom **1429**
Component overview W-boom system **1121**
Components and fastening points **1077**
Components **855, 1613**
Components **1187**
Components of pulley cart **1657**
Components of the system **1823**
Compressed air and brake system air dryer **1795**
Condition before installing **1983**
Condition of equipment that is functionally associated with the rope **1990**
Connecting the upper pulley block with the KA-frame **1629**
Connection schematic for emergency operation, illustrati **1725**
Consideration of wind conditions **135**
Console counterweight **55**
Control elements DTCO trip recorder* **281**
Control **43**
Control measures **1020**
Control measures **832**
Control release **799**
Control ropes **79**
Conversion chart for wind force **139**
Conversion chart for wind speed and dynamic pressure **139**
Coolant Engine cooling **1763, 1807**
Counterweight combinations **857**
Counterweight **854**
Counterweight **43, 44**
Counterweight or ballast **156**
Counterweight plates **855**
Counterweight plates Variation V1 and Variation V2 **857**
Crab steering **396**
Cracks and dents **2025**
Crane at the job site **400**
Crane cab with incline adjustment **103**
Crane cab with retracted / extended step **101**
Crane chassis **41**
Crane chassis **29**
Crane chassis maintenance and inspection schedule **1739**
Crane components **29**
Crane engine preheating with timer **763**
Crane geometry and load information **593**
Crane movement - Telescoping **897**
Crane operation **802**
Crane operation **905, 1641**
Crane operation **158, 1393**
Crane operation in case of thunderstorms **160**
Crane operation with a load **156**
Crane operation with derrick ballast **1391**
Crane operation with derrick ballast **1395**
Crane operator's cab **43**
Crane drive **43**
Crane speed slewing gear **79**
Crane speeds, luffing the main boom **79**
Crane speeds winches **78**
Crane start up and taking the crane out of service **736**
Crane superstructure **42**
Crane superstructure **51**
Crane superstructure maintenance and inspection schedule **1749**
Crane support **405**
Crane vehicle axles blocked **323**
Crane vehicle axles suspended **323**
Customer information **2045**
Cycle control **1825**

D

Damaged paint **2025**
Danger of being crushed! **905**
Danger of crushing when closing the windows **97**
Danger of falling! **906**
Dangerous conditions without shut off **1022**
Dangers when working together with several cranes **147**
Danger zone of crane **97**
D-boom **1076**
D-end section 7.0 m **69**
D-end section **1077**
Derrick ballast **45**
Derrick ballast - Suspended ballast **1346**
Derrick ballast, weight and utilization **679**

Derrick boom angle **677**
D-derrick boom **44**
Derrick relapse retainer **2013**
Descending from lattice sections or booms **118**
Description and component overview **1347**
Destined use **159**
Determining the factor for reeving **1306**
Determining the rope weight for the rope diameter **1306**
Did an alarm function occur? **1859**
Diaphragm reservoirs **1817**
Diaphragm reservoirs of axle suspension / axle blocking **1789**
Diesel engine **1759, 1805**
Diesel engine **41, 42**
Diesel particle filter* **1763, 1807**
Differential force monitoring for derrick ballast guyin **1407**
Differential locks **383**
Dimensions and weights crane chassis **47**
Dimensions and weights Crane superstructure **51**
Dimensions and weights equipment **57**
Dimensions and weights **447**
D-intermediate section 10.5 m **69**
D-intermediate section 14.0 m **69**
D-intermediate section **1077**
Disassembling SA-frame **493**
Disassembling the 60 t boom nose **1237**
Disassembling the 60 t boom nose **1245**
Disassembling the ballast pallet on the guide frame **1421**
Disassembling the D-boom **1109**
Disassembling the derrick ballast guying on the guide fr **1425**
Disassembling the fall protection equipment on the D-boo **1119**
Disassembling the fall protection equipment on the D-piv **1119**
Disassembling the F-auxiliary jib **1279**
Disassembling the F-jib **1273**
Disassembling the guide frame on the turntable **1427**
Disassembling the guy rods **1579**
Disassembling the K-lattice jib **1653**
Disassembling the S-boom **1581**
Disassembling the S-lattice sections **1485**
Disassembling the SLD/SD-boom **1573**
Disassembling the S-pivot section **1493**
Disassembling the S/SL boom **1477**
Disassembling the WA-frame 2 guy rods **1175, 1211**
Disassembling the W-boom system **1161**
Disassembling the wedge lock **853**
Disassembling the W-lattice jib **1171**
Disassembling the W-transport units **1179, 1211**
Disassembling the WV-boom system **1203**
Disassembling the WV-lattice jib **1211**
Disassembly device SA-frame **42**
Disassembly **1107, 1409, 1607, 1643**
Disconnecting electrical connection from the ballast pal **1423**
Disconnecting the connections to the turntable **479**
Disconnecting the connections to winch 1 **459**
Disconnecting the electrical connections **1169, 1211, 1243, 1279, 1577, 1609, 1649**
Disconnecting the electrical connections on the boom **1483**
Disconnecting the hydraulic connection on the boom **1483**
Disconnecting the hydraulic connections **1611, 1701, 1705, 1719, 1723**
Disconnecting the turntable with the quick connection **481**
Disconnecting the upper pulley block from the KA-frame **1651**
Disconnect the electrical connections **493**
Disconnect the hydraulic connections **493**
Displays in the crane operation program **719**
Display unit **289**
Disposal of fuels and lubricants **2030**
Distributor gear **1781**
Documentation **119**
D-pivot section 10.5 m **69**
D-pivot section **1077**
Driver's cab **42**
Driving configurations of the crane **91**
Driving conditions of the crane **331**
Driving speeds with 505/95 R 25 tires **78**
Driving the crane on the transport vehicle **507**
Driving the crane vehicle **345**
DTCO trip recorder* **319**
Ductile distortion **2025**

E

Electrical system **42, 43**
Electrical system - Lighting **1801, 1837**
Emergency equipment **513**
Emergency exist crane cab **107**
Emergency exit **105**
Emergency exit - driver's cab **105**
Emergency operation **1691**
Emergency operation of slewing gear(s) with assembly plate Variation 1 (V1) **1703**
Emergency operation of winch 4 on the LR1600/2 and LR16 **1699, 1707**
Emergency operation of winch 4 (W IV) on the LR1600/2 and LR1600/2-W **1721**
Emergency operation of winches, individual operation **1709**
Emergency operation of winches, parallel operation winch **1711**
Emergency operation slewing gear(s) with assembly plate(s) Variation 2 (V2) **1717**
Emergency operation winch 4 (WIV) **1721**
Emergency operation winches **1699**
Emergency operation with assembly plate(s) Variation 2 (V2) **1707**
Emergency operation with assembly plate Variation

1 (V1) **1697**
EMERGENCY STOP switch / EMERGENCY OFF switch **797**
Emergency take-down **1690**
Endangering air traffic **134**
Engaging the longitudinal differential lock axle 2 and a **385**
Engaging the longitudinal differential lock in the distr **383**
Engine monitoring **765**
Engine monitoring icons **731**
Engine oil **1759, 1805**
Ending crane operation **163**
Ending crane operation **163**
Ending emergency operation **1725**
Ending driving **381**
End operation with pin pulling device **1345**
Equipment in the cab **513**
Erecting the boom **1229, 1599**
Erecting the boom **1153, 1195, 1563**
Erecting the D-boom **1101**
Erecting the KA-frame **1627**
Erecting the SA-frame **1065**
Erecting the S-boom **1469**
Erecting the SLF-boom **1265**
Erecting the SLK-boom **1633**
Erection procedure **1229, 1599**
Erection / take down for crawler cranes **1061**
Erection / take down for mobile cranes **1061**
Erection / take down **1060**
Error diagnostics without the help of Liebherr Service **1867**
Error diagnostics with the help of Liebherr Service **1867**
Error messages by the LICCON computer system **791**
Error messages **553**
Establishing the connections **1225**
Establishing the connection to the turntable **455, 475**
Establishing the electrical connection from the guide fr **1355**
Establishing the electrical connections **1225**
Establishing the electrical connections **491, 1097, 1147, 1193, 1261, 1463, 1555, 1595, 1629**
Establishing the hydraulic connection from the guide fra **1355**
Establishing the hydraulic connections **1097, 1555, 1596, 1695**
Establishing the hydraulic connections to the boom **1463**
Establishing the hydraulic connection to the slewing gea **1703, 1717**
Establish the hydraulic connections **491**
Exceeding the LICCON overload protection for assembly **1127, 1433, 1621**
Exceeding the shut off limits of the LICCON overload pro **959, 1007**
Exhaust systems and other crane components with high tem **97**
Extending sliding beams from the crane cab **435**
Extending support cylinders from the crane cab **437**
Extending support cylinders with support control unit **423**
Extend sliding beam with support control unit **421**

F

Fall protection equipment on suspended ballast guide frames **245**
Fall protection equipment on the boom pivot sections and lattice sections **233**
Fall protection equipment on the crane chassis **201**
Fall protection equipment on the turntable **221**
F-assembly unit, see illustration 1 **1247**
Fastening points components W-system **1121**
Fastening points D-pivot section **1077**
Fastening points **1495**
Fastening points **1247**
Fastening points on the turntable **465**
Fastening points S-/SL-components **1429**
Fastening the seatbelt **317**
F-end section, see illustration 2 **1247**
Filling the grease container **1827**
Filling the lubrication lines **1827**
Fill quantities **1841**
Fill quantities, lubrication schedule **1840**
F-intermediate section 6 m, see illustration 3 **1247**
First aid measures after rescue **119**
Flap of oscillating safety 2 on collision with mechanica **2021**
Folding the swing arms in on the guide frame **1427**
Force F1 (Test point 1) between guying SA-frame - Derric **1397**
Force F4/F5 (MS4/MS5) guying derrick ballast - Derrick e **1399**
For cranes with pneumatic boom locking system **1963**
For cranes with telescopic boom system Telematik **1963**
Foreword to appendix **2040**
Frame **41, 42**
Fuel preliminary filter* **1767**
Fuel preliminary filter **1809**
Fuel system **1765**
Functional control before lifting the derrick ballast **1365**
Functional selection on the assembly plate **1697**
Function check **1555, 1825**
Function check of limit switch initiators on the mechani **2019**
Function key line **695, 731**
Functions on the remote control panel **1289**

G

General danger notes **1693**
General checks before starting to drive **305**
General control elements **277**

General control measures before crane operation **1021**
General **97, 401, 551, 783, 909, 917, 1287, 1873, 2007, 2025**
General **119, 167, 389, 405, 419, 433, 443, 905, 1995**
General hand signals **148**
General safety instructions **87**
General safety technical guidelines **96**
General specifications **1729**
General towing regulations **399**
General traffic regulations **87**
Gravity actuated relapse retainer **799**
Grounding **134**
Grounding the crane **134**
Grounding the load **135**
Grounding the mobile crane **303**
Ground pressure **77**
Guide frame ballast pallet* **53**
Guiding crane sections, lattice sections or crane compo **1031**
Guiding the load **905**
Guy ropes **79**
Guy rods **1024**

H

Handling of assembly plates **1695**
Handling of hook blocks **1311**
Hand signals for guidance **148**
Have the hydraulic, electric or engine failed? **1857**
Heater / engine pre-heating **1666**
Heater operation **1667, 1683**
Heating the crane operator's cab **1683**
Heating the driver's cab **1667**
Height dependent wind speeds according to EN 13000:2010 **140**
Hoist gear 1 **44**
Hoist gear 1 to 6 **1831**
Hoist gear 2 **43**
Hoist gear 3 **44**
Hoist gear 5 **44**
Hoist gear 6 **44**
Hoist gear, hoist rope **157**
Hoist limit switch “Hoist top” **791**
Hoist ropes **79**
Hook block **88**
Hook block overview **1311**
Hook blocks **1304**
Horizontal movements **151**
HS auxiliary jib **1586**
Hydraulic cylinder **1731**
Hydraulic hose lines **1789, 1818**
Hydraulic oil tank / auxiliary oil tank* **1815**
Hydraulic safety valves **799**
Hydraulic system **1785, 1815**
Hydraulic tank **1785**

I

Identification **119**
Identification of sliding beam **195**
Identification Track width retracted **196**
Important indicator instruments while driving **369**
Important service tasks **2029**
Independent steering **397**
Index **2047**
Influence of wind on the LICCON overload protection **262**
Input window hook block weight **585**
Inspecting load hooks **1961**
Inspecting the function of the overload protection **1969**
Inspecting the hoist and retracting winches **1949**
Inspecting the roller slewing ring connection **1969**
Inspection according to ISO 4309 **1984**
Inspection and maintenance of guy rods **2024**
Inspection and monitoring procedure **1961**
Inspection and replacement of safety ropes **243**
Inspection of accumulator pressure in relapse cylinder **2022**
Inspection of carrying crane structures, especially steel structures **1874**
Inspection of change over pulleys, illustration 2 **1971**
Inspection of crane wire ropes **1982**
Inspection of disk wheels **1948**
Inspection of lattice sections **1945**
Inspection of locking system of telescopic boom **1963**
Inspection of membrane accumulator **1967**
Inspection of pneumatic brake system for drum brakes **2006**
Inspection of relapse cylinders **1968**
Inspection of retaining ropes and anchor points **1965**
Inspection of rope pretension **1965**
Inspection of rope pulleys **1968**
Inspection of safety switching on the relapse supports **2010**
Inspection of the auxiliary reeving winch, recovery winch and spare gear winch **1971**
Inspection of the mounting of the load bearing equipment **1969**
Inspection of the oil and fuel reservoirs **1971**
Inspection of the rope feed mechanism in the telescopic boom **1961**
Inspection of the safety controls on the relapse cylinders **1968**
Inspection of the tele extension with eccentric, illustration 1 **1971**
Inspection of tire pressure **1947**
Inspection of tires and disk wheels **1947**
Inspection of tires **1947**
Inspection recommendations for periodic inspections of **1972**
Inspections **1949**

Installation **1983**
Installation of support beams **1299**
Installations in the cab **513**
Installing a double hook block for parallel operation **1323**
Installing a double hook block for single operation **1313**
Installing / removing the pulley cart on the adapter for the auxiliary jib **1661**
Installing / removing the roller cart from W-boom head **1659**
Installing the “adapter for the pulley cart” on the pul **1661**
Installing the auxiliary guying **1073**
Installing the auxiliary jib “HS” **1595**
Installing the ballast pallet **1361**
Installing the boom nose 60 t on the boom **1215**
Installing the boom nose 60 t on the L- / W-end sectio **1221**
Installing the boom nose 60 t on the S-end section **1219**
Installing the boom nose 60 t on the W-adapter **1223**
Installing the boom nose **1215**
Installing the brackets **867**
Installing the brackets with turntable extension* **869**
Installing the counterweight **867**
Installing the guide frame on the turntable **1353**
Installing the hook block **1313, 1323**
Installing the pulley cart **1659**
Installing the pulley cart on the “adapter for the auxil **1661**
Installing the single blocks **1335**
Installing the support beams **1299**
Installing the suspended ballast **1253**
Installing the turntable **467**
Instructions for resuming crane movements for cranes with CE mark **921**
Instructions for resuming crane movements for cranes without CE mark **969**
Instrument panel **527**
Intake gear (winch 4) **43**
Interior equipment **513**
Internal inspection of the wheel brakes **2008**
Interrupting crane operation **162**
Interruption of crane operation. **162**
Introduction **1983**
Is a sensor or limit switch defective? **1870**
Is the CPU defective? **1870**
Is the electrical connection of a cable drum interrupted **1870**
Is the LICCON monitor defective? **1869**
Is the power supply defective? **1869**

J

Job planning **94**
Joint lifting of a load with two cranes **147**

K

K-adapter 9.0 m **67**
K-assembly unit **67, 1615**
Keyboard **285**
K-pulley block **1617**

L

L-adapter 8.4 m **67**
LA-intermediate section 14.0 m, 2826.10 **63**
LA-intermediate section 7.0 m, 2826.10 **63**
Lattice mast boom - brief descriptions **31, 33, 35, 37**
Laying the W-lattice jib down **1163**
LD/SLD/SD-boom combination **1494**
Left support control unit **297**
L-end section 400 t **65**
Leveling instruments **789**
Level regulation from the driver's cab **325**
Level regulation **325**
LICCON computer system after engine start **769**
LICCON computer system boot up **555**
LICCON computer system **550**
LICCON computer system **784, 803**
LICCON computer system shows an error message? **1861**
LICCON job planer **130**
LICCON overload protection **784**
Liebherr Service **1729**
Lifting equipment **77**
Lifting / lowering a load **813**
Lifting of personnel **159**
Lifting the boom off **1225**
Lifting the boom off the ground **1225**
Lifting the boom off the ground **1595**
Lifting the derrick ballast off the ground **1387**
Lifting the load **903**
Lifting the turntable from the flatbed trailer **469**
Lifting winch 1 from the flatbed trailer **451**
LI-intermediate section 14.0 m, 2421.10 **65**
LI-intermediate section 14.0 m, 2421.10 reinforced **65**
LI-intermediate section 14.0 m, 2421.8 **65**
LI-intermediate section 7.0 m, 2421.10 **63**
LI-intermediate section 7.0 m, 2421.8 **63**
Limit switch Boom system **801**
Limit switch winch spooled out **793**
Load display **781**
Load take up with cross bar **901**
Load weighing and load display **777**
Load weighing **779**
Loosening the hydraulic connections from the guide frame **1425**
Lowering the hook block if slack rope forms **1308**
Lubricating the gear ring and the slewing gear pinion **1821**
Lubricating the slewing ring connection **1821**
Lubrication schedule **1841**
Luffing the boom **825**
Luff the boom down **1609**

M

Machine related movements **153**
Maintanance intervals - Crane superstructure **1747**
Maintenance and inspection guidelines **1733**
Maintenance and service - General **1728**
Maintenance **167, 1983**
Maintenance guidelines - Crane chassis **1758**
Maintenance guidelines - Crane superstructure **1802**
Maintenance intervals - Crane chassis **1737**
Maintenance notes for replacement parts **2030**
Maintenance work on gear components **1731**
Maintenance work on the crane superstructure or boom **1732**
Maneuvering mode **365**
Manual rope winches for assembly support of components **1023**
Measurement of wind speed **136**
Measures before tilting **1801**
Measures for defective components **1869**
Measures for work interruption or transport **1731**
Measures in clear problem cases **1857**
Mechanical auxiliary support **44**
Minimum required hook block weight **1305**
Mixing battery acid **1838**
Mobile pin pulling device **45**
Monitored auxiliary functions for crane operation **635**
Monitoring of crane movement **931, 979**
Monitoring of minimum force F1 **1395**
Monitors and displays **515**
Movement on the crane **97**
Moving the crane operator's cab **743**

N

National traffic regulations **91**
National traffic regulations **83**
Non-accessible walking and stepping surfaces **259**
Non-rotation free ropes and their rope end connections **1991**
Notice sign regarding vehicle height **176**
Notice Weight sliding beam **197**

O

Obligations of the crane operator **121**
Oil change **1833**
On-road driving **395**
Opening the front window **757**
Operating and control instruments **513**
Operating and control instruments on the crane chassis **274**
Operating and control instruments on the crane superstructure **512**
Operating behavior of steel ropes **1989**
Operating elements camera monitoring* **283**
Operating elements of the LICCON computer system on monitor 0 **559**
Operating elements of the LICCON computer system on monitor 1 **663**
Operating elements on control platform **535**
Operating elements switch cabinet **549**
Operating mode **1603**
Operating mode overview **1589**
Operating mode preselection on the LICCON computer syste **555**
Operating remote control panel **407**
Operating the access ladder from the crane operator's ca **749**
Operating the access ladder from the driver's cab **747**
Operating the access ladder **745**
Operating the crane **1159, 1201, 1235, 1271, 1475, 1571, 1601**
Operating the engine-independent auxiliary heater for en **1677**
Operating the engine-independent auxiliary heater* **1673, 1685**
Operating the windshield wiper / windshield washer syste **755**
Operating units in the cab **515**
Operation and performance test **2007**
Operations with a boom extension (folding jib, auxiliary **913**
Operations with a boom nose* on the lattice jib **911**
Operations with a boom nose* on the telescopic boom **909**
Operation test **2007**
Other operating elements **659**
Overflow container **1831**
Overload monitoring in operating mode with derrick balla **1401**
Overload protection (LMB) **553**
Overview load chart for cranes with CE mark **921**
Overview load chart for cranes without CE mark **969**
Overview of acoustic / visual warnings for cranes with C **923**
Overview of acoustic / visual warnings for cranes withou **971**
Overview of displays and component groups for error diag **1855**

P

Parking brake **347**
Parking the vehicle **164**
Performance test **2007**
Periodic crane inspections **1872**
Permissible ballast assemblies **1349**
Permissible counterweight assemblies **865**
Permissible ground pressures **128**
Permissible turntable ballast for 360° **443**
Permissible wind speed and wind surface calculation **262**
Permitted ground pressure for crawler cranes **129**
Permitted ground pressure for mobile cranes **129**
Personal protective equipment **111, 199**
Pin connections **1030**

Pin intake gear winch 4 on turntable **491**
Pinning and unpinning with pin pulling device **1343**
Pinning the K-assembly unit on the K-adapter **1623**
Pinning the relapse supports **1139, 1193**
Pinning the SA-frame on the turntable **485**
Pinning the S-pivot section on the turntable **1435**
Pinning the turntable with the quick connection **473**
Pinning winch 1 with the turntable **453**
Pin pulling device **1342**
Pin pulling device **1343**
Pin roller bearings. **489**
Placing the boom down **1239**
Placing the counterweight plates **871**
Placing the hoist / control ropes **1019**
Placing the KA-frame down **1653**
Placing the SA-frame onto the turntable **1067**
Placing the turntable on the crawler center section **471**
Placing the WV-lattice jib down **1205**
Planning crane operation **95**
Platforms **203**
Pneumatic springs for assembly support of components **1023**
Possible engine monitoring advance warning, warning and **733**
Pre-assembling guide frame **1353**
Preassembling the ballast pallet **1357**
Preface **2043**
Prepare intake gear winch 4 for transport **495**
Preparing for crane operation **1159, 1201, 1235, 1475, 1571, 1601**
Preparing the roller bearings for transport **497**
Prerequisites for emergency operation **1695**
Prerequisites for lifting of personnel **159**
Pressure filters in the crane hydraulic **1817**
Pressure monitoring in the relapse cylinders **795**
Procedure for shut off of crane movements **916**
Procedure **1725**
Procedure in case of problems **1851**
Procedure in case of slack rope **1308**
Procedure to follow in case of a problem **1853**
Procedure to follow in case of a problem **1853**
Product description **39**
Pulley cart **1656**
Pulley cart **75**
Pulley set 400 t **75**
Pulley set 600 t **75**
Pump distributor gear **1813**
Pump operating period of central lubrication system - Cr **1823**

Q

Quick test Crane geometry **783**
Quick test Overload protection **783**

R

Railing **201**
Ram work or pulling sheet piles **906**
Recommendations for taking oil samples **1732**
Recommendations for travel operation **2030**
Reeving in the hoist rope **1625**
Reeving in the hook block **837**
Reeving plans **914**
Reeving plans **915**
Reeving the hook block in and out **837**
Reeving the W-control rope in **1133, 1193**
Refueling fuel tanks* **1736**
Refueling **1735, 1765**
Regulating the engine rpm **807**
Reinstalling the drive shaft after tilting the driver's **1801**
Releasing the counterweight **883**
Releasing the crane control **805**
Releasing the electrical connection from the guide frame **1425**
Remote control panel connected on sockets -X250 to -X253 **301**
Remote control panel connected on sockets -X260 to -X263 **301**
Remote control panel **301, 1289**
Removal of support beams **1293**
Remove the SA-frame from the turntable **501**
Removing and recharging the battery **1838**
Removing the “adapter for the pulley cart” * on the pu **1663**
Removing the auxiliary jib “HS” **1611**
Removing the bracket **891**
Removing the brackets with the turntable extension **893**
Removing the counterweight **881**
Removing the counterweight plates **885**
Removing the hoist limit switch weight **851**
Removing the hook block **1319, 1329**
Removing the load hook* **847**
Removing the pulley cart **1659**
Removing the pulley cart on the “adapter for the auxilia **1663**
Removing the single blocks **1339**
Removing the support beams **1293**
Removing the turntable extension on the turntable **893**
Removing the turntable **477**
Removing winch 1 **457**
Repair and maintenance tasks **2029**
Repair welds **1876**
Repeat inspection of guy rods **2025**
Replacing the granular cartridge **1795, 1837**
Replacing the oil in the automatic transmission **1773**
Replacing the suction filter **1779**
Requirements for monitoring the winches **1950**
Requirements for the crane operator **119**
Rescuing the assembly personnel **119**
Resuming crane operation **163**
Resumption of crane operation **163**
Retaining the engine monitoring screen **735**
Retarder **349**

Retracting sliding beams from the crane cab **439**
Retracting sliding beams with support control unit **429**
Retracting support cylinders from crane cab **439**
Retracting support cylinders with support control unit **427**
Reduced sheer out rate **396**
Right support control unit **299**
Roof console **521**
Rope end connections **835**
Rope inspection log **1990**
Rope pulleys **1019**
Rope reeving **834**
Rope reeving **853**
Ropes **79**
Rope storage and marking **1990**
Rotation-resistant ropes and their rope end connections **1990**
Running / slowing down the slewing movement with the ped **829**

S

Safety bar **103**
Safety equipment **782**
Safety devices on the crane **789**
Safety guidelines for ladders **167**
Safety notes for external power feed (100 V AC to 400 V AC) **160**
Safety ropes **239**
Safety signs on the ladders **169**
Safety systems **43**
Safety technical instructions for working with a load **895**
Safety technical notes for assembly and disassembly **1018**
SA-frame **1062**
SA-frame **1063**
SA-frame **51**
S-boom relapse retainer **2011**
Securing and removing the load hook* **845**
Securing the assembly personnel against falling **117**
Securing the counterweight **879**
Securing the crane **507**
Securing the load hook* **845**
Selecting the location, illustrations 1 to 3 **125**
Selecting the operating location **401**
S-end section 750 t **61**
S-end section **61**
Service brake **349**
Service fluids and lubricants **1842**
Service items and lubricants (continuation) **1844, 1845, 1846, 1847, 1848, 1849, 1850**
Service items and lubricants **1843**
Servo oil pressure monitoring in the winches **795**
Set support beam behind on support base for crane operat **445**
Settings **1391**
Setting the ballast pallet down **1411**
Setting the lubrication and break periods **1823**
Setting the operating mode and set up configuration **563**
Setting winch 1 into the turntable **453**
Set up program areas **565**
Shut off of crane movement: LMB STOP by LICCON overload **941, 989**
Signs **175**
Signs on the crane **174**
Single hook blocks **1335**
S-intermediate section 14.0 m, 2826.20 **59**
S-intermediate section 14.0 m, 2826.20 reinforced **59**
S-intermediate section 14.0 m, 2826.30 **61**
S-intermediate section 14.0 m, S 3326.30 RO 13.5 t **77**
S-intermediate section 14.0 m, S 3326.40 15.3 t **77**
S-intermediate section 14.0 m, S 3326.40 RU 15.8 t **77**
S-intermediate section 3.5 m, 2826.30 **57**
S-intermediate section 7.0 m, 2825.30 **59**
S-intermediate section 7.0 m, 2826.20 **59**
Slewing gear **1835**
Slewing gear **43, 53**
Slewing ring connection **1821**
SLF-Boom combination **1246**
Sliding beam disassembly / assembly **1286**
Sliding beam monitoring* **715**
SLK boom **1612**
SLK-boom **1613**
SL-main boom **44**
Slopes and excavations, illustrations 4 and 5 **128**
SL-reducer section 7.0 m **61**
S-main boom **44**
Special functions **629**
Specified service items and lubricants for Liebherr cranes **1843**
Speeds **78**
S-pivot section 12 m, 2826.20 **57**
S-pivot section 12 m, 2826.30 **57**
S/SL-boom **1428**
Starting and stopping the engine **335, 759**
Starting / stopping the program **703**
Starting the engine **335, 759**
Starting the engine with the flame start system **761**
Starting the program **717, 721, 729**
Start the emergency operation aggregate **1697, 1707**
Statutory regulations **91**
Steering **389**
Steering **42**
Stretching **2025**
Supplementary service work **2028**
Supplied fall arrest system (safety harness and height s **115**
Support control unit **297, 419**
Support force monitoring* **707**
Support **1589**
Supporting **133**

Supporting the S/SL-boom combination for erection **1437**
Supports **41**
Suspended load fastening point **178**
Suspension **41**
Suspension path and incline **47**
Swinging the catwalk into operating position **229**
Swinging the crane operator's cab into operating positio **743**
Swinging the crane operator's cab into transport positio **743**
Swing in the support beam **417**
Swing the support beam out **411**
Switching back to the crane operation program **727**
Switching the slewing gear to coasting **831**
SW/SDW boom combination **1120**

S

support pressure **77**

T

Tackle points support beams **1287**
Take-down criteria **1986**
Taking on a load **899**
Taking over the previously selected configuration and ho **769**
Taking down the SLK-boom **1645**
Taking the ballast pallet down **1413**
Taking the S-boom down **1479, 1575**
Taking the SLF-boom down **1275**
Technical data **46**
Telescopic boom distortion because of sunshine on one si **896**
Telescoping the derrick ballast to the required derrick **1389**
Tempomat **375**
Temposet **379**
Terminology **28**
Terminology **261**
Test brackets (KMD = force test box) **801**
Testing cylinder pressure with “jib stop in test positio **2023**
Test point 1 = F1 **665**
Test point 2 = F2 and test point 3 = F3 **675**
The Control parameter program **721**
The Crane operation program on monitor 0 **593**
The Crane operation program on monitor 1 **665**
The Engine monitoring program **729**
The engine does not start? **1857**
The function key line in the crane operation program **655**
The set up program **563**
The “Support” program **433**
The Support program **703**
The Working range limitation program* **717**
Tilting the crane operator's cab **753**
Tilting the driver's cab **1801**
Tilt play of roller ring connection **1821**
Tire changes **2032**
Tires **2030**
Tires **41, 47**
Tires / wheels **1795**
Towing **399**
Towing with a defective engine and / or transmission **399**
Towing with an intact engine **399**
Traffic endangerment and environmental damage **98**
Traffic regulations **82**
Traffic regulations **83**
Transmission **41**
Transporting components **1023**
Transporting lattice sections **1023**
Transporting the crane **503**
Transporting the crane safely **505**
Transporting the hook block **901**
Transport of crane and crane components **502**
Transport weights and fastening points on the turntable **463**
Transport weights turntable **463**
Travel operation **330**
Travel operation without support beams **1297**
Troubleshooting on the central lubrication system **1829**
Turning out extremely rotation-resistant hoist ropes **1995**
Turning / driving in reverse **164**
Turning the axle suspension on **323**
Turning the crane superstructure **831**
Turning the engine off **343, 767**
Turning the heater and ventilation on **751**
Turning the heater / ventilation on **317**
Turning the differential locks off **387**
Turning the lights on / off **757**
Turning the sliding beam illumination on **431, 441**
Turning the turntable into assembly position **1433**
Turning the turntable into disassembly position **1479**
Turning the turntable to the left **1703, 1717**
Turning the turntable to the right **1705, 1719**
Turntable assembly **462**
Turntable extension **45**
Turntable extension* **53, 855**
Turntable **29**
Turntable with extension*, illustration 2 **221**
Turntable without extension, illustration 1 **221**
Twisting caused by stretching in rotation-resistant ropes and its remedy **1995**
Two hook operation **907**

U

Unloading the crane safely **509**
Unpinning the K-assembly unit on the K-adapter **1655**
Unpinning the relapse supports **1173, 1211**
Unpinning the S-pivot section on the turntable **1585**
Unpinning winch 1 on the turntable **461**

Unpin the SA-frame on the turntable **499**
Unreeving the hook block **843**
Unreeving the W-control rope **1177**
Unreeving the W-control ropes **1211**
Update confirmation **2044**
Update confirmation **2045**
Urea system* **1769, 1811**
Use of double-stranded height safety equipment, illustration 2 **117**
Use of single-stranded height safety equipment, illustration 1 **117**
User interface **717, 723**
Utilization conditions **1403**

V

Variations of boom nose and their use **1217**
Vertical movements **149**
Vibration sensor* **811**
Vibrations **78**
Visual check for damage **896**
Visual inspection **2007**

W

W-adapter for pulley sets 400 t and 600 t **75**
WA-frame 1 and WA-frame 2 end sections **71**
WA-frame 2, pivot section **71**
Waiting for the boot up phase **769**
Walking and stepping surfaces **257**
Walking on lattice sections or booms **118**
Walking on the telescopic boom **118**
Warning notes **1733**
Warranted maximum sound power level **188**
Wear **2025**
Weights **1024**
Weights **1287**
Weights of folding beams **49**
Weights W-transport units **1121**
Welding work on the load **161**
Wheel alignment **1799**
Wheel changes **2032**
Wheel checks **2031**
Wheel hubs **1799**
Which data is required by Liebherr Service? **1855**
Winch 1 **51**
Winch 2 **51**
Winch and master switch assignment to operating modes **803**
Winches **725**
Winch **1831**
Winch displays **689**
Wind influences for crane operation **260**
Wind influences for crane operation **261**
Wind influences in crane operation **142**
Wind influences during erection and take down **142**
Wind influences when the “Crane is not in service” **143**
Wind speed sensor **793**
Wind speed, wind gust speed and wind direction **136**
Wire rope **1983**
Wire ropes and rope end connections **835, 1990**
Wire ropes **835, 2004**
With flame start system at coolant temperature of less t **337**
W-lattice jib **2015**
W-lattice jib in operating mode S6D2WB (only for LG 1750) **1183**
W-lattice jib “downward, without pulley set, illustratio **2017**
W-lattice jib “downward, with pulley set, illustration 2 **2017**
W-luffing lattice jib **44**
Working in the vicinity of electricity transmission line **906**
Working in the vicinity of transmitters **145**
Working on lattice sections or booms **118**
Working on the auxiliary boom **117**
Working on the crane superstructure or boom **120**
Working on the telescopic boom head **117**
Working ranges of several cranes overlap **147**
Working with a load **894**
Workplace-related emission values **77**
Work station - Crane operator's cab **751**
Work station - Driver's cab **313**
W-pivot section 12 m with WA-bracket 1 pivot section **71**
WV-lattice jib **1184**
WV-lattice jib **1185**
WV-lattice jib in operating mode S6D2WVB (only for LG 1750) **1213**

“

“Winch display” icon **651**