Spare parts catalogue

en
de

Model:

LR 1300 SX

Serial number:

138406

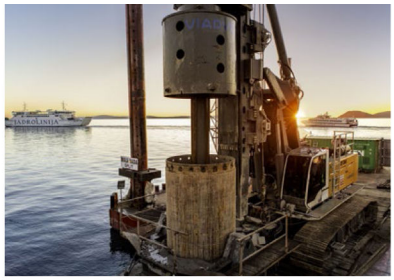

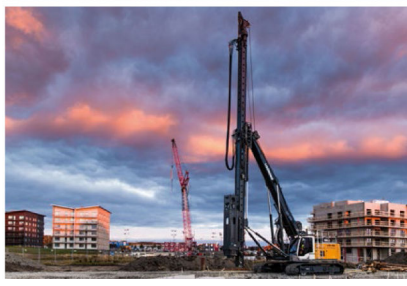

001 - 21.06.2017

LIEBHERR

USER GUIDE

Using the spare parts catalogue, it is possible to order spare parts by referencing the item number.

Spare parts catalogue layout

Customer-specific options are listed within the assembly listing in the last positions. Customer-specific options are so-called expansion kits and usually have the abbreviation NRS in the designation.

The assembly listing is located at the beginning of the spare parts catalogue and provides the machine serial number in the item number.

Spare parts sheet layout

1 Position number of the item in the illustration
2 Item number (order number)
3 Quantity
4 Spare part designation (original language)
5 Spare part designation (translation)
6 Specification of a serial number
up to serial number: -0815
from serial number: 0815-
7 Information on the spare part (not used)
8 Note on subordinate items, page number reference

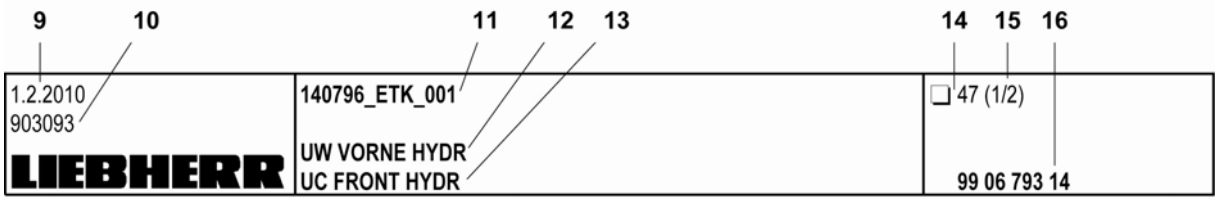

9 Printing date of the spare parts catalogue
10 Illustration number
11 Serial numbers for which this spare parts catalogue applies
12 Assembly designation (original language)
13 Assembly designation (translation)
14 Page number
15 Number of pages per assembly
16 Item number for the assembly
Example: 01 40 796 14 = Item number for the assembly listing

Searching for spare parts:

Searching using the assembly listing:

To find the desired spare part, you must navigate through the part list structure from beginning to end.
In doing so, first use the illustrations in the assembly listing as a guide.
The illustrations in the assembly listing provide a general idea of what is found in the list below the illustration.
Please note that certain assemblies and their spare parts may also be included in the conversion kits in the assembly listing.

Numerical index:

The numerical index is sorted by item number with reference to the page number, assembly, position and quantity.

Alphabetical index:

The alphabetical index is sorted by item designation with reference to item number, position, quantity, page number, assembly and assembly designation in which the item can be found.

Note on ordering

Before ordering, check whether the item number on the machine's type plate matches the number in your spare parts catalogue.

In order for us to be able to process your order quickly and correctly, please provide the following information with your order:

- Machine type and serial number (found on the machine's type plate)
- Item, designation and desired quantity
  For spare parts orders for drive motors, winches, hydraulic pumps, hydraulic motors, valves and cylinders, you must provide the serial number on the component's type plate.
- Delivery address and mode of dispatch

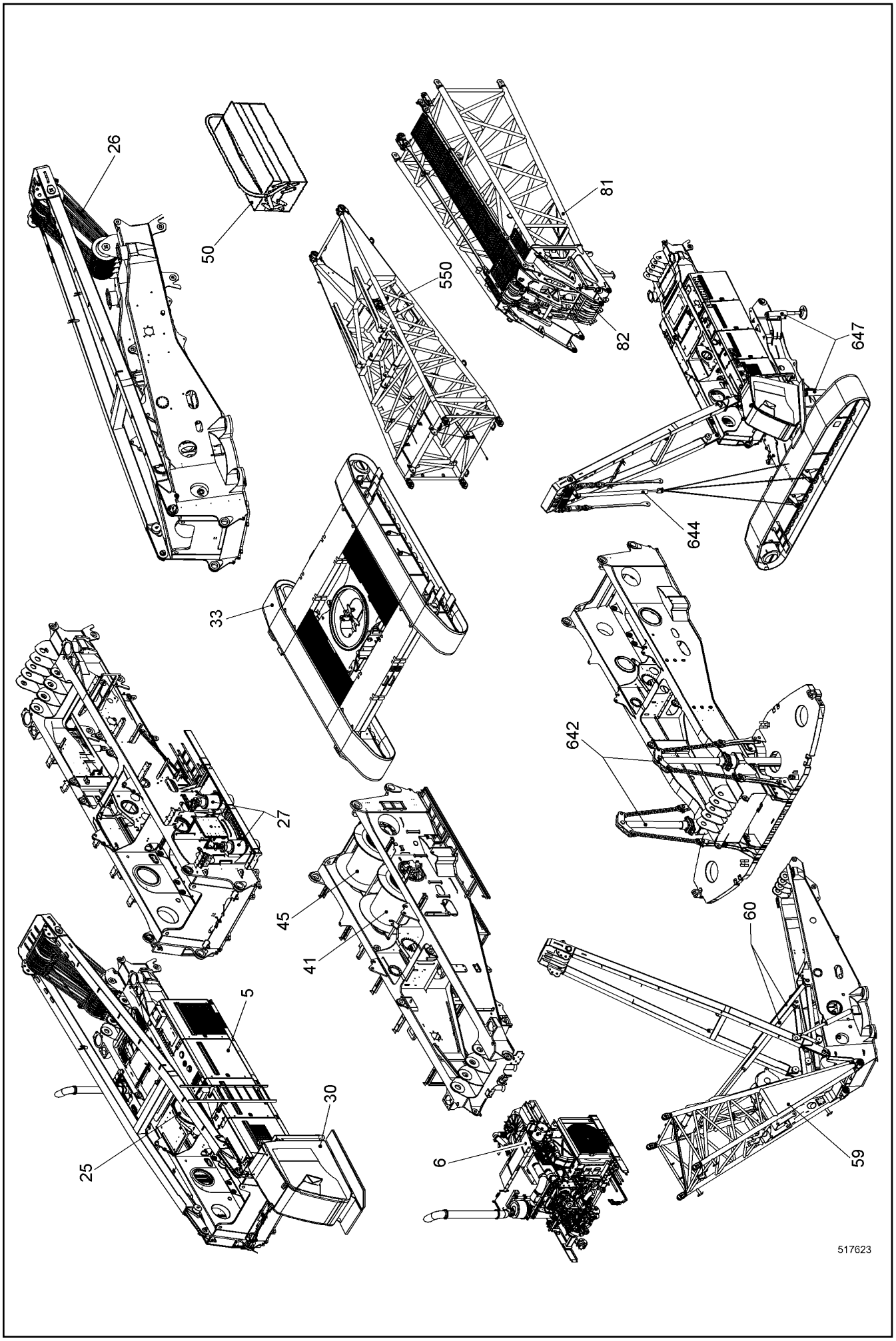
26
50
550
81
82
647
644
33
642
27
45
41
60
5
30
25
6
59
517623

Pos.	Item	Quantity	Description	Bezeichnung	Serie	K
5	11240479	1	SUPERSTRUCTURE CPL ⇨ ❑ 5	OW KPL		
6	11928855	1	AGGREGATE DIESEL ENGINE ⇨ ❑ 78	AGGREGAT DIESELMOTOR		
8	10351188	2	INSCRIPTION	SCHRIFTZUG		
13	789011714	1	FIRST-AID KIT	VERBANDSKASSETTE		
14	10592569	1	RADIO RFK ⇨ ❑ 331	RADIO NRS		
15	10521602	1	CROSS MASTER SWITCH EL INSTAL. ⇨ ❑ 332	KREUZMEISTERSCH EL EINBAU		
18	992338614	1	COUNTERWEIGHT ARRANGEMENT ⇨ ❑ 334	BALLASTGEWICHT ANORD		
23	10519697	1	NEEDLE LUFFING WINCH ⇨ ❑ 338	NADELEINZIEHWINDE		
24	992338714	1	ROPES LUG NEEDLE BOOM ⇨ ❑ 354	BESEILUNG EZW NADEL AL		
25	10519691	1	LUG SUPERSTRUCTURE CPL ⇨ ❑ 355	EZW OW EINBAU KPL		
26	11227037	1	ROPES LUG MAIN BOOM ⇨ ❑ 377	BESEILUNG EZW HAUPT AL		
27	10519682	1	SG SUPERSTRUCTURE ⇨ ❑ 378	DW OW		
30	11279706	1	CABIN CPL ⇨ ❑ 397	KABINE KPL		
31	10519696	1	CONNECTION SUPERSTR UC ⇨ ❑ 437	VERBINDUNG OW UW		
33	11893648	1	UC CPL ⇨ ❑ 439	UW KPL		
37	11248120	1	CENTRAL COUNTERWEIGHT CPL ⇨ ❑ 477	ZENTRALBALLAST KPL		
38	992338914	1	UC PLATFORM ⇨ ❑ 478	UW PODEST		
41	11262605	1	WINCH 1 CRANE ⇨ ❑ 480	WINDE 1 KRAN		
45	11262610	1	WINCH 2 CRANE ⇨ ❑ 495	WINDE 2 KRAN		
50	10561875	1	TOOL EQUIPMENT ⇨ ❑ 500	WERKZEUGAUSRUESTUNG		
52	11898219	1	SIGN LOCATIONS	SCHILDER ANORD		
53	11276851	1	TYPE PLATE	TYPENSCHILD		
59	11238204	1	PIVOT PIECE CPL ⇨ ❑ 504	ANLENKSTUECK KPL		
60	11292598	1	TILT-BACK SUPPORT ⇨ ❑ 522	RUECKFALLSTUETZE		
63	11241651	1	A-FRAME 1 ASSEMBLY UNIT ⇨ ❑ 533	A-BOCK 1 MONTAGEEINHEIT		
65	11285947	1	SUPPORT CPL ⇨ ❑ 541	AUFLAGE KPL		
67	11245707	1	INTERMEDIATE PIECE ASSEMB UNIT ⇨ ❑ 544	ZWISCHENSTUECK MONTAGEEI		
69	11286191	1	SUPPORT CPL ⇨ ❑ 559	AUFLAGE KPL		
71	11245713	1	INTERMEDIATE PIECE ASSEMB UNIT ⇨ ❑ 560	ZWISCHENSTUECK MONTAGEEI		
77	11286534	5	SUPPORT CPL ⇨ ❑ 566	AUFLAGE KPL		
79	11245719	5	INTERMEDIATE PIECE ASSEMB UNIT ⇨ ❑ 567	ZWISCHENSTUECK MONTAGEEI		
81	11241333	1	BOOM HEAD CPL ⇨ ❑ 573	AL KOPF KPL		

Pos.	Item	Quantity	Description	Bezeichnung	Serie	K
82	992339814	1	ROLLER SET ⇨ ❑ 587	ROLLENSATZ		
121	790517214	1	ROPE LEFT	SEIL LI		
122	790517214	1	ROPE LEFT	SEIL LI		
129	790386114	1	LOAD HOOK ⇨ ❑ 590	LASTHAKEN		
133	790411214	1	BOTTOM HOOK BLOCK ⇨ ❑ 591	UNTERFLASCHE		
137	790487114	1	BOTTOM HOOK BLOCK ⇨ ❑ 598	UNTERFLASCHE		
180	993438714	1	NEEDLE ADD-ON PARTS ⇨ ❑ 604	NADELANBAUTEILE		
401	10524422	1	SOFTWARE	SOFTWARE		
438	11907226	1	MODEM RFK ⇨ ❑ 622	MODEM NRS		
447	11250162	1	EMERGENCY OPERATION EL RFK ⇨ ❑ 624	NOTBETRIEB EL NRS		
510	11215524	1	ANGLE INDICATION RFK ⇨ ❑ 625	WINKELANZEIGE NRS		
550	10517439	1	ROPE LUG CPL RFK ⇨ ❑ 626	SEILEINZIEHWINDE KPL NRS		
553	10553721	1	ROOF RAILING RFK ⇨ ❑ 639	DACHGELAENDER NRS		
554	11241478	1	UC PLATFORM ⇨ ❑ 643	UW PODEST		
555	990870614	1	LADDER MOUNTING ⇨ ❑ 66	LEITER EINBAU		
560	10525471	1	ADDNL.FLOODLIGHT SUPERSTR. RFK ⇨ ❑ 646	ZUSATZSCHEINWERFER OW NR		
566	11215461	1	WARNING LIGHT RFK ⇨ ❑ 654	HELILEUCHTE NRS		
580	11271097	2	LIGHTNING ROD RFK ⇨ ❑ 659	FANGSTANGE NRS		
583	11237407	1	ACCESS LADDER CPL RFK ⇨ ❑ 660	AUFSTIEGSLEITER KPL NRS		
605	991011614	1	ROPE GUIDE ⇨ ❑ 661	SEILFUEHRUNG		
616	993183814	1	INTERMEDIATE TENSIONING RFK ⇨ ❑ 663	ZWISCHENABSPANNUNG NRS		
619	970599703	1	INTERMEDIATE TENSIONING RFK ⇨ ❑ 665	ZWISCHENABSPANNUNG NRS		
620	10556010	1	FALL PROTECTION RFK ⇨ ❑ 666	STURZSICHERUNG NRS		
621	11294737	1	GANGWAY INTERM. SECTION RFK ⇨ ❑ 670	LAUFSTEG ZWISCHENSTUECK		
622	11294742	1	GANGWAY INTERM. SECTION RFK ⇨ ❑ 674	LAUFSTEG ZWISCHENSTUECK		
624	11294743	5	GANGWAY INTERM. SECTION RFK ⇨ ❑ 675	LAUFSTEG ZWISCHENSTUECK		
625	10555148	1	FALL PROTECTION RFK ⇨ ❑ 676	STURZSICHERUNG NRS		
626	10557224	1	FALL PROTECTION RFK ⇨ ❑ 677	STURZSICHERUNG NRS		
642	10519713	1	SELF-LOADING SYSTEM RFK ⇨ ❑ 679	SELBSTVERLADESYSTEM NRS		
644	11236197	1	SELF-LOADING SYSTEM RFK ⇨ ❑ 684	SELBSTVERLADESYSTEM NRS		
647	11242988	1	SELF-LOADING SYSTEM RFK ⇨ ❑ 694	SELBSTVERLADESYSTEM NRS		

Pos.	Item	Quantity	Description	Bezeichnung	Serie	K
650	10536350	1	SYNCHRONIZING HYDR RFK ⇨ ❑ 707	GLEICHLAUF HYDR NRS		
651	971460103	1	WINCH SYNCHRONIZATION EL RFK	WINDENGLEICHLAUF EL NRS		
680	11236266	2	ROPE MOUNTING RFK ⇨ ❑ 711	SEILHALTERUNG NRS		
704	11894008	1	VIDEO MONITORING SYSTEM RFK ⇨ ❑ 713	VIDEOUEBERWACHUNGSANLAG		
719	10517280	1	CABIN INCLINATION RFK ⇨ ❑ 720	KABINENNEIGUNG NRS		
723	11220372	1	FOOT PEDAL EL INSTALLATION ⇨ ❑ 723	FUSSPEDAL EL EINBAU		
724	11936212	1	AIR CONDITIONING UNIT RFK ⇨ ❑ 724	KLIMAANLAGE NRS		
821	11284236	1	CENTRAL LUBRICATION RFK ⇨ ❑ 730	ZENTRALSCHMIERUNG NRS		
828	10522930	1	SG TACHOGENERATOR RFK ⇨ ❑ 733	DW GEBER NRS		
843	10560137	1	MAINS SUPPLY BATTERY ⇨ ❑ 735	FREMDEINSPEISUNG BATTERIE		
858	10521554	1	REFUELLING SYSTEM RFK ⇨ ❑ 736	BETANKUNGSANLAGE NRS		
992	981953714	1	SOUND REDUCTION	SCHALLABNAHME		
999	981809914	1	KEY	SCHLUESSEL		

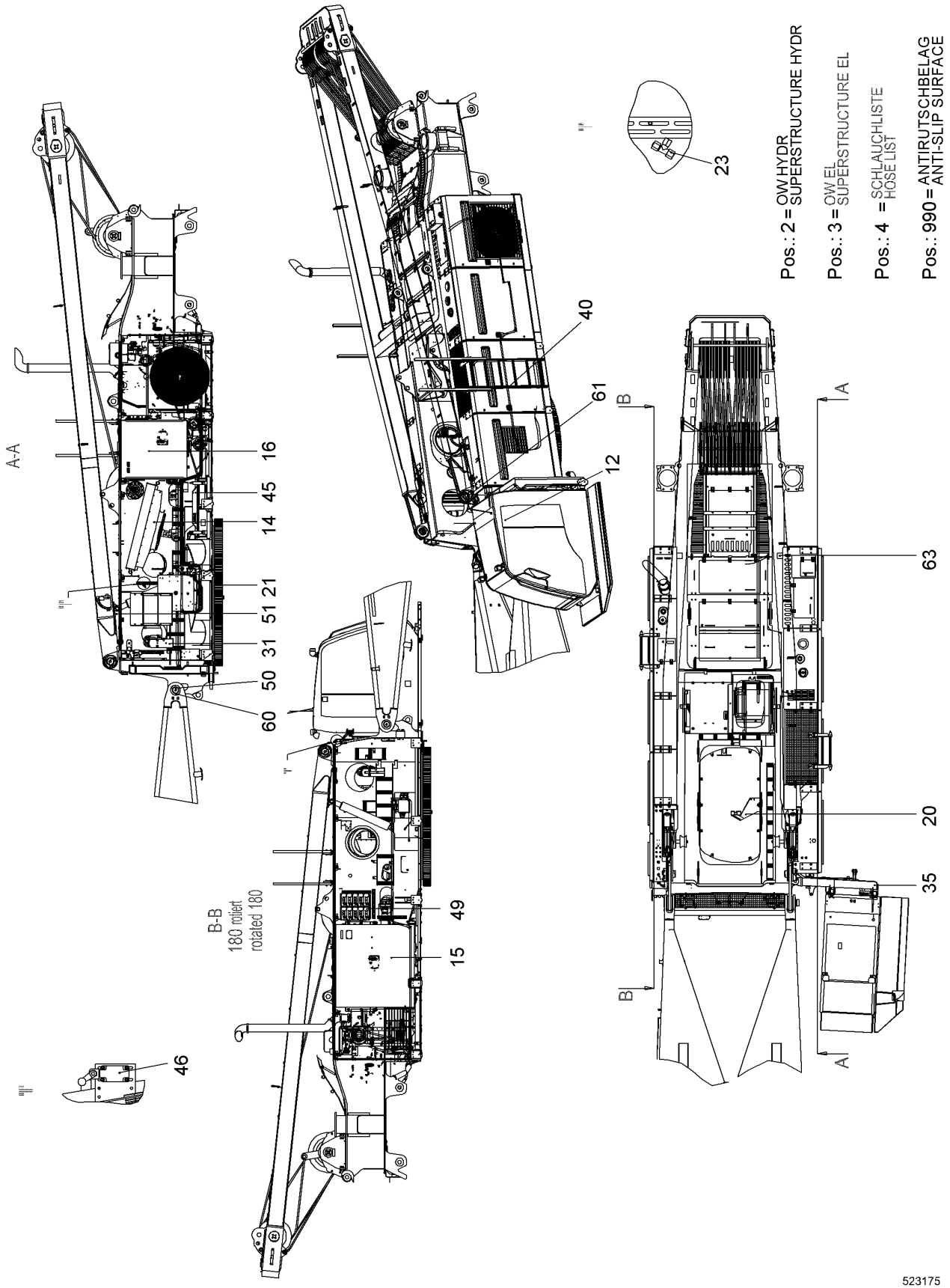
A-A
B-B
180 rotiert
rotated 180
16
45
14
21
51
31
50
60
40
61
12
23
46
49
15
63
20
35
Pos.: 2 = OW HYDR
SUPERSTRUCTURE HYDR
Pos.: 3 = OW EL
SUPERSTRUCTURE EL
Pos.: 4 = SCHLAUCHLISTE
HOSE LIST
Pos.: 990 = ANTIRUTSCHBELAG
ANTI-SLIP SURFACE
523175

Pos.	Item	Quantity	Description	Bezeichnung	Serie	K
2	11296186	1	SUPERSTRUCTURE HYDR ⇨ ❑ 7	OW HYDR		
3	11245190	1	SUPERSTRUCTURE EL ⇨ ❑ 33	OW EL		
4	11269954	1	HOSE LIST ⇨ ❑ 41	SCHLAUCHLISTE		
12	9874345	1	STICKER SOUND VOLUME LEVEL	AUFKLEBER SCHALLEISTUNGS		
14	10519616	1	OIL COOLER INSTALLATION ⇨ ❑ 45	OELKUEHLER EINBAU		
15	10560700	1	TANK INSTALLATION HYDR ⇨ ❑ 46	TANK HYDR EINBAU		
16	10560732	1	FUEL TANK ASSY. ⇨ ❑ 52	KRAFTSTOFFTANK EINBAU		
20	10552681	1	DRIVER INSTALLATION ⇨ ❑ 55	MITNEHMER EINBAU		
21	10519631	1	SUPERSTR. SLEWING RING INSTAL. ⇨ ❑ 57	OW DREHVERBINDUNG EINBAU		
23	11273155	1	CENTRAL GREASING ⇨ ❑ 58	ZENTRALSCHMIERUNG		
31	10578845	2	FIRE EXTINGUISHER MOUNTING ⇨ ❑ 61	FEUERLOESCHER EINBAU		
35	10581634	1	CABIN SUSPENSION CPL ⇨ ❑ 64	KABINENAUFHAENGUNG KPL		
40	990870614	1	LADDER MOUNTING ⇨ ❑ 66	LEITER EINBAU		
45	10560673	1	BATTERY INSTALLATION CPL ⇨ ❑ 67	BATTERIE EINBAU KPL		
46	11310932	1	LIMIT SWITCH INSTALLATION ⇨ ❑ 68	ENDSCHALTER EINBAU		
49	10560694	1	MODULES INSTALLATION ⇨ ❑ 69	MODULE EINBAU		
50	992345114	1	PIVOT BOLT INSTALLATION ⇨ ❑ 70	ANLENKBOLZEN EINBAU		
51	10519694	1	A-FRAME ERECTION CYL INSTAL. ⇨ ❑ 71	A-BOCK AUFRICHTZYL EINBAU		
60	954398703	2	BUSHING 120/150X88 E470;EN 10294-1	BUCHSE		
61	970588503	2	BUSHING 115/135X56 E470;EN 10294-1	BUCHSE		
63	991606114	1	SUPPORT CPL ⇨ ❑ 77	AUFLAGE KPL		
990	11258244	1	ANTI-SLIP SURFACE	ANTIRUTSCHBELAG		

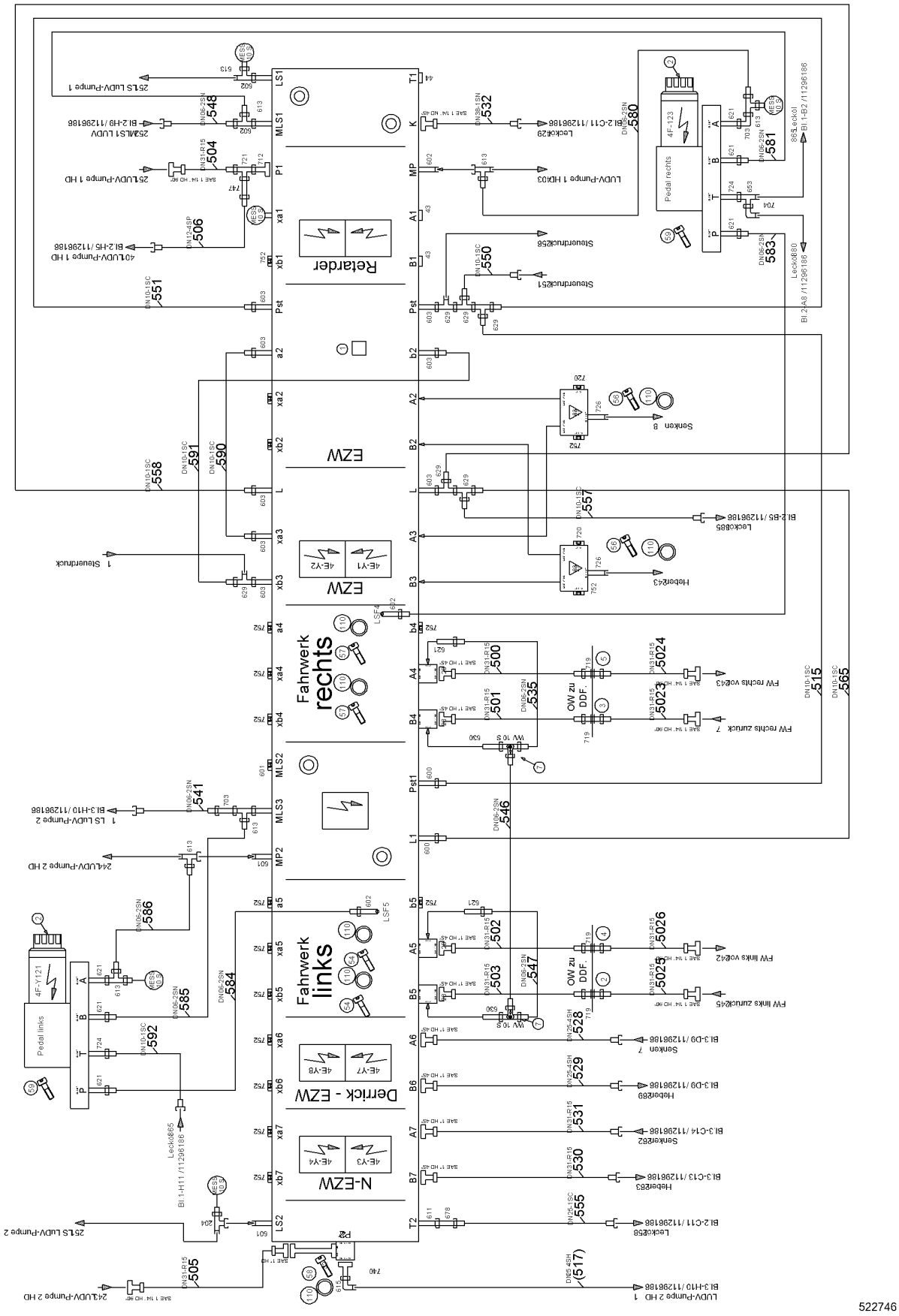

21.6.2017 522746 LIEBHERR	**138406_ETK_001** **SUPERSTRUCTURE HYDR** **OW HYDR**	❑ 7 (1/8) **11 29 618 6**

Pos.	Item	Quantity	Description	Bezeichnung	Serie	K
1	11286476	1	VALVE BLOCK ⇨ ❑ 15	VENTILBLOCK		
2	11286481	2	DIRECTIONAL CONTROL VALVE	WEGEVENTIL		
3	10351486	1	VALVE BLOCK ⇨ ❑ 22	VENTILBLOCK		
4	592145814	1	VALVE BLOCK ⇨ ❑ 26	VENTILBLOCK		
6	10541514	1	VALVE BLOCK SINGLE DISK	VENTILBLOCKEINZELSCHEIBE		
7	511491914	2	SHUTTLE VALVE	WECHSELVENTIL		
8	511704214	1	QUICK-FITTING THREAD COUPLING	SCHNELLVERSCHRAUBUNGSK		
9	946293614	1	RESTRICTOR BODY	DROSSELKOERPER		
10	513313914	2	DOUBLE-ACTING CYL ⇨ ❑ 27	DOPPELWIRKZYL		
11	511432714	5	DIRECTIONAL CONTROL VALVE	WEGEVENTIL		
12	510662614	2	CONNECTING PLATE	ANSCHLUSSPLATTE		
13	511657614	1	TEMPERATURE CONTROLLER ⇨ ❑ 28	TEMPERATURREGLER		
14	510572214	2	QUICK-FITTING THREAD COUPLING	SCHNELLVERSCHRAUBUNGSK		
15	510571914	1	QUICK-FITTING THREAD COUPLING ⇨ ❑ 29	SCHNELLVERSCHRAUBUNGSK		
16	511708414	1	QUICK-FITTING THREAD COUPLING	SCHNELLVERSCHRAUBUNGSK		
17	511511314	1	QUICK-FITTING THREAD COUPLING	SCHNELLVERSCHRAUBUNGSK		
18	511511214	1	QUICK-FITTING THREAD COUPLING	SCHNELLVERSCHRAUBUNGSK		
19	10445105	1	QUICK RELEASE FITTING ⇨ ❑ 30	SCHNELLVERSCHLUSSKUPPLUN		
20	511495814	1	INTERMEDIATE PLATE	ZWISCHENPLATTE		
21	10225925	1	COOLER MOTOR ⇨ ❑ 31	KUEHLER MOTOR		
23	510662914	3	CONNECTING PLATE	ANSCHLUSSPLATTE		
25	946294214	1	BLOCK	BLOCK		
26	991487414	1	RESTRICTOR BODY	DROSSELKOERPER		
28	956274314	4	FLANGE	FLANSCH		
30	943958914	1	BLOCK	BLOCK		
31	511607214	1	NON-RETURN VALVE	RUECKSCHLAGVENTIL		
32	790227714	1	CONNECTING FLANGE SAE	FLANSCHVERBINDUNG SAE		
33	592044714	1	NON-RETURN VALVE	RUECKSCHLAGVENTIL		
35	10548543	1	LID CPL	DECKEL KPL		
37	991867414	1	RESTRICTOR BODY	DROSSELKOERPER		
38	714001914	2	MAIN JET SOLEX 0.8MM	HAUPTDUESE SOLEX		
39	510682014	1	BALL VALVE	KUGELHAHN		
40	969329314	1	WELD PLATE	ANSCHWEISSPLATTE		
41	511631514	1	NON-RETURN VALVE	RUECKSCHLAGVENTIL		
42	944672614	1	CLOSING FLANGE	VERSCHLUSSFLANSCH		
43	510705314	2	SEALING FLANGE SAE	VERSCHLUSSFLANSCH SAE		
44	11293256	4	SEALING FLANGE SAE	VERSCHLUSSFLANSCH SAE		
45	949341514	1	CLOSING FLANGE	VERSCHLUSSFLANSCH		
46	477401814	1	FITTING	VERSCHRAUBUNG		
47	477700714	1	FITTING	VERSCHRAUBUNG		
54	10554335	8	HEX SCREW ISO 4017 M12X70 10.9	SECHSKANTSCHRAUBE		
55	4001246	16	HEX SCREW ISO 4017 M10X35 10.9	SECHSKANTSCHRAUBE		
56	4901067	16	SOCKET HEAD SCREW ISO 4762 M12X65 10.9	ZYLINDERSCHRAUBE		
57	4600505	8	SOCKET HEAD SCREW ISO 4762 M12X70 10.9	ZYLINDERSCHRAUBE		
58	404313401	4	SOCKET HEAD SCREW ISO 4762 M12X140 10.	ZYLINDERSCHRAUBE		
59	4600552	28	SOCKET HEAD SCREW ISO 4762 M5X50 10.9	ZYLINDERSCHRAUBE		
60	460023503	8	HEX SCREW ISO 4014 M12X80 10.9	SECHSKANTSCHRAUBE		

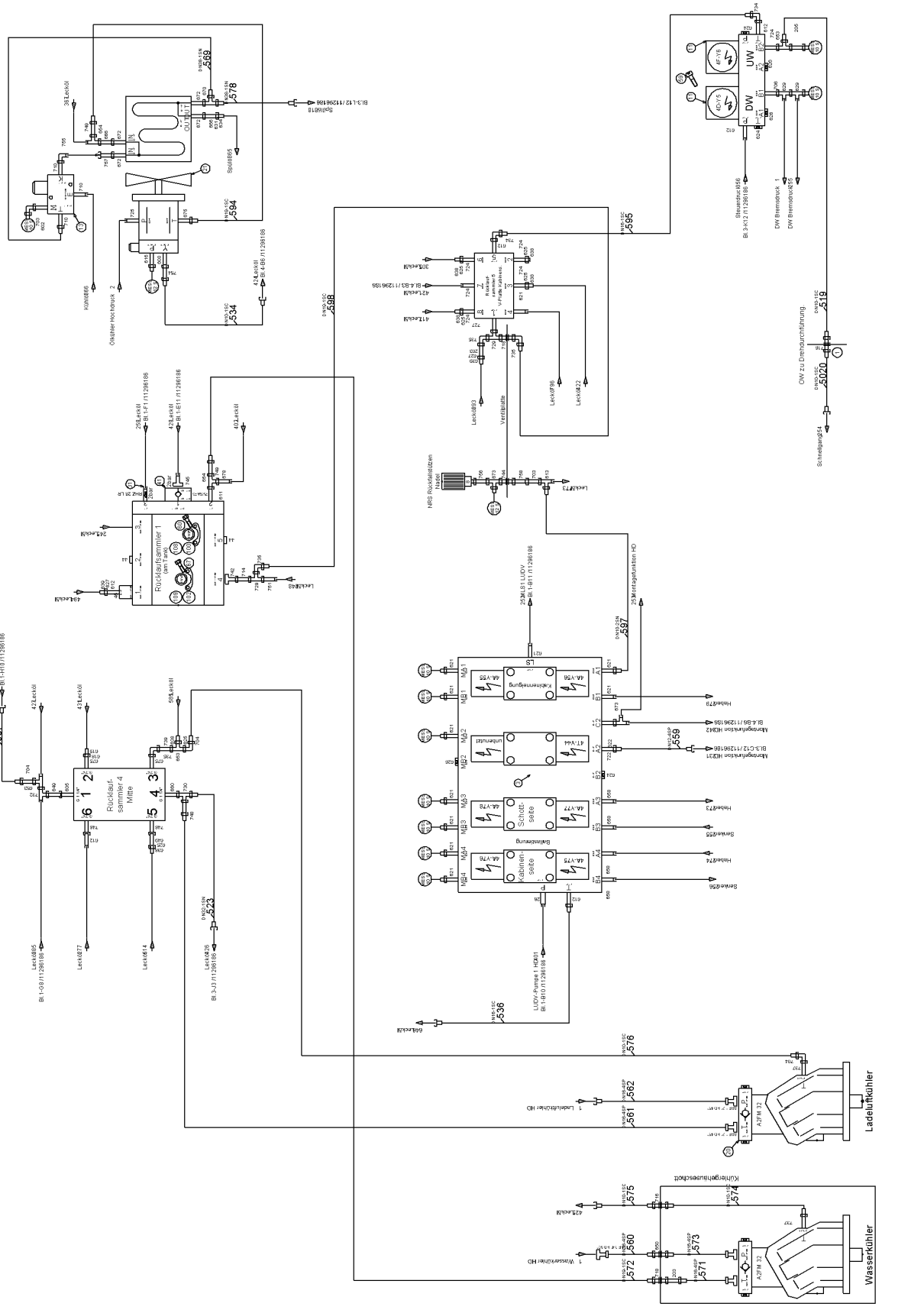
Rücklaufsammler 1
(am Tank)
Rücklauf-
sammler 4
Mitte
Schott-
seite
Kabinen-
seite
Ladeluftkühler
Wasserkühler
Kühlergehäuseschott
NRS Rückfahrsitzen
Steuerdruck 1
DW Bremsdruck 1
OW zu Drehdurchführung
Schnellgang/54
Ölkühler Hochhub 2
Ventilplatte
Verteilerblock
Bremsventil
Bremsventil
Bremsventil

Pos.	Item	Quantity	Description	Bezeichnung	Serie	K
61	4600366	36	HEX SCREW ISO 4017 M12X40 10.9	SECHSKANTSCHRAUBE		
62	10539300	24	HEX SCREW ISO 4017 M14X45 10.9	SECHSKANTSCHRAUBE		
64	4062002	16	HEX SCREW ISO 4017 M8X30 10.9	SECHSKANTSCHRAUBE		
65	4066122	8	HEX SCREW ISO 4017 M12X35 10.9	SECHSKANTSCHRAUBE		
67	4066098	48	HEX SCREW ISO 4017 M10X30 10.9	SECHSKANTSCHRAUBE		
100	510574414	8	FLANGE HALF	FLANSCHHAELFTE		
101	510587514	8	FLANGE HALF	FLANSCHHAELFTE		
102	511502414	24	FLANGE HALF	FLANSCHHAELFTE		
103	510586614	12	FLANGE HALF	FLANSCHHAELFTE		
104	510586914	18	FLANGE HALF	FLANSCHHAELFTE		
105	510548714	8	FLANGE HALF	FLANSCHHAELFTE		
106	10490784	4	RECTANGULAR SECTION RING	RECHTECKRING		
107	10490785	4	RECTANGULAR SECTION RING	RECHTECKRING		
108	10490787	5	RECTANGULAR SECTION RING	RECHTECKRING		
109	10472425	18	RECTANGULAR SECTION RING	RECHTECKRING		
110	10490781	19	RECTANGULAR SECTION RING	RECHTECKRING		
200	510664814	2	GAUGE CONNECTION	MESSSTUTZEN		
201	7409720	1	GAUGE CONNECTION	MESSSTUTZEN		
202	510694514	19	GAUGE CONNECTION	MESSSTUTZEN		
203	247041102	1	FITTING	VERSCHRAUBUNG		
204	482431314	1	FITTING	VERSCHRAUBUNG		
205	485431414	1	FITTING	VERSCHRAUBUNG		
600	471030508	3	FITTING	VERSCHRAUBUNG		
601	471008214	3	FITTING	VERSCHRAUBUNG		
602	471004514	11	FITTING	VERSCHRAUBUNG		
603	7362091	12	FITTING	VERSCHRAUBUNG		
605	247116402	3	FITTING	VERSCHRAUBUNG		
606	247043102	2	FITTING	VERSCHRAUBUNG		
607	247042702	1	FITTING	VERSCHRAUBUNG		
608	471100414	2	FITTING	VERSCHRAUBUNG		
609	247027202	1	FITTING	VERSCHRAUBUNG		
610	247011602	1	FITTING	VERSCHRAUBUNG		
611	247010102	4	FITTING	VERSCHRAUBUNG		
612	247009702	13	FITTING	VERSCHRAUBUNG		
613	7367776	12	FITTING	VERSCHRAUBUNG		
614	790453814	1	FITTING	VERSCHRAUBUNG		
615	482531614	1	FITTING	VERSCHRAUBUNG		
616	471032908	1	FITTING	VERSCHRAUBUNG		
617	471100114	3	FITTING	VERSCHRAUBUNG		
618	247049002	1	FITTING	VERSCHRAUBUNG		
619	477700214	1	FITTING	VERSCHRAUBUNG		
620	474002314	4	FITTING	VERSCHRAUBUNG		
621	471032808	27	FITTING	VERSCHRAUBUNG		
622	471032608	1	FITTING	VERSCHRAUBUNG		
624	247112702	9	FITTING	VERSCHRAUBUNG		
625	247048802	6	FITTING	VERSCHRAUBUNG		
626	247128402	8	FITTING	VERSCHRAUBUNG		
627	247049102	2	FITTING	VERSCHRAUBUNG		
628	474032614	3	FITTING	VERSCHRAUBUNG		
629	247242302	11	FITTING	VERSCHRAUBUNG		
630	481930414	3	FITTING	VERSCHRAUBUNG		
631	247049202	1	FITTING	VERSCHRAUBUNG		
632	477701414	2	FITTING	VERSCHRAUBUNG		
633	477400714	2	FITTING	VERSCHRAUBUNG		
634	477700814	1	FITTING	VERSCHRAUBUNG		
635	475501414	2	FITTING	VERSCHRAUBUNG		
636	474032914	2	FITTING	VERSCHRAUBUNG		
638	477700514	6	FITTING	VERSCHRAUBUNG		
639	477700114	2	FITTING	VERSCHRAUBUNG		

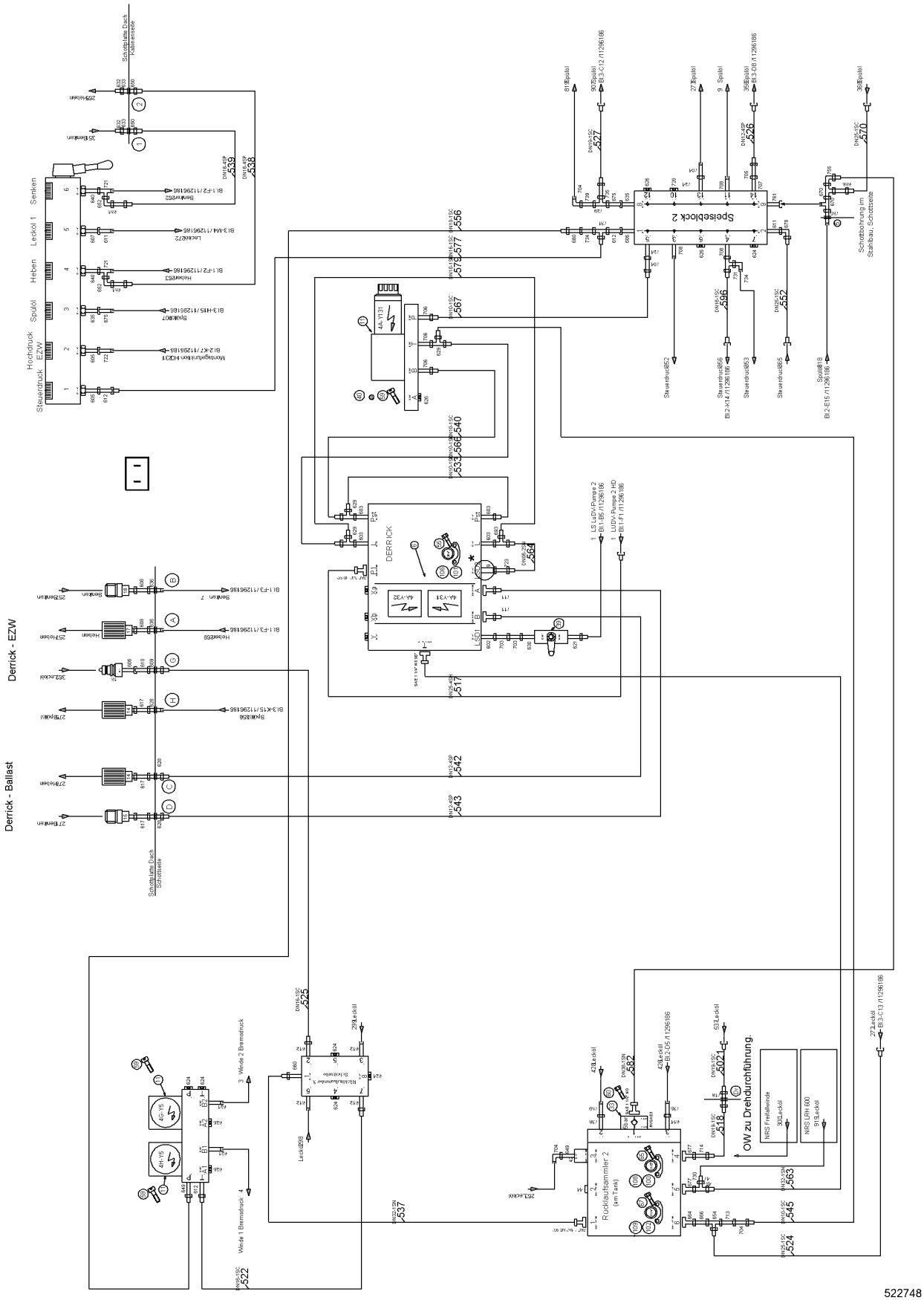
Derrick - EZW
Derrick - Ballast
Steuerdruck
Hochdruck EZW
Senken
Lecköl 1
Heben
Spülöl
Schottplatte Dach Kabinenseite
Schottplatte Dach Schottseite
Schottdurchführung im Stahlbau, Schottseite
Speiseblock 2
DERRICK
Rückkühlsammler 2 (am Tank)
OW zu Drehdurchführung
Winde 1 Bremsdruck
Winde 2 Bremsdruck
522748

Pos.	Item	Quantity	Description	Bezeichnung	Serie	K
640	7410455	2	FITTING	VERSCHRAUBUNG		
649	247009202	6	FITTING	VERSCHRAUBUNG		
650	474032714	2	FITTING	VERSCHRAUBUNG		
651	485435014	2	FITTING	VERSCHRAUBUNG		
652	482531814	2	FITTING	VERSCHRAUBUNG		
653	247128602	4	FITTING	VERSCHRAUBUNG		
654	247020902	3	FITTING	VERSCHRAUBUNG		
658	471032708	4	FITTING	VERSCHRAUBUNG		
660	247232702	2	FITTING	VERSCHRAUBUNG		
664	510704614	1	FITTING	VERSCHRAUBUNG		
666	485431314	4	FITTING	VERSCHRAUBUNG		
670	7367986	3	FITTING	VERSCHRAUBUNG		
672	471034708	4	FITTING	VERSCHRAUBUNG		
673	7617461	3	FITTING	VERSCHRAUBUNG		
675	247009902	5	FITTING	VERSCHRAUBUNG		
677	510701314	2	FITTING	VERSCHRAUBUNG		
678	7617494	2	FITTING	VERSCHRAUBUNG		
680	247040302	1	FITTING	VERSCHRAUBUNG		
681	247042402	4	FITTING	VERSCHRAUBUNG		
693	482430314	1	FITTING	VERSCHRAUBUNG		

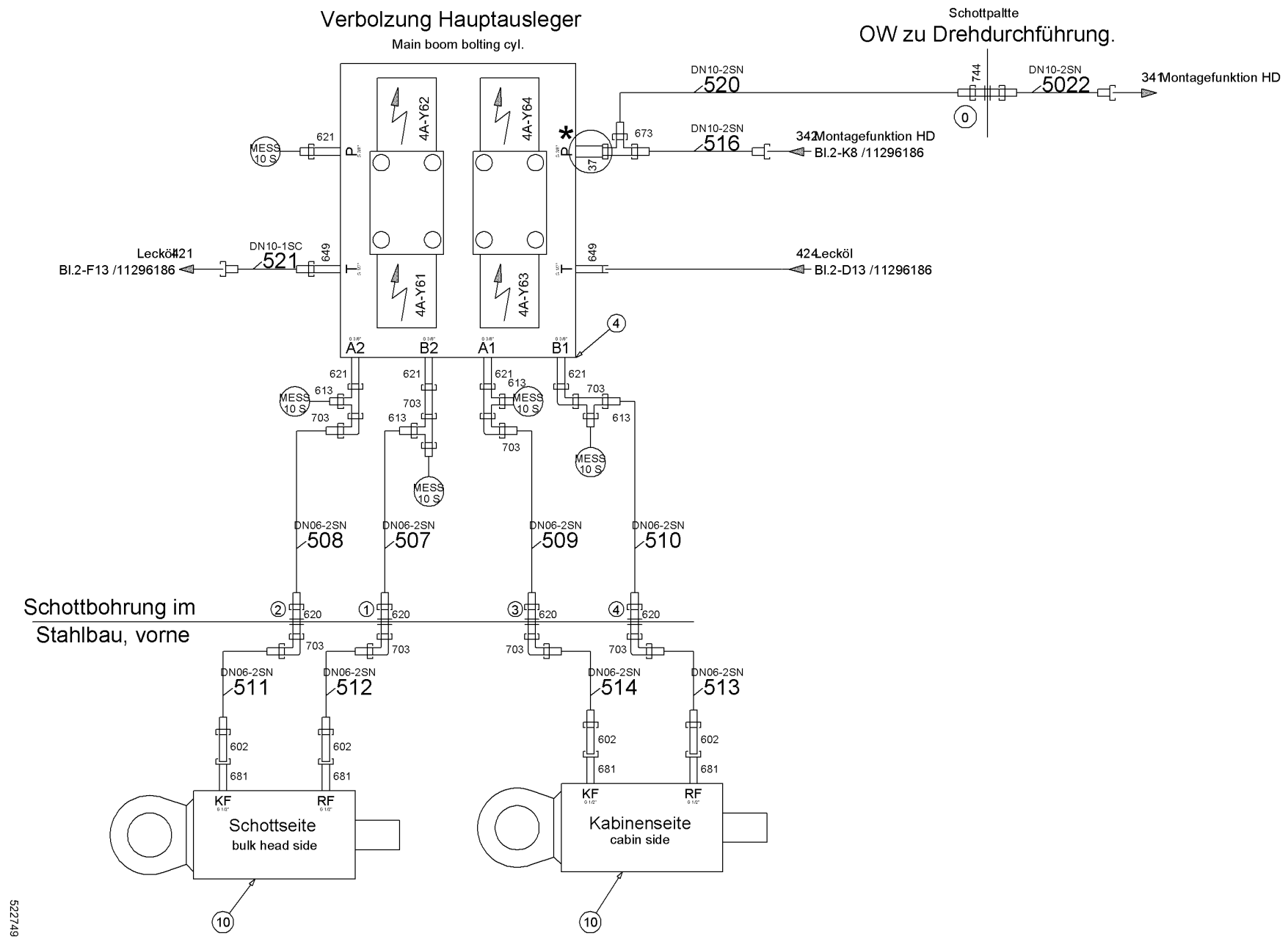
Verbolzung Hauptausleger
Main boom bolting cyl.
Schottpaltte
OW zu Drehdurchführung.
DN10-2SN
520
DN10-2SN
5022
341 Montagefunktion HD
744
0
DN10-2SN
516
342 Montagefunktion HD
Bl.2-K8 /11296186
673
37
621
MESS
10 S
4A-Y62
4A-Y64
4A-Y61
4A-Y63
649
DN10-1SC
521
421 Lecköl
Bl.2-F13 /11296186
424 Lecköl
Bl.2-D13 /11296186
A2
B2
A1
B1
4
613
703
DN06-2SN
508
DN06-2SN
507
DN06-2SN
509
DN06-2SN
510
Schottbohrung im
Stahlbau, vorne
620
DN06-2SN
511
DN06-2SN
512
DN06-2SN
514
DN06-2SN
513
602
681
KF
RF
Schottseite
bulk head side
Kabinenseite
cabin side
10
522749

Pos.	Item	Quantity	Description	Bezeichnung	Serie	K
703	7617268	13	FITTING	VERSCHRAUBUNG		
704	247117702	9	FITTING	VERSCHRAUBUNG		
705	7617460	1	FITTING	VERSCHRAUBUNG		
706	471007014	4	FITTING	VERSCHRAUBUNG		
707	471033114	1	FITTING	VERSCHRAUBUNG		
708	247261802	3	FITTING	VERSCHRAUBUNG		
710	10225291	3	FITTING	VERSCHRAUBUNG		
711	510701914	2	FITTING	VERSCHRAUBUNG		
712	510702414	1	FITTING	VERSCHRAUBUNG		
713	485435714	1	FITTING	VERSCHRAUBUNG		
714	485431214	2	FITTING	VERSCHRAUBUNG		
716	247027002	1	FITTING	VERSCHRAUBUNG		
718	247027302	2	FITTING	VERSCHRAUBUNG		
719	474033014	4	FITTING	VERSCHRAUBUNG		
720	477704614	3	FITTING	VERSCHRAUBUNG		
721	482331914	3	FITTING	VERSCHRAUBUNG		
722	471033214	2	FITTING	VERSCHRAUBUNG		
723	472531508	1	FITTING	VERSCHRAUBUNG		
724	247009402	10	FITTING	VERSCHRAUBUNG		
725	471033414	1	FITTING	VERSCHRAUBUNG		
726	471034414	2	FITTING	VERSCHRAUBUNG		
727	247121102	1	FITTING	VERSCHRAUBUNG		
729	247138602	3	FITTING	VERSCHRAUBUNG		
730	482330814	2	FITTING	VERSCHRAUBUNG		
731	247128502	2	FITTING	VERSCHRAUBUNG		
732	247105602	1	FITTING	VERSCHRAUBUNG		
734	247108302	4	FITTING	VERSCHRAUBUNG		
735	247126202	5	FITTING	VERSCHRAUBUNG		
736	482530914	1	FITTING	VERSCHRAUBUNG		
737	471030708	1	FITTING	VERSCHRAUBUNG		
738	471033614	1	FITTING	VERSCHRAUBUNG		
739	247040902	2	FITTING	VERSCHRAUBUNG		
740	510703914	1	FITTING	VERSCHRAUBUNG		
742	510702014	1	FITTING	VERSCHRAUBUNG		
744	474002414	2	FITTING	VERSCHRAUBUNG		
745	510701214	1	FITTING	VERSCHRAUBUNG		
746	247042502	2	FITTING	VERSCHRAUBUNG		
747	485434214	1	FITTING	VERSCHRAUBUNG		
748	485430714	1	FITTING	VERSCHRAUBUNG		
749	247041502	2	FITTING	VERSCHRAUBUNG		
752	247117302	15	FITTING	VERSCHRAUBUNG		
755	482530814	2	FITTING	VERSCHRAUBUNG		
756	471100714	1	FITTING	VERSCHRAUBUNG		
757	491101214	1	FITTING	VERSCHRAUBUNG		
758	485433414	1	FITTING	VERSCHRAUBUNG		
759	485432814	1	FITTING	VERSCHRAUBUNG		
760	474001214	1	FITTING	VERSCHRAUBUNG		
761	481931114	1	FITTING	VERSCHRAUBUNG		

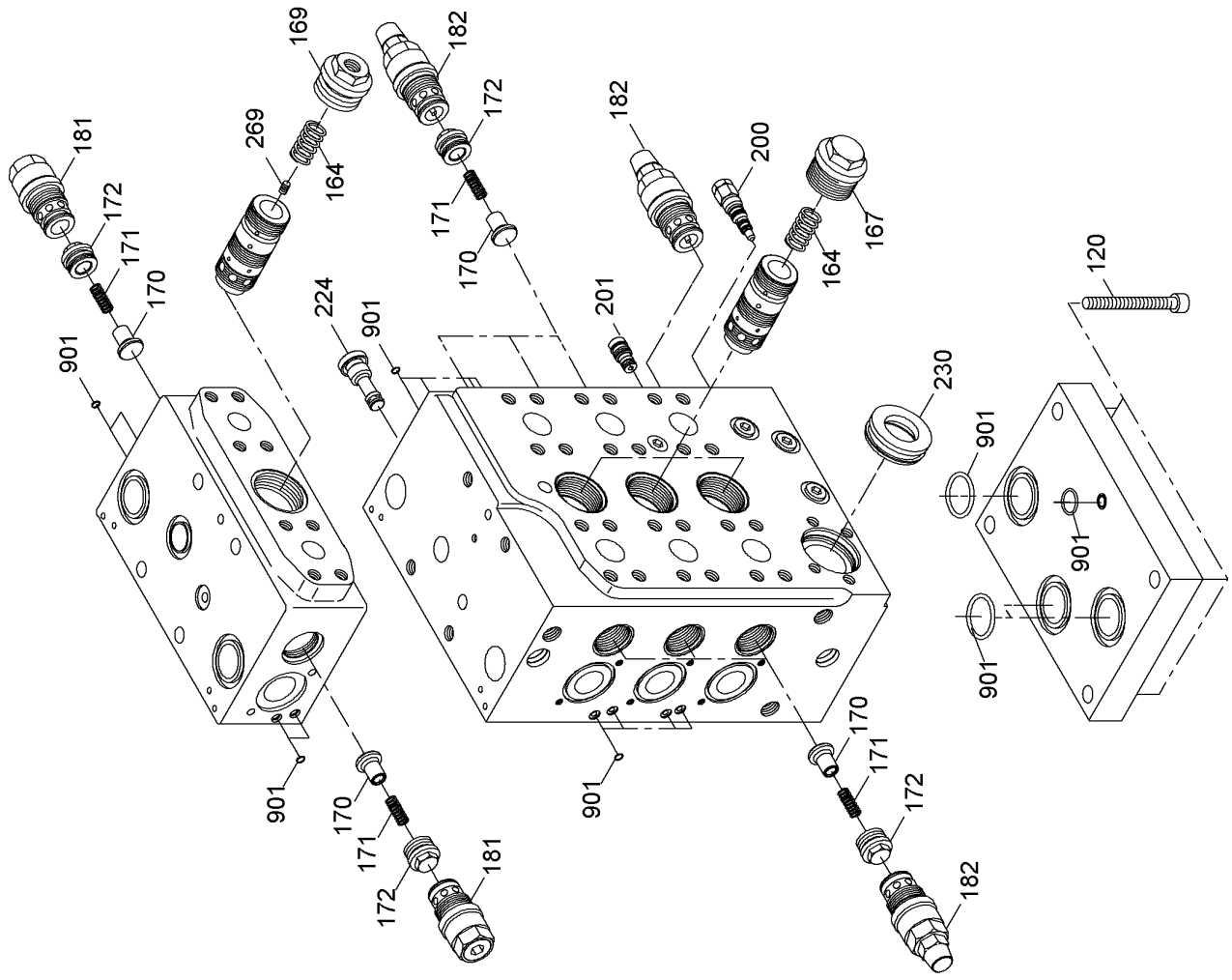
181
172
171
170
901
269
169
164
182
172
171
170
224
901
182
200
167
164
201
120
230
901
901
901
901
170
171
172
182
901
170
171
172
181

609968

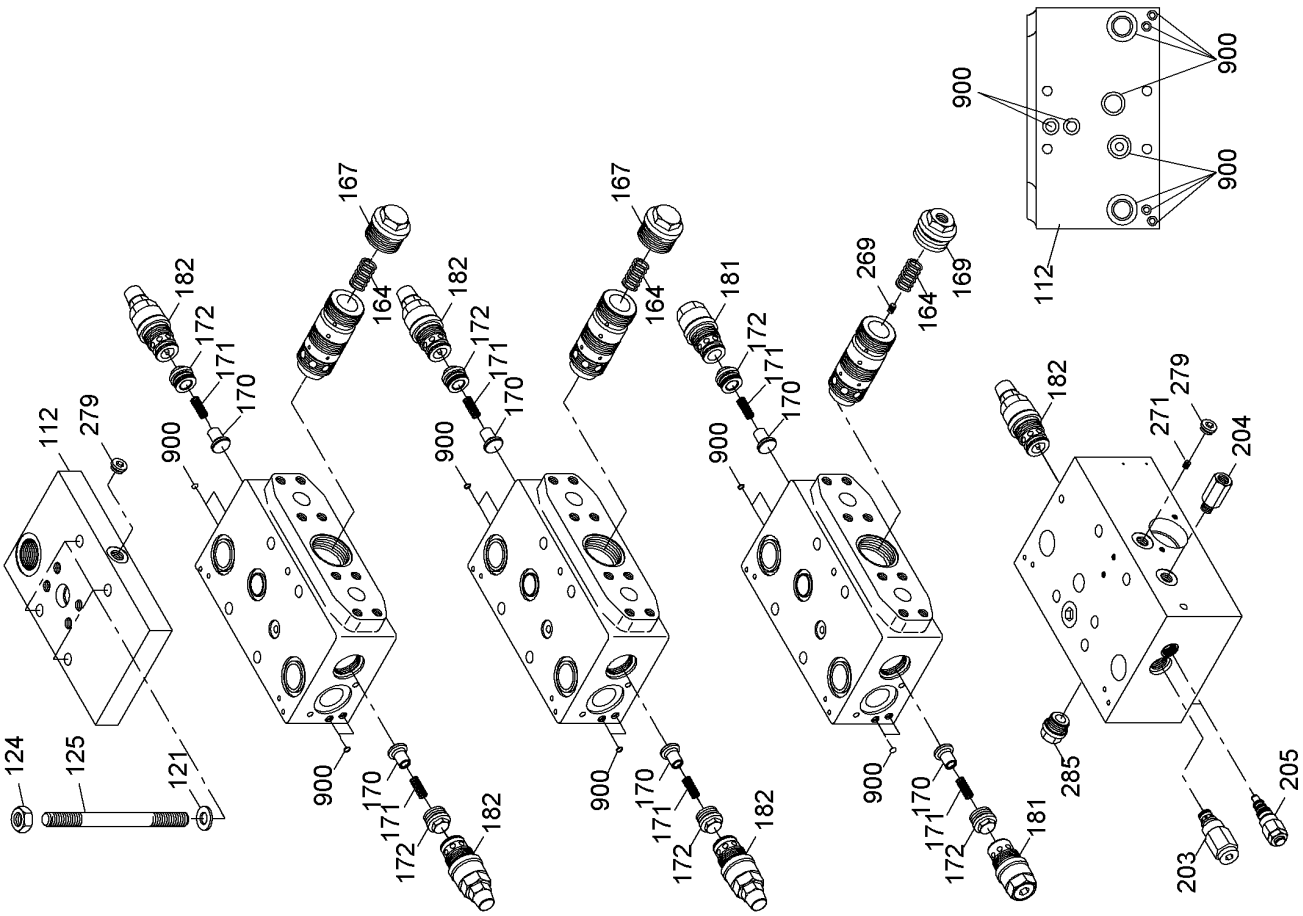
112
279
124
125
121
900
182
172
171
170
167
164
181
269
169
271
204
285
205
203
609983

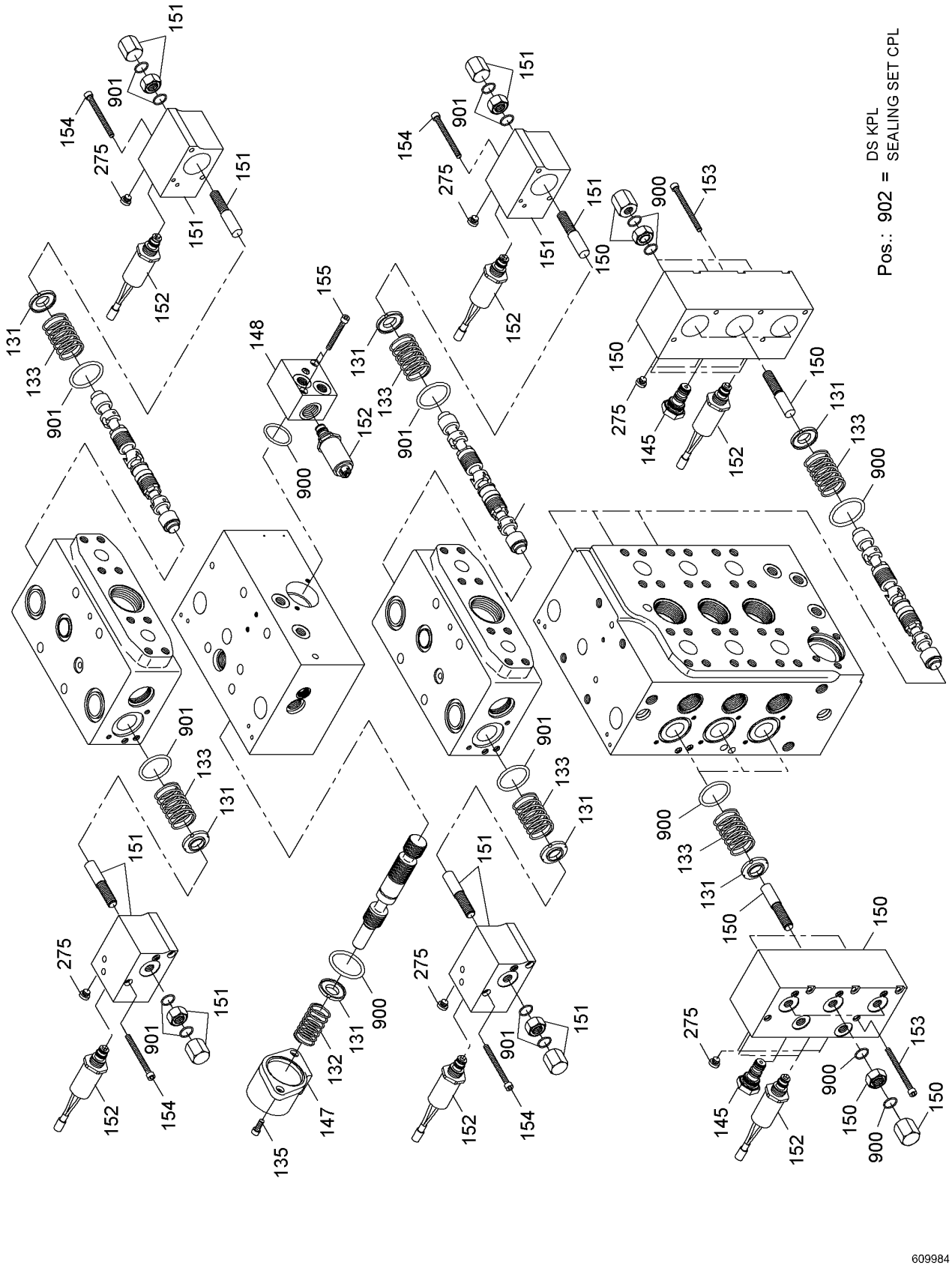
Pos.: 902 = DS KPL SEALING SET CPL
609984

Pos.	Item	Quantity	Description	Bezeichnung	Serie	K
112	592072914	1	SHEET	PLATTE		
120	11651481	4	SOCKET HEAD SCREW ISO 4762 M10X35 10.9	ZYLINDERSCHRAUBE		
121	11233289	4	WASHER ISO 7089 24/13X2.5 ST	SCHEIBE		
124	11233292	4	HEX NUT ISO 4032 M12 10	SECHSKANTMUTTER		
125	11934656	4	DOUBLE-ENDED STUD DIN 939 M12X440	STIFTSCHRAUBE		
131	790579314	15	SPRING SUPPORT	FEDERTELLER		
132	10349778	1	PRESSURE SPRING	DRUCKFEDER		
133	10296909	14	PRESSURE SPRING	DRUCKFEDER		
135	11233296	2	SOCKET HEAD SCREW ISO 4762 M6X16 8.8	ZYLINDERSCHRAUBE		
145	592070714	2	RESTRICTOR VALVE ⇨ ❑ 19	DROSSELVENTIL		
147	11301913	1	COVER	DECKEL		
148	11233332	1	COVER	DECKEL		
150	11233333	2	COVER	DECKEL		
151	11233338	8	COVER	DECKEL		
152	592300614	13	SOLENOID VALVE ⇨ ❑ 20	MAGNETVENTIL		
153	11233401	10	SOCKET HEAD SCREW ISO 4762 M6X75 10.9	ZYLINDERSCHRAUBE		
154	11233402	16	SOCKET HEAD SCREW ISO 4762 M6X70 8.8	ZYLINDERSCHRAUBE		
155	11233404	2	SOCKET HEAD SCREW ISO 4762 M6X50 8.8	ZYLINDERSCHRAUBE		
164	7000942	7	PRESSURE SPRING	DRUCKFEDER		
167	10228470	5	SCREW PLUG M39X1.5X36.5	VERSCHLUSSSCHRAUBE		
169	10301757	2	SCREW PLUG M39X1.5X36.5	VERSCHLUSSSCHRAUBE		
170	7024502	14	TAPER	KEGEL		
171	7024503	14	PRESSURE SPRING	DRUCKFEDER		
172	7024504	14	SCREW PLUG M24X1.5X20	VERSCHLUSSSCHRAUBE		
181	11835950	4	NON-RETURN VALVE	RUECKSCHLAGVENTIL		
182	11835951	12	PRESSURE FEEDER VALVE	DRUCKEINSPEISEVENTIL		
200	592309014	1	PRESSURE LIMITING CARTRIDGE ⇨ ❑ 21	DRUCKBEGRENZUNGSPATRON		
201	10101193	1	VALVE	VENTIL		
203	7026676	1	VALVE	VENTIL		
204	7623541	1	FLOW REGULATING CHECK VALVE	DROSSELRUECKSCHLAGVENTIL		
205	592309014	1	PRESSURE LIMITING CARTRIDGE ⇨ ❑ 21	DRUCKBEGRENZUNGSPATRON		
224	7024968	1	CONNECTION PIECE	ANSCHLUSSSTUECK		
230	592071014	1	NON-RETURN VALVE	RUECKSCHLAGVENTIL		
269	7026135	2	NOZZLE	DUESE		
271	7014257	1	NOZZLE	DUESE		
275	11234068	16	SCREW PLUG M14X1.5X41	VERSCHLUSSSCHRAUBE		
279	7371299	2	SCREW PLUG M14X1.5 ST	VERSCHLUSSSCHRAUBE		
285	11234129	1	REDUCING PIECE	REDUZIERSTUECK		
900	10349776	1	SEALING SET MONOBLOCK	DS MONOBLOCK		
901	10349716	1	SEALING SET MONOBLOCK	DS MONOBLOCK		
902	790579414	1	SEALING SET CPL	DS KPL		

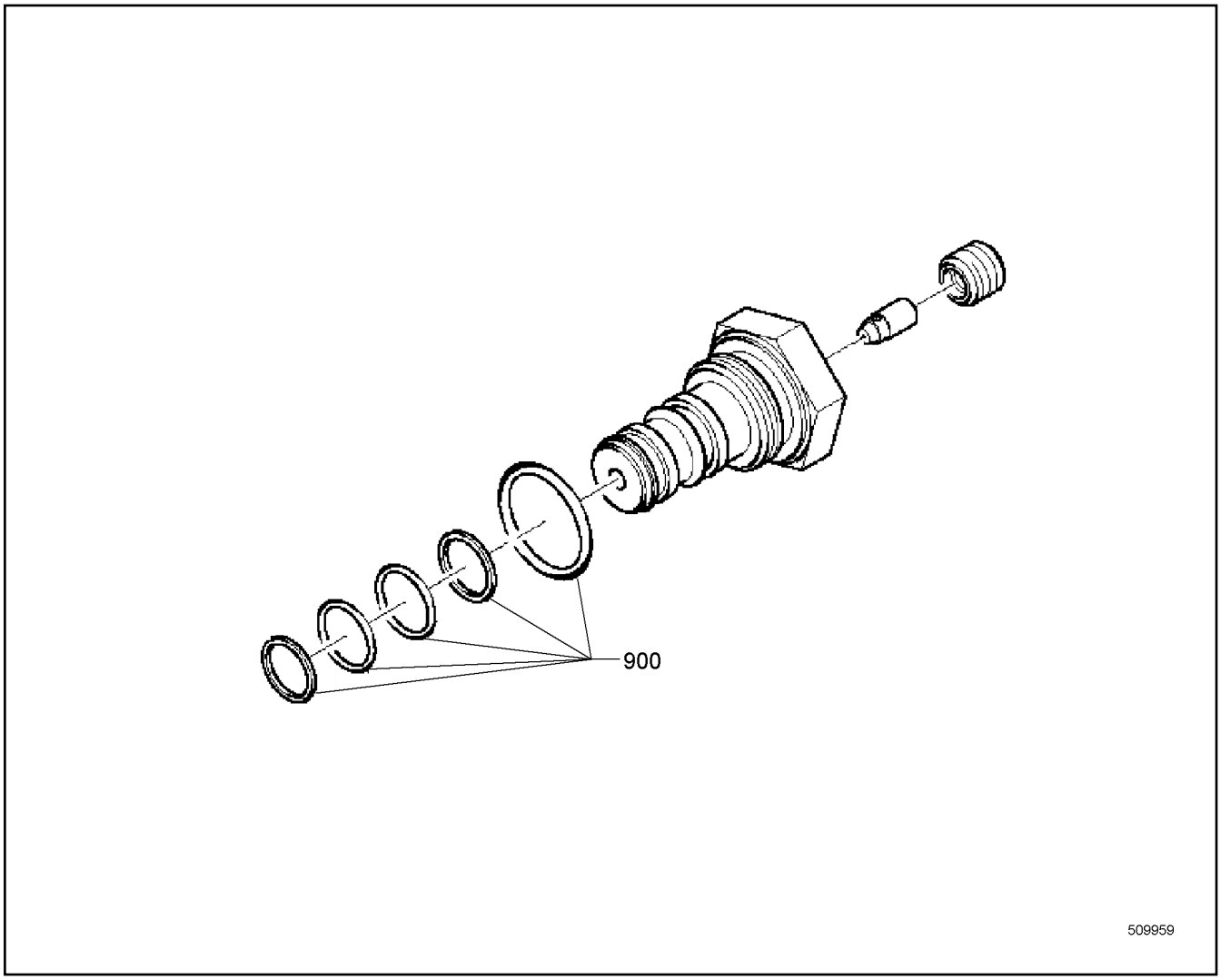

Pos.	Item	Quantity	Description	Bezeichnung	Serie	K
900	790545514	1	SEALING SET	DS		

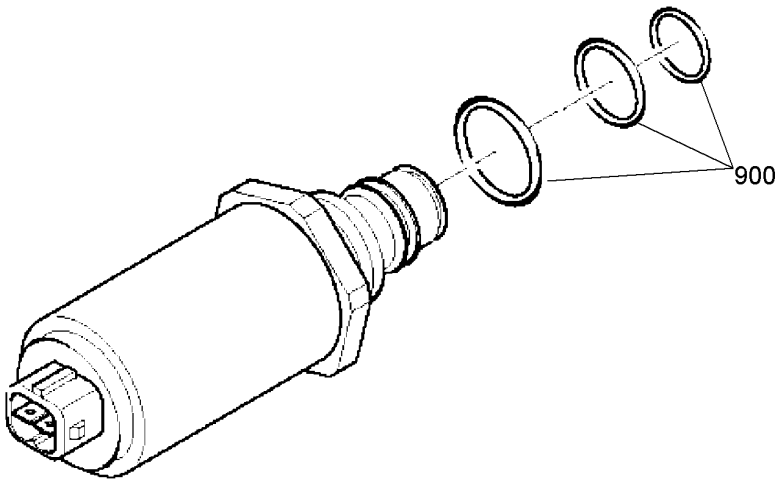

509958

Pos.	Item	Quantity	Description	Bezeichnung	Serie	K
900	790545514	1	SEALING SET	DS		

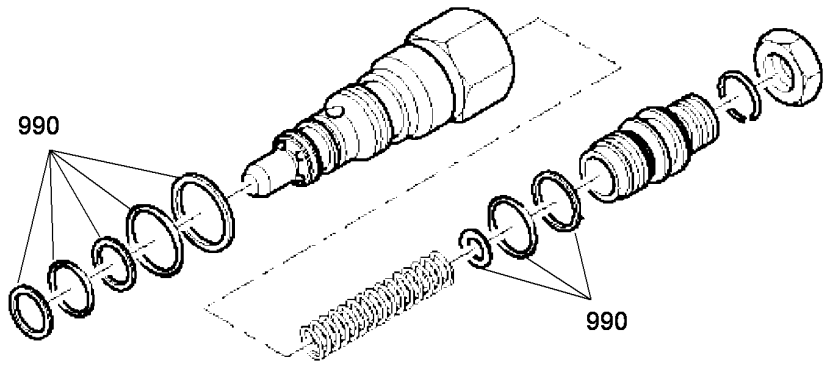

603475

Pos.	Item	Quantity	Description	Bezeichnung	Serie	K
990	790413614	1	SEALING SET	DS		

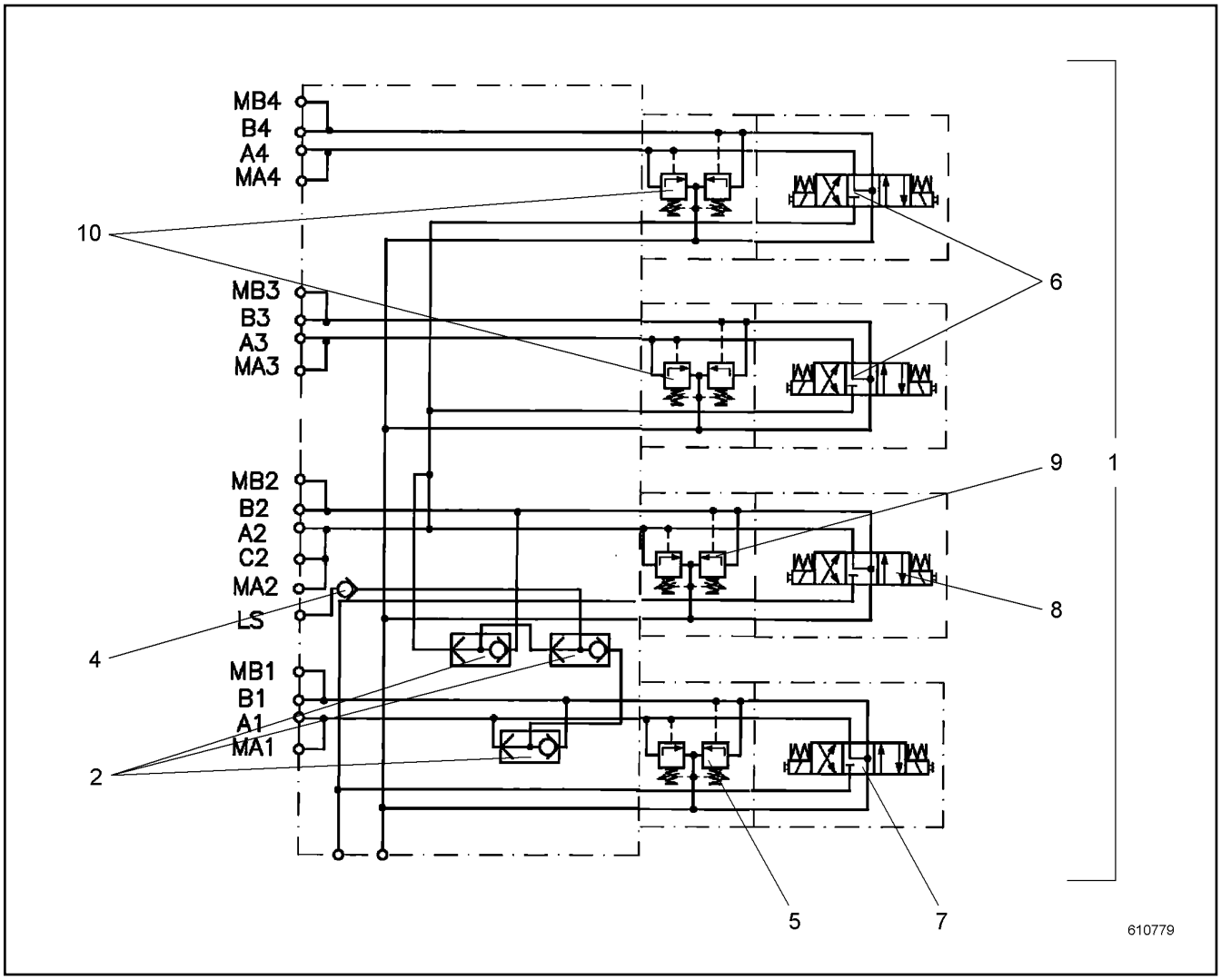

Pos.	Item	Quantity	Description	Bezeichnung	Serie	K
1	10524595	1	SEALING SET ⇨ ❑ 23	DS		
2	11938600	3	SHUTTLE VALVE	WECHSELVENTIL		
4	11229182	1	NON-RETURN VALVE	RUECKSCHLAGVENTIL		
5	11229183	1	PRESSURE VALVE	DRUCKVENTIL		
6	510427214	2	DIRECTIONAL CONTROL VALVE	WEGEVENTIL		
7	11229184	1	DIRECTIONAL CONTROL VALVE ⇨ ❑ 24	WEGEVENTIL		
8	10591435	1	DIRECTIONAL CONTROL VALVE ⇨ ❑ 25	WEGEVENTIL		
9	11229185	1	PRESSURE VALVE	DRUCKVENTIL		
10	10537607	2	DOUBLE PRESSURE LIMITING VALVE	DOPPELDRUCKBEGRENZUNGSV		

OHNE BILD
WITHOUT ILLUSTRATION
SANS PLANCHE
SIN FIG.
SEM ILUSTRAÇÃO
БЕЗ ИЗОБРАЖЕНИЯ

600000

Pos.	Item	Quantity	Description	Bezeichnung	Serie	K
1	10099037	24	FOUR LIPPED SEALS	VIERLIPPENDICHTUNG		
2	11301682	10	FOUR LIPPED SEALS	VIERLIPPENDICHTUNG		

OHNE BILD
WITHOUT ILLUSTRATION
SANS PLANCHE
SIN FIG.
SEM ILUSTRAÇÃO
БЕЗ ИЗОБРАЖЕНИЯ

600000

Pos.	Item	Quantity	Description	Bezeichnung	Serie	K
1	693208614	2	MAGNET COIL	MAGNETSPULE		

OHNE BILD
WITHOUT ILLUSTRATION
SANS PLANCHE
SIN FIG.
SEM ILUSTRAÇÃO
БЕЗ ИЗОБРАЖЕНИЯ

600000

Pos.	Item	Quantity	Description	Bezeichnung	Serie	K
1	11229186	2	MAGNET COIL	MAGNETSPULE		
900	10423993	1	SEALING SET	DS		

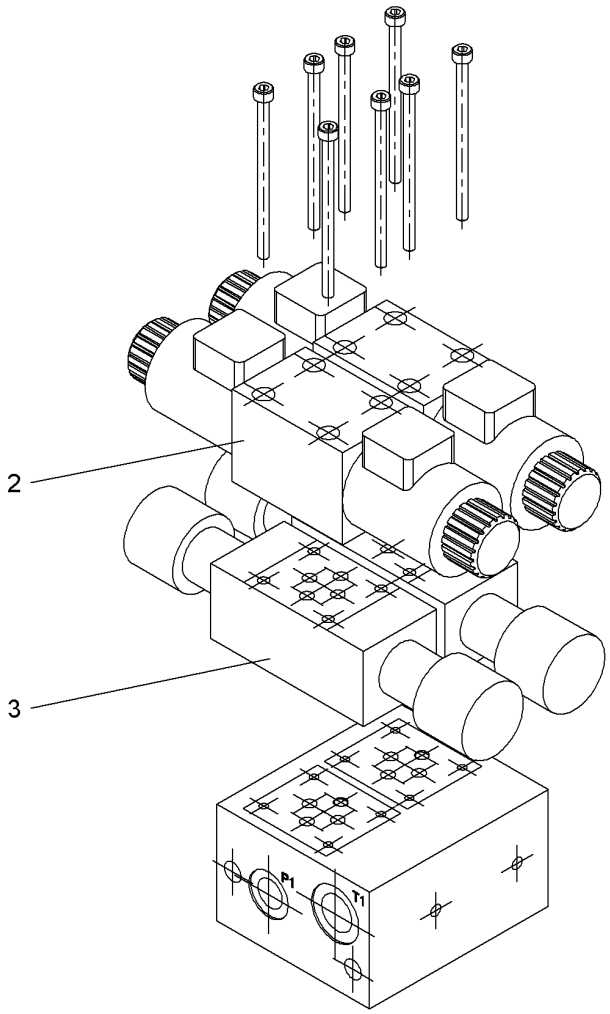

Pos.	Item	Quantity	Description	Bezeichnung	Serie	K
2	11223305	2	DIRECTIONAL CONTROL VALVE	WEGEVENTIL		
3	11293250	2	PRESSURE LIMITING VALVE	DRUCKBEGRENZUNGSVENTIL		

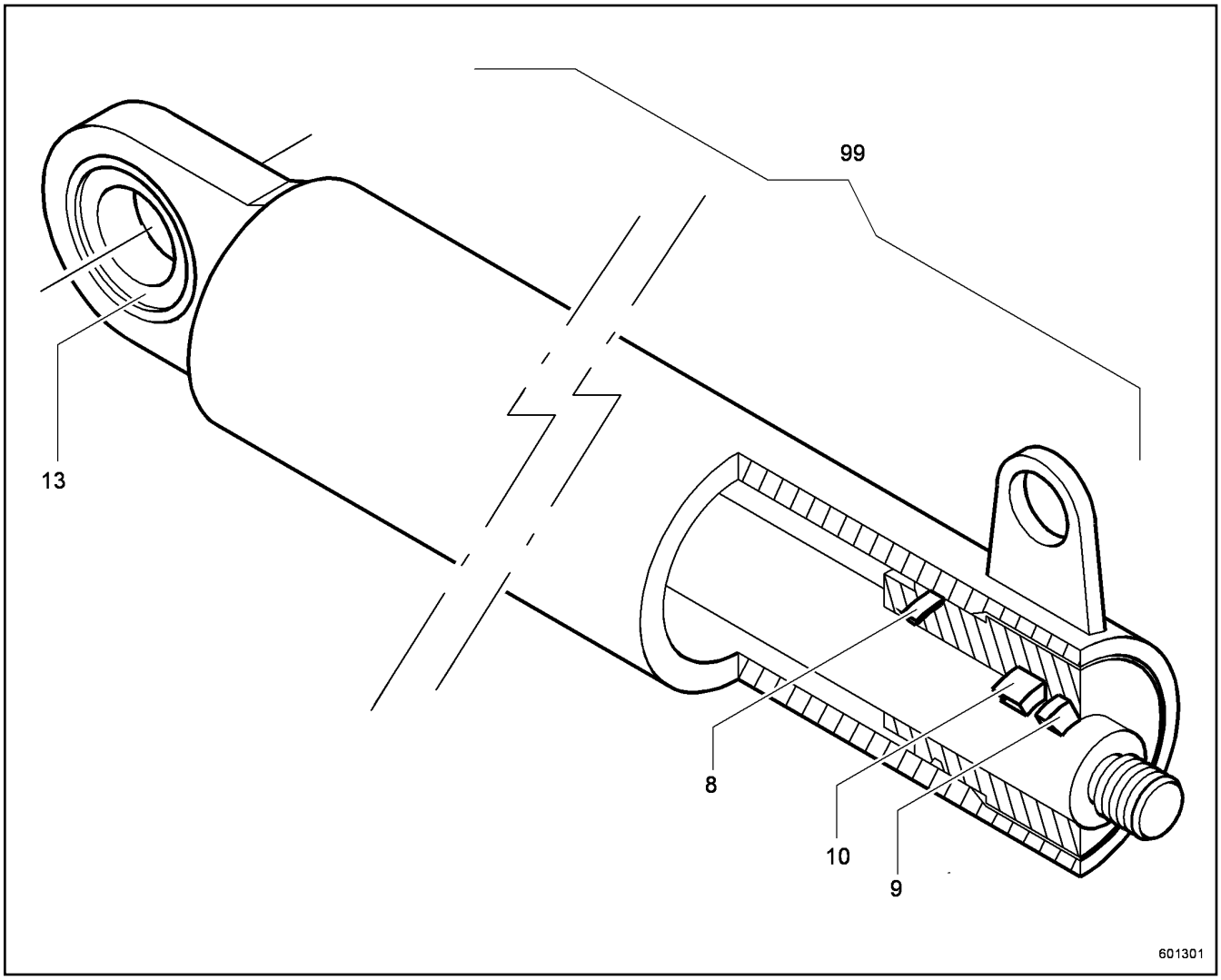

Pos.	Item	Quantity	Description	Bezeichnung	Serie	K
8	726456914	1	O-RING	O-RING		
9	726054414	1	SCRAPER RING	ABSTREIFRING		
10	726307914	1	ROD SEAL	NUTRING		
13	513319614	1	PIVOT HEAD	GELENKKOPF		
99	513319214	1	SEALING SET CPL CYL	DS KPL ZYL		

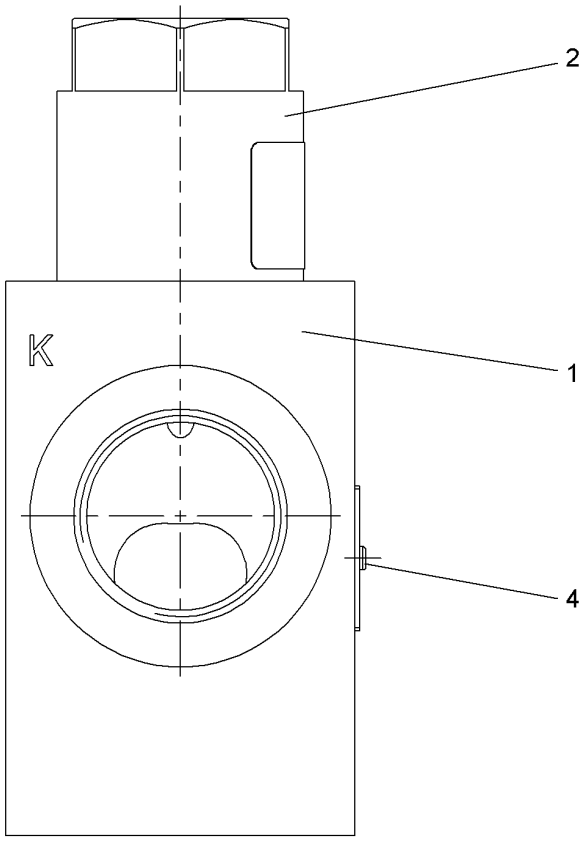

Pos.	Item	Quantity	Description	Bezeichnung	Serie	K
1	11932850	1	BODY	KOERPER		
2	11932853	1	VALVE	VENTIL		
4	7024631	2	SCREW DIN 7500C M2.5X5.3	SCHRAUBE		

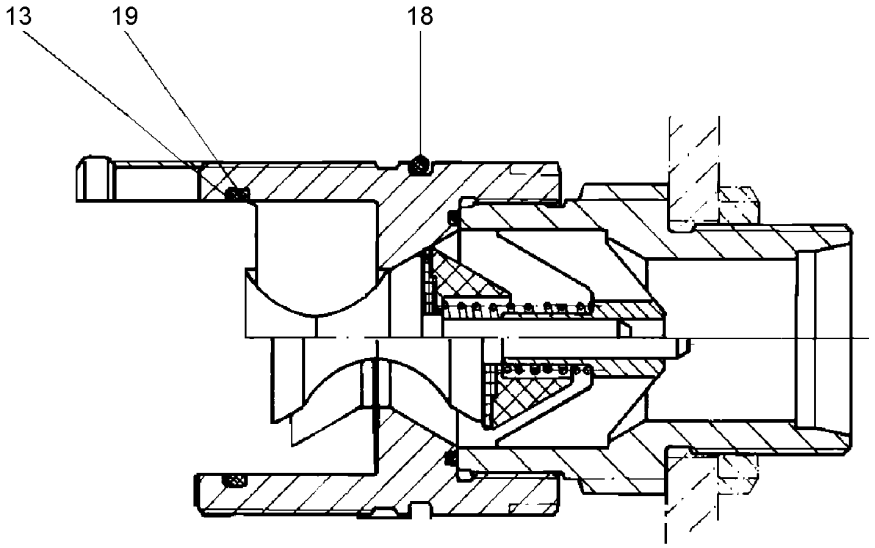

Pos.	Item	Quantity	Description	Bezeichnung	Serie	K
1	7615441	1	SOCKET DUST-PROOF	STAUBMUFFE		
13	511710314	1	SUPPORTING RING	STUETZRING		
18	726403514	1	O-RING	O-RING		
19	726408414	1	O-RING	O-RING		

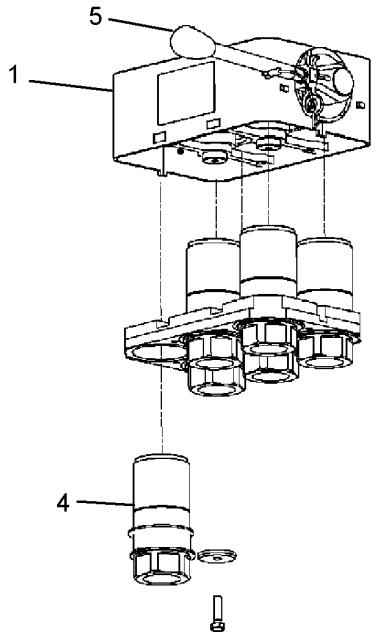

603339

Pos.	Item	Quantity	Description	Bezeichnung	Serie	K
1	10447745	1	HOUSING	GEHAEUSE		
4	10447748	6	SLEEVE	MUFFE		
5	10447749	1	LEVER	HEBEL		

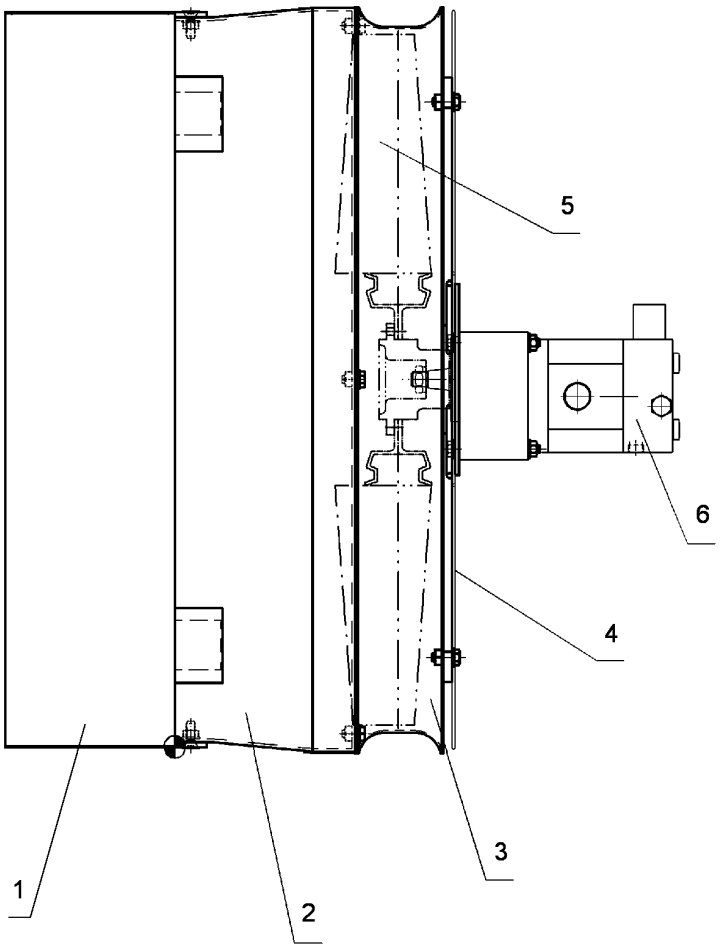

Pos.	Item	Quantity	Description	Bezeichnung	Serie	K
1	10352185	1	OIL COOLER	OELKUEHLER		
2	10352186	1	FAN COWL	LUEFTERHAUBE		
3	10352187	1	VENTILATOR RING	LUEFTERRING		
4	10566030	1	GUARD	SCHUTZGITTER		
5	10352188	1	FAN	LUEFTER		
6	550945314	1	OIL MOTOR ⇨ ❑ 32	OELMOTOR		

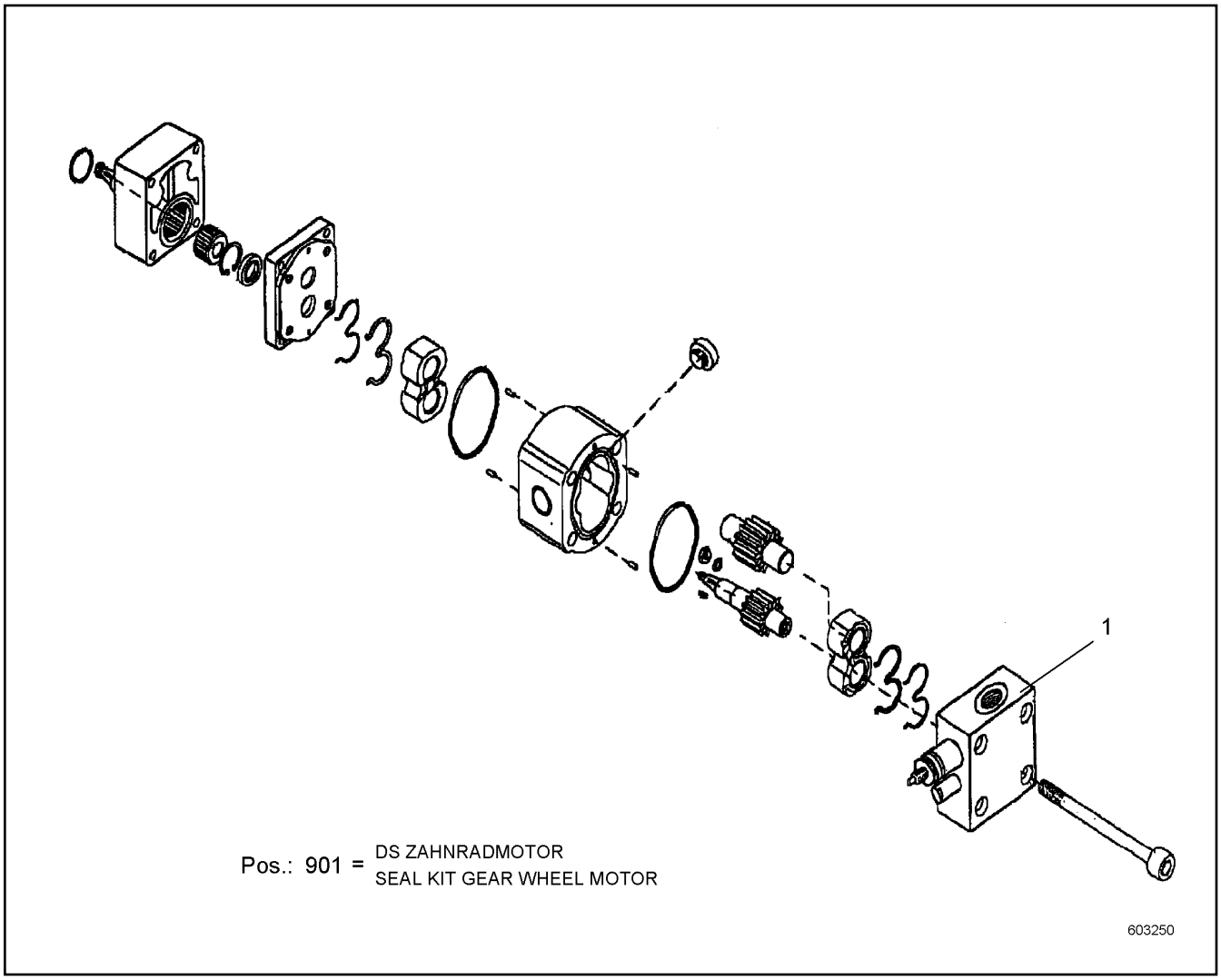

Pos.	Item	Quantity	Description	Bezeichnung	Serie	K
1	10501620	1	LID CPL	DECKEL KPL		
901	10493890	1	SEAL KIT GEAR WHEEL MOTOR	DS ZAHNRADMOTOR		

OHNE BILD
WITHOUT ILLUSTRATION
SANS PLANCHE
SIN FIG.
SEM ILUSTRAÇÃO
БЕЗ ИЗОБРАЖЕНИЯ

600000

Pos.	Item	Quantity	Description	Bezeichnung	Serie	K
11	11247121	1	CABLE LOOM W 2	KABELSTRANG W 2		
13	10563643	1	CABLE LOOM W 3	KABELSTRANG W 3		
21	10351656	1	CAN MODULE	CAN MODUL		
22	10351667	1	CAN MODULE	CAN MODUL		
23	10351660	1	CAN MODULE	CAN MODUL		
24	10351671	1	CAN MODULE	CAN MODUL		
26	10351668	1	CAN MODULE	CAN MODUL		
27	10351672	1	CAN MODULE	CAN MODUL		
28	10351674	1	CAN MODULE	CAN MODUL		
30	11229635	3	TERMINAL CAP	ENDPOL KAPPE		
31	10664204	2	BATTERY	BATTERIE		
32	10547876	2	BATTERY TERMINAL CLAMP	BATTERIEKLEMME		
33	10224316	1	BATTERY TERMINAL CLAMP	BATTERIEKLEMME		
34	10530489	1	FUSE HOLDER ⇨ ❑ 35	SICHERUNGSHALTER		
35	606070908	1	BATTERY MAIN SWITCH	BATTERIEHAUPTSCHALTER		
37	7412268	2	ELBOW PIECE	WINKELSTUECK		
39	10875360	3	EMERGENCY STOP BUTTON	NOT-AUS TASTER		
40	11241756	1	TEMPERATURE SENSOR	TEMPERATURFUEHLER		
41	11258086	1	CONTROL LIGHT	KONTROLLLEUCHTE		
42	11461533	1	NAMEPLATE ACCIDENT PREVENTION	SCHILD UNFALLVERHUETUNG		
43	606655108	1	LIMIT SENSOR	GRENZTASTER		
45	606281014	1	CAMS LIMIT SWITCH	NOCKENENDSCHALTER		
46	606281114	1	DRIVE FLANGE	ANTRIEBSFLANSCH		
50	10493626	1	TEMPERATURE SENSOR	TEMPERATURFUEHLER		
52	10288438	1	BACK-UP-ALARM	BACK-UP-ALARM		

OHNE BILD
WITHOUT ILLUSTRATION
SANS PLANCHE
SIN FIG.
SEM ILUSTRAÇÃO
БЕЗ ИЗОБРАЖЕНИЯ

600000

Pos.	Item	Quantity	Description	Bezeichnung	Serie	K
60	7027205	2	WORK LIGHT ⇨ ❑ 36	ARBEITSSCHEINWERFER		
61	10224272	2	HOLDER	HALTER		
65	11219179	2	PRESSURE SENSOR	DRUCKAUFNEHMER		
66	10515473	2	PRESSURE SENSOR	DRUCKAUFNEHMER		
71	10539250	1	KEY SWITCH	SCHLUESSELSCHALTER		
72	10595399	1	KEYRING PENDANT	SCHLUESSELANHAENGER		
73	773400308	0.25	STEEL WIRE ROPE	STAHLDRAHTSEIL		
74	602206514	2	CABLE LUG	KABELSCHUH		
81	10517426	1	LEVEL PROBE	NIVEAUSONDE		
91	918365114	1	BYPASS CONNECTOR	UEBERBRUECKUNGSSTECKER		
93	605604914	1	BS HOUSING	SOCKELGEHAEUSE		
94	605609514	1	FEMALE INSERT	BUCHSENEINSATZ		
100	10224500	4	WORK LIGHT ⇨ ❑ 37	ARBEITSSCHEINWERFER		
103	10566458	1	TERMINAL BOX ⇨ ❑ 38	KLEMMKASTEN		
111	11239082	1	CONTROL CONSOLE ⇨ ❑ 40	STEUERPULT		
131	10520078	1	SOCKET	STECKDOSE		

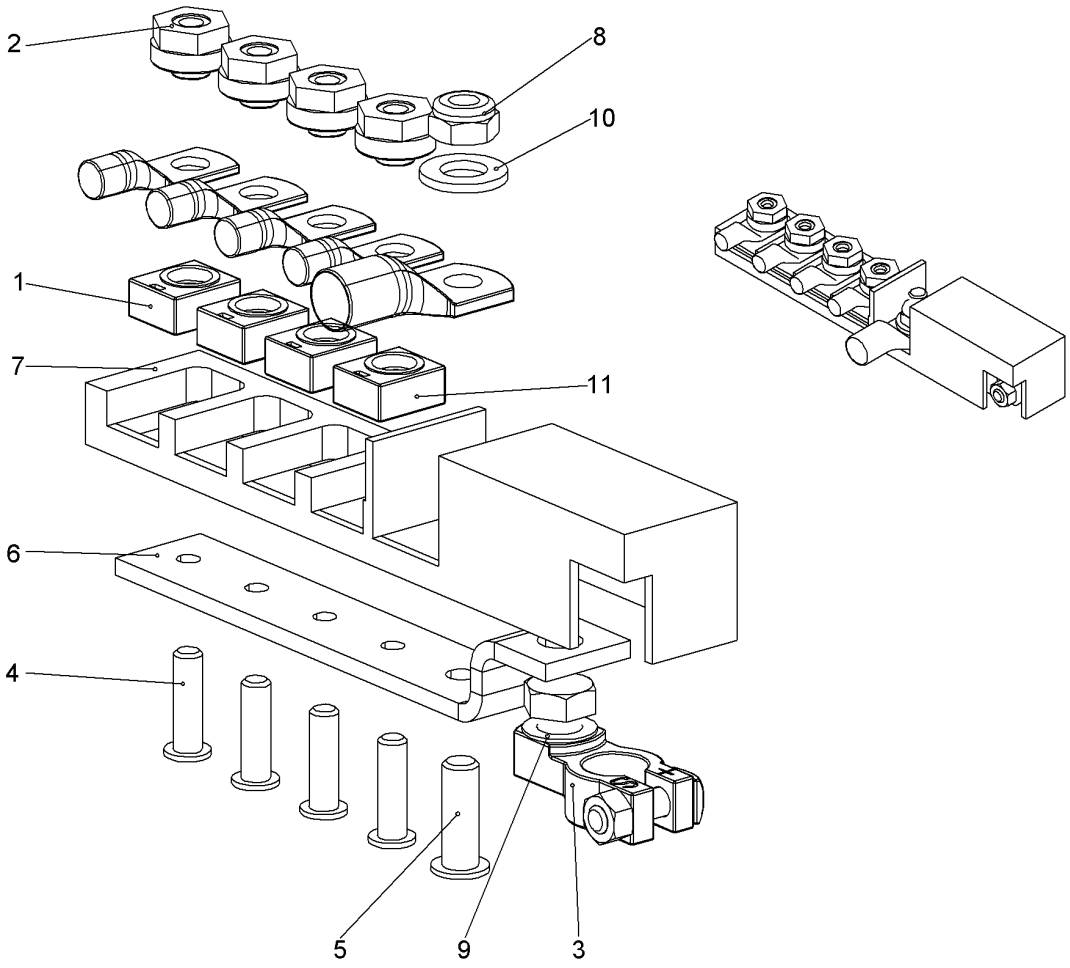

Pos.	Item	Quantity	Description	Bezeichnung	Serie	K
1	10224306	1	FUSE CARTRIDGE	SICHERUNGSEINSATZ		
3	10224316	1	BATTERY TERMINAL CLAMP	BATTERIEKLEMME		
4	10225045	4	SOCKET HEAD SCREW UN 1206 M8X30	ZYLINDERSCHRAUBE		
5	10502692	1	SCREW UN 1206 M10X30	SCHRAUBE		
6	10530486	1	FLAT COPPER EL	FLACHKUPFER EL		
7	10530487	1	COVER	ABDECKUNG		
8	411901114	1	HEX NUT DIN 985 M10 10	SECHSKANTMUTTER		
9	425221314	1	SERRATED LOCK WASHER DIN 6798 13	FAECHERSCHEIBE		
10	4901782	1	WASHER ISO 7089 12 A4	SCHEIBE		
11	10224307	3	FUSE CARTRIDGE	SICHERUNGSEINSATZ		

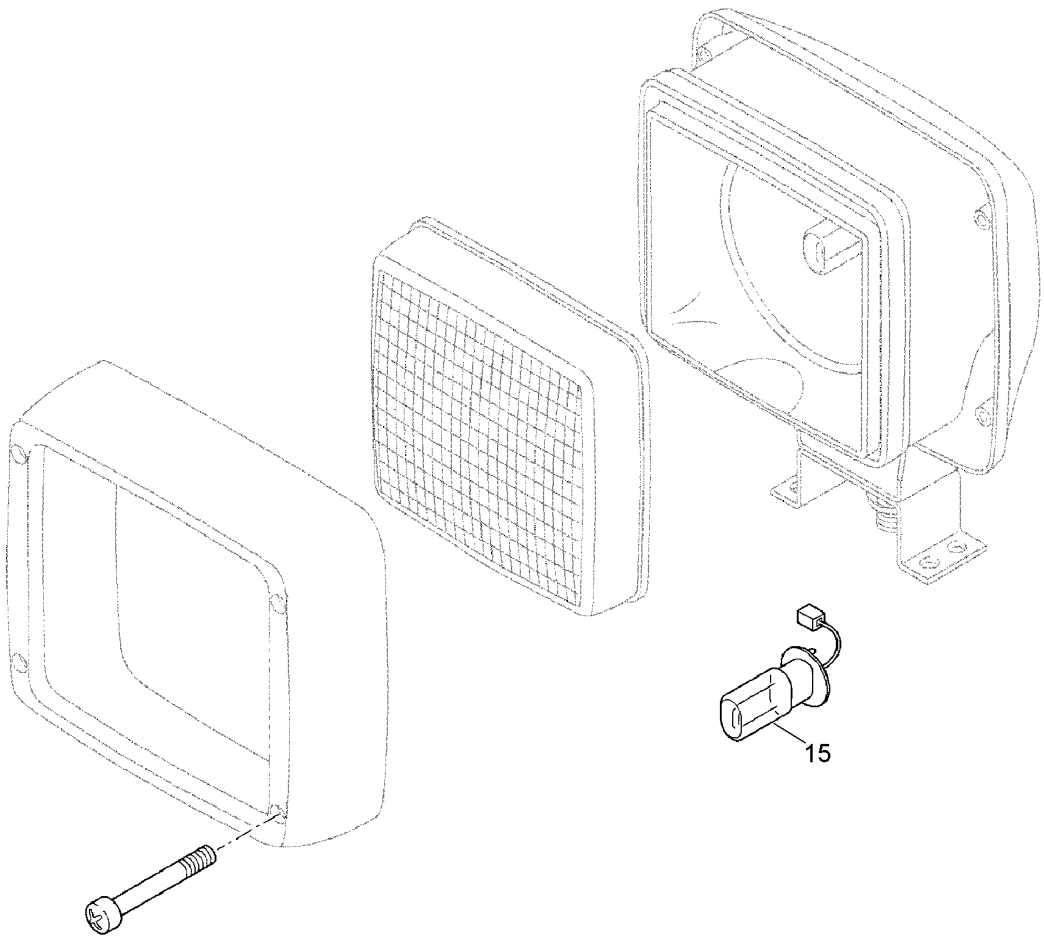

Pos.	Item	Quantity	Description	Bezeichnung	Serie	K
15	607021114	1	LIGHT BULB	GLUEHLAMPE		

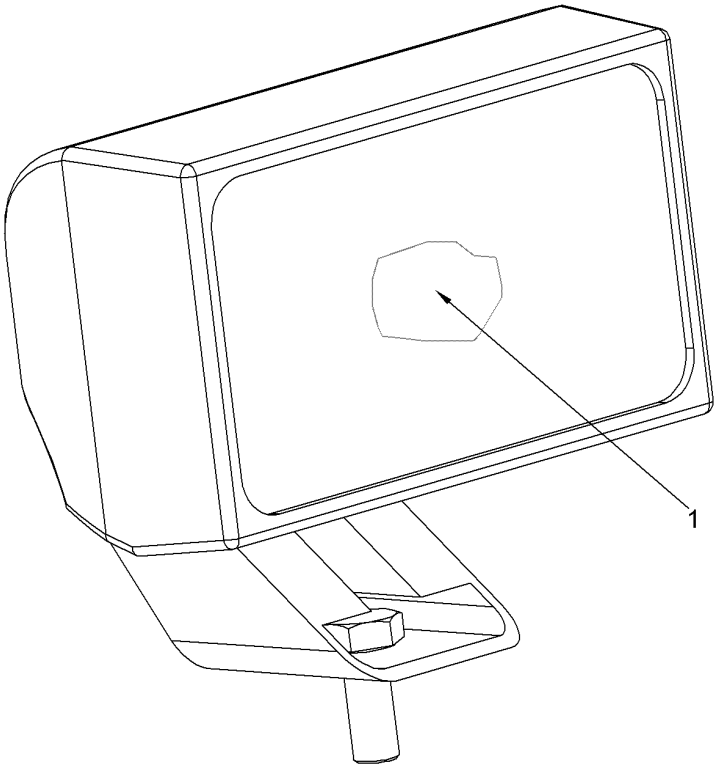

Pos.	Item	Quantity	Description	Bezeichnung	Serie	K
1	607021714	1	LIGHT BULB	GLUEHLAMPE		

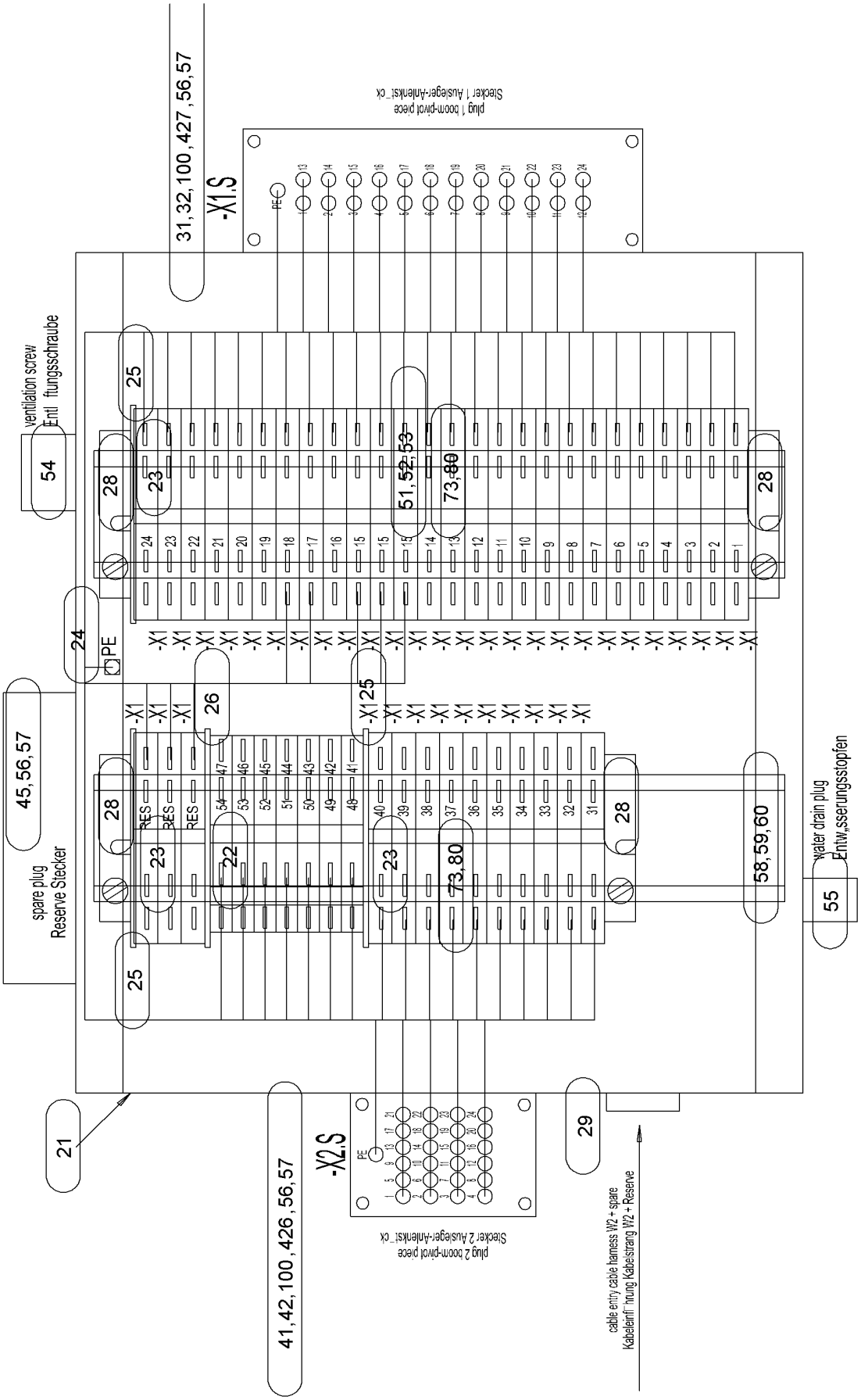
31,32,100,427,56,57
-X1.S
plug 1 boom-pivot piece
Stecker 1 Ausleger-Anlenkst._ck
ventilation screw
Entl ftungsschraube
54
25
28
23
51,52,53
73,80
24
PE
45,56,57
spare plug
Reserve Stecker
26
RES
22
58,59,60
water drain plug
Entw„sserungsstopfen
55
21
41,42,100,426,56,57
-X2.S
plug 2 boom-pivot piece
Stecker 2 Ausleger-Anlenkst._ck
29
cable entry cable harness W2 + spare
Kabeleinf ührung Kabelstrang W2 + Reserve
514896

Pos.	Item	Quantity	Description	Bezeichnung	Serie	K
21	918975514	1	HOUSING DRILLED	GEHAEUSE GEBOHRT		
22	602125114	7	SERIES TERMINAL	REIHENKLEMME		
23	602153814	39	SERIES TERMINAL	REIHENKLEMME		
24	602206114	1	CABLE LUG	KABELSCHUH		
25	602730714	3	CLOSING PLATE	ABSCHLUSSPLATTE		
26	602812714	1	CLOSING PLATE	ABSCHLUSSPLATTE		
28	602720514	4	END ANGLE	ENDWINKEL		
29	693061314	1	STOPPER PLUG	BLINDSTOPFEN		
31	10195680	1	ADD-ON HOUSING	ANBAUGEHAEUSE		
32	605609514	1	FEMALE INSERT	BUCHSENEINSATZ		
41	605613701	1	ADD-ON HOUSING	ANBAUGEHAEUSE		
42	605612014	1	FEMALE INSERT	BUCHSENEINSATZ		
45	693149814	1	ADD-ON HOUSING	ANBAUGEHAEUSE		
51	602731714	1	CROSS CONNECTOR	QUERVERBINDER		
52	602835914	1	DESIGNATION CARD	BEZEICHNUNGSKARTE		
54	485581914	1	VENTILATION SCREW	ENTLUEFTUNGSSCHRAUBE		
55	602501208	1	WATER DRAIN PLUG	ENTWAESSERUNGSSTOPFEN		
56	10507964	12	LOCKING RING 4	SICHERUNGSRING		
57	10539448	12	SOCKET HEAD SCREW ISO 4762 M4X12 A4-7	ZYLINDERSCHRAUBE		
58	602106714	0.37	CARRIER RAIL	TRAGSCHIENE		
59	602134114	4	FASTENING SCREW	BEF SCHRAUBE		
60	420000414	4	WASHER ISO 7089 6 A4	SCHEIBE		
73	602303214	1	RECEPTACLE	STECKHUELSE		
80	602209314	42	RECEPTACLE	STECKHUELSE		
100	602307708	2	WIRED END FERRULE	ADERENDHUELSE		
251	10870540	10.7	ELECTR.CABLE	KFZ-LEITUNG		
426	605610301	24	CONTACT BUSHING	KONTAKTBUCHSE		
427	605601801	24	CONTACT BUSHING	KONTAKTBUCHSE		

OHNE BILD
WITHOUT ILLUSTRATION
SANS PLANCHE
SIN FIG.
SEM ILUSTRAÇÃO
БЕЗ ИЗОБРАЖЕНИЯ

600000

Pos.	Item	Quantity	Description	Bezeichnung	Serie	K
10	11236937	1	CONTROL CONSOLE	STEUERPULT		
11	11239085	1	WIRING HARNESS	KABELSTRANG		

ACHTUNG !
ATTENTION !
ATTENTION !
ATENCIÓN !
ATENÇÃO !
ВНИМАНИЕ

Für Schlauchbestellungen kann über die Schlauchnummer, in der entsprechenden Schlauchliste, die Identnummer festgestellt werden.

For ordering flexible hoses you can find the identification number through the hose-number in the corresponding hose-list.

Pour des ordres de tuyau flexible le nombre d'identification on voit dans la liste de tuyau flexible correspondente.

Para el pedido de manguera, indicar el número de identificación de la manguera de la lista respectiva.

Para se encomendar uma mangueira, consulte o número de identificaçao na respectiva lista de mangueiras.

Для оформления заказов на шланги/рукавы идент. № может быть определен при помощи номера шланга/рукава, указанного в соотетствующем перечне шлангов/рукавов.

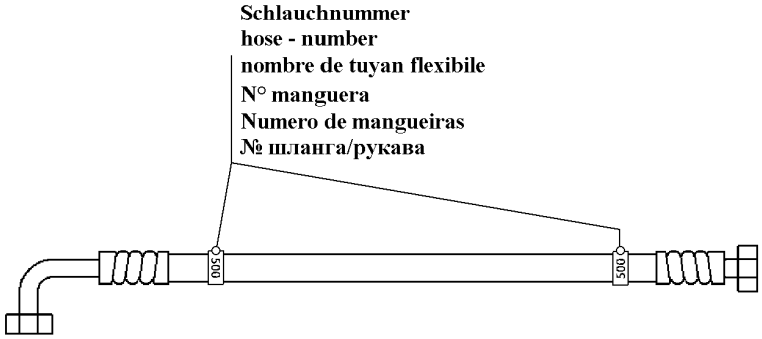

500000

Pos.	Item	Quantity	Description	Bezeichnung	Serie	K
415	996848514	1	HOSE CPL	SCHLAUCH KPL		
426	995962014	1	HOSE CPL	SCHLAUCH KPL		
428	928009314	1	HOSE CPL	SCHLAUCH KPL		
429	918291914	1	HOSE CPL	SCHLAUCH KPL		
431	928589814	1	HOSE CPL	SCHLAUCH KPL		
500	995972114	1	HOSE CPL	SCHLAUCH KPL		
501	995972214	1	HOSE CPL	SCHLAUCH KPL		
502	995972314	1	HOSE CPL	SCHLAUCH KPL		
503	995972414	1	HOSE CPL	SCHLAUCH KPL		
506	928183014	1	HOSE CPL	SCHLAUCH KPL		
507	996466614	1	HOSE CPL	SCHLAUCH KPL		
508	928765014	1	HOSE CPL	SCHLAUCH KPL		
509	991168714	1	HOSE CPL	SCHLAUCH KPL		
510	995972814	1	HOSE CPL	SCHLAUCH KPL		
511	928010214	1	HOSE CPL	SCHLAUCH KPL		
512	928010214	1	HOSE CPL	SCHLAUCH KPL		
513	928010214	1	HOSE CPL	SCHLAUCH KPL		
514	928010214	1	HOSE CPL	SCHLAUCH KPL		
515	995972914	1	HOSE CPL	SCHLAUCH KPL		
516	993657714	1	HOSE CPL	SCHLAUCH KPL		
517	995973814	1	HOSE CPL	SCHLAUCH KPL		
518	995973014	1	HOSE CPL	SCHLAUCH KPL		
519	994465914	1	HOSE CPL	SCHLAUCH KPL		
520	992261414	1	HOSE CPL	SCHLAUCH KPL		
521	995060114	1	HOSE CPL	SCHLAUCH KPL		
522	928443714	1	HOSE CPL	SCHLAUCH KPL		

ACHTUNG !
ATTENTION !
ATTENTION !
ATENCIÓN !
ATENÇÃO !
ВНИМАНИЕ

Für Schlauchbestellungen kann über die Schlauchnummer, in der entsprechenden Schlauchliste, die Identnummer festgestellt werden.

For ordering flexible hoses you can find the identification number through the hose-number in the corresponding hose-list.

Pour des ordres de tuyau flexible le nombre d'identification on voit dans la liste de tuyau flexible correspondente.

Para el pedido de manguera, indicar el número de identificación de la manguera de la lista respectiva.

Para se encomendar uma mangueira, consulte o número de identificaçao na respectiva lista de mangueiras.

Для оформления заказов на шланги/рукавы идент. № может быть определен при помощи номера шланга/рукава, указанного в соотетствующем перечне шлангов/рукавов.

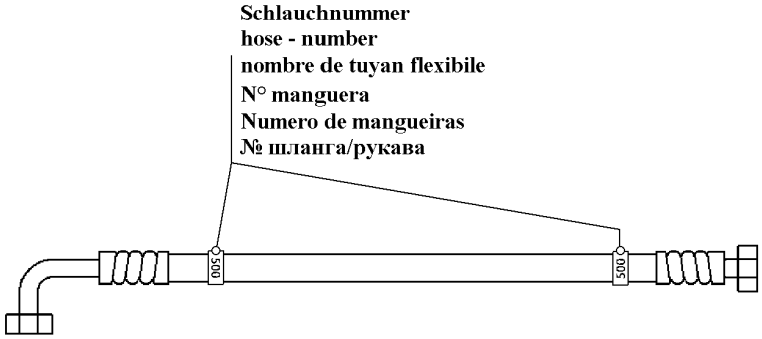

500000

Pos.	Item	Quantity	Description	Bezeichnung	Serie	K
523	995973214	1	HOSE CPL	SCHLAUCH KPL		
524	919735014	1	HOSE CPL	SCHLAUCH KPL		
525	928461114	1	HOSE CPL	SCHLAUCH KPL		
526	928456714	1	HOSE CPL	SCHLAUCH KPL		
527	919706714	1	HOSE CPL	SCHLAUCH KPL		
528	996037814	1	HOSE CPL	SCHLAUCH KPL		
529	996037914	1	HOSE CPL	SCHLAUCH KPL		
530	995973514	1	HOSE CPL	SCHLAUCH KPL		
531	995973614	1	HOSE CPL	SCHLAUCH KPL		
532	995027514	1	HOSE CPL	SCHLAUCH KPL		
533	919140514	1	HOSE CPL	SCHLAUCH KPL		
534	996466814	1	HOSE CPL	SCHLAUCH KPL		
535	993734014	1	HOSE CPL	SCHLAUCH KPL		
536	928445414	1	HOSE CPL	SCHLAUCH KPL		
537	993774614	1	HOSE CPL	SCHLAUCH KPL		
538	995176314	1	HOSE CPL	SCHLAUCH KPL		
539	995973714	1	HOSE CPL	SCHLAUCH KPL		
540	995207914	1	HOSE CPL	SCHLAUCH KPL		
541	996778614	1	HOSE CPL	SCHLAUCH KPL		
542	928018514	1	HOSE CPL	SCHLAUCH KPL		
543	919146814	1	HOSE CPL	SCHLAUCH KPL		
545	994460114	1	HOSE CPL	SCHLAUCH KPL		
546	928020314	1	HOSE CPL	SCHLAUCH KPL		
547	928032214	1	HOSE CPL	SCHLAUCH KPL		
548	928764814	1	HOSE CPL	SCHLAUCH KPL		
550	995974114	1	HOSE CPL	SCHLAUCH KPL		

ACHTUNG !
ATTENTION !
ATTENTION !
ATENCIÓN !
ATENÇÃO !
ВНИМАНИЕ

Für Schlauchbestellungen kann über die Schlauchnummer, in der entsprechenden Schlauchliste, die Identnummer festgestellt werden.

For ordering flexible hoses you can find the identification number through the hose-number in the corresponding hose-list.

Pour des ordres de tuyau flexible le nombre d'identification on voit dans la liste de tuyau flexible correspondente.

Para el pedido de manguera, indicar el número de identificación de la manguera de la lista respectiva.

Para se encomendar uma mangueira, consulte o número de identificaçao na respectiva lista de mangueiras.

Для оформления заказов на шланги/рукавы идент. № может быть определен при помощи номера шланга/рукава, указанного в соотетствующем перечне шлангов/рукавов.

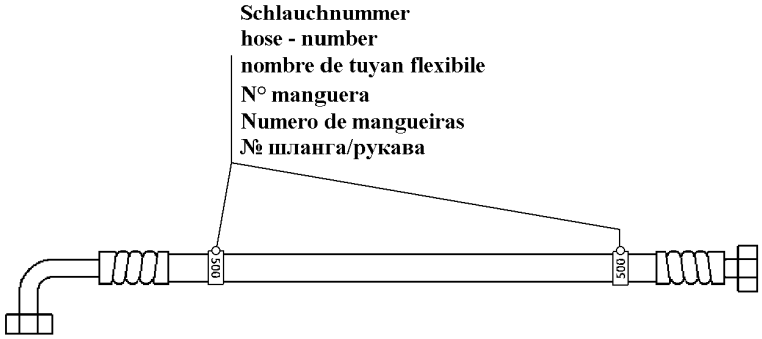

500000

Pos.	Item	Quantity	Description	Bezeichnung	Serie	K
551	914798914	1	HOSE CPL	SCHLAUCH KPL		
555	929414814	1	HOSE CPL	SCHLAUCH KPL		
556	918873814	1	HOSE CPL	SCHLAUCH KPL		
557	992569114	1	HOSE CPL	SCHLAUCH KPL		
558	995974214	1	HOSE CPL	SCHLAUCH KPL		
559	928885614	1	HOSE CPL	SCHLAUCH KPL		
561	995974414	1	HOSE CPL	SCHLAUCH KPL		
562	995974614	1	HOSE CPL	SCHLAUCH KPL		
563	995974714	1	HOSE CPL	SCHLAUCH KPL		
564	995974814	1	HOSE CPL	SCHLAUCH KPL		
565	995974914	1	HOSE CPL	SCHLAUCH KPL		
566	995264214	1	HOSE CPL	SCHLAUCH KPL		
567	996467014	1	HOSE CPL	SCHLAUCH KPL		
569	992258514	1	HOSE CPL	SCHLAUCH KPL		
575	914794514	1	HOSE CPL	SCHLAUCH KPL		
576	995440614	1	HOSE CPL	SCHLAUCH KPL		
577	992261314	1	HOSE CPL	SCHLAUCH KPL		
578	995006114	1	HOSE CPL	SCHLAUCH KPL		
579	991253814	1	HOSE CPL	SCHLAUCH KPL		
580	928123014	1	HOSE CPL	SCHLAUCH KPL		
581	919714914	1	HOSE CPL	SCHLAUCH KPL		
582	929473314	1	HOSE CPL	SCHLAUCH KPL		
583	990038114	1	HOSE CPL	SCHLAUCH KPL		
584	928110014	1	HOSE CPL	SCHLAUCH KPL		
585	928357214	1	HOSE CPL	SCHLAUCH KPL		
586	991528514	1	HOSE CPL	SCHLAUCH KPL		

ACHTUNG !
ATTENTION !
ATTENTION !
ATENCIÓN !
ATENÇÃO !
ВНИМАНИЕ

Für Schlauchbestellungen kann über die Schlauchnummer, in der entsprechenden Schlauchliste, die Identnummer festgestellt werden.

For ordering flexible hoses you can find the identification number through the hose-number in the corresponding hose-list.

Pour des ordres de tuyau flexible le nombre d'identification on voit dans la liste de tuyau flexible correspondente.

Para el pedido de manguera, indicar el número de identificación de la manguera de la lista respectiva.

Para se encomendar uma mangueira, consulte o número de identificaçao na respectiva lista de mangueiras.

Для оформления заказов на шланги/рукавы идент. № может быть определен при помощи номера шланга/рукава, указанного в соотетствующем перечне шлангов/рукавов.

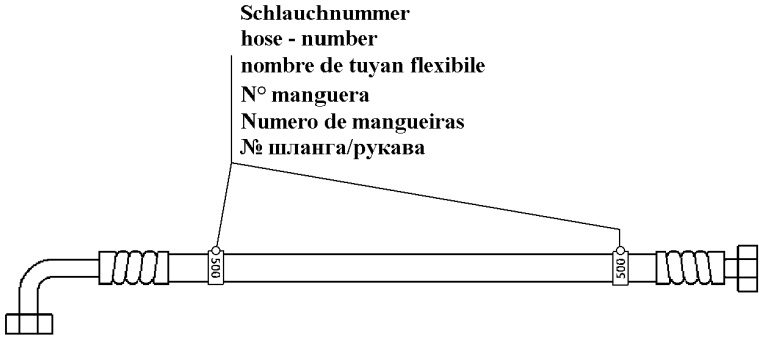

500000

Pos.	Item	Quantity	Description	Bezeichnung	Serie	K
587	991375814	1	HOSE CPL	SCHLAUCH KPL		
590	996467114	1	HOSE CPL	SCHLAUCH KPL		
591	992298714	1	HOSE CPL	SCHLAUCH KPL		
592	914762914	1	HOSE CPL	SCHLAUCH KPL		
594	992519014	1	HOSE CPL	SCHLAUCH KPL		
595	918810914	1	HOSE CPL	SCHLAUCH KPL		
596	911256414	1	HOSE CPL	SCHLAUCH KPL		
597	928712614	1	HOSE CPL	SCHLAUCH KPL		
598	918285814	1	HOSE CPL	SCHLAUCH KPL		
5020	991209514	1	HOSE CPL	SCHLAUCH KPL		
5021	993775014	1	HOSE CPL	SCHLAUCH KPL		
5022	914792514	1	HOSE CPL	SCHLAUCH KPL		
5023	995976414	1	HOSE CPL	SCHLAUCH KPL		
5024	995976414	1	HOSE CPL	SCHLAUCH KPL		
5025	995976514	1	HOSE CPL	SCHLAUCH KPL		
5026	995976514	1	HOSE CPL	SCHLAUCH KPL		

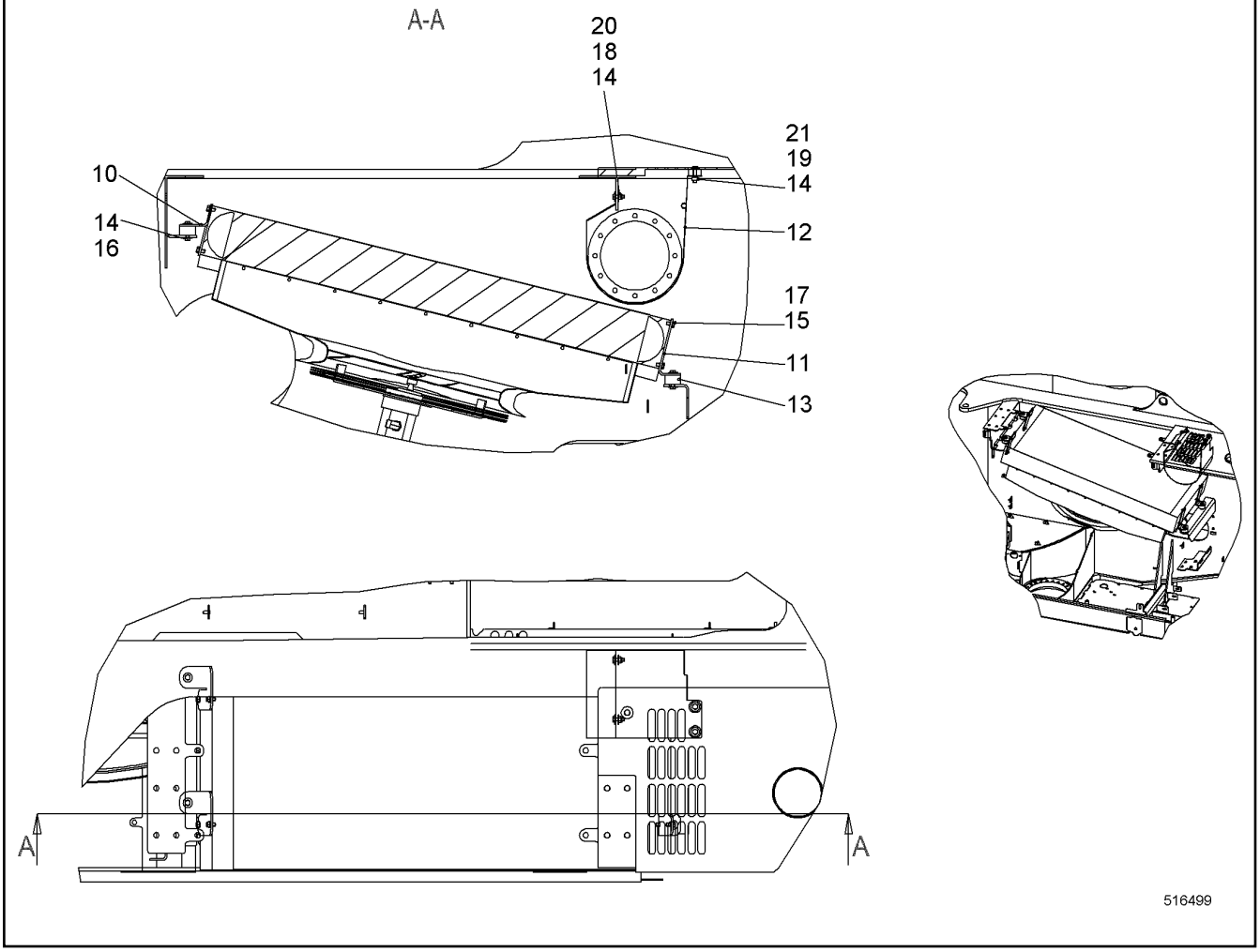

Pos.	Item	Quantity	Description	Bezeichnung	Serie	K
10	10336583	2	BRACKET	BUEGEL		
11	10336584	2	BRACKET	BUEGEL		
12	10580585	1	PROTECTION GUARD	SCHUTZBLECH		
13	726922214	4	RUBBER MOUNT	LAGER GUMMI		
14	10540511	14	WASHER ISO 7093-1 10 A4	SCHEIBE		
15	420001114	8	WASHER ISO 7089 10 A4	SCHEIBE		
16	406527414	8	HEX SCREW ISO 4017 M10X18 A4-70	SECHSKANTSCHRAUBE		
17	406518714	8	HEX SCREW ISO 4017 M10X20 A4-70	SECHSKANTSCHRAUBE		
18	406511614	2	HEX SCREW ISO 4017 M10X30 A4-70	SECHSKANTSCHRAUBE		
19	406512014	2	HEX SCREW ISO 4017 M10X45 A4-70	SECHSKANTSCHRAUBE		
20	10540494	2	HEX NUT ISO 10511 M10 A4	SECHSKANTMUTTER		
21	485549914	2	CAGE NUT M10-RR-140-47	KAEFIGMUTTER		

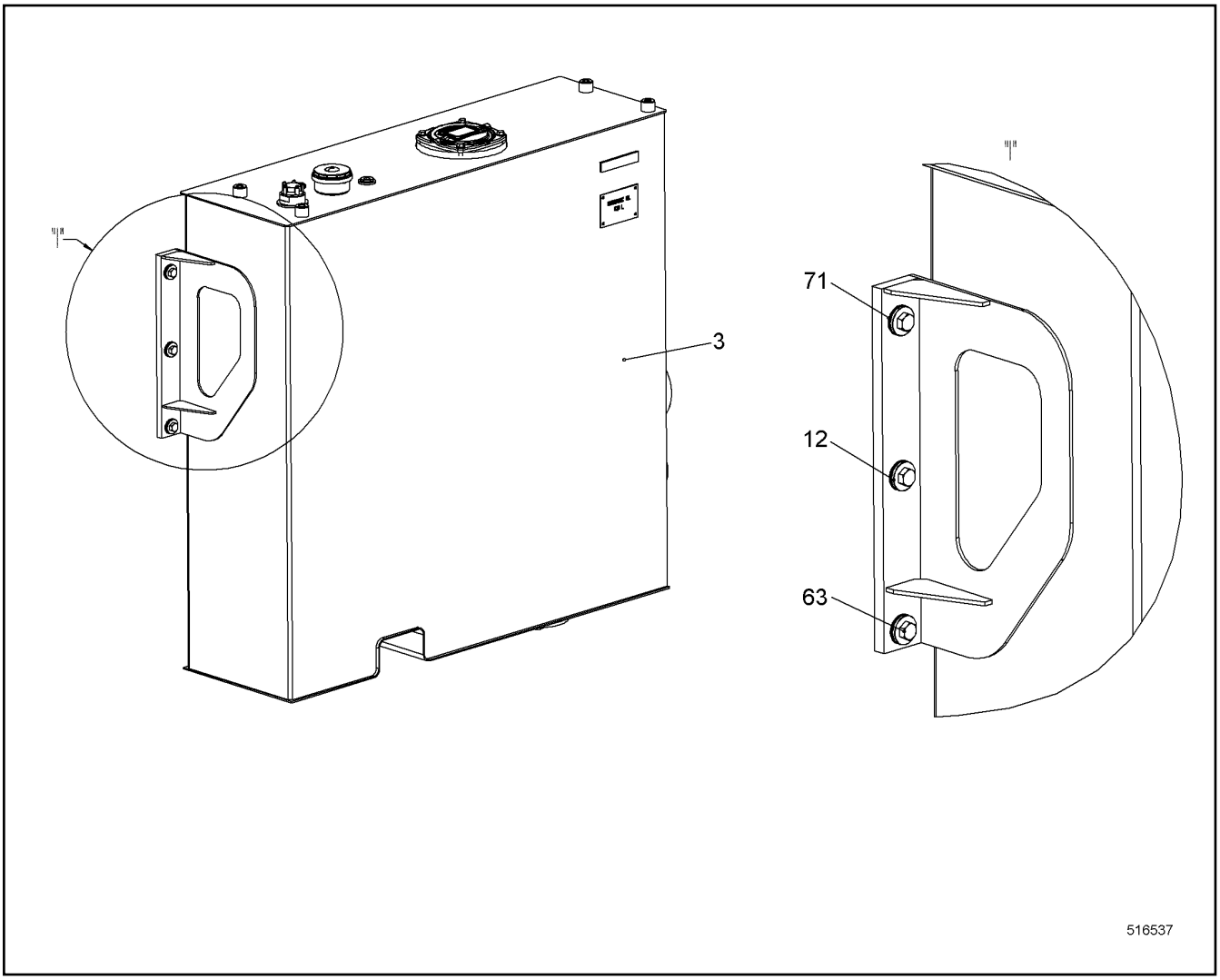

Pos.	Item	Quantity	Description	Bezeichnung	Serie	K
3	10560701	1	TANK HYDR CPL ⇨ ❑ 47	TANK HYDR KPL		
12	10588730	3	BUSHING EN 10060 17.5X26.5X29 S355J2;EN	BUCHSE		
62	10543903	3	HEX SCREW ISO 4017 M16X50 10.9	SECHSKANTSCHRAUBE		
63	10543904	3	HEX SCREW ISO 4017 M16X55 10.9	SECHSKANTSCHRAUBE		
70	421300414	3	WASHER DIN 6340 17 C35	SCHEIBE		

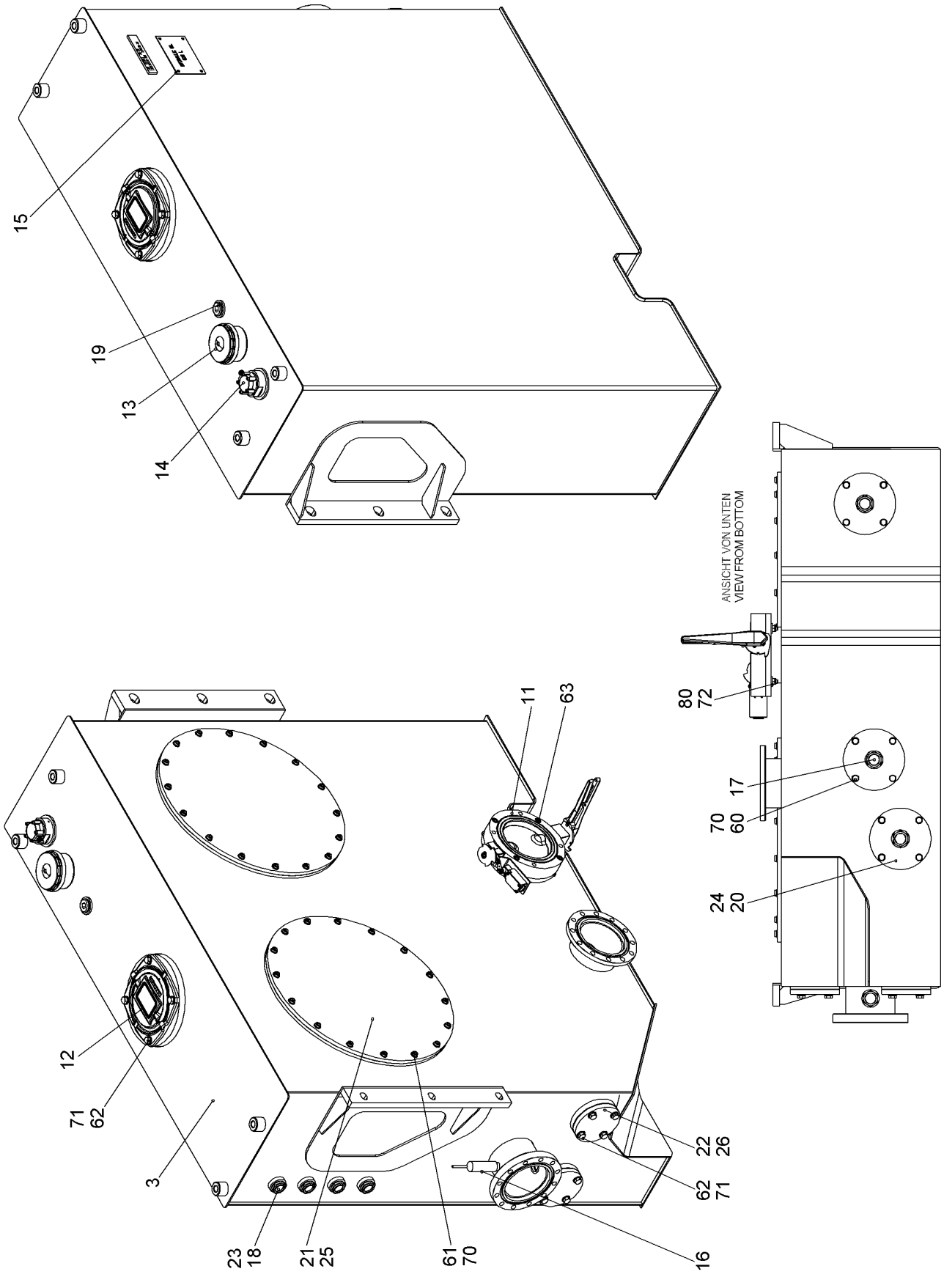
15
19
13
14
ANSICHT VON UNTEN
VIEW FROM BOTTOM
80
72
70
60
17
24
20
11
63
12
71
62
3
23
18
21
25
61
70
16
62
71
22
26
516538

Pos.	Item	Quantity	Description	Bezeichnung	Serie	K
3	10560703	1	TANK HYDR ST.CONST.	TANK HYDR SCHWK		
11	10526733	1	SHUT OFF DEVICE ⇨ ❑ 49	ABSPERRORGAN		
12	10515724	1	RETURN FILTER ⇨ ❑ 50	RUECKLAUFFILTER		
13	510690614	1	AERATION FILTER ⇨ ❑ 51	BELUEFTUNGSFILTER		
14	10529210	1	LEVEL SENSOR	NIVEAUGEBER		
15	10584544	1	SIGN	SCHILD		
16	10352111	1	PRESSURE SWITCH	DRUCKSCHALTER		
17	403900714	4	OIL DRAIN PLUG G1"X11 MS	OELABLASSSCHRAUBE		
18	5106280	4	OIL SIGHT GLASS	OELSTANDSAUGE		
19	477704614	1	FITTING	VERSCHRAUBUNG		
21	942264714	2	COVER	DECKEL		
22	552066514	2	FLANGE	FLANSCH		
23	7101022	4	SEALING RING	DICHTRING		
24	726409814	3	O-RING	O-RING		
25	726428714	2	O-RING	O-RING		
26	552006114	2	SEAL	DICHTUNG		
60	406511914	12	HEX SCREW ISO 4017 M10X25 A4-70	SECHSKANTSCHRAUBE		
61	4072083	32	SOCKET HEAD SCREW DIN 7984 M10X25 08.8	ZYLINDERSCHRAUBE		
62	406517314	12	HEX SCREW ISO 4017 M12X30 A4-70	SECHSKANTSCHRAUBE		
63	4630200	4	SOCKET HEAD SCREW ISO 4762 M10X65 10.9	ZYLINDERSCHRAUBE		
70	420001114	44	WASHER ISO 7089 10 A4	SCHEIBE		
71	4901782	12	WASHER ISO 7089 12 A4	SCHEIBE		
72	421300214	4	WASHER DIN 6340 10.5 C35	SCHEIBE		
80	10540494	4	HEX NUT ISO 10511 M10 A4	SECHSKANTMUTTER		

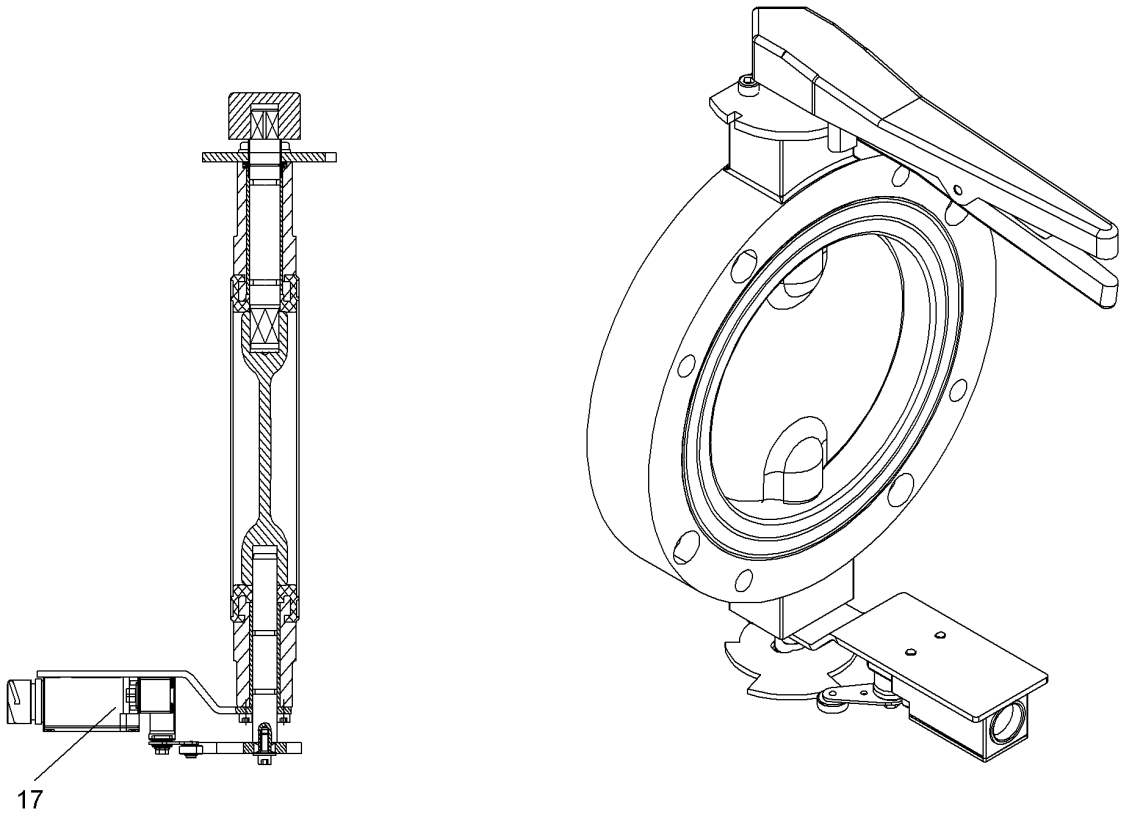

Pos.	Item	Quantity	Description	Bezeichnung	Serie	K
17	11921102	1	LIMIT SWITCH	ENDSCHALTER		

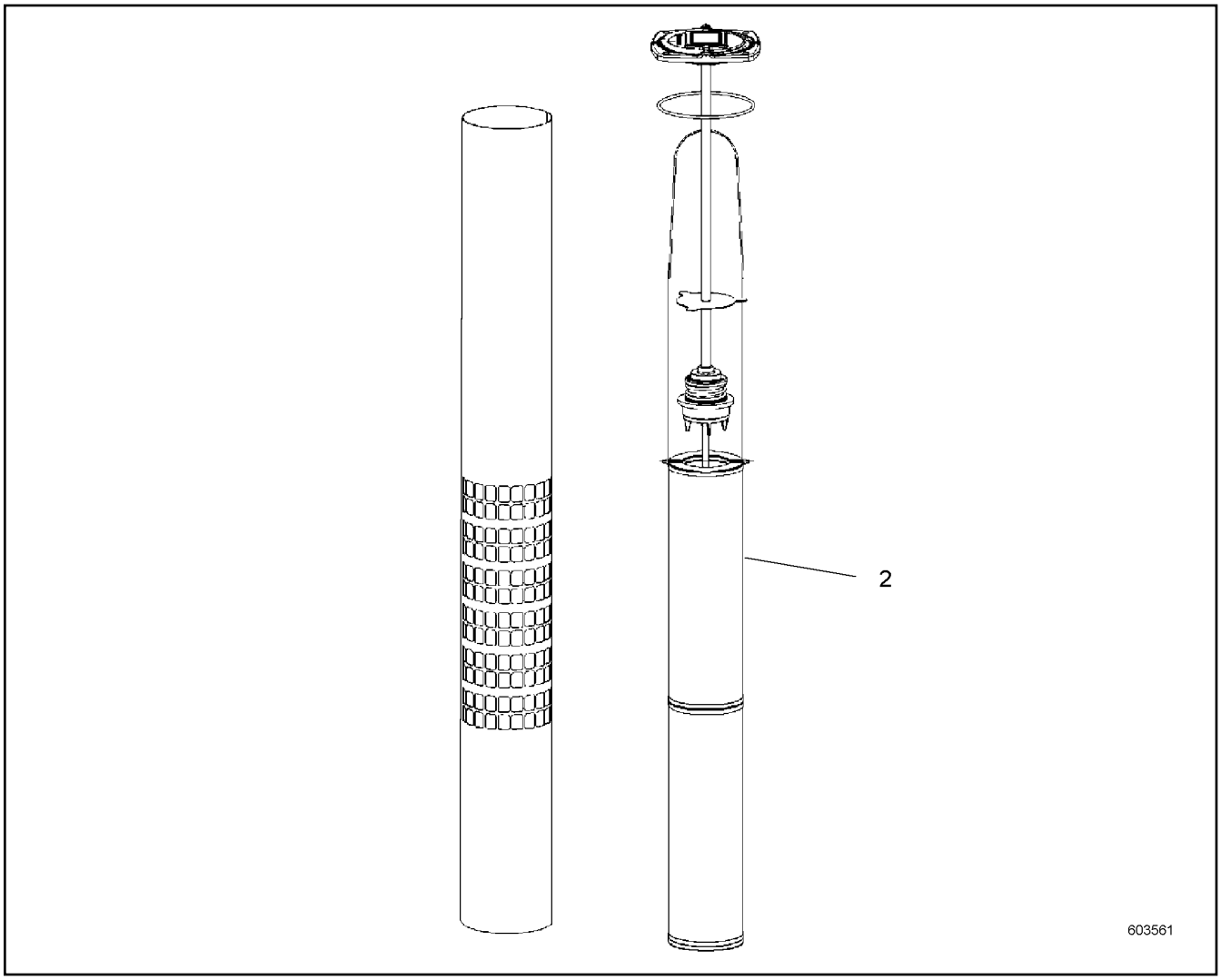

Pos.	Item	Quantity	Description	Bezeichnung	Serie	K
1	11227203	1	FILTER INSERT	FILTEREINSATZ		
3	10218953	1	O-RING	O-RING		

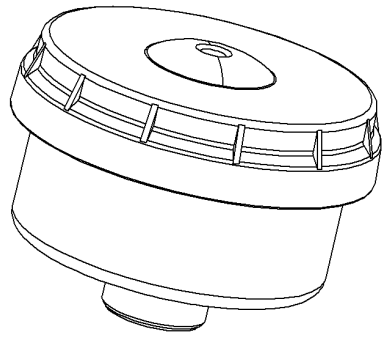

604282

Pos.	Item	Quantity	Description	Bezeichnung	Serie	K
1	510713814	1	FILTER ELEMENT	FILTERELEMENT		

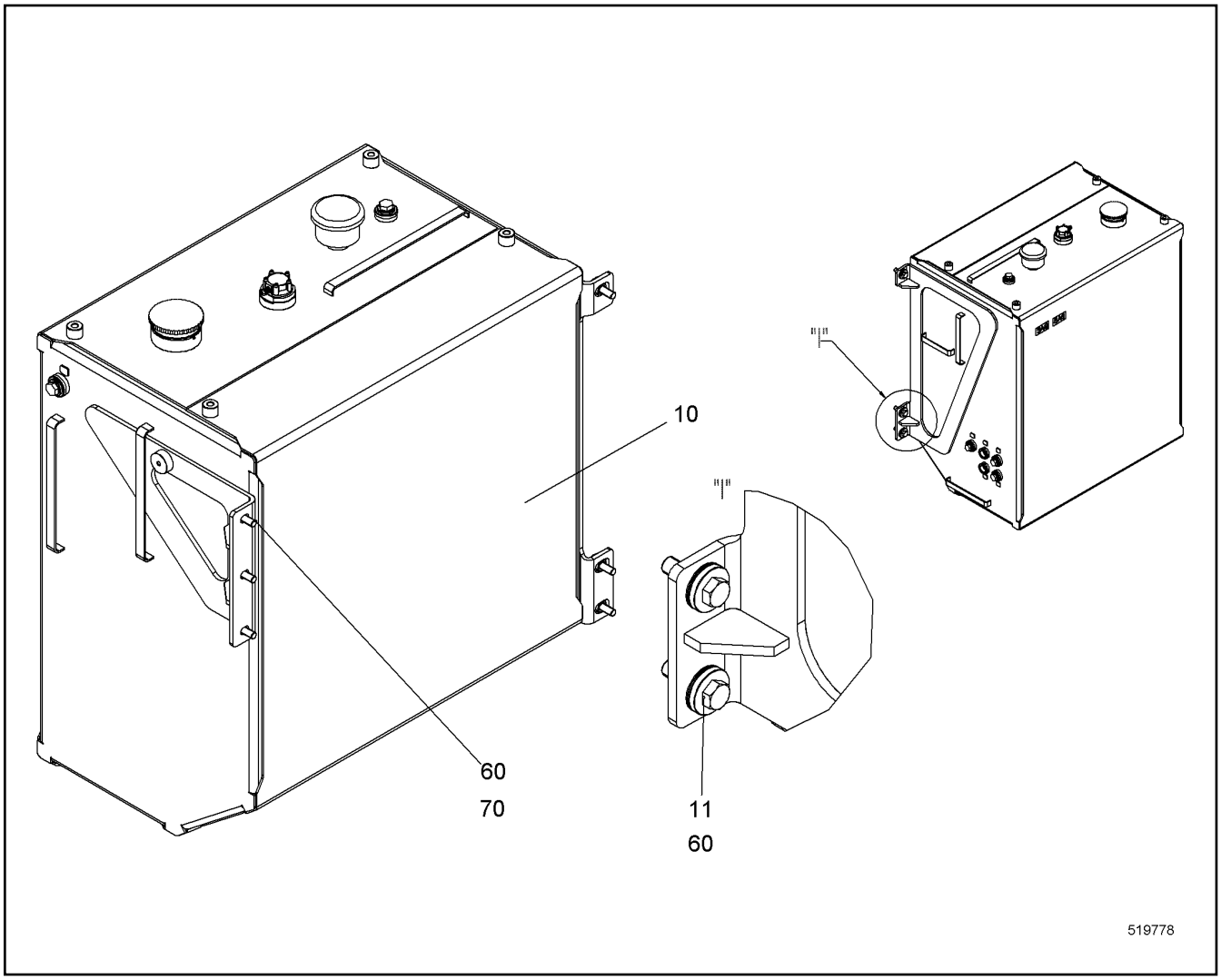

Pos.	Item	Quantity	Description	Bezeichnung	Serie	K
10	10560733	1	FUEL TANK CPL ⇨ ❑ 53	KRAFTSTOFFTANK KPL		
11	959019014	3	BUSHING	BUCHSE		
60	10539317	6	HEX SCREW ISO 4017 M16X35 10.9	SECHSKANTSCHRAUBE		
70	421300414	3	WASHER DIN 6340 17 C35	SCHEIBE		

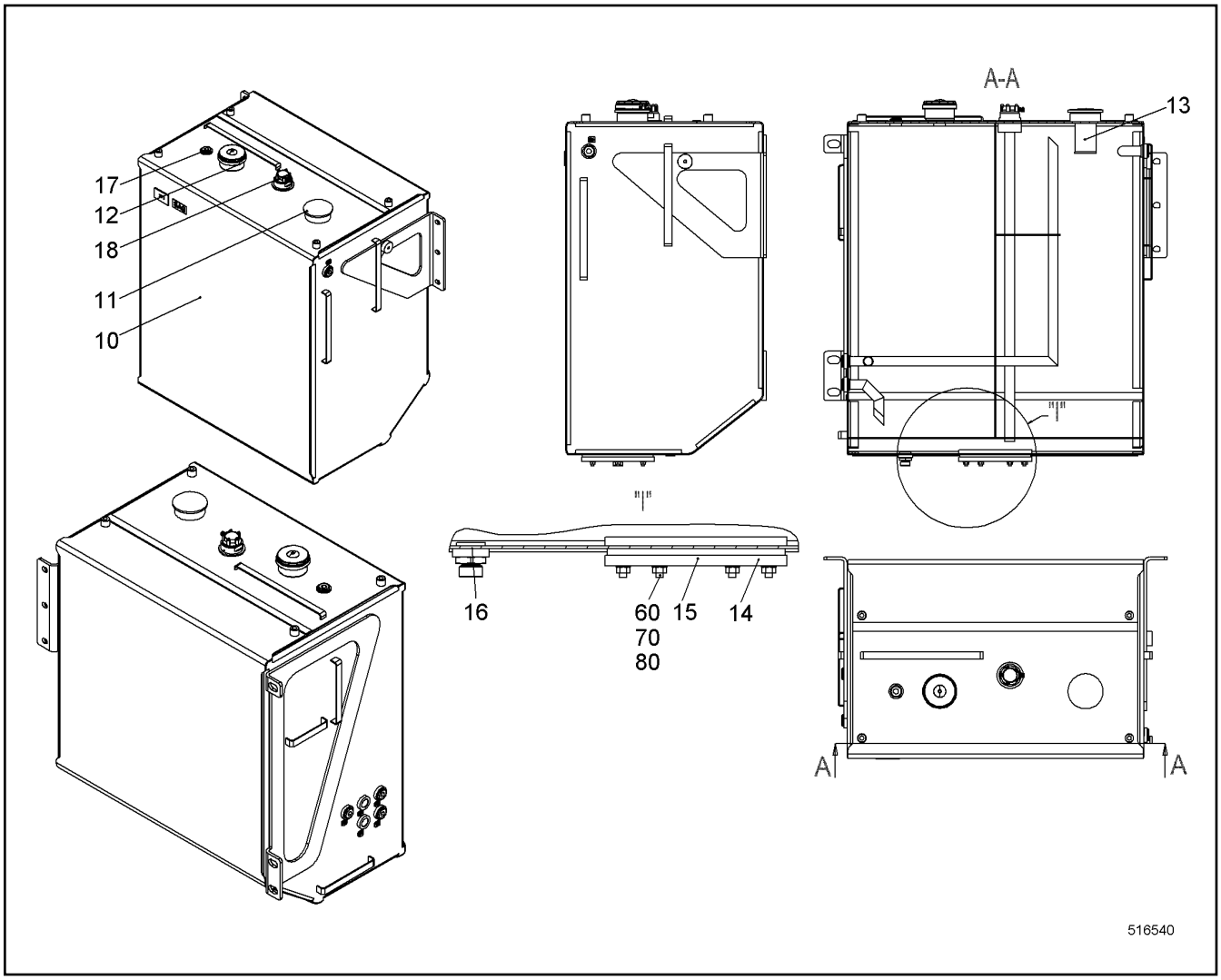

Pos.	Item	Quantity	Description	Bezeichnung	Serie	K
10	10560734	1	FUEL TANK ST.CONST.	KRAFTSTOFFTANK SCHWK		
11	7365412	1	LOCKABLE TANK CAP	TANKVERSCHLUSS		
12	11280868	1	AERATION FILTER ⇨ ❑ 54	BELUEFTUNGSFILTER		
13	10296919	1	FILLER SIEVE	EINFUELLSIEB		
14	10520927	1	COVER	DECKEL		
15	726401514	1	O-RING	O-RING		
16	403900714	1	OIL DRAIN PLUG G1"X11 MS	OELABLASSSCHRAUBE		
17	477704614	5	FITTING	VERSCHRAUBUNG		
18	10528589	1	LEVEL SENSOR	NIVEAUGEBER		
60	4068017	6	DOUBLE-ENDED STUD DIN 939 M10X30 8.8	STIFTSCHRAUBE		
70	420001114	6	WASHER ISO 7089 10 A4	SCHEIBE		
80	411514614	6	HEX NUT ISO 4032 M10 A4-70	SECHSKANTMUTTER		

OHNE BILD
WITHOUT ILLUSTRATION
SANS PLANCHE
SIN FIG.
SEM ILUSTRAÇÃO
БЕЗ ИЗОБРАЖЕНИЯ

600000

Pos.	Item	Quantity	Description	Bezeichnung	Serie	K
1	10350585	1	PAPER FLEECE	PAPIERVLIES		

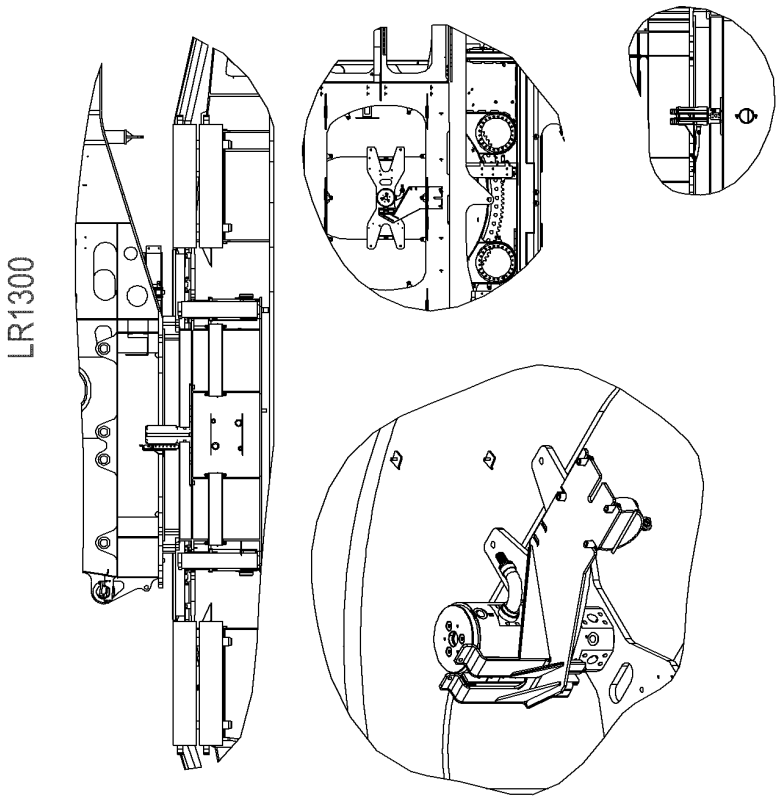
LR1300

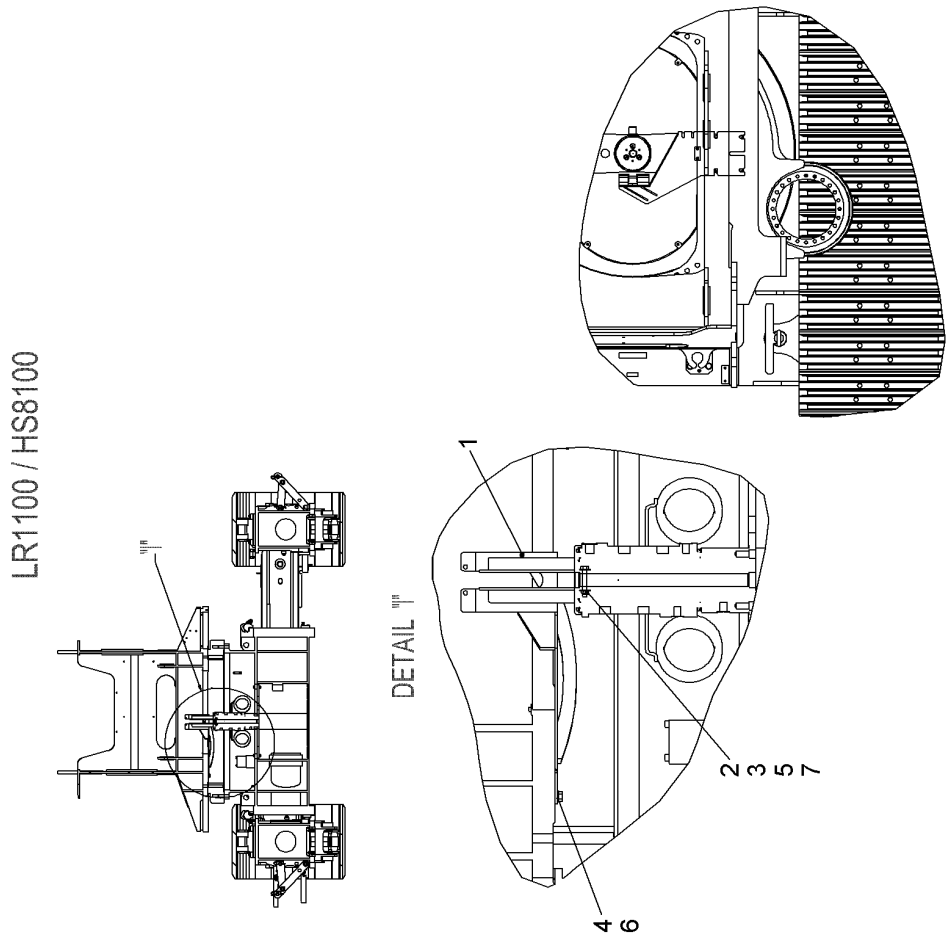
LR1100 / HS8100
DETAIL "I"
1
2
3
5
7
4
6
516892

Pos.	Item	Quantity	Description	Bezeichnung	Serie	K
1	10552306	1	CONSOLE	KONSOLE		
2	10572706	2	WP	WP		
3	406527914	1	HEX SCREW ISO 4017 M10X80 A4-70	SECHSKANTSCHRAUBE		
4	10539316	4	HEX SCREW ISO 4017 M16X30 10.9	SECHSKANTSCHRAUBE		
5	10540494	1	HEX NUT ISO 10511 M10 A4	SECHSKANTMUTTER		
6	10544173	4	WASHER ISO 7093-1 16	SCHEIBE		
7	10540511	2	WASHER ISO 7093-1 10 A4	SCHEIBE		

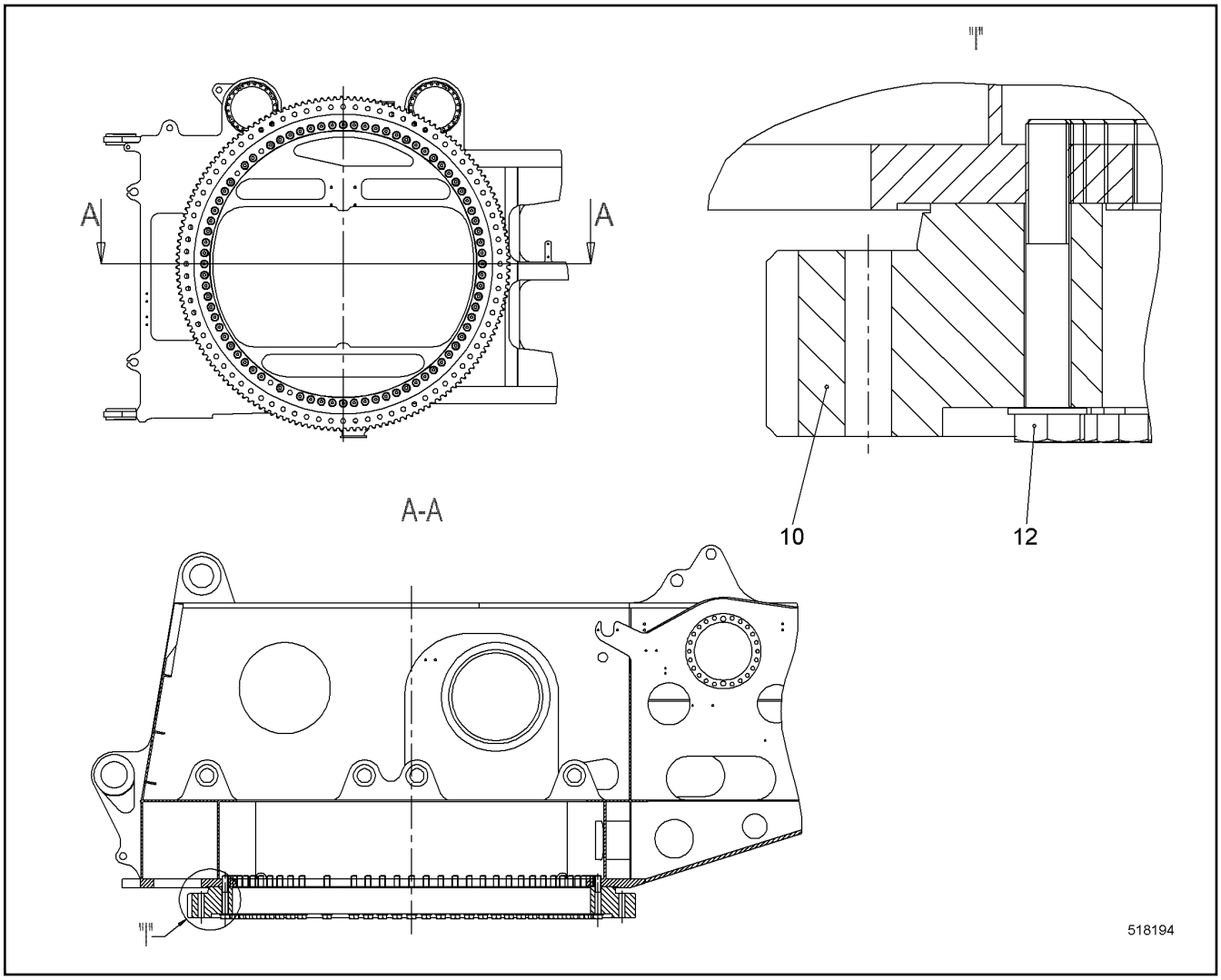

Pos.	Item	Quantity	Description	Bezeichnung	Serie	K
10	990706901	1	SLEW RING ROLLER BEARING	GW-LAGER		
12	11266734	76	FLANGED BOLT M33X220 10.9	BUNDSCHRAUBE		

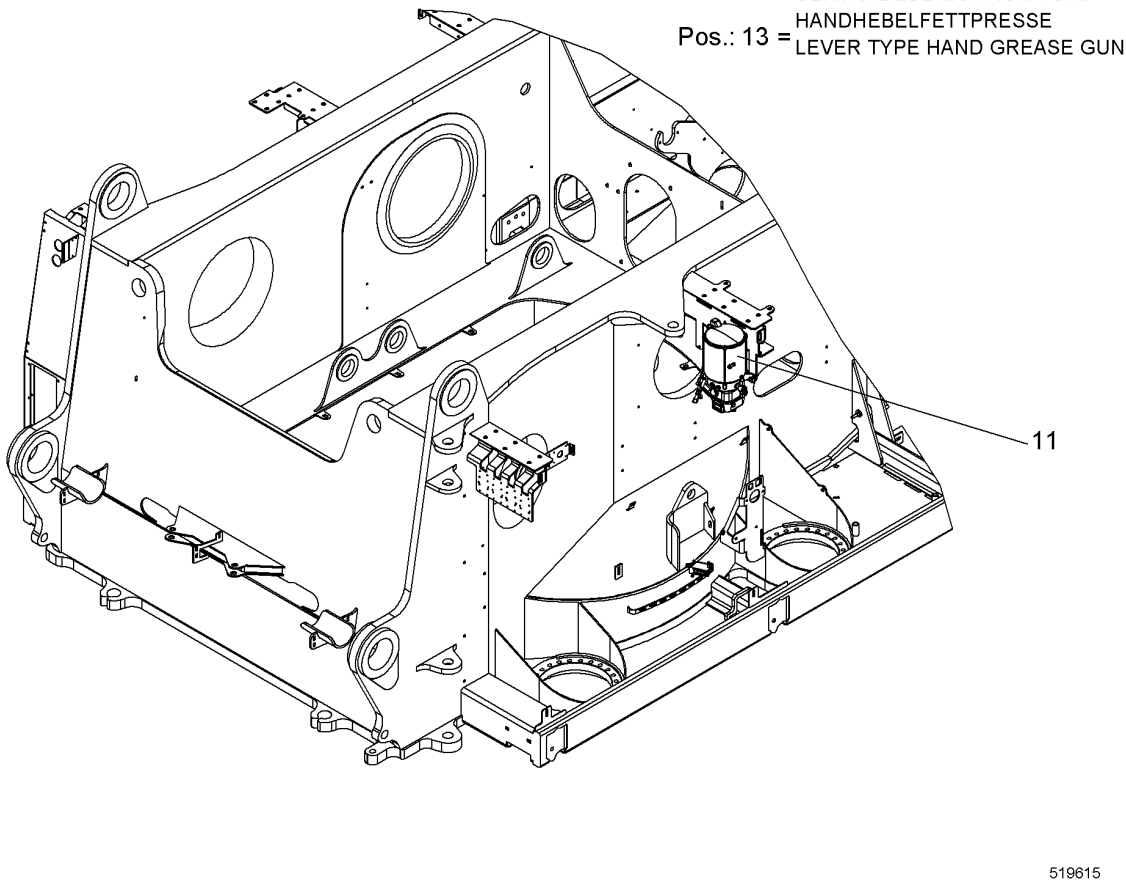

Pos.	Item	Quantity	Description	Bezeichnung	Serie	K
10	11280482	2	CONNECTION PARTS	ANSCHLUSSTEILE		
11	11265572	1	MOUNTING PARTS ⇨ ❑ 59	MONTAGETEILE		
12	11223123	1	CENTRAL LUBRICATION PUMP ⇨ ❑ 60	ZENTRALSCHMIERPUMPE		
13	10445635	1	LEVER TYPE HAND GREASE GUN	HANDHEBELFETTPRESSE		
14	10448187	1	FILLER NECK CONNECTION	FUELLANSCHLUSS		

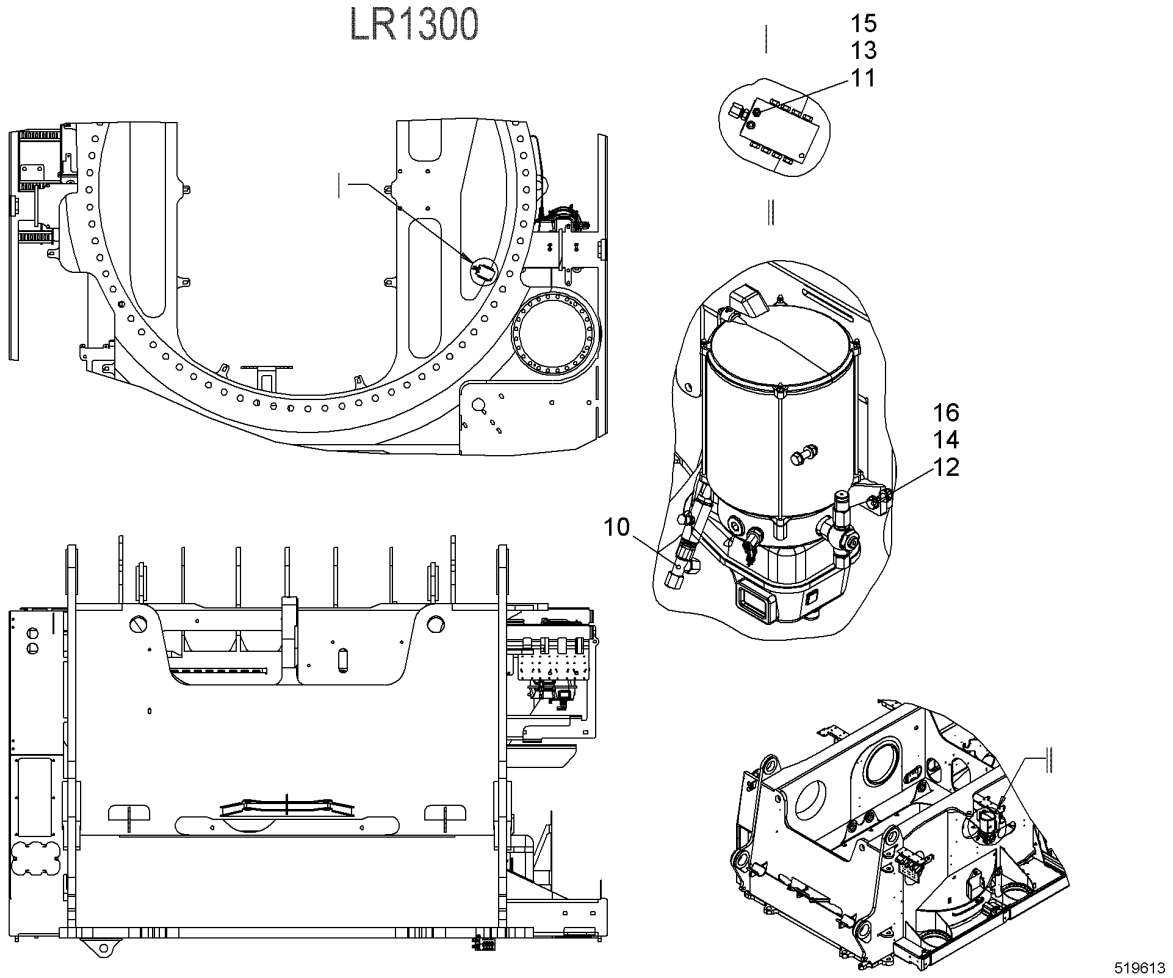

Pos.	Item	Quantity	Description	Bezeichnung	Serie	K
10	11262806	1	FITTING	VERSCHRAUBUNG		
12	406501314	2	HEX SCREW ISO 4017 M8X30 A4-70	SECHSKANTSCHRAUBE		
13	420005214	2	WASHER ISO 7089 5 A4	SCHEIBE		
14	420001014	4	WASHER ISO 7089 8 A4	SCHEIBE		
15	10540484	2	HEX NUT ISO 10511 M5 A4	SECHSKANTMUTTER		
16	10540493	2	HEX NUT ISO 10511 M8 A4	SECHSKANTMUTTER		

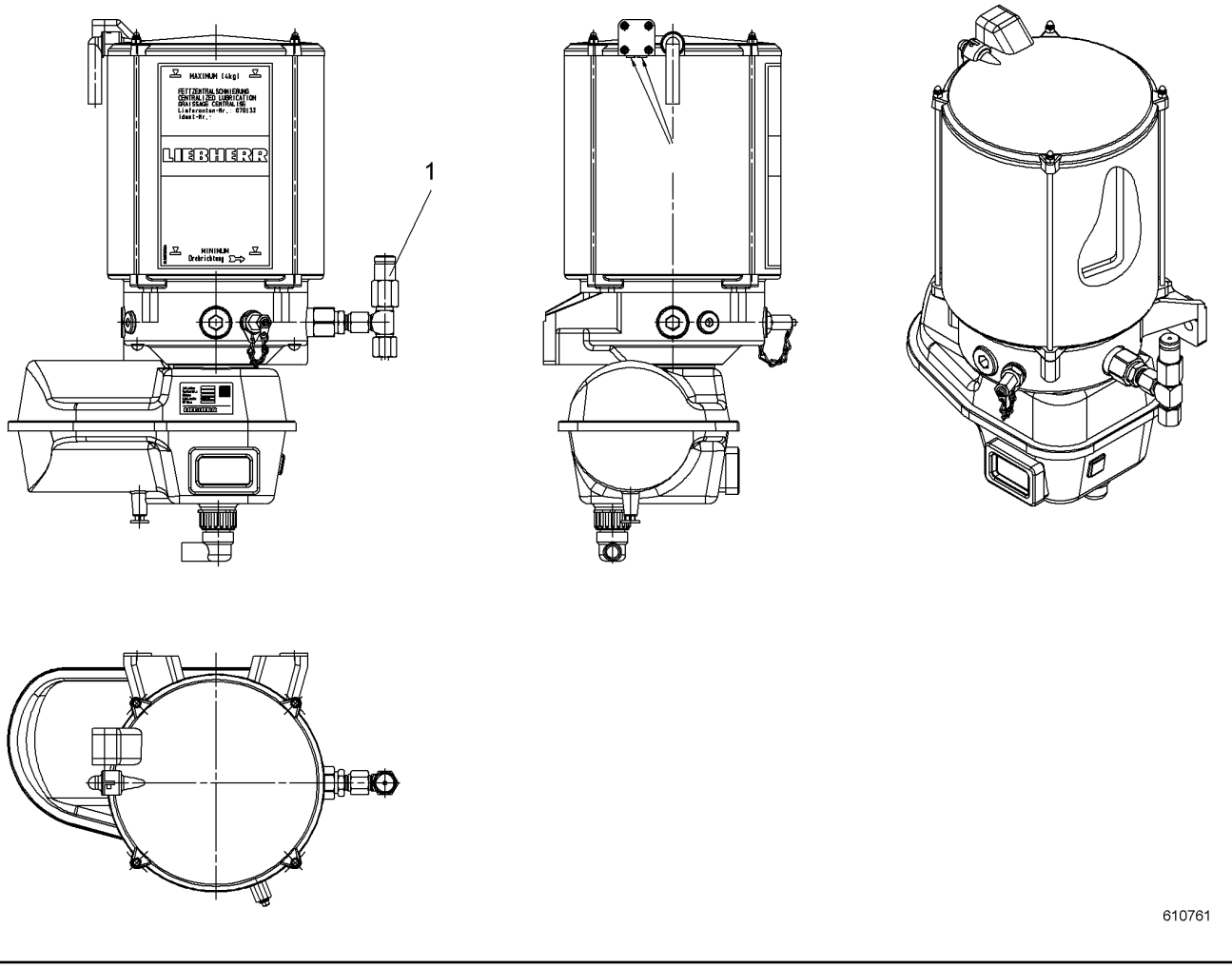

Pos.	Item	Quantity	Description	Bezeichnung	Serie	K
1	10540347	1	PUMP ELEMENT	PUMPENELEMENT		

LIEBHERR

21.6.2017
520296

138406_ETK_001

FIRE EXTINGUISHER MOUNTING
FEUERLOESCHER EINBAU

61 (1/2)

10 57 884 5

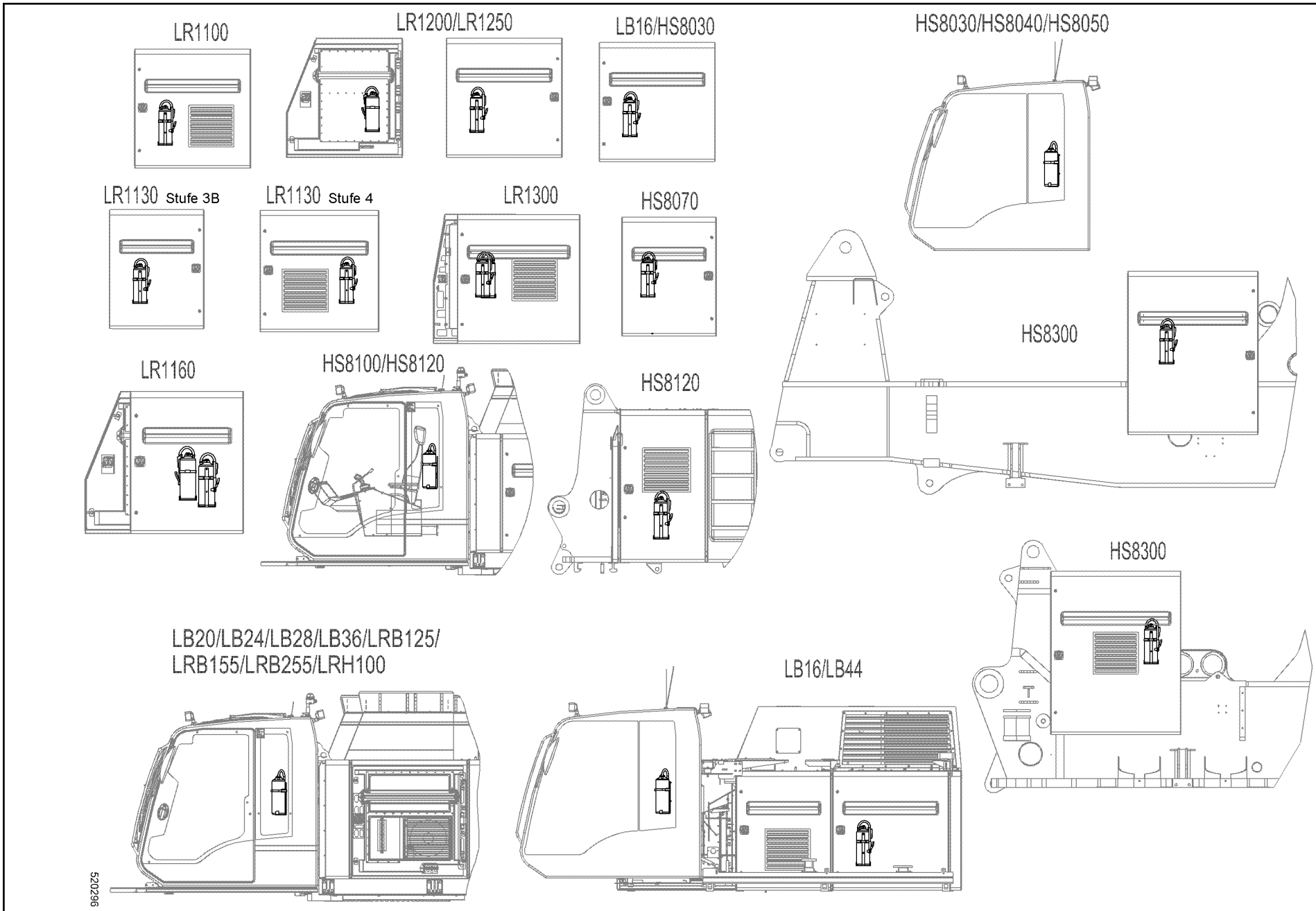

Pos.	Item	Quantity	Description	Bezeichnung	Serie	K
10	926547714	1	FIRE EXTINGUISHER RFK ⇨ ❑ 63	FEUERLOESCHER NRS		

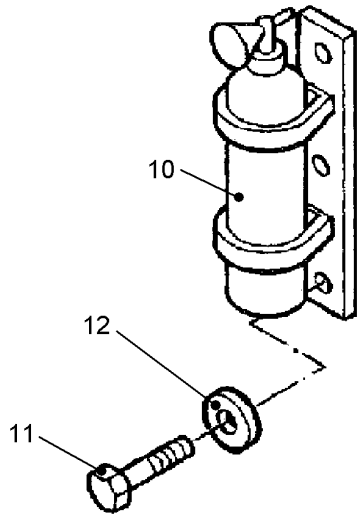

500174

Pos.	Item	Quantity	Description	Bezeichnung	Serie	K
10	890100814	1	FIRE EXTINGUISHER	FEUERLOESCHER		
11	406501514	2	HEX SCREW ISO 4017 M8X16 A4-70	SECHSKANTSCHRAUBE		
12	10540510	2	WASHER ISO 7093-1 8 A4	SCHEIBE		

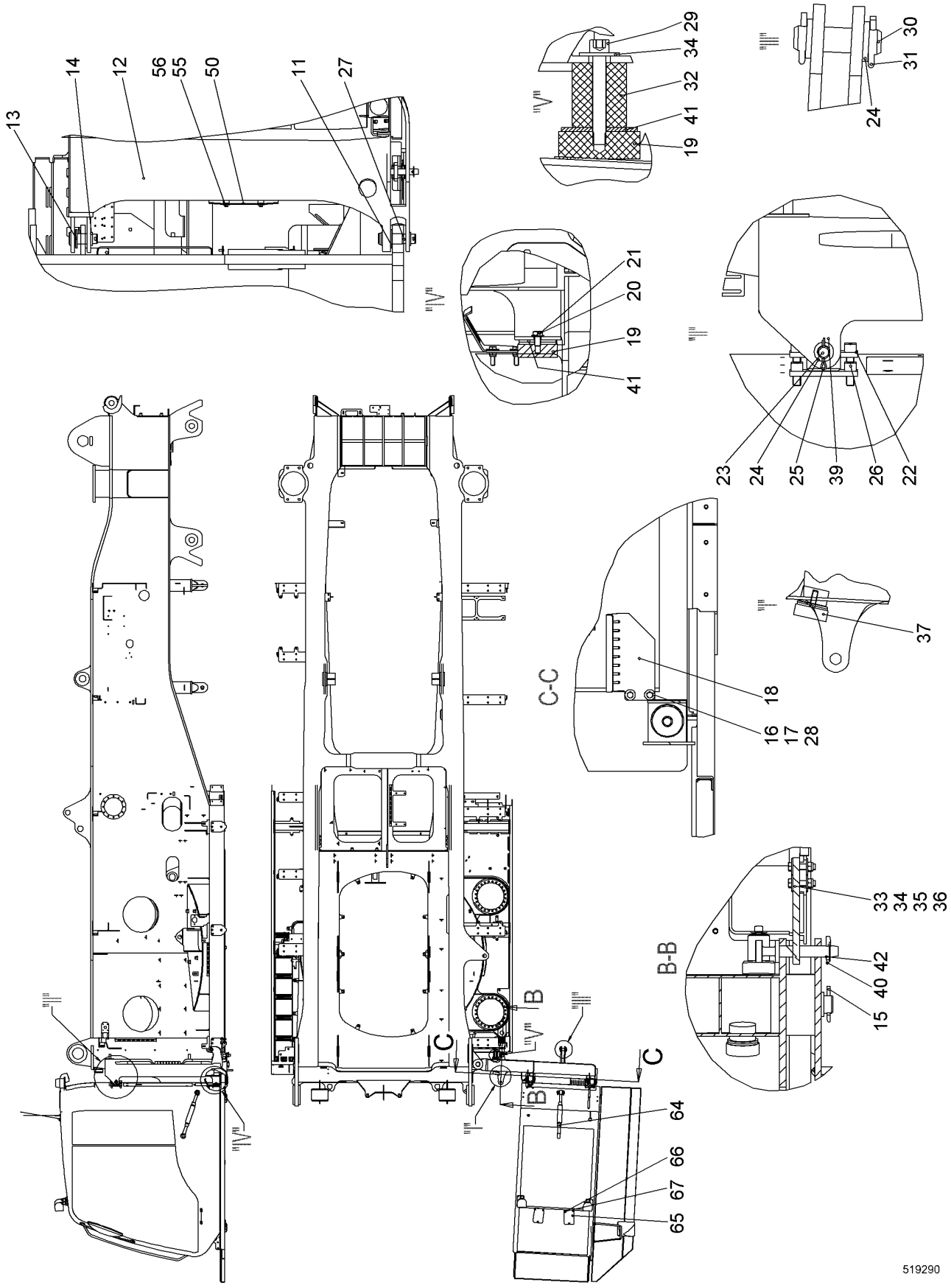

21.6.2017 519290	**138406_ETK_001**	64 (1/2)
LIEBHERR	**CABIN SUSPENSION CPL** **KABINENAUFHAENGUNG KPL**	**10 58 163 4**

Pos.	Item	Quantity	Description	Bezeichnung	Serie	K
11	790519814	2	COLLER BUSHING 40/80X51 CUSN7ZNPB	BUNDBUCHSE		
12	10578321	1	FRAME ST.CONST.	RAHMEN SCHWK		
13	451436614	1	PIN DIN EN 22341-B 40H11X115X102 X20CR1	BOLZEN		
14	421103014	3	WASHER DIN EN 28738 40 ST	SCHEIBE		
15	433009114	2	SPLIT PIN ISO 1234 8X63 A4	SPLINT		
16	10540510	4	WASHER ISO 7093-1 8 A4	SCHEIBE		
17	10540493	2	HEX NUT ISO 10511 M8 A4	SECHSKANTMUTTER		
18	10588168	1	FASTENER	HALTERUNG		
19	726910114	3	RUBBER MOUNT	LAGER GUMMI		
20	4901782	2	WASHER ISO 7089 12 A4	SCHEIBE		
21	406517714	2	HEX SCREW ISO 4017 M12X20 A4-70	SECHSKANTSCHRAUBE		
22	918585114	2	CONSOLE	KONSOLE		
23	485501714	2	PIN DIN EN 22340-B 25F7X120 42CRMO4+QT;E	BOLZEN		
24	421102214	8	WASHER DIN EN 28738 26 ST;	SCHEIBE		
25	433007708	4	SPLIT PIN ISO 1234 6.3X45	SPLINT		
26	10544065	8	SOCKET HEAD SCREW ISO 4762 M16X30 10.9	ZYLINDERSCHRAUBE		
27	968523914	1	PIN	BOLZEN		
28	406501314	2	HEX SCREW ISO 4017 M8X30 A4-70	SECHSKANTSCHRAUBE		
29	10539524	1	SOCKET HEAD SCREW ISO 4762 M12X85 A4-7	ZYLINDERSCHRAUBE		
30	450052114	2	PIN DIN EN 22340-B 25F8X88 LHRD900-40;100	BOLZEN		
31	433007508	4	SPLIT PIN ISO 1234 6.3X32 ST	SPLINT		
32	11216088	1	SPACER PIECE	DISTANZSTUECK		
33	10578343	1	MOUNTING BRACKET	BEFESTIGUNGSBUEGEL		
34	10540512	9	WASHER ISO 7093-1 12 A4	SCHEIBE		
35	406527614	4	HEX SCREW ISO 4017 M12X55 A4-70	SECHSKANTSCHRAUBE		
36	10540495	4	HEX NUT ISO 10511 M12 A4	SECHSKANTMUTTER		
37	726904014	1	RUBBER MOUNT	LAGER GUMMI		
39	790212314	2	BUSHING 25/40X56	BUCHSE		
40	432016214	1	SAFETY PLUG W HINGE-LID 8X42	SICHERHEITSKLAPPSTECKER		
42	11942798	1	PIN	BOLZEN		
50	10586253	1	WP	WP		
55	10540511	4	WASHER ISO 7093-1 10 A4	SCHEIBE		
56	406518714	4	HEX SCREW ISO 4017 M10X20 A4-70	SECHSKANTSCHRAUBE		
64	790306414	1	TURNBUCKLE	SPANNSCHLOSS		
65	385072014	2	COVER	DECKEL		
66	406501514	6	HEX SCREW ISO 4017 M8X16 A4-70	SECHSKANTSCHRAUBE		
67	420001014	6	WASHER ISO 7089 8 A4	SCHEIBE		

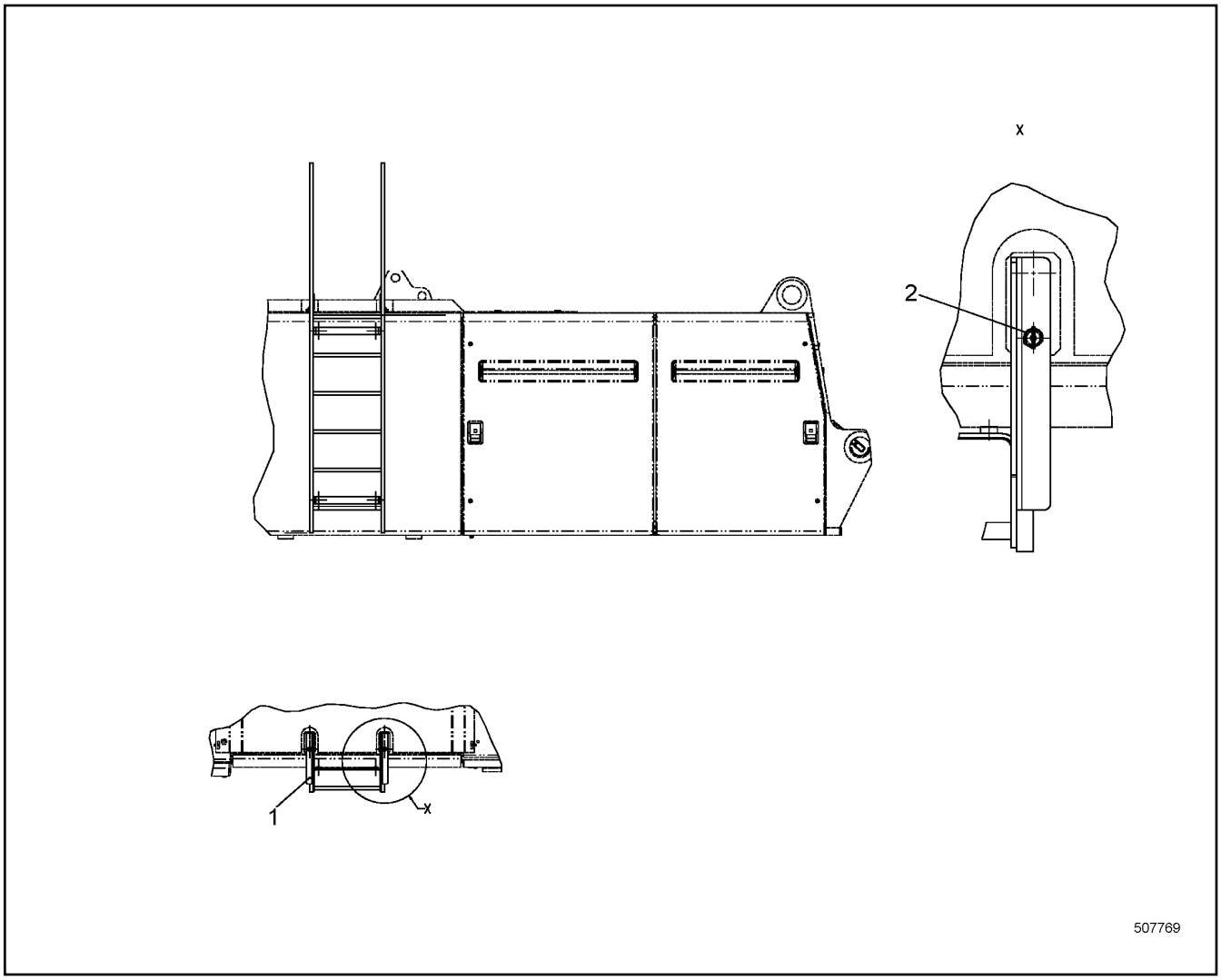

Pos.	Item	Quantity	Description	Bezeichnung	Serie	K
1	10226190	1	LADDER CPL	LEITER KPL		
2	485565814	2	SAFETY PLUG W HINGE-LID 4X27	SICHERHEITSKLAPPSTECKER		

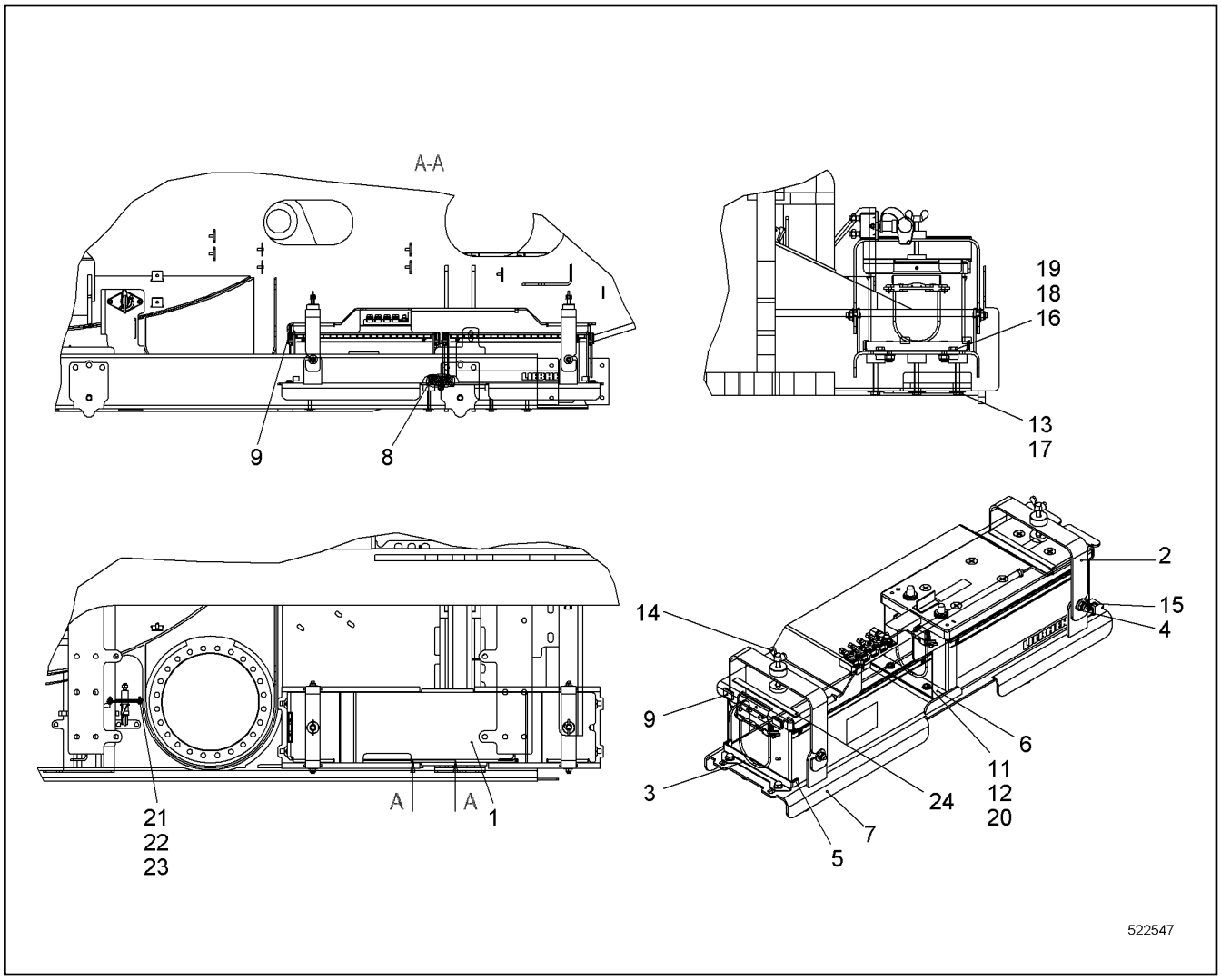

Pos.	Item	Quantity	Description	Bezeichnung	Serie	K
1	10560674	1	BATTERY COVER	BATTERIEABDECKUNG		
2	10597981	2	BRACKET	BUEGEL		
3	10509133	2	CLAMPING BRACKET	KLEMMBUEGEL		
4	10540511	4	WASHER ISO 7093-1 10 A4	SCHEIBE		
5	289058614	0.016	RUBBER	GUMMI		
6	948282314	1	STRIP	LEISTE		
7	10579979	1	CONSOLE	KONSOLE		
8	289058614	0.08	RUBBER	GUMMI		
9	289058614	0.023	RUBBER	GUMMI		
11	4901782	2	WASHER ISO 7089 12 A4	SCHEIBE		
12	485555314	2	SOCKET HEAD SCREW ISO 4762 M12X35 A4-7	ZYLINDERSCHRAUBE		
13	420600408	6	WASHER DIN 440 R11 ST	SCHEIBE		
14	485559814	2	WING SCREW DIN 316 M10X80 4.6	FLUEGELSCHRAUBE		
15	10540494	4	HEX NUT ISO 10511 M10 A4	SECHSKANTMUTTER		
16	406518714	4	HEX SCREW ISO 4017 M10X20 A4-70	SECHSKANTSCHRAUBE		
17	10539293	6	HEX SCREW ISO 4017 M10X75 A4-70	SECHSKANTSCHRAUBE		
18	420001114	4	WASHER ISO 7089 10 A4	SCHEIBE		
19	485550014	4	CAGE NUT M10-RR-140-62	KAEFIGMUTTER		
20	10540495	2	HEX NUT ISO 10511 M12 A4	SECHSKANTMUTTER		
21	10540484	2	HEX NUT ISO 10511 M5 A4	SECHSKANTMUTTER		
22	406501814	2	HEX SCREW ISO 4017 M5X20 A4-70	SECHSKANTSCHRAUBE		
23	485570714	4	WASHER ISO 7093-1 5 A4	SCHEIBE		
24	262107814	6	CELL RUBBER	ZELLGUMMI		

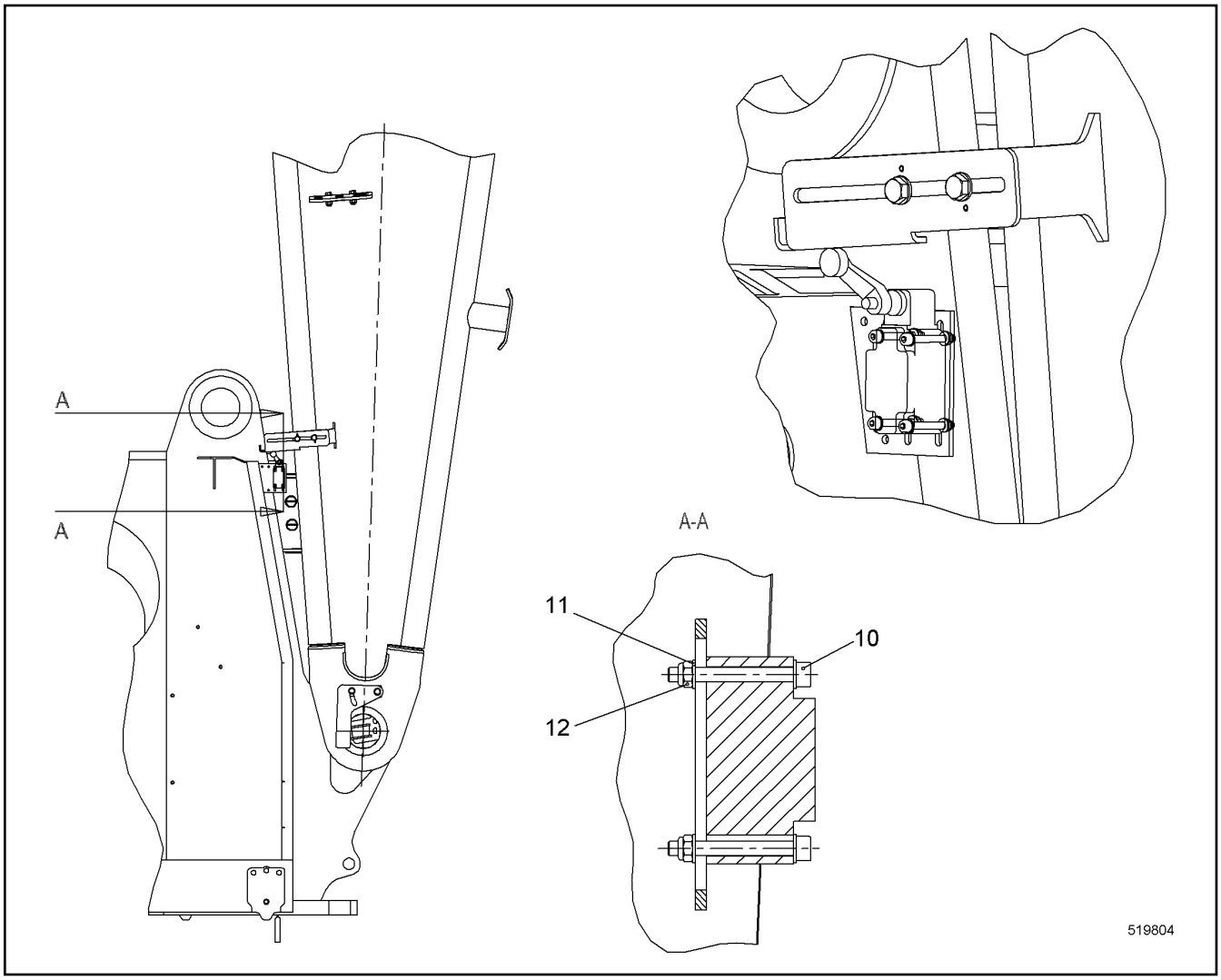

Pos.	Item	Quantity	Description	Bezeichnung	Serie	K
10	404214114	4	SOCKET HEAD SCREW ISO 4762 M5X45 10.9	ZYLINDERSCHRAUBE		
11	420005214	8	WASHER ISO 7089 5 A4	SCHEIBE		
12	10540484	4	HEX NUT ISO 10511 M5 A4	SECHSKANTMUTTER		

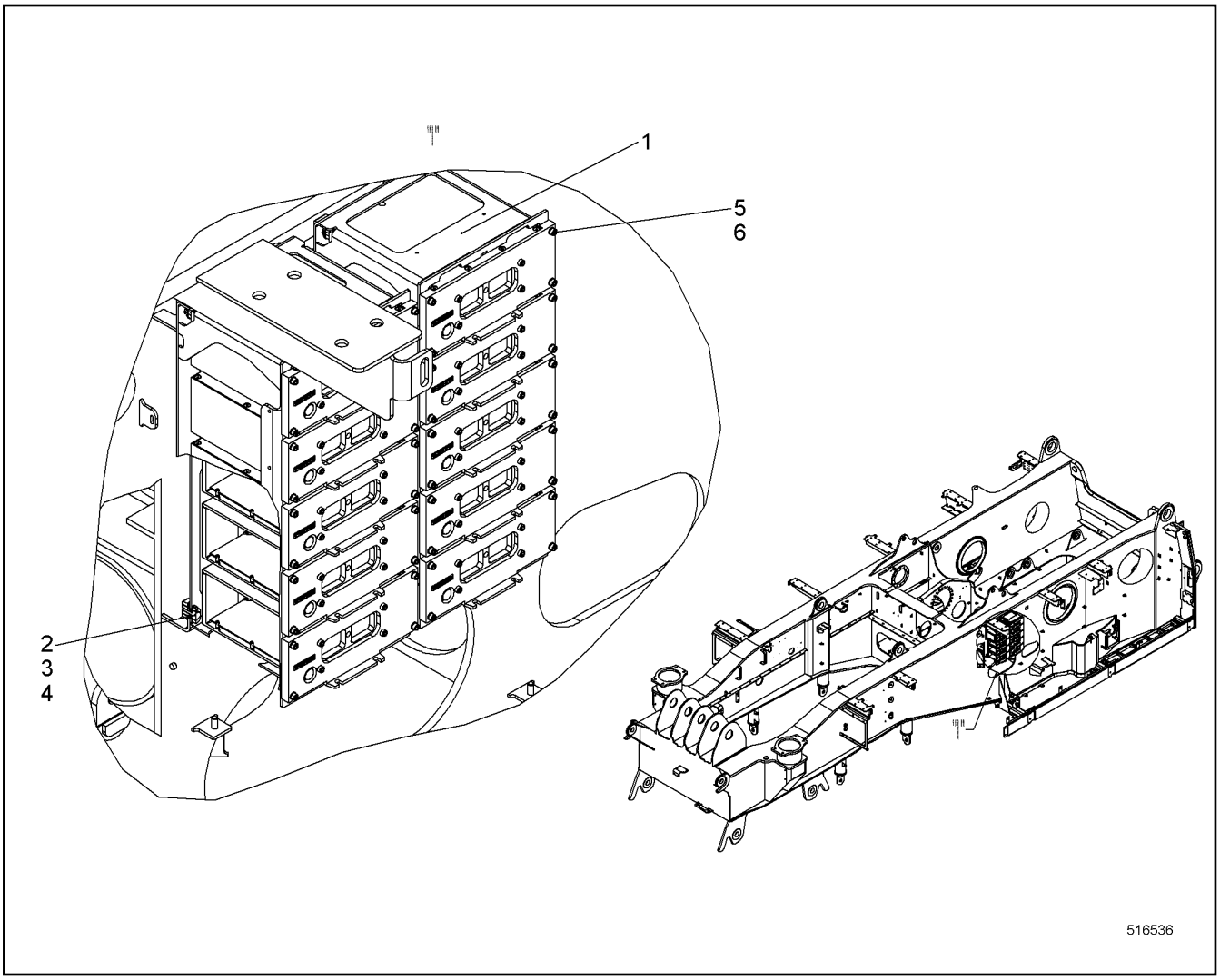

Pos.	Item	Quantity	Description	Bezeichnung	Serie	K
1	916793914	2	MODULE ASSEMBLY GROUP CARRIER	MODULBAUGRUPPENTRAEGER		
2	485549914	8	CAGE NUT M10-RR-140-47	KAEFIGMUTTER		
3	406527414	8	HEX SCREW ISO 4017 M10X18 A4-70	SECHSKANTSCHRAUBE		
4	420001114	8	WASHER ISO 7089 10 A4	SCHEIBE		
5	420005214	40	WASHER ISO 7089 5 A4	SCHEIBE		
6	10278936	40	SOCKET HEAD SCREW ISO 4762 M5X20 A4-7	ZYLINDERSCHRAUBE		

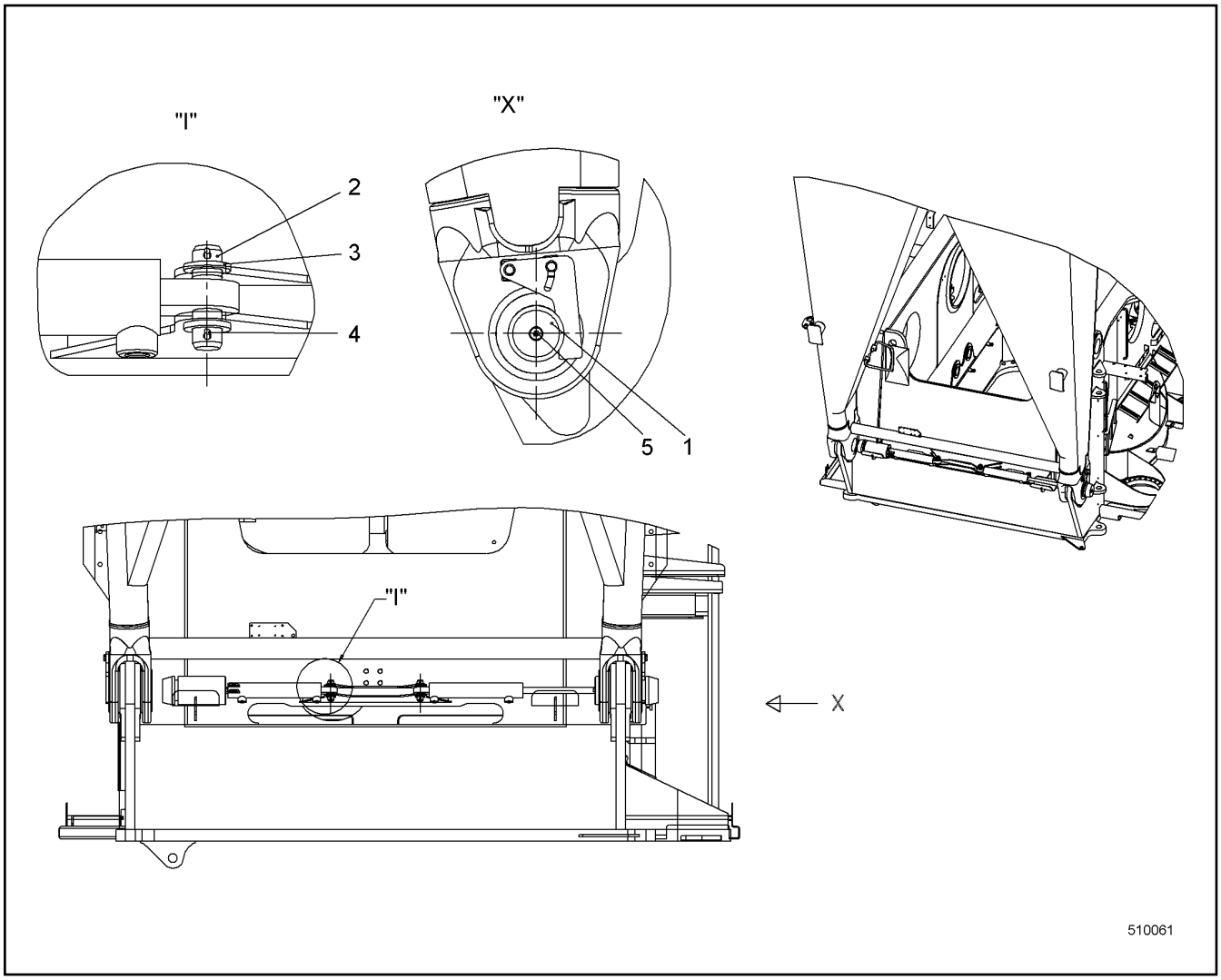

Pos.	Item	Quantity	Description	Bezeichnung	Serie	K
1	959712214	2	PIN 120X270 35NICRMOV125	BOLZEN		
2	450052114	2	PIN DIN EN 22340-B 25F8X88 LHRD900-40;100	BOLZEN		
3	421102214	4	WASHER DIN EN 28738 26 ST;	SCHEIBE		
4	433006614	4	SPLIT PIN ISO 1234 5X45	SPLINT		
5	7743242	2	HYDRAULIC-TYPE LUBRICAT.NIPPLE	KEGELSCHMIERNIPPEL		

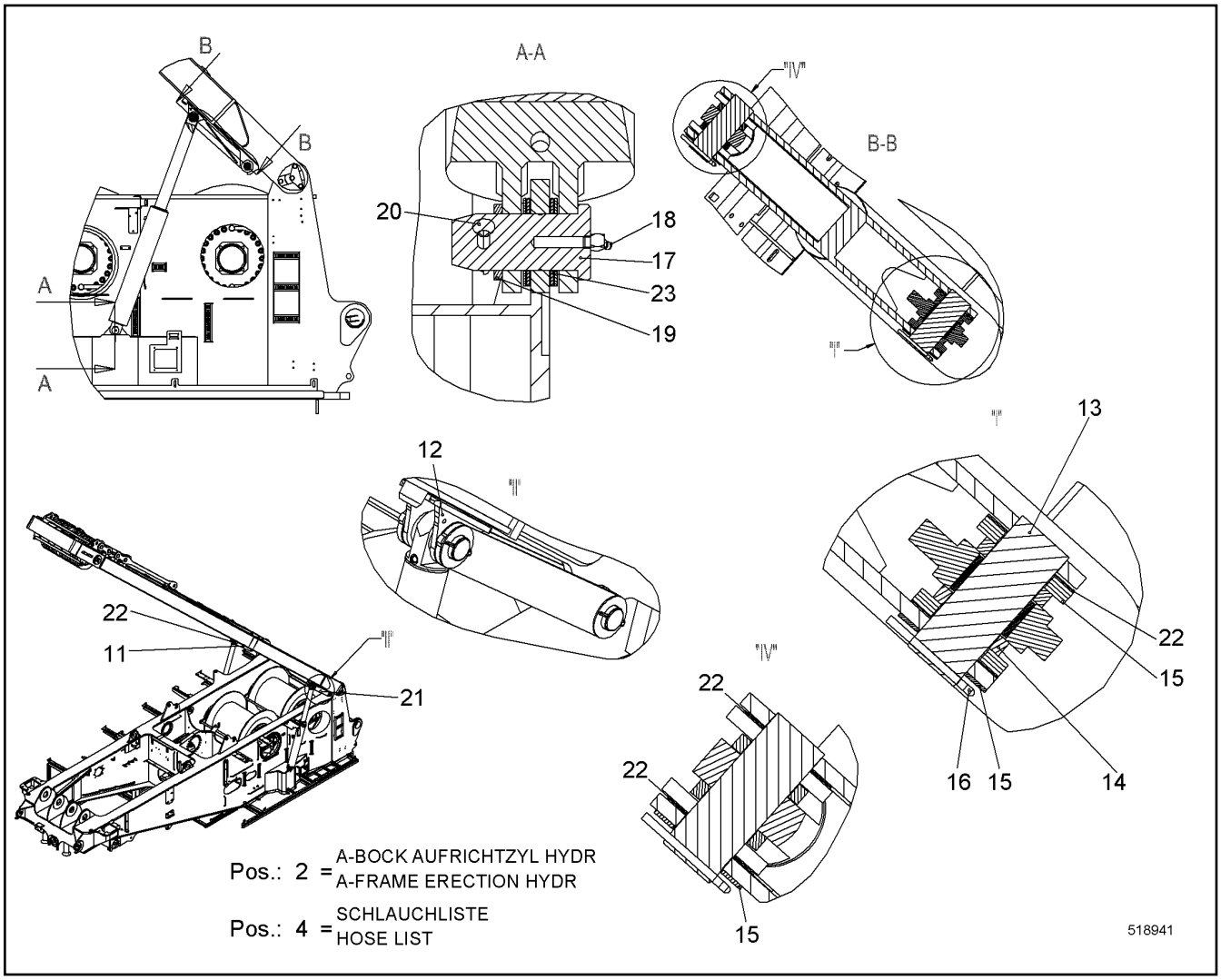

Pos.	Item	Quantity	Description	Bezeichnung	Serie	K
2	10519695	1	A-FRAME ERECTION HYDR ⇨ ❑ 72	A-BOCK AUFRICHTZYL HYDR		
4	10545451	1	HOSE LIST ⇨ ❑ 76	SCHLAUCHLISTE		
11	11235361	1	MOUNTING LINK LEFT CPL	LASCHE LI KPL		
12	10533999	2	ROCKER ST.CONST.	WIPPE SCHWK		
13	10534039	4	PIN 50X138 LHRD900-40;10019758	BOLZEN		
14	10534042	8	BUSHING 51/70X13.5 POLYAMID	BUCHSE		
15	949740514	20	WASHER 52/92X3 PA 6 G	SCHEIBE		
16	433008214	4	SPLIT PIN ISO 1234 6.3X71 A4	SPLINT		
17	950663614	2	PIN 60X110 LHRD750-30;10019758	BOLZEN		
18	7001228	2	HYDRAULIC-TYPE LUBRICAT.NIPPLE	KEGELSCHMIERNIPPEL		
19	421103214	2	WASHER DIN EN 28738 45 ST;	SCHEIBE		
20	433010314	2	SPLIT PIN ISO 1234 10X80 A4	SPLINT		
21	11235382	1	MOUNTING LINK RIGHT CPL	LASCHE RE KPL		
22	11241005	16	WASHER 52/92X1 PA 6 G	SCHEIBE		
23	10593096	8	WASHER 46/70X2 POLYAMID	SCHEIBE		

LIEBHERR

138406_ETK_001

A-FRAME ERECTION HYDR
A-BOCK AUFRICHTZYL HYDR

10 51 969 5

A-Bock-Aufrichtzylinder

A-frame elevating cylinder

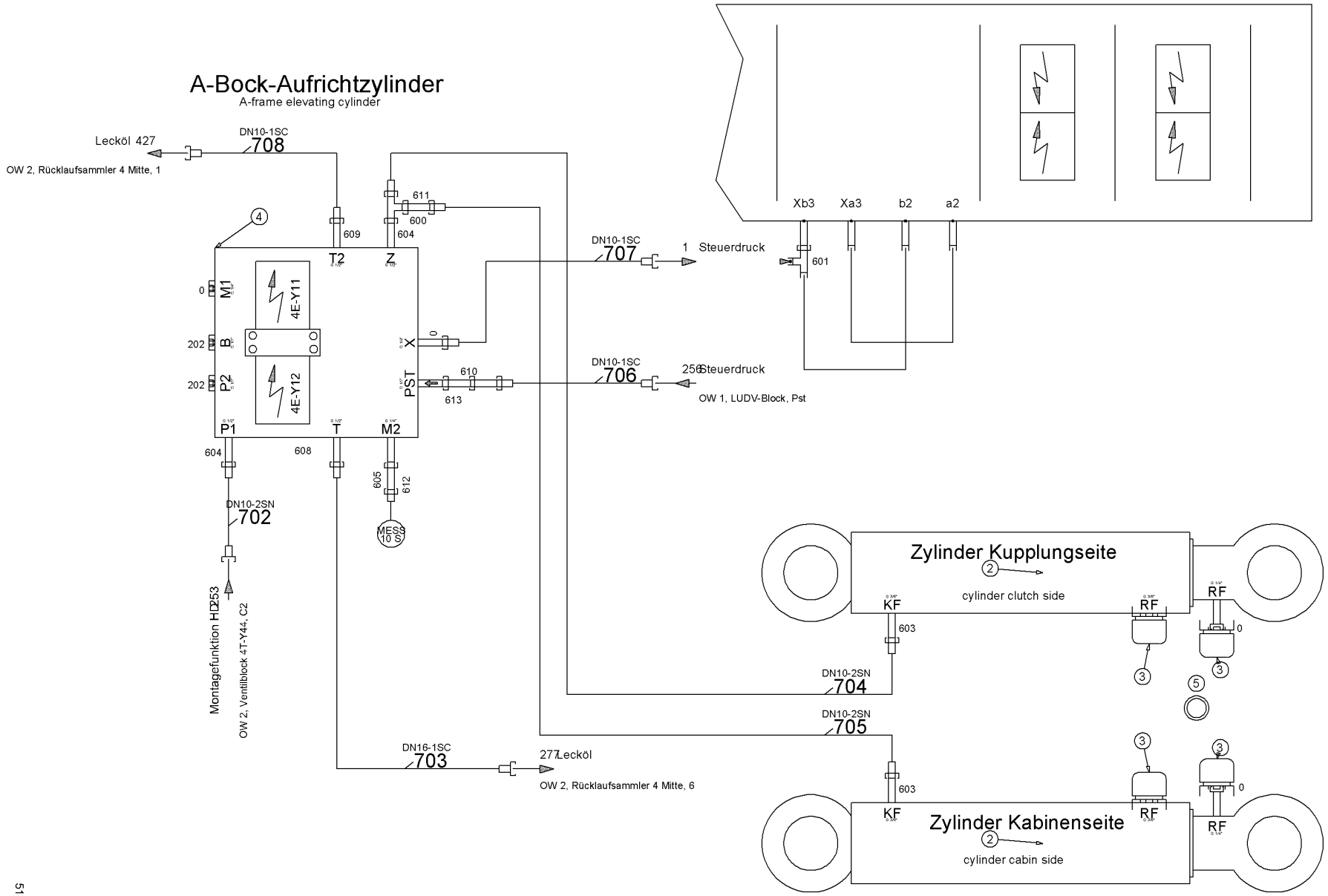

517862

Pos.	Item	Quantity	Description	Bezeichnung	Serie	K
2	592104114	2	DOUBLE-ACTING CYL ⇨ ❑ 74	DOPPELWIRKZYL		
3	540136314	4	VENTILATION VALVE	ENTLUEFTUNGSVENTIL		
4	10225408	1	VALVE BLOCK ⇨ ❑ 75	VENTILBLOCK		
5	710103814	4	SEALING RING	DICHTRING		
201	510694514	2	GAUGE CONNECTION	MESSSTUTZEN		
202	247112702	2	FITTING	VERSCHRAUBUNG		
600	7617461	1	FITTING	VERSCHRAUBUNG		
603	471032708	2	FITTING	VERSCHRAUBUNG		
604	471032608	2	FITTING	VERSCHRAUBUNG		
605	471004514	1	FITTING	VERSCHRAUBUNG		
608	247009702	1	FITTING	VERSCHRAUBUNG		
609	247009402	1	FITTING	VERSCHRAUBUNG		
610	485433514	1	FITTING	VERSCHRAUBUNG		
611	7617354	1	FITTING	VERSCHRAUBUNG		
612	7617268	1	FITTING	VERSCHRAUBUNG		
613	7617460	1	FITTING	VERSCHRAUBUNG		
614	7362091	1	FITTING	VERSCHRAUBUNG		
615	247043202	2	FITTING	VERSCHRAUBUNG		
616	247117302	1	FITTING	VERSCHRAUBUNG		

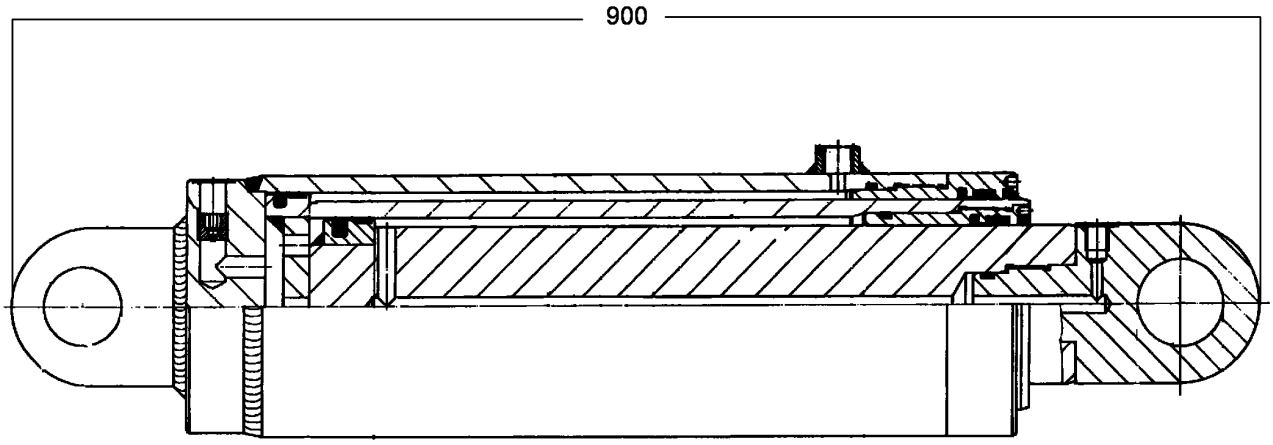

Pos.	Item	Quantity	Description	Bezeichnung	Serie	K
2	11909669	1	TELESCOPE	TELESKOP		
90	11918996	1	ROD EYE	STANGENAUGE		
180	726466314	1	O-RING	O-RING		
181	11918997	2	SUPPORTING RING	STUETZRING		
190	10504737	1	BUSHING 50/60X35 CUZN25AL5	BUCHSE		
270	11249191	1	NOZZLE	DUESE		
900	790407714	1	SEALING SET CPL CYL	DS KPL ZYL		

Pos.: 4 = DROSSELRUECKSCHLAGVENTIL
LOW REGULATING CHECK VALVE

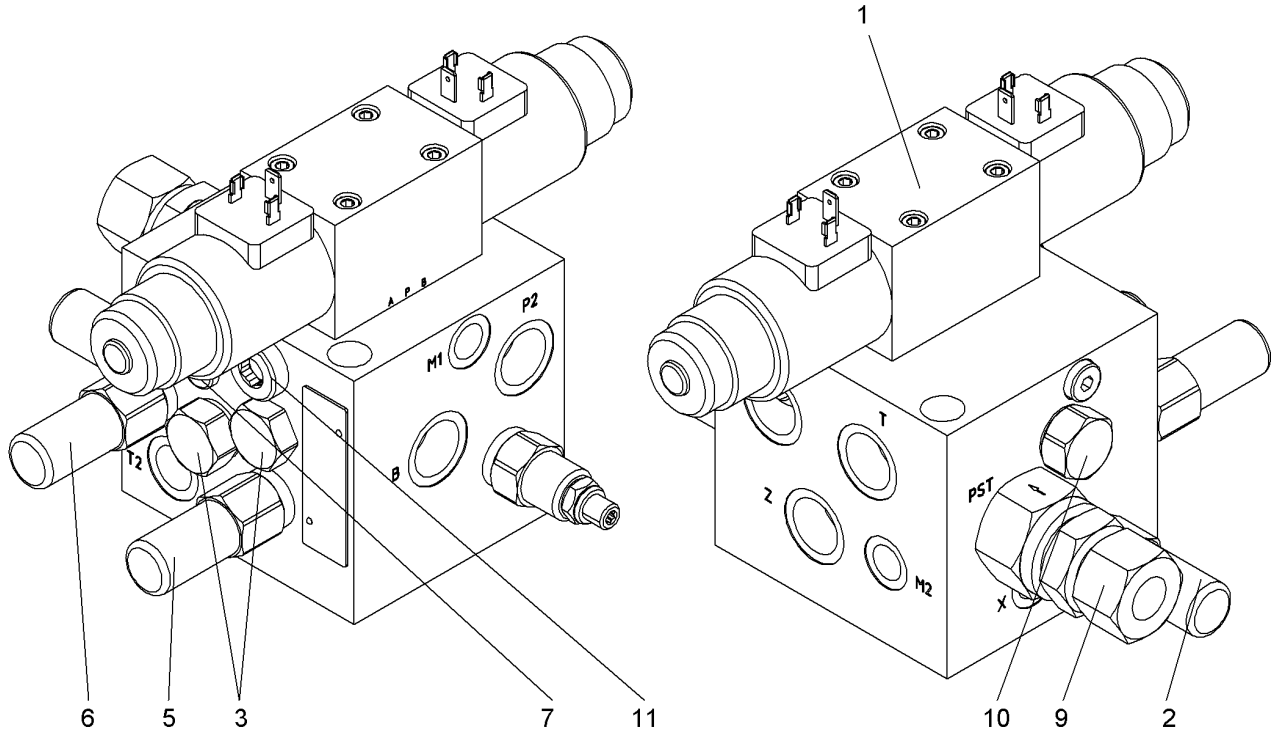

Pos.	Item	Quantity	Description	Bezeichnung	Serie	K
1	11233727	1	DIRECTIONAL CONTROL VALVE	WEGEVENTIL		
2	10350546	1	PRESSURE LIMITING VALVE	DRUCKBEGRENZUNGSVENTIL		
3	11233729	2	NON-RETURN VALVE	RUECKSCHLAGVENTIL		
4	11233730	1	FLOW REGULATING CHECK VALVE	DROSSELRUECKSCHLAGVENTIL		
5	11233731	1	PRESSURE LIMITING VALVE	DRUCKBEGRENZUNGSVENTIL		
6	11233731	1	PRESSURE LIMITING VALVE	DRUCKBEGRENZUNGSVENTIL		
7	11233732	1	NOZZLE	DUESE		
9	11233742	1	NON-RETURN VALVE	RUECKSCHLAGVENTIL		
10	11233749	1	NON-RETURN VALVE	RUECKSCHLAGVENTIL		
11	11233751	1	NON-RETURN VALVE	RUECKSCHLAGVENTIL		

ACHTUNG !
ATTENTION !
ATTENTION !
ATENCIÓN !
ATENÇÃO !
ВНИМАНИЕ

Für Schlauchbestellungen kann über die Schlauchnummer, in der entsprechenden Schlauchliste, die Identnummer festgestellt werden.

For ordering flexible hoses you can find the identification number through the hose-number in the corresponding hose-list.

Pour des ordres de tuyau flexible le nombre d'identification on voit dans la liste de tuyau flexible correspondente.

Para el pedido de manguera, indicar el número de identificación de la manguera de la lista respectiva.

Para se encomendar uma mangueira, consulte o número de identificaçao na respectiva lista de mangueiras.

Для оформления заказов на шланги/рукавы идент. № может быть определен при помощи номера шланга/рукава, указанного в соотетствующем перечне шлангов/рукавов.

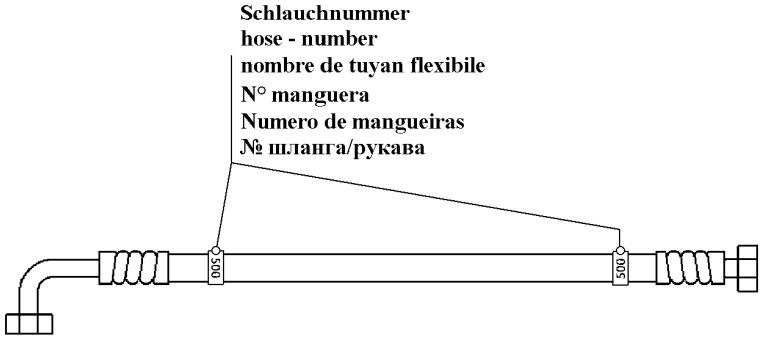

500000

Pos.	Item	Quantity	Description	Bezeichnung	Serie	K
702	928137714	1	HOSE CPL	SCHLAUCH KPL		
703	928591114	1	HOSE CPL	SCHLAUCH KPL		
704	928538414	1	HOSE CPL	SCHLAUCH KPL		
705	929376814	1	HOSE CPL	SCHLAUCH KPL		
706	919791614	1	HOSE CPL	SCHLAUCH KPL		
707	918805114	1	HOSE CPL	SCHLAUCH KPL		
708	919127514	1	HOSE CPL	SCHLAUCH KPL		

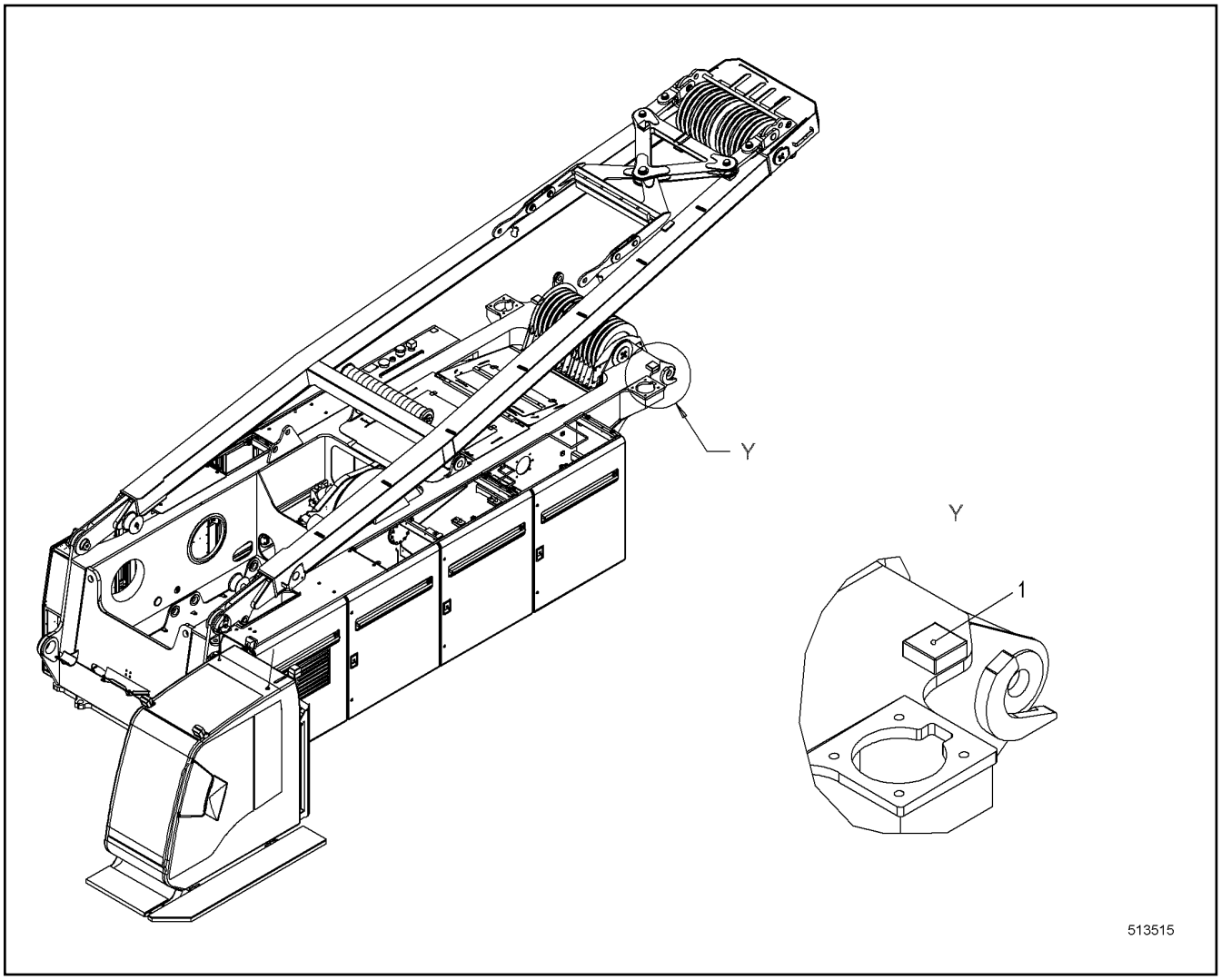

Pos.	Item	Quantity	Description	Bezeichnung	Serie	K
1	10098143	2	BASE PLATE	AUFLAGEPLATTE		

OHNE BILD
WITHOUT ILLUSTRATION
SANS PLANCHE
SIN FIG.
SEM ILUSTRAÇÃO
БЕЗ ИЗОБРАЖЕНИЯ

600000

Pos.	Item	Quantity	Description	Bezeichnung	Serie	K
10	11928852	1	CENTRAL POWER UNIT CPL ⇨ ❑ 79	ZENTRALAGGREGAT KPL		
11	11244090	1	PANELLING SUPERSTR. INSTAL.CPL ⇨ ❑ 307	VERKLEIDUNG OW EINBAU KPL		
12	11249222	1	COVER UNDERSIDE ⇨ ❑ 325	ABDECKUNG UNTERSEITE		
14	11244837	1	MOUNTING PARTS SUPERSTRUCTURE ⇨ ❑ 327	BEF-TEILE OW		

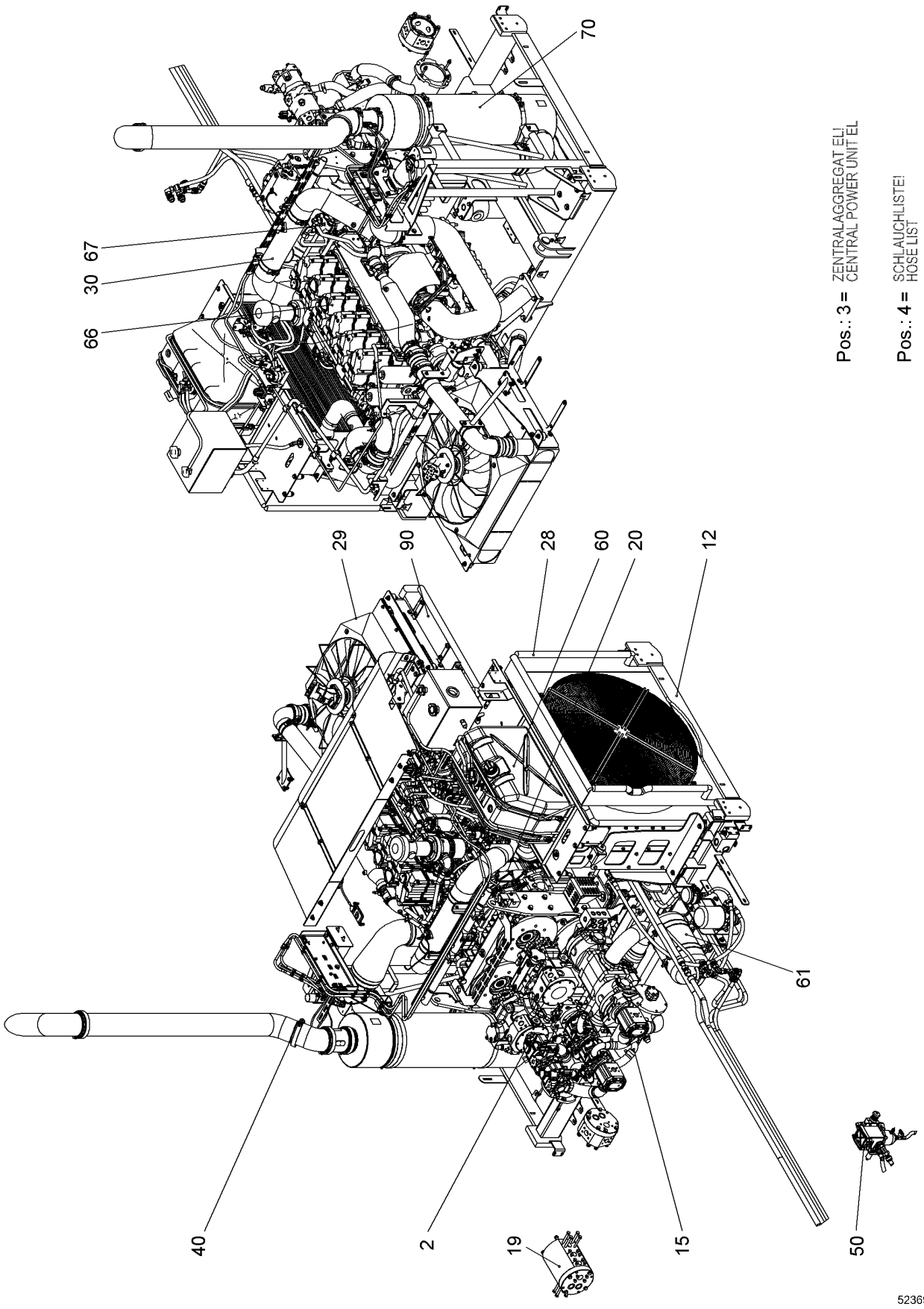
70
67
30
66
29
90
28
60
20
12
61
40
2
19
15
50
Pos.: 3 = ZENTRALAGGREGAT ELI
CENTRAL POWER UNIT EL
Pos.: 4 = SCHLAUCHLISTE!
HOSE LIST
523692

Pos.	Item	Quantity	Description	Bezeichnung	Serie	K
2	11247735	1	HYDR POWER UNIT ⇨ ❑ 81	AGGREGAT HYDR		
3	11244487	1	CENTRAL POWER UNIT EL ⇨ ❑ 172	ZENTRALAGGREGAT EL		
4	11241137	1	HOSE LIST ⇨ ❑ 173	SCHLAUCHLISTE		
12	11241138	1	MOTOR BEARING CPL ⇨ ❑ 175	MOTORLAGER KPL		
15	10519481	1	SUCTION PIPE OIL ⇨ ❑ 177	ANSAUGROHR OEL		
19	10580170	1	RETURN PIPE ⇨ ❑ 180	RUECKLAUFROHR		
20	11241139	1	ADD-ON PARTS DIESEL ENGINE ⇨ ❑ 181	ANBAUTEILE DIESELMOTOR		
28	11941518	1	COOLER INSTALLATION WATER ⇨ ❑ 182	KUEHLER EINBAU WASSER		
29	11241141	1	COOLER INSTALLATION CHARGE AIR ⇨ ❑ 188	KUEHLER EINBAU LADELUFT		
30	11929220	1	SUCTION UNIT AIR ⇨ ❑ 193	ANSAUGANLAGE LUFT		
40	11241143	1	EXHAUST GAS SYSTEM ⇨ ❑ 197	ABGASANLAGE		
50	11241144	1	FUEL SYSTEM ⇨ ❑ 199	KRAFTSTOFFANLAGE		
60	11929236	1	ASSEMBLY INSTAL. ⇨ ❑ 203	ANLAGE HARNSTOFF EINBAU		
61	11929588	1	AIR DUCT CPL ⇨ ❑ 209	LUFTFUEHRUNG KPL		
66	12425454	1	DIESEL ENGINE ⇨ ❑ 213	DIESELMOTOR		
67	11928913	1	COMPRESSOR RFK ⇨ ❑ 299	KOMPRESSOR NRS		
70	11900325	1	EXHAUST GAS SYSTEM ⇨ ❑ 303	ABGASANLAGE		
90	11241146	1	COVER ⇨ ❑ 305	ABDECKUNG		

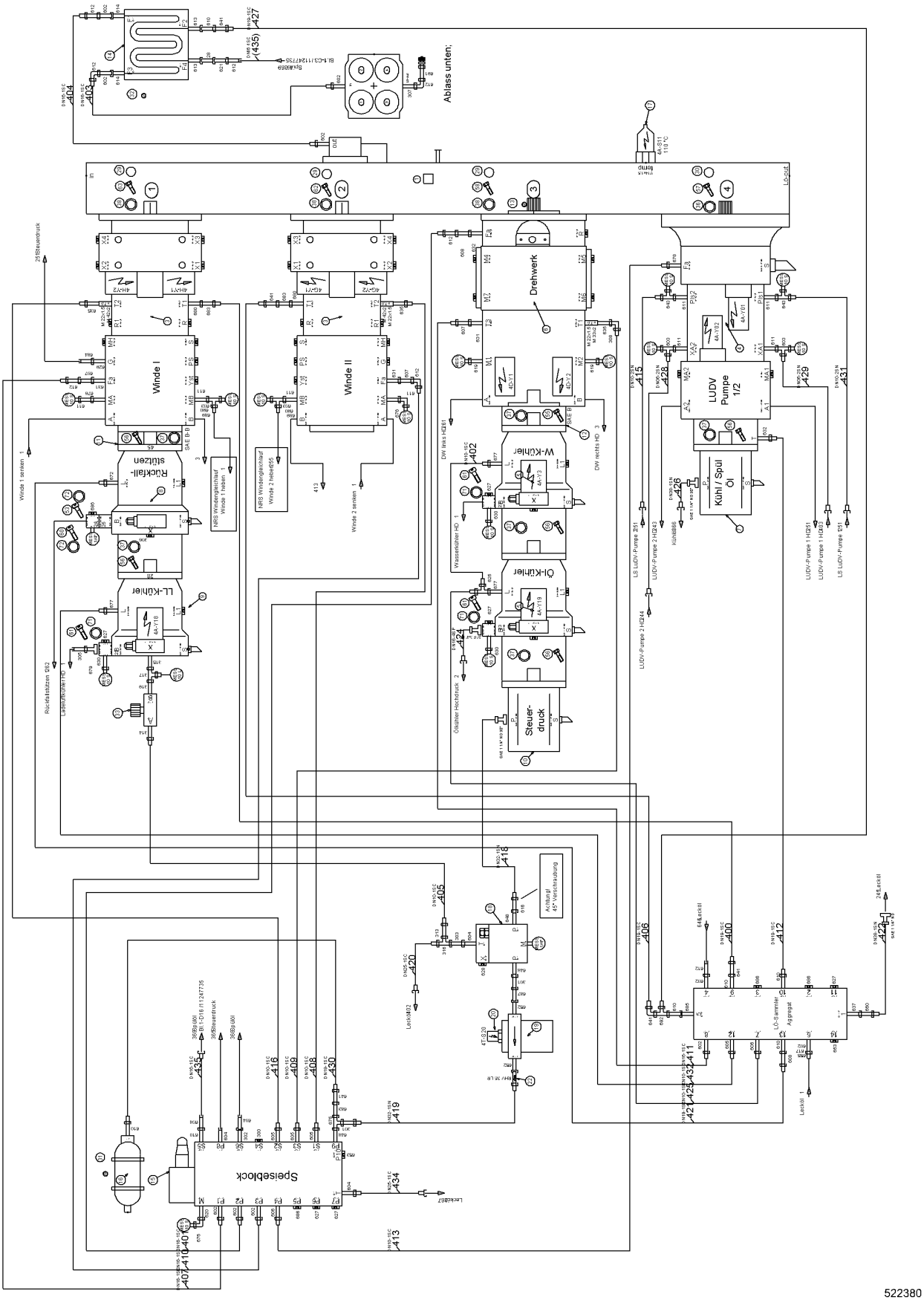

21.6.2017 522380	**138406_ETK_001**	81 (1/4)
LIEBHERR	**HYDR POWER UNIT** **AGGREGAT HYDR**	**11 24 773 5**

Pos.	Item	Quantity	Description	Bezeichnung	Serie	K
1	11246820	1	DISTRIBUTOR GEARBOX ⇨ ❑ 85	VERTEILERGETRIEBE		
2	11253687	1	RESTRICTOR BODY	DROSSELKOERPER		
3	10534307	2	V PUMP ⇨ ❑ 87	V.PUMPE		
4	10118349	1	DOUBLE V-PUMP ⇨ ❑ 103	DOPPELV.PUMPE		
5	10530653	2	V PUMP	V.PUMPE		
6	10128787	1	V PUMP ⇨ ❑ 127	V.PUMPE		
7	512249914	1	GEAR PUMP	ZAHNRADPUMPE		
8	10226505	1	V PUMP ⇨ ❑ 154	V.PUMPE		
9	10226013	1	V PUMP ⇨ ❑ 163	V.PUMPE		
10	512214414	1	GEAR PUMP	ZAHNRADPUMPE		
11	10553922	1	THROUGH DRIVE	DURCHTRIEB		
12	10129874	1	THROUGH DRIVE ⇨ ❑ 149	DURCHTRIEB		
13	10594064	1	COUPLING PIECE	KUPPLUNGSSTUECK		
14	10446225	1	HEAT EXCHANGER	WAERMETAUSCHER		
15	511637714	1	VALVE BLOCK FEED PRESSURE ⇨ ❑ 169	VENTILBLOCKSPEISEDRUCK		
16	510641214	1	BLADDER ACCUMULATOR	BLASENSPEICHER		
17	10513459	1	TEMPERATURE SWITCH	TEMPERATURSCHALTER		
18	511414514	1	PRESSURE LIMITING VALVE ⇨ ❑ 170	DRUCKBEGRENZUNGSVENTIL		
19	10223581	1	PRESSURE FILTER ⇨ ❑ 171	DRUCKFILTER		
20	592200514	1	CLOGGING INDICATOR	VERSCHMUTZUNGSANZEIGE		
22	511419314	1	NON-RETURN VALVE	RUECKSCHLAGVENTIL		
24	944137814	1	FLANGE	FLANSCH		
25	944813514	1	FLANGE	FLANSCH		
26	11253689	2	RESTRICTOR BODY	DROSSELKOERPER		
27	511442214	1	OIL DRAIN PLUG M22X1.5	OELABLASSSCHRAUBE		
28	10446305	1	SPECIAL THREADED UNION	SONDERVERSCHRAUBUNG		
29	726411214	3	O-RING	O-RING		
30	790311914	1	O-RING	O-RING		
31	774212914	2	CLAMP	SCHELLE		
32	10350978	1	FASTENING CLIP	BEF SCHELLE		
33	510497214	1	RESTRICTOR VALVE	DROSSELVENTIL		
36	421700314	4	WASHER DIN 7989-B 18 ST;	SCHEIBE		
37	460022703	14	WASHER EN 14399-6 12 C45	SCHEIBE		
38	422010414	20	WASHER RD 34/20.4X5 30 CRMO V 9	SCHEIBE		
52	4001246	4	HEX SCREW ISO 4017 M10X35 10.9	SECHSKANTSCHRAUBE		
53	4043133	4	SOCKET HEAD SCREW ISO 4762 M10X70 10.9	ZYLINDERSCHRAUBE		
56	4066124	12	HEX SCREW ISO 4017 M12X30 10.9	SECHSKANTSCHRAUBE		
57	10543907	4	HEX SCREW ISO 4017 M16X70 10.9	SECHSKANTSCHRAUBE		
58	10543922	4	HEX SCREW ISO 4017 M20X50 10.9	SECHSKANTSCHRAUBE		
59	4066098	12	HEX SCREW ISO 4017 M10X30 10.9	SECHSKANTSCHRAUBE		
60	4043124	4	SOCKET HEAD SCREW ISO 4762 M10X25 10.9	ZYLINDERSCHRAUBE		
61	404333614	12	SOCKET HEAD SCREW ISO 4762 UNC 3/8"-16	ZYLINDERSCHRAUBE		
62	10544093	4	SOCKET HEAD SCREW ISO 4762 M20X55 10.9	ZYLINDERSCHRAUBE		
63	10544092	4	SOCKET HEAD SCREW ISO 4762 M20X50 10.9	ZYLINDERSCHRAUBE		
70	10472425	3	RECTANGULAR SECTION RING	RECHTECKRING		
71	10490784	13	RECTANGULAR SECTION RING	RECHTECKRING		
72	10490781	2	RECTANGULAR SECTION RING	RECHTECKRING		
300	477704614	1	FITTING	VERSCHRAUBUNG		
301	482530914	2	FITTING	VERSCHRAUBUNG		
302	247091002	1	FITTING	VERSCHRAUBUNG		

Pos.	Item	Quantity	Description	Bezeichnung	Serie	K
303	7617494	1	FITTING	VERSCHRAUBUNG		
304	7409720	2	GAUGE CONNECTION	MESSSTUTZEN		
305	7407108	1	FITTING	VERSCHRAUBUNG		
306	477704914	1	FITTING	VERSCHRAUBUNG		
307	247011602	1	FITTING	VERSCHRAUBUNG		
308	247117702	1	FITTING	VERSCHRAUBUNG		
310	511502414	6	FLANGE HALF	FLANSCHHAELFTE		
312	510587514	2	FLANGE HALF	FLANSCHHAELFTE		
313	485437514	1	FITTING	VERSCHRAUBUNG		
314	7362091	1	FITTING	VERSCHRAUBUNG		
315	471007914	1	FITTING	VERSCHRAUBUNG		
316	247020902	1	FITTING	VERSCHRAUBUNG		
317	247242302	1	FITTING	VERSCHRAUBUNG		
318	510629008	1	GAUGE CONNECTION	MESSSTUTZEN		
319	481933614	1	FITTING	VERSCHRAUBUNG		
602	247009702	10	FITTING	VERSCHRAUBUNG		
603	7367776	4	FITTING	VERSCHRAUBUNG		
604	247010102	4	FITTING	VERSCHRAUBUNG		
605	247009402	4	FITTING	VERSCHRAUBUNG		
606	247009202	2	FITTING	VERSCHRAUBUNG		
607	247041402	3	FITTING	VERSCHRAUBUNG		
608	247041102	3	FITTING	VERSCHRAUBUNG		
610	247009902	7	FITTING	VERSCHRAUBUNG		
611	471008214	8	FITTING	VERSCHRAUBUNG		
612	247108302	8	FITTING	VERSCHRAUBUNG		
613	247043502	2	FITTING	VERSCHRAUBUNG		
614	247043102	2	FITTING	VERSCHRAUBUNG		
616	10531725	1	FITTING	VERSCHRAUBUNG		
617	247049102	1	FITTING	VERSCHRAUBUNG		
619	471004614	2	FITTING	VERSCHRAUBUNG		
620	471004514	1	FITTING	VERSCHRAUBUNG		
621	247261802	1	FITTING	VERSCHRAUBUNG		
625	247128602	1	FITTING	VERSCHRAUBUNG		
627	247128402	6	FITTING	VERSCHRAUBUNG		
628	247117302	1	FITTING	VERSCHRAUBUNG		
629	471033014	1	FITTING	VERSCHRAUBUNG		
630	471032808	3	FITTING	VERSCHRAUBUNG		
631	471031508	3	FITTING	VERSCHRAUBUNG		
632	471031308	2	FITTING	VERSCHRAUBUNG		
635	471039908	3	FITTING	VERSCHRAUBUNG		
637	471034708	1	FITTING	VERSCHRAUBUNG		
641	247126202	5	FITTING	VERSCHRAUBUNG		
643	482431314	2	FITTING	VERSCHRAUBUNG		
648	790453814	3	FITTING	VERSCHRAUBUNG		
652	247044302	2	FITTING	VERSCHRAUBUNG		
653	247142002	2	FITTING	VERSCHRAUBUNG		
655	477700114	1	FITTING	VERSCHRAUBUNG		
660	482530814	1	FITTING	VERSCHRAUBUNG		
671	510694514	14	GAUGE CONNECTION	MESSSTUTZEN		
672	471031108	1	FITTING	VERSCHRAUBUNG		
675	482330814	1	FITTING	VERSCHRAUBUNG		
676	7617268	3	FITTING	VERSCHRAUBUNG		
677	471008014	3	FITTING	VERSCHRAUBUNG		
678	471030508	1	FITTING	VERSCHRAUBUNG		
679	510709214	1	FITTING	VERSCHRAUBUNG		
680	471031808	2	FITTING	VERSCHRAUBUNG		
683	485431214	3	FITTING	VERSCHRAUBUNG		
684	485433314	1	FITTING	VERSCHRAUBUNG		
685	475501914	1	FITTING	VERSCHRAUBUNG		
686	247112702	4	FITTING	VERSCHRAUBUNG		

Pos.	Item	Quantity	Description	Bezeichnung	Serie	K
687	481931614	1	FITTING	VERSCHRAUBUNG		
689	477700414	2	FITTING	VERSCHRAUBUNG		
690	477400314	2	FITTING	VERSCHRAUBUNG		
691	470701414	1	FITTING	VERSCHRAUBUNG		
692	247138602	1	FITTING	VERSCHRAUBUNG		

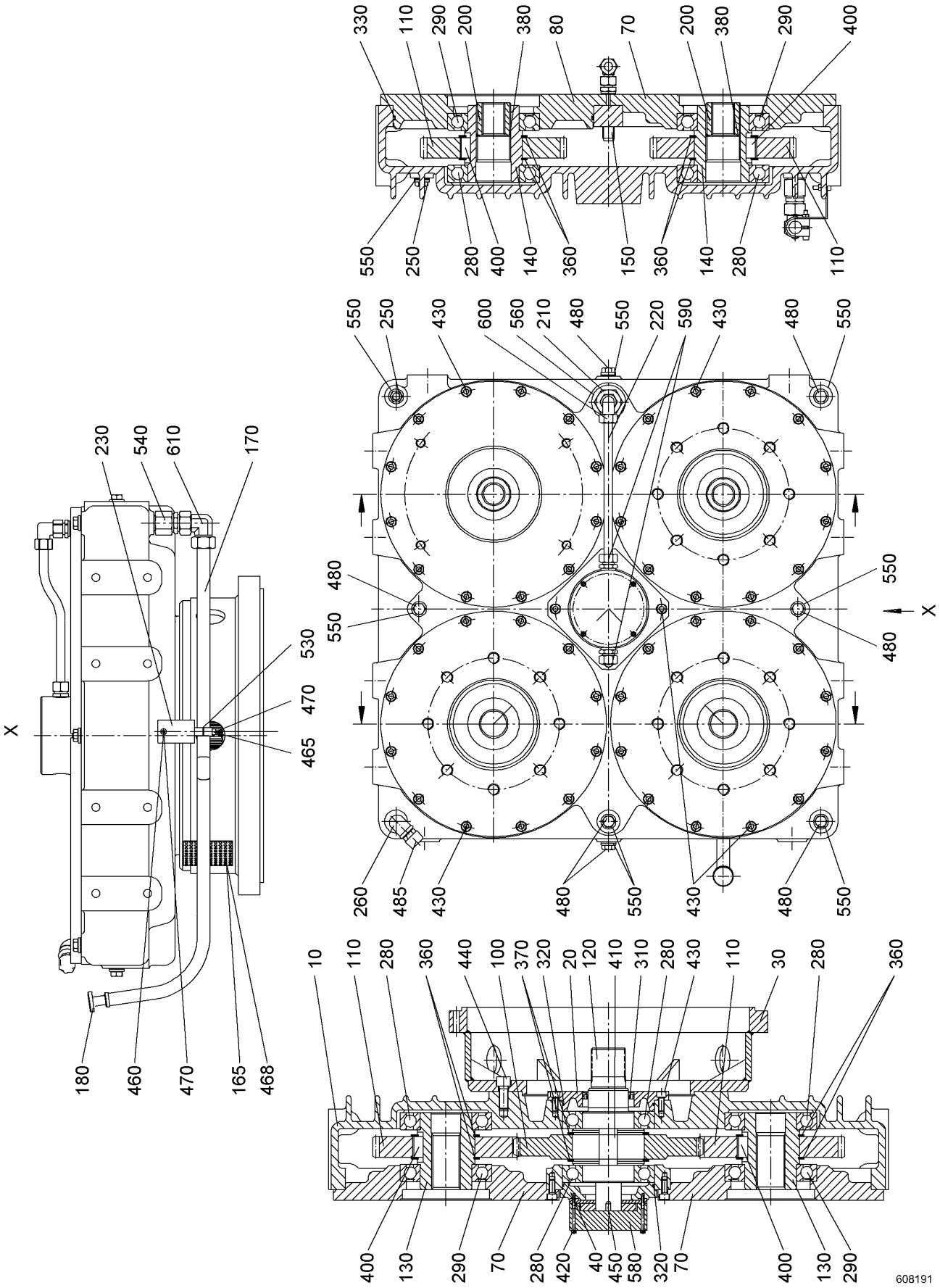
330 110 290 200 380 80 70 200 380 290 400
550 250 280 400 140 360 150 360 140 280 110
550 250 430 600 560 210 480 550 220 590 430 480 550
480 550 550 480 X
260 485 430 480 550 430 480 550
230 540 610 170
530 470 465 X
180 460 470 165 468
10 110 280 360 440 100 370 320 20 120 410 310 280 430 110 30 280 360
400 130 290 70 280 420 40 450 580 320 70 400 130 290
608191

Pos.	Item	Quantity	Description	Bezeichnung	Serie	K
10	11290844	1	HOUSING	GEHAEUSE		
20	592178514	1	SEALING RING COVER	DICHTRINGDECKEL		
30	11250972	1	ADD-ON FLANGE	ANBAUFLANSCH		
40	790403714	1	ADD-ON FLANGE	ANBAUFLANSCH		
70	11250974	3	ADD-ON FLANGE	ANBAUFLANSCH		
80	11290845	1	ADD-ON FLANGE	ANBAUFLANSCH		
100	11294362	1	SPUR WHEEL	STIRNRAD		
110	11294363	4	SPUR WHEEL	STIRNRAD		
120	790346614	1	SPLINE SHAFT	ZAHNWELLE		
130	10350230	2	PROFILE HOLLOW SHAFT	PROFILHOHLWELLE		
140	11253077	2	PROFILE HOLLOW SHAFT	PROFILHOHLWELLE		
150	592316114	1	THREADED PIPE	GEWINDEROHR		
165	11290846	2	PERFORATED PLATE	LOCHBLECH		
170	11290847	1	TUBE	ROHR		
180	11290849	1	OIL DIPSTICK	OELMESSSTAB		
200	11290850	2	COUPLING PIECE	KUPPLUNGSSTUECK		
210	592316314	1	SCREW PLUG	VERSCHLUSSSCHRAUBE		
220	592316414	1	TUBE	ROHR		
230	11290852	1	ANGLE	WINKEL		
250	505105814	2	SCREW PLUG D26X26 G1/2" M14X1.5	VERSCHLUSSSCHRAUBE		
260	505104914	1	VENTILATION FILTER	ENTLUEFTUNGSFILTER		
280	745141814	6	DEEP GROOVE BALL BEARING	RILLENKUGELLAGER		
290	10350232	4	DEEP GROOVE BALL BEARING	RILLENKUGELLAGER		
310	790403914	1	SEALING RING	DICHTRING		
320	10593504	2	O-RING	O-RING		
330	790347014	1	O-RING	O-RING		
360	10530197	8	LOCKING RING DIN 471 A100X3	SICHERUNGSRING		
370	485529714	2	LOCKING RING DIN 471 A125X4	SICHERUNGSRING		
380	11268816	2	LOCKING RING DIN 472 J56X2	SICHERUNGSRING		
400	571827308	8	FITTING KEY DIN 6885 B28X16X36 ST	PASSFEDER		
410	485529814	2	FITTING KEY DIN 6885 B32X18X40	PASSFEDER		
420	11250990	4	SOCKET HEAD SCREW ISO 4762 M5X65 8.8	INNENSECHSKANTSCHRAUBE		
430	404208514	58	SOCKET HEAD SCREW ISO 4762 M10X25 A4-7	ZYLINDERSCHRAUBE		
440	10530200	12	SOCKET HEAD SCREW ISO 4762 M16X40 8.8	ZYLINDERSCHRAUBE		
450	10567120	1	FITTING KEY DIN 6885 B8X7X12	PASSFEDER		
460	11290853	1	SOCKET HEAD SCREW ISO4762 M6X25 8.8	INNENSECHSKANTSCHRAUBE		
465	11290854	1	SOCKET HEAD SCREW ISO4762 M6X45 8.8	INNENSECHSKANTSCHRAUBE		
468	11250998	8	HEX SCREW ISO 4017 M5X12 8.8	SECHSKANTSCHRAUBE		
470	11290855	2	HEX NUT M6	SECHSKANTMUTTER		
480	4000898	9	SCREW PLUG DIN 910 R1/2" 5.8	VERSCHLUSSSCHRAUBE		
485	693113814	1	VENTILATION FILTER	ENTLUEFTUNGSFILTER		
530	11290856	1	PIPE CLAMP	ROHRSCHELLE		
540	11290857	1	REDUCING STUD	REDUZIERSTUTZEN		
550	790347114	11	SEALING RING	DICHTRING		
560	790347214	1	SEALING RING	DICHTRING		
580	592178914	1	LUBRICATING OIL PUMP	SCHMIEROELPUMPE		
590	471016401	2	FITTING	VERSCHRAUBUNG		
600	592317014	1	THREADED ELBOW JOINT	WINKELVERSCHRAUBUNG		
610	11268711	1	THREADED ELBOW JOINT	WINKELVERSCHRAUBUNG		

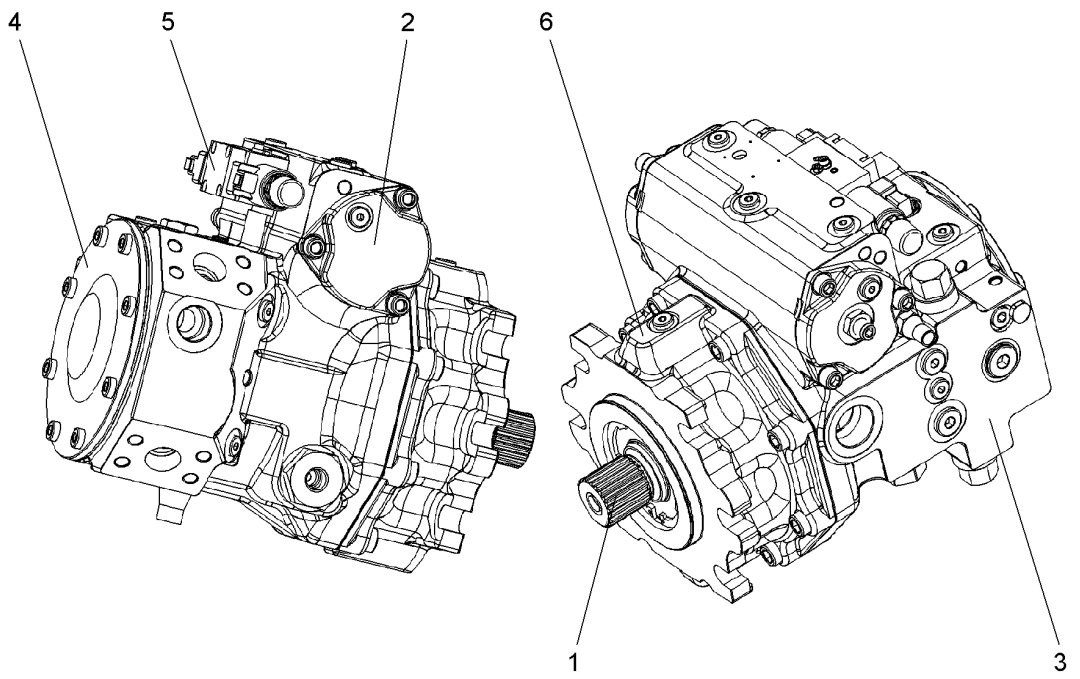

Pos.	Item	Quantity	Description	Bezeichnung	Serie	K
1	11219902	1	DRIVING GEAR ⇨ ❑ 88	TRIEBWERK		
2	11219905	1	ADJUSTMENT ⇨ ❑ 89	VERSTELLUNG		
3	11219910	1	PUMP HOUSING ⇨ ❑ 92	PUMPENGEHAEUSE		
4	11219350	1	PUMP COVER ⇨ ❑ 100	PUMPENDECKEL		
5	11219917	1	CONTROL GEAR ⇨ ❑ 101	STEUERGERAET		
6	11219918	1	BEARING FLANGE ⇨ ❑ 102	LAGERFLANSCH		

OHNE BILD
WITHOUT ILLUSTRATION
SANS PLANCHE
SIN FIG.
SEM ILUSTRAÇÃO
БЕЗ ИЗОБРАЖЕНИЯ

600000

Pos.	Item	Quantity	Description	Bezeichnung	Serie	K
1	11219920	1	DRIVING SHAFT	TRIEBWELLE		
2	11219922	1	CRADLE	WIEGE		
3	11219924	1	HYDRAULIC PARTS DRIVING GEAR	TRIEBWERK HYDRAULIKTEIL		
4	11219356	1	SEALING SET	DS		

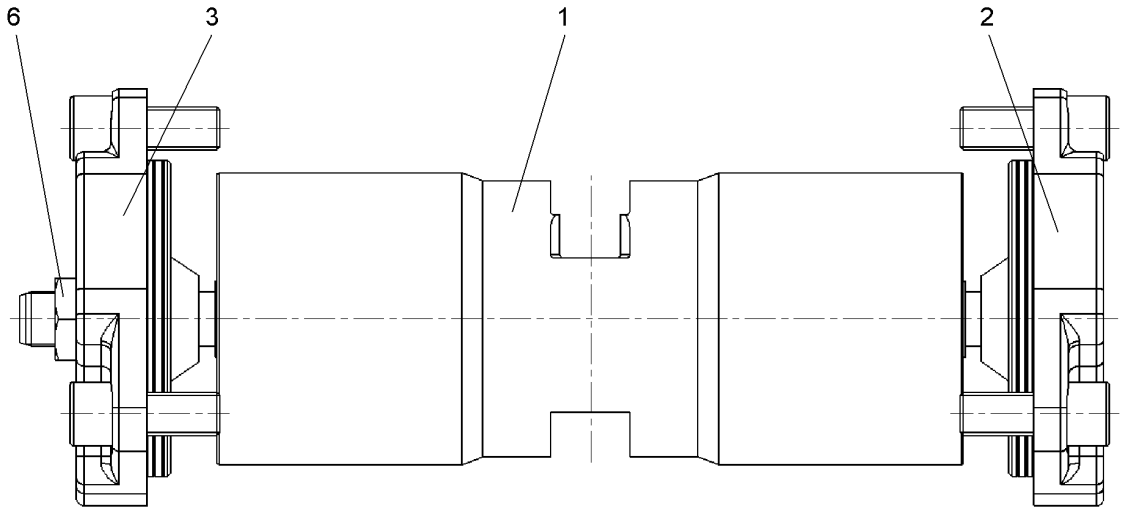

Pos.	Item	Quantity	Description	Bezeichnung	Serie	K
1	11219925	1	ADJUSTING PISTON	STELLKOLBEN		
2	11219927	1	COVER ⇨ ❑ 90	DECKEL		
3	11219929	1	COVER ⇨ ❑ 91	DECKEL		
6	4980793	1	HEX NUT ISO 8675 M16X1.5 4	SECHSKANTMUTTER		

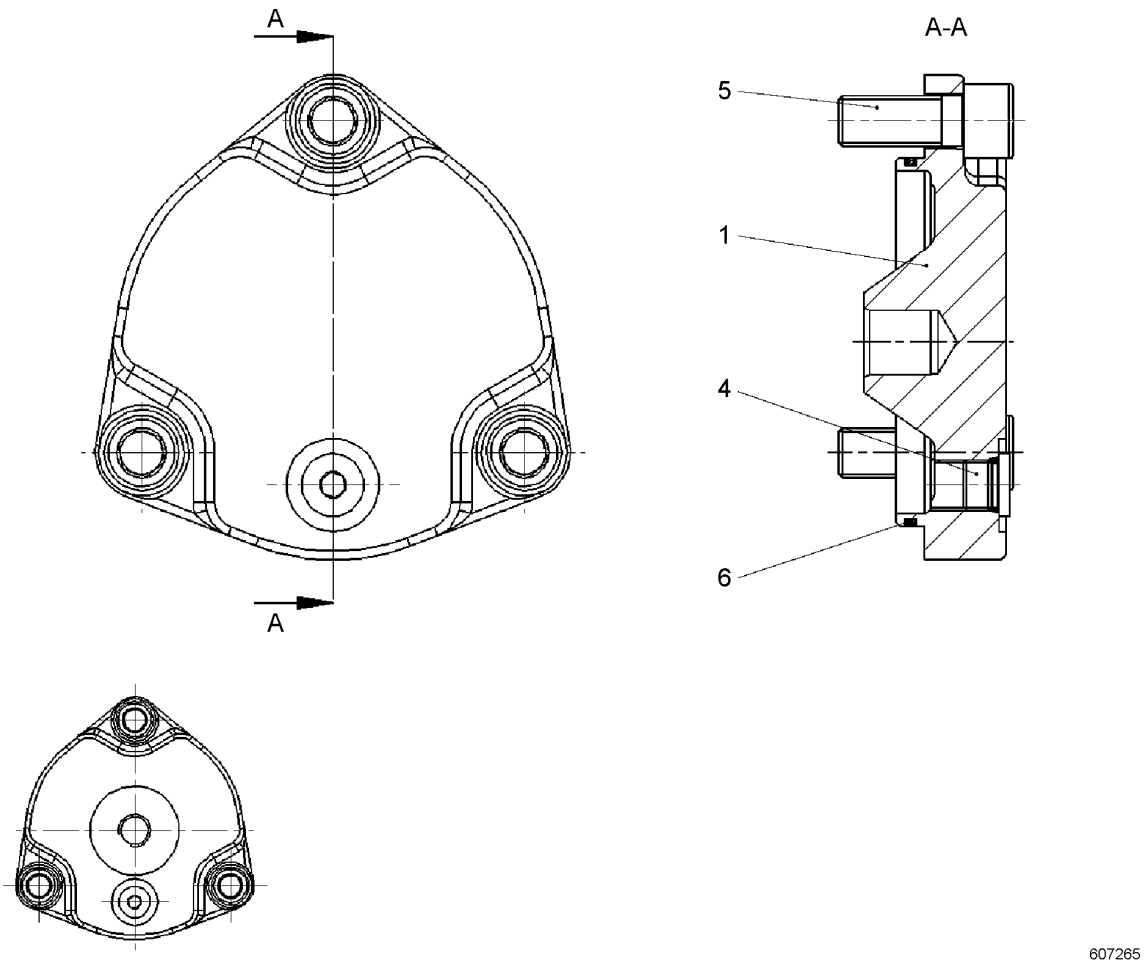

Pos.	Item	Quantity	Description	Bezeichnung	Serie	K
1	11267378	1	COVER	DECKEL		
4	10337050	1	SCREW PLUG M14X1.5 NBR	VERSCHLUSSSCHRAUBE		
5	11217079	3	SOCKET HEAD SCREW	ZYLINDERSCHRAUBE		
6	11267377	1	O-RING	O-RING		

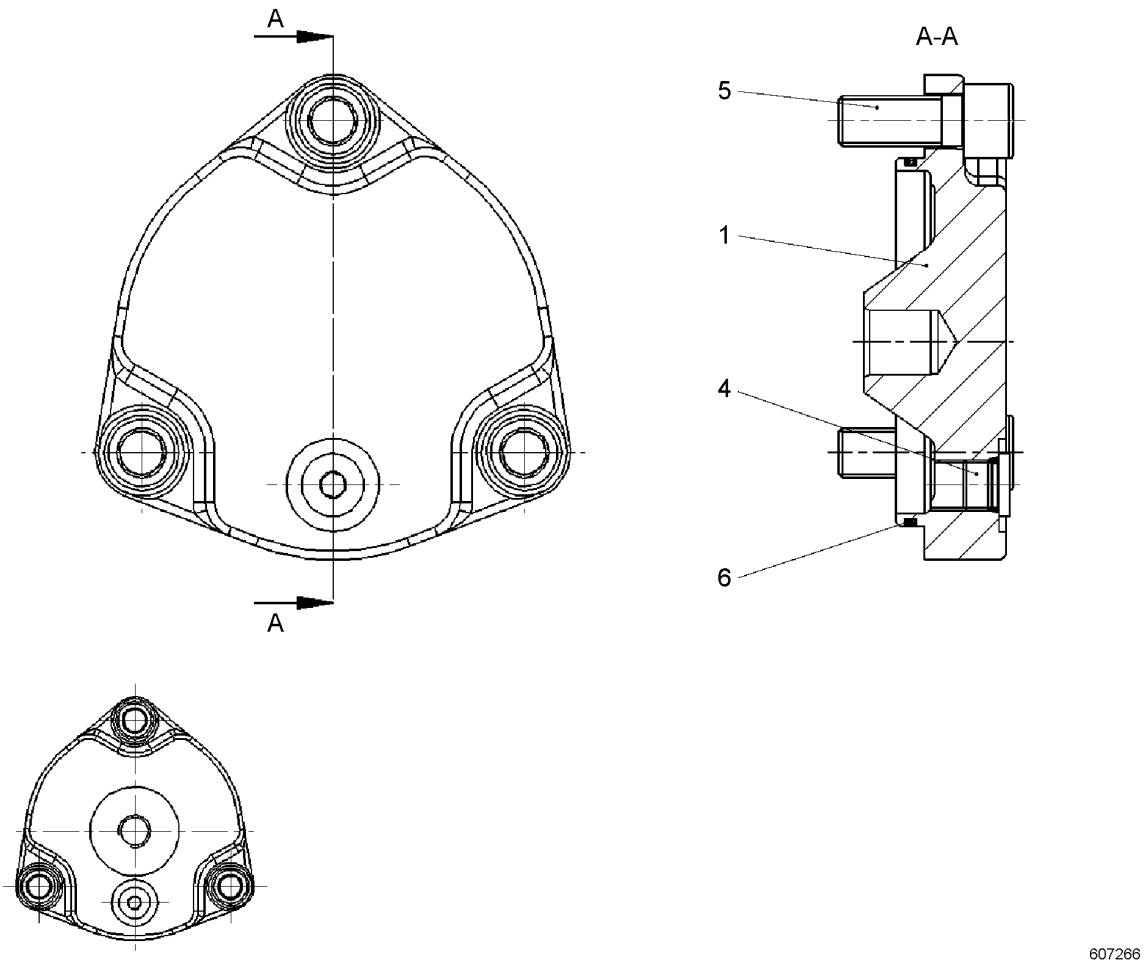

Pos.	Item	Quantity	Description	Bezeichnung	Serie	K
1	11267396	1	COVER	DECKEL		
4	10337050	1	SCREW PLUG M14X1.5 NBR	VERSCHLUSSSCHRAUBE		
5	11217079	3	SOCKET HEAD SCREW	ZYLINDERSCHRAUBE		
6	11267377	1	O-RING	O-RING		

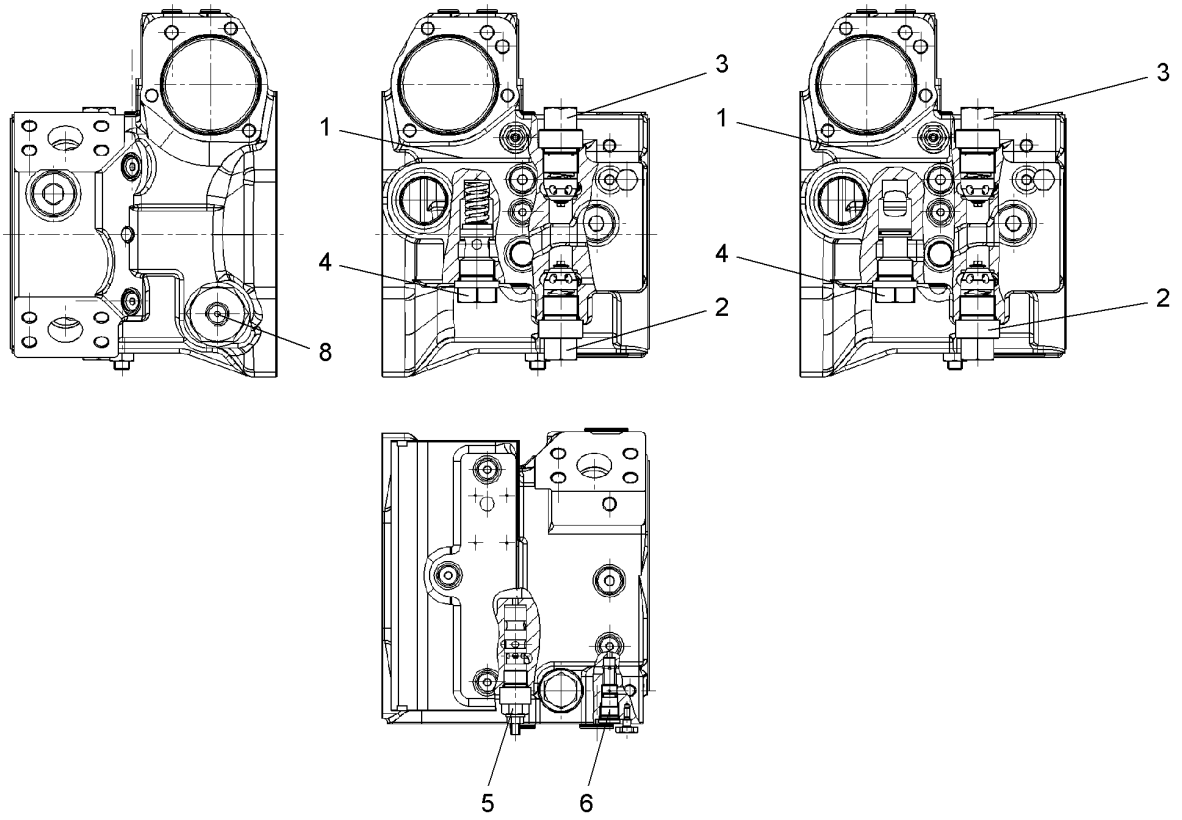

Pos.	Item	Quantity	Description	Bezeichnung	Serie	K
1	11219930	1	PUMP HOUSING ⇨ ❑ 93	PUMPENGEHAEUSE		
2	11219368	1	PRESSURE LIMITING VALVE	DRUCKBEGRENZUNGSVENTIL		
3	10593474	1	PRESSURE LIMITING VALVE ⇨ ❑ 95	DRUCKBEGRENZUNGSVENTIL		
4	11219369	1	LOCKING SET ⇨ ❑ 96	VERSCHLUSSATZ		
5	11067304	1	SHUTDOWN VALVE ⇨ ❑ 97	ABSCHALTVENTIL		
6	11067305	1	SHUTTLE VALVE ⇨ ❑ 98	WECHSELVENTIL		
8	11219933	1	PANEL SCREW	BLENDENSCHRAUBE		

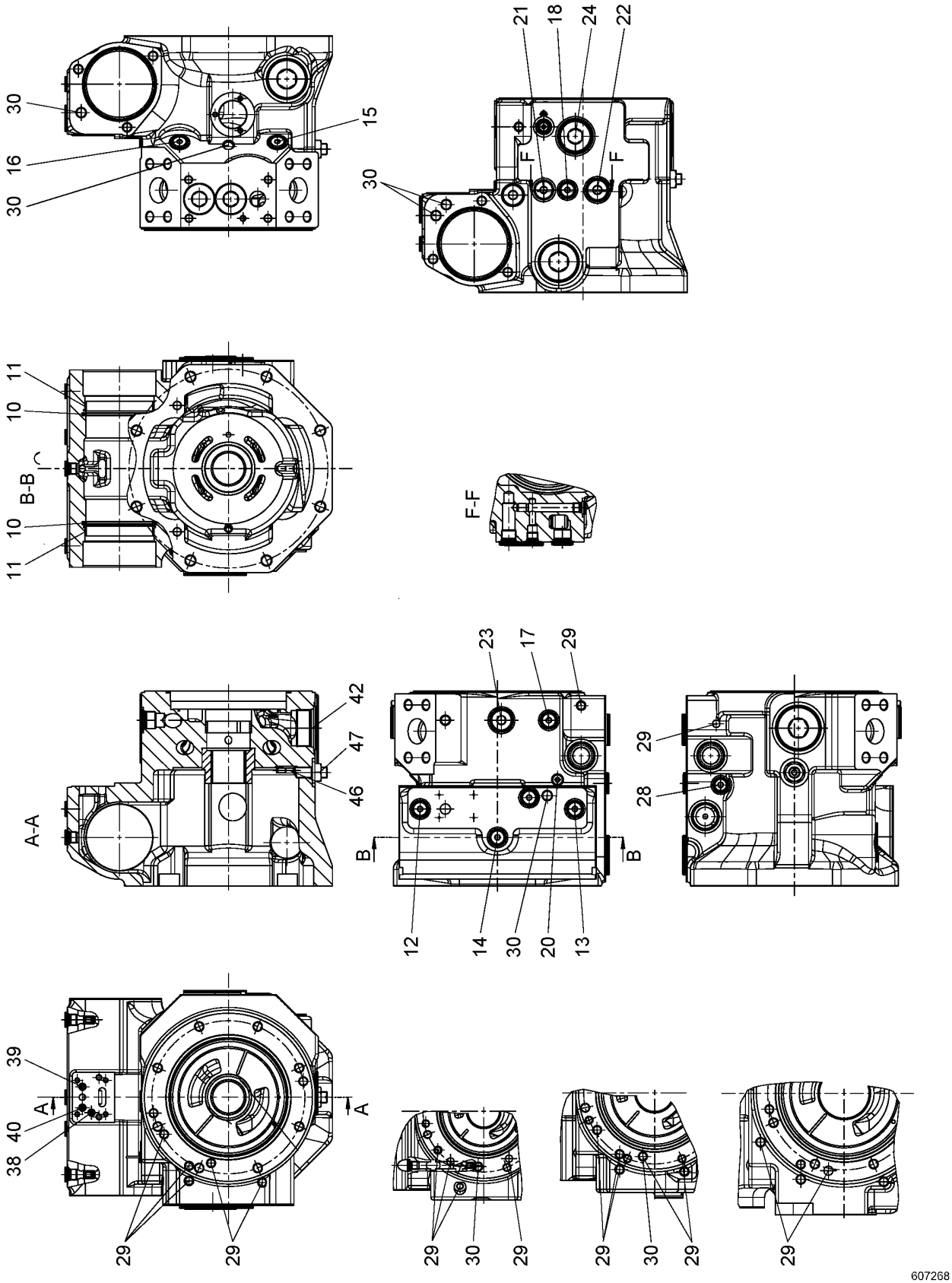
30
16
30
15
21
18
24
22
F
F
30
11
10
B-B
10
11
F-F
23
17
29
42
47
46
A-A
B
B
29
28
12
14
30
20
13
39
A
40
38
A
29
29
29
30
29
29
30
29
29
607268

Pos.	Item	Quantity	Description	Bezeichnung	Serie	K
10	11267400	2	BAR SEAL KIT	STANGENDICHTSATZ		
11	11267401	2	GUIDE RING	FUEHRUNGSRING		
12	10337050	1	SCREW PLUG M14X1.5 NBR	VERSCHLUSSSCHRAUBE		
13	10337050	1	SCREW PLUG M14X1.5 NBR	VERSCHLUSSSCHRAUBE		
14	10337050	1	SCREW PLUG M14X1.5 NBR	VERSCHLUSSSCHRAUBE		
15	10337050	1	SCREW PLUG M14X1.5 NBR	VERSCHLUSSSCHRAUBE		
16	10337050	1	SCREW PLUG M14X1.5 NBR	VERSCHLUSSSCHRAUBE		
17	10337050	1	SCREW PLUG M14X1.5 NBR	VERSCHLUSSSCHRAUBE		
18	10337050	1	SCREW PLUG M14X1.5 NBR	VERSCHLUSSSCHRAUBE		
20	11267402	1	SCREW PLUG	VERSCHLUSSSCHRAUBE		
21	10337052	1	SCREW PLUG M18X1.5 NBR	VERSCHLUSSSCHRAUBE		
22	10349193	1	SCREW PLUG M22X1.5	VERSCHLUSSSCHRAUBE		
23	10349193	1	SCREW PLUG M22X1.5	VERSCHLUSSSCHRAUBE		
24	10289931	1	SCREW PLUG M33X2 NBR	VERSCHLUSSSCHRAUBE		
28	11267403	1	SCREW PLUG	VERSCHLUSSSCHRAUBE		
29	7012971	3	DOUBLE PLUG	DOPPELABREISSSTOPFEN		
30	10424238	3	DOUBLE PLUG	DOPPELABREISSSTOPFEN		
38	11490265	1	FILTER	FILTER		
39	11490265	1	FILTER	FILTER		
40	11490265	1	FILTER	FILTER		
42	10525039	1	SCREW PLUG M48X2	VERSCHLUSSSCHRAUBE		
46	11267405	1	ECCENTRIC SCREW	EXZENTERSCHRAUBE		
47	514618508	1	COLLAR NUT M14X1.5	BUNDMUTTER		

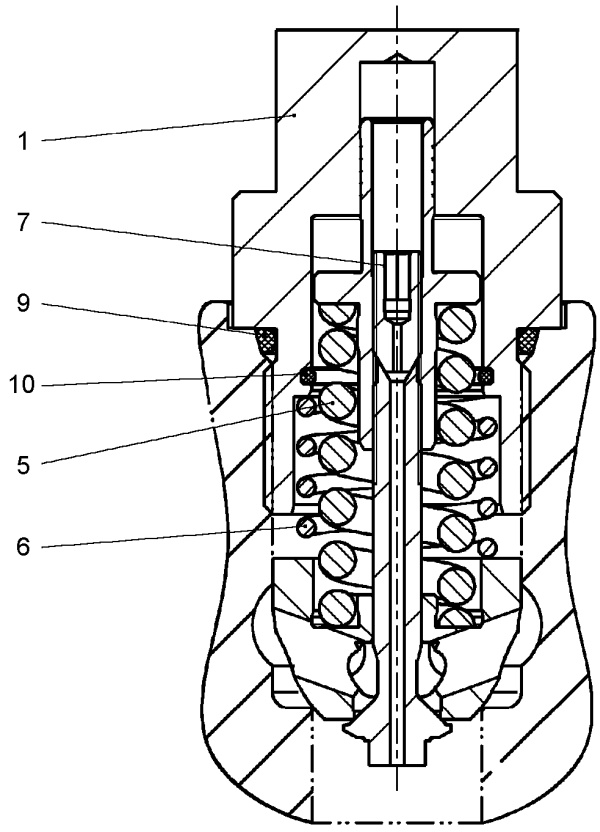

Pos.	Item	Quantity	Description	Bezeichnung	Serie	K
1	11267415	1	SCREW PLUG	VERSCHLUSSSCHRAUBE		
5	7028143	1	PRESSURE SPRING	DRUCKFEDER		
6	11267416	1	PRESSURE SPRING	DRUCKFEDER		
7	11267417	1	GRUB SCREW	GEWINDESTIFT		
9	11267418	1	O-RING	O-RING		
10	7007492	1	O-RING	O-RING		

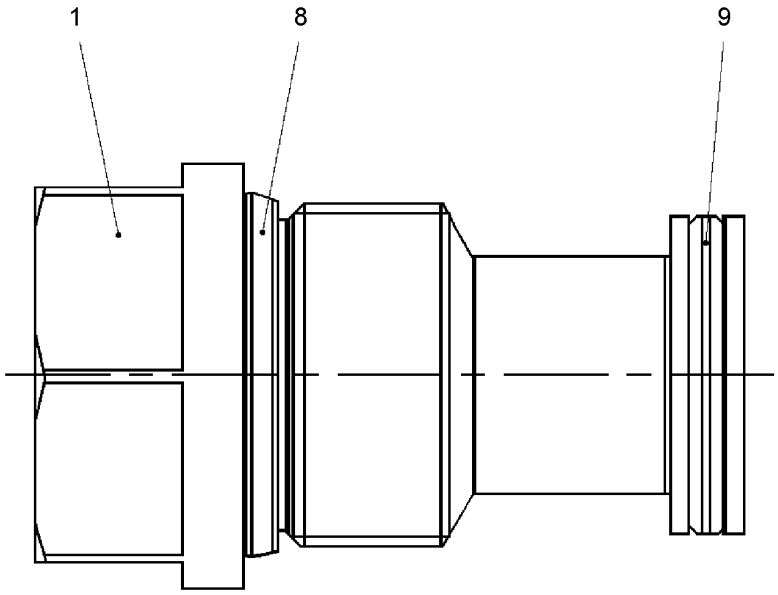

Pos.	Item	Quantity	Description	Bezeichnung	Serie	K
1	11267421	1	SCREW PLUG	VERSCHLUSSSCHRAUBE		
8	11267418	1	O-RING	O-RING		
9	7006213	1	O-RING	O-RING		

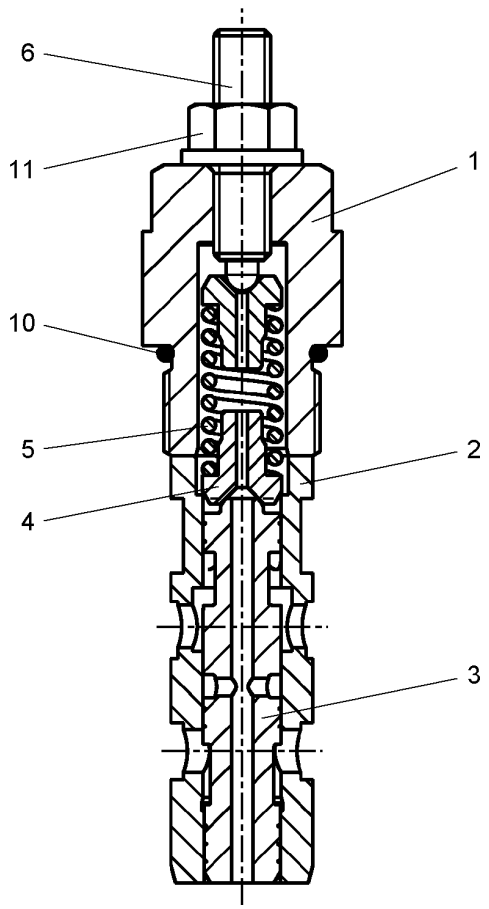

Pos.	Item	Quantity	Description	Bezeichnung	Serie	K
1	11267439	1	SCREW PLUG	VERSCHLUSSSCHRAUBE		
2	11267440	1	SLEEVE	HUELSE		
3	11600281	1	SPOOL	STEUERKOLBEN		
4	11267441	2	SPRING SUPPORT	FEDERTELLER		
5	11267442	1	PRESSURE SPRING	DRUCKFEDER		
6	10599567	1	ADJUSTING SCREW	EINSTELLSCHRAUBE		
10	11212730	1	O-RING	O-RING		
11	7361601	1	GROMMET NUT M8	DICHTUNGSMUTTER		

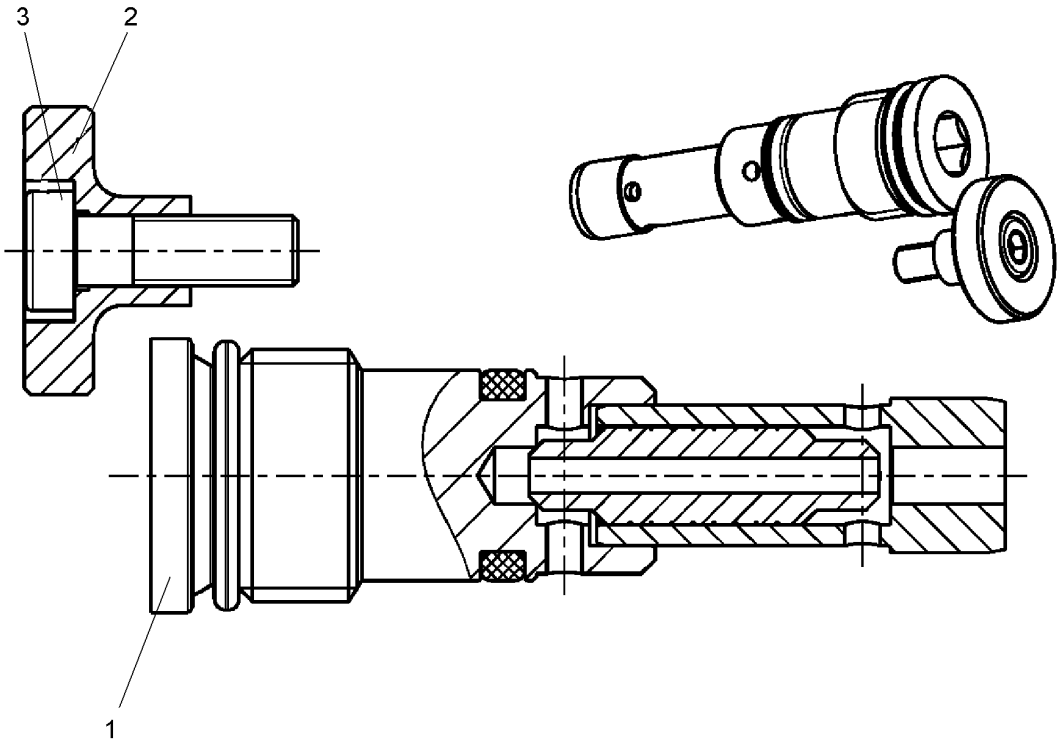

Pos.	Item	Quantity	Description	Bezeichnung	Serie	K
1	11267447	1	SHUTTLE VALVE ⇨ ❑ 99	WECHSELVENTIL		
2	11913115	1	LIMIT STOP	ANSCHLAG		
3	11913116	1	SOCKET HEAD SCREW	ZYLINDERSCHRAUBE		

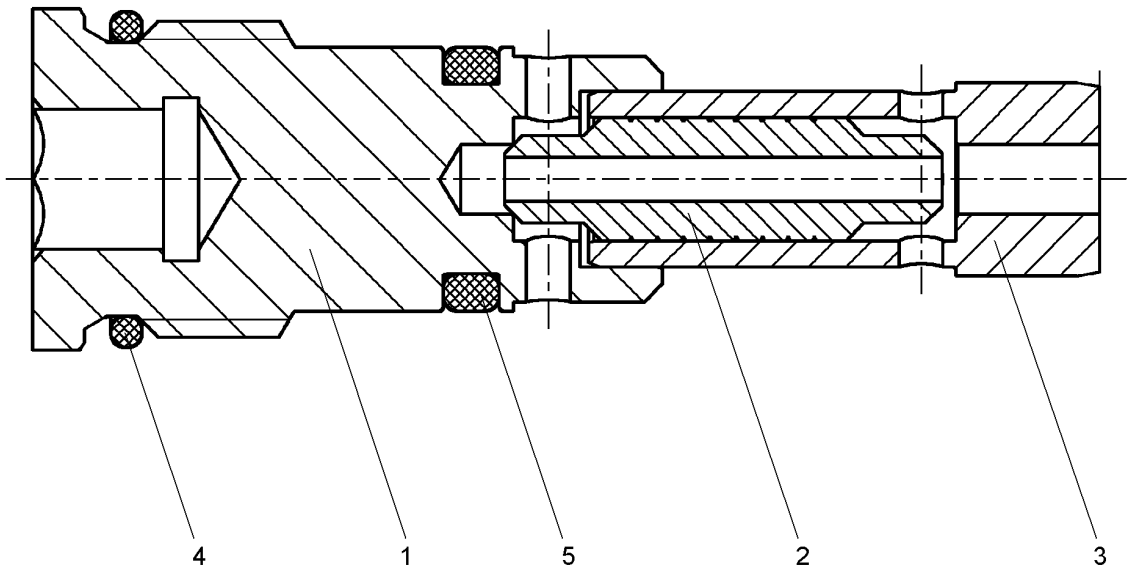

Pos.	Item	Quantity	Description	Bezeichnung	Serie	K
1	11267451	1	SCREW PLUG	VERSCHLUSSSCHRAUBE		
2	11913123	1	PISTON	KOLBEN		
3	11267453	1	SLEEVE	HUELSE		
4	10097551	1	O-RING	O-RING		
5	726429814	1	O-RING	O-RING		

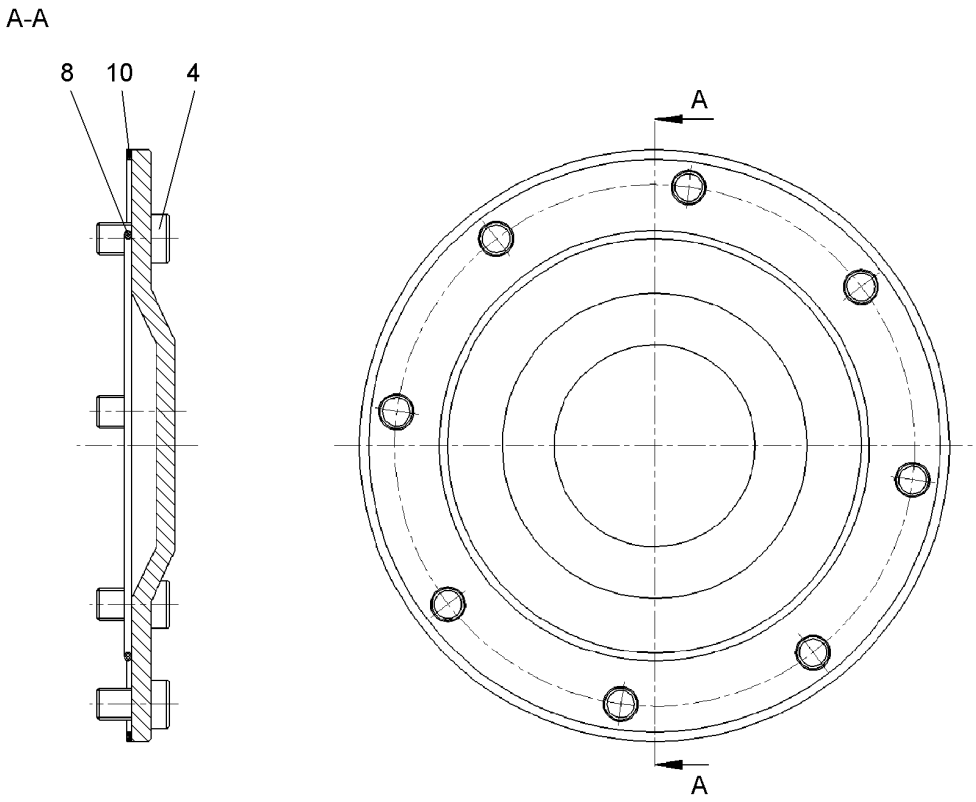

Pos.	Item	Quantity	Description	Bezeichnung	Serie	K
4	11219373	8	SOCKET HEAD SCREW	ZYLINDERSCHRAUBE		
8	11219374	1	O-RING	O-RING		
10	11267455	1	RING	RING		

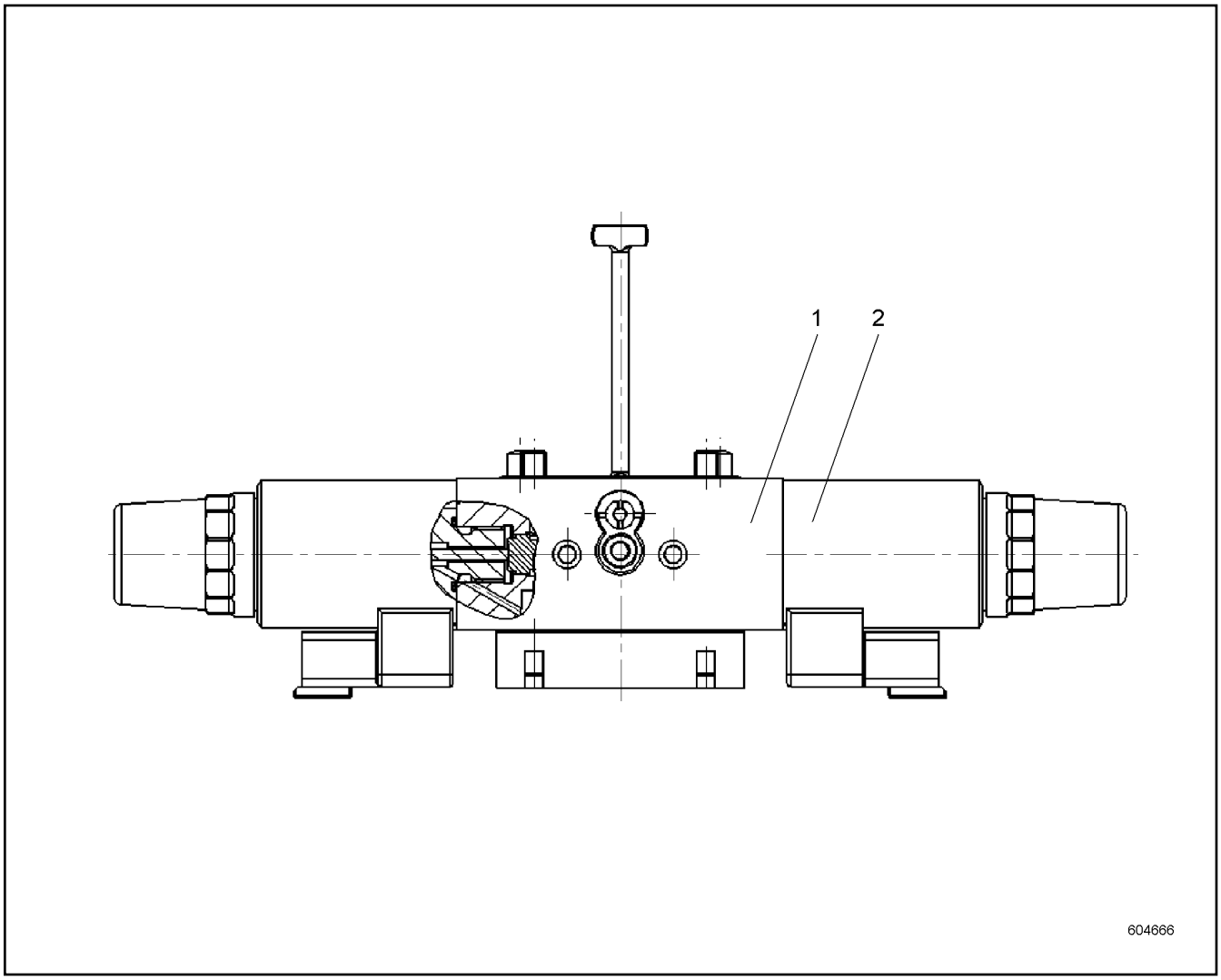

Pos.	Item	Quantity	Description	Bezeichnung	Serie	K
1	11219934	1	CONTROL UNIT	ANSTEUERGERAET		
2	11219375	2	PROPORTIONAL MAGNET	PROPORTIONALMAGNET		

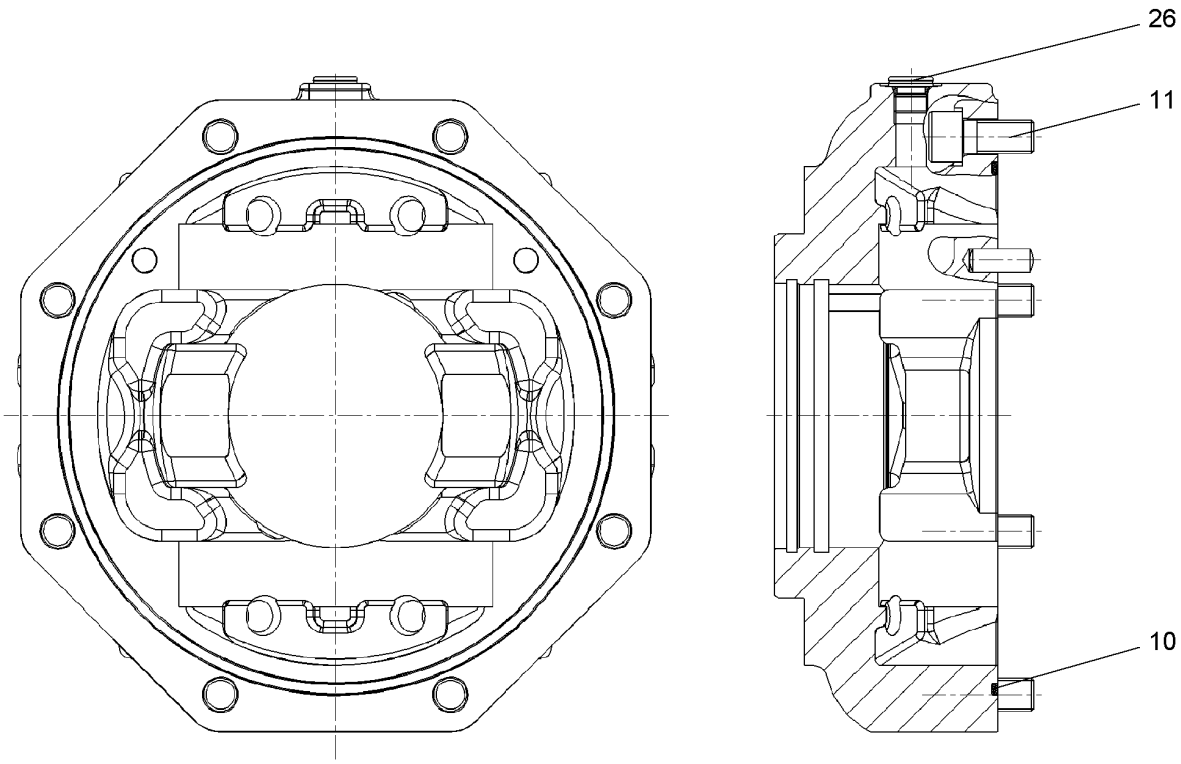

Pos.	Item	Quantity	Description	Bezeichnung	Serie	K
10	11219376	1	O-RING	O-RING		
11	11219936	8	SOCKET HEAD SCREW	ZYLINDERSCHRAUBE		
26	10337050	1	SCREW PLUG M14X1.5 NBR	VERSCHLUSSSCHRAUBE		

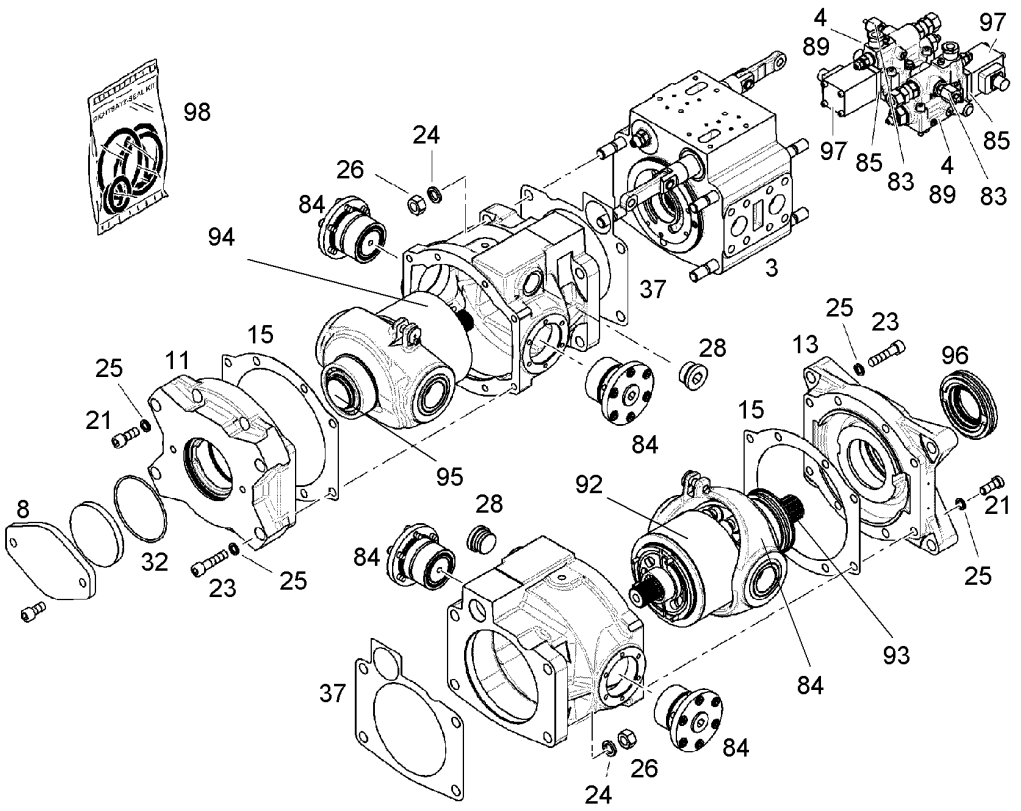

Pos.	Item	Quantity	Description	Bezeichnung	Serie	K
3	10118350	1	CONNECTION HOUSING ⇨ ❑ 105	ANSCHLUSSGEHAEUSE		
4	9074418	2	REGULATING VALVE ⇨ ❑ 109	REGELVENTIL		
8	10133334	1	COVER ⇨ ❑ 111	DECKEL		
11	9276385	1	CONNECTION FLANGE	ANSCHLUSSFLANSCH		
13	9268423	1	CONNECTION FLANGE	ANSCHLUSSFLANSCH		
15	9882207	2	SEAL	DICHTUNG		
21	4043163	8	SOCKET HEAD SCREW ISO 4762 M12X30 10.9	ZYLINDERSCHRAUBE		
23	10012659	8	SOCKET HEAD SCREW ISO 4762 M12X50 10.9	ZYLINDERSCHRAUBE		
24	4239009	8	LOCK WASHER 17X24X2.6	SICHERUNGSSCHEIBE		
25	4980013	16	WASHER SPRING DIN 7980 12 FST	FEDERRING		
26	4980548	8	HEX NUT ISO 8673 M16X1.5 10	SECHSKANTMUTTER		
28	10137121	2	SCREW PLUG	VERSCHLUSSSCHRAUBE		
32	7004512	1	O-RING	O-RING		
37	9276860	2	FLAT GASKET	FLACHDICHTUNG		
83	10118367	1	RK PRESSUR CUT-OFF ⇨ ❑ 112	RS DRUCKABSCHNEIDUNG		
84	10139752	1	REPAIR SET SWIVEL YOKE ⇨ ❑ 114	RS SCHWENKJOCH		
85	9275443	1	REPAIR SET LID ⇨ ❑ 117	RS DECKEL		
89	9273644	1	SEAL KIT REGULATING VALVE ⇨ ❑ 110	DS REGELVENTIL		

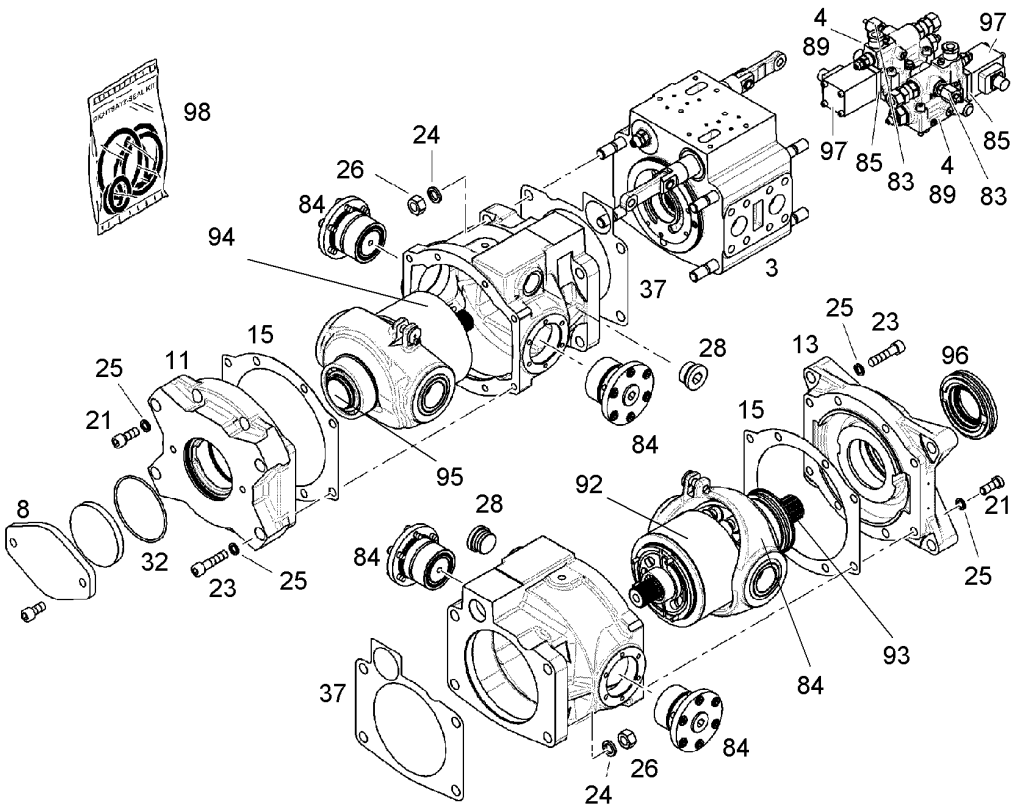

Pos.	Item	Quantity	Description	Bezeichnung	Serie	K
92	9889984	1	REPAIR KIT DRIVING MECHANISM ⇨ ❑ 118	RS TRIEBWERK		
93	9889977	1	REPAIR KIT SHAFT	RS WELLE		
94	9889983	1	REPAIR KIT DRIVING MECHANISM ⇨ ❑ 121	RS TRIEBWERK		
95	9884402	1	REPAIR KIT SHAFT ⇨ ❑ 123	RS WELLE		
96	9268016	1	REPAIR KIT LOCK RING ⇨ ❑ 124	RS VERSCHLUSSRING		
97	9273187	1	REPAIR KIT MAGNET ⇨ ❑ 125	RS MAGNET		
98	9276408	1	SEAL KIT DOUBLE PUMP ⇨ ❑ 126	DS DOPPELPUMPE		

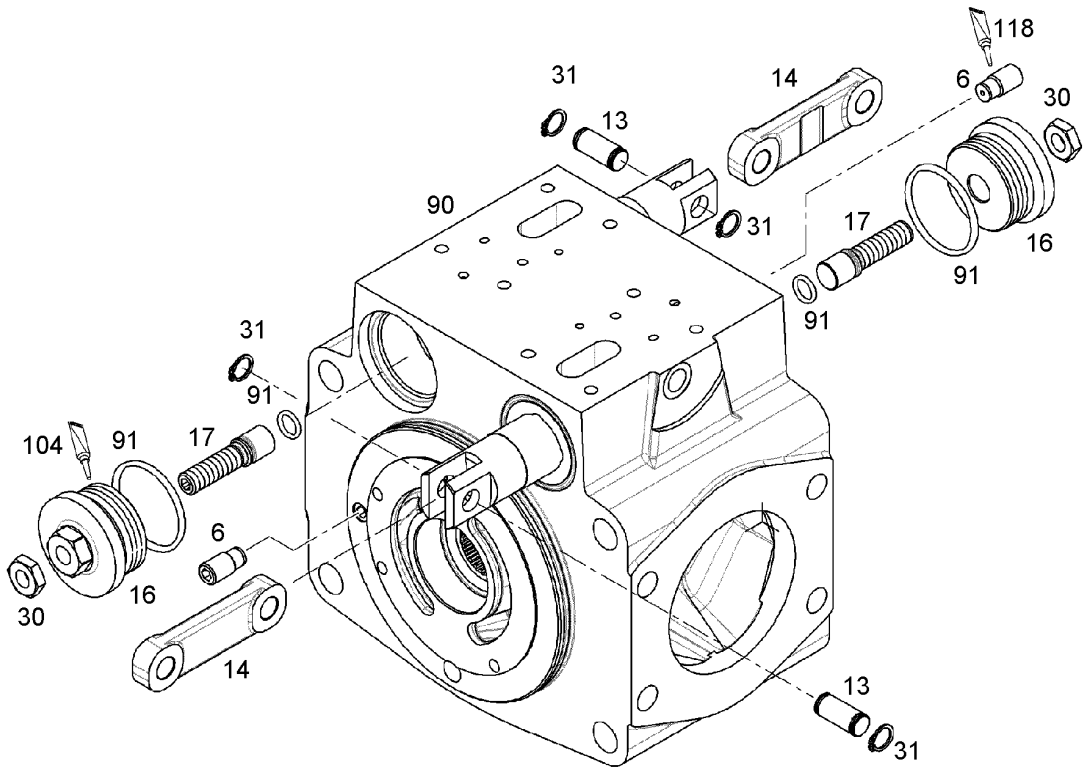

Pos.	Item	Quantity	Description	Bezeichnung	Serie	K
6	9267343	2	VENTILATION VALVE ⇨ ❑ 106	ENTLUEFTUNGSVENTIL		
13	9477439	2	PIN	BOLZEN		
14	9887828	2	CONNECTING LINK	VERBINDUNGSLASCHE		
16	9885660	2	SCREW PLUG M48X2	VERSCHLUSSSCHRAUBE		
17	9885661	2	LIMIT STOP SCREW M12X38 42CRM04	ANSCHLAGSCHRAUBE		
30	4900125	2	HEX NUT ISO 4035 M12 5	SECHSKANTMUTTER		
31	4280008	4	LOCKING RING DIN 471 12X1	SICHERUNGSRING		
90	10118357	1	REPAIR KIT CONNECTION HOUSING ⇨ ❑ 107	RS ANSCHLUSSGEHAEUSE		
91	9274731	1	SEAL KIT CONNECTING HOUSING ⇨ ❑ 108	DS ANSCHLUSSGEHAEUSE		
104	811202114	1	SCREW LOCKING	SCHRAUBENSICHERUNG		
118	8655023	1	GLUE	KLEBSTOFF		

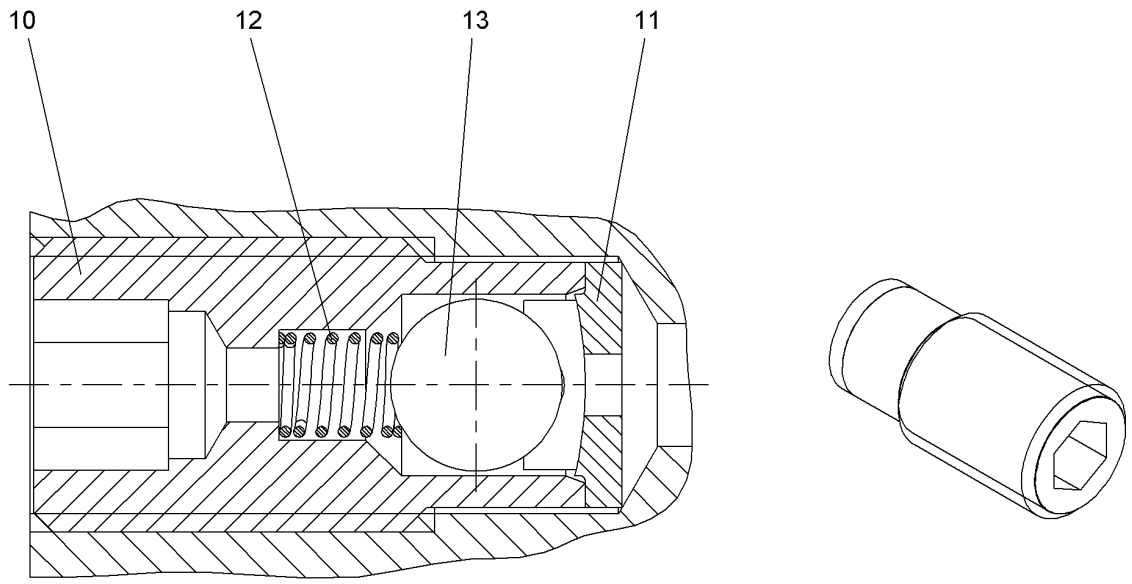

Pos.	Item	Quantity	Description	Bezeichnung	Serie	K
10	9267340	1	VALVE SLEEVE	VENTILHUELSE		
11	9267341	1	RING	RING		
12	9267342	1	PRESSURE SPRING	DRUCKFEDER		
13	4901195	1	BALL	KUGEL		

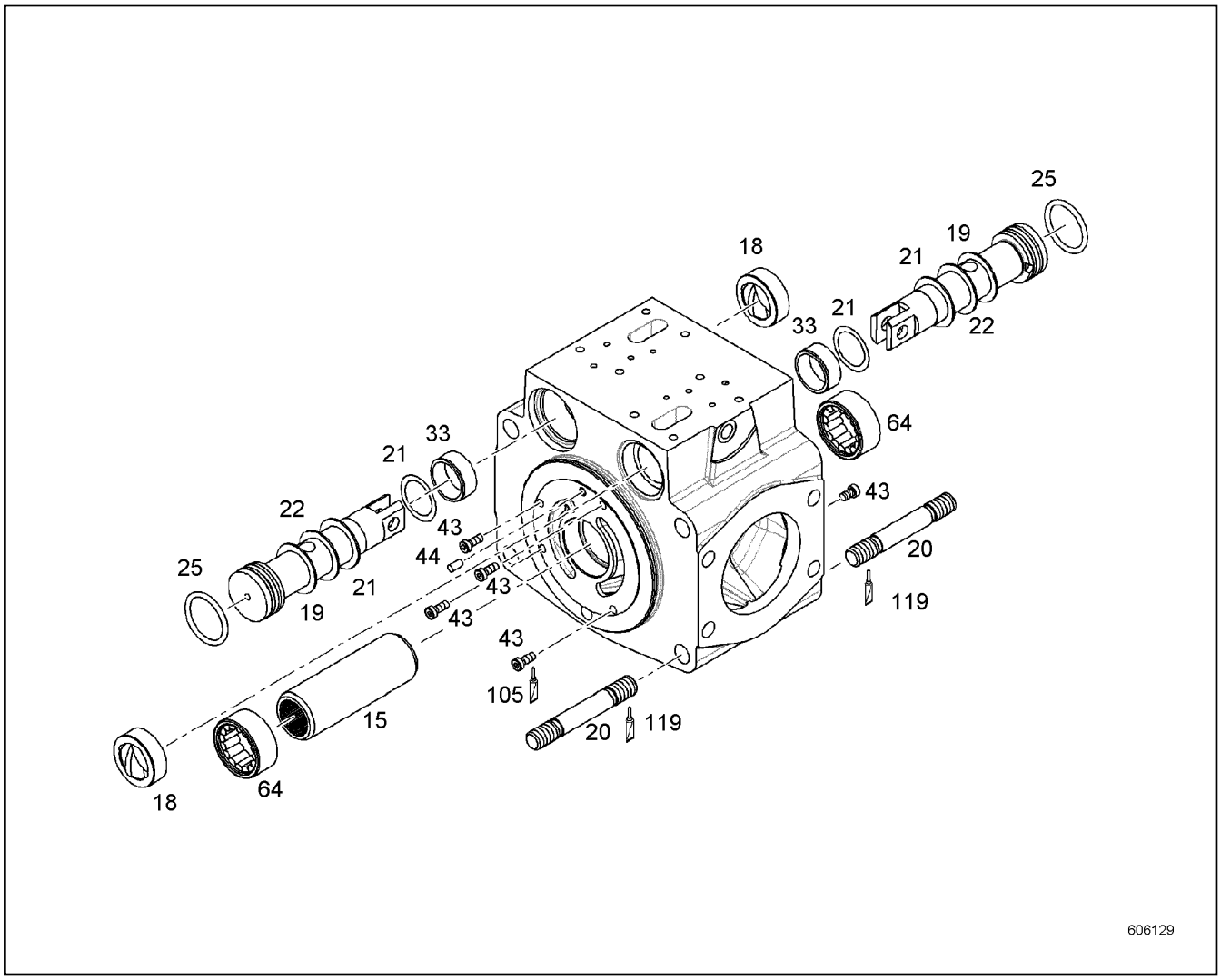

Pos.	Item	Quantity	Description	Bezeichnung	Serie	K
15	9073827	1	COUPLING FERRULE	KUPPLUNGSHUELSE		
18	9266680	2	GUIDE RING	FUEHRUNGSRING		
19	7380291	2	SUPPORTING WASHER S32X44X2 FST	STUETZSCHEIBE		
20	9275003	8	DOUBLE-ENDED STUD M16X1.5	STIFTSCHRAUBE		
21	7380815	4	SUPPORTING WASHER S32X44X0.5 FST	STUETZSCHEIBE		
22	7380586	2	SUPPORTING WASHER S32X44X1.3 FST	STUETZSCHEIBE		
25	10285620	2	SEALING RING	MANTELRING		
33	9881114	2	GUIDE RING	FUEHRUNGSRING		
43	4981218	8	SOCKET HEAD SCREW ISO 14580 M6X16 10.9	ZYLINDERSCHRAUBE		
44	4980046	2	PARALLEL PIN ISO 8734 5M6X12 ST	ZYLINDERSTIFT		
64	7469905	2	CYL.NEEDLE BEARING	ZYLINDERNADELLAGER		
105	8655016	1	SCREW LOCKING	SCHRAUBENSICHERUNG		
119	8655032	1	GLUE	KLEBSTOFF		

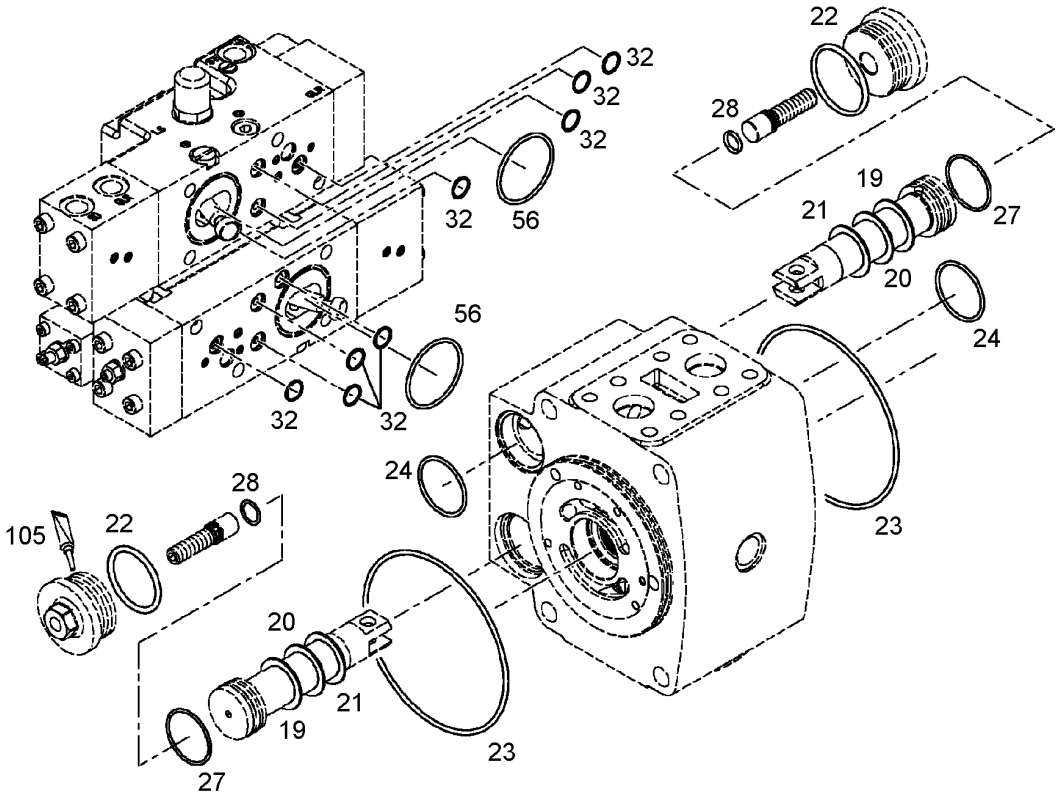

Pos.	Item	Quantity	Description	Bezeichnung	Serie	K
19	7380291	2	SUPPORTING WASHER S32X44X2 FST	STUETZSCHEIBE		
20	7380586	2	SUPPORTING WASHER S32X44X1.3 FST	STUETZSCHEIBE		
21	7380815	4	SUPPORTING WASHER S32X44X0.5 FST	STUETZSCHEIBE		
22	7380015	2	O-RING	O-RING		
23	7000329	2	O-RING	O-RING		
24	7380348	2	O-RING	O-RING		
27	10285620	2	SEALING RING	MANTELRING		
28	7380120	2	O-RING	O-RING		
32	7380648	10	O-RING	O-RING		
56	7380888	2	O-RING	O-RING		
105	8655016	1	SCREW LOCKING	SCHRAUBENSICHERUNG		

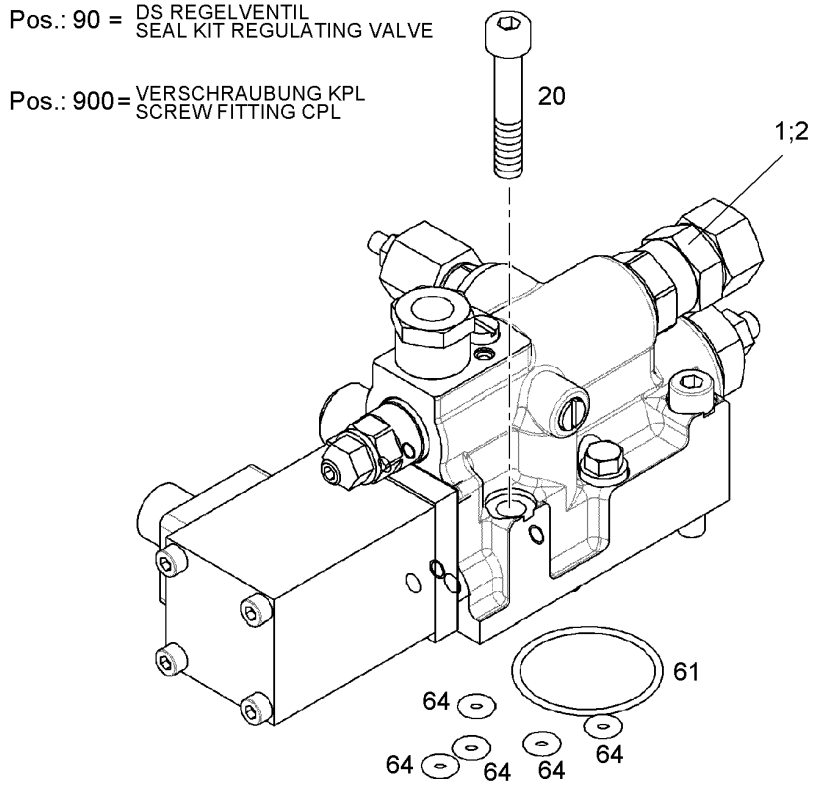

Pos.	Item	Quantity	Description	Bezeichnung	Serie	K
1	10121091	1	ADAPTOR	ADAPTER		
2	7381367	1	SEALING RING	DICHTRING		
20	4980840	4	SOCKET HEAD SCREW ISO 4762 M8X45 12.9	ZYLINDERSCHRAUBE		
61	7380888	1	O-RING	O-RING		
64	7380648	5	O-RING	O-RING		
90	9273644	1	SEAL KIT REGULATING VALVE ⇨ ❑ 110	DS REGELVENTIL		
900	11253240	1	SCREW FITTING CPL	VERSCHRAUBUNG KPL		

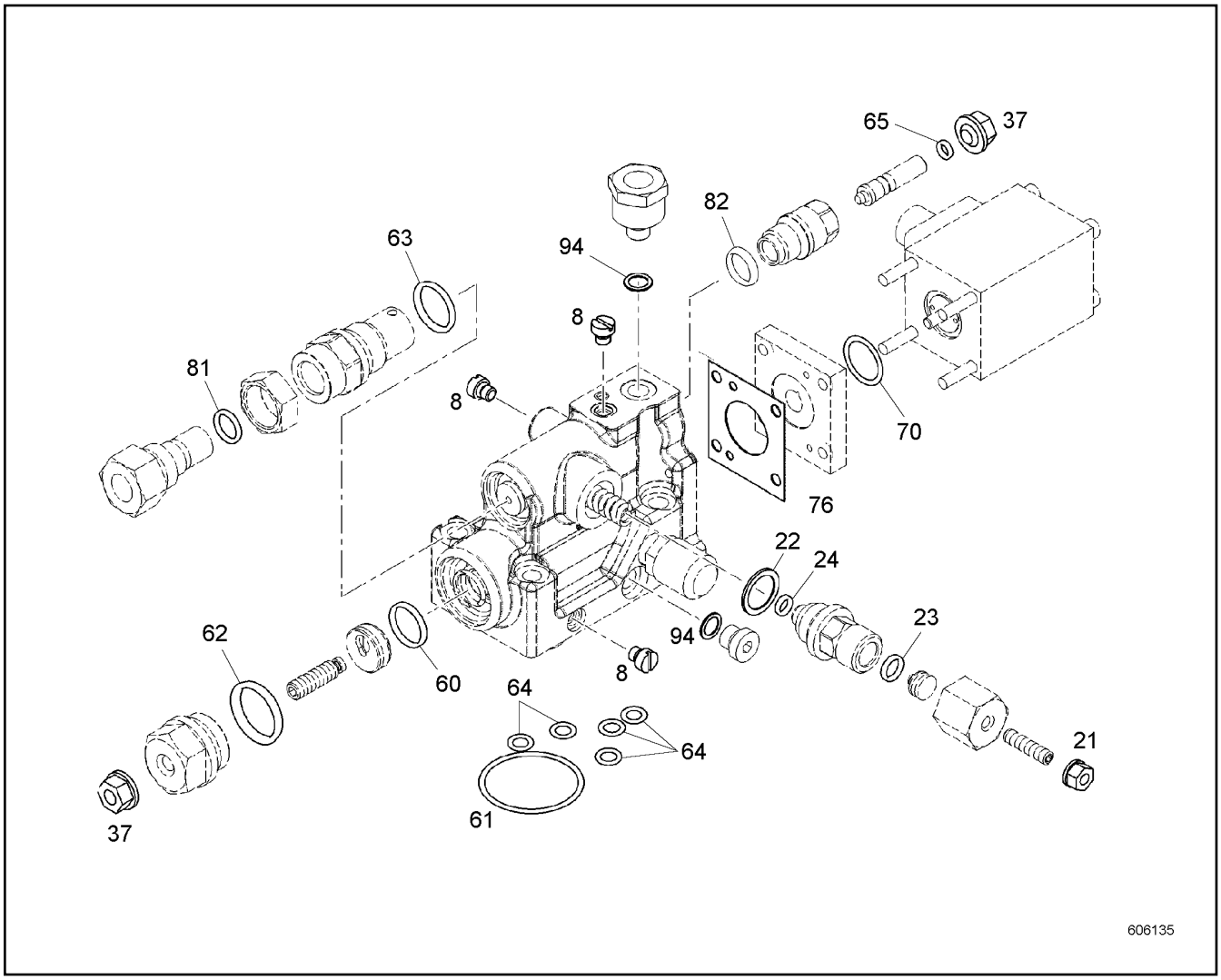

Pos.	Item	Quantity	Description	Bezeichnung	Serie	K
8	9268441	3	SCREW PLUG M6	VERSCHLUSSSCHRAUBE		
21	7361600	1	GROMMET NUT M6	DICHTUNGSMUTTER		
22	7013116	1	SEALING RING	DICHTRING		
23	7381442	1	O-RING	O-RING		
24	7381056	1	O-RING	O-RING		
37	7361601	2	GROMMET NUT M8	DICHTUNGSMUTTER		
60	7381103	1	O-RING	O-RING		
61	7380888	1	O-RING	O-RING		
62	7380865	1	O-RING	O-RING		
63	7381087	1	O-RING	O-RING		
64	7380648	5	O-RING	O-RING		
65	7380612	1	O-RING	O-RING		
70	7380868	1	O-RING	O-RING		
76	9275428	1	SEAL	DICHTUNG		
81	7380596	1	O-RING	O-RING		
82	7381082	1	O-RING	O-RING		
94	7381367	2	SEALING RING	DICHTRING		

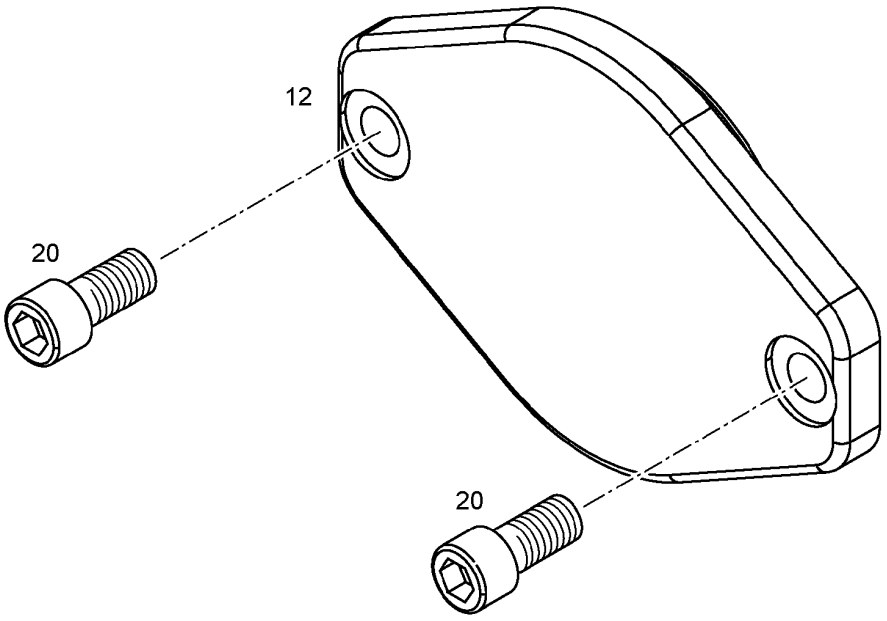

Pos.	Item	Quantity	Description	Bezeichnung	Serie	K
12	10134561	1	COVER	DECKEL		
20	4980938	2	SOCKET HEAD SCREW ISO 4762 M12X25 8.8	ZYLINDERSCHRAUBE		

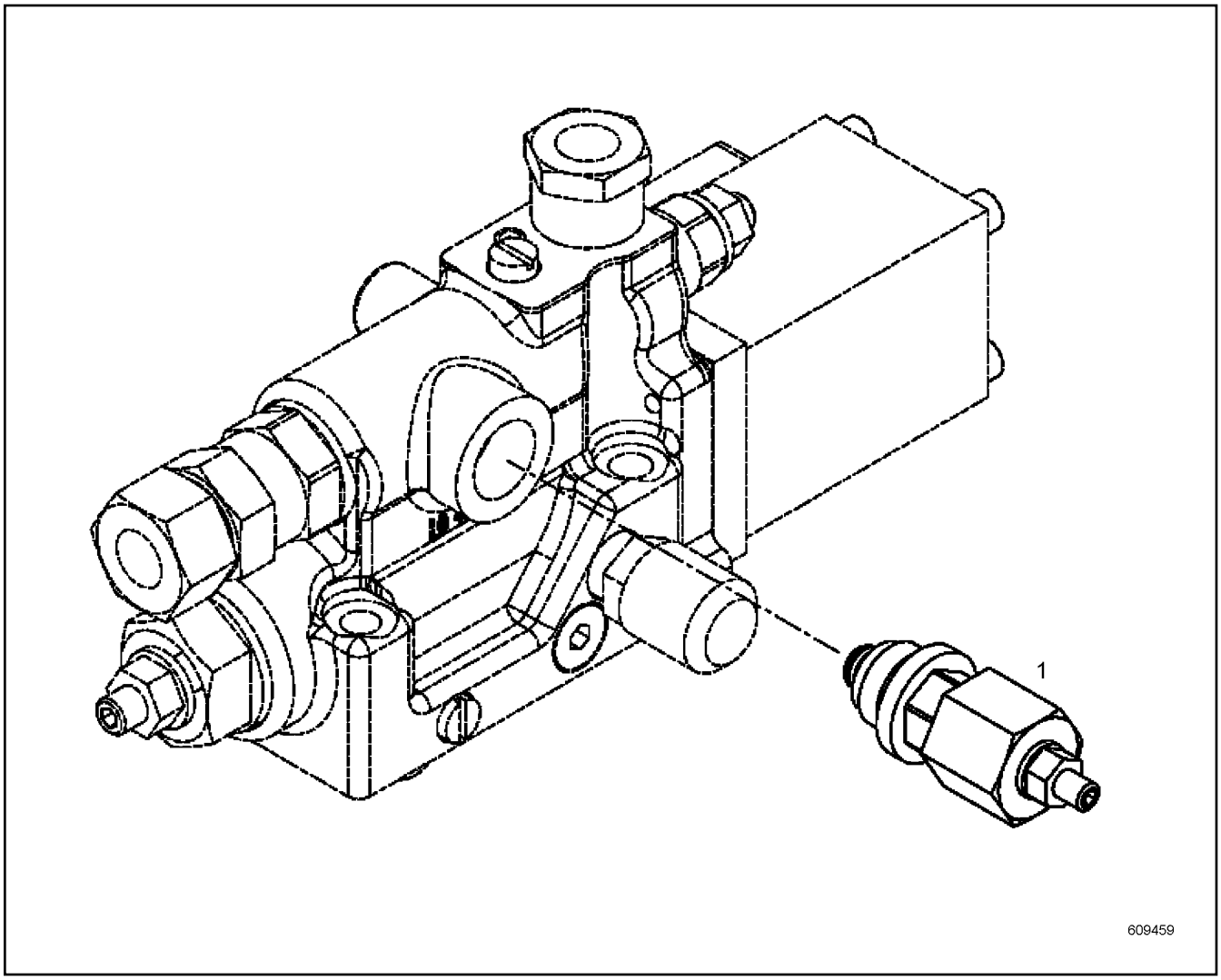

Pos.	Item	Quantity	Description	Bezeichnung	Serie	K
1	9278875	1	PRESSURE CUT-OFF ⇨ ❑ 113	DRUCKABSCHNEIDUNG		

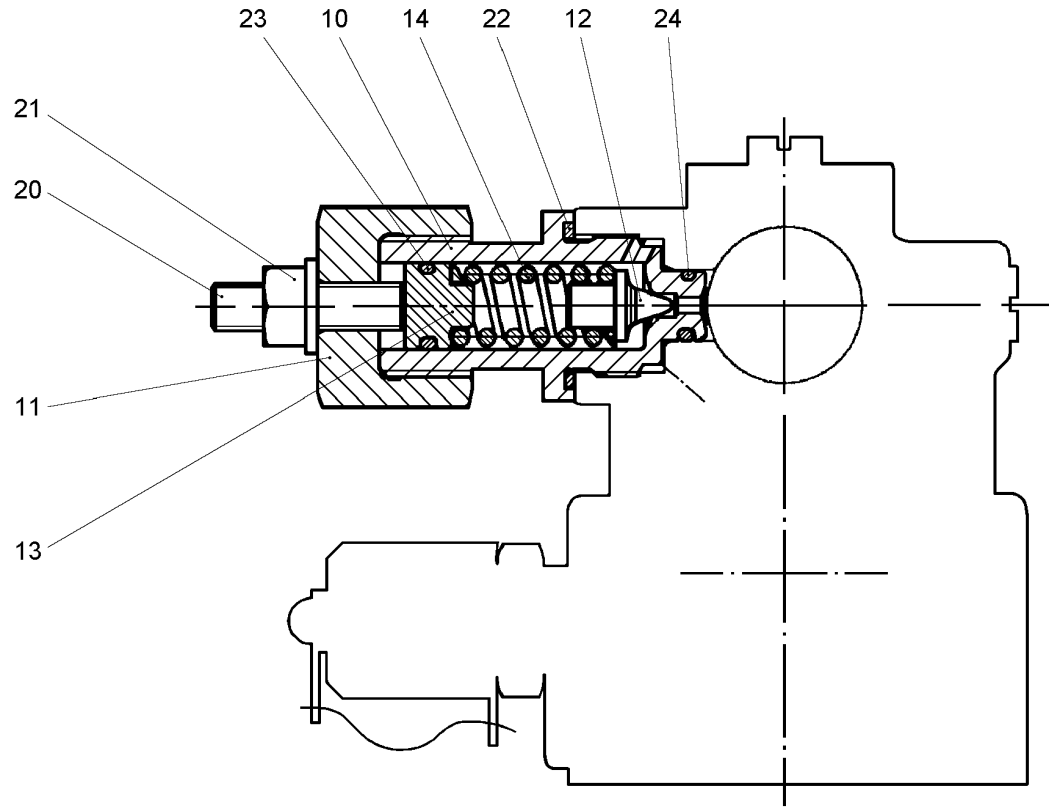

Pos.	Item	Quantity	Description	Bezeichnung	Serie	K
10	9278874	1	VALVE SEAT	VENTILSITZ		
11	9278873	1	NUT M18X1.5 9SMNPB28K	MUTTER		
12	9266085	1	TAPER	KEGEL		
13	9278876	1	SPRING SUPPORT	FEDERTELLER		
14	9266088	1	PRESSURE SPRING	DRUCKFEDER		
20	4980900	1	GRUB SCREW DIN 913 22H	GEWINDESTIFT		
21	7361600	1	GROMMET NUT M6	DICHTUNGSMUTTER		
22	7013116	1	SEALING RING	DICHTRING		
23	7381442	1	O-RING	O-RING		
24	7381056	1	O-RING	O-RING		

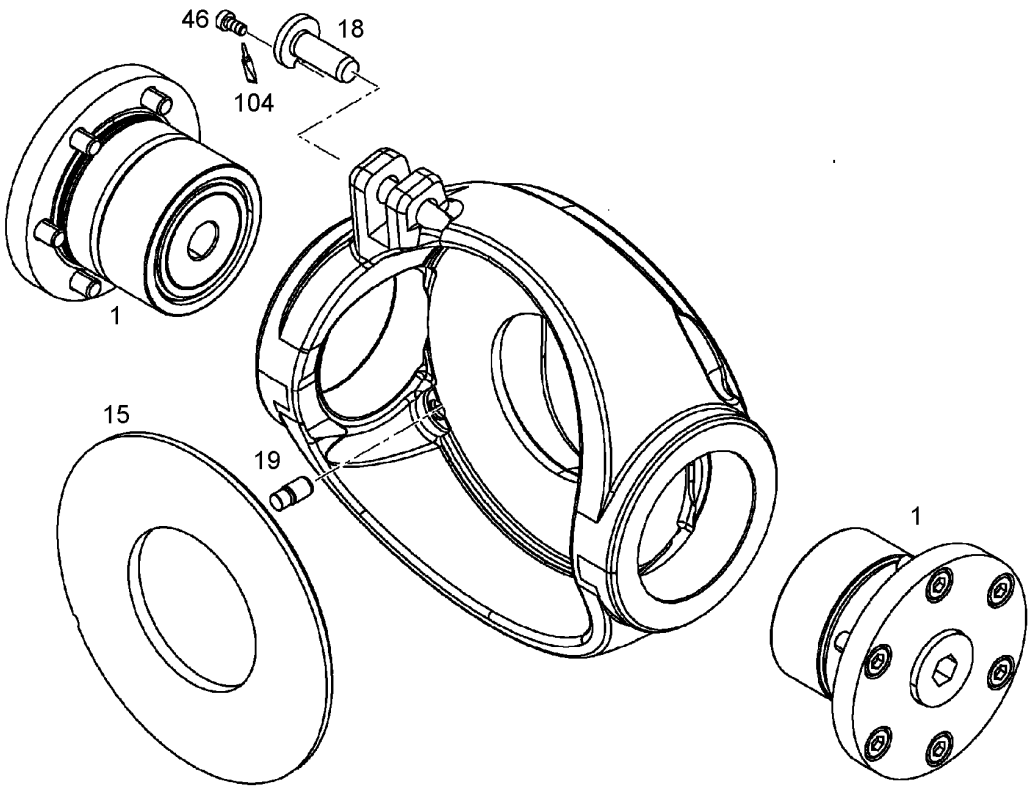

Pos.	Item	Quantity	Description	Bezeichnung	Serie	K
1	9077464	2	RS FLANGE ⇨ ❑ 115	RS FLANSCH		
15	9889809	1	SLIDING DISC 72X152X6	GLEITSCHEIBE		
18	9477429	1	PIN	BOLZEN		
19	9888133	1	PIN	STIFT		
46	4980750	1	SOCKET HEAD SCREW DIN 6912 8.8	ZYLINDERSCHRAUBE		
104	811202114	1	SCREW LOCKING	SCHRAUBENSICHERUNG		

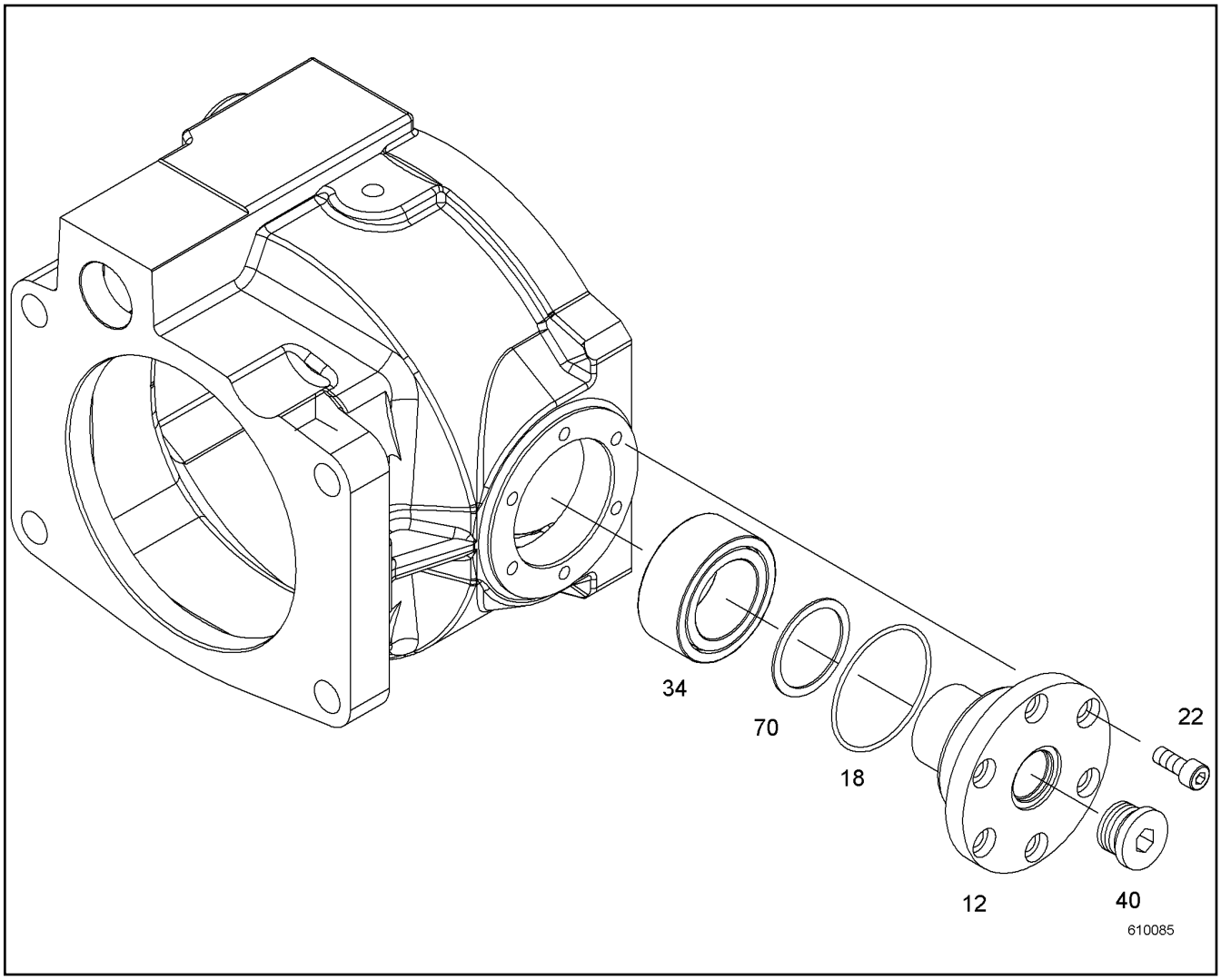

Pos.	Item	Quantity	Description	Bezeichnung	Serie	K
12	9072435	1	FLANGE	FLANSCH		
18	7380656	1	O-RING	O-RING		
22	240217402	6	SOCKET HEAD SCREW DIN 6912 M8X16 8.8	ZYLINDERSCHRAUBE		
34	7382149	1	CYL ROLLER BEARING	ZYL ROLLENLAGER		
40	10137108	1	SCREW PLUG	VERSCHLUSSSCHRAUBE		
70	9072436	1	SPACER RING SET	DISTANZRINGSATZ		
			⇨ ❑ 116			

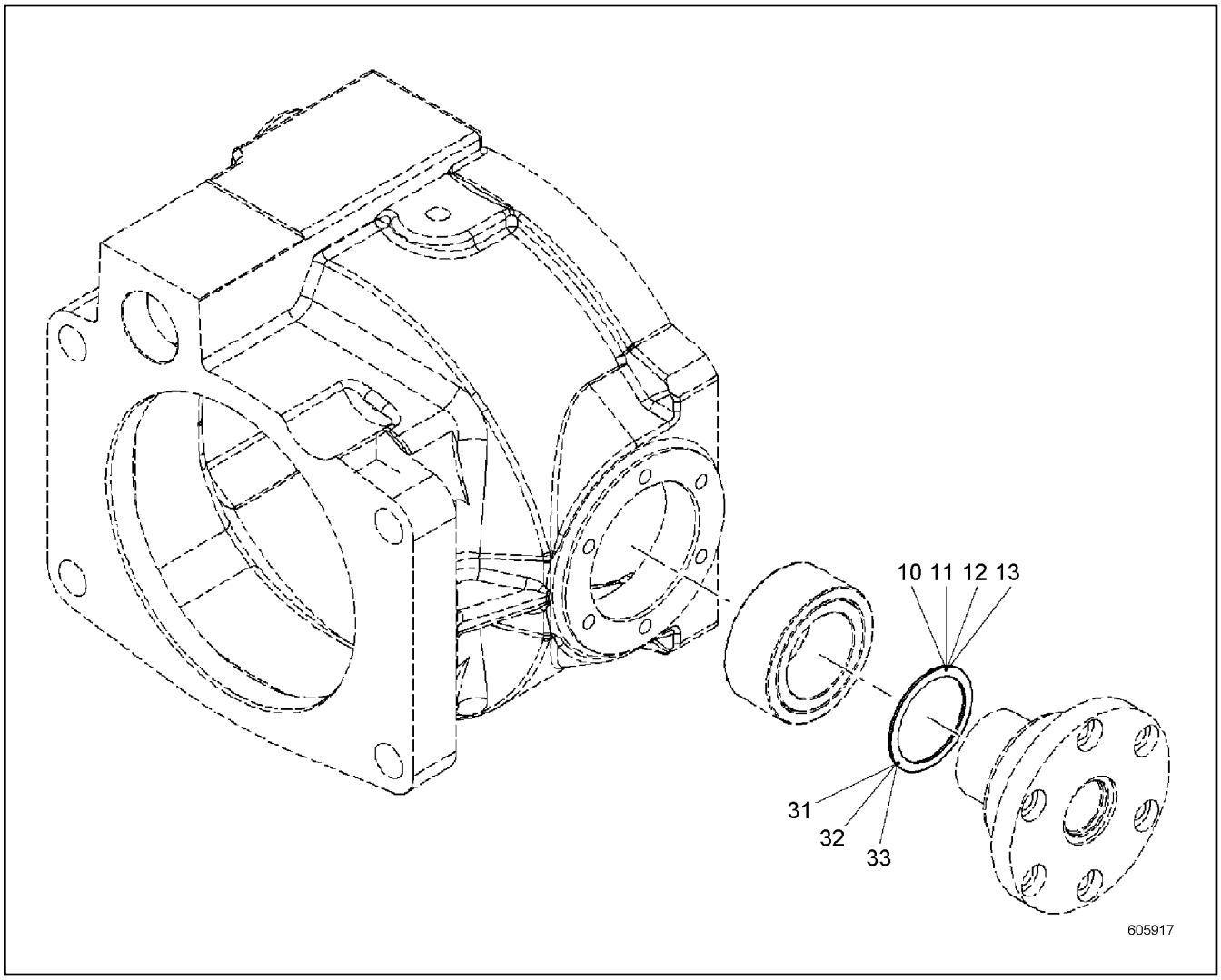

Pos.	Item	Quantity	Description	Bezeichnung	Serie	K
10	9072437	1	DISTANCE RING 42X51X1.3 CK75;DIN 17222	DISTANZRING		
11	9072438	1	DISTANCE RING 42X51X1.4 CK75;DIN 17222	DISTANZRING		
12	9072439	1	DISTANCE RING 42X51X1.5 CK75;DIN 17222	DISTANZRING		
13	9072440	1	DISTANCE RING 42X51X1.6 CK75;DIN 17222	DISTANZRING		
31	9074307	1	DISTANCE RING CK75;DIN 17222	DISTANZRING		
32	9074308	1	DISTANCE RING CK75;DIN 17222	DISTANZRING		
33	9074332	1	DISTANCE RING 42X51X1.9 CK75;DIN 17222	DISTANZRING		

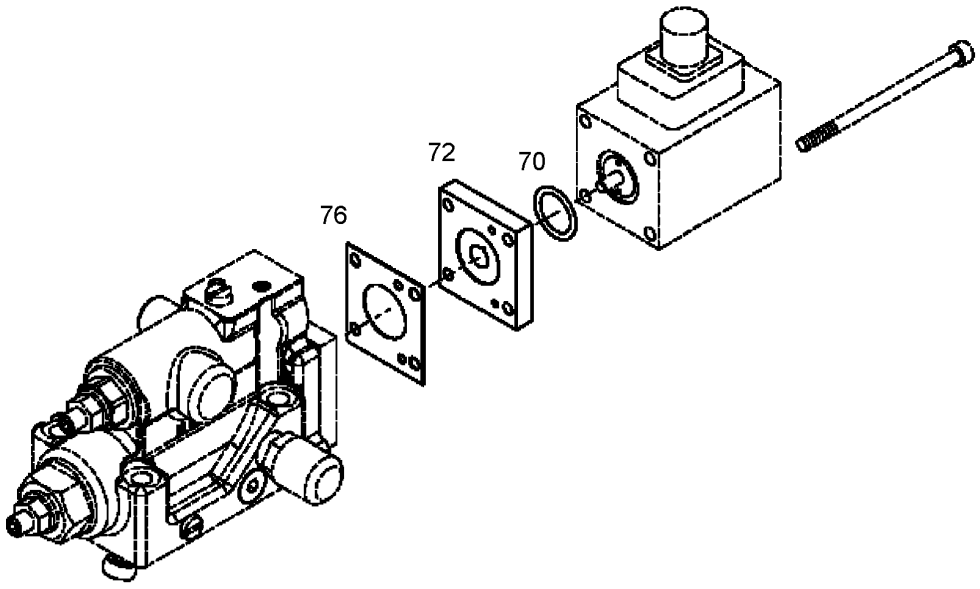

Pos.	Item	Quantity	Description	Bezeichnung	Serie	K
70	7380868	1	O-RING	O-RING		
72	9275429	1	COVER	DECKEL		
76	9275428	1	SEAL	DICHTUNG		

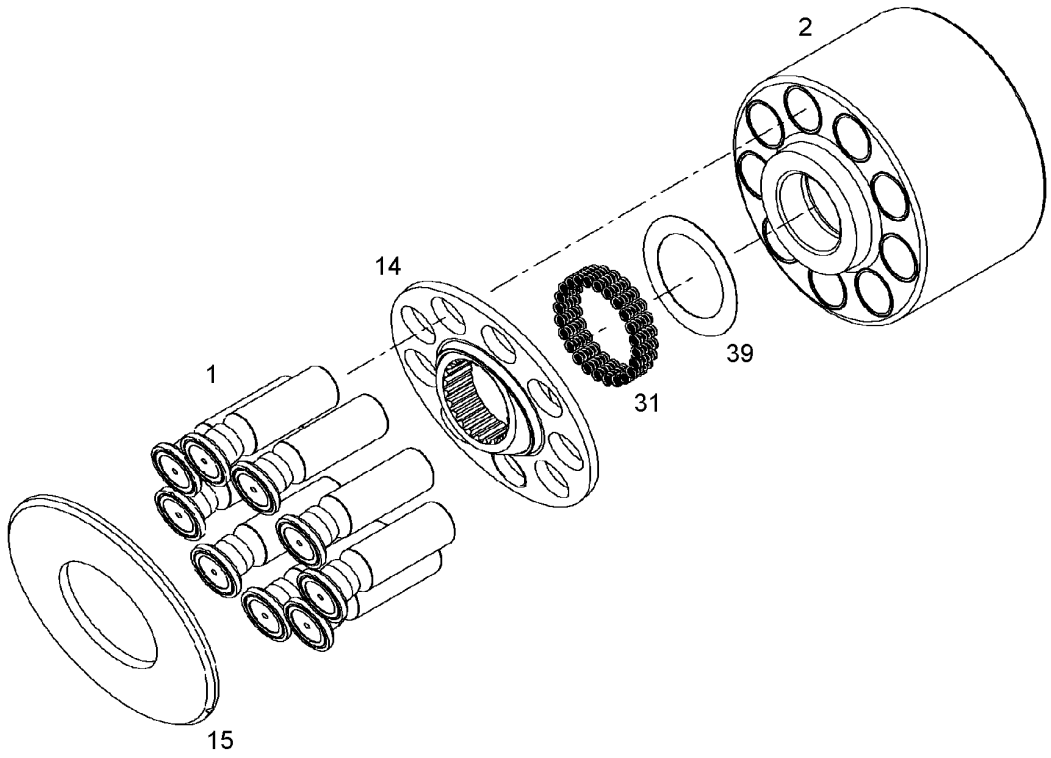

Pos.	Item	Quantity	Description	Bezeichnung	Serie	K
1	9889831	9	RK PISTON WITH GUIDE SHOE	RS KOLBEN MIT GLEITSCHUH		
2	9889833	1	RK CYLINDER+CONTROL PLATE ⇨ ❑ 119	RS ZYLINDER+STEUERPLATTE		
14	9889988	1	RK PULL-BACK BALL+PULL-B.PLATE ⇨ ❑ 120	RS RUECKZUGKUGEL+RUECKZ.		
15	9889809	1	SLIDING DISC 72X152X6	GLEITSCHEIBE		
31	7382167	24	PRESSURE SPRING	DRUCKFEDER		
39	9885924	1	WASHER SET	SCHEIBENSATZ		

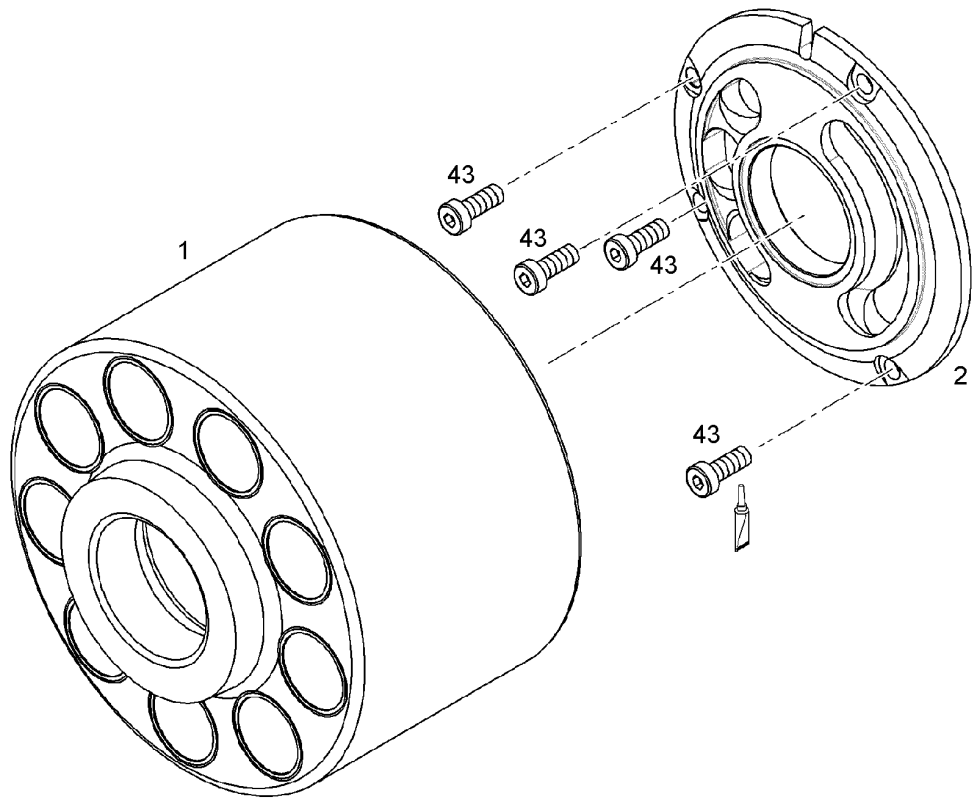

Pos.	Item	Quantity	Description	Bezeichnung	Serie	K
1	9075894	1	CYLINDER WITH BUSHING	ZYLINDER MIT BUCHSE		
2	9887035	1	CONTROL PLATE LEFT	STEUERPLATTE LINKS		
43	4981218	4	SOCKET HEAD SCREW ISO 14580 M6X16 10.9	ZYLINDERSCHRAUBE		

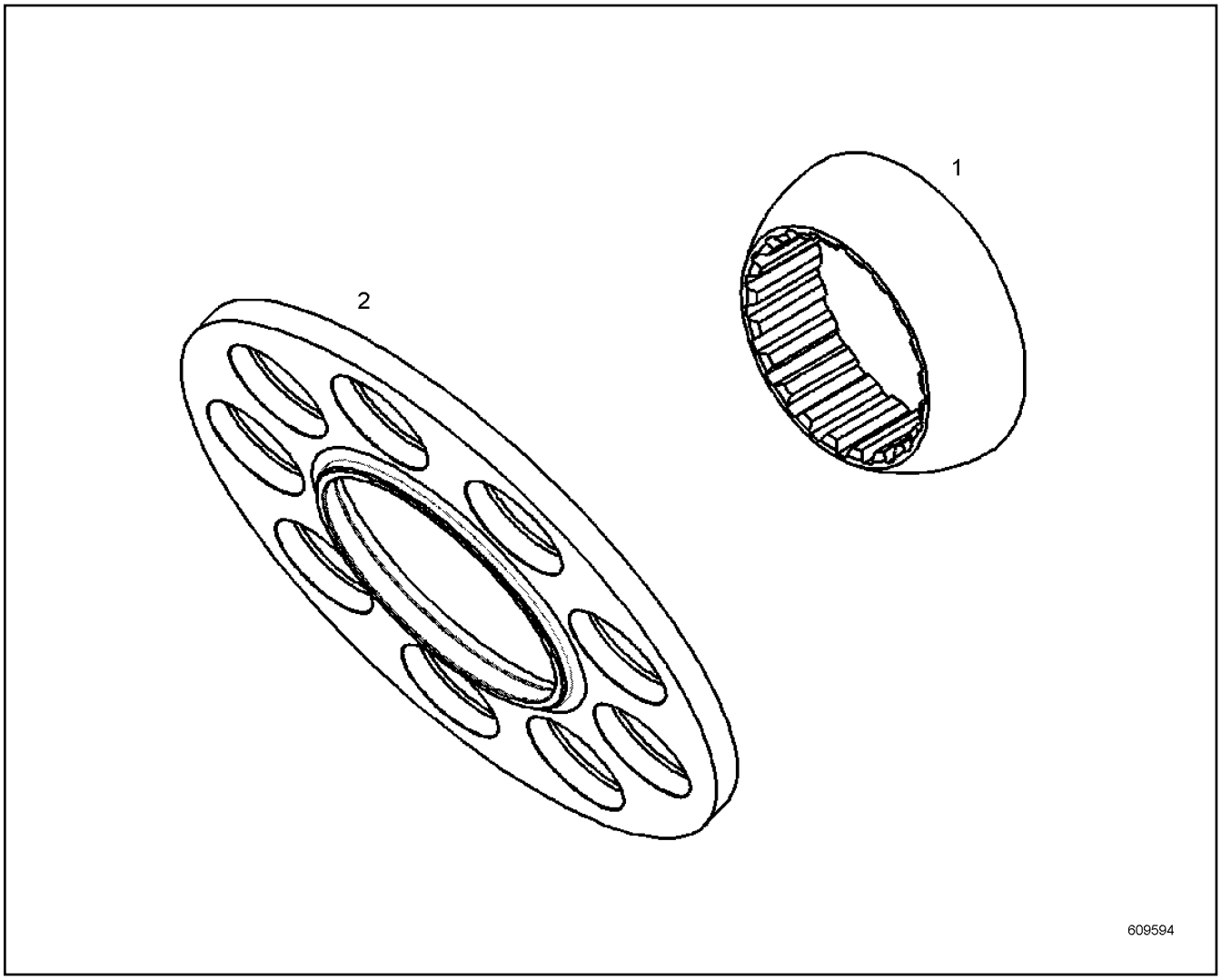

Pos.	Item	Quantity	Description	Bezeichnung	Serie	K
1	9889929	1	PULL-BACK BALL	RUECKZUGKUGEL		
2	9889930	1	PULL-BACK PLATE	RUECKZUGPLATTE		

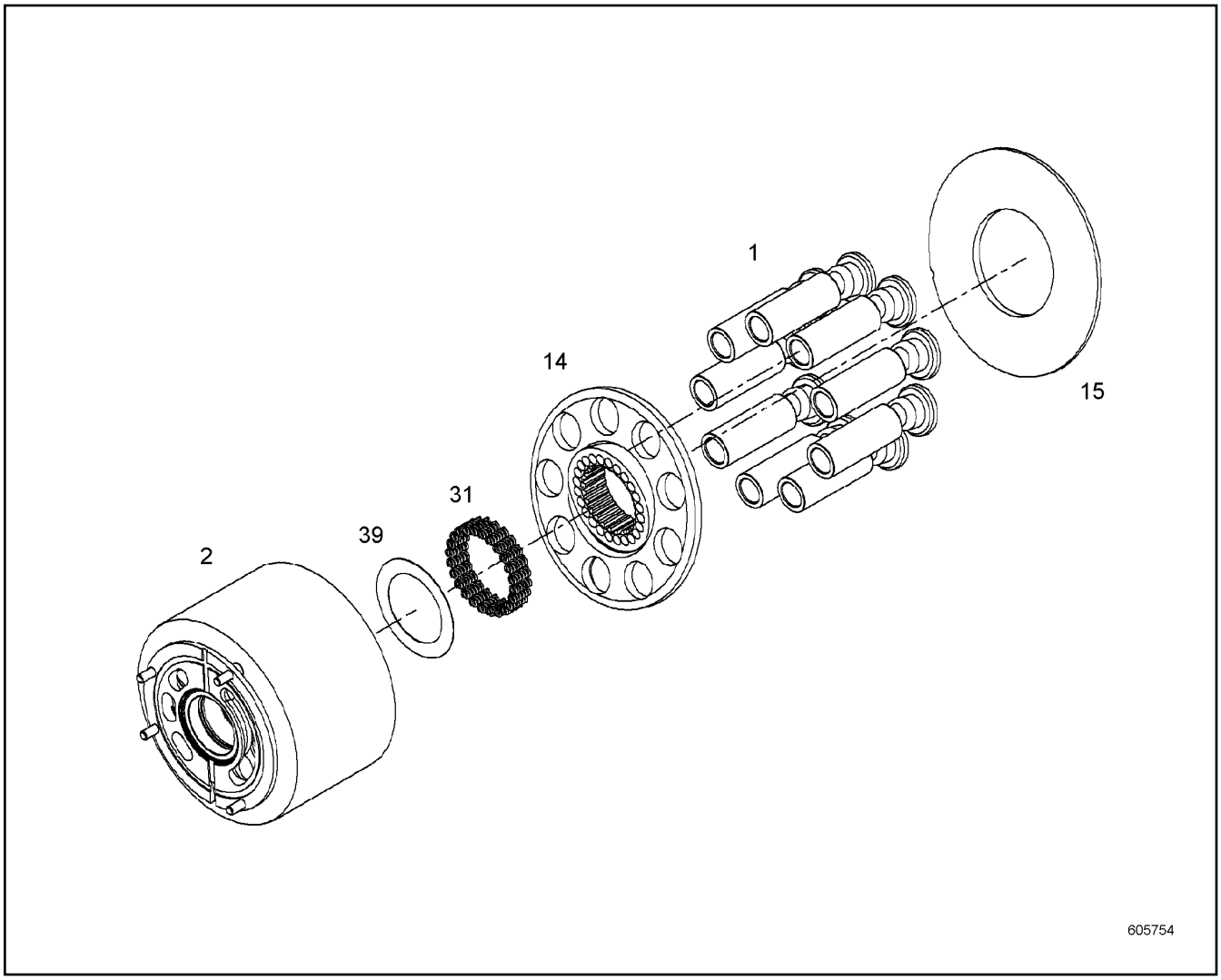

Pos.	Item	Quantity	Description	Bezeichnung	Serie	K
1	9889831	1	RK PISTON WITH GUIDE SHOE	RS KOLBEN MIT GLEITSCHUH		
2	9889832	1	RK CYLINDER+CONTROL PLATE ⇨ ❑ 122	RS ZYLINDER+STEUERPLATTE		
14	9889988	1	RK PULL-BACK BALL+PULL-B.PLATE ⇨ ❑ 120	RS RUECKZUGKUGEL+RUECKZ.		
15	9889809	1	SLIDING DISC 72X152X6	GLEITSCHEIBE		
31	7382167	24	PRESSURE SPRING	DRUCKFEDER		
39	9885924	1	WASHER SET	SCHEIBENSATZ		

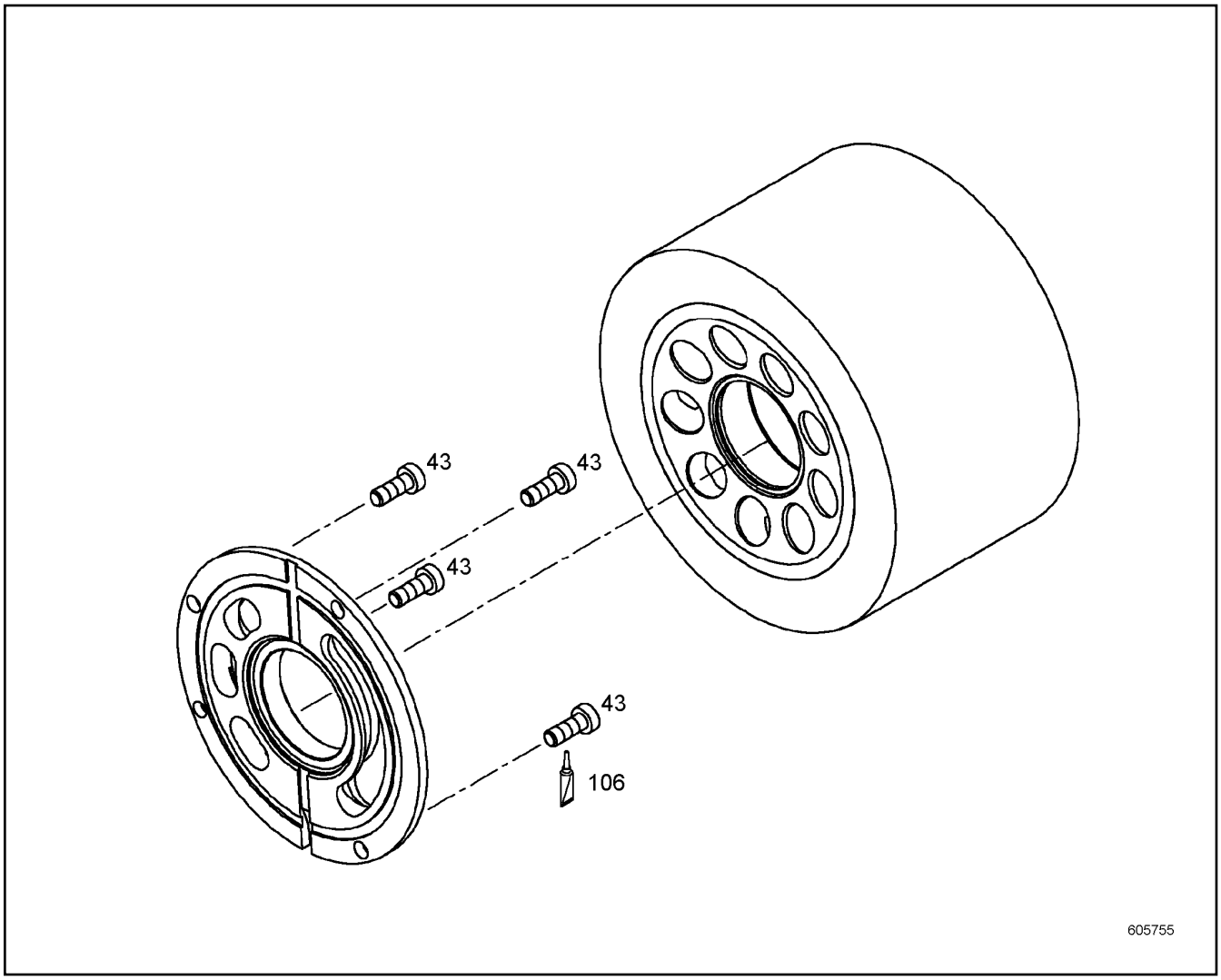

Pos.	Item	Quantity	Description	Bezeichnung	Serie	K
43	4981218	4	SOCKET HEAD SCREW ISO 14580 M6X16 10.9	ZYLINDERSCHRAUBE		
106	8700012	1	SCREW LOCKING	SCHRAUBENSICHERUNG		

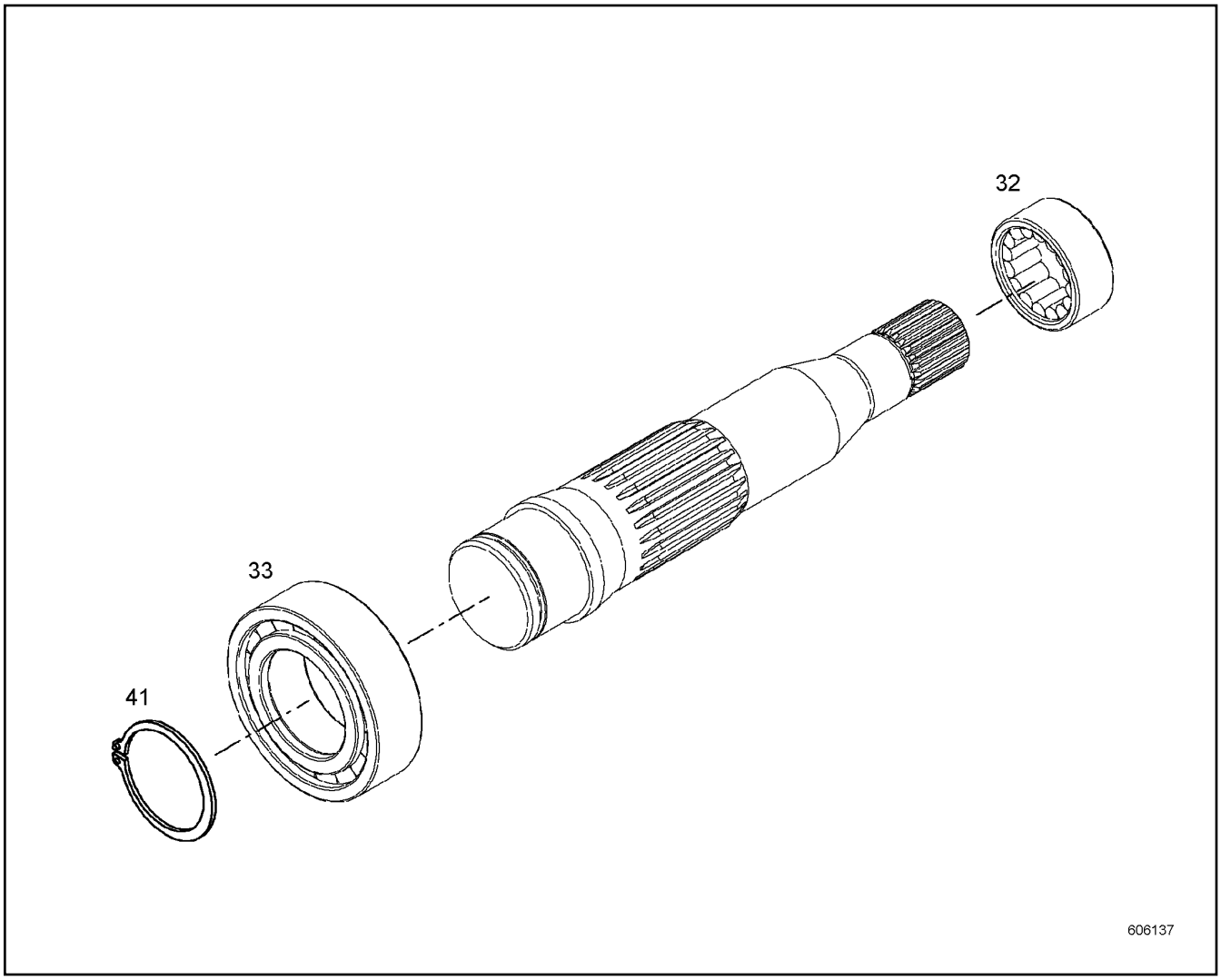

Pos.	Item	Quantity	Description	Bezeichnung	Serie	K
32	7469905	1	CYL.NEEDLE BEARING	ZYLINDERNADELLAGER		
33	7380106	1	CYLINDRICAL ROLLER BEARING	ZYLINDERROLLENLAGER		
41	4280034	1	LOCKING RING DIN 471 50X2	SICHERUNGSRING		

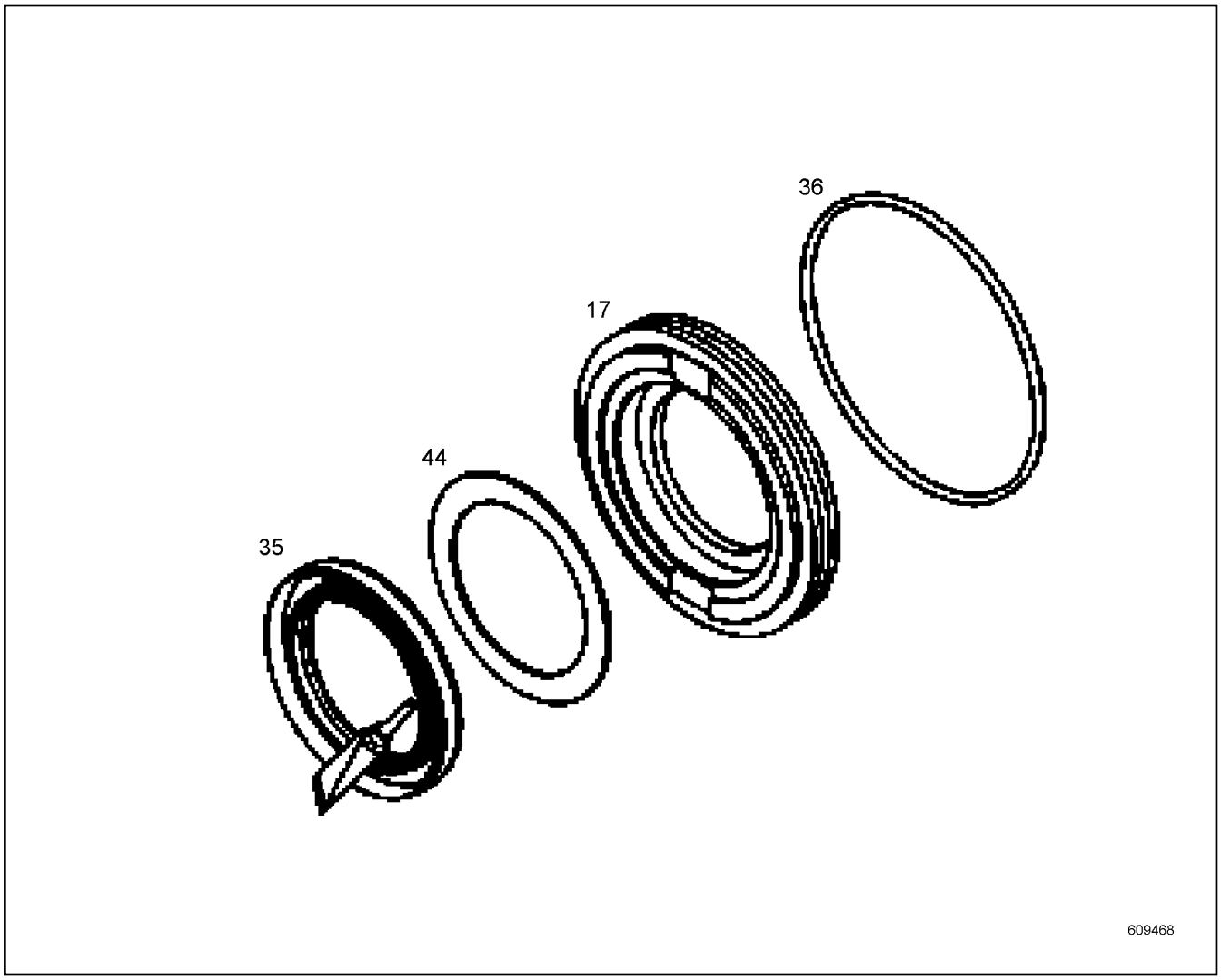

Pos.	Item	Quantity	Description	Bezeichnung	Serie	K
17	9885628	1	CLOSING RING	VERSCHLUSSRING		
35	10014510	1	ROTARY SHAFT LIP SEAL	RADIALWELLENDICHTRING		
36	7380657	1	O-RING	O-RING		
44	7380531	1	SHIM RING 55X65X1.5 ST	PASSSCHEIBE		

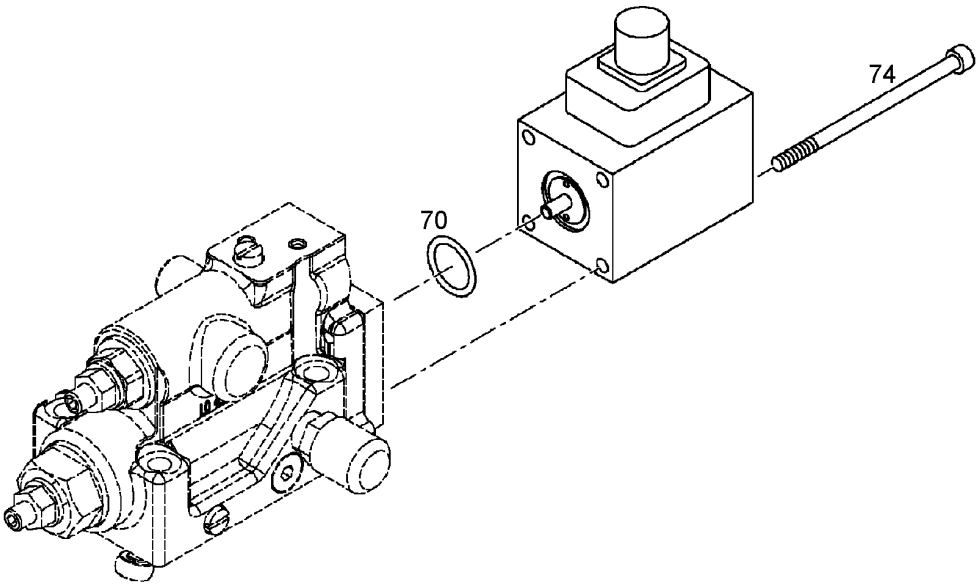

Pos.	Item	Quantity	Description	Bezeichnung	Serie	K
70	7381004	1	O-RING	O-RING		
74	10539462	4	SOCKET HEAD SCREW ISO 4762 M5X85 A4-7	ZYLINDERSCHRAUBE		

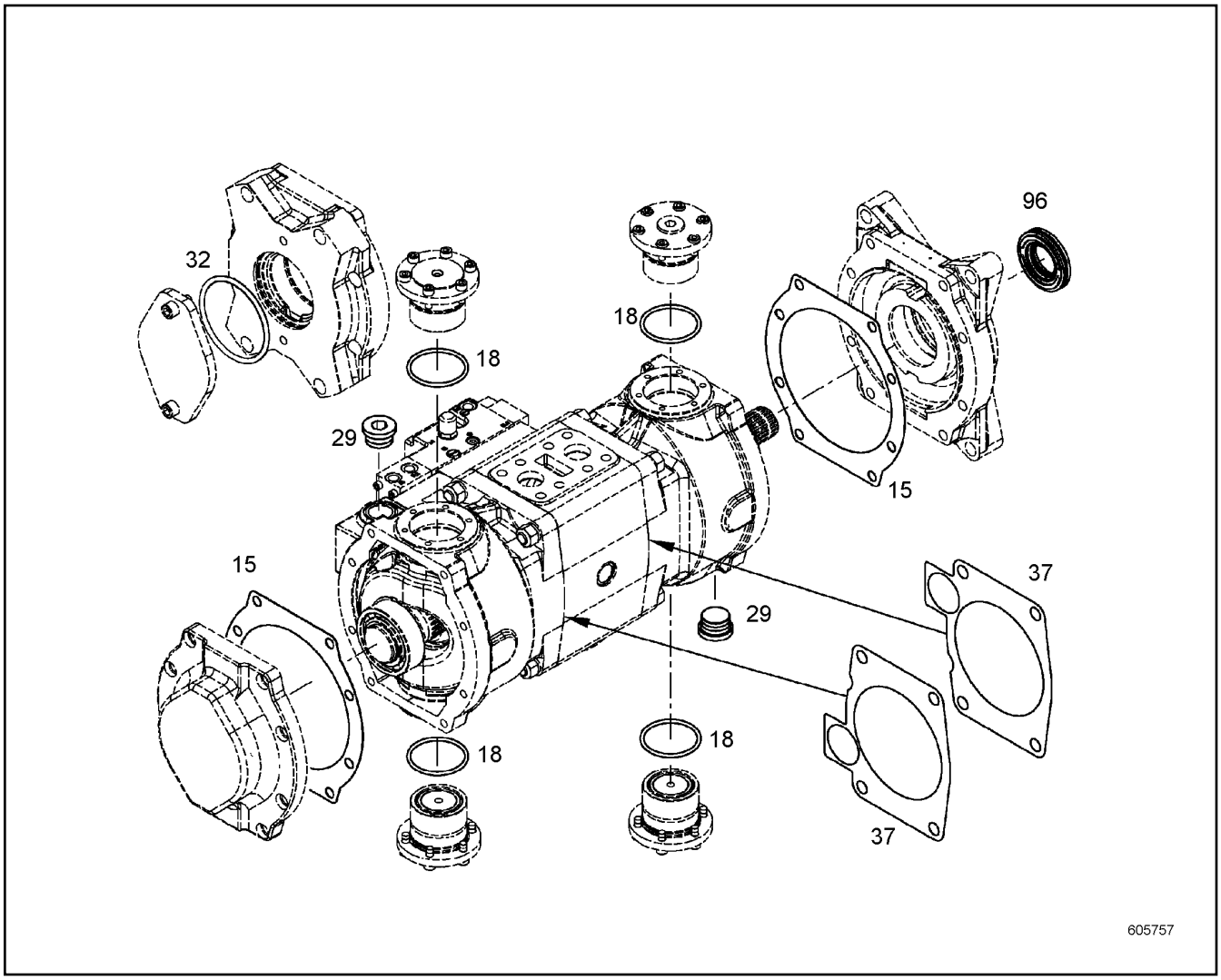

Pos.	Item	Quantity	Description	Bezeichnung	Serie	K
15	9882207	2	SEAL	DICHTUNG		
18	7380656	4	O-RING	O-RING		
29	10137121	2	SCREW PLUG	VERSCHLUSSSCHRAUBE		
32	7004512	1	O-RING	O-RING		
37	9276860	2	FLAT GASKET	FLACHDICHTUNG		
96	9268016	1	REPAIR KIT LOCK RING ⇨ ❑ 124	RS VERSCHLUSSRING		

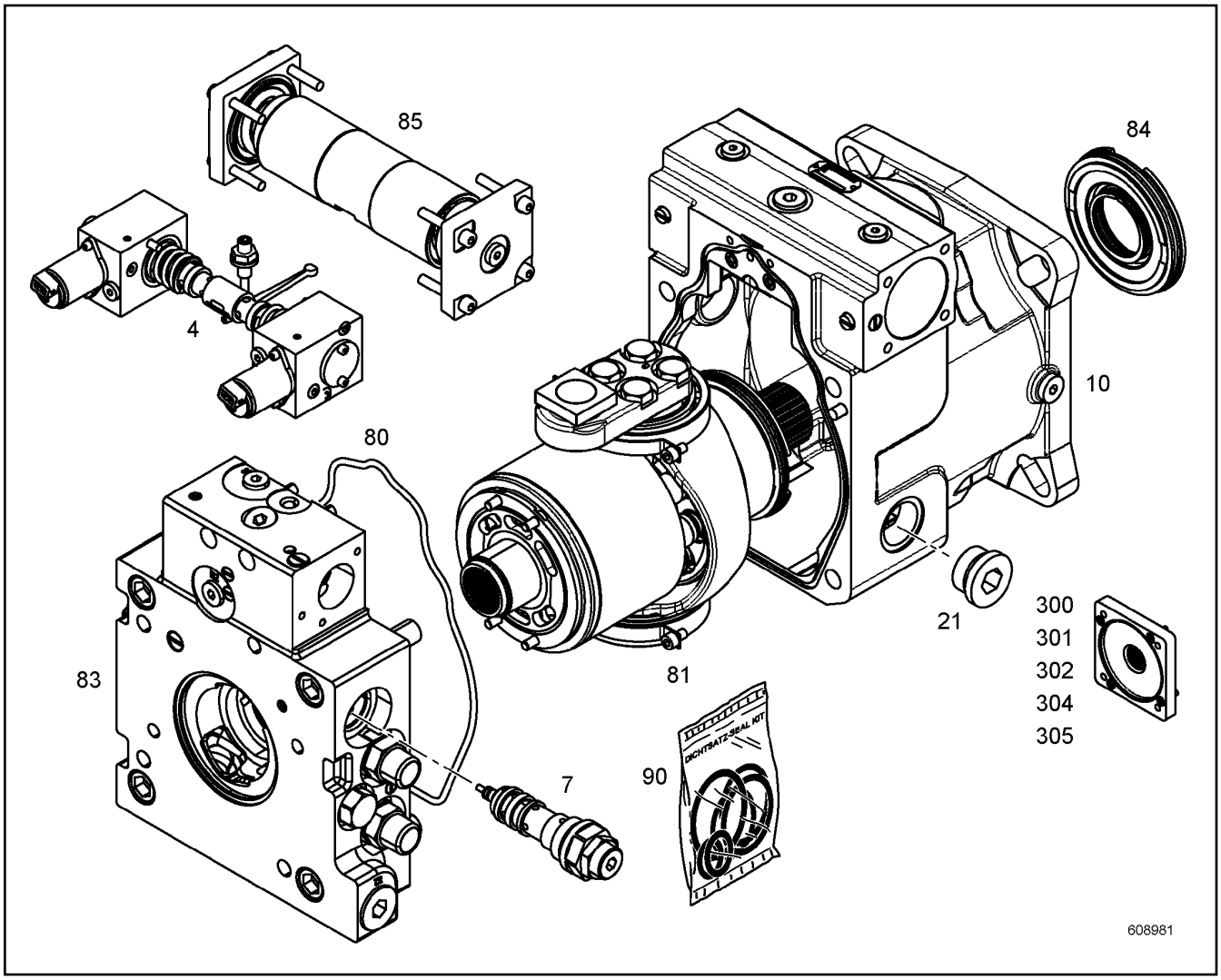

Pos.	Item	Quantity	Description	Bezeichnung	Serie	K
4	11362187	1	REGULATING VALVE ⇨ ❑ 129	REGELVENTIL		
7	10127478	1	REGULATING VALVE ⇨ ❑ 132	REGELVENTIL		
21	10137121	1	SCREW PLUG	VERSCHLUSSSCHRAUBE		
80	10122248	1	RK ADDITIONAL PARTS ⇨ ❑ 133	RS ZUSATZTEILE		
81	10138025	1	REPAIR KIT DRIVING MECHANISM ⇨ ❑ 134	RS TRIEBWERK		
83	10141317	1	REPAIR KIT CONNECTING PLATE ⇨ ❑ 140	RS ANSCHLUSSPLATTE		
84	10138032	1	REPAIR KIT LOCK RING ⇨ ❑ 144	RS VERSCHLUSSRING		
85	10122262	1	REGULATION REPAIR KIT ⇨ ❑ 145	RS VERSTELLUNG		
90	10138033	1	SEAL KIT CPL. ⇨ ❑ 146	DICHTSATZ KPL.		
300	10129874	1	THROUGH DRIVE ⇨ ❑ 149	DURCHTRIEB		
301	10130005	1	THROUGH DRIVE ⇨ ❑ 150	DURCHTRIEB		
302	10132357	1	CONSTRUCTION KIT OUTPUT ⇨ ❑ 151	ANBAUSATZ DURCHTRIEB		
304	10134521	1	THROUGH DRIVE ⇨ ❑ 152	DURCHTRIEB		

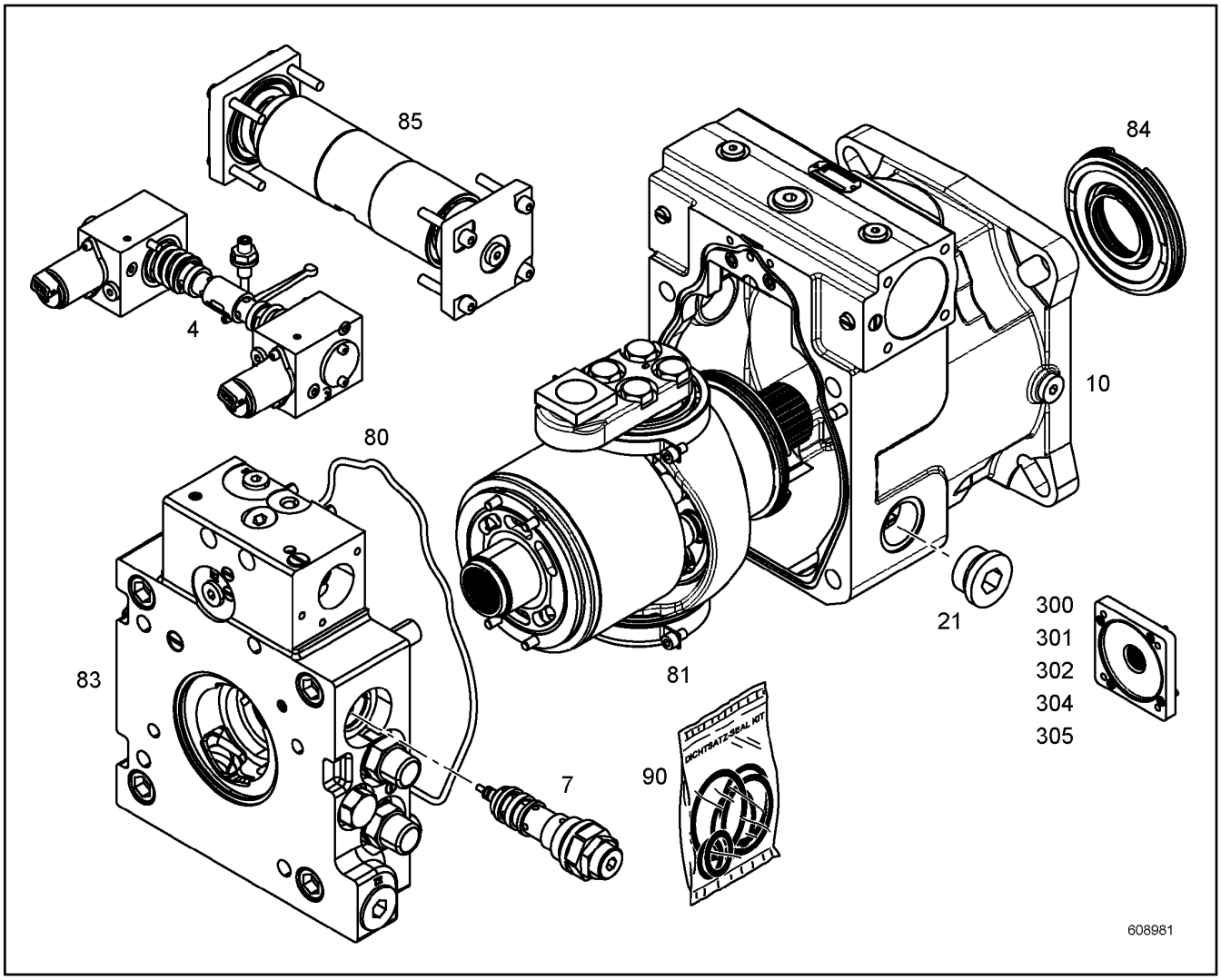

Pos.	Item	Quantity	Description	Bezeichnung	Serie	K
305	10138068	1	THROUGH DRIVE ⇨ ❑ 153	DURCHTRIEB		

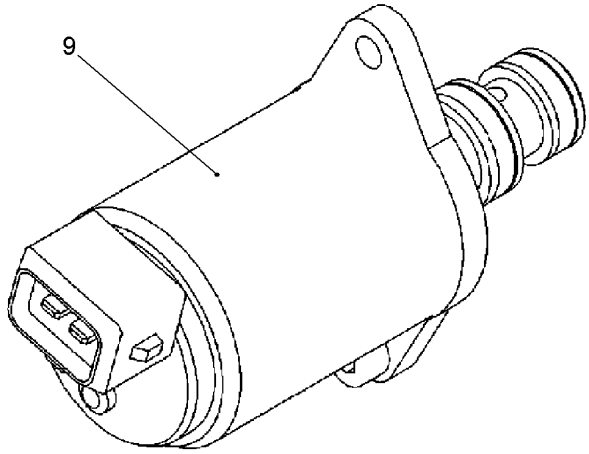

609098

Pos.	Item	Quantity	Description	Bezeichnung	Serie	K
9	10129420	2	PRESSURE REDUCTION VALVE ⇨ ❑ 130	DRUCKREDUZIERVENTIL		

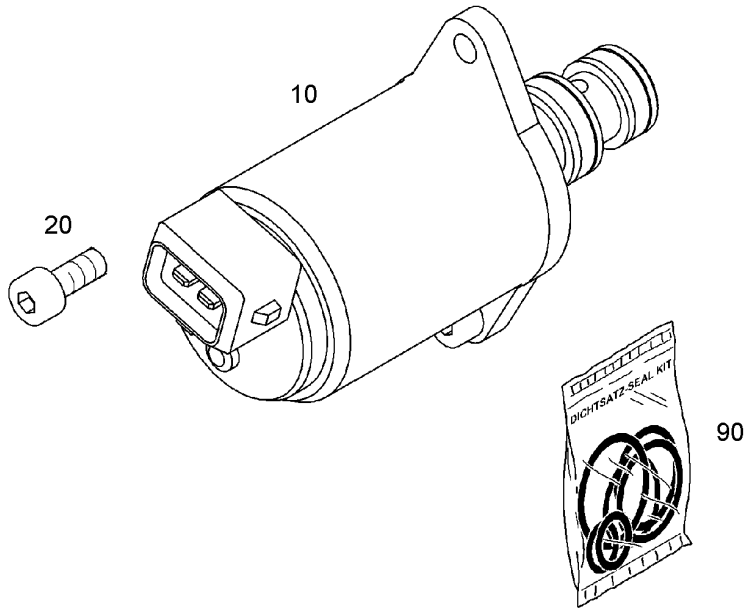

Pos.	Item	Quantity	Description	Bezeichnung	Serie	K
10	10135472	1	PRESSURE FEEDER VALVE	DRUCKEINSPEISEVENTIL		
20	10228541	2	SOCKET HEAD SCREW ISO 4762 M4X10 10.9	ZYLINDERSCHRAUBE		
90	10123214	1	SEAL KIT PRESSUR.CONTROL VALVE ⇨ ❑ 131	DS DRUCKREDUZIERVENTIL		

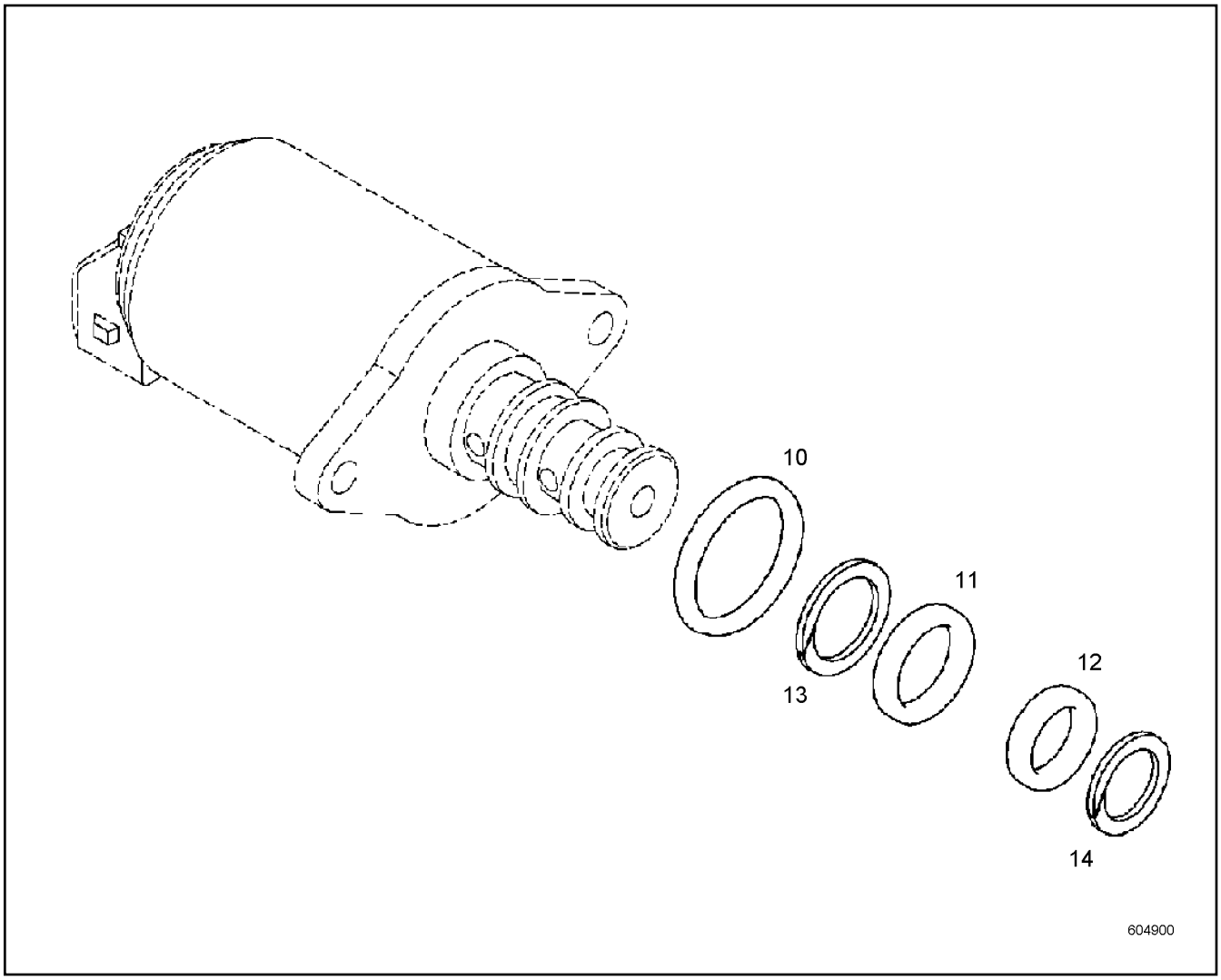

Pos.	Item	Quantity	Description	Bezeichnung	Serie	K
10	7381440	1	O-RING	O-RING		
11	7381439	1	O-RING	O-RING		
12	7381438	1	O-RING	O-RING		
13	11007751	1	BACK-UP RING CUT	STUETZRING GESCHL.		
14	11007749	1	BACK-UP RING CUT	STUETZRING GESCHL.		

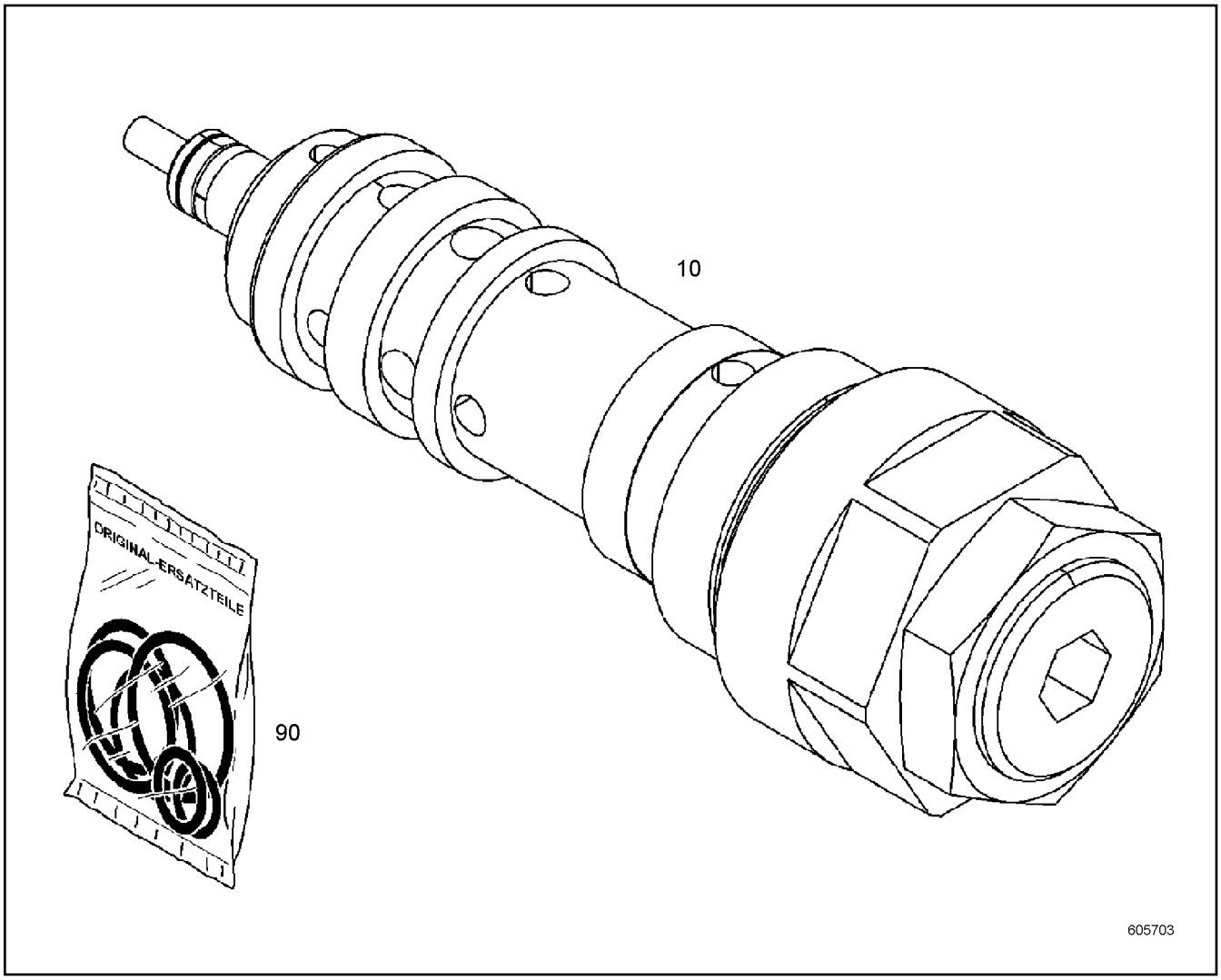

Pos.	Item	Quantity	Description	Bezeichnung	Serie	K
10	10127479	1	REGULATING VALVE	REGELVENTIL		

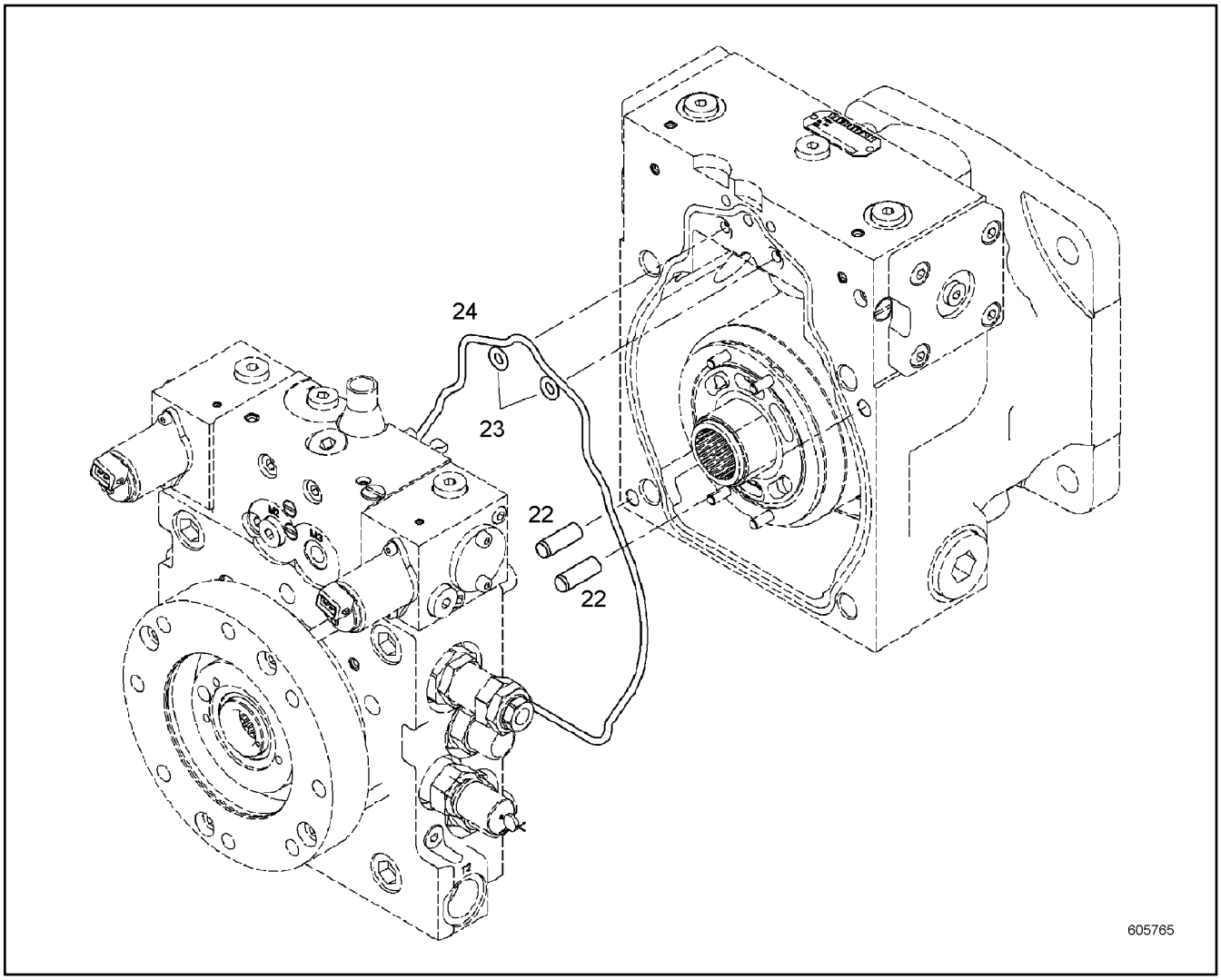

Pos.	Item	Quantity	Description	Bezeichnung	Serie	K
22	4981077	2	PARALLEL PIN ISO 8734 10M6X30 ST	ZYLINDERSTIFT		
23	7381013	2	O-RING	O-RING		
24	10002309	1	O-RING	O-RING		

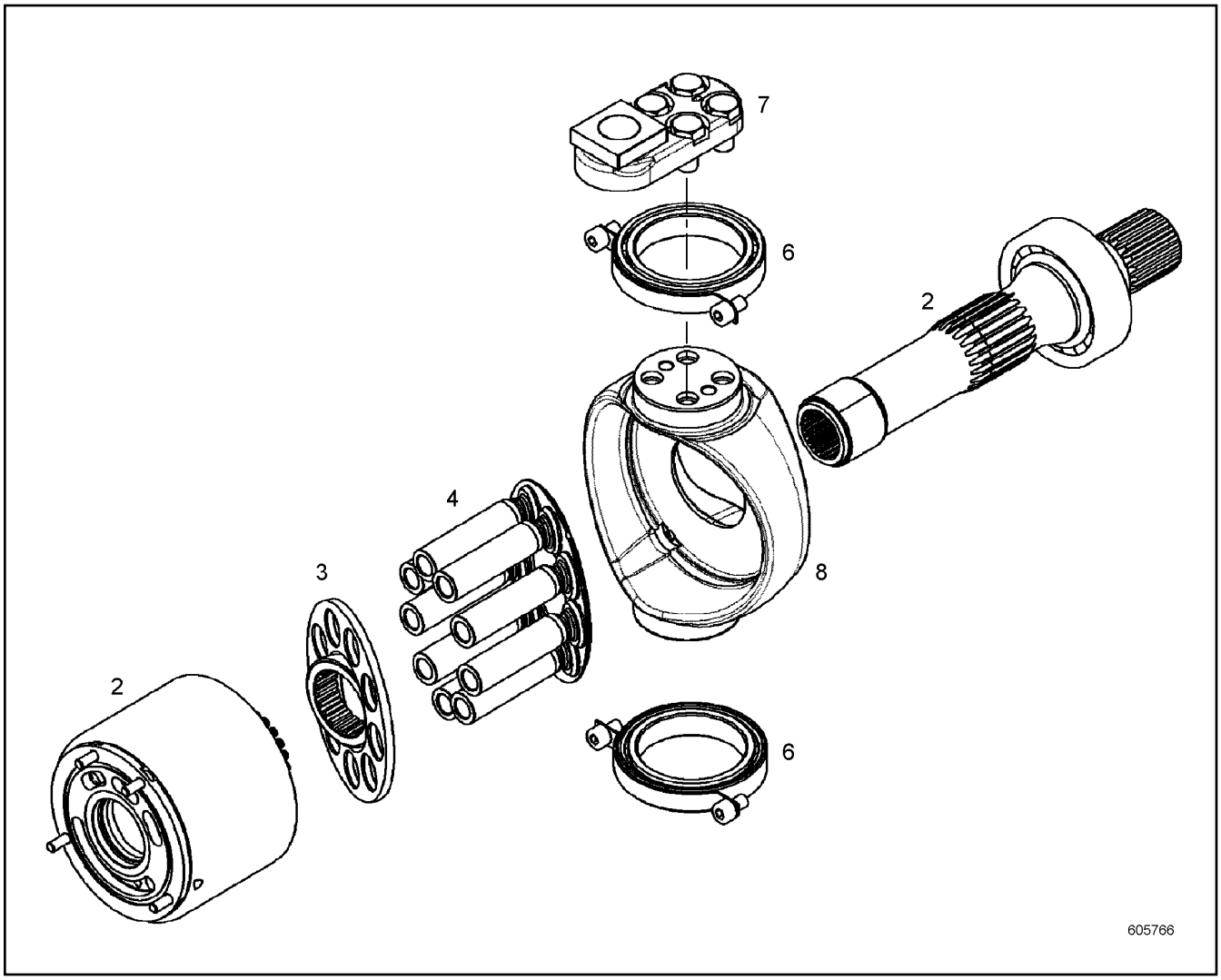

Pos.	Item	Quantity	Description	Bezeichnung	Serie	K
2	10138026	1	RK CYL.+CONTROL PLATE+SHAFT ⇨ ❑ 135	RS ZYL.+STEUERPL.+WELLE		
3	9078214	1	RK PULL-BACK BALL+PULL-B.PLATE	RS RUECKZUGKUGEL+RUECKZ.		
4	10122692	1	RK PISTON WITH GUIDE SHOE	RS KOLBEN MIT GLEITSCHUH		
6	10143607	1	REPAIR SET SWIVEL BEARING ⇨ ❑ 138	RS SCHWENKLAGER		
7	10122245	1	REPAIR KIT LEVER ⇨ ❑ 139	RS HEBEL		
8	10122246	1	REPAIR SET SWIVEL YOKE	RS SCHWENKJOCH		

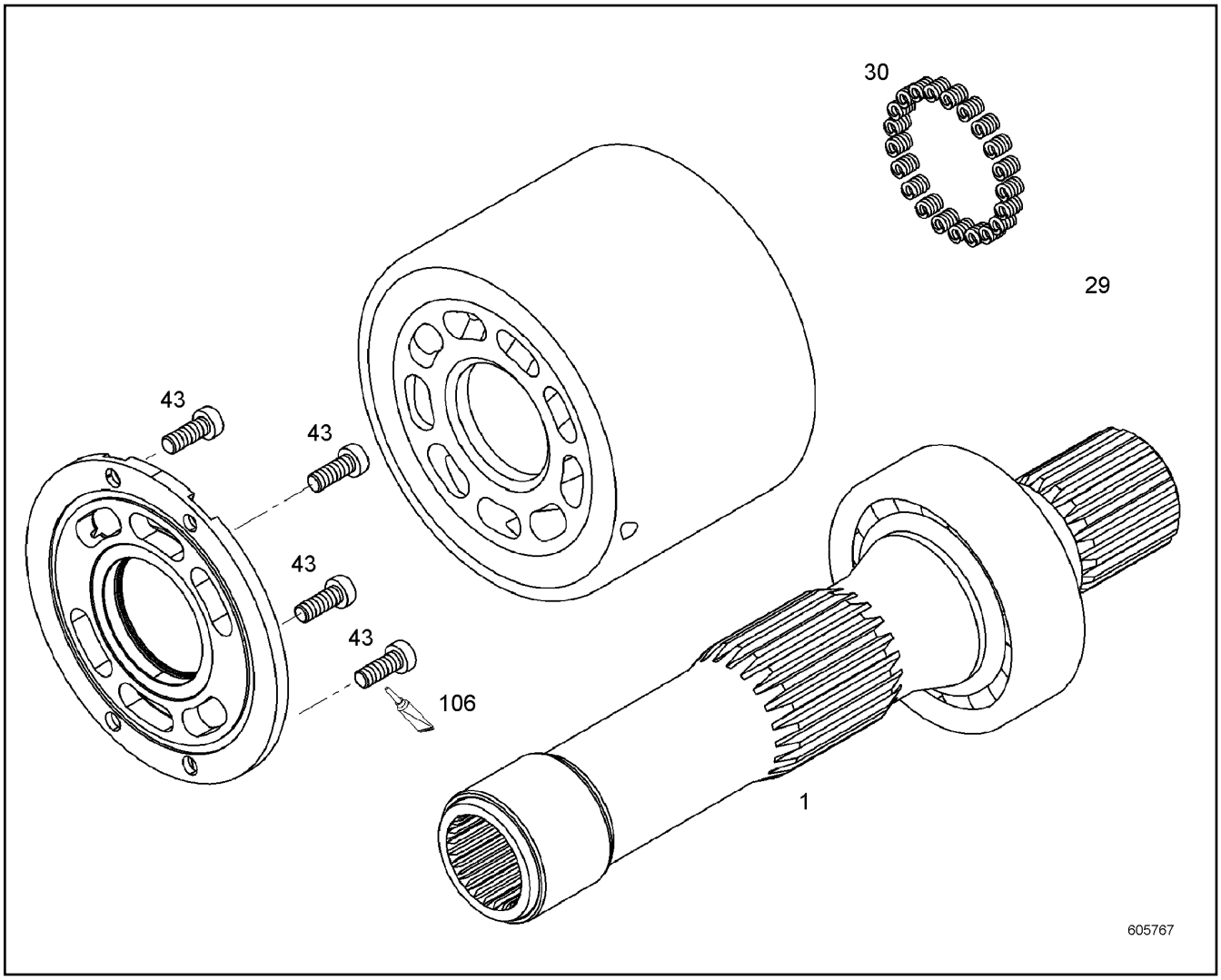

Pos.	Item	Quantity	Description	Bezeichnung	Serie	K
1	10138027	1	REPAIR KIT SHAFT ⇨ ❑ 136	RS WELLE		
29	9885937	1	WASHER SET ⇨ ❑ 137	SCHEIBENSATZ		
30	7381699	21	PRESSURE SPRING	DRUCKFEDER		
43	10137839	4	TALLOW-DROP SCREW M6X16 10.9	LINSENKOPFSCHRAUBE		
106	7016208	1	OMNIFIT	OMNIFIT		

OHNE BILD
WITHOUT ILLUSTRATION
SANS PLANCHE
SIN FIG.
SEM ILUSTRAÇÃO
БЕЗ ИЗОБРАЖЕНИЯ

600000

Pos.	Item	Quantity	Description	Bezeichnung	Serie	K
33	7380070	1	CYLINDRICAL ROLLER BEARING	ZYLINDERROLLENLAGER		
39	7380297	1	O-RING	O-RING		
40	4281017	1	LOCKING RING DIN 472 95X3	SICHERUNGSRING		
41	4280032	2	LOCKING RING DIN 471 45X1.75	SICHERUNGSRING		

OHNE BILD
WITHOUT ILLUSTRATION
SANS PLANCHE
SIN FIG.
SEM ILUSTRAÇÃO
БЕЗ ИЗОБРАЖЕНИЯ

600000

Pos.	Item	Quantity	Description	Bezeichnung	Serie	K
10	10123256	2	SUPPORTING WASHER 45X56X0.3	STUETZSCHEIBE		
11	10123257	2	SUPPORTING WASHER 45X56X0.4	STUETZSCHEIBE		
12	10123258	2	SUPPORTING WASHER 45X56X0.5	STUETZSCHEIBE		

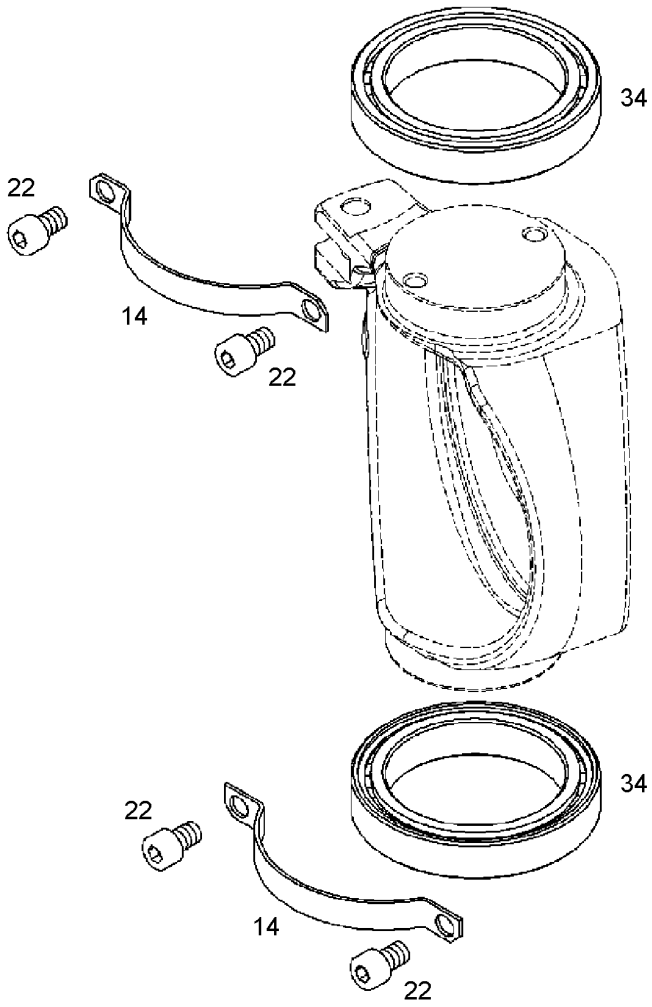

Pos.	Item	Quantity	Description	Bezeichnung	Serie	K
14	9887948	2	BEARING HOLDER	LAGERHALTER		
22	10219869	4	SOCKET HEAD SCREW ISO 4762 M8X12 8.8	ZYLINDERSCHRAUBE		
34	11490216	2	CYL ROLLER BEARING	ZYL ROLLENLAGER		

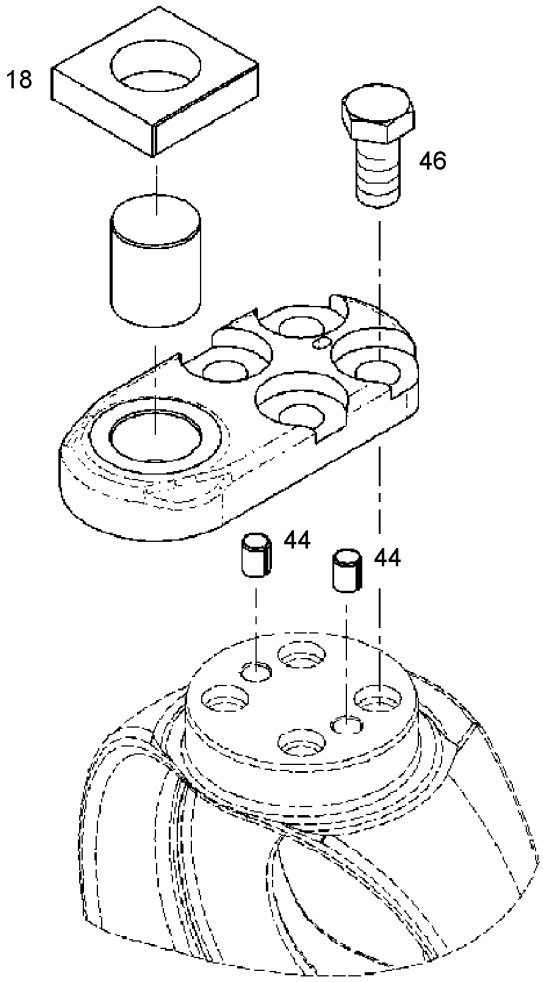

Pos.	Item	Quantity	Description	Bezeichnung	Serie	K
18	9076196	1	GROOVING BLOCK	NUTENSTEIN		
44	4980638	2	DOWEL PIN ISO 13337 8X10 ST	SPANNSTIFT		
46	4980977	4	HEX SCREW ISO 4017 M12X25 10.9	SECHSKANTSCHRAUBE		

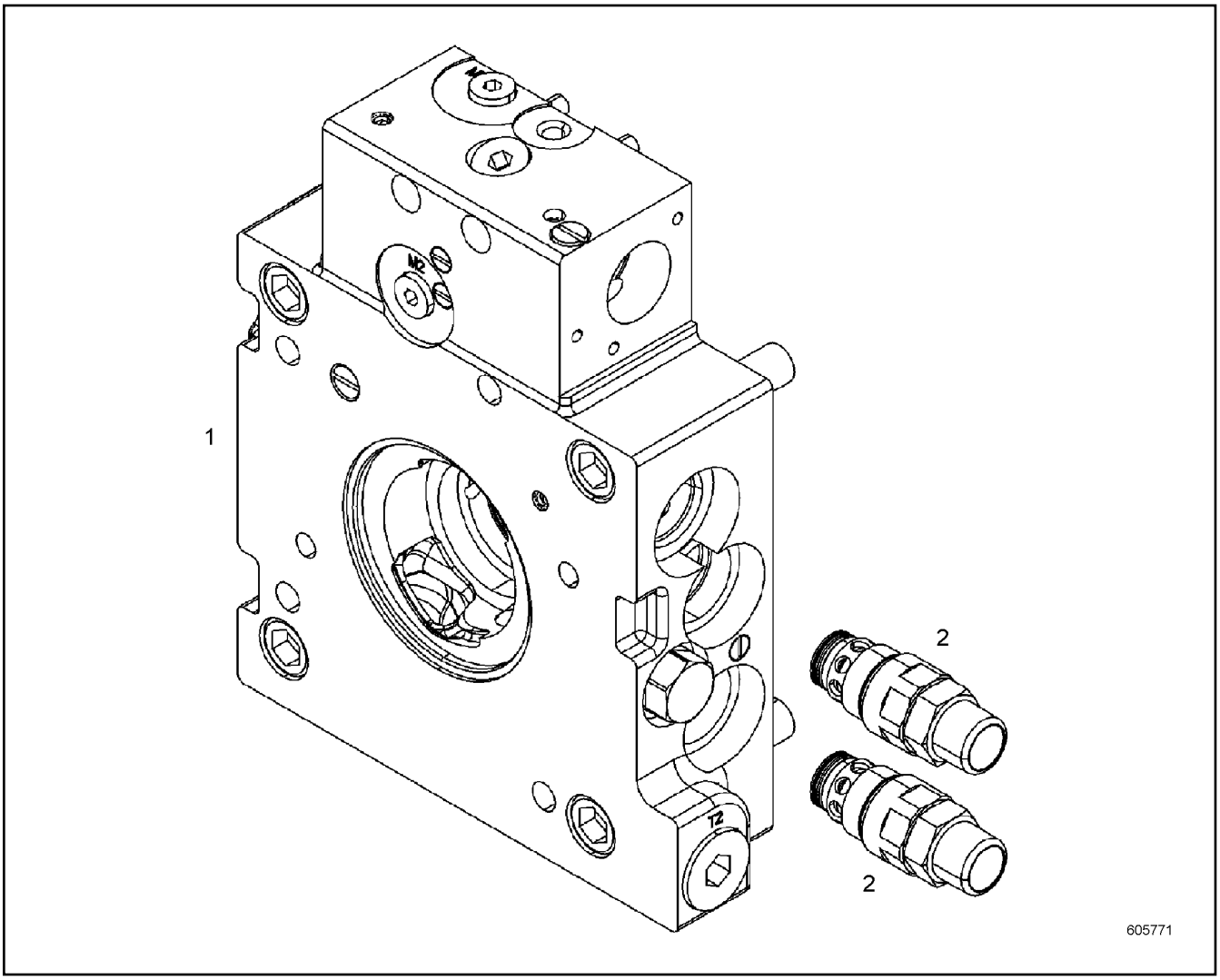

Pos.	Item	Quantity	Description	Bezeichnung	Serie	K
1	10141316	1	TERMINAL BOARD PRE-ASS. ⇨ ❑ 141	ANSCHLUSSPLATTE VORM.		
2	10123236	2	PRESSURE FEEDER VALVE ⇨ ❑ 143	DRUCKEINSPEISEVENTIL		

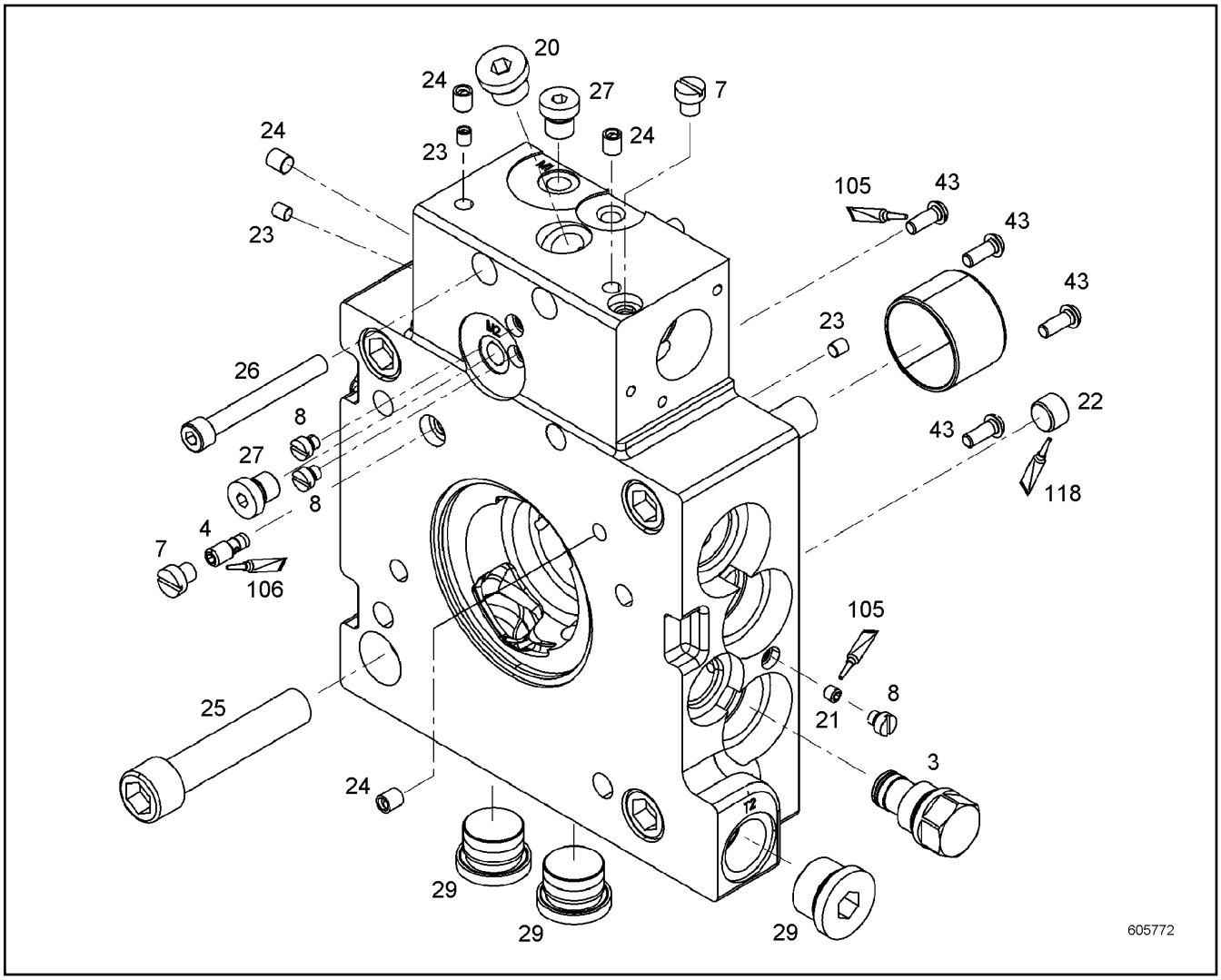

Pos.	Item	Quantity	Description	Bezeichnung	Serie	K
3	10123528	1	STOP PLUG ⇨ ❑ 142	STOPFEN		
4	10124239	1	SHUTTLE VALVE	WECHSELVENTIL		
7	9881609	2	SCREW PLUG M8X1	VERSCHLUSSSCHRAUBE		
8	9268441	5	SCREW PLUG M6	VERSCHLUSSSCHRAUBE		
20	10137312	1	SCREW PLUG	VERSCHLUSSSCHRAUBE		
21	4980082	1	GRUB SCREW DIN 913 M6X6 45H	GEWINDESTIFT		
22	403900501	1	SCREW PLUG DIN 906 ST	VERSCHLUSSSCHRAUBE		
23	7380490	2	SEALING PLUG	DICHTSTOPFEN		
24	7008121	4	SEALING PLUG	DICHTSTOPFEN		
25	10017870	4	SOCKET HEAD SCREW ISO 4762 M16X80 10.9	ZYLINDERSCHRAUBE		
26	11170484	2	SOCKET HEAD SCREW ISO 4762 M8X70 10.9	ZYLINDERSCHRAUBE		
27	10137115	2	SCREW PLUG	VERSCHLUSSSCHRAUBE		
29	10137108	3	SCREW PLUG	VERSCHLUSSSCHRAUBE		
43	10137839	4	TALLOW-DROP SCREW M6X16 10.9	LINSENKOPFSCHRAUBE		
105	8655016	1	SCREW LOCKING	SCHRAUBENSICHERUNG		
106	7016208	1	OMNIFIT	OMNIFIT		
118	811208201	1	GLUE	KLEBSTOFF		

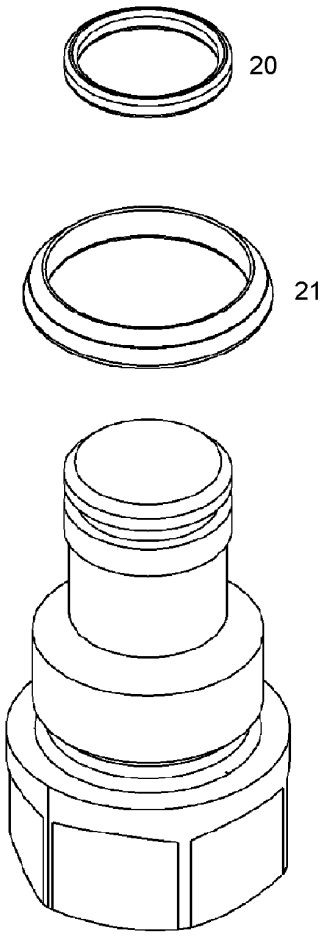

Pos.	Item	Quantity	Description	Bezeichnung	Serie	K
20	7381128	1	O-RING	O-RING		
21	7381127	1	O-RING	O-RING		

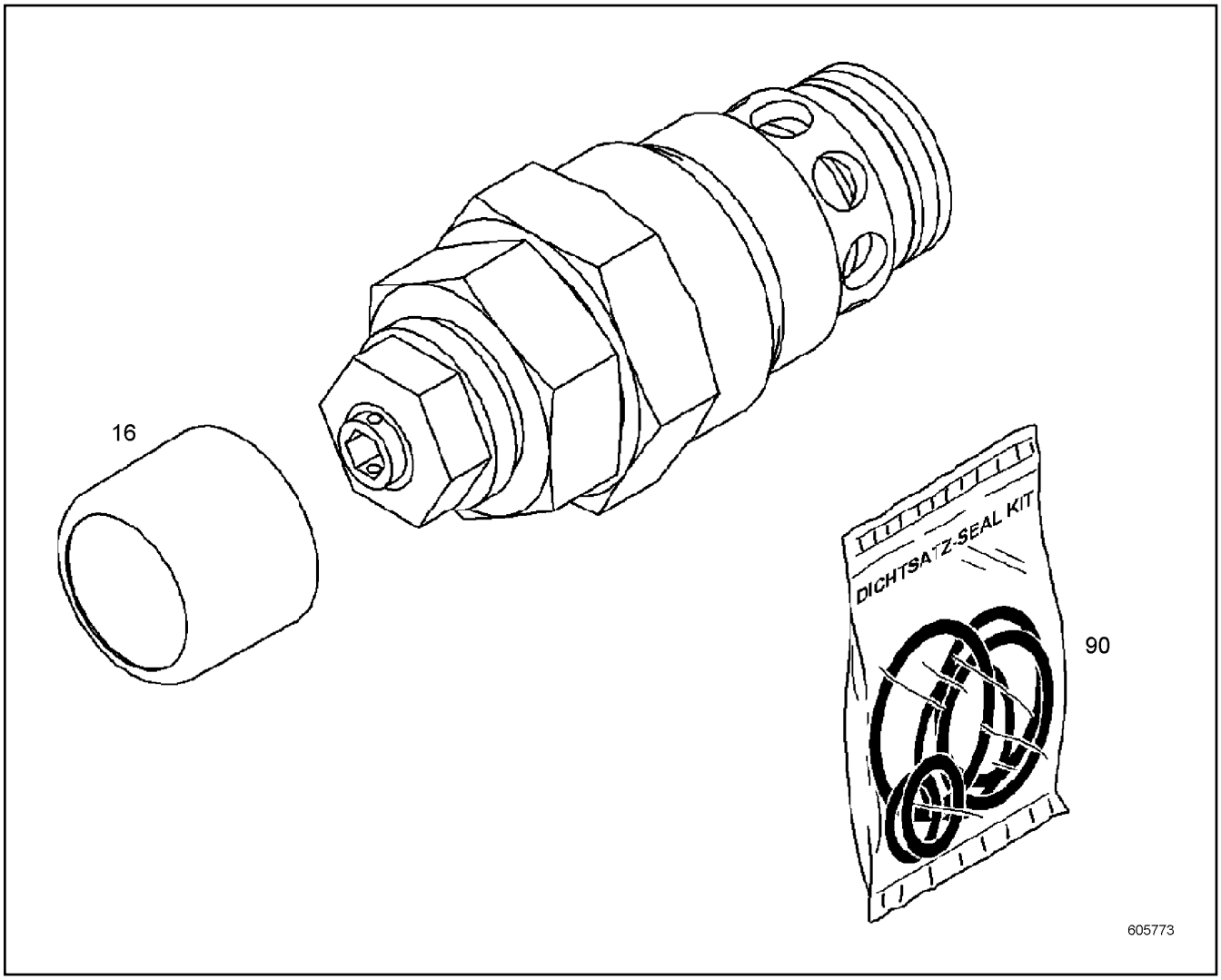

Pos.	Item	Quantity	Description	Bezeichnung	Serie	K
16	10801869	1	PROTECTING CAP	SCHUTZKAPPE		
90	10332095	1	SEAL KIT PRESSURE VALVE	DS DRUCKVENTIL		

OHNE BILD
WITHOUT ILLUSTRATION
SANS PLANCHE
SIN FIG.
SEM ILUSTRAÇÃO
БЕЗ ИЗОБРАЖЕНИЯ

600000

Pos.	Item	Quantity	Description	Bezeichnung	Serie	K
39	7380297	1	O-RING	O-RING		
40	4281017	1	LOCKING RING DIN 472 95X3	SICHERUNGSRING		
44	4002229	1	SHIM RING DIN 988 50X62X1.5	PASSSCHEIBE		

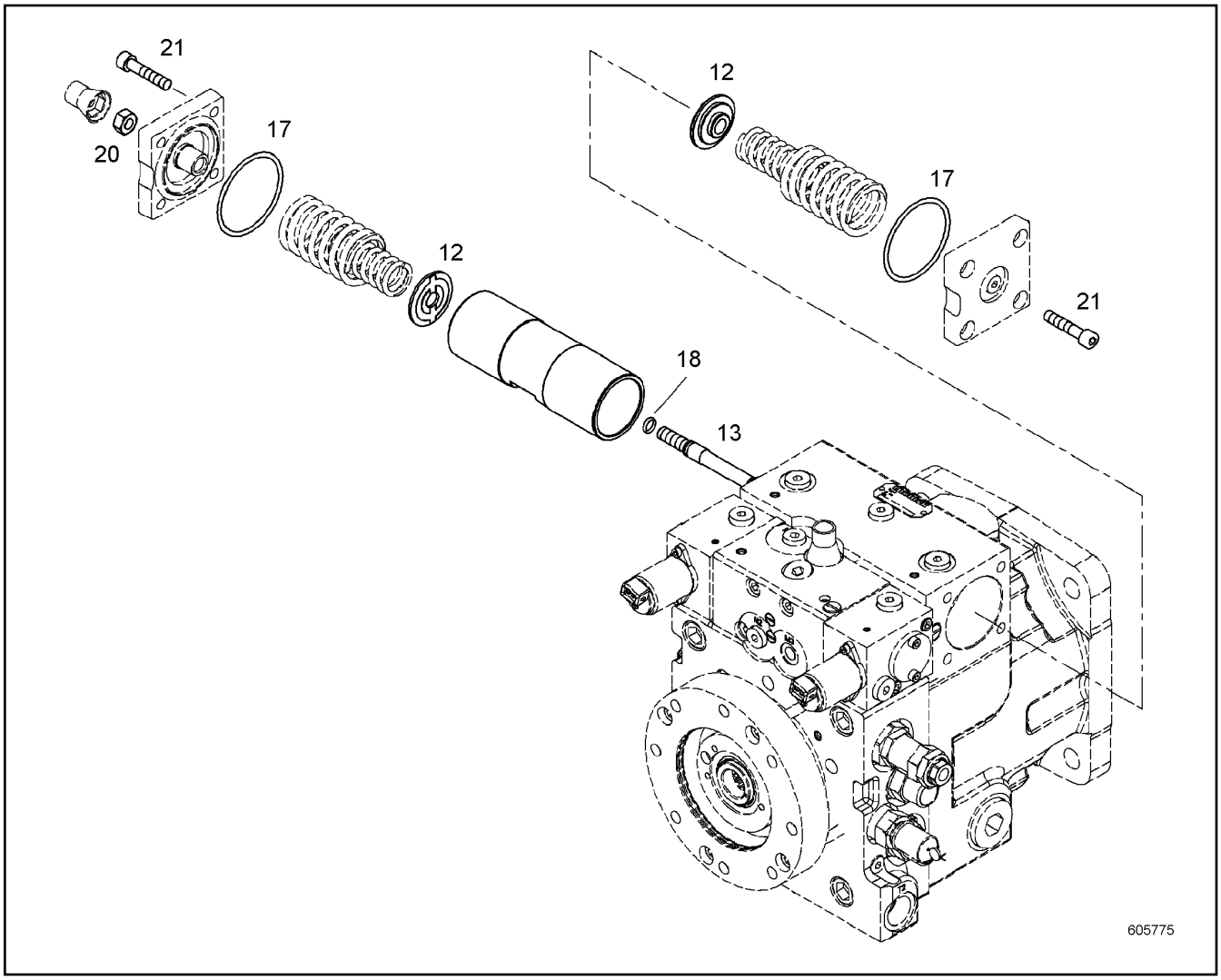

Pos.	Item	Quantity	Description	Bezeichnung	Serie	K
12	9076178	2	SPRING SUPPORT	FEDERTELLER		
13	9076176	1	CHECK SCREW M10X101 31CRMOV9;DIN EN	STELLSCHRAUBE		
17	10016874	2	O-RING	O-RING		
18	7380574	1	O-RING	O-RING		
20	4980986	1	HEX NUT ISO 8673 8	SECHSKANTMUTTER		
21	4980920	8	SOCKET HEAD SCREW ISO 4762 M8X40 10.9	ZYLINDERSCHRAUBE		

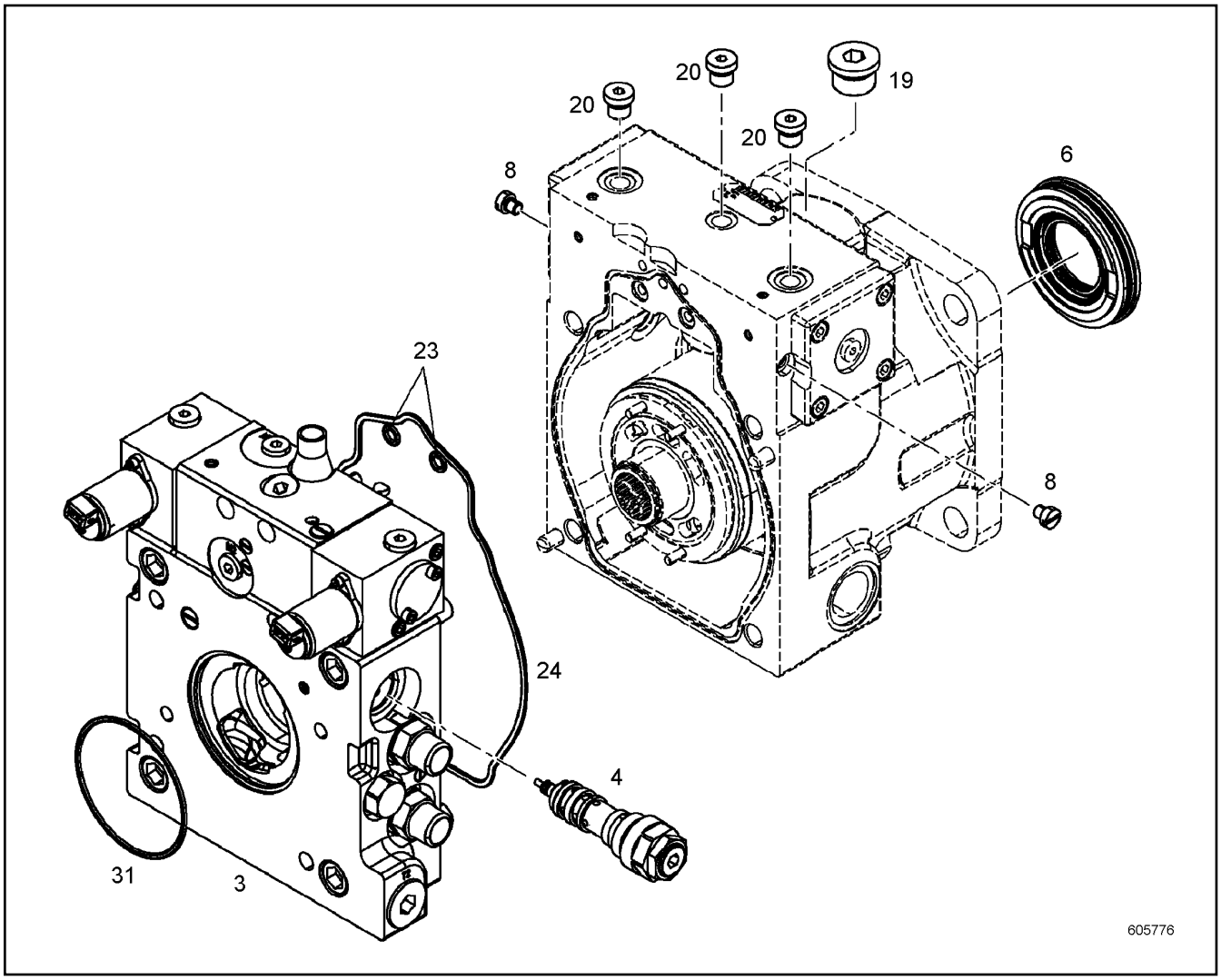

Pos.	Item	Quantity	Description	Bezeichnung	Serie	K
3	10138034	1	GASKET KIT INT.FLANGE ⇨ ❑ 147	DS ANSCHLUSSPLATTE		
4	10122265	1	SEAL KIT REGULATING VALVE ⇨ ❑ 148	DS REGELVENTIL		
6	10138032	1	REPAIR KIT LOCK RING ⇨ ❑ 144	RS VERSCHLUSSRING		
8	9881609	2	SCREW PLUG M8X1	VERSCHLUSSSCHRAUBE		
19	10137108	1	SCREW PLUG	VERSCHLUSSSCHRAUBE		
20	10137113	3	SCREW PLUG	VERSCHLUSSSCHRAUBE		
23	7381013	2	O-RING	O-RING		
24	10002309	1	O-RING	O-RING		
31	7380297	1	O-RING	O-RING		

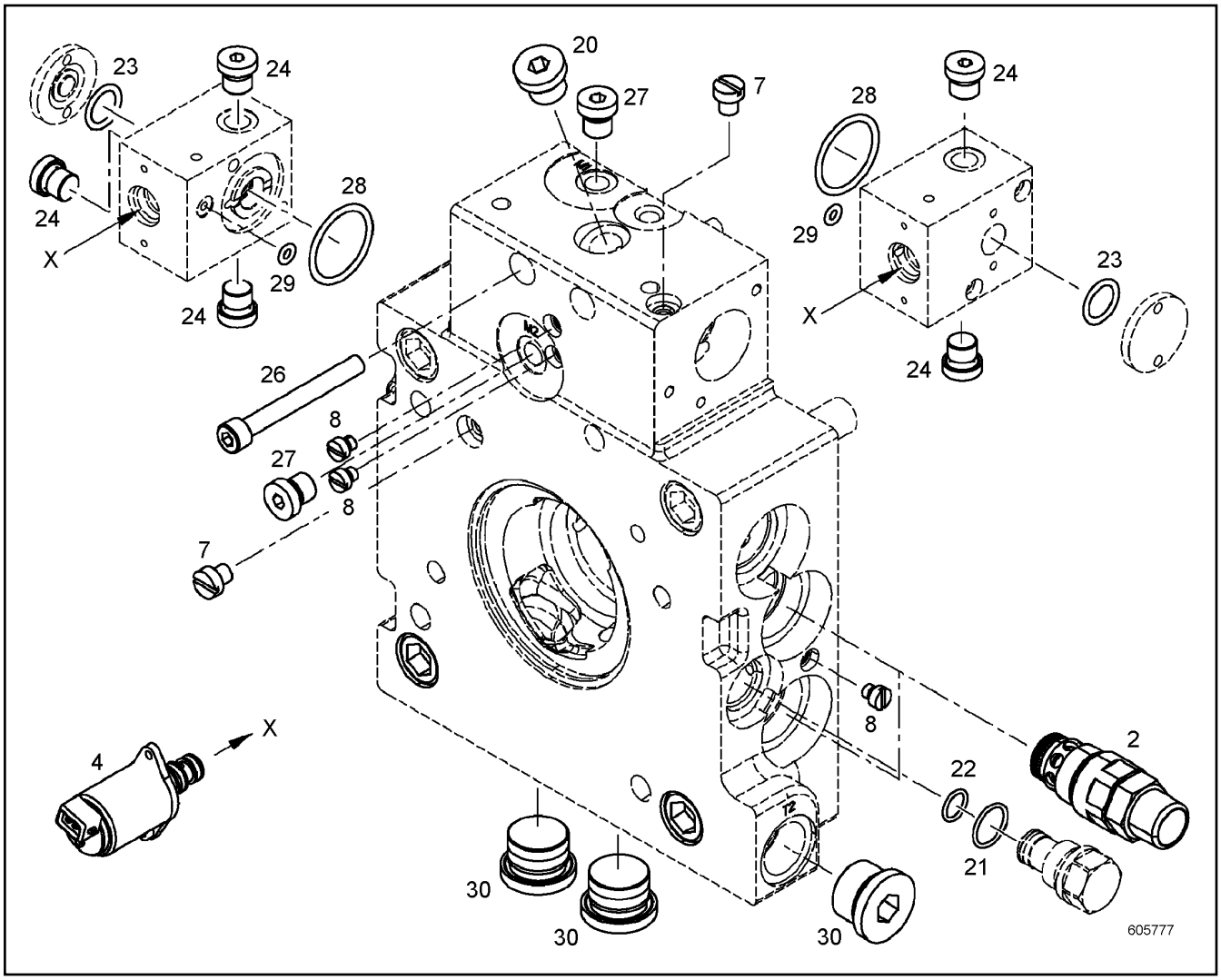

Pos.	Item	Quantity	Description	Bezeichnung	Serie	K
2	10332095	2	SEAL KIT PRESSURE VALVE	DS DRUCKVENTIL		
4	10123210	2	SEAL KIT PRESSUR.CONTROL VALVE	DS DRUCKREDUZIERVENTIL		
7	9881609	2	SCREW PLUG M8X1	VERSCHLUSSSCHRAUBE		
8	9268441	5	SCREW PLUG M6	VERSCHLUSSSCHRAUBE		
20	10137312	1	SCREW PLUG	VERSCHLUSSSCHRAUBE		
21	7381127	1	O-RING	O-RING		
22	7381128	1	O-RING	O-RING		
23	7380610	2	O-RING	O-RING		
24	10137113	4	SCREW PLUG	VERSCHLUSSSCHRAUBE		
26	11170484	2	SOCKET HEAD SCREW ISO 4762 M8X70 10.9	ZYLINDERSCHRAUBE		
27	10137115	2	SCREW PLUG	VERSCHLUSSSCHRAUBE		
28	10016947	2	O-RING	O-RING		
29	7022118	2	O-RING	O-RING		
30	10137108	3	SCREW PLUG	VERSCHLUSSSCHRAUBE		

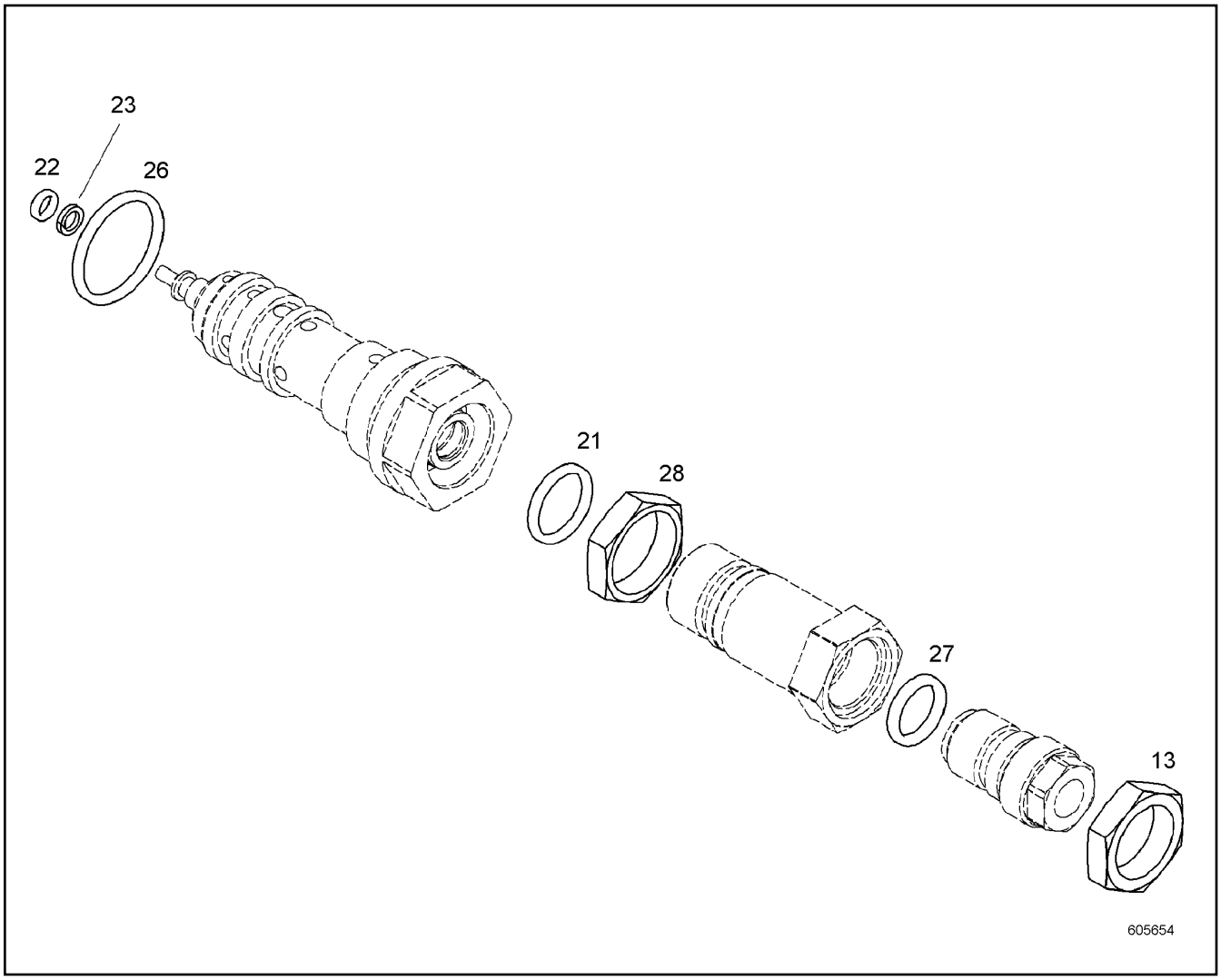

Pos.	Item	Quantity	Description	Bezeichnung	Serie	K
13	9072969	1	NUT M22X1.5 11SMNPB30+C;EN 10277-3	MUTTER		
21	7380987	1	O-RING	O-RING		
22	7381446	1	O-RING	O-RING		
23	7382212	1	BACK-UP RING CUT	STUETZRING GESCHL.		
26	7380608	1	O-RING	O-RING		
27	7380576	1	O-RING	O-RING		
28	9077401	1	NUT M24X1 9SMNPB28K	MUTTER		

OHNE BILD
WITHOUT ILLUSTRATION
SANS PLANCHE
SIN FIG.
SEM ILUSTRAÇÃO
БЕЗ ИЗОБРАЖЕНИЯ

600000

Pos.	Item	Quantity	Description	Bezeichnung	Serie	K
11	10129873	1	COUPLING FERRULE	KUPPLUNGSHUELSE		
20	4980947	2	SOCKET HEAD SCREW ISO 4762 M12X30 10.9	ZYLINDERSCHRAUBE		
22	7380605	1	O-RING	O-RING		

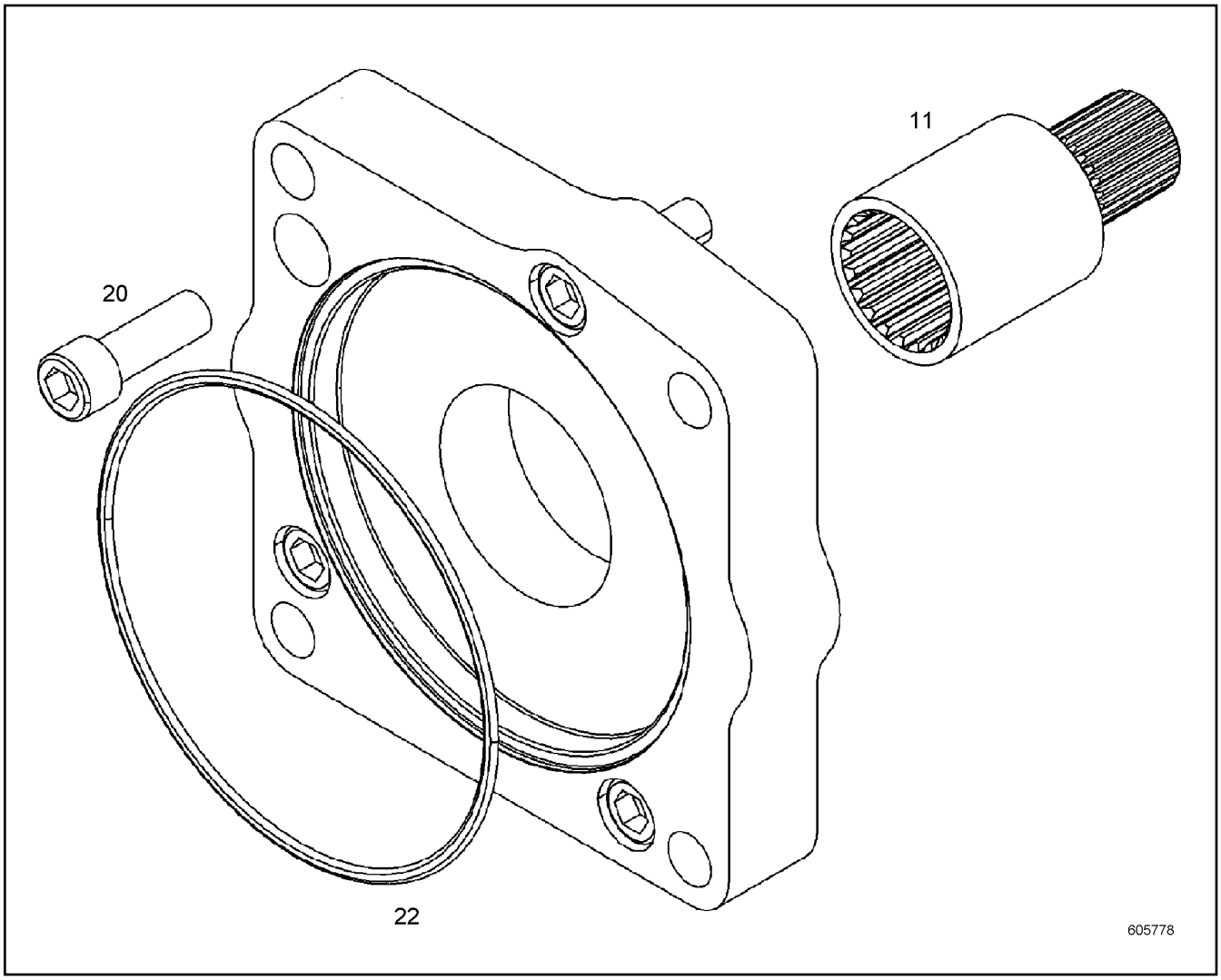

Pos.	Item	Quantity	Description	Bezeichnung	Serie	K
11	10130007	1	COUPLING FERRULE	KUPPLUNGSHUELSE		
20	4600513	4	SOCKET HEAD SCREW ISO 4762 M14X40 10.9	ZYLINDERSCHRAUBE		
22	7380601	1	O-RING	O-RING		

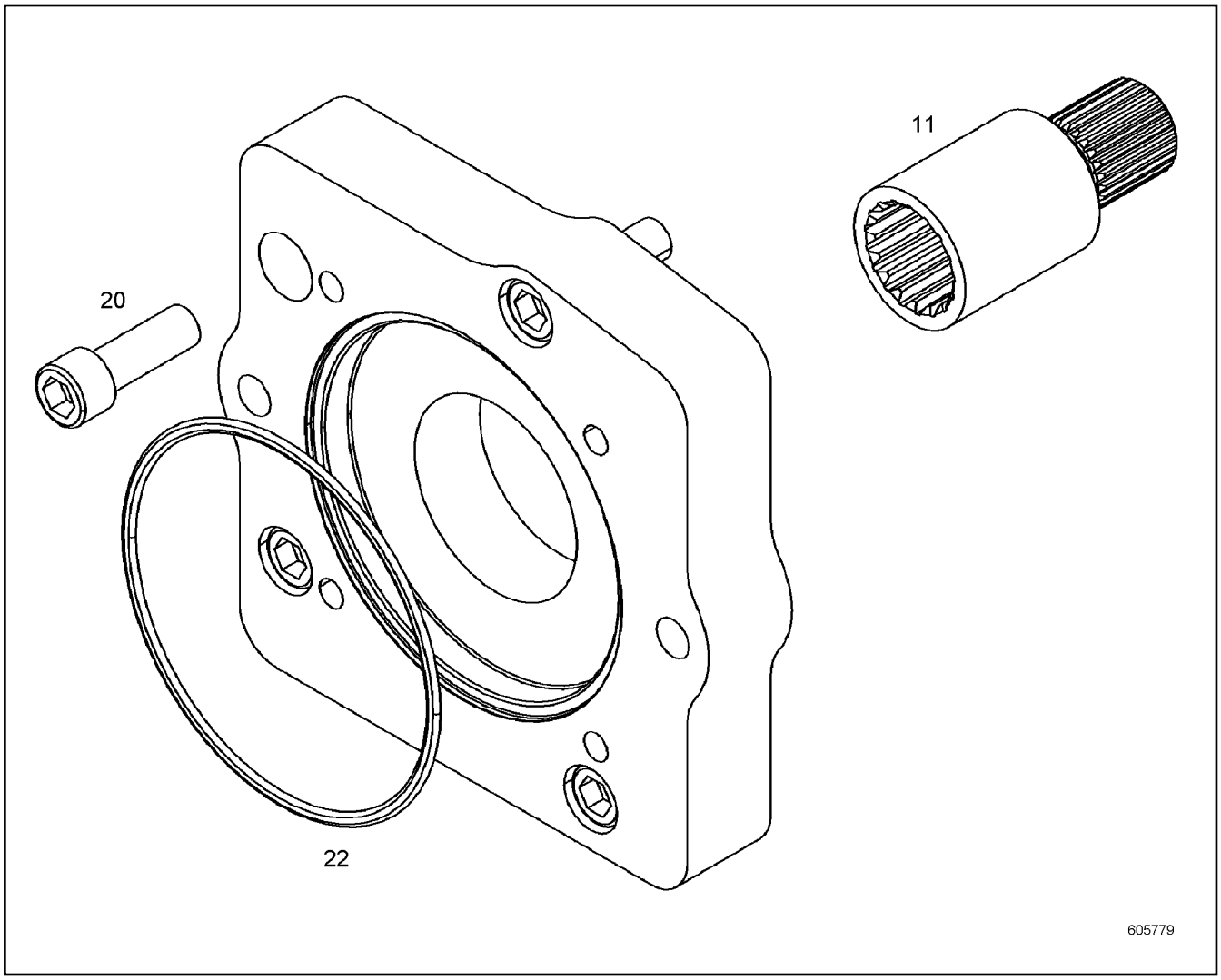

Pos.	Item	Quantity	Description	Bezeichnung	Serie	K
11	10132360	1	COUPLING FERRULE	KUPPLUNGSHUELSE		
20	4600513	4	SOCKET HEAD SCREW ISO 4762 M14X40 10.9	ZYLINDERSCHRAUBE		
22	7380691	1	O-RING	O-RING		

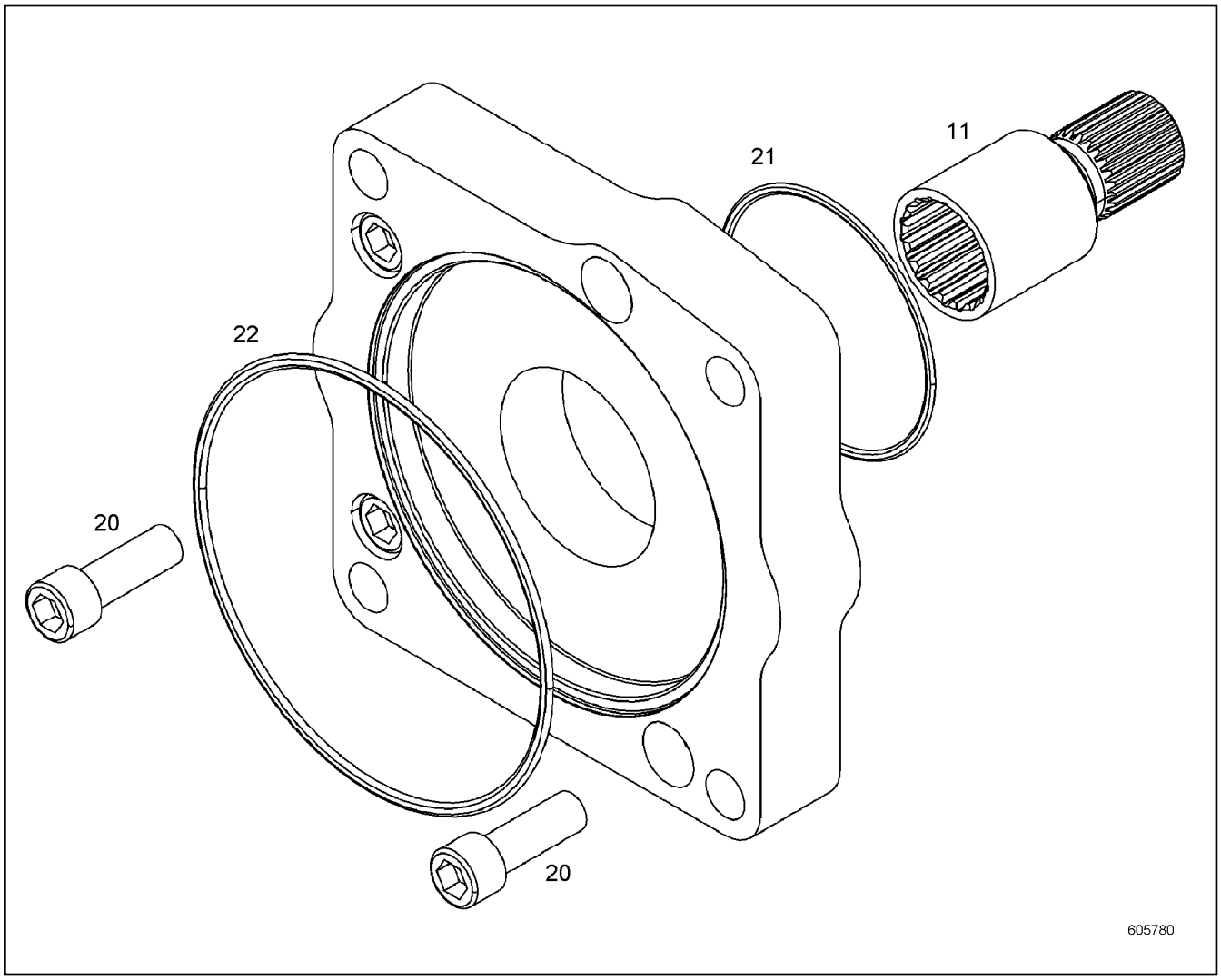

Pos.	Item	Quantity	Description	Bezeichnung	Serie	K
11	10117768	1	COUPLING FERRULE	KUPPLUNGSHUELSE		
20	4600513	4	SOCKET HEAD SCREW ISO 4762 M14X40 10.9	ZYLINDERSCHRAUBE		
21	7380297	1	O-RING	O-RING		
22	7380601	1	O-RING	O-RING		

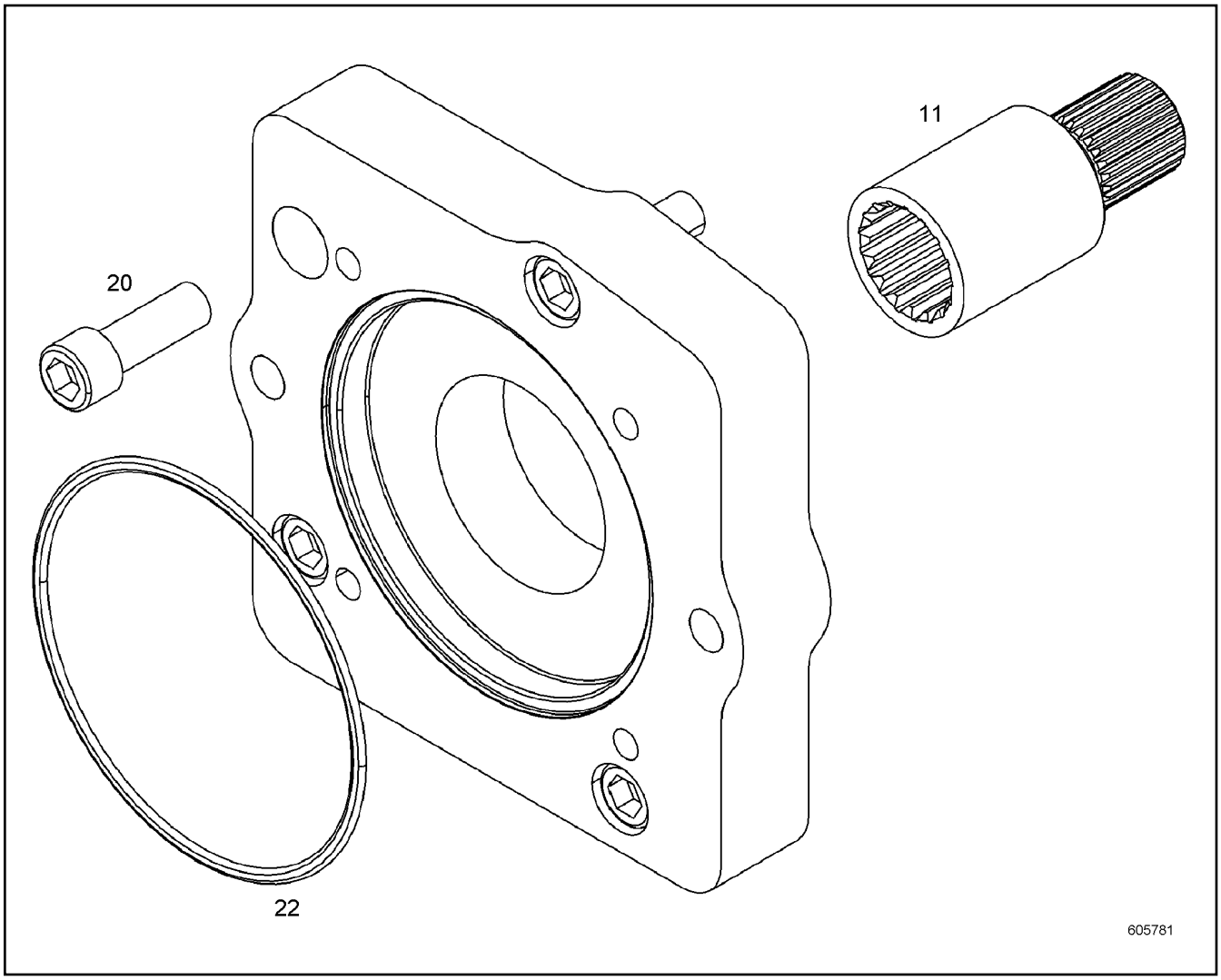

Pos.	Item	Quantity	Description	Bezeichnung	Serie	K
11	10138069	1	COUPLING FERRULE	KUPPLUNGSHUELSE		
20	4600513	4	SOCKET HEAD SCREW ISO 4762 M14X40 10.9	ZYLINDERSCHRAUBE		
22	7380691	1	O-RING	O-RING		

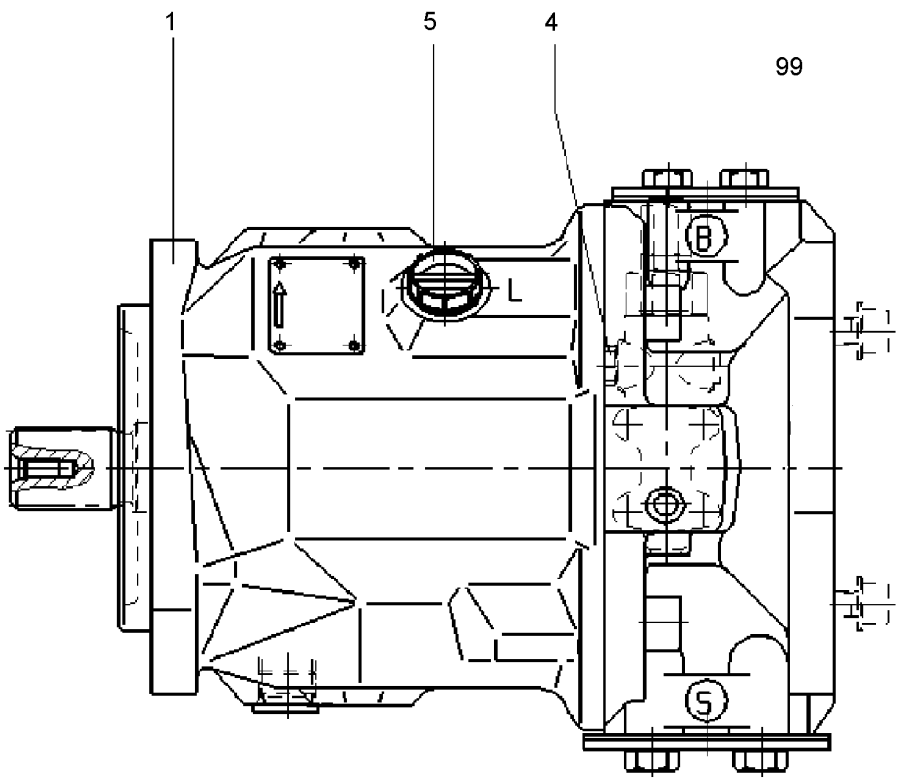

Pos.	Item	Quantity	Description	Bezeichnung	Serie	K
1	11221268	1	PUMP ELEMENT ⇨ ❑ 155	PUMPENELEMENT		
4	11220932	1	SEALING SCREW	DICHTSCHRAUBE		
5	11221267	1	SEALING SCREW	DICHTSCHRAUBE		
99	10351610	1	SEALING SET CPL ⇨ ❑ 162	DS KPL		

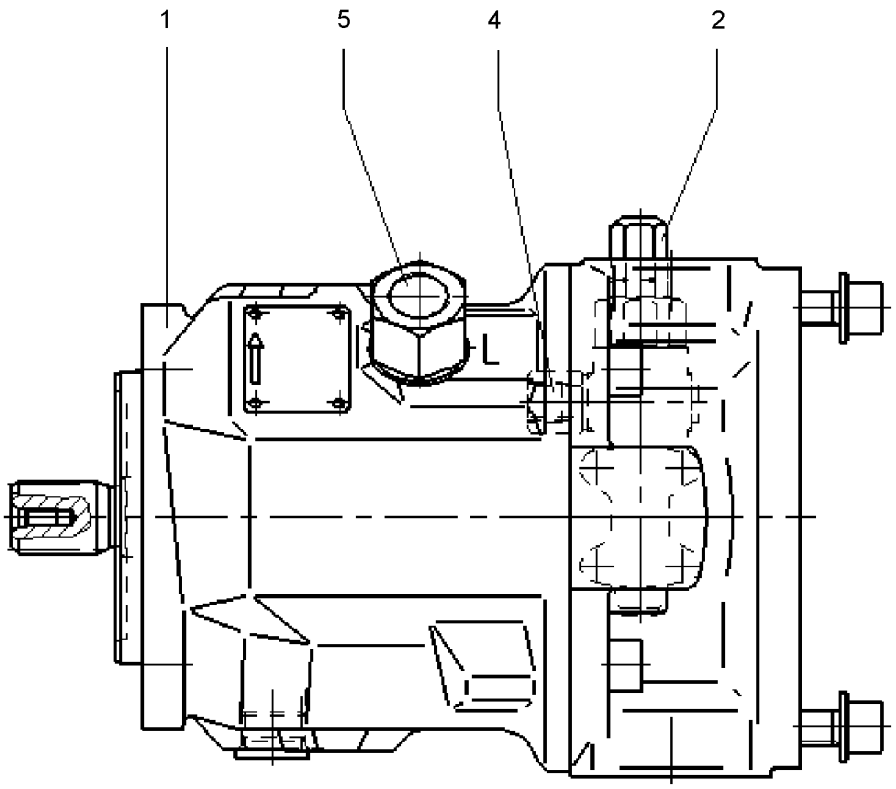

Pos.	Item	Quantity	Description	Bezeichnung	Serie	K
1	11221274	1	PUMP ELEMENT ⇨ ❑ 156	PUMPENELEMENT		
2	10351603	1	CONTROL VALVE ⇨ ❑ 159	STEUERVENTIL		
4	7019834	1	ADAPTOR ⇨ ❑ 160	ADAPTER		
5	11221276	1	ADAPTOR ⇨ ❑ 161	ADAPTER		

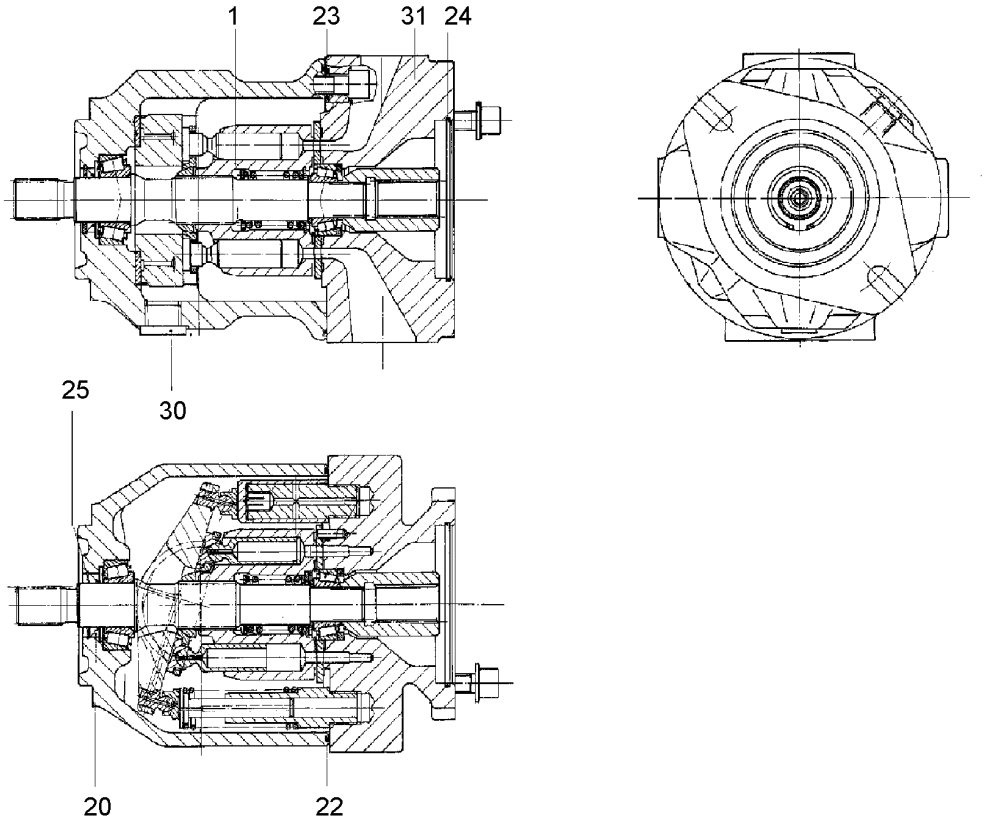

Pos.	Item	Quantity	Description	Bezeichnung	Serie	K
1	10324889	1	DRIVING GEAR ⇨ ❑ 157	TRIEBWERK		
20	710069514	1	SHAFT SEAL	WELLENDICHTRING		
22	10351605	1	O-RING	O-RING		
23	10351608	4	O-RING	O-RING		
24	11220389	1	O-RING	O-RING		
25	10220937	1	LOCKING RING AEHNL.DIN 984 40X1.75	SICHERUNGSRING		
30	11217837	1	SCREW PLUG	VERSCHLUSSSCHRAUBE		
31	7022127	1	DOUBLE PLUG	DOPPELABREISSSTOPFEN		

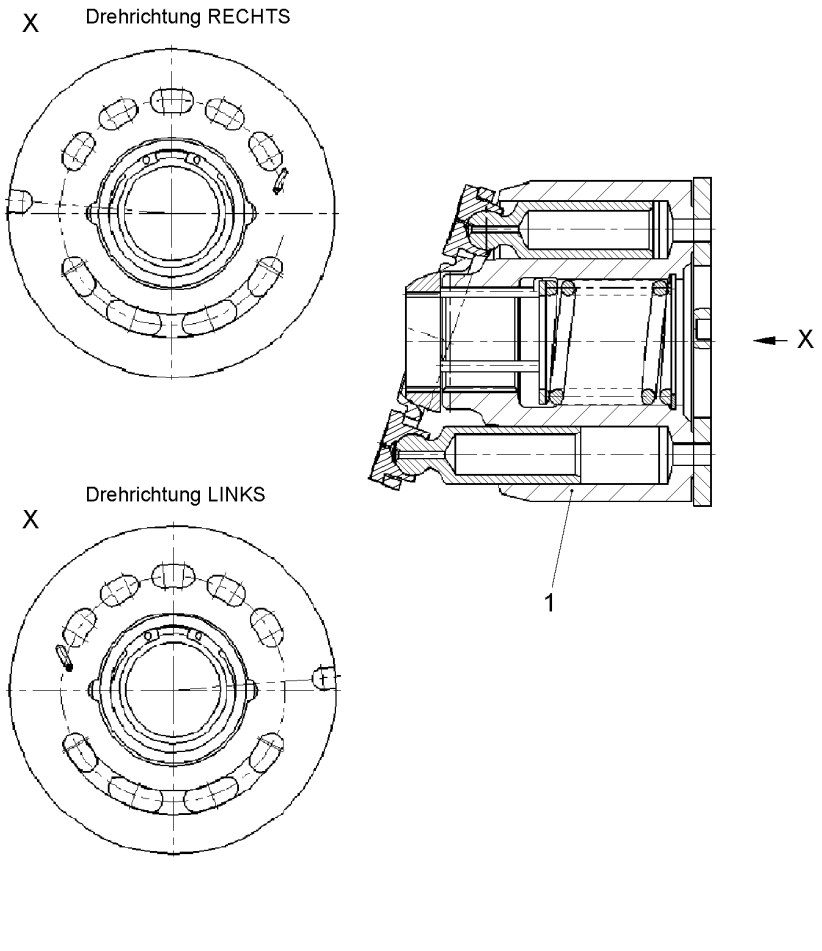

Pos.	Item	Quantity	Description	Bezeichnung	Serie	K
1	10324892	1	DRIVING GEAR ⇨ ❑ 158	TRIEBWERK		

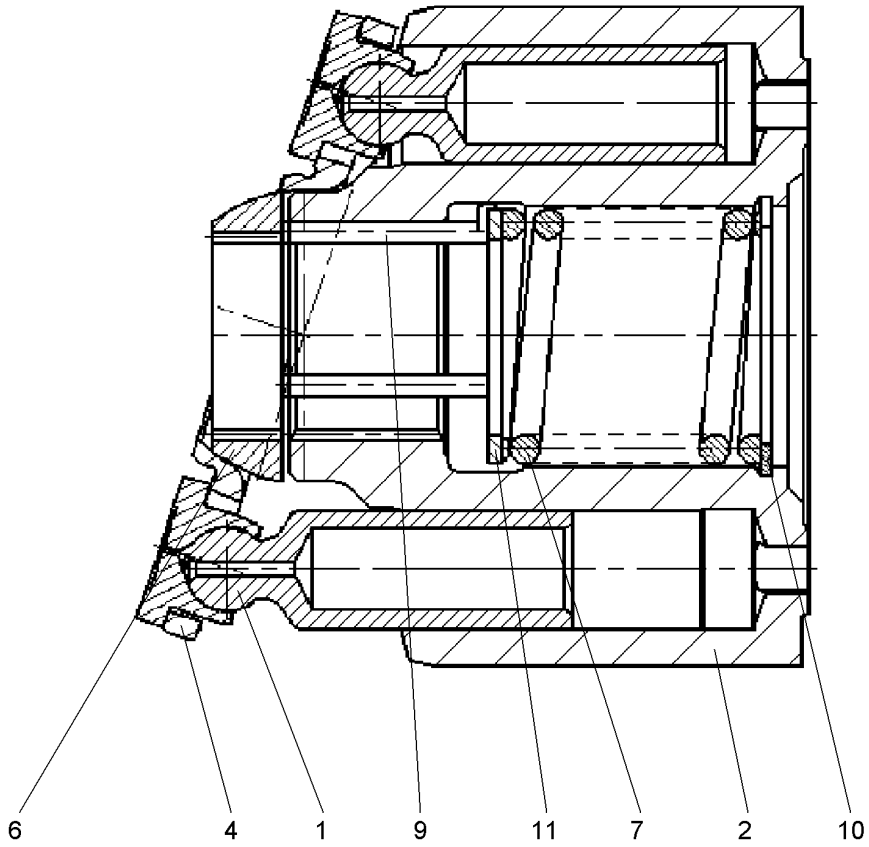

Pos.	Item	Quantity	Description	Bezeichnung	Serie	K
1	10324863	9	PISTON	KOLBEN		
2	10324901	1	CYLINDER	ZYLINDER		
4	7023459	1	PULL-BACK PLATE	RUECKZUGPLATTE		
6	10324872	1	PULL-BACK BALL	RUECKZUGKUGEL		
7	10324860	1	SPRING	FEDER		
9	10101458	3	PRESSURE PIN	DRUCKSTIFT		
10	10324881	1	V-RING	V-RING		
11	10324886	1	SUPPORTING WASHER	STUETZSCHEIBE		

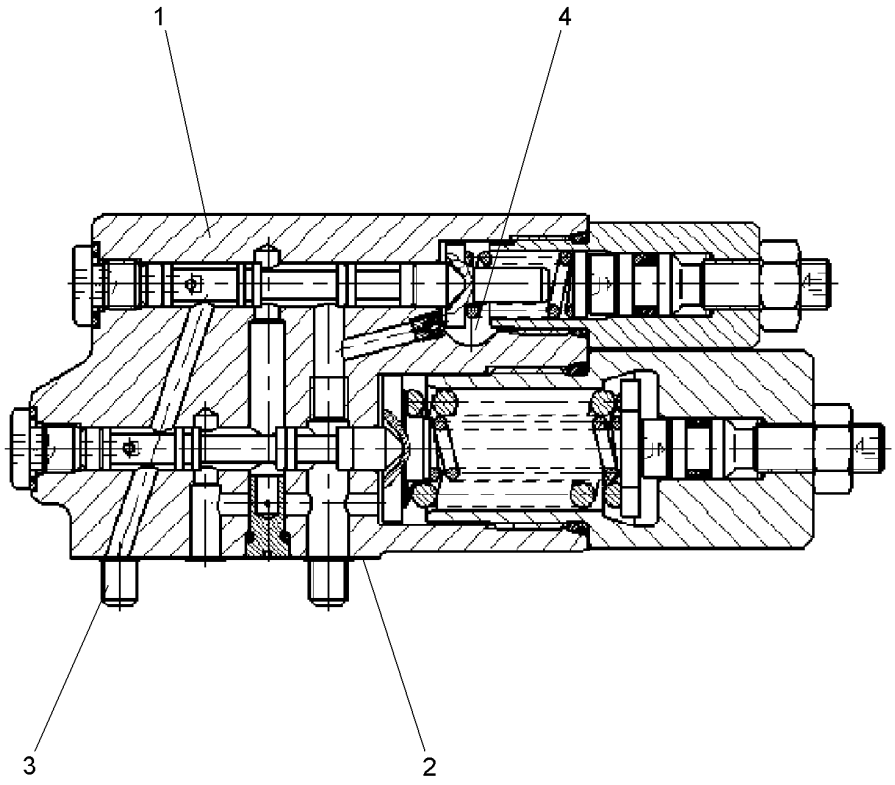

604744

Pos.	Item	Quantity	Description	Bezeichnung	Serie	K
1	10409413	1	CONTROL VALVE	STEUERVENTIL		
2	10297876	1	SEAL	DICHTUNG		
3	11215951	4	SOCKET HEAD SCREW	ZYLINDERSCHRAUBE		
4	10324900	1	SCREW PLUG 7/16-20UNF-2A	VERSCHLUSSSCHRAUBE		

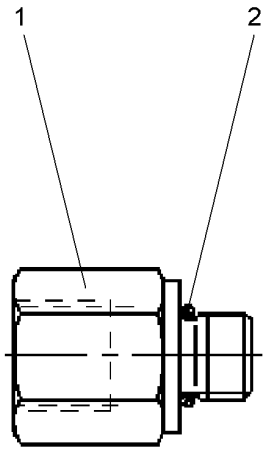

604751

Pos.	Item	Quantity	Description	Bezeichnung	Serie	K
1	570950308	1	ADAPTOR	ADAPTER		
2	7019733	1	O-RING	O-RING		

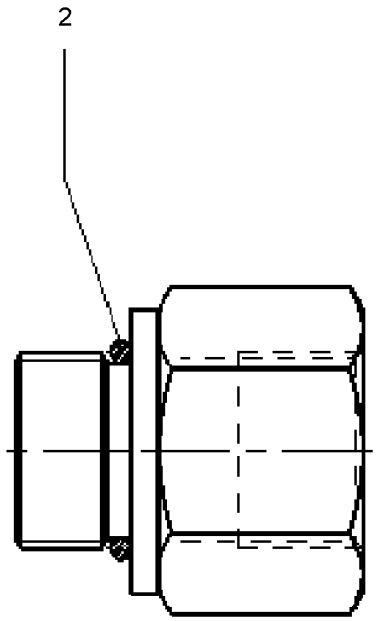

604782

Pos.	Item	Quantity	Description	Bezeichnung	Serie	K
2	11221283	1	O-RING	O-RING		

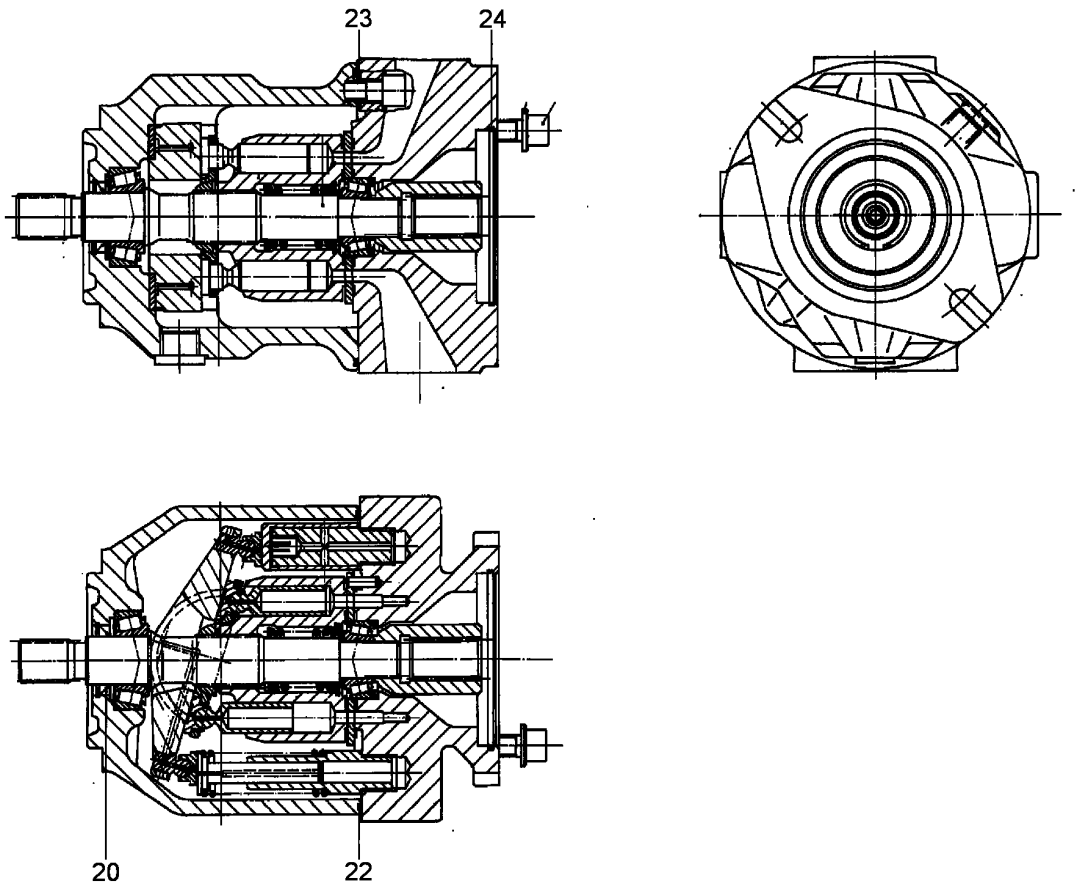

Pos.	Item	Quantity	Description	Bezeichnung	Serie	K
20	710069514	1	SHAFT SEAL	WELLENDICHTRING		
22	10351605	1	O-RING	O-RING		
23	10351608	4	O-RING	O-RING		
24	11220389	1	O-RING	O-RING		

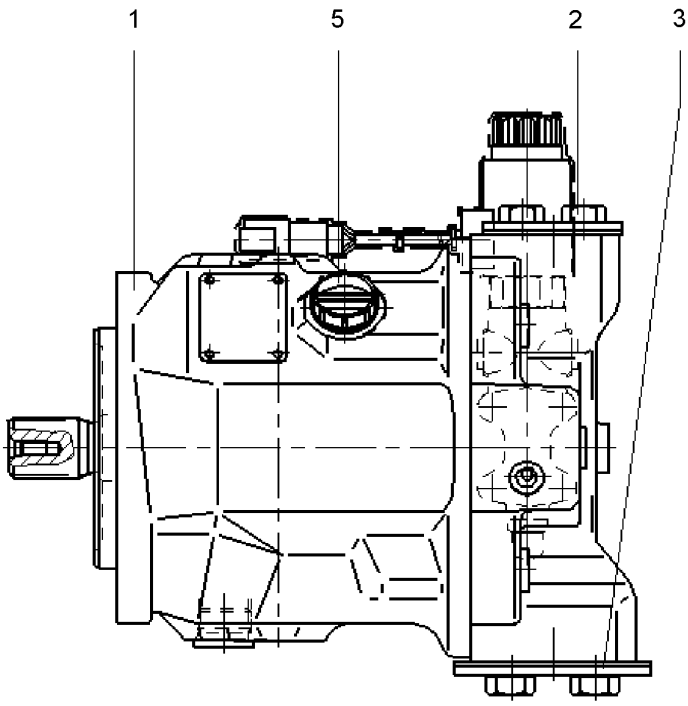

Pos.	Item	Quantity	Description	Bezeichnung	Serie	K
1	11215913	1	PUMP ELEMENT ⇨ ❑ 164	PUMPENELEMENT		
2	11215698	1	FLANGE COVER	FLANSCHABDECKUNG		
3	11215699	1	FLANGE COVER	FLANSCHABDECKUNG		
5	10008093	1	SCREW PLUG 3/4"-16UNF	VERSCHLUSSSCHRAUBE		

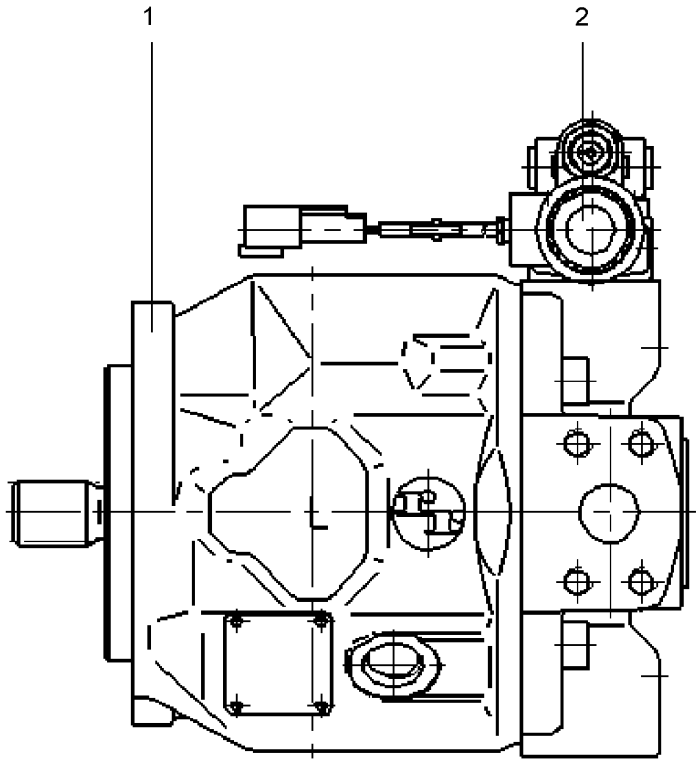

Pos.	Item	Quantity	Description	Bezeichnung	Serie	K
1	11215936	1	PUMP ELEMENT ⇨ ❑ 165	PUMPENELEMENT		
2	10114975	1	CONTROL VALVE ⇨ ❑ 168	STEUERVENTIL		

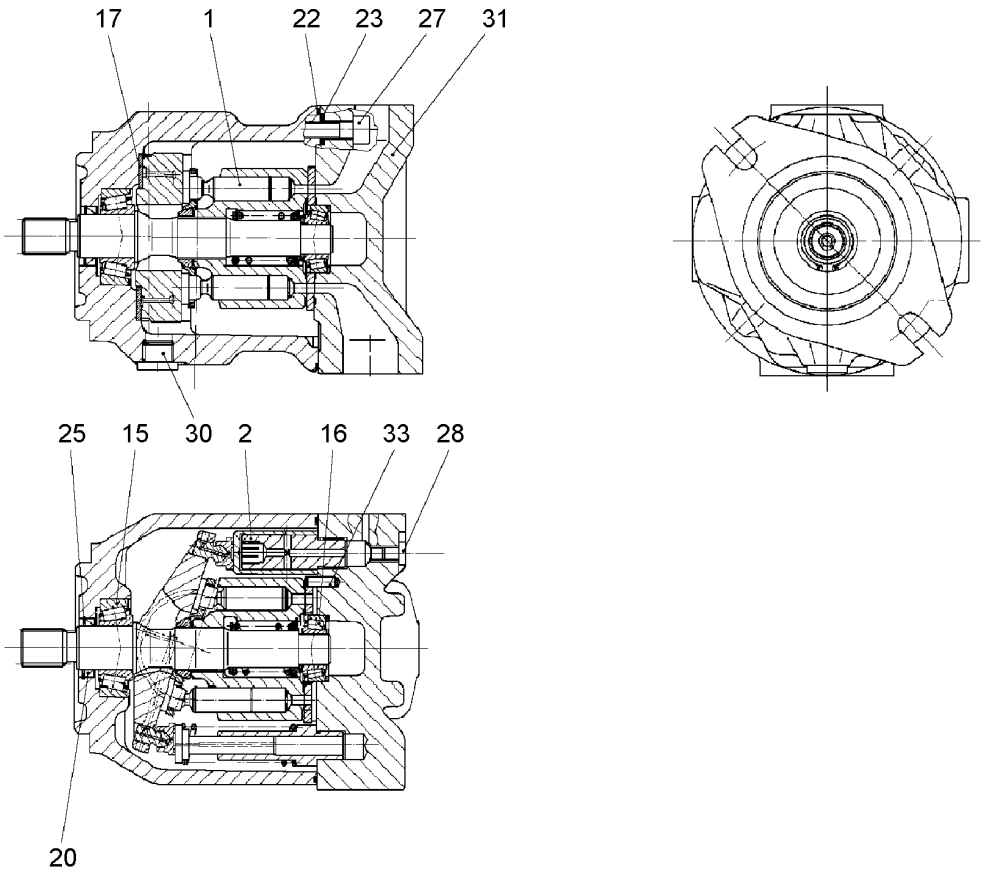

Pos.	Item	Quantity	Description	Bezeichnung	Serie	K
1	10287664	1	DRIVING GEAR ⇨ ❑ 166	TRIEBWERK		
2	10287665	1	ADJUSTING PIECE ⇨ ❑ 167	VERSTELLTEIL		
15	10355730	1	TAPERED ROLLER BEARING	KEGELROLLENLAGER		
16	10355731	1	TAPERED ROLLER BEARING	KEGELROLLENLAGER		
17	7413401	2	BEARING SHELL	LAGERSCHALE		
20	7413402	1	SHAFT SEAL	WELLENDICHTRING		
22	10802833	1	O-RING	O-RING		
23	11215707	4	O-RING	O-RING		
25	10008092	1	LOCKING RING DIN 984 35X1.5	SICHERUNGSRING		
27	10355735	4	SOCKET HEAD SCREW M10X30	ZYLINDERSCHRAUBE		
28	10115237	2	SCREW PLUG M10X1	VERSCHLUSSSCHRAUBE		
30	10008093	1	SCREW PLUG 3/4"-16UNF	VERSCHLUSSSCHRAUBE		
31	7022127	1	DOUBLE PLUG	DOPPELABREISSSTOPFEN		
33	570948608	1	PARALLEL PIN ISO 2338 6M6X18 ST	ZYLINDERSTIFT		

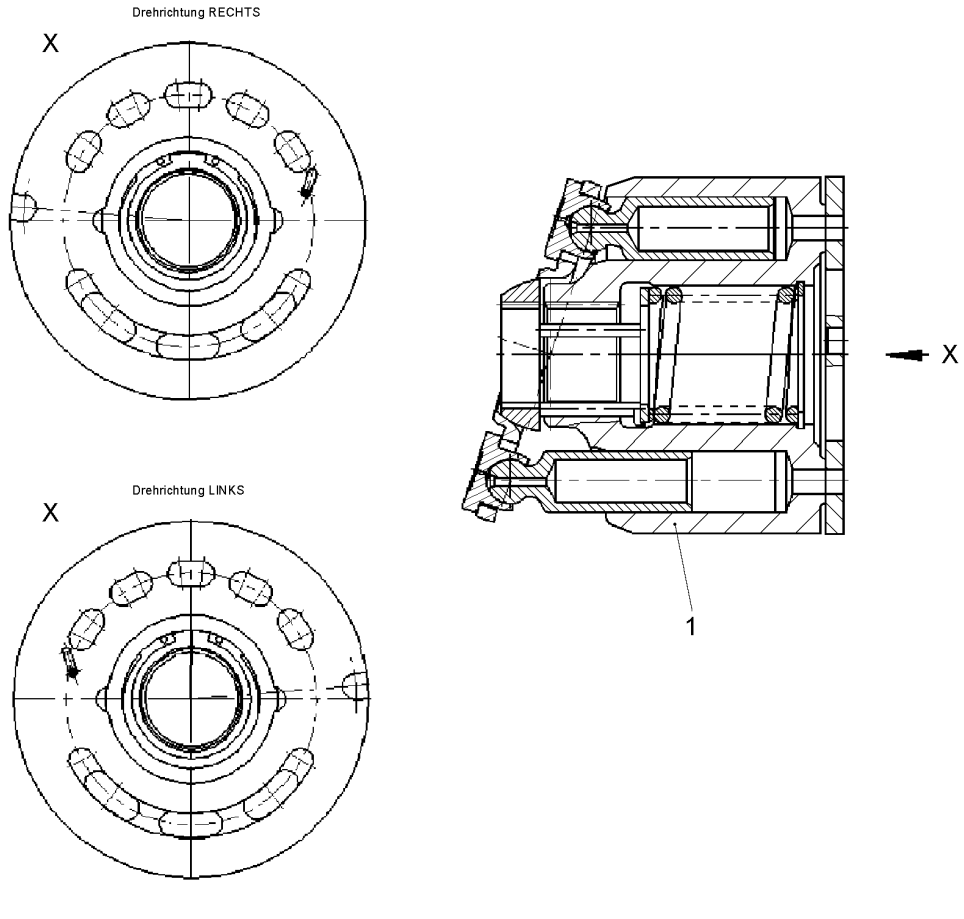

Pos.	Item	Quantity	Description	Bezeichnung	Serie	K
1	10287725	1	DRIVING GEAR	TRIEBWERK		

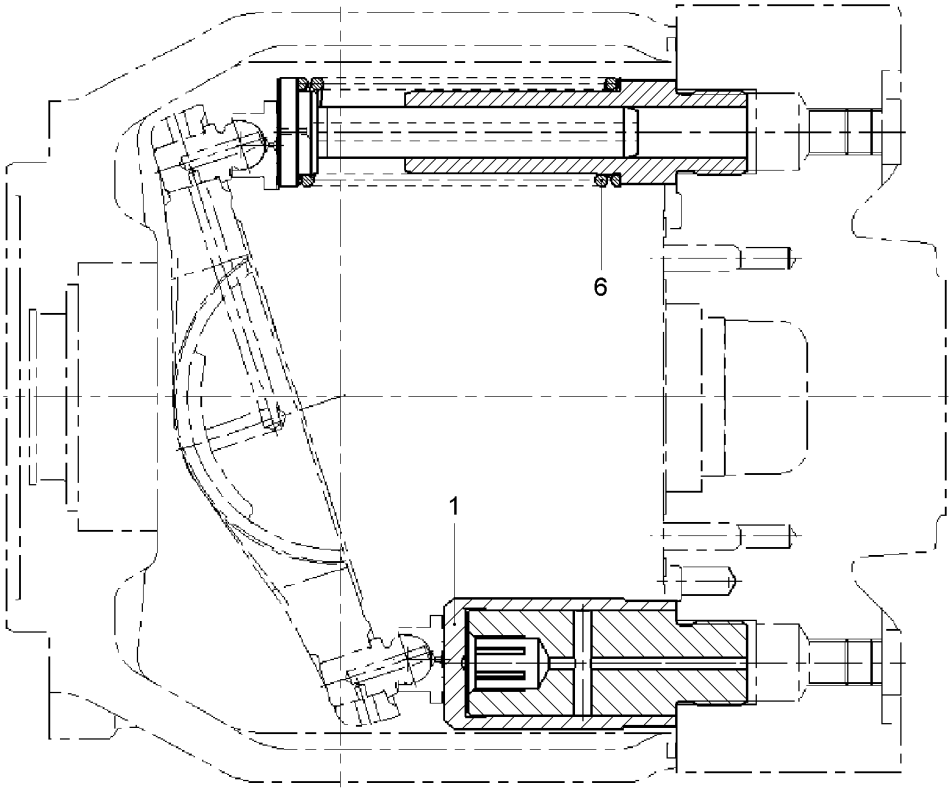

604431

Pos.	Item	Quantity	Description	Bezeichnung	Serie	K
1	10287733	1	DISPLACEMENT PISTON	VERSTELLKOLBEN		
6	10287741	1	SPRING	FEDER		

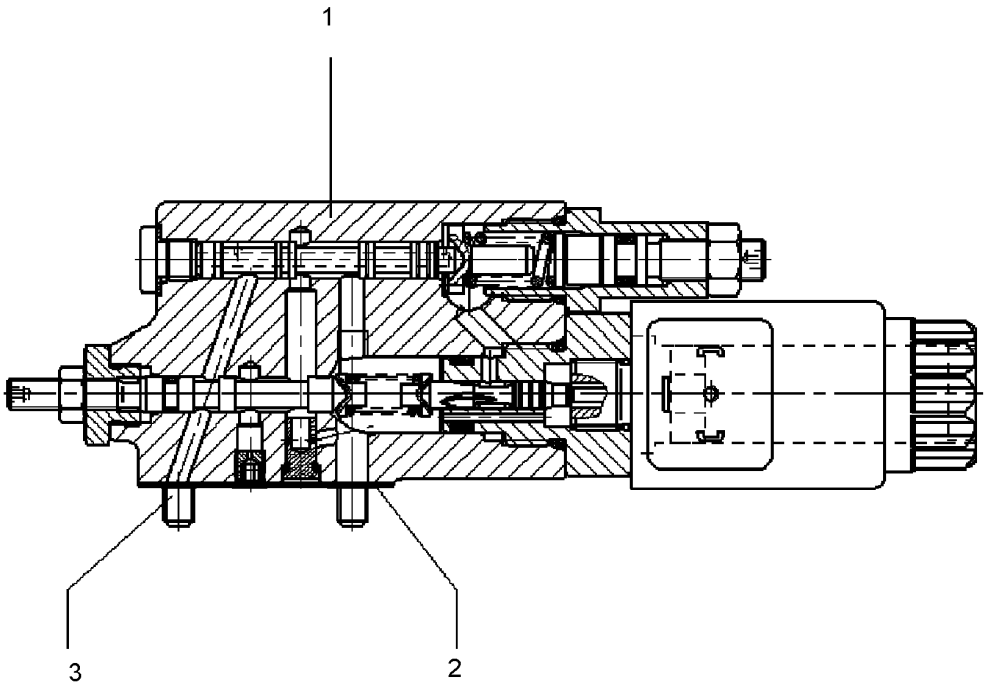

Pos.	Item	Quantity	Description	Bezeichnung	Serie	K
1	11215942	1	CONTROL VALVE	STEUERVENTIL		
2	10297876	1	SEAL	DICHTUNG		
3	11215951	4	SOCKET HEAD SCREW	ZYLINDERSCHRAUBE		

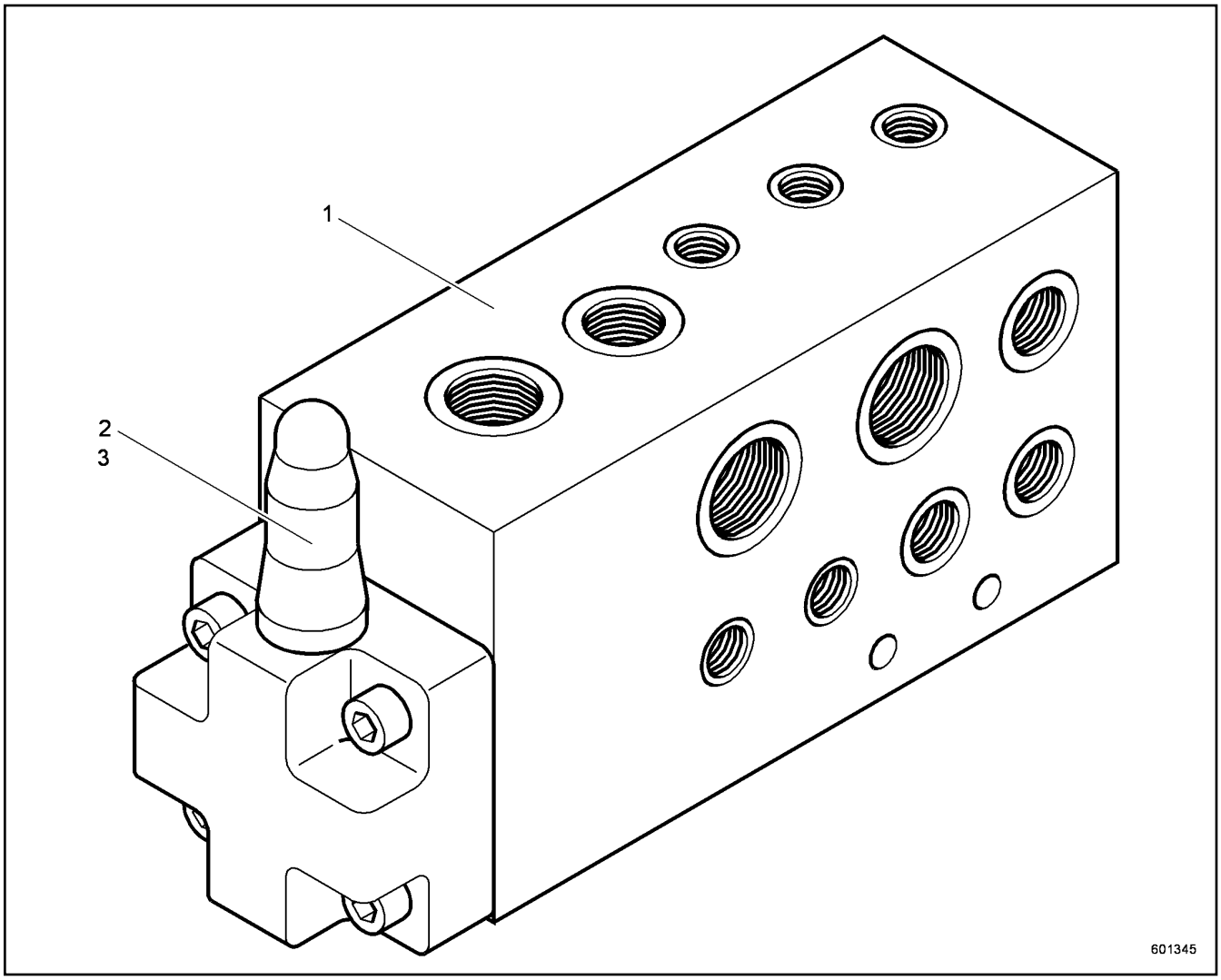

Pos.	Item	Quantity	Description	Bezeichnung	Serie	K
1	511640614	1	CONTROL BLOCK	STEUERBLOCK		
2	511640714	1	BUILT-IN VALVE	EINBAUVENTIL		
3	511640814	1	CONTROL LID	STEUERDECKEL		

OHNE BILD
WITHOUT ILLUSTRATION
SANS PLANCHE
SIN FIG.
SEM ILUSTRAÇÃO
БЕЗ ИЗОБРАЖЕНИЯ

600000

Pos.	Item	Quantity	Description	Bezeichnung	Serie	K
10	10225991	1	O-RING	O-RING		

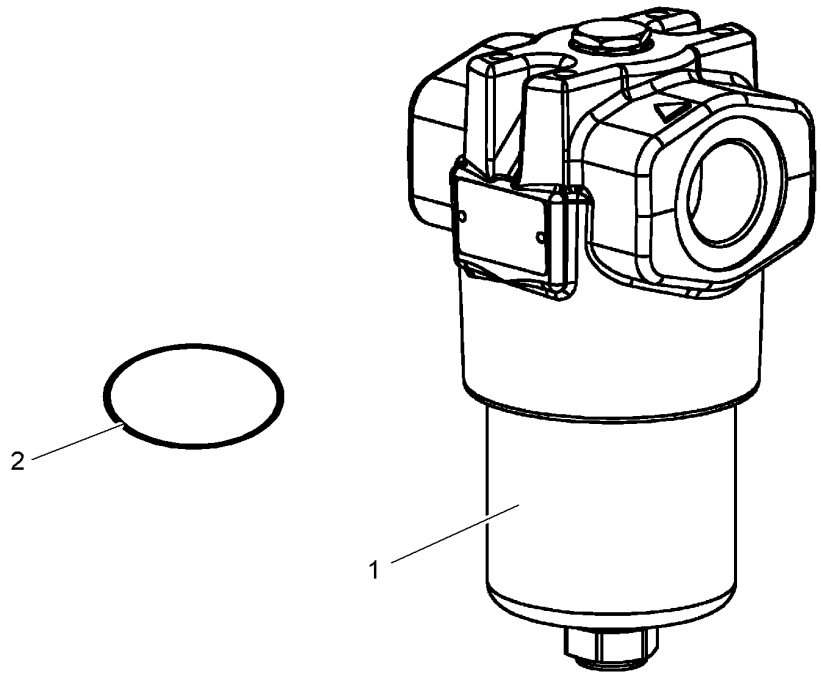

Pos.	Item	Quantity	Description	Bezeichnung	Serie	K
1	10037623	1	FILTER INSERT	FILTEREINSATZ		
2	10350604	1	O-RING	O-RING		
3	10224159	1	SEALING SET CPL	DS KPL		

OHNE BILD
WITHOUT ILLUSTRATION
SANS PLANCHE
SIN FIG.
SEM ILUSTRAÇÃO
БЕЗ ИЗОБРАЖЕНИЯ

600000

Pos.	Item	Quantity	Description	Bezeichnung	Serie	K
11	11247122	1	CABLE LOOM W 1	KABELSTRANG W 1		
12	10123877	2	RUBBER RING	GUMMIRING		
13	6205239	1	SOCKET	STECKDOSE		
21	10226635	1	RELAY	RELAIS		

ACHTUNG !
ATTENTION !
ATTENTION !
ATENCIÓN !
ATENÇÃO !
ВНИМАНИЕ

Für Schlauchbestellungen kann über die Schlauchnummer, in der entsprechenden Schlauchliste, die Identnummer festgestellt werden.

For ordering flexible hoses you can find the identification number through the hose-number in the corresponding hose-list.

Pour des ordres de tuyau flexible le nombre d'identification on voit dans la liste de tuyau flexible correspondente.

Para el pedido de manguera, indicar el número de identificación de la manguera de la lista respectiva.

Para se encomendar uma mangueira, consulte o número de identificaçao na respectiva lista de mangueiras.

Для оформления заказов на шланги/рукавы идент. № может быть определен при помощи номера шланга/рукава, указанного в соответствующем перечне шлангов/рукавов.

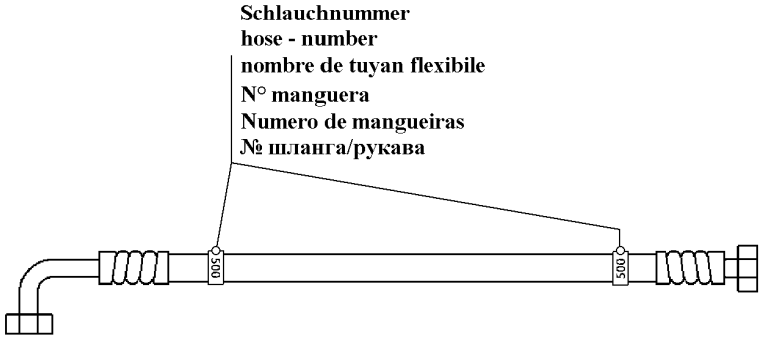

500000

Pos.	Item	Quantity	Description	Bezeichnung	Serie	K
382	993694214	1	HOSE CPL	SCHLAUCH KPL		
391	996779514	1	HOSE CPL	SCHLAUCH KPL		
392	996779614	1	HOSE CPL	SCHLAUCH KPL		
400	992835314	1	HOSE CPL	SCHLAUCH KPL		
401	991139814	1	HOSE CPL	SCHLAUCH KPL		
402	995421014	1	HOSE CPL	SCHLAUCH KPL		
403	928266514	1	HOSE CPL	SCHLAUCH KPL		
404	914757914	1	HOSE CPL	SCHLAUCH KPL		
405	991216914	1	HOSE CPL	SCHLAUCH KPL		
406	991964414	1	HOSE CPL	SCHLAUCH KPL		
407	928857314	1	HOSE CPL	SCHLAUCH KPL		
408	990053014	1	HOSE CPL	SCHLAUCH KPL		
409	993643514	1	HOSE CPL	SCHLAUCH KPL		
410	995512314	1	HOSE CPL	SCHLAUCH KPL		
411	928272714	1	HOSE CPL	SCHLAUCH KPL		
412	996459514	1	HOSE CPL	SCHLAUCH KPL		
413	996735814	1	HOSE CPL	SCHLAUCH KPL		
416	995180714	1	HOSE CPL	SCHLAUCH KPL		
418	928868414	1	HOSE CPL	SCHLAUCH KPL		
419	991547014	1	HOSE CPL	SCHLAUCH KPL		
420	929478114	1	HOSE CPL	SCHLAUCH KPL		
421	919143414	1	HOSE CPL	SCHLAUCH KPL		
422	919167714	1	HOSE CPL	SCHLAUCH KPL		
424	995961914	1	HOSE CPL	SCHLAUCH KPL		
425	995263914	1	HOSE CPL	SCHLAUCH KPL		
427	928880614	1	HOSE CPL	SCHLAUCH KPL		

ACHTUNG !
ATTENTION !
ATTENTION !
ATENCIÓN !
ATENÇÃO !
ВНИМАНИЕ

Für Schlauchbestellungen kann über die Schlauchnummer, in der entsprechenden Schlauchliste, die Identnummer festgestellt werden.

For ordering flexible hoses you can find the identification number through the hose-number in the corresponding hose-list.

Pour des ordres de tuyau flexible le nombre d'identification on voit dans la liste de tuyau flexible correspondente.

Para el pedido de manguera, indicar el número de identificación de la manguera de la lista respectiva.

Para se encomendar uma mangueira, consulte o número de identificaçao na respectiva lista de mangueiras.

Для оформления заказов на шланги/рукавы идент. № может быть определен при помощи номера шланга/рукава, указанного в соотетствующем перечне шлангов/рукавов.

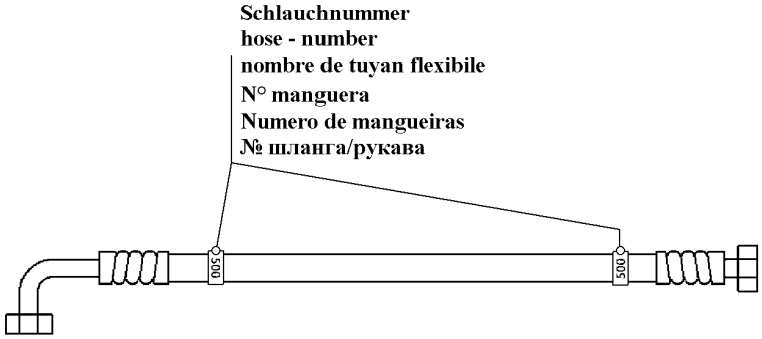

500000

Pos.	Item	Quantity	Description	Bezeichnung	Serie	K
430	918269214	1	HOSE CPL	SCHLAUCH KPL		
432	918874514	1	HOSE CPL	SCHLAUCH KPL		
434	996459714	1	HOSE CPL	SCHLAUCH KPL		
435	928611014	1	HOSE CPL	SCHLAUCH KPL		
504	995972514	1	HOSE CPL	SCHLAUCH KPL		
505	995972614	1	HOSE CPL	SCHLAUCH KPL		
552	991587514	1	HOSE CPL	SCHLAUCH KPL		
560	995974314	1	HOSE CPL	SCHLAUCH KPL		
570	991390514	1	HOSE CPL	SCHLAUCH KPL		
572	918245214	1	HOSE CPL	SCHLAUCH KPL		
619	995943514	1	HOSE CPL	SCHLAUCH KPL		
620	995943614	1	HOSE CPL	SCHLAUCH KPL		
628	991194914	1	HOSE CPL	SCHLAUCH KPL		
629	995943814	1	HOSE CPL	SCHLAUCH KPL		
822	996770614	1	HOSE CPL	SCHLAUCH KPL		
825	997058014	1	HOSE CPL	SCHLAUCH KPL		
916	995959114	1	HOSE CPL	SCHLAUCH KPL		

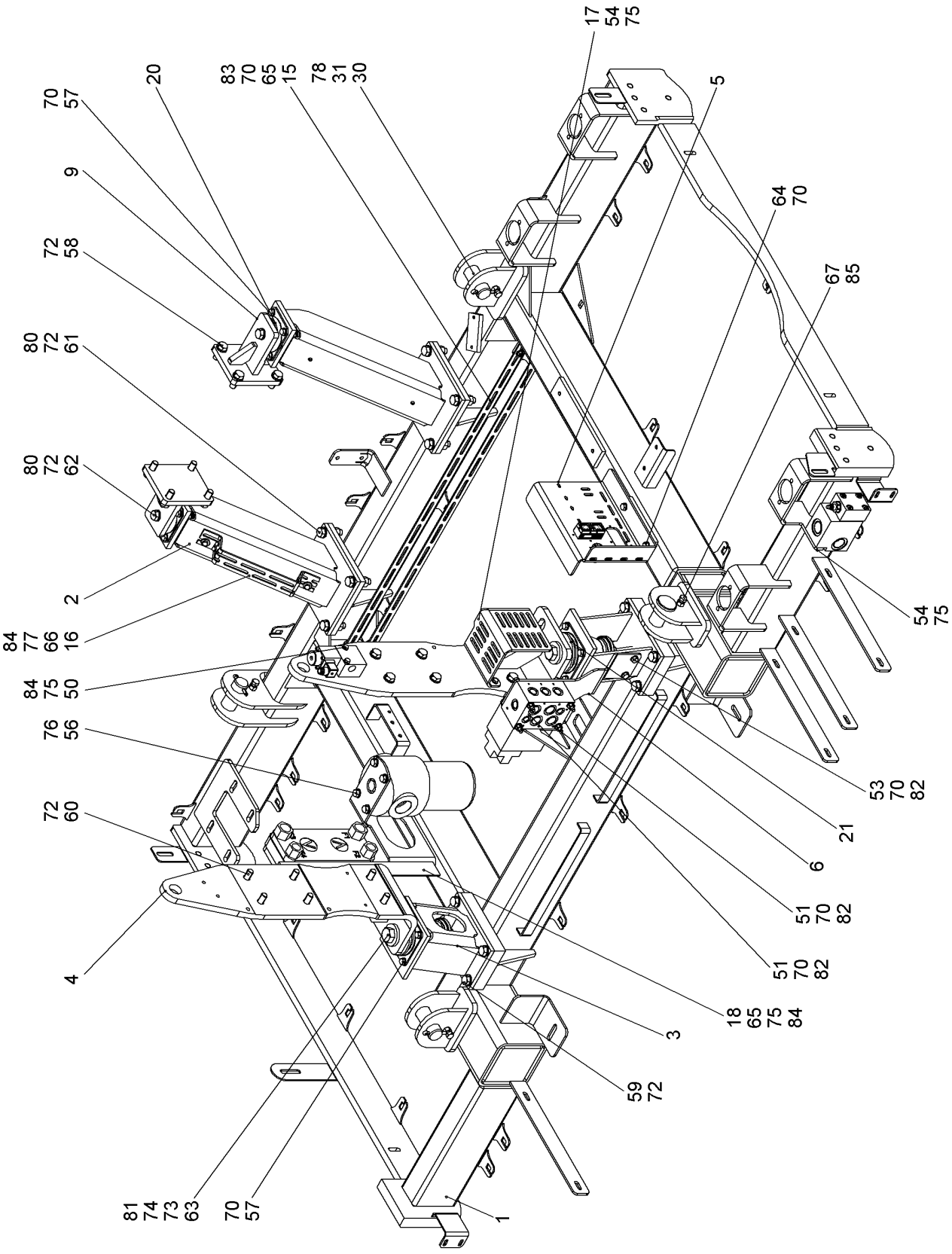

21.6.2017 519780 LIEBHERR	**138406_ETK_001** **MOTOR BEARING CPL** **MOTORLAGER KPL**	❑ 175 (1/2) **11 24 113 8**

Pos.	Item	Quantity	Description	Bezeichnung	Serie	K
1	11247688	1	FRAME CPL	RAHMEN KPL		
2	11249800	2	CONSOLE	KONSOLE		
3	10579755	2	CONSOLE	KONSOLE		
4	11250222	2	CONSOLE	KONSOLE		
5	10579779	1	CONSOLE	KONSOLE		
6	11215384	1	CONSOLE	KONSOLE		
9	11249889	2	CONSOLE	KONSOLE		
15	11234799	2	SLOTTED TAPE STEEL	SCHLITZBANDSTAHL		
16	11263413	1	BRACKET	BUEGEL		
17	11263501	1	CONSOLE	KONSOLE		
18	11263757	1	ANGLE	WINKEL		
21	746923314	2	CONICAL MOUNT	KONUSLAGER		
30	11944129	4	PIN	BOLZEN		
31	433009014	4	SPLIT PIN ISO 1234 8X56 A4	SPLINT		
50	10538809	2	HEX SCREW ISO 4017 M8X80 A4-70	SECHSKANTSCHRAUBE		
51	10538824	6	HEX SCREW ISO 4017 M10X110 A4-70	SECHSKANTSCHRAUBE		
53	406511614	2	HEX SCREW ISO 4017 M10X30 A4-70	SECHSKANTSCHRAUBE		
54	406518814	4	HEX SCREW ISO 4017 M8X20 A4-70	SECHSKANTSCHRAUBE		
56	406517914	4	HEX SCREW ISO 4017 M12X25 A4-70	SECHSKANTSCHRAUBE		
57	406527414	16	HEX SCREW ISO 4017 M10X18 A4-70	SECHSKANTSCHRAUBE		
58	10539318	8	HEX SCREW ISO 4017 M16X40 10.9	SECHSKANTSCHRAUBE		
59	10539317	8	HEX SCREW ISO 4017 M16X35 10.9	SECHSKANTSCHRAUBE		
60	10543902	12	HEX SCREW ISO 4017 M16X45 10.9	SECHSKANTSCHRAUBE		
61	10543905	8	HEX SCREW ISO 4017 M16X60 10.9	SECHSKANTSCHRAUBE		
62	10543914	2	HEX SCREW ISO 4017 M16X130 10.9	SECHSKANTSCHRAUBE		
63	10544017	2	HEX SCREW ISO 4014 M24X200 10.9	SECHSKANTSCHRAUBE		
64	406527314	2	HEX SCREW ISO 4017 M10X16 A4-70	SECHSKANTSCHRAUBE		
65	406501414	8	HEX SCREW ISO 4017 M8X25 A4-70	SECHSKANTSCHRAUBE		
66	406501314	2	HEX SCREW ISO 4017 M8X30 A4-70	SECHSKANTSCHRAUBE		
67	406511414	8	HEX SCREW ISO 4017 M12X40 A4-70	SECHSKANTSCHRAUBE		
70	420001114	42	WASHER ISO 7089 10 A4	SCHEIBE		
72	10544172	48	WASHER ISO 7089 16	SCHEIBE		
73	883203014	2	WASHER DIN 6340 25	SCHEIBE		
74	460014603	2	WASHER DIN 6916 25 C45	SCHEIBE		
75	420001014	16	WASHER ISO 7089 8 A4	SCHEIBE		
76	4901782	4	WASHER ISO 7089 12 A4	SCHEIBE		
77	421300514	4	WASHER DIN 6340 8.4 C35	SCHEIBE		
78	421103014	4	WASHER DIN EN 28738 40 ST	SCHEIBE		
80	10544154	10	HEX NUT ISO 4032 M16 10	SECHSKANTMUTTER		
81	10544158	2	HEX NUT ISO 4032 M24 10	SECHSKANTMUTTER		
82	411514614	8	HEX NUT ISO 4032 M10 A4-70	SECHSKANTMUTTER		
83	411515014	4	HEX NUT ISO 4032 M8 A4-70	SECHSKANTMUTTER		
84	10540493	8	HEX NUT ISO 10511 M8 A4	SECHSKANTMUTTER		
85	411516914	8	HEX NUT ISO 4032 M12 A4-70	SECHSKANTMUTTER		

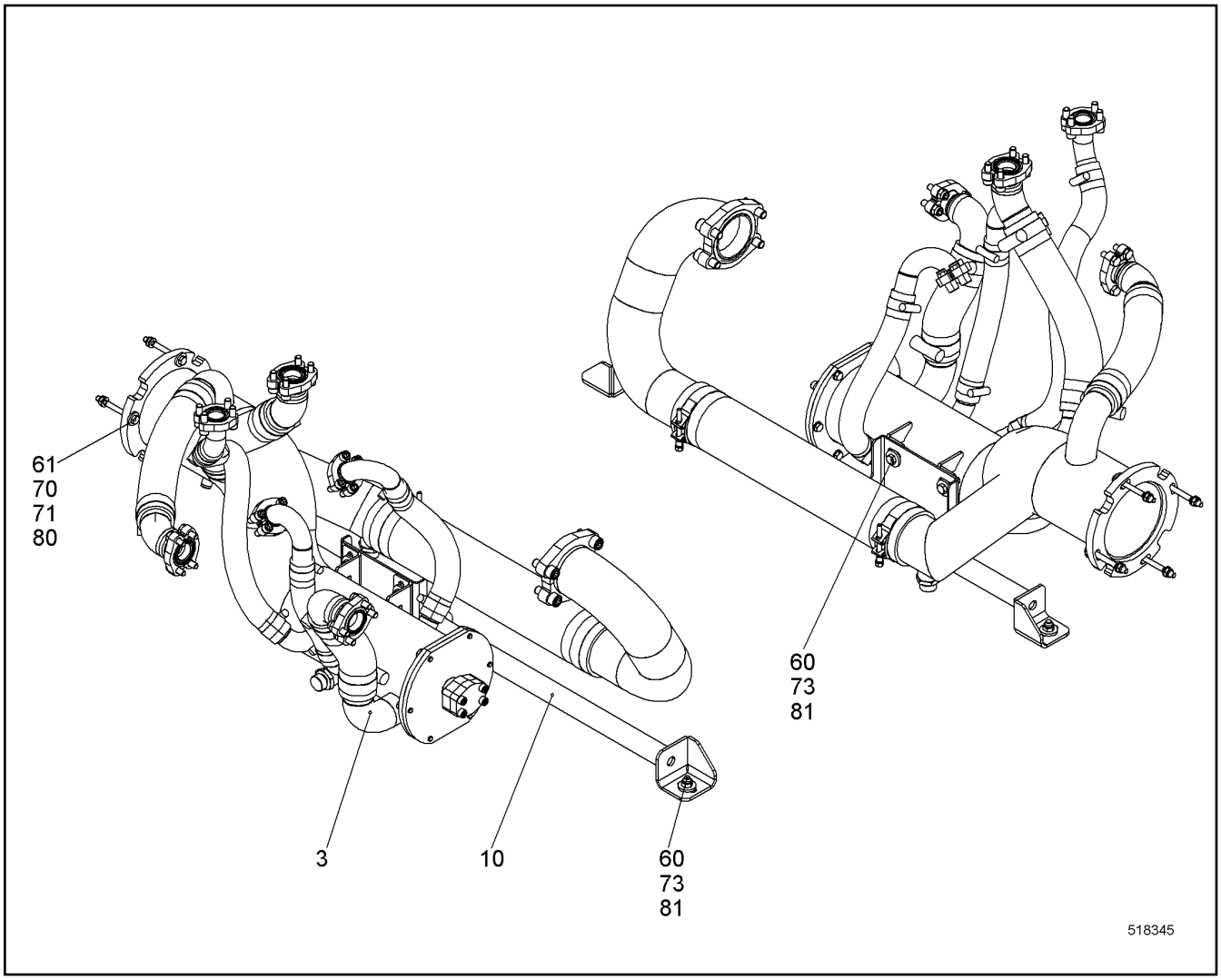

Pos.	Item	Quantity	Description	Bezeichnung	Serie	K
3	10575322	1	INTAKE PIPE OIL CPL ⇨ ❑ 178	ANSAUGROHR OEL KPL		
10	10579104	1	HOLDER	HALTER		
60	406511414	6	HEX SCREW ISO 4017 M12X40 A4-70	SECHSKANTSCHRAUBE		
61	4002195	4	HEX SCREW ISO 4014 M10X100 10.9	SECHSKANTSCHRAUBE		
70	420001114	4	WASHER ISO 7089 10 A4	SCHEIBE		
71	421300214	4	WASHER DIN 6340 10.5 C35	SCHEIBE		
73	4635283	12	WASHER DIN 6340 13 ST	SCHEIBE		
80	411901114	4	HEX NUT DIN 985 M10 10	SECHSKANTMUTTER		
81	10540495	6	HEX NUT ISO 10511 M12 A4	SECHSKANTMUTTER		

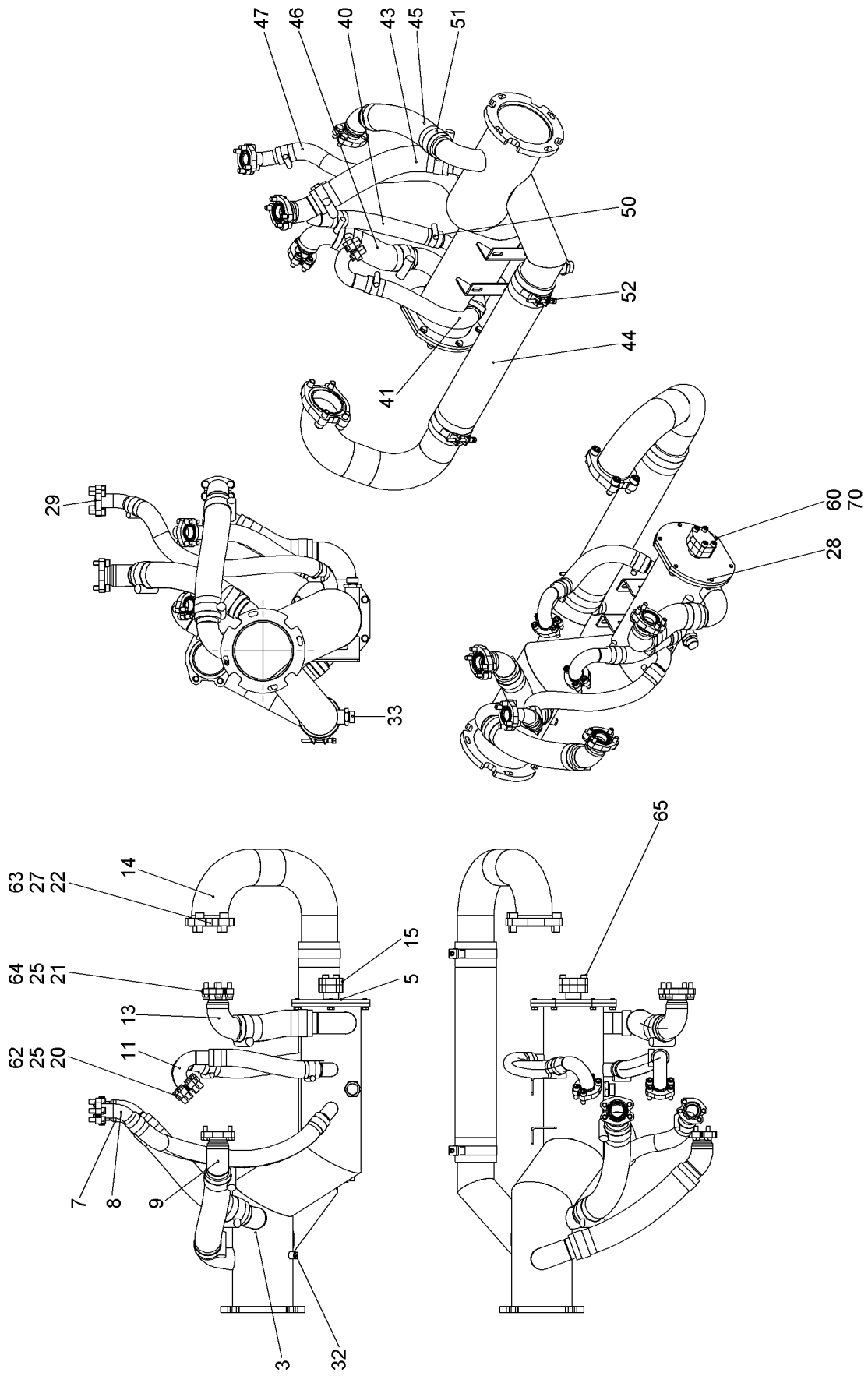

21.6.2017 521094 LIEBHERR	**138406_ETK_001** **INTAKE PIPE OIL CPL** **ANSAUGROHR OEL KPL**	❑ 178 (1/2) **10 57 532 2**

Pos.	Item	Quantity	Description	Bezeichnung	Serie	K
3	10575323	1	SUCTION PIPE OIL ST.CONST.	ANSAUGROHR OEL SCHWK		
5	11217289	1	COVER	DECKEL		
7	592070414	1	INTAKE PIPE CPL	ANSAUGROHR KPL		
8	10598537	1	INTAKE PIPE CPL	ANSAUGROHR KPL		
9	10350932	1	INTAKE PIPE CPL	ANSAUGROHR KPL		
11	10579155	2	INTAKE PIPE CPL	ANSAUGROHR KPL		
13	916526414	1	INTAKE PIPE CPL	ANSAUGROHR KPL		
14	592330814	1	INTAKE PIPE CPL	ANSAUGROHR KPL		
15	11293256	1	SEALING FLANGE SAE	VERSCHLUSSFLANSCH SAE		
20	511502414	6	FLANGE HALF	FLANSCHHAELFTE		
21	510574414	2	FLANGE HALF	FLANSCHHAELFTE		
22	511598114	2	FLANGE HALF	FLANSCHHAELFTE		
25	726431414	2	O-RING	O-RING		
26	510587908	1	O-RING	O-RING		
27	726409714	1	O-RING	O-RING		
28	9177947	1	O-RING	O-RING		
29	726431414	1	O-RING	O-RING		
32	477704914	1	FITTING	VERSCHRAUBUNG		
33	403900714	2	OIL DRAIN PLUG G1"X11 MS	OELABLASSSCHRAUBE		
40	11236517	1	SIPHON PIPE	SAUGSCHLAUCH		
41	11236515	1	SIPHON PIPE	SAUGSCHLAUCH		
43	11236514	1	SIPHON PIPE	SAUGSCHLAUCH		
44	592257814	1	SIPHON PIPE	SAUGSCHLAUCH		
45	11236511	1	SIPHON PIPE	SAUGSCHLAUCH		
46	11236518	1	SIPHON PIPE	SAUGSCHLAUCH		
47	11236513	1	SIPHON PIPE	SAUGSCHLAUCH		
50	10579070	6	HOSE CLAMP	SCHLAUCHSCHELLE		
51	790208814	6	HOSE CLAMP	SCHLAUCHSCHELLE		
52	774256114	2	HOSE CLAMP	SCHLAUCHSCHELLE		
60	406511914	6	HEX SCREW ISO 4017 M10X25 A4-70	SECHSKANTSCHRAUBE		
62	409878214	12	HEX SCREW ASME B18.2.1 UNC 7/16"-14UNC	SECHSKANTSCHRAUBE		
63	10544068	4	SOCKET HEAD SCREW ISO 4762 M16X40 10.9	ZYLINDERSCHRAUBE		
64	409878414	4	HEX SCREW ASME B18.2.1 UNC 1/2"-13UNCX1	SECHSKANTSCHRAUBE		
65	407203008	4	SOCKET HEAD SCREW DIN 6912 M10X40 8.8	ZYLINDERSCHRAUBE		
70	420001114	6	WASHER ISO 7089 10 A4	SCHEIBE		

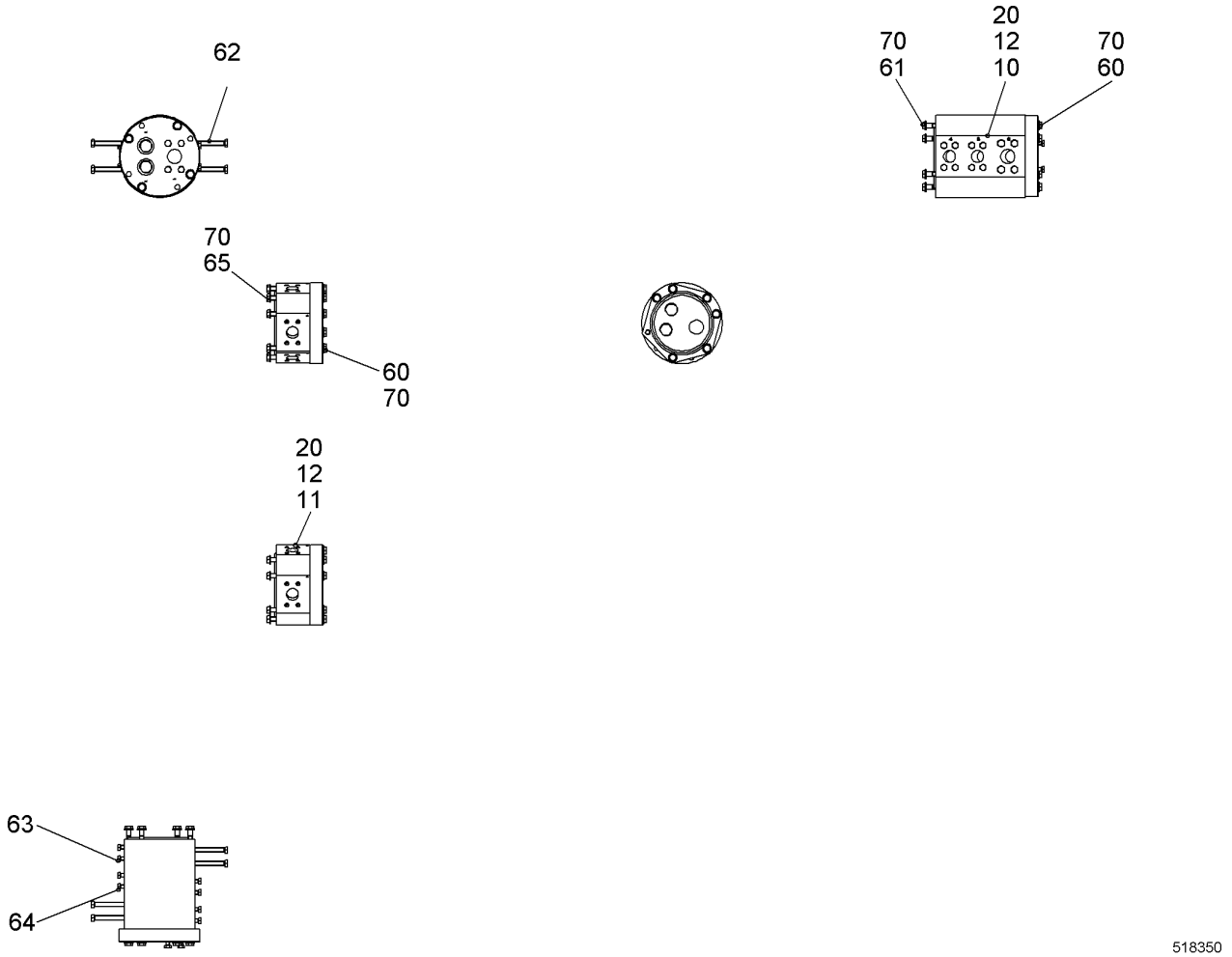

Pos.	Item	Quantity	Description	Bezeichnung	Serie	K
10	953466003	1	INTAKE PIPE	ANSAUGROHR		
12	10595280	2	COVER	DECKEL		
20	726404414	4	O-RING	O-RING		
60	4902260	10	HEX SCREW ISO 4017 M12X55 10.9	SECHSKANTSCHRAUBE		
61	4062009	4	HEX SCREW ISO 4014 M12X50 10.9	SECHSKANTSCHRAUBE		
62	4600385	8	SOCKET HEAD SCREW ISO 4762 M12X100 10.	ZYLINDERSCHRAUBE		
63	4066098	12	HEX SCREW ISO 4017 M10X30 10.9	SECHSKANTSCHRAUBE		
64	4066093	8	HEX SCREW ISO 4017 M10X25 10.9	SECHSKANTSCHRAUBE		
65	4066122	6	HEX SCREW ISO 4017 M12X35 10.9	SECHSKANTSCHRAUBE		
70	4901782	20	WASHER ISO 7089 12 A4	SCHEIBE		

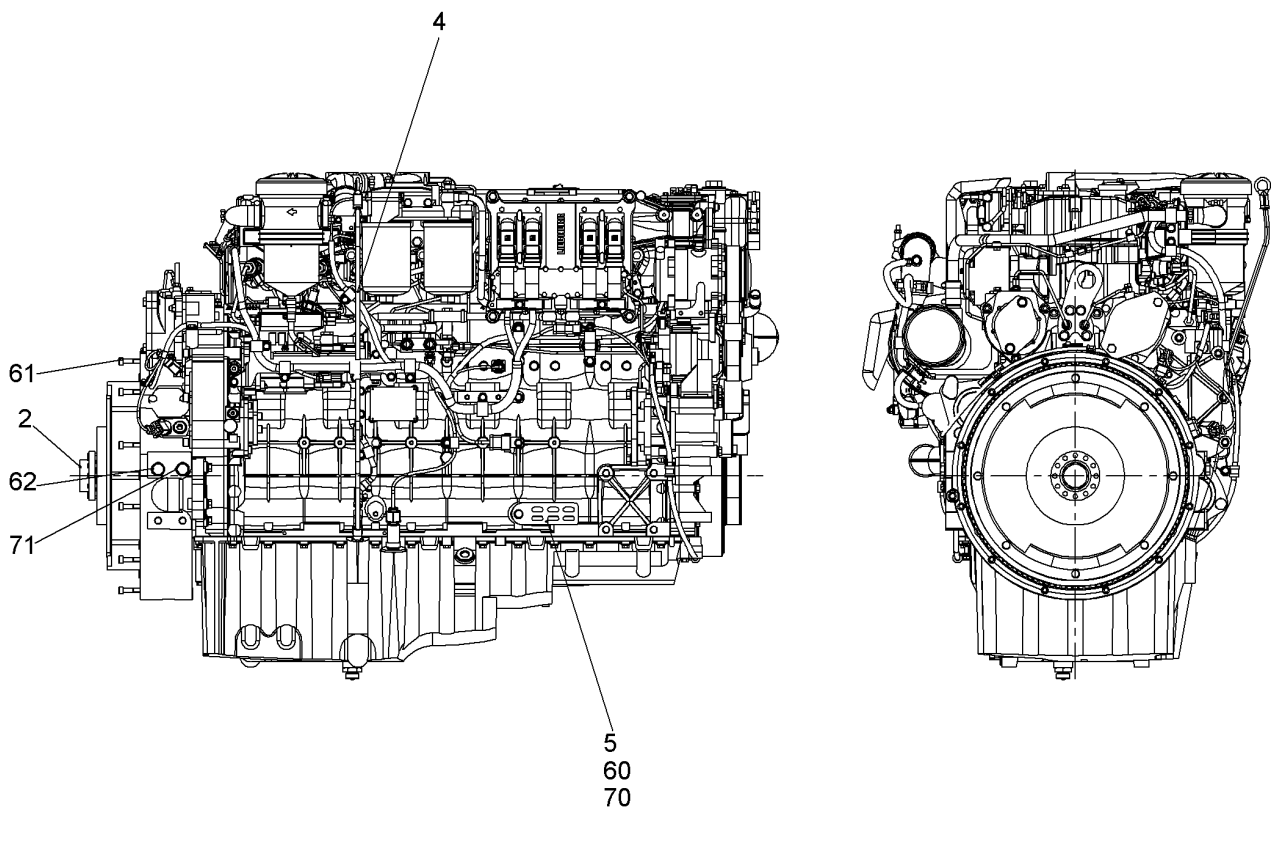

Pos.	Item	Quantity	Description	Bezeichnung	Serie	K
2	11249334	1	COUPLING	KUPPLUNG		
4	10142567	1	OIL DIPSTICK CPL.	OELMESSSTAB KPL.		
5	11261002	2	WP	WP		
60	406511914	1	HEX SCREW ISO 4017 M10X25 A4-70	SECHSKANTSCHRAUBE		
61	4001622	12	SOCKET HEAD SCREW ISO 4762 M10X55 10.9	ZYLINDERSCHRAUBE		
62	10539315	4	HEX SCREW ISO 4017 M16X25 10.9	SECHSKANTSCHRAUBE		
70	10554336	1	WASHER ISO 7089 10 ST	SCHEIBE		
71	4901893	4	WASHER ISO 7089 17/30X3 A4	SCHEIBE		

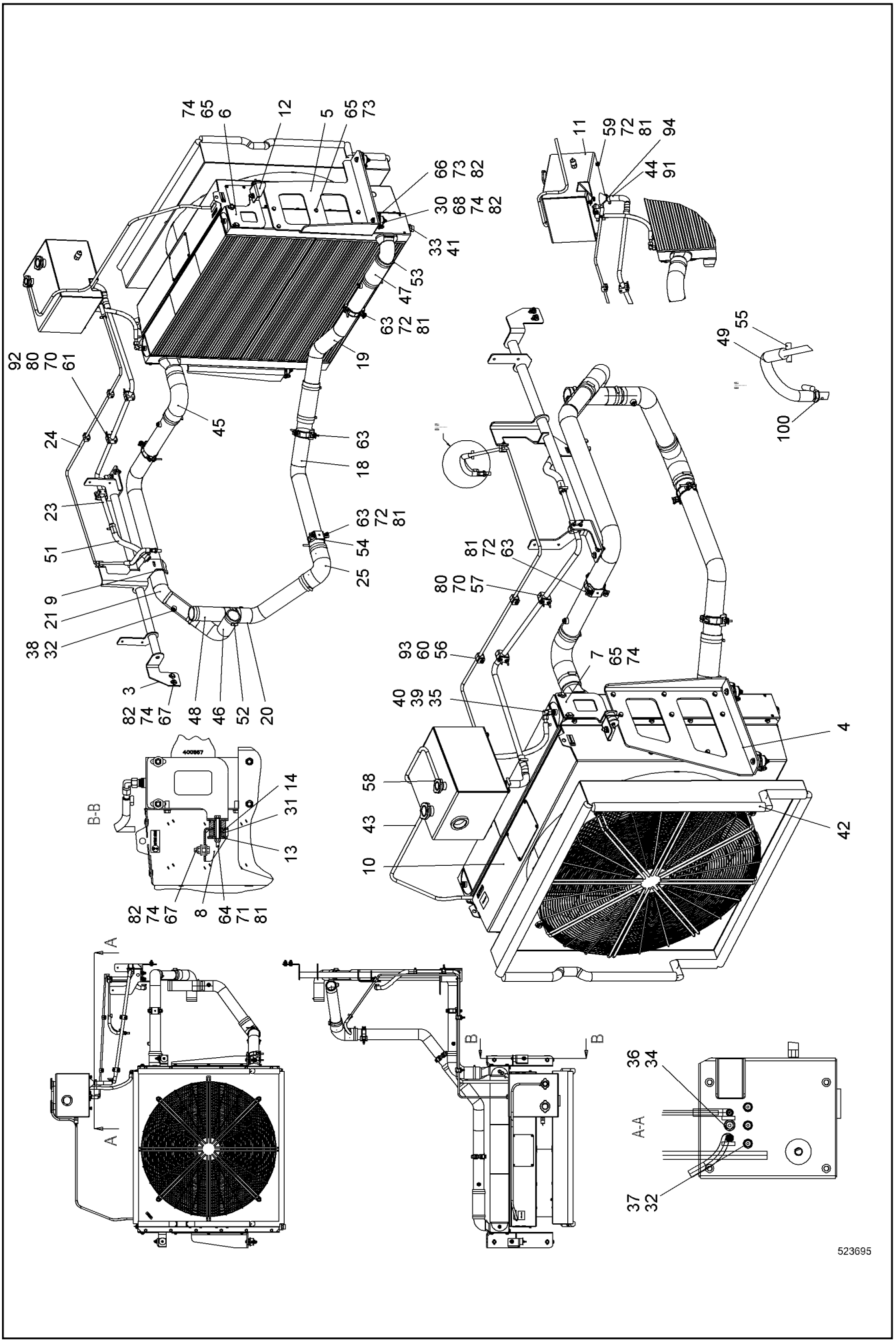
74 65 6 12 5 65 73
66 73 82
30 68 74 82
33 41
53
47
63 72 81
19
92 80 70 61
24
23
51
21 9
38 32
45
63
18
63 72 81
54
25
3
82 74 67 48 46 52 20
11 59 72 81 94
44 91
49 55
100
81 72 63
80 70 57
93 60 56
40 39 35
7 65 74
4
58
43
10
42
B-B
400667
31 14
13
82 74 67 8 64 71 81
A
A
B
B
A-A
36 34
37 32
523695

Pos.	Item	Quantity	Description	Bezeichnung	Serie	K
3	11250382	1	HOLDER	HALTER		
4	10575306	1	WP	WP		
5	10575307	1	WP	WP		
6	10599757	1	WP	WP		
7	10599758	1	WP	WP		
8	10599759	1	WP	WP		
9	11269800	1	RUBBER	GUMMI		
10	10574237	1	COOLER MOTOR ⇨ ❑ 185	KUEHLER MOTOR		
11	11941710	1	EQUALIZING RESERVOIR	AUSGLEICHSBEHAELTER		
12	10556597	1	HOLDER	HALTER		
13	10567619	2	WASHER 53/10X5 AISI 316	SCHEIBE		
14	10571340	2	SLEEVE 20/13.5X44 AISI 316	HUELSE		
18	11287692	1	COOLING WATER PIPE	KUEHLWASSERROHR		
19	11269259	1	COOLING WATER PIPE	KUEHLWASSERROHR		
20	11250555	1	COOLING WATER PIPE	KUEHLWASSERROHR		
21	11250556	1	COOLING WATER PIPE	KUEHLWASSERROHR		
23	11250564	1	TUBE	ROHR		
24	11287715	1	TUBE	ROHR		
25	11287796	1	FORM HOSE	FORMSCHLAUCH		
30	726613614	4	RUBBER MOUNT	LAGER GUMMI		
31	10567622	4	BUFFER	PUFFER		
32	4900262	7	SEALING RING	DICHTRING		
33	7101022	1	SEALING RING	DICHTRING		
34	710103714	1	SEALING RING	DICHTRING		
35	247117702	1	FITTING	VERSCHRAUBUNG		
36	470905214	1	FITTING	VERSCHRAUBUNG		
37	470905714	3	FITTING	VERSCHRAUBUNG		
38	477704914	4	FITTING	VERSCHRAUBUNG		
39	476608008	1	FITTING	VERSCHRAUBUNG		
40	592023914	1	HOSE FITTING	SCHLAUCHARMATUR		
41	403900714	1	OIL DRAIN PLUG G1"X11 MS	OELABLASSSCHRAUBE		
42	7014524	5	CLAMPING PROFILE	KLEMMPROFIL		
43	553128608	2.5	FUEL HOSE	KRAFTSTOFFSCHLAUCH		
44	11270026	1	FORM HOSE	FORMSCHLAUCH		
45	10337090	1	FORM HOSE	FORMSCHLAUCH		
46	10350439	1	FORM HOSE	FORMSCHLAUCH		
47	11656331	1	COOLING WATER HOSE	KUEHLWASSERSCHLAUCH		
48	11621777	1	COOLING WATER HOSE	KUEHLWASSERSCHLAUCH		
49	10873086	1	COOLING WATER HOSE	KUEHLWASSERSCHLAUCH		
51	11621772	1	COOLING WATER HOSE	KUEHLWASSERSCHLAUCH		
52	774206408	4	HOSE CLAMP	SCHLAUCHSCHELLE		
53	774218808	9	HOSE CLAMP	SCHLAUCHSCHELLE		
54	774255714	4	CLAMP	SCHELLE		
55	774204914	6	HOSE CLAMP	SCHLAUCHSCHELLE		
56	7365090	6	CLAMP-HALF	KLEMMHAELFTE		
57	602008508	6	CLAMP-HALF	KLEMMHAELFTE		
58	10581765	1	HOSE CLAMP	SCHLAUCHSCHELLE		
59	406501514	6	HEX SCREW ISO 4017 M8X16 A4-70	SECHSKANTSCHRAUBE		
60	404251014	3	SOCKET HEAD SCREW ISO 4762 M6X35 A4-7	ZYLINDERSCHRAUBE		
61	404251414	6	SOCKET HEAD SCREW ISO 4762 M6X60 A4-7	ZYLINDERSCHRAUBE		
63	406501314	8	HEX SCREW ISO 4017 M8X30 A4-70	SECHSKANTSCHRAUBE		
64	10538809	2	HEX SCREW ISO 4017 M8X80 A4-70	SECHSKANTSCHRAUBE		
65	406511914	16	HEX SCREW ISO 4017 M10X25 A4-70	SECHSKANTSCHRAUBE		
66	406511614	8	HEX SCREW ISO 4017 M10X30 A4-70	SECHSKANTSCHRAUBE		
67	406509314	6	HEX SCREW ISO 4017 M10X35 A4-70	SECHSKANTSCHRAUBE		
68	406527914	4	HEX SCREW ISO 4017 M10X80 A4-70	SECHSKANTSCHRAUBE		
70	4000648	9	WASHER DIN 7349 6.4	SCHEIBE		
71	420001014	6	WASHER ISO 7089 8 A4	SCHEIBE		
72	421300514	20	WASHER DIN 6340 8.4 C35	SCHEIBE		

Pos.	Item	Quantity	Description	Bezeichnung	Serie	K
73	420001114	28	WASHER ISO 7089 10 A4	SCHEIBE		
74	421300214	24	WASHER DIN 6340 10.5 C35	SCHEIBE		
80	10540492	9	HEX NUT ISO 10511 M6 A4	SECHSKANTMUTTER		
81	10540493	12	HEX NUT ISO 10511 M8 A4	SECHSKANTMUTTER		
82	10540494	18	HEX NUT ISO 10511 M10 A4	SECHSKANTMUTTER		
91	4900778	4	HOSE CLAMP	SCHLAUCHSCHELLE		
92	7005053	3	LID PLATE	DECKPLATTE		
93	602025814	2	LID PLATE	DECKPLATTE		
94	550936214	1	FORM HOSE	FORMSCHLAUCH		
100	10115523	1	HOSE NIPPLE	SCHLAUCHNIPPEL		

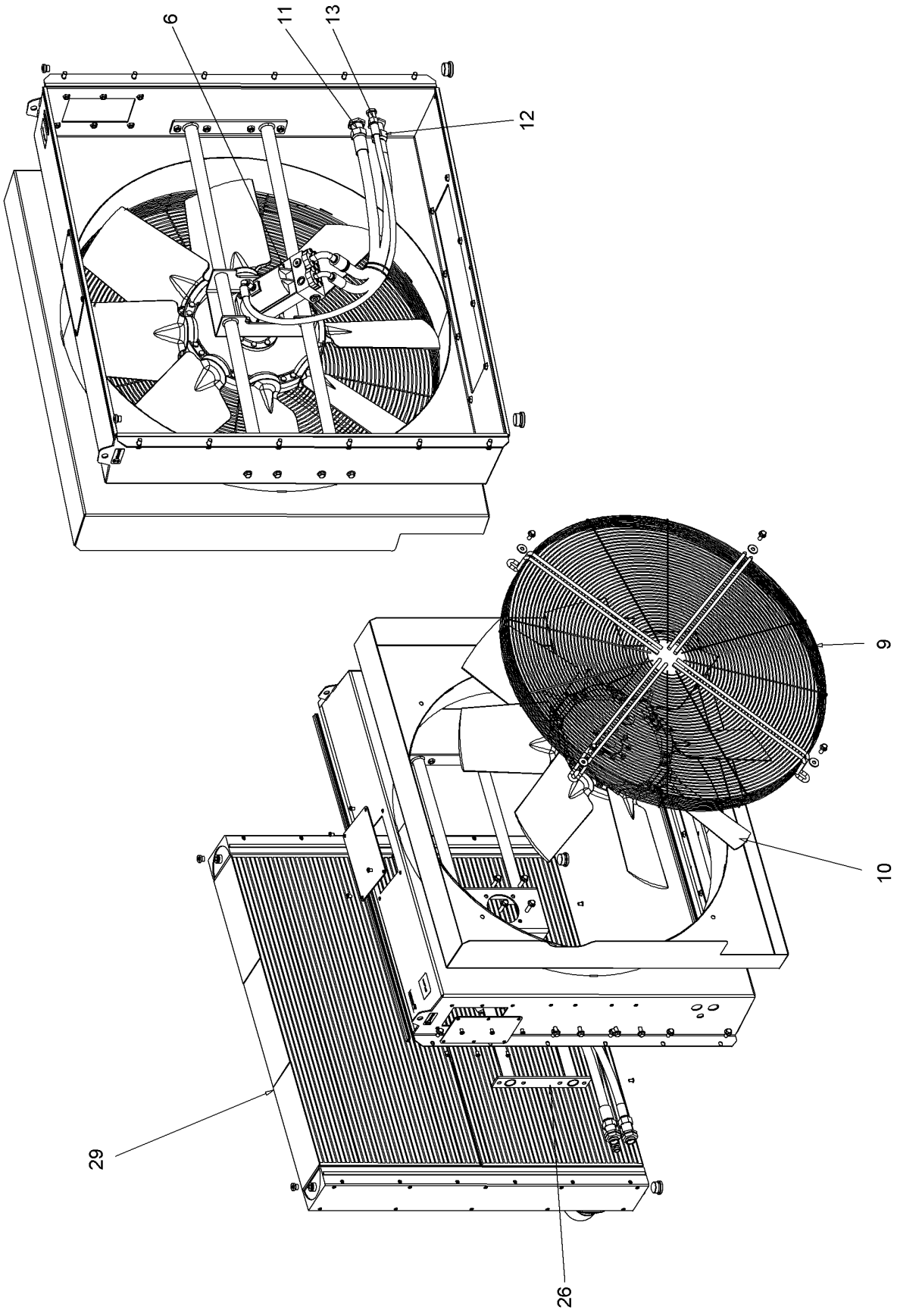
6
11
13
12
9
10
29
26
607278

Pos.	Item	Quantity	Description	Bezeichnung	Serie	K
6	512250114	1	OIL MOTOR ⇨ ❑ 187	OELMOTOR		
9	11267554	1	GUARD	SCHUTZGITTER		
10	11267555	1	FAN	LUEFTER		
11	11267556	1	HOSE CPL	SCHLAUCH KPL		
12	11267557	1	HOSE CPL	SCHLAUCH KPL		
13	11267558	1	HOSE CPL	SCHLAUCH KPL		
26	11267559	1	MOTOR HOLDER	MOTORHALTER		
29	11267560	1	COOLER	KUEHLER		

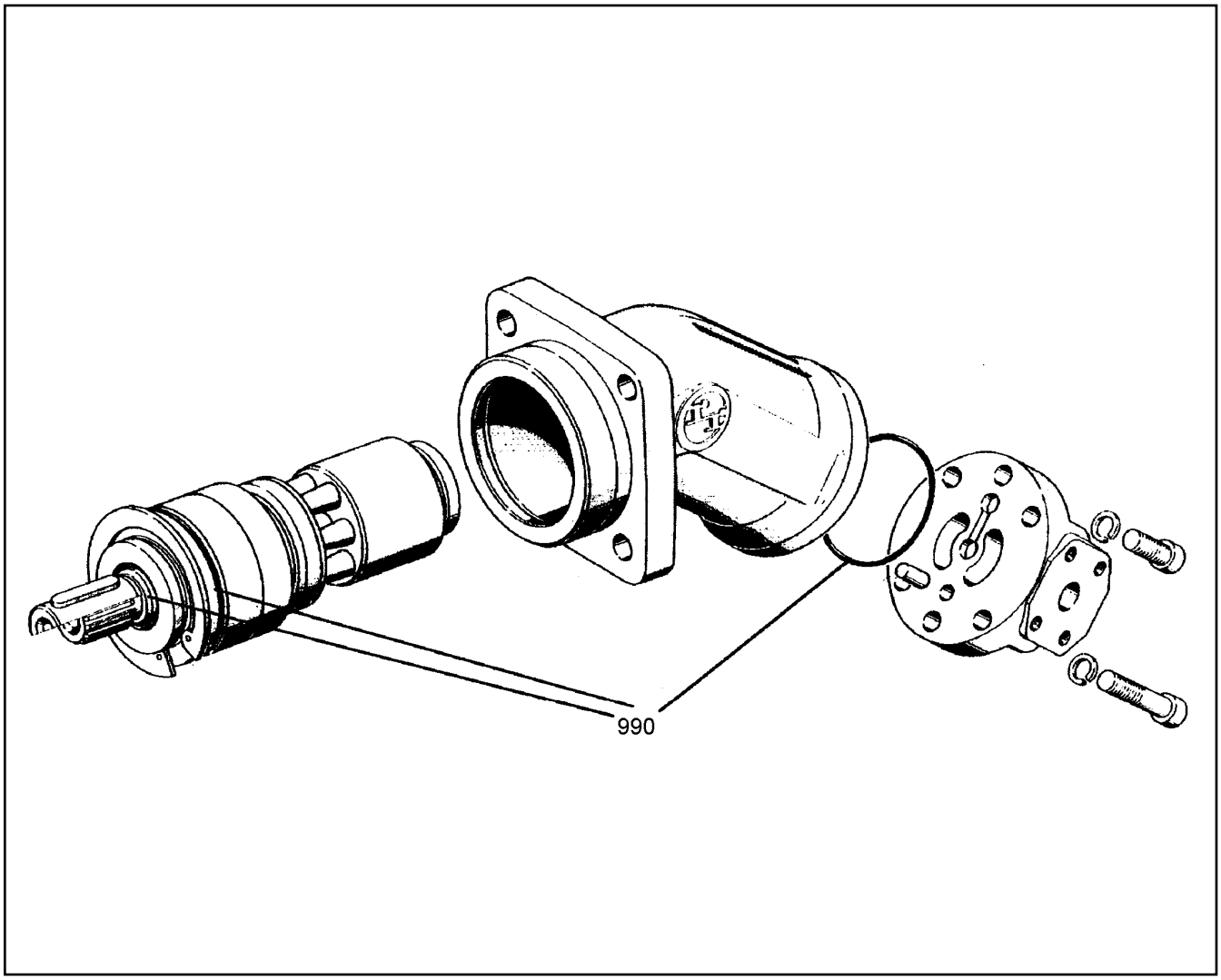

Pos.	Item	Quantity	Description	Bezeichnung	Serie	K
990	502050814	1	SEALING SET CPL	DS KPL		

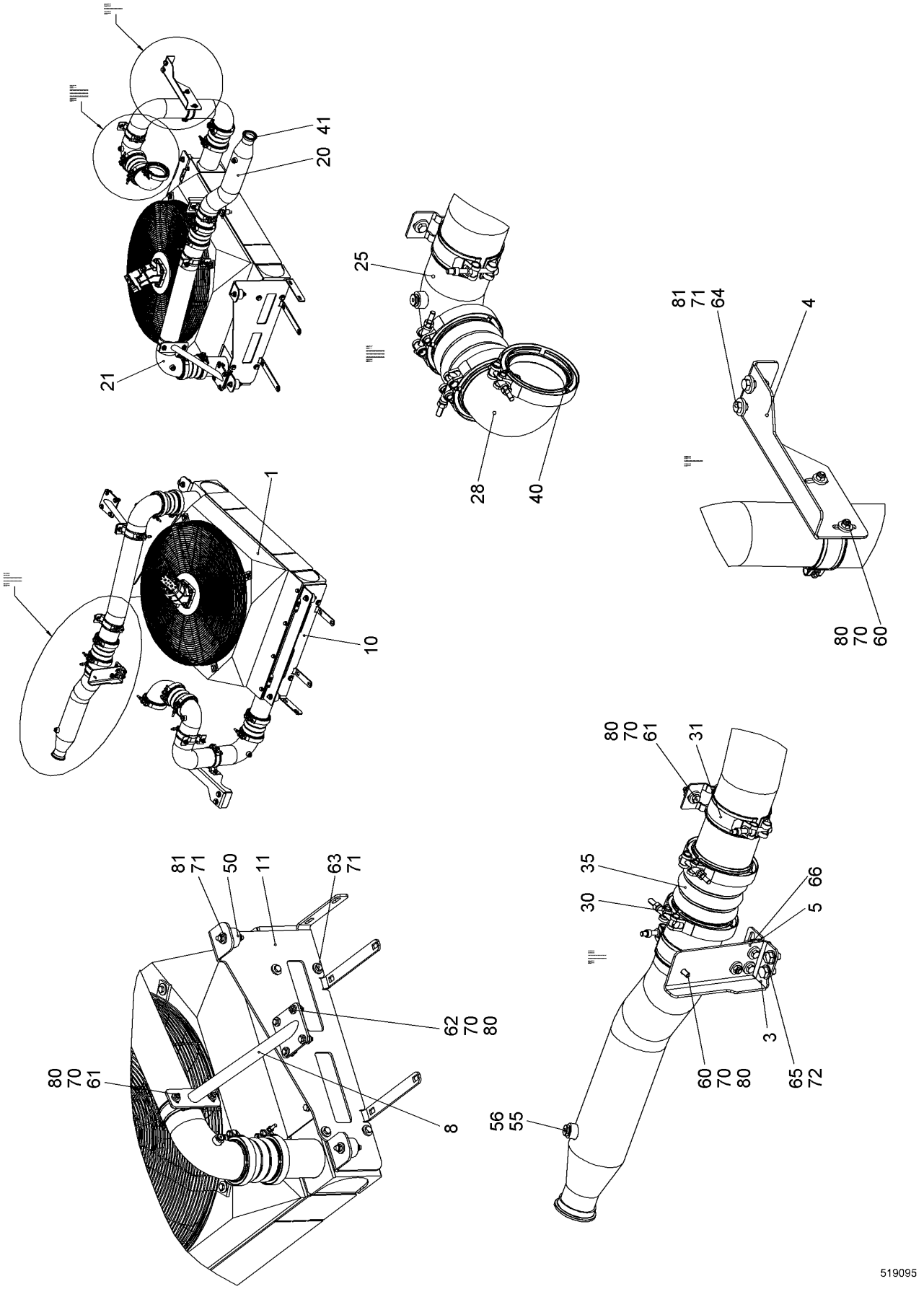

21.6.2017 519095	**138406_ETK_001**	❑ 188 (1/2)
LIEBHERR	**COOLER INSTALLATION CHARGE AIR** **KUEHLER EINBAU LADELUFT**	**11 24 114 1**

Pos.	Item	Quantity	Description	Bezeichnung	Serie	K
1	10574239	1	COOLER MOTOR ⇨ ❑ 190	KUEHLER MOTOR		
3	11285747	1	WP ⇨ ❑ 192	WP		
5	11276612	1	SLEEVE 14/25X26 S235JRH;EN 10210-1	HUELSE		
8	11251056	1	HOLDER	HALTER		
10	10575566	1	WP	WP		
11	10575567	1	WP	WP		
20	11250430	1	CHARGE AIR PIPE	LADELUFTROHR		
21	11250438	1	CHARGE AIR PIPE	LADELUFTROHR		
25	11250439	1	CHARGE AIR PIPE	LADELUFTROHR		
28	10562107	1	CHARGE AIR PIPE	LADELUFTROHR		
30	10127984	9	RETAINER CLIP	SPANNSCHELLE		
31	10513605	5	CLAMP	SCHELLE		
35	10521397	4	CHARGE AIR CORRUGATED HOSE	LADELUFTWELLSCHLAUCH		
40	7380605	1	O-RING	O-RING		
41	7380970	1	O-RING	O-RING		
50	726612114	4	RUBBER MOUNT	LAGER GUMMI		
55	10598295	4	SCREW PLUG	VERSCHLUSSSCHRAUBE		
56	710102514	4	SEALING RING	DICHTRING		
60	406501414	4	HEX SCREW ISO 4017 M8X25 A4-70	SECHSKANTSCHRAUBE		
61	406501314	6	HEX SCREW ISO 4017 M8X30 A4-70	SECHSKANTSCHRAUBE		
62	406517614	4	HEX SCREW ISO 4017 M8X35 A4-70	SECHSKANTSCHRAUBE		
63	406511914	8	HEX SCREW ISO 4017 M10X25 A4-70	SECHSKANTSCHRAUBE		
64	406509314	2	HEX SCREW ISO 4017 M10X35 A4-70	SECHSKANTSCHRAUBE		
65	406517714	2	HEX SCREW ISO 4017 M12X20 A4-70	SECHSKANTSCHRAUBE		
66	406512614	1	HEX SCREW ISO 4017 M12X50 A4-70	SECHSKANTSCHRAUBE		
70	421300514	28	WASHER DIN 6340 8.4 C35	SCHEIBE		
71	421300214	22	WASHER DIN 6340 10.5 C35	SCHEIBE		
72	4901782	3	WASHER ISO 7089 12 A4	SCHEIBE		
80	10540493	14	HEX NUT ISO 10511 M8 A4	SECHSKANTMUTTER		
81	10540494	10	HEX NUT ISO 10511 M10 A4	SECHSKANTMUTTER		

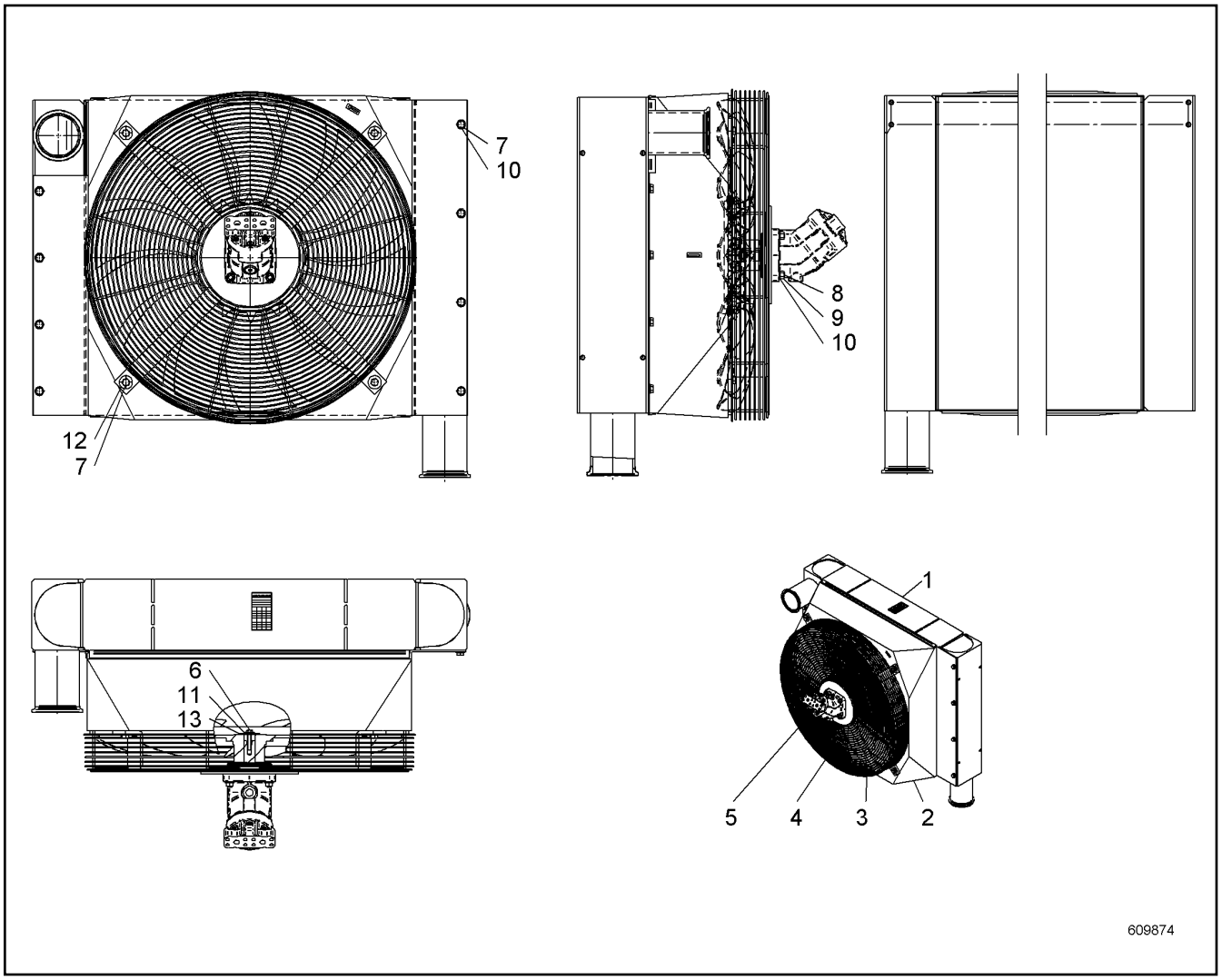

Pos.	Item	Quantity	Description	Bezeichnung	Serie	K
1	11932246	1	CHARGE AIR COOLER	LADELUFTKUEHLER		
2	11932245	1	FAN COWL	LUEFTERHAUBE		
3	11932244	1	GUARD	SCHUTZGITTER		
4	11932243	1	FAN	LUEFTER		
5	512239414	1	OIL MOTOR ⇨ ❑ 191	OELMOTOR		
6	11932242	1	HEX SCREW ISO 4017 M8X40 8.8	SECHSKANTSCHRAUBE		
7	11932241	12	HEX SCREW ISO 4017 M10X25 10.9	SECHSKANTSCHRAUBE		
8	11932240	4	HEX SCREW ISO 4017 M10X40 10.9	SECHSKANTSCHRAUBE		
9	11932239	4	HEX NUT ISO 4032 M10 8.8	SECHSKANTMUTTER		
10	11932238	16	WASHER ISO 7089 10	SCHEIBE		
11	11932237	1	WASHER ISO 7093-1 8	SCHEIBE		
12	11932236	4	WASHER ISO 7093-1 10	SCHEIBE		
13	11922654	1	WASHER	SCHEIBE		

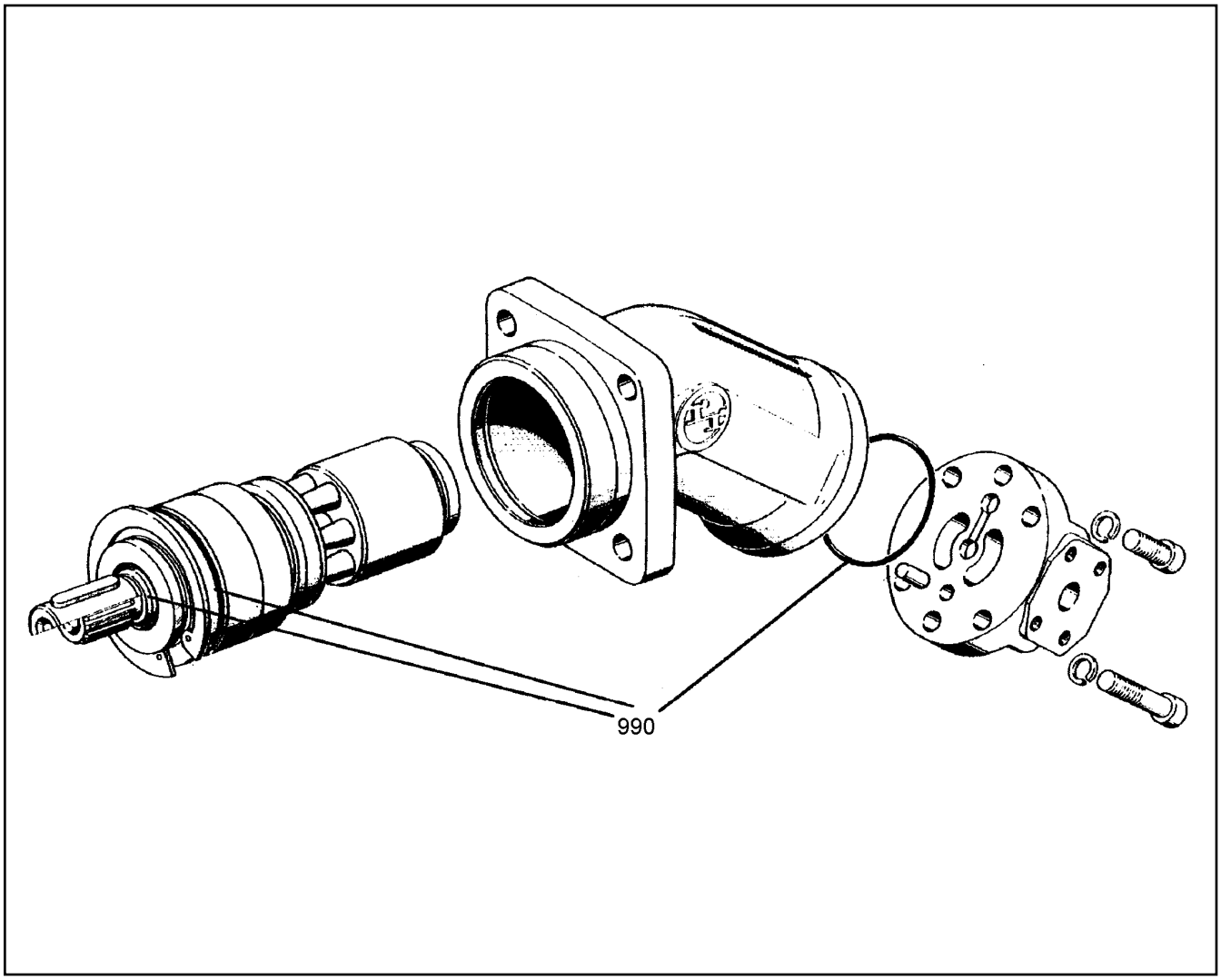

Pos.	Item	Quantity	Description	Bezeichnung	Serie	K
990	502050814	1	SEALING SET CPL	DS KPL		

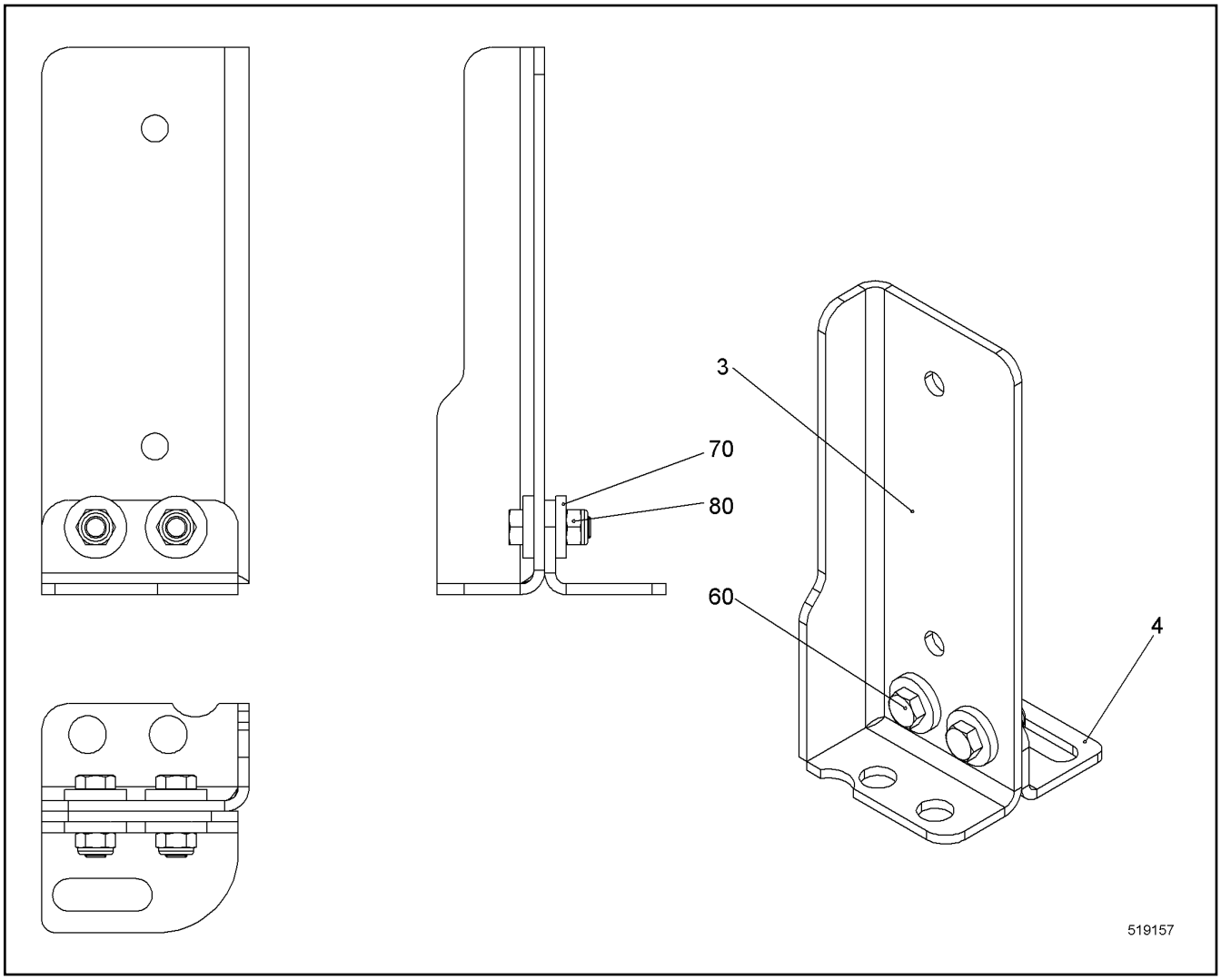

Pos.	Item	Quantity	Description	Bezeichnung	Serie	K
3	11250985	1	WP	WP		
4	11285709	1	WP	WP		
60	406501414	2	HEX SCREW ISO 4017 M8X25 A4-70	SECHSKANTSCHRAUBE		
70	421300514	4	WASHER DIN 6340 8.4 C35	SCHEIBE		
80	10540493	2	HEX NUT ISO 10511 M8 A4	SECHSKANTMUTTER		

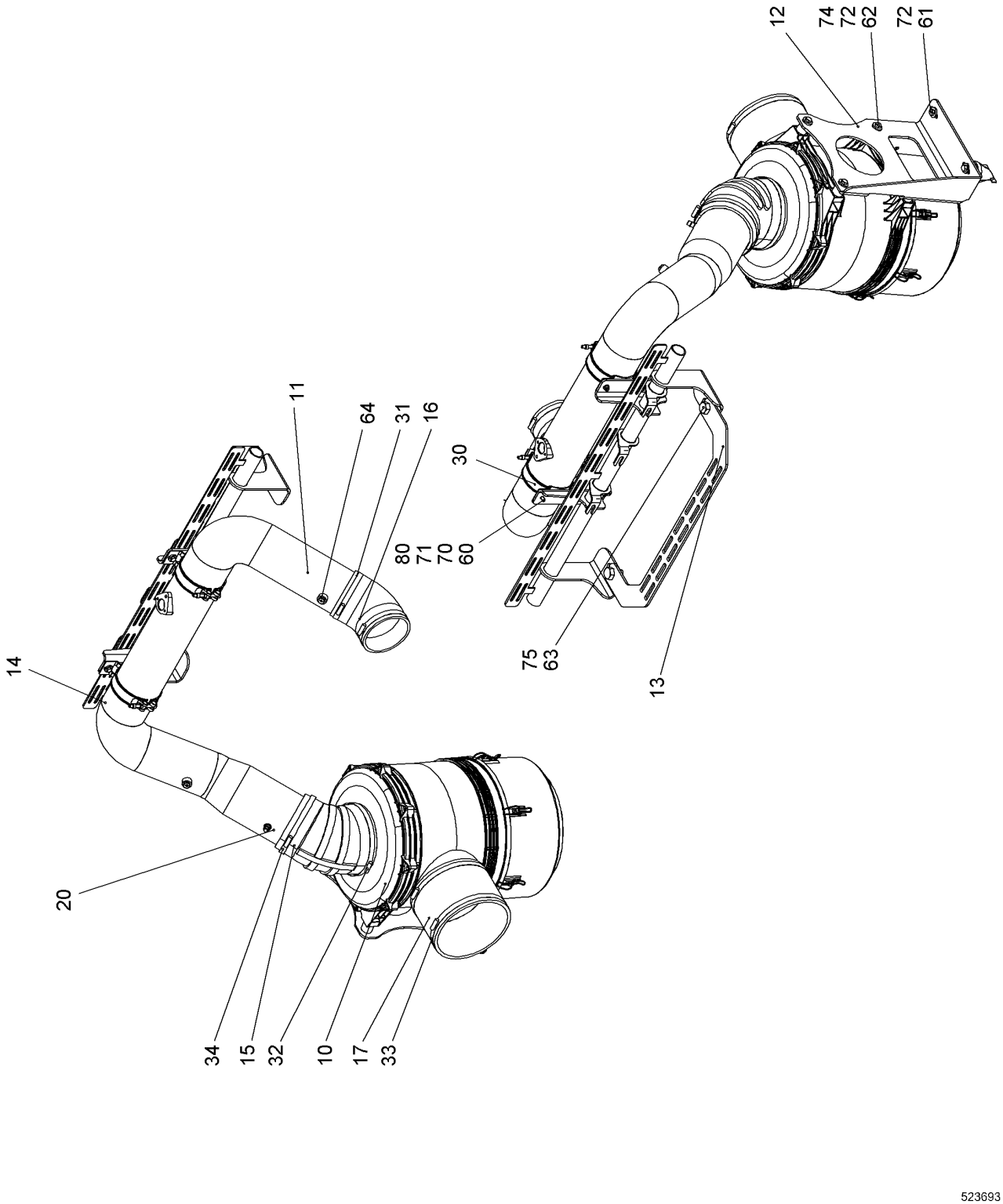
12
74
72
62
72
61
11
64
31
16
30
80
71
70
60
14
75
63
13
20
34
15
32
10
17
33
523693

Pos.	Item	Quantity	Description	Bezeichnung	Serie	K
10	11246790	1	AIR FILTER ⇨ ❑ 195	LUFTFILTER		
11	11929287	1	SUCTION PIPE AIR	ANSAUGROHR LUFT		
12	11247208	1	CONSOLE	KONSOLE		
13	11215385	1	CONSOLE	KONSOLE		
14	11929329	1	HOLDER ST.CONST.	HALTER SCHWK		
15	11246836	1	FORM HOSE	FORMSCHLAUCH		
16	550789808	1	ELBOW	KRUEMMER		
17	10352453	1	HOSE	SCHLAUCH		
20	11060522	1	MAINTENANCE SWITCH	WARTUNGSSCHALTER		
30	11229805	2	CLAMP	SCHELLE		
31	774209908	2	HOSE CLAMP	SCHLAUCHSCHELLE		
32	774241914	1	HOSE CLAMP	SCHLAUCHSCHELLE		
33	774247214	2	HOSE CLAMP	SCHLAUCHSCHELLE		
34	774217108	1	HOSE CLAMP	SCHLAUCHSCHELLE		
60	406501414	4	HEX SCREW ISO 4017 M8X25 A4-70	SECHSKANTSCHRAUBE		
61	406518714	2	HEX SCREW ISO 4017 M10X20 A4-70	SECHSKANTSCHRAUBE		
62	10538823	4	HEX SCREW ISO 4017 M10X65 A4-70	SECHSKANTSCHRAUBE		
63	10543919	2	HEX SCREW ISO 4017 M20X35 10.9	SECHSKANTSCHRAUBE		
64	477704914	2	FITTING	VERSCHRAUBUNG		
70	420001014	4	WASHER ISO 7089 8 A4	SCHEIBE		
71	421300514	4	WASHER DIN 6340 8.4 C35	SCHEIBE		
72	421300214	6	WASHER DIN 6340 10.5 C35	SCHEIBE		
74	10519789	4	WASHER 12/30X30 S355J2;EN 10025-2	SCHEIBE		
75	10544174	2	WASHER ISO 7089 20	SCHEIBE		
80	10540493	4	HEX NUT ISO 10511 M8 A4	SECHSKANTMUTTER		

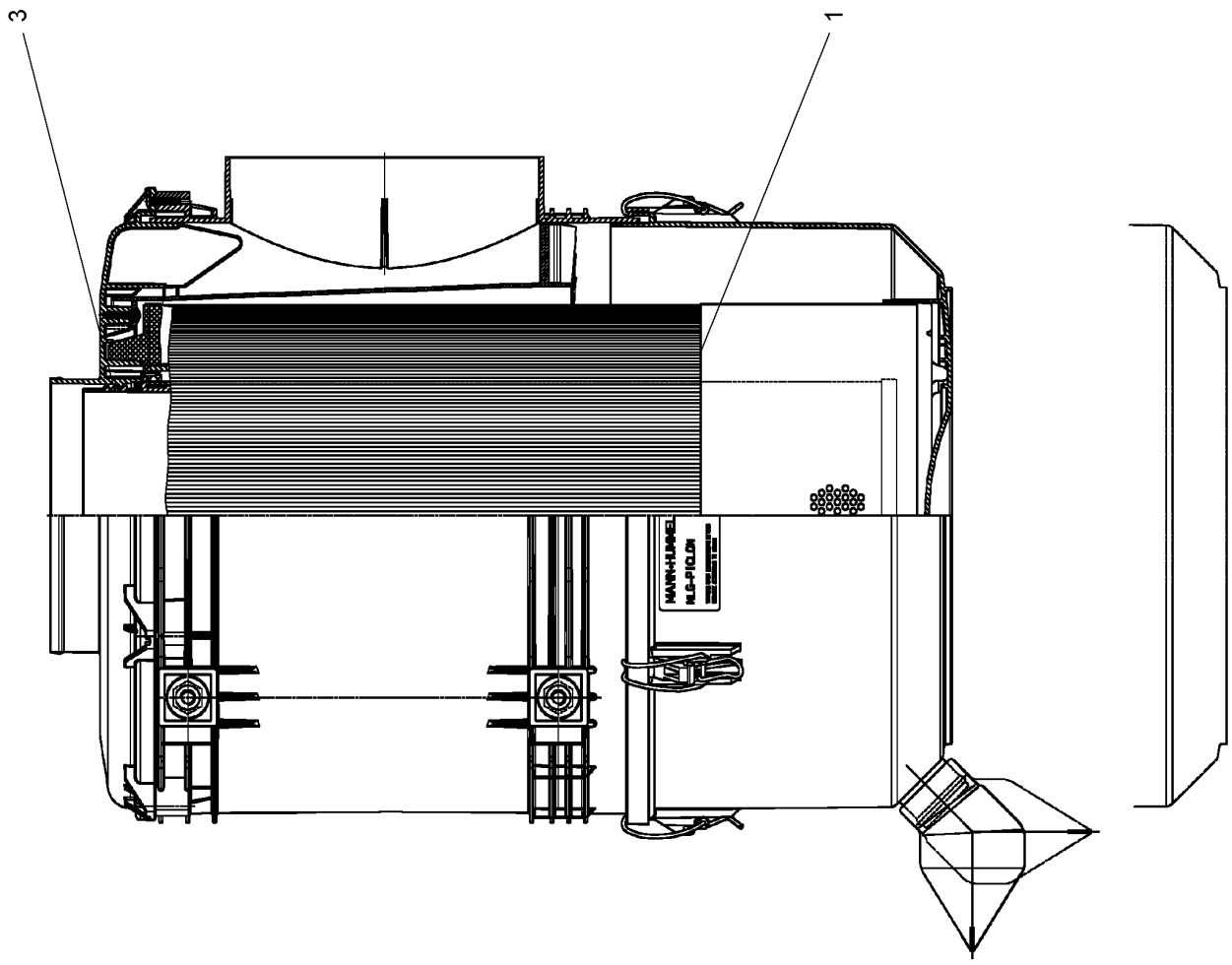

608021

Pos.	Item	Quantity	Description	Bezeichnung	Serie	K
1	11291031	1	FILTER ELEMENT	FILTERELEMENT		
3	11291030	1	SAFETY ELEMENT	SICHERHEITSELEMENT		

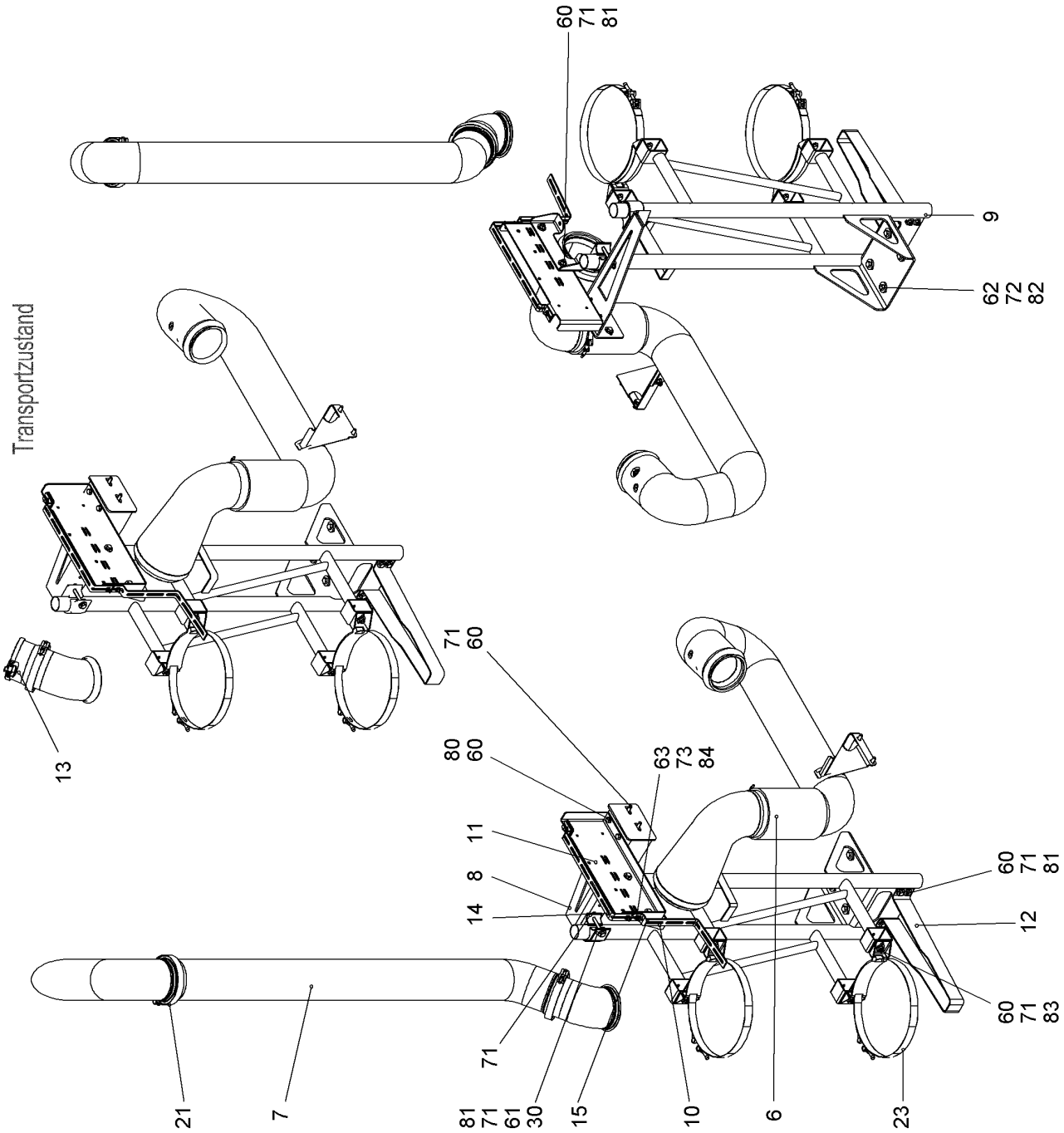

21.6.2017 522548 LIEBHERR	**138406_ETK_001** **EXHAUST GAS SYSTEM** **ABGASANLAGE**	❑ 197 (1/2) **11 24 114 3**

Pos.	Item	Quantity	Description	Bezeichnung	Serie	K
6	11248166	1	FLUE GAS PIPE CPL	ABGASROHR KPL		
7	11248175	1	EXHAUST TAIL PIPE	ABGASENDROHR		
8	11247607	1	CONSOLE	KONSOLE		
9	11247464	1	CONSOLE	KONSOLE		
10	11248432	1	WP	WP		
11	11248433	1	WP	WP		
12	11248460	1	BRACKET	BUEGEL		
13	11299163	1	EXHAUST FLAP	AUSPUFFKLAPPE		
14	11308593	1	BRACKET	BUEGEL		
15	11308594	1	BRACKET	BUEGEL		
21	10494116	2	PROFIL CLAMP	PROFILSCHELLE		
23	10355006	2	SWIVEL BOLT BRACKET CLAMP	GELENKBANDKONSOLENSCHE		
30	979896808	2	CLAMPING RING	KLEMMRING		
60	406511614	14	HEX SCREW ISO 4017 M10X30 A4-70	SECHSKANTSCHRAUBE		
61	10538824	2	HEX SCREW ISO 4017 M10X110 A4-70	SECHSKANTSCHRAUBE		
62	406519214	4	HEX SCREW ISO 4017 M12X45 A4-70	SECHSKANTSCHRAUBE		
63	406518514	3	HEX SCREW ISO 4017 M6X25 A4-70	SECHSKANTSCHRAUBE		
71	421300214	28	WASHER DIN 6340 10.5 C35	SCHEIBE		
72	4635283	8	WASHER DIN 6340 13 ST	SCHEIBE		
73	10540500	6	WASHER ISO 7093-1 6 A4	SCHEIBE		
80	10540494	2	HEX NUT ISO 10511 M10 A4	SECHSKANTMUTTER		
81	411514614	8	HEX NUT ISO 4032 M10 A4-70	SECHSKANTMUTTER		
82	10540495	4	HEX NUT ISO 10511 M12 A4	SECHSKANTMUTTER		
83	411880614	4	HEX NUT ISO 7042 M10 8	SECHSKANTMUTTER		
84	10540492	3	HEX NUT ISO 10511 M6 A4	SECHSKANTMUTTER		

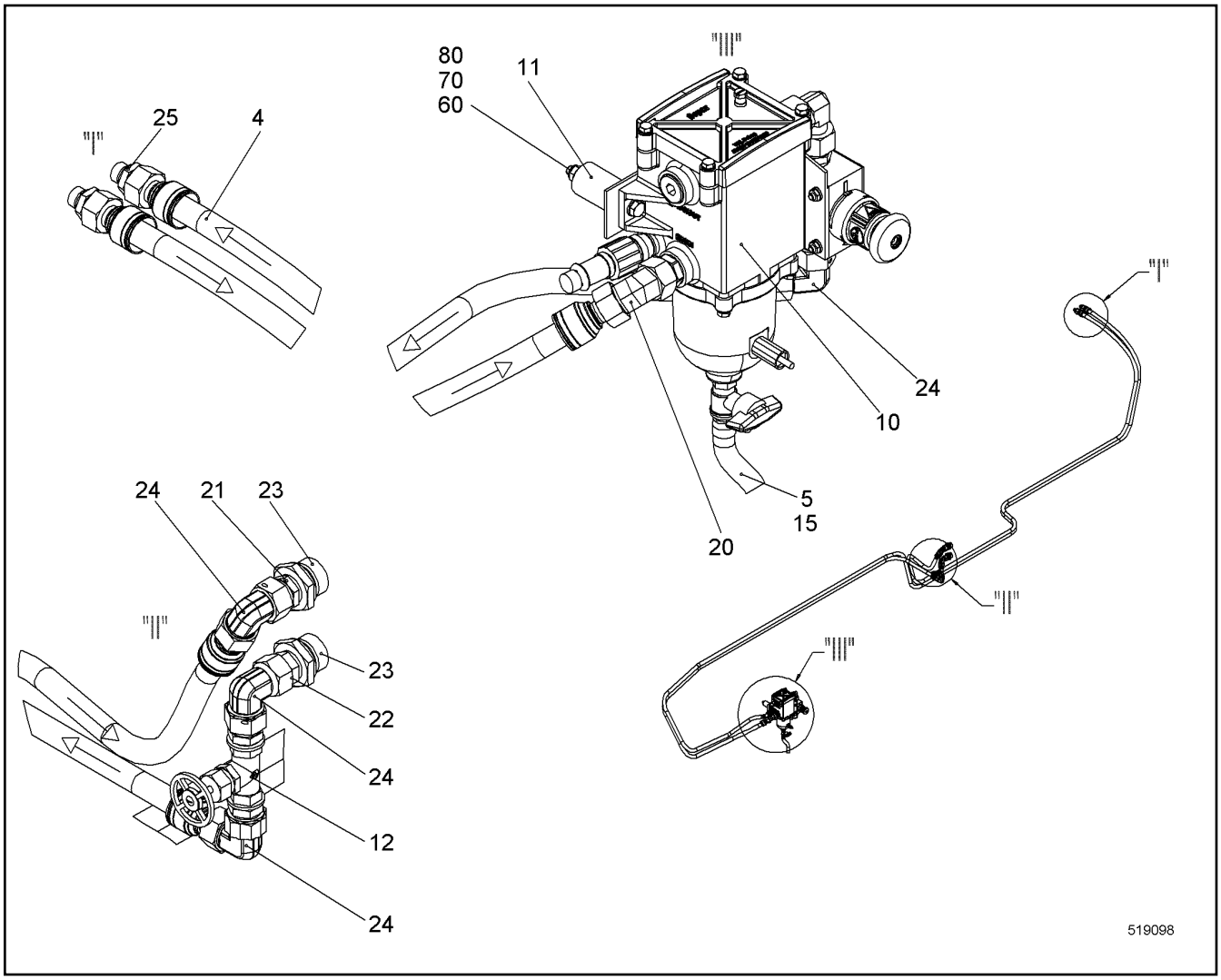

Pos.	Item	Quantity	Description	Bezeichnung	Serie	K
4	11249729	1	HOSE LIST ⇨ ❑ 200	SCHLAUCHLISTE		
5	11621769	0.5	COOLING WATER HOSE	KUEHLWASSERSCHLAUCH		
10	10550911	1	ADD-ON PRELIMINARY FUEL FILTER ⇨ ❑ 201	KRAFTSTOFFVORFILTER ANBAU		
11	11249738	2	WASHER 10/30X50 S355J2;EN 10025-2	SCHEIBE		
12	7402781	1	THROUGH-VALVE	DURCHGANGSVENTIL		
15	774204914	1	HOSE CLAMP	SCHLAUCHSCHELLE		
20	10035314	1	FITTING	VERSCHRAUBUNG		
21	247009702	1	FITTING	VERSCHRAUBUNG		
22	247011602	1	FITTING	VERSCHRAUBUNG		
23	247043102	2	FITTING	VERSCHRAUBUNG		
24	247108302	4	FITTING	VERSCHRAUBUNG		
25	471034714	2	FITTING	VERSCHRAUBUNG		
60	10538809	2	HEX SCREW ISO 4017 M8X80 A4-70	SECHSKANTSCHRAUBE		
70	420001014	4	WASHER ISO 7089 8 A4	SCHEIBE		
80	10540493	2	HEX NUT ISO 10511 M8 A4	SECHSKANTMUTTER		

ACHTUNG !
ATTENTION !
ATTENTION !
ATENCIÓN !
ATENÇÃO !
ВНИМАНИЕ

Für Schlauchbestellungen kann über die Schlauchnummer, in der entsprechenden Schlauchliste, die Identnummer festgestellt werden.

For ordering flexible hoses you can find the identification number through the hose-number in the corresponding hose-list.

Pour des ordres de tuyau flexible le nombre d'identification on voit dans la liste de tuyau flexible correspondente.

Para el pedido de manguera, indicar el número de identificación de la manguera de la lista respectiva.

Para se encomendar uma mangueira, consulte o número de identificaçao na respectiva lista de mangueiras.

Для оформления заказов на шланги/рукавы идент. № может быть определен при помощи номера шланга/рукава, указанного в соотетствующем перечне шлангов/рукавов.

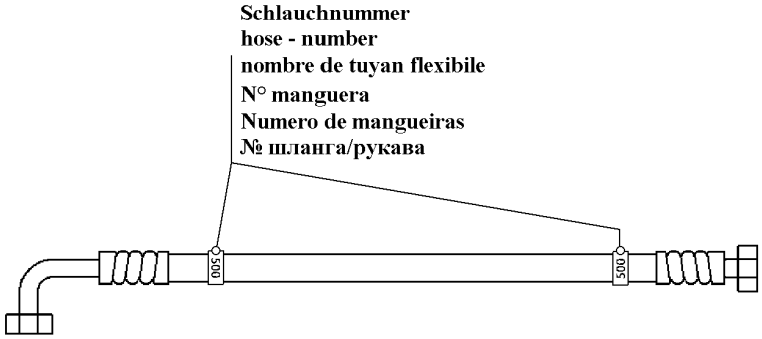

500000

Pos.	Item	Quantity	Description	Bezeichnung	Serie	K
800	928130914	1	HOSE CPL	SCHLAUCH KPL		
801	928130914	1	HOSE CPL	SCHLAUCH KPL		
803	996779714	1	HOSE CPL	SCHLAUCH KPL		

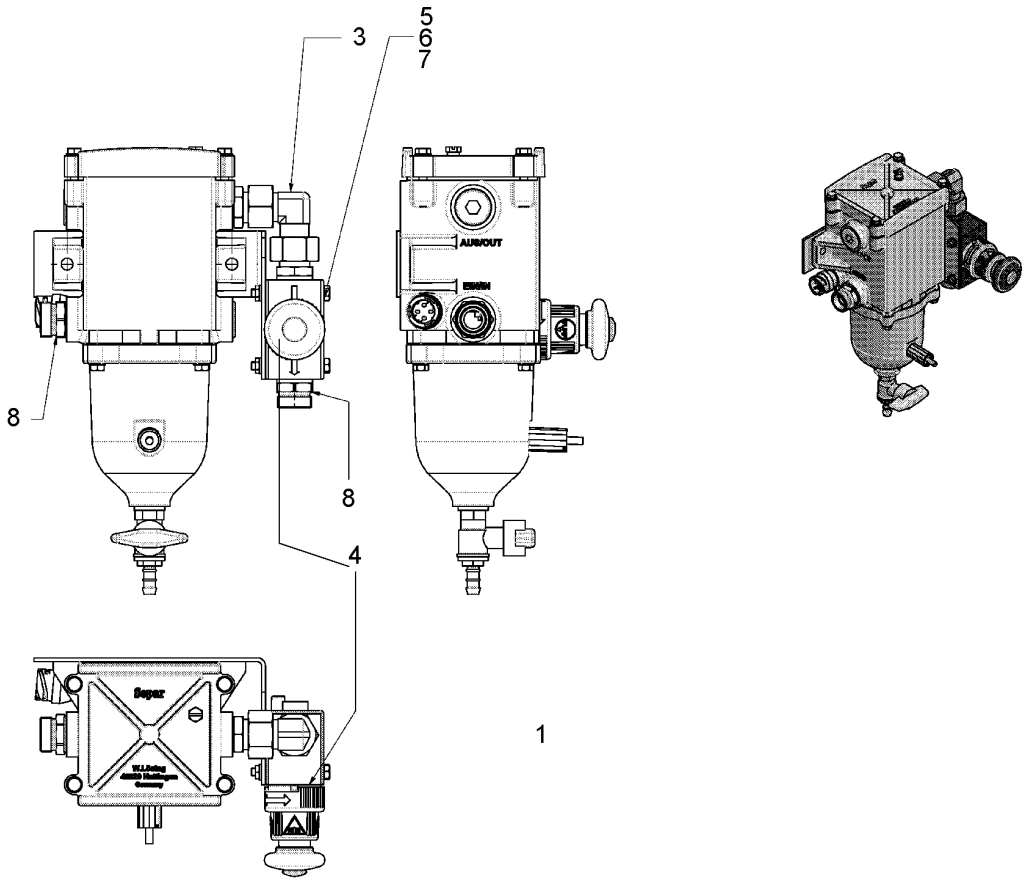

Pos.	Item	Quantity	Description	Bezeichnung	Serie	K
1	10303007	1	FUEL PREFILTER ⇨ ❑ 202	KRAFTSTOFFVORFILTER		
3	11229464	1	FITTING	VERSCHRAUBUNG		
4	10129218	1	MANUAL VENTILATION PUMP	HANDENTLUEFTUNGSPUMPE		
5	11219069	2	SOCKET HEAD SCREW M5X55	ZYLINDERSCHRAUBE		
6	11219056	2	LOCK NUT DIN 985	SICHERUNGSMUTTER		
7	11219067	2	WASHER ISO 7089	SCHEIBE		
8	11067653	2	FITTING	VERSCHRAUBUNG		

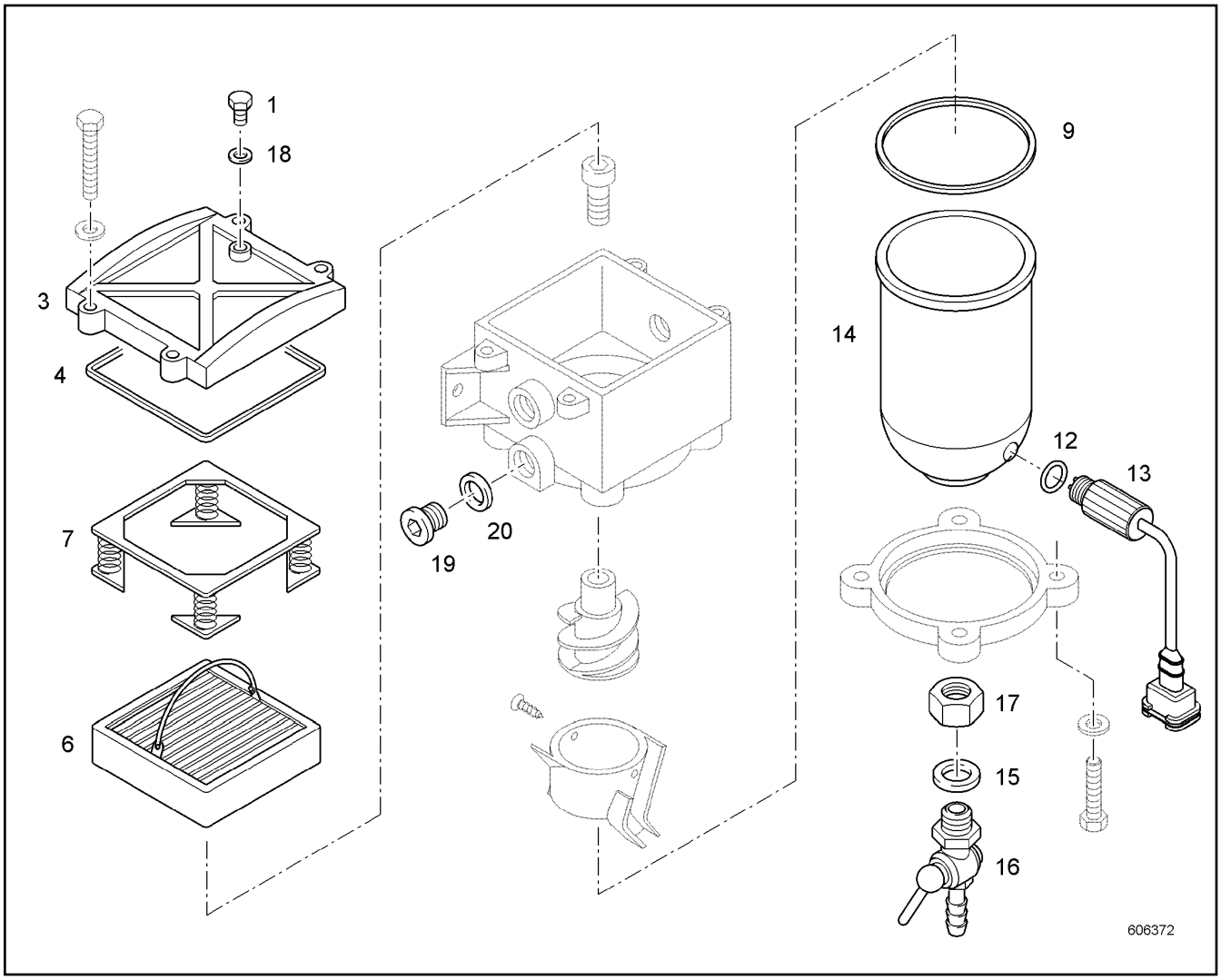

Pos.	Item	Quantity	Description	Bezeichnung	Serie	K
1	7412942	1	VENTILATION SCREW	ENTLUEFTUNGSSCHRAUBE		
3	7027755	1	COVER	DECKEL		
4	10294171	1	SEAL	DICHTUNG		
6	553183708	1	FILTER ELEMENT	FILTERELEMENT		
7	10032001	1	SPRING ELEMENT	FEDERELEMENT		
9	10294170	1	BOWLEN SEALING	BOWLENDICHTUNG		
12	7380986	1	O-RING	O-RING		
13	10331335	1	WATER SENSOR	WASSERSONDE		
14	10331395	1	BOWL	BOWLE		
15	7412937	1	O-RING	O-RING		
16	11696074	1	DRAIN TAP	ABLASSHAHN		
17	11005554	1	TWO-HOLE NUT AL	ZWEILOCHMUTTER		
18	7412935	1	SEAL	DICHTUNG		
19	10340236	2	SCREW PLUG M22X1.5	VERSCHLUSSSCHRAUBE		
20	10340226	2	O-RING	O-RING		

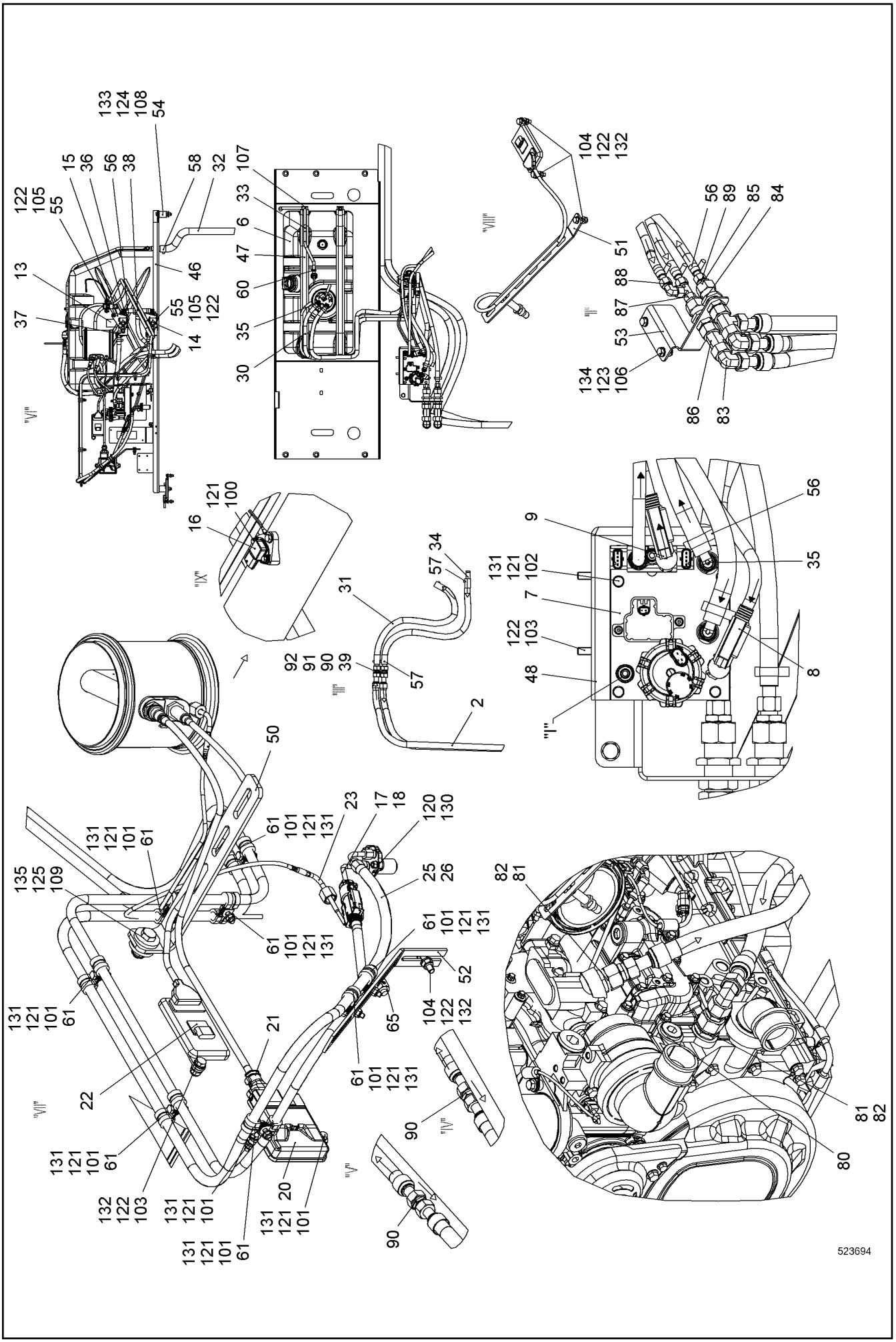
523694

Pos.	Item	Quantity	Description	Bezeichnung	Serie	K
2	11269498	1	HOSE LIST ⇨ ❑ 206	SCHLAUCHLISTE		
6	11242408	1	UREA CONTAINER ⇨ ❑ 207	HARNSTOFFBEHAELTER		
7	11373478	1	PUMP	PUMPE		
8	10144282	1	HOSE LINE	SCHLAUCHLEITUNG		
9	10144297	1	HOSE LINE	SCHLAUCHLEITUNG		
13	11082158	2	WATER VALVE	WASSERVENTIL		
14	11274707	1	SIGN	SCHILD		
15	11274708	1	SIGN	SCHILD		
16	10141261	1	MOISTURE SENSOR	FEUCHTESENSOR		
17	10144093	1	INJECTOR CPL.	INJEKTOR KPL.		
18	10144861	1	SEAL	DICHTUNG		
20	10144039	1	CONTROL GEAR	STEUERGERAET		
21	10144038	1	SENSOR	SENSOR		
22	11008787	2	SENSOR	SENSOR		
23	11349182	2	TEMPERATURE SENSOR	TEMPERATURSENSOR		
25	11621764	4.5	AIR PIPE	LUFTLEITUNG		
26	10227531	4.5	CORRUGATED PIPE	WELLROHR		
30	11621769	6.5	COOLING WATER HOSE	KUEHLWASSERSCHLAUCH		
31	11621772	2	COOLING WATER HOSE	KUEHLWASSERSCHLAUCH		
32	886002814	1.3	HOSE	SCHLAUCH		
33	553128608	1.5	FUEL HOSE	KRAFTSTOFFSCHLAUCH		
34	10444797	1	CONNECTING PIPE	VERBINDUNGSROHR		
35	11482007	4	PLUG COUPLING	STECKKUPPLUNG		
36	11082454	2	PLUG COUPLING	STECKKUPPLUNG		
37	10678754	2	PLUG COUPLING	STECKKUPPLUNG		
38	553087814	1	TEE	T-STUECK		
39	956385814	2	FITTINGS	STUTZEN		
46	10579806	1	HOLDER ST.CONST.	HALTER SCHWK		
47	10581173	2	TIGHTENING STRAP HINGE PIN	GELENKBOLZENSPANNBAND		
48	11242757	1	HOLDER	HALTER		
50	10577229	1	WP	WP		
51	11279013	1	WP	WP		
52	11279036	1	BRACKET	BUEGEL		
53	11279237	1	BRACKET	BUEGEL		
54	11217169	6	DISTANCE SLEEVE	DISTANZHUELSE		
55	10553403	6	WASHER 9/16X25 S355J2;EN 10025-2	SCHEIBE		
56	774204914	14	HOSE CLAMP	SCHLAUCHSCHELLE		
57	482000814	4	HOSE CLAMP	SCHLAUCHSCHELLE		
58	790244814	1	HOSE CLAMP	SCHLAUCHSCHELLE		
60	10581765	1	HOSE CLAMP	SCHLAUCHSCHELLE		
61	7362546	16	FASTENING CLAMP	HALTERUNGSSCHELLE		
65	10816958	1	FITTING	VERSCHRAUBUNG		
80	477705214	1	FITTING	VERSCHRAUBUNG		
81	471031508	2	FITTING	VERSCHRAUBUNG		
82	247041502	2	FITTING	VERSCHRAUBUNG		
83	247126202	3	FITTING	VERSCHRAUBUNG		
84	247027302	2	FITTING	VERSCHRAUBUNG		
85	247040902	2	FITTING	VERSCHRAUBUNG		
86	247138602	2	FITTING	VERSCHRAUBUNG		
87	247128602	1	FITTING	VERSCHRAUBUNG		
88	247117702	1	FITTING	VERSCHRAUBUNG		
89	511713914	3	HOSE FITTING	SCHLAUCHARMATUR		
90	247000902	4	FITTING	VERSCHRAUBUNG		
91	477102814	2	FITTING	VERSCHRAUBUNG		
92	247049002	2	FITTING	VERSCHRAUBUNG		
100	406501714	2	HEX SCREW ISO 4017 M6X16 A4-70	SECHSKANTSCHRAUBE		
101	406518514	10	HEX SCREW ISO 4017 M6X25 A4-70	SECHSKANTSCHRAUBE		
102	10538799	4	HEX SCREW ISO 4017 M6X45 A4-70	SECHSKANTSCHRAUBE		

Pos.	Item	Quantity	Description	Bezeichnung	Serie	K
103	406518814	4	HEX SCREW ISO 4017 M8X20 A4-70	SECHSKANTSCHRAUBE		
104	406501314	4	HEX SCREW ISO 4017 M8X30 A4-70	SECHSKANTSCHRAUBE		
105	10541593	6	HEX SCREW ISO 4017 M8X85 A4-70	SECHSKANTSCHRAUBE		
106	406511914	2	HEX SCREW ISO 4017 M10X25 A4-70	SECHSKANTSCHRAUBE		
107	10539505	4	SOCKET HEAD SCREW ISO 4762 M10X60 A4-7	ZYLINDERSCHRAUBE		
108	406511214	6	HEX SCREW ISO 4017 M10X70 A4-70	SECHSKANTSCHRAUBE		
109	406518414	1	HEX SCREW ISO 4017 M12X35 A4-70	SECHSKANTSCHRAUBE		
120	420005214	2	WASHER ISO 7089 5 A4	SCHEIBE		
121	420000414	30	WASHER ISO 7089 6 A4	SCHEIBE		
122	420001014	26	WASHER ISO 7089 8 A4	SCHEIBE		
123	420001114	4	WASHER ISO 7089 10 A4	SCHEIBE		
124	421300214	12	WASHER DIN 6340 10.5 C35	SCHEIBE		
125	4635283	2	WASHER DIN 6340 13 ST	SCHEIBE		
130	411551114	2	HEX NUT ISO 4032 M5 A4-70	SECHSKANTMUTTER		
131	10540492	14	HEX NUT ISO 10511 M6 A4	SECHSKANTMUTTER		
132	10540493	6	HEX NUT ISO 10511 M8 A4	SECHSKANTMUTTER		
133	411514614	6	HEX NUT ISO 4032 M10 A4-70	SECHSKANTMUTTER		
134	10540494	2	HEX NUT ISO 10511 M10 A4	SECHSKANTMUTTER		
135	10540495	1	HEX NUT ISO 10511 M12 A4	SECHSKANTMUTTER		
210	11922544	10	BLANKING PLUG	VERSCHLUSSSTOPFEN		

ACHTUNG !
ATTENTION !
ATTENTION !
ATENCIÓN !
ATENÇÃO !
ВНИМАНИЕ

Für Schlauchbestellungen kann über die Schlauchnummer, in der entsprechenden Schlauchliste, die Identnummer festgestellt werden.

For ordering flexible hoses you can find the identification number through the hose-number in the corresponding hose-list.

Pour des ordres de tuyau flexible le nombre d'identification on voit dans la liste de tuyau flexible correspondente.

Para el pedido de manguera, indicar el número de identificación de la manguera de la lista respectiva.

Para se encomendar uma mangueira, consulte o número de identificaçao na respectiva lista de mangueiras.

Для оформления заказов на шланги/рукавы идент. № может быть определен при помощи номера шланга/рукава, указанного в соотетствующем перечне шлангов/рукавов.

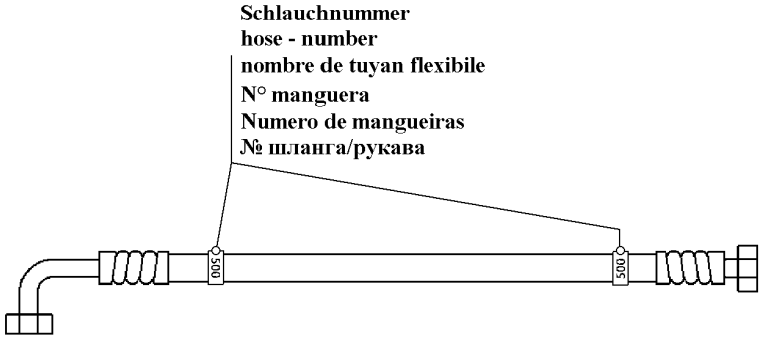

500000

Pos.	Item	Quantity	Description	Bezeichnung	Serie	K
823	996770714	1	HOSE CPL	SCHLAUCH KPL		
824	996770814	1	HOSE CPL	SCHLAUCH KPL		
826	996771014	1	HOSE CPL	SCHLAUCH KPL		
827	996771114	1	HOSE CPL	SCHLAUCH KPL		

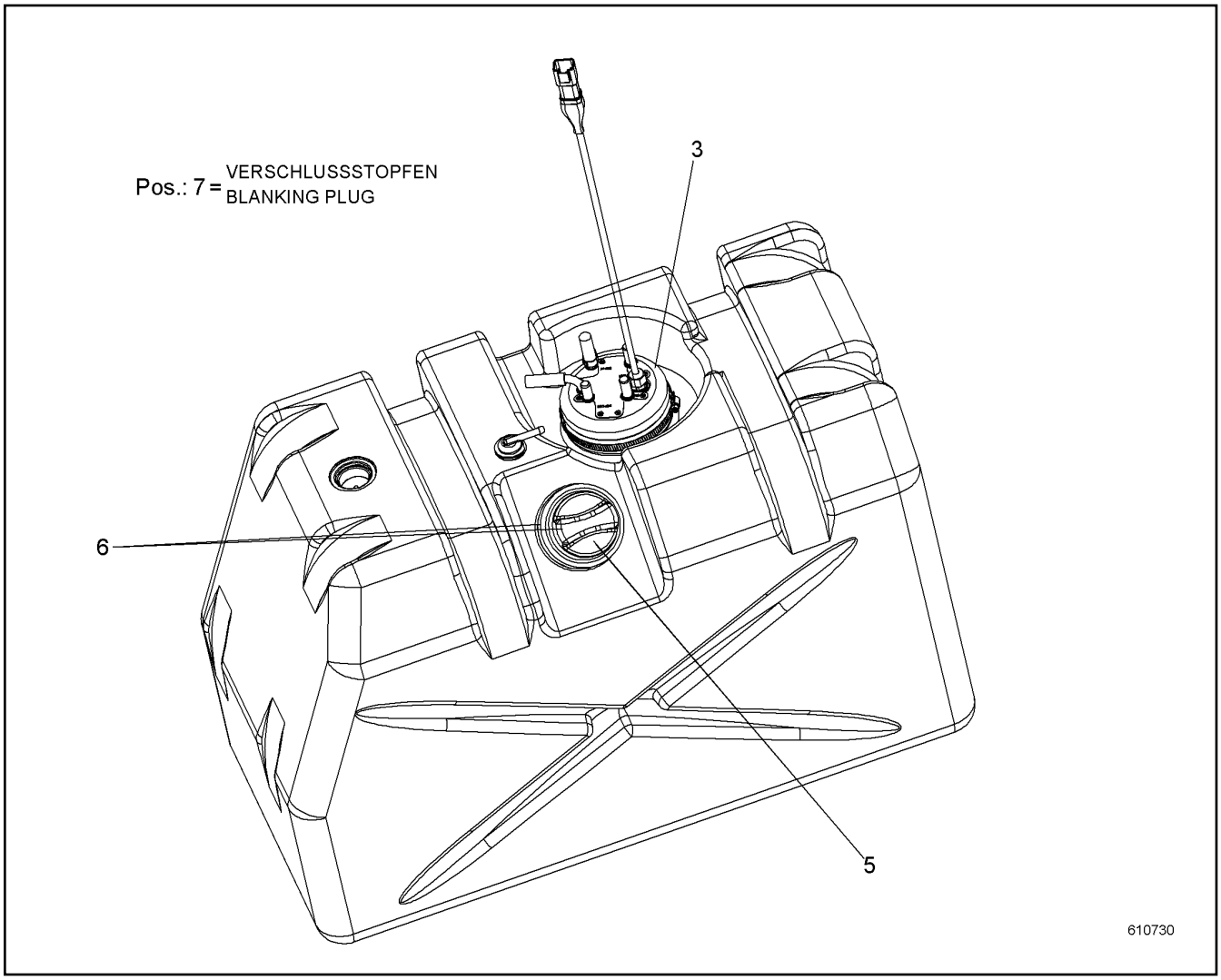

Pos.	Item	Quantity	Description	Bezeichnung	Serie	K
3	11239595	1	SIEVE	SIEB		
5	11101351	1	LOCKABLE TANK CAP	TANKVERSCHLUSS		
6	10146538	1	SUCTION MODUL ⇨ ❑ 208	ENTNAHMEMODUL		
7	11951869	1	BLANKING PLUG	VERSCHLUSSSTOPFEN		

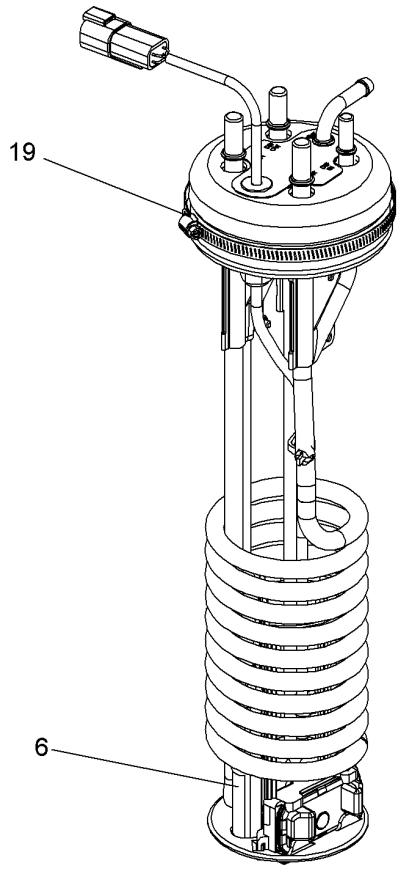

Pos.	Item	Quantity	Description	Bezeichnung	Serie	K
6	11368896	1	STRAINER FILTER	SIEBFILTER		
19	11833907	1	HOSE CLAMP	SCHLAUCHSCHELLE		

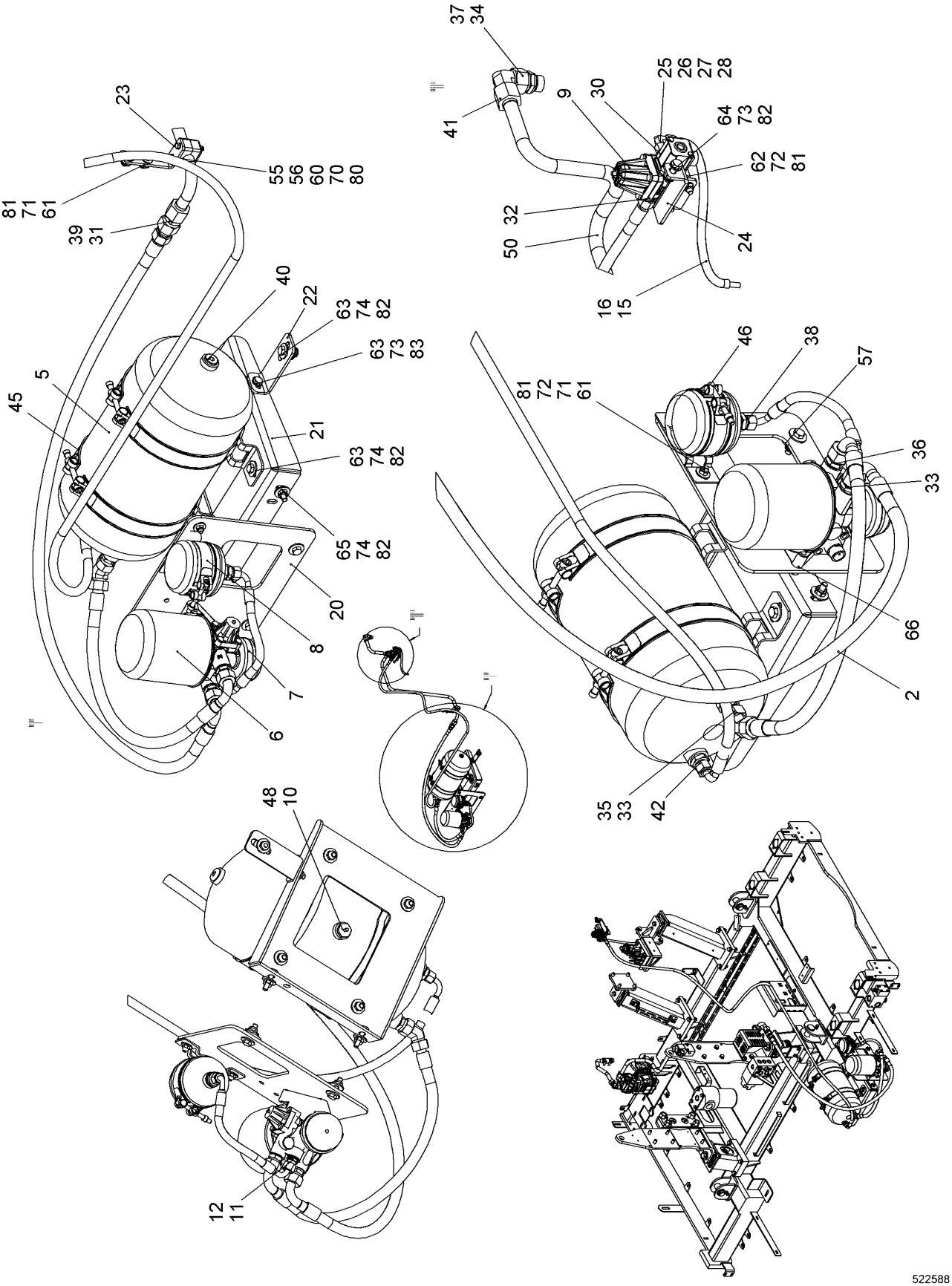

21.6.2017 522588	**138406_ETK_001**	209 (1/2)
LIEBHERR	**AIR DUCT CPL** **LUFTFUEHRUNG KPL**	**11 92 958 8**

Pos.	Item	Quantity	Description	Bezeichnung	Serie	K
2	11929821	1	HOSE LIST ⇨ ❑ 211	SCHLAUCHLISTE		
5	502919808	1	AIR TANK	LUFTBEHAELTER		
6	11837214	1	AIR DRYER ⇨ ❑ 212	LUFTTROCKNER		
7	502661608	1	SILENCER	GERAEUSCHDAEMPFER		
8	11837331	1	CONTAINER	BEHAELTER		
9	10872307	1	PRESSURE LIMITING VALVE	DRUCKBEGRENZUNGSVENTIL		
10	502921908	1	WATER DRAIN VALVE	ENTWAESSERUNGSVENTIL		
11	11930190	1	RESTRICTOR BODY	DROSSELKOERPER		
12	714001514	1	MAIN JET SOLEX 1MM	HAUPTDUESE SOLEX		
15	11621764	0.5	AIR PIPE	LUFTLEITUNG		
16	10227531	0.5	CORRUGATED PIPE	WELLROHR		
20	11929423	1	WP	WP		
21	11929596	1	WP	WP		
22	11930281	1	WP	WP		
23	11930759	1	WP	WP		
24	11931909	1	WP	WP		
25	10871759	1	PLUG-IN SLEEVE	EINSTECKHUELSE		
26	11926906	1	FITTING	VERSCHRAUBUNG		
27	10816957	1	BOX NUT M14X1.5 AISI 316 TI	UEBERWURFMUTTER		
28	10663840	1	FITTING	VERSCHRAUBUNG		
30	10872598	1	FITTING	VERSCHRAUBUNG		
31	247000902	1	FITTING	VERSCHRAUBUNG		
32	10288174	1	FITTING	VERSCHRAUBUNG		
33	471031108	2	FITTING	VERSCHRAUBUNG		
34	471031308	1	FITTING	VERSCHRAUBUNG		
35	10035314	1	FITTING	VERSCHRAUBUNG		
36	7621827	1	FITTING	VERSCHRAUBUNG		
37	247126202	1	FITTING	VERSCHRAUBUNG		
38	11600199	1	FITTING	VERSCHRAUBUNG		
39	247041102	1	FITTING	VERSCHRAUBUNG		
40	477704514	1	FITTING	VERSCHRAUBUNG		
41	477430614	2	FITTING	VERSCHRAUBUNG		
42	471039908	1	FITTING	VERSCHRAUBUNG		
45	790562114	2	CLAMP	SCHELLE		
46	10513605	1	CLAMP	SCHELLE		
48	710104514	1	SEALING RING	DICHTRING		
50	11930769	1	TUBE	ROHR		
55	602008508	2	CLAMP-HALF	KLEMMHAELFTE		
56	7005053	1	LID PLATE	DECKPLATTE		
57	10351046	1	WASHER 12/50X5 POLYURE.	SCHEIBE		
60	10538800	2	HEX SCREW ISO 4017 M6X55 A4-70	SECHSKANTSCHRAUBE		
61	406501414	4	HEX SCREW ISO 4017 M8X25 A4-70	SECHSKANTSCHRAUBE		
62	10539492	2	SOCKET HEAD SCREW ISO 4762 M8X80 A4-7	ZYLINDERSCHRAUBE		
63	406511614	6	HEX SCREW ISO 4017 M10X30 A4-70	SECHSKANTSCHRAUBE		
64	406509314	1	HEX SCREW ISO 4017 M10X35 A4-70	SECHSKANTSCHRAUBE		
65	406527814	4	HEX SCREW ISO 4017 M10X40 A4-70	SECHSKANTSCHRAUBE		
66	407003014	3	HEX SCREW ISO 8676 M12X1.5X30 8.8	SECHSKANTSCHRAUBE		
70	420000414	4	WASHER ISO 7089 6 A4	SCHEIBE		
71	10540510	6	WASHER ISO 7093-1 8 A4	SCHEIBE		
72	420001014	6	WASHER ISO 7089 8 A4	SCHEIBE		
73	420001114	4	WASHER ISO 7089 10 A4	SCHEIBE		
74	10540511	18	WASHER ISO 7093-1 10 A4	SCHEIBE		
75	4901782	3	WASHER ISO 7089 12 A4	SCHEIBE		
80	10540492	2	HEX NUT ISO 10511 M6 A4	SECHSKANTMUTTER		
81	10540493	6	HEX NUT ISO 10511 M8 A4	SECHSKANTMUTTER		
82	10540494	11	HEX NUT ISO 10511 M10 A4	SECHSKANTMUTTER		

ACHTUNG !
ATTENTION !
ATTENTION !
ATENCIÓN !
ATENÇÃO !
ВНИМАНИЕ

Für Schlauchbestellungen kann über die Schlauchnummer, in der entsprechenden Schlauchliste, die Identnummer festgestellt werden.

For ordering flexible hoses you can find the identification number through the hose-number in the corresponding hose-list.

Pour des ordres de tuyau flexible le nombre d'identification on voit dans la liste de tuyau flexible correspondente.

Para el pedido de manguera, indicar el número de identificación de la manguera de la lista respectiva.

Para se encomendar uma mangueira, consulte o número de identificaçao na respectiva lista de mangueiras.

Для оформления заказов на шланги/рукавы идент. № может быть определен при помощи номера шланга/рукава, указанного в соотетствующем перечне шлангов/рукавов.

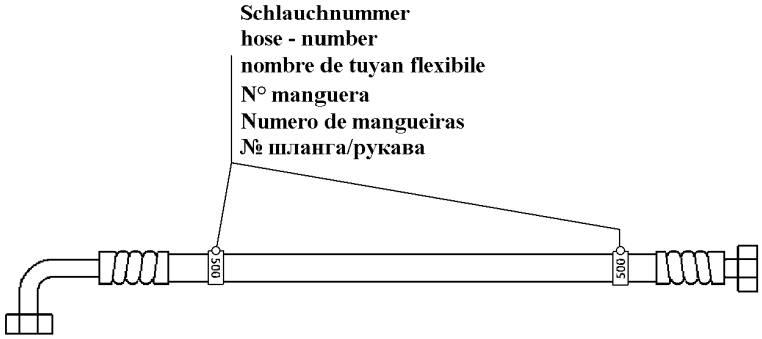

500000

Pos.	Item	Quantity	Description	Bezeichnung	Serie	K
200	928757814	1	HOSE CPL	SCHLAUCH KPL		
201	929443814	1	HOSE CPL	SCHLAUCH KPL		
202	995537614	1	HOSE CPL	SCHLAUCH KPL		
203	992890714	1	HOSE CPL	SCHLAUCH KPL		

OHNE BILD
WITHOUT ILLUSTRATION
SANS PLANCHE
SIN FIG.
SEM ILUSTRAÇÃO
БЕЗ ИЗОБРАЖЕНИЯ

600000

Pos.	Item	Quantity	Description	Bezeichnung	Serie	K
1	571352308	1	CARTOUCHE	KARTUSCHE		

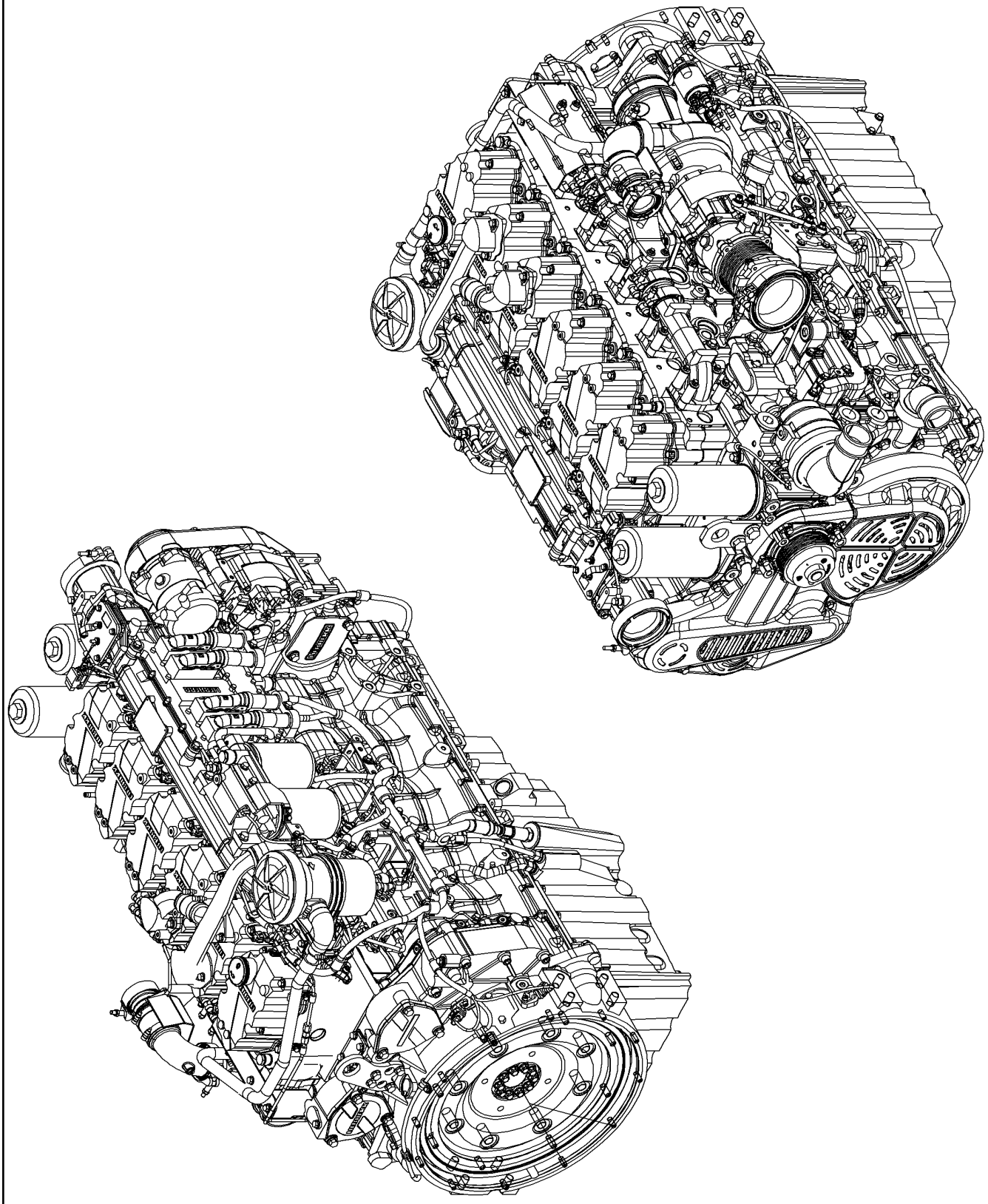

610226

Pos.	Item	Quantity	Description	Bezeichnung	Serie	K
10	11389617	1	CRANKCASE CPL. WITH CYLINDER ⇨ ❑ 217	KURBELGEHAEUSE KPL. MIT ZY		
12	10147686	1	POWER UNIT SUPPORT ATTACHMENT ⇨ ❑ 219	AGGREGATETRAEGER ANBAU		
14	10138450	1	FINAL CONTROL VALVE ⇨ ❑ 220	ENDREGELVENTIL		
15	10142749	6	PISTON COOLING ⇨ ❑ 221	KOLBENKUEHLUNG		
16	10142018	1	CRANKCASE BREATHER ASSEMBLY ⇨ ❑ 223	KURBELGEHAEUSEENTLUEFT.		
20	10148444	1	OIL SUMP WITH FASTENING ⇨ ❑ 225	OELWANNE MIT BEFEST.		
21	10145919	1	OIL DIPSTICK WITH PIPE ⇨ ❑ 228	OELMESSSTAB MIT ROHR		
22	10134517	1	LEVEL SENSOR ⇨ ❑ 229	NIVEAUGEBER		
25	10146716	1	OIL LINE PRE-ASSEMBLY ⇨ ❑ 230	OELLEITUNG VORM.		
50	10147437	1	CRANKSHAFT WITH GEAR	KURBELWELLE MIT ZAHNRAD		
51	9076458	1	SET MAIN BEARINGS ⇨ ❑ 231	KURBELWELLENLAGERSATZ		
52	10121345	1	RK CRANKSHAFT SEAL ⇨ ❑ 232	RS KURBELWELLENDICHTUNG		
53	10141983	1	CRANKSHAFT ADD-ON PARTS	KURBELWELLENANBAUTEILE		
60	11348072	6	CONROD ⇨ ❑ 233	PLEUELSTANGE		
70	10146367	6	PISTON CPL. ⇨ ❑ 234	KOLBEN KPL.		
80	10131768	6	CYL HEAD ADD-ON ⇨ ❑ 235	ZYL KOPF ANBAU		
81	10148438	6	ROCKER ARM BRACKET CPL. ⇨ ❑ 236	KIPPHEBELBOCK KPL.		
82	10134751	3	CYLINDER HEAD COVER ASSEMBLY ⇨ ❑ 238	ZYLINDERKOPFDECKEL ANBAU		
83	10126535	1	CYLINDER HEAD COVER ASSEMBLY ⇨ ❑ 239	ZYLINDERKOPFDECKEL ANBAU		
84	10134696	2	CYLINDER HEAD COVER ASSEMBLY ⇨ ❑ 241	ZYLINDERKOPFDECKEL ANBAU		
100	10138231	1	CAMSHAFT CPL.	NOCKENWELLE KPL.		
110	9079870	6	CONTROL PARTS	STEUERUNGSTEIL		
130	10129481	1	OIL COOLER ADD-ON ⇨ ❑ 242	OELKUEHLER ANBAU		
140	10133945	1	LUBRICATING OIL PUMP ⇨ ❑ 245	SCHMIEROELPUMPE		
141	10133947	1	SUCTION PUMP WITH FASTENING ⇨ ❑ 246	ABSAUGPUMPE MIT BEFEST.		
150	10142942	1	LUBE OIL FILTER ASSEMBLY ⇨ ❑ 248	SCHMIEROELFILTER ANBAU		
171	10150857	1	HIGH PRESSURE PUMP W.FASTENING ⇨ ❑ 249	HOCHDRUCKPUMPE MIT BEFEST		
180	10153606	1	REPAIR SET DRIVE	RS ANTRIEB		
190	10152867	6	INJECTOR WITH FASTENING ⇨ ❑ 252	INJEKTOR MIT BEFEST.		
191	10153151	6	HIGH PRESS.CONNECTOR W.FASTEN. ⇨ ❑ 253	DRUCKROHRSTUTZEN MIT BEFE		
192	10135432	6	INJECTOR FASTENING ⇨ ❑ 256	BEFESTIGUNG INJEKTOR		
193	10135434	6	PRESSURE ADAPTER FASTENING ⇨ ❑ 257	BEFESTIGUNG DRUCKROHRST		

Pos.	Item	Quantity	Description	Bezeichnung	Serie	K
201	10146797	1	FUEL FINE-FILTER ASSEMBLY ⇨ ❑ 258	KRAFTSTOFF-FEINFILTERANBA		
212	10143339	1	FUEL LINES ⇨ ❑ 260	KRAFTSTOFFLEITUNGEN		
214	10145885	1	LEAK OIL RETURN LINE ⇨ ❑ 261	LECKOELRUECKLAUF		
215	10143828	1	INJECTION LINES ⇨ ❑ 262	EINSPRITZLEITUNGEN		
217	10141790	1	CONNECTING PIECE PRE-ASS. ⇨ ❑ 263	ANSCHLUSSSTUECK VORM.		
220	10147366	1	AIR INTAKE PIPE ASS. ⇨ ❑ 264	LUFTANSAUGROHR ANBAU		
221	10147369	1	INTAKE STACK ASSEMBLY ⇨ ❑ 265	ANSAUGSTUTZEN ANBAU		
224	10147364	1	AIR INTAKE ASSEMBLY ⇨ ❑ 266	LUFTANSAUGUNG ANBAU		
230	10149676	1	CONNECTING LINE ADD-ON ⇨ ❑ 267	VERBINDUNGSLEITUNG ANBAU		
260	9078314	1	HEATING FLANGE ADD-ON ⇨ ❑ 268	HEIZFLANSCH ANBAU		
331	9072906	1	INTERMEDIATE GEAR CPL. ⇨ ❑ 270	ZWISCHENRAD KPL.		
340	10142860	1	AIR COND. COMPRESSOR ADD-ON ⇨ ❑ 271	KLIMAKOMPRESSOR ANBAU		
342	10146117	1	COVERING ASSEMBLY ⇨ ❑ 272	ABDECKUNG ANBAU		
370	10142734	1	WATER PUMP WITH FASTENING ⇨ ❑ 274	WASSERPUMPE MIT BEFEST.		
380	10148215	1	THERMOSTAT HOUSING ASSEMBLY ⇨ ❑ 275	THERMOSTATGEHAEUSE ANBA		
381	10148217	1	PIPELINE INSTALLATION ⇨ ❑ 276	ROHRLEITUNG ANBAU		
382	10142742	1	COOLANT PIPE BEND ADD-ON ⇨ ❑ 277	KUEHLMITTELKRUEMMER ANBA		
387	10142744	1	COOLING WATER AIR BLEEDING ⇨ ❑ 278	KUEHLWASSERENTLUEFTUNG		
388	10146012	1	MANIFOLD FOR WATER CPL. ⇨ ❑ 279	WASSERSAMMELLEITUNG KPL.		
410	10141444	1	EXHAUST PIPE ASSEMBLY ⇨ ❑ 280	ABGASROHR ANBAU		
415	10147370	1	HEAT PROTECTION W.FASTENING ⇨ ❑ 282	HITZESCHUTZ MIT BEFEST.		
430	10140136	1	EXHAUST TC MOUNTING ⇨ ❑ 283	ATL-ANBAU		
432	10145112	1	EXHAUST NOZZLE ATTACHMENT ⇨ ❑ 284	ABGASSTUTZEN ANBAU		
436	10146224	1	REGULATION BOOST PRESSURE ⇨ ❑ 285	LADEDRUCKREGELUNG		
440	10145845	1	GENERATOR, PRE-ASSEMBLED ⇨ ❑ 286	GENERATOR VORM.		
450	10120372	1	STARTER INSTALLATION ⇨ ❑ 287	STARTER ANBAU		
452	10115664	1	LOCKING PIECES	VERSCHLUSSTEILE		
480	9079823	1	TRANSPORT DEVICE ATTACHEMENT	TRANSPORTVORRICHTUNG AN		
481	10142864	1	TRANSPORT DEVICE ATTACHEMENT ⇨ ❑ 289	TRANSPORTVORRICHTUNG AN		
520	10115577	1	FLYWHEEL HOUSING MOUNTING ⇨ ❑ 290	SCHWUNGRADGEHAEUSE ANBA		
521	10116110	1	LOCKING PIECES	VERSCHLUSSTEILE		

Pos.	Item	Quantity	Description	Bezeichnung	Serie	K
522	10119128	1	LOCKING PIECES ⇨ ❑ 291	VERSCHLUSSTEILE		
524	10128439	1	LOCKING PIECES ⇨ ❑ 292	VERSCHLUSSTEILE		
526	10127979	1	LOCKING PIECES ⇨ ❑ 293	VERSCHLUSSTEILE		
530	10118929	1	FLYWHEEL ASSEMBLY ⇨ ❑ 294	SCHWUNGRAD ANBAU		
570	12425589	1	MOTOR CONTROL DEVICE ⇨ ❑ 295	MOTORSTEUERGERAET		
571	10146795	1	CONTROL BOX ANNEXE	STEUERGERAET ANBAU		
580	10150288	1	CABLE HARNESS MOUNTING ⇨ ❑ 296	KABELBAUM ANBAU		
581	10142977	1	ENGINE CONTROL SENSORS ⇨ ❑ 297	MOTORREGELUNGSENSORIK		
582	11376327	1	CABLE LOOM	KABELSATZ		
630	10142747	1	LOCKING PIECES	VERSCHLUSSTEILE		
650	9078249	1	LOCKING PIECES	VERSCHLUSSTEILE		
652	10144027	1	LOCKING PIECES	VERSCHLUSSTEILE		
654	9078301	1	LOCKING PIECES	VERSCHLUSSTEILE		
656	10146374	1	LOCKING PIECES ⇨ ❑ 298	VERSCHLUSSTEILE		

OHNE BILD
WITHOUT ILLUSTRATION
SANS PLANCHE
SIN FIG.
SEM ILUSTRAÇÃO
БЕЗ ИЗОБРАЖЕНИЯ

600000

Pos.	Item	Quantity	Description	Bezeichnung	Serie	K
1	10154385	1	CRANKCASE PRE-ASSY.	KURBELGEHAEUSE VORM.		
2	4980362	6	END COVER	VERSCHLUSSDECKEL		
3	4001664	11	END COVER	VERSCHLUSSDECKEL		
4	7380177	3	SCREW PLUG	VERSCHLUSSSCHRAUBE		
6	7380566	3	SCREW PLUG	VERSCHLUSSSCHRAUBE		
7	7381457	2	SCREW PLUG	VERSCHLUSSSCHRAUBE		
8	7382069	1	SEALING PLUG	DICHTSTOPFEN		
14	10030837	14	SEALING PLUG	DICHTSTOPFEN		
80	10154458	6	CYLINDER ⇨ ❑ 218	ZYLINDER		
104	8655023	1	GLUE	KLEBSTOFF		

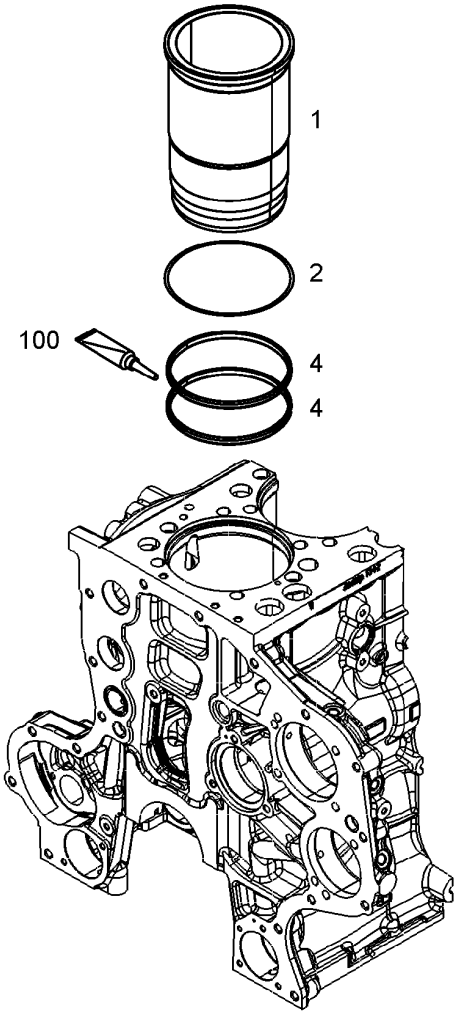

Pos.	Item	Quantity	Description	Bezeichnung	Serie	K
1	10153973	1	CYLINDER BUSHING	ZYLINDERBUCHSE		
2	10154459	1	SHEET GASKET	DICHTSCHEIBE		
4	10282774	2	O-RING	O-RING		
100	10285708	1	GREASE	FETT		

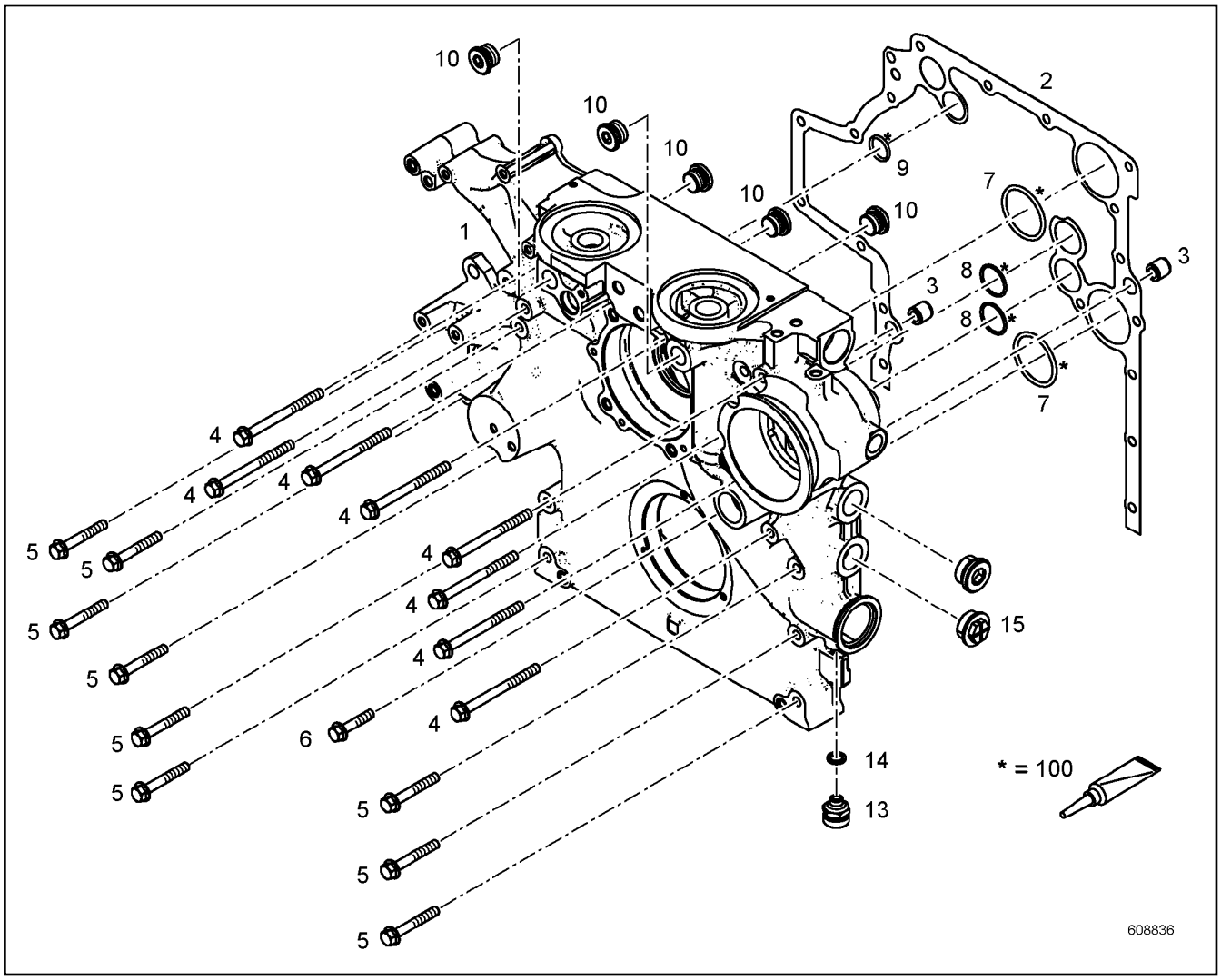

Pos.	Item	Quantity	Description	Bezeichnung	Serie	K
1	10148254	1	AGGREGATE SUPPORT PRE-ASS.	AGGREGATETRAEGER VORM.		
2	10126738	1	SEAL	DICHTUNG		
3	10134348	2	TIGHT FIT SLEEVE 16X20X20	PASSHUELSE		
4	10037312	8	HEX SCREW EN 1665 M10X120 10.9	SECHSKANTSCHRAUBE		
5	10114153	9	HEX SCREW DIN 6921 M10X70 10.9	SECHSKANTSCHRAUBE		
6	10035580	1	HEX SCREW DIN 6921 M10X50 10.9	SECHSKANTSCHRAUBE		
7	7381779	2	O-RING	O-RING		
8	7380653	2	O-RING	O-RING		
9	10004261	1	O-RING	O-RING		
10	10041903	5	SCREW PLUG	VERSCHLUSSSCHRAUBE		
13	10011832	1	VALVE	VENTIL		
14	7381225	1	SEALING RING	DICHTRING		
15	10465711	1	SEALING PLUG	DICHTSTOPFEN		
100	10285708	1	GREASE	FETT		

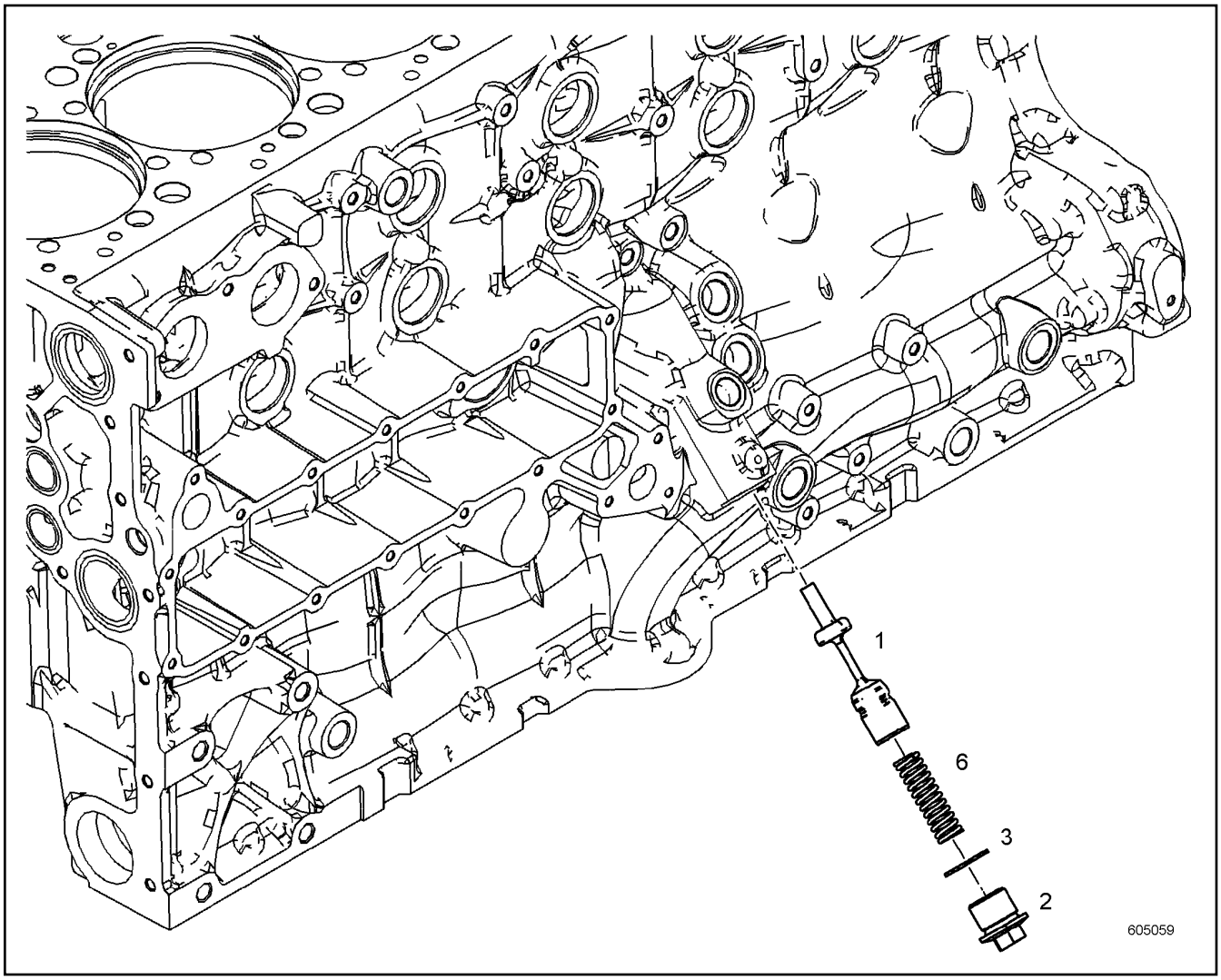

Pos.	Item	Quantity	Description	Bezeichnung	Serie	K
1	10149655	1	PISTON	KOLBEN		
2	10137918	1	SCREW PLUG 11SMNPB30+C;EN 10277-3	VERSCHLUSSSCHRAUBE		
3	7101021	1	SEALING RING	DICHTRING		
6	11118160	1	PRESSURE SPRING	DRUCKFEDER		

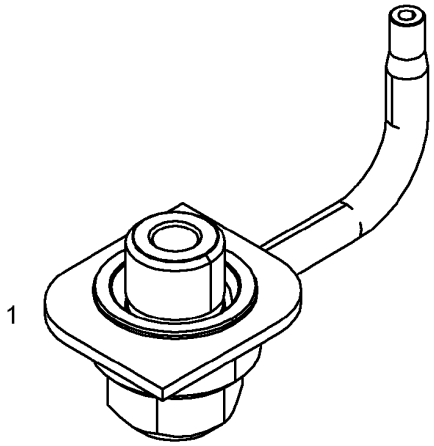

607381

Pos.	Item	Quantity	Description	Bezeichnung	Serie	K
1	10151634	1	PISTON COOLING PRE-ASS. ⇨ ❑ 222	KOLBENKUEHLUNG VORM.		

OHNE BILD
WITHOUT ILLUSTRATION
SANS PLANCHE
SIN FIG.
SEM ILUSTRAÇÃO
БЕЗ ИЗОБРАЖЕНИЯ

600000

Pos.	Item	Quantity	Description	Bezeichnung	Serie	K
1	10151636	1	PISTON COOLING NOZZLE	KOLBENKUEHLDUESE		
2	10151637	1	HOLLOW SCREW	HOHLSCHRAUBE		

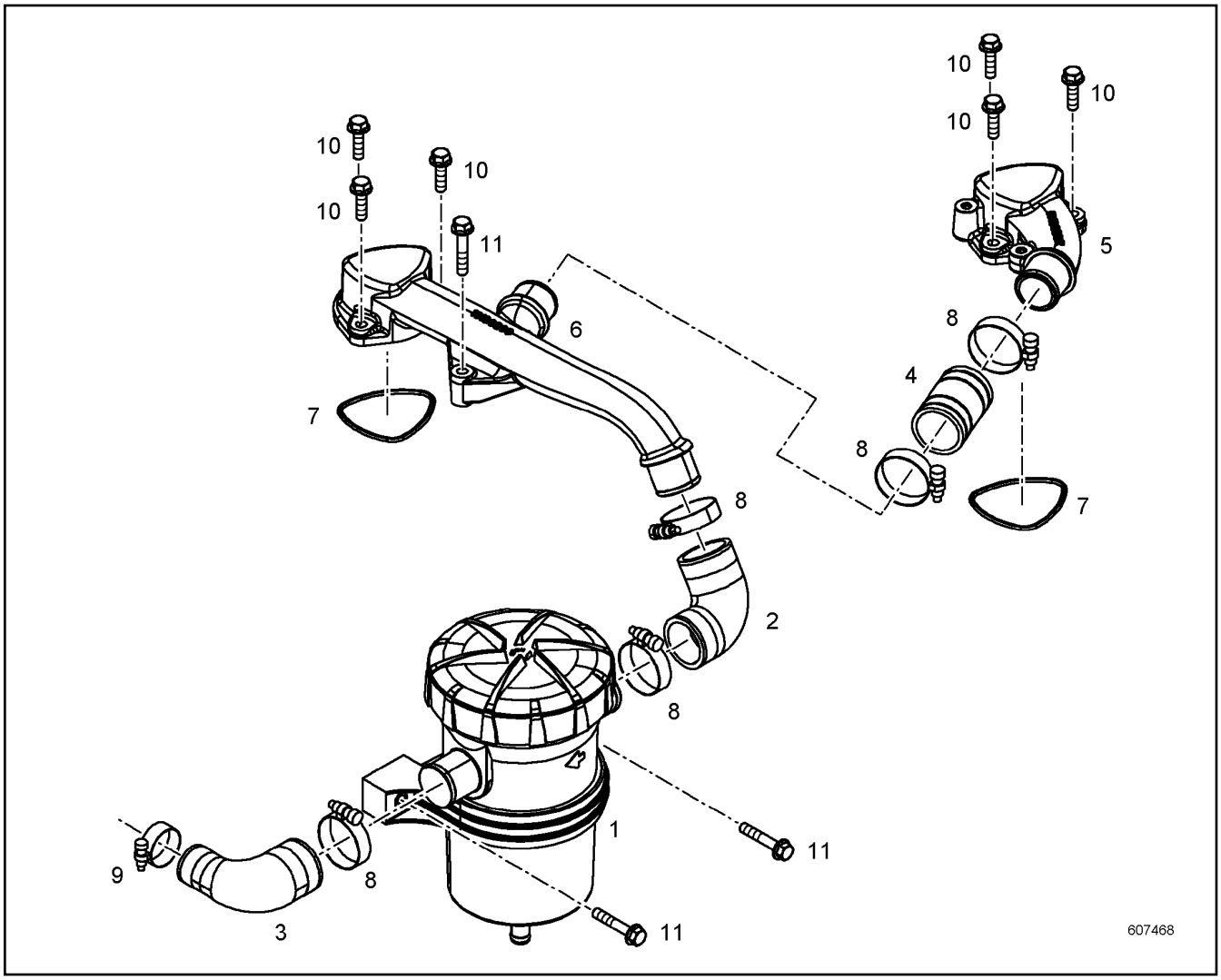

Pos.	Item	Quantity	Description	Bezeichnung	Serie	K
1	10136800	1	CRANKCASE BREATHER ⇨ ❑ 224	KURBELGEHAEUSEENTLUEFTUN		
2	10126091	1	RUBBER CONNECTION	GUMMIMUFFE		
3	10133641	1	RUBBER CONNECTION	GUMMIMUFFE		
4	10126090	1	RUBBER CONNECTION	GUMMIMUFFE		
5	10139393	1	CONNECTION PIECE	ANSCHLUSSSTUECK		
6	10139391	1	CONNECTION PIECE	ANSCHLUSSSTUECK		
7	7381593	2	O-RING	O-RING		
8	5700024	5	HOSE CLAMP	SCHLAUCHSCHELLE		
9	5004927	1	HOSE CLAMP	SCHLAUCHSCHELLE		
10	10007782	6	HEX SCREW EN 1665 M8X30 8.8	SECHSKANTSCHRAUBE		
11	10016907	3	HEX SCREW EN 1665 M8X45 8.8	SECHSKANTSCHRAUBE		

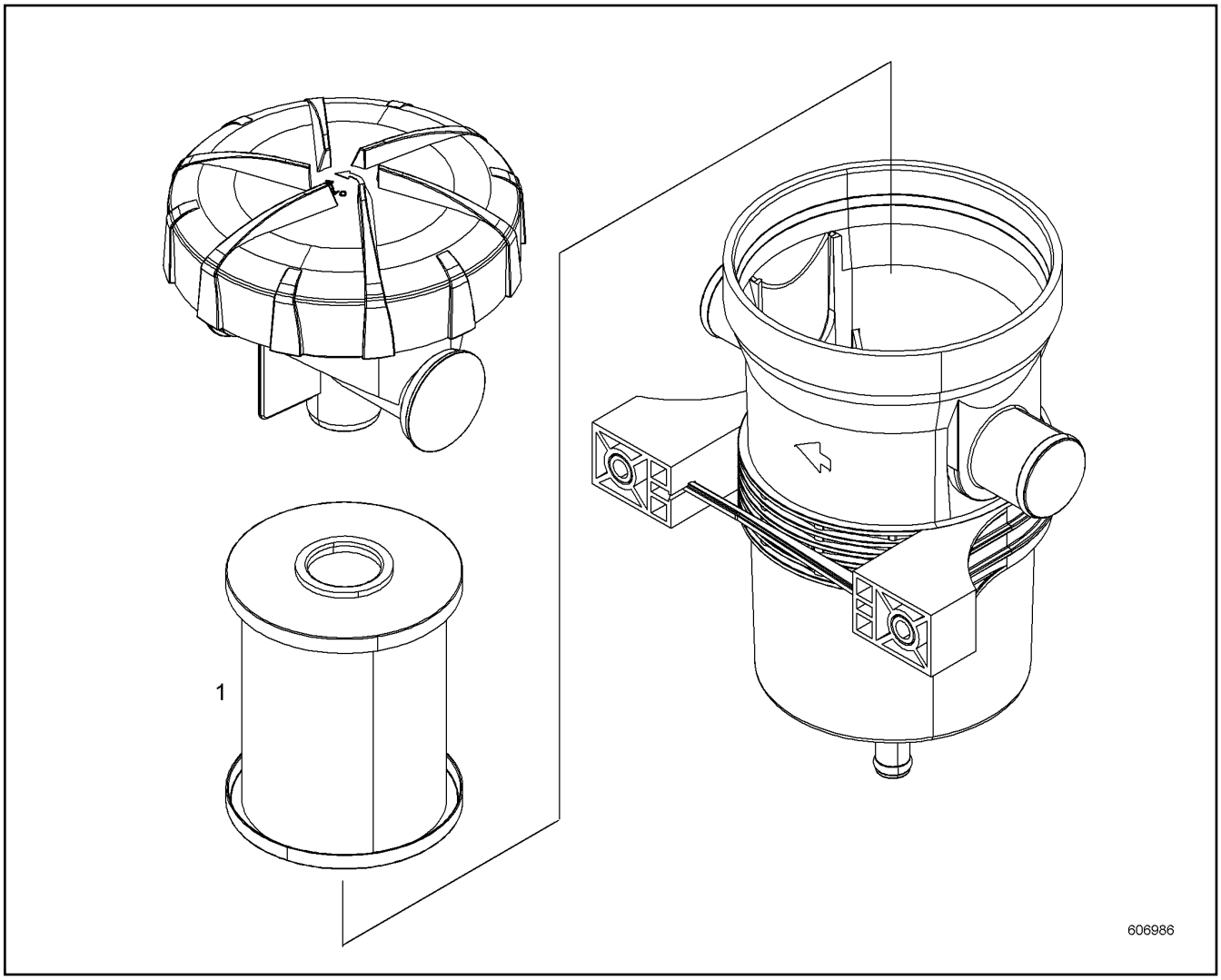

Pos.	Item	Quantity	Description	Bezeichnung	Serie	K
1	10136801	1	SPARE ELEMENT	ERSATZELEMENT		

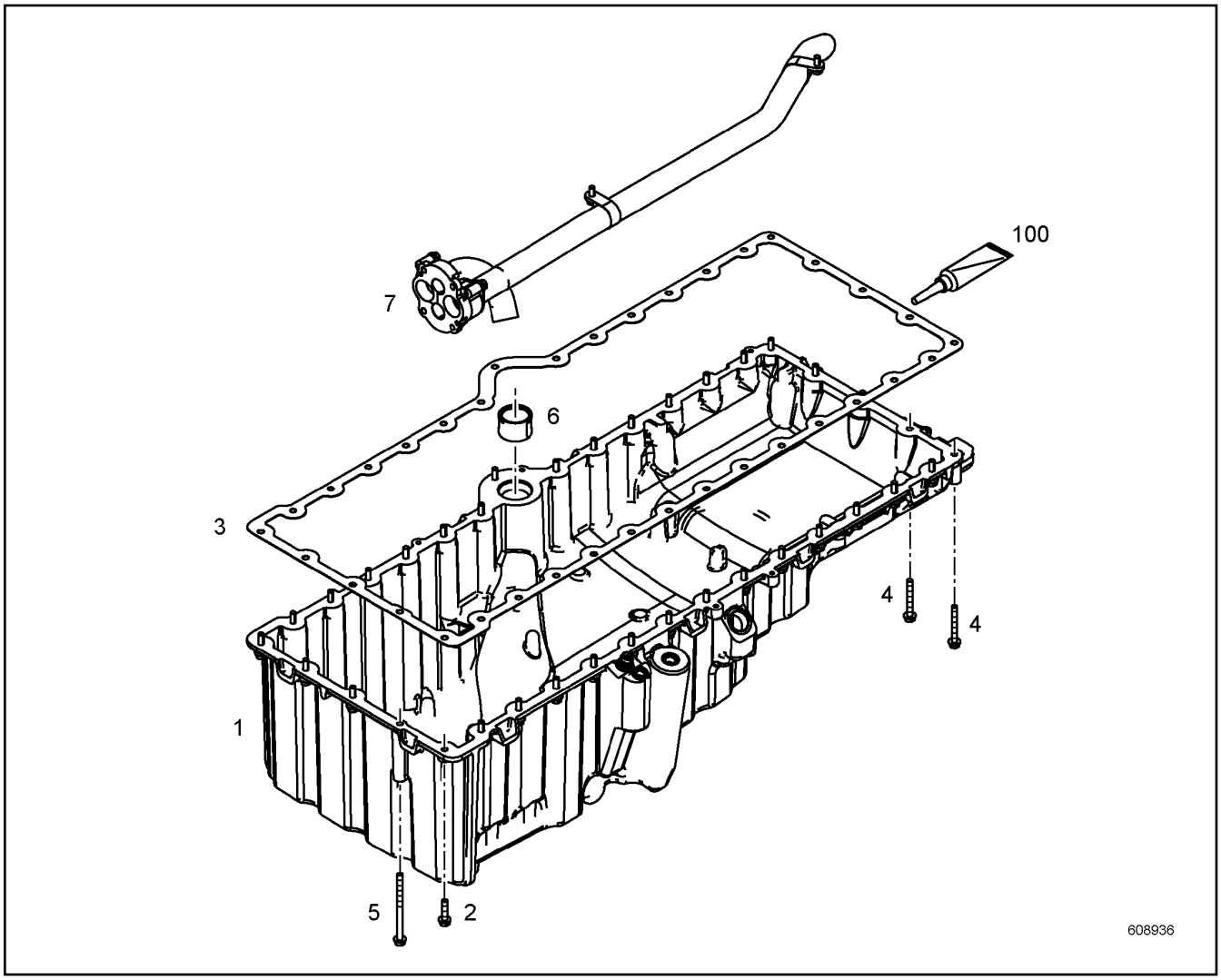

Pos.	Item	Quantity	Description	Bezeichnung	Serie	K
1	10155298	1	OIL SUMP PRE-ASS. ⇨ ❑ 226	OELWANNE VORM.		
2	10113711	33	HEX SCREW EN 1665 M8X35 8.8	SECHSKANTSCHRAUBE		
3	10126427	1	SEAL	DICHTUNG		
4	10100304	2	HEX SCREW EN 1665 M8X65 8.8	SECHSKANTSCHRAUBE		
5	10017158	1	HEX SCREW EN 1665 M8X120 8.8	SECHSKANTSCHRAUBE		
6	10125386	1	PLUG-IN PIPE	STECKROHR		
7	10139539	1	PIPELINE INSTALLATION	ROHRLEITUNG ANBAU		
100	10354595	1	SURFACE SEALING	FLAECHENDICHTUNG		

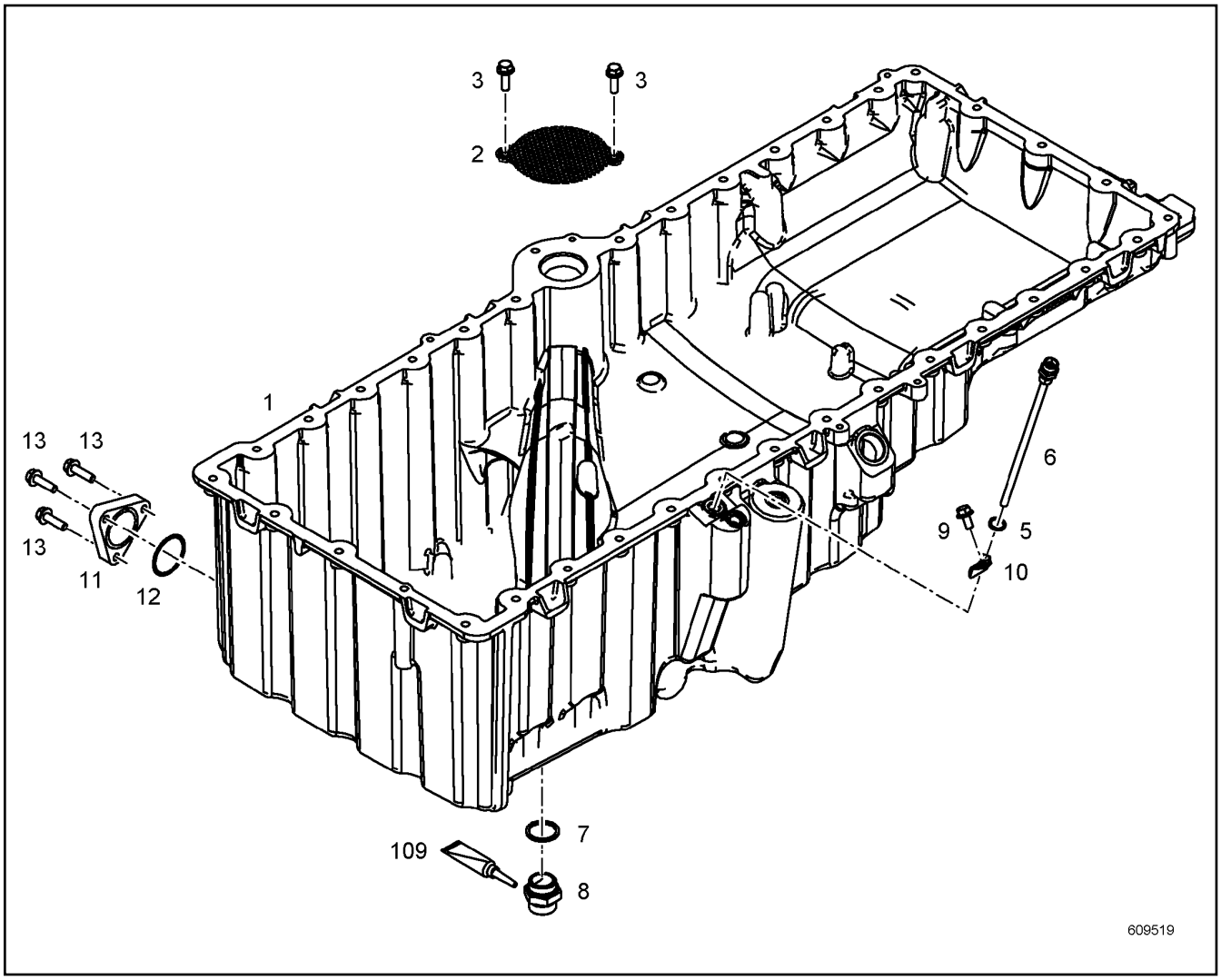

Pos.	Item	Quantity	Description	Bezeichnung	Serie	K
1	10155297	1	OIL SUMP	OELWANNE		
2	10135441	1	PERFORATED PLATE	LOCHBLECH		
3	11833770	2	HEX SCREW DIN 6921 M8X30 8.8	SECHSKANTSCHRAUBE		
5	7101008	1	SEALING RING	DICHTRING		
6	9080660	1	TUBE	ROHR		
7	7101021	1	SEALING RING	DICHTRING		
8	5004624	1	OIL DRAIN PLUG ⇨ ❑ 227	OELABLASSSCHRAUBE		
9	10005511	1	HEX SCREW DIN EN 1665 M8X16 8.8	SECHSKANTSCHRAUBE		
10	10122693	1	CLAMP	SCHELLE		
11	10149013	1	COVER	DECKEL		
12	7380423	1	O-RING	O-RING		
13	4038502	3	DOUBLE-ENDED STUD DIN 835 M8X35 8.8	STIFTSCHRAUBE		
14	10424333	3	HEX NUT EN 1661 M8 8	SECHSKANTMUTTER		
105	811202114	1	SCREW LOCKING	SCHRAUBENSICHERUNG		
109	8627609	1	SEALANT	DICHTUNGSMITTEL		

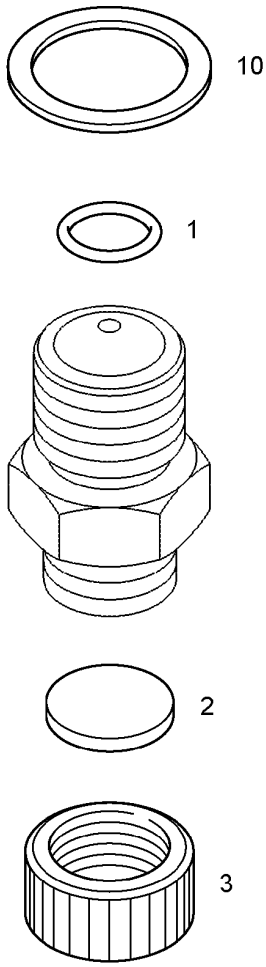

Pos.	Item	Quantity	Description	Bezeichnung	Serie	K
1	7264625	1	O-RING	O-RING		
2	7011131	1	SEAL	DICHTUNG		
3	7013456	1	PROTECTING CAP	SCHUTZKAPPE		
10	7101021	1	SEALING RING	DICHTRING		

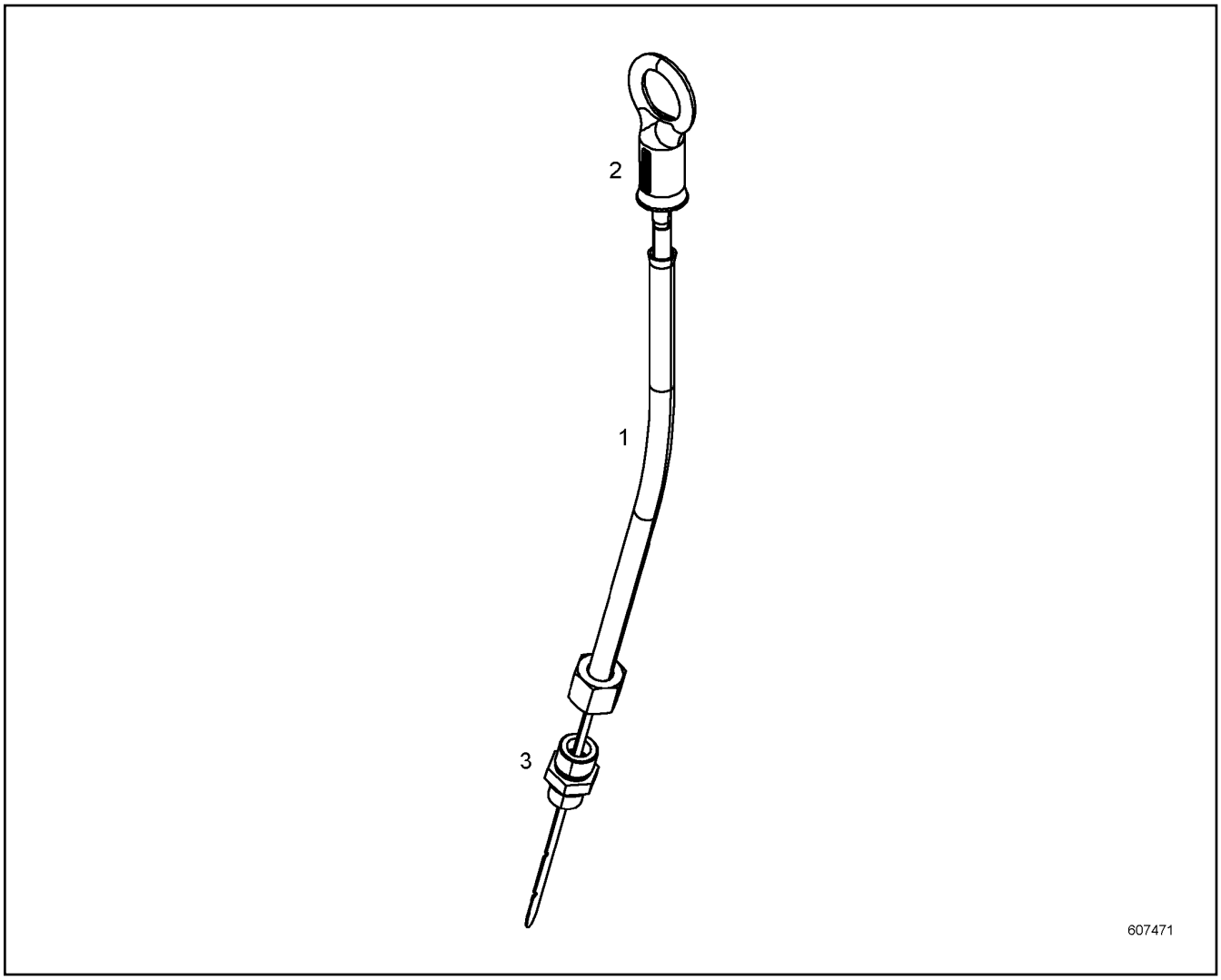

Pos.	Item	Quantity	Description	Bezeichnung	Serie	K
1	9266847	1	GUIDING PIPE	FUEHRUNGSROHR		
2	10145918	1	OIL DIPSTICK	OELMESSSTAB		
3	4981235	1	FITTING	VERSCHRAUBUNG		

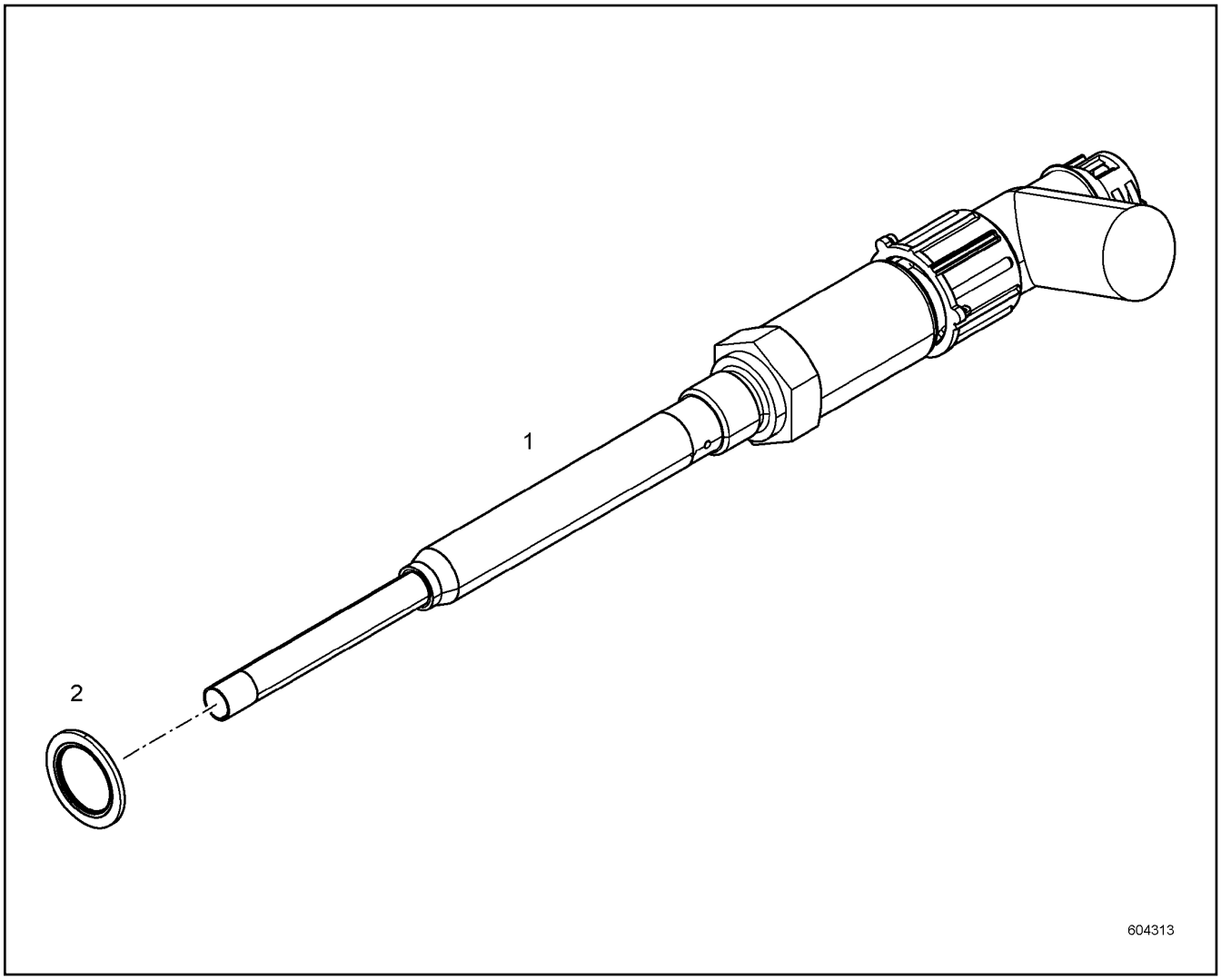

Pos.	Item	Quantity	Description	Bezeichnung	Serie	K
1	11088130	1	LEVEL SENSOR	NIVEAUGEBER		
2	10011868	1	SEALING RING	DICHTRING		

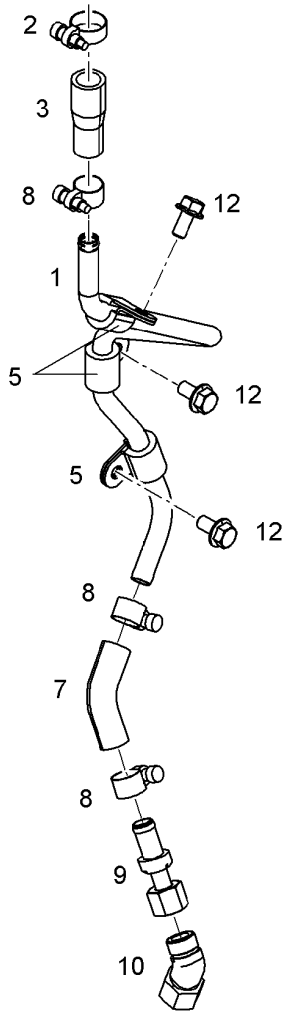

Pos.	Item	Quantity	Description	Bezeichnung	Serie	K
1	10131350	1	OIL RETURN PIPE	OELRUECKLAUFLEITUNG		
2	4901138	1	HOSE CLAMP	SCHLAUCHSCHELLE		
3	10123671	1	RUBBER CONNECTION	GUMMIMUFFE		
5	7381629	3	CLAMP	SCHELLE		
7	10126317	1	RUBBER CONNECTION	GUMMIMUFFE		
8	4981029	3	HOSE CLAMP	SCHLAUCHSCHELLE		
9	10119971	1	NON-RETURN VALVE	RUECKSCHLAGVENTIL		
10	7027665	1	FITTING	VERSCHRAUBUNG		
12	10005078	3	HEX SCREW EN 1665 M8X16 8.8	SECHSKANTSCHRAUBE		

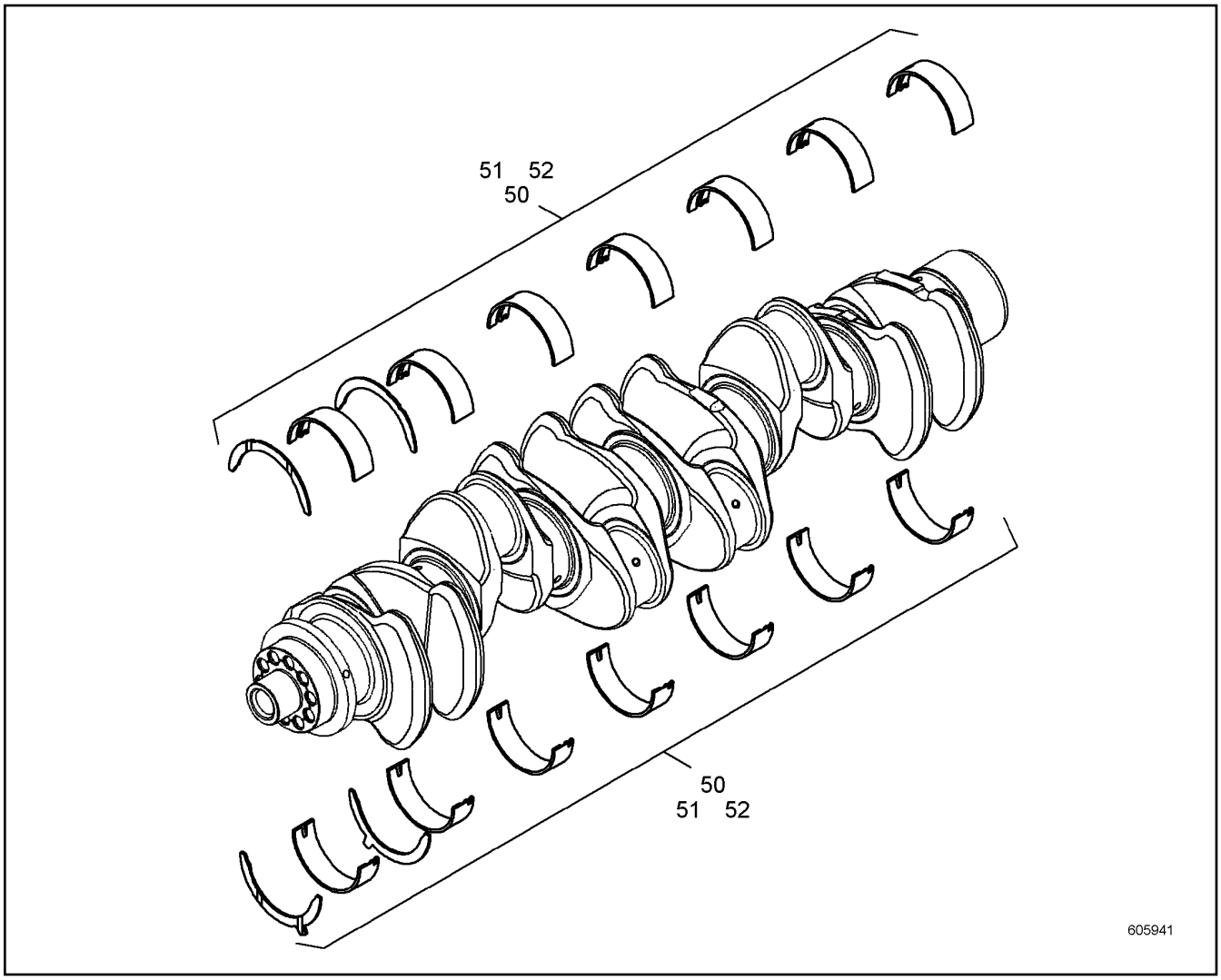

Pos.	Item	Quantity	Description	Bezeichnung	Serie	K
50	10116928	1	RK CRANKSHAFT BEARING	RS KURBELWELLENLAGERUNG		
51	10140599	1	RK1 MAIN BEARING CPL.	RS1 KURBELWELLENLAGERUNG		
52	10140603	1	RK2 MAIN BEARING CPL.	RS2 KURBELWELLENLAGERUNG		

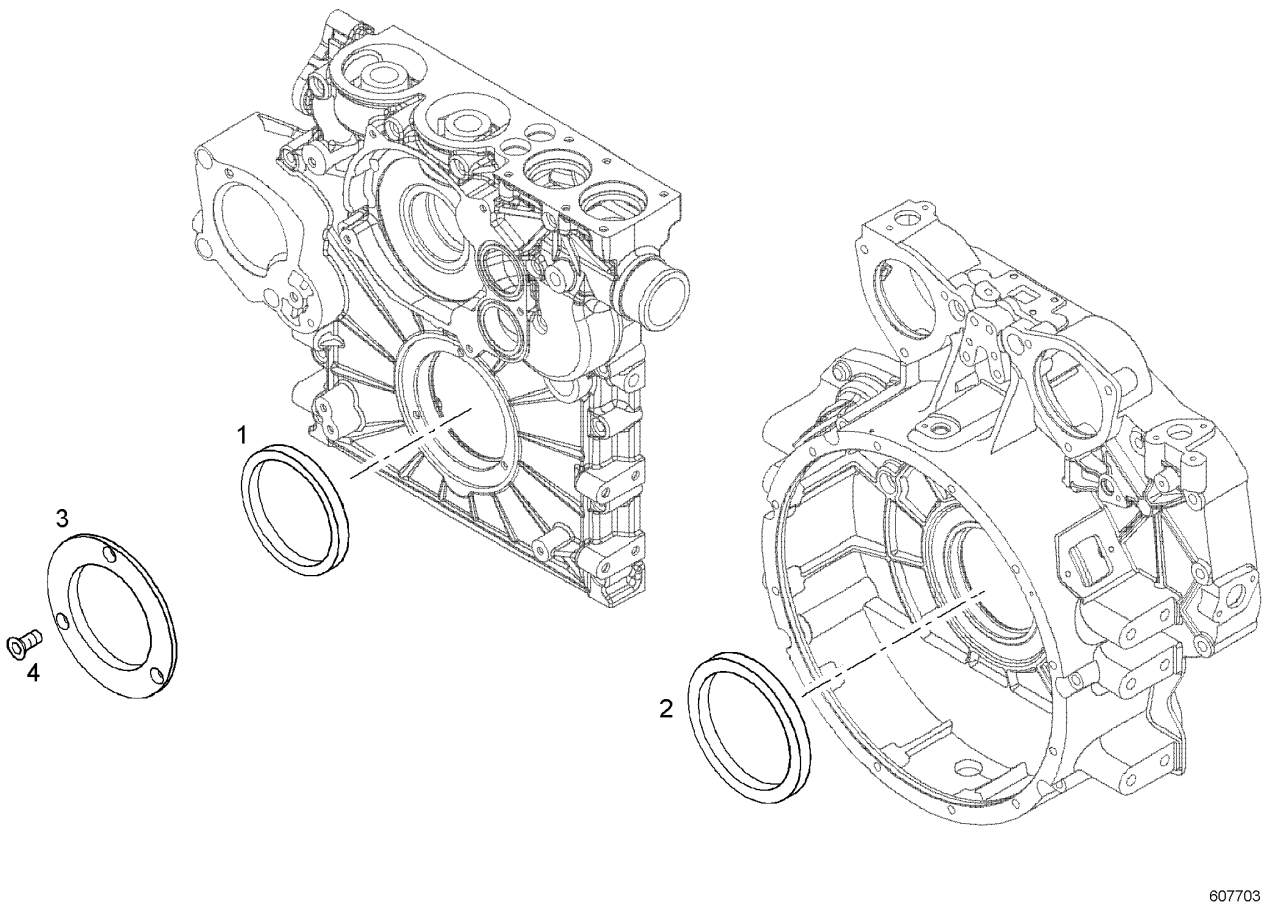

Pos.	Item	Quantity	Description	Bezeichnung	Serie	K
1	10121952	1	RK CRANKSHAFT SEAL	RS KURBELWELLENDICHTUNG		
2	10121335	1	RK CRANKSHAFT SEAL	RS KURBELWELLENDICHTUNG		
3	10120443	1	GUARD RING	SCHUTZRING		
4	10342191	3	COUNTERSUNK SCREW ISO 14581 M8X20 8.8	SENKSCHRAUBE		

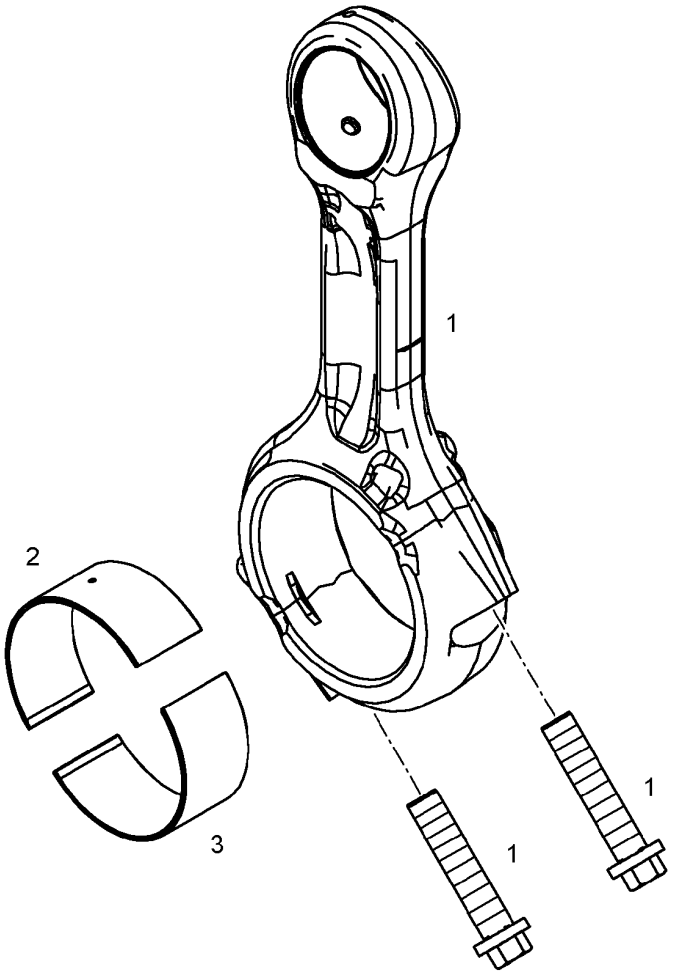

Pos.	Item	Quantity	Description	Bezeichnung	Serie	K
1	11348054	1	CONROD	PLEUELSTANGE		
2	10145100	1	CONNECTING ROD BEARING	PLEUELLAGER		
3	10145101	1	CONNECTING ROD BEARING	PLEUELLAGER		

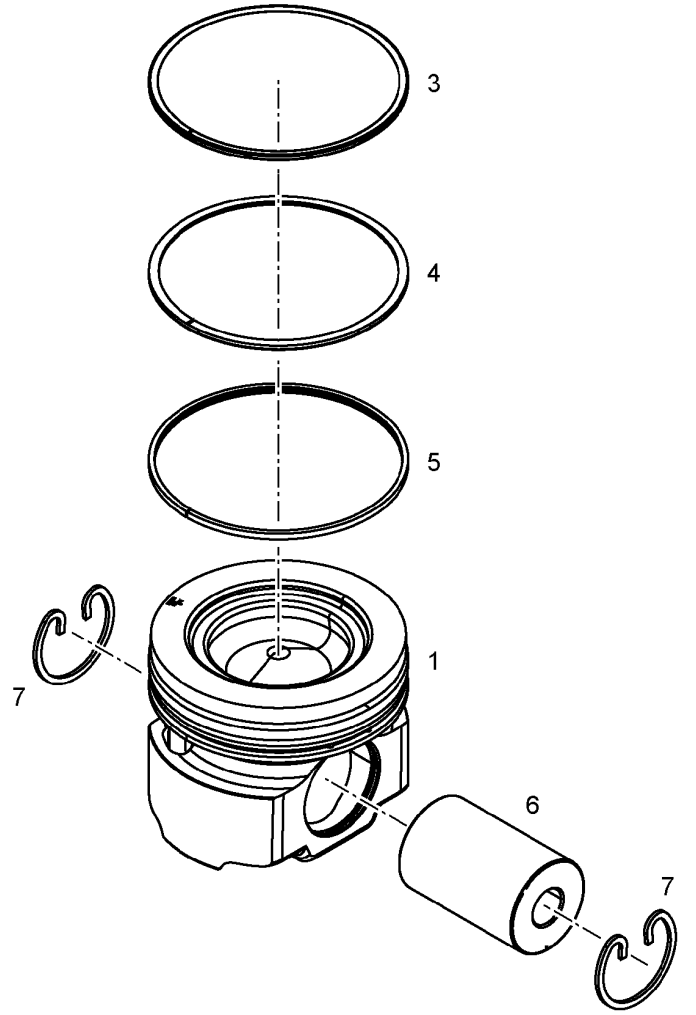

Pos.	Item	Quantity	Description	Bezeichnung	Serie	K
1	10143510	1	PISTON	KOLBEN		
3	11351303	1	KBA-RING	KBA-RING		
4	12476138	1	PISTON RING MG	M-RING		
5	10146358	1	DSF RING	DSF-RING		
6	10282849	1	PISTON BOLT 52X80 16MNCR5	KOLBENBOLZEN		
7	4980482	2	SNAP RING 52X2 FST	SPRENGRING		

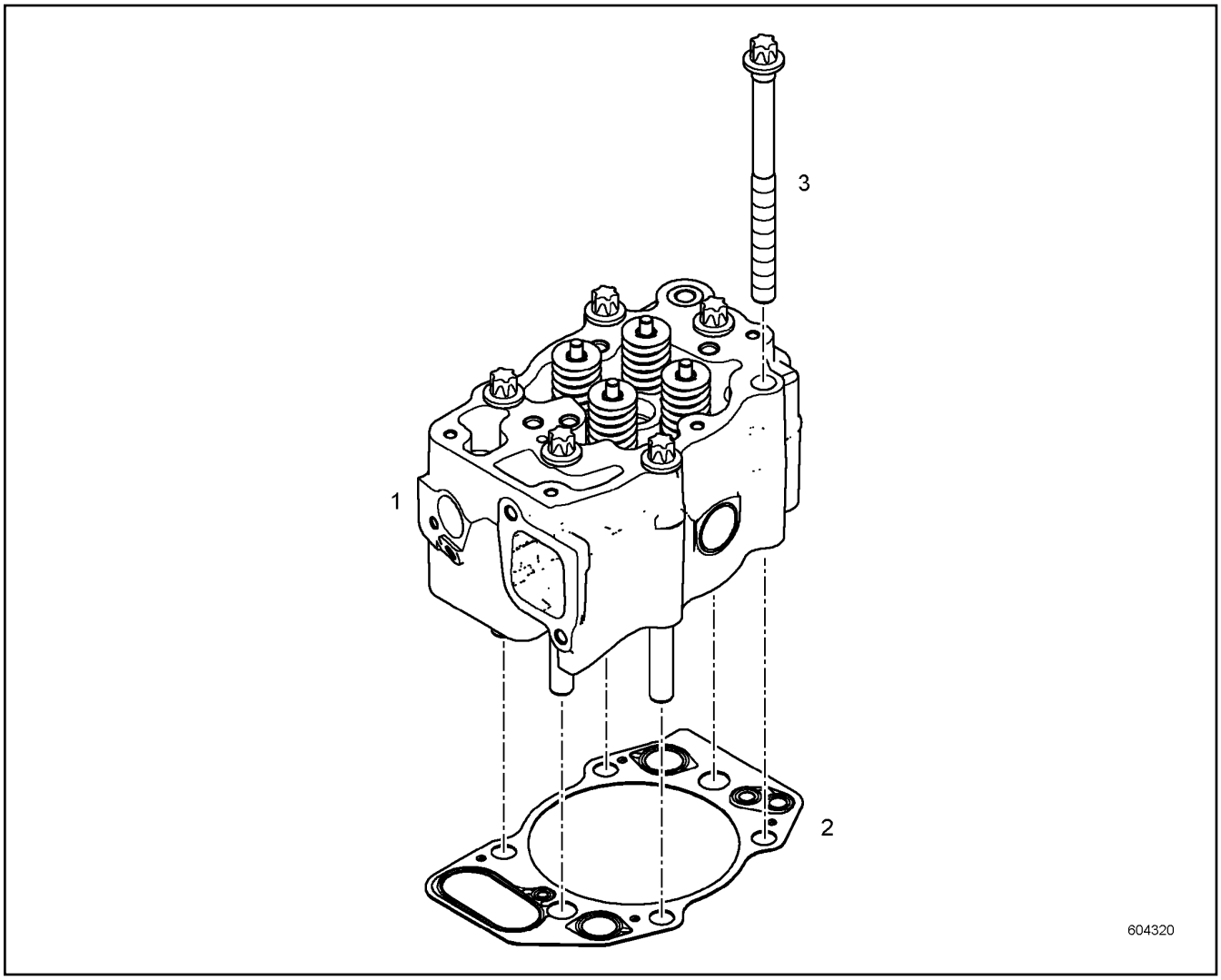

Pos.	Item	Quantity	Description	Bezeichnung	Serie	K
1	10145864	1	CYLINDER HEAD PRE-ASSY.	ZYLINDERKOPF VORM.		
2	10133667	1	CYLINDER HEAD GASKET	ZYLINDERKOPFDICHTUNG		
3	10125439	6	HEXALOBULAR HEAD SCREW M16X210 10.9	SECHSRUNDSCHRAUBE		

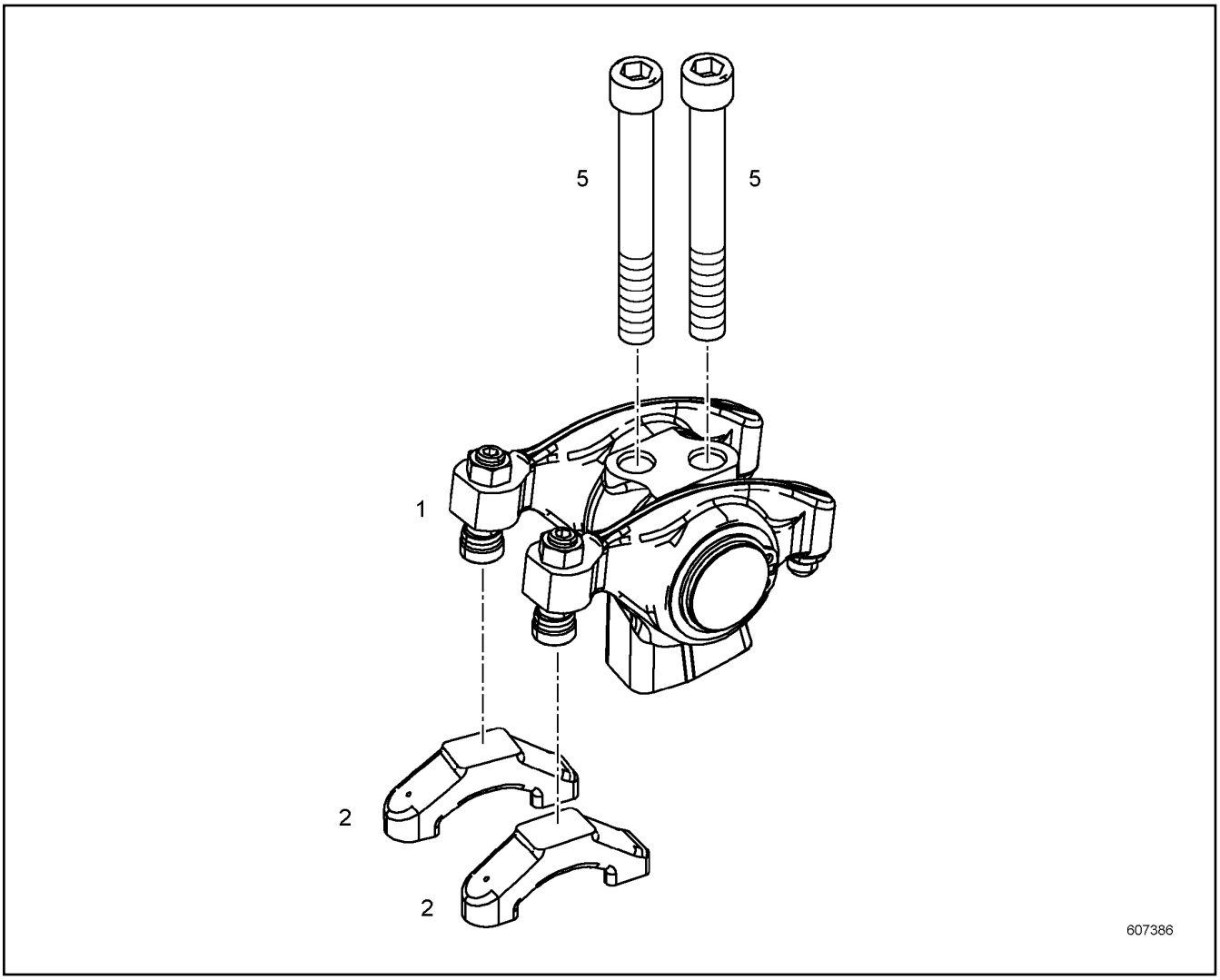

Pos.	Item	Quantity	Description	Bezeichnung	Serie	K
1	11448005	1	ROCKER ARM BRACKET PRE-ASS. ⇨ ❑ 237	KIPPHEBELBOCK VORM.		
2	10119695	2	VALVE BRIDGE	VENTILBRUECKE		
5	4600385	2	SOCKET HEAD SCREW ISO 4762 M12X100 10.	ZYLINDERSCHRAUBE		

OHNE BILD
WITHOUT ILLUSTRATION
SANS PLANCHE
SIN FIG.
SEM ILUSTRAÇÃO
БЕЗ ИЗОБРАЖЕНИЯ

600000

Pos.	Item	Quantity	Description	Bezeichnung	Serie	K
2	11448000	2	ROCKER ARM PRE-ASSY.	KIPPHEBEL VORM.		
3	10012557	2	HEX NUT M10X1 8	SECHSKANTMUTTER		
5	10012225	2	ADJUSTING SCREW M10X1	EINSTELLSCHRAUBE		
6	9078522	2	WASHER 34X45X1	SCHEIBE		
7	428011301	2	LOCKING RING DIN 471 34X1.5	SICHERUNGSRING		
8	10036325	1	SEALING PLUG	DICHTSTOPFEN		

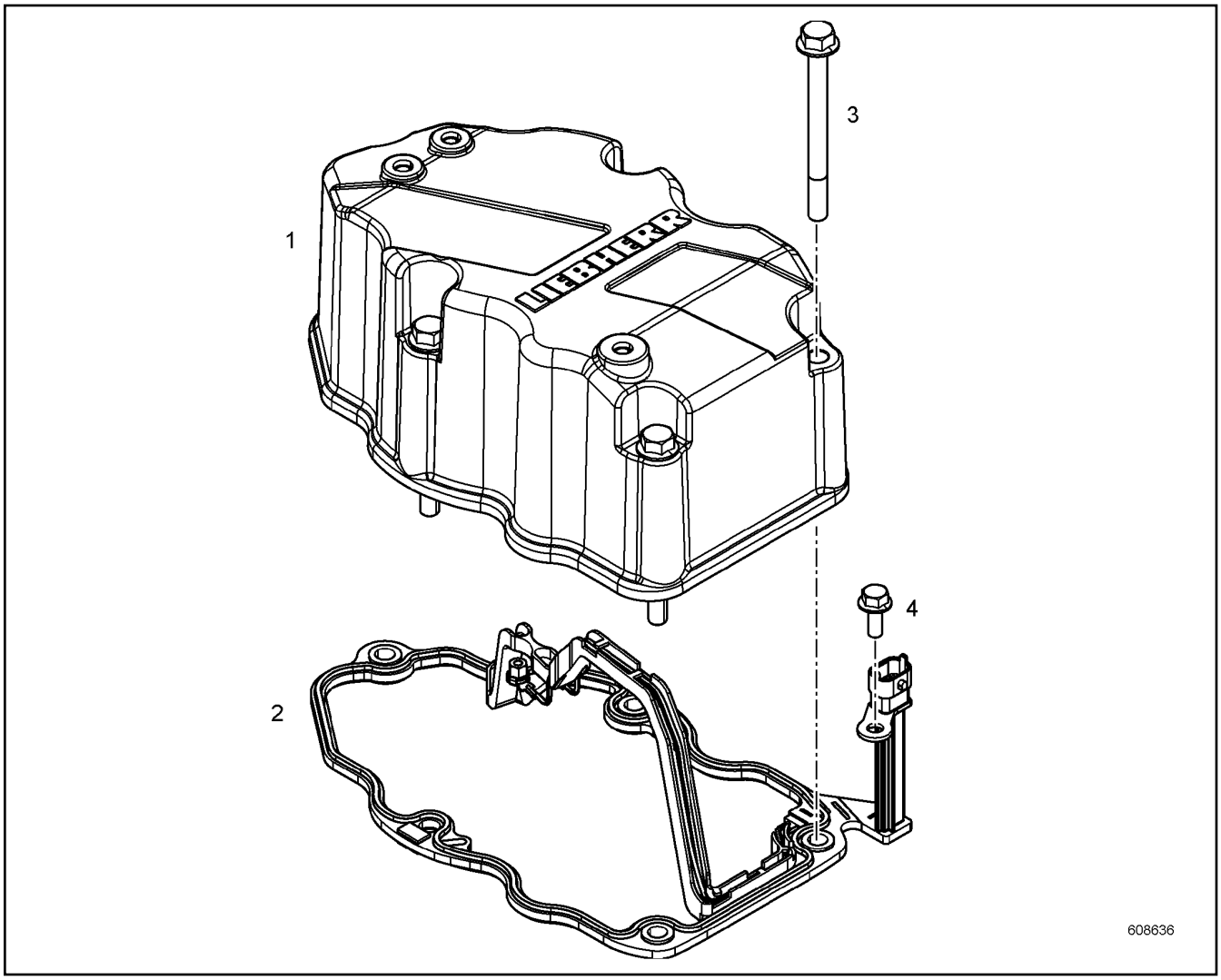

Pos.	Item	Quantity	Description	Bezeichnung	Serie	K
1	10134750	1	CYLINDER HEAD COVER	ZYLINDERKOPFDECKEL		
2	10126510	1	SEAL	DICHTUNG		
3	10100303	5	HEX SCREW EN 1665 M8X90 8.8	SECHSKANTSCHRAUBE		
4	407350208	1	HEX SCREW EN 1665 M6X16 8.8	SECHSKANTSCHRAUBE		

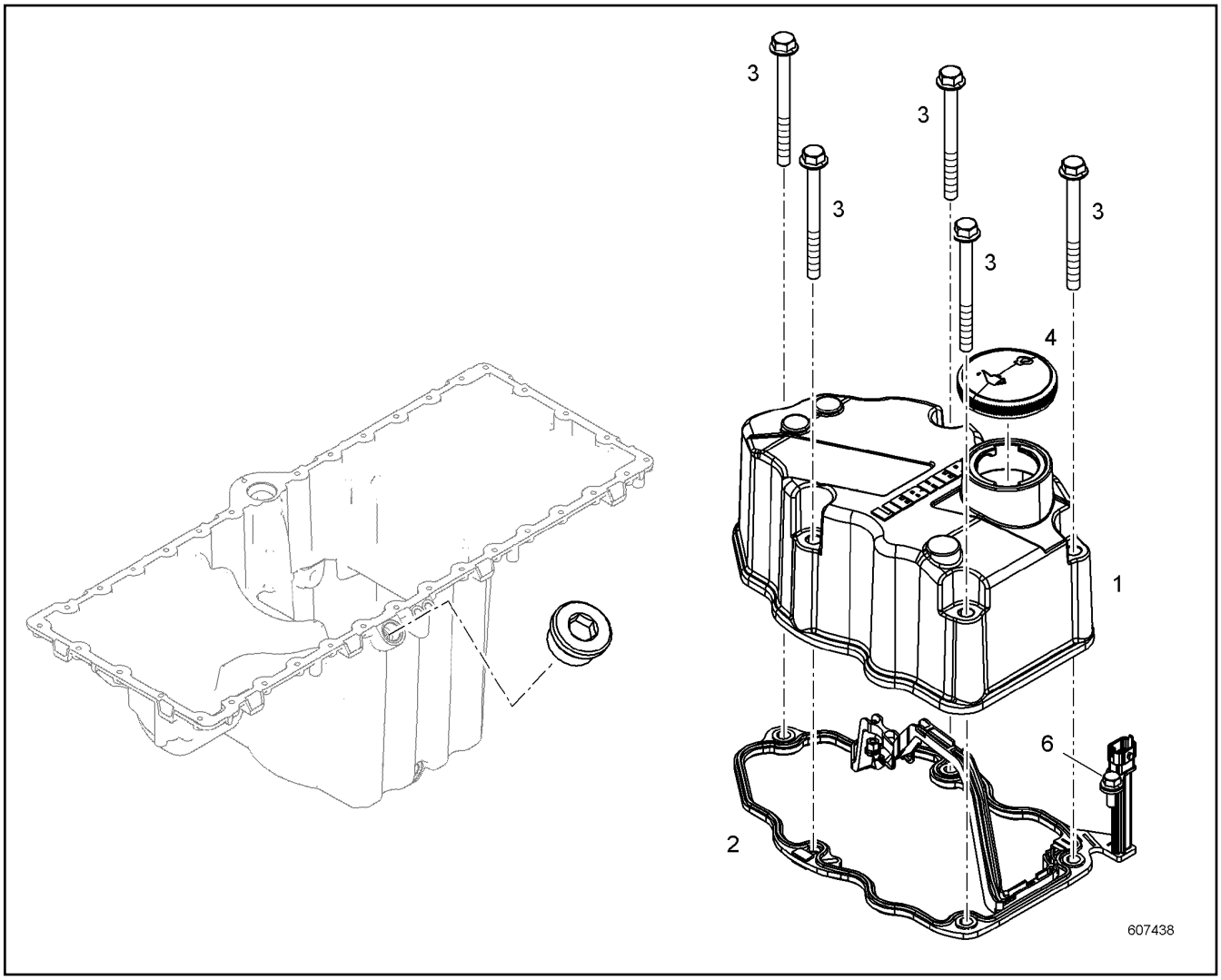

Pos.	Item	Quantity	Description	Bezeichnung	Serie	K
1	10134698	1	CYLINDER HEAD COVER	ZYLINDERKOPFDECKEL		
2	10126510	1	SEAL	DICHTUNG		
3	10100303	5	HEX SCREW EN 1665 M8X90 8.8	SECHSKANTSCHRAUBE		
4	9144757	1	END COVER ⇨ ❑ 240	VERSCHLUSSDECKEL		
6	407350208	1	HEX SCREW EN 1665 M6X16 8.8	SECHSKANTSCHRAUBE		

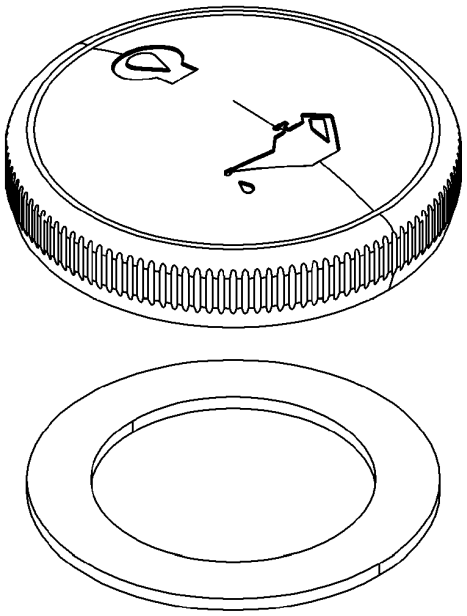

Pos.	Item	Quantity	Description	Bezeichnung	Serie	K
3	9144762	1	SEAL	DICHTUNG		

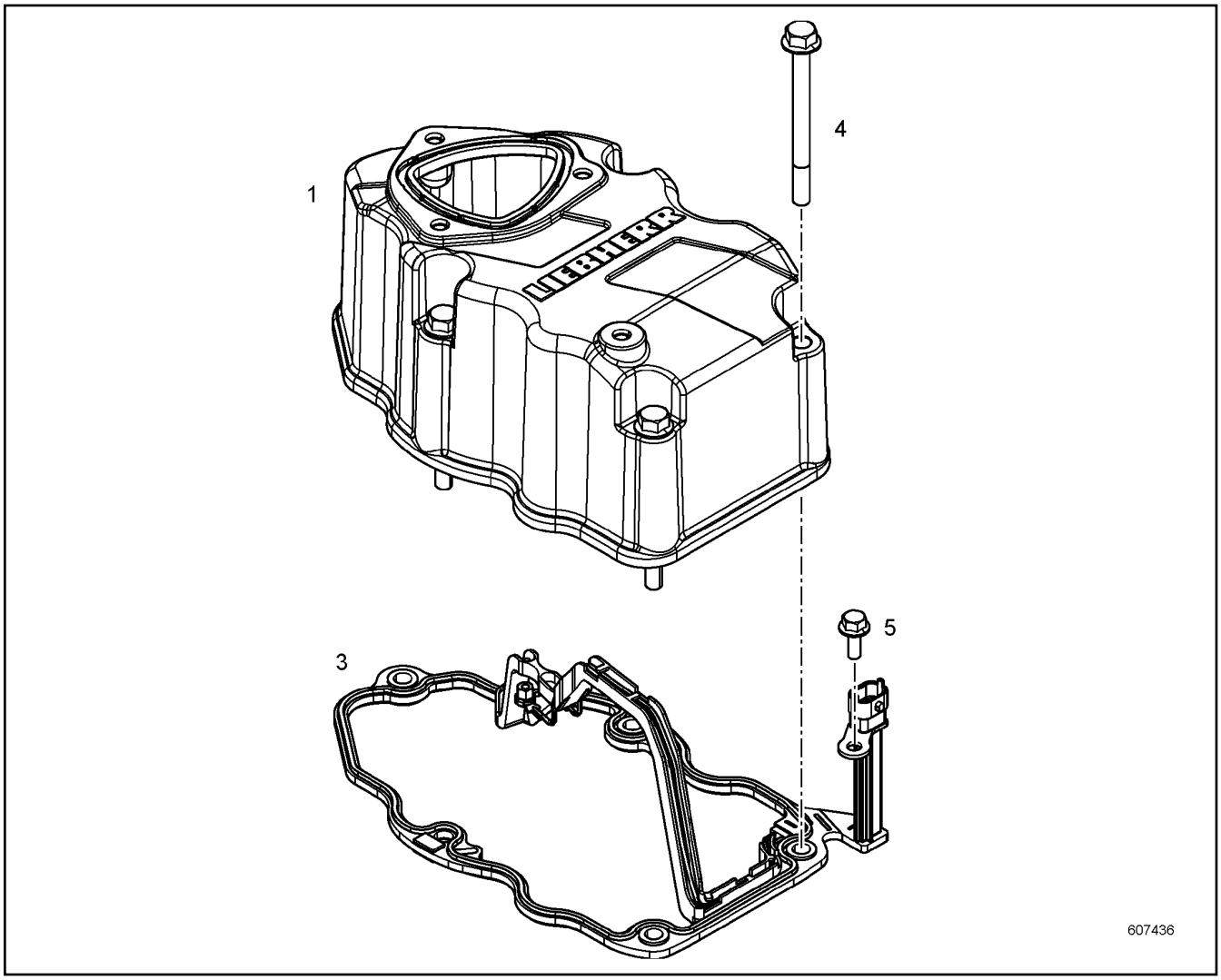

Pos.	Item	Quantity	Description	Bezeichnung	Serie	K
1	10134695	1	CYLINDER HEAD COVER	ZYLINDERKOPFDECKEL		
3	10126510	1	SEAL	DICHTUNG		
4	10100303	5	HEX SCREW EN 1665 M8X90 8.8	SECHSKANTSCHRAUBE		
5	407350208	1	HEX SCREW EN 1665 M6X16 8.8	SECHSKANTSCHRAUBE		

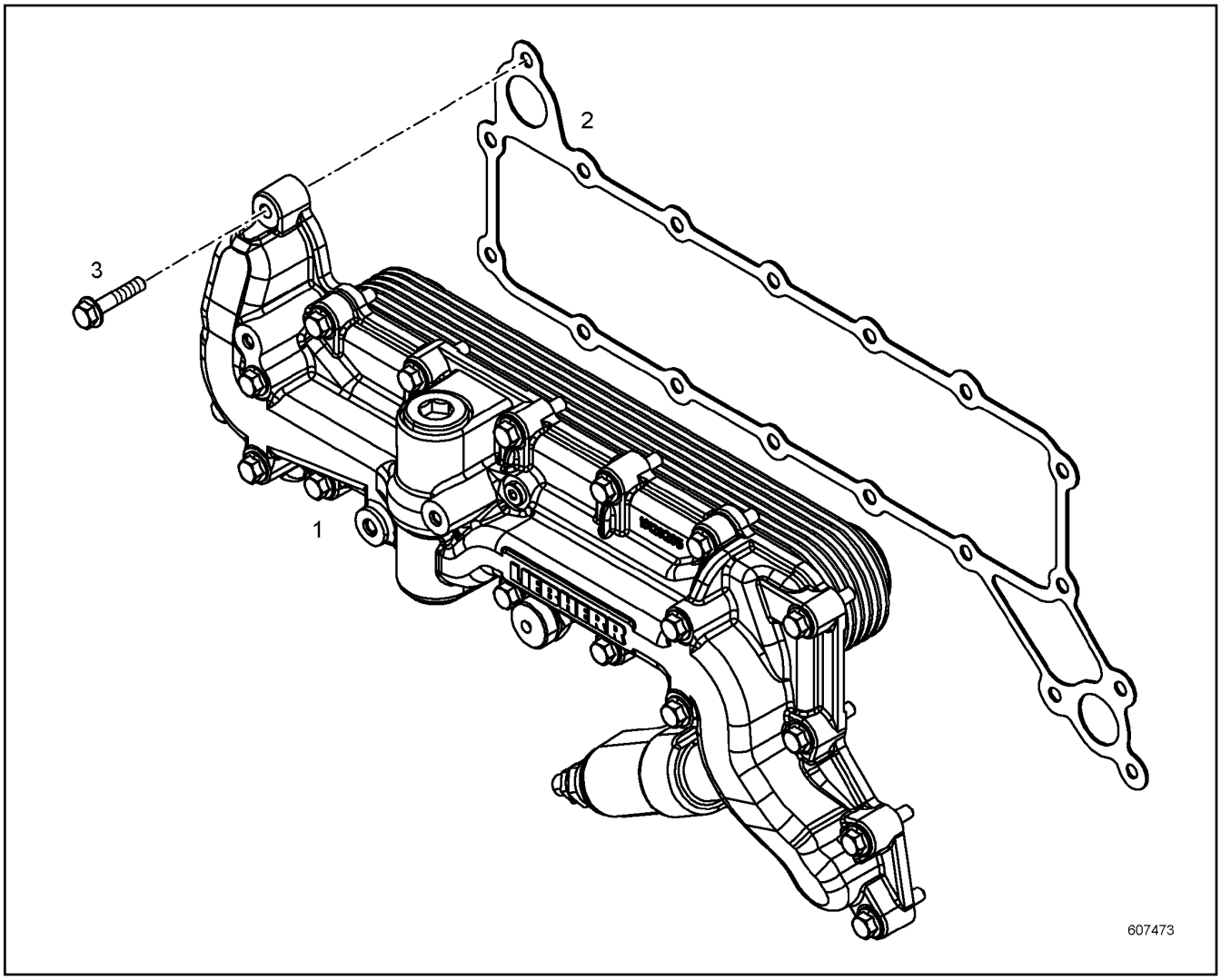

Pos.	Item	Quantity	Description	Bezeichnung	Serie	K
1	10129480	1	OIL COOLER, PRE-ASSEMBLED ⇨ ❑ 243	OELKUEHLER VORM.		
2	10117891	1	SEAL	DICHTUNG		
3	10218013	18	HEX SCREW DIN 6921 M8X55 8.8	SECHSKANTSCHRAUBE		

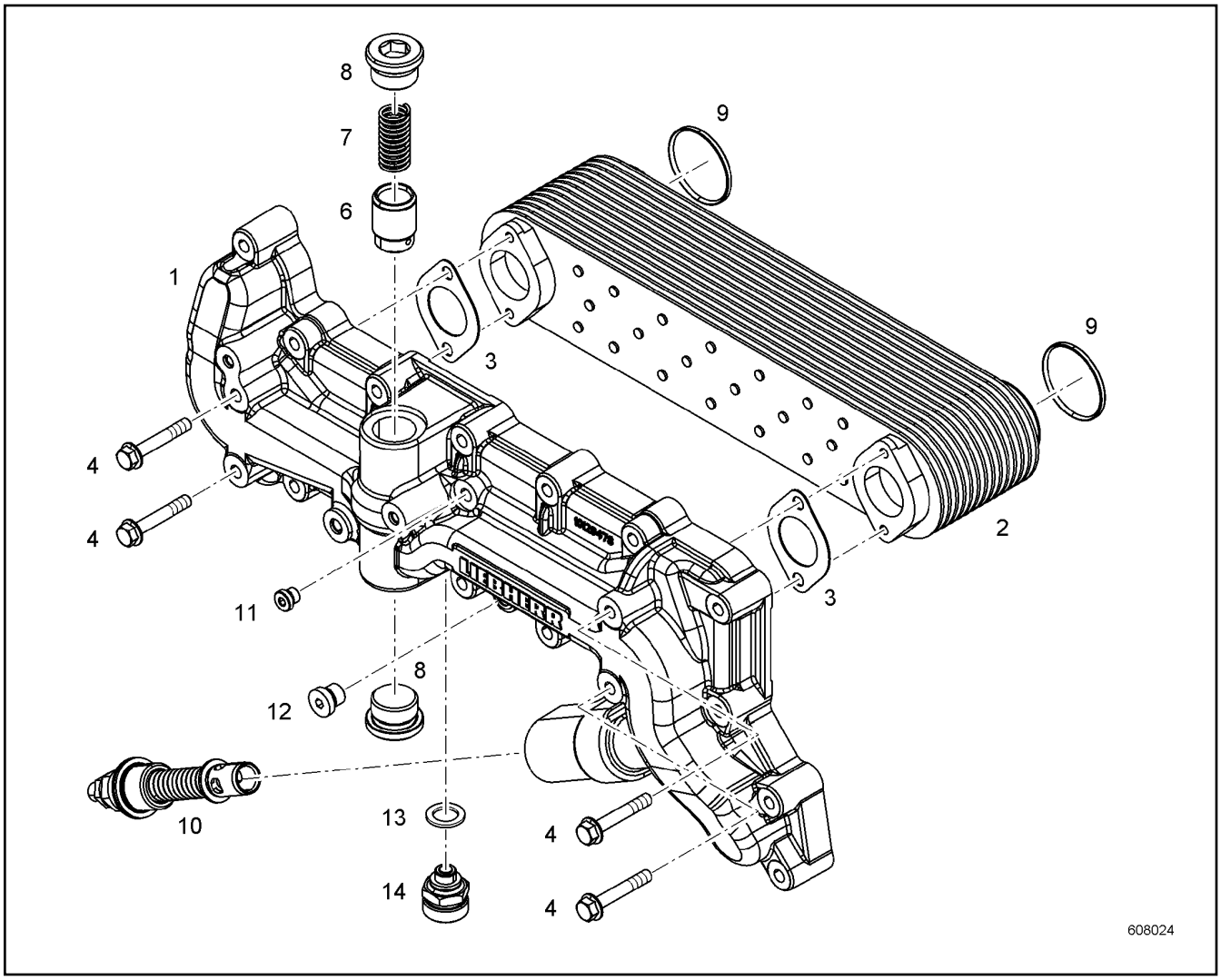

Pos.	Item	Quantity	Description	Bezeichnung	Serie	K
1	10129479	1	OIL COOLER HOUSING	OELKUEHLERGEHAEUSE		
2	5700088	1	OIL COOLER	OELKUEHLER		
3	10119923	2	SEAL	DICHTUNG		
4	10005073	4	HEX SCREW EN 1665 M8X50 8.8	SECHSKANTSCHRAUBE		
6	9886591	1	PISTON	KOLBEN		
7	9886756	1	PRESSURE SPRING	DRUCKFEDER		
8	7382204	2	SCREW PLUG	VERSCHLUSSSCHRAUBE		
9	7380955	2	O-RING	O-RING		
10	10152592	1	OVERPRESSURE VALVE ⇨ ❑ 244	UEBERDRUCKVENTIL		
11	7381638	1	SCREW PLUG	VERSCHLUSSSCHRAUBE		
12	7380566	1	SCREW PLUG	VERSCHLUSSSCHRAUBE		
13	7381225	1	SEALING RING	DICHTRING		
14	10011832	1	VALVE	VENTIL		

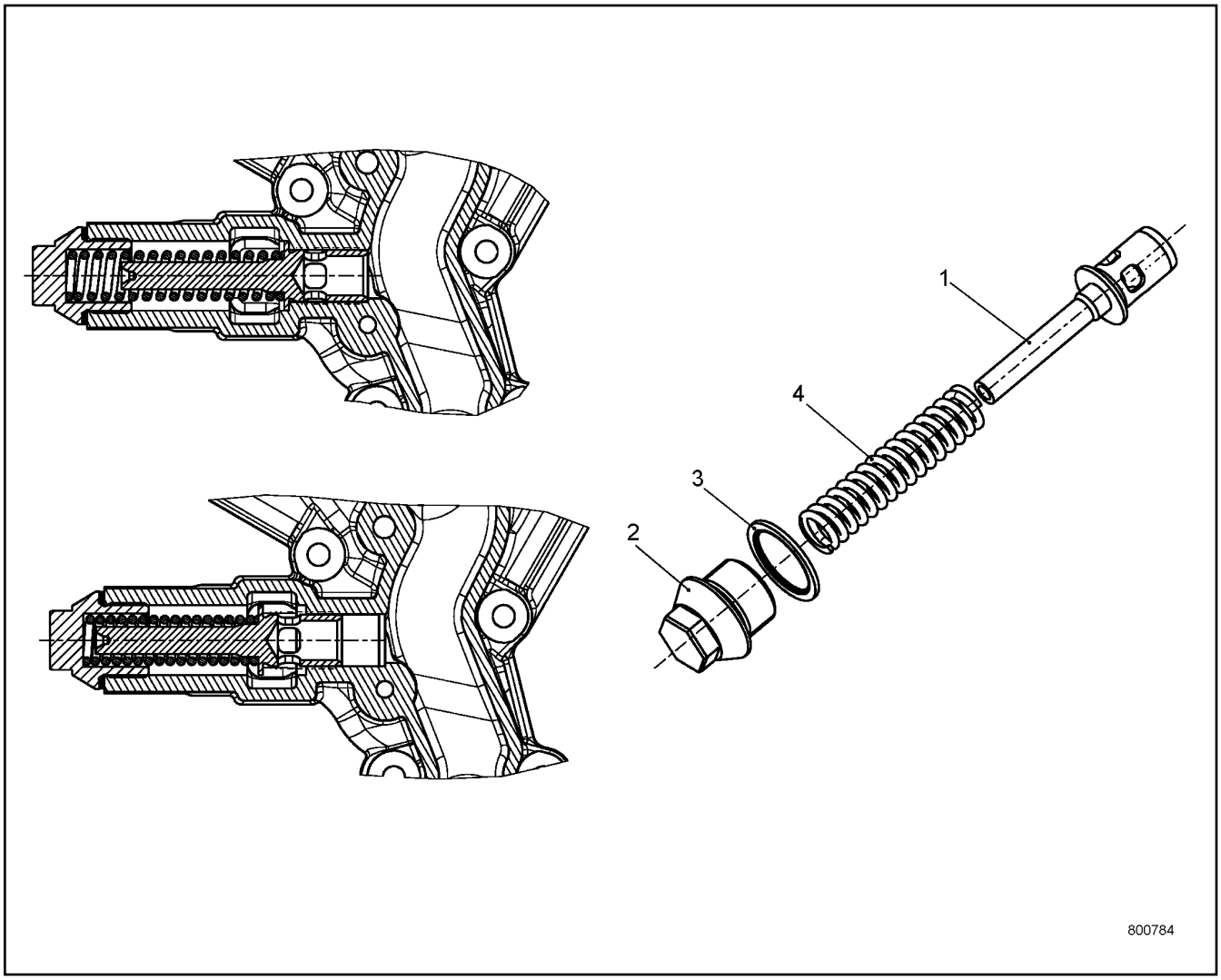

Pos.	Item	Quantity	Description	Bezeichnung	Serie	K
1	10152593	1	PISTON	KOLBEN		
2	10152594	1	SCREW PLUG M30X40 ETG 100	VERSCHLUSSSCHRAUBE		
3	10113731	1	SEALING RING	DICHTRING		
4	10129501	1	PRESSURE SPRING	DRUCKFEDER		

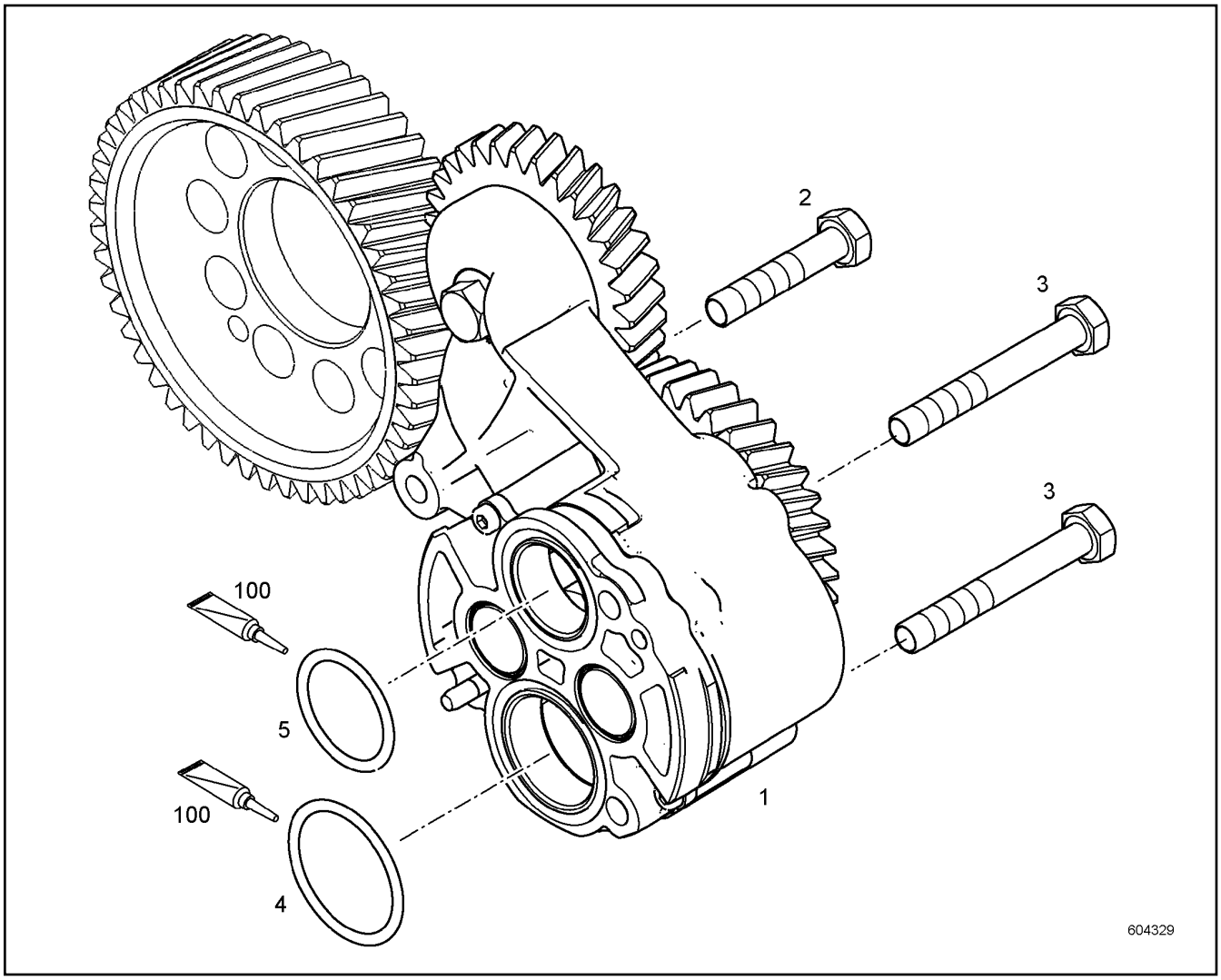

Pos.	Item	Quantity	Description	Bezeichnung	Serie	K
1	10138565	1	LUBRICATING OIL PUMP	SCHMIEROELPUMPE		
2	10005713	1	HEX SCREW DIN 6921 M8X45 8.8	SECHSKANTSCHRAUBE		
3	11066361	2	HEX SCREW DIN 6921 M8X90 8.8	SECHSKANTSCHRAUBE		
4	11066168	1	O-RING	O-RING		
5	7382059	1	O-RING	O-RING		
100	10282622	1	GREASE	FETT		

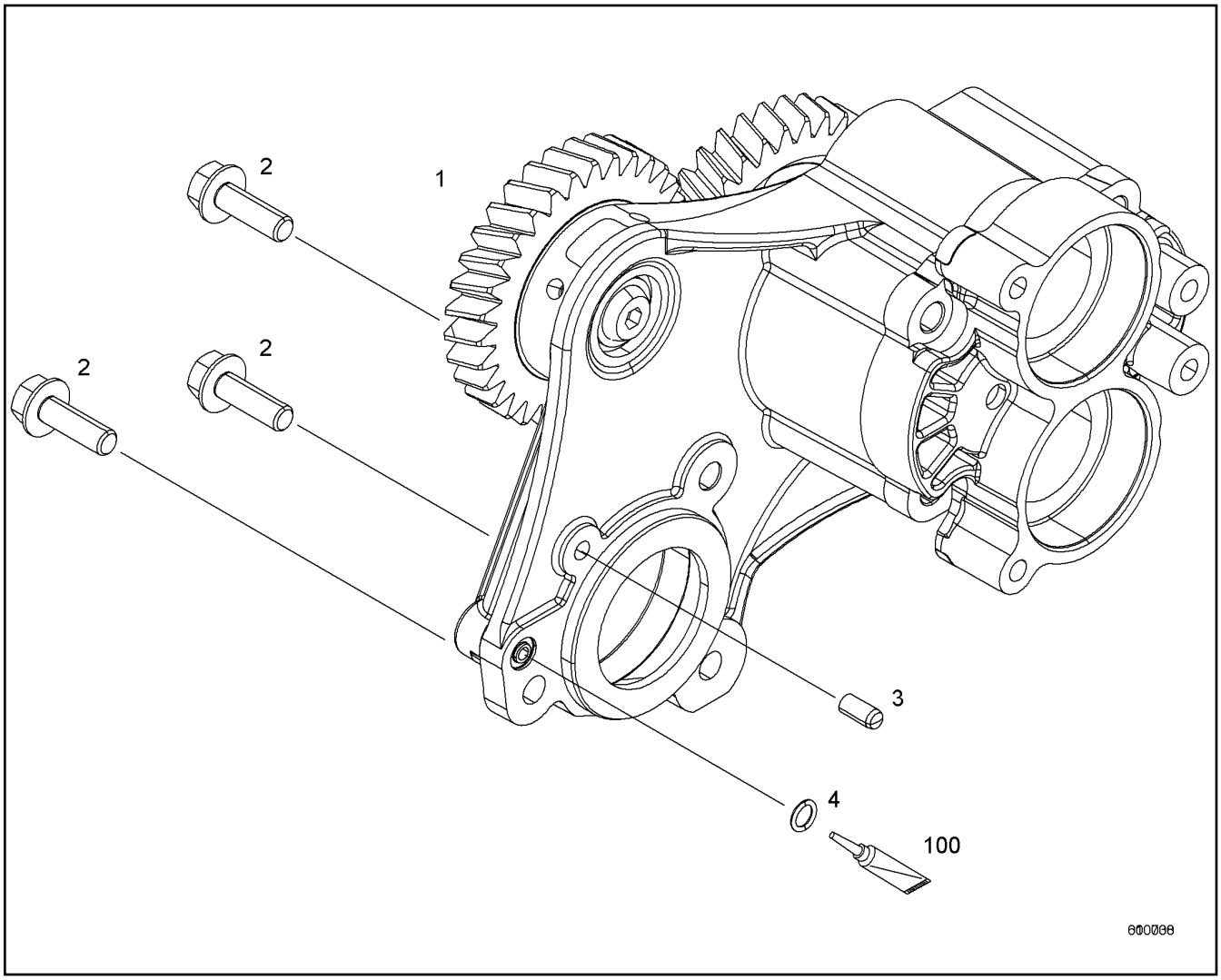

Pos.	Item	Quantity	Description	Bezeichnung	Serie	K
1	10133823	1	SUCTION PUMP PRE-ASS. ⇨ ❑ 247	ABSAUGPUMPE VORM.		
2	11004752	3	HEX SCREW DIN 6921 M8X25 8.8	SECHSKANTSCHRAUBE		
3	4980000	1	PARALLEL PIN ISO 8734 6M6X14 ST	ZYLINDERSTIFT		
4	7381685	1	O-RING	O-RING		
100	10285708	1	GREASE	FETT		

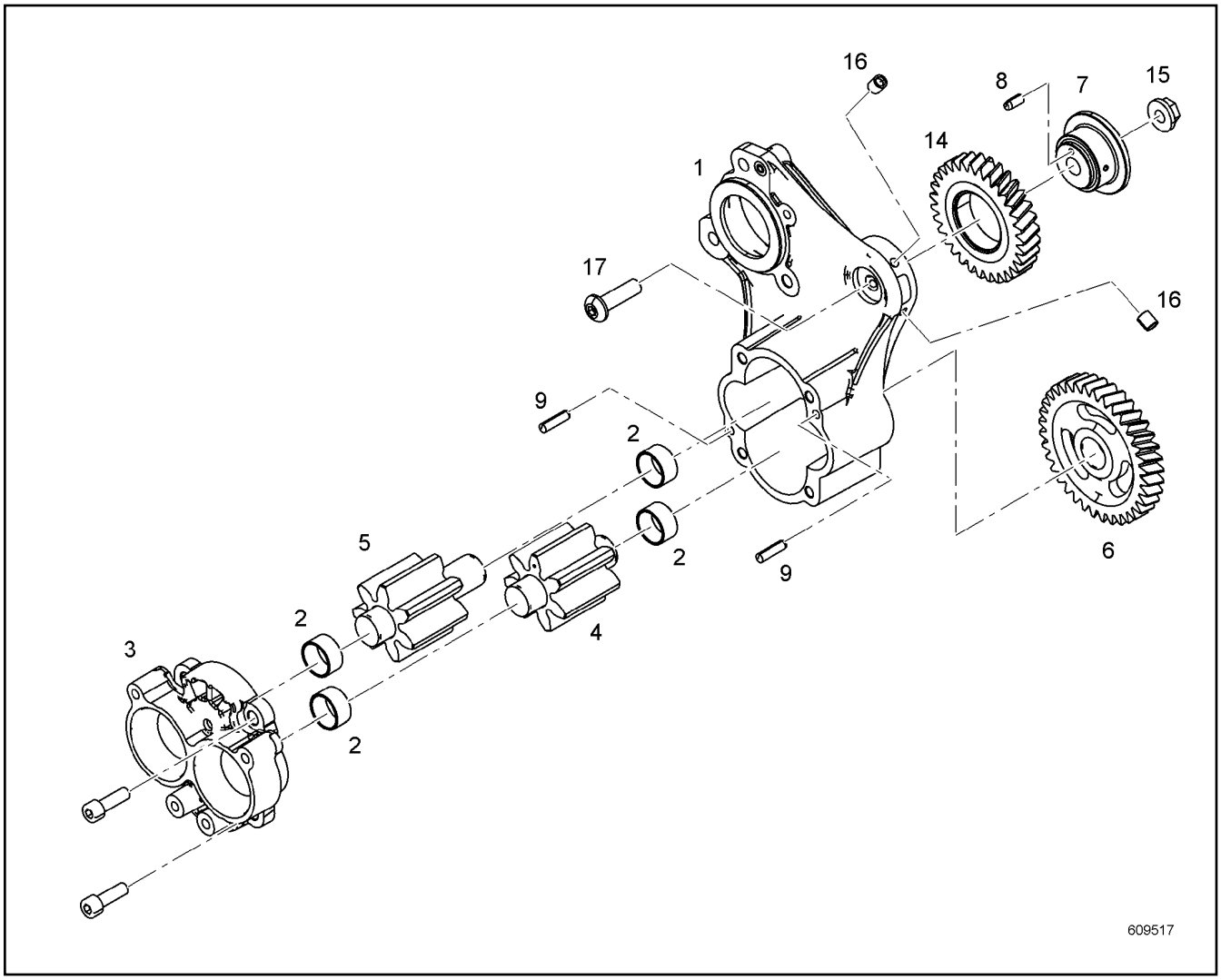

Pos.	Item	Quantity	Description	Bezeichnung	Serie	K
1	10132069	1	PUMP HOUSING	PUMPENGEHAEUSE		
2	10121971	4	BEARING BUSH 22X25X13	LAGERBUCHSE		
3	10132074	1	CONNECTION FLANGE	ANSCHLUSSFLANSCH		
4	10121983	1	GEAR WHEEL	ZAHNRAD		
5	10121982	1	GEAR WHEEL	ZAHNRAD		
6	10133684	1	GEAR WHEEL	ZAHNRAD		
7	10120188	1	HUB	NABE		
8	4901104	1	PARALLEL PIN ISO 8734 4M6X10 ST	ZYLINDERSTIFT		
9	10011777	2	PARALLEL PIN 8M6X24 ST 2 K 50	ZYLINDERSTIFT		
14	9072633	1	INTERMEDIATE GEAR PRE-ASSY.	ZWISCHENRAD VORM.		
15	4980805	1	HEX NUT EN 1661 M10 8	SECHSKANTMUTTER		
16	7380779	2	SEALING PLUG	DICHTSTOPFEN		
17	10112497	1	HEX SCREW DIN 6921 M10X40 8.8	SECHSKANTSCHRAUBE		

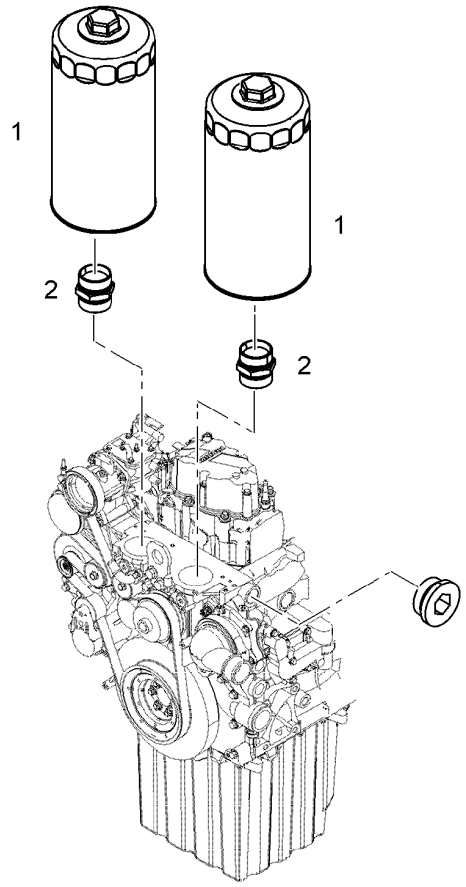

Pos.	Item	Quantity	Description	Bezeichnung	Serie	K
1	10297295	2	EASY-CHANGE FILTER	WECHSELFILTER		
2	9273271	2	FITTINGS	STUTZEN		
105	8655016	1	SCREW LOCKING	SCHRAUBENSICHERUNG		

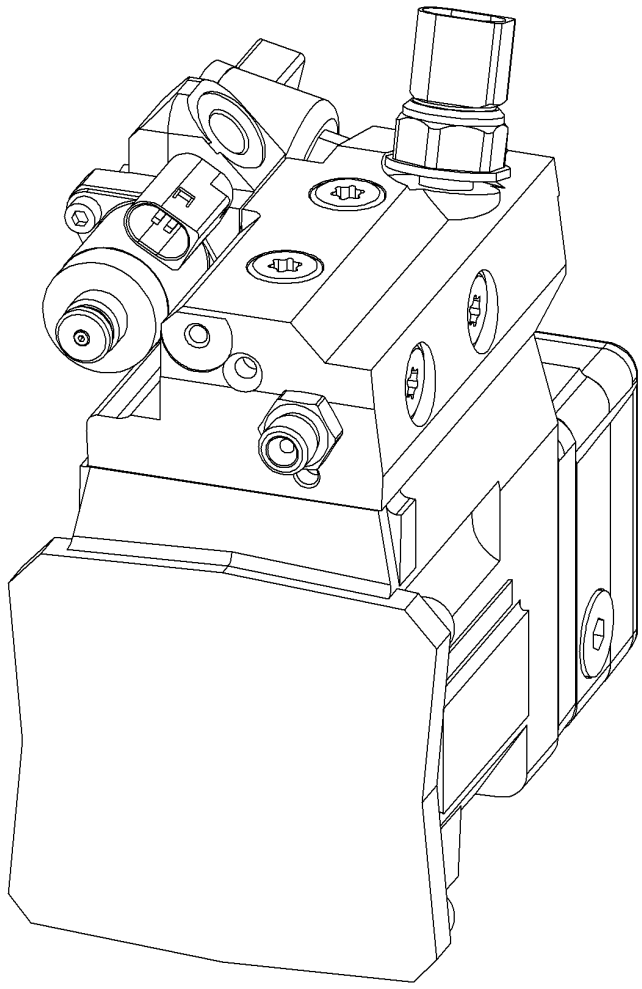

Pos.	Item	Quantity	Description	Bezeichnung	Serie	K
1	10150743	1	RK HIGH PRESSURE PUMP ⇨ ❑ 250	RS HOCHDRUCKPUMPE		
2	4001622	4	SOCKET HEAD SCREW ISO 4762 M10X55 10.9	ZYLINDERSCHRAUBE		
200	10150743	1	RK HIGH PRESSURE PUMP ⇨ ❑ 250	RS HOCHDRUCKPUMPE		
210	10152787	1	SEAL KIT HIGH PRESSURE PUMP ⇨ ❑ 251	DS HOCHDRUCKPUMPE		
220	10149198	1	RK PRE-FEED PUMP	RS VORFOERDERPUMPE		
230	12401396	1	VOLUM CONTROL VALVE	SAUGDROSSELVENTIL		

OHNE BILD
WITHOUT ILLUSTRATION
SANS PLANCHE
SIN FIG.
SEM ILUSTRAÇÃO
БЕЗ ИЗОБРАЖЕНИЯ

600000

Pos.	Item	Quantity	Description	Bezeichnung	Serie	K
2	4001622	4	SOCKET HEAD SCREW ISO 4762 M10X55 10.9	ZYLINDERSCHRAUBE		
4	10152787	1	SEAL KIT HIGH PRESSURE PUMP ⇨ ❑ 251	DS HOCHDRUCKPUMPE		
5	10149198	1	RK PRE-FEED PUMP	RS VORFOERDERPUMPE		

OHNE BILD
WITHOUT ILLUSTRATION
SANS PLANCHE
SIN FIG.
SEM ILUSTRAÇÃO
БЕЗ ИЗОБРАЖЕНИЯ

600000

Pos.	Item	Quantity	Description	Bezeichnung	Serie	K
1	10128671	1	O-RING	O-RING		
2	10128559	1	O-RING	O-RING		
3	10128678	1	O-RING	O-RING		
4	11002988	1	FITTING	VERSCHRAUBUNG		
5	10011865	2	SEALING RING	DICHTRING		
6	10011868	4	SEALING RING	DICHTRING		

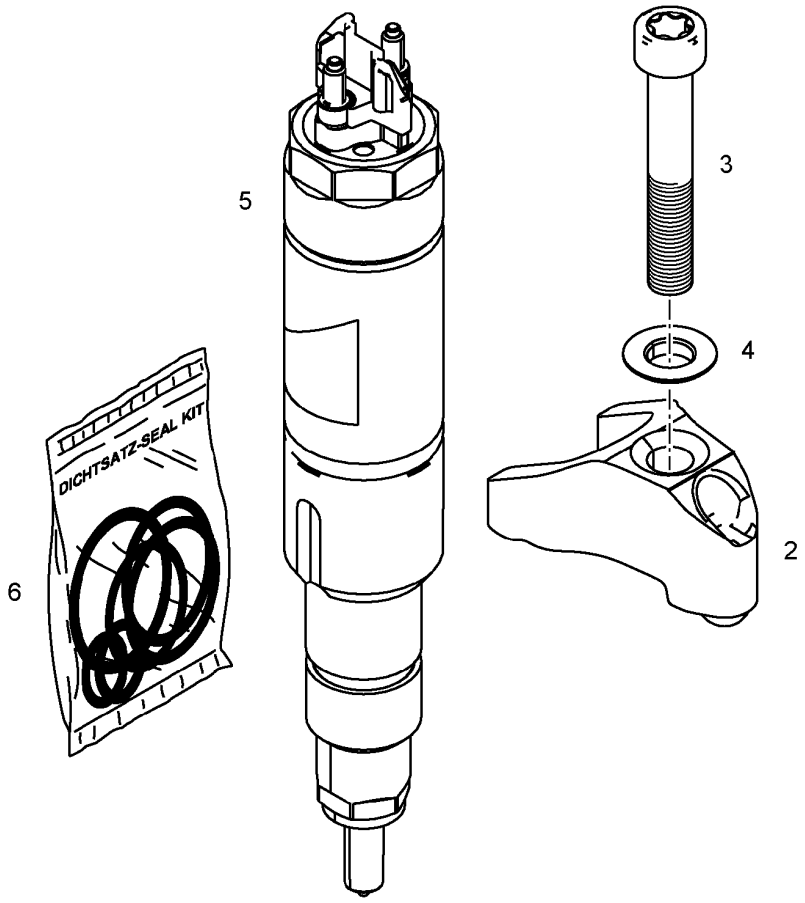

Pos.	Item	Quantity	Description	Bezeichnung	Serie	K
2	11403994	1	JAW	PRATZE		
3	11082116	1	SOCKET HEAD SCREW ISO 14580 M8X50 10.9	ZYLINDERSCHRAUBE		
4	10036473	1	SPHERICAL WASHER DIN 6319 8.4X17X3.2 ST	KUGELSCHEIBE		
200	10152874	1	RK INJECTOR	RS INJEKTOR		
210	10141215	1	SEAL KIT INJECTOR	DS INJEKTOR		

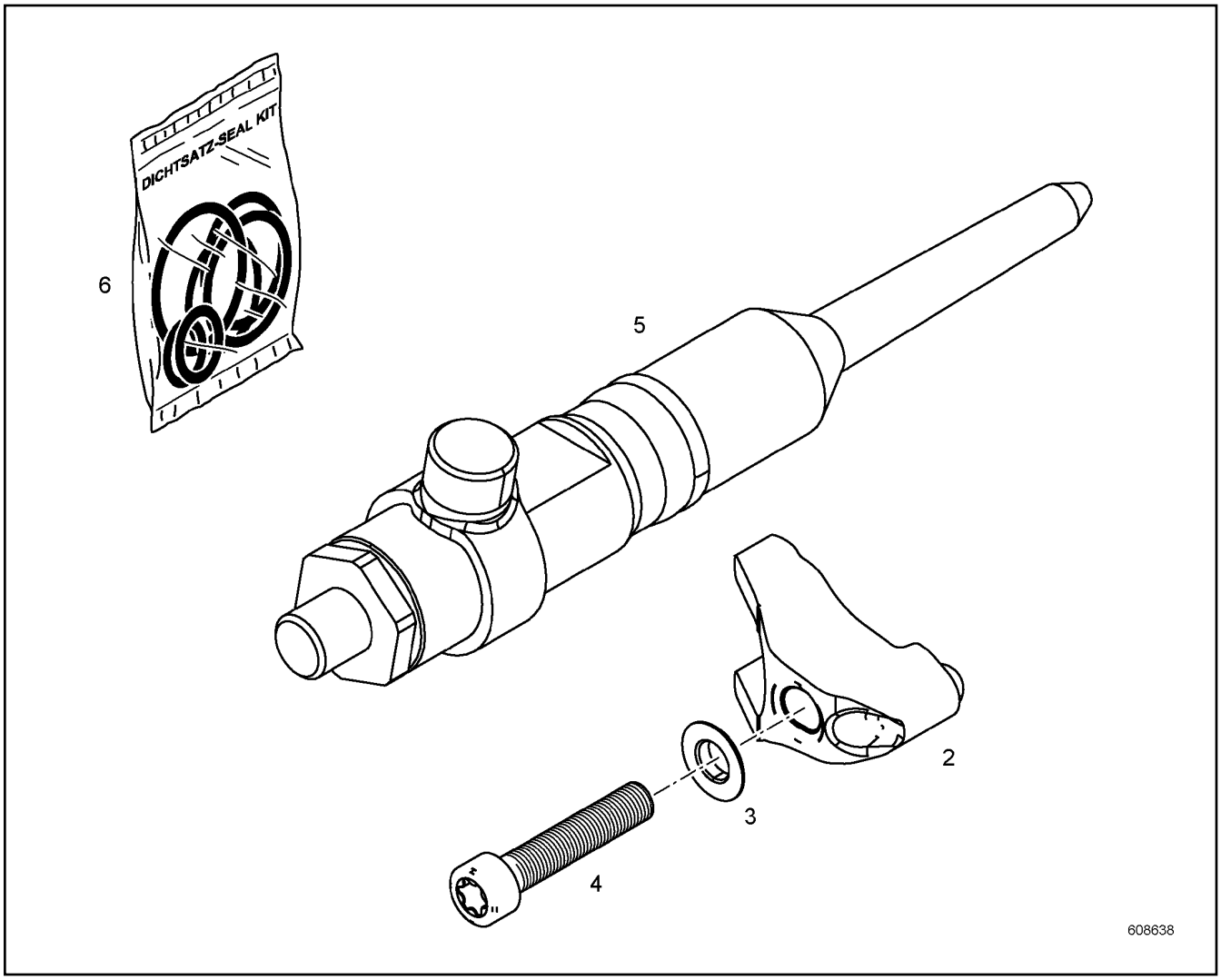

Pos.	Item	Quantity	Description	Bezeichnung	Serie	K
2	10150144	1	JAW	PRATZE		
3	11622278	1	SPHERICAL WASHER DIN 6319 C8.4X17X3.2	KUGELSCHEIBE		
4	11600879	1	SOCKET HEAD SCREW ISO 14579 M8X40 10.9	ZYLINDERSCHRAUBE		
200	10141140	1	RK HIGH PRESSURE CONNECTOR ⇨ ❑ 254	RS DRUCKROHRSTUTZEN		
210	10141216	1	SEAL KIT HIGH PRESS.CONNECTOR	DS DRUCKROHRSTUTZEN		

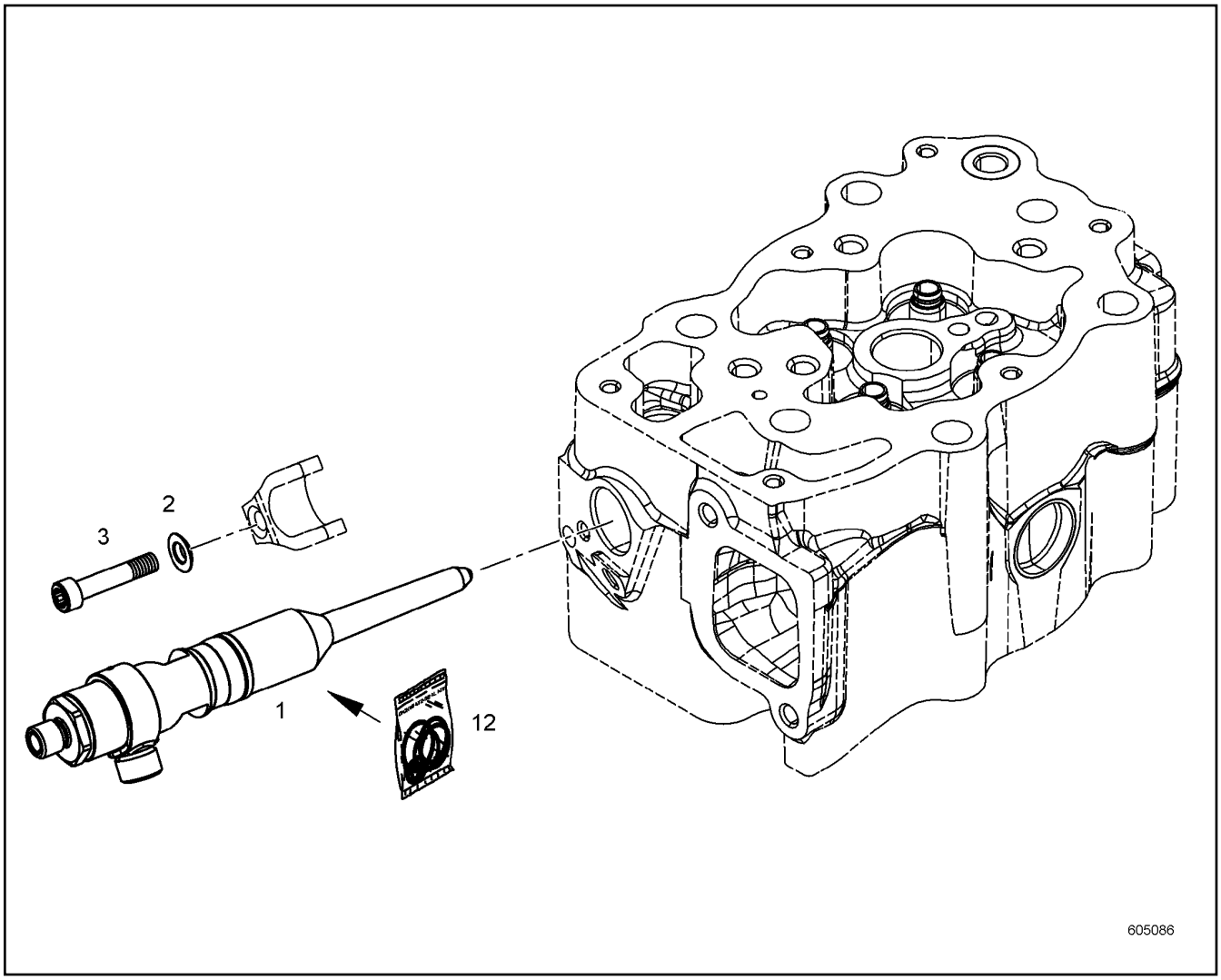

Pos.	Item	Quantity	Description	Bezeichnung	Serie	K
1	10135080	1	HIGH PRESSURE CONNECTOR ⇨ ❑ 255	DRUCKROHRSTUTZEN		
2	10036473	1	SPHERICAL WASHER DIN 6319 8.4X17X3.2 ST	KUGELSCHEIBE		
3	11600879	1	SOCKET HEAD SCREW ISO 14579 M8X40 10.9	ZYLINDERSCHRAUBE		
12	10141216	1	SEAL KIT HIGH PRESS.CONNECTOR	DS DRUCKROHRSTUTZEN		

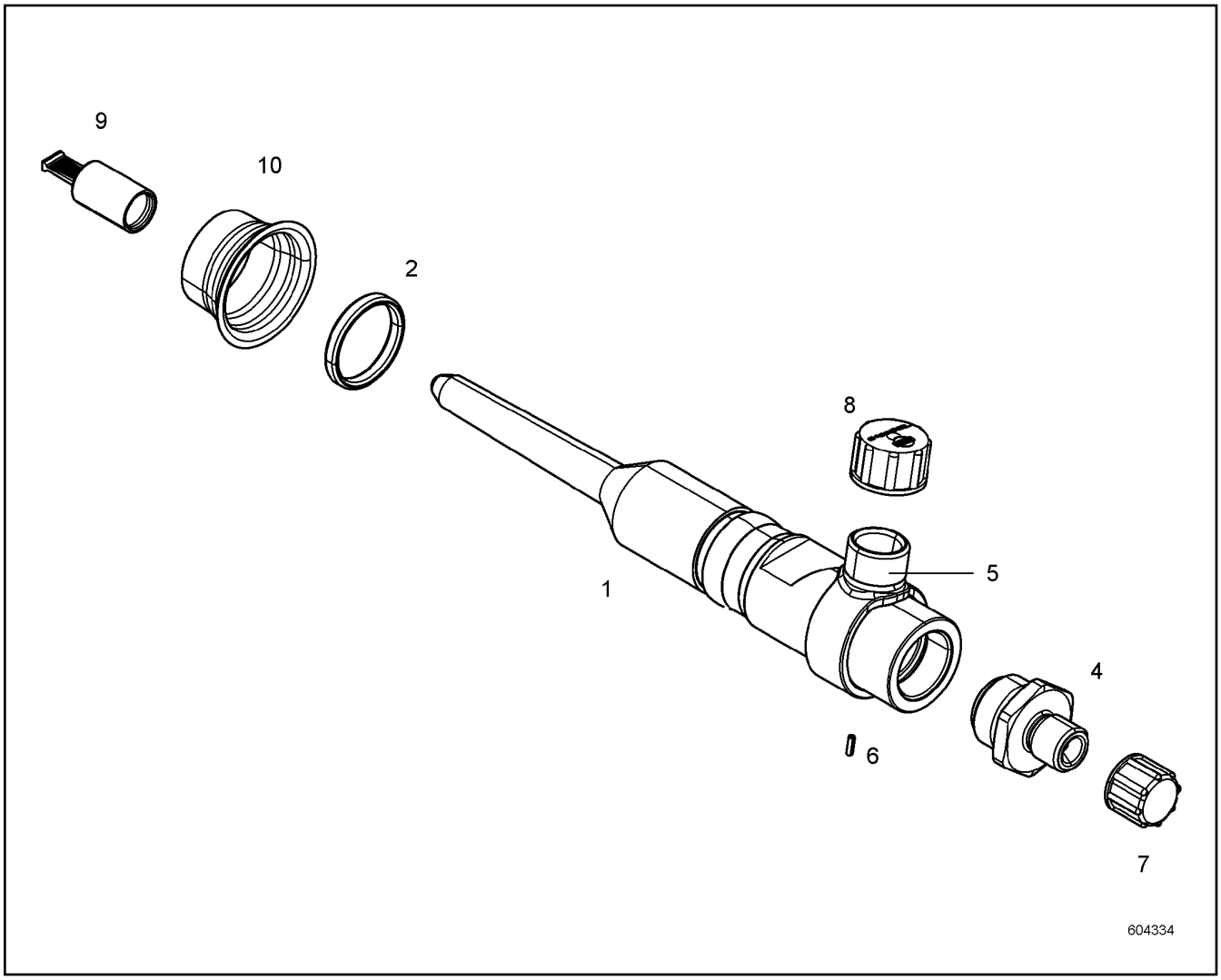

Pos.	Item	Quantity	Description	Bezeichnung	Serie	K
1	10131081	1	HIGH PRESSURE CONNECTOR	DRUCKROHRSTUTZEN		
2	10130757	1	O-RING	O-RING		
4	10128100	1	CONNECTION STUB	ANSCHLUSSSTUTZEN		
5	10129179	1	CLAMP	SCHELLE		
6	11001743	1	DOWEL PIN ISO 8752 2X6 ST	SPANNSTIFT		
7	10129382	1	COVER LID	ABDECKKAPPE		
8	779009008	1	SCREW CAP	SCHRAUBKAPPE		
9	11694640	1	HANDLE CAP	GRIFFKAPPE		
10	10129385	1	COVER LID	ABDECKKAPPE		

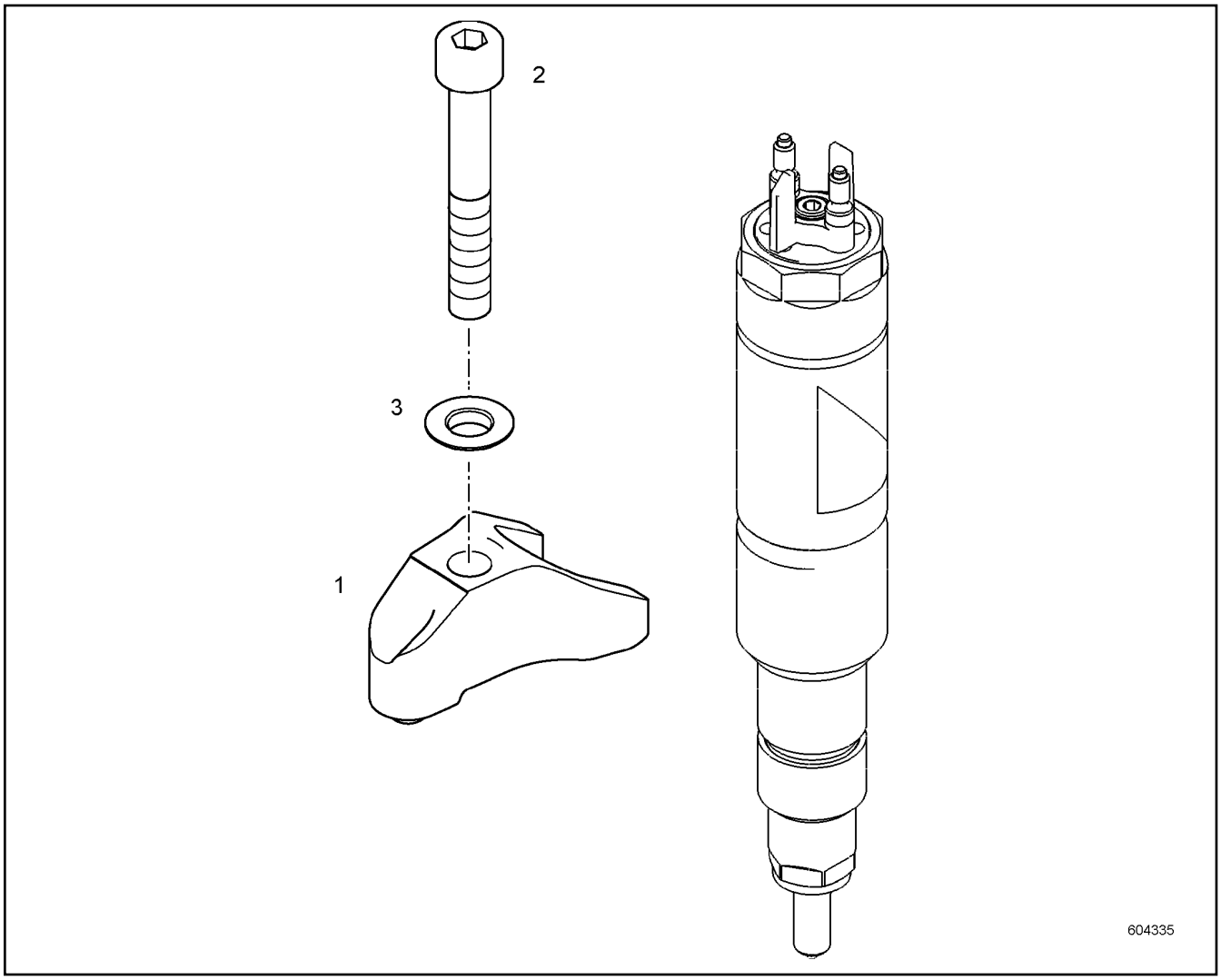

Pos.	Item	Quantity	Description	Bezeichnung	Serie	K
1	11403994	1	JAW	PRATZE		
2	11082116	1	SOCKET HEAD SCREW ISO 14580 M8X50 10.9	ZYLINDERSCHRAUBE		
3	10036473	1	SPHERICAL WASHER DIN 6319 8.4X17X3.2 ST	KUGELSCHEIBE		

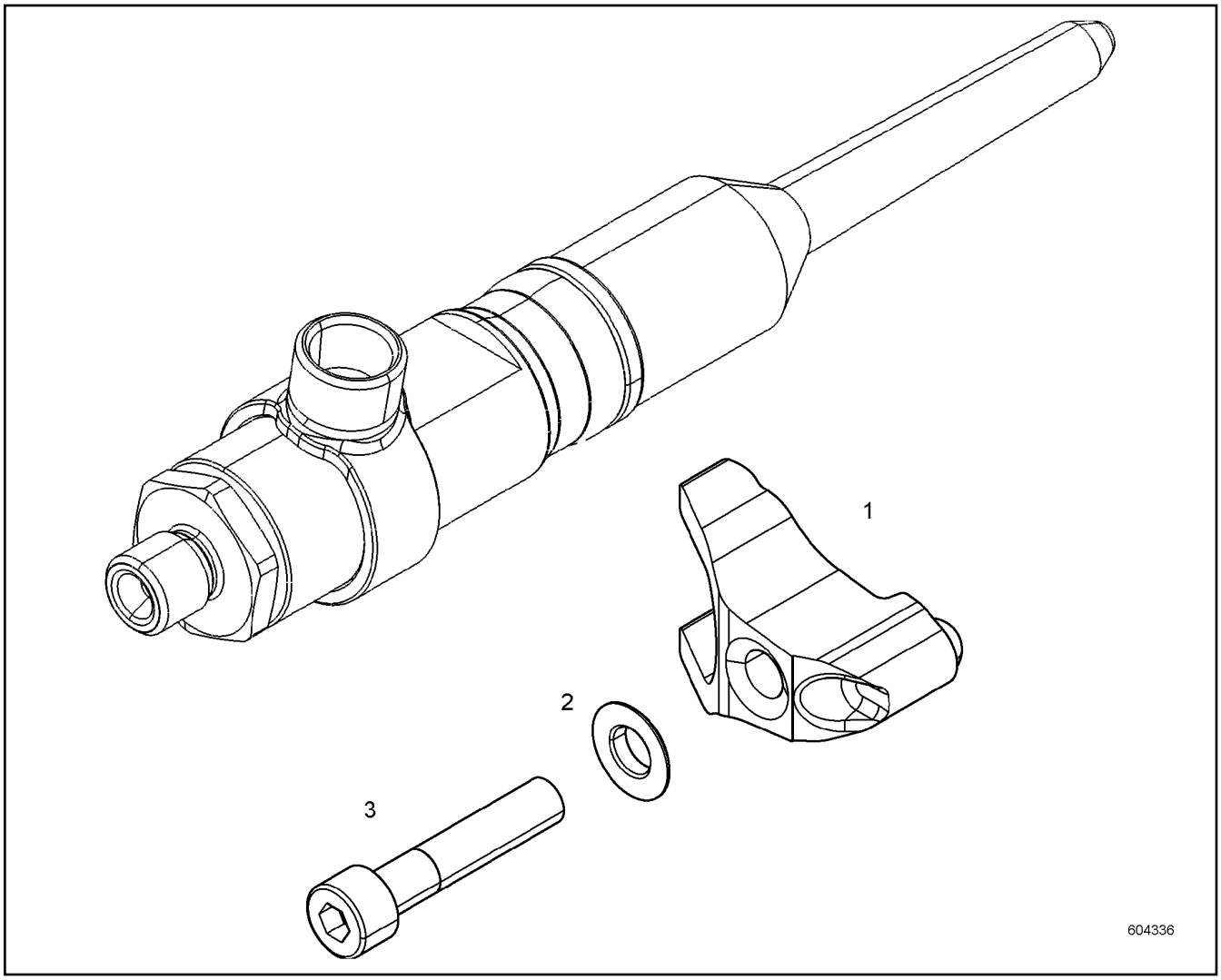

Pos.	Item	Quantity	Description	Bezeichnung	Serie	K
1	10146415	1	JAW	PRATZE		
2	11622278	1	SPHERICAL WASHER DIN 6319 C8.4X17X3.2	KUGELSCHEIBE		
3	11600879	1	SOCKET HEAD SCREW ISO 14579 M8X40 10.9	ZYLINDERSCHRAUBE		

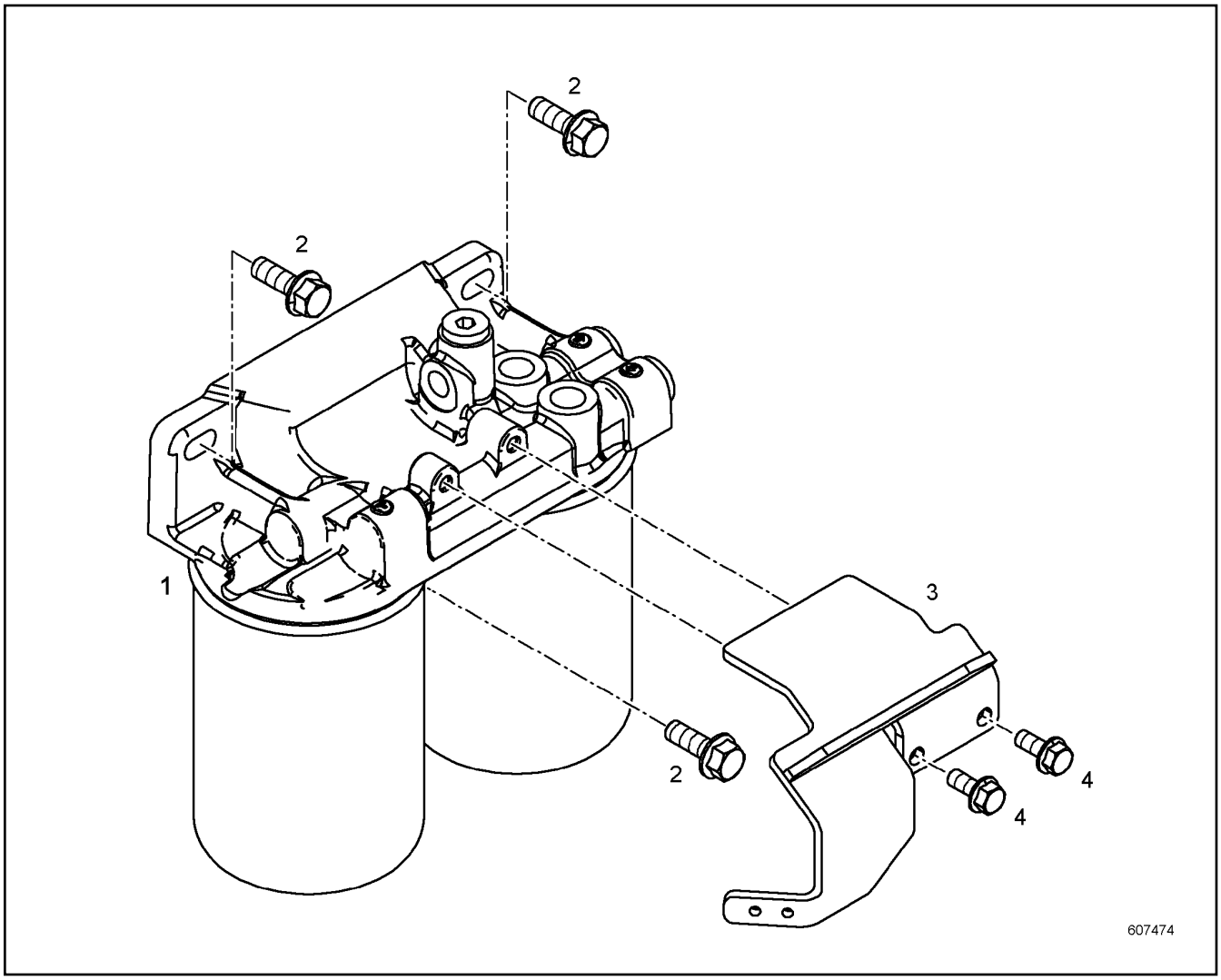

Pos.	Item	Quantity	Description	Bezeichnung	Serie	K
1	10146753	1	FUEL FINE FILTER ⇨ ❑ 259	KRAFTSTOFFFEINFILTER		
2	10333464	3	HEX SCREW DIN 6921 M10X35 8.8	SECHSKANTSCHRAUBE		
3	10138079	1	HOLDER	HALTER		
4	10016906	2	HEX SCREW EN 1665 M8X20 8.8	SECHSKANTSCHRAUBE		

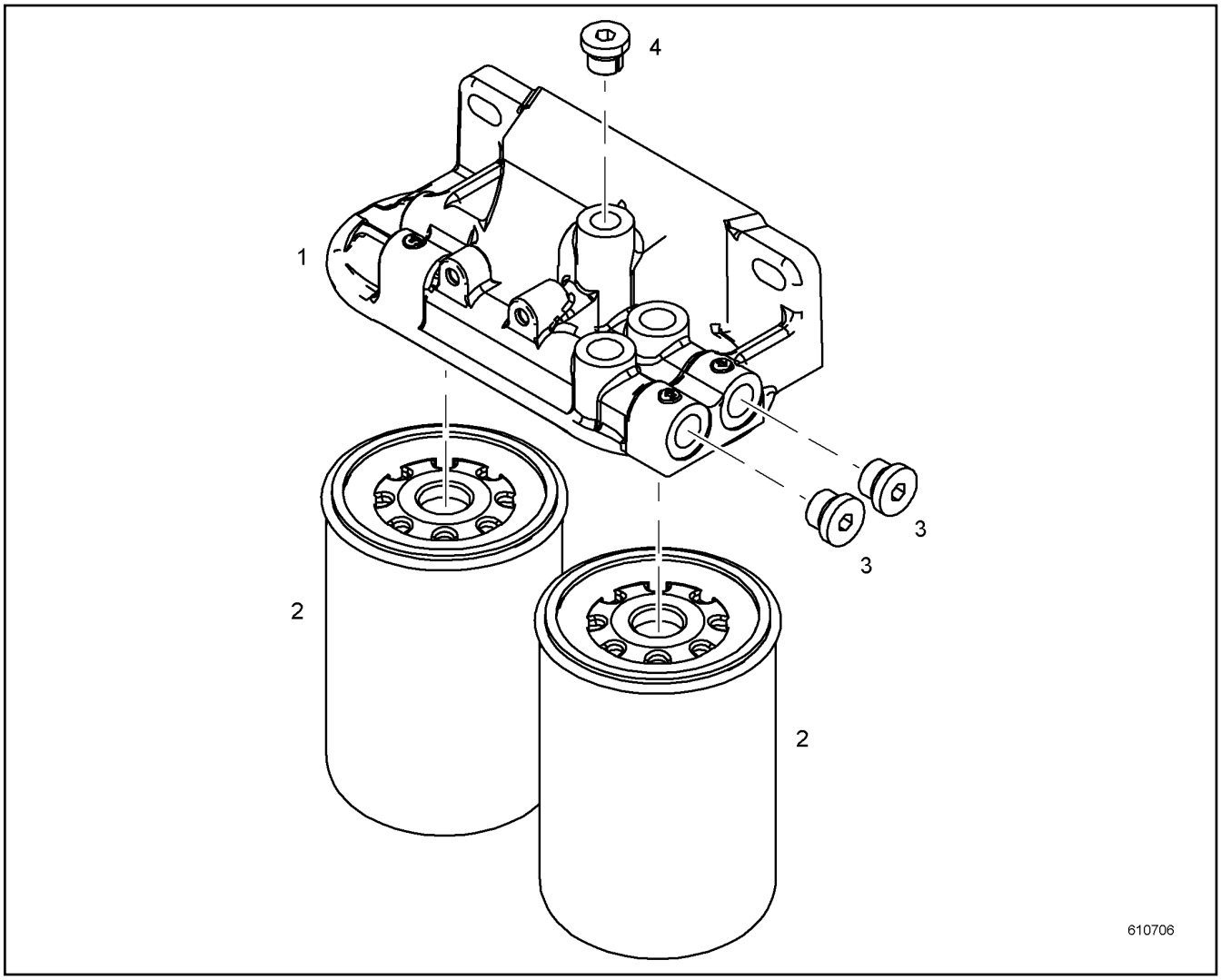

Pos.	Item	Quantity	Description	Bezeichnung	Serie	K
1	12455374	1	FILTER BRACKET	FILTERKONSOLE		
2	10429946	2	FUEL FINE FILTER	KRAFTSTOFFFEINFILTER		
3	7380688	2	SCREW PLUG	VERSCHLUSSSCHRAUBE		
4	10116078	1	SCREW PLUG	VERSCHLUSSSCHRAUBE		

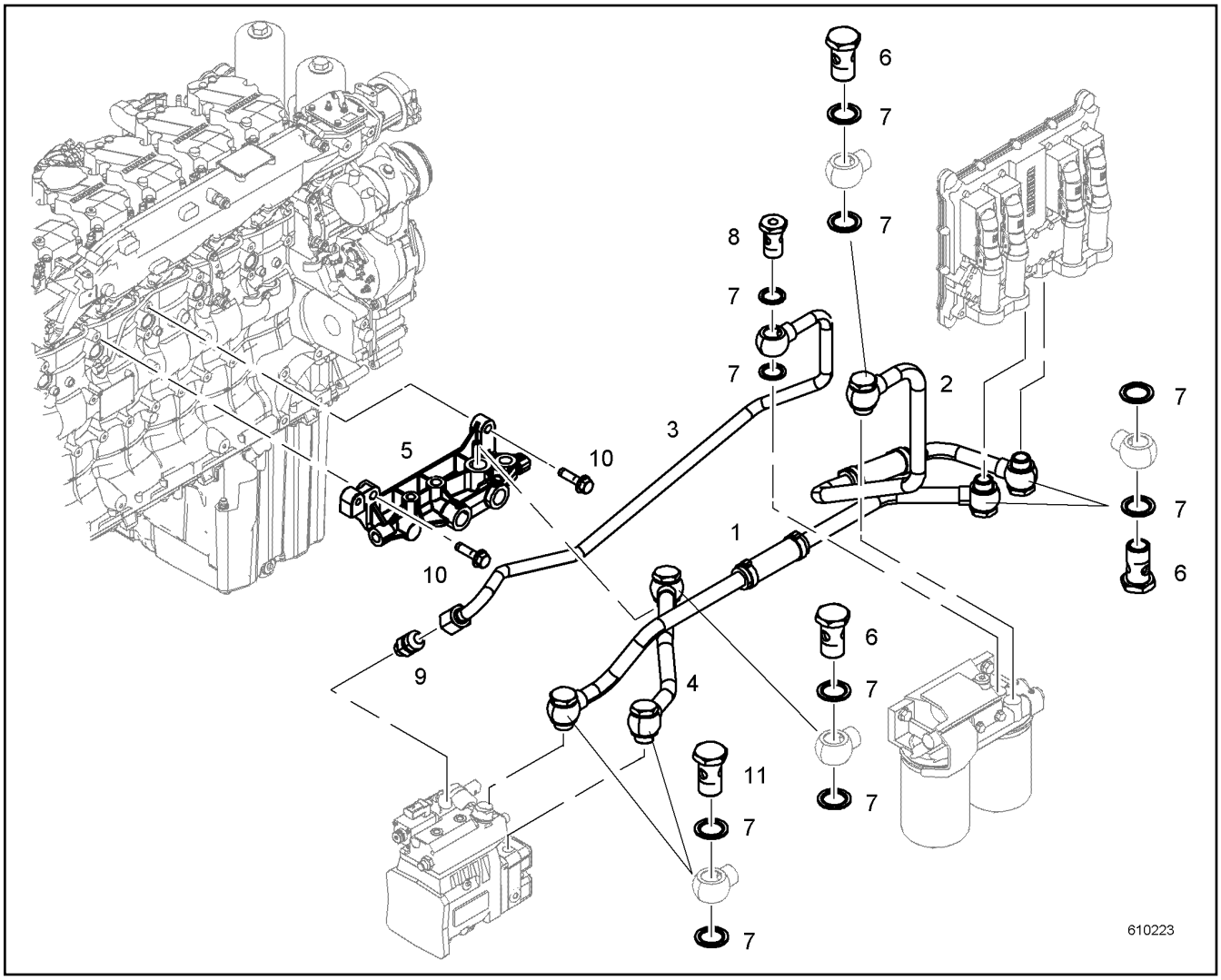

Pos.	Item	Quantity	Description	Bezeichnung	Serie	K
1	10141988	1	PIPELINE	ROHRLEITUNG		
2	10141989	1	PIPELINE	ROHRLEITUNG		
3	10142080	1	PIPELINE	ROHRLEITUNG		
4	10141986	1	PIPELINE	ROHRLEITUNG		
5	10151825	1	DISTRIBUTOR BLOCK	VERTEILERBLOCK		
6	4981226	4	HOLLOW SCREW DIN 7643 15	HOHLSCHRAUBE		
7	10011868	14	SEALING RING	DICHTRING		
8	10129819	1	HOLLOW SCREW DIN 7643 15X3	HOHLSCHRAUBE		
9	11002988	1	FITTING	VERSCHRAUBUNG		
10	10007782	2	HEX SCREW EN 1665 M8X30 8.8	SECHSKANTSCHRAUBE		
11	11443132	2	HOLLOW SCREW	HOHLSCHRAUBE		

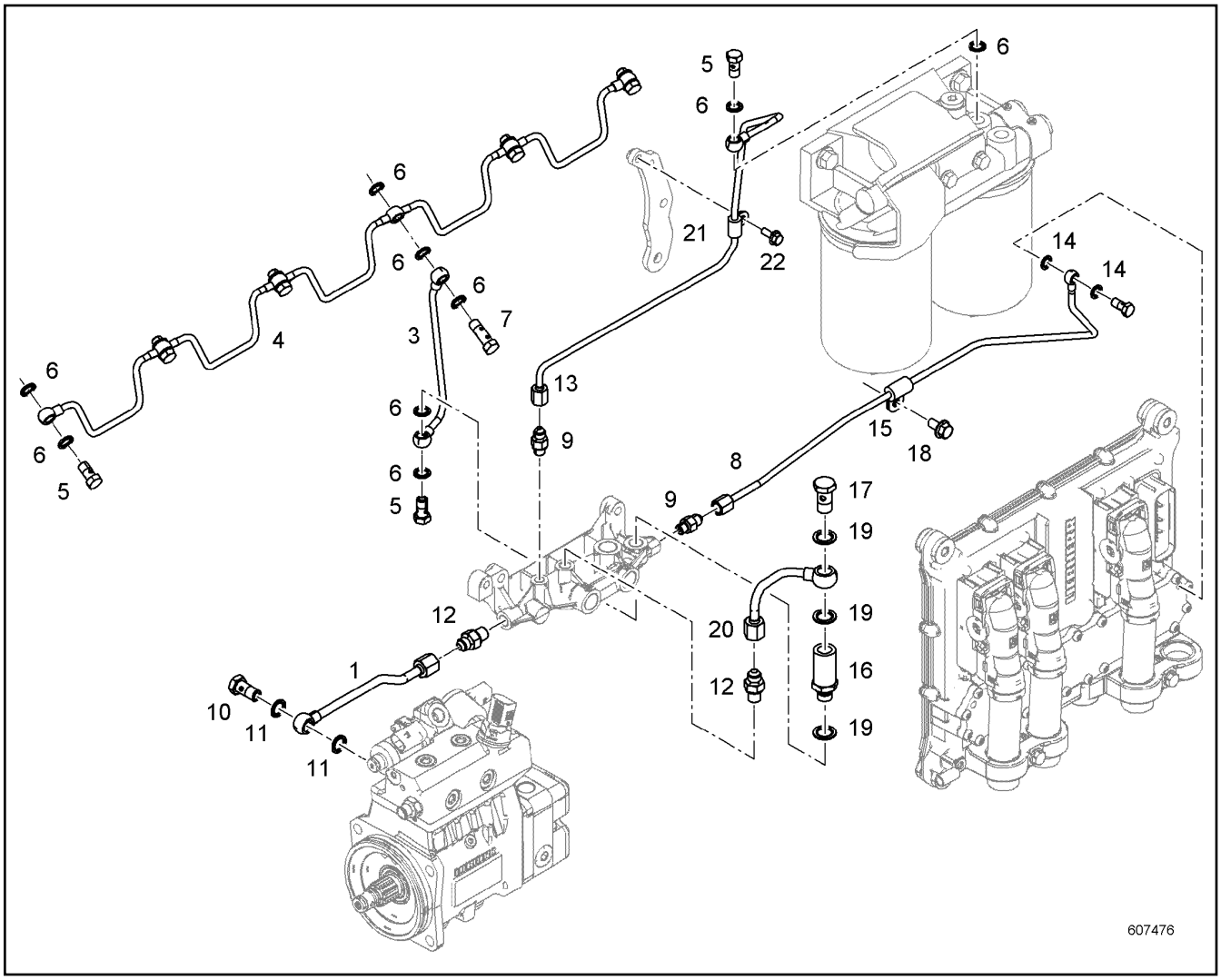

Pos.	Item	Quantity	Description	Bezeichnung	Serie	K
1	10143235	1	PIPELINE	ROHRLEITUNG		
3	10132170	1	PIPELINE	ROHRLEITUNG		
4	9076621	1	FUEL LINE	KRAFTSTOFFLEITUNG		
5	4079160	7	HOLLOW SCREW DIN 7643 M10X1	HOHLSCHRAUBE		
6	10011864	17	SEALING RING	DICHTRING		
7	10014864	1	DOUBLE BANJO BOLT 6X6 9SMNPB28K	DOPPELHOHLSCHRAUBE		
8	10142006	1	PIPELINE	ROHRLEITUNG		
9	10813933	2	FITTING	VERSCHRAUBUNG		
10	4980664	1	HOLLOW SCREW DIN 7643 8X3	HOHLSCHRAUBE		
11	10011865	2	SEALING RING	DICHTRING		
12	10813935	2	FITTING	VERSCHRAUBUNG		
13	10145889	1	PIPELINE	ROHRLEITUNG		
14	10011871	2	SEALING RING	DICHTRING		
15	7382088	1	CLAMP	SCHELLE		
16	10132935	1	INTERMEDIATE PART	ZWISCHENSTUECK		
17	4079240	1	HOLLOW SCREW DIN 7643 10X3	HOHLSCHRAUBE		
18	10005078	1	HEX SCREW EN 1665 M8X16 8.8	SECHSKANTSCHRAUBE		
19	10011866	3	SEALING RING	DICHTRING		
20	10132180	1	PIPELINE	ROHRLEITUNG		
21	7381292	1	CLAMP	SCHELLE		
22	407350208	1	HEX SCREW EN 1665 M6X16 8.8	SECHSKANTSCHRAUBE		

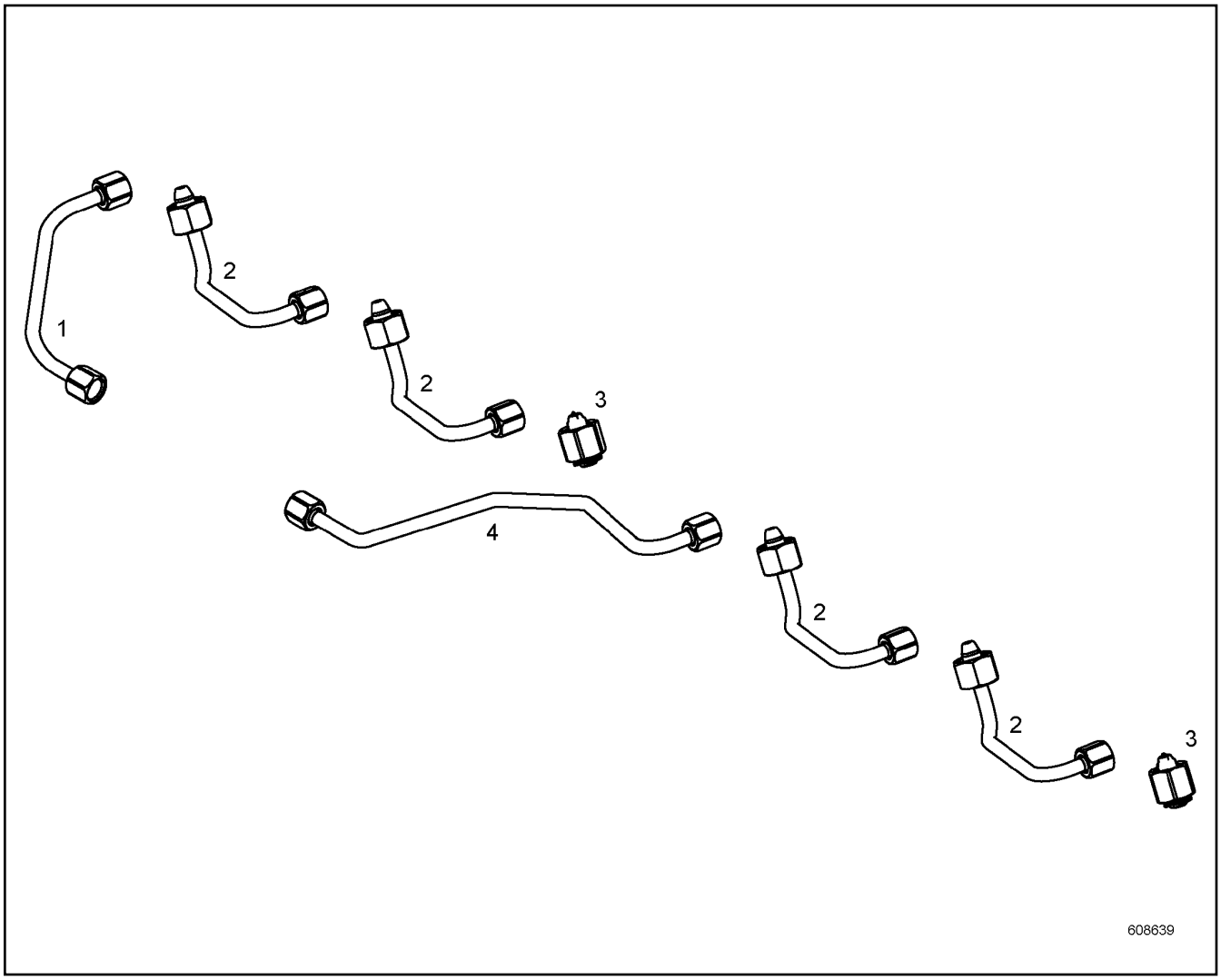

Pos.	Item	Quantity	Description	Bezeichnung	Serie	K
1	10143829	1	INJECTION LINE	EINSPRITZLEITUNG		
2	10143827	4	INJECTION LINE	EINSPRITZLEITUNG		
3	11389287	2	SEALING PLUG	DICHTSTOPFEN		
4	10143831	1	INJECTION LINE	EINSPRITZLEITUNG		

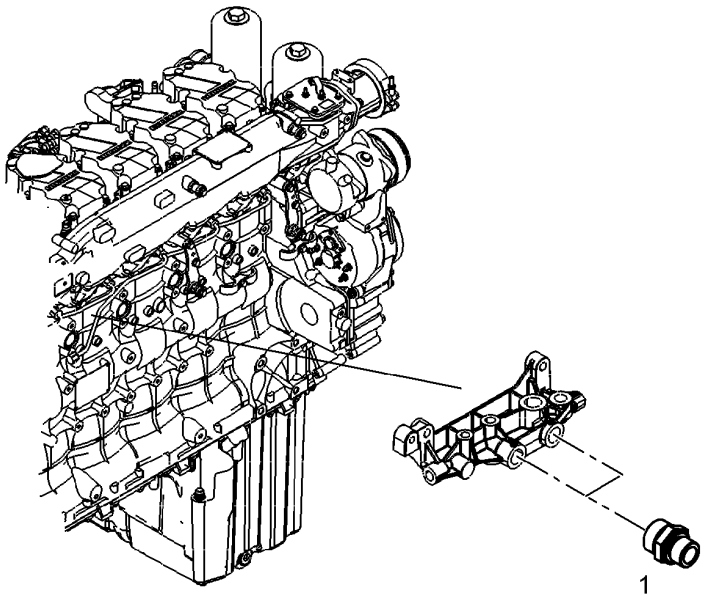

607413

Pos.	Item	Quantity	Description	Bezeichnung	Serie	K
1	4981232	2	FITTING	VERSCHRAUBUNG		

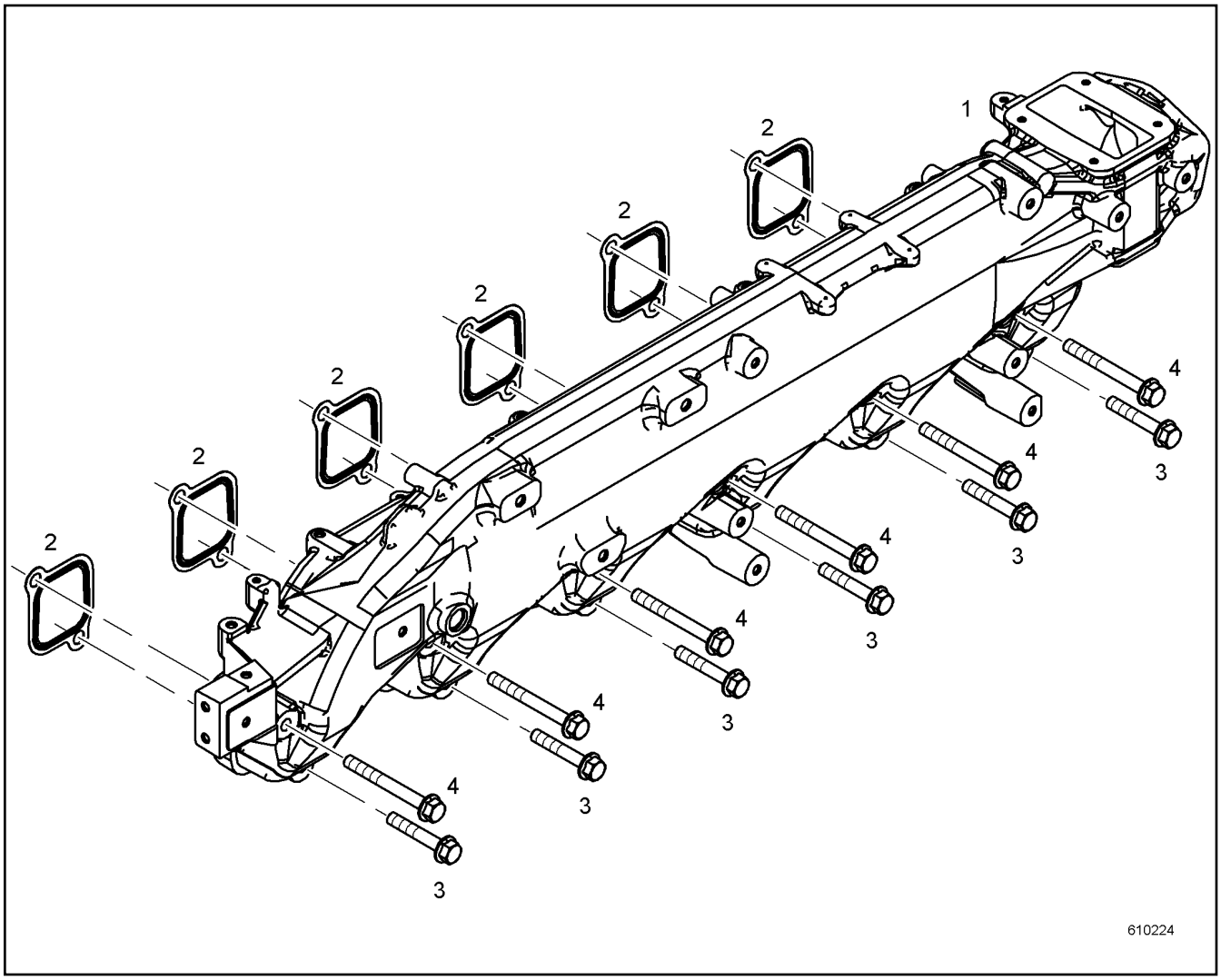

Pos.	Item	Quantity	Description	Bezeichnung	Serie	K
1	11415782	1	AIR SUCTION PIPE	LUFTANSAUGROHR		
2	10118556	6	SEAL	DICHTUNG		
3	10014638	6	HEX SCREW EN 1665 M10X60 8.8	SECHSKANTSCHRAUBE		
4	10489016	6	HEX SCREW DIN 6921 M10X90 8.8	SECHSKANTSCHRAUBE		

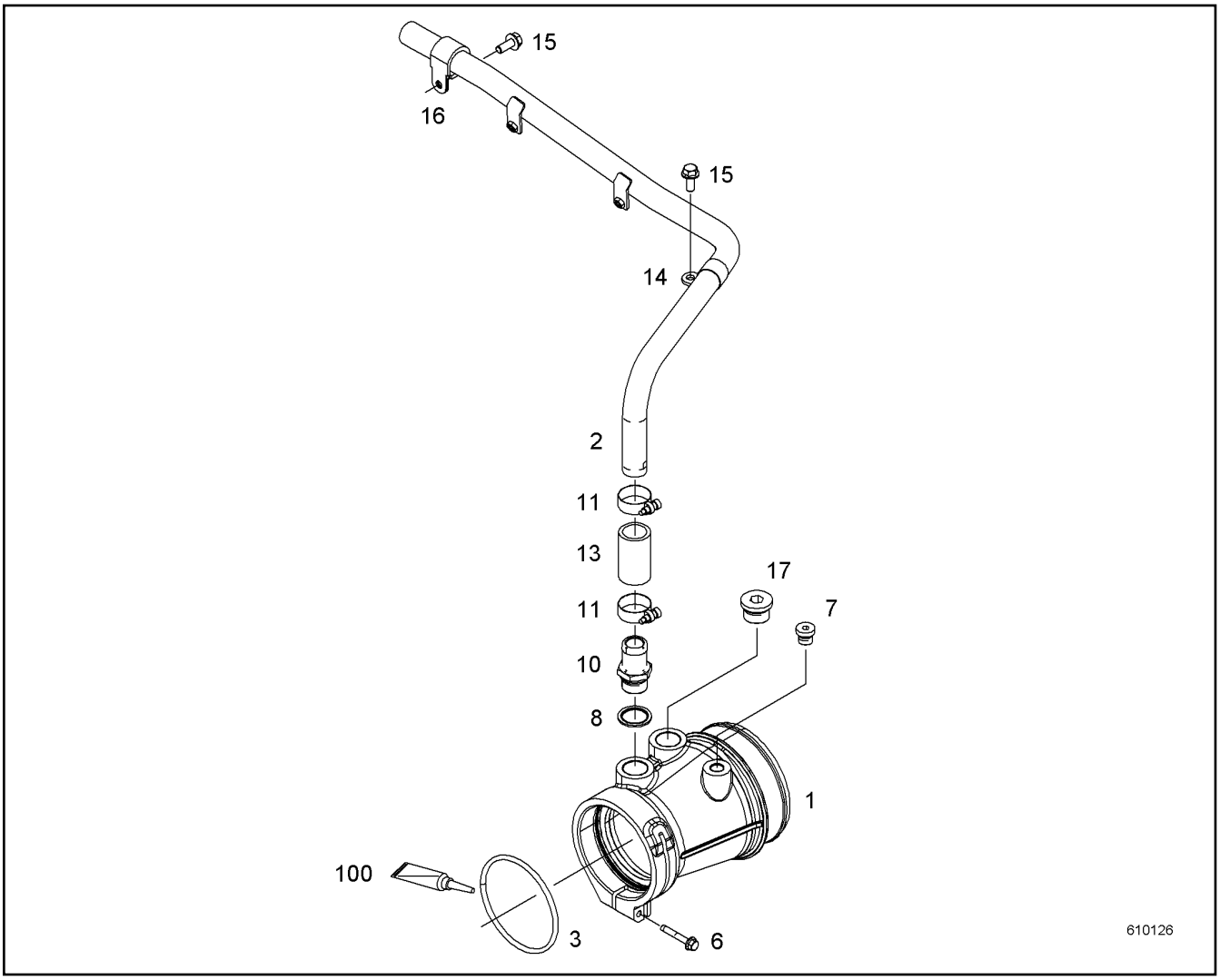

Pos.	Item	Quantity	Description	Bezeichnung	Serie	K
1	11444998	1	INTAKE STACK	ANSAUGSTUTZEN		
2	10147368	1	PIPELINE	ROHRLEITUNG		
3	11008055	1	O-RING	O-RING		
6	11656240	1	HEX SCREW DIN 6921 M6X40 8.8	SECHSKANTSCHRAUBE		
7	7380566	1	SCREW PLUG	VERSCHLUSSSCHRAUBE		
8	10011870	1	SEALING RING	DICHTRING		
10	10121893	1	HOSE NIPPLE	SCHLAUCHNIPPEL		
11	4900778	2	HOSE CLAMP	SCHLAUCHSCHELLE		
13	9271340	1	RUBBER CONNECTION	GUMMIMUFFE		
14	7381631	1	CLAMP	SCHELLE		
15	10016906	2	HEX SCREW EN 1665 M8X20 8.8	SECHSKANTSCHRAUBE		
16	7381631	1	CLAMP	SCHELLE		
17	7381457	1	SCREW PLUG	VERSCHLUSSSCHRAUBE		
100	10285708	1	GREASE	FETT		

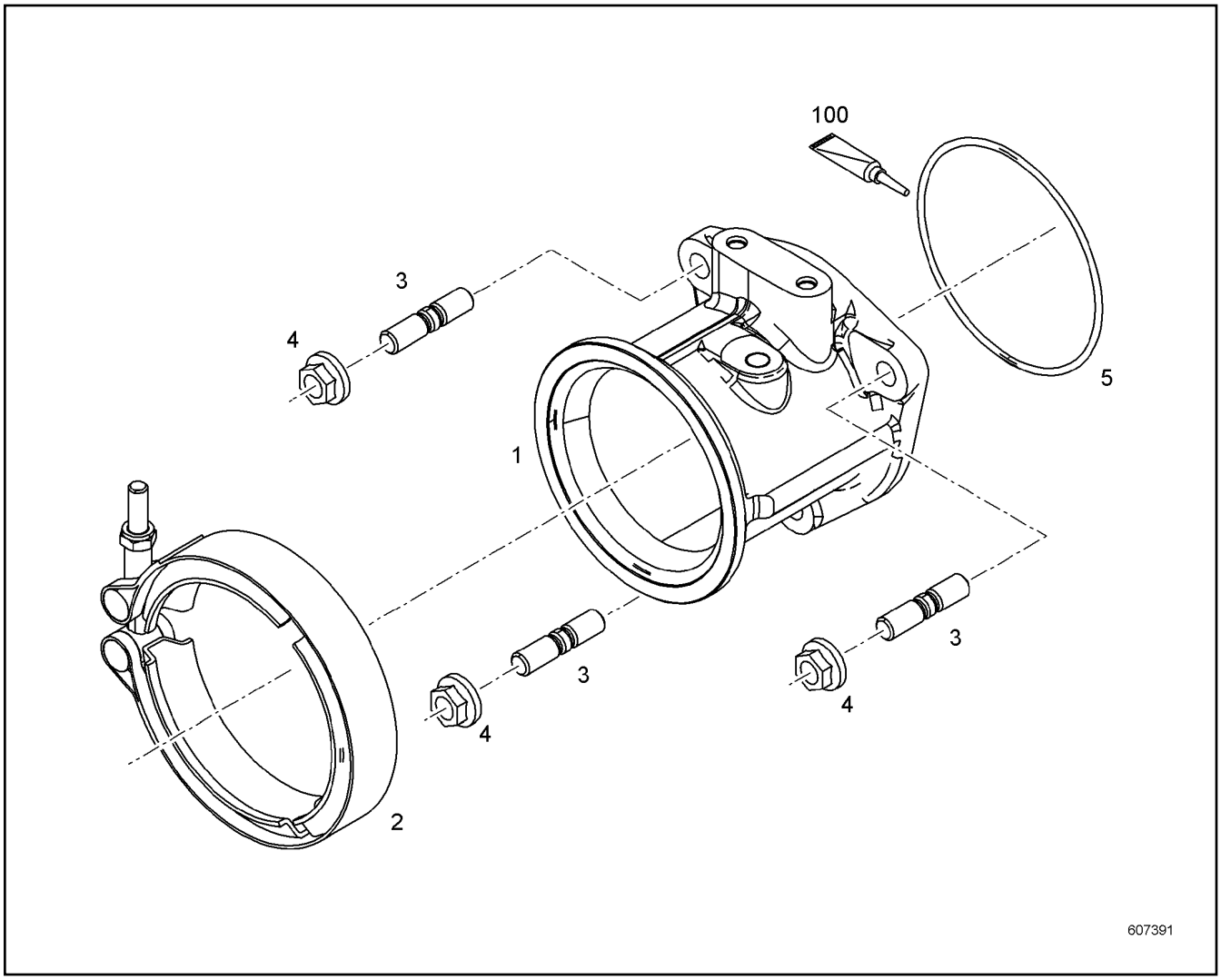

Pos.	Item	Quantity	Description	Bezeichnung	Serie	K
1	10141549	1	CONNECTING LINE	VERBINDUNGSLEITUNG		
2	10127984	1	RETAINER CLIP	SPANNSCHELLE		
3	10489376	3	DOUBLE-ENDED STUD DIN 835 M10X25 8.8	STIFTSCHRAUBE		
4	4980805	3	HEX NUT EN 1661 M10 8	SECHSKANTMUTTER		
5	7380605	1	O-RING	O-RING		
100	10285708	1	GREASE	FETT		

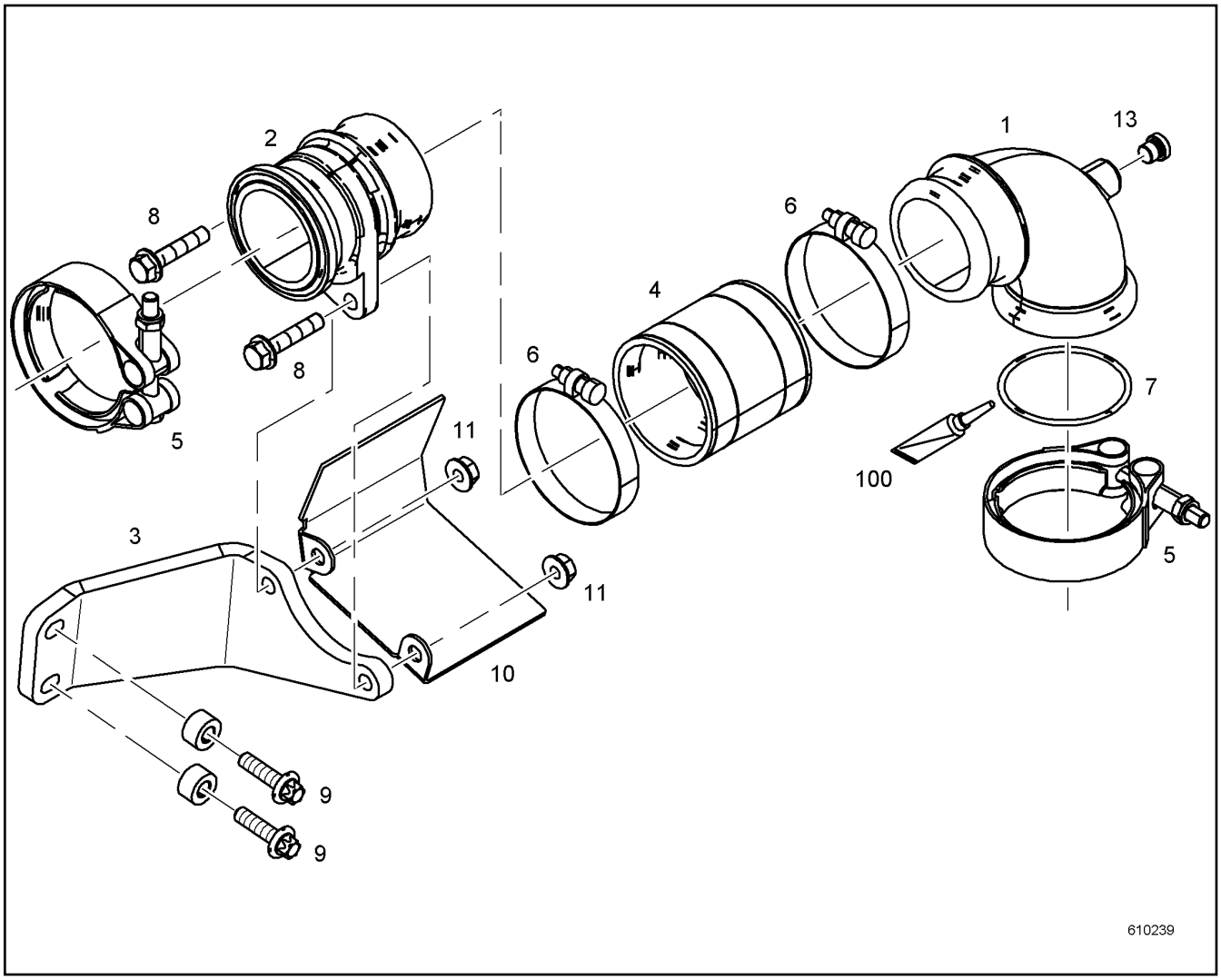

Pos.	Item	Quantity	Description	Bezeichnung	Serie	K
1	10143612	1	CHARGE AIR LINE	LADELUFTLEITUNG		
2	10143614	1	CHARGE AIR LINE	LADELUFTLEITUNG		
3	11404751	1	CONSOLE	KONSOLE		
4	10129904	1	RUBBER CONNECTION	GUMMIMUFFE		
5	10124798	2	RETAINER CLIP	SPANNSCHELLE		
6	5004929	2	HOSE CLAMP	SCHLAUCHSCHELLE		
7	7380970	1	O-RING	O-RING		
8	10440788	2	HEX SCREW EN 1665 M8X40 8.8	SECHSKANTSCHRAUBE		
9	10125702	2	HEXALOBULAR HEAD SCREW M8X30 21CRM	SECHSRUNDSCHRAUBE		
10	12428325	1	HEAT PROTECTION SHEET	HITZESCHUTZBLECH		
11	10424333	2	HEX NUT EN 1661 M8 8	SECHSKANTMUTTER		
13	7381638	1	SCREW PLUG	VERSCHLUSSSCHRAUBE		
100	10285708	1	GREASE	FETT		

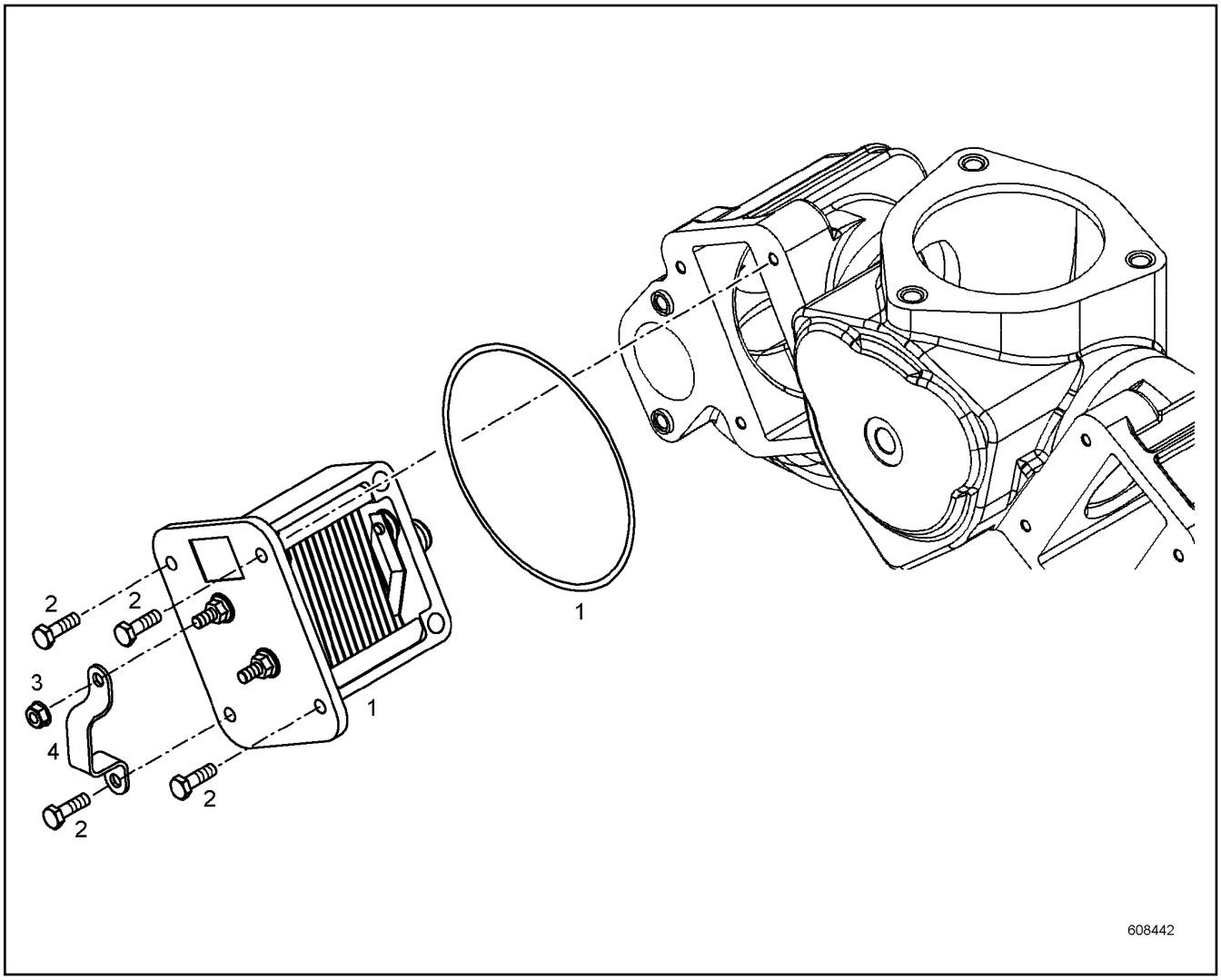

Pos.	Item	Quantity	Description	Bezeichnung	Serie	K
1	10299988	1	HEATING FLANGE PRE.ASS. ⇨ ❑ 269	HEIZFLANSCH VORM.		
2	10018711	4	HEX SCREW DIN 6921 M6X20 8.8	SECHSKANTSCHRAUBE		
3	10003366	1	RIBBED HEX NUT M6 10	SECHSKANTRIPPENMUTTER		
4	9080911	1	EARTH CONNECTION PLATE	MASSEVERBINDUNGSBLECH		

OHNE BILD
WITHOUT ILLUSTRATION
SANS PLANCHE
SIN FIG.
SEM ILUSTRAÇÃO
БЕЗ ИЗОБРАЖЕНИЯ

600000

Pos.	Item	Quantity	Description	Bezeichnung	Serie	K
1	10116255	1	O-RING	O-RING		
2	7380935	1	O-RING	O-RING		

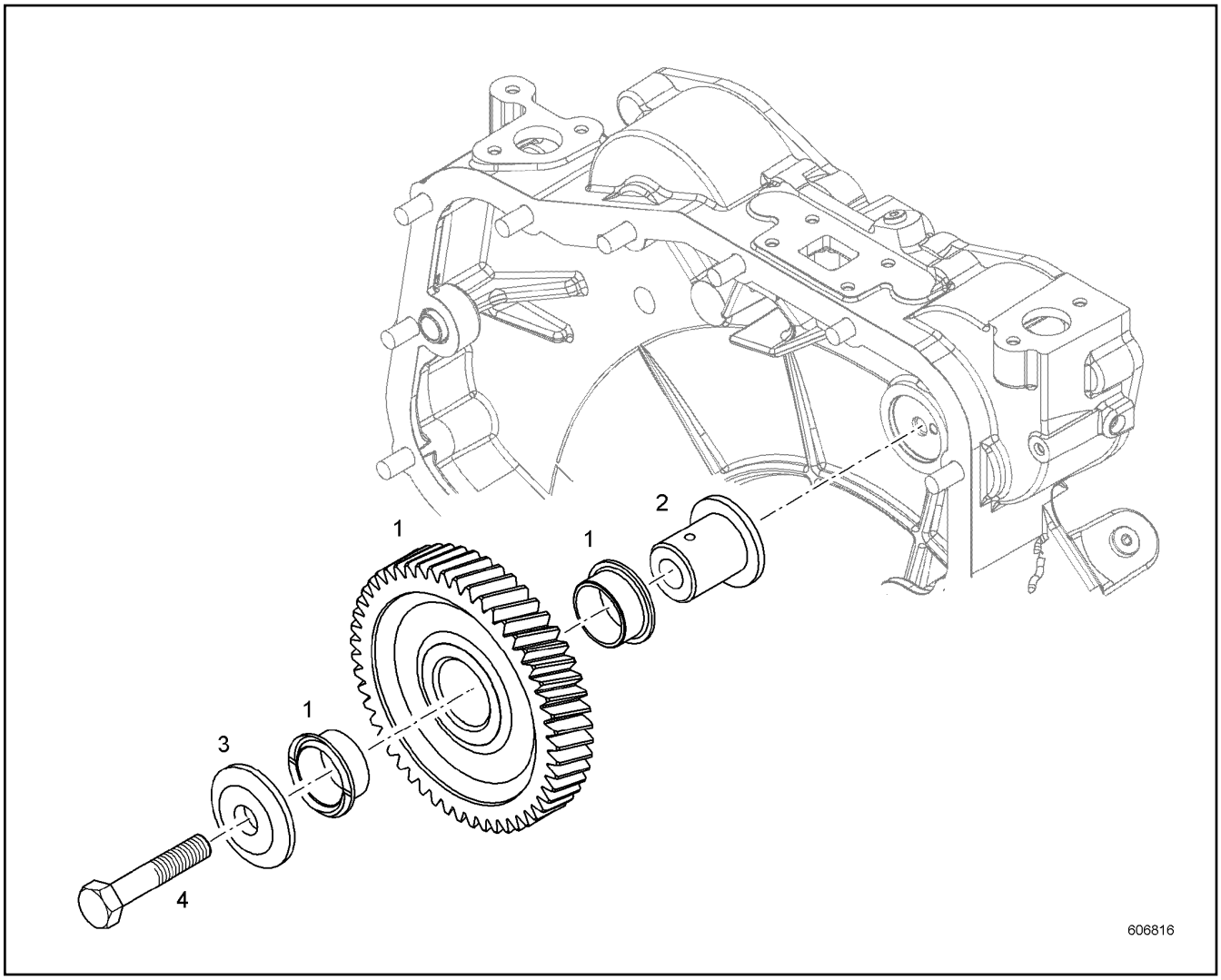

Pos.	Item	Quantity	Description	Bezeichnung	Serie	K
1	9072904	1	INTERMEDIATE GEAR PRE-ASSY.	ZWISCHENRAD VORM.		
2	9072907	1	INTERMEDIATE WHEEL AXLE	ZWISCHENRADACHSE		
3	9072908	1	BEARING COVER	LAGERDECKEL		
4	10013916	1	HEX SCREW ISO 4014 M12X65 8.8	SECHSKANTSCHRAUBE		

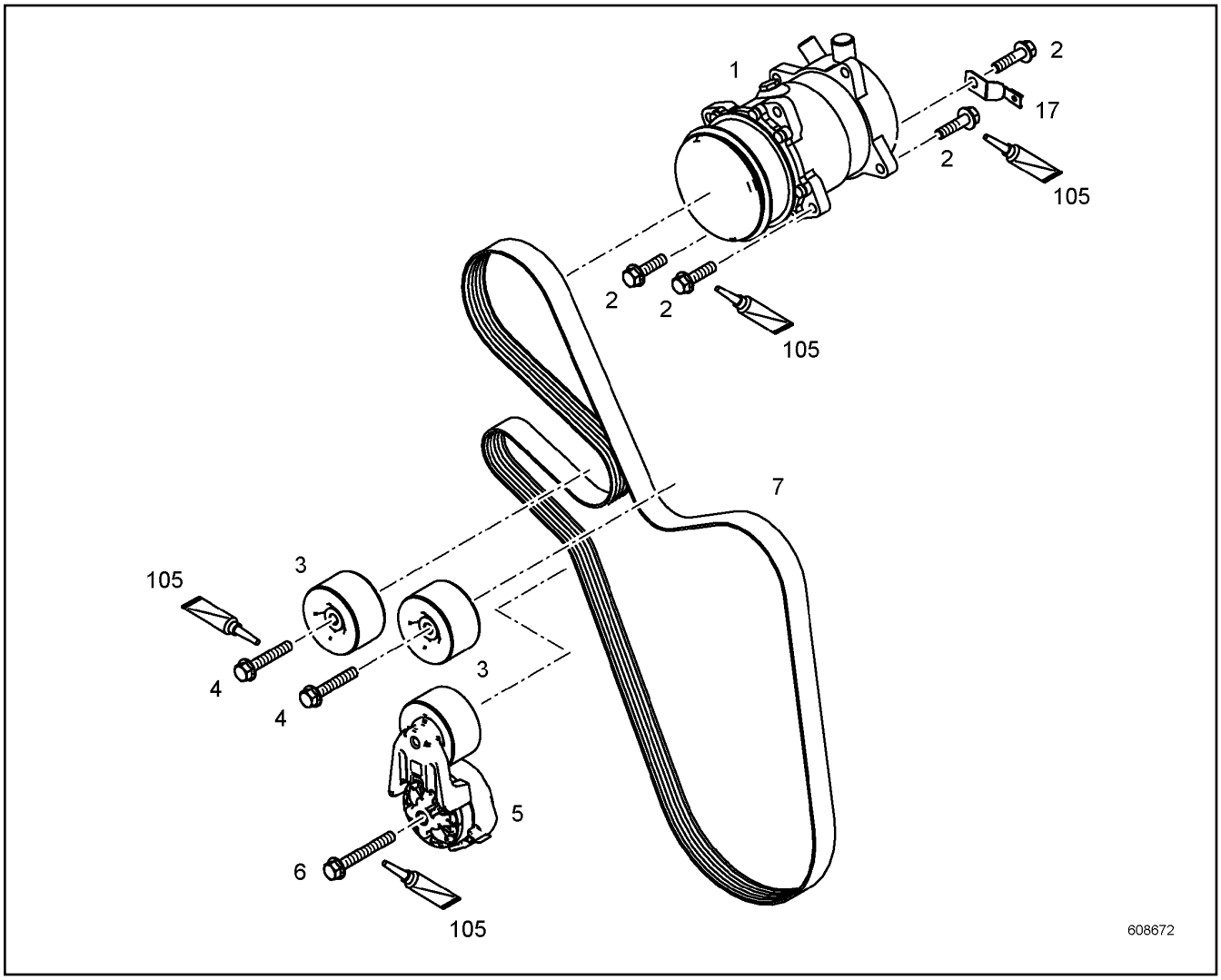

Pos.	Item	Quantity	Description	Bezeichnung	Serie	K
1	10116767	1	AIR CONDITIONING COMPRESSOR	KLIMAKOMPRESSOR		
2	10112497	4	HEX SCREW DIN 6921 M10X40 8.8	SECHSKANTSCHRAUBE		
3	10149360	2	GUIDE PULLEY COMPL.	UMLENKROLLE VORM.		
4	10014638	2	HEX SCREW EN 1665 M10X60 8.8	SECHSKANTSCHRAUBE		
5	10153373	1	FASTENING DEVICE	SPANNVORRICHTUNG		
6	10101657	1	HEX SCREW EN 1665 M10X80 8.8	SECHSKANTSCHRAUBE		
7	11482412	1	V-RIPPED BELT	KEILRIPPENRIEMEN		
17	10041876	1	HOLDER	HALTER		
105	811202114	1	SCREW LOCKING	SCHRAUBENSICHERUNG		

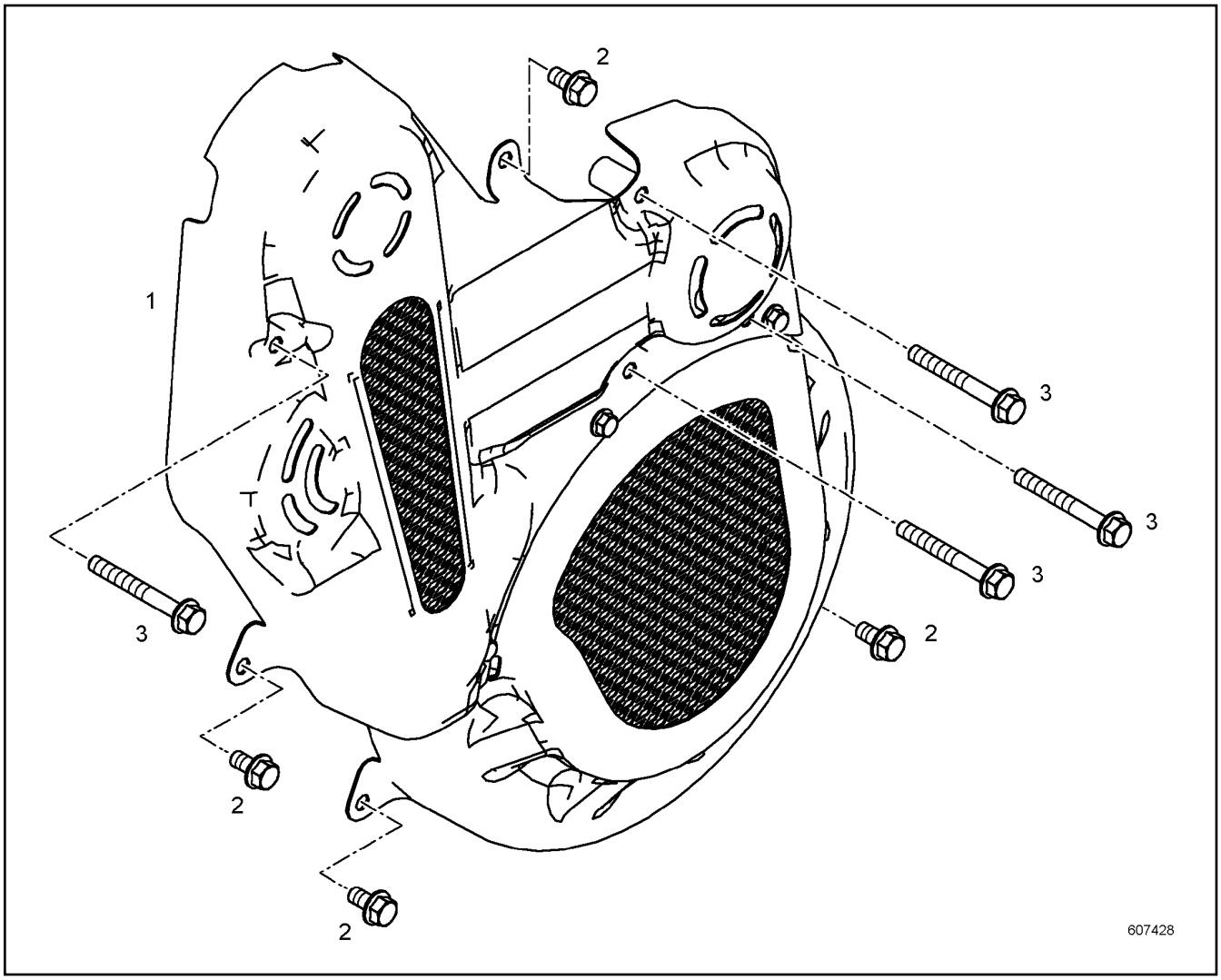

Pos.	Item	Quantity	Description	Bezeichnung	Serie	K
1	11440134	1	COVER PRE-ASS. ⇨ ❑ 273	ABDECKUNG VORM.		
2	10030518	4	HEX SCREW EN 1665 M10X20 8.8	SECHSKANTSCHRAUBE		
3	10101657	4	HEX SCREW EN 1665 M10X80 8.8	SECHSKANTSCHRAUBE		

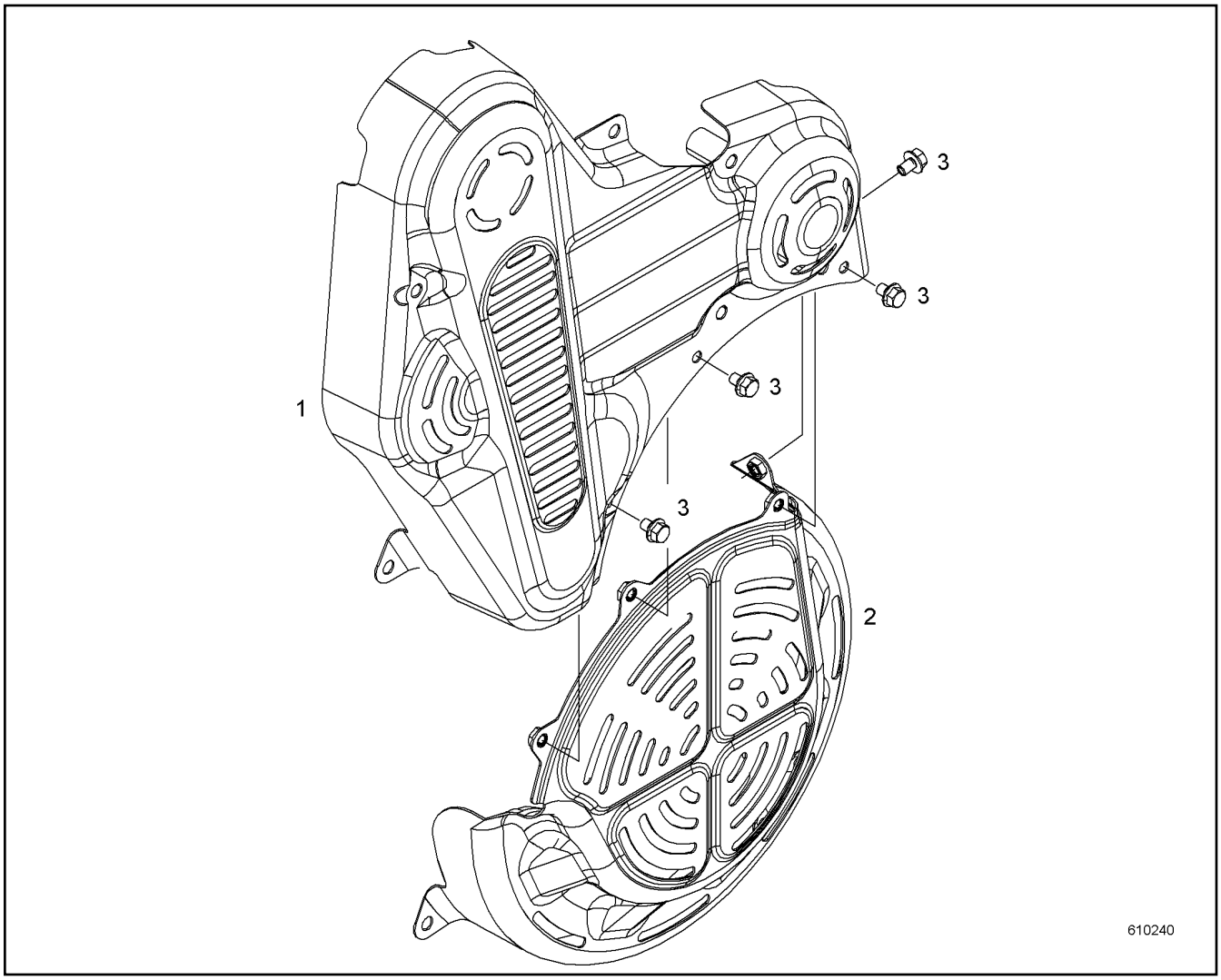

Pos.	Item	Quantity	Description	Bezeichnung	Serie	K
1	11357451	1	COVER	ABDECKUNG		
2	11357453	1	COVER	ABDECKUNG		
3	10024115	4	HEX SCREW EN 1665 M8X12 8.8	SECHSKANTSCHRAUBE		

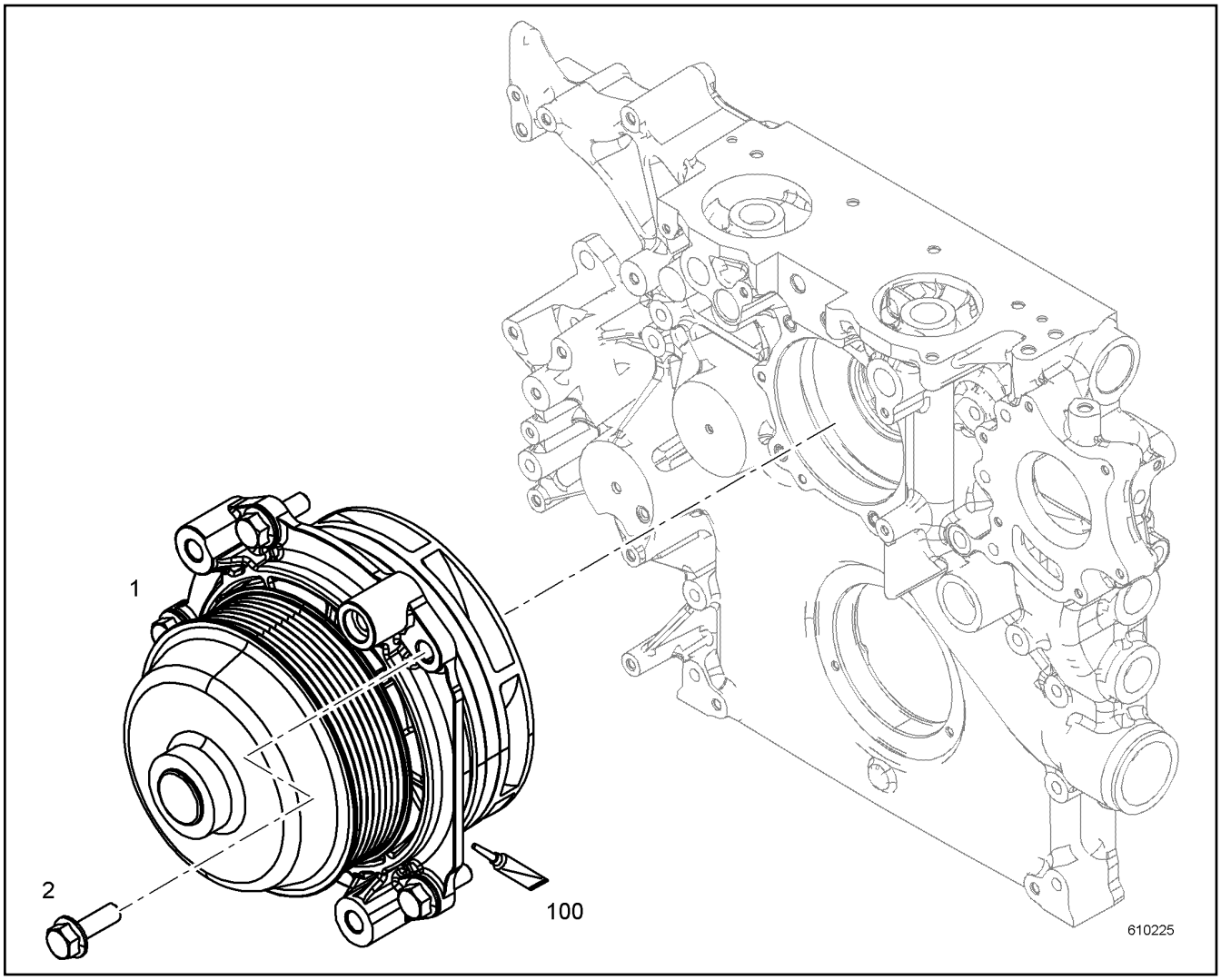

Pos.	Item	Quantity	Description	Bezeichnung	Serie	K
1	11354498	1	WATER PUMP, PRE-ASSEMBLED	WASSERPUMPE VORM.		
2	10009007	5	HEX SCREW EN 1665 M8X25 8.8	SECHSKANTSCHRAUBE		
100	10285708	1	GREASE	FETT		

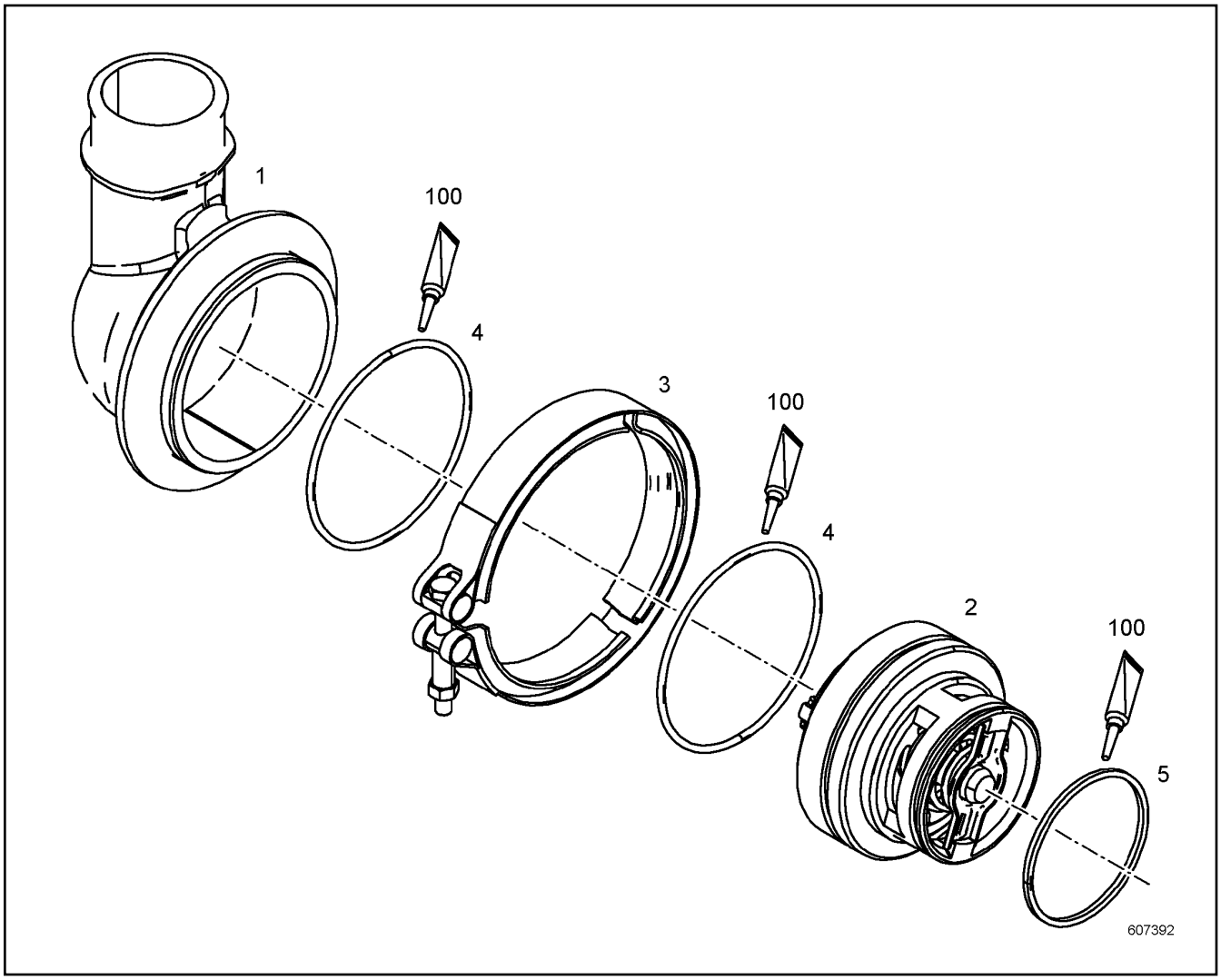

Pos.	Item	Quantity	Description	Bezeichnung	Serie	K
1	10148200	1	THERMOSTAT HOUSING	THERMOSTATGEHAEUSE		
2	10154798	1	THERMOSTAT	THERMOSTAT		
3	10138820	1	RETAINER CLIP	SPANNSCHELLE		
4	10002167	2	O-RING	O-RING		
5	7009080	1	O-RING	O-RING		
100	10285708	1	GREASE	FETT		

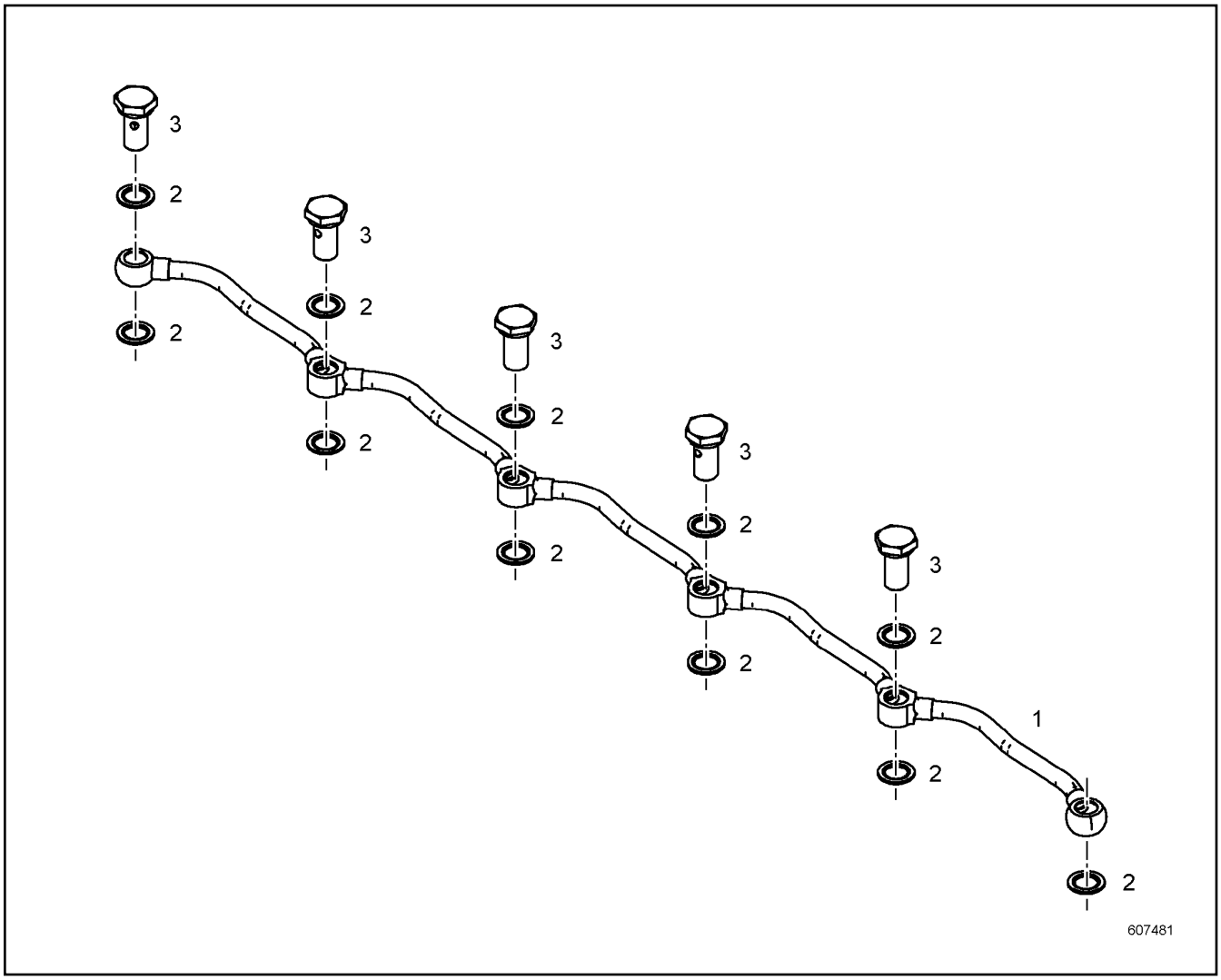

Pos.	Item	Quantity	Description	Bezeichnung	Serie	K
1	10149699	1	PIPELINE	ROHRLEITUNG		
2	10011866	11	SEALING RING	DICHTRING		
3	9080466	5	HOLLOW SCREW 10X1 9SMNPB28K	HOHLSCHRAUBE		

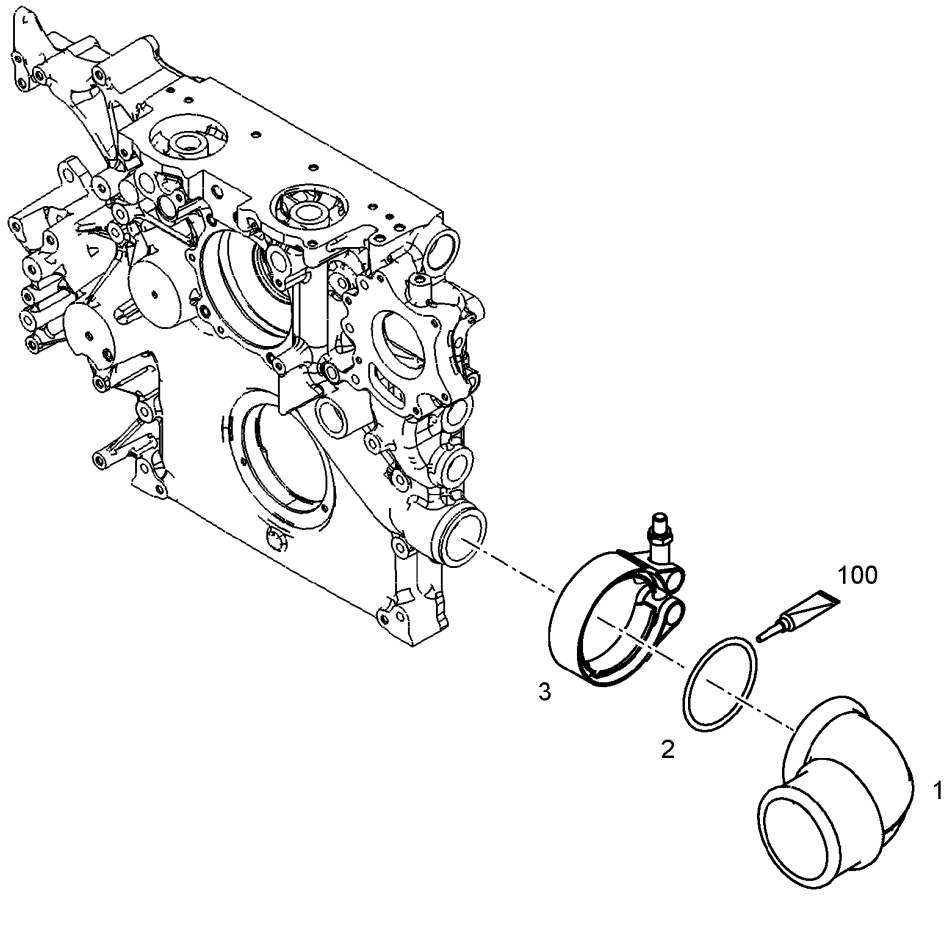

Pos.	Item	Quantity	Description	Bezeichnung	Serie	K
1	10153669	1	ELBOW	KRUEMMER		
2	10122841	1	RETAINER CLIP	SPANNSCHELLE		
3	7380083	1	O-RING	O-RING		
100	10285708	1	GREASE	FETT		

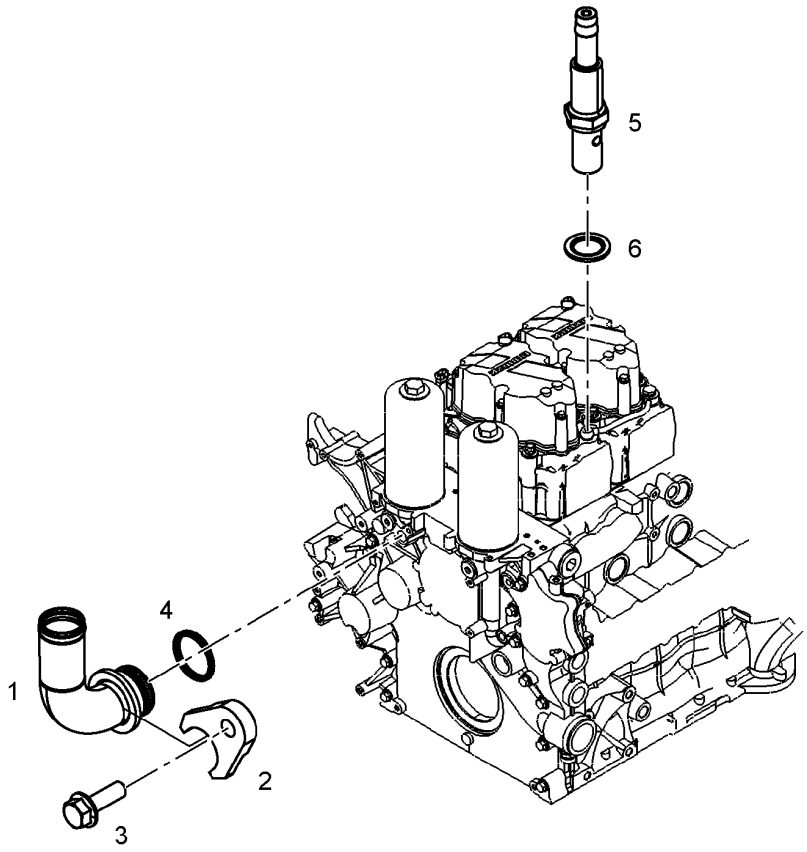

Pos.	Item	Quantity	Description	Bezeichnung	Serie	K
1	10142668	1	HOSE NIPPLE	SCHLAUCHNIPPEL		
2	10142763	1	PLATE	BLECH		
3	10009007	1	HEX SCREW EN 1665 M8X25 8.8	SECHSKANTSCHRAUBE		
4	7381526	1	O-RING	O-RING		
5	10140969	1	HOSE NIPPLE	SCHLAUCHNIPPEL		
6	10011866	1	SEALING RING	DICHTRING		

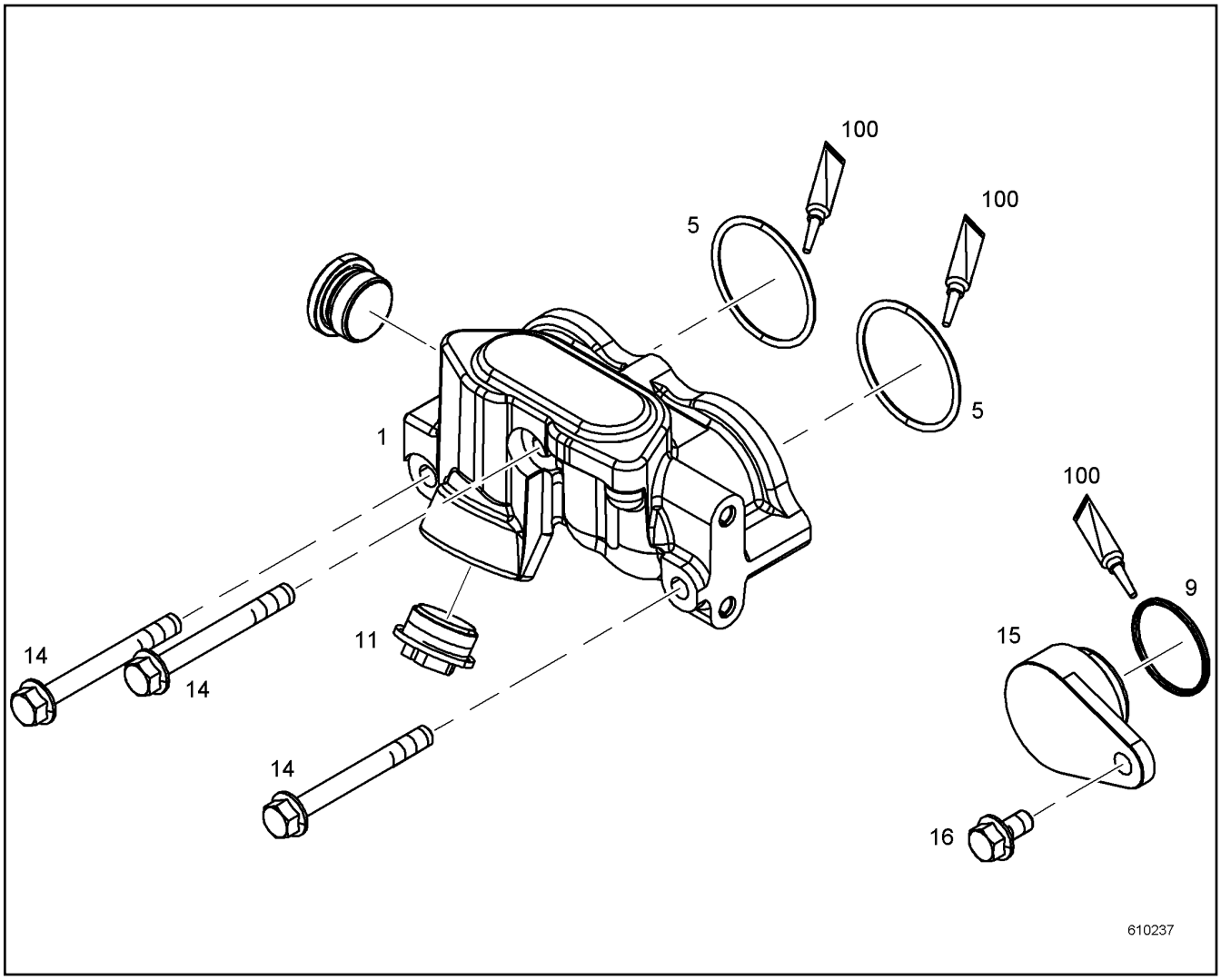

Pos.	Item	Quantity	Description	Bezeichnung	Serie	K
1	10146018	1	WATER COLLECTING PIPE	WASSERSAMMELLEITUNG		
5	7381779	2	O-RING	O-RING		
9	7381615	1	O-RING	O-RING		
11	10465711	1	SEALING PLUG	DICHTSTOPFEN		
14	10489016	3	HEX SCREW DIN 6921 M10X90 8.8	SECHSKANTSCHRAUBE		
15	10143304	1	LOCKING PIECES	VERSCHLUSSTEILE		
16	10030518	1	HEX SCREW EN 1665 M10X20 8.8	SECHSKANTSCHRAUBE		
100	10285708	1	GREASE	FETT		

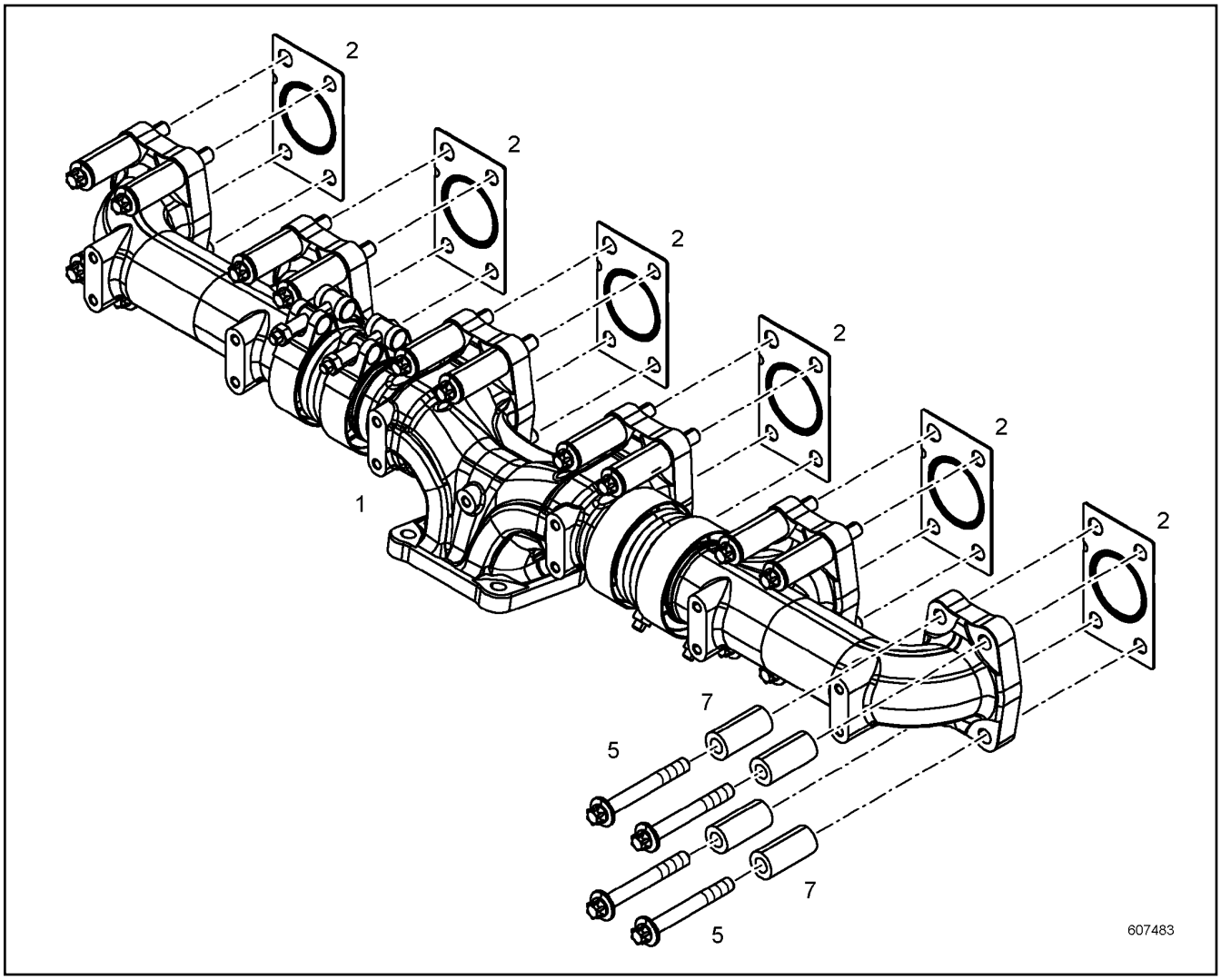

Pos.	Item	Quantity	Description	Bezeichnung	Serie	K
1	10141443	1	EXHAUST PIPE PRE-ASS. ⇨ ❑ 281	ABGASROHR VORM.		
2	10135885	6	SEAL	DICHTUNG		
5	10138772	24	HEXALOBULAR HEAD SCREW M10X80 21CRM	SECHSRUNDSCHRAUBE		
7	10141438	24	DISTANCE SLEEVE 11X21X45 42CRM04	DISTANZHUELSE		

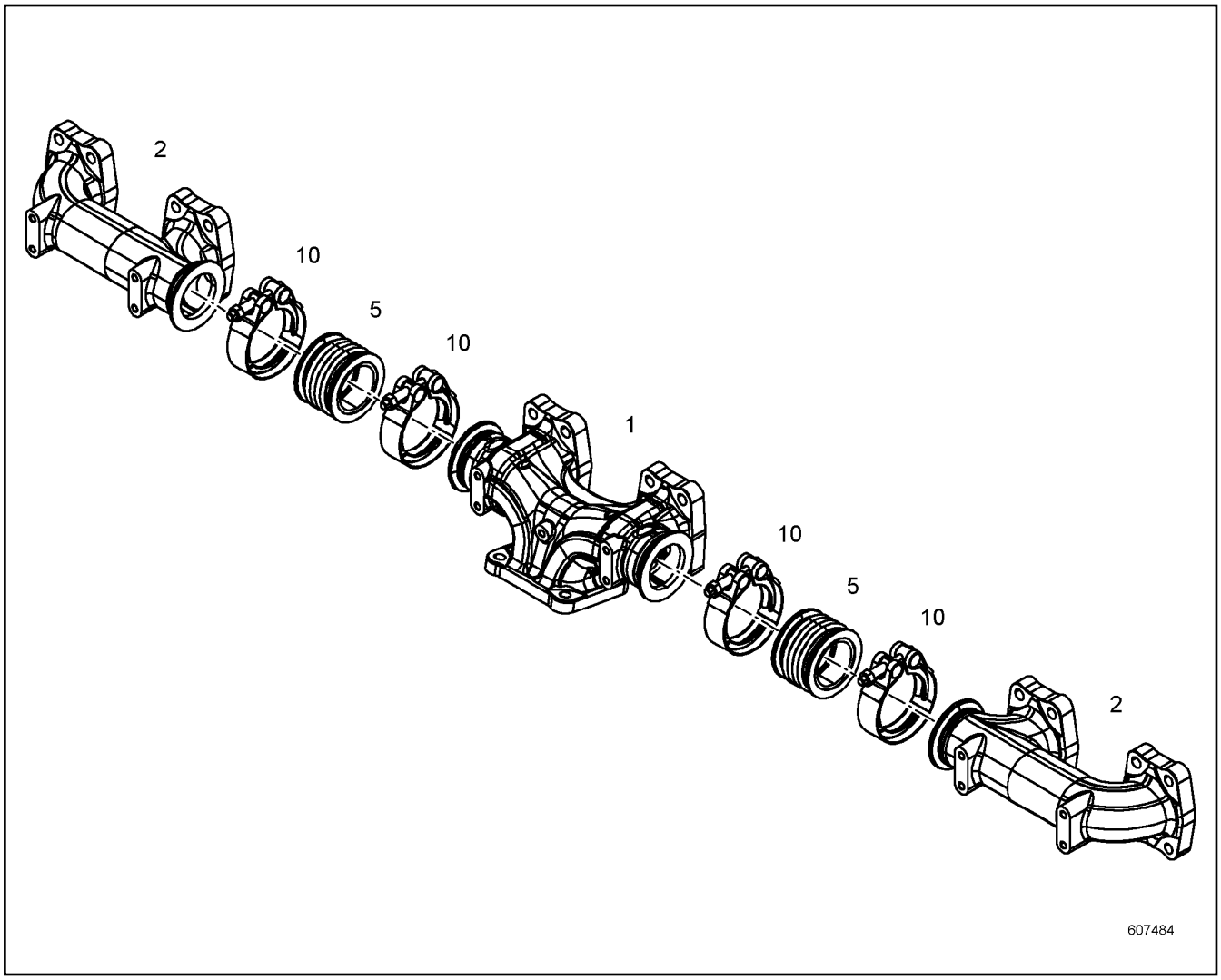

Pos.	Item	Quantity	Description	Bezeichnung	Serie	K
1	10141440	1	OUTLET MANIFOLD	ABGASKRUEMMER		
2	10141442	2	OUTLET MANIFOLD	ABGASKRUEMMER		
5	10141520	2	COMPENSATOR	KOMPENSATOR		
10	10132073	4	RETAINER CLIP	SPANNSCHELLE		

OHNE BILD
WITHOUT ILLUSTRATION
SANS PLANCHE
SIN FIG.
SEM ILUSTRAÇÃO
БЕЗ ИЗОБРАЖЕНИЯ

600000

Pos.	Item	Quantity	Description	Bezeichnung	Serie	K
1	10147371	1	HEAT PROTECTION SHEET	HITZESCHUTZBLECH		
2	9132577	4	DISTANCE SLEEVE 18X8.5X10	DISTANZHUELSE		
3	10118695	4	HEXALOBULAR HEAD SCREW M8X25 X5NICR	SECHSRUNDSCHRAUBE		

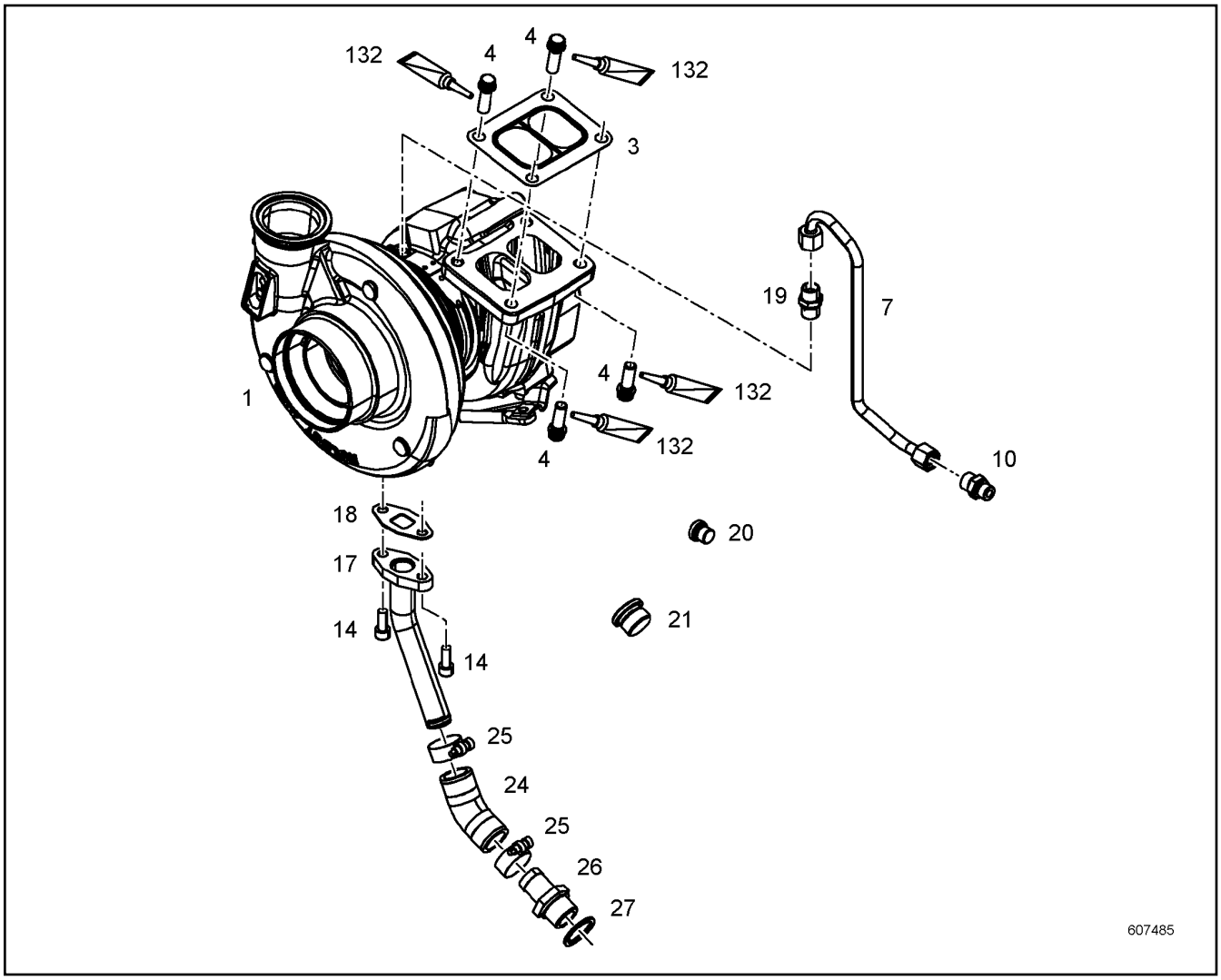

Pos.	Item	Quantity	Description	Bezeichnung	Serie	K
1	10139624	1	TURBOCHARGER	TURBOLADER		
3	10125740	1	SEAL	DICHTUNG		
4	10132558	4	12-SIDED SCREW M10X30 X5NICRTI26-15	ZWOELFKANTSCHRAUBE		
7	10140137	1	LUBRICATING OIL LINE	SCHMIEROELLEITUNG		
10	4981235	1	FITTING	VERSCHRAUBUNG		
14	4043082	2	SOCKET HEAD SCREW ISO 4762 M8X20 10.9	ZYLINDERSCHRAUBE		
17	10140138	1	OIL RETURN PIPE	OELRUECKLAUFLEITUNG		
18	10115623	1	SEAL	DICHTUNG		
19	7021521	1	FITTING	VERSCHRAUBUNG		
20	7380566	1	SCREW PLUG	VERSCHLUSSSCHRAUBE		
21	7381457	1	SCREW PLUG	VERSCHLUSSSCHRAUBE		
24	10128875	1	RUBBER CONNECTION	GUMMIMUFFE		
25	4900778	2	HOSE CLAMP	SCHLAUCHSCHELLE		
26	9140351	1	HOSE NIPPLE	SCHLAUCHNIPPEL		
27	10011870	1	SEALING RING	DICHTRING		
132	10002552	1	COPPER PASTE	KUPFERPASTE		

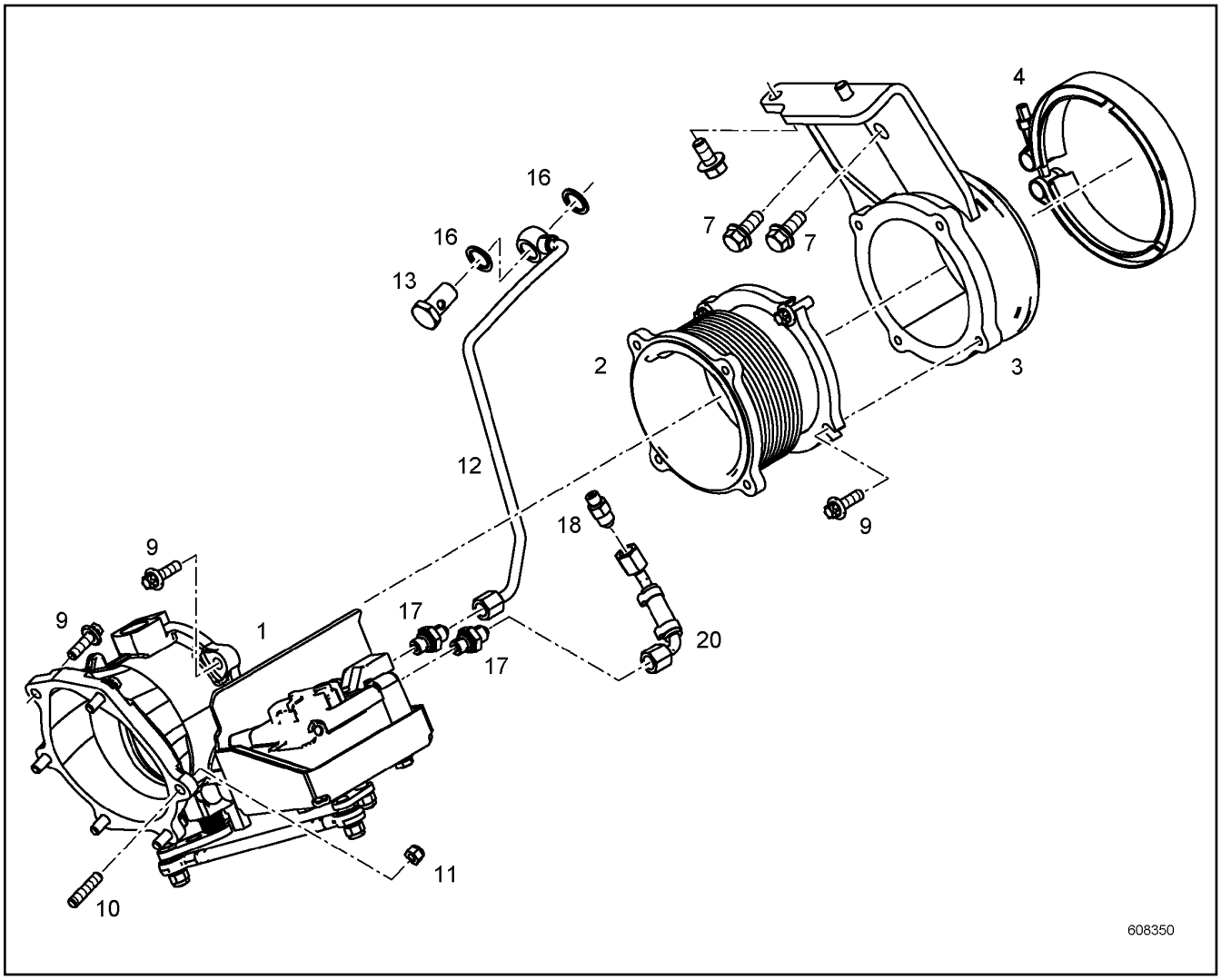

Pos.	Item	Quantity	Description	Bezeichnung	Serie	K
1	10153118	1	EXHAUST FLAP	ABGASKLAPPE		
2	10149145	1	COMPENSATOR	KOMPENSATOR		
3	10146274	1	EXHAUST NOZZLE	ABGASSTUTZEN		
4	10138820	1	RETAINER CLIP	SPANNSCHELLE		
7	10219458	4	HEX SCREW DIN 6921 M10X30 10.9	SECHSKANTSCHRAUBE		
9	10127323	13	HEXALOBULAR HEAD SCREW M8X25 21CRM	SECHSRUNDSCHRAUBE		
10	11690424	1	DOUBLE-ENDED STUD DIN 939 M8X25	STIFTSCHRAUBE		
11	7381182	1	HEX NUT AEHNL.ISO 7042 M8 10	SECHSKANTMUTTER		
12	10145914	1	PIPELINE	ROHRLEITUNG		
13	4980741	1	HOLLOW SCREW DIN 7643 12X3	HOHLSCHRAUBE		
16	10011867	2	SEALING RING	DICHTRING		
17	10801399	2	FITTING	VERSCHRAUBUNG		
18	10813934	1	FITTING	VERSCHRAUBUNG		
20	11381601	1	COOLING WATER LINE	KUEHLWASSERLEITUNG		

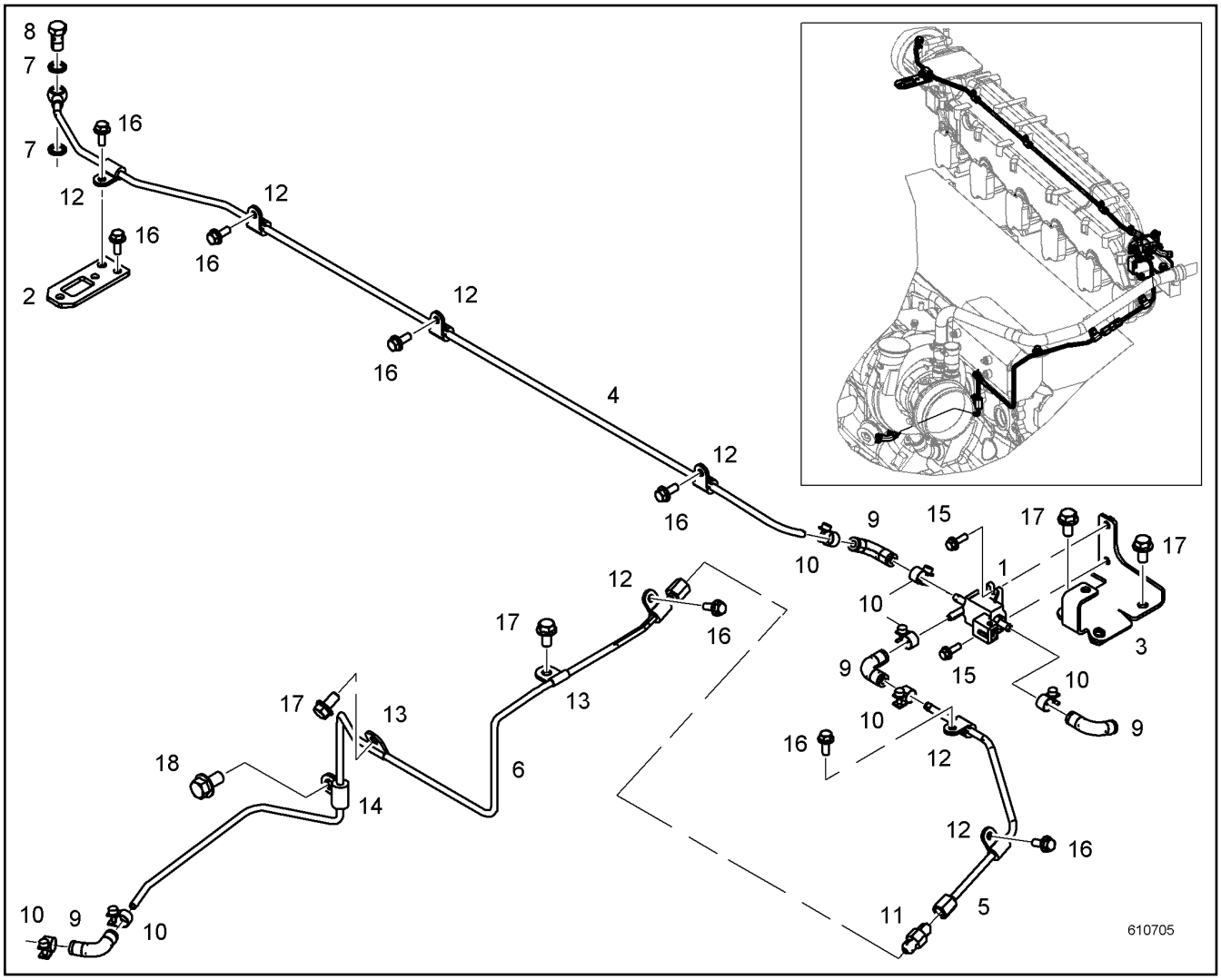

Pos.	Item	Quantity	Description	Bezeichnung	Serie	K
1	10149191	1	CYCLE VALVE	TAKTVENTIL		
2	10145373	1	HOLDER	HALTER		
3	10146836	1	HOLDER	HALTER		
4	10146838	1	PIPELINE	ROHRLEITUNG		
5	10146839	1	PIPELINE	ROHRLEITUNG		
6	10146840	1	PIPELINE	ROHRLEITUNG		
7	10011864	2	SEALING RING	DICHTRING		
8	4079160	1	HOLLOW SCREW DIN 7643 M10X1	HOHLSCHRAUBE		
9	10128228	4	RUBBER CONNECTION	GUMMIMUFFE		
10	11005281	7	HOSE CLAMP	SCHLAUCHSCHELLE		
11	10334218	1	FITTINGS	STUTZEN		
12	7381292	7	CLAMP	SCHELLE		
13	11000593	2	CLAMP	SCHELLE		
14	9077164	1	PIPE CLAMP	ROHRSCHELLE		
15	12207547	2	HEX SCREW EN 1665 M5X16 8.8	SECHSKANTSCHRAUBE		
16	407350208	8	HEX SCREW EN 1665 M6X16 8.8	SECHSKANTSCHRAUBE		
17	10005078	4	HEX SCREW EN 1665 M8X16 8.8	SECHSKANTSCHRAUBE		
18	10030518	1	HEX SCREW EN 1665 M10X20 8.8	SECHSKANTSCHRAUBE		

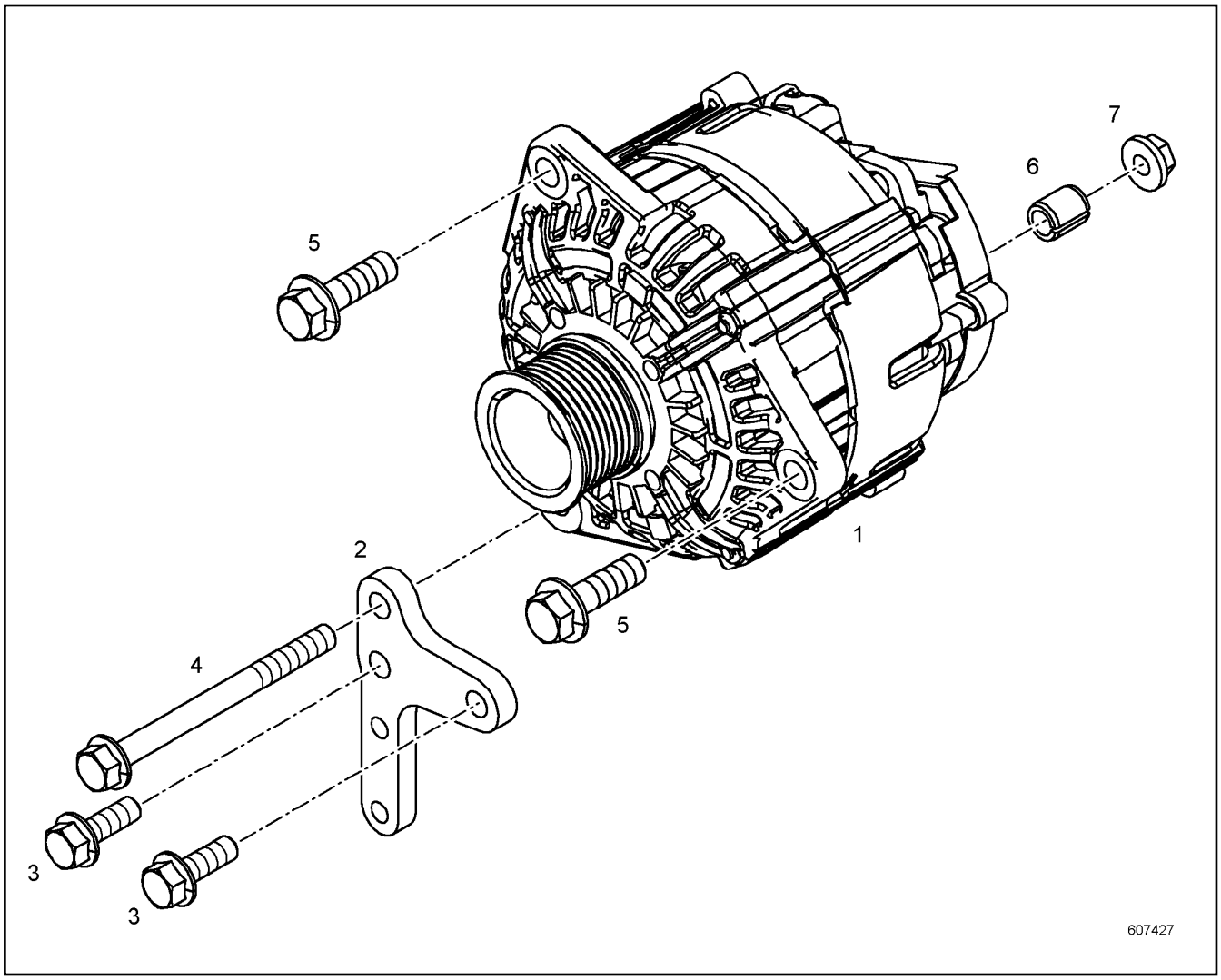

Pos.	Item	Quantity	Description	Bezeichnung	Serie	K
1	10148088	1	THREE PHASE CURRENT GENERATOR	DREHSTROMGENERATOR		
2	10149477	1	MOUNTING SHEET	BEFESTIGUNGSBLECH		
3	10219458	2	HEX SCREW DIN 6921 M10X30 10.9	SECHSKANTSCHRAUBE		
4	10113710	1	HEX SCREW EN 1665 M10X120 8.8	SECHSKANTSCHRAUBE		
5	4601426	2	HEX SCREW EN 1665 M12X40 8.8	SECHSKANTSCHRAUBE		
6	10145395	1	BUSHING	BUCHSE		
7	4980805	1	HEX NUT EN 1661 M10 8	SECHSKANTMUTTER		

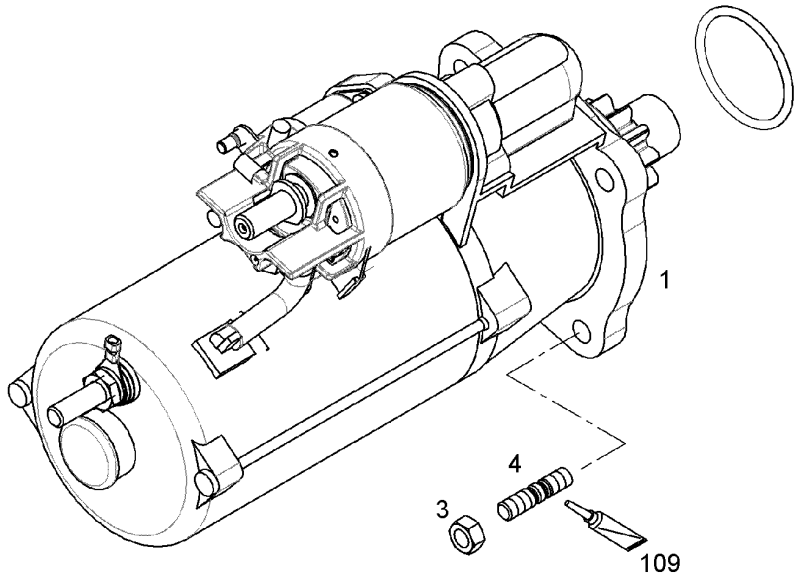

Pos.	Item	Quantity	Description	Bezeichnung	Serie	K
1	11386645	1	STARTER ⇨ ❑ 288	STARTER		
3	4980805	3	HEX NUT EN 1661 M10 8	SECHSKANTMUTTER		
4	4901450	3	DOUBLE-ENDED STUD DIN 835 M10X30 8.8	STIFTSCHRAUBE		
109	8655016	1	SCREW LOCKING	SCHRAUBENSICHERUNG		

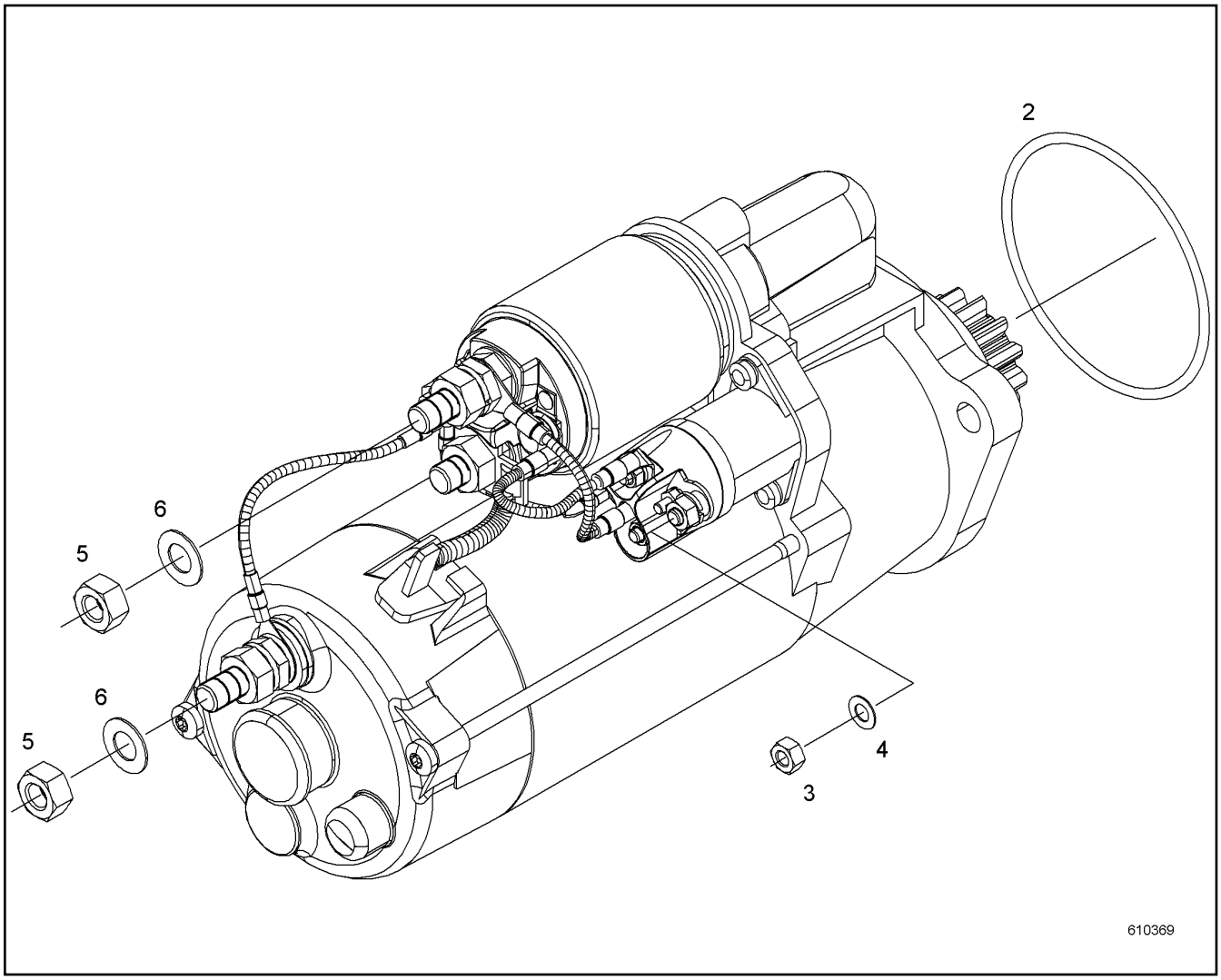

Pos.	Item	Quantity	Description	Bezeichnung	Serie	K
2	10218370	1	O-RING	O-RING		
3	10411094	1	HEX NUT M6 8	SECHSKANTMUTTER		
4	10411092	1	SPRING WASHER DIN 137 X10CRNI18-8;EN 10	FEDERSCHEIBE		
5	10411095	2	HEX NUT 8	SECHSKANTMUTTER		
6	10411093	2	SPRING WASHER DIN 137 X10CRNI18-8;EN 10	FEDERSCHEIBE		

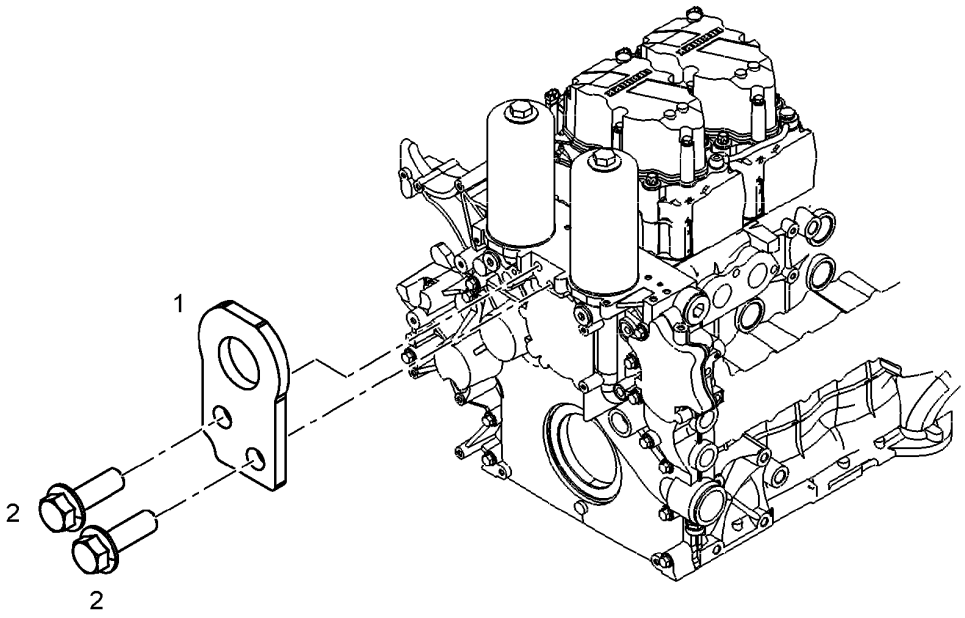

607420

Pos.	Item	Quantity	Description	Bezeichnung	Serie	K
1	10145229	1	TRANSPORTER CONSOLE	TRANSPORTKONSOLE		
2	11181806	2	HEX SCREW DIN 6921 M16X50 8.8	SECHSKANTSCHRAUBE		

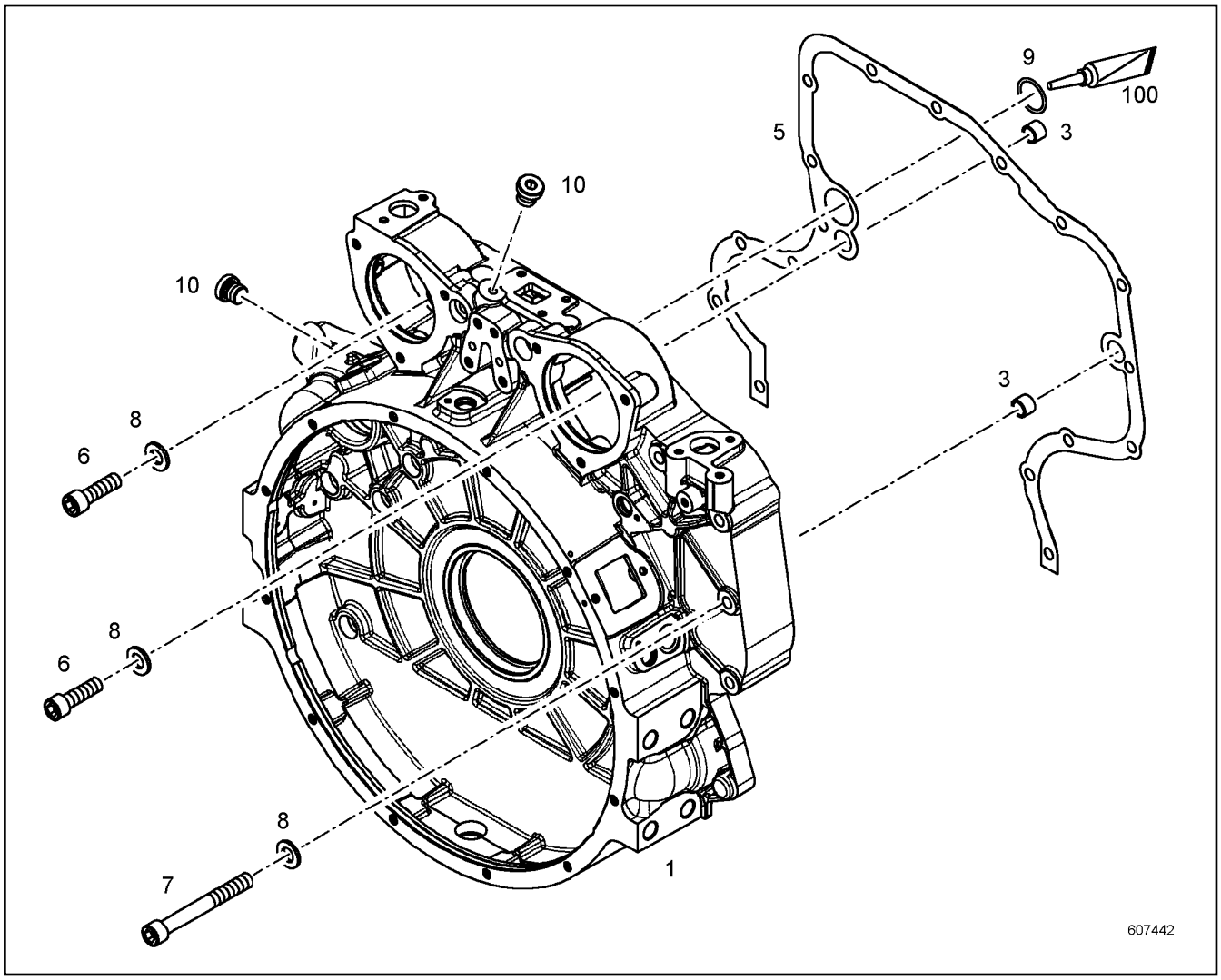

Pos.	Item	Quantity	Description	Bezeichnung	Serie	K
1	10115576	1	FLYWHEEL HOUSING PRE-ASS.	SCHWUNGRADGEHAEUSE VORM		
3	9074798	2	TIGHT FIT SLEEVE 16X20X20 S235JR;EN 1002	PASSHUELSE		
5	10137721	1	SEAL	DICHTUNG		
6	4980012	2	SOCKET HEAD SCREW ISO 4762 M12X40 10.9	ZYLINDERSCHRAUBE		
7	4600385	15	SOCKET HEAD SCREW ISO 4762 M12X100 10.	ZYLINDERSCHRAUBE		
8	10289804	17	WASHER ISO 7089 13	SCHEIBE		
9	7380653	1	O-RING	O-RING		
10	7381638	2	SCREW PLUG	VERSCHLUSSSCHRAUBE		
100	10282622	1	GREASE	FETT		

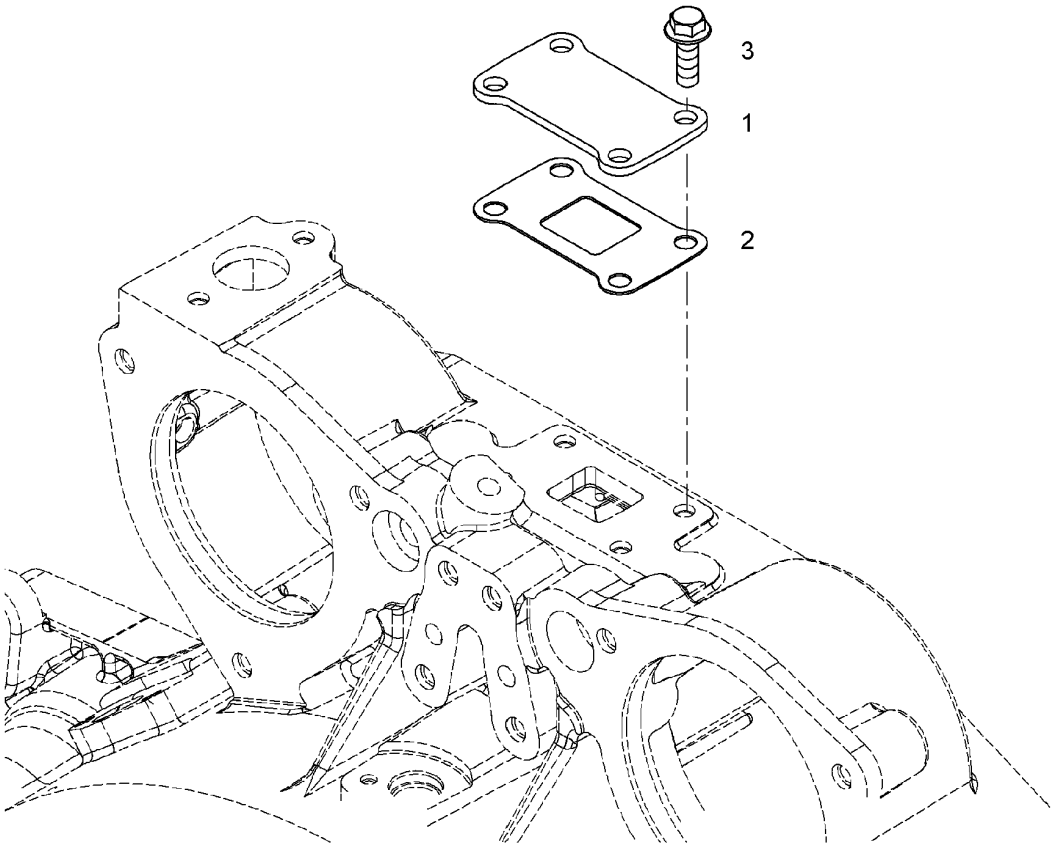

Pos.	Item	Quantity	Description	Bezeichnung	Serie	K
1	10119129	1	SHEET	PLATTE		
2	9079130	1	SEAL	DICHTUNG		
3	10016906	4	HEX SCREW EN 1665 M8X20 8.8	SECHSKANTSCHRAUBE		

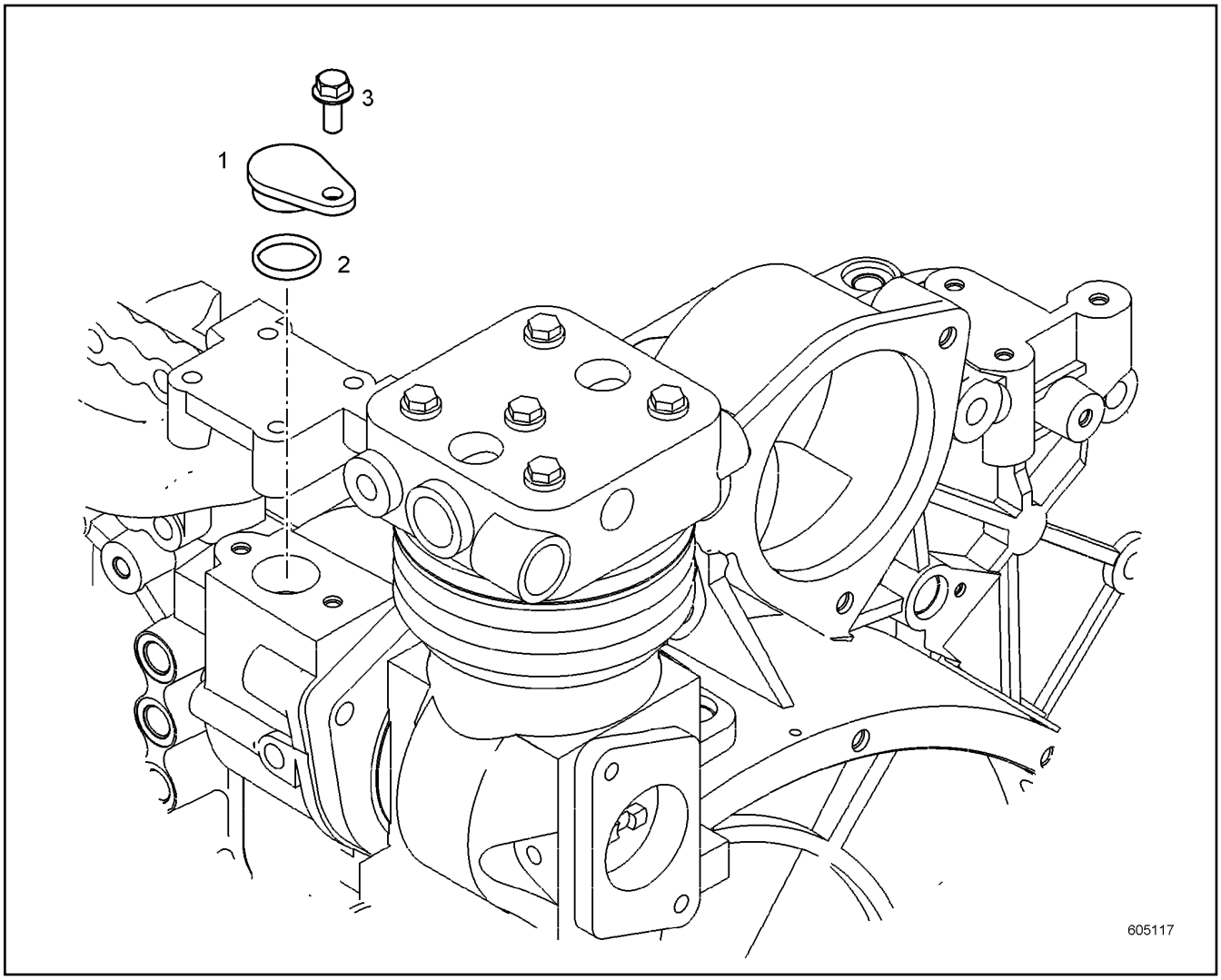

Pos.	Item	Quantity	Description	Bezeichnung	Serie	K
1	10128440	1	LOCKING PIECES	VERSCHLUSSTEILE		
2	10217777	1	O-RING	O-RING		
3	10016906	1	HEX SCREW EN 1665 M8X20 8.8	SECHSKANTSCHRAUBE		

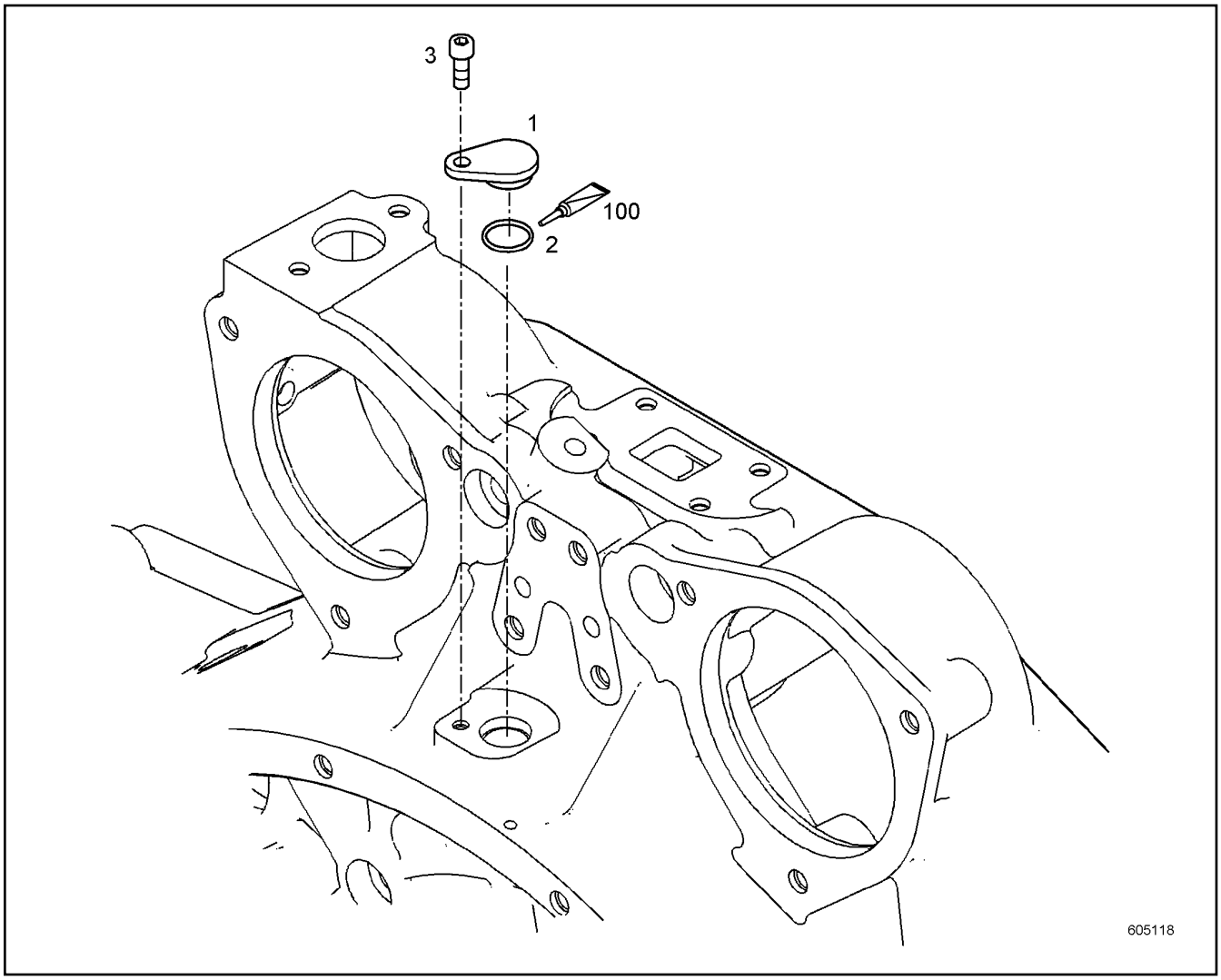

Pos.	Item	Quantity	Description	Bezeichnung	Serie	K
1	10127967	1	COVER	DECKEL		
2	7381103	1	O-RING	O-RING		
3	404250914	1	SOCKET HEAD SCREW ISO 4762 M6X16 A4-7	ZYLINDERSCHRAUBE		
100	10282622	1	GREASE	FETT		

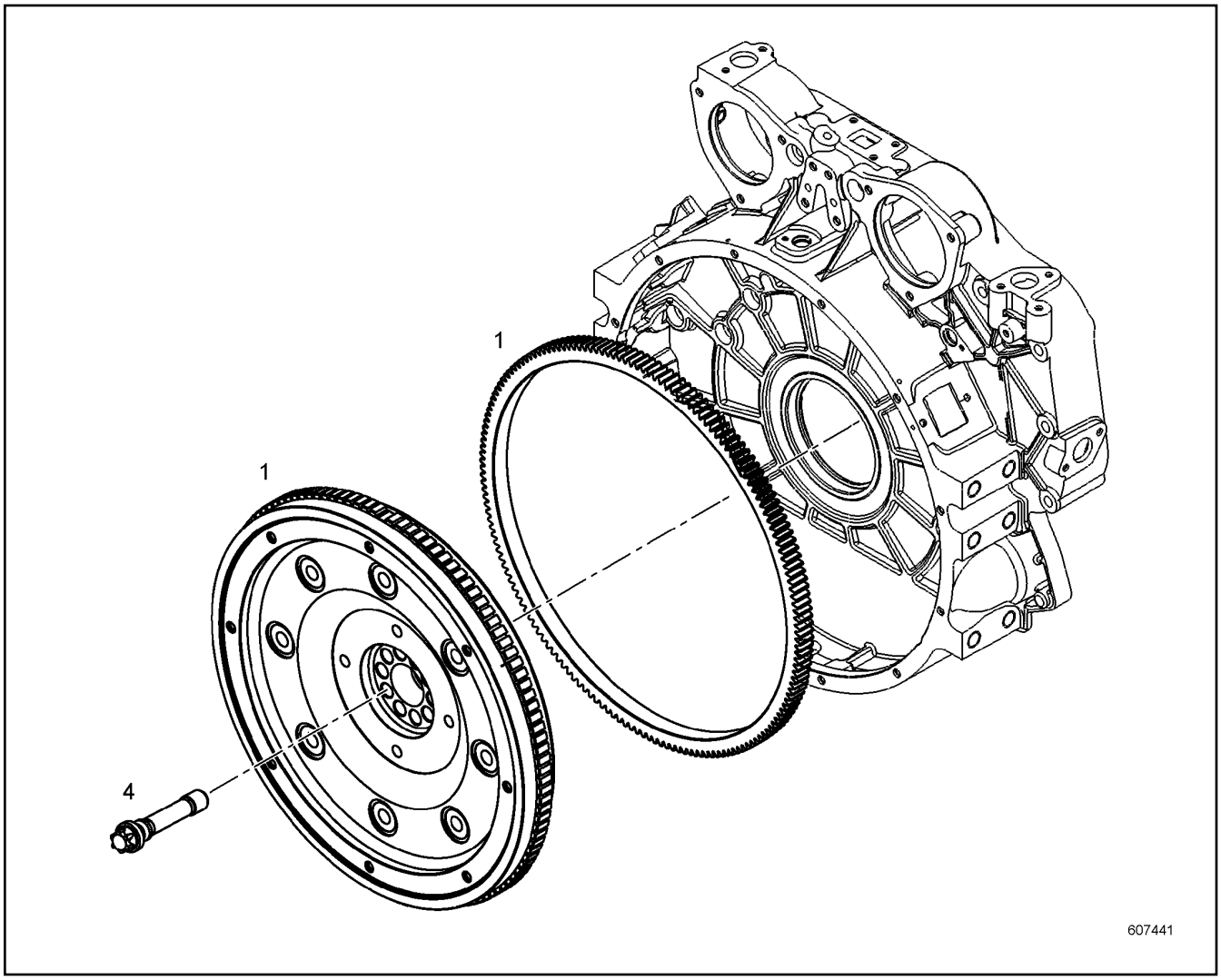

Pos.	Item	Quantity	Description	Bezeichnung	Serie	K
1	10118928	1	FLYWHEEL PRE-ASS.	SCHWUNGRAD VORM.		
4	10118912	10	HEXALOBULAR HEAD SCREW M16X147 10.9	SECHSRUNDSCHRAUBE		

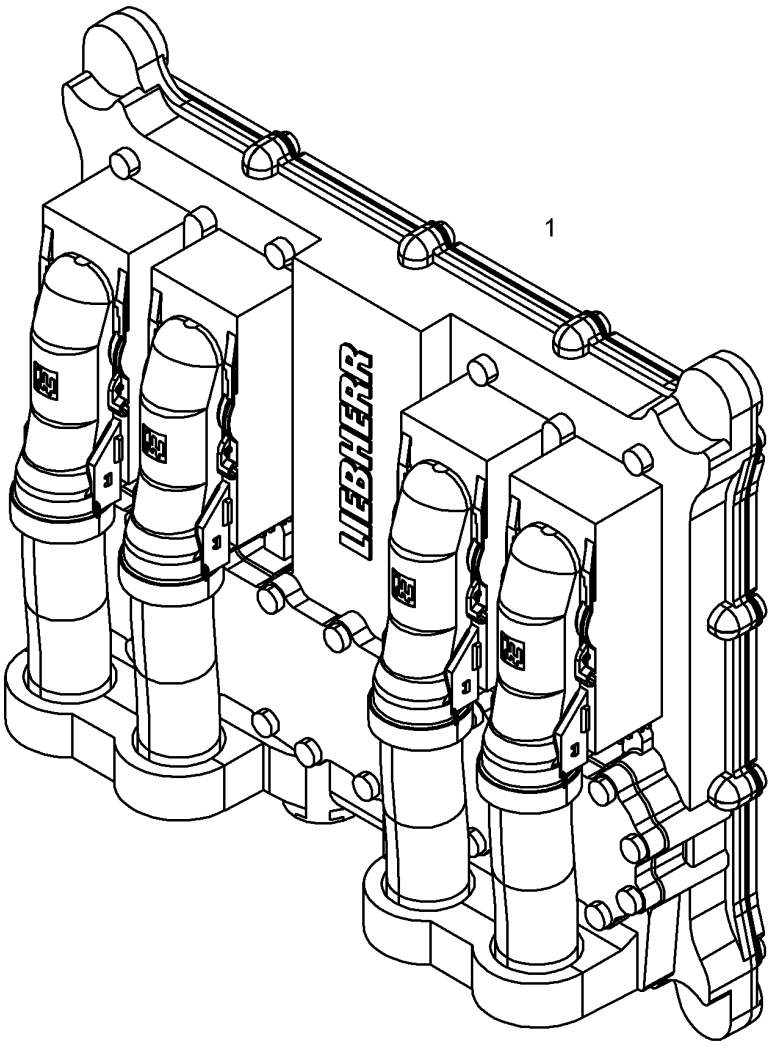

Pos.	Item	Quantity	Description	Bezeichnung	Serie	K
1	10883842	1	MOTOR CONTROL DEVICE	MOTORSTEUERGERAET		

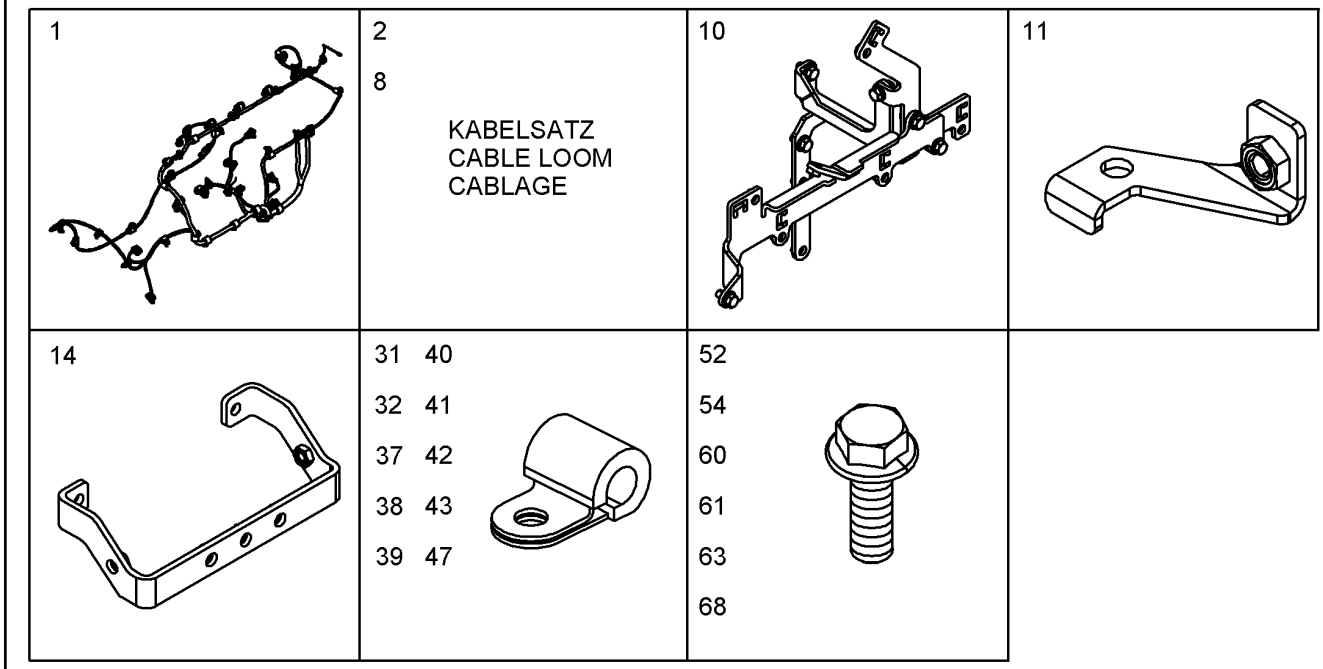

Pos.	Item	Quantity	Description	Bezeichnung	Serie	K
1	12403954	1	CABLE HARNESS	KABELBAUM		
2	10150287	1	WIRING HARNESS ASSEMBLY	KABELSATZ ANBAU		
8	11425228	1	WIRING HARNESS ASSEMBLY	KABELSATZ ANBAU		
10	10146587	1	CLAMP - ADD-ON UNIT	HALTER ANBAU		
11	10144123	1	HOLDER	HALTER		
14	10146405	1	HOLDER	HALTER		
31	7381771	1	CLAMP	SCHELLE		
32	7381770	4	CLAMP	SCHELLE		
37	7382090	5	CLAMP	SCHELLE		
38	7381628	2	CLAMP	SCHELLE		
39	7381629	6	CLAMP	SCHELLE		
40	7382085	2	FASTENING CLAMP	HALTERUNGSSCHELLE		
41	7381635	3	CLAMP	SCHELLE		
42	7381630	2	CLAMP	SCHELLE		
43	7381631	1	CLAMP	SCHELLE		
47	7382092	2	CLAMP	SCHELLE		
52	12207546	2	HEX SCREW EN 1665 M5X10 8.8	SECHSKANTSCHRAUBE		
54	407350208	5	HEX SCREW EN 1665 M6X16 8.8	SECHSKANTSCHRAUBE		
60	10005078	3	HEX SCREW EN 1665 M8X16 8.8	SECHSKANTSCHRAUBE		
61	10016906	22	HEX SCREW EN 1665 M8X20 8.8	SECHSKANTSCHRAUBE		
63	10007782	1	HEX SCREW EN 1665 M8X30 8.8	SECHSKANTSCHRAUBE		
68	10030518	2	HEX SCREW EN 1665 M10X20 8.8	SECHSKANTSCHRAUBE		
93	9132577	1	DISTANCE SLEEVE 18X8.5X10	DISTANZHUELSE		
99	603202314	2	CABLE TIE	KABELBINDER		
103	10123876	2	RUBBER RING	GUMMIRING		

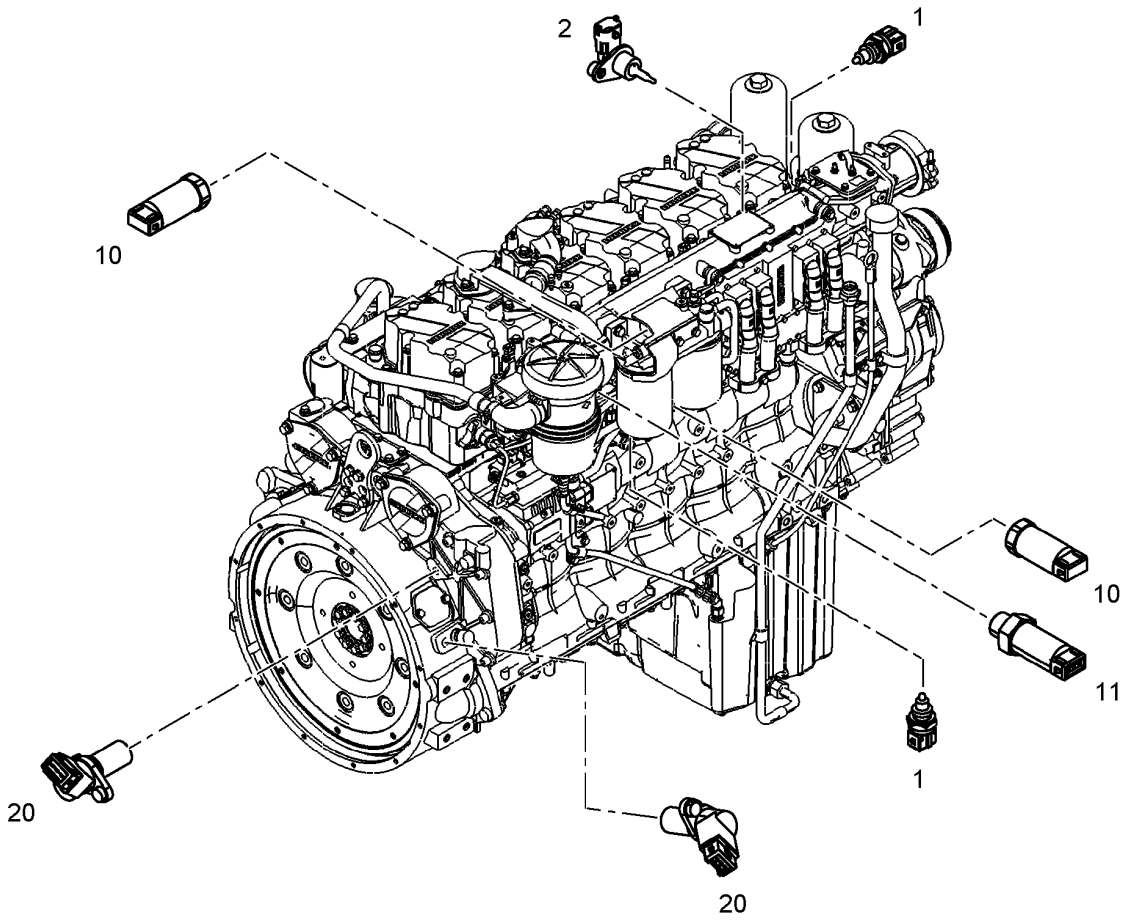

Pos.	Item	Quantity	Description	Bezeichnung	Serie	K
1	10493626	2	TEMPERATURE SENSOR	TEMPERATURFUEHLER		
2	10152036	1	TEMPERATURE PROBE CPL.	TEMPERATURFUEHLER KPL.		
10	9076531	2	PRESSURE TRANSMITTER	DRUCKGEBER		
11	9076550	1	PRESSURE TRANSMITTER CPL.	DRUCKGEBER KPL.		
20	10133077	2	ROTATIONAL SPEED SENSOR CPL.	DREHZAHLGEBER KPL.		

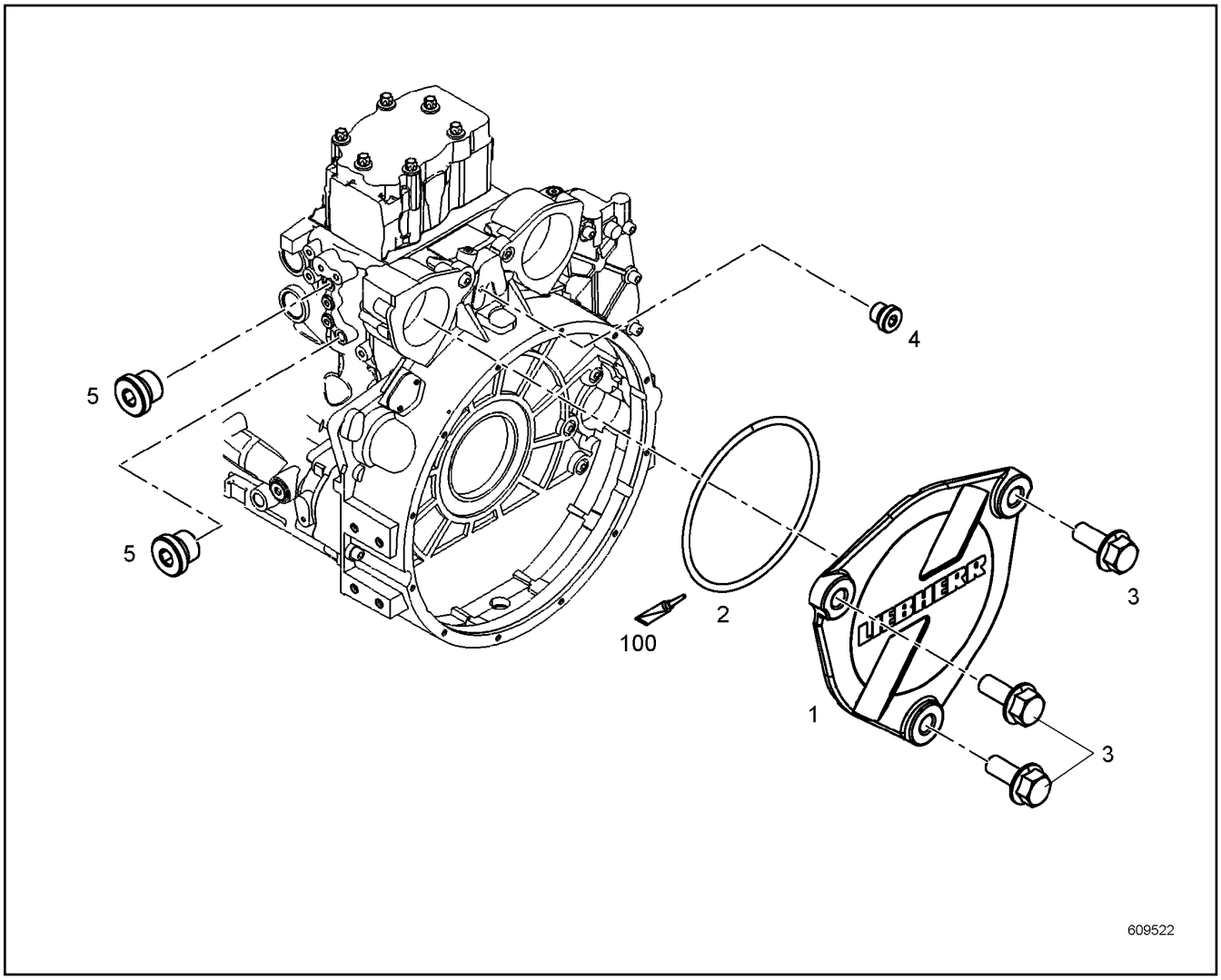

Pos.	Item	Quantity	Description	Bezeichnung	Serie	K
1	10122317	1	COVER	DECKEL		
2	7380657	1	O-RING	O-RING		
3	10336008	3	HEX SCREW DIN 6921 M10X25 8.8	SECHSKANTSCHRAUBE		
4	7381638	1	SCREW PLUG	VERSCHLUSSSCHRAUBE		
5	7382203	2	SCREW PLUG	VERSCHLUSSSCHRAUBE		
100	10285708	1	GREASE	FETT		

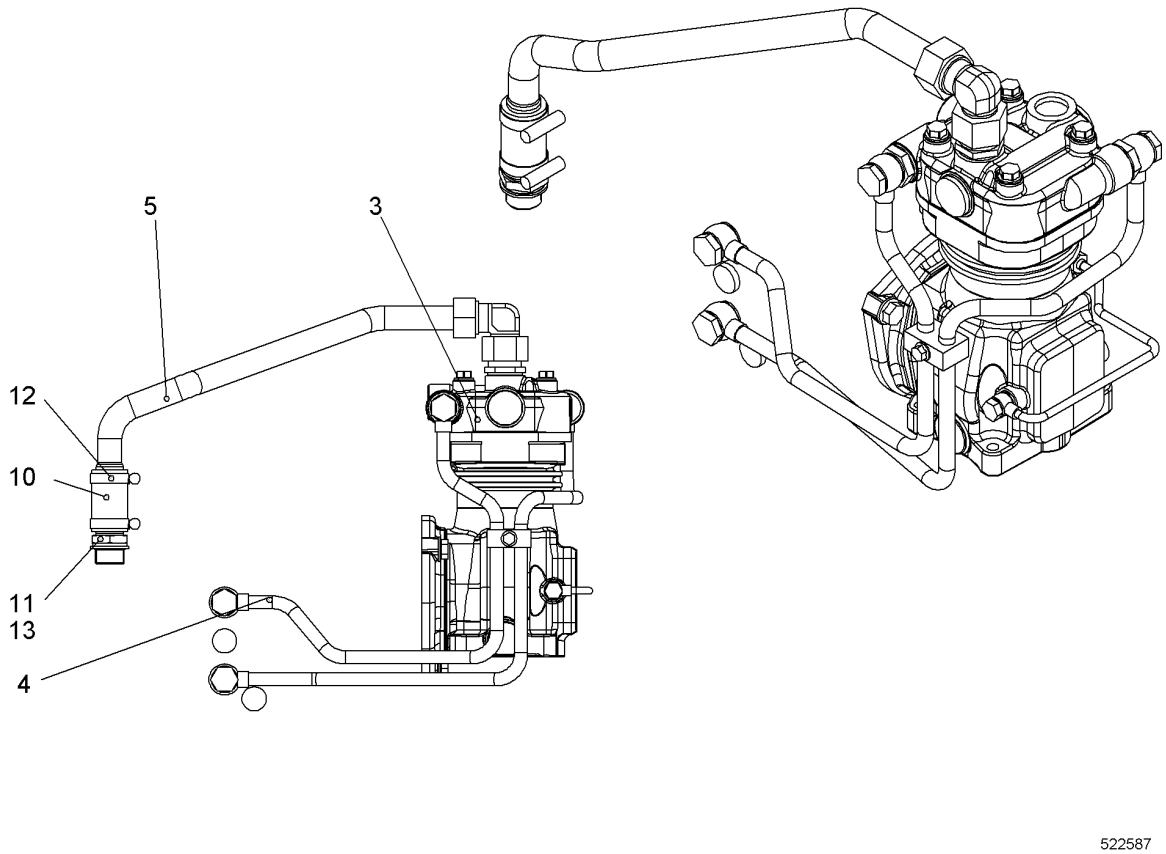

Pos.	Item	Quantity	Description	Bezeichnung	Serie	K
3	11417370	1	AIR COMPRESSOR ⇨ ❑ 300	LUFTPRESSER		
4	11414757	1	ACCESSORIES AIR COMPRESSOR ⇨ ❑ 301	ANBAUTEILE LUFTPRESSER		
5	11414758	1	PIPELINE INSTALLATION	ROHRLEITUNG ANBAU		
10	9271340	1	RUBBER CONNECTION	GUMMIMUFFE		
11	10121893	1	HOSE NIPPLE	SCHLAUCHNIPPEL		
12	790244814	2	HOSE CLAMP	SCHLAUCHSCHELLE		
13	10011870	1	SEALING RING	DICHTRING		

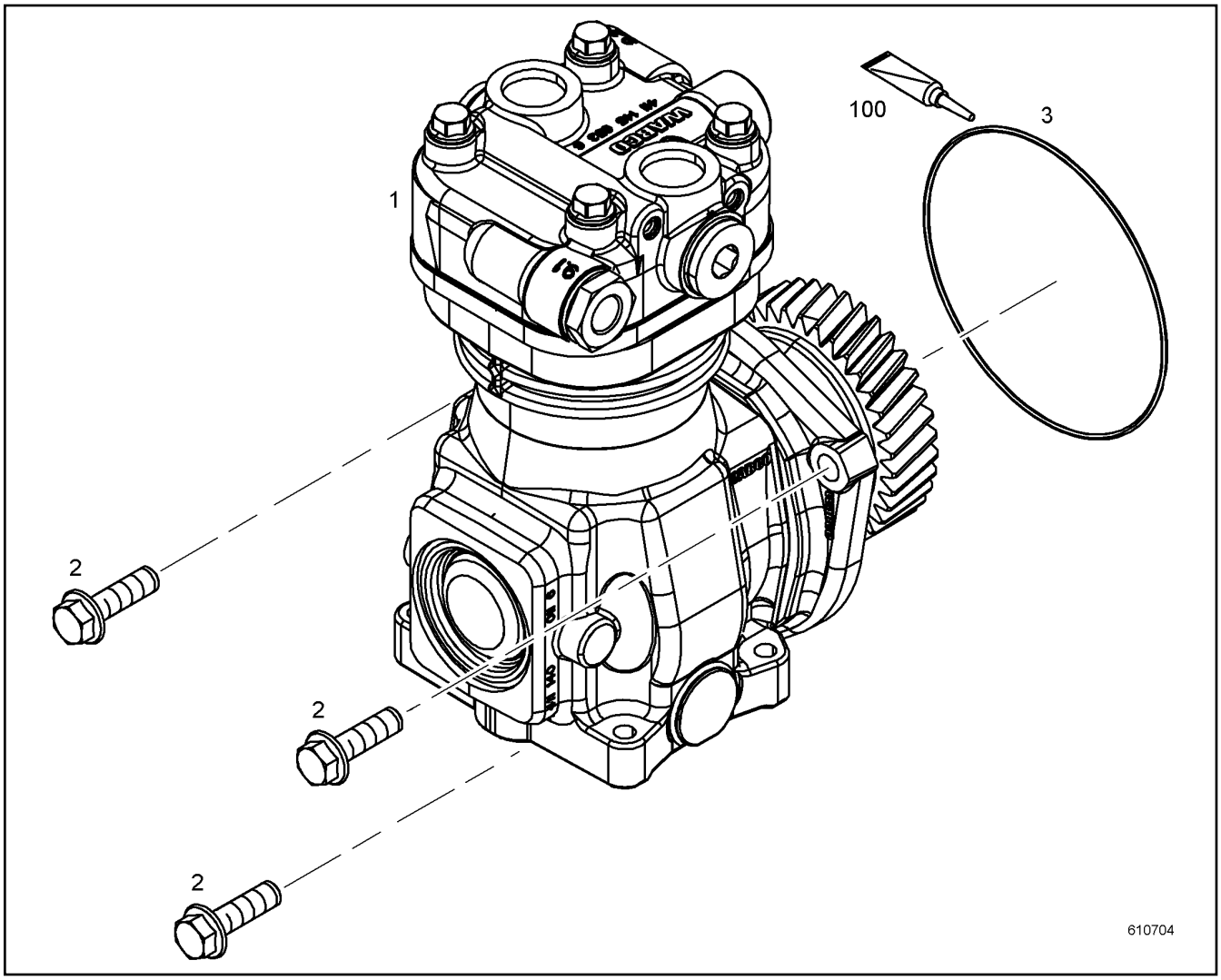

Pos.	Item	Quantity	Description	Bezeichnung	Serie	K
1	11417369	1	AIR COMPRESSOR PRE-ASSY.	LUFTPRESSER VORM.		
2	10016908	3	HEX SCREW EN 1665 M10X30 8.8	SECHSKANTSCHRAUBE		
3	10002310	1	O-RING	O-RING		
100	10285708	1	GREASE	FETT		

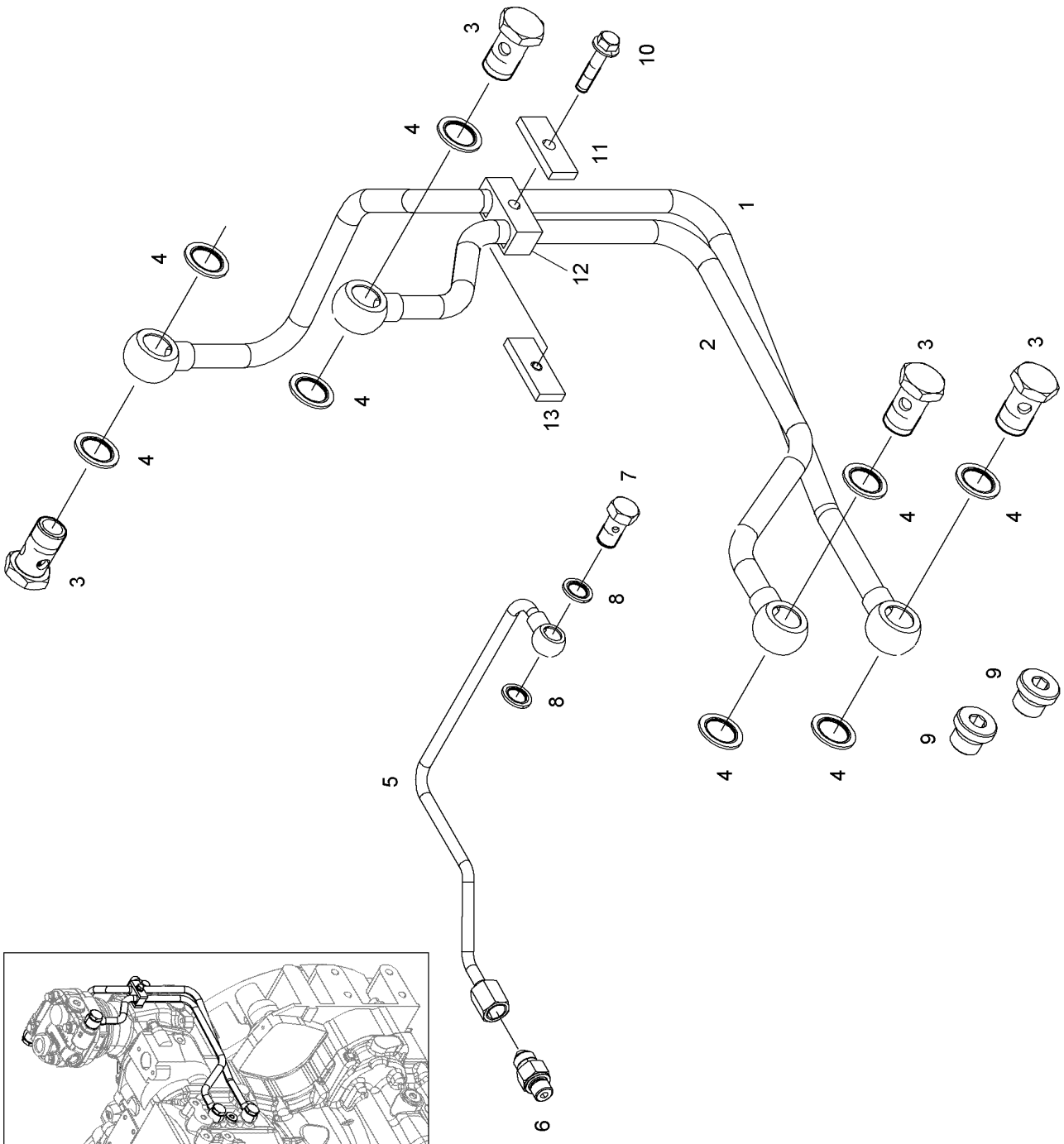

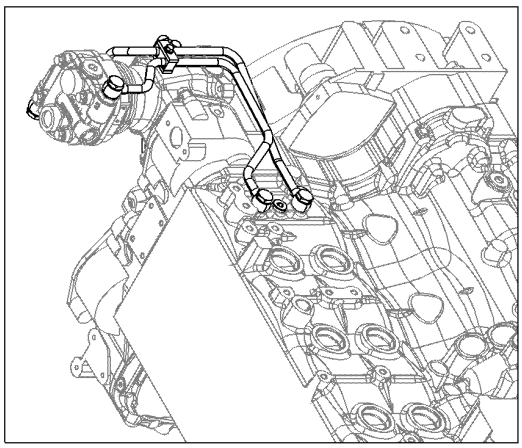

610615

Pos.	Item	Quantity	Description	Bezeichnung	Serie	K
1	11414767	1	COOLING WATER LINE	KUEHLWASSERLEITUNG		
2	11414759	1	COOLING WATER LINE	KUEHLWASSERLEITUNG		
3	4980741	4	HOLLOW SCREW DIN 7643 12X3	HOHLSCHRAUBE		
4	10011867	8	SEALING RING	DICHTRING		
5	11410004	1	PIPELINE	ROHRLEITUNG		
6	10813933	1	FITTING	VERSCHRAUBUNG		
7	4079160	1	HOLLOW SCREW DIN 7643 M10X1	HOHLSCHRAUBE		
8	10011864	2	SEALING RING	DICHTRING		
9	7381638	2	SCREW PLUG	VERSCHLUSSSCHRAUBE		
10	10290537	1	HEX SCREW EN 1665 M6X30 8.8	SECHSKANTSCHRAUBE		
11	9073190	1	SUPPORT PLATE	STUETZBLECH		
12	7382216	1	PIPE CLAMP	ROHRSCHELLE		
13	9073189	1	SUPPORT PLATE	STUETZBLECH		

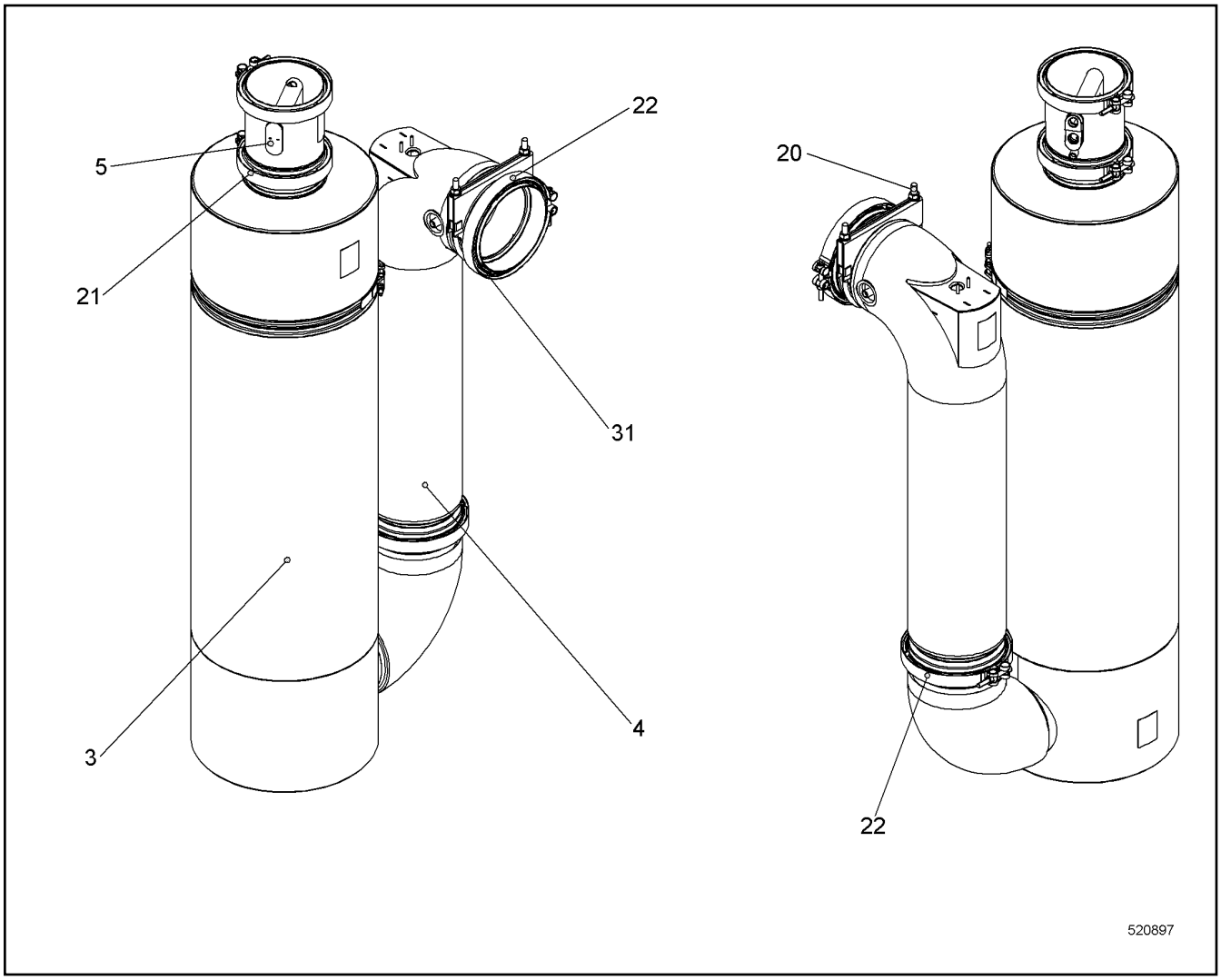

Pos.	Item	Quantity	Description	Bezeichnung	Serie	K
3	11403711	1	SCR CPL. ⇨ ❑ 304	SCR KPL.		
4	10148669	1	EXHAUST MIXING PIPE	ABGASMISCHROHR		
5	10144086	1	MIXER	MISCHER		
20	10144699	1	BOW-TYPE CLAMP	BUEGELSCHELLE		
21	10494116	2	PROFIL CLAMP	PROFILSCHELLE		
22	10494117	2	PROFIL CLAMP	PROFILSCHELLE		
31	10144102	1	SEAL	DICHTUNG		

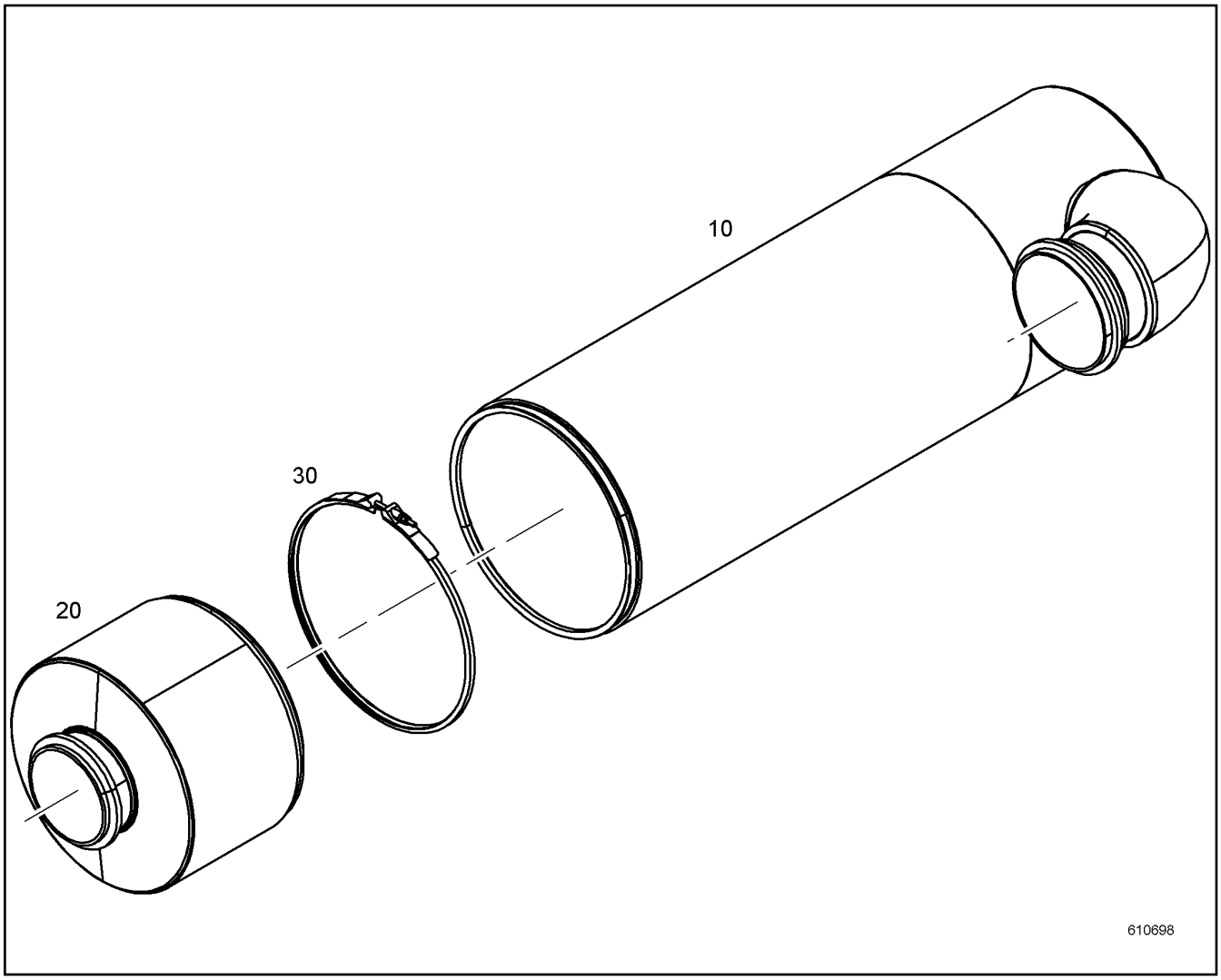

Pos.	Item	Quantity	Description	Bezeichnung	Serie	K
10	10144034	1	INLET MODULE	EINGANGSMODUL		
20	11403695	1	OUTLET MODULE	AUSGANGSMODUL		
30	10141051	1	PROFIL CLAMP	PROFILSCHELLE		

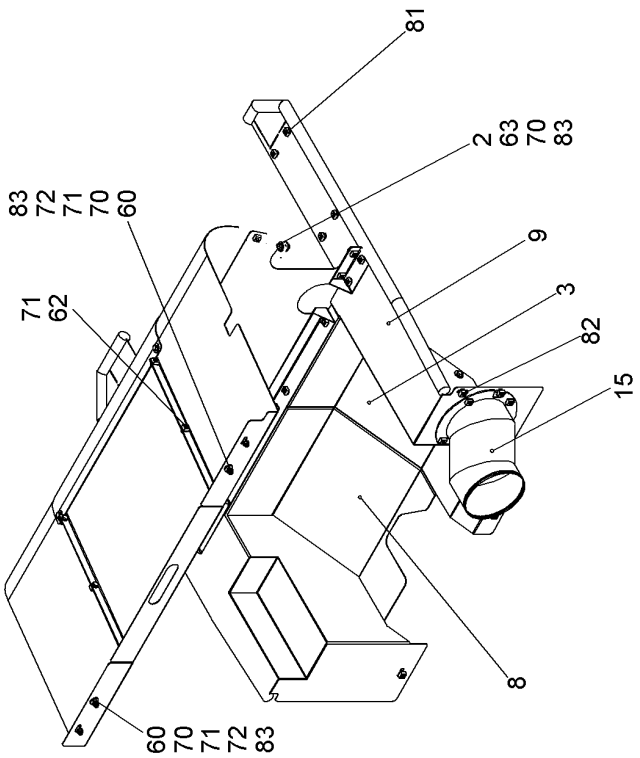
81
2
63
70
83
83
72
71
70
60
9
71
62
3
82
15
8
60
70
71
72
83

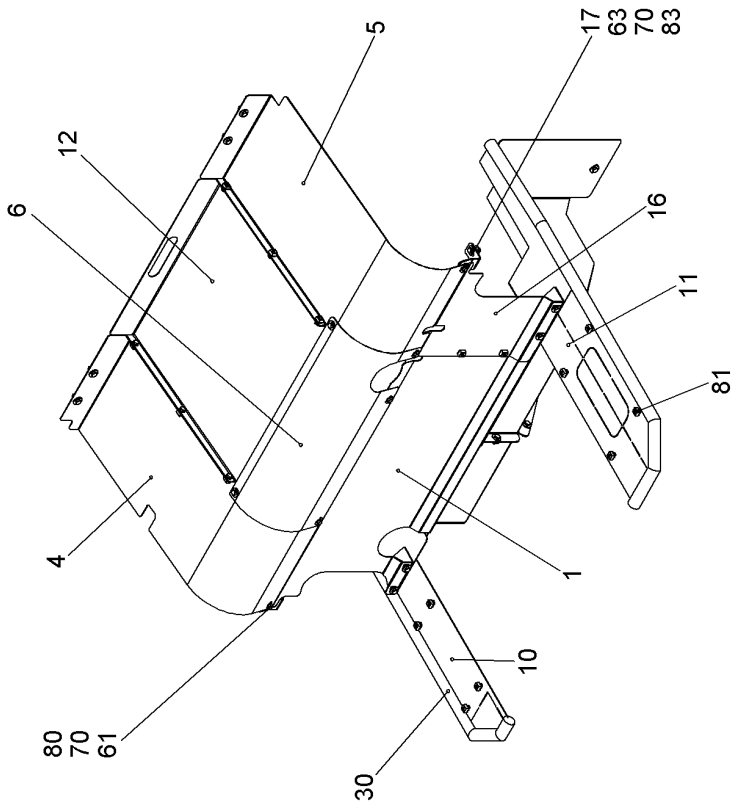
5
17
63
70
83
12
6
16
11
81
4
1
10
80
70
61
30

519126

Pos.	Item	Quantity	Description	Bezeichnung	Serie	K
1	11252203	1	COVER	ABDECKUNG		
2	11252207	1	COVER	ABDECKUNG		
3	11252211	1	COVER	ABDECKUNG		
4	11252214	1	COVER	ABDECKUNG		
5	11252215	1	COVER	ABDECKUNG		
6	11252216	1	COVER	ABDECKUNG		
8	11252208	1	COVER	ABDECKUNG		
9	11252213	1	COVER	ABDECKUNG		
10	10583346	1	COVER	ABDECKUNG		
11	10583347	1	COVER	ABDECKUNG		
12	11262861	1	COVER	ABDECKUNG		
15	11252578	1	SUCTION PIPE AIR	ANSAUGROHR LUFT		
16	11252205	1	COVER	ABDECKUNG		
17	11252206	1	COVER	ABDECKUNG		
30	7014524	4.5	CLAMPING PROFILE	KLEMMPROFIL		
60	406511614	4	HEX SCREW ISO 4017 M10X30 A4-70	SECHSKANTSCHRAUBE		
61	406511914	40	HEX SCREW ISO 4017 M10X25 A4-70	SECHSKANTSCHRAUBE		
62	406518714	10	HEX SCREW ISO 4017 M10X20 A4-70	SECHSKANTSCHRAUBE		
63	406509314	2	HEX SCREW ISO 4017 M10X35 A4-70	SECHSKANTSCHRAUBE		
70	10540511	51	WASHER ISO 7093-1 10 A4	SCHEIBE		
71	420001114	11	WASHER ISO 7089 10 A4	SCHEIBE		
72	421300214	2	WASHER DIN 6340 10.5 C35	SCHEIBE		
80	413003308	32	CAGE NUT M10-R-140-32	KAEFIGMUTTER		
81	413004408	8	CAGE NUT M10-R-140-62	KAEFIGMUTTER		
82	413003508	10	CAGE NUT M10-R-140-47	KAEFIGMUTTER		
83	10540494	6	HEX NUT ISO 10511 M10 A4	SECHSKANTMUTTER		

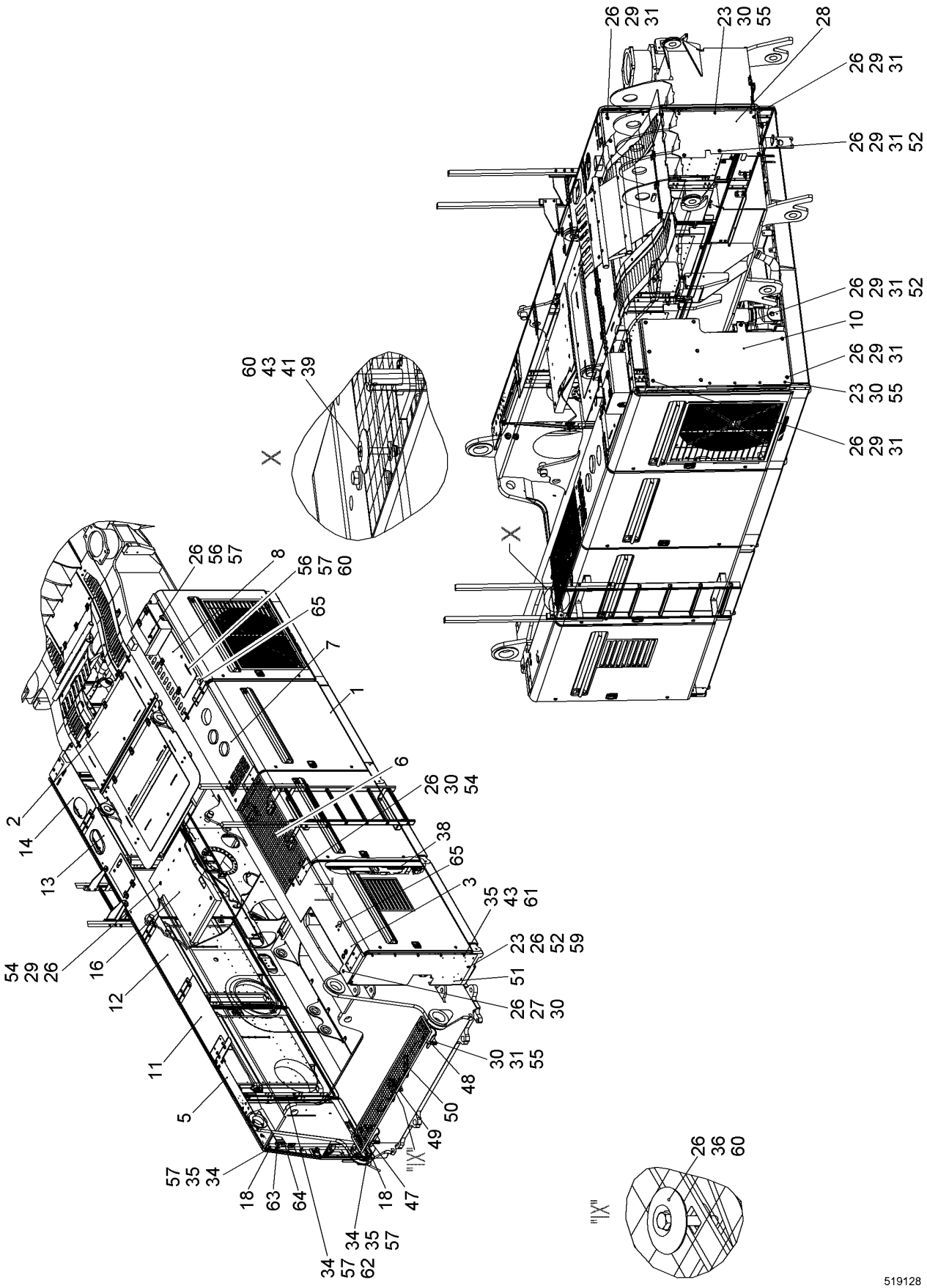
519128

Pos.	Item	Quantity	Description	Bezeichnung	Serie	K
1	11244091	1	COVERS ⇨ ❑ 311	VERKLEIDUNG		
2	10545910	1	MOTOR COWLING ⇨ ❑ 323	MOTORABDECKUNG		
3	10545911	1	ROOF	DACH		
4	10336682	1	WP	WP		
5	10545914	1	ROOF	DACH		
6	10545915	1	GRATING	GITTERROST		
7	10545916	1	ROOF	DACH		
8	10545917	1	ROOF	DACH		
9	11248969	2	BRACKET	BUEGEL		
10	10545918	1	SHEET	PLATTE		
11	10545957	1	ROOF	DACH		
12	10545958	1	ROOF	DACH		
13	11244865	1	ROOF	DACH		
14	11244758	1	ROOF	DACH		
15	11248991	2	ORIFICE	BLENDE		
16	10563073	1	ROOF	DACH		
17	11273242	4	SLIDEWAY 8/14X35 POM	GLEITFUEHRUNG		
18	11217232	4	PLATE	BLECH		
19	11248990	2	ORIFICE	BLENDE		
20	11248992	2	ORIFICE	BLENDE		
21	11248964	1	ORIFICE	BLENDE		
22	11248966	1	ORIFICE	BLENDE		
23	406511914	35	HEX SCREW ISO 4017 M10X25 A4-70	SECHSKANTSCHRAUBE		
24	406518614	5	HEX SCREW ISO 4017 M10X50 A4-70	SECHSKANTSCHRAUBE		
25	10563082	1	ANGLE	WINKEL		
26	10540511	134	WASHER ISO 7093-1 10 A4	SCHEIBE		
28	11244094	1	SHEET	PLATTE		
29	485550014	21	CAGE NUT M10-RR-140-62	KAEFIGMUTTER		
30	10540494	54	HEX NUT ISO 10511 M10 A4	SECHSKANTMUTTER		
31	406511614	28	HEX SCREW ISO 4017 M10X30 A4-70	SECHSKANTSCHRAUBE		
32	970857103	1	FILING DESK	PULTABLAGE		
33	10223693	2	HOLDER	HALTER		
34	420001014	21	WASHER ISO 7089 8 A4	SCHEIBE		
35	406501414	11	HEX SCREW ISO 4017 M8X25 A4-70	SECHSKANTSCHRAUBE		
36	10538807	5	HEX SCREW ISO 4017 M8X50 A4-70	SECHSKANTSCHRAUBE		
37	10225695	2	SHEET	PLATTE		
38	959465714	2	BRACKET	BUEGEL		
39	10331506	6	HEX SCREW ISO 4017 M8X55 A4-70	SECHSKANTSCHRAUBE		

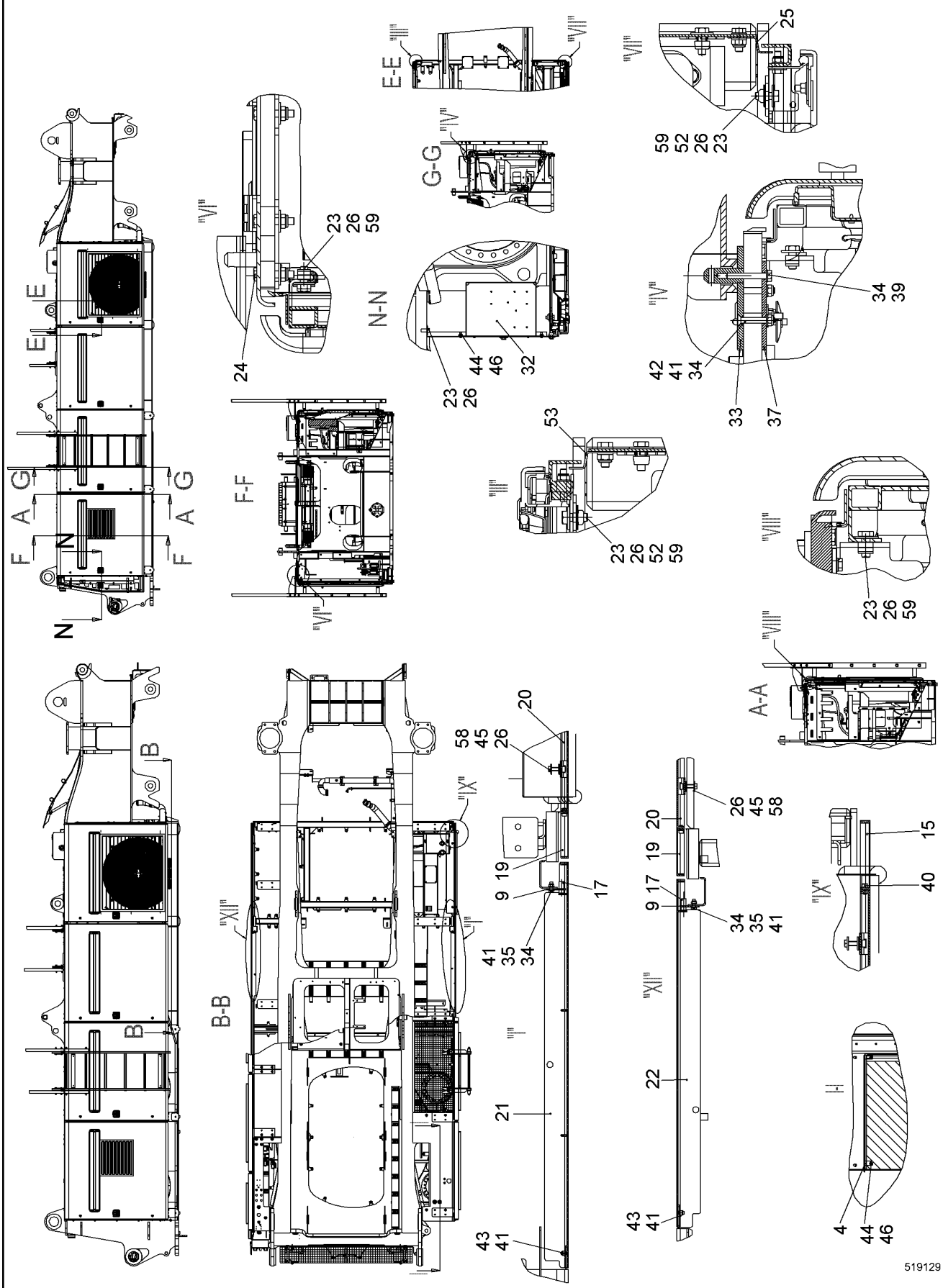

21.6.2017 519129	**138406_ETK_001**	❑ 309 (3/4)
LIEBHERR	**PANELLING SUPERSTR. INSTAL.CPL** **VERKLEIDUNG OW EINBAU KPL**	**11 24 409 0**

Pos.	Item	Quantity	Description	Bezeichnung	Serie	K
40	10539483	8	SOCKET HEAD SCREW ISO 4762 M8X16 A4-7	ZYLINDERSCHRAUBE		
41	10540493	23	HEX NUT ISO 10511 M8 A4	SECHSKANTMUTTER		
42	11910892	6	COUNTERSUNK SCREW ISO 10642 M8X50 A4	SENKSCHRAUBE		
43	10540510	13	WASHER ISO 7093-1 8 A4	SCHEIBE		
44	420000414	10	WASHER ISO 7089 6 A4	SCHEIBE		
45	406527814	4	HEX SCREW ISO 4017 M10X40 A4-70	SECHSKANTSCHRAUBE		
46	10540492	10	HEX NUT ISO 10511 M6 A4	SECHSKANTMUTTER		
47	10584123	1	HOLDER	HALTER		
48	10584124	1	HOLDER	HALTER		
49	10584210	1	HOLDER CPL	HALTER KPL		
50	10584105	1	GRATING	GITTERROST		
51	10583642	1	SHEET	PLATTE		
52	10349263	24	DISTANCE WASHER RD30X1 ALU	DISTANZSCHEIBE		
53	11244498	1	ANGLE	WINKEL		
54	406512014	31	HEX SCREW ISO 4017 M10X45 A4-70	SECHSKANTSCHRAUBE		
55	420001114	40	WASHER ISO 7089 10 A4	SCHEIBE		
56	958478414	2	BRACKET	BUEGEL		
57	411515014	7	HEX NUT ISO 4032 M8 A4-70	SECHSKANTMUTTER		
58	413003508	4	CAGE NUT M10-R-140-47	KAEFIGMUTTER		
59	890035314	21	T-NUT M10X12	T-NUTENSTEIN		
60	10098157	11	DISH	TELLER		
61	485550114	5	CAGE NUT M8-RR-123-47	KAEFIGMUTTER		
62	402600114	1	RING BOLT DIN 580 M8 C15E;EN 10084	RINGSCHRAUBE		
63	11225402	2	GROMMET	DURCHFUEHRUNGSTUELLE		
64	591645108	1	BLANKING PLUG	VERSCHLUSSSTOPFEN		
65	779014014	2	BLANKING PLUG	VERSCHLUSSSTOPFEN		

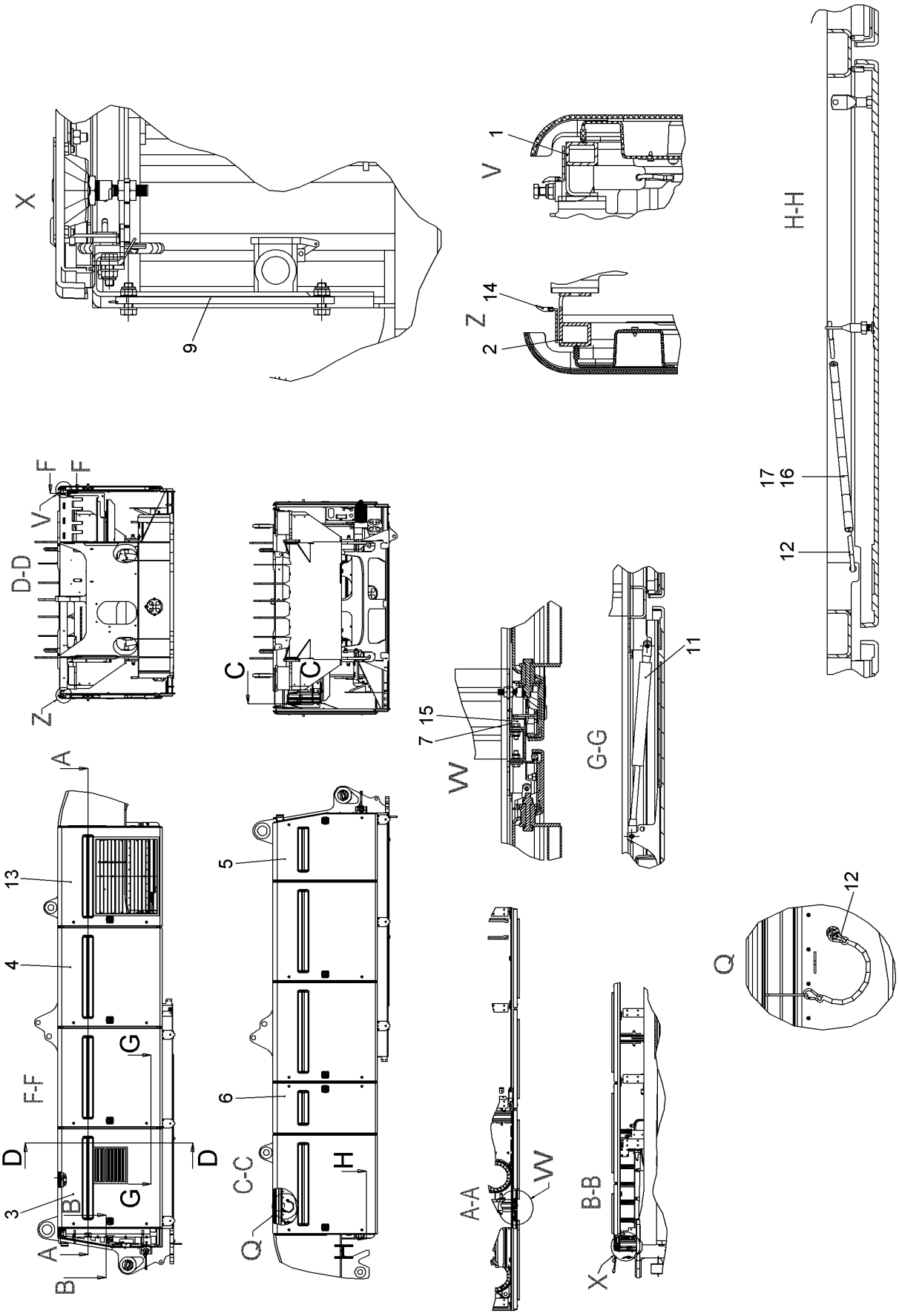
X
9
V
1
Z
14
2
H-H
17
16
12
D-D
F
F
V
Z
C
C
7
15
W
G-G
11
A
13
4
F-F
G
D
D
3
B
G
A
B
5
6
C-C
H
Q
H
A-A
W
B-B
X
Q
12
519130

Pos.	Item	Quantity	Description	Bezeichnung	Serie	K
1	10566842	1	FRAME	RAHMEN		
2	11244092	1	FRAME	RAHMEN		
3	10578835	1	DOOR ⇨ ❑ 315	TUER		
4	10578976	5	DOOR ⇨ ❑ 317	TUER		
5	10579400	1	DOOR ⇨ ❑ 319	TUER		
6	10566237	1	DOOR ⇨ ❑ 321	TUER		
7	10351547	7	WP	WP		
8	10351548	1	WP	WP		
9	10020512	1	BULKHEAD PLATE	SCHOTTPLATTE		
11	592323514	7	GAS SPRING	GASFEDER		
12	744011114	5	SNAP HOOK	KARABINERHAKEN		
13	10565808	1	DOOR ⇨ ❑ 322	TUER		

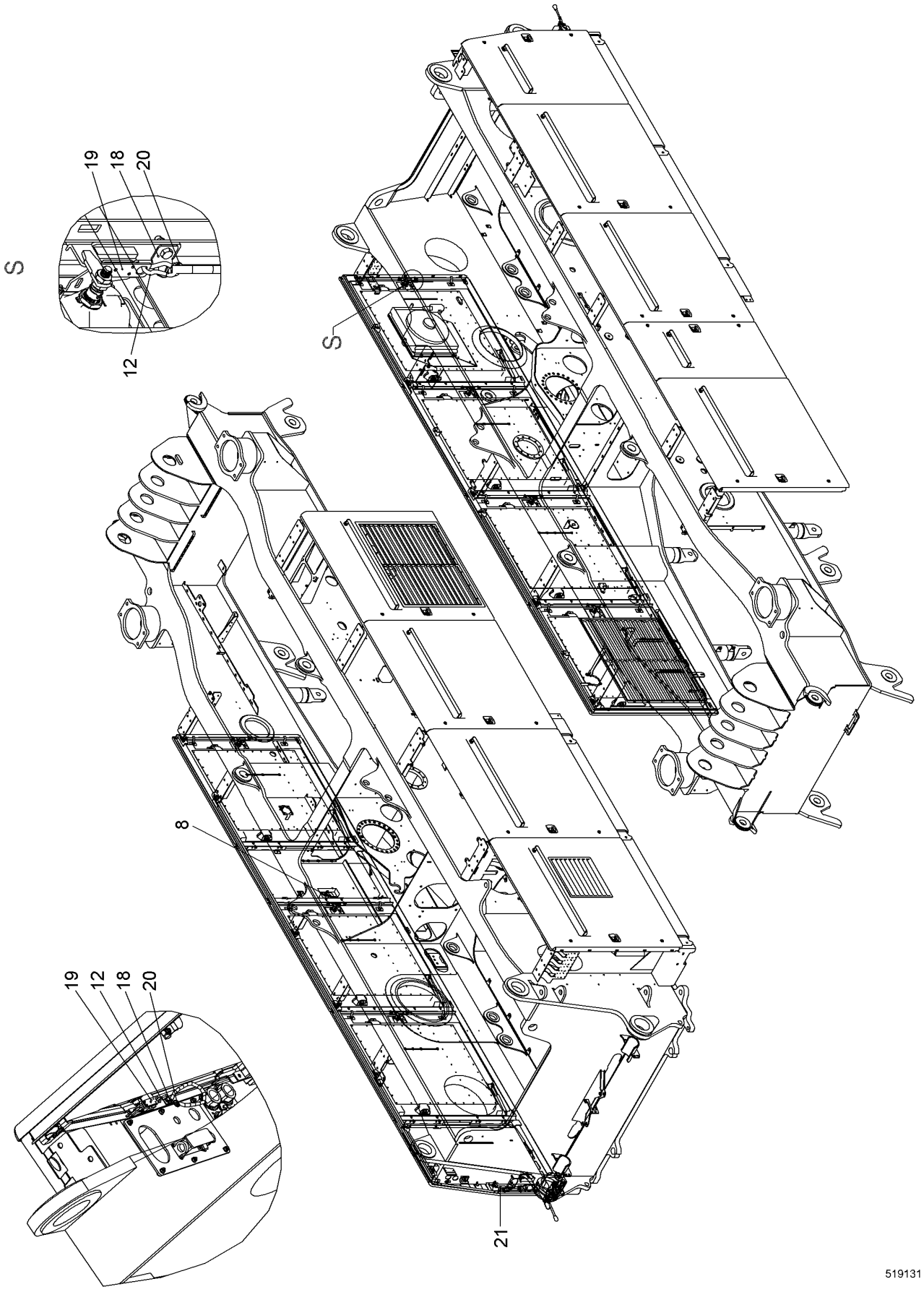
19
18
20
S
12
S
8
19
12
18
20
21
519131

Pos.	Item	Quantity	Description	Bezeichnung	Serie	K
14	262105314	9	FLEXIBLE EDGE PROTECTOR	KANTENSCHUTZ FLEXIBEL		
15	790549214	9	DOOR WEDGE	TUERKEIL		
16	740000801	2.3	KNOTTED-LINK CHAIN	KNOTENKETTE		
17	603000408	2.3	INSULATING HOSE	ISOLIERSCHLAUCH		
18	10574364	2	ANGLE	WINKEL		
19	10574357	2	PLATE	BLECH		
20	704214114	2	KEY RING RD 25	SCHLUESSELRING		
21	10581590	1	PLATE	BLECH		

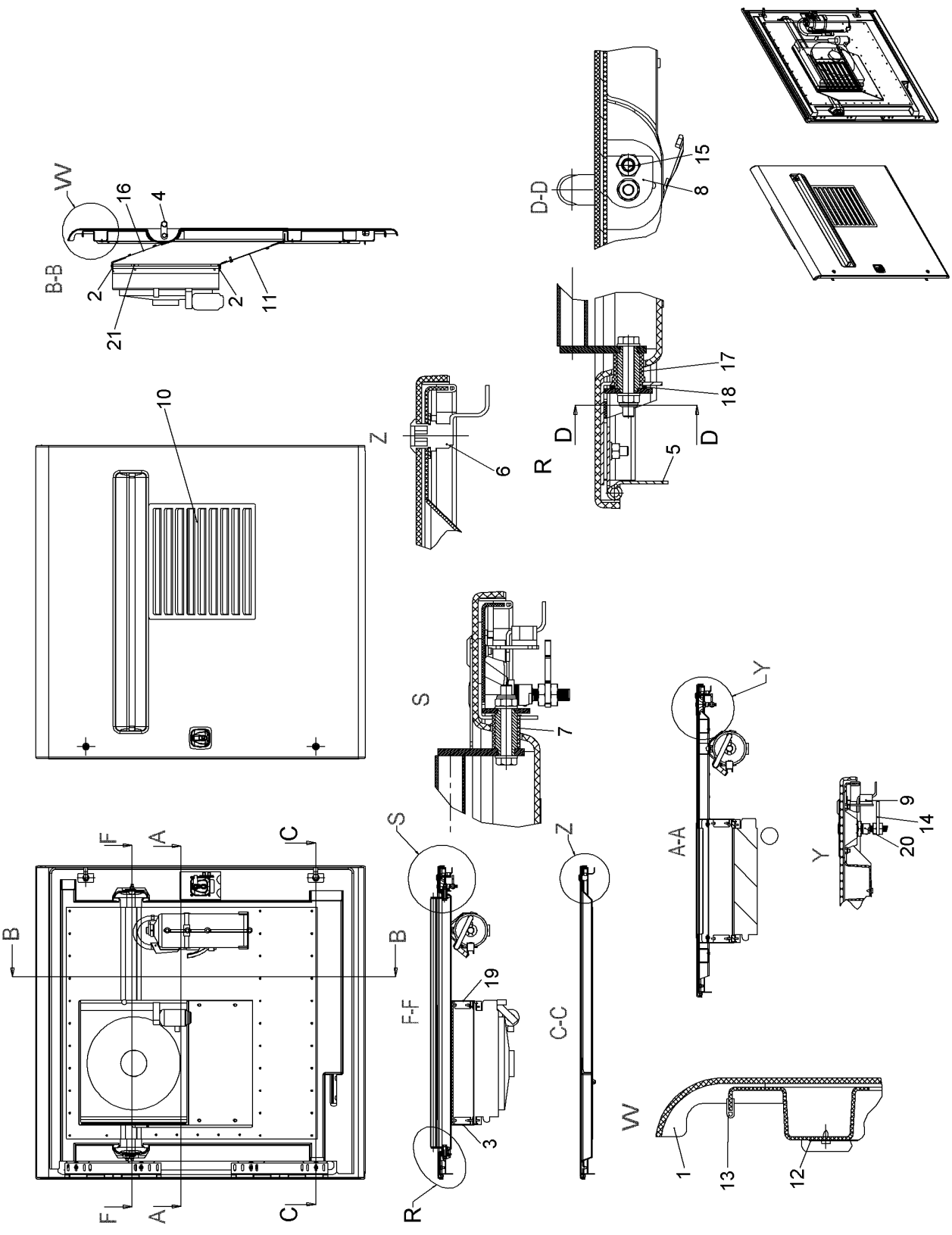
W
16
4
B-B
2
2
11
21
D-D
15
8
10
Z
6
D
R
D
17
18
5
S
7
S
F
A
C
B
B
F
A
C
F-F
19
3
R
Z
C-C
A-A
Y
Y
9
14
20
W
1
13
12
519779

Pos.	Item	Quantity	Description	Bezeichnung	Serie	K
1	10578836	1	DOOR	TUER		
2	262105314	1.1	FLEXIBLE EDGE PROTECTOR	KANTENSCHUTZ FLEXIBEL		
3	10223447	1	WP	WP		
4	10020487	1	GRIP	GRIFF		
5	385204714	2	HINGE	SCHARNIER		
6	10020161	2	ROTATING BAR CPL	DREHRIEGEL KPL		
7	797029114	1	BUSHING 20X24X30 POM;DIN EN ISO 9988	BUCHSE		
8	990443514	2	LIMIT STOP	ANSCHLAG		
9	790549314	1	DOOR WEDGE STOP	TUERKEIL PUFFER		
10	10223362	1	FAN COVER	LUEFTERABDECKUNG		
11	10223448	1	WP	WP		
12	10578841	1	PERFORATED PLATE	LOCHBLECH		
13	11918670	4	SEALING PROFILE	DICHTUNGSPROFIL		
14	10351784	1	LOCKING BAR	RIEGEL		
15	790550914	1	THRUST PIECE M12X26 X8CRNIS18-9;EN 1008	DRUCKSTUECK		
16	10223449	1	WP	WP		
17	958471514	1	BUSHING 20X24.9X31.9 POM;DIN EN ISO 9988	BUCHSE		
18	958471614	1	WASHER 25.2/32X3 POM	SCHEIBE		
19	10223446	1	WP	WP		
20	10353879	1	DOOR LOCK	TUERSCHLOSS		
21	726902614	4	RUBBER MOUNT	LAGER GUMMI		

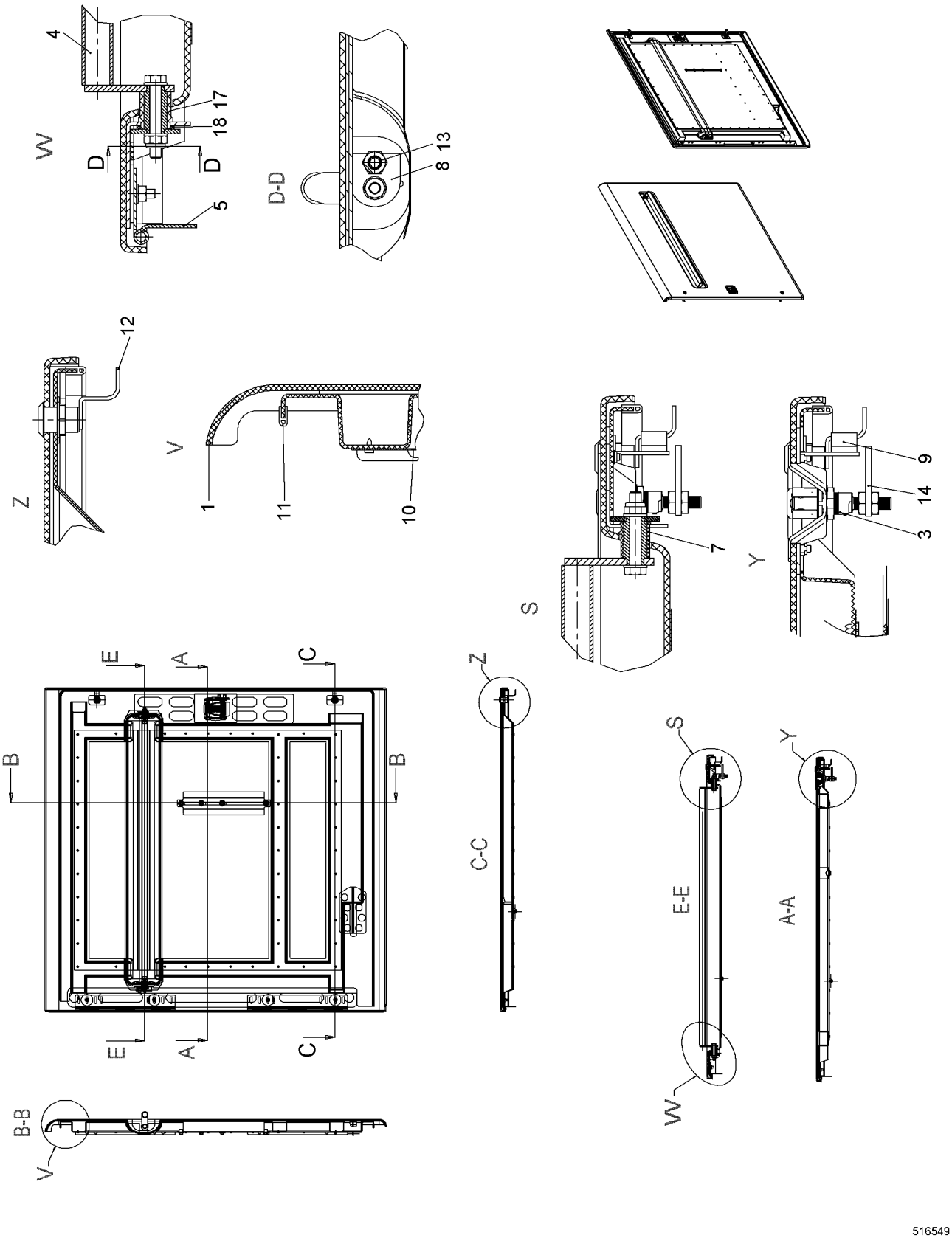
4
W
D
D
18 17
5
D-D
8 13
12
Z
V
1
11
10
S
7
Y
9
14
3
E
A
C
B
B
E
A
C
B-B
V
Z
C-C
S
E-E
W
Y
A-A
516549

Pos.	Item	Quantity	Description	Bezeichnung	Serie	K
1	10578972	1	DOOR	TUER		
3	10353879	1	DOOR LOCK	TUERSCHLOSS		
4	10020487	1	GRIP	GRIFF		
5	385204714	2	HINGE	SCHARNIER		
7	797029114	1	BUSHING 20X24X30 POM;DIN EN ISO 9988	BUCHSE		
8	990443514	2	LIMIT STOP	ANSCHLAG		
9	790549314	1	DOOR WEDGE STOP	TUERKEIL PUFFER		
10	10578971	1	PERFORATED PLATE	LOCHBLECH		
11	11918670	4.1	SEALING PROFILE	DICHTUNGSPROFIL		
12	10020161	2	ROTATING BAR CPL	DREHRIEGEL KPL		
13	790550914	1	THRUST PIECE M12X26 X8CRNIS18-9;EN 1008	DRUCKSTUECK		
14	10351784	1	LOCKING BAR	RIEGEL		
17	958471514	1	BUSHING 20X24.9X31.9 POM;DIN EN ISO 9988	BUCHSE		
18	958471614	1	WASHER 25.2/32X3 POM	SCHEIBE		

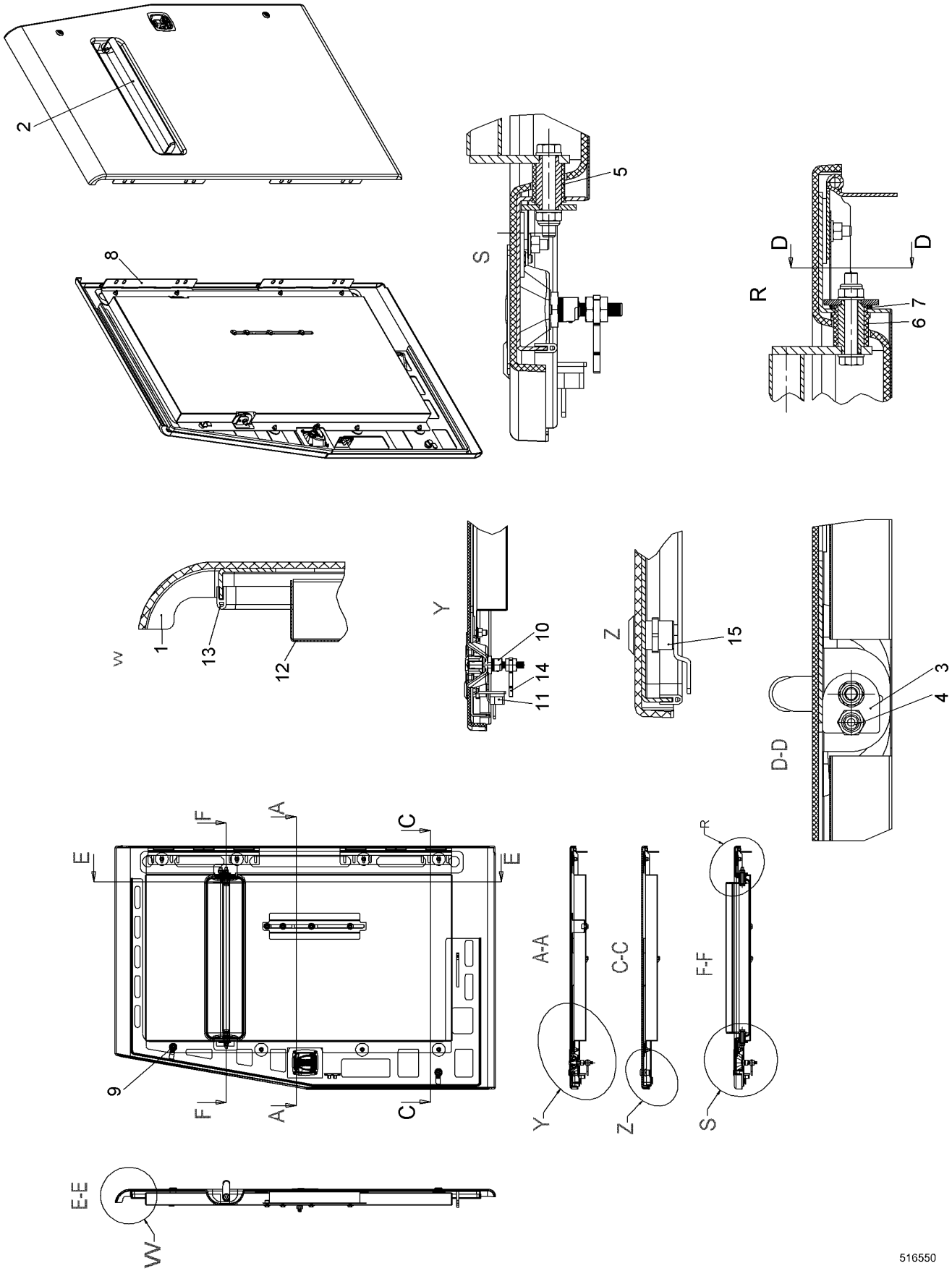
2
8
5
S
D
D
R
6 7
W
1
13
12
Y
10
11 14
Z
15
D-D
3
4
F
A
C
E
E
9
F
A
C
A-A
C-C
F-F
R
Y
Z
S
E-E
W
516550

Pos.	Item	Quantity	Description	Bezeichnung	Serie	K
1	10579397	1	DOOR	TUER		
2	10579454	1	GRIP	GRIFF		
3	990443514	2	LIMIT STOP	ANSCHLAG		
4	790550914	1	THRUST PIECE M12X26 X8CRNIS18-9;EN 1008	DRUCKSTUECK		
5	797029114	1	BUSHING 20X24X30 POM;DIN EN ISO 9988	BUCHSE		
6	958471514	1	BUSHING 20X24.9X31.9 POM;DIN EN ISO 9988	BUCHSE		
7	958471614	1	WASHER 25.2/32X3 POM	SCHEIBE		
8	385204714	2	HINGE	SCHARNIER		
9	10020161	1	ROTATING BAR CPL	DREHRIEGEL KPL		
10	10353879	1	DOOR LOCK	TUERSCHLOSS		
11	790549314	1	DOOR WEDGE STOP	TUERKEIL PUFFER		
12	10579423	1	PERFORATED PLATE	LOCHBLECH		
13	11918670	2.6	SEALING PROFILE	DICHTUNGSPROFIL		
14	10351784	1	LOCKING BAR	RIEGEL		
15	10581486	1	SASH LOCK	VORREIBER		

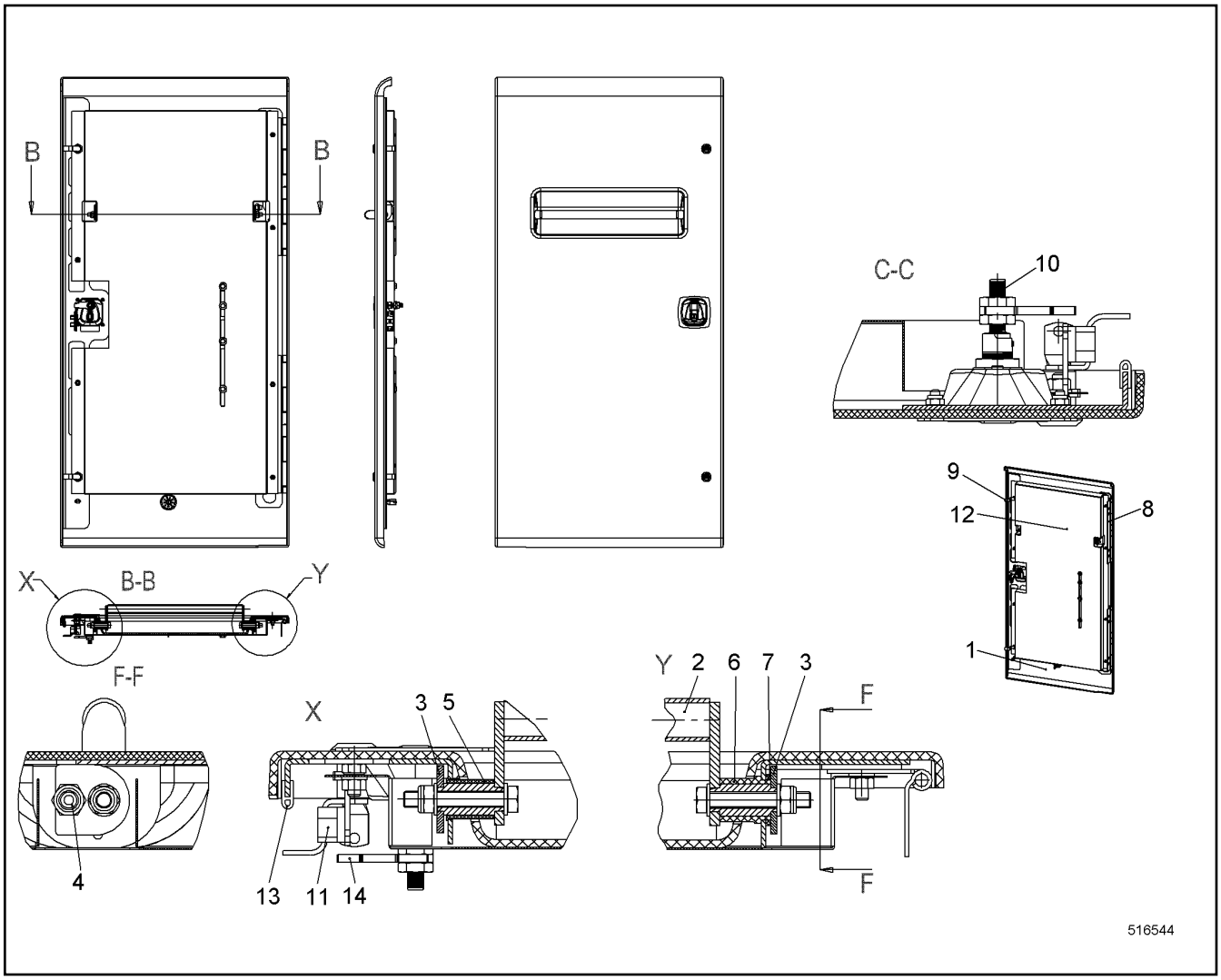

Pos.	Item	Quantity	Description	Bezeichnung	Serie	K
1	10566238	1	DOOR	TUER		
2	10579145	1	GRIP	GRIFF		
3	990443514	2	LIMIT STOP	ANSCHLAG		
4	790550914	1	THRUST PIECE M12X26 X8CRNIS18-9;EN 1008	DRUCKSTUECK		
5	797029114	1	BUSHING 20X24X30 POM;DIN EN ISO 9988	BUCHSE		
6	958471514	1	BUSHING 20X24.9X31.9 POM;DIN EN ISO 9988	BUCHSE		
7	958471614	1	WASHER 25.2/32X3 POM	SCHEIBE		
8	385204714	2	HINGE	SCHARNIER		
9	10020161	2	ROTATING BAR CPL	DREHRIEGEL KPL		
10	10353879	1	DOOR LOCK	TUERSCHLOSS		
11	790549314	1	DOOR WEDGE STOP	TUERKEIL PUFFER		
12	10566239	1	PERFORATED PLATE	LOCHBLECH		
13	11918670	1.35	SEALING PROFILE	DICHTUNGSPROFIL		
14	10351784	1	LOCKING BAR	RIEGEL		

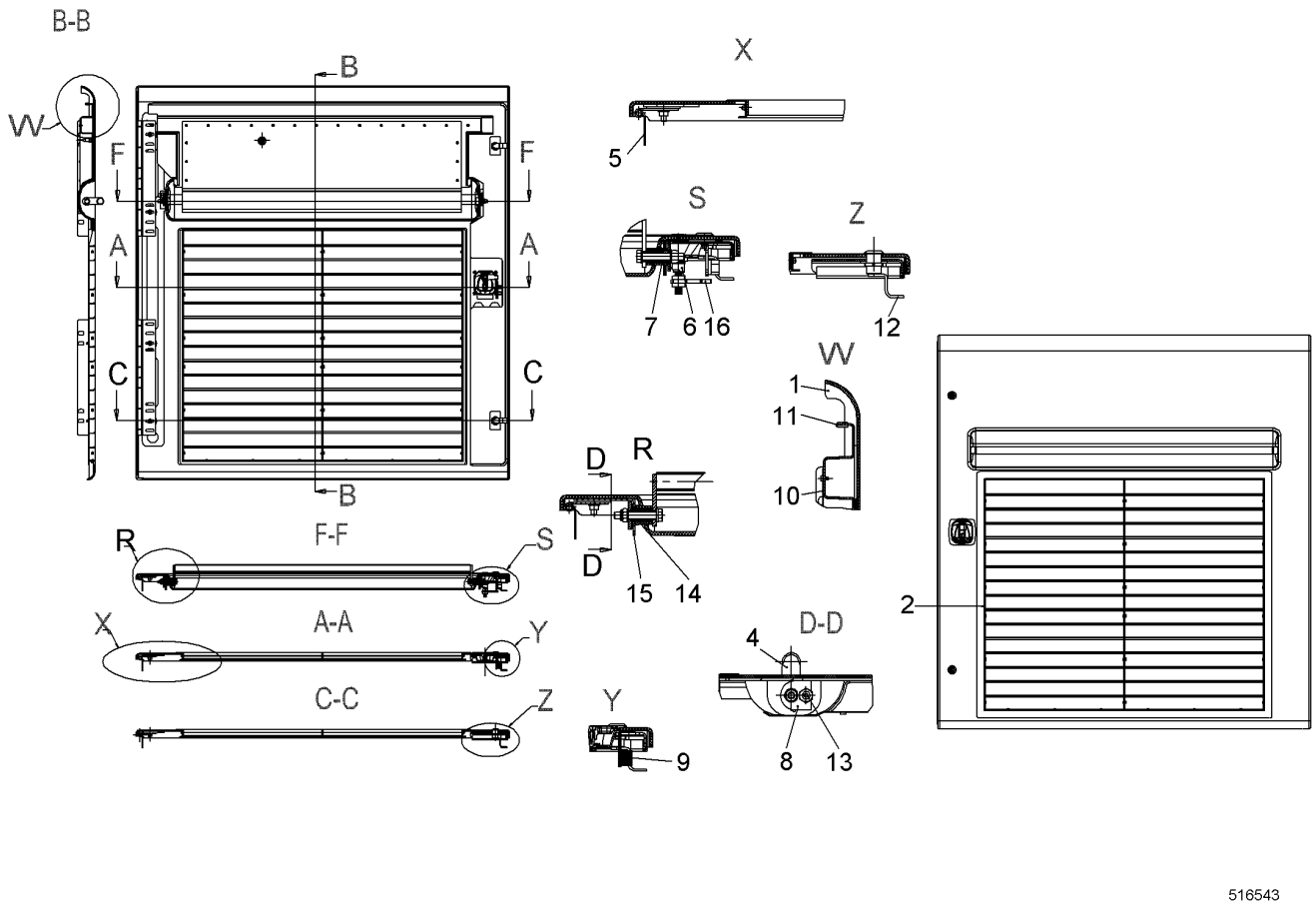

Pos.	Item	Quantity	Description	Bezeichnung	Serie	K
1	10565777	1	DOOR	TUER		
2	10565889	1	FAN COVER	LUEFTERABDECKUNG		
4	10020487	1	GRIP	GRIFF		
5	385204714	2	HINGE	SCHARNIER		
6	10353879	1	DOOR LOCK	TUERSCHLOSS		
7	797029114	1	BUSHING 20X24X30 POM;DIN EN ISO 9988	BUCHSE		
8	990443514	2	LIMIT STOP	ANSCHLAG		
9	790549314	1	DOOR WEDGE STOP	TUERKEIL PUFFER		
10	10565879	1	PERFORATED PLATE	LOCHBLECH		
11	11918670	2.8	SEALING PROFILE	DICHTUNGSPROFIL		
12	10020161	2	ROTATING BAR CPL	DREHRIEGEL KPL		
13	790550914	1	THRUST PIECE M12X26 X8CRNIS18-9;EN 1008	DRUCKSTUECK		
14	958471514	1	BUSHING 20X24.9X31.9 POM;DIN EN ISO 9988	BUCHSE		
15	958471614	1	WASHER 25.2/32X3 POM	SCHEIBE		
16	10351784	1	LOCKING BAR	RIEGEL		

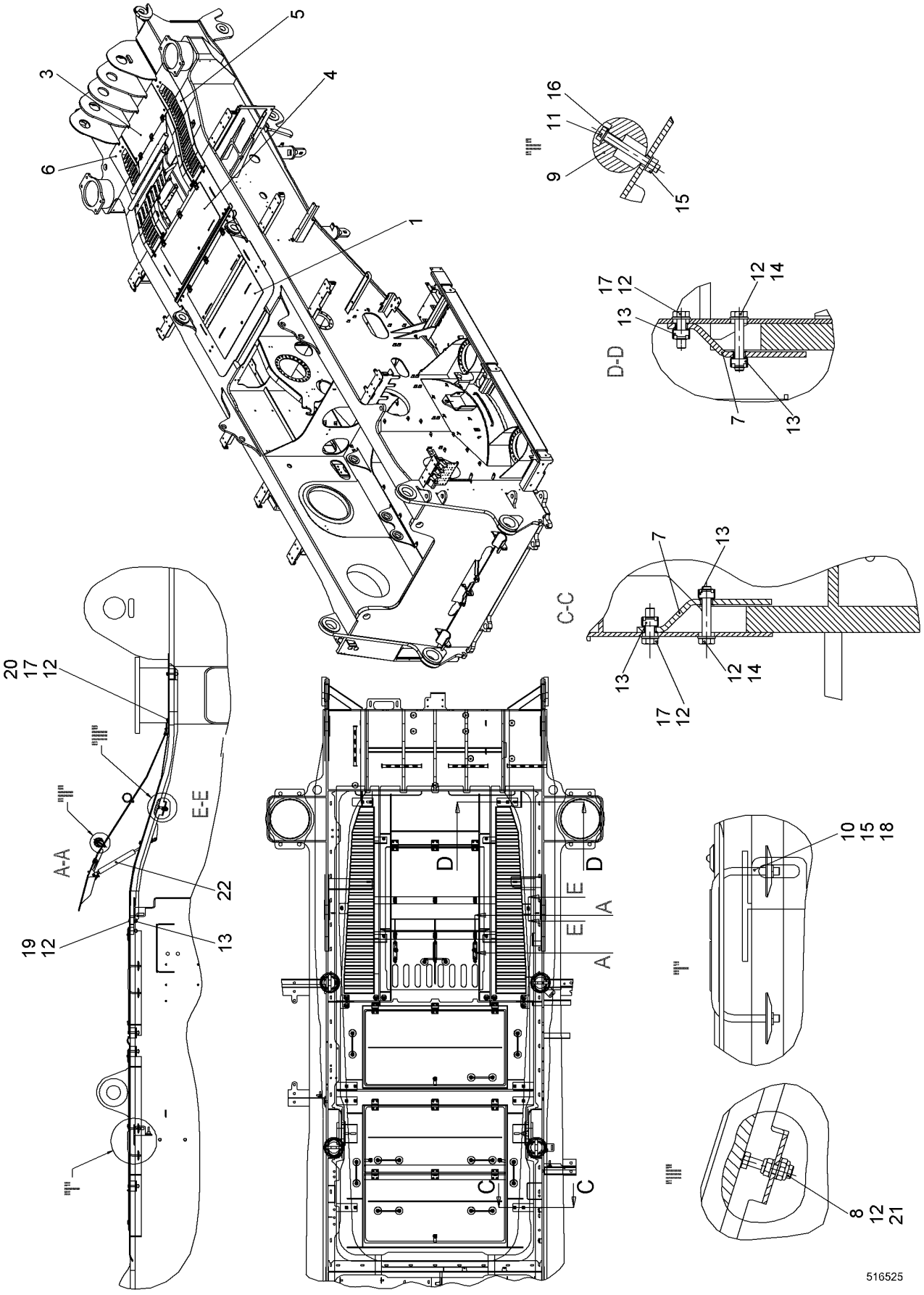

21.6.2017 516525 LIEBHERR	**138406_ETK_001** **MOTOR COWLING** **MOTORABDECKUNG**	❑ 323 (1/2) **10 54 591 0**

Pos.	Item	Quantity	Description	Bezeichnung	Serie	K
1	10563099	1	ROOF	DACH		
3	10545968	1	ROOF	DACH		
4	10545969	1	ROOF	DACH		
5	10545970	1	ROOF	DACH		
6	10546335	1	ROOF	DACH		
7	10349206	8	BRACKET	BUEGEL		
8	10540494	4	HEX NUT ISO 10511 M10 A4	SECHSKANTMUTTER		
9	10546407	2	STRIP	LEISTE		
10	958478414	10	BRACKET	BUEGEL		
11	10331507	6	HEX SCREW ISO 4017 M8X65 A4-70	SECHSKANTSCHRAUBE		
12	420001114	36	WASHER ISO 7089 10 A4	SCHEIBE		
13	413004408	24	CAGE NUT M10-R-140-62	KAEFIGMUTTER		
14	10539959	8	HEX SCREW ISO 4017 M10X60 A4-70	SECHSKANTSCHRAUBE		
15	411515014	26	HEX NUT ISO 4032 M8 A4-70	SECHSKANTMUTTER		
16	420001014	12	WASHER ISO 7089 8 A4	SCHEIBE		
17	406509314	12	HEX SCREW ISO 4017 M10X35 A4-70	SECHSKANTSCHRAUBE		
18	10098157	20	DISH	TELLER		
19	406512014	8	HEX SCREW ISO 4017 M10X45 A4-70	SECHSKANTSCHRAUBE		
20	411514614	4	HEX NUT ISO 4032 M10 A4-70	SECHSKANTMUTTER		
21	406518614	2	HEX SCREW ISO 4017 M10X50 A4-70	SECHSKANTSCHRAUBE		
22	592323514	3	GAS SPRING	GASFEDER		

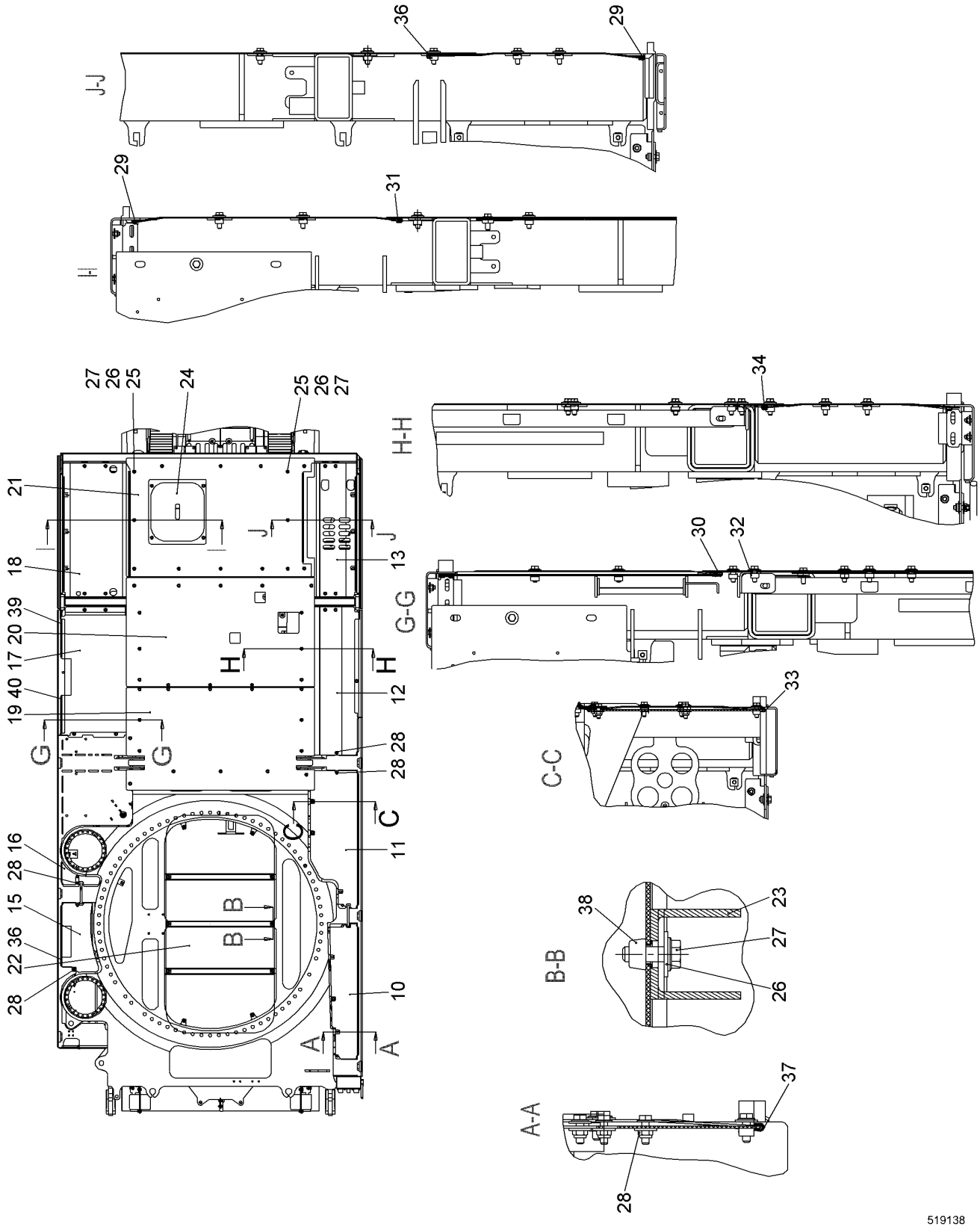

21.6.2017 519138	**138406_ETK_001**	325 (1/2)
LIEBHERR	**COVER UNDERSIDE** **ABDECKUNG UNTERSEITE**	**11 24 922 2**

Pos.	Item	Quantity	Description	Bezeichnung	Serie	K
10	10560687	1	SHEET	PLATTE		
11	10560691	1	SHEET	PLATTE		
12	10560692	1	SHEET	PLATTE		
13	11249223	1	SHEET	PLATTE		
15	10583559	1	SHEET	PLATTE		
16	10560690	1	SHEET	PLATTE		
17	10560688	1	SHEET	PLATTE		
18	11249224	1	SHEET	PLATTE		
19	10583611	1	SHEET	PLATTE		
20	10583612	1	SHEET	PLATTE		
21	11249225	1	SHEET	PLATTE		
22	10098789	1	SHEET	PLATTE		
23	11225259	3	U-PROFILE	U-PROFIL		
24	11249678	1	SHEET	PLATTE		
25	485550014	2	CAGE NUT M10-RR-140-62	KAEFIGMUTTER		
26	10540511	89	WASHER ISO 7093-1 10 A4	SCHEIBE		
27	406550714	84	HEX SCREW EN 1665 M10X30 A2-70	SECHSKANTSCHRAUBE		
28	10540494	12	HEX NUT ISO 10511 M10 A4	SECHSKANTMUTTER		
29	226016702	2.18	EDGE PROTECTION METER WARE	KANTENSCHUTZ METERWARE		
30	226016702	1.11	EDGE PROTECTION METER WARE	KANTENSCHUTZ METERWARE		
31	226016702	1.19	EDGE PROTECTION METER WARE	KANTENSCHUTZ METERWARE		
32	485549914	53	CAGE NUT M10-RR-140-47	KAEFIGMUTTER		
33	226016702	1.24	EDGE PROTECTION METER WARE	KANTENSCHUTZ METERWARE		
34	226016702	1.29	EDGE PROTECTION METER WARE	KANTENSCHUTZ METERWARE		
35	226016702	0.57	EDGE PROTECTION METER WARE	KANTENSCHUTZ METERWARE		
36	226016702	0.85	EDGE PROTECTION METER WARE	KANTENSCHUTZ METERWARE		
37	226016702	1.2	EDGE PROTECTION METER WARE	KANTENSCHUTZ METERWARE		
38	413003308	18	CAGE NUT M10-R-140-32	KAEFIGMUTTER		
39	226016702	0.36	EDGE PROTECTION METER WARE	KANTENSCHUTZ METERWARE		
40	226016702	0.35	EDGE PROTECTION METER WARE	KANTENSCHUTZ METERWARE		

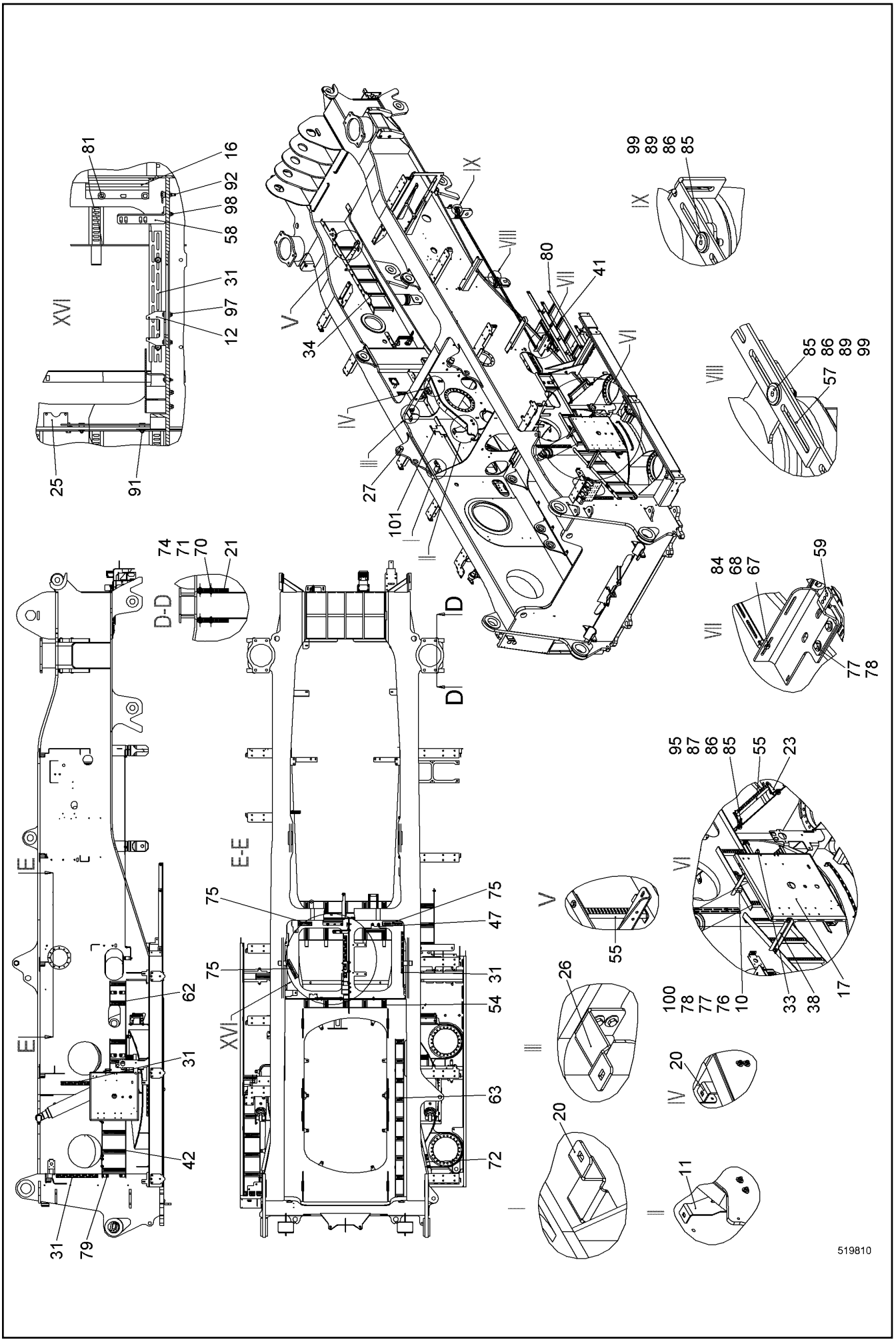
519810

Pos.	Item	Quantity	Description	Bezeichnung	Serie	K
10	956009714	1	INTERMEDIATE PART	ZWISCHENSTUECK		
11	10575981	1	BRACKET ST.CONST.	BUEGEL SCHWK		
12	954598503	2	VALVE HOLDER	VENTILHALTER		
13	10575967	1	BRACKET	BUEGEL		
14	10575984	1	BRACKET ST.CONST.	BUEGEL SCHWK		
15	10575968	1	BRACKET	BUEGEL		
16	949401114	1	HOSE HOLDER ST.CONST. CPL	SCHLAUCHHALTER SCHWK KPL		
17	10575966	1	VALVE PLATE	VENTILPLATTE		
18	10575969	1	BRACKET	BUEGEL		
19	10576104	1	BRACKET ST.CONST.	BUEGEL SCHWK		
20	10575985	2	BRACKET	BUEGEL		
21	10349434	4	STRIP	LEISTE		
22	11247375	1	BRACKET	BUEGEL		
23	10575970	8	BRACKET	BUEGEL		
24	949758314	1	BRACKET	BUEGEL		
25	967313703	1	BRACKET	BUEGEL		
26	10579757	1	BRACKET	BUEGEL		
27	11947719	2	PIN	BOLZEN		
28	11247029	1	SLOTTED STRIP	SCHLITZBAND		
29	11247791	1	BRACKET	BUEGEL		
30	10575980	3	HOLDER	HALTER		
31	11247792	9	SLOTTED STRIP	SCHLITZBAND		
32	11247799	2	SLOTTED STRIP	SCHLITZBAND		
33	11247808	1	BRACKET	BUEGEL		
35	11265945	1	BRACKET	BUEGEL		
37	10575971	3	BRACKET	BUEGEL		
38	11247011	1	BRACKET	BUEGEL		
39	10445651	2	BRACKET	BUEGEL		
42	11246919	1	CABLE LADDER ST.CONST.	KABELLEITER SCHWK		
43	10592619	1	BRACKET	BUEGEL		
44	10592621	1	BRACKET	BUEGEL		
46	10599571	1	WP	WP		
47	10599614	1	C-RAIL ST.CONST.	C-SCHIENE SCHWK		
48	11247158	1	CABLE LADDER ST.CONST.	KABELLEITER SCHWK		
49	10599854	1	WP	WP		
50	11247207	1	CABLE LADDER ST.CONST.	KABELLEITER SCHWK		
52	11244040	2	SLOTTED STRIP	SCHLITZBAND		
57	11234375	2	SLOTTED STRIP	SCHLITZBAND		
58	11234405	1	BRACKET	BUEGEL		
59	11234413	1	BRACKET	BUEGEL		

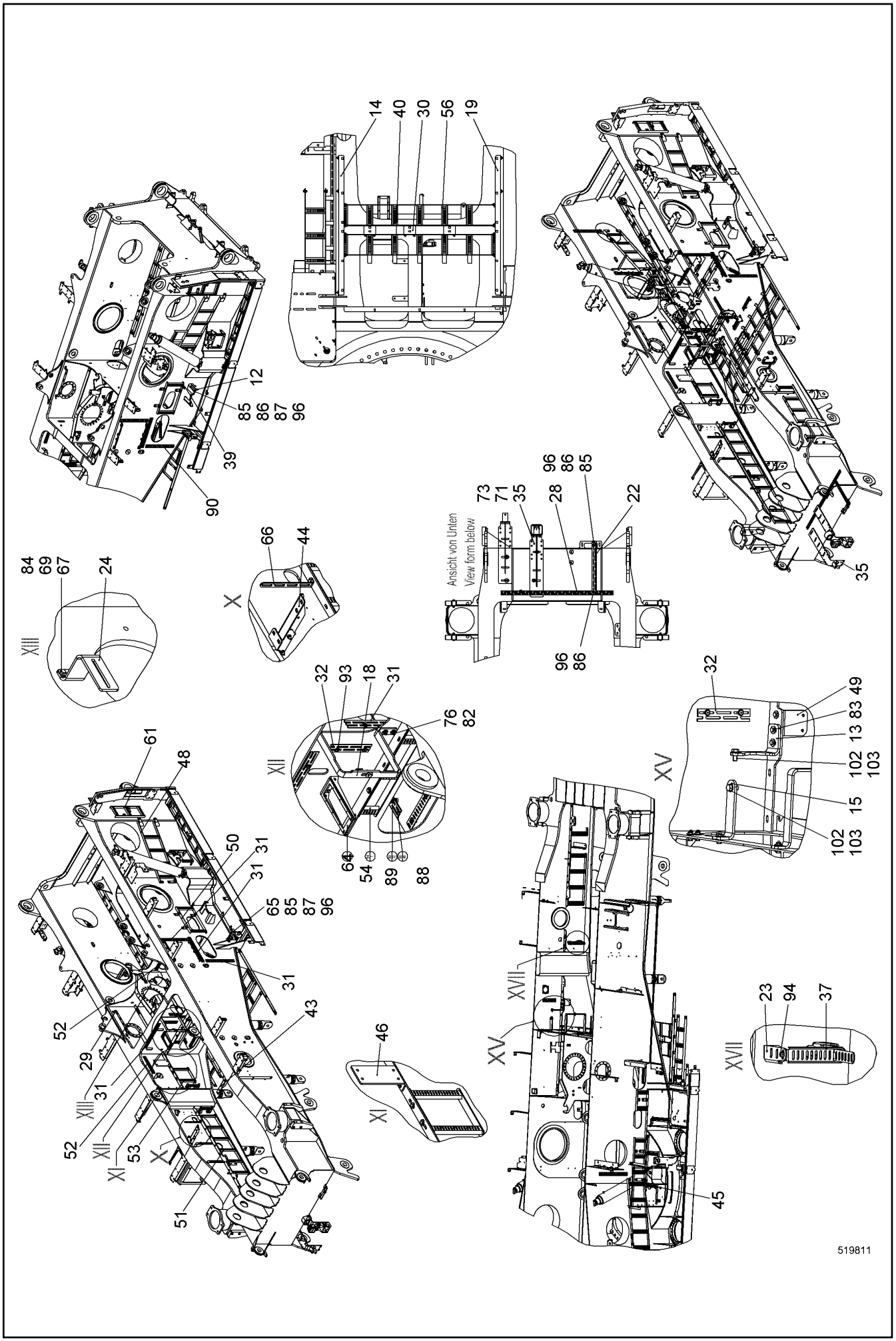
14 40 30 56 19
12 85 86 87 96 39 90
96 86 85 73 71 35 28 22 35
Ansicht von Unten
View form below
96 86
66 44 X
84 69 67 24 XIII
32 93 18 31 76 82 XII 64 54 89 88
61 48 50 31 31 65 85 87 96 31 43 52 29 31 XIII 52 XII XI 53 X 51
46 XI
XVII XV
32 49 83 13 102 103 15 102 103 XV
23 94 37 XVII
45
519811

Pos.	Item	Quantity	Description	Bezeichnung	Serie	K
61	11247023	1	CABLE LADDER ST.CONST.	KABELLEITER SCHWK		
62	11247131	1	CABLE LADDER ST.CONST.	KABELLEITER SCHWK		
64	954485303	1	CONSOLE	KONSOLE		
65	11265089	1	CABLE LADDER ST.CONST.	KABELLEITER SCHWK		
67	10540500	6	WASHER ISO 7093-1 6 A4	SCHEIBE		
68	406532614	1	HEX SCREW ISO 4017 M6X20 A4-70	SECHSKANTSCHRAUBE		
69	406551114	2	HEX SCREW ISO 4017 M6X35 A4-70	SECHSKANTSCHRAUBE		
70	10540495	8	HEX NUT ISO 10511 M12 A4	SECHSKANTMUTTER		
71	10540512	11	WASHER ISO 7093-1 12 A4	SCHEIBE		
72	11257849	1	BRACKET	BUEGEL		
73	406517314	3	HEX SCREW ISO 4017 M12X30 A4-70	SECHSKANTSCHRAUBE		
74	10538830	8	HEX SCREW ISO 4017 M12X80 A4-70	SECHSKANTSCHRAUBE		
75	11257851	3	BRACKET	BUEGEL		
76	10540494	83	HEX NUT ISO 10511 M10 A4	SECHSKANTMUTTER		
77	10540511	125	WASHER ISO 7093-1 10 A4	SCHEIBE		
78	420001114	53	WASHER ISO 7089 10 A4	SCHEIBE		
79	406511914	24	HEX SCREW ISO 4017 M10X25 A4-70	SECHSKANTSCHRAUBE		
80	406511614	46	HEX SCREW ISO 4017 M10X30 A4-70	SECHSKANTSCHRAUBE		
81	406509314	23	HEX SCREW ISO 4017 M10X35 A4-70	SECHSKANTSCHRAUBE		
82	406527814	8	HEX SCREW ISO 4017 M10X40 A4-70	SECHSKANTSCHRAUBE		
83	406512014	1	HEX SCREW ISO 4017 M10X45 A4-70	SECHSKANTSCHRAUBE		
84	10540492	3	HEX NUT ISO 10511 M6 A4	SECHSKANTMUTTER		
85	10540493	37	HEX NUT ISO 10511 M8 A4	SECHSKANTMUTTER		
86	10540510	34	WASHER ISO 7093-1 8 A4	SCHEIBE		
87	420001014	26	WASHER ISO 7089 8 A4	SCHEIBE		
88	421700508	48	WASHER DIN 7989 11 ST	SCHEIBE		
89	460022703	34	WASHER EN 14399-6 12 C45	SCHEIBE		
90	408606414	14	COUNTERSUNK SCREW DIN 7991 M8X25 A4-7	SENKSCHRAUBE		
91	408600808	2	COUNTERSUNK SCREW ISO 10642 M8X40 8.8	SENKSCHRAUBE		
92	4002655	10	COUNTERSUNK SCREW ISO 10642 M8X60 8.8	SENKSCHRAUBE		
93	10349756	6	COUNTERSUNK SCREW ISO 10642 M8X35 A4	SENKSCHRAUBE		
94	406518814	8	HEX SCREW ISO 4017 M8X20 A4-70	SECHSKANTSCHRAUBE		
95	406501414	2	HEX SCREW ISO 4017 M8X25 A4-70	SECHSKANTSCHRAUBE		
96	406501314	10	HEX SCREW ISO 4017 M8X30 A4-70	SECHSKANTSCHRAUBE		
97	406517614	2	HEX SCREW ISO 4017 M8X35 A4-70	SECHSKANTSCHRAUBE		
98	406532914	1	HEX SCREW ISO 4017 M8X40 A4-70	SECHSKANTSCHRAUBE		
99	408600708	2	COUNTERSUNK SCREW ISO 10642 M8X30 8.8	SENKSCHRAUBE		
100	10539293	1	HEX SCREW ISO 4017 M10X75 A4-70	SECHSKANTSCHRAUBE		
101	954229003	1	HOLDER	HALTER		
102	10544172	2	WASHER ISO 7089 16	SCHEIBE		
103	10539317	2	HEX SCREW ISO 4017 M16X35 10.9	SECHSKANTSCHRAUBE		

OHNE BILD
WITHOUT ILLUSTRATION
SANS PLANCHE
SIN FIG.
SEM ILUSTRAÇÃO
БЕЗ ИЗОБРАЖЕНИЯ

600000

Pos.	Item	Quantity	Description	Bezeichnung	Serie	K
280	11699714	1	CAR RADIO	AUTORADIO		

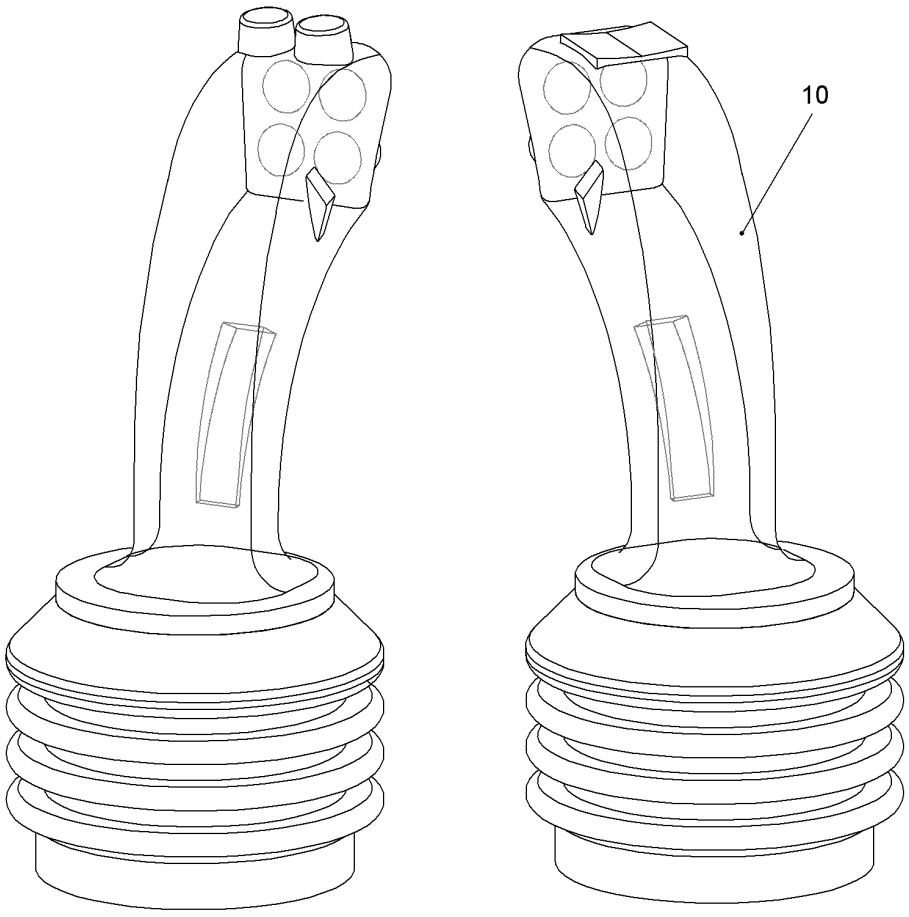

Pos.	Item	Quantity	Description	Bezeichnung	Serie	K
10	11214819	1	MASTER SWITCH ⇨ ❑ 333	MEISTERSCHALTER		

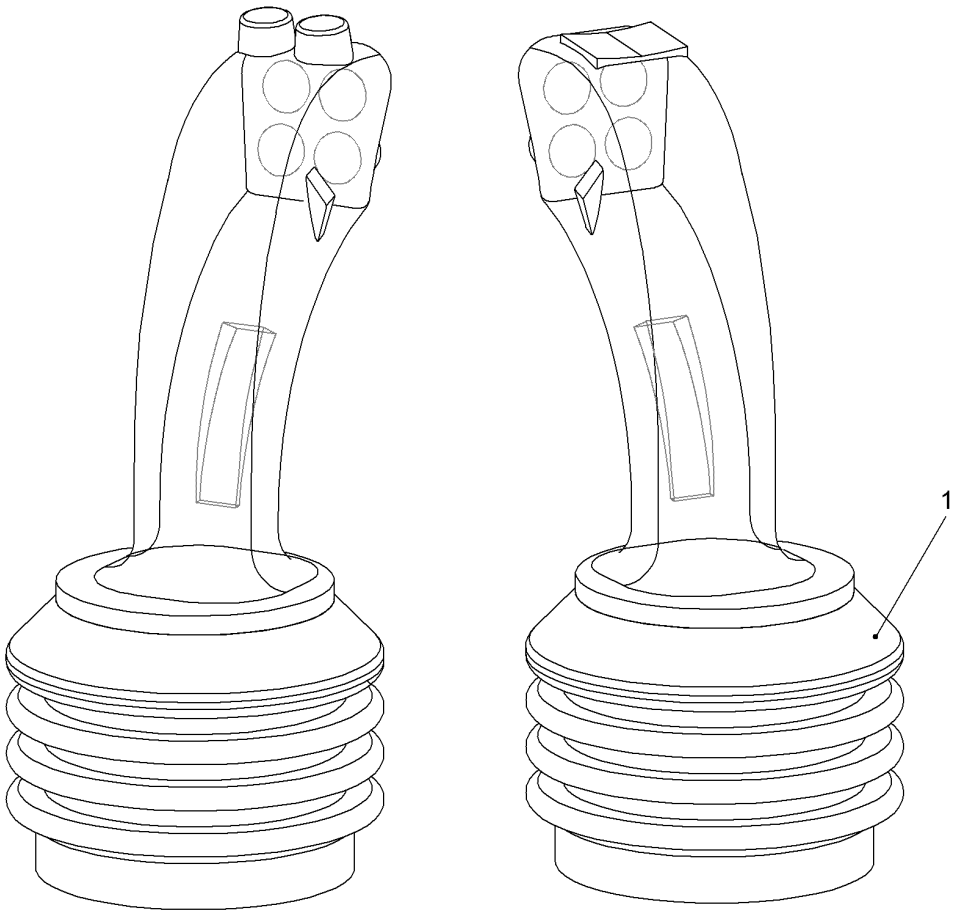

Pos.	Item	Quantity	Description	Bezeichnung	Serie	K
1	606272314	1	RUBBER BELLOWS	FALTENBALG		

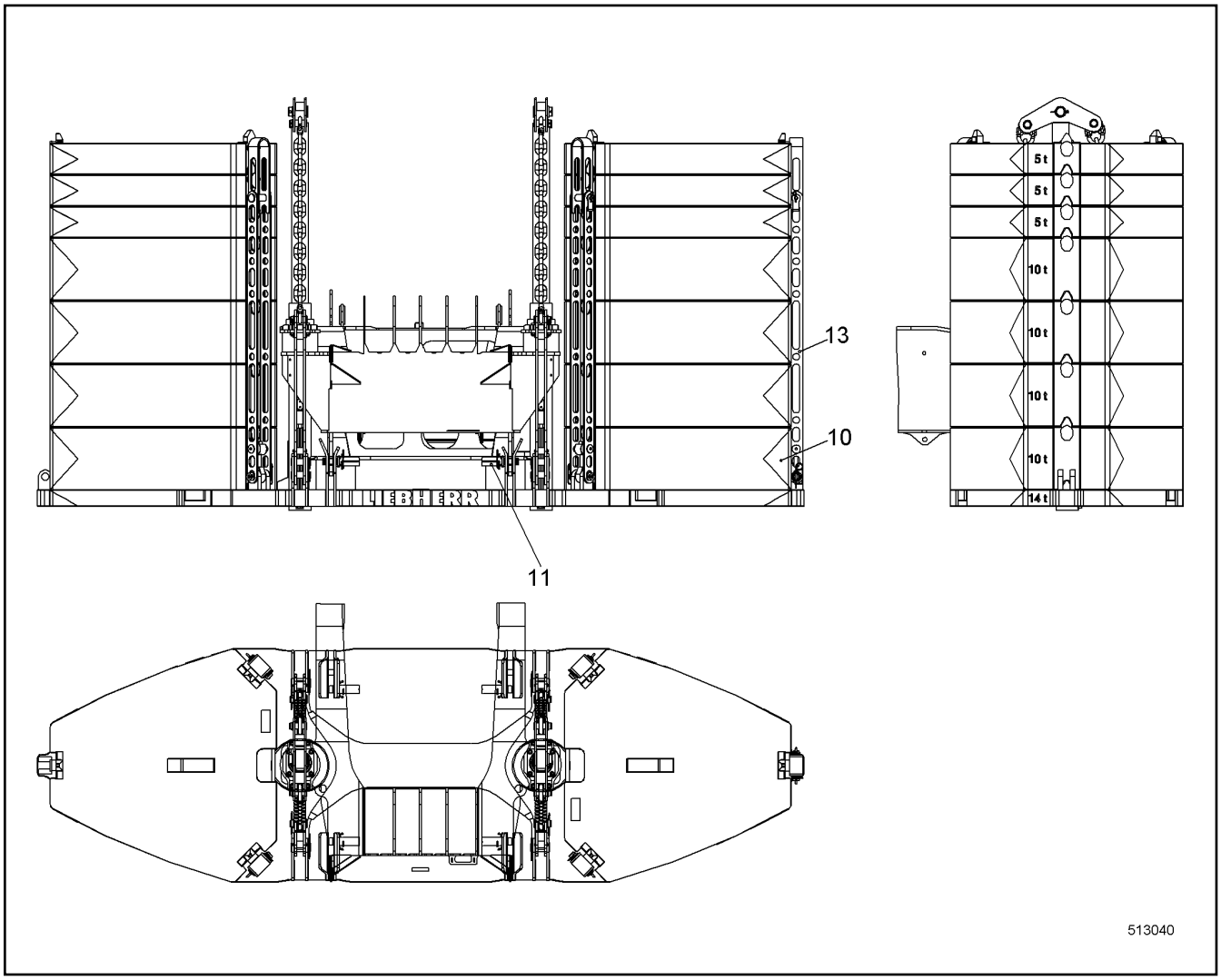

Pos.	Item	Quantity	Description	Bezeichnung	Serie	K
10	992757214	1	BASEPLATE CPL ⇨ ❑ 335	GRUNDPLATTE KPL		
11	10526560	1	MOUNTING PARTS ⇨ ❑ 336	MONTAGETEILE		
13	992980314	1	LASHING BALLAST ⇨ ❑ 337	VERZURRUNG BALLAST		

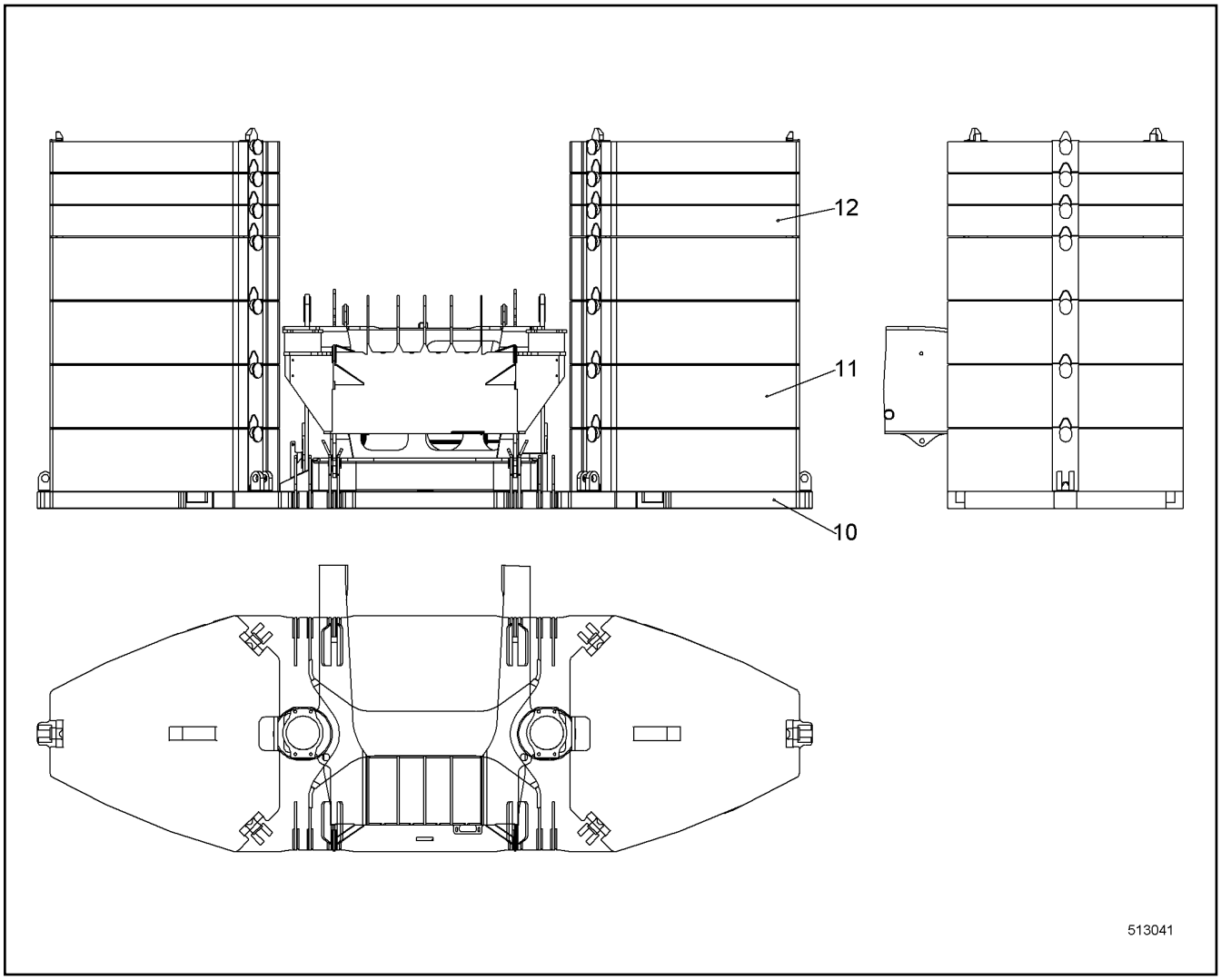

Pos.	Item	Quantity	Description	Bezeichnung	Serie	K
10	992741214	1	BASEPLATE ST.CONST.	GRUNDPLATTE SCHWK		
11	10349440	8	ADDITIONAL BALLAST	ZUSATZBALLAST		
12	10349439	6	ADDITIONAL BALLAST	ZUSATZBALLAST		

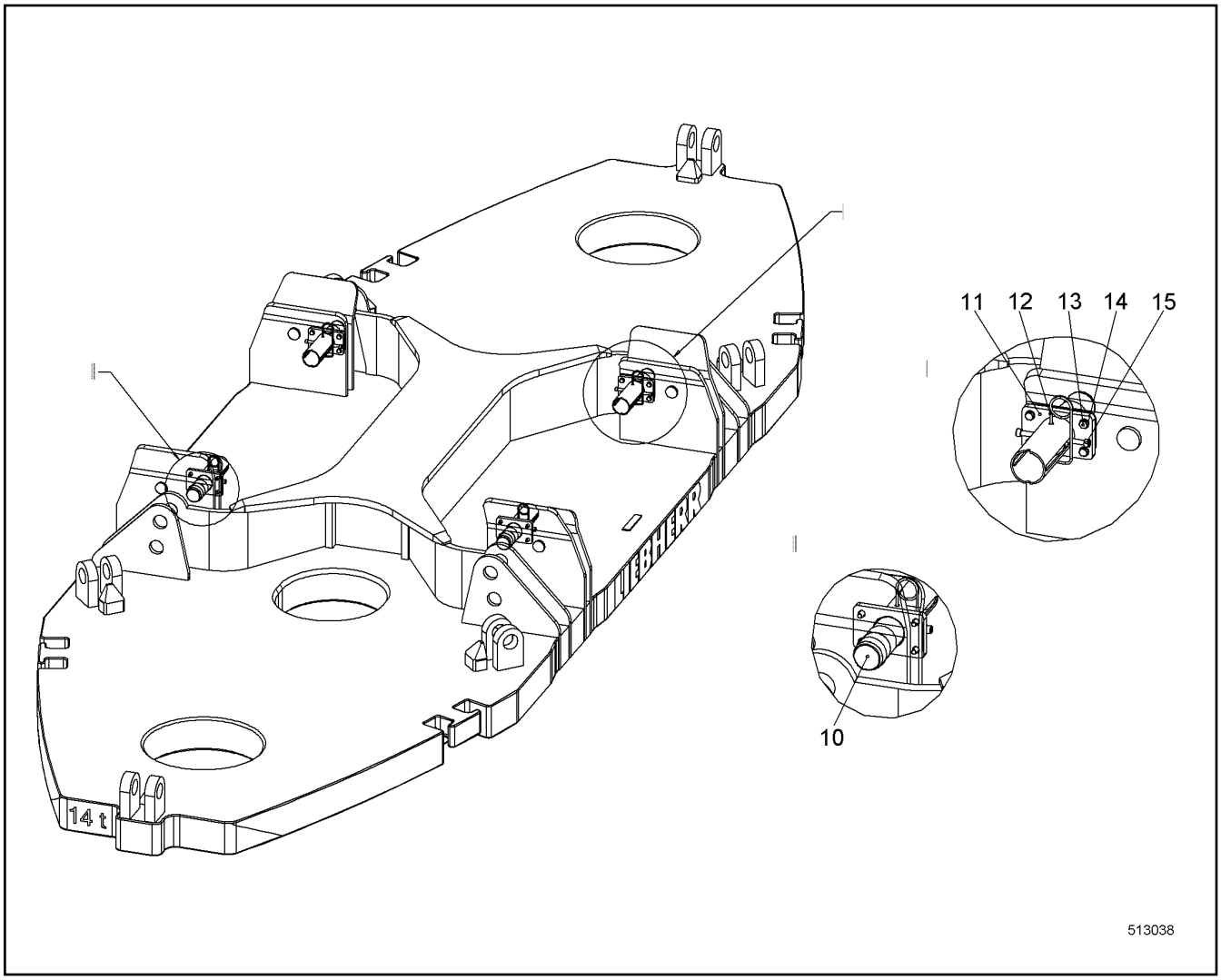

Pos.	Item	Quantity	Description	Bezeichnung	Serie	K
10	957831614	4	PIN 65X193 LHRD900-40;10019758	BOLZEN		
11	992757514	4	CONSOLE	KONSOLE		
12	433105414	4	RETAINING SPRING 4.5 MM	SICHERUNGSFEDER		
13	406511614	16	HEX SCREW ISO 4017 M10X30 A4-70	SECHSKANTSCHRAUBE		
14	420001114	16	WASHER ISO 7089 10 A4	SCHEIBE		
15	10539505	8	SOCKET HEAD SCREW ISO 4762 M10X60 A4-7	ZYLINDERSCHRAUBE		

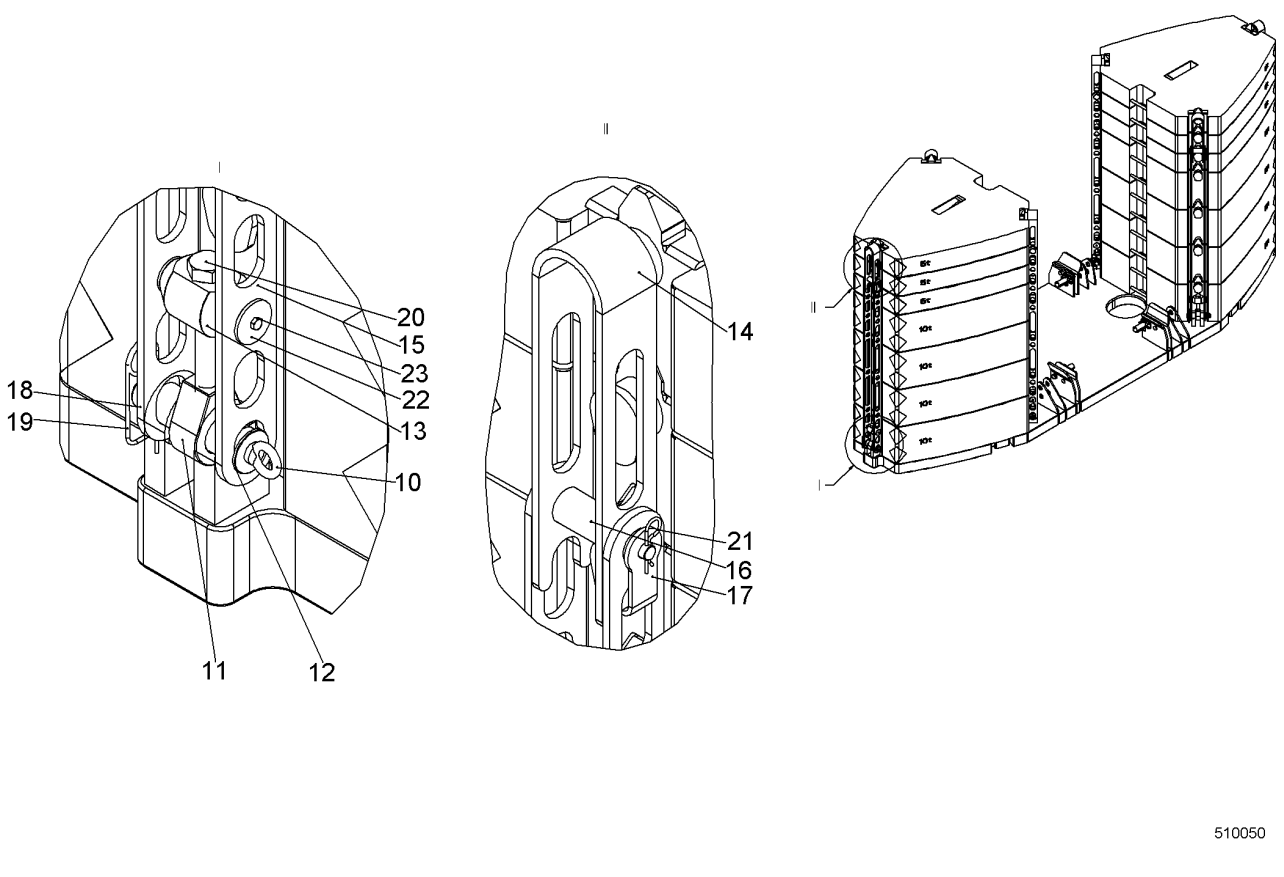

Pos.	Item	Quantity	Description	Bezeichnung	Serie	K
10	402600514	6	RING BOLT DIN 580 M16 C15E;EN 10084	RINGSCHRAUBE		
11	959912014	6	BUTT STRAP	LASCHE		
12	959912114	6	PIN 75X240 LHRD900-40;10019758	BOLZEN		
13	959912214	6	PIN 110X198 LHRD900-40;10019758	BOLZEN		
14	992982314	6	MOUNTING LINK ST. CONST.	LASCHE SCHWK		
15	959912514	12	BUTT STRAP	LASCHE		
16	959912614	6	PIN	BOLZEN		
17	959912714	6	LOCKING PLATE	SICHERUNGSBLECH		
18	421103614	6	WASHER DIN EN 28738 65 ST;	SCHEIBE		
19	433105008	6	RETAINING SPRING DIN 2194 6MM FS	SICHERUNGSFEDER		
20	406144514	6	HEX SCREW ISO 4014 M36X230 8.8	SECHSKANTSCHRAUBE		
21	433206314	6	SPRING PLUG DIN 11024 5	FEDERSTECKER		
22	947084514	12	WASHER 76/13X6 LH355-40;10019698	SCHEIBE		
23	406517714	12	HEX SCREW ISO 4017 M12X20 A4-70	SECHSKANTSCHRAUBE		

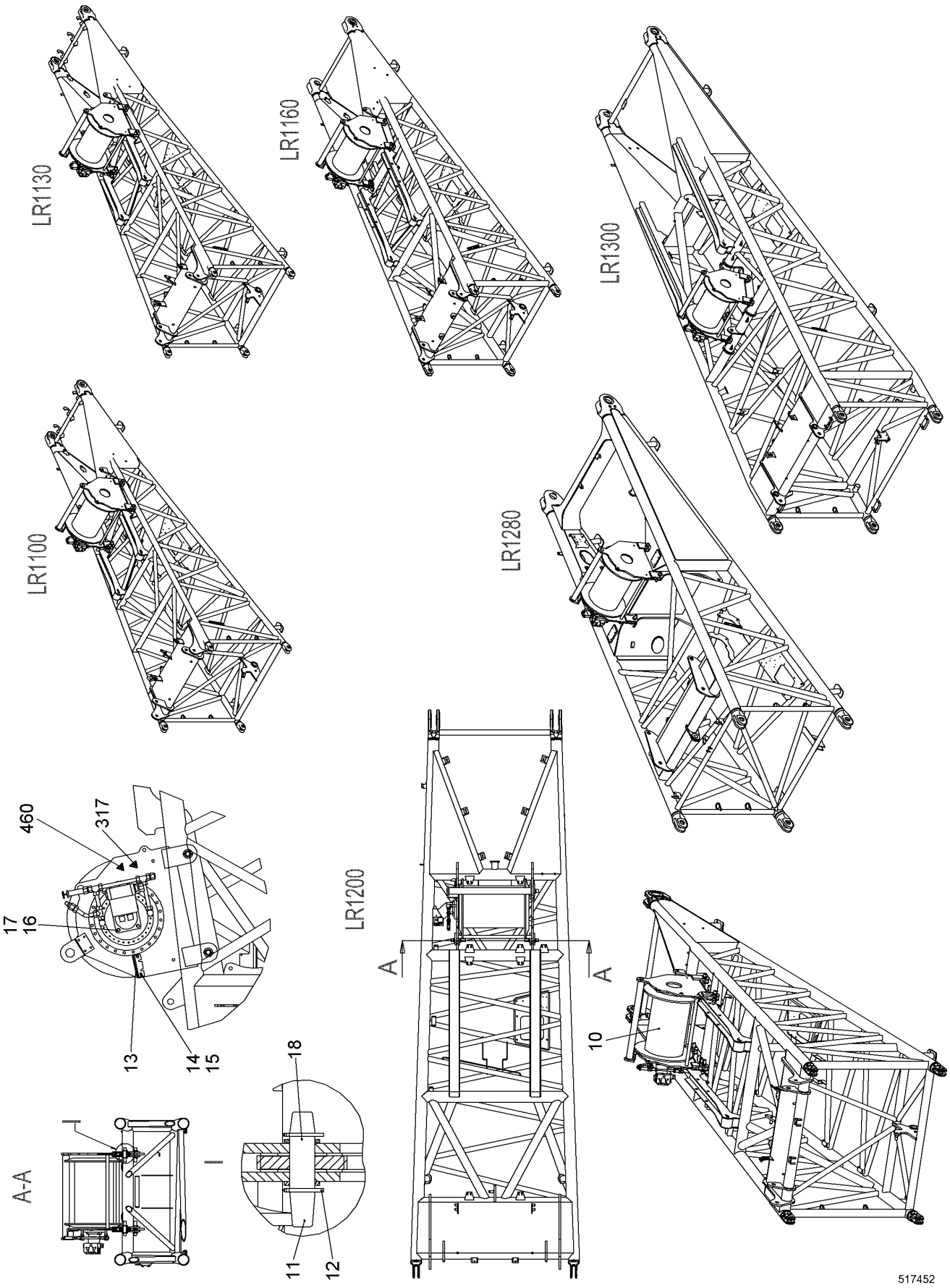

21.6.2017 517452	**138406_ETK_001**	❑ 338 (1/2)
LIEBHERR	**NEEDLE LUFFING WINCH** **NADELEINZIEHWINDE**	**10 51 969 7**

Pos.	Item	Quantity	Description	Bezeichnung	Serie	K
2	10519698	1	NEEDLE LUFFING WINCH HYDR ⇨ ❑ 340	NADELEINZIEHWINDE HYDR		
3	10226573	1	WIRING HARNESS	KABELSTRANG		
4	993324114	1	HOSE LIST ⇨ ❑ 343	SCHLAUCHLISTE		
10	969624801	1	WINCH ⇨ ❑ 344	WINDE		
11	10351894	4	PIN 40X182 LHRD900-40;10019758	BOLZEN		
12	433006714	8	SPLIT PIN ISO 1234 5X50	SPLINT		
13	954598503	1	VALVE HOLDER	VENTILHALTER		
14	420001014	2	WASHER ISO 7089 8 A4	SCHEIBE		
15	406501414	2	HEX SCREW ISO 4017 M8X25 A4-70	SECHSKANTSCHRAUBE		
16	425221314	4	SERRATED LOCK WASHER DIN 6798 13	FAECHERSCHEIBE		
17	4600706	4	HEX SCREW ISO 4017 M12X45 10.9	SECHSKANTSCHRAUBE		
18	421103014	8	WASHER DIN EN 28738 40 ST	SCHEIBE		
317	773195214	1	SIGN	SCHILD		
460	773195614	2	NAMEPLATE UVV	SCHILD UVV		
500		-1	GRATING	GITTERROST		
501		-1	GRATING	GITTERROST		

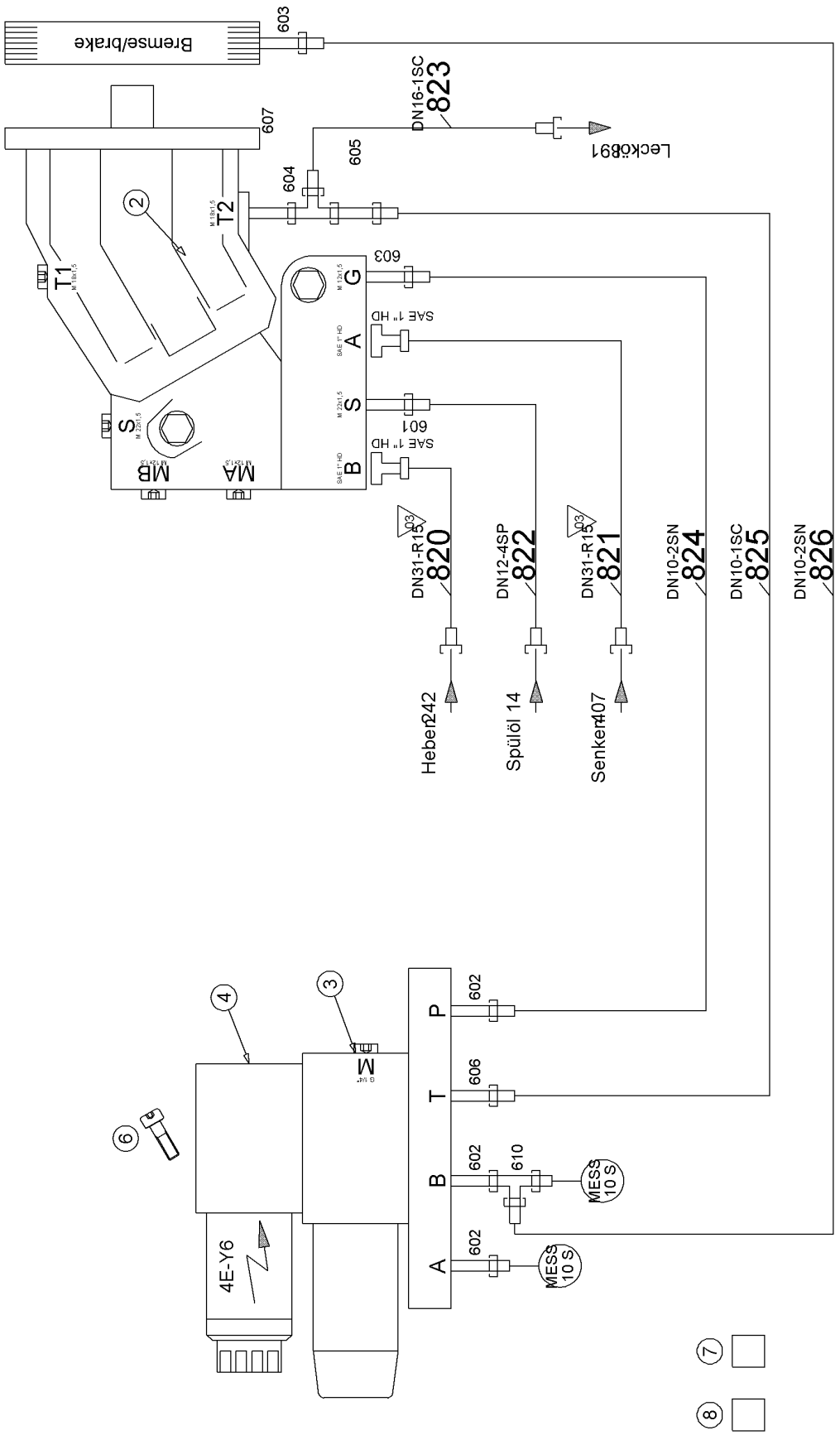

21.6.2017 523671 LIEBHERR	**138406_ETK_001** **NEEDLE LUFFING WINCH HYDR** **NADELEINZIEHWINDE HYDR**	❑ 340 (1/2) **10 51 969 8**

Pos.	Item	Quantity	Description	Bezeichnung	Serie	K
2	512252714	1	OIL MOTOR ⇨ ❑ 342	OELMOTOR		
3	511476914	1	PRESSURE REDUCTION VALVE	DRUCKREDUZIERVENTIL		
4	511432714	1	DIRECTIONAL CONTROL VALVE	WEGEVENTIL		
5	510662914	1	CONNECTING PLATE	ANSCHLUSSPLATTE		
6	404302914	1	SOCKET HEAD SCREW ISO 4762 M5X90 10.9	ZYLINDERSCHRAUBE		
7	7621780	1	LASHING STRAP	ZURRGURT		
8	10020519	1	LASHING STRAP	ZURRGURT		
201	510694514	2	GAUGE CONNECTION	MESSSTUTZEN		
601	471033014	1	FITTING	VERSCHRAUBUNG		
602	471032808	3	FITTING	VERSCHRAUBUNG		
603	471004614	2	FITTING	VERSCHRAUBUNG		
604	247128502	1	FITTING	VERSCHRAUBUNG		
605	247040302	1	FITTING	VERSCHRAUBUNG		
606	247009402	1	FITTING	VERSCHRAUBUNG		
607	471034714	1	FITTING	VERSCHRAUBUNG		
610	7367776	1	FITTING	VERSCHRAUBUNG		
620	510586914	4	FLANGE HALF	FLANSCHHAELFTE		
630	10490781	2	RECTANGULAR SECTION RING	RECHTECKRING		
640	4600366	8	HEX SCREW ISO 4017 M12X40 10.9	SECHSKANTSCHRAUBE		

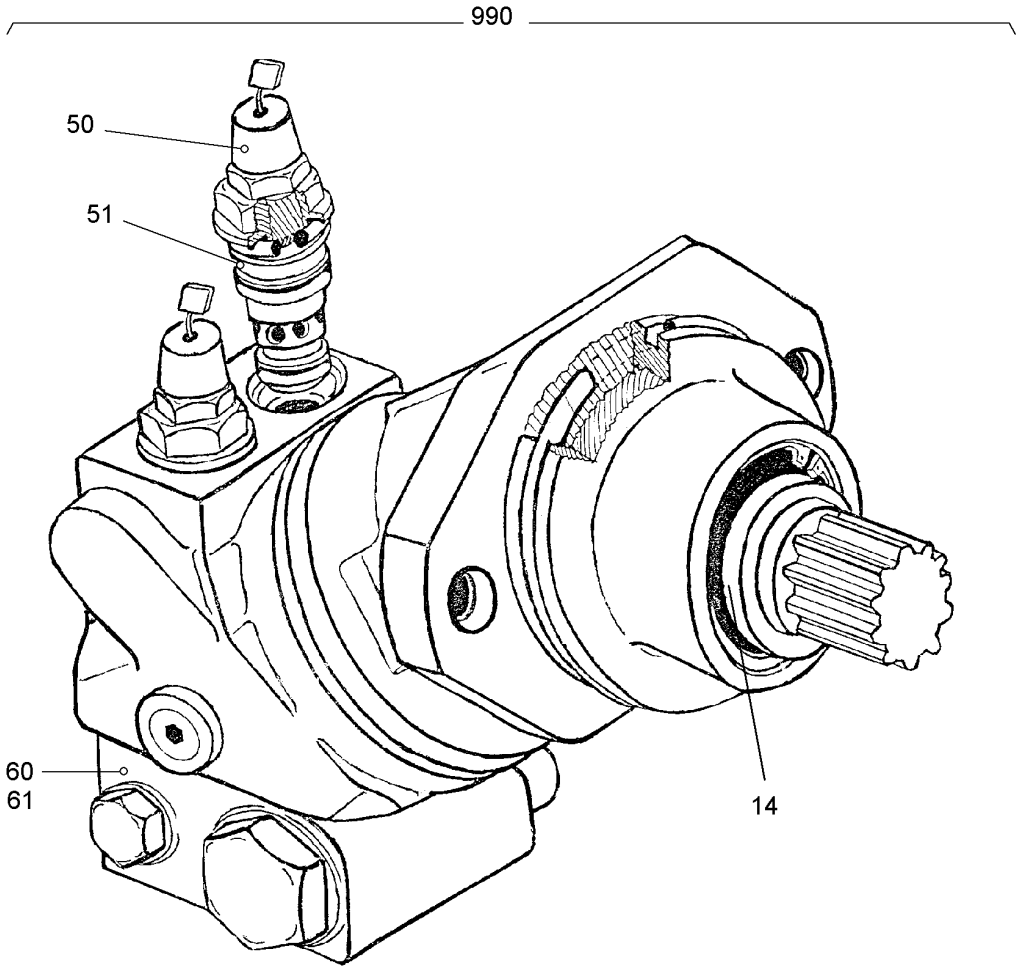

Pos.	Item	Quantity	Description	Bezeichnung	Serie	K
14	10564158	1	SHAFT SEAL	WELLENDICHTRING		
50	511619614	2	PRESSURE LIMITING VALVE	DRUCKBEGRENZUNGSVENTIL		
51	511493914	2	SEALING SET	DS		
60	10227399	1	BRAKE VALVE	BREMSVENTIL		
61	512259514	1	SEALING SET	DS		
990	512259414	1	SEALING SET	DS		

ACHTUNG !
ATTENTION !
ATTENTION !
ATENCIÓN !
ATENÇÃO !
ВНИМАНИЕ

Für Schlauchbestellungen kann über die Schlauchnummer, in der entsprechenden Schlauchliste, die Identnummer festgestellt werden.

For ordering flexible hoses you can find the identification number through the hose-number in the corresponding hose-list.

Pour des ordres de tuyau flexible le nombre d'identification on voit dans la liste de tuyau flexible correspondente.

Para el pedido de manguera, indicar el número de identificación de la manguera de la lista respectiva.

Para se encomendar uma mangueira, consulte o número de identificaçao na respectiva lista de mangueiras.

Для оформления заказов на шланги/рукавы идент. № может быть определен при помощи номера шланга/рукава, указанного в соотетствующем перечне шлангов/рукавов.

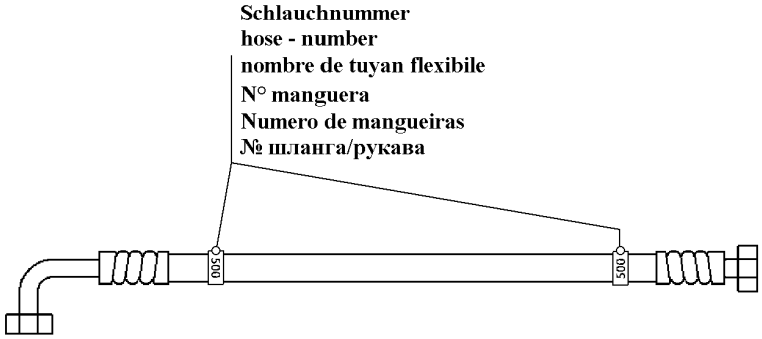

500000

Pos.	Item	Quantity	Description	Bezeichnung	Serie	K
820	996625314	1	HOSE CPL	SCHLAUCH KPL		
821	996625414	1	HOSE CPL	SCHLAUCH KPL		
822	993623814	1	HOSE CPL	SCHLAUCH KPL		
823	928861314	1	HOSE CPL	SCHLAUCH KPL		
824	918882614	1	HOSE CPL	SCHLAUCH KPL		
825	928326514	1	HOSE CPL	SCHLAUCH KPL		
826	918870914	1	HOSE CPL	SCHLAUCH KPL		

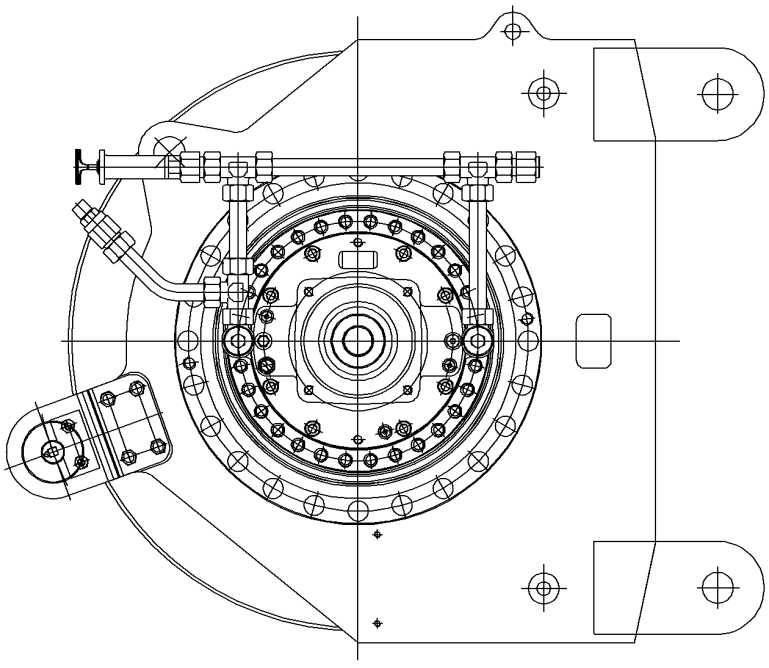

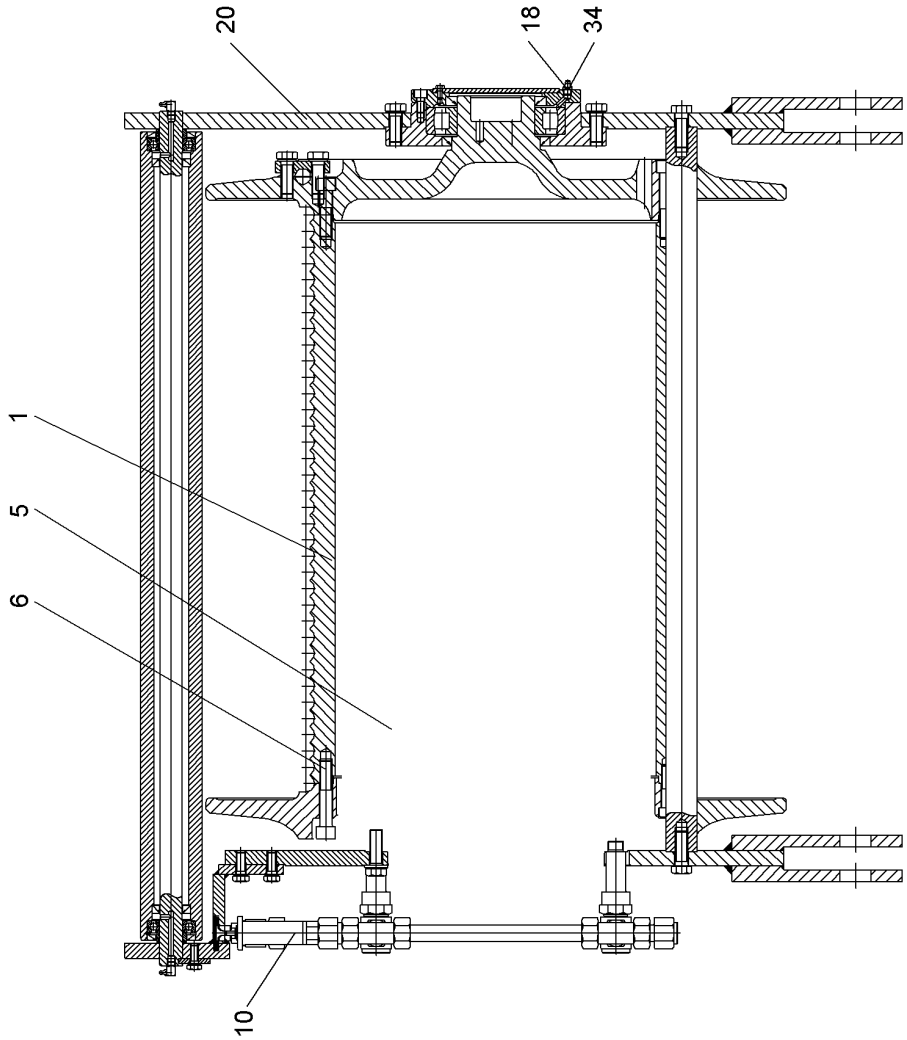

609537

Pos.	Item	Quantity	Description	Bezeichnung	Serie	K
1	938850001	1	ROPE DRUM ⇨ ❑ 346	SEILTROMMEL		
5	938849701	1	PLANETARY GEARBOX ⇨ ❑ 347	PLANETENGETRIEBE		
6	10191905	24	SOCKET HEAD SCREW ISO 4762 M16X85 10.9	ZYLINDERSCHRAUBE		
10	933675501	1	OIL-GAUGING INSTRUMENT ⇨ ❑ 352	OELMESSEINRICHTUNG		
18	7743242	1	HYDRAULIC-TYPE LUBRICAT.NIPPLE	KEGELSCHMIERNIPPEL		
20	969654301	1	WINCH FRAME ⇨ ❑ 353	WINDENRAHMEN		
34	789000701	1	PROTECTING CAP	SCHUTZKAPPE		

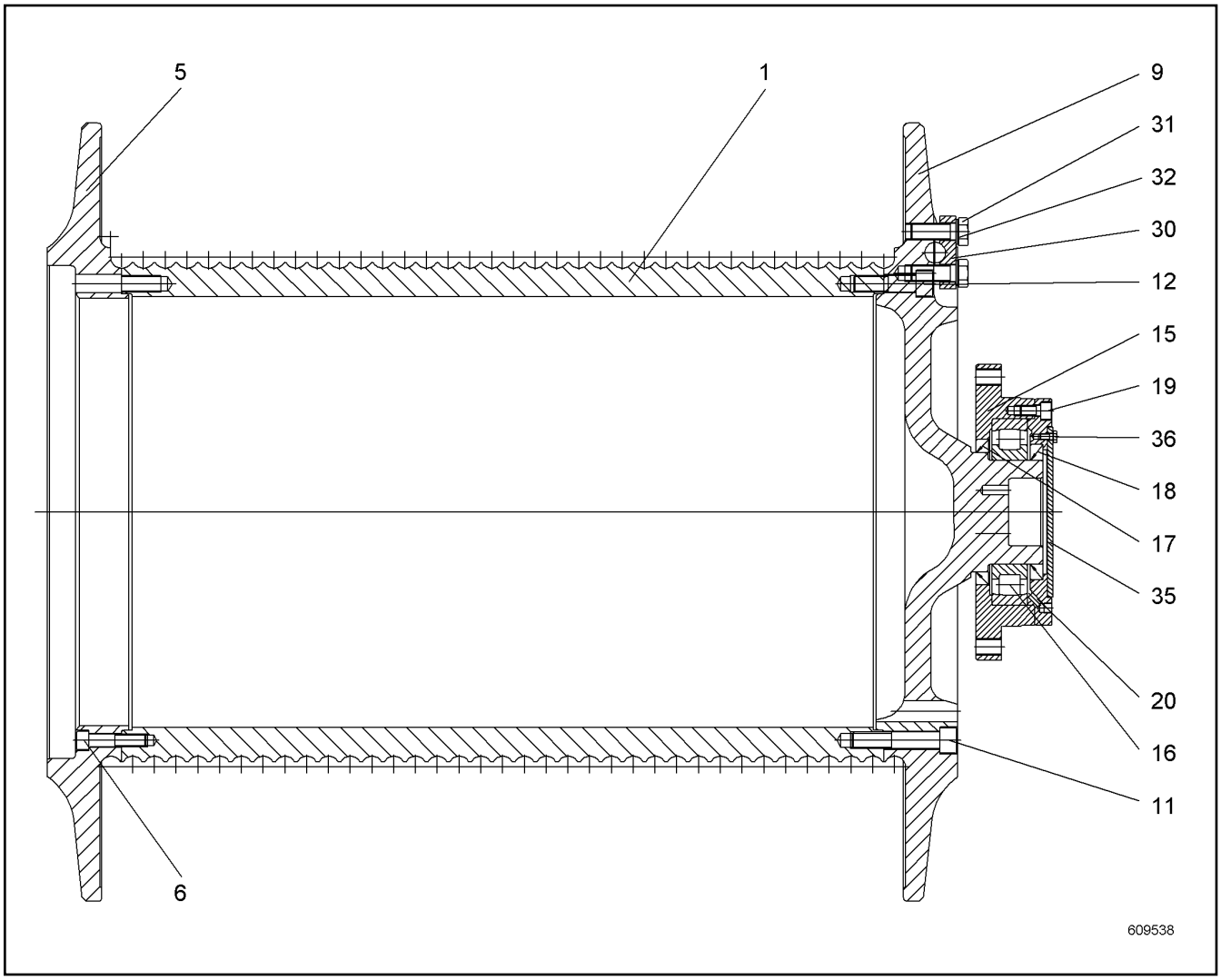

Pos.	Item	Quantity	Description	Bezeichnung	Serie	K
1	938850101	1	DRUM	TROMMEL		
5	938850201	1	LIMMIT DISK	ENDSCHEIBE UL		
6	10539520	3	SOCKET HEAD SCREW ISO 4762 M12X55 A4-7	ZYLINDERSCHRAUBE		
9	939556301	1	END WASHER EL	ENDSCHEIBE EL		
11	10191905	18	SOCKET HEAD SCREW ISO 4762 M16X85 10.9	ZYLINDERSCHRAUBE		
12	10544072	6	SOCKET HEAD SCREW ISO 4762 M16X60 10.9	ZYLINDERSCHRAUBE		
15	939556201	1	SUPPORT FLANGE	STUETZFLANSCH		
16	746001701	1	SELF-ALIGNING ROLLER BEARING	PENDELROLLENLAGER		
17	710048501	1	ROTARY SHAFT LIP SEAL	RADIALWELLENDICHTRING		
18	710029801	1	ROTARY SHAFT LIP SEAL	RADIALWELLENDICHTRING		
19	404208814	6	SOCKET HEAD SCREW ISO 4762 M10X20 A4-7	ZYLINDERSCHRAUBE		
20	939554301	1	COVER	DECKEL		
30	319719401	5	CLAMPING PIECE	KLEMMSTUECK		
31	10543902	10	HEX SCREW ISO 4017 M16X45 10.9	SECHSKANTSCHRAUBE		
32	423911601	10	LOCK WASHER 16X17X24X2.6 VS	SICHERUNGSSCHEIBE		
35	932037701	1	COVER	DECKEL		
36	485557714	3	HEX SCREW ISO 4017 M6X12 A4-70	SECHSKANTSCHRAUBE		

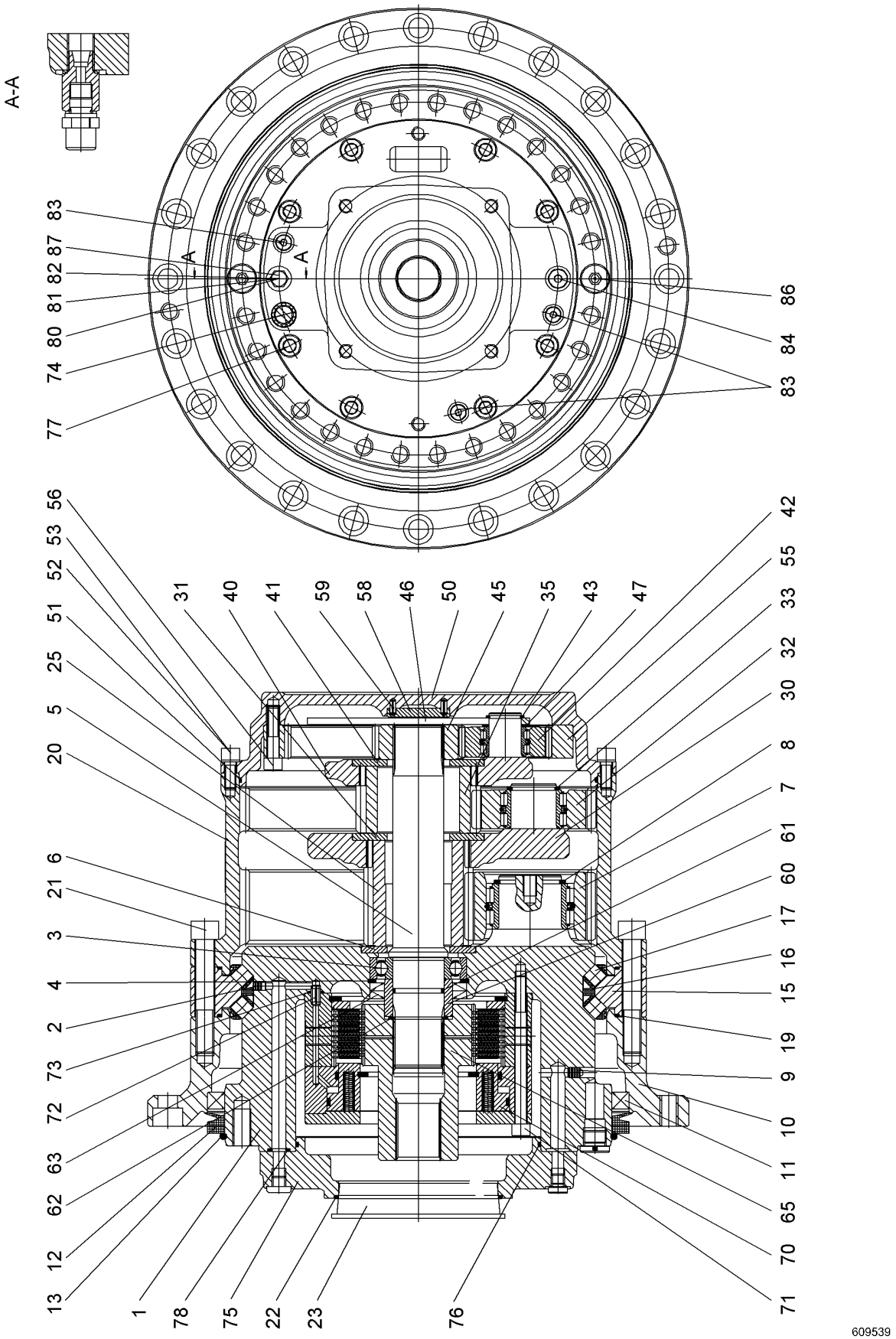
A-A
A
A
83
87
82
81
80
74
77
86
84
83
56
53
52
51
25
5
20
6
21
3
4
2
73
72
63
62
12
13
31
40
41
59
58
46
50
45
35
43
47
42
55
33
32
30
8
7
61
60
17
16
15
19
9
10
11
65
70
71
1
78
75
22
23
76
609539

Pos.	Item	Quantity	Description	Bezeichnung	Serie	K
1		1	CONNECTION CARRIER	ANSCHLUSSTRAEGER		
2		1	SEALING PLUG	DICHTSTOPFEN		
3		1	DEEP GROOVE BALL BEARING	RILLENKUGELLAGER		
4		1	LOCKING RING DIN 472 85X3	SICHERUNGSRING		
5		1	DRIVE SHAFT	ANTRIEBSWELLE		
6		1	RETAINING DISK	HALTESCHEIBE		
7		5	PLANET WHEEL	PLANETENRAD		
8		5	LOCKING RING DIN 471 55X3	SICHERUNGSRING		
9		3	SEALING PLUG	DICHTSTOPFEN		
10		1	POWER TAKE-OFF FLANGE	ABTRIEBSFLANSCH		
11		1	ROTARY SHAFT LIP SEAL	RADIALWELLENDICHTRING		
12		1	RING	RING		
13		1	O-RING	O-RING		
15		1	BEARING RING	LAGERRING		
16		38	ROLLER CAGE	ROLLENKAEFIG		
17		114	CYL.ROLLER	ZYLINDERROLLE		
19		2	O-RING	O-RING		
20		1	INNER WHEEL	INNENRAD		
21		24	SOCKET HEAD SCREW ISO 4762 M16X100 10.	ZYLINDERSCHRAUBE		
22		1	O-RING	O-RING		
23		1	CONICAL PLUG	KEGELSTOPFEN		
25		1	SUN WHEEL	SONNENRAD		
30		1	PLANETARY CARRIER	PLANETENTRAEGER		
31		1	RETAINING DISK 115X55X6	HALTESCHEIBE		
32		3	PLANET WHEEL	PLANETENRAD		
33		3	LOCKING RING DIN 471 40X2.5	SICHERUNGSRING		
35		1	SUN WHEEL	SONNENRAD		
40		1	PLANETARY CARRIER	PLANETENTRAEGER		
41		1	RETAINING DISK 115X55X6	HALTESCHEIBE		
42		3	PLANET WHEEL	PLANETENRAD		
43		3	LOCKING RING DIN 471 28X2	SICHERUNGSRING		
45		1	SUN WHEEL	SONNENRAD		
46		1	THRUST WASHER	ANLAUFSCHEIBE		
47		3	SUPPORTING WASHER DIN 988 S28X40X2 F	STUETZSCHEIBE		
50		1	SUPPORT FLANGE	STUETZFLANSCH		
51		1	O-RING	O-RING		
52		12	SOCKET HEAD SCREW ISO 4762 M10X25 A4-7	ZYLINDERSCHRAUBE		
53		12	LOCK WASHER 10.5/16X2 VS10	SICHERUNGSSCHEIBE		
55		1	INNER WHEEL	INNENRAD		
56		12	SOCKET HEAD SCREW ISO 4762 M10X45 A4-7	ZYLINDERSCHRAUBE		
58		1	WASHER	SCHEIBE		
59		2	DOWEL PIN ISO 8752 5X12 ST	SPANNSTIFT		
60		1	SLEEVE	LAUFRING		
61		1	O-RING	O-RING		
62		1	SNAP RING AV45X1.75	SPRENGRING		
63		2	ROTARY SHAFT LIP SEAL	RADIALWELLENDICHTRING		
65		1	MULTI-DISC CARRIER	LAMELLENTRAEGER		
70		1	SPRING LOADED MULTI-DISC BRAKE	FEDERDRUCKLAMELLENBREMS		
71		12	SOCKET HEAD SCREW ISO 4762 M10X130 10.	ZYLINDERSCHRAUBE		
72		1	DOWEL PIN ISO 8752 8X16 ST	SPANNSTIFT		
73		1	O-RING	O-RING		
74		1	BLANKING PLUG	VERSCHLUSSSTOPFEN		
75		1	MOTOR FLANGE	MOTORFLANSCH		
76		1	O-RING	O-RING		
77		8	SOCKET HEAD SCREW ISO 4762 M12X40 A4-7	ZYLINDERSCHRAUBE		
78		8	O-RING	O-RING		
80		1	FITTING	VERSCHRAUBUNG		
81		1	SEALING RING	DICHTRING		
82		1	VENTILATION VALVE	ENTLUEFTUNGSVENTIL		
83		3	FITTING	VERSCHRAUBUNG		

Pos.	Item	Quantity	Description	Bezeichnung	Serie	K
84		1	SCREW PLUG	VERSCHLUSSSCHRAUBE		
86		2	SCREW PLUG	VERSCHLUSSSCHRAUBE		
87		1	SEALING RING	DICHTRING		

OHNE BILD
WITHOUT ILLUSTRATION
SANS PLANCHE
SIN FIG.
SEM ILUSTRAÇÃO
БЕЗ ИЗОБРАЖЕНИЯ

600000

Pos.	Item	Quantity	Description	Bezeichnung	Serie	K
1	939589501	1	BRAKE MULTI-DISC SET ⇨ ❑ 351	BREMSLAMELLENSATZ		
2	939589601	1	BRAKE PACKING SET	BREMSE-DICHTUNGSSATZ		
3	939589701	1	BRAKE SPRING SET	BREMSFEDERSATZ		

OHNE BILD
WITHOUT ILLUSTRATION
SANS PLANCHE
SIN FIG.
SEM ILUSTRAÇÃO
БЕЗ ИЗОБРАЖЕНИЯ

600000

Pos.	Item	Quantity	Description	Bezeichnung	Serie	K
8	503192801	10	OUTER MULTI-DISC	AUSSENLAMELLE		
9	503192901	9	INTERNAL MULTI-DISC	INNENLAMELLE		

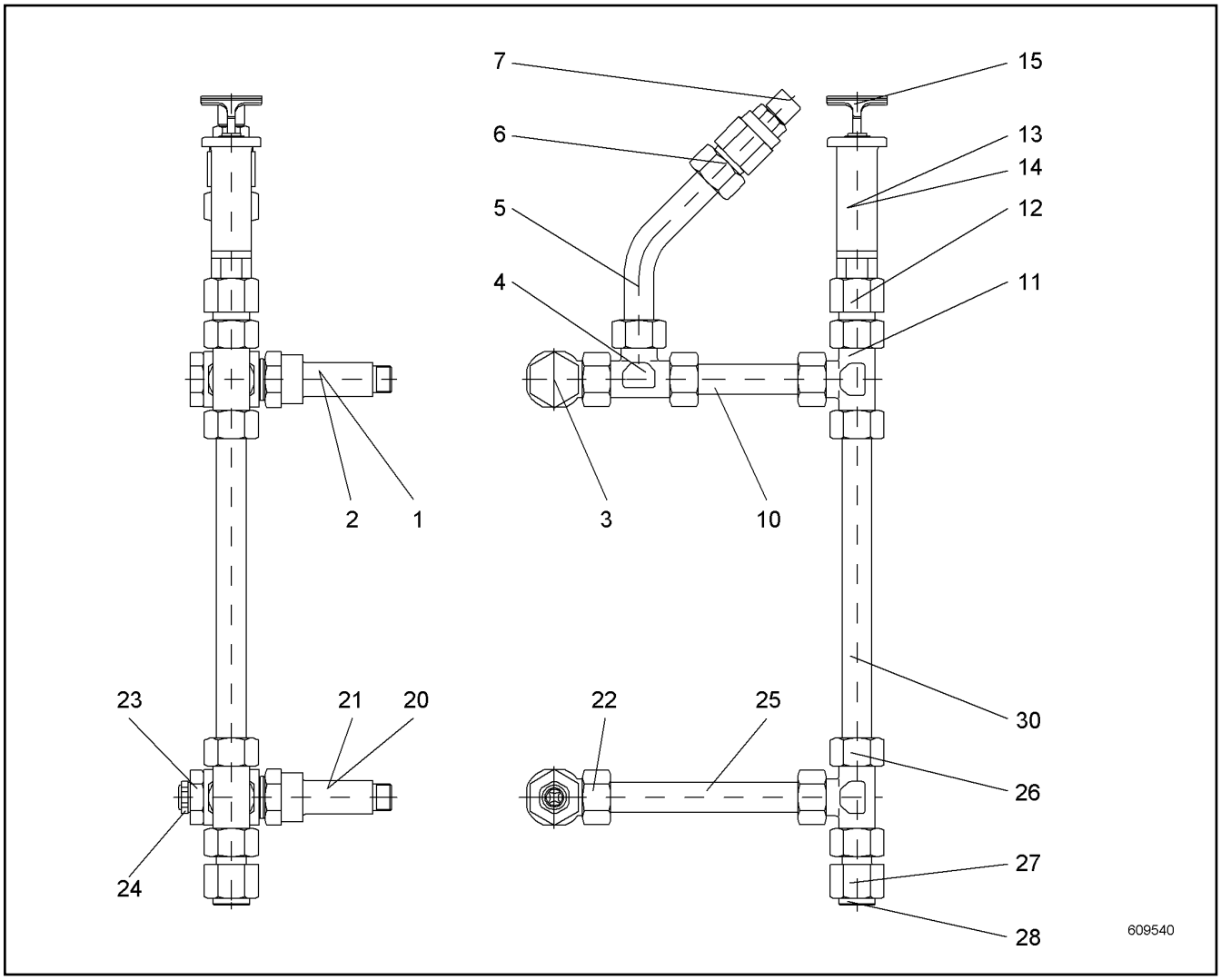

Pos.	Item	Quantity	Description	Bezeichnung	Serie	K
1	927739401	1	THREADED CONNECTION PIECE	GEWINDEANSCHLUSSSTUTZEN		
2	761022903	1	SEALING RING	DICHTRING		
3	473201101	1	FITTING	VERSCHRAUBUNG		
4	472001401	1	FITTING	VERSCHRAUBUNG		
5	933676701	1	TUBE	ROHR		
6	470702001	1	FITTING	VERSCHRAUBUNG		
7	721108801	1	VENTILATION AND AERATION FILTE	BE-UND ENTLUEFTUNGSFILTER		
10	10190120	1	TUBE	ROHR		
11	470400701	1	FITTING	VERSCHRAUBUNG		
12	927586201	1	CONNECTION STUB	ANSCHLUSSSTUTZEN		
13	927501901	1	VENTILATION CONNECTING PIECE	ENTLUEFTUNGSSTUTZEN		
14	7610225	1	SEALING RING	DICHTRING		
15	927610201	1	OIL DIPSTICK	OELMESSSTAB		
20	927739401	1	THREADED CONNECTION PIECE	GEWINDEANSCHLUSSSTUTZEN		
21	761022903	1	SEALING RING	DICHTRING		
22	473201101	1	FITTING	VERSCHRAUBUNG		
23	933676601	1	SCREW PLUG	VERSCHLUSSSCHRAUBE		
24	10022192	1	OIL LEVEL SIGHT GLASS	OELSCHAUGLAS		
25	999832101	1	TUBE	ROHR		
26	470400701	1	FITTING	VERSCHRAUBUNG		
27	927586201	1	CONNECTION STUB	ANSCHLUSSSTUTZEN		
28	7361961	1	SCREW PLUG	VERSCHLUSSSCHRAUBE		
30	979323301	1	TUBE	ROHR		

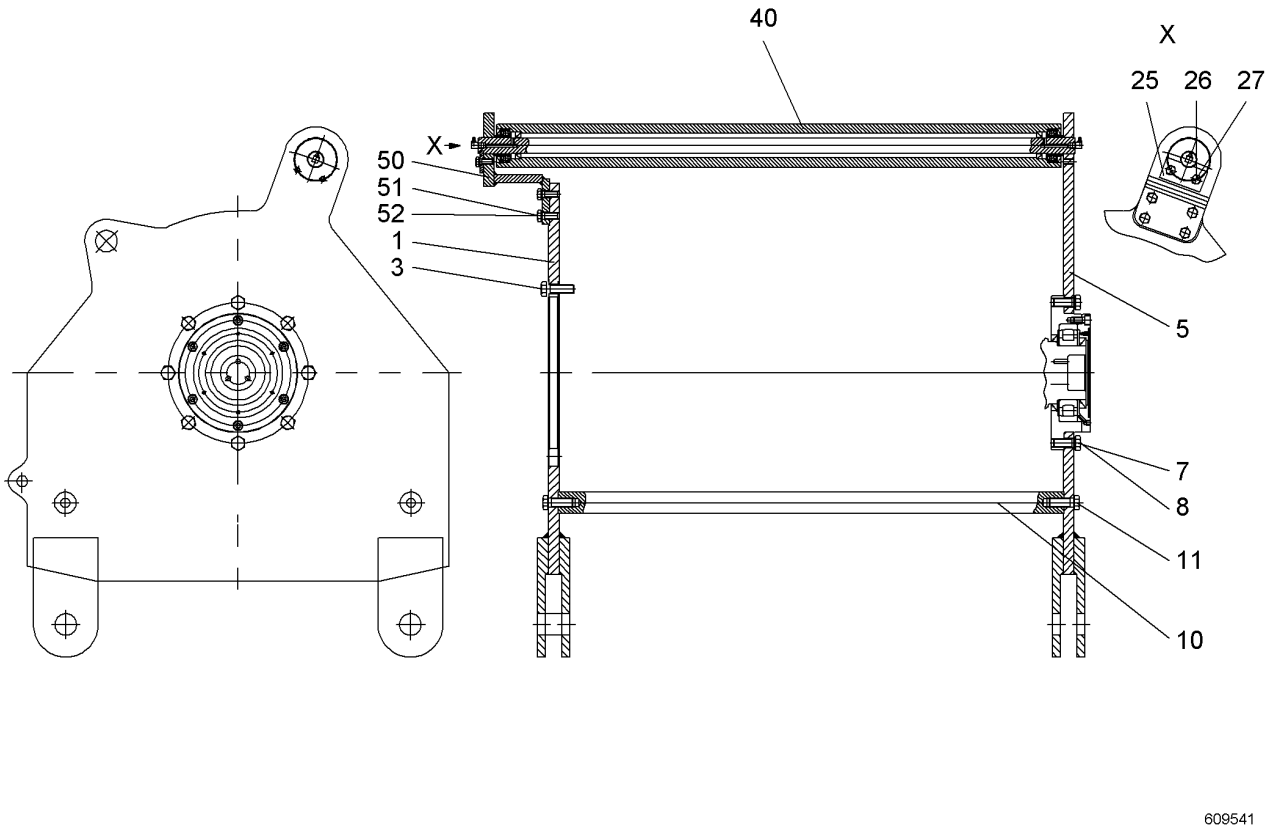

Pos.	Item	Quantity	Description	Bezeichnung	Serie	K
1	969655301	1	CONNECTION PLATE	ANSCHLUSSSCHILD		
3	10543903	28	HEX SCREW ISO 4017 M16X50 10.9	SECHSKANTSCHRAUBE		
5	938858501	1	CONNECTION PLATE	ANSCHLUSSSCHILD		
7	10539318	8	HEX SCREW ISO 4017 M16X40 10.9	SECHSKANTSCHRAUBE		
8	423911601	8	LOCK WASHER 16X17X24X2.6 VS	SICHERUNGSSCHEIBE		
10	938858701	2	STRUT	STREBE		
11	10543902	4	HEX SCREW ISO 4017 M16X45 10.9	SECHSKANTSCHRAUBE		
25	997040201	1	AXLE HOLDER	ACHSHALTER		
26	406511914	2	HEX SCREW ISO 4017 M10X25 A4-70	SECHSKANTSCHRAUBE		
27	4229913	2	LOCK WASHER 10.5/16X2 VS10	SICHERUNGSSCHEIBE		
40	969641401	1	SAFETY ROLLER	SCHUTZWALZE		
50	969641501	1	HOLDER	HALTER		
51	406517314	4	HEX SCREW ISO 4017 M12X30 A4-70	SECHSKANTSCHRAUBE		
52	4900093	4	LOCK WASHER 12X13X18X2.1	SICHERUNGSSCHEIBE		

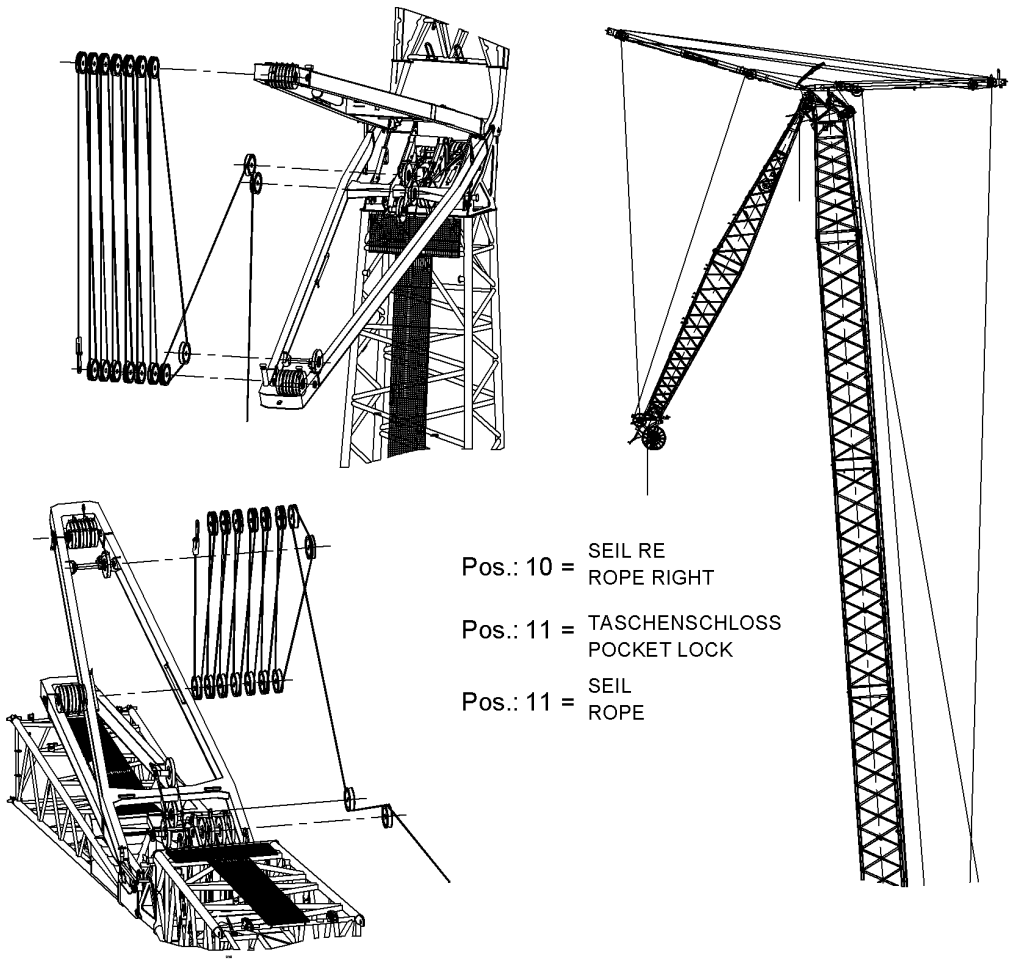

Pos.	Item	Quantity	Description	Bezeichnung	Serie	K
10	10227828	1	ROPE RIGHT	SEIL RE		
11	773941308	1	POUCH SOCKET	TASCHENSCHLOSS		
12	774730714	40	ROPE	SEIL		

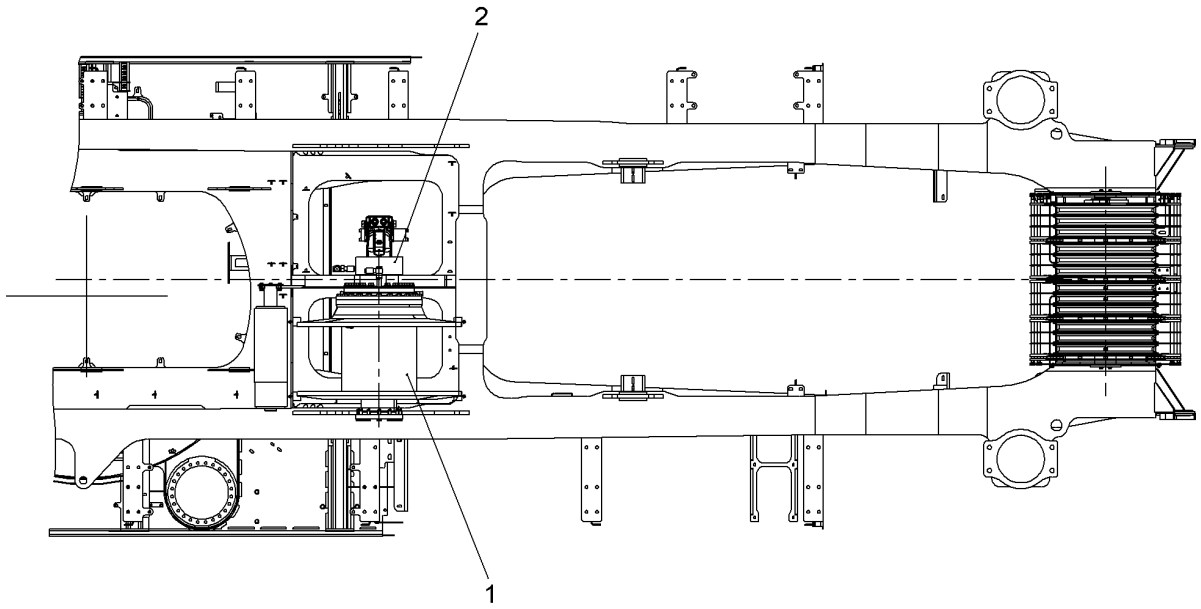

Pos.	Item	Quantity	Description	Bezeichnung	Serie	K
1	10519686	1	LUG SUPERSTRUCTURE CPL ⇨ ❑ 356	EZW OW EINBAU KPL		
2	990494114	1	DRIVE UNIT ⇨ ❑ 374	ANTRIEBSEINHEIT		

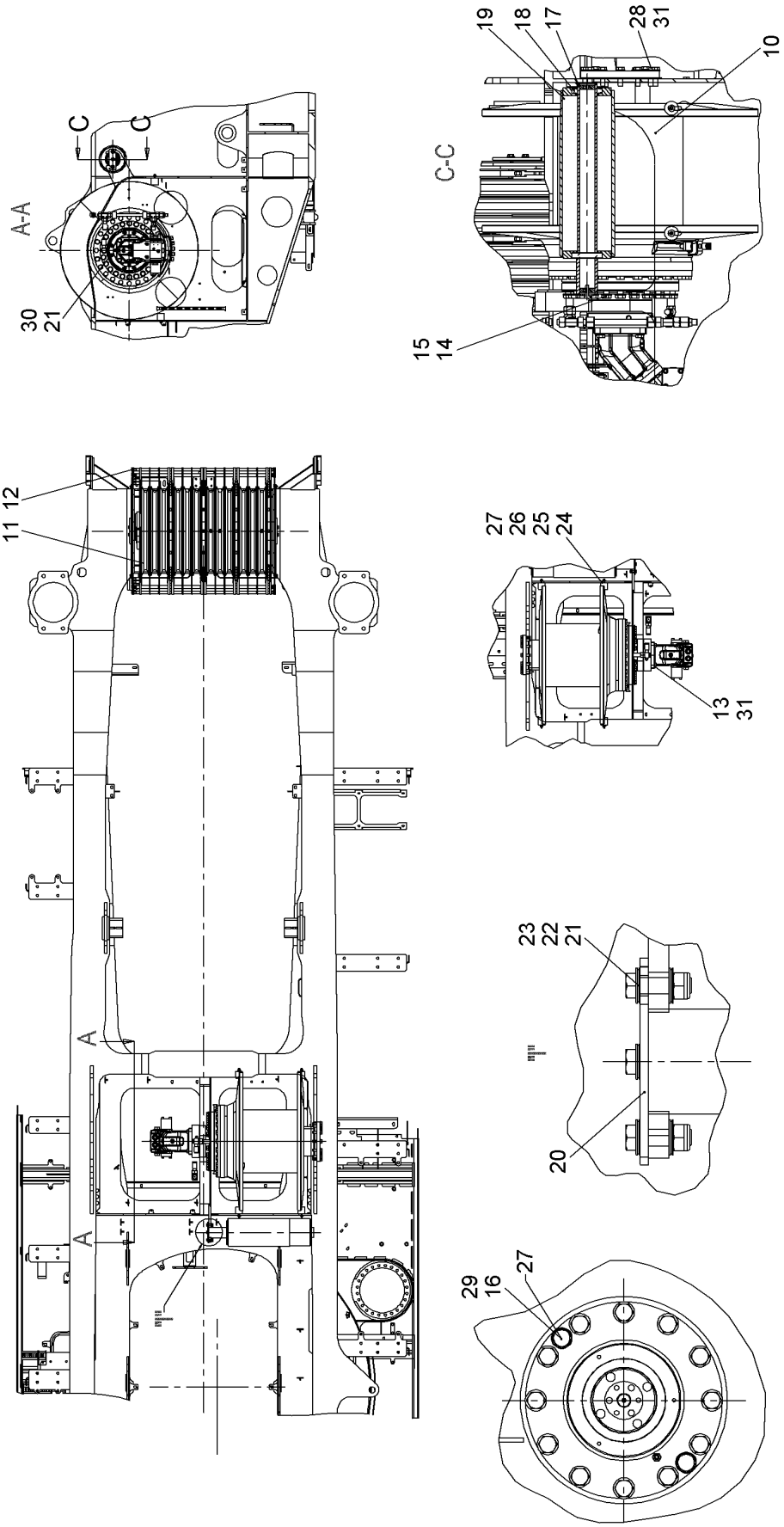
A-A
C
C
30
21
C-C
19
18
17
28
31
10
15
14
11 12
A
A
27
26
25
24
13
31
23
22
21
20
29
16
27
516503

Pos.	Item	Quantity	Description	Bezeichnung	Serie	K
2	10519687	1	MAIN LUG HYDR ⇨ ❑ 358	HAUPT EZW HYDR		
4	10552085	1	HOSE LIST ⇨ ❑ 360	SCHLAUCHLISTE		
10	10551563	1	WINCH ⇨ ❑ 361	WINDE		
11	992925814	1	LUG SHEAVE SET ⇨ ❑ 366	EZW ROLLENPAKET		
12	992925914	1	ROPE GUARD LUG CPL ⇨ ❑ 367	SEILSCHUTZ EZW KPL		
13	10543903	4	HEX SCREW ISO 4017 M16X50 10.9	SECHSKANTSCHRAUBE		
14	10543920	22	HEX SCREW ISO 4017 M20X40 10.9	SECHSKANTSCHRAUBE		
15	10536600	22	WEDGE LOCK WASHER M20	KEILSICHERUNGSSCHEIBE		
16	460024203	2	WASHER DIN 6916 17 C45	SCHEIBE		
17	918539614	1	AXLE	ACHSE		
18	746171514	2	DEEP GROOVE BALL BEARING	RILLENKUGELLAGER		
19	971361703	1	ROLLER ST.CONST.	ROLLE SCHWK		
20	949892214	1	WP	WP		
21	10536582	13	WEDGE LOCK WASHER M12 254 SMO;EN 10	KEILSICHERUNGSSCHEIBE		
22	406511414	3	HEX SCREW ISO 4017 M12X40 A4-70	SECHSKANTSCHRAUBE		
23	10540495	2	HEX NUT ISO 10511 M12 A4	SECHSKANTMUTTER		
24	289064214	4	SPACER PIECE	DISTANZSTUECK		
25	10539488	4	SOCKET HEAD SCREW ISO 4762 M8X60 A4-7	ZYLINDERSCHRAUBE		
26	10540493	4	HEX NUT ISO 10511 M8 A4	SECHSKANTMUTTER		
27	10540510	4	WASHER ISO 7093-1 8 A4	SCHEIBE		
28	10543905	12	HEX SCREW ISO 4017 M16X60 10.9	SECHSKANTSCHRAUBE		
29	10539315	2	HEX SCREW ISO 4017 M16X25 10.9	SECHSKANTSCHRAUBE		
30	4043003	8	SOCKET HEAD SCREW ISO 4762 M12X40 10.9	ZYLINDERSCHRAUBE		
31	7623374	16	WEDGE LOCK WASHER M16	KEILSICHERUNGSSCHEIBE		

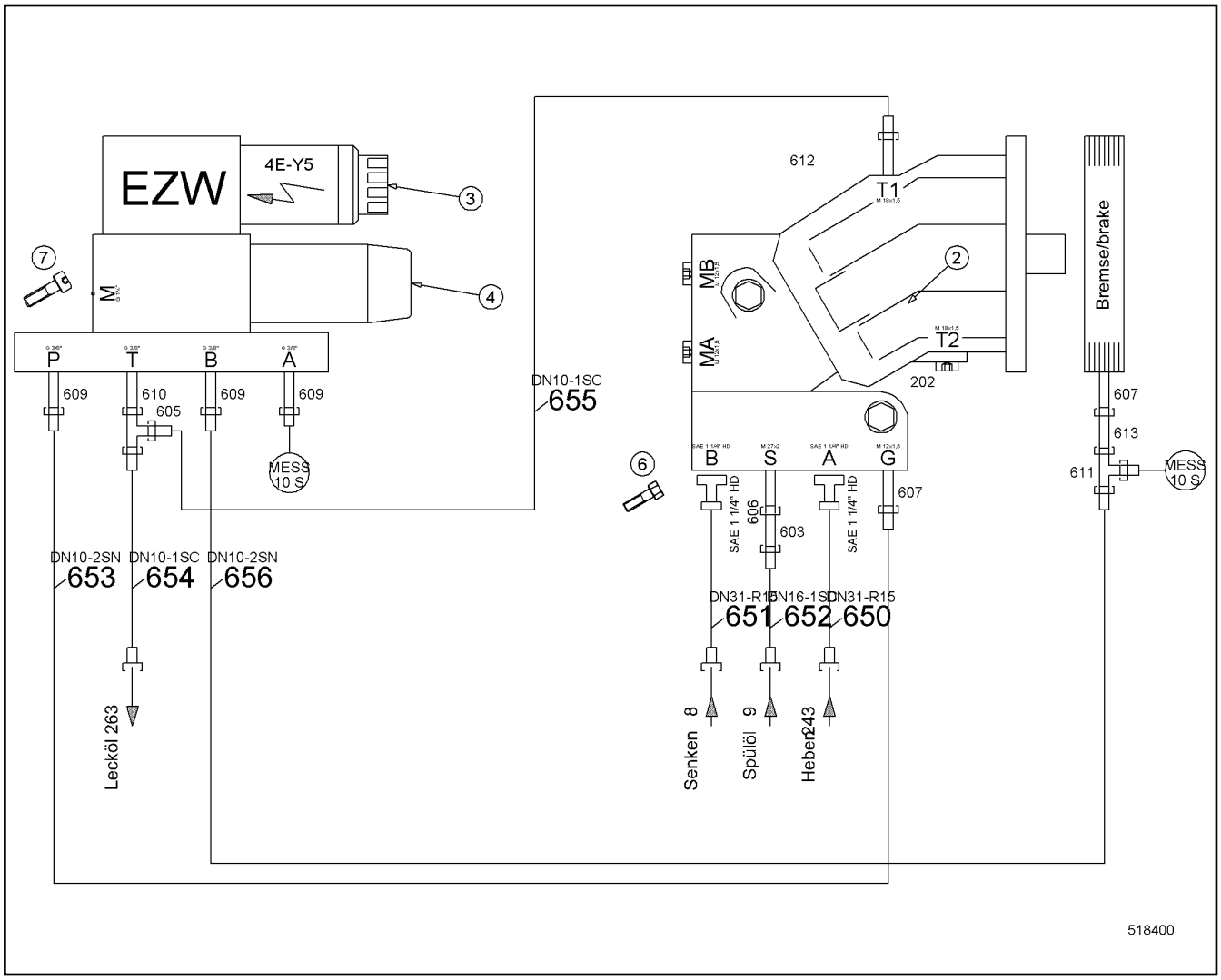

Pos.	Item	Quantity	Description	Bezeichnung	Serie	K
2	512294214	1	OIL MOTOR ⇨ ❑ 359	OELMOTOR		
3	511432714	1	DIRECTIONAL CONTROL VALVE	WEGEVENTIL		
4	511476914	1	PRESSURE REDUCTION VALVE	DRUCKREDUZIERVENTIL		
5	510662914	1	CONNECTING PLATE	ANSCHLUSSPLATTE		
6	10539311	6	HEX SCREW ISO 4017 M14X130 10.9	SECHSKANTSCHRAUBE		
7	404302914	4	SOCKET HEAD SCREW ISO 4762 M5X90 10.9	ZYLINDERSCHRAUBE		
201	510694514	2	GAUGE CONNECTION	MESSSTUTZEN		
202	477705114	1	FITTING	VERSCHRAUBUNG		
603	7407108	1	FITTING	VERSCHRAUBUNG		
605	247128602	1	FITTING	VERSCHRAUBUNG		
606	471033314	1	FITTING	VERSCHRAUBUNG		
607	471004614	2	FITTING	VERSCHRAUBUNG		
609	471032808	3	FITTING	VERSCHRAUBUNG		
610	247009402	1	FITTING	VERSCHRAUBUNG		
611	7367776	1	FITTING	VERSCHRAUBUNG		
612	471039408	1	FITTING	VERSCHRAUBUNG		
613	7617268	1	FITTING	VERSCHRAUBUNG		
615	10539300	2	HEX SCREW ISO 4017 M14X45 10.9	SECHSKANTSCHRAUBE		
616	10472425	2	RECTANGULAR SECTION RING	RECHTECKRING		
617	510586614	4	FLANGE HALF	FLANSCHHAELFTE		

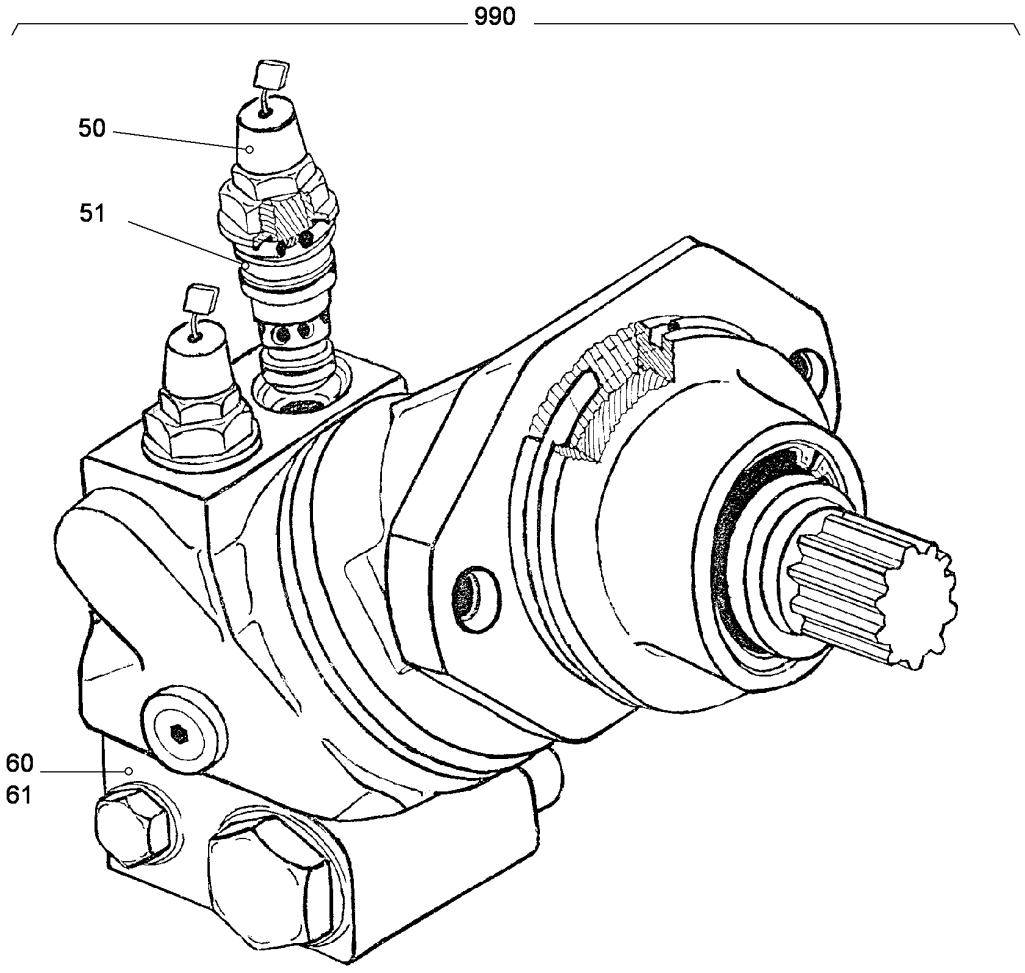

Pos.	Item	Quantity	Description	Bezeichnung	Serie	K
50	511639714	2	PRESSURE LIMITING VALVE	DRUCKBEGRENZUNGSVENTIL		
51	512401514	2	SEALING SET	DS		
60	512401414	1	BRAKE VALVE	BREMSVENTIL		
61	511614214	1	SEALING SET	DS		
990	512402214	1	SEAL KIT CPL.	DICHTSATZ KPL.		

ACHTUNG !
ATTENTION !
ATTENTION !
ATENCIÓN !
ATENÇÃO !
ВНИМАНИЕ

Für Schlauchbestellungen kann über die Schlauchnummer, in der entsprechenden Schlauchliste, die Identnummer festgestellt werden.

For ordering flexible hoses you can find the identification number through the hose-number in the corresponding hose-list.

Pour des ordres de tuyau flexible le nombre d'identification on voit dans la liste de tuyau flexible correspondente.

Para el pedido de manguera, indicar el número de identificación de la manguera de la lista respectiva.

Para se encomendar uma mangueira, consulte o número de identificaçao na respectiva lista de mangueiras.

Для оформления заказов на шланги/рукавы идент. № может быть определен при помощи номера шланга/рукава, указанного в соотетствующем перечне шлангов/рукавов.

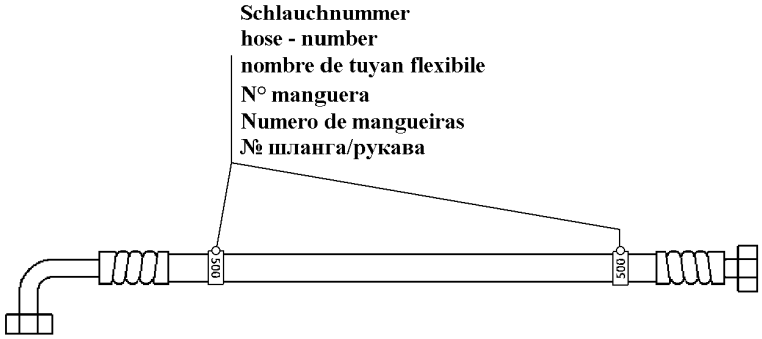

500000

Pos.	Item	Quantity	Description	Bezeichnung	Serie	K
650	995951314	1	HOSE CPL	SCHLAUCH KPL		
651	995951414	1	HOSE CPL	SCHLAUCH KPL		
652	991170814	1	HOSE CPL	SCHLAUCH KPL		
653	993213714	1	HOSE CPL	SCHLAUCH KPL		
654	993751514	1	HOSE CPL	SCHLAUCH KPL		
655	914763014	1	HOSE CPL	SCHLAUCH KPL		
656	928950414	1	HOSE CPL	SCHLAUCH KPL		

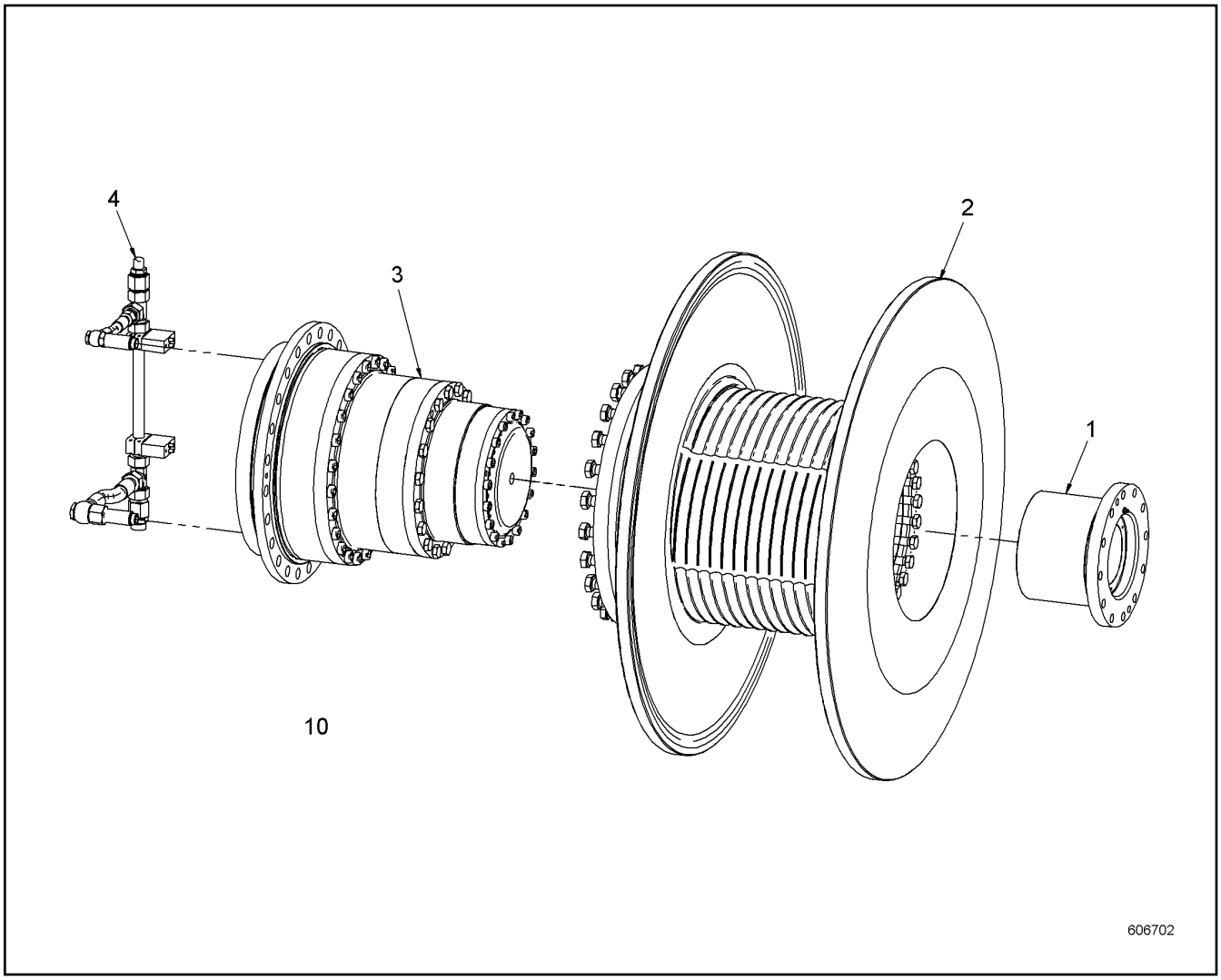

Pos.	Item	Quantity	Description	Bezeichnung	Serie	K
1	10583864	1	FLANGE ⇨ ❑ 362	FLANSCH		
2	10555973	1	ROPE DRUM ⇨ ❑ 363	SEILTROMMEL		
3	10583865	1	GEARBOX ⇨ ❑ 364	GETRIEBE		
4	10583845	1	OIL LINE ⇨ ❑ 365	OELLEITUNG		
10	10547904	1	SCREW LOCKING	SCHRAUBENSICHERUNG		
200	10595126	1	SEALING SET CPL	DS KPL		

1

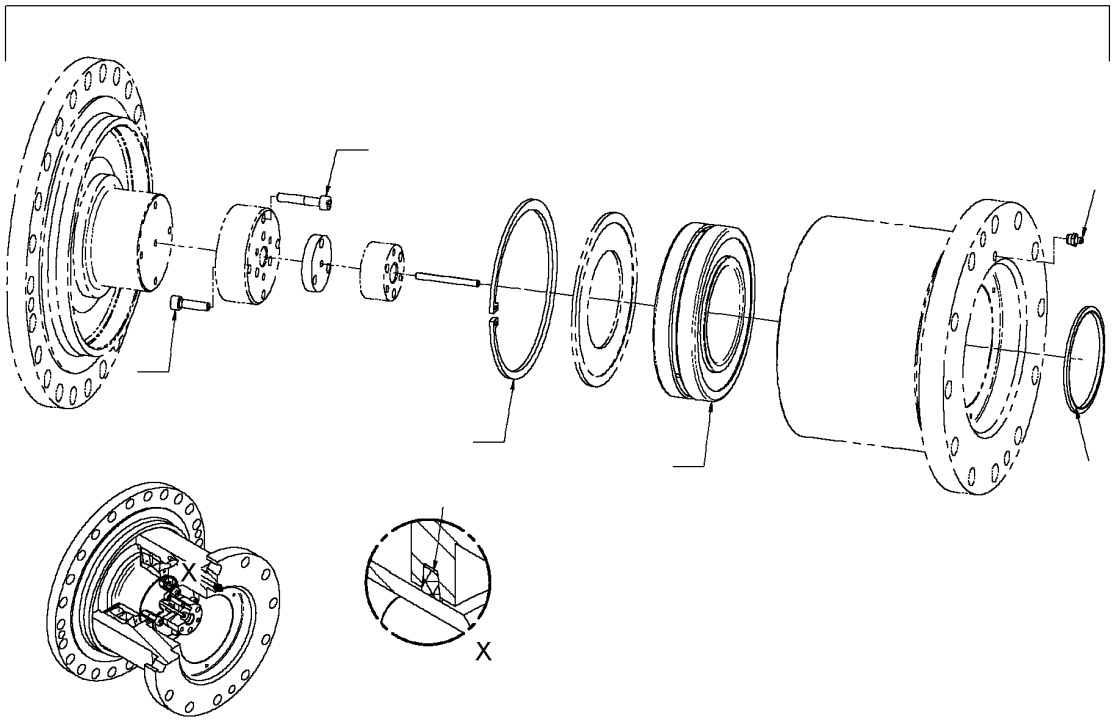

Pos.	Item	Quantity	Description	Bezeichnung	Serie	K
1	11253394	1	REPAIR KIT	REPARATURSATZ		

1

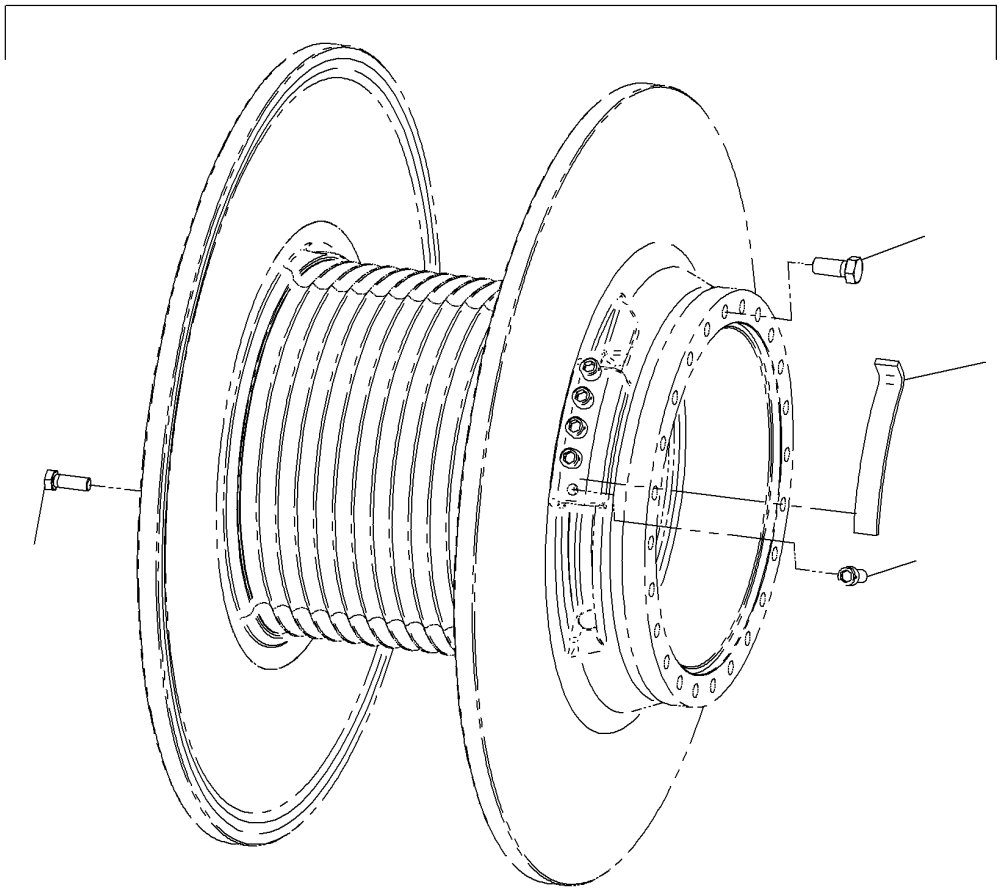

606704

Pos.	Item	Quantity	Description	Bezeichnung	Serie	K
1	11253398	1	REPAIR KIT	REPARATURSATZ		

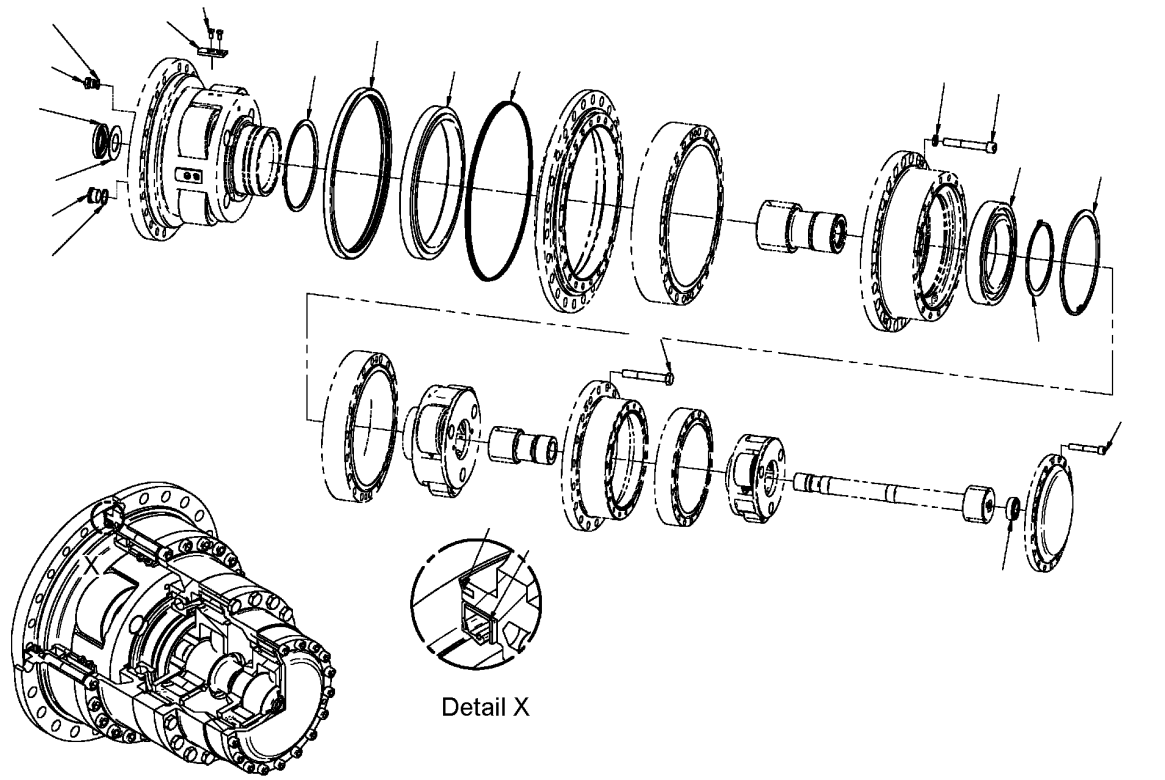

Pos.	Item	Quantity	Description	Bezeichnung	Serie	K
1	11253401	1	REPAIR KIT	REPARATURSATZ		

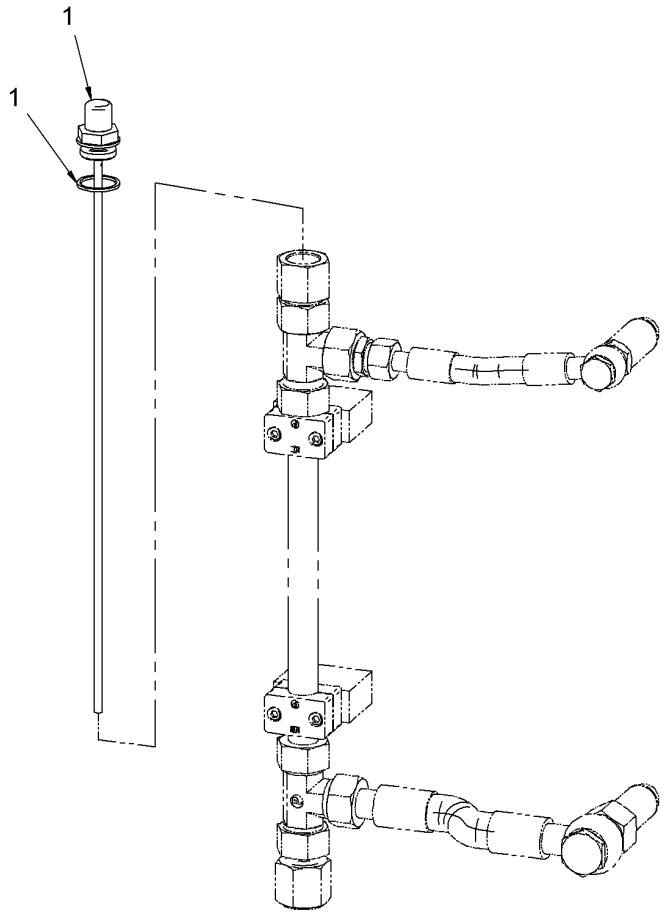

Pos.	Item	Quantity	Description	Bezeichnung	Serie	K
1	11253440	1	REPAIR KIT	REPARATURSATZ		

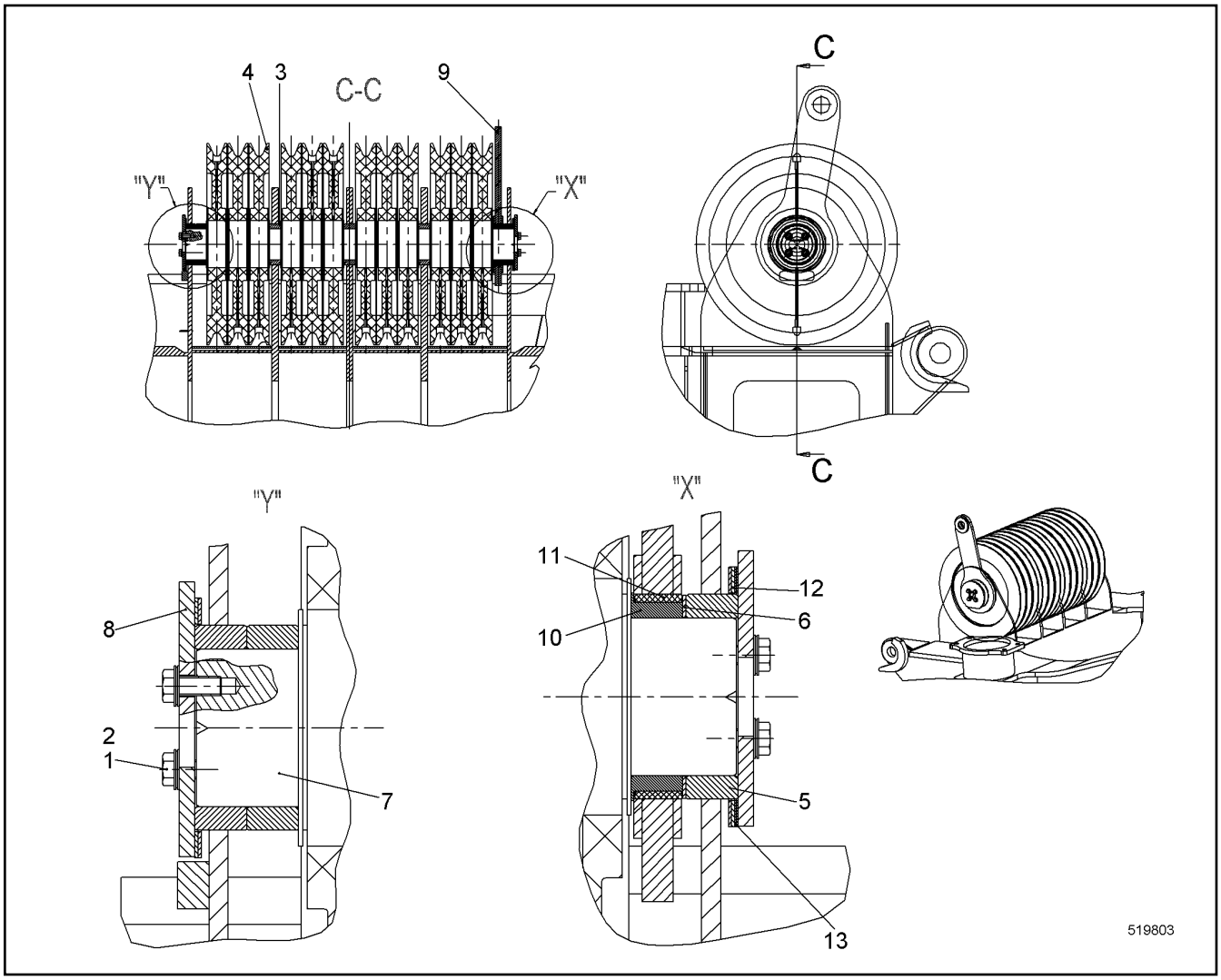

Pos.	Item	Quantity	Description	Bezeichnung	Serie	K
1	10536582	8	WEDGE LOCK WASHER M12 254 SMO;EN 10	KEILSICHERUNGSSCHEIBE		
2	406517314	8	HEX SCREW ISO 4017 M12X30 A4-70	SECHSKANTSCHRAUBE		
3	959869314	3	BUSHING 100/130X36 S770QL;EN 10210-2	BUCHSE		
4	914690714	12	ROPE PULLEY CPL	SEILROLLE KPL		
5	10336763	3	BUSHING 100/130X33 S770QL;EN 10210-2	BUCHSE		
6	385151114	1	WASHER 129/102X2 ST 12.03	SCHEIBE		
7	959866614	1	PIN	BOLZEN		
8	949196514	2	COVER	DECKEL		
9	970827603	1	ROPE FIXING POINT STRAP	LASCHE FIXPUNKT EINZIEHSEIL		
10	959001414	1	BUSHING	BUCHSE		
11	10223371	1	BUSHING 120X130X30 KUNSTSTOFF	BUCHSE		
12	949352914	4	WASHER 165/132X2 ST 12.03	SCHEIBE		
13	385123814	2	WASHER 165/132X1 ST 12.03	SCHEIBE		

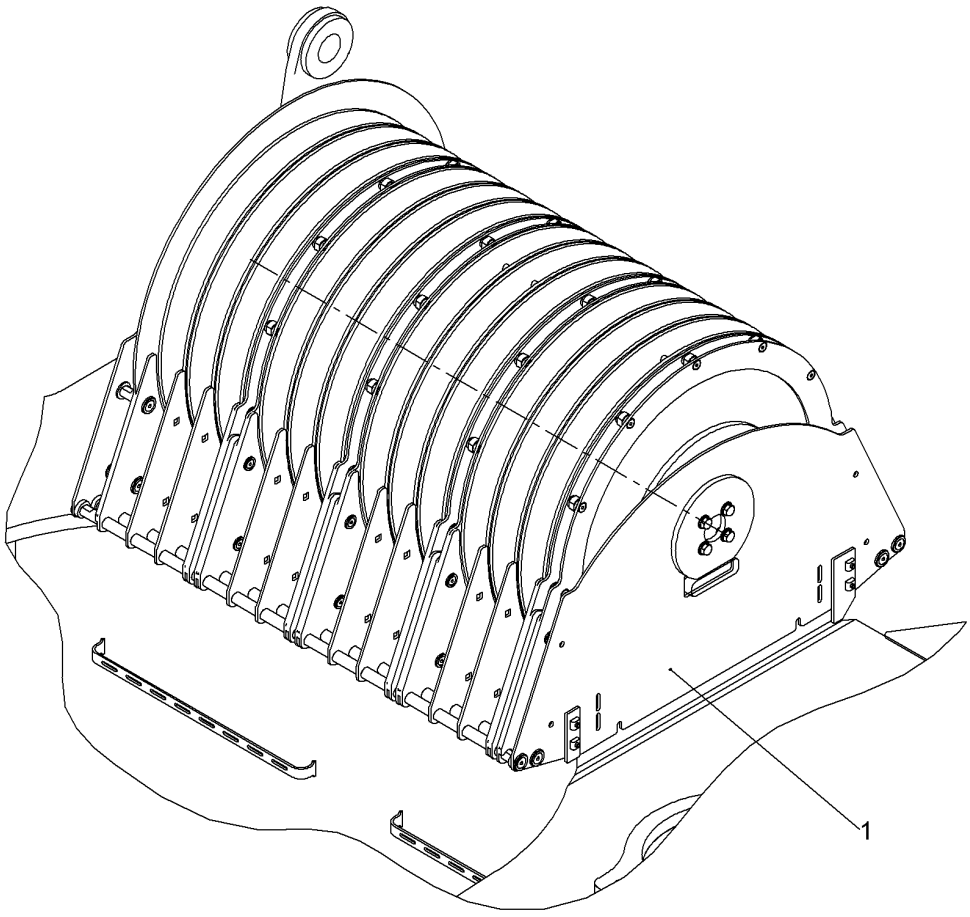

Pos.	Item	Quantity	Description	Bezeichnung	Serie	K
1	993353714	1	ROPE GUARD LUG CPL ⇨ ❑ 368	SEILSCHUTZ EZW KPL		

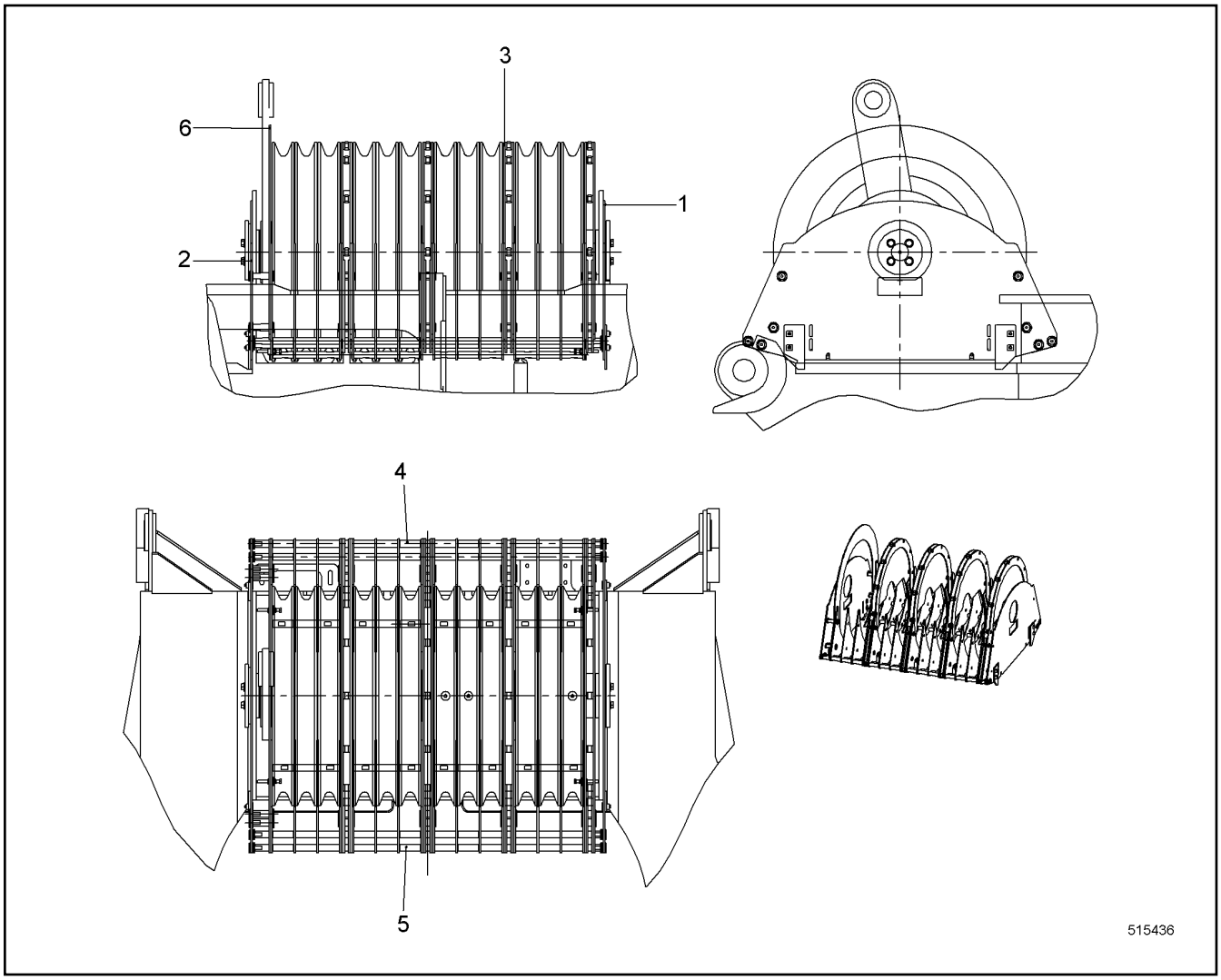

Pos.	Item	Quantity	Description	Bezeichnung	Serie	K
1	992938914	1	SIDE COMPONENT ⇨ ❑ 369	SEITENTEIL		
2	992939214	1	SIDE COMPONENT ⇨ ❑ 370	SEITENTEIL		
3	992938814	4	BRACKET CPL ⇨ ❑ 371	BUEGEL KPL		
4	992938614	1	BRACKET CPL ⇨ ❑ 372	KONSOLE KPL		
5	992943414	1	BRACKET CPL ⇨ ❑ 373	KONSOLE KPL		
6	10099010	1	BRACKET	BUEGEL		

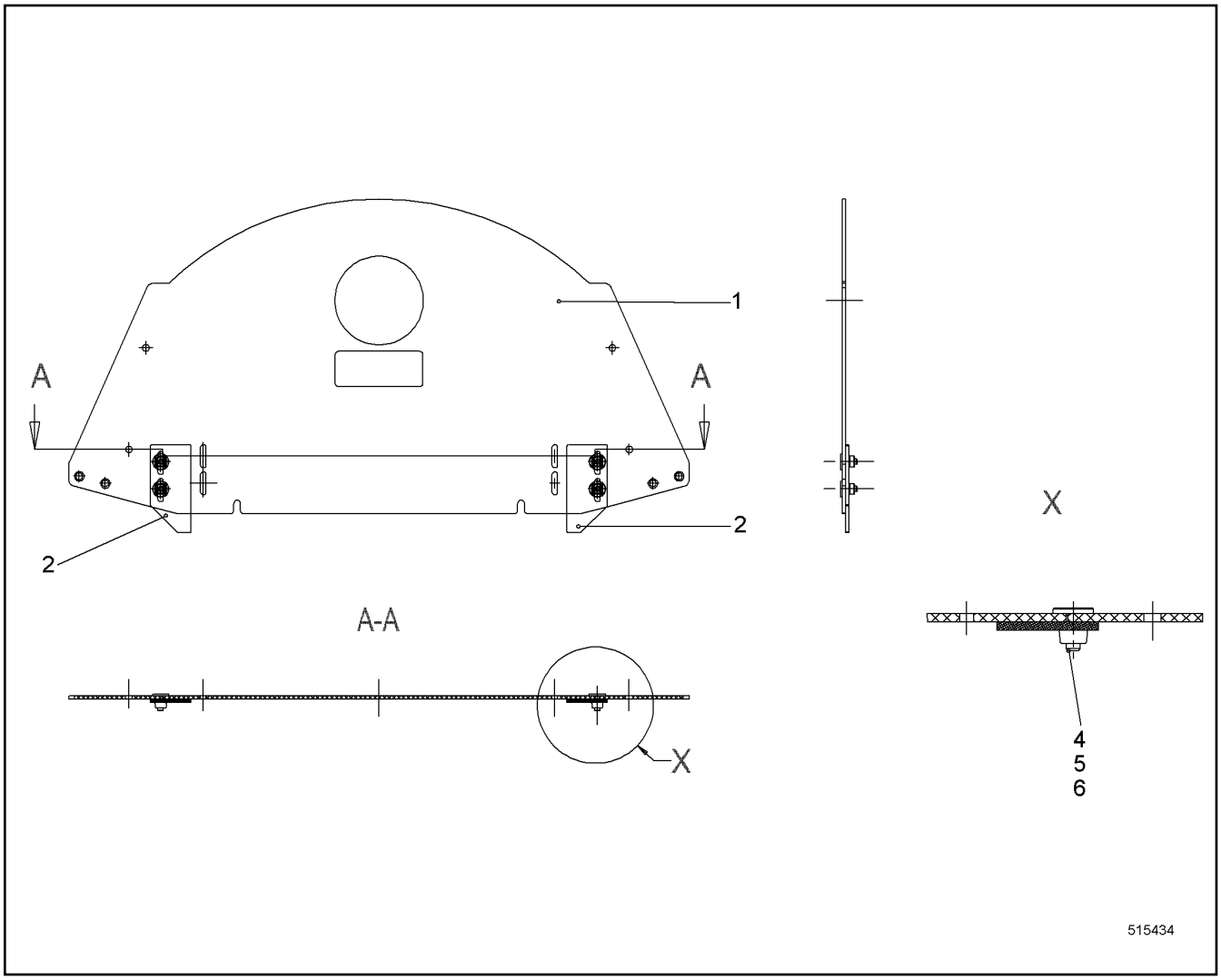

Pos.	Item	Quantity	Description	Bezeichnung	Serie	K
1	10099005	1	SHEET	PLATTE		
2	10336711	2	BRACKET	BUEGEL		
4	485550114	4	CAGE NUT M8-RR-123-47	KAEFIGMUTTER		
5	460022703	4	WASHER EN 14399-6 12 C45	SCHEIBE		
6	4002551	4	COUNTERSUNK SCREW DIN 7991 M8X25 8.8	SENKSCHRAUBE		

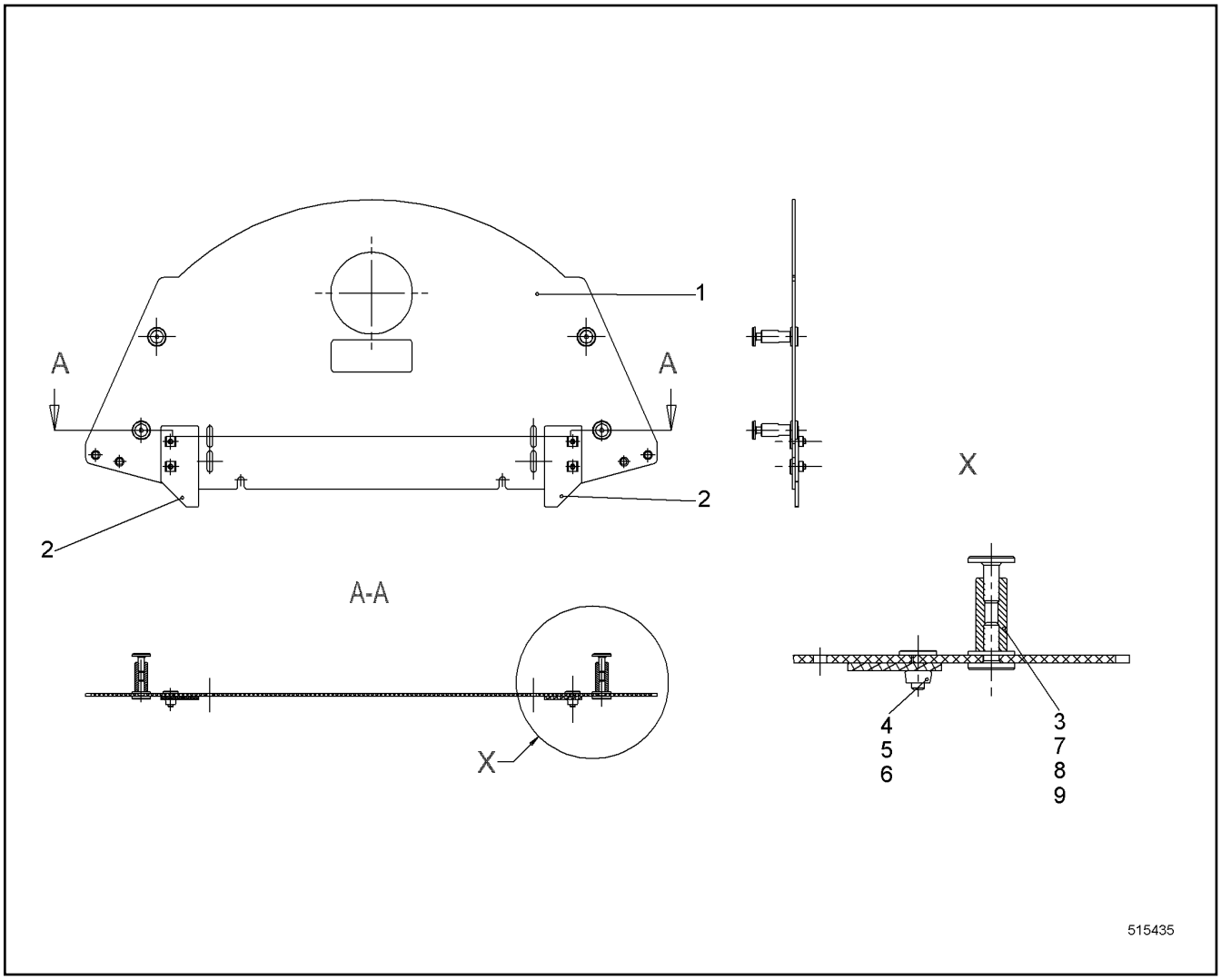

Pos.	Item	Quantity	Description	Bezeichnung	Serie	K
1	10099005	1	SHEET	PLATTE		
2	10336711	2	BRACKET	BUEGEL		
4	485550114	4	CAGE NUT M8-RR-123-47	KAEFIGMUTTER		
5	460022703	4	WASHER EN 14399-6 12 C45	SCHEIBE		
6	4002551	4	COUNTERSUNK SCREW DIN 7991 M8X25 8.8	SENKSCHRAUBE		
7	4600170	8	COUNTERSUNK SCREW DIN 7991 M10X30 8.8	SENKSCHRAUBE		
8	460024203	8	WASHER DIN 6916 17 C45	SCHEIBE		
9	485568514	4	WASHER DIN 34816 10.5 PA 6.6	SCHEIBE		

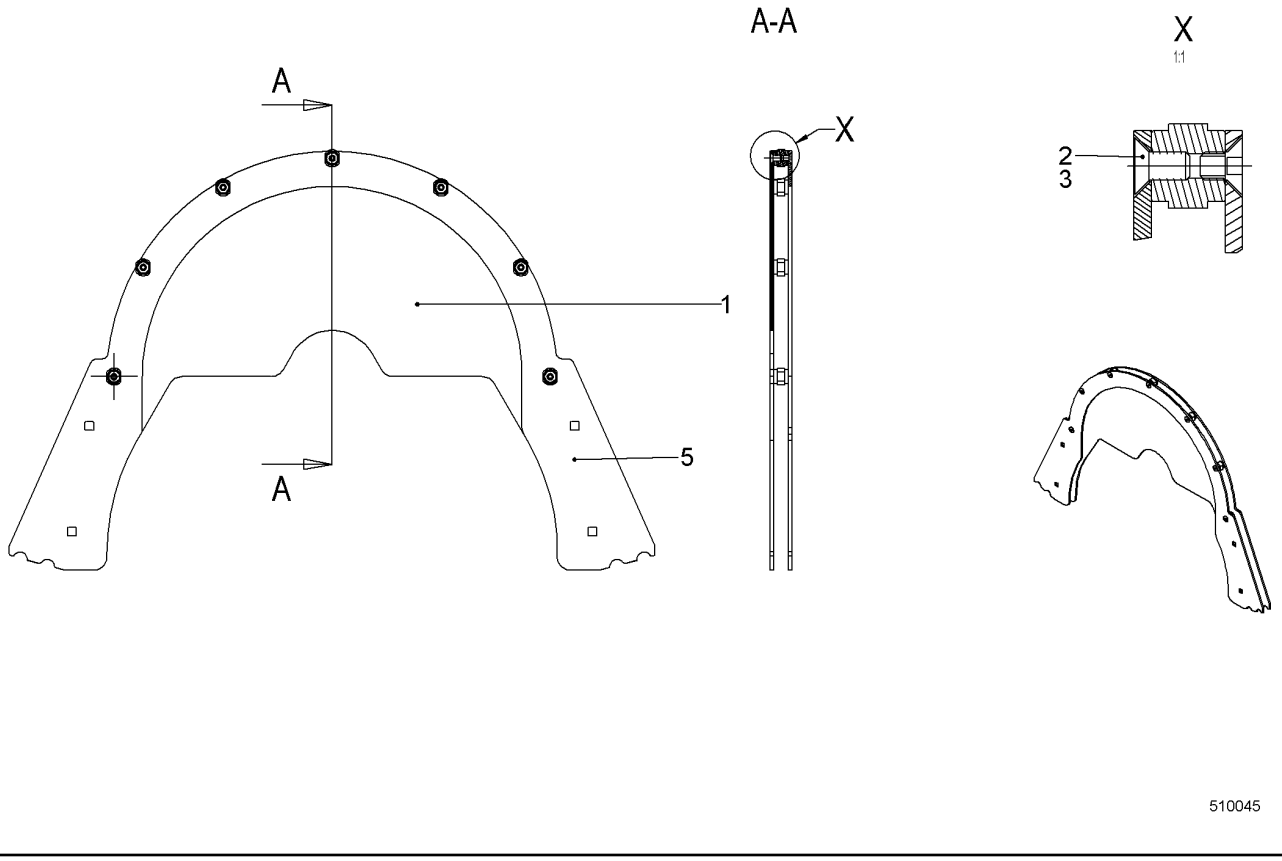

Pos.	Item	Quantity	Description	Bezeichnung	Serie	K
1	10336709	1	BRACKET	BUEGEL		
3	4001205	7	COUNTERSUNK SCREW DIN 7991 M8X16 8.8	SENKSCHRAUBE		
4	4600257	7	COUNTERSUNK SCREW DIN 7991 M8X12 8.8	SENKSCHRAUBE		
5	10099007	1	BRACKET	BUEGEL		

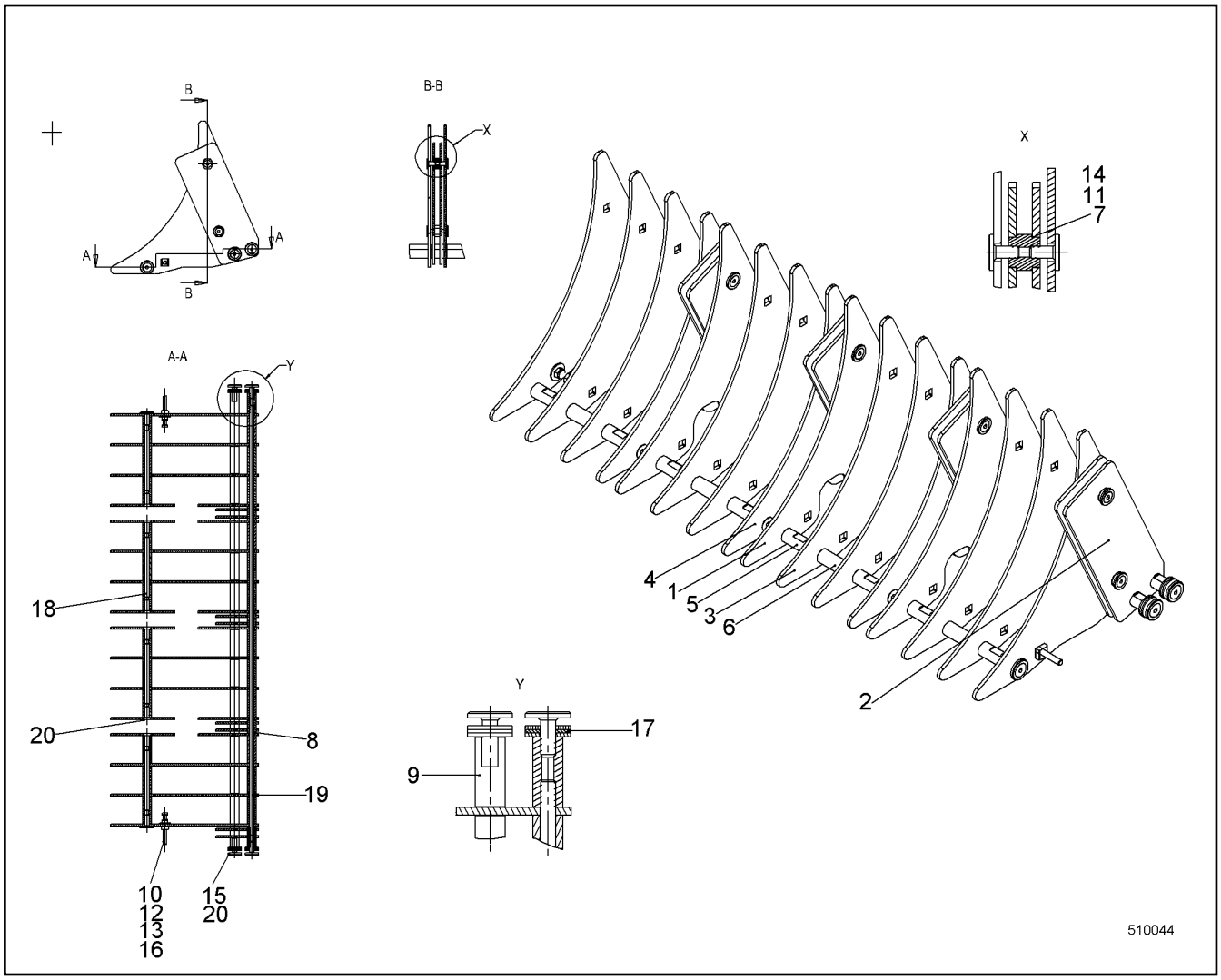

Pos.	Item	Quantity	Description	Bezeichnung	Serie	K
1	10336707	3	SHEET	PLATTE		
2	10336708	8	SHEET	PLATTE		
3	10099009	10	SHEET	PLATTE		
4	10336722	3	SHEET	PLATTE		
10	10331507	2	HEX SCREW ISO 4017 M8X65 A4-70	SECHSKANTSCHRAUBE		
11	4600157	16	COUNTERSUNK SCREW DIN 7991 M8X20 8.8;	SENKSCHRAUBE		
12	10540510	2	WASHER ISO 7093-1 8 A4	SCHEIBE		
13	10540493	2	HEX NUT ISO 10511 M8 A4	SECHSKANTMUTTER		
14	460022703	16	WASHER EN 14399-6 12 C45	SCHEIBE		
15	460024203	6	WASHER DIN 6916 17 C45	SCHEIBE		
16	485550114	2	CAGE NUT M8-RR-123-47	KAEFIGMUTTER		
17	485568514	12	WASHER DIN 34816 10.5 PA 6.6	SCHEIBE		
20	4600170	12	COUNTERSUNK SCREW DIN 7991 M10X30 8.8	SENKSCHRAUBE		

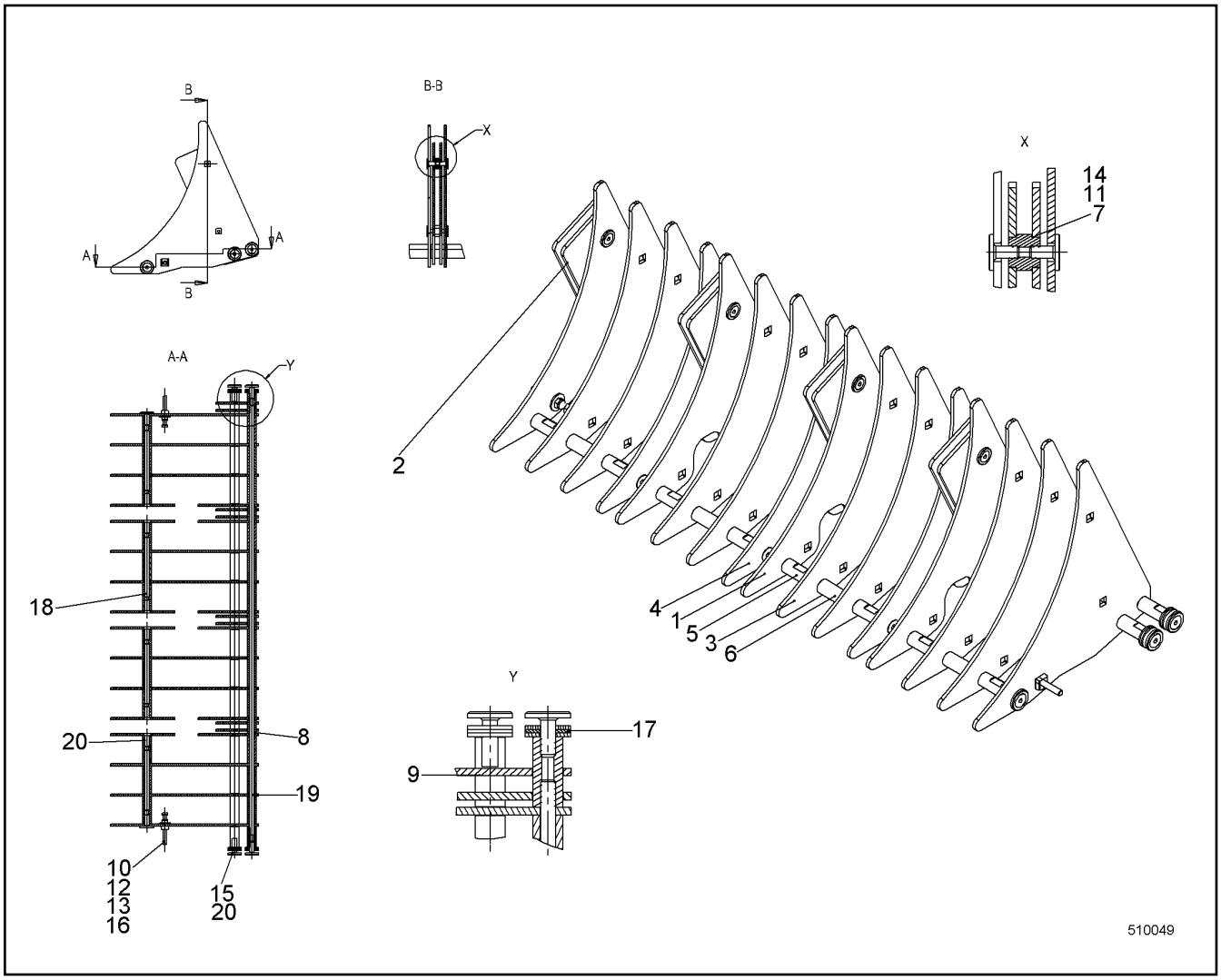

Pos.	Item	Quantity	Description	Bezeichnung	Serie	K
1	10336707	3	SHEET	PLATTE		
2	10336708	8	SHEET	PLATTE		
3	10099009	10	SHEET	PLATTE		
4	10336722	3	SHEET	PLATTE		
10	10331507	2	HEX SCREW ISO 4017 M8X65 A4-70	SECHSKANTSCHRAUBE		
11	4600157	16	COUNTERSUNK SCREW DIN 7991 M8X20 8.8;	SENKSCHRAUBE		
12	10540510	2	WASHER ISO 7093-1 8 A4	SCHEIBE		
13	10540493	2	HEX NUT ISO 10511 M8 A4	SECHSKANTMUTTER		
14	460022703	16	WASHER EN 14399-6 12 C45	SCHEIBE		
15	460024203	6	WASHER DIN 6916 17 C45	SCHEIBE		
16	485550114	2	CAGE NUT M8-RR-123-47	KAEFIGMUTTER		
17	485568514	12	WASHER DIN 34816 10.5 PA 6.6	SCHEIBE		
20	4600170	12	COUNTERSUNK SCREW DIN 7991 M10X30 8.8	SENKSCHRAUBE		

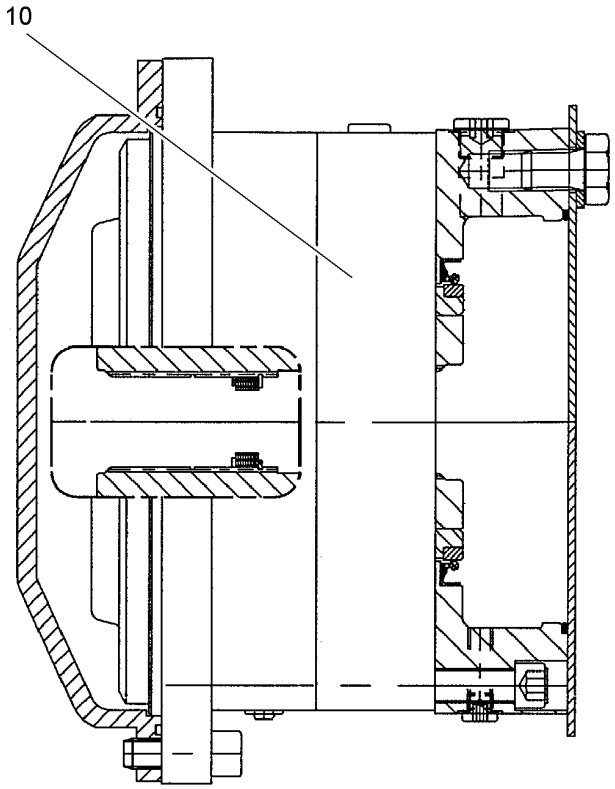

506837

Pos.	Item	Quantity	Description	Bezeichnung	Serie	K
10	990464514	1	DRIVE ⇨ ❑ 375	ANTRIEB		

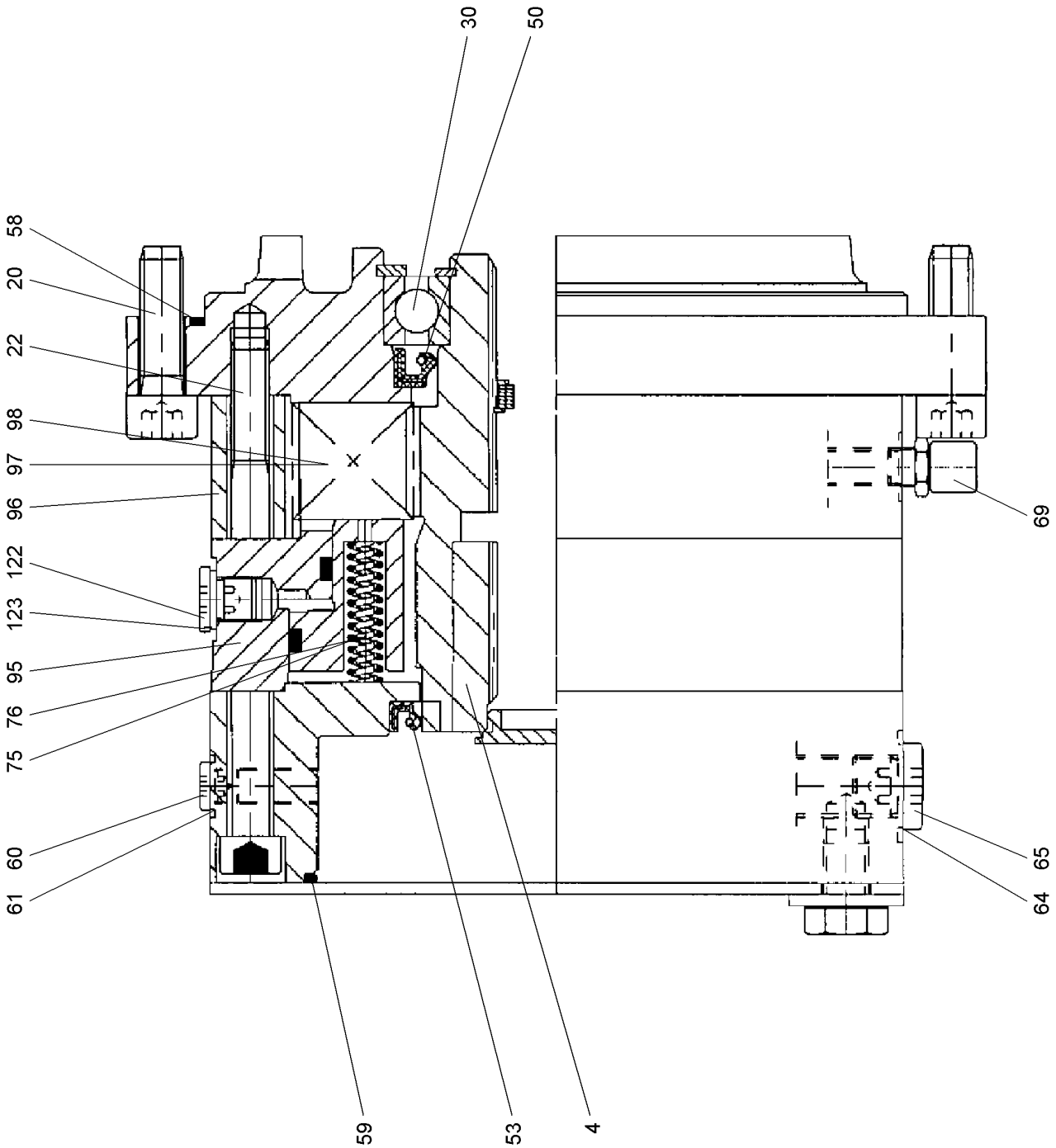
30
50
58
20
22
98
97
96
122
123
95
76
75
60
61
69
65
64
59
53
4
604840

Pos.	Item	Quantity	Description	Bezeichnung	Serie	K
4	11223233	1	DRIVE SLEEVE	ANTRIEBSHUELSE		
20	10337130	8	SOCKET HEAD SCREW ISO 4762 M12X40 A4-7	ZYLINDERSCHRAUBE		
22	10539530	12	SOCKET HEAD SCREW ISO 4762 M12X140 A4	ZYLINDERSCHRAUBE		
30	10592555	1	DEEP GROOVE BALL BEARING	RILLENKUGELLAGER		
50	11950210	1	SHAFT SEAL	WELLENDICHTRING		
53	11950212	1	ROTARY SHAFT LIP SEAL	RADIALWELLENDICHTRING		
58	726456214	1	O-RING	O-RING		
59	10548553	1	O-RING	O-RING		
60	502027614	2	SCREW PLUG DIN 908 M10X1 ST	VERSCHLUSSSCHRAUBE		
61	790295414	2	SEALING RING	DICHTRING		
64	4600320	1	SCREW PLUG DIN 908 M18X1.5 5.8	VERSCHLUSSSCHRAUBE		
65	790444514	1	SEALING RING	DICHTRING		
69	592089814	1	VENTILATION VALVE	ENTLUEFTUNGSVENTIL		
75	11305568	16	PRESSURE SPRING	DRUCKFEDER		
76	11305579	16	PRESSURE SPRING	DRUCKFEDER		
95	592054714	1	ACTUATING UNIT	BETAETIGUNGSEINHEIT		
96	501559414	1	MULTI-DISC CARRIER	LAMELLENTRAEGER		
97	501540414	8	OUTER MULTI-DISC	AUSSENLAMELLE		
98	501540514	7	INTERNAL MULTI-DISC	INNENLAMELLE		
122	502027514	1	SCREW PLUG DIN 908 M12X1.5	VERSCHLUSSSCHRAUBE		
123	710121014	1	SEALING RING	DICHTRING		

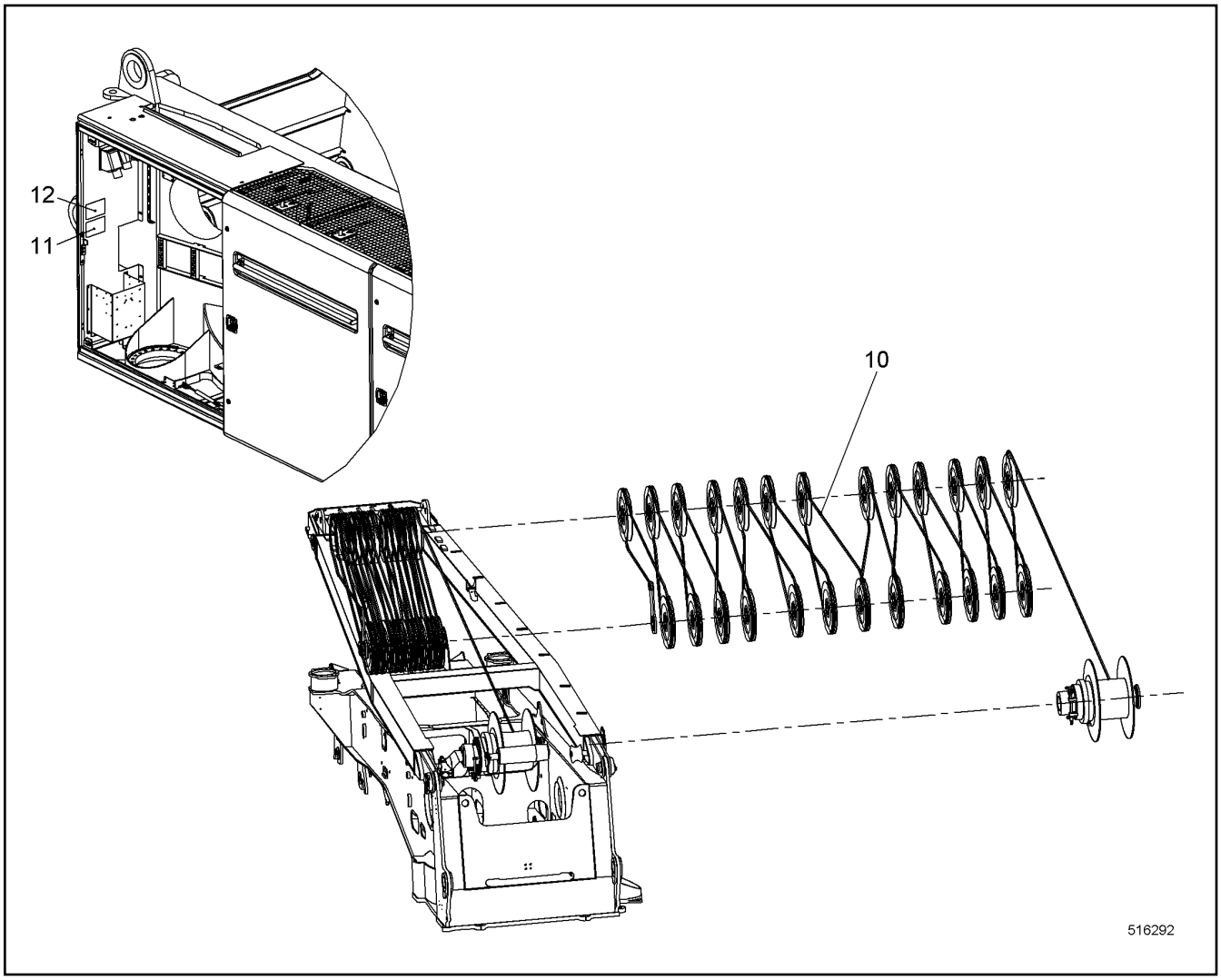

Pos.	Item	Quantity	Description	Bezeichnung	Serie	K
10	11227045	1	ROPE LEFT	SEIL LI		
11	11227046	1	SIGN	SCHILD		
12	10533589	1	SIGN	SCHILD		

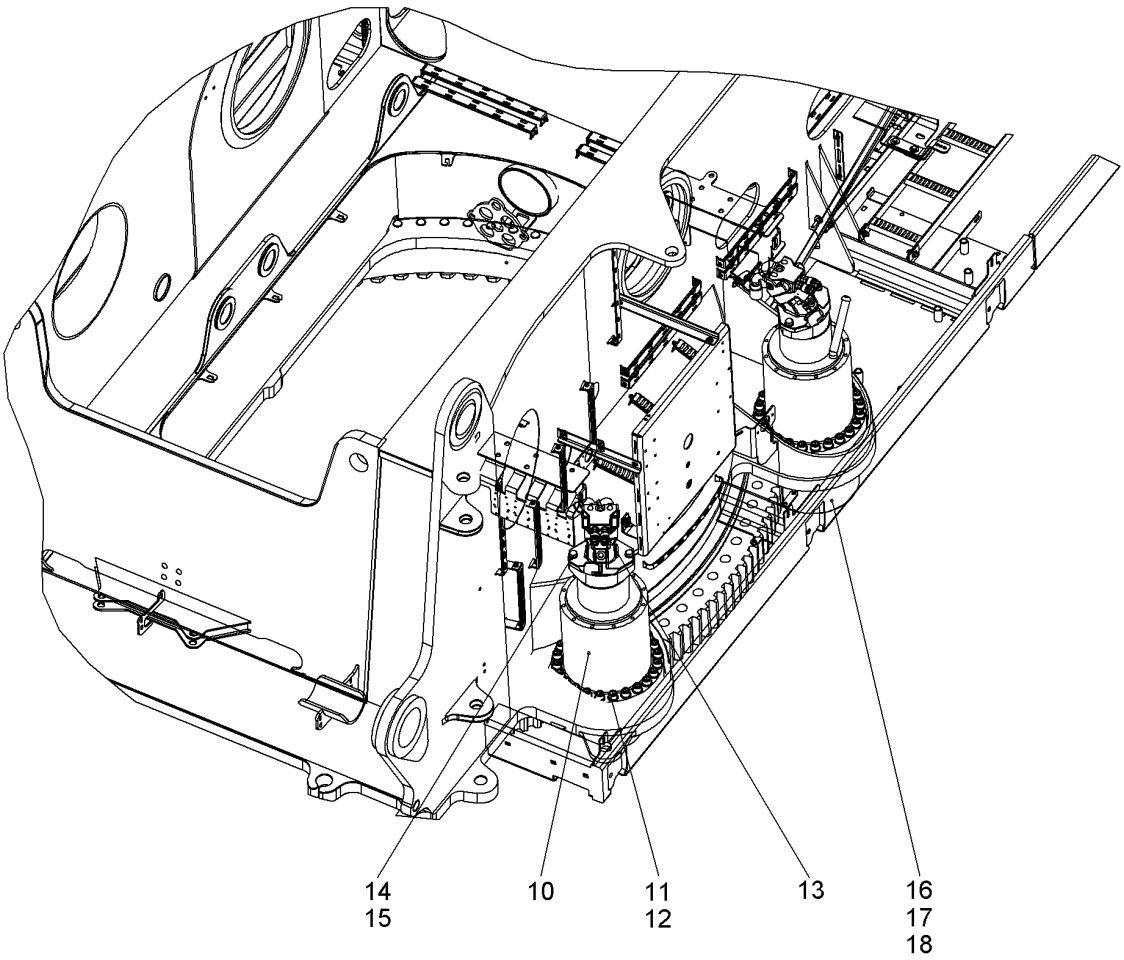

Pos.	Item	Quantity	Description	Bezeichnung	Serie	K
2	10519683	1	SG HYDR ⇨ ❑ 379	DW HYDR		
4	10561780	1	HOSE LIST ⇨ ❑ 390	SCHLAUCHLISTE		
10	90013762	2	SLEWING GEAR DRIVE ⇨ ❑ 391	DREHWERKANTRIEB		
11	460022203	48	WASHER DIN 6916 21 C45	SCHEIBE		
12	10544105	48	SOCKET HEAD SCREW ISO 4762 M20X130 10.	ZYLINDERSCHRAUBE		
14	10544172	4	WASHER ISO 7089 16	SCHEIBE		
15	10543902	4	HEX SCREW ISO 4017 M16X45 10.9	SECHSKANTSCHRAUBE		
16	10099140	2	PINION GUARD	RITZELSCHUTZ		
17	420001014	6	WASHER ISO 7089 8 A4	SCHEIBE		
18	406501514	6	HEX SCREW ISO 4017 M8X16 A4-70	SECHSKANTSCHRAUBE		

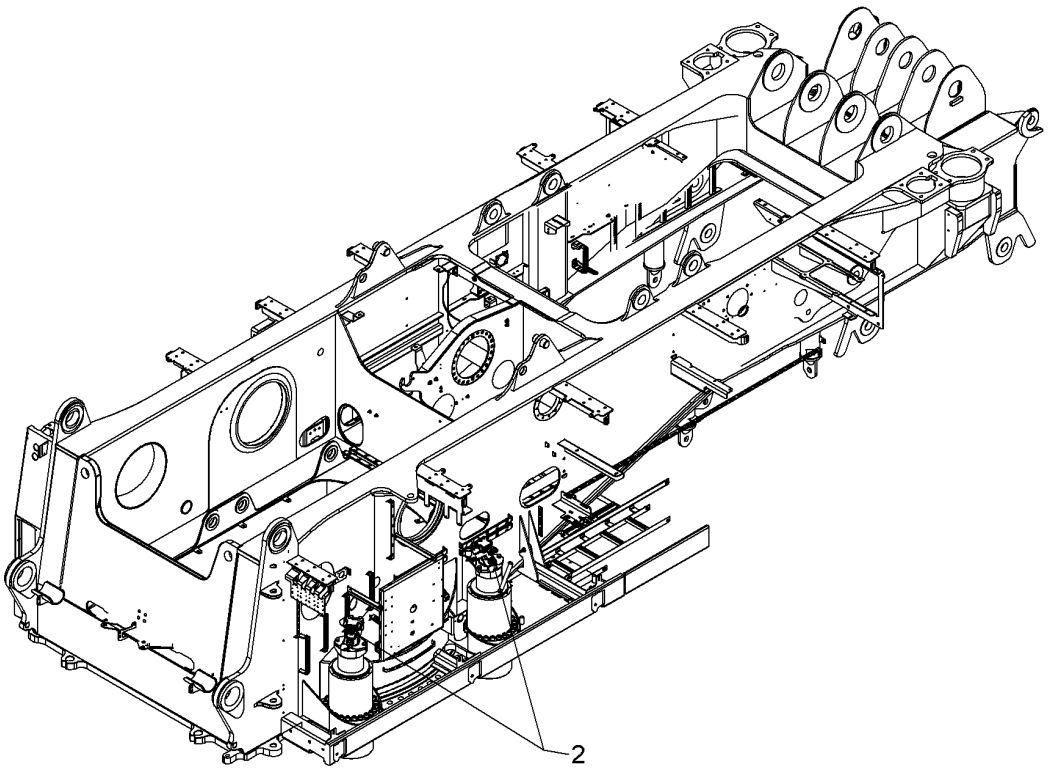

Pos.	Item	Quantity	Description	Bezeichnung	Serie	K
2	10552161	1	TUBING HYDR ⇨ ❑ 380	VERROHRUNG HYDR		

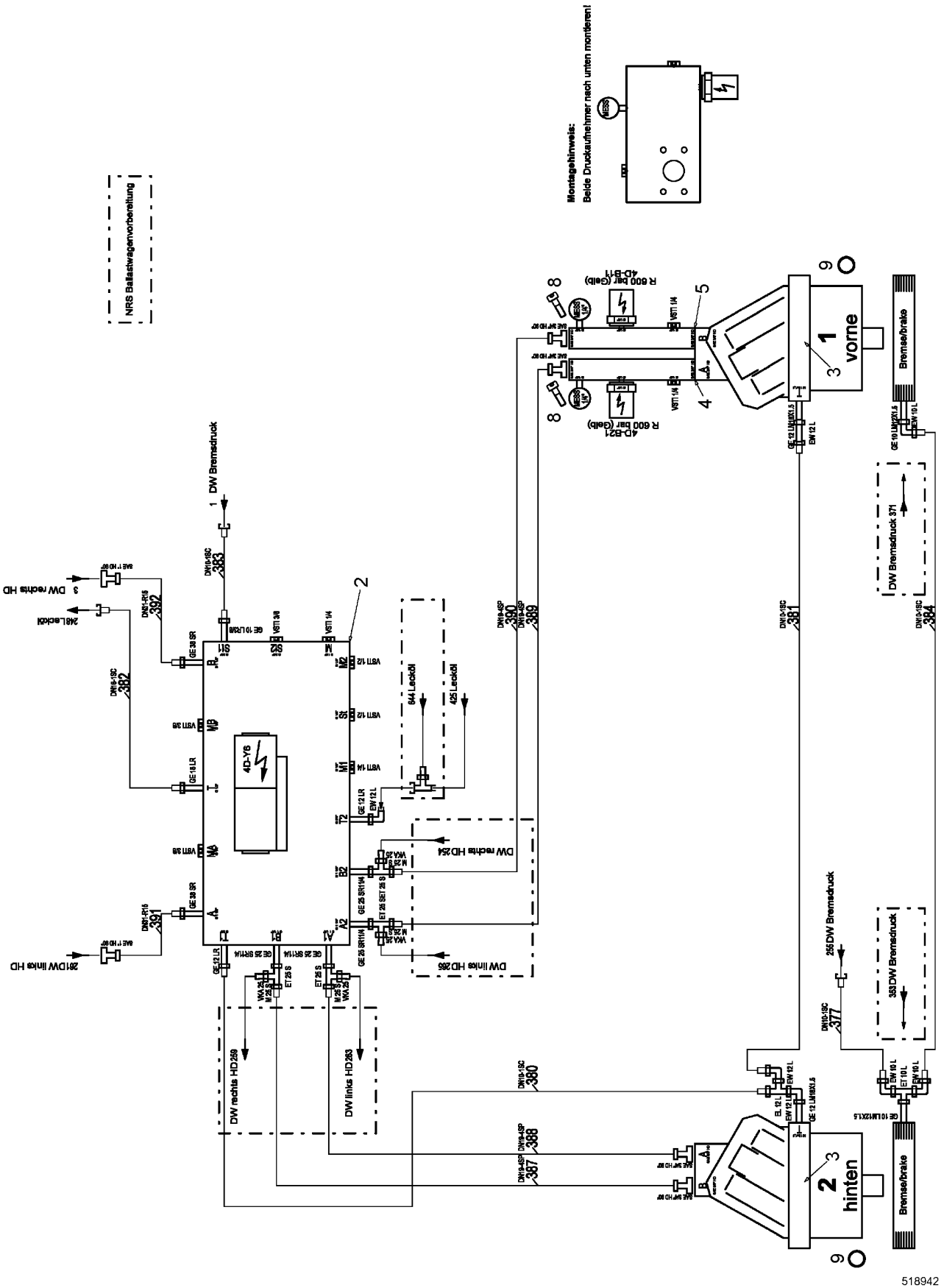

21.6.2017 518942 LIEBHERR	**138406_ETK_001** **TUBING HYDR** **VERROHRUNG HYDR**	❑ 380 (1/2) **10 55 216 1**

Pos.	Item	Quantity	Description	Bezeichnung	Serie	K
2	511434714	1	SG SAFETY BLOCK ⇨ ❑ 382	DW SICHERUNGSBLOCK		
3	512299114	2	OIL MOTOR ⇨ ❑ 384	OELMOTOR		
6	4001246	16	HEX SCREW ISO 4017 M10X35 10.9	SECHSKANTSCHRAUBE		
7	4600366	8	HEX SCREW ISO 4017 M12X40 10.9	SECHSKANTSCHRAUBE		
8	4630200	8	SOCKET HEAD SCREW ISO 4762 M10X65 10.9	ZYLINDERSCHRAUBE		
9	726461714	2	O-RING	O-RING		
200	7409720	2	GAUGE CONNECTION	MESSSTUTZEN		
201	482430314	1	FITTING	VERSCHRAUBUNG		
202	7403569	3	FITTING	VERSCHRAUBUNG		
203	510694514	2	GAUGE CONNECTION	MESSSTUTZEN		
204	247117702	4	FITTING	VERSCHRAUBUNG		
600	247117302	4	FITTING	VERSCHRAUBUNG		
602	247128602	1	FITTING	VERSCHRAUBUNG		
603	247112702	2	FITTING	VERSCHRAUBUNG		
604	247009702	1	FITTING	VERSCHRAUBUNG		
605	247009402	2	FITTING	VERSCHRAUBUNG		
608	247128402	4	FITTING	VERSCHRAUBUNG		
611	471039408	2	FITTING	VERSCHRAUBUNG		
612	471034414	2	FITTING	VERSCHRAUBUNG		
618	471039708	2	FITTING	VERSCHRAUBUNG		
619	471007014	1	FITTING	VERSCHRAUBUNG		
620	10597776	4	FITTING	VERSCHRAUBUNG		
623	482431714	4	FITTING	VERSCHRAUBUNG		
624	477400814	4	FITTING	VERSCHRAUBUNG		
625	477701514	4	FITTING	VERSCHRAUBUNG		
630	510586914	4	FLANGE HALF	FLANSCHHAELFTE		
631	510587514	8	FLANGE HALF	FLANSCHHAELFTE		
640	10490784	4	RECTANGULAR SECTION RING	RECHTECKRING		
641	10490781	2	RECTANGULAR SECTION RING	RECHTECKRING		

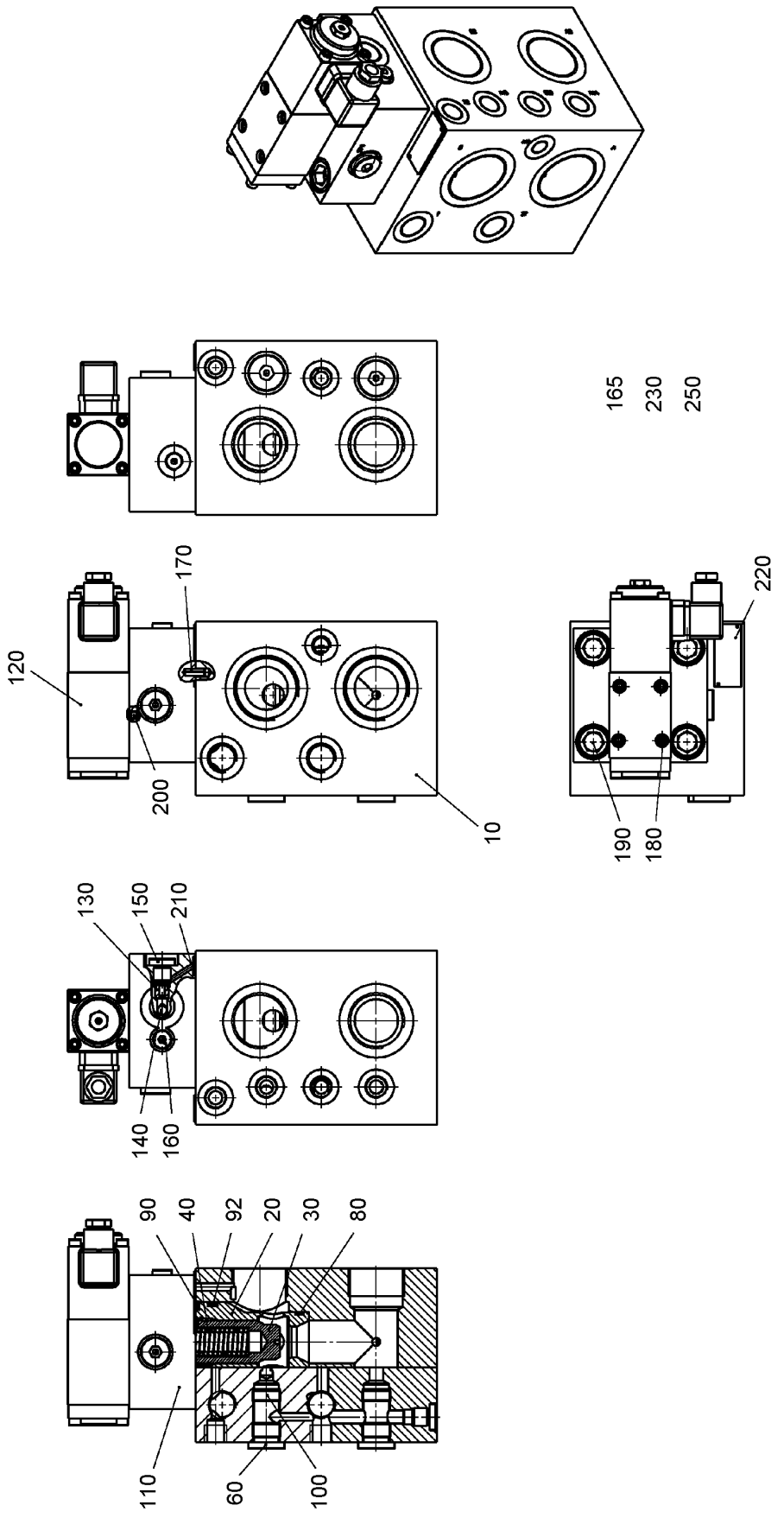
165
230
250
170
120
200
10
220
190
180
130
150
210
140
160
90
40
92
20
30
80
110
60
100
606149

Pos.	Item	Quantity	Description	Bezeichnung	Serie	K
10	11226015	1	BLOCK	BLOCK		
20	11226016	1	SLEEVE NG32/RD60/23X85	HUELSE		
30	11226017	1	PISTON	KOLBEN		
40	11226019	1	PRESSURE SPRING	DRUCKFEDER		
60	11226023	2	SCREW PLUG G1/2"-ED	VERSCHLUSSSCHRAUBE		
80	11226035	1	SEALING RING	DICHTRING		
90	11226084	1	O-RING	O-RING		
92	11226086	1	SEALING RING	DICHTRING		
100	11226088	2	CHECK VALVE	SPERRVENTIL		
110	11226090	1	COVER	DECKEL		
120	10336968	1	SOLENOID VALVE	MAGNETVENTIL		
130	11226118	1	SEAT	SITZ		
140	11226127	1	STEEL BALL	STAHLKUGEL		
150	11226129	1	SCREW PLUG G1/4"-ED	VERSCHLUSSSCHRAUBE		
160	11226130	1	SCREW PLUG G1/8"-ED	VERSCHLUSSSCHRAUBE		
165	11226133	1	SCREW PLUG G3/8"-ED	VERSCHLUSSSCHRAUBE		
170	11226135	1	DOWEL PIN DIN 1481 5X16 ST	SPANNSTIFT		
180	11226137	4	SOCKET HEAD SCREW DIN 912 M5X45 8.8	ZYLINDERSCHRAUBE		
190	11226139	4	SOCKET HEAD SCREW DIN 912 M16X60 8.8	ZYLINDERSCHRAUBE		
200	11226142	1	NOZZLE	DUESE		
210	11226144	4	O-RING	O-RING		
220	11226148	1	TYPE PLATE	TYPENSCHILD		
230	10540182	1	DIRECTIONAL CONTROL VALVE	WEGEVENTIL		
250	512256614	1	SEALING SET CPL	DS KPL		

OHNE BILD
WITHOUT ILLUSTRATION
SANS PLANCHE
SIN FIG.
SEM ILUSTRAÇÃO
БЕЗ ИЗОБРАЖЕНИЯ

600000

Pos.	Item	Quantity	Description	Bezeichnung	Serie	K
1	7023828	1	DRIVING GEAR ⇨ ❑ 385	TRIEBWERK		
4	11940146	1	CONNECTING PLATE	ANSCHLUSSPLATTE		
5	11903905	1	PARALLEL PIN	ZYLINDERSTIFT		
6	11940147	1	O-RING	O-RING		
7	404208514	6	SOCKET HEAD SCREW ISO 4762 M10X25 A4-7	ZYLINDERSCHRAUBE		
31	10650270	1	CLOSING RING ⇨ ❑ 388	VERSCHLUSSRING		
905	7023847	14	STEEL GASKET	STAHLDICHTRING		
990	512299214	1	SEALING SET CPL	DS KPL		

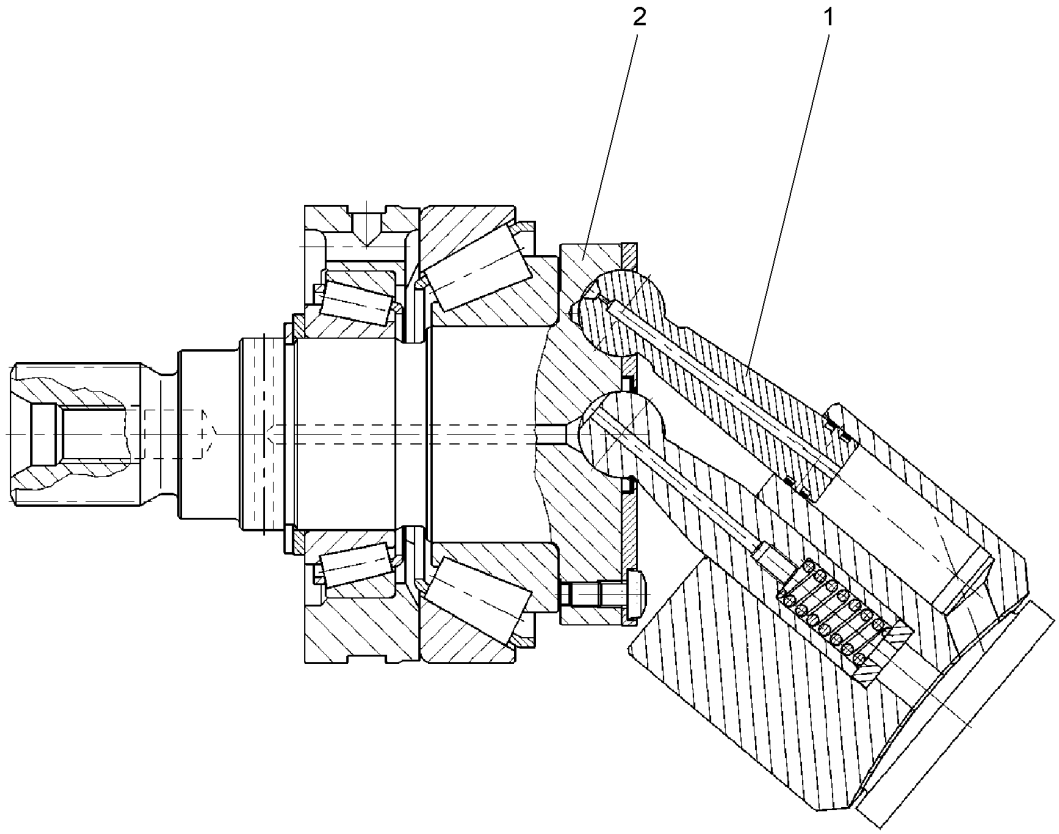

Pos.	Item	Quantity	Description	Bezeichnung	Serie	K
1	11940176	1	HYDRAULIC PARTS DRIVING GEAR ⇨ ❑ 386	TRIEBWERK HYDRAULIKTEIL		
2	11940177	1	DRIVING SHAFT ⇨ ❑ 387	TRIEBWELLE		

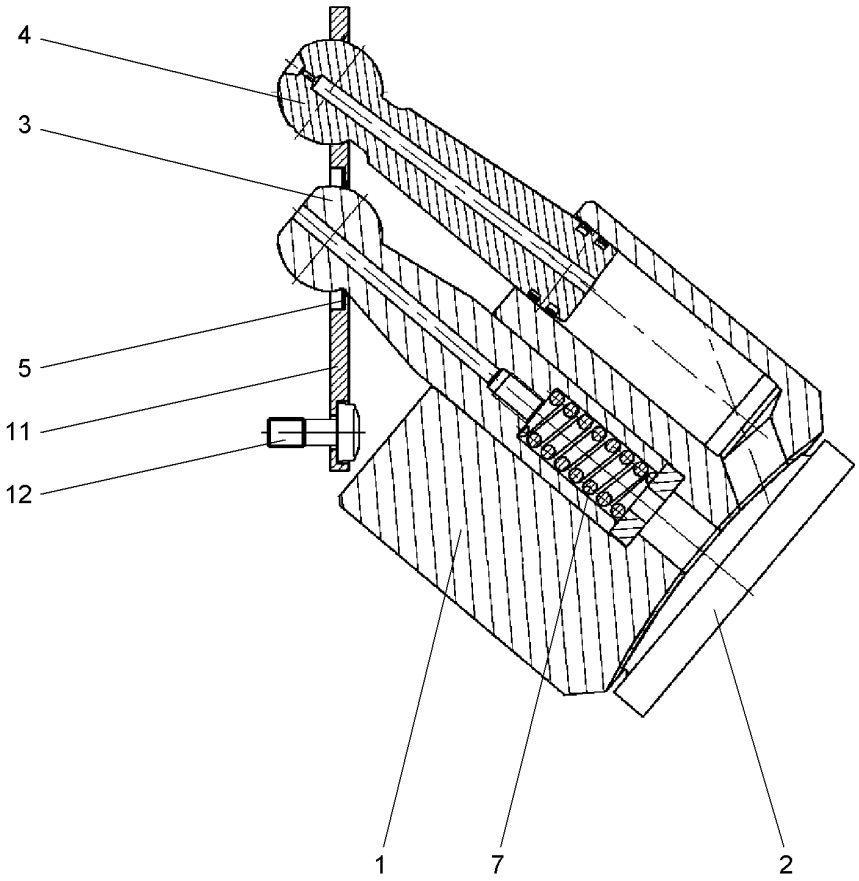

Pos.	Item	Quantity	Description	Bezeichnung	Serie	K
1	7023838	1	CYLINDER	ZYLINDER		
2	7023839	1	GUIDE PLATE	STEUERPLATTE		
3	11940182	1	CENTER STUD	MITTELZAPFEN		
4	11940198	7	PISTON WITH PISTON RINGS	KOLBEN M. KOLBENRINGEN		
5	7023834	1	WASHER	SCHEIBE		
7	11940199	1	PRESSURE SPRING	DRUCKFEDER		
11	7023835	1	PULL-BACK PLATE	RUECKZUGPLATTE		
12	11940203	7	PAN-HEAD SCREW	FLACHKOPFSCHRAUBE		

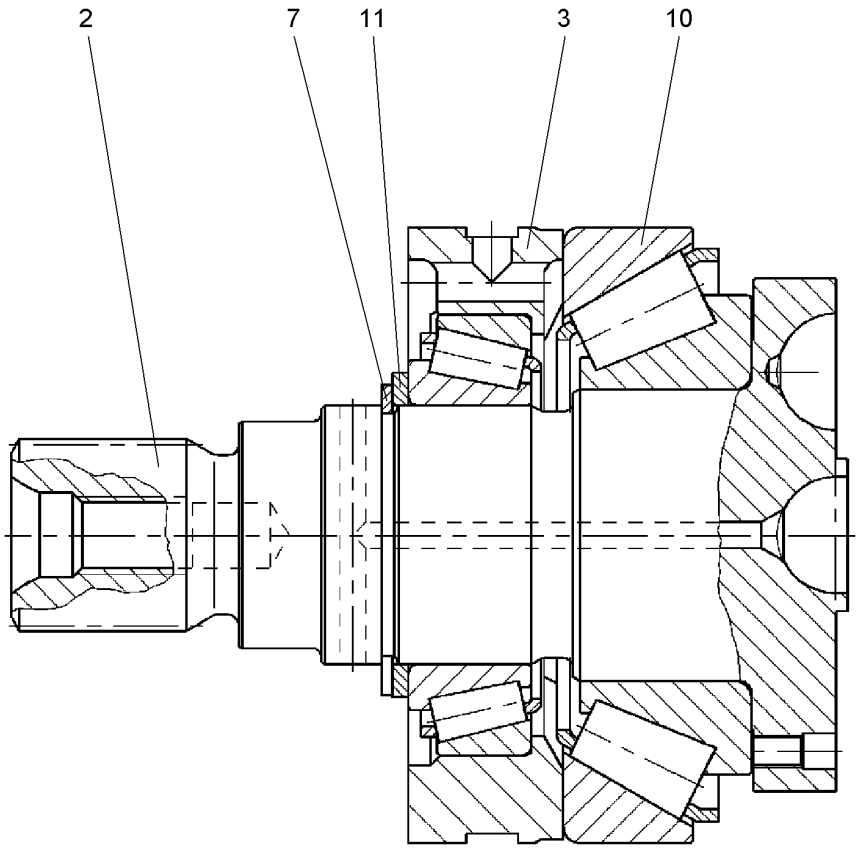

Pos.	Item	Quantity	Description	Bezeichnung	Serie	K
2	11940205	1	DRIVING SHAFT	TRIEBWELLE		
3	7023833	1	BEARING RING	LAGERRING		
7	10216718	1	LOCKING RING	SICHERUNGSRING		
10	7023837	1	TAPERED ROLLER BEARING	KEGELROLLENLAGER		
11	11940207	1	TAPERED ROLLER BEARING	KEGELROLLENLAGER		

OHNE BILD
WITHOUT ILLUSTRATION
SANS PLANCHE
SIN FIG.
SEM ILUSTRAÇÃO
БЕЗ ИЗОБРАЖЕНИЯ

600000

Pos.	Item	Quantity	Description	Bezeichnung	Serie	K
1	11940208	1	CLOSING RING ⇨ ❑ 389	VERSCHLUSSRING		
2	10424724	1	LOCKING RING DIN 471	SICHERUNGSRING		
3	7372232	1	O-RING	O-RING		
4	10475718	1	SHIM RING 70X95X0.5	PASSSCHEIBE		

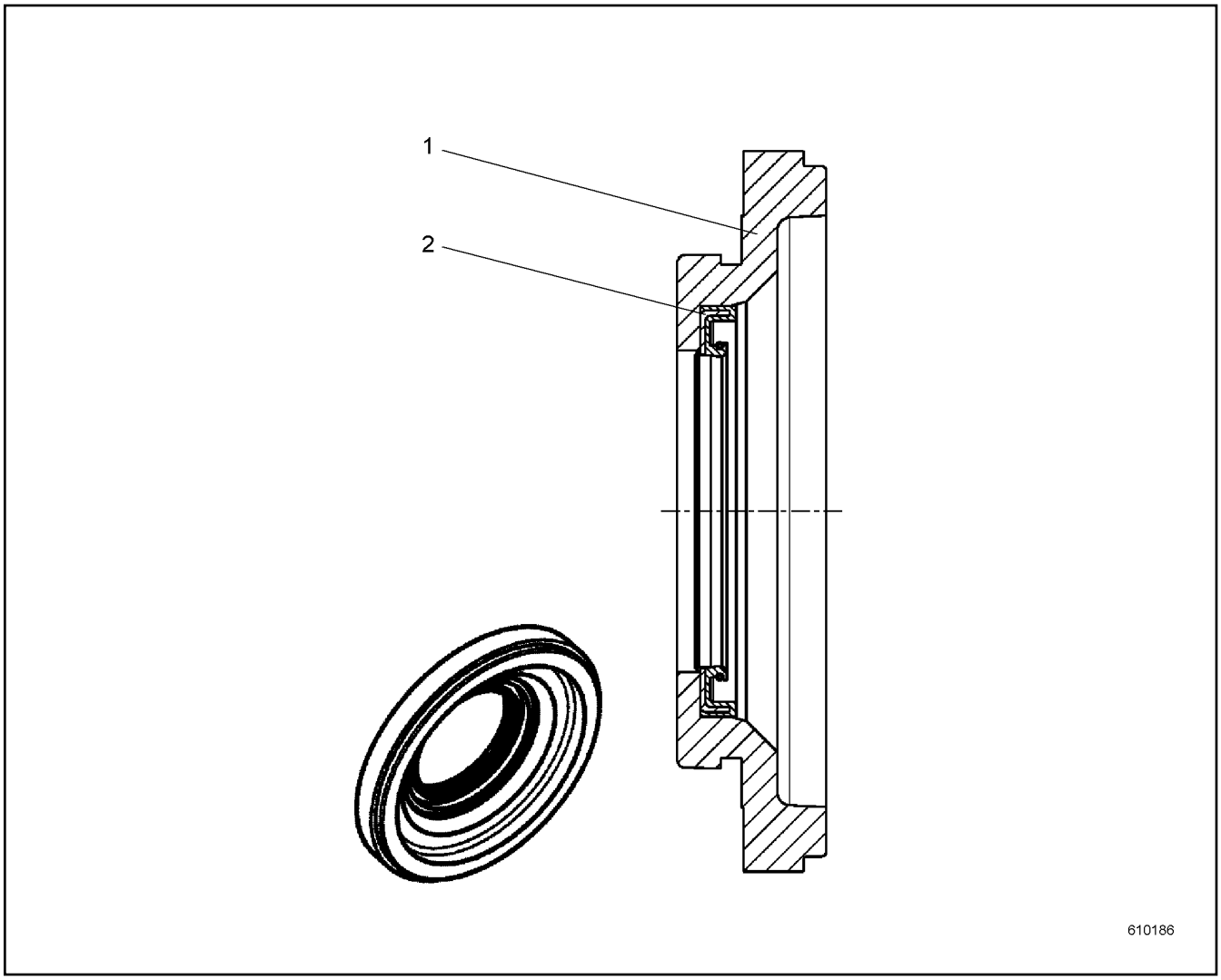

Pos.	Item	Quantity	Description	Bezeichnung	Serie	K
1	7013563	1	CLOSING RING	VERSCHLUSSRING		
2	7022315	1	SHAFT SEAL	WELLENDICHTRING		

ACHTUNG !
ATTENTION !
ATTENTION !
ATENCIÓN !
ATENÇÃO !
ВНИМАНИЕ

Für Schlauchbestellungen kann über die Schlauchnummer, in der entsprechenden Schlauchliste, die Identnummer festgestellt werden.

For ordering flexible hoses you can find the identification number through the hose-number in the corresponding hose-list.

Pour des ordres de tuyau flexible le nombre d'identification on voit dans la liste de tuyau flexible correspondente.

Para el pedido de manguera, indicar el número de identificación de la manguera de la lista respectiva.

Para se encomendar uma mangueira, consulte o número de identificaçao na respectiva lista de mangueiras.

Для оформления заказов на шланги/рукавы идент. № может быть определен при помощи номера шланга/рукава, указанного в соотетствующем перечне шлангов/рукавов.

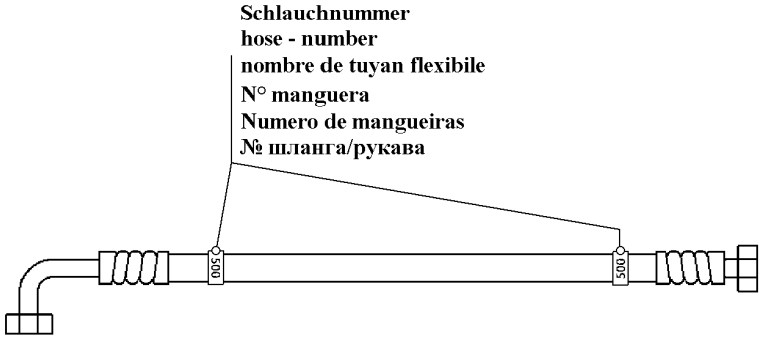

500000

Pos.	Item	Quantity	Description	Bezeichnung	Serie	K
377	996038114	1	HOSE CPL	SCHLAUCH KPL		
380	918819414	1	HOSE CPL	SCHLAUCH KPL		
381	928113314	1	HOSE CPL	SCHLAUCH KPL		
382	995082614	1	HOSE CPL	SCHLAUCH KPL		
383	996038214	1	HOSE CPL	SCHLAUCH KPL		
384	995944214	1	HOSE CPL	SCHLAUCH KPL		
387	995944314	1	HOSE CPL	SCHLAUCH KPL		
388	991384314	1	HOSE CPL	SCHLAUCH KPL		
389	992552014	1	HOSE CPL	SCHLAUCH KPL		
390	928044014	1	HOSE CPL	SCHLAUCH KPL		
391	995944414	1	HOSE CPL	SCHLAUCH KPL		
392	995951214	1	HOSE CPL	SCHLAUCH KPL		

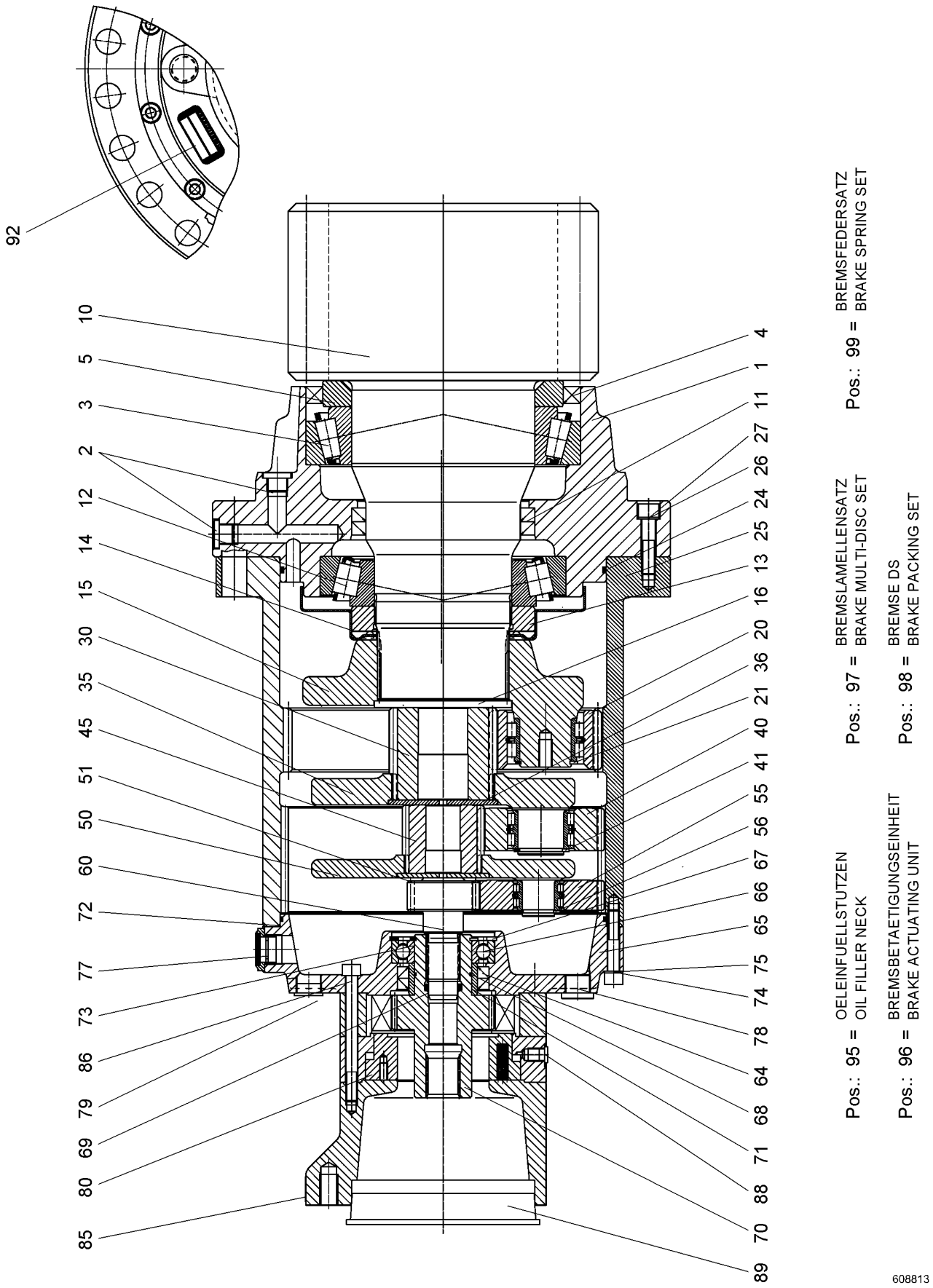
92
10
5
3
2
12
14
15
30
35
45
51
50
60
72
77
73
86
79
69
80
85
4
1
11
27
26
24
25
13
16
20
36
21
40
41
55
56
67
66
65
75
74
78
64
68
71
88
70
89
Pos.: 95 = OELEINFUELLSTUTZEN
OIL FILLER NECK
Pos.: 96 = BREMSBETAETIGUNGSEINHEIT
BRAKE ACTUATING UNIT
Pos.: 97 = BREMSLAMELLENSATZ
BRAKE MULTI-DISC SET
Pos.: 98 = BREMSE DS
BRAKE PACKING SET
Pos.: 99 = BREMSFEDERSATZ
BRAKE SPRING SET
608813

Pos.	Item	Quantity	Description	Bezeichnung	Serie	K
1	927562201	1	OUTPUT SHAFT HOUSING	ABTRIEBSWELLENGEHAEUSE		
2	477510201	4	SCREW PLUG	VERSCHLUSSSCHRAUBE		
3	746224201	1	TAPERED ROLLER BEARING	KEGELROLLENLAGER		
4	710054401	1	ROTARY SHAFT LIP SEAL	RADIALWELLENDICHTRING		
5	927562301	1	WASHER	SCHEIBE		
10	938585201	1	OUTPUT SHAFT	ABTRIEBSWELLE		
11	710058901	2	ROTARY SHAFT LIP SEAL	RADIALWELLENDICHTRING		
12	7462008	1	TAPERED ROLLER BEARING	KEGELROLLENLAGER		
13	927509501	1	SLOTTED NUT M120X2 C45	NUTMUTTER		
14	927509601	1	COVER PLATE	ABDECKBLECH		
15	90022085	1	PLANETARY CARRIER	PLANETENTRAEGER		
16	944228903	1	RETAINING DISK	HALTESCHEIBE		
20	927562601	5	PLANET WHEEL	PLANETENRAD		
21	4000870	5	LOCKING RING DIN 471 45X2.5	SICHERUNGSRING		
24	7264148	1	O-RING	O-RING		
25	927562801	1	INNER WHEEL	INNENRAD		
26	4000784	8	SOCKET HEAD SCREW ISO 4762 M12X50 10.9	ZYLINDERSCHRAUBE		
27	4900093	8	LOCK WASHER 12X13X18X2.1	SICHERUNGSSCHEIBE		
30	927562901	1	SUN WHEEL	SONNENRAD		
35	927597201	1	PLANETARY CARRIER	PLANETENTRAEGER		
36	944169103	1	RETAINING DISK	HALTESCHEIBE		
40	927596701	3	PLANET WHEEL	PLANETENRAD		
41	400208003	3	LOCKING RING DIN 471 40X2.5	SICHERUNGSRING		
45	927597301	1	SUN WHEEL	SONNENRAD		
50	927651401	1	PLANETARY CARRIER	PLANETENTRAEGER		
51	944112203	1	RETAINING DISK	HALTESCHEIBE		
55	927651501	3	PLANET WHEEL	PLANETENRAD		
56	4630001	3	LOCKING RING DIN 471 28X2	SICHERUNGSRING		
60	927651701	1	SUN WHEEL	SONNENRAD		
64	710022201	2	ROTARY SHAFT LIP SEAL	RADIALWELLENDICHTRING		
65	927563901	1	GEARBOX COVER	GETRIEBEDECKEL		
66	745141001	1	DEEP GROOVE BALL BEARING	RILLENKUGELLAGER		
67	10171632	1	LOCKING RING DIN 472 90X3	SICHERUNGSRING		
68	726435801	1	O-RING	O-RING		
69	726453901	1	O-RING	O-RING		
70	927564001	1	MULTI-DISC CARRIER	LAMELLENTRAEGER		
71	747401901	1	INNER RING	INNENRING		
72	10171585	1	LOCKING RING DIN 471 50X2	SICHERUNGSRING		
73	761032203	1	O-RING	O-RING		
74	10527561	12	SOCKET HEAD SCREW ISO 4762 M10X55 A4-7	ZYLINDERSCHRAUBE		
75	4229913	12	LOCK WASHER 10.5/16X2 VS10	SICHERUNGSSCHEIBE		
77	774322101	2	OIL LEVEL SIGHT GLASS	OELSCHAUGLAS		
78	477704514	1	FITTING	VERSCHRAUBUNG		
79	4097529	1	BLANKING PLUG	VERSCHLUSSSTOPFEN		
80	502038301	1	MULTI-DISK BRAKE ⇨ ❑ 393	LAMELLENBREMSE		
85	927564101	1	MOTOR FLANGE	MOTORFLANSCH		
86	10539513	12	SOCKET HEAD SCREW ISO 4762 M10X110 A4	ZYLINDERSCHRAUBE		
88	779016201	1	BLANKING PLUG	VERSCHLUSSSTOPFEN		
89	779006601	1	CONICAL PLUG	KEGELSTOPFEN		
92	431500401	2	GROOVED NAIL ISO 8746 2X6 ST	KERBNAGEL		
95	927693401	1	OIL FILLER NECK ⇨ ❑ 394	OELEINFUELLSTUTZEN		
96	10006595	1	BRAKE ACTUATING UNIT	BREMSBETAETIGUNGSEINHEIT		
97	939347801	1	BRAKE MULTI-DISC SET ⇨ ❑ 395	BREMSLAMELLENSATZ		
98	939347901	1	BRAKE PACKING SET ⇨ ❑ 396	BREMSE DS		
99	939348001	1	BRAKE SPRING SET	BREMSFEDERSATZ		

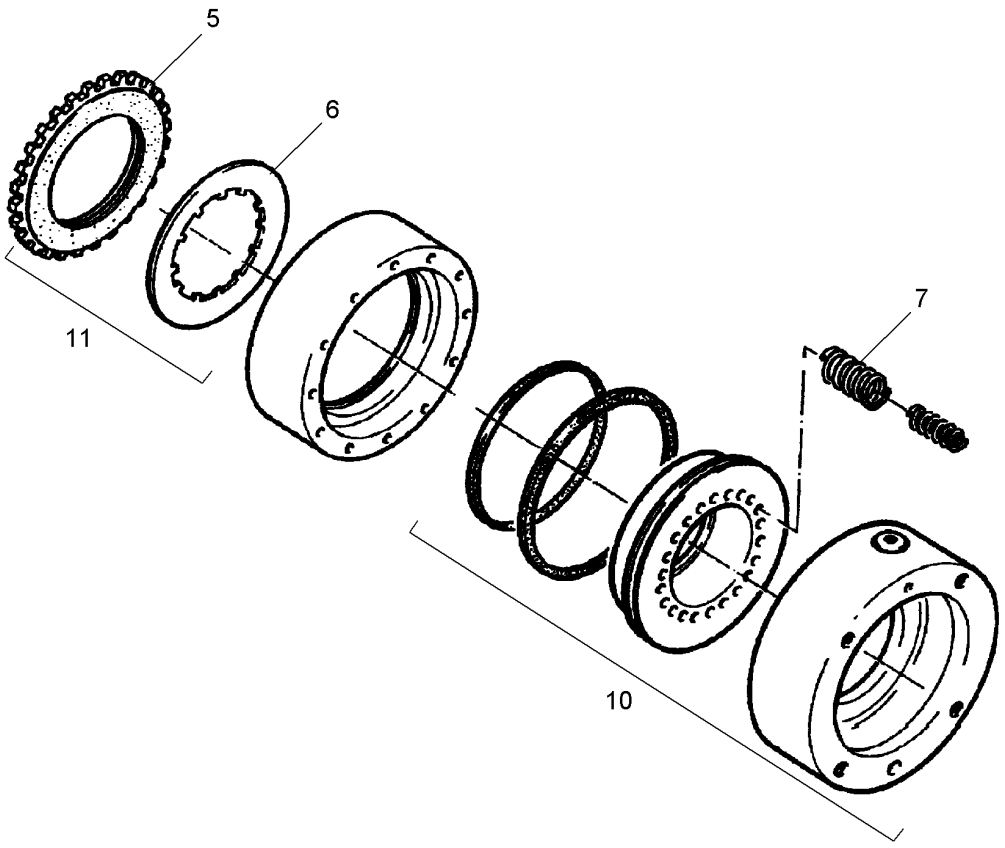

Pos.: 8 = DRUCKFEDER
PRESSURE SPRING

607903

Pos.	Item	Quantity	Description	Bezeichnung	Serie	K
5	503199301	9	OUTER MULTI-DISC	AUSSENLAMELLE		
6	540287614	7	INTERNAL MULTI-DISC	INNENLAMELLE		
7	720046001	22	PRESSURE SPRING	DRUCKFEDER		
8	720046101	12	PRESSURE SPRING	DRUCKFEDER		
10	512714614	1	SEALING SET	DS		
11	512714714	1	SEALING SET	DS		

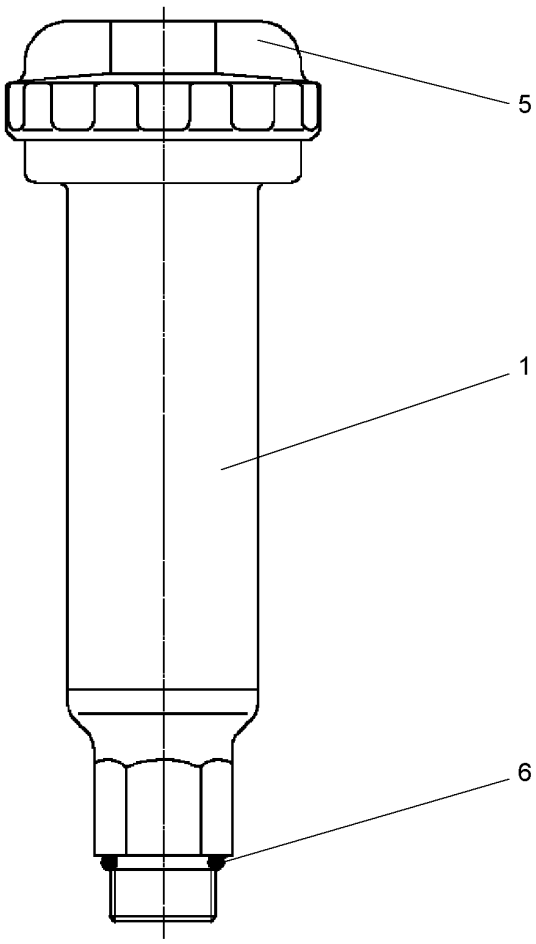

Pos.	Item	Quantity	Description	Bezeichnung	Serie	K
1	944215103	1	FILLER NECK	EINFUELLSTUTZEN		
5	7401726	1	LOCKABLE TANK CAP	TANKVERSCHLUSS		
6	7610225	1	SEALING RING	DICHTRING		

OHNE BILD
WITHOUT ILLUSTRATION
SANS PLANCHE
SIN FIG.
SEM ILUSTRAÇÃO
БЕЗ ИЗОБРАЖЕНИЯ

600000

Pos.	Item	Quantity	Description	Bezeichnung	Serie	K
4	503199301	9	OUTER MULTI-DISC	AUSSENLAMELLE		
5	503199401	7	INTERNAL MULTI-DISC	INNENLAMELLE		

OHNE BILD
WITHOUT ILLUSTRATION
SANS PLANCHE
SIN FIG.
SEM ILUSTRAÇÃO
БЕЗ ИЗОБРАЖЕНИЯ

600000

Pos.	Item	Quantity	Description	Bezeichnung	Serie	K
9	512714614	1	SEALING SET	DS		
10	512714714	1	SEALING SET	DS		

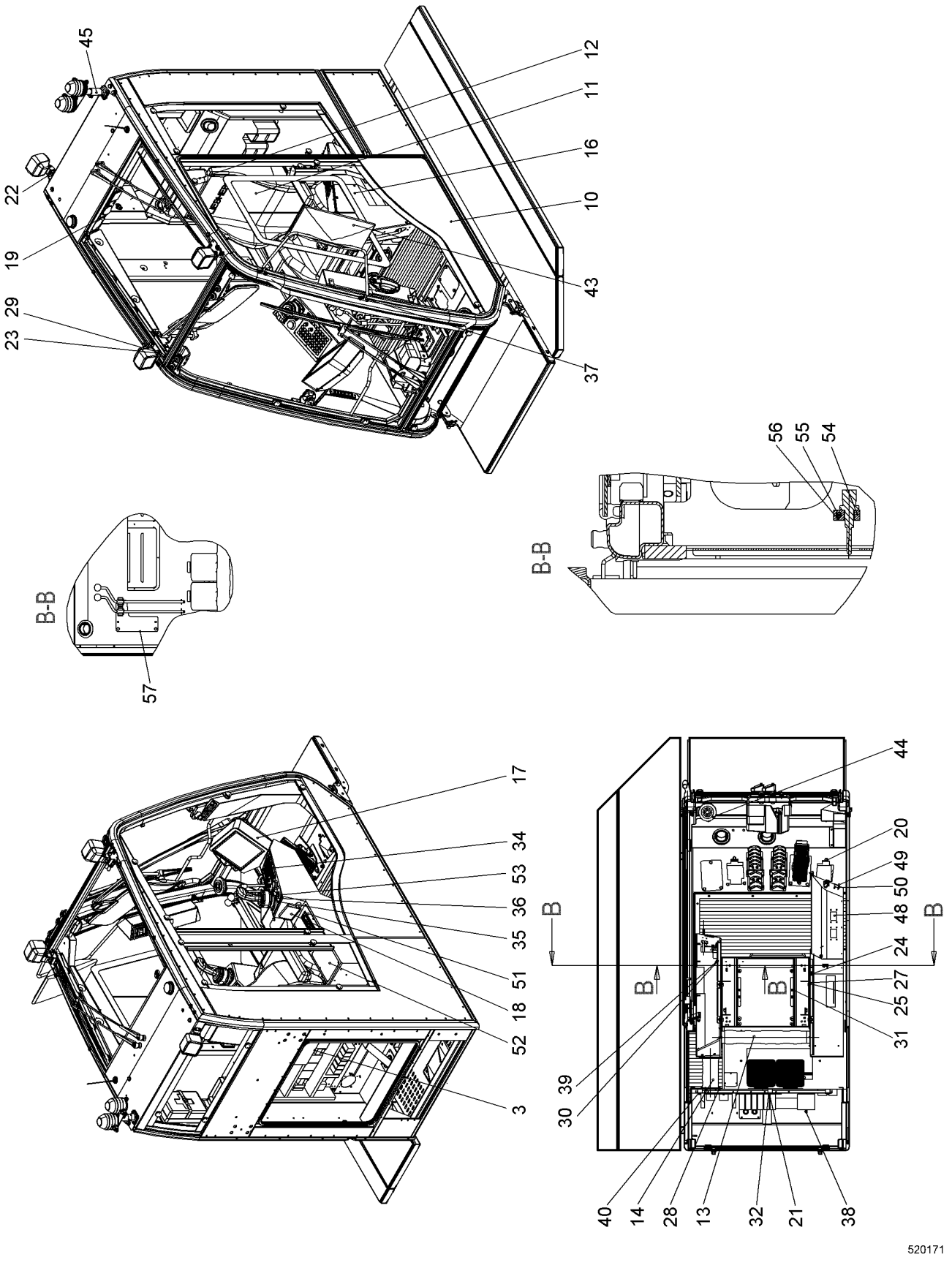

21.6.2017 520171 LIEBHERR	**138406_ETK_001** **CABIN CPL** **KABINE KPL**	❑ 397 (1/2) **11 27 970 6**

Pos.	Item	Quantity	Description	Bezeichnung	Serie	K
3	11279736	1	CABIN EL ⇨ ❑ 399	KABINE EL		
10	10350080	1	CABIN ⇨ ❑ 415	KABINE		
11	10225068	1	OPERATOR SEAT ⇨ ❑ 430	FAHRERSITZ		
12	737022103	1	HEAD REST	KOPFSTUETZE		
13	553079914	1	HOSE CPL	SCHLAUCH KPL		
14	592007514	1	HOSE CPL	SCHLAUCH KPL		
16	10223224	1	STEERING CONSOLE LEFT CPL	STEUERKONSOLE LI KPL		
17	11260956	1	STEERING CONSOLE RIGHT CPL ⇨ ❑ 433	STEUERKONSOLE RE KPL		
19	10541536	20	PAN-HEAD SCREW ISO 7045 M3X16 A2-70	FLACHKOPFSCHRAUBE		
20	420001014	18	WASHER ISO 7089 8 A4	SCHEIBE		
21	404403114	1	GRUB SCREW ISO 4026 M10X40 45H	GEWINDESTIFT		
22	406501714	5	HEX SCREW ISO 4017 M6X16 A4-70	SECHSKANTSCHRAUBE		
23	420000414	14	WASHER ISO 7089 6 A4	SCHEIBE		
24	4001967	2	COUNTERSUNK SCREW DIN 7991 M10X20 8.8	SENKSCHRAUBE		
25	406518714	14	HEX SCREW ISO 4017 M10X20 A4-70	SECHSKANTSCHRAUBE		
26	406501414	19	HEX SCREW ISO 4017 M8X25 A4-70	SECHSKANTSCHRAUBE		
27	420001114	6	WASHER ISO 7089 10 A4	SCHEIBE		
28	10541561	16	PAN-HEAD SCREW ISO 7045 M5X16 A2-70	FLACHKOPFSCHRAUBE		
29	485557714	8	HEX SCREW ISO 4017 M6X12 A4-70	SECHSKANTSCHRAUBE		
30	485550114	3	CAGE NUT M8-RR-123-47	KAEFIGMUTTER		
31	404206414	12	SOCKET HEAD SCREW ISO 4762 M8X20 A4-7	ZYLINDERSCHRAUBE		
32	411514614	1	HEX NUT ISO 4032 M10 A4-70	SECHSKANTMUTTER		
34	4002871	24	COUNTERSUNK SCREW ISO 7047 M4X20 4.8	SENKSCHRAUBE		
35	400180214	8	PAN-HEAD SCREW ISO 7045 M5X20 4.8	FLACHKOPFSCHRAUBE		
36	400180314	15	PAN-HEAD SCREW ISO 7045 M6X25 4.8	FLACHKOPFSCHRAUBE		
37	408606214	4	COUNTERSUNK SCREW DIN 7991 M8X20 A4-7	SENKSCHRAUBE		
38	411515014	4	HEX NUT ISO 4032 M8 A4-70	SECHSKANTMUTTER		
39	406501514	14	HEX SCREW ISO 4017 M8X16 A4-70	SECHSKANTSCHRAUBE		
40	10540511	8	WASHER ISO 7093-1 10 A4	SCHEIBE		
43	779002114	1	OUTSIDE MIRROR	AUSSENSPIEGEL		
44	970785703	1	SPIRIT LEVEL ASSY. ⇨ ❑ 434	LIBELLE EINBAU		
45	10537560	1	LAMP HOLDER CPL ⇨ ❑ 435	LEUCHTENHALTER KPL		
47	10540484	4	HEX NUT ISO 10511 M5 A4	SECHSKANTMUTTER		
48	10593544	2	COVER	DECKEL		
49	10593554	1	COVER	DECKEL		
50	485546514	12	HEX NUT ISO 4032 M3 A4-70	SECHSKANTMUTTER		
51	10549547	1	NAMEPLATE CONTROL PLATE	SCHILD STEUERPLATTE		
52	10549800	1	NAMEPLATE CONTROL PLATE	SCHILD STEUERPLATTE		
53	10549545	1	ADAPTOR 5X84X90 PA 6	ADAPTER		
54	10591343	1	HOLDER	HALTER		
55	10526837	1	HEX SCREW ISO 4017 M6X50 A4-70	SECHSKANTSCHRAUBE		
56	411517114	2	HEX NUT ISO 4032 M6 A4-70	SECHSKANTMUTTER		
57	11309625	1	HOLDER CPL ⇨ ❑ 436	HALTER KPL		

OHNE BILD
WITHOUT ILLUSTRATION
SANS PLANCHE
SIN FIG.
SEM ILUSTRAÇÃO
БЕЗ ИЗОБРАЖЕНИЯ

600000

Pos.	Item	Quantity	Description	Bezeichnung	Serie	K
8	10559635	1	SWITCH CABINET X1 ⇨ ❑ 401	SCHALTSCHR X1		
10	10519079	1	CONTROL STAND LEFT ⇨ ❑ 404	STEUERSTAND LI		
20	11260957	1	CONTROL STAND RIGHT ⇨ ❑ 410	STEUERSTAND RE		
31	916525114	1	CABLE DUCT CABINET 1 ⇨ ❑ 411	KABELDURCHFUEHRUNG KABIN		
41	607147008	1	INTERNAL LIGHT	INNENLEUCHTE		
42	607021714	1	LIGHT BULB	GLUEHLAMPE		
43	607023214	1	LIGHT BULB	GLUEHLAMPE		
47	6003031	6	SLEEVE CONTACT	BUCHSENKONTAKT		
49	10224272	3	HOLDER	HALTER		
50	7027205	3	WORK LIGHT ⇨ ❑ 36	ARBEITSSCHEINWERFER		
51	605264814	3	PLUG	STECKER		
52	7368242	3	CONTACT LOCK	KONTAKTVERRIEGELUNG		
53	600454314	6.5	CONTROL LEAD	STEUERLEITUNG		
54	602305914	3	FLAT PLUG HOUSING	FLACHSTECKERGEHAEUSE		
55	602203914	6	FLAT PLUG	FLACHSTECKER		
61	611052614	1	FILTER BLOWER INSTALLATION ⇨ ❑ 412	FILTERLUEFTER EINBAU		
71	10350334	2	LOUDSPEAKER	LAUTSPRECHER		
74	614027114	1	EXTENSION CABLE	VERLAENGERUNGSKABEL		
76	11645490	1	ANTENNA	ANTENNE		
81	614046114	1	HOOTER	HUPE		

OHNE BILD
WITHOUT ILLUSTRATION
SANS PLANCHE
SIN FIG.
SEM ILUSTRAÇÃO
БЕЗ ИЗОБРАЖЕНИЯ

600000

Pos.	Item	Quantity	Description	Bezeichnung	Serie	K
83	11952726	1	SOUND TRANSMITTER EL ⇨ ❑ 413	SCHALLGEBER EL		
85	10424276	1	TEMPERATURE SENSOR	TEMPERATURFUEHLER		
90	10524928	1	FLASHING LIGHT	BLITZLEUCHTE		
91	602209014	1	FLAT PLUG HOUSING	FLACHSTECKERGEHAEUSE		
92	602203914	6	FLAT PLUG	FLACHSTECKER		
93	6203137	1	BUSHING HOUSING	BUCHSENGEHAEUSE		
94	7368248	1	CONTACT LOCK	KONTAKTVERRIEGELUNG		
95	6003031	6	SLEEVE CONTACT	BUCHSENKONTAKT		
96	10542325	1	PROTECTING CAP	SCHUTZKAPPE		
97	693030914	2	CONTROL LEAD	STEUERLEITUNG		
98	10540846	1	WIRING HARNESS	KABELSTRANG		
100	10524927	1	SIGNAL LAMP	SIGNALLEUCHTE		
150	11234650	4	CABLE	KABEL		
201	10519082	1	CABLE LOOM W 19	KABELSTRANG W 19		
202	11261603	1	CABLE LOOM W 20	KABELSTRANG W 20		
203	10519084	1	WIRING HARNESS	KABELSTRANG		
204	10519085	1	CABLE LOOM W 22	KABELSTRANG W 22		
205	11912031	1	WIRING HARNESS	KABELSTRANG		
206	11259039	1	WIRING HARNESS	KABELSTRANG		
210	11223717	2	FOOT PEDAL	FUSSPEDAL		
211	11223691	1	FOOT PEDAL EL INSTALLATION ⇨ ❑ 414	FUSSPEDAL EL EINBAU		
212	11273458	2	ROD CPL	STANGE KPL		

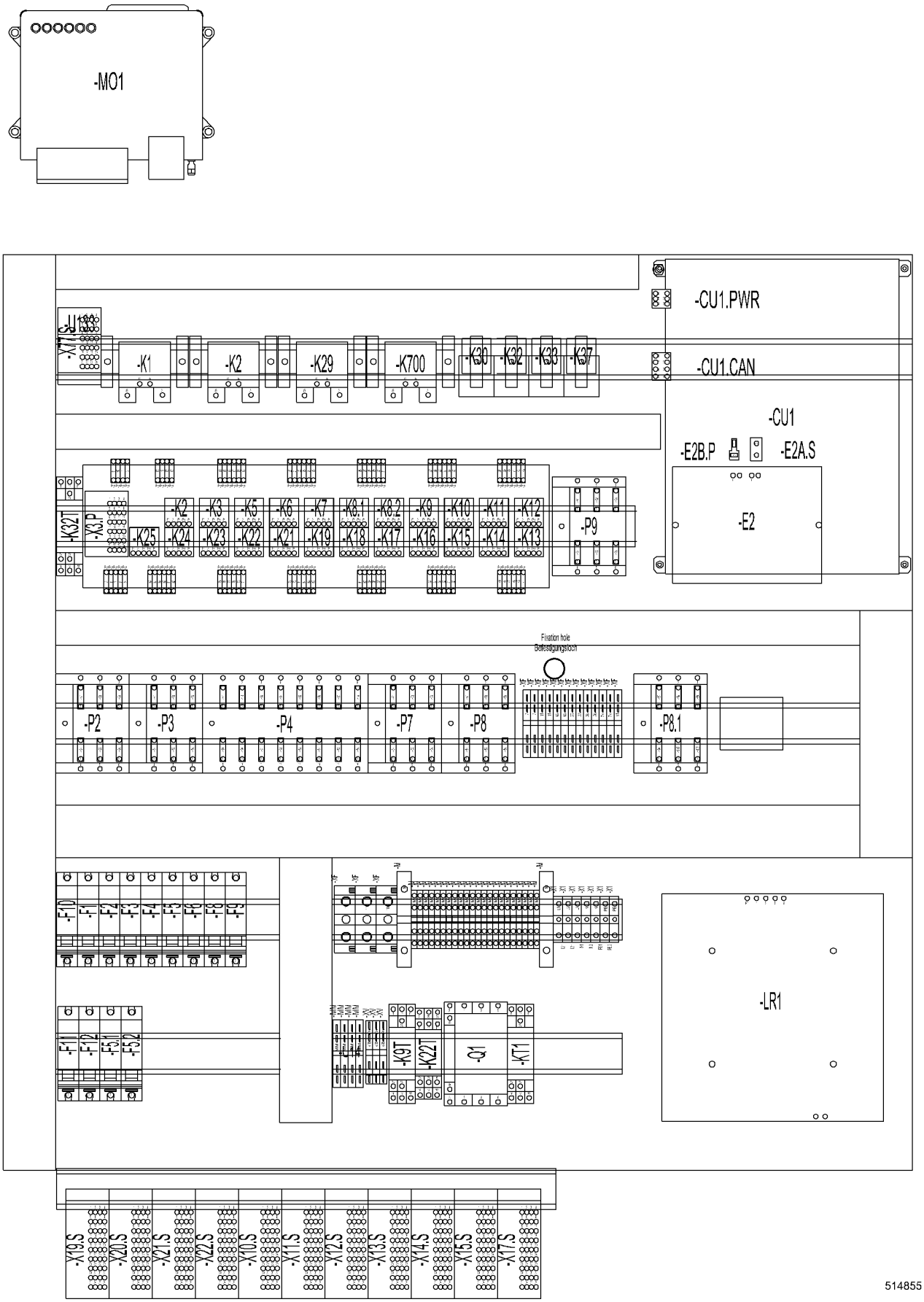
-M01
-CU1.PWR
-CU1.CAN
-CU1
-E2B.P
-E2A.S
-E2
-P9
-P2
-P3
-P4
-P7
-P8
-P8.1
Fixation hole
Befestigungsloch
-LR1
514855

Pos.	Item	Quantity	Description	Bezeichnung	Serie	K
21	10526962	1	SUBPLATE	MONTAGEPLATTE		
25	10559638	1	CABLE LOOM W 10	KABELSTRANG W 10		
31	10223180	1	CONTROL SYSTEM	STEUERRECHNER		
32	10541109	1	DATA CARD CF2	DATEN KARTE CF2		
41	607147008	1	INTERNAL LIGHT	INNENLEUCHTE		
42	607021714	1	LIGHT BULB	GLUEHLAMPE		
43	607023214	1	LIGHT BULB	GLUEHLAMPE		
51	917585714	1	PC-BOARD PLATE 1	STECKKARTE PLATINE 1		
56	992081114	1	RESERVE FUSES ⇨ ❑ 403	RESERVESICHERUNGEN		
57	10529597	1	BUSBAR	SAMMELSCHIENE		
58	11219647	1	BUSBAR	SAMMELSCHIENE		
59	10351108	2	CONTACT GUARD	BERUEHRUNGSSCHUTZ		
60	10351101	1	CABLE PROTECTION SWITCH	LEITUNGSSCHUTZSCHALTER		
61	10351102	3	CABLE PROTECTION SWITCH	LEITUNGSSCHUTZSCHALTER		
62	10351103	1	CABLE PROTECTION SWITCH	LEITUNGSSCHUTZSCHALTER		
63	10351104	2	CABLE PROTECTION SWITCH	LEITUNGSSCHUTZSCHALTER		
64	10351105	1	CABLE PROTECTION SWITCH	LEITUNGSSCHUTZSCHALTER		
65	10351106	3	CABLE PROTECTION SWITCH	LEITUNGSSCHUTZSCHALTER		
68	604105314	5	FLAT FUSE LINK	FLACHSICHERUNGSEINSATZ		
69	604105514	41	FLAT FUSE LINK	FLACHSICHERUNGSEINSATZ		
70	604105614	6	FLAT FUSE LINK	FLACHSICHERUNGSEINSATZ		
71	693181114	3	SERIES TERMINAL	REIHENKLEMME		
72	602832314	1	PARTITION	TRENNWAND		
73	693138614	1	CROSS CONNECTOR	QUERVERBINDER		
74	602153814	13	SERIES TERMINAL	REIHENKLEMME		
75	10550739	22	SERIES TERMINAL	REIHENKLEMME		
78	693182314	2	CLOSING PLATE	ABSCHLUSSPLATTE		
79	10227563	2	INSULATING ELEMENT	ISOLIERSTUECK		
80	602153814	4	SERIES TERMINAL	REIHENKLEMME		
81	630120108	4	CUTOFF RELAY	TRENNRELAIS		
83	630121508	1	CENTER-ZERO RELAY	WECHSLERRELAIS		
84	630122908	1	RELAY SOCKET	RELAIS STECKSOCKEL		
85	630170014	1	TIME RELAY	ZEITRELAIS		
86	602151914	4	SERIES TERMINAL	REIHENKLEMME		
87	602812714	1	CLOSING PLATE	ABSCHLUSSPLATTE		
88	602812414	1	CROSS CONNECTOR	QUERVERBINDER		
91	693183914	1	VOLTAGE TRANSFORMER	SPANNUNGSWANDLER		
92	602208714	1	FLAT PLUG HOUSING	FLACHSTECKERGEHAEUSE		
93	602209714	1	ATTACHABLE SLEEVE HOUSING	STECKHUELSENGEHAEUSE		
201	605253314	11	PLUG	STECKER		
203	605254214	11	PLUG	STECKER		
211	605253414	1	PLUG	STECKER		
213	605254114	1	PLUG	STECKER		

OHNE BILD
WITHOUT ILLUSTRATION
SANS PLANCHE
SIN FIG.
SEM ILUSTRAÇÃO
БЕЗ ИЗОБРАЖЕНИЯ

600000

Pos.	Item	Quantity	Description	Bezeichnung	Serie	K
2	10227556	1	FUSE ASSAYER	SICHERUNGSPRUEFER		
5	604105314	5	FLAT FUSE LINK	FLACHSICHERUNGSEINSATZ		
7	604105414	5	FLAT FUSE LINK	FLACHSICHERUNGSEINSATZ		
10	604105514	10	FLAT FUSE LINK	FLACHSICHERUNGSEINSATZ		
15	604105614	5	FLAT FUSE LINK	FLACHSICHERUNGSEINSATZ		
21	10224306	2	FUSE CARTRIDGE	SICHERUNGSEINSATZ		
22	10224307	2	FUSE CARTRIDGE	SICHERUNGSEINSATZ		

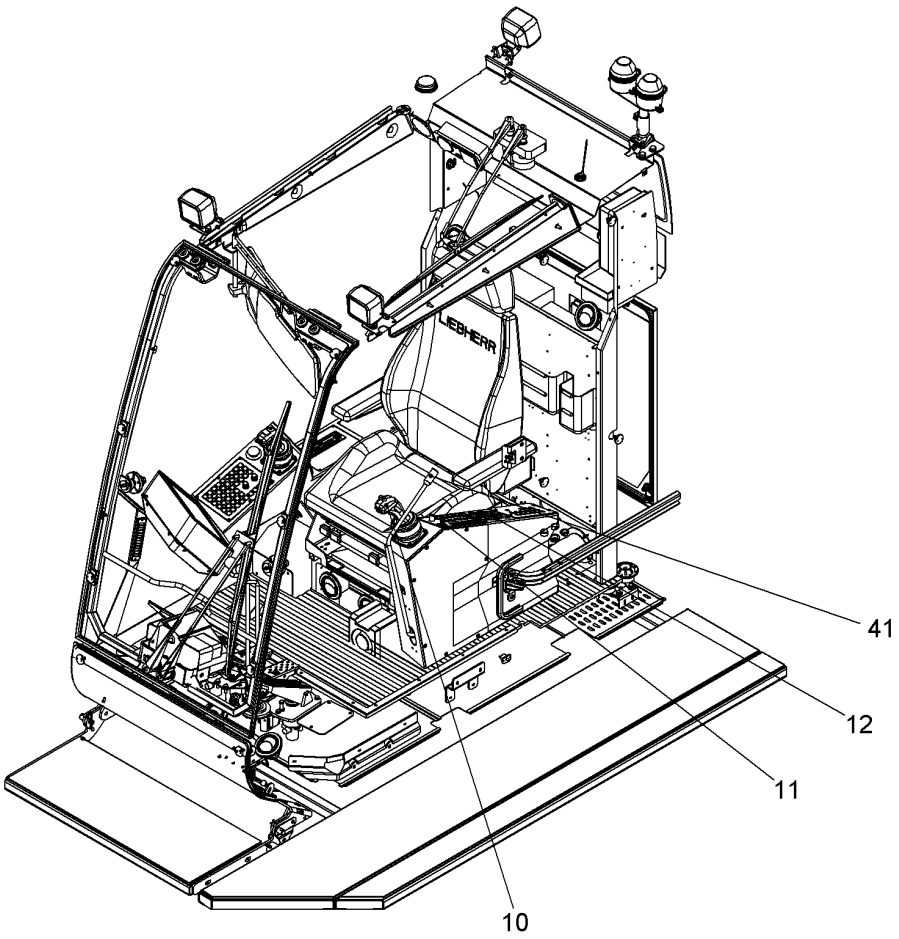

Pos.	Item	Quantity	Description	Bezeichnung	Serie	K
10	11214818	1	MASTER SWITCH ⇨ ❑ 405	MEISTERSCHALTER		
11	10036107	1	KEYBOARD OPERATING PANEL CPL ⇨ ❑ 406	TASTATUR BEDIENPULT X11 KP		
12	10531718	1	KEYBOARD ⇨ ❑ 407	TASTATUR		
31	10599206	1	OPERATING HOURS COUNTER	BETRIEBSSTUNDENZAEHLER		
32	10599215	1	ADAPTER FRAME	ADAPTERRAHMEN		
41	693168514	1	SAFETY LEVER CPL ⇨ ❑ 409	SICHERHEITSHEBEL KPL		

OHNE BILD
WITHOUT ILLUSTRATION
SANS PLANCHE
SIN FIG.
SEM ILUSTRAÇÃO
БЕЗ ИЗОБРАЖЕНИЯ

600000

Pos.	Item	Quantity	Description	Bezeichnung	Serie	K
1	606272314	1	RUBBER BELLOWS	FALTENBALG		

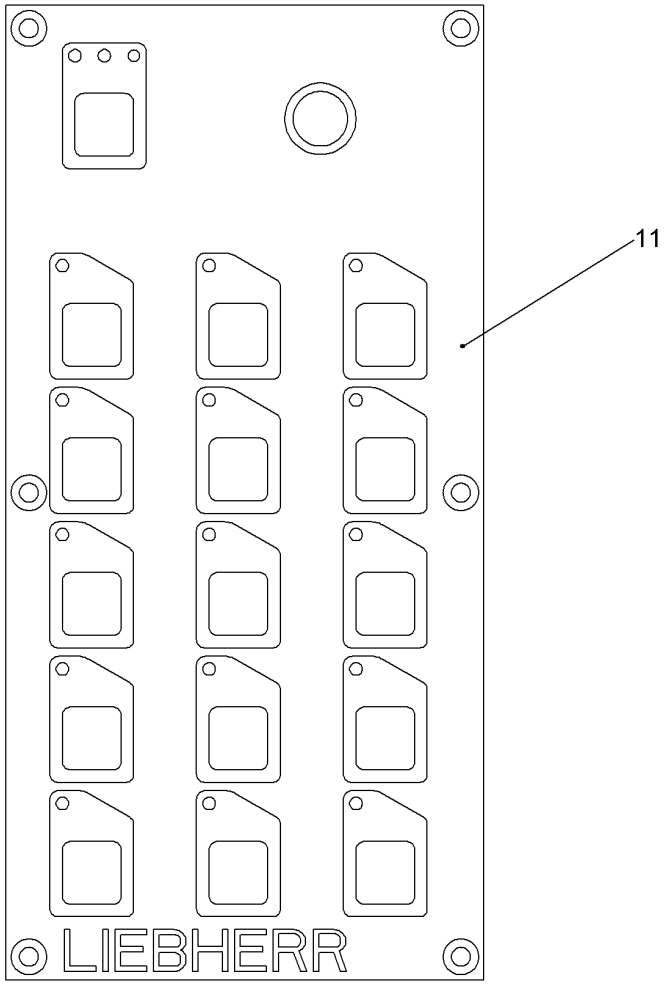

Pos.	Item	Quantity	Description	Bezeichnung	Serie	K
11	612436814	1	CONTROL AREA	BEDIENFELD		
80	10687925	1	TURNING KNOB	DREHKNOPF		
81	10687926	1	WASHER	SCHEIBE		
82	10687924	1	COVER	DECKEL		

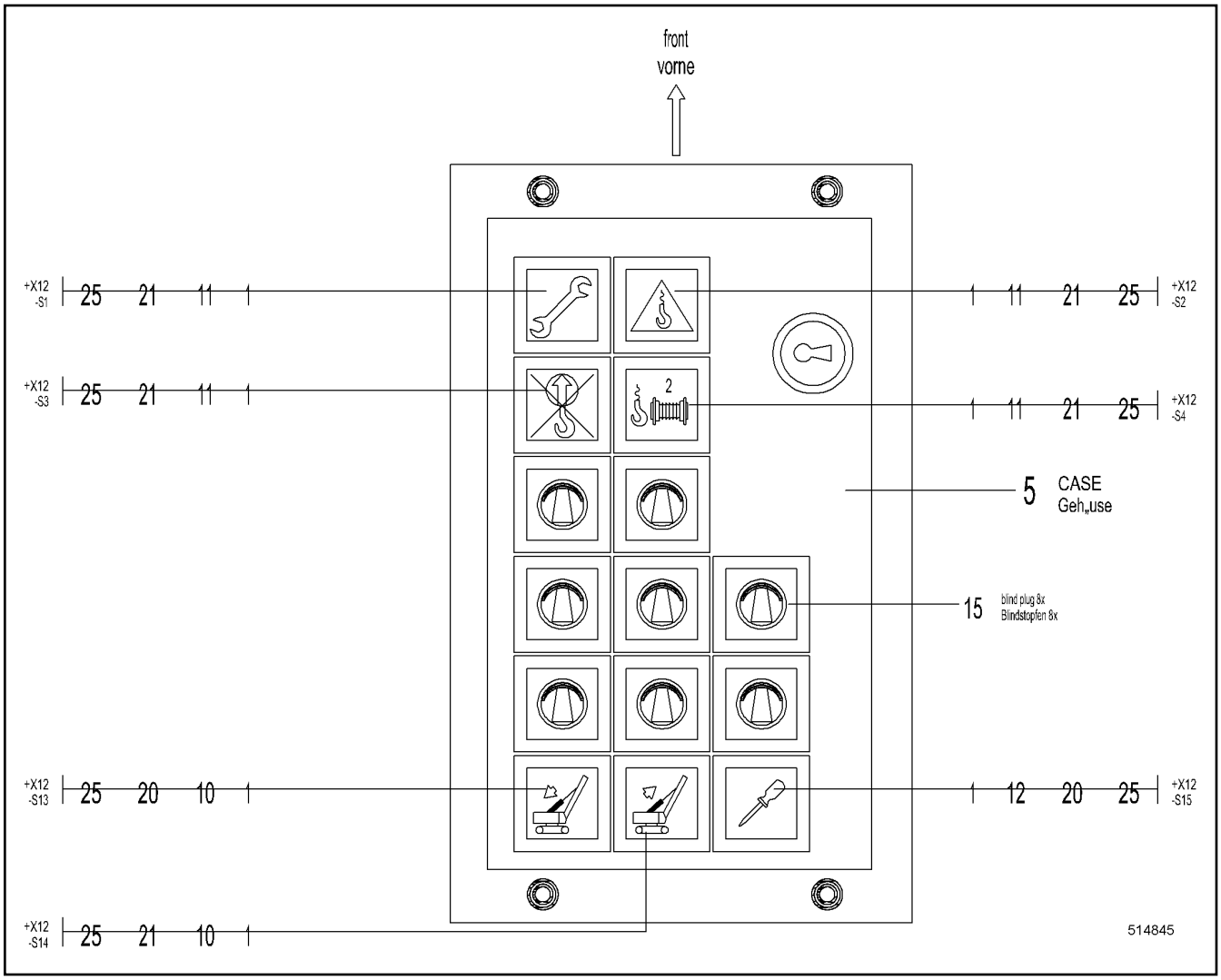

Pos.	Item	Quantity	Description	Bezeichnung	Serie	K
5	385094414	1	SWITCHING HOUSING ⇨ ❑ 408	SCHALTERGEHAEUSE		
10	606672114	2	ILLUMINATED BUTTON	LEUCHTTASTER		
11	606674714	4	ILLUMINATED BUTTON	LEUCHTTASTER		
12	606667814	1	ILLUMINATED BUTTON	LEUCHTTASTER		
15	602458214	8	STOPPER PLUG	BLINDSTOPFEN		
20	6204372	2	LUMINOUS PUSH BUTTON CONTACTOR	LEUCHTTASTKONTAKTGEBER		
21	6001593	5	LUMINOUS SWITCH CONTACT SENDER	LEUCHTSCHALTKONTAKTGEBE		
25	260514602	7	LED LAMP	LED-LAMPE		
30	400180214	4	PAN-HEAD SCREW ISO 7045 M5X20 4.8	FLACHKOPFSCHRAUBE		

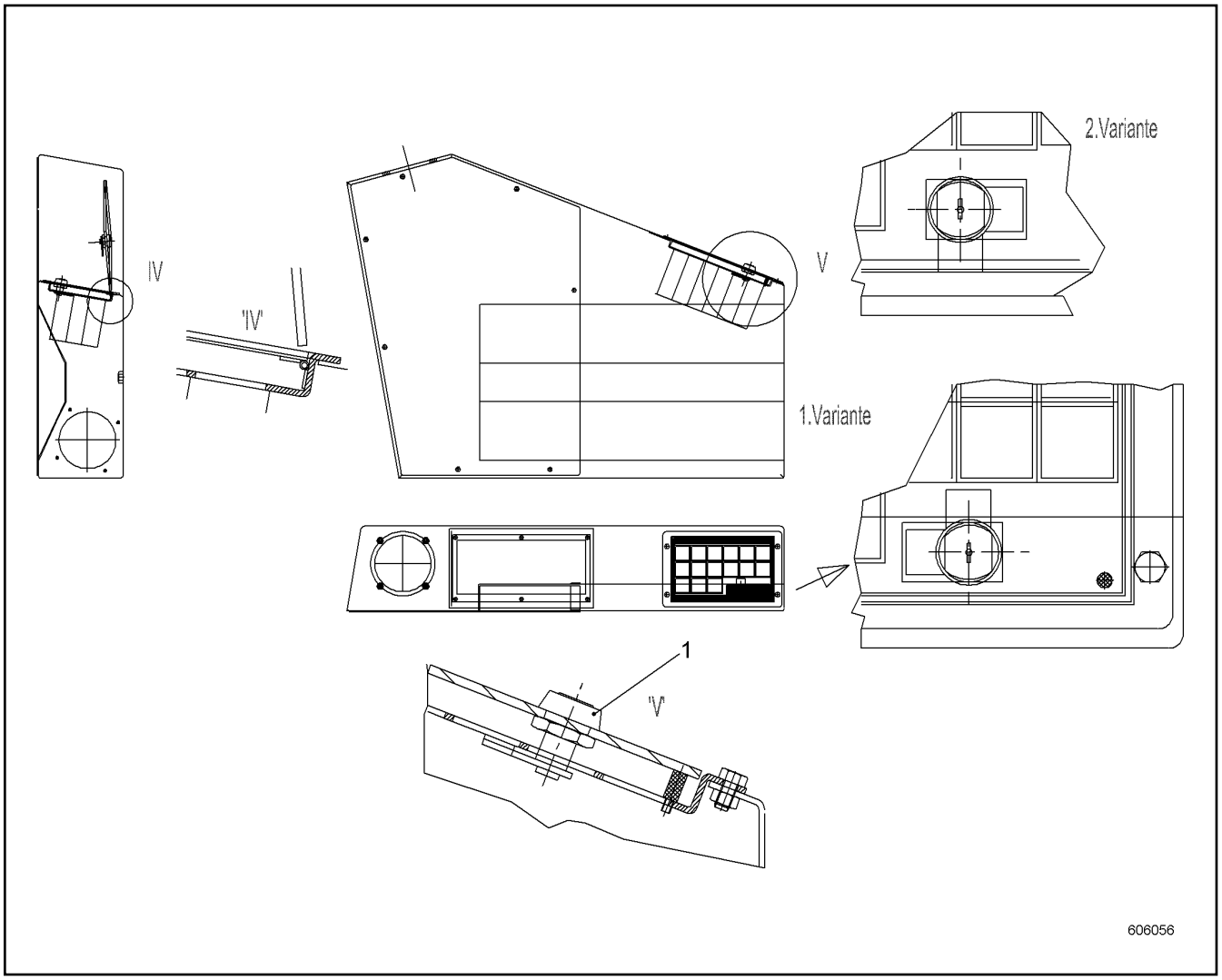

Pos.	Item	Quantity	Description	Bezeichnung	Serie	K
1	10542435	1	CYL LOCK	ZYL VERSCHLUSS		

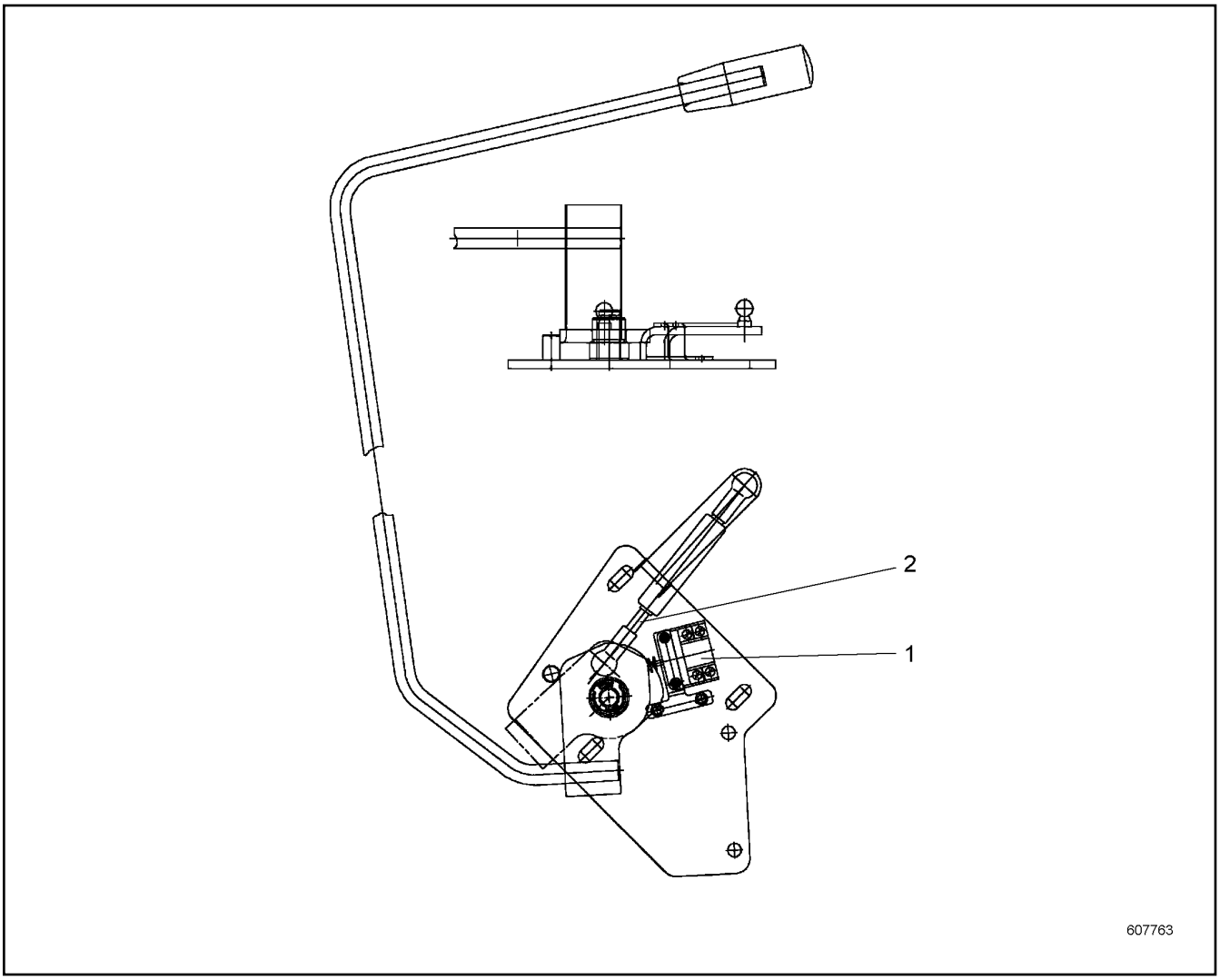

Pos.	Item	Quantity	Description	Bezeichnung	Serie	K
1	10445976	1	SWITCH	SCHALTER		
2	10800103	1	GAS OPERATED SPRING	GASDRUCKFEDER		

OHNE BILD
WITHOUT ILLUSTRATION
SANS PLANCHE
SIN FIG.
SEM ILUSTRAÇÃO
БЕЗ ИЗОБРАЖЕНИЯ

600000

Pos.	Item	Quantity	Description	Bezeichnung	Serie	K
23	10677274	1	CAN MODULE	CAN MODUL		
24	11260077	1	MONITOR LCD CPL	MONITOR LCD KPL		
31	740732003	1	IGNITION STARTER SWITCH	ZUENDSTARTSCHALTER		
32	10663904	1	ANTITHEFT LOCK	WEGFAHRSPERRE		
33	693073014	1	EMERGENCY STOP BUTTON	NOT-AUS TASTER		
35	606718408	1	EMERGENCY STOP SIGN	SCHILD NOT-AUS		
50	10663954	2	KEY	SCHLUESSEL		

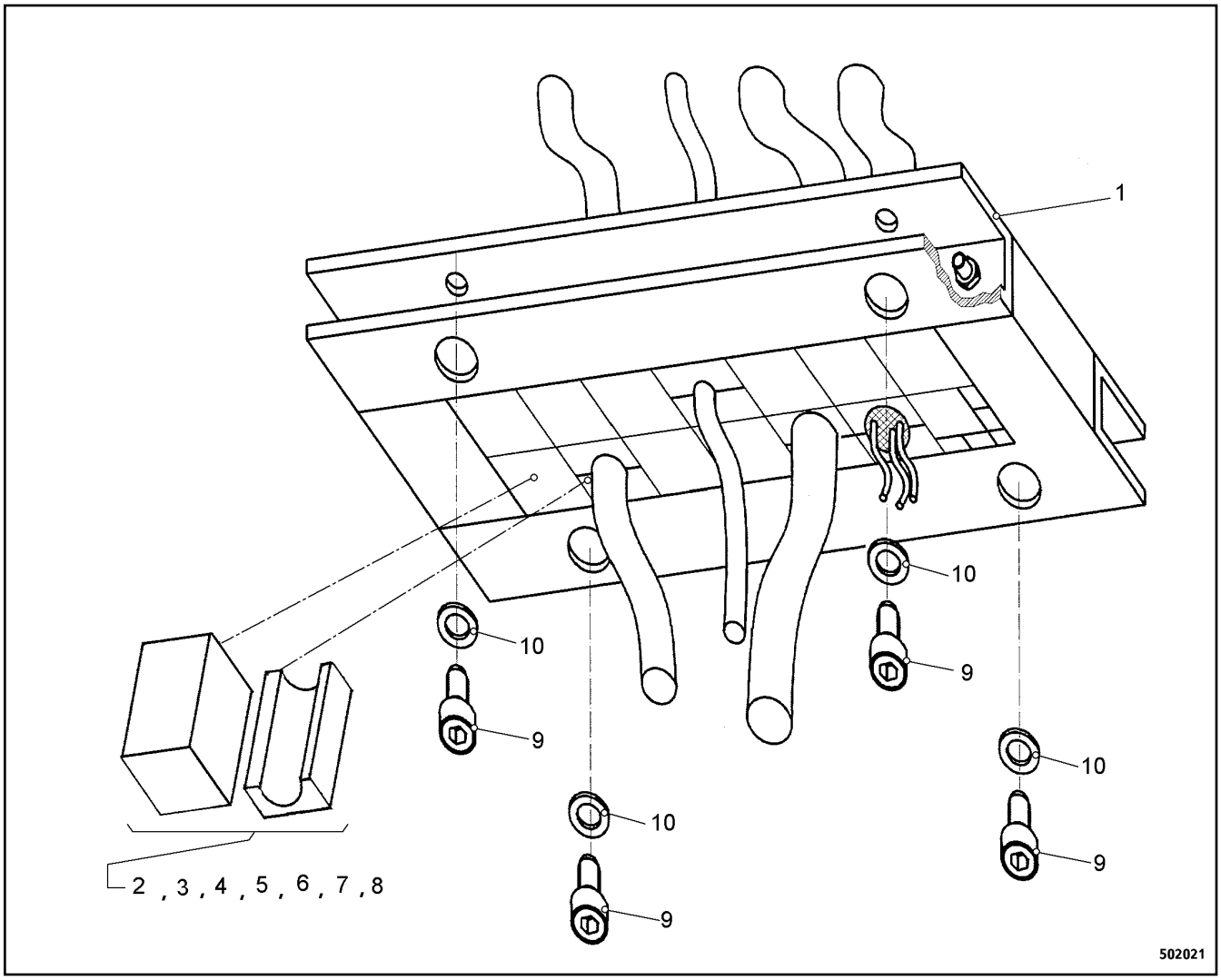

Pos.	Item	Quantity	Description	Bezeichnung	Serie	K
1	602481914	1	FRAME	RAHMEN		
2	602454614	2	SEALING MODULE	DICHTUNGSMODUL		
3	602457014	2	SEALING MODULE	DICHTUNGSMODUL		
4	602454714	2	SEALING MODULE	DICHTUNGSMODUL		
5	602453214	2	SEALING MODULE	DICHTUNGSMODUL		
6	602457114	2	SEALING MODULE	DICHTUNGSMODUL		
7	602457214	2	SEALING MODULE	DICHTUNGSMODUL		
8	602453914	2	SEALING MODULE	DICHTUNGSMODUL		
9	10539483	4	SOCKET HEAD SCREW ISO 4762 M8X16 A4-7	ZYLINDERSCHRAUBE		
10	10447017	4	LOCKING RING 8	SICHERUNGSRING		

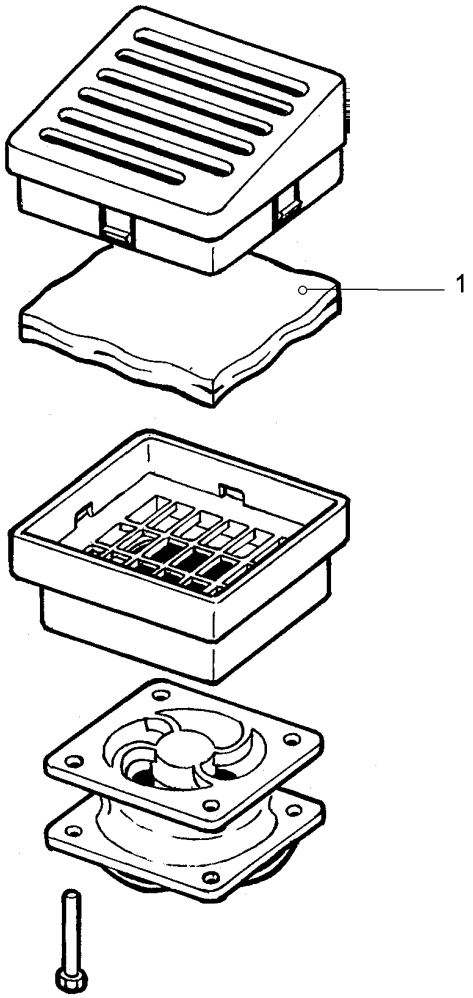

Pos.	Item	Quantity	Description	Bezeichnung	Serie	K
1	611124514	1	FILTER MAT	FILTERMATTE		

OHNE BILD
WITHOUT ILLUSTRATION
SANS PLANCHE
SIN FIG.
SEM ILUSTRAÇÃO
БЕЗ ИЗОБРАЖЕНИЯ

600000

Pos.	Item	Quantity	Description	Bezeichnung	Serie	K
10	11933792	1	SOUNDER	SCHALLGEBER		
11	692406008	1	TERMINAL HOUSING	ENDGEHAEUSE		
12	692406008	1	TERMINAL HOUSING	ENDGEHAEUSE		
13	602339508	3	SLEEVE CONTACT	BUCHSENKONTAKT		
14	605620008	3	SINGLE STRAND SEALING	EINZELADERABDICHTUNG		
15	692405708	4	STOPPER PLUG	BLINDSTOPFEN		

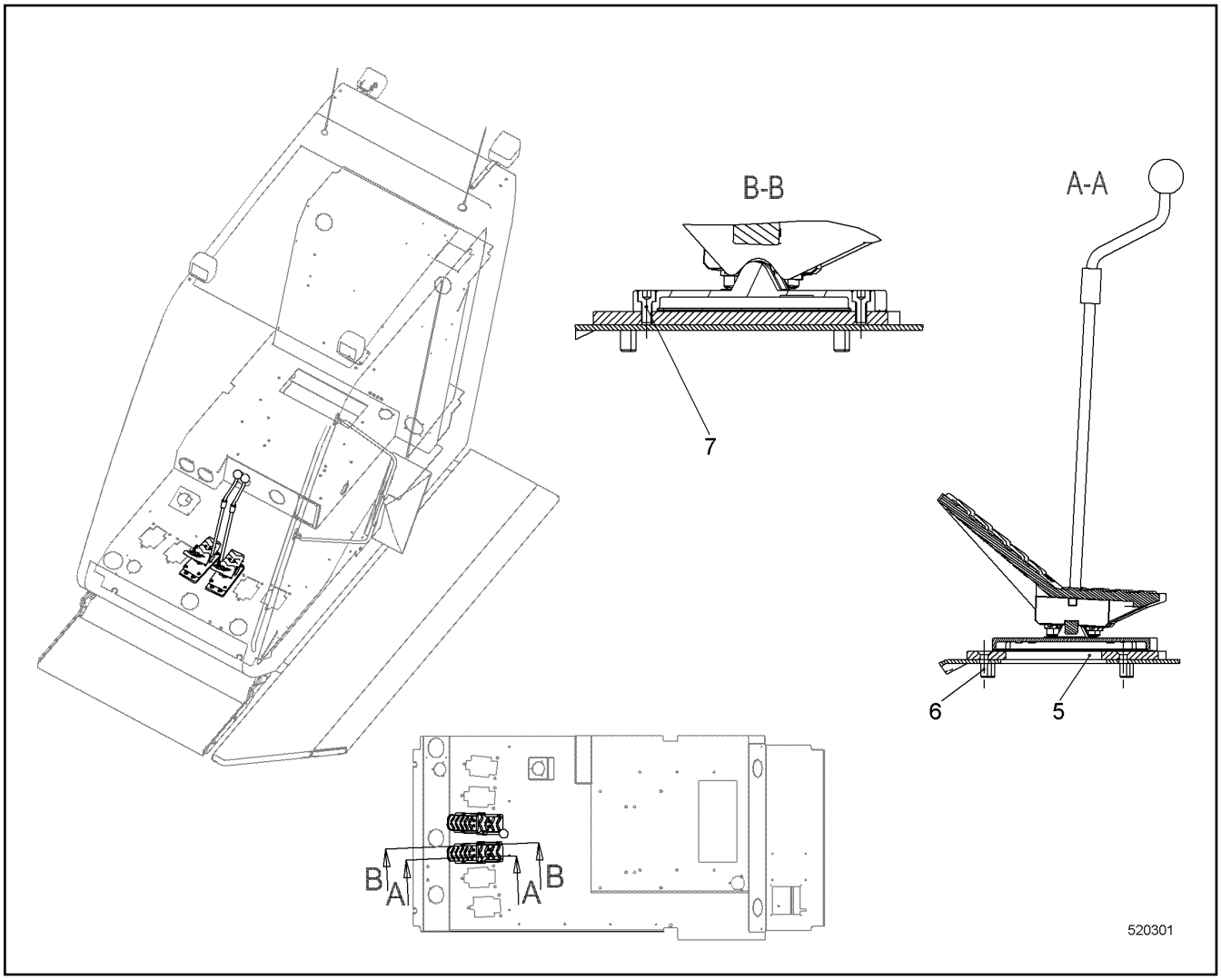

Pos.	Item	Quantity	Description	Bezeichnung	Serie	K
5	11223693	2	ADAPTER PLATE	ADAPTERBLECH		
6	408600708	8	COUNTERSUNK SCREW ISO 10642 M8X30 8.8	SENKSCHRAUBE		
7	408301208	8	SOCKET HEAD SCREW DIN 7984 M8X16 08.8	ZYLINDERSCHRAUBE		

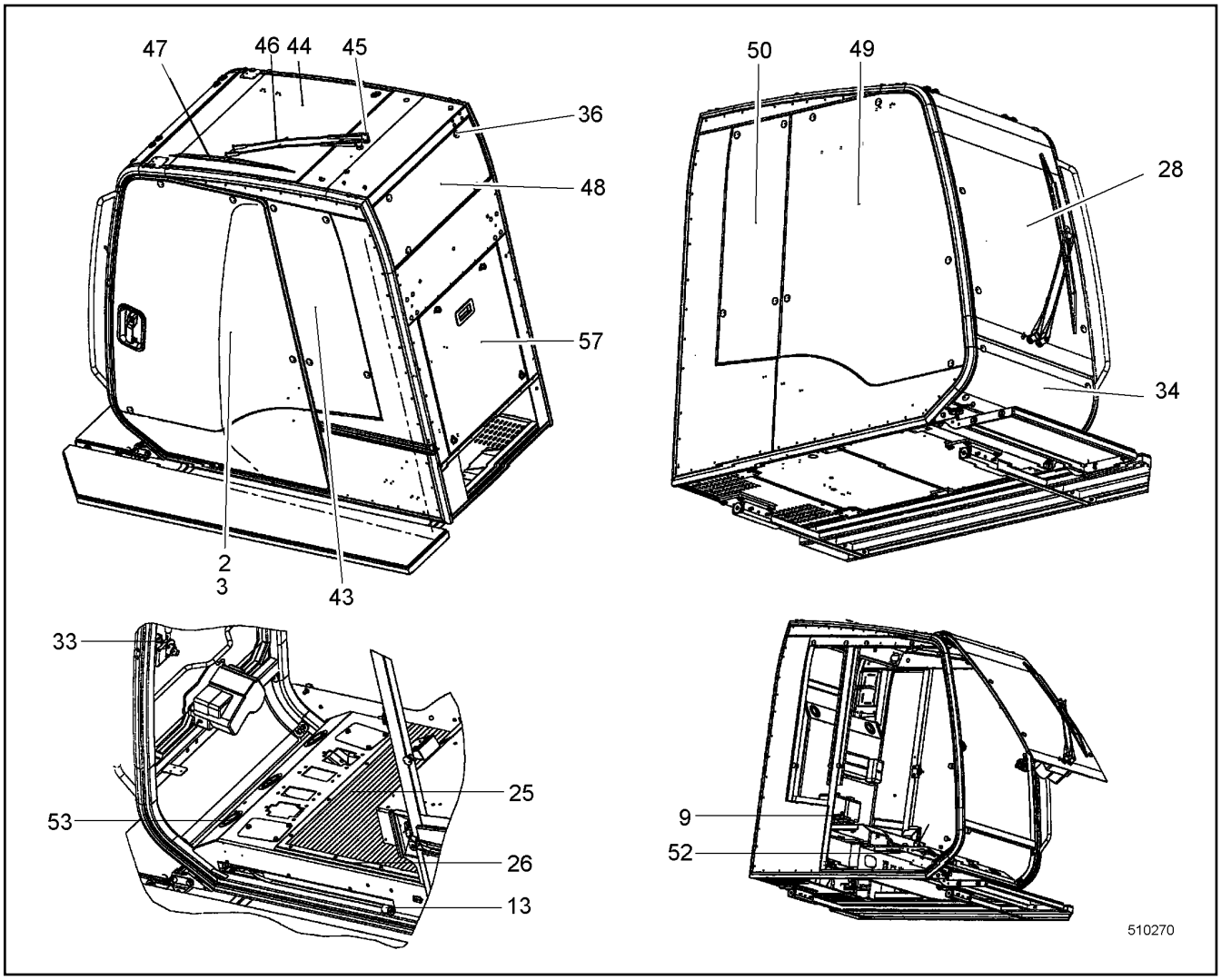

Pos.	Item	Quantity	Description	Bezeichnung	Serie	K
2	10226454	1	DOOR ACCESSORIES ⇨ ❑ 417	TUERE ZUBEHOEHR		
3	10350076	1	SLIDING DOOR ⇨ ❑ 419	SCHIEBETUER		
9	592286714	2	CONTAINER	BEHAELTER		
13	592286814	1	BUFFER	PUFFER		
25	592286914	1	FLOOR MAT	BODENMATTE		
26	592287014	1	STRIP	LEISTE		
28	592287114	1	FRONT WINDOW CPL ⇨ ❑ 422	FRONTSCHEIBE KPL		
33	592288314	1	BALL PIVOT	KUGELZAPFEN		
34	592288414	1	FRONT WINDOW CPL	FRONTSCHEIBE KPL		
36	592286514	1	FITTING	VERSCHRAUBUNG		
43	592288514	1	SIDE PANE LEFT	SEITENSCHEIBE LI		
44	592288614	1	ROOF WINDOW	DACHSCHEIBE		
45	592288714	1	WIPER MOTOR	WISCHERMOTOR		
46	592288814	1	WIPER ARM	WISCHARM		
47	592288914	1	WIPER BLADE	WISCHERBLATT		
48	592289014	1	REAR WINDOW	HECKSCHEIBE		
49	592289114	1	SIDE PANE RIGHT	SEITENSCHEIBE RE		
50	592289214	1	SIDE PANE RIGHT	SEITENSCHEIBE RE		
52	592289314	1	AIR NOZZLE	LUFTDUESE		
53	592289414	1	NOZZLE HOLDER	DUESENHALTER		
57	592289514	1	FLAP CPL ⇨ ❑ 423	KLAPPE KPL		

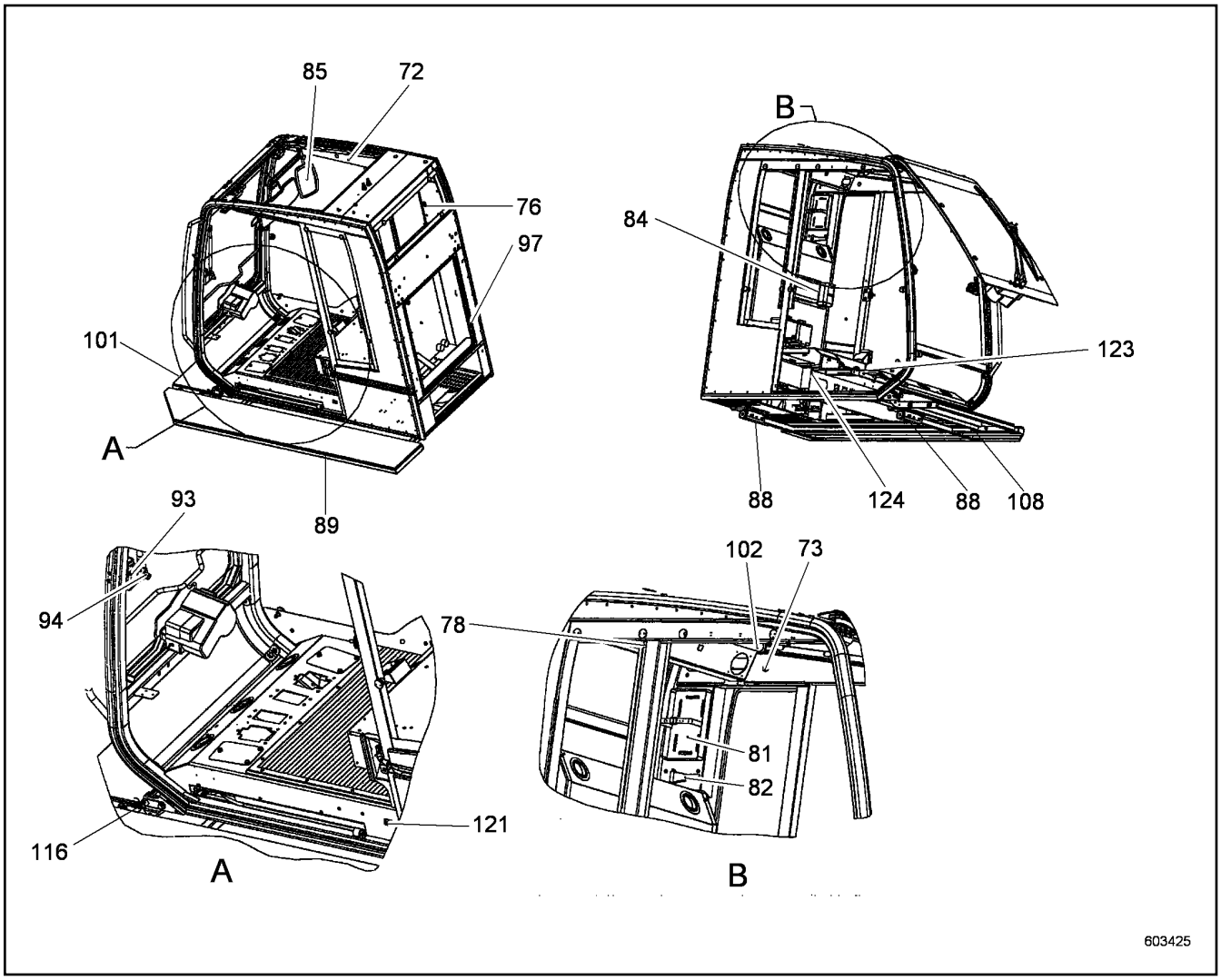

Pos.	Item	Quantity	Description	Bezeichnung	Serie	K
72	592289814	1	PANELLING RIGHT	VERKLEIDUNG RE		
73	592289914	1	MUSHROOM BUTTON	PILZKNOPF		
76	592290014	1	COAT HOOK	GARDEROBEHAKEN		
78	592290114	1	COVERS	VERKLEIDUNG		
81	592290214	1	HOLDER	HALTER		
82	592290314	1	HOLDER	HALTER		
84	592290414	1	HOLDER	HALTER		
85	592290514	1	MIRROR + SUNN VISOR ⇨ ❑ 424	SPIEGEL + SONNENBLENDE		
88	10512821	2	GUIDE	FUEHRUNG		
89	10512061	1	PEDESTAL	PODEST		
94	592291014	1	SNIB	FESTSTELLER		
97	592291114	1	PROFILE	PROFIL		
101	10512048	1	PEDESTAL	PODEST		
102	592291214	1	SUNSHADE	SONNENROLLO		
108	592291314	1	LIMIT STOP BUFFER	ANSCHLAGPUFFER		
116	592291414	1	PLATFORM FIXATION CPL ⇨ ❑ 425	PODESTSICHERUNG KPL		
121	592291814	1	SWITCH	SCHALTER		
123	592291914	1	OPERATIONAL CONTROL	BEDIENELEMENT		
124	11940910	1	AIR CONDITIONER RFK ⇨ ❑ 426	KLIMAGERAET NRS		

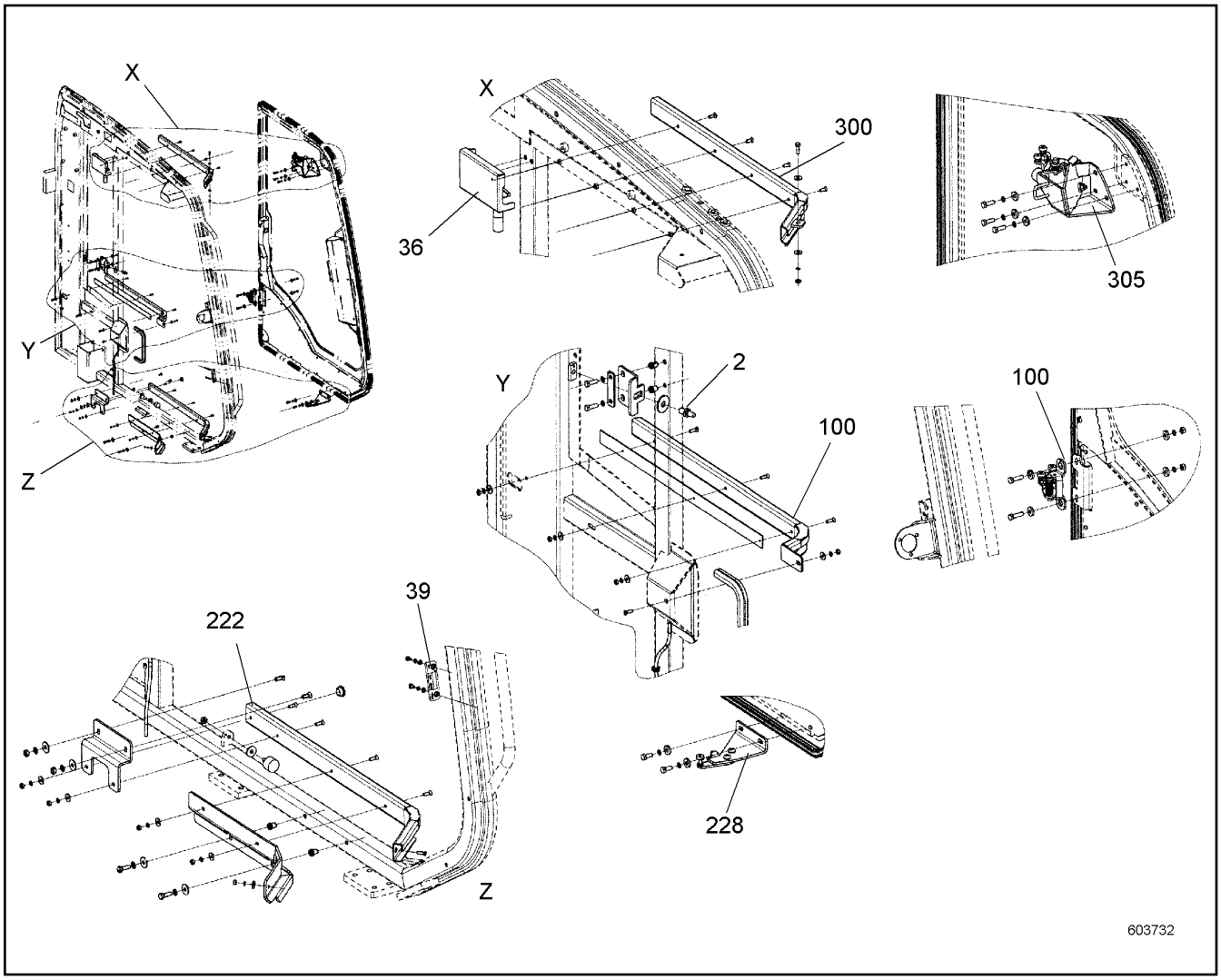

Pos.	Item	Quantity	Description	Bezeichnung	Serie	K
2	7615720	1	CLOSING PIN	SCHLIESSBOLZEN		
36	10572075	1	LOCKING	VERRIEGELUNG		
39	10447259	1	SHEET	PLATTE		
100	959576314	1	GUIDE CPL ⇨ ❑ 418	FUEHRUNG KPL		
222	10226459	1	GUIDING RAIL	FUEHRUNGSSCHIENE		
228	10226461	1	GUIDING BRACKET BELOW	FUEHRUNGSKONSOLE UNTEN		
300	10226462	1	GUIDING RAIL	FUEHRUNGSSCHIENE		
305	10226463	1	GUIDING BRACKET ABOVE	FUEHRUNGSKONSOLE OBEN		

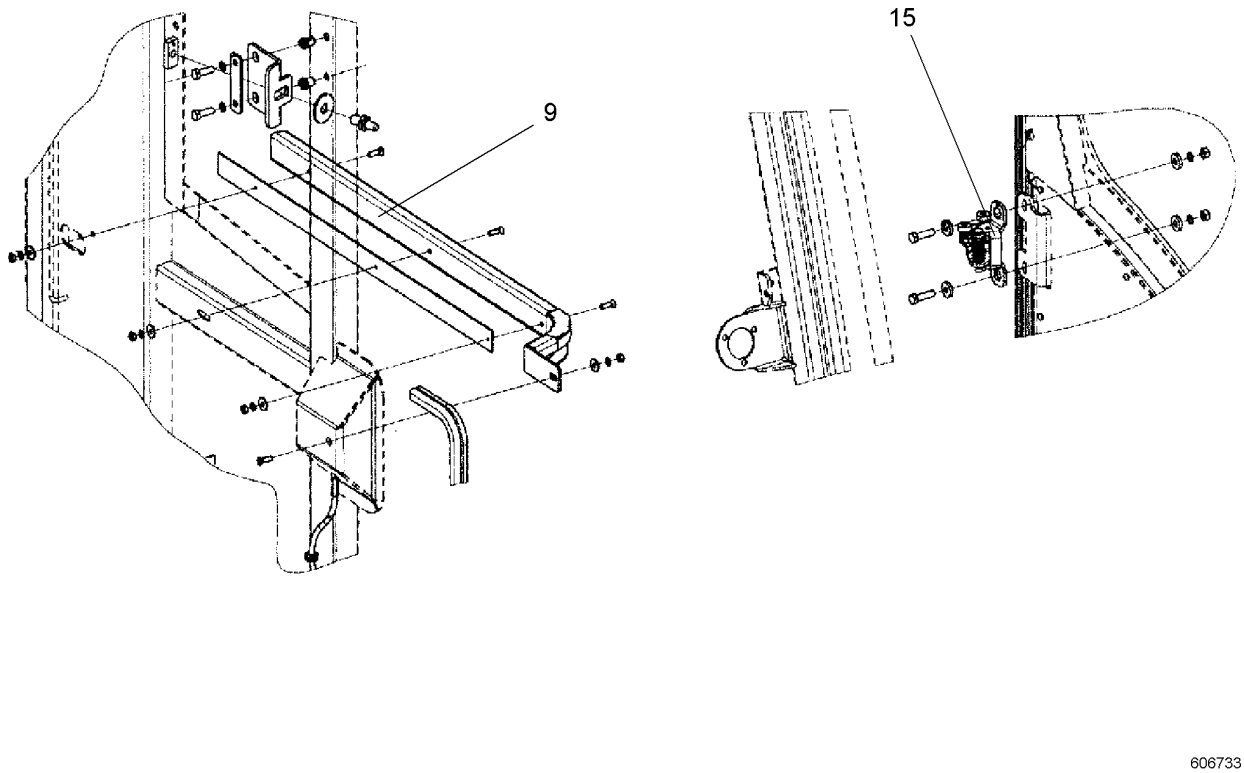

Pos.	Item	Quantity	Description	Bezeichnung	Serie	K
9	10226457	1	GUIDING RAIL	FUEHRUNGSSCHIENE		
15	10226458	1	GUIDING BRACKET CENTRE	FUEHRUNGSKONSOLE MITTE		

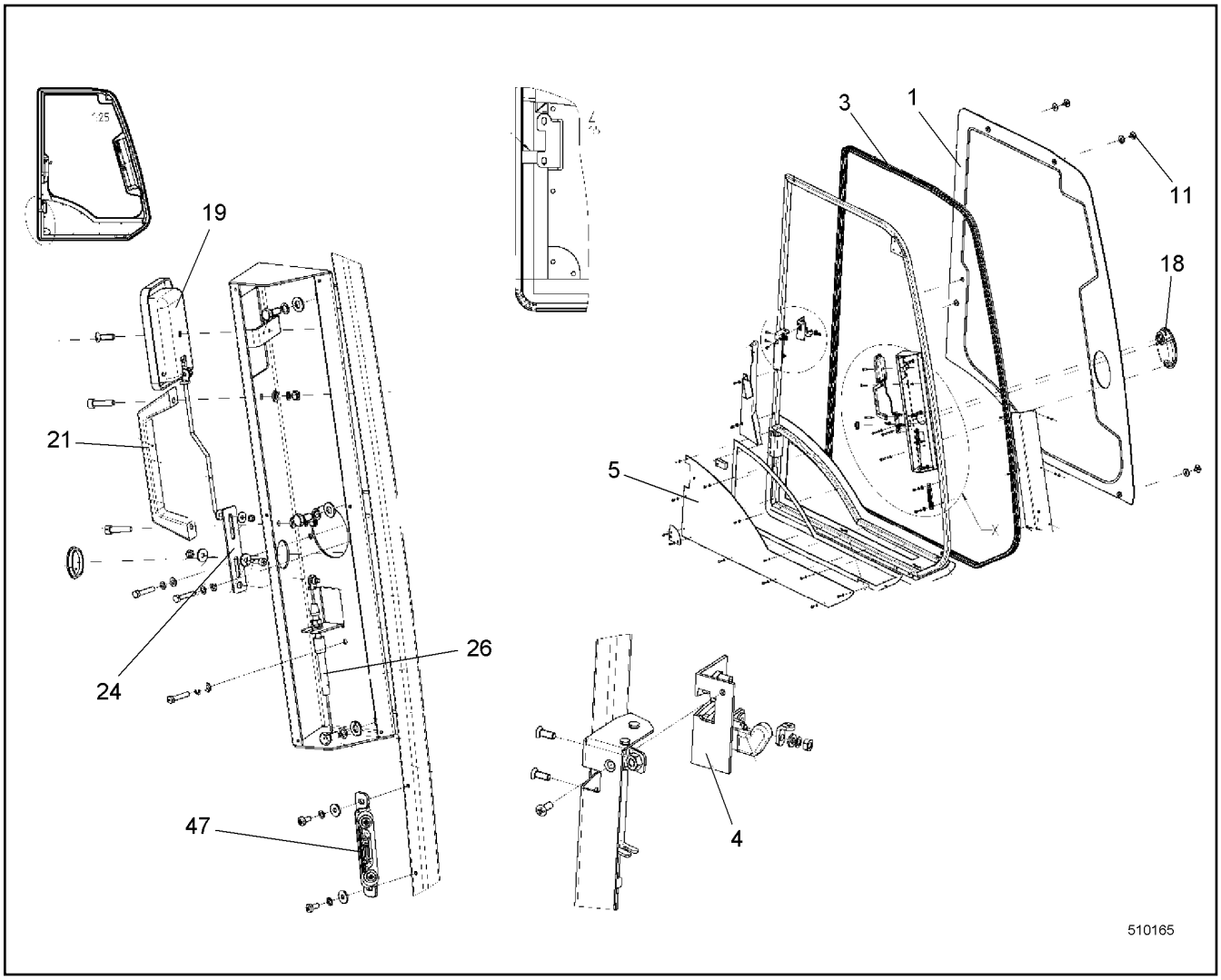

Pos.	Item	Quantity	Description	Bezeichnung	Serie	K
1	10224413	1	SLIDING WINDOW ⇨ ❑ 420	SCHIEBEFENSTER		
3	592285714	1	DOOR SEAL	TUERDICHTUNG		
4	592285814	1	ROTARY LOCK	DREHSCHLOSS		
5	10226479	1	ORIFICE	BLENDE		
11	592286514	5	FITTING	VERSCHRAUBUNG		
18	10226472	1	GRIP SHELL	GRIFFSCHALE		
19	10226473	1	DOOR HANDLE INTERNAL	TUERGRIFF INNEN		
21	10226478	1	DOOR HANDLE INTERNAL	TUERGRIFF INNEN		
24	10226477	1	SHEET	PLATTE		
26	592286314	1	ROPE PULL	SEILZUG		
47	10447258	1	KEY COLLAR	SCHLIESSKEIL		

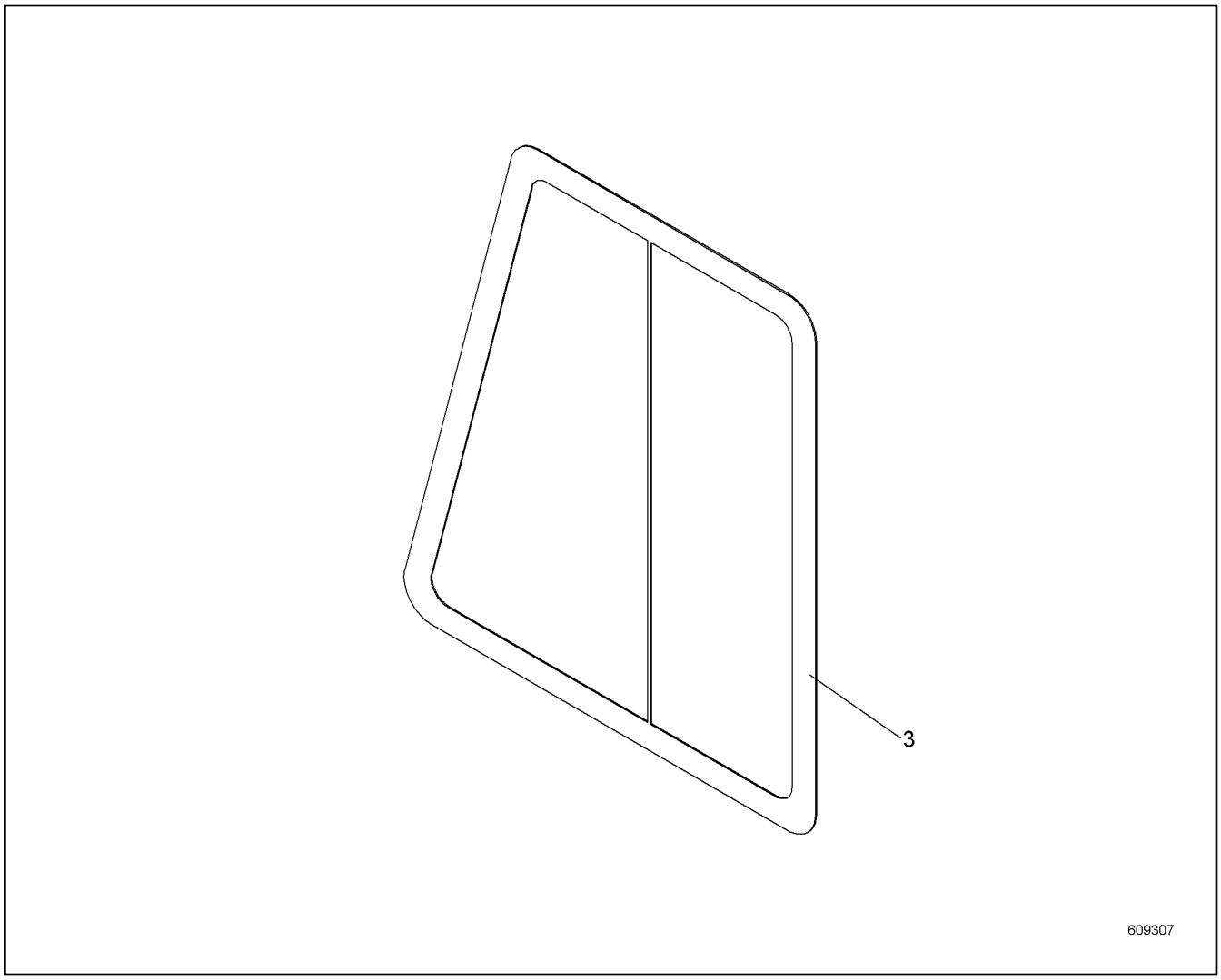

Pos.	Item	Quantity	Description	Bezeichnung	Serie	K
3	11250970	1	SLIDING WINDOW ⇨ ❑ 421	SCHIEBEFENSTER		

OHNE BILD
WITHOUT ILLUSTRATION
SANS PLANCHE
SIN FIG.
SEM ILUSTRAÇÃO
БЕЗ ИЗОБРАЖЕНИЯ

600000

Pos.	Item	Quantity	Description	Bezeichnung	Serie	K
1	10428121	1	GRIP	GRIFF		
2	11250971	1	SEAL	DICHTUNG		

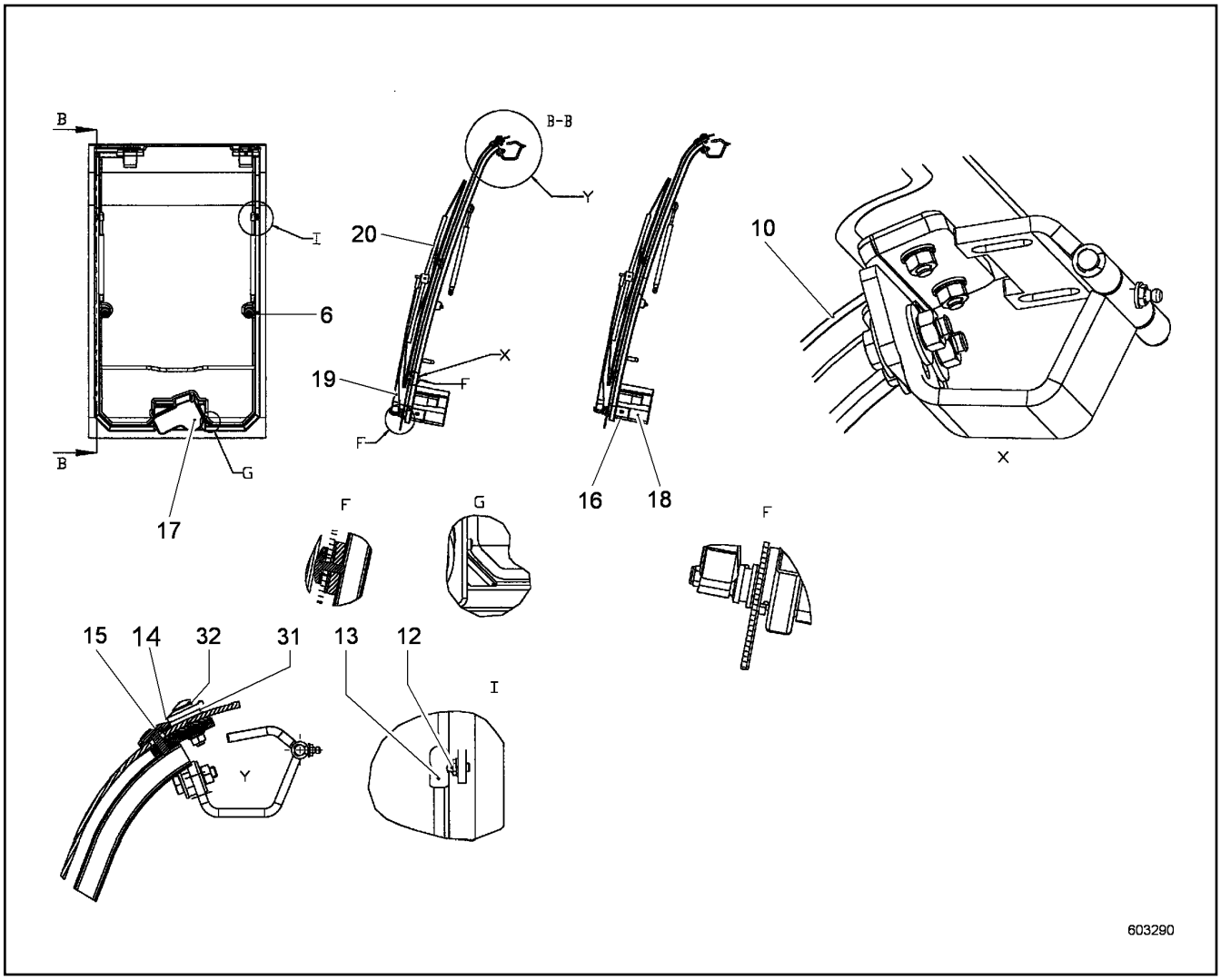

Pos.	Item	Quantity	Description	Bezeichnung	Serie	K
1	11281448	1	FRAME	RAHMEN		
4	10522188	1	WASHER	SCHEIBE		
5	10522190	1	RUBBER	GUMMI		
6	592333714	1	CLOSING PIN	SCHLIESSBOLZEN		
7	10522189	1	SHEET	PLATTE		
10	592287214	1	FRONT WINDOW	FRONTSCHEIBE		
12	592288314	1	BALL PIVOT	KUGELZAPFEN		
13	592287414	1	GAS SPRING	GASFEDER		
14	10226471	1	DISTANCE WASHER	DISTANZSCHEIBE		
15	592287514	1	SCREW	SCHRAUBE		
16	592287614	1	WIPER MOTOR	WISCHERMOTOR		
17	592287714	1	ELBOW PIECE	WINKELSTUECK		
18	592287814	1	COVER	ABDECKUNG		
19	592287914	1	WIPER ARM	WISCHARM		
20	592288014	1	WIPER BLADE	WISCHERBLATT		
31	592288114	1	SHEET GASKET	DICHTSCHEIBE		
32	592288214	1	WASHER	SCHEIBE		

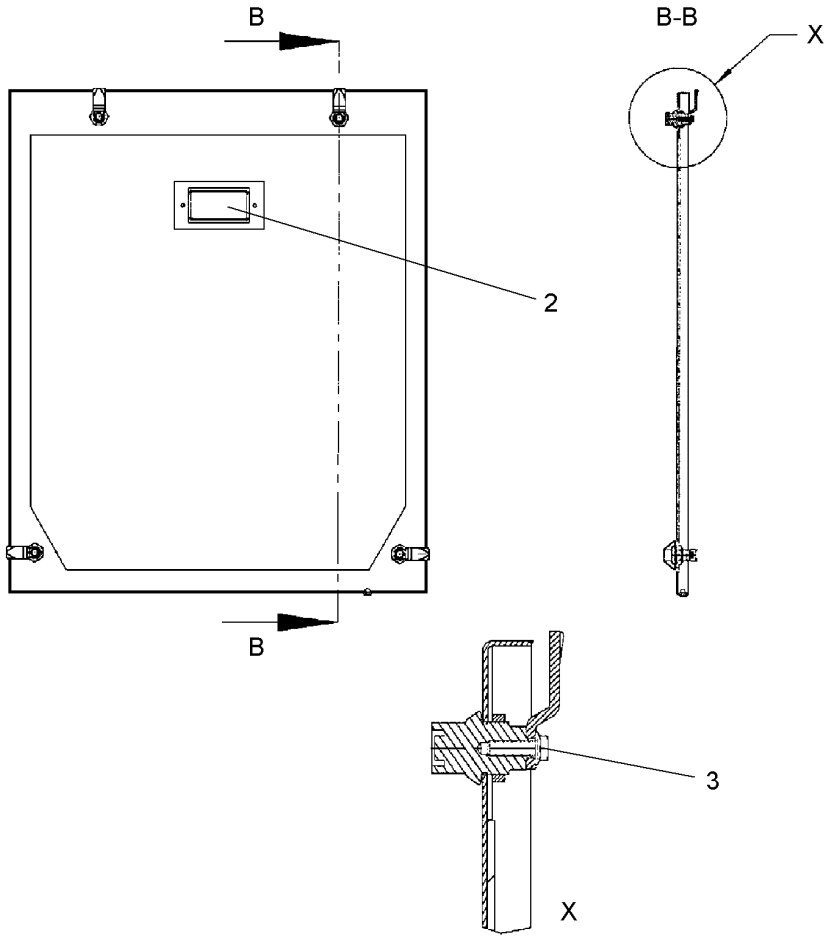

Pos.	Item	Quantity	Description	Bezeichnung	Serie	K
2	592289614	1	GRIP SHELL	GRIFFSCHALE		
3	592289714	1	CYLINDER LOCK	ZYL SCHLOSS		

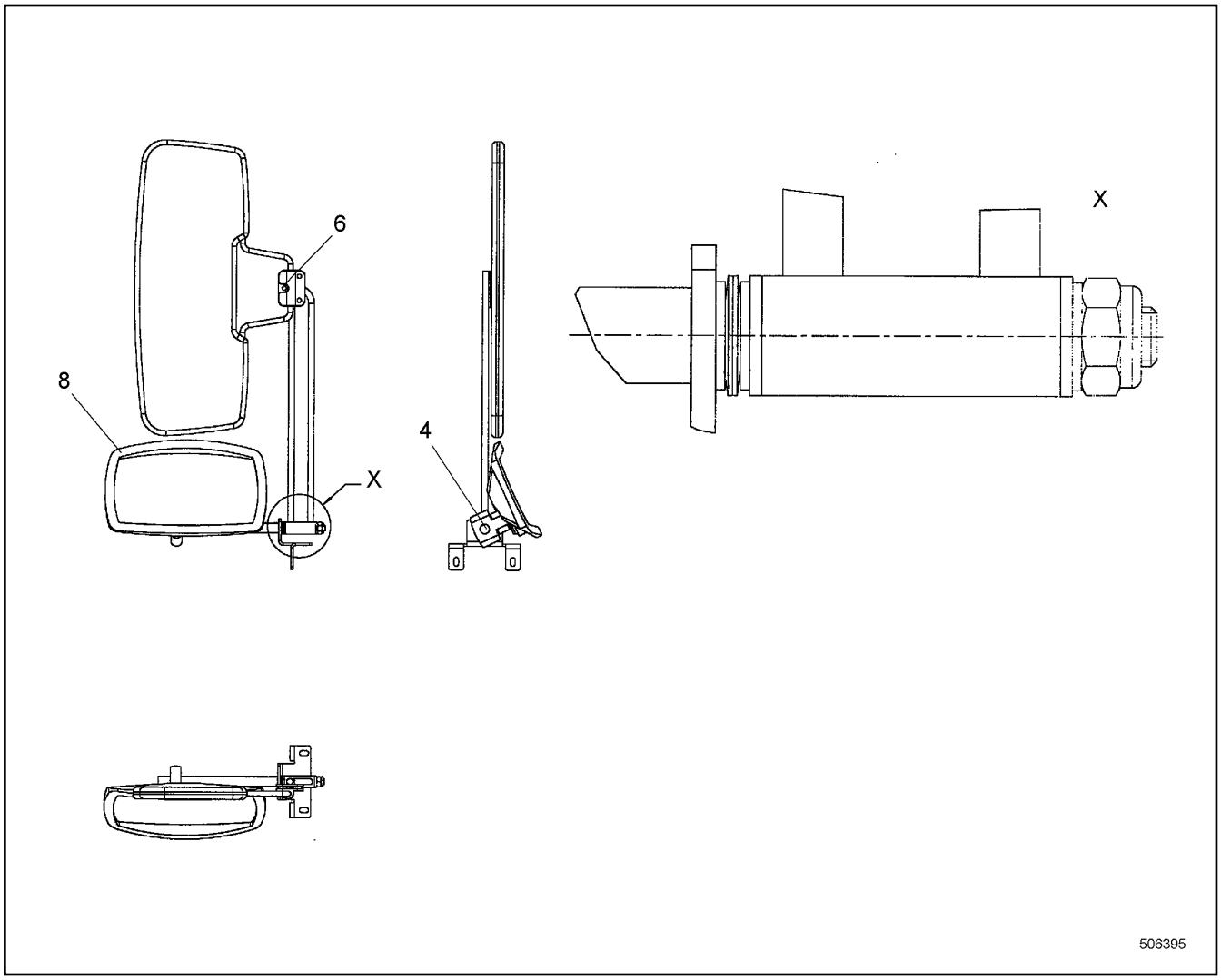

Pos.	Item	Quantity	Description	Bezeichnung	Serie	K
4	592290614	1	COLLER BUSHING	BUNDBUCHSE		
6	592290714	1	SUN VISOR	SONNENBLENDE		
8	592290814	1	MIRROR	SPIEGEL		

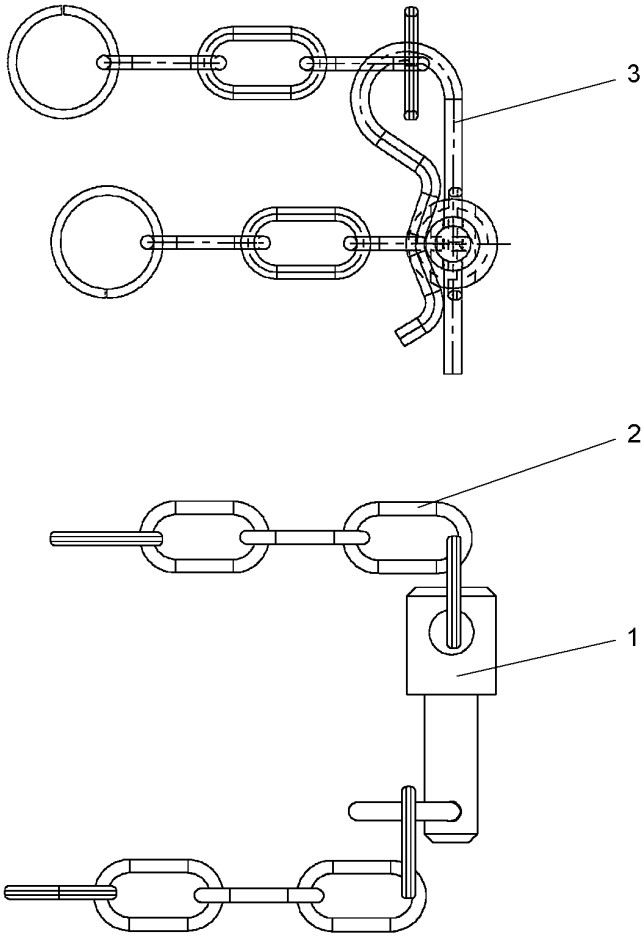

Pos.	Item	Quantity	Description	Bezeichnung	Serie	K
1	592291514	1	PIN	BOLZEN		
2	592291614	1	SECURING CHAIN	SICHERUNGSKETTE		
3	592291714	1	SPRING PLUG	FEDERSTECKER		

OHNE BILD
WITHOUT ILLUSTRATION
SANS PLANCHE
SIN FIG.
SEM ILUSTRAÇÃO
БЕЗ ИЗОБРАЖЕНИЯ

600000

Pos.	Item	Quantity	Description	Bezeichnung	Serie	K
1	11939346	1	AIR CONDITIONING ⇨ ❑ 427	KLIMAANLAGE		
2	11314166	1	TANK MOUNTING	TANKHALTERUNG		

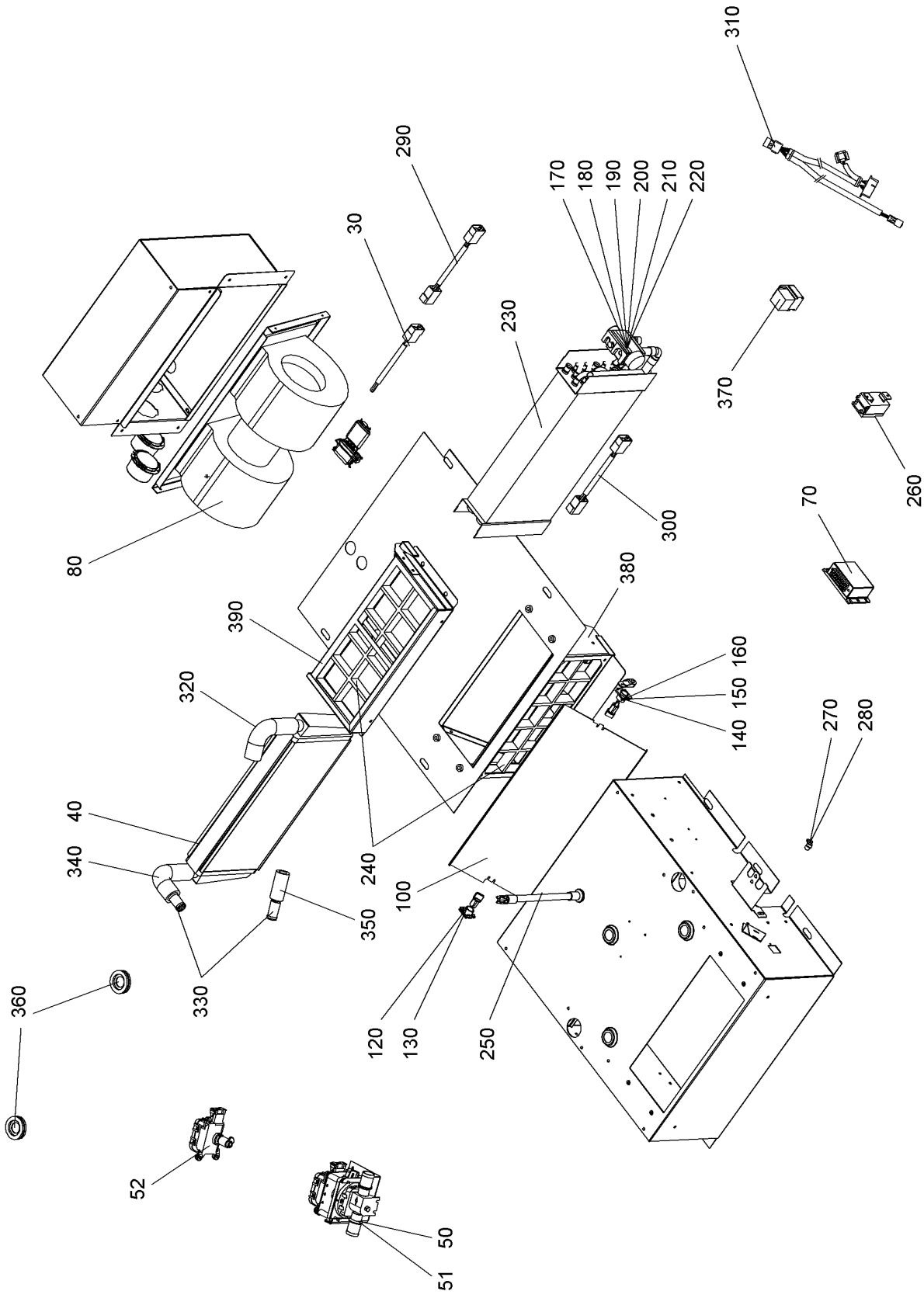
310
290
170
180
190
200
210
220
30
230
370
260
80
300
70
380
390
160
150
140
320
270
280
40
340
240
100
350
360
330
120
130
250
52
50
51
610497

Pos.	Item	Quantity	Description	Bezeichnung	Serie	K
30	10223208	1	CABLE LOOM	KABELSATZ		
40	10512662	1	HEAT EXCHANGER	WAERMETAUSCHER		
50	10584671	1	WATER VALVE ⇨ ❑ 429	WASSERVENTIL		
51	592293114	1	WATER VALVE	WASSERVENTIL		
52	592293214	1	MOTOR	MOTOR		
70	592293314	1	VALVE	VENTIL		
80	10223209	1	FAN	LUEFTER		
100	11909480	1	FLAP	KLAPPE		
120	11909482	1	BEARING	LAGER		
130	11909483	1	CLIP	CLIP		
140	11909496	1	SHEET	PLATTE		
150	11909497	1	CLIP	CLIP		
160	11909498	1	LEVER	HEBEL		
170	10223210	1	EXPANSION VALVE	EXPANSIONSVENTIL		
180	592293414	1	O-RING	O-RING		
190	592293514	1	O-RING	O-RING		
200	11259704	1	HOLDING PLATE	HALTEPLATTE		
210	11259705	1	HOLDING PLATE	HALTEPLATTE		
220	11946452	1	COVER LID	ABDECKKAPPE		
230	592293614	1	EVAPORATOR	VERDAMPFER		
240	592293714	2	FILTER	FILTER		
250	10572149	1	WATER DRAIN CPL	WASSERABLAUF KPL		
260	592293814	1	THERMOSTAT	THERMOSTAT		
270	11230660	1	BOWDEN PULL SYSTEM	BOWDENZUG		
280	11946451	1	CLAMP	KLAMMER		
290	11946453	1	CABLE LOOM	KABELSATZ		
300	11946454	1	CABLE LOOM	KABELSATZ		
310	11946455	1	CABLE LOOM	KABELSATZ		
320	11946456	1	HOSE BEND	SCHLAUCHBOGEN		
330	11946457	1	REDUCER	REDUZIERUNG		
340	11946458	1	HOSE BEND	SCHLAUCHBOGEN		
350	11946459	1	WATER HOSE	WASSERSCHLAUCH		
360	11946462	1	CABLE SLEEVE	KABELTUELLE		
370	11946464	1	CENTER-ZERO RELAY	WECHSLERRELAIS		
380	11946423	1	FAN BOX	LUEFTERKASTEN		
390	11946424	1	AIR FILTER HOLDER	LUFTFILTERHALTER		

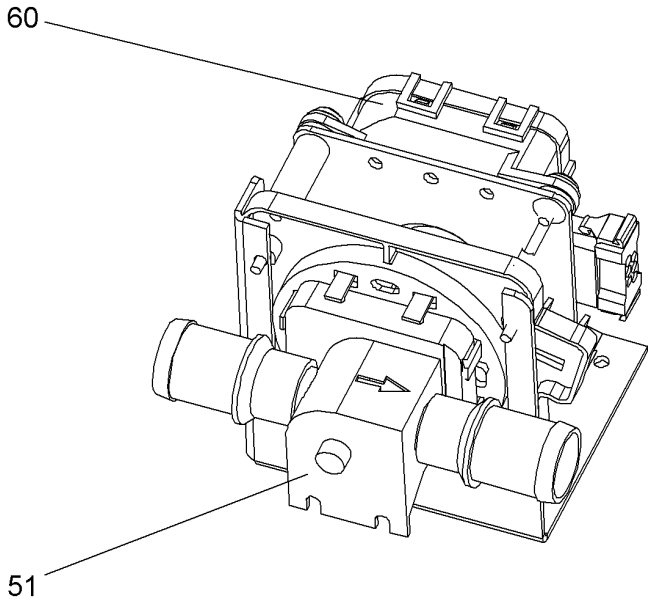

607897

Pos.	Item	Quantity	Description	Bezeichnung	Serie	K
51	592293114	1	WATER VALVE	WASSERVENTIL		
60	592293214	1	MOTOR	MOTOR		

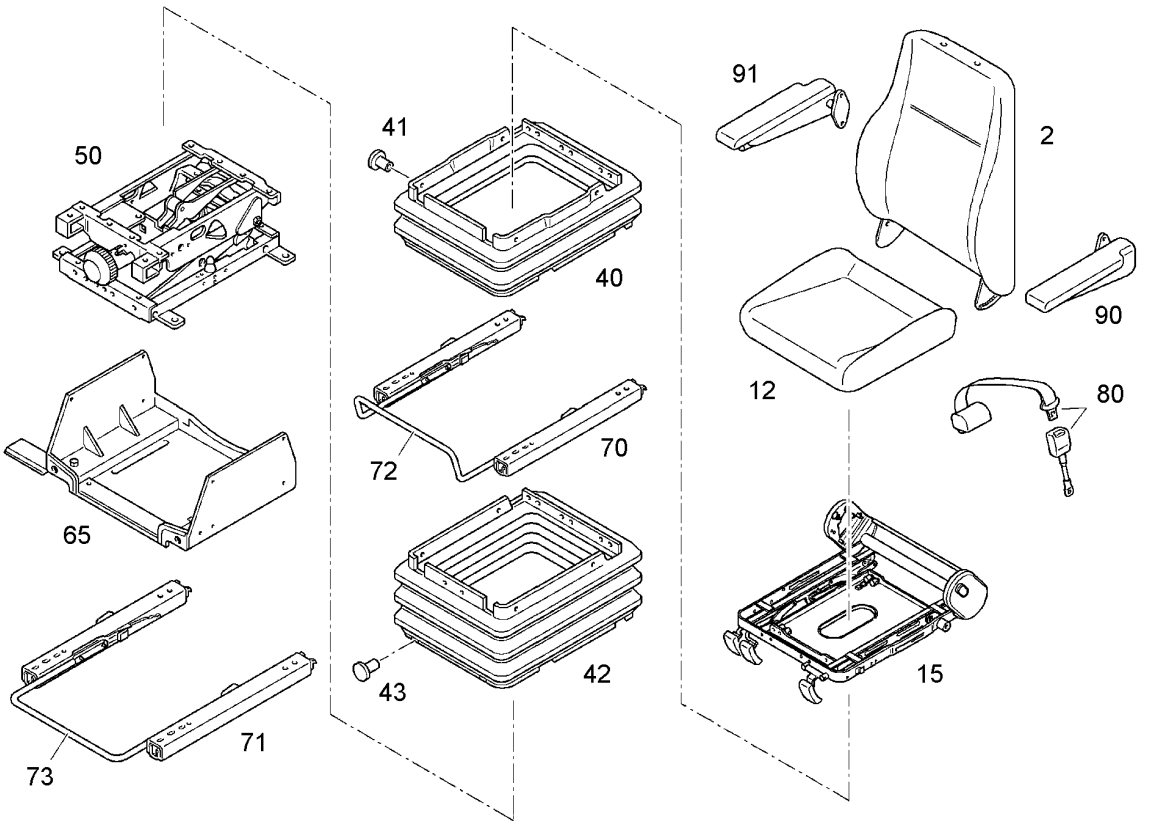

Pos.	Item	Quantity	Description	Bezeichnung	Serie	K
2	10289988	1	BACK PART	RUECKENTEIL		
12	7024981	1	SEAT PART CPL	SITZTEIL KPL		
15	7024996	1	SEAT FRAME ⇨ ❑ 431	SITZRAHMEN		
40	10100666	1	RUBBER BELLOWS	FALTENBALG		
41	10289973	1	FIXING PARTS	BEFESTIGUNGSTEILE		
42	7366620	1	RUBBER BELLOWS	FALTENBALG		
43	10289975	4	BUTTON	KNOPF		
50	10289993	1	VIBRATING SYSTEM ⇨ ❑ 432	SCHWINGSYSTEM		
65	10165637	1	SEAT VAT	SITZWANNE		
70	10289990	1	SLIDE SEAT GUIDE	SCHIEBESITZFUEHRUNG		
71	7024987	1	SLIDE SEAT GUIDE	SCHIEBESITZFUEHRUNG		
72	10289976	1	BRACKET	BUEGEL		
73	7370581	1	BRACKET	BUEGEL		
80	7371746	1	HIP BELT	BECKENGURT		
90	7024982	1	ARM REST LEFT	ARMLEHNE LINKS		
91	7024983	1	ARM REST RIGHT	ARMLEHNE RE		

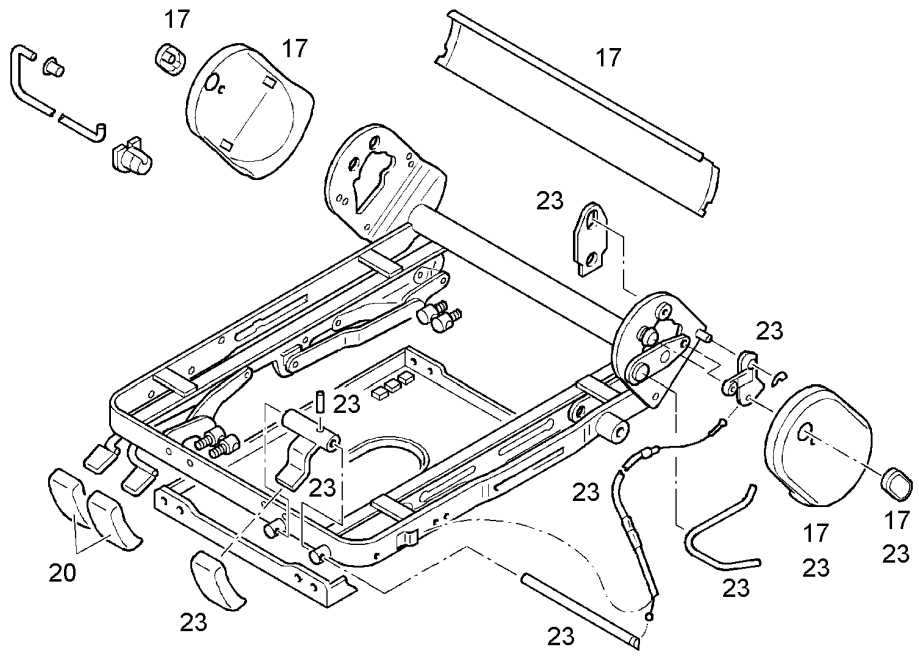

Pos.	Item	Quantity	Description	Bezeichnung	Serie	K
17	10036950	1	COVER LID	ABDECKKAPPE		
20	7025006	1	GRIP	GRIFF		
23	7025007	1	LATCHING DEVICE CPL	RASTVORRICHTUNG KPL		

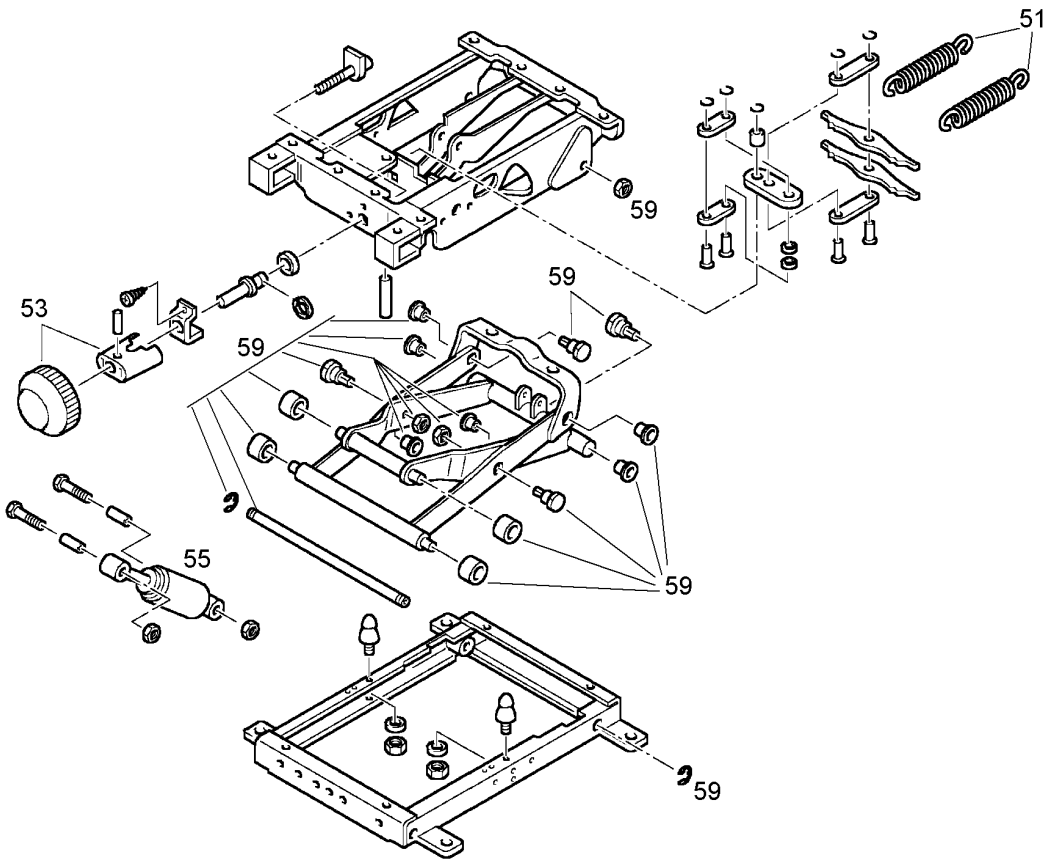

Pos.	Item	Quantity	Description	Bezeichnung	Serie	K
51	7617520	2	TENSION SPRING	ZUGFEDER		
53	5609144	1	HANDWHEEL	HANDRAD		
55	10289994	1	SHOCK ABSORBER	STOSSDAEMPFER		
59	7025009	1	BEARING	SCHERENLAGERUNG		

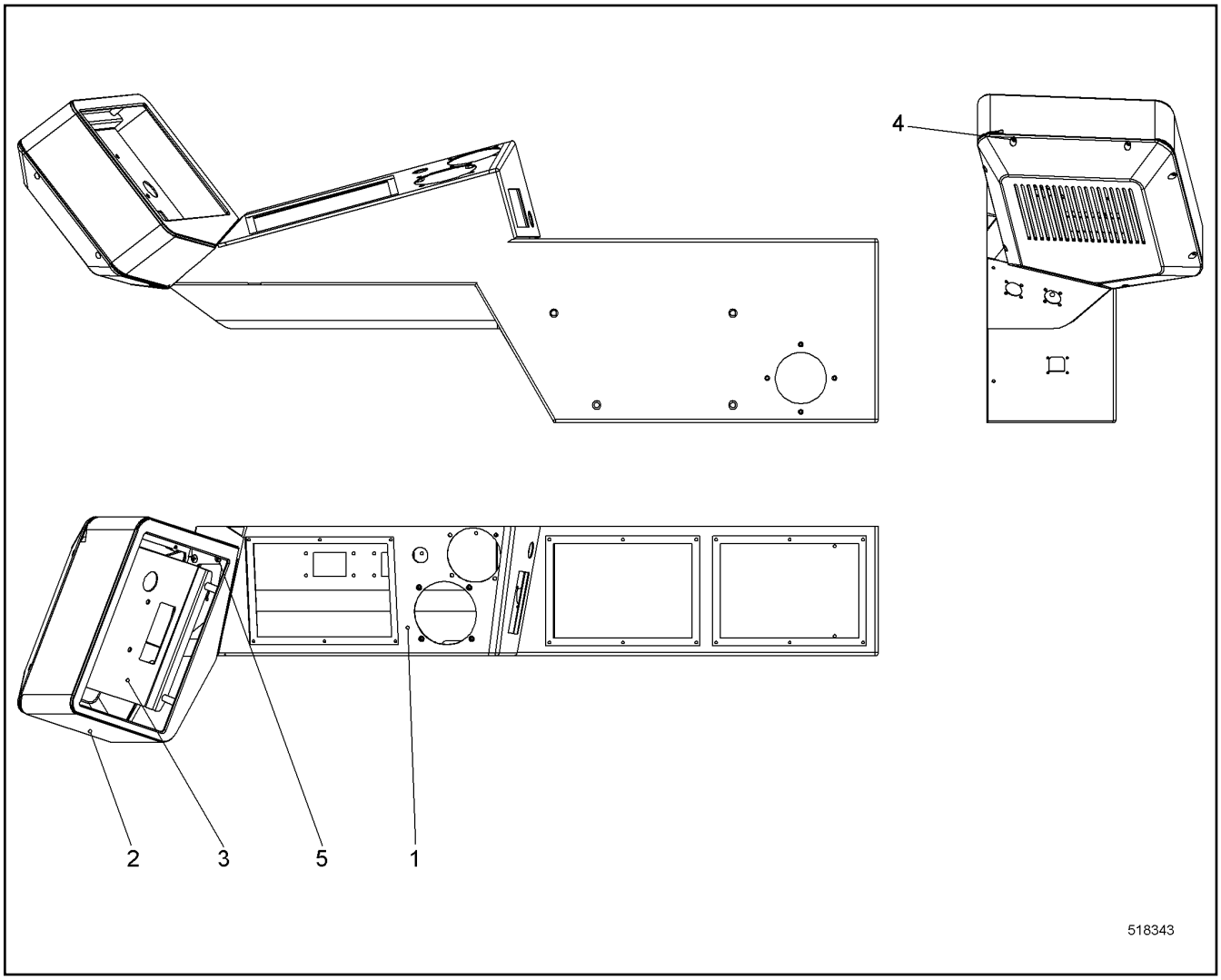

Pos.	Item	Quantity	Description	Bezeichnung	Serie	K
1	11262893	1	BRACKET REAR	KONSOLE HINTEN		
2	11262812	1	MONITOR SCREEN HOUSING	BILDSCHIRMGEHAEUSE		
3	11262894	1	HOLDER	HALTER		
4	10541540	11	PAN-HEAD SCREW ISO 7045 M4X6 A2-70	FLACHKOPFSCHRAUBE		
5	4002401	4	COUNTERSUNK SCREW ISO 7047 M6X12 4.8	SENKSCHRAUBE		

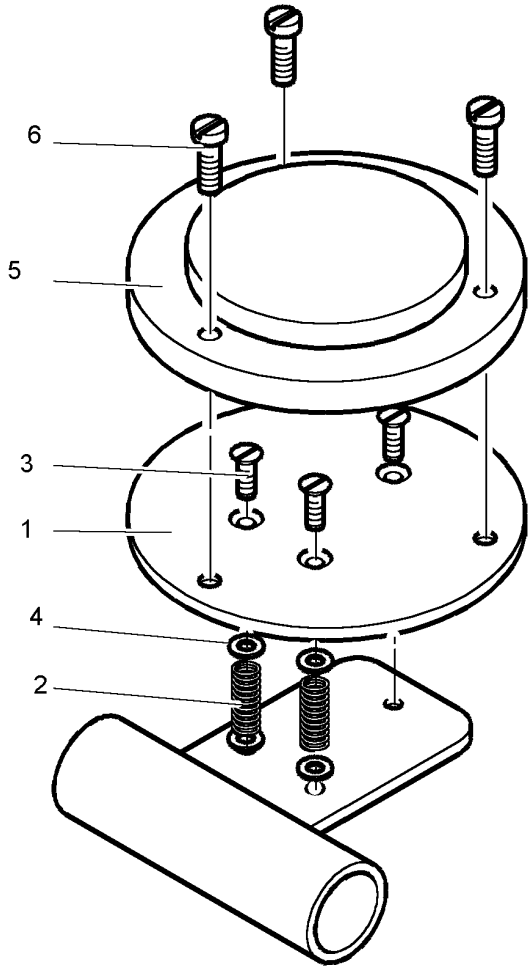

Pos.	Item	Quantity	Description	Bezeichnung	Serie	K
2	411551214	9	HEX NUT ISO 4032 M4 A4-70	SECHSKANTMUTTER		
3	407041214	3	COUNTERSUNK SCREW ISO 2009 M4X25 4.8	SENKSCHRAUBE		
4	420000314	3	WASHER ISO 7089 4 A4	SCHEIBE		
5	714000808	1	SPIRIT LEVEL	WASSERWAAGE		
6	10541561	3	PAN-HEAD SCREW ISO 7045 M5X16 A2-70	FLACHKOPFSCHRAUBE		

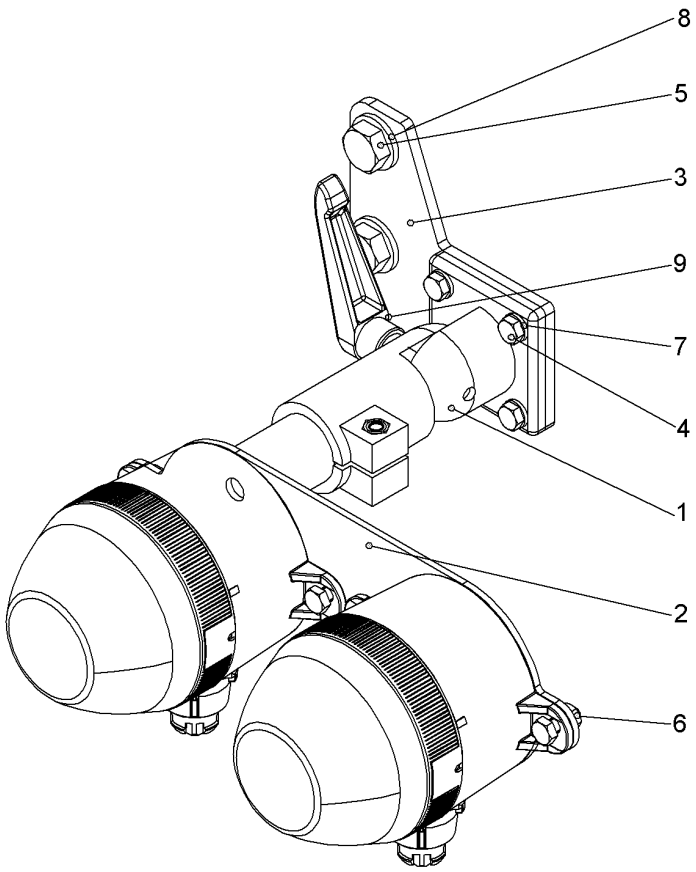

Pos.	Item	Quantity	Description	Bezeichnung	Serie	K
1	10537558	1	TERMINAL HOLDER B30	KLEMMHALTER		
2	10537562	1	LAMP HOLDER	LEUCHTENHALTER		
3	10537566	1	WP	WP		
4	406501714	8	HEX SCREW ISO 4017 M6X16 A4-70	SECHSKANTSCHRAUBE		
5	406528014	2	HEX SCREW ISO 4017 M12X16 A4-70	SECHSKANTSCHRAUBE		
6	411517114	4	HEX NUT ISO 4032 M6 A4-70	SECHSKANTMUTTER		
7	420000414	8	WASHER ISO 7089 6 A4	SCHEIBE		
8	4901782	2	WASHER ISO 7089 12 A4	SCHEIBE		
9	10555411	1	CLAMPING LEVER	KLEMMHEBEL		

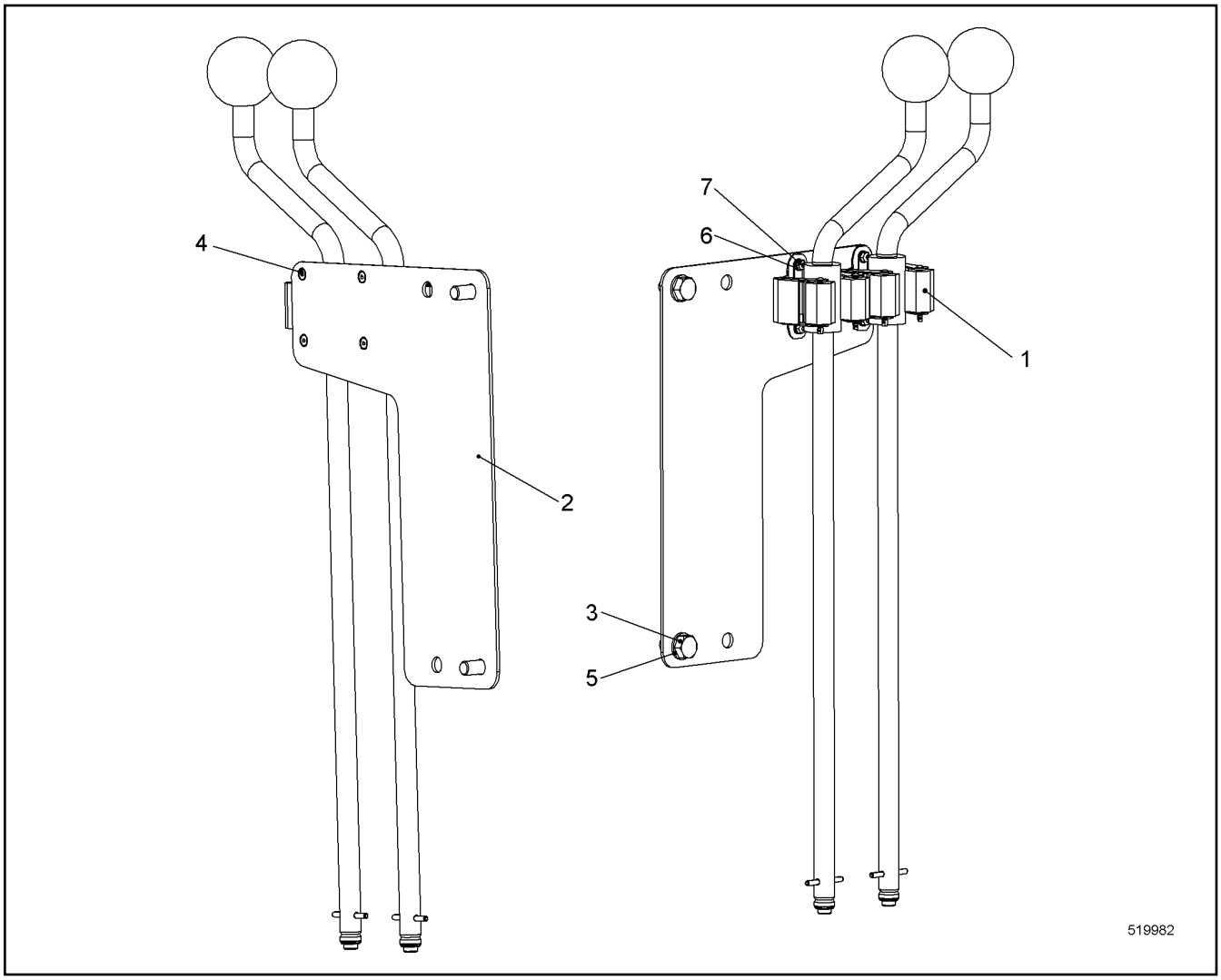

Pos.	Item	Quantity	Description	Bezeichnung	Serie	K
1	10445629	2	EQUIPMENT MOUNTING	GERAETEHALTER		
2	11309628	1	WP	WP		
3	406501514	2	HEX SCREW ISO 4017 M8X16 A4-70	SECHSKANTSCHRAUBE		
4	407071114	4	COUNTERSUNK SCREW DIN 7991 M3X8 A4-7	SENKSCHRAUBE		
5	420001014	2	WASHER ISO 7089 8 A4	SCHEIBE		
6	485546414	4	WASHER ISO 7089 3 A4	SCHEIBE		
7	485546514	4	HEX NUT ISO 4032 M3 A4-70	SECHSKANTMUTTER		

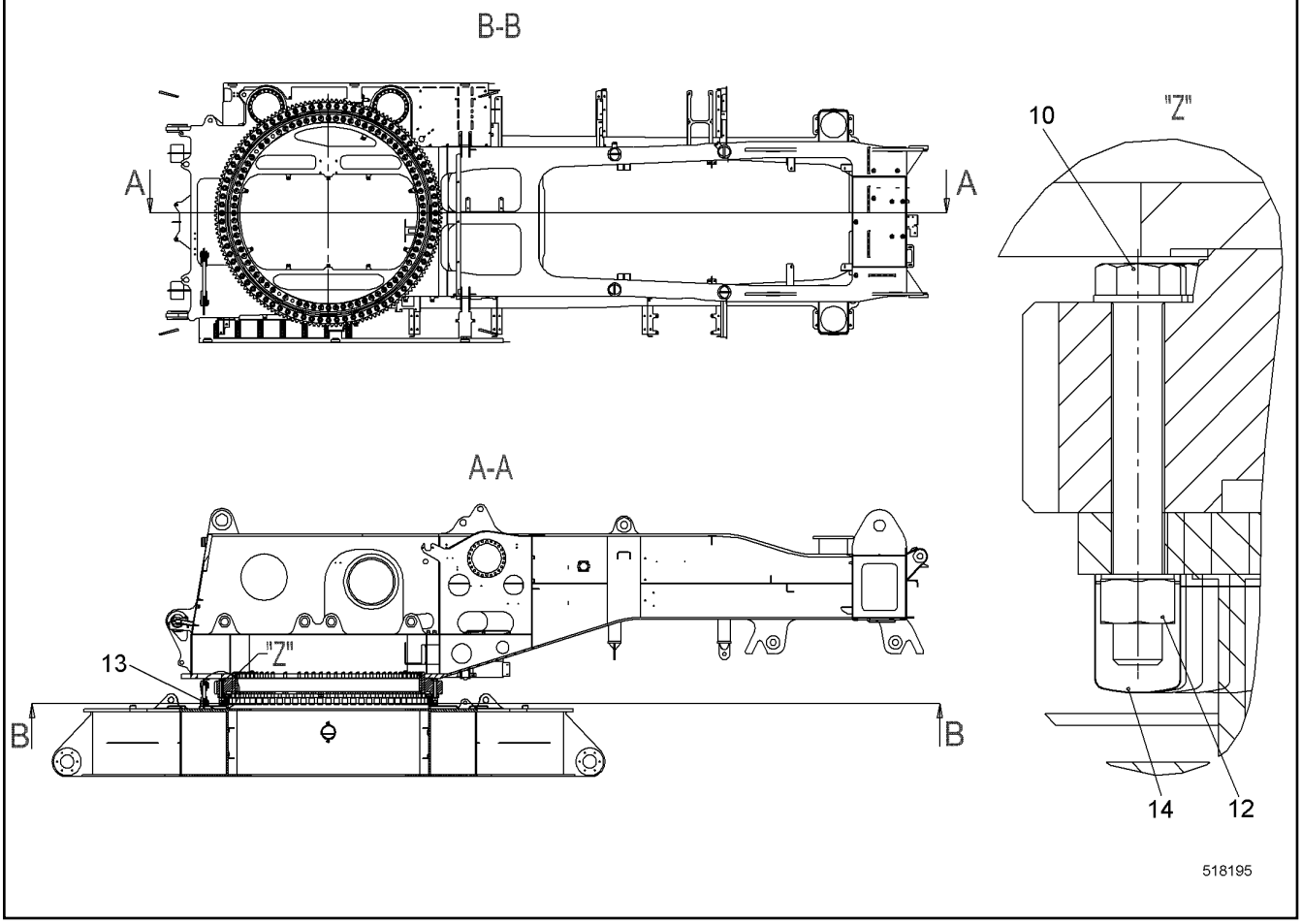

Pos.	Item	Quantity	Description	Bezeichnung	Serie	K
10	10512966	80	FLANGED BOLT M33X245 10.9	BUNDSCHRAUBE		
12	412705014	80	NUT LWN 8-60-106 M33 10	MUTTER		
13	991804114	1	LASHING SUPERSTRUCTURE ⇨ ❑ 438	VERZURRUNG OW		
14	11266978	80	PROTECTING CAP	SCHUTZKAPPE		

LR1280 / LR1300

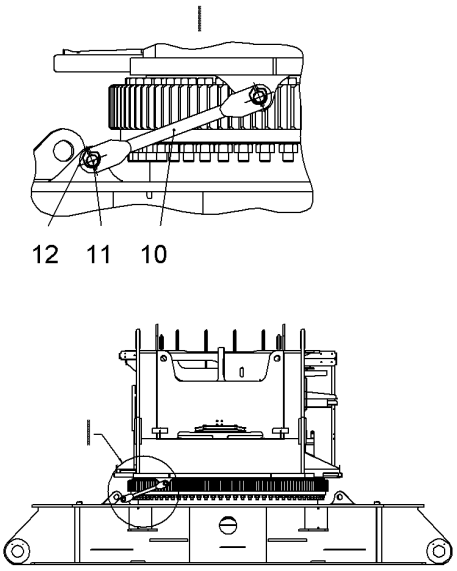

LR1300 / LR1300W

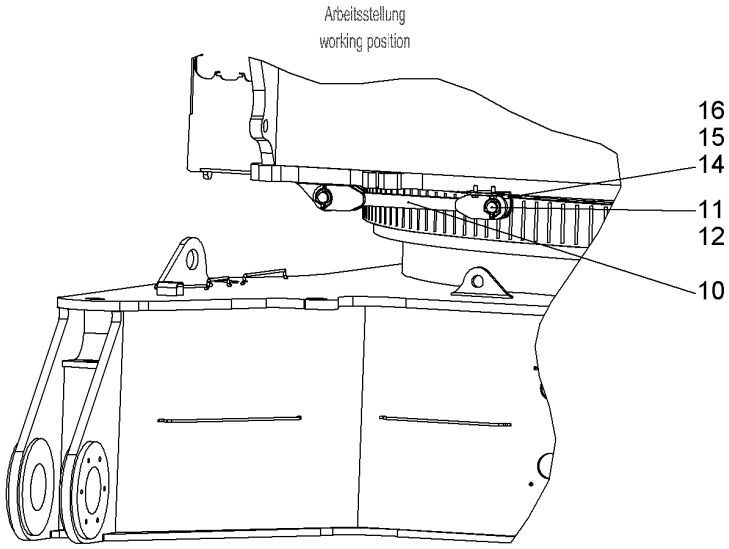

519291

Pos.	Item	Quantity	Description	Bezeichnung	Serie	K
10	953580303	1	BUTT STRAP	LASCHE		
11	11938016	2	PIN 50X95 LHRD900-40;10019758	BOLZEN		
12	10098106	2	SAFETY PLUG W HINGE-LID 10X55	SICHERHEITSKLAPPSTECKER		
14	10540512	2	WASHER ISO 7093-1 12 A4	SCHEIBE		
15	406517314	2	HEX SCREW ISO 4017 M12X30 A4-70	SECHSKANTSCHRAUBE		

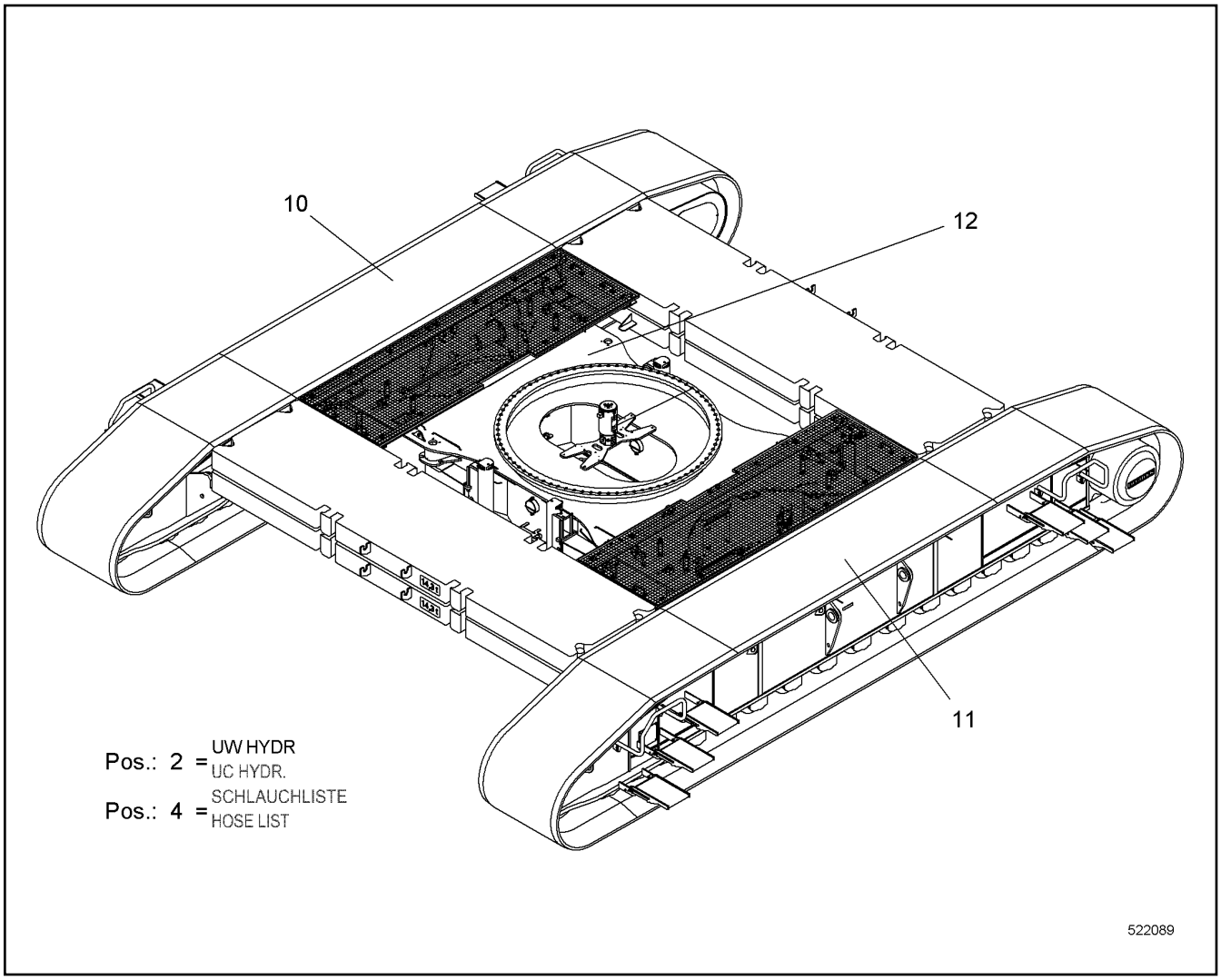

Pos.	Item	Quantity	Description	Bezeichnung	Serie	K
2	11893003	1	UC HYDR ⇨ ❑ 440	UW HYDR		
4	11893001	1	HOSE LIST ⇨ ❑ 459	SCHLAUCHLISTE		
10	11893650	1	CRAWLER CARRIER RIGHT CPL ⇨ ❑ 462	RAUPENTRAEGER RE KPL		
11	11893651	1	CRAWLER CARRIER LEFT CPL ⇨ ❑ 473	RAUPENTRAEGER LI KPL		
12	11313908	1	CENTRE PART CPL ⇨ ❑ 475	MITTELTEIL KPL		
13	289059414	1	WP	WP		

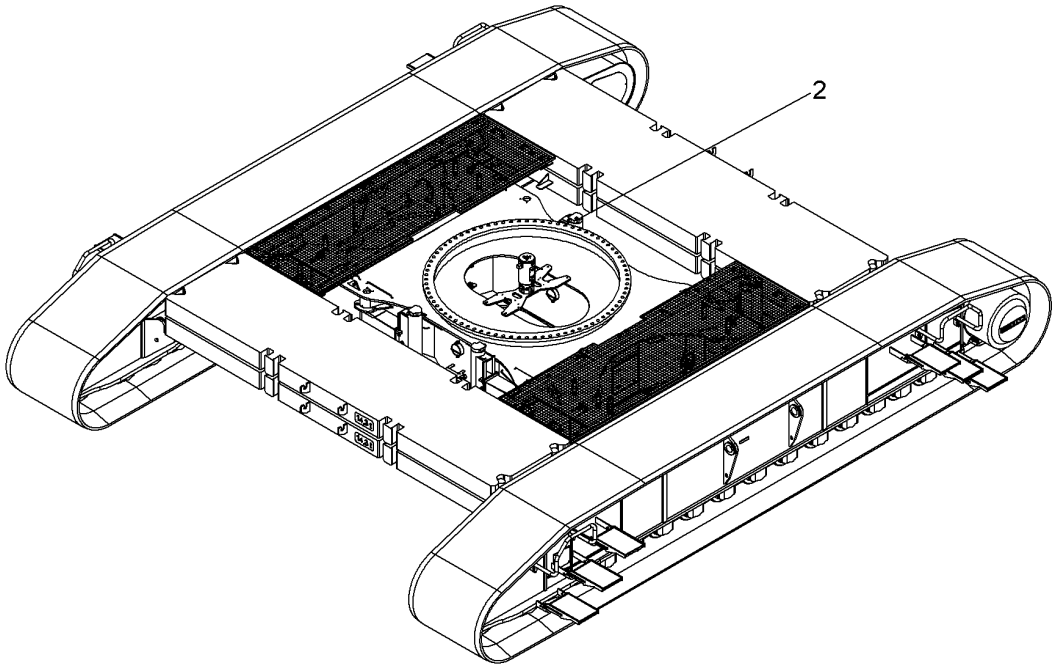

Pos.	Item	Quantity	Description	Bezeichnung	Serie	K
2	11893005	1	TUBING HYDR ⇨ ❑ 441	VERROHRUNG HYDR		

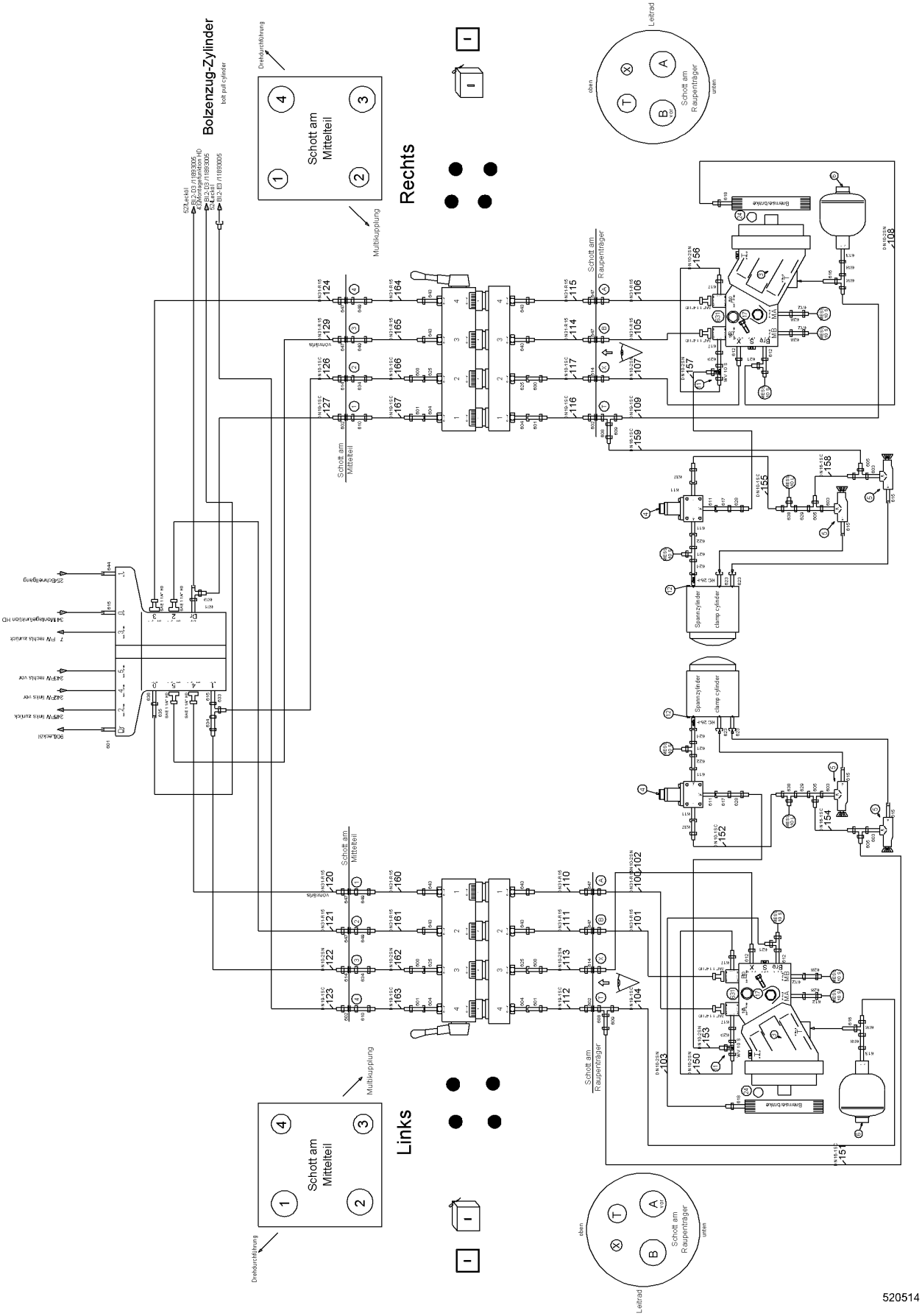
Bolzenzug-Zylinder
bolt pull-cylinder
Rechts
Links
Schott am Mittelteil
Schott am Raupenträger
Multikupplung
Drehdurchführung
Leitrad
oben
unten
Spannzylinder
clamp cylinder
520514

Pos.	Item	Quantity	Description	Bezeichnung	Serie	K
2	10550970	1	ROTARY FEED THROUGH HYDR ⇨ ❑ 445	DREHDURCHFUEHRUNG HYDR		
3	512405914	2	VARIABLE DISPLACEMENT MOTOR ⇨ ❑ 447	V.MOTOR		
4	510438514	2	PRESSURE REDUCTION VALVE	DRUCKREDUZIERVENTIL		
5	592323114	4	PRESSURE LIMITING VALVE	DRUCKBEGRENZUNGSVENTIL		
6	592274714	2	DIAPHRAGM ACCUMULATOR	MEMBRANSPEICHER		
7	10445102	1	QUICK RELEASE FITTING ⇨ ❑ 453	SCHNELLVERSCHLUSSKUPPLUN		
8	10445101	1	QUICK RELEASE FITTING ⇨ ❑ 454	SCHNELLVERSCHLUSSKUPPLUN		
9	10551548	2	QUICK RELEASE FITTING ⇨ ❑ 455	SCHNELLVERSCHLUSSKUPPLUN		
10	510710614	4	INTERMEDIATE FLANGE SAE	ZWISCHENFLANSCH SAE		
11	511491914	2	SHUTTLE VALVE	WECHSELVENTIL		
12	10099055	2	NON-RETURN VALVE	RUECKSCHLAGVENTIL		
13	513314114	4	DOUBLE-ACTING CYL ⇨ ❑ 456	DOPPELWIRKZYL		
14	510403414	4	DIRECTIONAL CTRL. VALVE	WEGESCHIEBER		
16	511458114	4	NON-RETURN VALVE	RUECKSCHLAGVENTIL		
17	10539305	8	HEX SCREW ISO 4017 M14X70 10.9	SECHSKANTSCHRAUBE		
18	10544050	16	SOCKET HEAD SCREW ISO 4762 M14X75 10.9	ZYLINDERSCHRAUBE		
19	10539300	16	HEX SCREW ISO 4017 M14X45 10.9	SECHSKANTSCHRAUBE		
20	10445127	2	ENCLOSURE CPL	GEHAEUSE KPL		
21	10551191	2	LID CPL ⇨ ❑ 457	DECKEL KPL		
22	247049002	1	FITTING	VERSCHRAUBUNG		
23	477700214	1	FITTING	VERSCHRAUBUNG		
24	726461014	2	O-RING	O-RING		
25	11918725	2	CHAIN CPL ⇨ ❑ 458	KETTE KPL		
204	510694514	8	GAUGE CONNECTION	MESSSTUTZEN		
205	510629008	2	GAUGE CONNECTION	MESSSTUTZEN		
600	471032708	24	FITTING	VERSCHRAUBUNG		
601	247009902	6	FITTING	VERSCHRAUBUNG		
602	247027302	4	FITTING	VERSCHRAUBUNG		
603	247009702	4	FITTING	VERSCHRAUBUNG		
604	475501414	4	FITTING	VERSCHRAUBUNG		
605	247128502	4	FITTING	VERSCHRAUBUNG		
606	482430614	2	FITTING	VERSCHRAUBUNG		
608	247041102	4	FITTING	VERSCHRAUBUNG		
609	247138602	4	FITTING	VERSCHRAUBUNG		
610	247126202	3	FITTING	VERSCHRAUBUNG		
611	247042402	6	FITTING	VERSCHRAUBUNG		
612	471008214	8	FITTING	VERSCHRAUBUNG		
613	247011602	2	FITTING	VERSCHRAUBUNG		
614	474002414	4	FITTING	VERSCHRAUBUNG		
615	471032608	6	FITTING	VERSCHRAUBUNG		

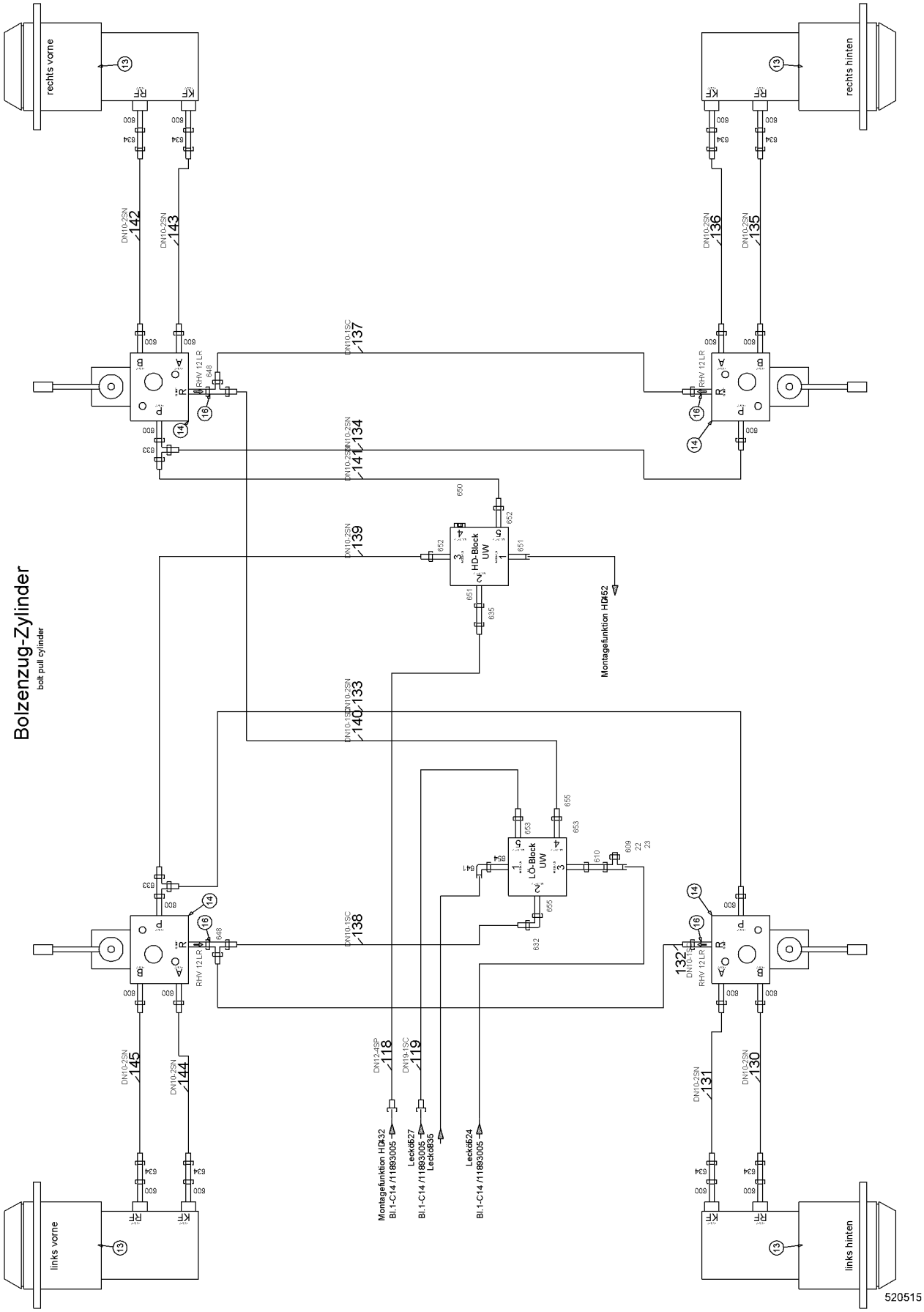

21.6.2017 520515	**138406_ETK_001**	443 (3/4)
LIEBHERR	**TUBING HYDR** **VERROHRUNG HYDR**	**11 89 300 5**

Pos.	Item	Quantity	Description	Bezeichnung	Serie	K
616	471031308	2	FITTING	VERSCHRAUBUNG		
617	471004514	6	FITTING	VERSCHRAUBUNG		
618	471004614	2	FITTING	VERSCHRAUBUNG		
620	471100614	2	FITTING	VERSCHRAUBUNG		
621	7367776	4	FITTING	VERSCHRAUBUNG		
622	471032808	2	FITTING	VERSCHRAUBUNG		
623	481933014	4	FITTING	VERSCHRAUBUNG		
624	481930414	2	FITTING	VERSCHRAUBUNG		
625	475502514	4	FITTING	VERSCHRAUBUNG		
628	7617268	6	FITTING	VERSCHRAUBUNG		
629	485436414	2	FITTING	VERSCHRAUBUNG		
631	10472425	10	RECTANGULAR SECTION RING	RECHTECKRING		
632	247117702	1	FITTING	VERSCHRAUBUNG		
633	7617461	3	FITTING	VERSCHRAUBUNG		
634	7617354	11	FITTING	VERSCHRAUBUNG		
635	7617460	2	FITTING	VERSCHRAUBUNG		
636	471033214	1	FITTING	VERSCHRAUBUNG		
637	7362091	2	FITTING	VERSCHRAUBUNG		
638	247242302	2	FITTING	VERSCHRAUBUNG		
641	247108302	1	FITTING	VERSCHRAUBUNG		
643	7410455	8	FITTING	VERSCHRAUBUNG		
644	247009202	1	FITTING	VERSCHRAUBUNG		
646	510586614	16	FLANGE HALF	FLANSCHHAELFTE		
647	474033014	8	FITTING	VERSCHRAUBUNG		
648	247128602	2	FITTING	VERSCHRAUBUNG		
649	482531814	4	FITTING	VERSCHRAUBUNG		
650	477704514	1	FITTING	VERSCHRAUBUNG		
651	471033014	2	FITTING	VERSCHRAUBUNG		
652	471036014	2	FITTING	VERSCHRAUBUNG		
653	7365616	2	FITTING	VERSCHRAUBUNG		
654	471031108	1	FITTING	VERSCHRAUBUNG		
655	471039908	2	FITTING	VERSCHRAUBUNG		

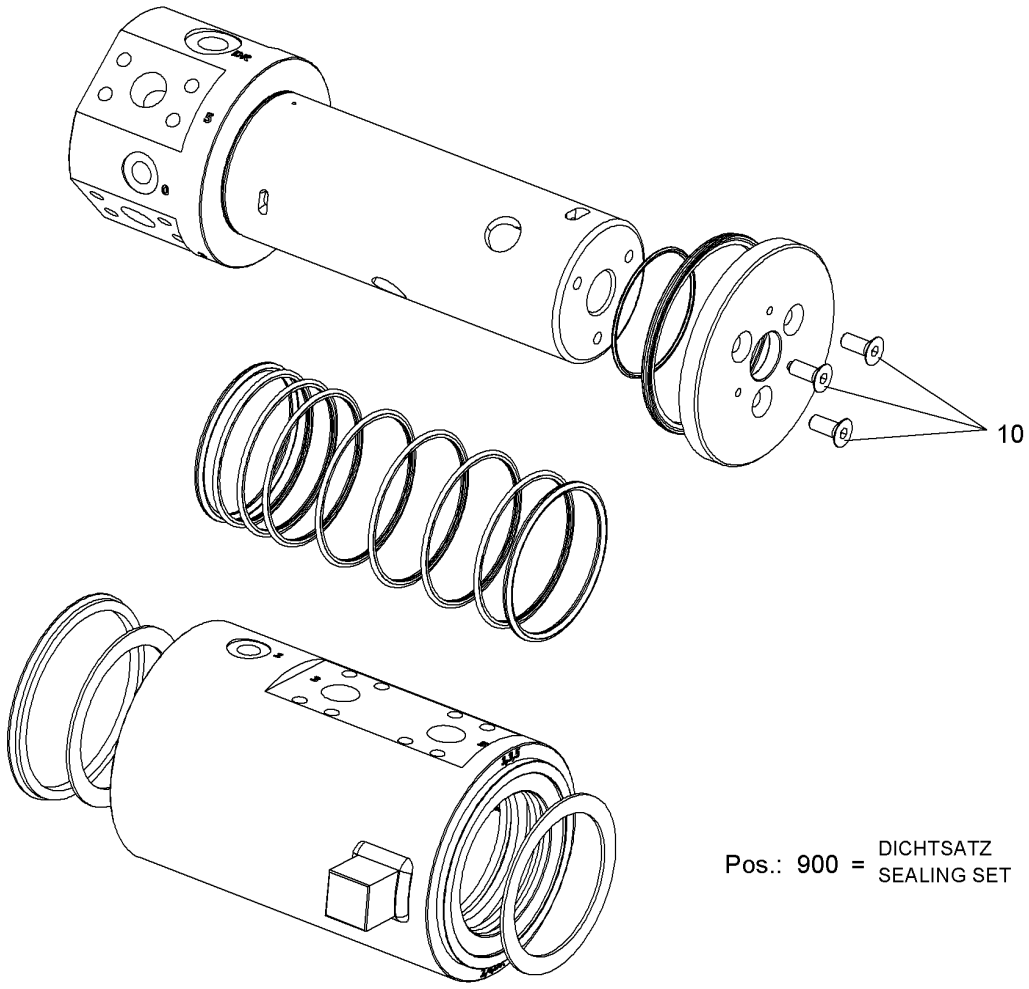

Pos.	Item	Quantity	Description	Bezeichnung	Serie	K
10	11249772	3	SCREW M12X30	SCHRAUBE		
900	11896178	1	SEALING SET ⇨ ❑ 446	DS		

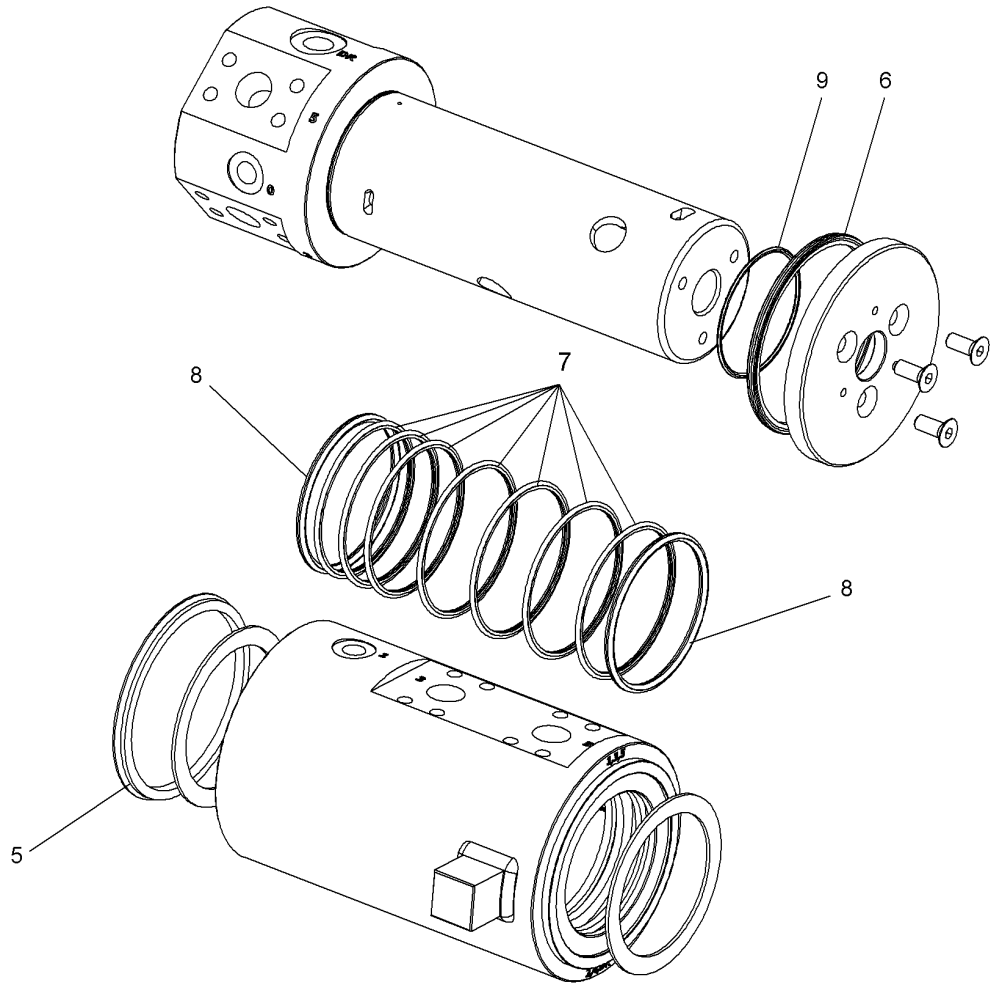

Pos.	Item	Quantity	Description	Bezeichnung	Serie	K
5	11251437	1	V-RING	V-RING		
6	11251434	1	SEAL	DICHTUNG		
7	11253456	7	LIFETIME SEAL	GLEITDICHTRING		
8	11251423	2	O-RING	O-RING		
9	11249804	1	O-RING	O-RING		

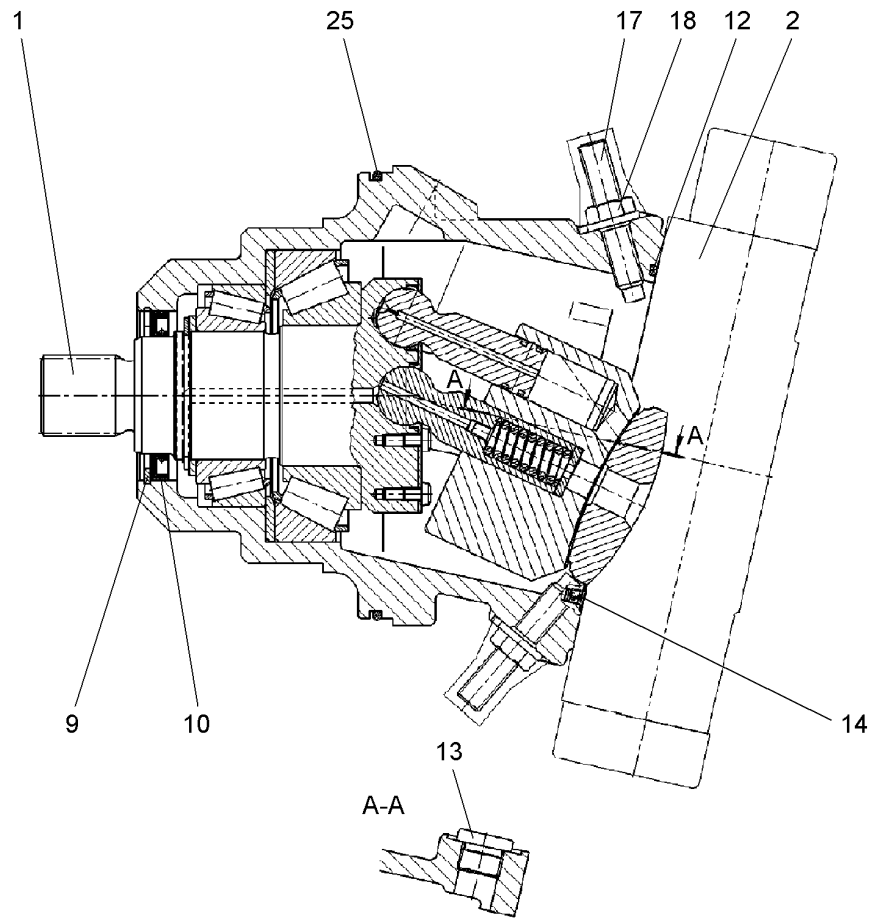

Pos.	Item	Quantity	Description	Bezeichnung	Serie	K
1	10503513	1	DRIVING GEAR ⇨ ❑ 448	TRIEBWERK		
2	11224738	1	ADJUSTMENT ⇨ ❑ 450	VERSTELLUNG		
9	10598700	1	LOCKING RING	SICHERUNGSRING		
10	790563914	1	SHAFT SEAL	WELLENDICHTRING		
12	726459414	1	O-RING	O-RING		
13	10503477	1	SCREW PLUG M26X1.5	VERSCHLUSSSCHRAUBE		
14	7022118	1	O-RING	O-RING		
17	7373597	2	GRUB SCREW	GEWINDESTIFT		
18	7005072	2	SEALING NUT M12X1.75	DICHTMUTTER		
25	11224740	1	O-RING	O-RING		

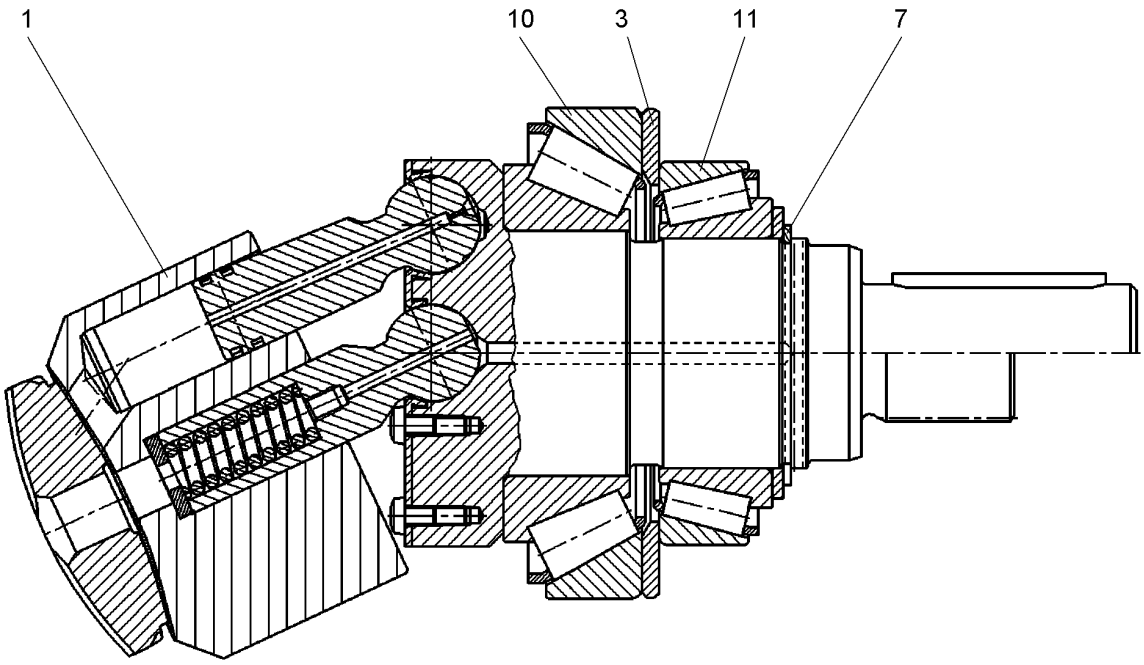

Pos.: 98 = DS ANTRIEBSWELLE
SEAL KIT DRIVE SHAFT

610760

Pos.	Item	Quantity	Description	Bezeichnung	Serie	K
1	10007947	1	HYDRAULIC PARTS DRIVING GEAR ⇨ ❑ 449	TRIEBWERK HYDRAULIKTEIL		
3	10007971	1	SHIM RING	PASSSCHEIBE		
7	11214714	1	LOCKING RING	SICHERUNGSRING		
10	11214718	1	TAPERED ROLLER BEARING	KEGELROLLENLAGER		
11	11214719	1	TAPERED ROLLER BEARING	KEGELROLLENLAGER		
98	512416214	1	SEAL KIT DRIVE SHAFT	DS ANTRIEBSWELLE		

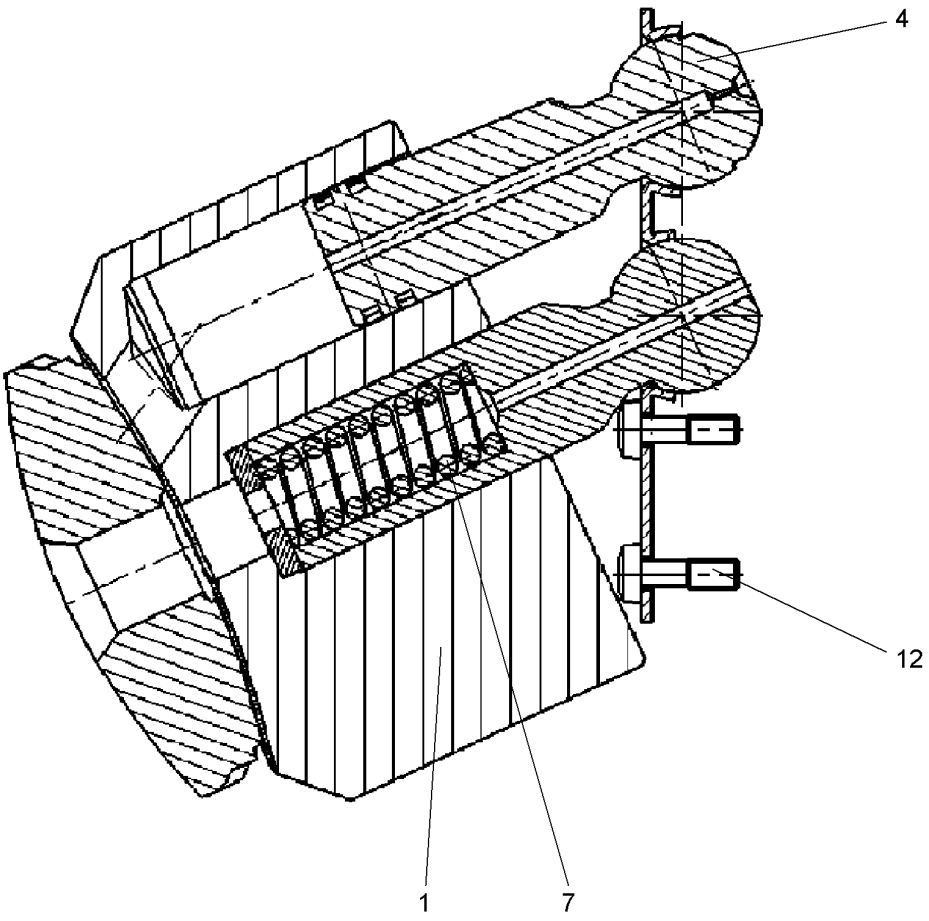

Pos.	Item	Quantity	Description	Bezeichnung	Serie	K
1	10007948	1	CYLINDER	ZYLINDER		
4	10007952	7	PISTON	KOLBEN		
7	10007967	1	PRESSURE SPRING	DRUCKFEDER		
12	10342275	14	OVAL SCREW M6X20 10.9	LINSENSCHRAUBE		

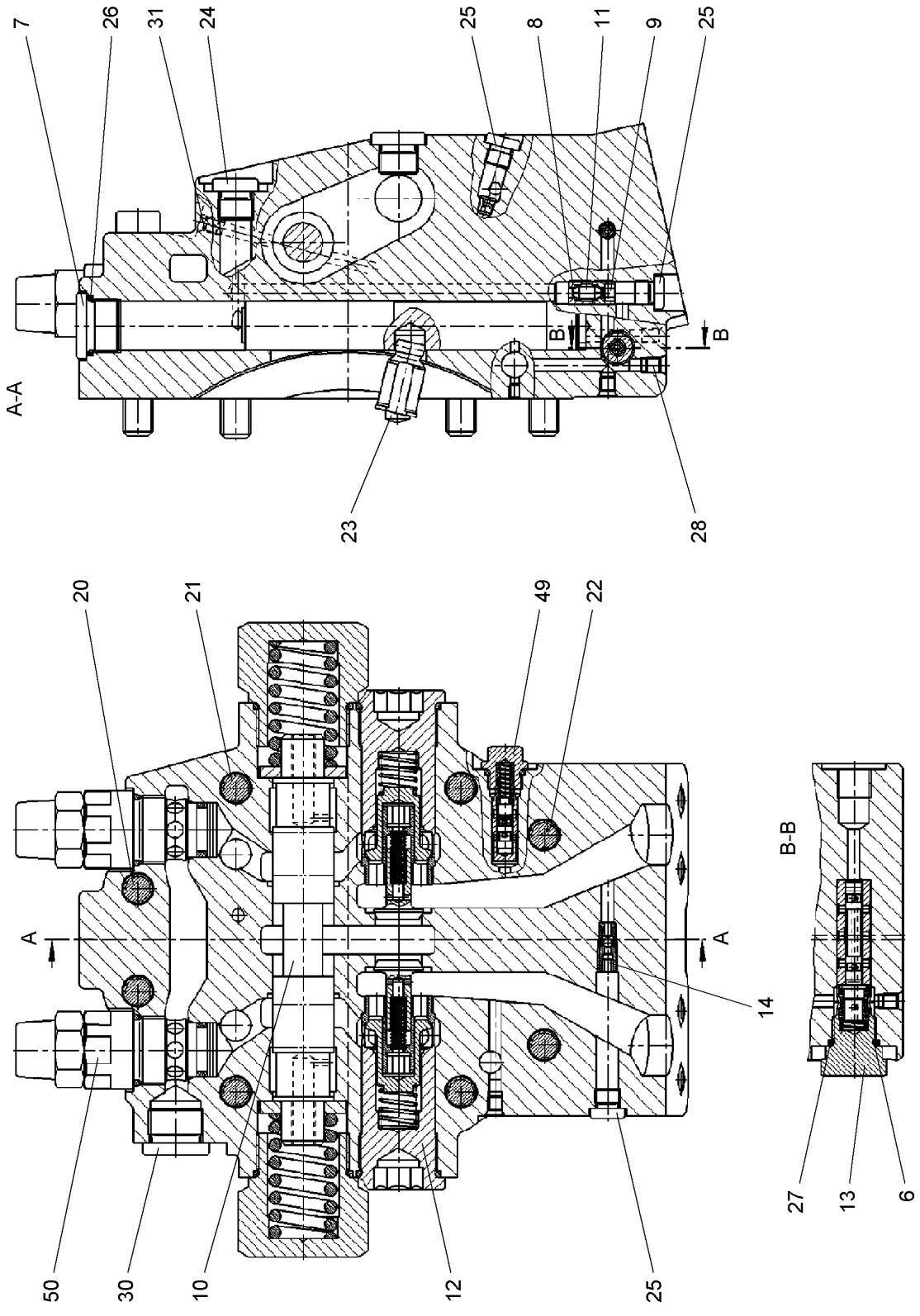
7
26
31
24
25
8
11
9
25
A-A
B
B
23
28
20
21
49
22
A
A
14
50
30
10
12
25
B-B
27
13
6
604984

Pos.	Item	Quantity	Description	Bezeichnung	Serie	K
6	10115224	1	PRESSURE SPRING	DRUCKFEDER		
7	11224761	1	SCREW PLUG	VERSCHLUSSSCHRAUBE		
8	7615603	1	THROTTLE SCREW	DROSSELSCHRAUBE		
9	7615604	1	THROTTLE SCREW	DROSSELSCHRAUBE		
10	512411914	1	BRAKE VALVE	BREMSVENTIL		
11	10115230	1	PIN	STIFT		
12	11224762	2	VALVE	VENTIL		
13	10115232	1	SCREW PLUG	VERSCHLUSSSCHRAUBE		
14	10446566	1	SHUTTLE VALVE ⇨ ❑ 452	WECHSELVENTIL		
20	11220320	2	SOCKET HEAD SCREW	ZYLINDERSCHRAUBE		
21	11220320	2	SOCKET HEAD SCREW	ZYLINDERSCHRAUBE		
22	11224767	4	SOCKET HEAD SCREW	ZYLINDERSCHRAUBE		
23	10598777	2	PARALLEL PIN	ZYLINDERSTIFT		
24	7414500	3	SCREW PLUG	VERSCHLUSSSCHRAUBE		
25	10115237	4	SCREW PLUG M10X1	VERSCHLUSSSCHRAUBE		
26	7028151	1	O-RING	O-RING		
27	10115240	1	O-RING	O-RING		
28	7022127	5	DOUBLE PLUG	DOPPELABREISSSTOPFEN		
30	10519025	1	SCREW PLUG	VERSCHLUSSSCHRAUBE		
31	7012971	1	DOUBLE PLUG	DOPPELABREISSSTOPFEN		
49	10115241	1	PRESSURE CONTROL VALVE	DRUCKREGELVENTIL		
50	511655114	2	PRESSURE LIMITING VALVE	DRUCKBEGRENZUNGSVENTIL		

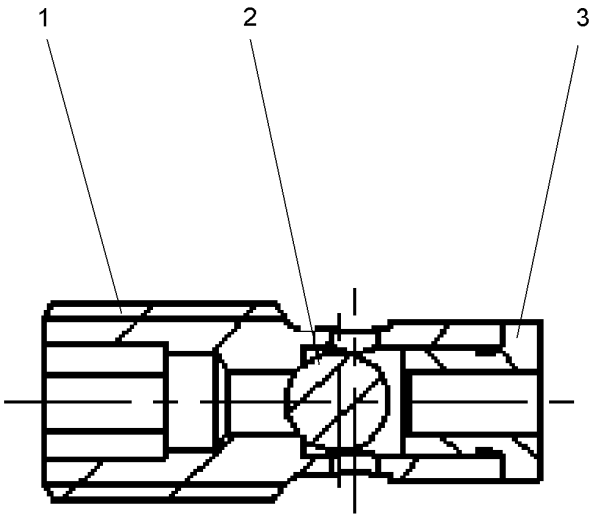

606080

Pos.	Item	Quantity	Description	Bezeichnung	Serie	K
1	11214946	1	VALVE SCREW	VENTILSCHRAUBE		
2	11225403	1	BALL	KUGEL		
3	10115304	1	BUSHING	BUCHSE		

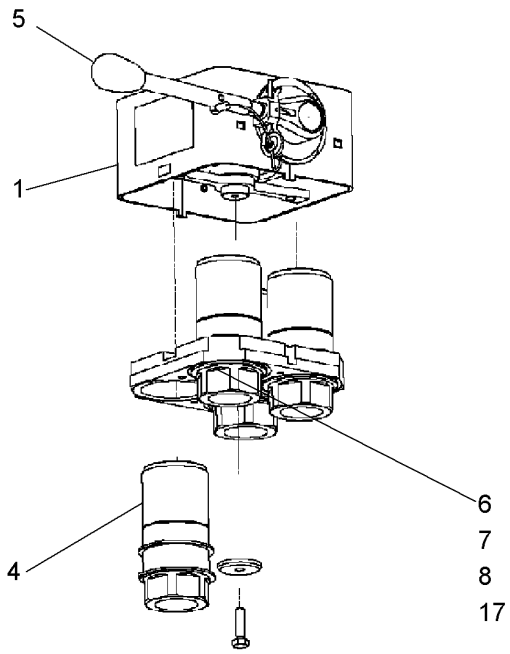

Pos.	Item	Quantity	Description	Bezeichnung	Serie	K
1	10447744	1	HOUSING	GEHAEUSE		
4	10447748	4	SLEEVE	MUFFE		
5	10447749	1	LEVER	HEBEL		
6	11293193	1	HUB	NABE		
7	11293195	1	WASHER	SCHEIBE		
8	11293196	1	LOCKING RING DIN 471 14X1 FEDERSTAHL/	SICHERUNGSRING		
17	11292956	1	GUIDE	FUEHRUNG		

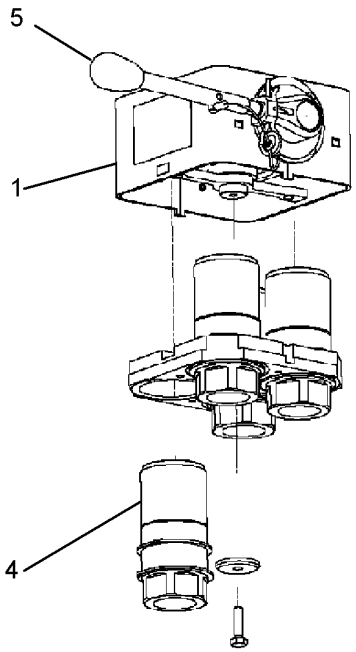

603333

Pos.	Item	Quantity	Description	Bezeichnung	Serie	K
1	10447743	1	HOUSING	GEHAEUSE		
4	10447748	4	SLEEVE	MUFFE		
5	10447749	1	LEVER	HEBEL		

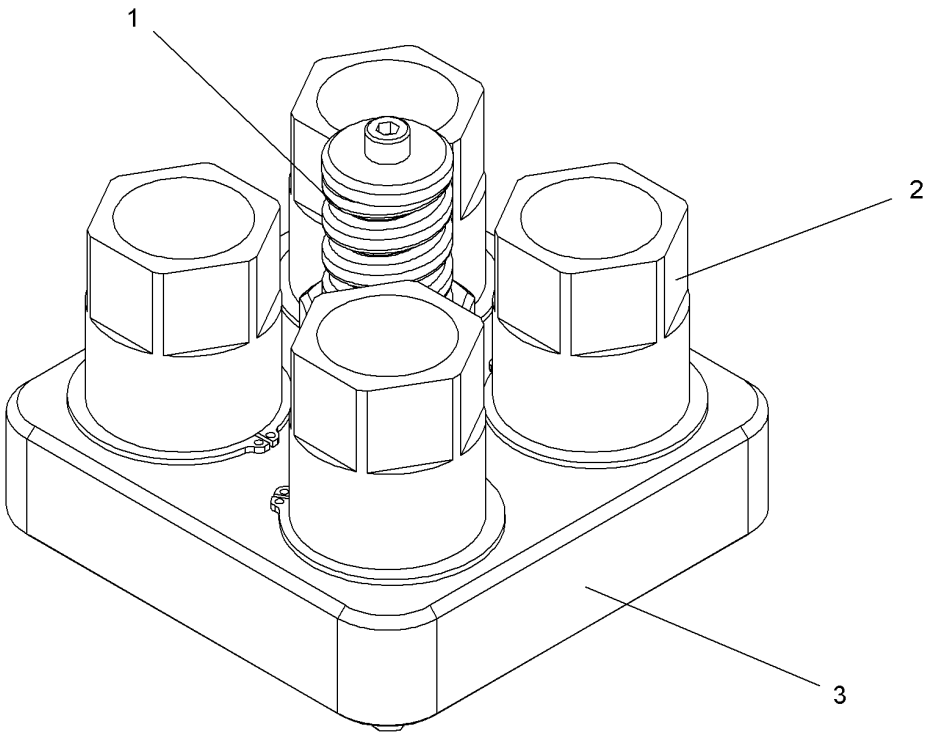

Pos.	Item	Quantity	Description	Bezeichnung	Serie	K
1	10572236	1	GUIDING BOLT	FUEHRUNGSBOLZEN		
2	10447747	4	PLUG	STECKER		
3	10572241	1	COVER	DECKEL		

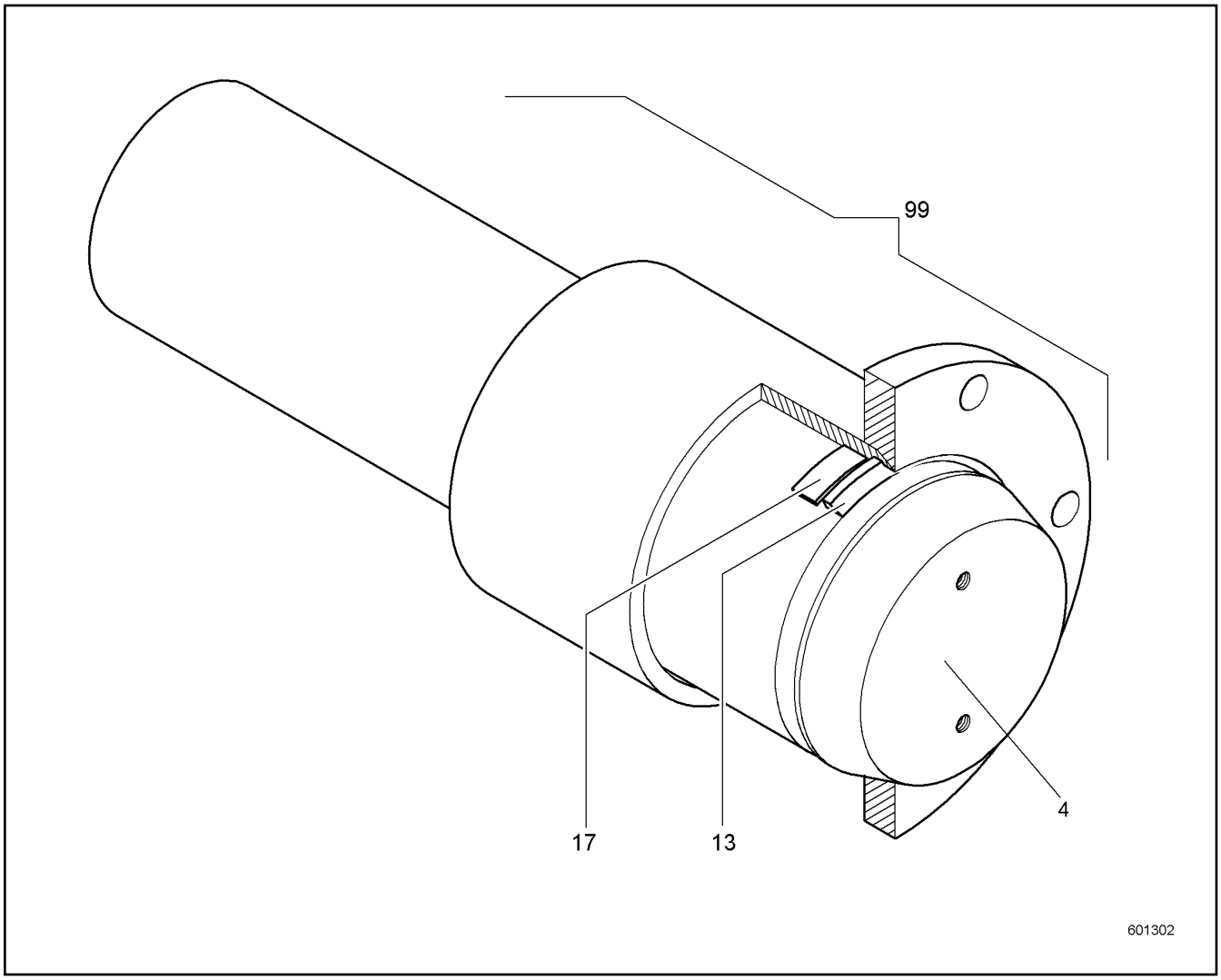

Pos.	Item	Quantity	Description	Bezeichnung	Serie	K
4	11230438	1	PIN 150X330	BOLZEN		
13	726054214	1	SCRAPER RING	ABSTREIFRING		
17	513319814	1	ROD GUIDE RING	STANGENFUEHRUNGSRING		
99	513319014	1	SEALING SET CPL CYL	DS KPL ZYL		

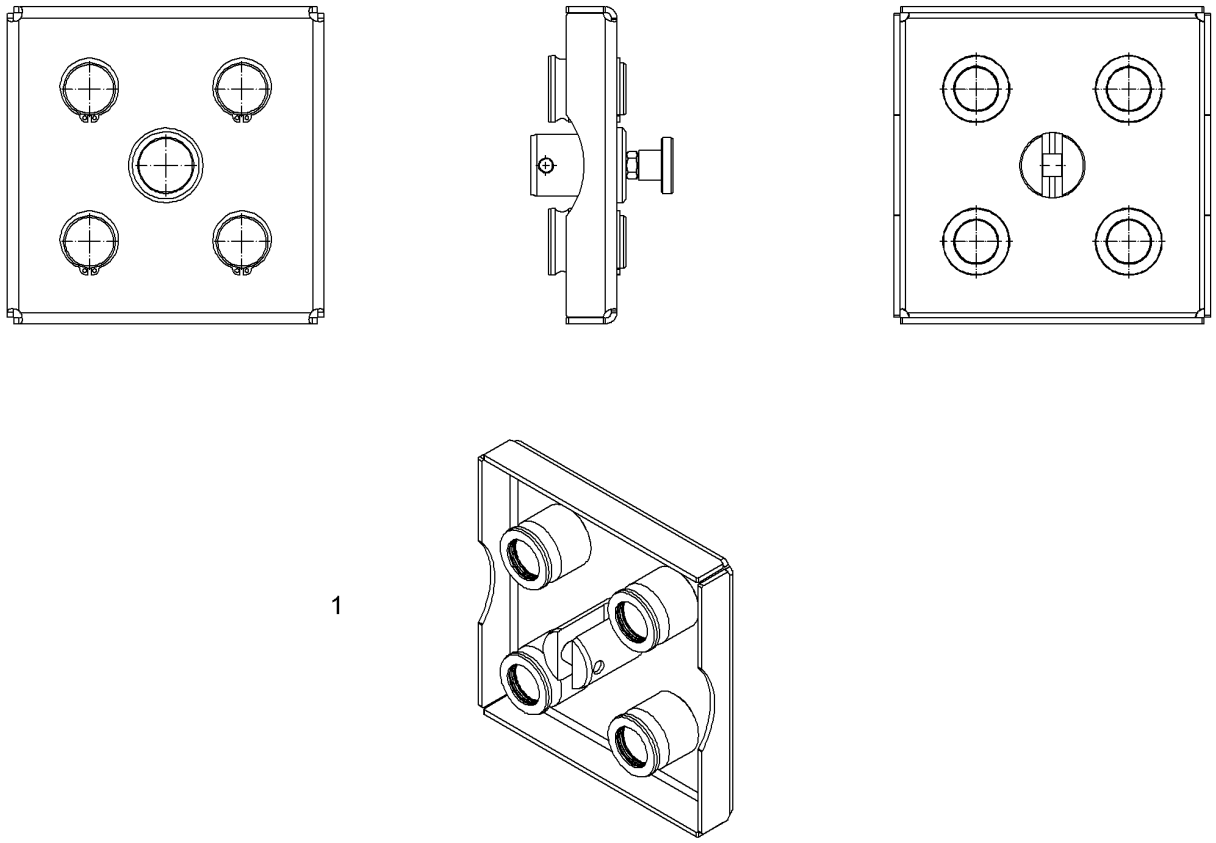

Pos.	Item	Quantity	Description	Bezeichnung	Serie	K
1	11247913	4	PLUG	STECKER		

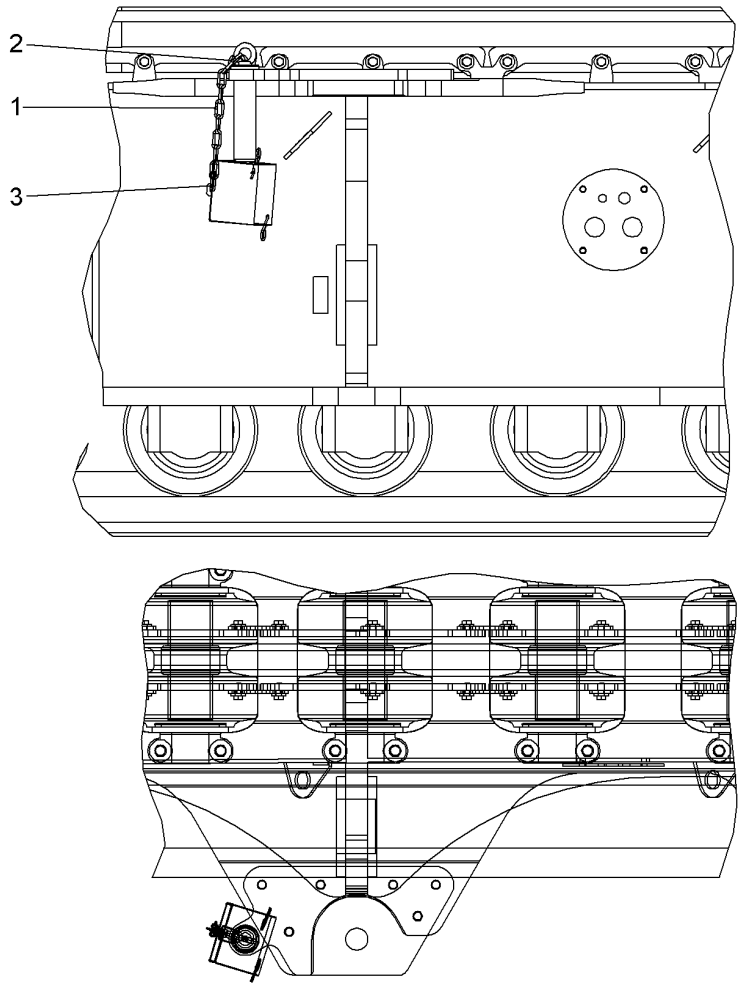

Pos.	Item	Quantity	Description	Bezeichnung	Serie	K
1	740000208	0.4	CHAIN	KETTE		
2	744010014	1	SNAP HOOK	KARABINERHAKEN		
3	773939214	1	SHACKLE	SCHAEKEL		

ACHTUNG !
ATTENTION !
ATTENTION !
ATENCIÓN !
ATENÇÃO !
ВНИМАНИЕ

Für Schlauchbestellungen kann über die Schlauchnummer, in der entsprechenden Schlauchliste, die Identnummer festgestellt werden.

For ordering flexible hoses you can find the identification number through the hose-number in the corresponding hose-list.

Pour des ordres de tuyau flexible le nombre d'identification on voit dans la liste de tuyau flexible correspondente.

Para el pedido de manguera, indicar el número de identificación de la manguera de la lista respectiva.

Para se encomendar uma mangueira, consulte o número de identificaçao na respectiva lista de mangueiras.

Для оформления заказов на шланги/рукавы идент. № может быть определен при помощи номера шланга/рукава, указанного в соответствующем перечне шлангов/рукавов.

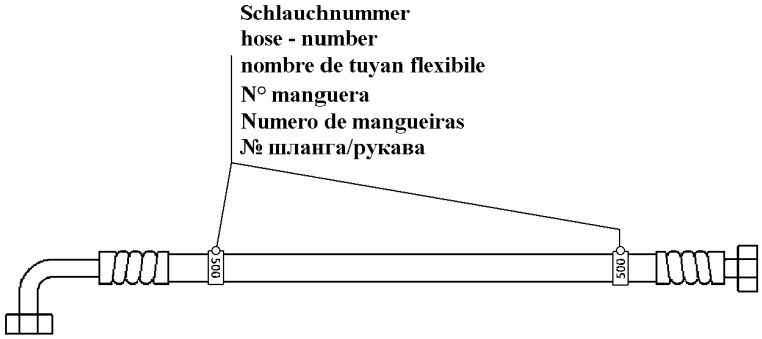

500000

Pos.	Item	Quantity	Description	Bezeichnung	Serie	K
100	996084614	1	HOSE CPL	SCHLAUCH KPL		
101	996087014	1	HOSE CPL	SCHLAUCH KPL		
102	928209814	1	HOSE CPL	SCHLAUCH KPL		
103	928872514	1	HOSE CPL	SCHLAUCH KPL		
104	993204614	1	HOSE CPL	SCHLAUCH KPL		
105	996084614	1	HOSE CPL	SCHLAUCH KPL		
106	996087014	1	HOSE CPL	SCHLAUCH KPL		
107	928209814	1	HOSE CPL	SCHLAUCH KPL		
108	928872814	1	HOSE CPL	SCHLAUCH KPL		
109	993204614	1	HOSE CPL	SCHLAUCH KPL		
110	996991514	1	HOSE CPL	SCHLAUCH KPL		
111	928265514	1	HOSE CPL	SCHLAUCH KPL		
112	918288114	1	HOSE CPL	SCHLAUCH KPL		
113	918276114	1	HOSE CPL	SCHLAUCH KPL		
114	996991514	1	HOSE CPL	SCHLAUCH KPL		
115	928265514	1	HOSE CPL	SCHLAUCH KPL		
116	918288114	1	HOSE CPL	SCHLAUCH KPL		
117	918276114	1	HOSE CPL	SCHLAUCH KPL		
118	928152414	1	HOSE CPL	SCHLAUCH KPL		
119	995437214	1	HOSE CPL	SCHLAUCH KPL		
120	996000214	1	HOSE CPL	SCHLAUCH KPL		
121	996026214	1	HOSE CPL	SCHLAUCH KPL		
122	928137514	1	HOSE CPL	SCHLAUCH KPL		
123	996204514	1	HOSE CPL	SCHLAUCH KPL		
124	996089814	1	HOSE CPL	SCHLAUCH KPL		
126	996204614	1	HOSE CPL	SCHLAUCH KPL		

ACHTUNG !
ATTENTION !
ATTENTION !
ATENCIÓN !
ATENÇÃO !
ВНИМАНИЕ

Für Schlauchbestellungen kann über die Schlauchnummer, in der entsprechenden Schlauchliste, die Identnummer festgestellt werden.

For ordering flexible hoses you can find the identification number through the hose-number in the corresponding hose-list.

Pour des ordres de tuyau flexible le nombre d'identification on voit dans la liste de tuyau flexible correspondente.

Para el pedido de manguera, indicar el número de identificación de la manguera de la lista respectiva.

Para se encomendar uma mangueira, consulte o número de identificaçao na respectiva lista de mangueiras.

Для оформления заказов на шланги/рукавы идент. № может быть определен при помощи номера шланга/рукава, указанного в соотетствующем перечне шлангов/рукавов.

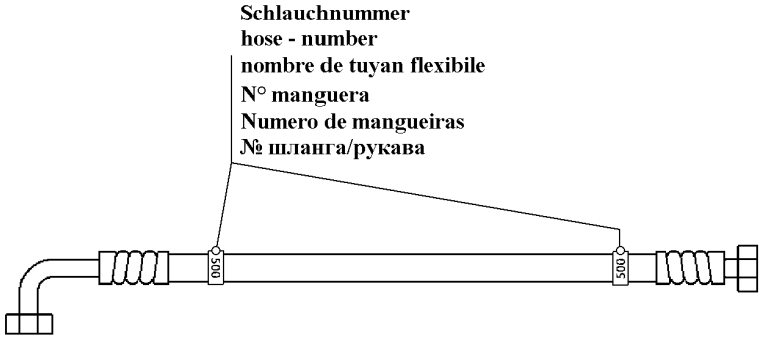

500000

Pos.	Item	Quantity	Description	Bezeichnung	Serie	K
127	918272514	1	HOSE CPL	SCHLAUCH KPL		
129	996026214	1	HOSE CPL	SCHLAUCH KPL		
130	996450714	1	HOSE CPL	SCHLAUCH KPL		
131	992564614	1	HOSE CPL	SCHLAUCH KPL		
132	996972614	1	HOSE CPL	SCHLAUCH KPL		
133	995085214	1	HOSE CPL	SCHLAUCH KPL		
134	995085214	1	HOSE CPL	SCHLAUCH KPL		
135	990045814	1	HOSE CPL	SCHLAUCH KPL		
136	991276414	1	HOSE CPL	SCHLAUCH KPL		
137	991961214	1	HOSE CPL	SCHLAUCH KPL		
138	911292114	1	HOSE CPL	SCHLAUCH KPL		
139	928538414	1	HOSE CPL	SCHLAUCH KPL		
140	995219914	1	HOSE CPL	SCHLAUCH KPL		
141	996204714	1	HOSE CPL	SCHLAUCH KPL		
142	996450714	1	HOSE CPL	SCHLAUCH KPL		
143	992564614	1	HOSE CPL	SCHLAUCH KPL		
144	991276414	1	HOSE CPL	SCHLAUCH KPL		
145	990045814	1	HOSE CPL	SCHLAUCH KPL		
150	928973314	1	HOSE CPL	SCHLAUCH KPL		
151	928169614	1	HOSE CPL	SCHLAUCH KPL		
152	991312114	1	HOSE CPL	SCHLAUCH KPL		
153	929467714	1	HOSE CPL	SCHLAUCH KPL		
154	928865914	1	HOSE CPL	SCHLAUCH KPL		
155	991312114	1	HOSE CPL	SCHLAUCH KPL		
156	928973314	1	HOSE CPL	SCHLAUCH KPL		
157	929467714	1	HOSE CPL	SCHLAUCH KPL		

ACHTUNG !
ATTENTION !
ATTENTION !
ATENCIÓN !
ATENÇÃO !
ВНИМАНИЕ

Für Schlauchbestellungen kann über die Schlauchnummer, in der entsprechenden Schlauchliste, die Identnummer festgestellt werden.

For ordering flexible hoses you can find the identification number through the hose-number in the corresponding hose-list.

Pour des ordres de tuyau flexible le nombre d'identification on voit dans la liste de tuyau flexible correspondente.

Para el pedido de manguera, indicar el número de identificación de la manguera de la lista respectiva.

Para se encomendar uma mangueira, consulte o número de identificaçao na respectiva lista de mangueiras.

Для оформления заказов на шланги/рукавы идент. № может быть определен при помощи номера шланга/рукава, указанного в соотетствующем перечне шлангов/рукавов.

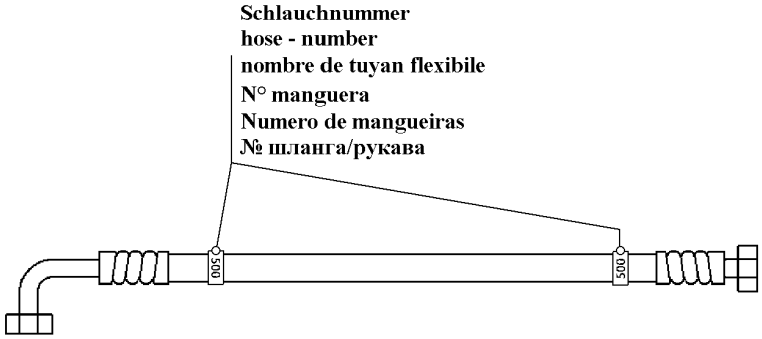

500000

Pos.	Item	Quantity	Description	Bezeichnung	Serie	K
158	928865914	1	HOSE CPL	SCHLAUCH KPL		
159	928169614	1	HOSE CPL	SCHLAUCH KPL		
160	996204814	1	HOSE CPL	SCHLAUCH KPL		
161	996084314	1	HOSE CPL	SCHLAUCH KPL		
162	918820914	1	HOSE CPL	SCHLAUCH KPL		
163	928003714	1	HOSE CPL	SCHLAUCH KPL		
164	996084314	1	HOSE CPL	SCHLAUCH KPL		
165	996204814	1	HOSE CPL	SCHLAUCH KPL		
166	929399714	1	HOSE CPL	SCHLAUCH KPL		
167	995240114	1	HOSE CPL	SCHLAUCH KPL		

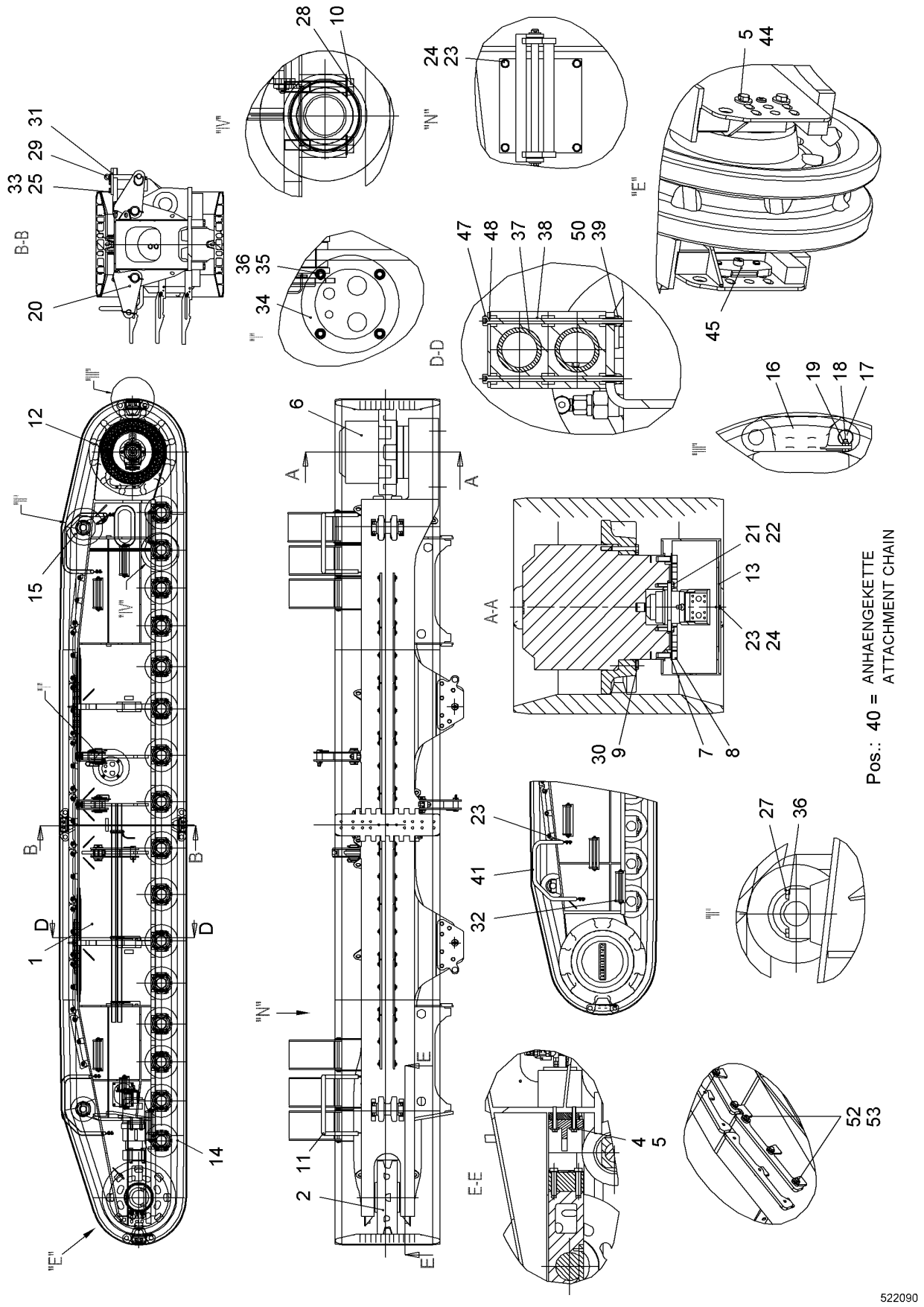

21.6.2017 522090	**138406_ETK_001**	462 (1/2)
LIEBHERR	**CRAWLER CARRIER RIGHT CPL** **RAUPENTRAEGER RE KPL**	**11 89 365 0**

Pos.	Item	Quantity	Description	Bezeichnung	Serie	K
1	11893689	1	CRAWLER CARRIER ST.CONST.	RAUPENTRAEGER RE SCHWK		
2	10557161	1	GUIDE WHEEL UNIT CPL ⇨ ❑ 464	LEITRADEINHEIT KPL		
4	10543932	4	HEX SCREW ISO 4017 M20X130 10.9	SECHSKANTSCHRAUBE		
5	10567956	8	WASHER DIN 6340 21 C35	SCHEIBE		
6	969317801	1	TRACTION DRIVE ⇨ ❑ 466	FAHRANTRIEB		
7	421500614	30	WASHER EN 14399-6 30 ST	SCHEIBE		
8	10336668	30	SOCKET HEAD SCREW DIN 912 M30X2X80 12.	ZYLINDERSCHRAUBE		
9	460014603	45	WASHER DIN 6916 25 C45	SCHEIBE		
10	10544028	64	HEX SCREW ISO 4014 M30X180 10.9	SECHSKANTSCHRAUBE		
11	10523559	1	HANDRAIL	HANDLAUF		
12	10521183	1	SPROCKET	TURAS		
13	971333403	1	COVER	DECKEL		
14	10552633	16	RUNNING ROLLER CPL	LAUFROLLE KPL		
15	790523314	2	CARRYING ROLLER CPL	TRAGROLLE KPL		
16	388291208	72	FLOOR PLATE	BODENPLATTE		
17	954584908	144	ROUND STEEL	RUNDSTAHL		
18	406517314	152	HEX SCREW ISO 4017 M12X30 A4-70	SECHSKANTSCHRAUBE		
19	10540495	152	HEX NUT ISO 10511 M12 A4	SECHSKANTMUTTER		
20	971333503	3	TRANSPORT BRACKET CPL	TRANSPORTARM KPL		
21	10544174	2	WASHER ISO 7089 20	SCHEIBE		
22	10545854	2	HEX SCREW ISO 4017 M20X75 10.9	SECHSKANTSCHRAUBE		
23	4901782	15	WASHER ISO 7089 12 A4	SCHEIBE		
24	406517914	7	HEX SCREW ISO 4017 M12X25 A4-70	SECHSKANTSCHRAUBE		
25	10543944	12	HEX SCREW ISO 4017 M24X80 10.9	SECHSKANTSCHRAUBE		
27	10543910	8	HEX SCREW ISO 4017 M16X90 10.9	SECHSKANTSCHRAUBE		
28	10544177	64	WASHER ISO 7089 30	SCHEIBE		
29	992921714	2	PIN CPL	BOLZEN KPL		
30	406154014	45	HEX SCREW ISO 8765 M24X2X200 10.9	SECHSKANTSCHRAUBE		
31	954373603	2	WP	WP		
32	10501795	6	ACCESS CPL ⇨ ❑ 471	AUFSTIEG KPL		
33	10544176	12	WASHER ISO 7089 24	SCHEIBE		
34	10558762	1	DIAPHRAGM	SCHOTTBLECH		
35	10539315	4	HEX SCREW ISO 4017 M16X25 10.9	SECHSKANTSCHRAUBE		
36	10544172	12	WASHER ISO 7089 16	SCHEIBE		
37	510511814	5	HYDRAULIC HOSE	HYDRAULIKSCHLAUCH		
38	7413103	12	CLAMP-HALF	KLEMMHAELFTE		
39	10540492	6	HEX NUT ISO 10511 M6 A4	SECHSKANTMUTTER		
40	990835714	1	ATTACHMENT CHAIN ⇨ ❑ 472	ANHAENGEKETTE		
41	10518461	1	HANDRAIL	HANDLAUF		
44	10543920	4	HEX SCREW ISO 4017 M20X40 10.9	SECHSKANTSCHRAUBE		
45	10539631	2	LIMIT STOP	ANSCHLAG		
47	10446871	6	SOCKET HEAD SCREW ISO 4762 M6X155 10.9	ZYLINDERSCHRAUBE		
48	602026414	3	LID PLATE	DECKPLATTE		
50	420000414	6	WASHER ISO 7089 6 A4	SCHEIBE		
52	10539317	54	HEX SCREW ISO 4017 M16X35 10.9	SECHSKANTSCHRAUBE		
53	421600901	54	WASHER DIN 7349 17 ST	SCHEIBE		

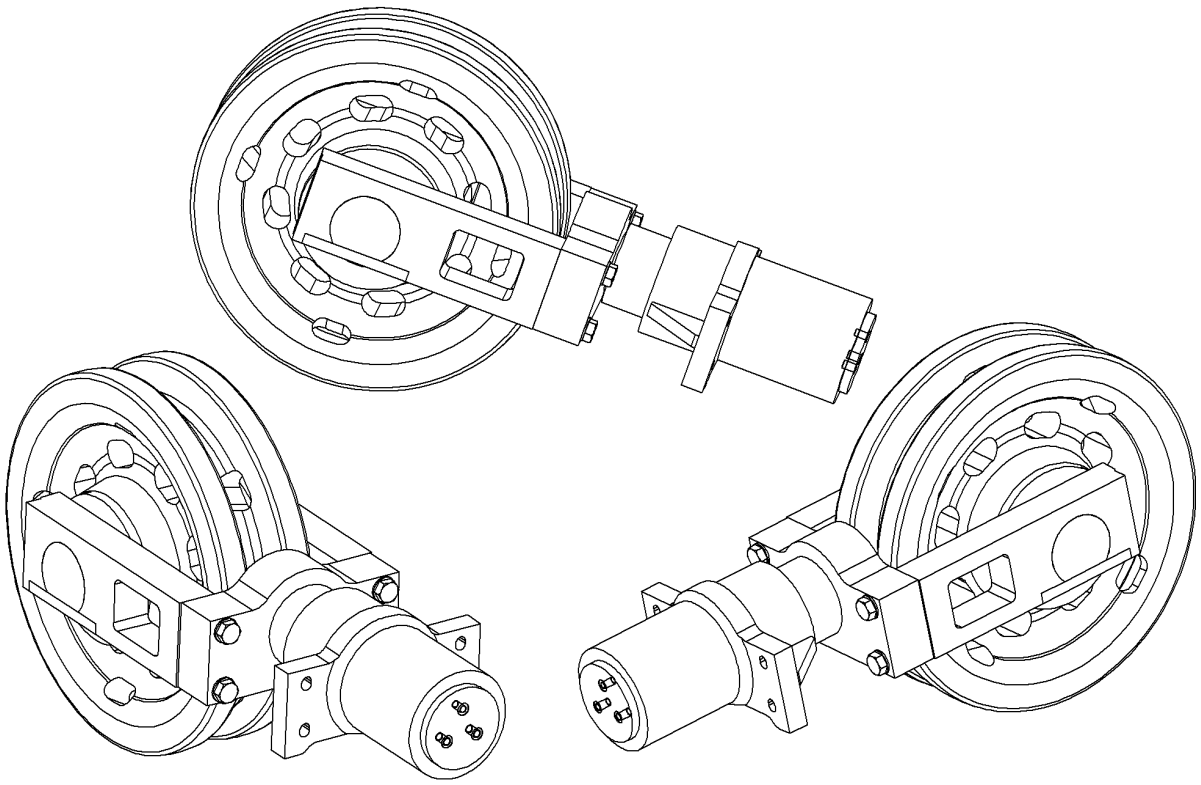

Pos.	Item	Quantity	Description	Bezeichnung	Serie	K
1	10557162	1	GUIDE WHEEL CPL ⇨ ❑ 465	LEITRAD KPL		
2	10557163	1	TENSION JACK HYDR CPL	SPANNER HYDR KPL		

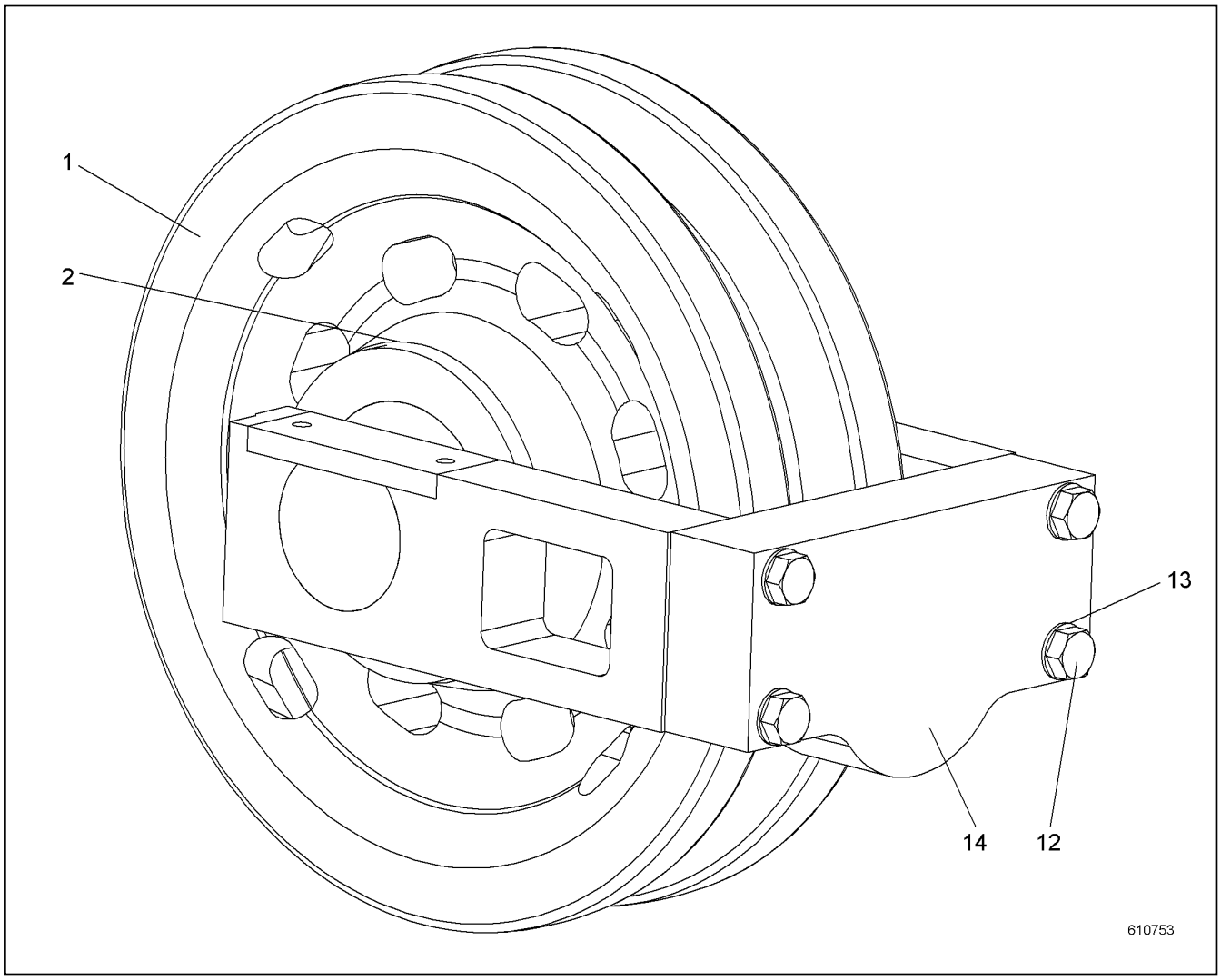

Pos.	Item	Quantity	Description	Bezeichnung	Serie	K
1	11299752	1	GUIDE WHEEL	LEITRAD		
2	11890145	2	BUSHING	BUCHSE		
12	10590183	4	SCREW M30X1.5X150	SCHRAUBE		
13	10544177	4	WASHER ISO 7089 30	SCHEIBE		
14	10589483	1	TRAVERSE	TRAVERSE		

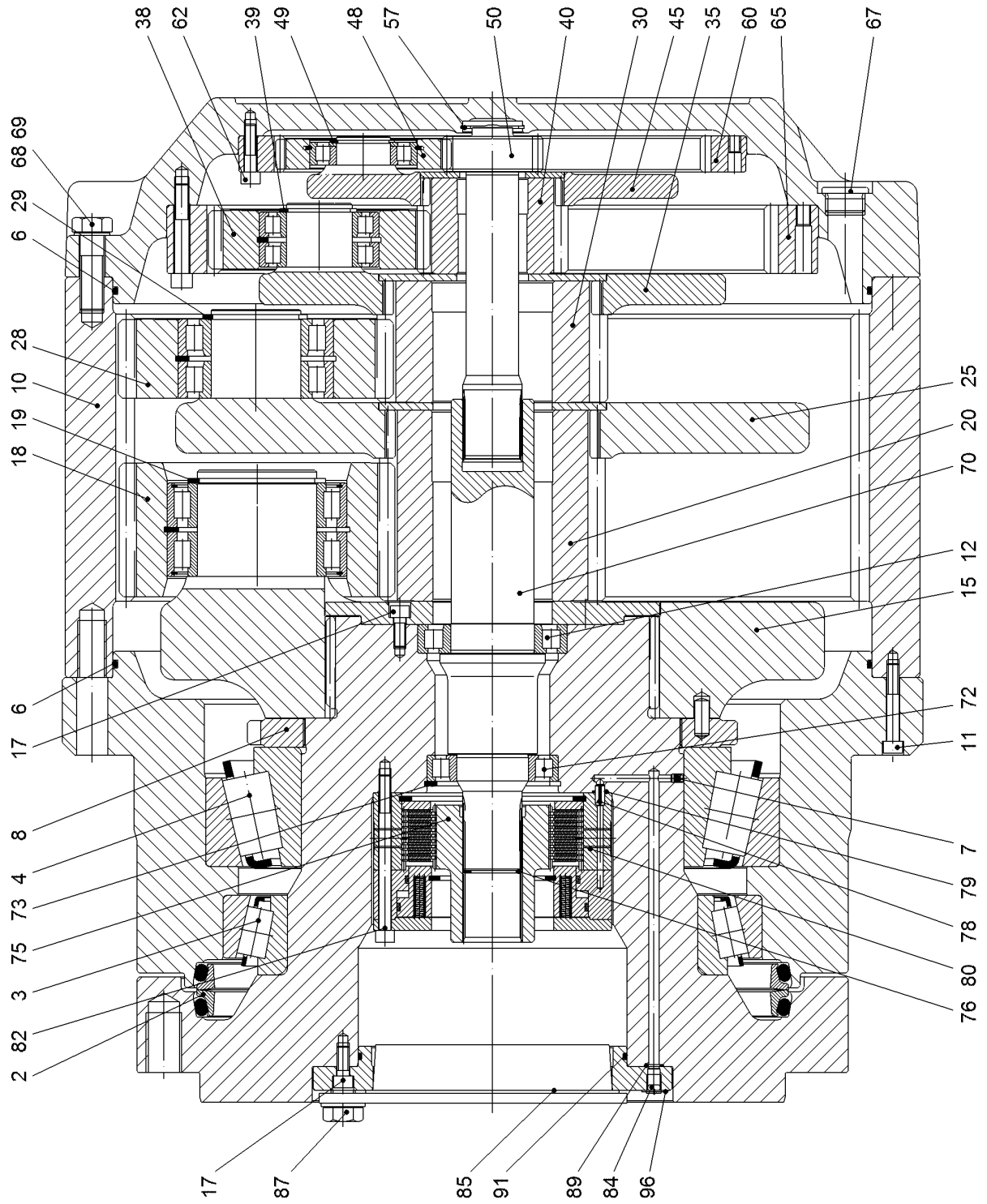
38
62
39
49
48
57
50
40
30
45
35
60
65
67
68 69
6 29
28
10
19
18
25
20
70
12
15
6
17
72
11
8
7
4
79
73
78
75
80
3
76
82
2
17
87
85
91
89
84
96
606629

Pos.	Item	Quantity	Description	Bezeichnung	Serie	K
2	7610244	1	AXIAL FACE SEAL	GLEITRINGDICHTUNG		
3	761008703	1	TAPERED ROLLER BEARING	KEGELROLLENLAGER		
4	746225801	1	TAPERED ROLLER BEARING	KEGELROLLENLAGER		
6	726450601	2	O-RING	O-RING		
7	7380480	1	SEALING PLUG	DICHTSTOPFEN		
8	944403703	1	ADJUSTING NUT	EINSTELLMUTTER		
10	944403803	1	INNER WHEEL	INNENRAD		
11	4630200	15	SOCKET HEAD SCREW ISO 4762 M10X65 10.9	ZYLINDERSCHRAUBE		
12	7610021	1	CYL ROLLER BEARING	ZYL ROLLENLAGER		
15	944403903	1	PLANETARY CARRIER	PLANETENTRAEGER		
17	4043124	12	SOCKET HEAD SCREW ISO 4762 M10X25 10.9	ZYLINDERSCHRAUBE		
18	944404303	5	PLANET WHEEL ⇨ ❑ 468	PLANETENRAD		
19	428011901	5	LOCKING RING DIN 471 100X4 FEDERSTAHL/	SICHERUNGSRING		
20	944404503	1	SUN WHEEL	SONNENRAD		
25	944404603	1	PLANETARY CARRIER	PLANETENTRAEGER		
28	944404803	3	PLANET WHEEL ⇨ ❑ 469	PLANETENRAD		
29	10171594	3	LOCKING RING DIN 471	SICHERUNGSRING		
30	944405203	1	SUN WHEEL	SONNENRAD		
35	944406403	1	PLANETARY CARRIER	PLANETENTRAEGER		
38	944406503	3	PLANET WHEEL ⇨ ❑ 470	PLANETENRAD		
39	400093303	3	LOCKING RING DIN 471 55X3	SICHERUNGSRING		
40	944378403	1	SUN WHEEL	SONNENRAD		
45	969392201	1	PLANETARY CARRIER	PLANETENTRAEGER		
48	944434703	3	PLANET WHEEL	PLANETENRAD		
49	10171583	3	LOCKING RING DIN 471 45X1.75	SICHERUNGSRING		
50	944434903	1	DRIVE SHAFT	ANTRIEBSWELLE		
57	429612001	1	L RING JL50X2	L-RING		
60	944378903	1	INNER WHEEL	INNENRAD		
62	4900981	24	SOCKET HEAD SCREW ISO 4762 M10X45 10.9	ZYLINDERSCHRAUBE		
65	944406703	1	INNER WHEEL	INNENRAD		
67	409710601	3	SCREW PLUG AEHNL.DIN 908 M33X2 ST	VERSCHLUSSSCHRAUBE		
68	10543925	12	HEX SCREW ISO 4017 M20X65 10.9	SECHSKANTSCHRAUBE		
69	423912001	12	LOCK WASHER 20X21X30X2.8 VS	SICHERUNGSSCHEIBE		
70	944405903	1	INTERMEDIATE SHAFT	ZWISCHENWELLE		
72	761001103	1	CYL ROLLER BEARING	ZYL ROLLENLAGER		
73	10171636	1	LOCKING RING DIN 472 110X4	SICHERUNGSRING		
75	944406203	1	MULTI-DISC CARRIER	LAMELLENTRAEGER		
76	428107101	1	LOCKING RING DIN 472 46X1.75	SICHERUNGSRING		
78	432008001	1	DOWEL PIN ISO 8752 8X16 ST	SPANNSTIFT		
79	726410201	1	O-RING	O-RING		
80	502037201	1	SPRING LOADED MULTI-DISC BRAKE ⇨ ❑ 350	FEDERDRUCKLAMELLENBREMS		
82	4002442	12	SOCKET HEAD SCREW ISO 4762 M10X130 10.	ZYLINDERSCHRAUBE		
84	779016501	1	BLANKING PLUG	VERSCHLUSSSTOPFEN		
85	779006901	1	CONICAL PLUG	KEGELSTOPFEN		
87	10543920	2	HEX SCREW ISO 4017 M20X40 10.9	SECHSKANTSCHRAUBE		
89	726403201	1	O-RING	O-RING		
91	726428401	1	O-RING	O-RING		
96	431500401	2	GROOVED NAIL ISO 8746 2X6 ST	KERBNAGEL		

OHNE BILD
WITHOUT ILLUSTRATION
SANS PLANCHE
SIN FIG.
SEM ILUSTRAÇÃO
БЕЗ ИЗОБРАЖЕНИЯ

600000

Pos.	Item	Quantity	Description	Bezeichnung	Serie	K
1	944404403	1	PLANET WHEEL	PLANETENRAD		
5	746506601	2	CYLINDRICAL ROLLER BEARING	ZYLINDERROLLENLAGER		
7	10171632	1	LOCKING RING DIN 472 90X3	SICHERUNGSRING		

OHNE BILD
WITHOUT ILLUSTRATION
SANS PLANCHE
SIN FIG.
SEM ILUSTRAÇÃO
БЕЗ ИЗОБРАЖЕНИЯ

600000

Pos.	Item	Quantity	Description	Bezeichnung	Serie	K
1	944404903	1	PLANET WHEEL	PLANETENRAD		
5	746413001	2	CYLINDRICAL ROLLER BEARING	ZYLINDERROLLENLAGER		
7	10171639	1	LOCKING RING DIN 472 130X4	SICHERUNGSRING		

OHNE BILD
WITHOUT ILLUSTRATION
SANS PLANCHE
SIN FIG.
SEM ILUSTRAÇÃO
БЕЗ ИЗОБРАЖЕНИЯ

600000

Pos.	Item	Quantity	Description	Bezeichnung	Serie	K
1	944406603	1	PLANET WHEEL	PLANETENRAD		
5	746310401	2	CYLINDRICAL ROLLER BEARING	ZYLINDERROLLENLAGER		
7	428104201	1	LOCKING RING DIN 472 100X4	SICHERUNGSRING		

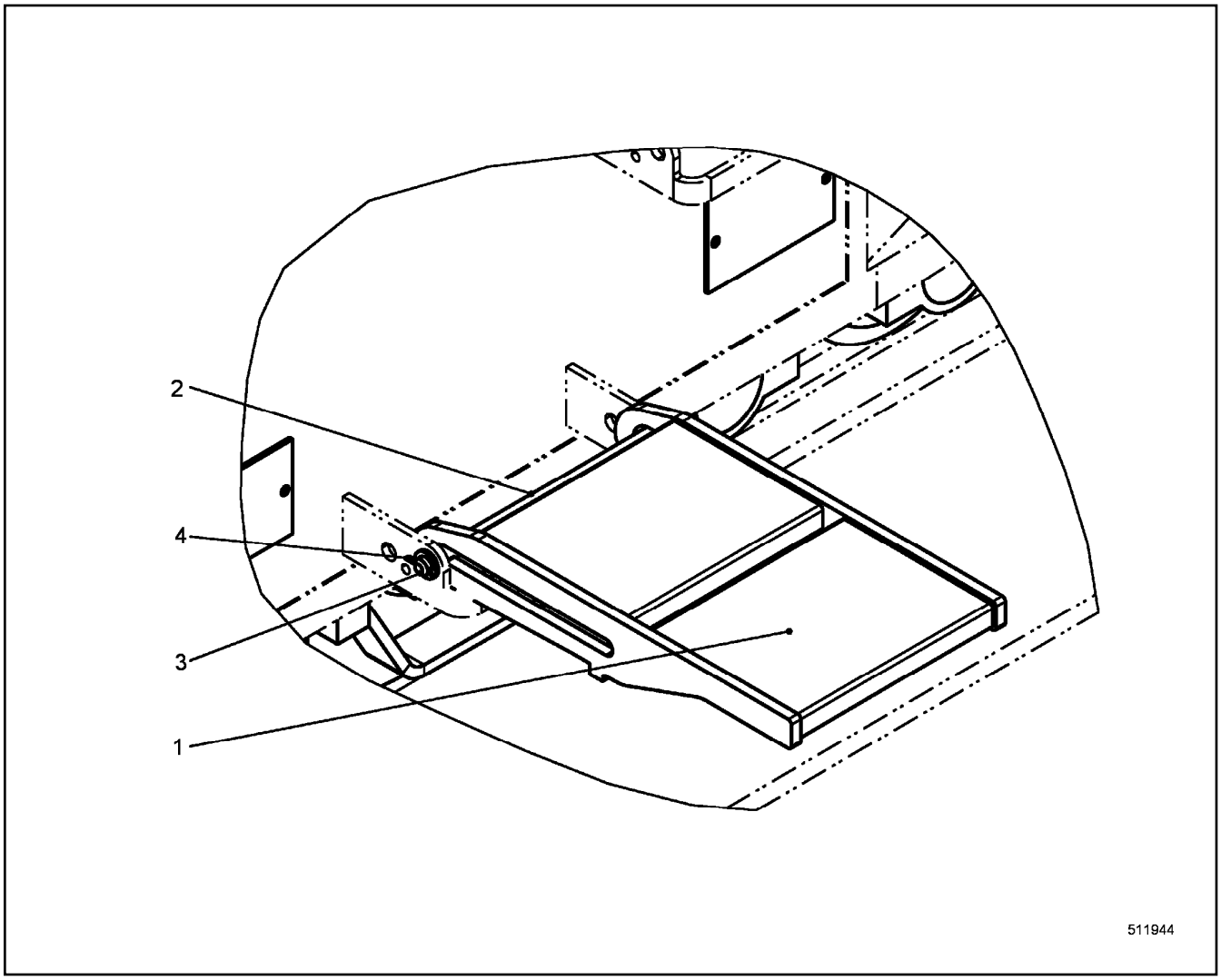

Pos.	Item	Quantity	Description	Bezeichnung	Serie	K
1	10501783	1	STEP	TRITTSTUFE		
2	11942040	1	PIN RD20X394 LHRD900-40;10019758	BOLZEN		
3	421101814	2	WASHER DIN EN 28738 22 ST;	SCHEIBE		
4	433006314	2	SPLIT PIN ISO 1234 5X32	SPLINT		

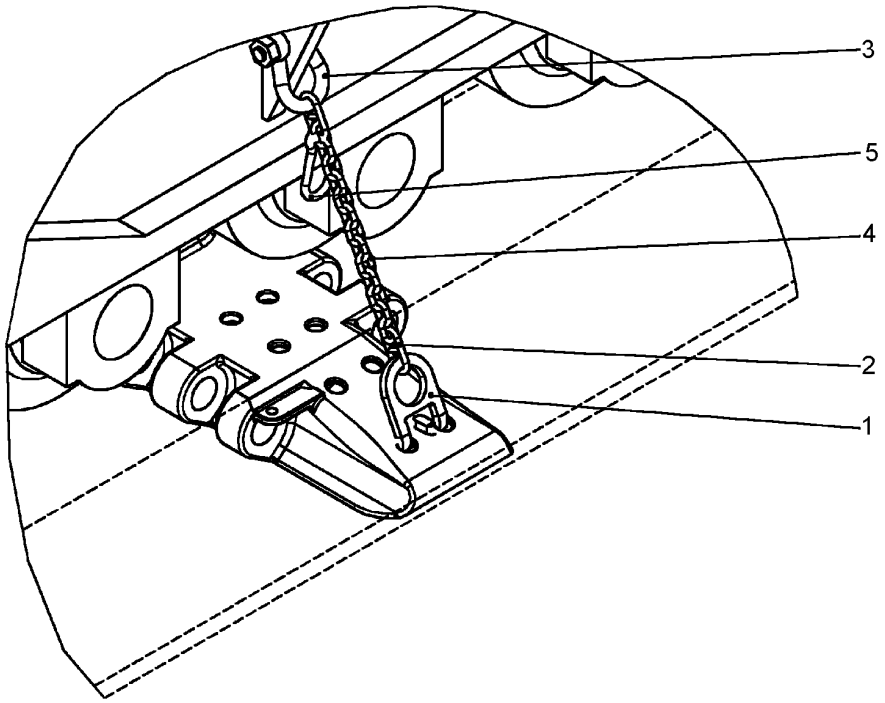

Pos.	Item	Quantity	Description	Bezeichnung	Serie	K
1	971304903	2	BRACKET	BUEGEL		
2	773967214	4	CHAIN CONNECTION LOCK	KETTENVERBINDUNGSSCHLOS		
3	773954714	2	SHACKLE	SCHAEKEL		
4	740000908	0.624	CHAIN	KETTE		
5	744010414	2	SNAP HOOK	KARABINERHAKEN		

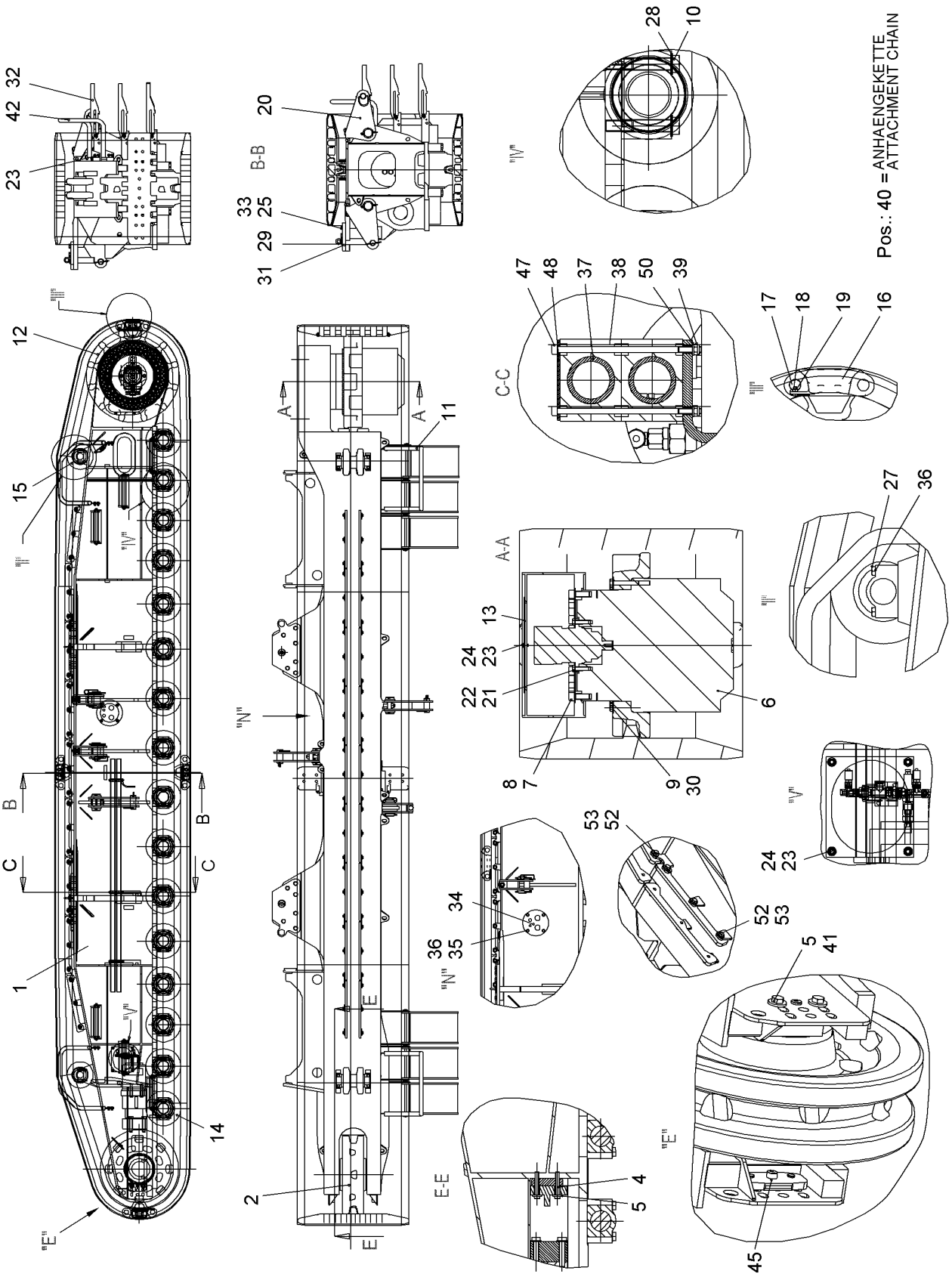
Pos.: 40 = ANHAENGEKETTE
ATTACHMENT CHAIN
522091

Pos.	Item	Quantity	Description	Bezeichnung	Serie	K
1	11893687	1	CRAWLERCARRIER LEFT ST.CONST	RAUPENTRAEGER LI SCHWK		
2	10557161	1	GUIDE WHEEL UNIT CPL ⇨ ❑ 464	LEITRADEINHEIT KPL		
4	10543932	4	HEX SCREW ISO 4017 M20X130 10.9	SECHSKANTSCHRAUBE		
5	10567956	8	WASHER DIN 6340 21 C35	SCHEIBE		
6	969317801	1	TRACTION DRIVE ⇨ ❑ 466	FAHRANTRIEB		
7	421500614	30	WASHER EN 14399-6 30 ST	SCHEIBE		
8	10336668	30	SOCKET HEAD SCREW DIN 912 M30X2X80 12.	ZYLINDERSCHRAUBE		
9	460014603	45	WASHER DIN 6916 25 C45	SCHEIBE		
10	10544028	64	HEX SCREW ISO 4014 M30X180 10.9	SECHSKANTSCHRAUBE		
11	10523559	1	HANDRAIL	HANDLAUF		
12	10521183	1	SPROCKET	TURAS		
13	971333403	1	COVER	DECKEL		
14	10552633	16	RUNNING ROLLER CPL	LAUFROLLE KPL		
15	790523314	2	CARRYING ROLLER CPL	TRAGROLLE KPL		
16	388291208	72	FLOOR PLATE	BODENPLATTE		
17	954584908	144	ROUND STEEL	RUNDSTAHL		
18	406517314	152	HEX SCREW ISO 4017 M12X30 A4-70	SECHSKANTSCHRAUBE		
19	10540495	152	HEX NUT ISO 10511 M12 A4	SECHSKANTMUTTER		
20	971333503	3	TRANSPORT BRACKET CPL	TRANSPORTARM KPL		
21	10544174	2	WASHER ISO 7089 20	SCHEIBE		
22	10545854	2	HEX SCREW ISO 4017 M20X75 10.9	SECHSKANTSCHRAUBE		
23	4901782	15	WASHER ISO 7089 12 A4	SCHEIBE		
24	406517914	7	HEX SCREW ISO 4017 M12X25 A4-70	SECHSKANTSCHRAUBE		
25	10543944	12	HEX SCREW ISO 4017 M24X80 10.9	SECHSKANTSCHRAUBE		
27	10543910	8	HEX SCREW ISO 4017 M16X90 10.9	SECHSKANTSCHRAUBE		
28	10544177	64	WASHER ISO 7089 30	SCHEIBE		
29	992921714	2	PIN CPL	BOLZEN KPL		
30	406154014	45	HEX SCREW ISO 8765 M24X2X200 10.9	SECHSKANTSCHRAUBE		
31	954373603	2	WP	WP		
32	10501795	6	ACCESS CPL ⇨ ❑ 471	AUFSTIEG KPL		
33	10544176	12	WASHER ISO 7089 24	SCHEIBE		
34	10558762	1	DIAPHRAGM	SCHOTTBLECH		
35	10539315	4	HEX SCREW ISO 4017 M16X25 10.9	SECHSKANTSCHRAUBE		
36	10544172	12	WASHER ISO 7089 16	SCHEIBE		
37	510511814	5	HYDRAULIC HOSE	HYDRAULIKSCHLAUCH		
38	7413103	12	CLAMP-HALF	KLEMMHAELFTE		
39	10540492	6	HEX NUT ISO 10511 M6 A4	SECHSKANTMUTTER		
40	990835714	1	ATTACHMENT CHAIN ⇨ ❑ 472	ANHAENGEKETTE		
41	10543920	4	HEX SCREW ISO 4017 M20X40 10.9	SECHSKANTSCHRAUBE		
42	10518461	1	HANDRAIL	HANDLAUF		
45	10539631	2	LIMIT STOP	ANSCHLAG		
47	10446871	6	SOCKET HEAD SCREW ISO 4762 M6X155 10.9	ZYLINDERSCHRAUBE		
48	602026414	3	LID PLATE	DECKPLATTE		
50	420000414	6	WASHER ISO 7089 6 A4	SCHEIBE		
52	10539317	54	HEX SCREW ISO 4017 M16X35 10.9	SECHSKANTSCHRAUBE		
53	421600901	54	WASHER DIN 7349 17 ST	SCHEIBE		

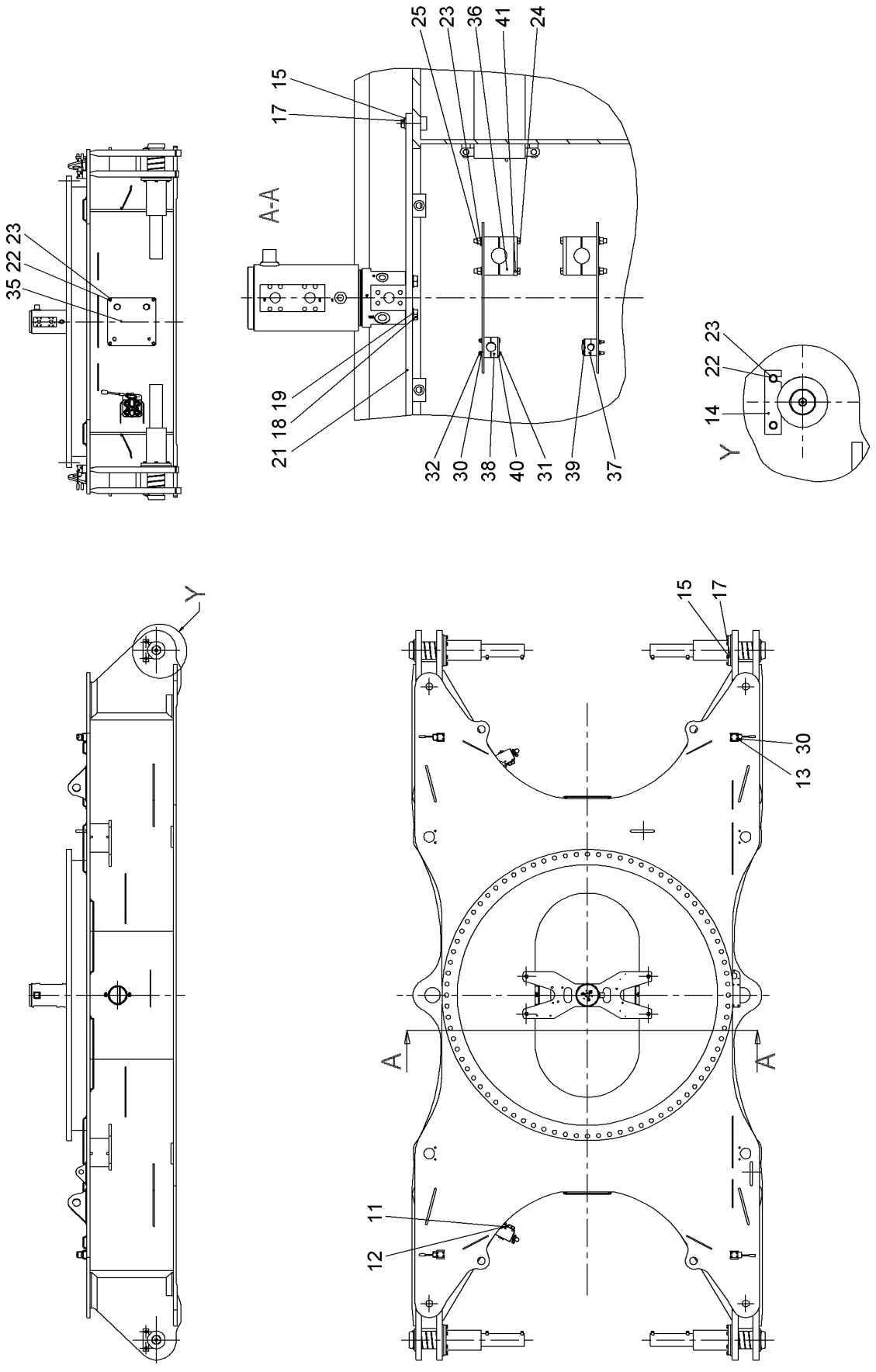
25
23
36
41
24
15
17
A-A
35 22 23
21 18 19
32
30
38
40
31
39
37
22 23
14
Y
Y
15
17
13 30
A
A
11
12
520512

Pos.	Item	Quantity	Description	Bezeichnung	Serie	K
11	406501414	6	HEX SCREW ISO 4017 M8X25 A4-70	SECHSKANTSCHRAUBE		
12	420001014	6	WASHER ISO 7089 8 A4	SCHEIBE		
13	10526837	16	HEX SCREW ISO 4017 M6X50 A4-70	SECHSKANTSCHRAUBE		
14	954372503	4	AXLE HOLDER	ACHSHALTER		
15	10544172	28	WASHER ISO 7089 16	SCHEIBE		
17	10539318	28	HEX SCREW ISO 4017 M16X40 10.9	SECHSKANTSCHRAUBE		
18	10543921	4	HEX SCREW ISO 4017 M20X45 10.9	SECHSKANTSCHRAUBE		
19	10544174	4	WASHER ISO 7089 20	SCHEIBE		
22	406517314	16	HEX SCREW ISO 4017 M12X30 A4-70	SECHSKANTSCHRAUBE		
23	4901782	24	WASHER ISO 7089 12 A4	SCHEIBE		
24	10538834	8	HEX SCREW ISO 4017 M12X130 A4-70	SECHSKANTSCHRAUBE		
25	411516914	8	HEX NUT ISO 4032 M12 A4-70	SECHSKANTMUTTER		
30	420000414	24	WASHER ISO 7089 6 A4	SCHEIBE		
31	10538801	8	HEX SCREW ISO 4017 M6X60 A4-70	SECHSKANTSCHRAUBE		
32	411517114	8	HEX NUT ISO 4032 M6 A4-70	SECHSKANTMUTTER		
35	11235482	2	DIAPHRAGM	SCHOTTBLECH		
36	602010114	16	CLAMP-HALF	KLEMMHAELFTE		
37	7404678	4	CLAMP-HALF	KLEMMHAELFTE		
38	602008808	4	CLAMP-HALF	KLEMMHAELFTE		
39	7005053	2	LID PLATE	DECKPLATTE		
40	7008583	2	LID PLATE	DECKPLATTE		
41	5005525	4	LID PLATE	DECKPLATTE		

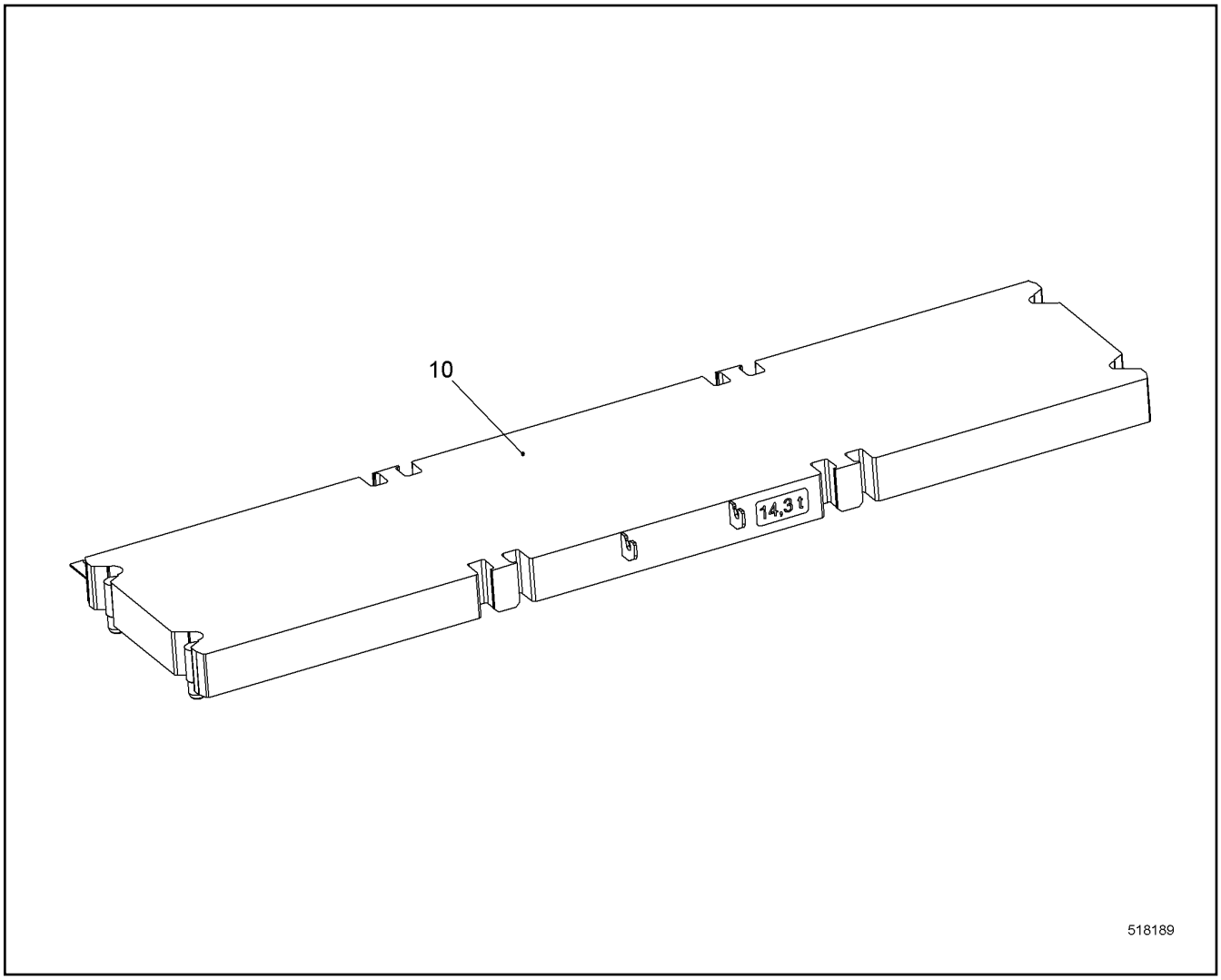

Pos.	Item	Quantity	Description	Bezeichnung	Serie	K
10	11242597	4	CENTRAL COUNTERW. ST.CONST.	ZENTRALBALLAST SCHWK		

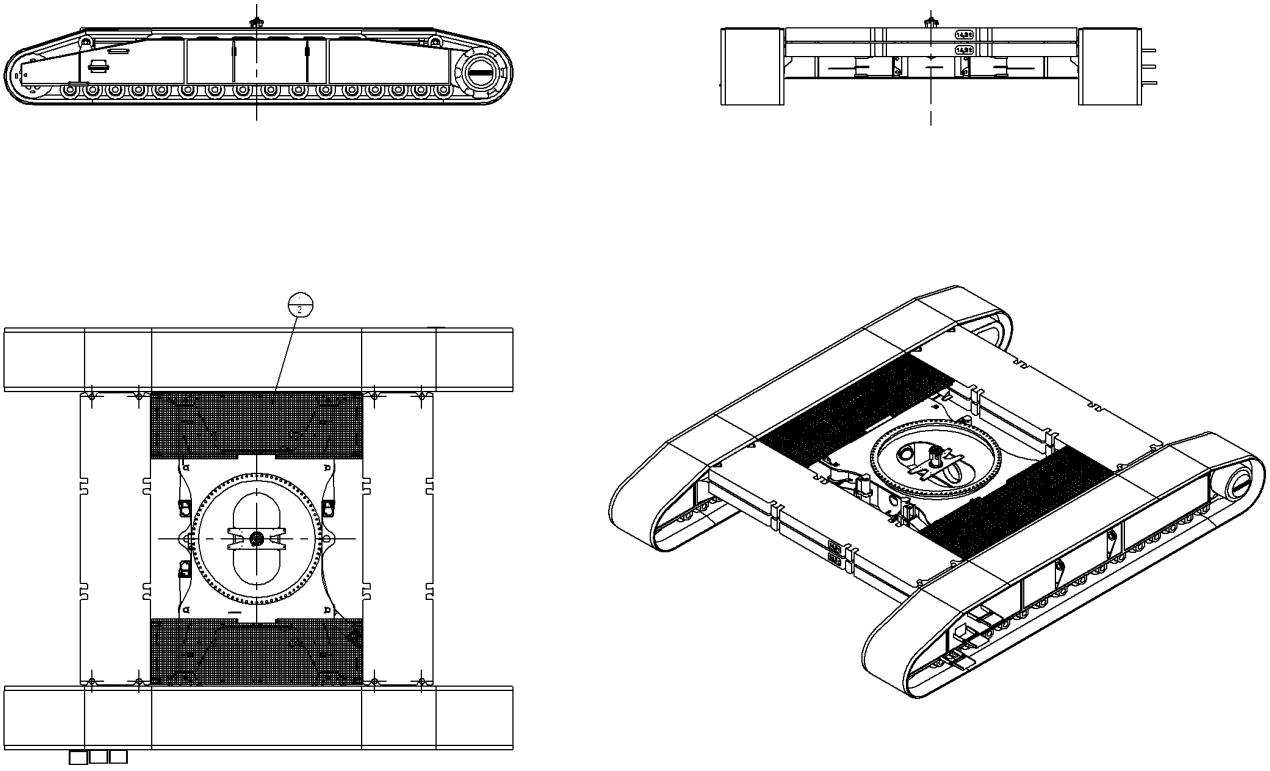

Pos.	Item	Quantity	Description	Bezeichnung	Serie	K
1	992671814	2	PEDESTAL ⇨ ❑ 479	PODEST		

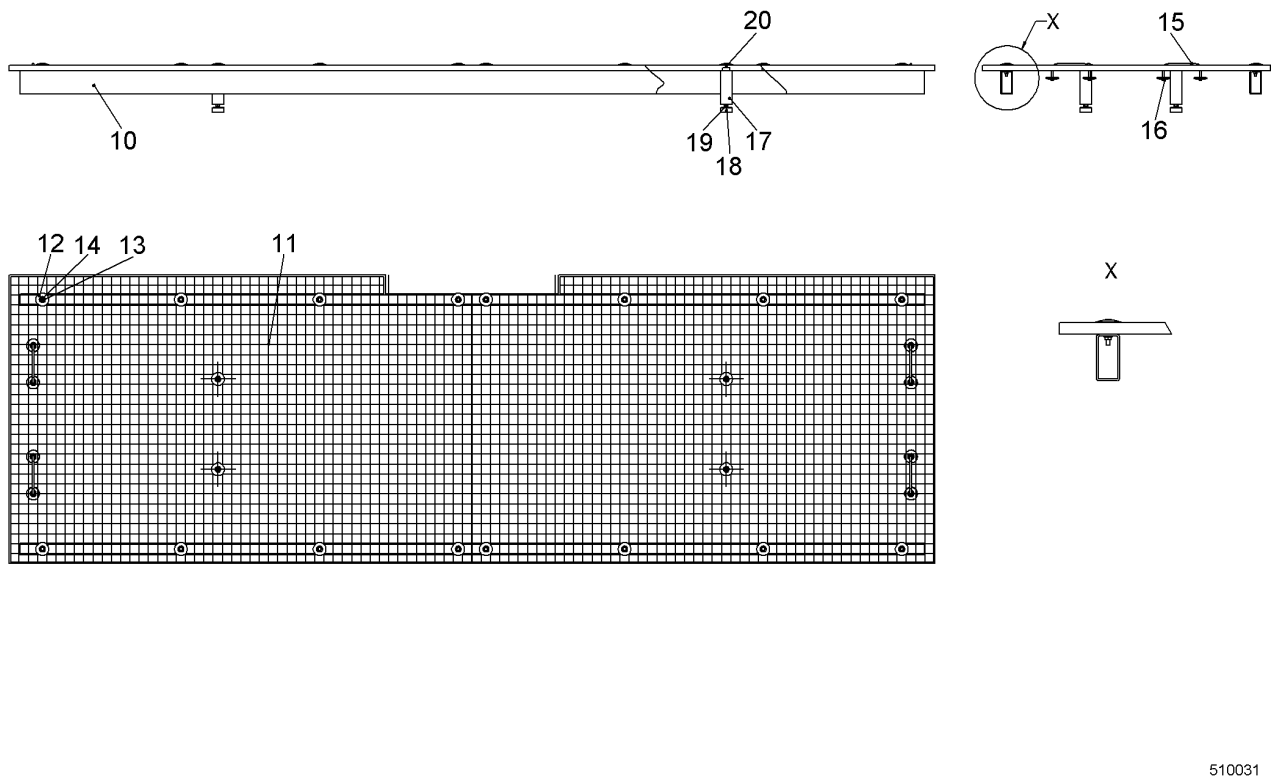

Pos.	Item	Quantity	Description	Bezeichnung	Serie	K
10	958097914	2	BRACING TUBE	TRAGROHR		
11	10227124	1	GRATING	GITTERROST		
12	10098157	28	DISH	TELLER		
13	10538807	16	HEX SCREW ISO 4017 M8X50 A4-70	SECHSKANTSCHRAUBE		
14	485569314	16	HEX NUT EN 1661 M8 A2-70	SECHSKANTMUTTER		
15	958478414	4	BRACKET	BUEGEL		
16	10540493	8	HEX NUT ISO 10511 M8 A4	SECHSKANTMUTTER		
17	10227757	4	SPACER PIECE	DISTANZSTUECK		
18	726611214	4	RUBBER MOUNT	LAGER GUMMI		
19	4000383	4	HEX NUT ISO 4032 M10 10	SECHSKANTMUTTER		
20	406501314	4	HEX SCREW ISO 4017 M8X30 A4-70	SECHSKANTSCHRAUBE		

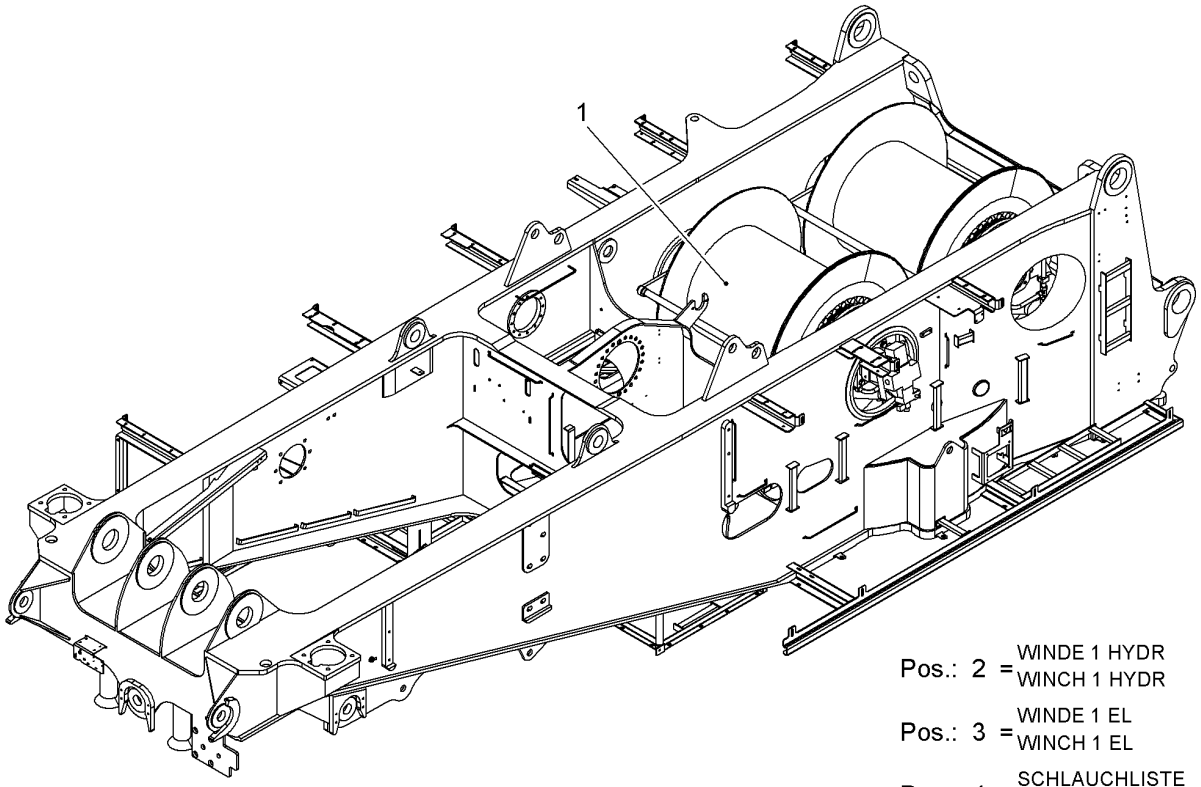

Pos.	Item	Quantity	Description	Bezeichnung	Serie	K
2	11262606	1	WINCH 1 HYDR ⇨ ❑ 481	WINDE 1 HYDR		
3	11216342	1	WINCH EL ⇨ ❑ 483	WINDE EL		
4	11262609	1	HOSE LIST ⇨ ❑ 484	SCHLAUCHLISTE		
10	10530398	1	WINCH ⇨ ❑ 485	WINDE		
11	11220500	1	WINCHES INSTALLATION ⇨ ❑ 493	WINDEN EINBAU		

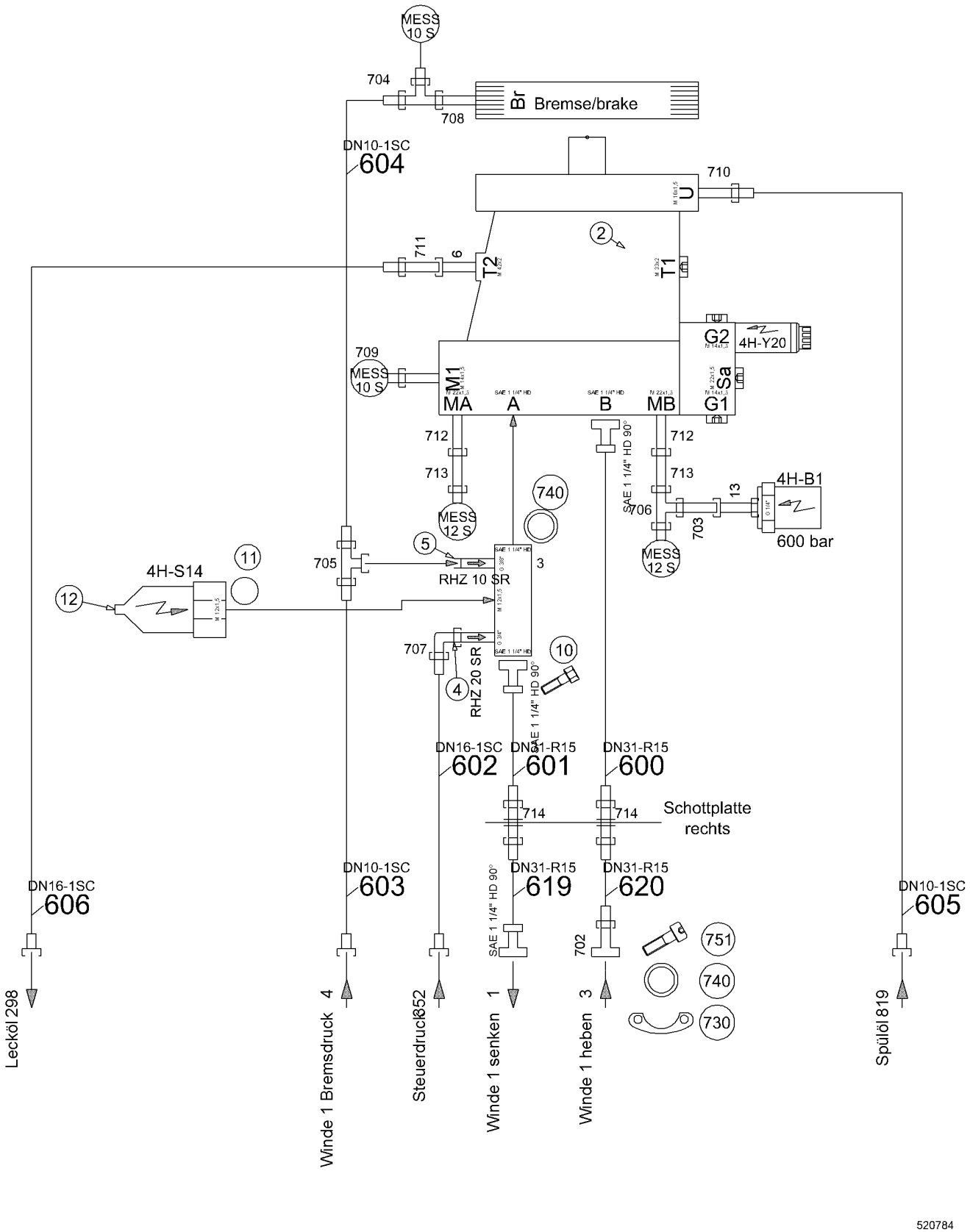
MESS 10 S
704
708
Br
Bremse/brake
DN10-1SC
604
710
U
2
711
6
T2
T1
G2
4H-Y20
709
MESS 10 S
M1
Sa
MA
A
B
MB
G1
712
713
740
MESS 12 S
SAE 1 1/4" HD 90°
706
703
13
4H-B1
600 bar
5
705
RHZ 10 SR
3
11
4H-S14
12
707
4
RHZ 20 SR
10
DN16-1SC
602
DN31-R15
601
DN31-R15
600
714
Schottplatte rechts
DN16-1SC
606
DN10-1SC
603
DN31-R15
619
DN31-R15
620
DN10-1SC
605
702
751
740
730
Lecköl 298
4
Winde 1 Bremsdruck
352
Steuerdruck
1
Winde 1 senken
3
Winde 1 heben
Spülöl 819
520784

Pos.	Item	Quantity	Description	Bezeichnung	Serie	K
2	11251232	1	VARIABLE DISPLACEMENT MOTOR	V.MOTOR		
4	510493714	1	NON-RETURN VALVE	RUECKSCHLAGVENTIL		
5	511458814	1	NON-RETURN VALVE	RUECKSCHLAGVENTIL		
10	10539307	4	HEX SCREW ISO 4017 M14X90 10.9	SECHSKANTSCHRAUBE		
11	710069314	1	SEALING RING	DICHTRING		
12	10352119	1	PRESSURE SWITCH ON	DRUCKSCHALTER EINSCHALTE		
13	289031614	1	SPECIAL THREADED UNION	SONDERVERSCHRAUBUNG		
700	510694514	2	GAUGE CONNECTION	MESSSTUTZEN		
701	510664814	2	GAUGE CONNECTION	MESSSTUTZEN		
702	510702414	1	FITTING	VERSCHRAUBUNG		
703	481930514	1	FITTING	VERSCHRAUBUNG		
704	7367776	1	FITTING	VERSCHRAUBUNG		
705	482431314	1	FITTING	VERSCHRAUBUNG		
706	482431414	1	FITTING	VERSCHRAUBUNG		
707	7407108	1	FITTING	VERSCHRAUBUNG		
708	471004614	1	FITTING	VERSCHRAUBUNG		
709	471008214	1	FITTING	VERSCHRAUBUNG		
710	471030708	1	FITTING	VERSCHRAUBUNG		
711	247009702	1	FITTING	VERSCHRAUBUNG		
712	7622060	2	FITTING	VERSCHRAUBUNG		
713	485433314	2	FITTING	VERSCHRAUBUNG		
714	474033014	2	FITTING	VERSCHRAUBUNG		
730	510586614	8	FLANGE HALF	FLANSCHHAELFTE		
740	10472425	5	RECTANGULAR SECTION RING	RECHTECKRING		
750	10539300	8	HEX SCREW ISO 4017 M14X45 10.9	SECHSKANTSCHRAUBE		
751	10544044	4	SOCKET HEAD SCREW ISO 4762 M14X45 10.9	ZYLINDERSCHRAUBE		

OHNE BILD
WITHOUT ILLUSTRATION
SANS PLANCHE
SIN FIG.
SEM ILUSTRAÇÃO
БЕЗ ИЗОБРАЖЕНИЯ

600000

Pos.	Item	Quantity	Description	Bezeichnung	Serie	K
1	606279214	1	GEAR CAM LIMITSWITCH	GETRIEBENOCKENENDSCHALTE		

ACHTUNG !
ATTENTION !
ATTENTION !
ATENCIÓN !
ATENÇÃO !
ВНИМАНИЕ

Für Schlauchbestellungen kann über die Schlauchnummer, in der entsprechenden Schlauchliste, die Identnummer festgestellt werden.

For ordering flexible hoses you can find the identification number through the hose-number in the corresponding hose-list.

Pour des ordres de tuyau flexible le nombre d'identification on voit dans la liste de tuyau flexible correspondente.

Para el pedido de manguera, indicar el número de identificación de la manguera de la lista respectiva.

Para se encomendar uma mangueira, consulte o número de identificaçao na respectiva lista de mangueiras.

Для оформления заказов на шланги/рукавы идент. № может быть определен при помощи номера шланга/рукава, указанного в соотетствующем перечне шлангов/рукавов.

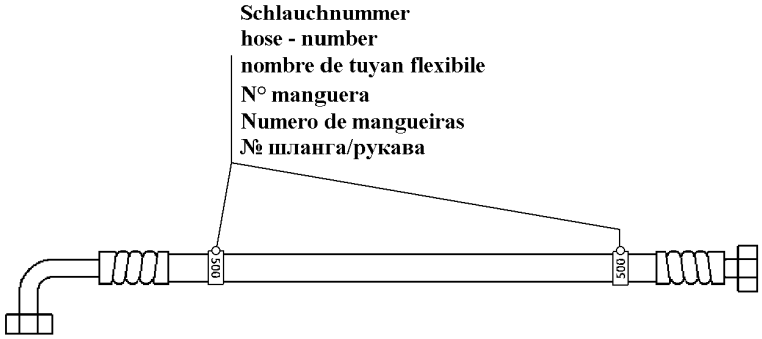

500000

Pos.	Item	Quantity	Description	Bezeichnung	Serie	K
600	995943114	1	HOSE CPL	SCHLAUCH KPL		
601	996026214	1	HOSE CPL	SCHLAUCH KPL		
602	991391814	1	HOSE CPL	SCHLAUCH KPL		
603	996367614	1	HOSE CPL	SCHLAUCH KPL		
604	992511514	1	HOSE CPL	SCHLAUCH KPL		
605	911108414	1	HOSE CPL	SCHLAUCH KPL		
606	928536514	1	HOSE CPL	SCHLAUCH KPL		
619	995943514	1	HOSE CPL	SCHLAUCH KPL		
620	995943614	1	HOSE CPL	SCHLAUCH KPL		

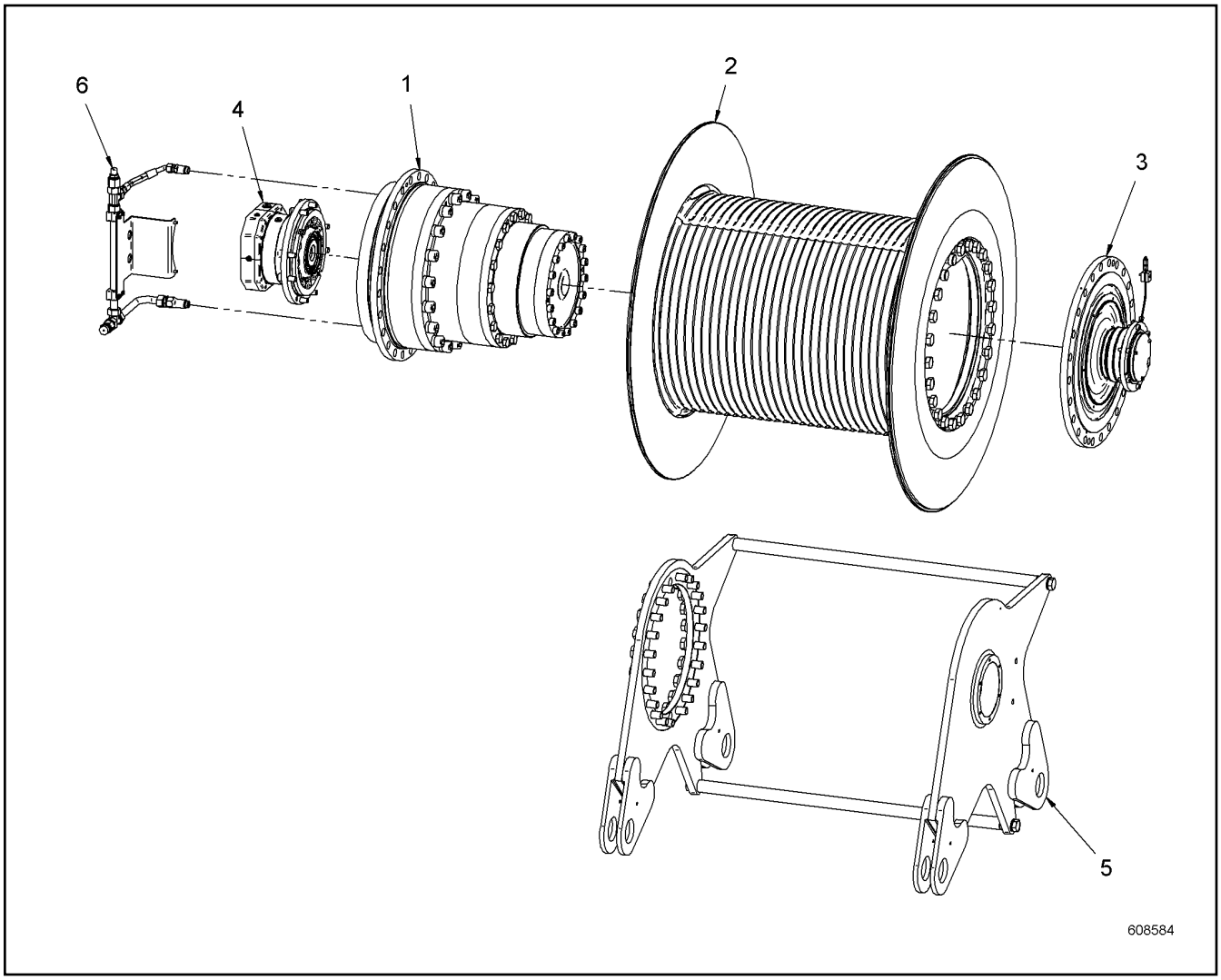

Pos.	Item	Quantity	Description	Bezeichnung	Serie	K
1	11893213	1	GEARBOX ⇨ ❑ 486	GETRIEBE		
2	11231269	1	ROPE DRUM ⇨ ❑ 488	SEILTROMMEL		
3	11231270	1	FLANGE BEARING ⇨ ❑ 489	FLANSCHLAGER		
4	11893214	1	DRIVE ⇨ ❑ 490	ANTRIEB		
5	11893215	1	WINCH TRESTLE ⇨ ❑ 491	WINDENBOCK		
6	11893216	1	OIL LINE ⇨ ❑ 492	OELLEITUNG		

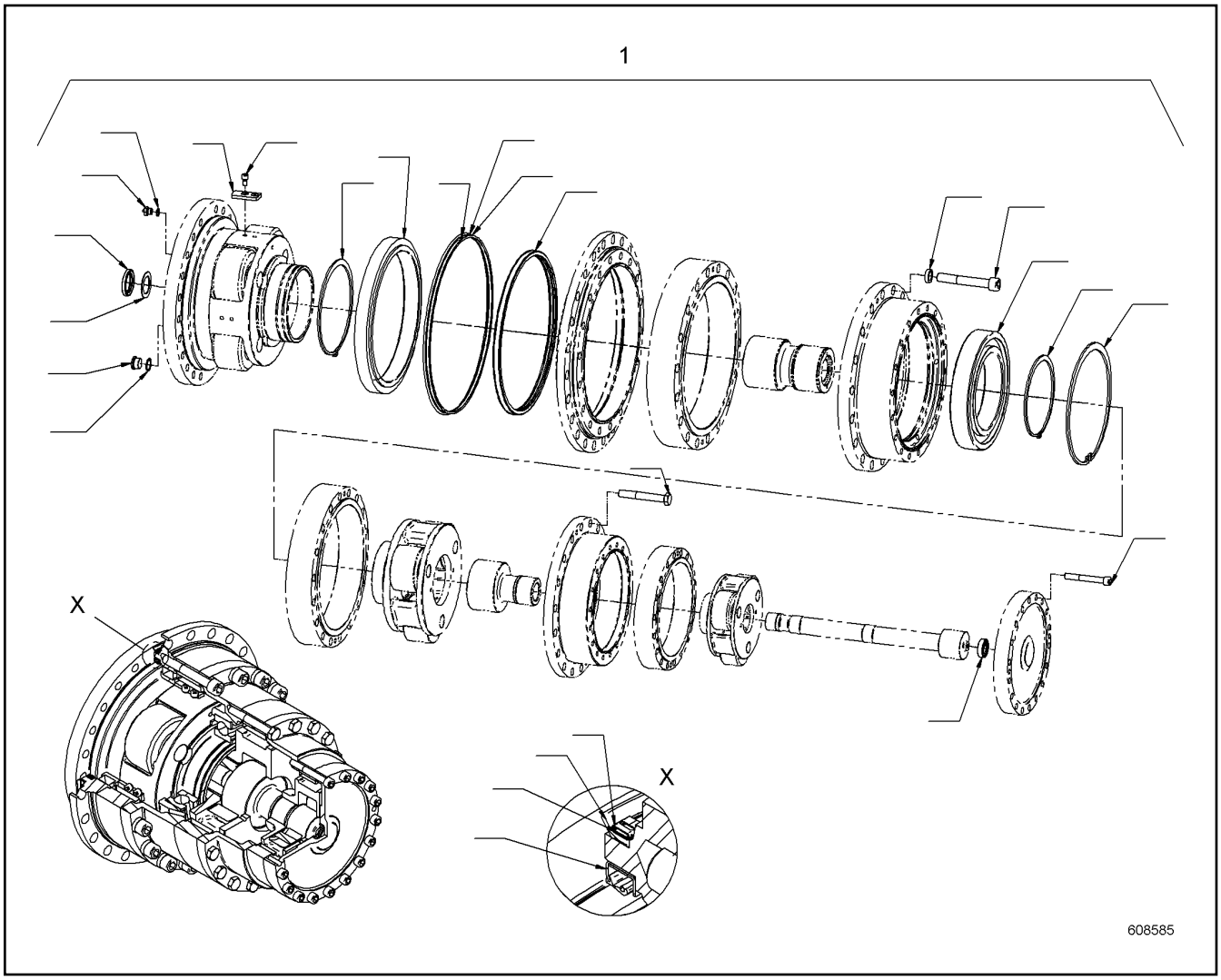

Pos.	Item	Quantity	Description	Bezeichnung	Serie	K
1	11893228	1	REPAIR KIT ⇨ ❑ 487	REPARATURSATZ		

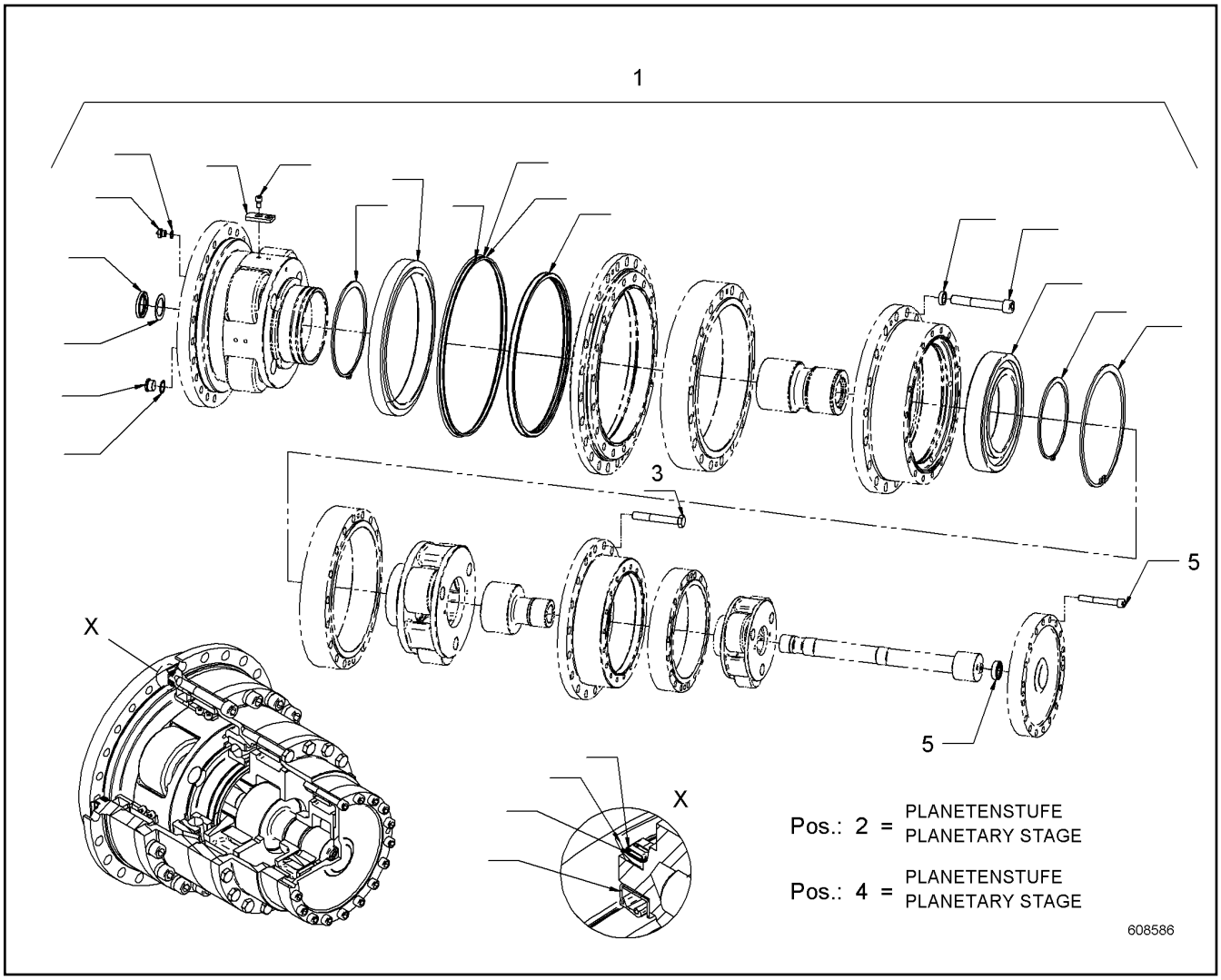

Pos.	Item	Quantity	Description	Bezeichnung	Serie	K
1	11233487	1	REPAIR KIT	REPARATURSATZ		
2	11893250	1	PLANETARY STAGE	PLANETENSTUFE		
3	11231317	1	REPAIR KIT	REPARATURSATZ		
4	11893252	1	PLANETARY STAGE	PLANETENSTUFE		
5	11231319	1	REPAIR KIT	REPARATURSATZ		

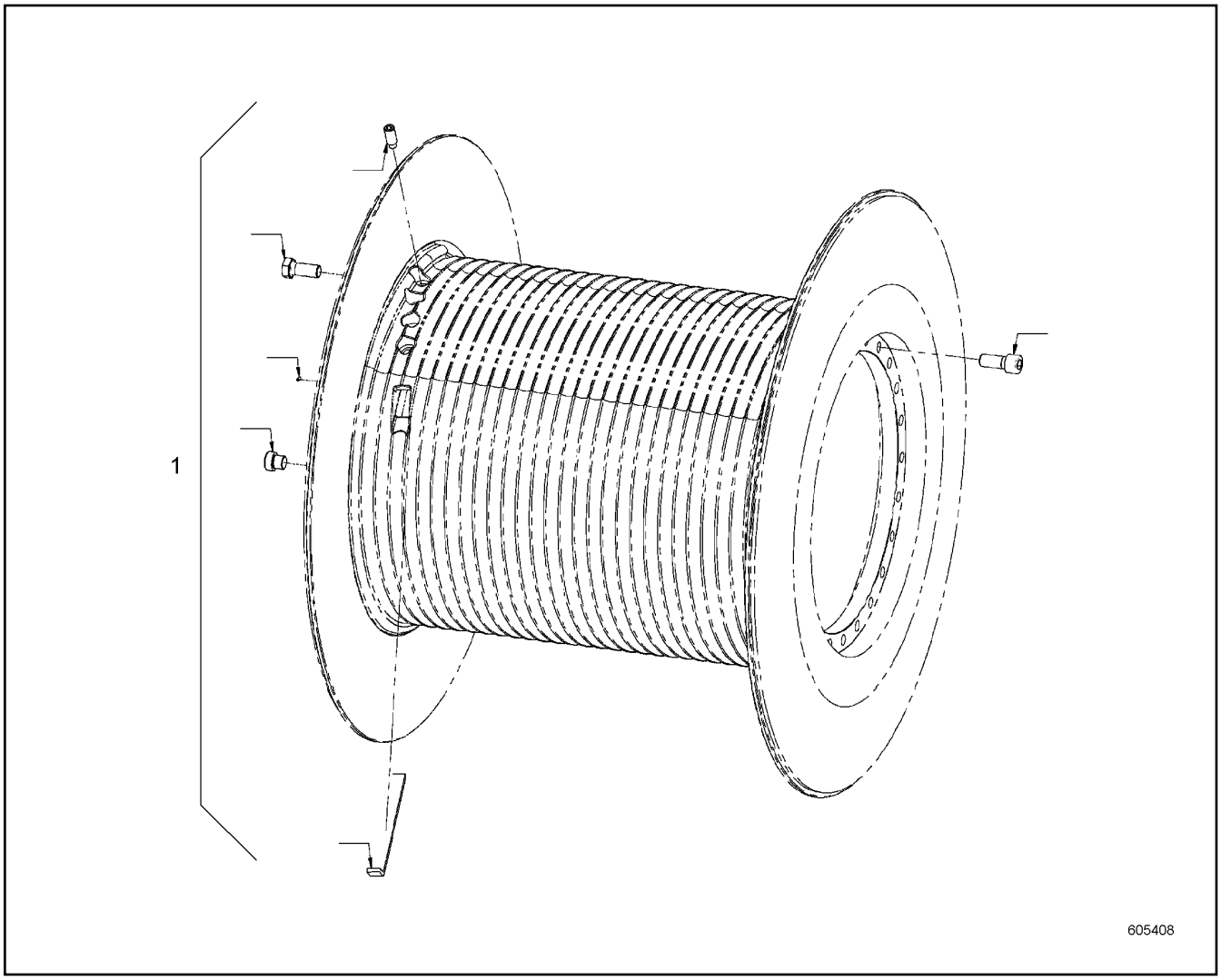

Pos.	Item	Quantity	Description	Bezeichnung	Serie	K
1	11231322	1	REPAIR KIT	REPARATURSATZ		

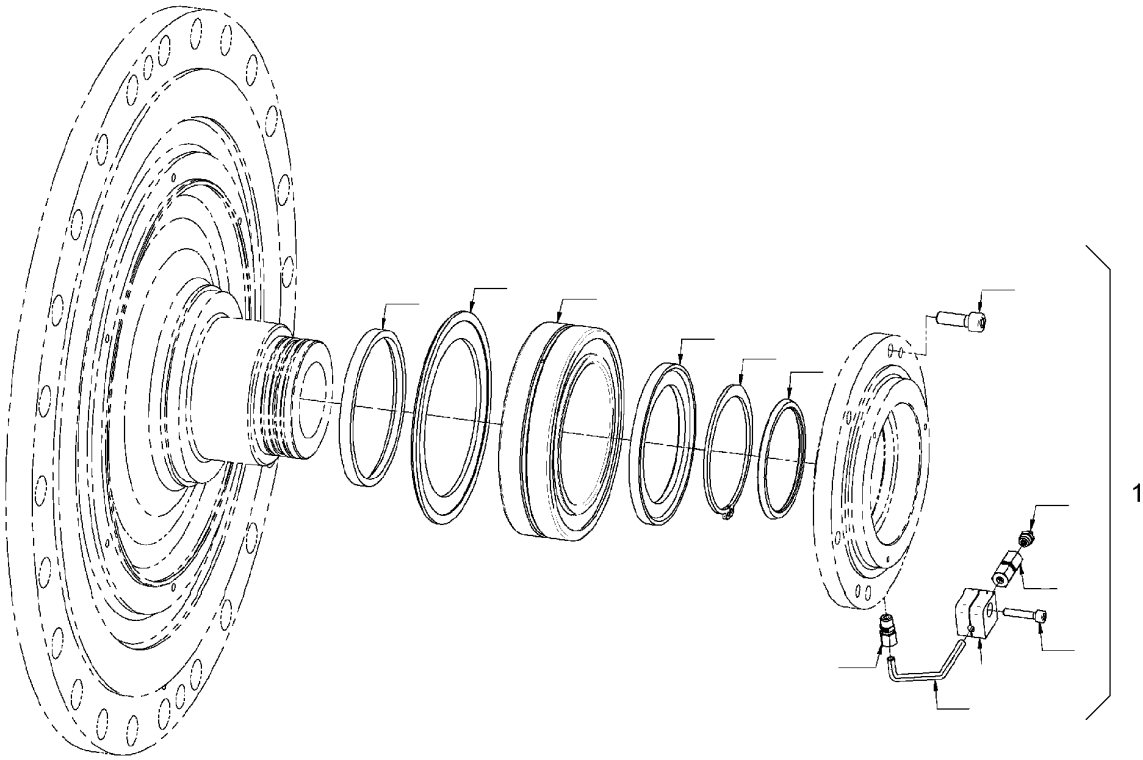

Pos.	Item	Quantity	Description	Bezeichnung	Serie	K
1	11231336	1	REPAIR KIT	REPARATURSATZ		

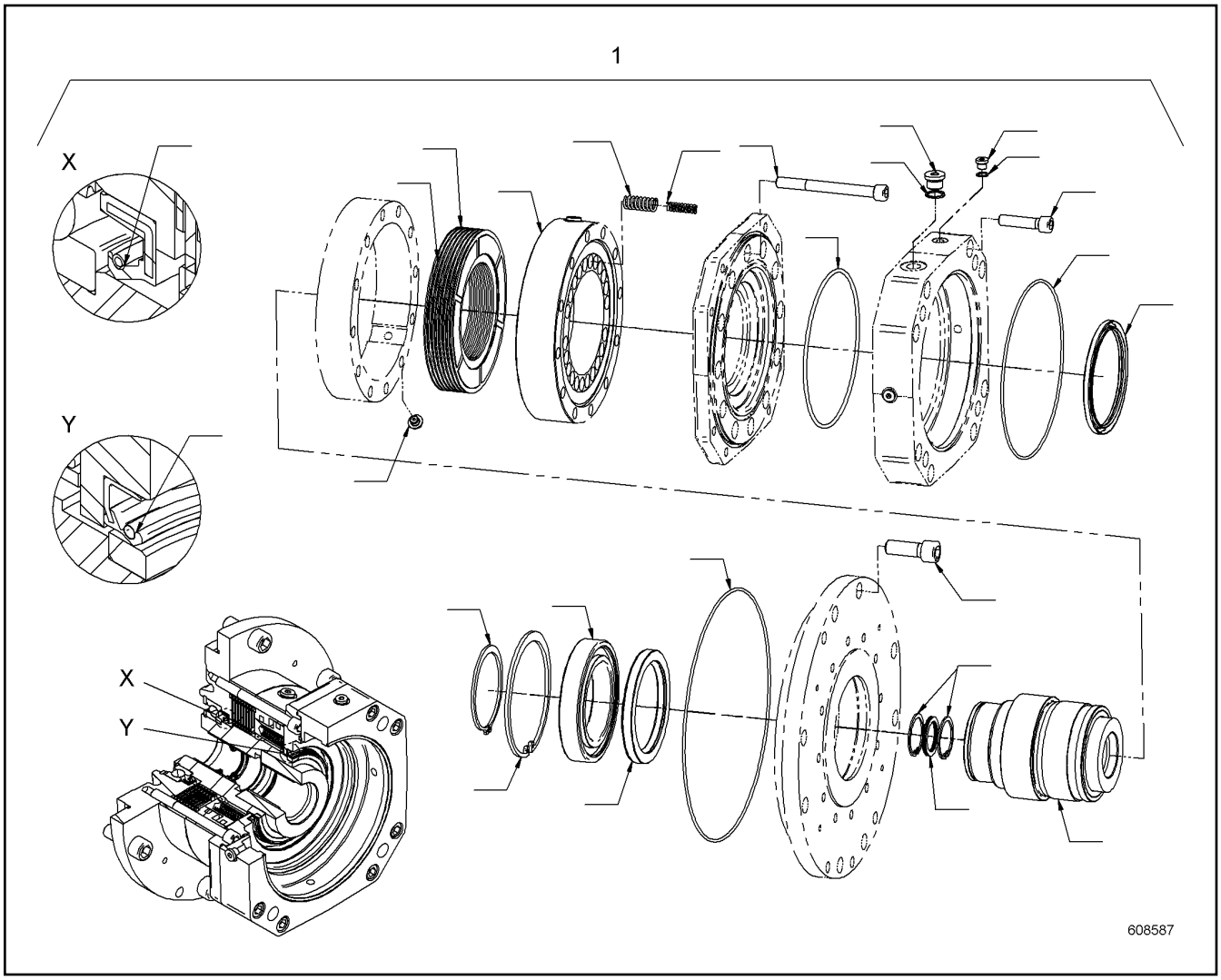

Pos.	Item	Quantity	Description	Bezeichnung	Serie	K
1	11893253	1	REPAIR SET DRIVE	RS ANTRIEB		

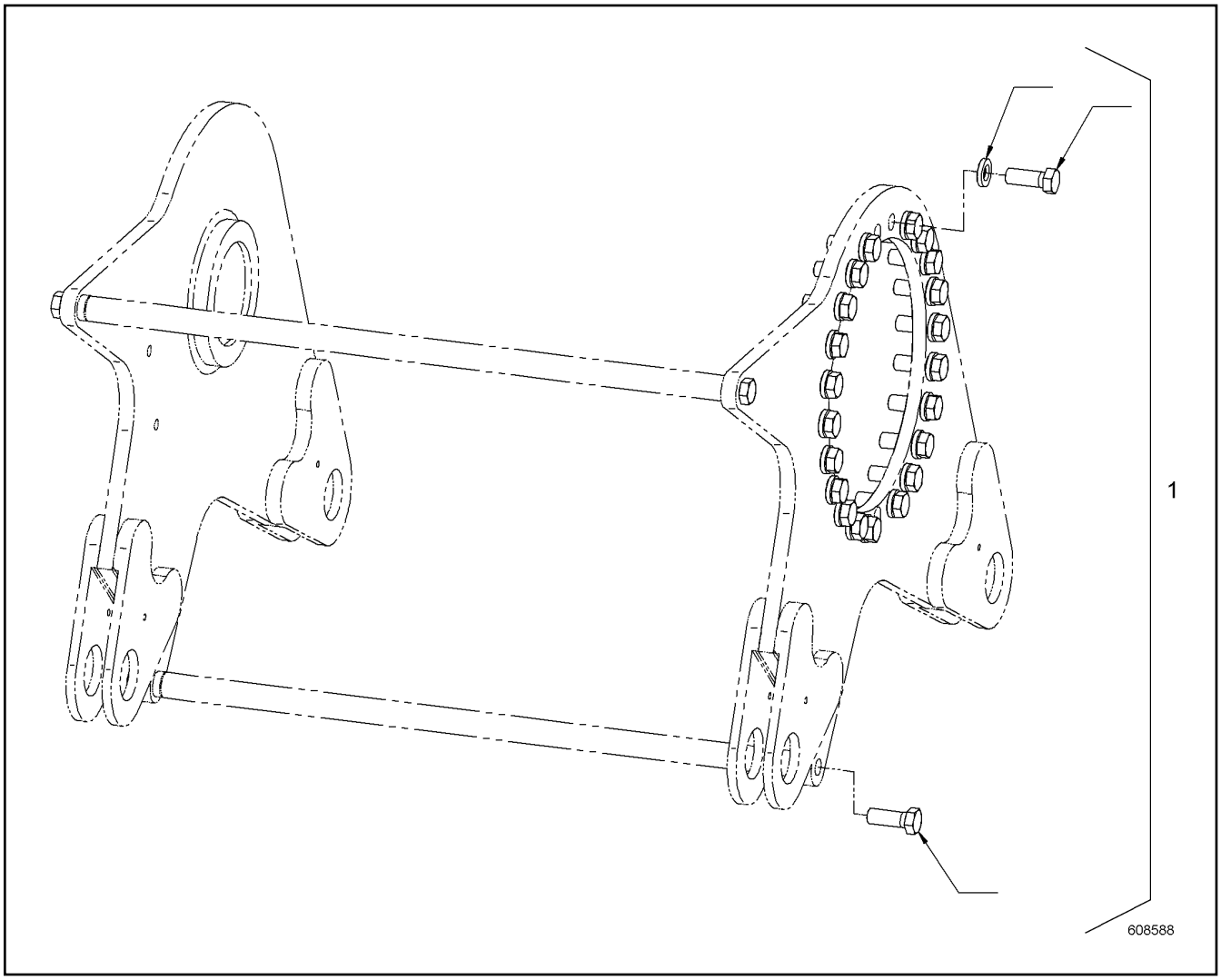

Pos.	Item	Quantity	Description	Bezeichnung	Serie	K
1	11893254	1	REPAIR KIT	REPARATURSATZ		

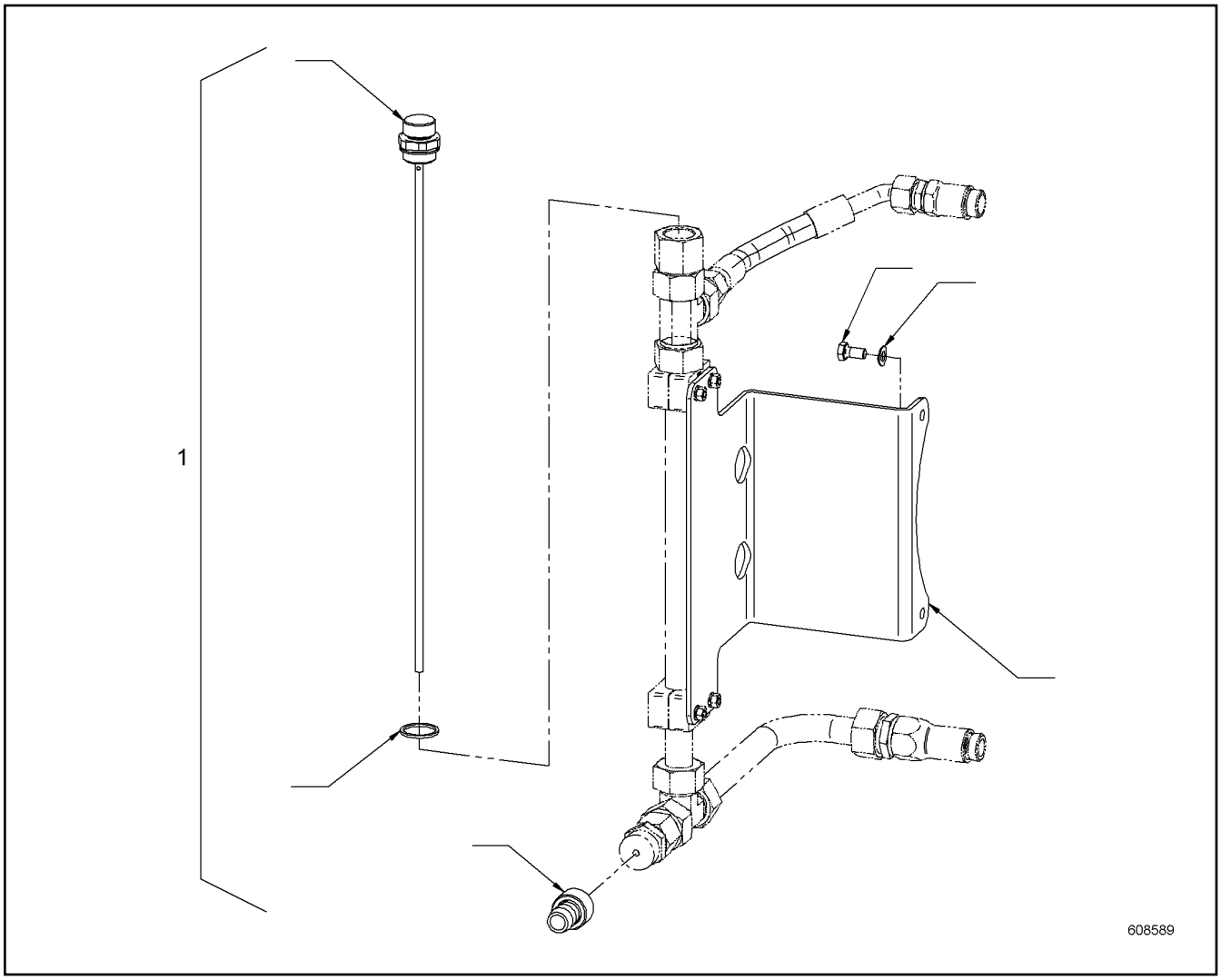

Pos.	Item	Quantity	Description	Bezeichnung	Serie	K
1	11893255	1	REPAIR KIT	REPARATURSATZ		

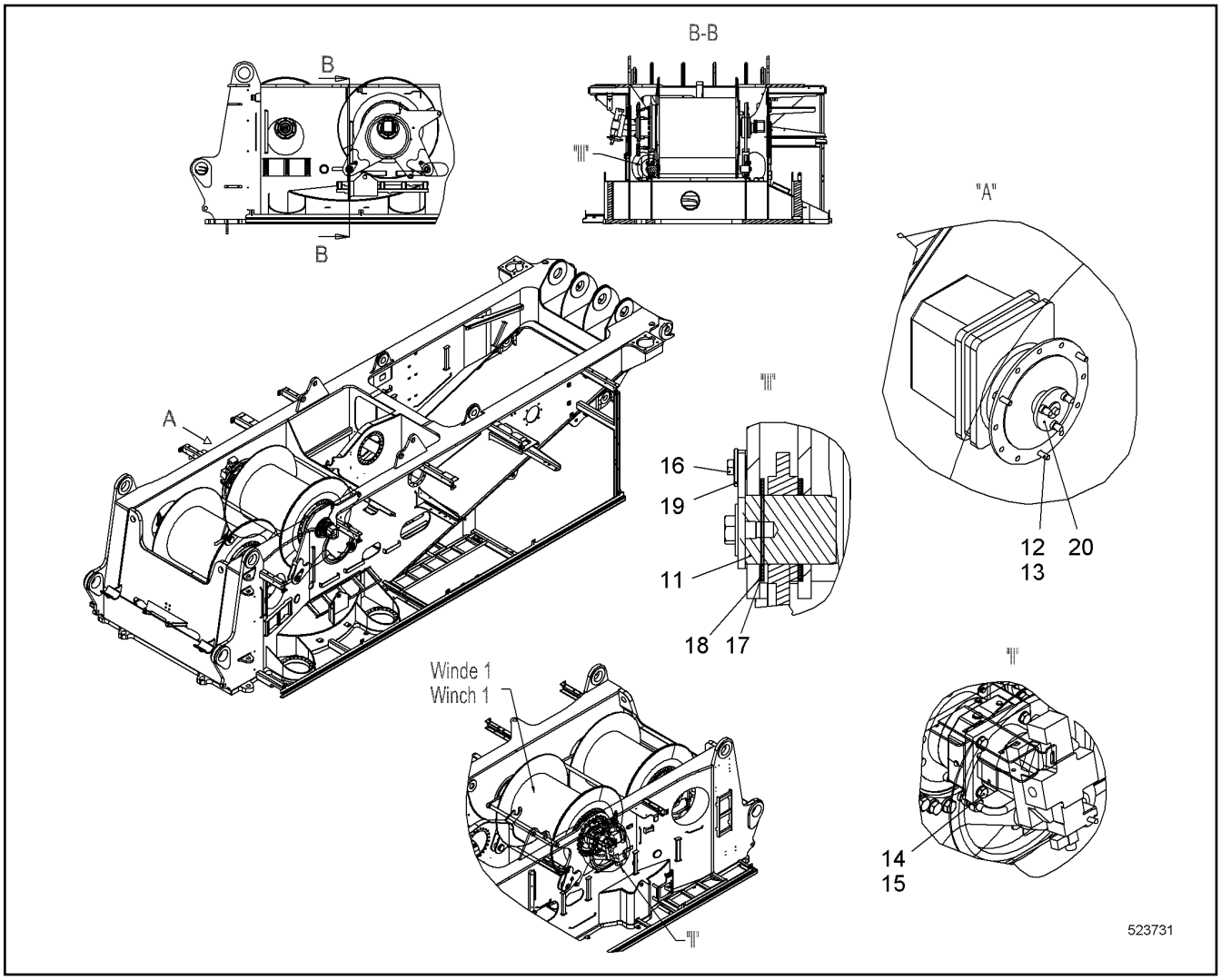

Pos.	Item	Quantity	Description	Bezeichnung	Serie	K
11	10574629	4	PIN CPL ⇨ ❑ 494	BOLZEN KPL		
12	420000414	3	WASHER ISO 7089 6 A4	SCHEIBE		
13	406532614	3	HEX SCREW ISO 4017 M6X20 A4-70	SECHSKANTSCHRAUBE		
14	10544174	4	WASHER ISO 7089 20	SCHEIBE		
15	10543924	4	HEX SCREW ISO 4017 M20X60 10.9	SECHSKANTSCHRAUBE		
16	406517314	4	HEX SCREW ISO 4017 M12X30 A4-70	SECHSKANTSCHRAUBE		
17	954432003	10	PLATE	BLECH		
18	954486503	6	PLATE	BLECH		
19	970726703	4	BUSHING 13/28X15 S355J2;EN 10025-2	BUCHSE		
20	606279014	1	DRIVE FLANGE	ANTRIEBSFLANSCH		

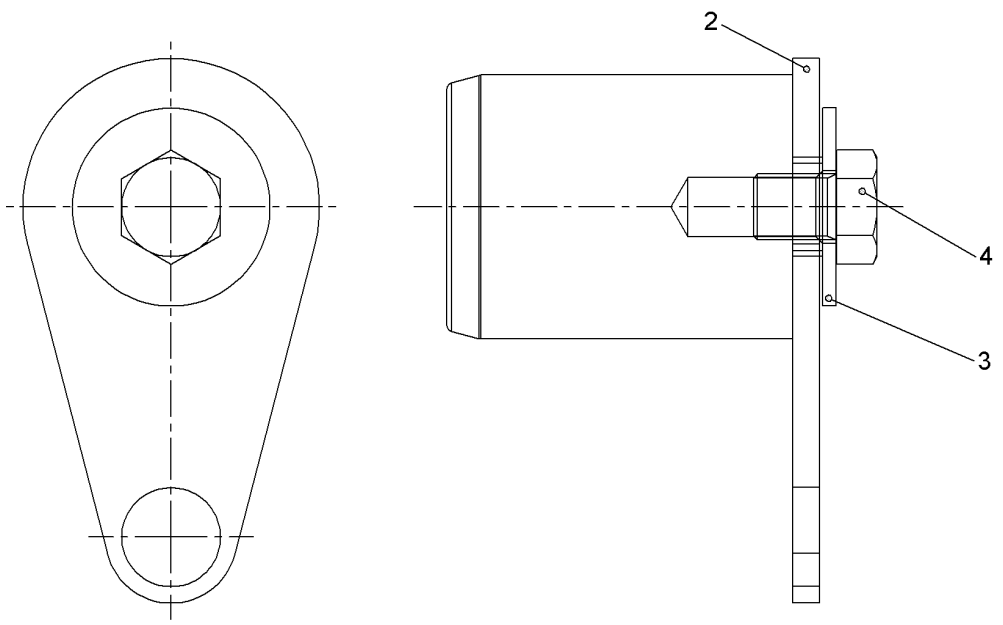

Pos.	Item	Quantity	Description	Bezeichnung	Serie	K
1	10574630	1	PIN	BOLZEN		
2	10574631	1	WP	WP		
3	10544175	1	WASHER ISO 7093-1 20	SCHEIBE		
4	10543917	1	HEX SCREW ISO 4017 M20X25 10.9	SECHSKANTSCHRAUBE		

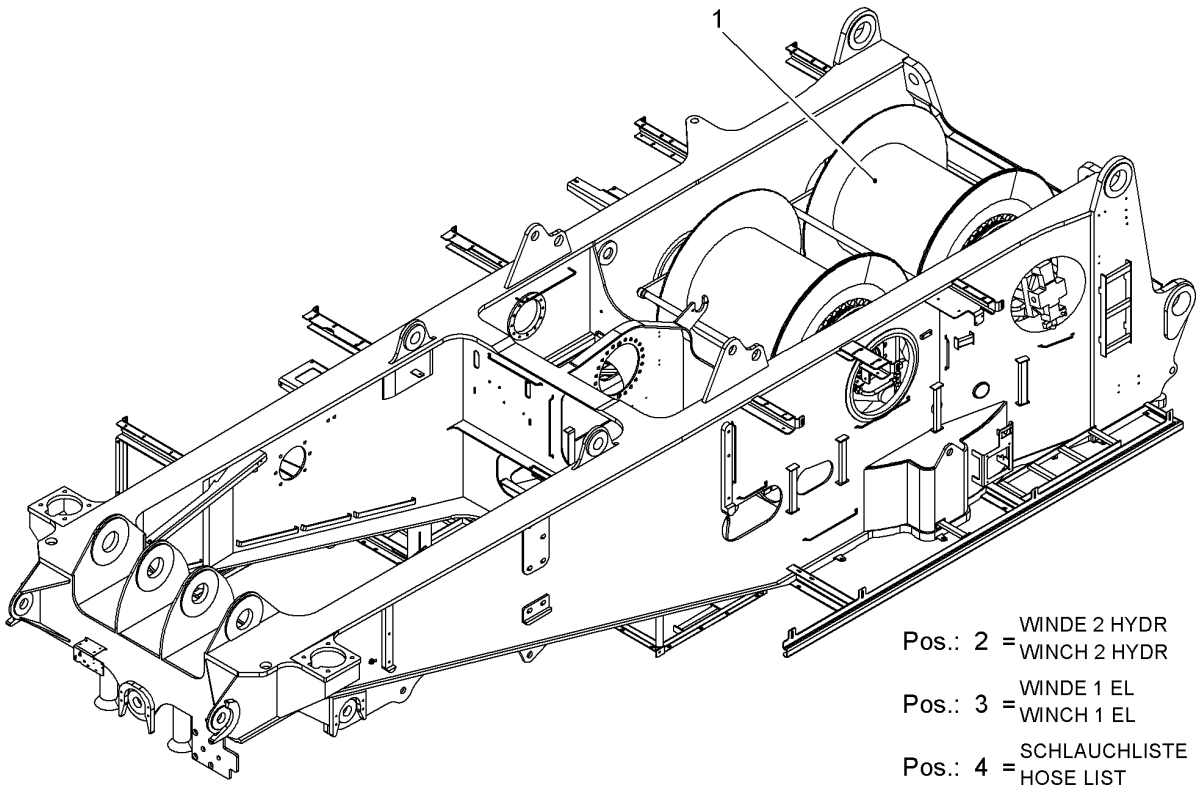

Pos.	Item	Quantity	Description	Bezeichnung	Serie	K
2	11262611	1	WINCH 2 HYDR ⇨ ❑ 496	WINDE 2 HYDR		
3	11216342	1	WINCH EL ⇨ ❑ 483	WINDE EL		
4	11262612	1	HOSE LIST ⇨ ❑ 498	SCHLAUCHLISTE		
10	10530398	1	WINCH ⇨ ❑ 485	WINDE		
11	11220501	1	WINCHES INSTALLATION ⇨ ❑ 499	WINDEN EINBAU		

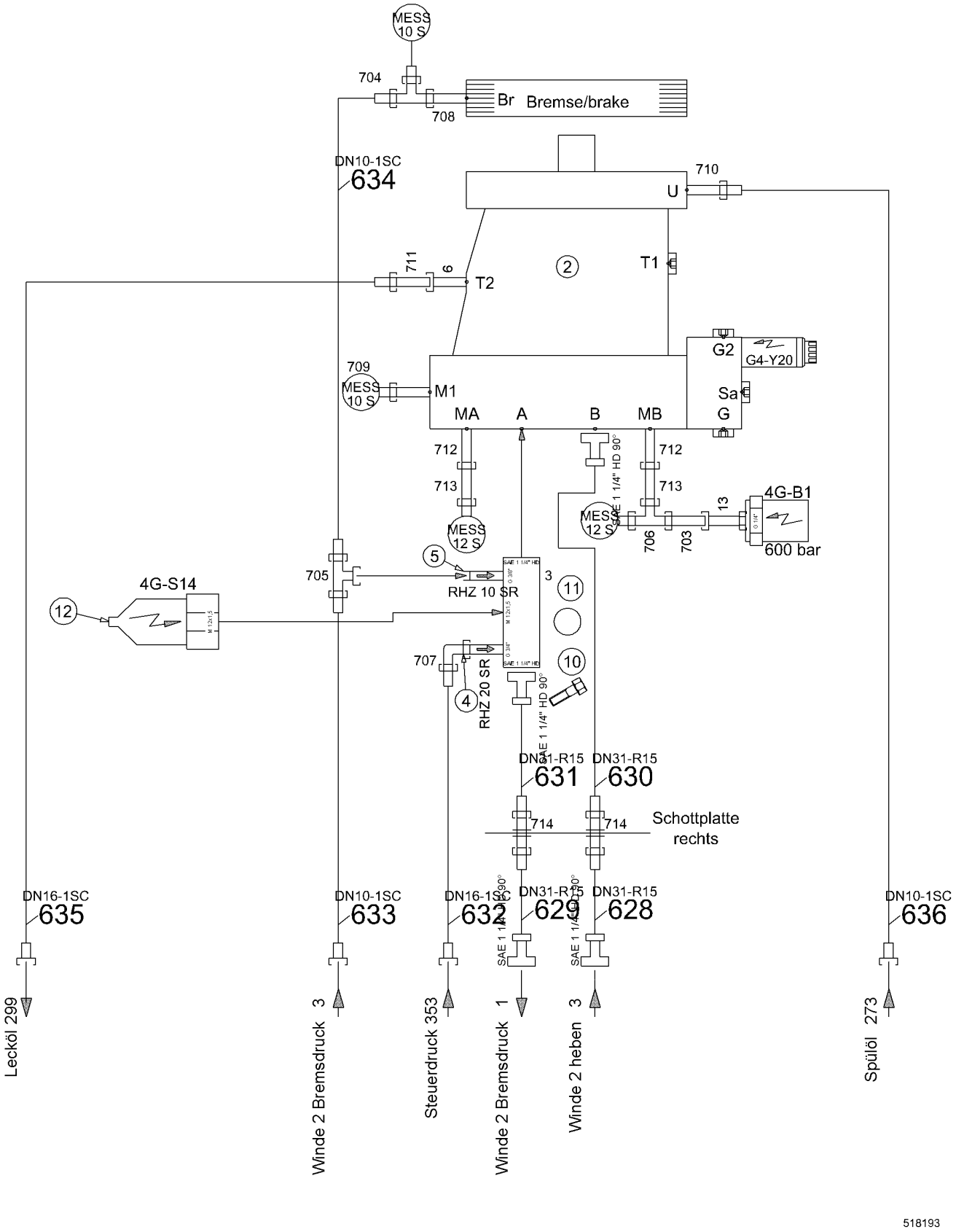
MESS 10 S
704
708
Br
Bremse/brake
DN10-1SC
634
710
U
711
6
T2
2
T1
709
MESS 10 S
M1
MA
A
B
MB
G2
G4-Y20
Sa
G
712
713
712
713
SAE 1 1/4" HD 90°
MESS 12 S
706
703
13
4G-B1
600 bar
MESS 12 S
5
705
RHZ 10 SR
3
11
4G-S14
12
707
4
RHZ 20 SR
10
SAE 1 1/4" HD 90°
DN31-R15
631
DN31-R15
630
714
714
Schottplatte
rechts
DN16-1SC
635
DN10-1SC
633
DN16-1SC
632
SAE 1 1/4" HD 90°
DN31-R15
629
SAE 1 1/4" HD 90°
DN31-R15
628
DN10-1SC
636
Lecköl 299
3
Winde 2 Bremsdruck
Steuerdruck 353
1
Winde 2 Bremsdruck
3
Winde 2 heben
Spülöl 273
518193

Pos.	Item	Quantity	Description	Bezeichnung	Serie	K
2	11251232	1	VARIABLE DISPLACEMENT MOTOR	V.MOTOR		
4	510493714	1	NON-RETURN VALVE	RUECKSCHLAGVENTIL		
5	511458814	1	NON-RETURN VALVE	RUECKSCHLAGVENTIL		
10	10539307	4	HEX SCREW ISO 4017 M14X90 10.9	SECHSKANTSCHRAUBE		
11	710069314	1	SEALING RING	DICHTRING		
12	10352119	1	PRESSURE SWITCH ON	DRUCKSCHALTER EINSCHALTE		
13	289031614	1	SPECIAL THREADED UNION	SONDERVERSCHRAUBUNG		
700	510694514	2	GAUGE CONNECTION	MESSSTUTZEN		
701	510664814	2	GAUGE CONNECTION	MESSSTUTZEN		
703	481930514	1	FITTING	VERSCHRAUBUNG		
704	7367776	1	FITTING	VERSCHRAUBUNG		
705	482431314	1	FITTING	VERSCHRAUBUNG		
706	482431414	1	FITTING	VERSCHRAUBUNG		
707	7407108	1	FITTING	VERSCHRAUBUNG		
708	471004614	1	FITTING	VERSCHRAUBUNG		
709	471008214	1	FITTING	VERSCHRAUBUNG		
710	471030708	1	FITTING	VERSCHRAUBUNG		
711	247009702	1	FITTING	VERSCHRAUBUNG		
712	7622060	2	FITTING	VERSCHRAUBUNG		
713	485433314	2	FITTING	VERSCHRAUBUNG		
714	474033014	2	FITTING	VERSCHRAUBUNG		
730	510586614	8	FLANGE HALF	FLANSCHHAELFTE		
740	10472425	5	RECTANGULAR SECTION RING	RECHTECKRING		
750	10539300	16	HEX SCREW ISO 4017 M14X45 10.9	SECHSKANTSCHRAUBE		

ACHTUNG !
ATTENTION !
ATTENTION !
ATENCIÓN !
ATENÇÃO !
ВНИМАНИЕ

Für Schlauchbestellungen kann über die Schlauchnummer, in der entsprechenden Schlauchliste, die Identnummer festgestellt werden.

For ordering flexible hoses you can find the identification number through the hose-number in the corresponding hose-list.

Pour des ordres de tuyau flexible le nombre d'identification on voit dans la liste de tuyau flexible correspondente.

Para el pedido de manguera, indicar el número de identificación de la manguera de la lista respectiva.

Para se encomendar uma mangueira, consulte o número de identificaçao na respectiva lista de mangueiras.

Для оформления заказов на шланги/рукавы идент. № может быть определен при помощи номера шланга/рукава, указанного в соотетствующем перечне шлангов/рукавов.

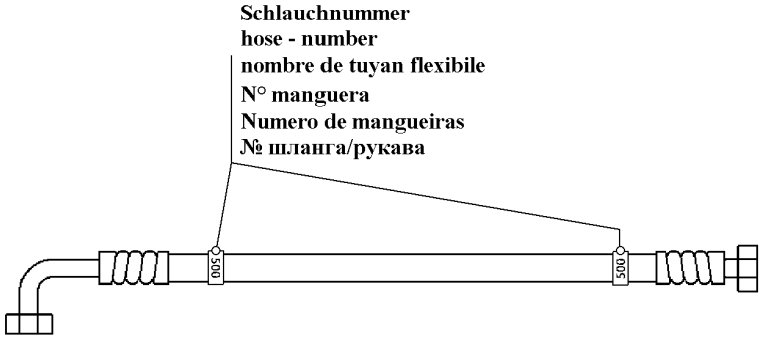

500000

Pos.	Item	Quantity	Description	Bezeichnung	Serie	K
628	995943714	1	HOSE CPL	SCHLAUCH KPL		
629	995943814	1	HOSE CPL	SCHLAUCH KPL		
630	995991314	1	HOSE CPL	SCHLAUCH KPL		
631	995944014	1	HOSE CPL	SCHLAUCH KPL		
632	995944114	1	HOSE CPL	SCHLAUCH KPL		
633	993685614	1	HOSE CPL	SCHLAUCH KPL		
634	992879314	1	HOSE CPL	SCHLAUCH KPL		
635	919757114	1	HOSE CPL	SCHLAUCH KPL		
636	994905314	1	HOSE CPL	SCHLAUCH KPL		

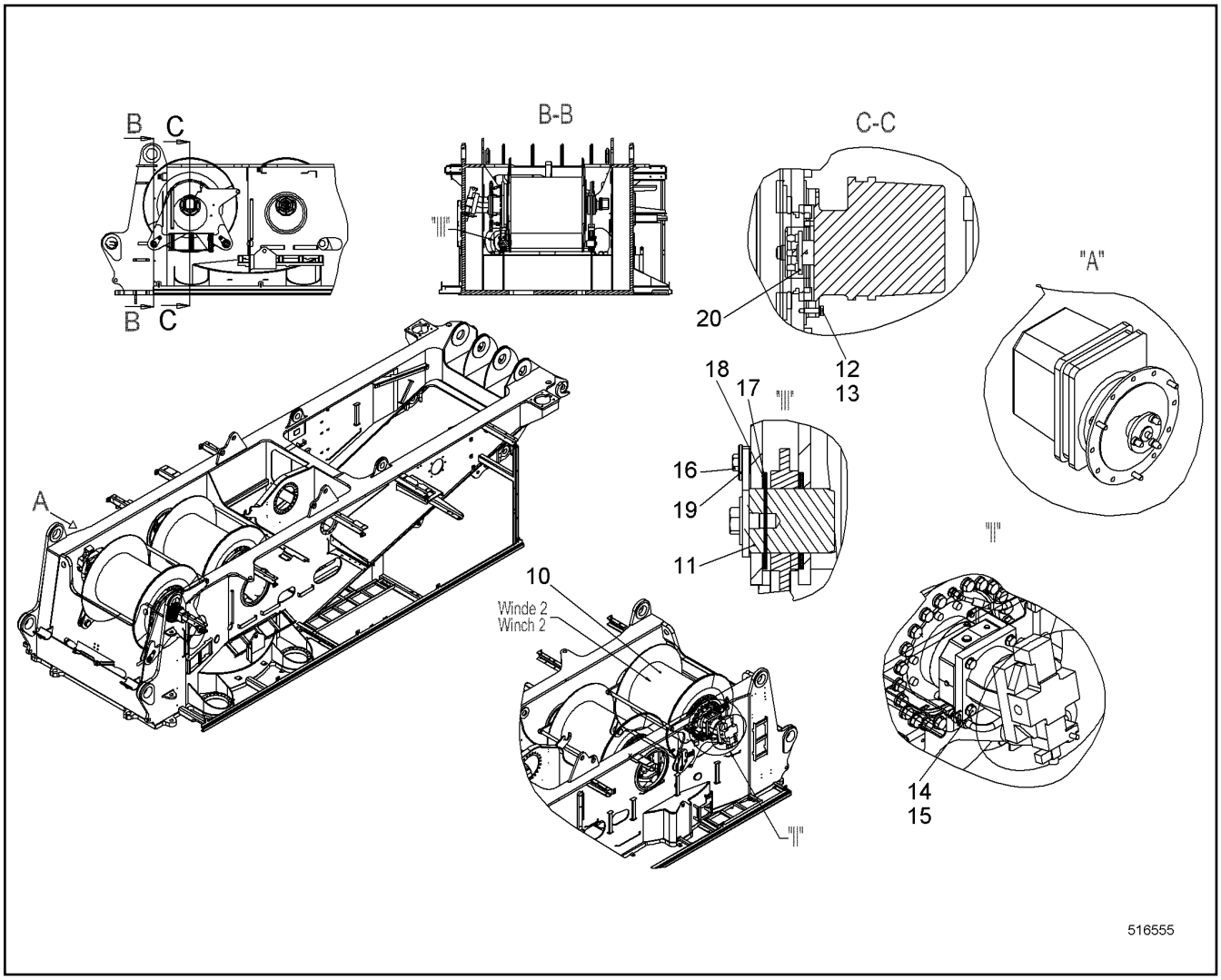

Pos.	Item	Quantity	Description	Bezeichnung	Serie	K
11	10574629	4	PIN CPL ⇨ ❑ 494	BOLZEN KPL		
12	420000414	3	WASHER ISO 7089 6 A4	SCHEIBE		
13	406532614	3	HEX SCREW ISO 4017 M6X20 A4-70	SECHSKANTSCHRAUBE		
14	10544174	4	WASHER ISO 7089 20	SCHEIBE		
15	10543924	4	HEX SCREW ISO 4017 M20X60 10.9	SECHSKANTSCHRAUBE		
16	406517314	4	HEX SCREW ISO 4017 M12X30 A4-70	SECHSKANTSCHRAUBE		
17	954432003	10	PLATE	BLECH		
18	954486503	6	PLATE	BLECH		
19	970726703	4	BUSHING 13/28X15 S355J2;EN 10025-2	BUCHSE		
20	606279014	1	DRIVE FLANGE	ANTRIEBSFLANSCH		

OHNE BILD
WITHOUT ILLUSTRATION
SANS PLANCHE
SIN FIG.
SEM ILUSTRAÇÃO
БЕЗ ИЗОБРАЖЕНИЯ

600000

Pos.	Item	Quantity	Description	Bezeichnung	Serie	K
1	10561838	1	TOOL ⇨ ❑ 501	WERKZEUG		
29	919023914	1	CABLE HYDR ⇨ ❑ 502	LEITUNG HYDR		
31	917665814	1	DRAIN HOSE CPL ⇨ ❑ 503	ABLASSSCHLAUCH KPL		
45	885392414	1	EXTENSION 1 " X 410MM	VERLAENGERUNG		
50	885391814	1	CROSS HANDLE 1 "	QUERGRIFF		
55	885380314	1	WRENCH SOCKET 36 X 1 "	STECKNUSS		
90	602707214	1	CABLE SOCK	KABELSTRUMPF		
91	602707414	1	CABLE SOCK	KABELSTRUMPF		
92	10222935	2	ROUND SLING	RUNDSCHLINGE		
93	790269114	1	ROUND SLING	RUNDSCHLINGE		
94	773954514	2	SHACKLE	SCHAEKEL		

OHNE BILD
WITHOUT ILLUSTRATION
SANS PLANCHE
SIN FIG.
SEM ILUSTRAÇÃO
БЕЗ ИЗОБРАЖЕНИЯ

600000

Pos.	Item	Quantity	Description	Bezeichnung	Serie	K
1	10560228	1	TOOL	WERKZEUG		
2	790042514	1	TOOL BOX	WERKZEUGKASTEN		
4	885602114	1	HAND LEVER PRESS 400B	HANDHEBELPRESSE		
5	790042214	1	HOSE LINE	SCHLAUCHLEITUNG		
6	790042914	1	HOSE LINE	SCHLAUCHLEITUNG		
7	750001114	1	PRESSURE GAUGE	MANOMETER		
8	750003414	1	PRESSURE GAUGE	MANOMETER		
9	7363730	2	PRESSURE GAUGE CONNECTION	MANOMETERANSCHLUSS		
10	510694314	2	PRESSUREGAUGE DIRECTCONNECTION	MANOMETERDIREKTANSCHLUS		
11	7002475	2	MEASURING HOSE	MESSSCHLAUCH		
12	790036914	1	CROWBAR 1200 MM	BRECHSTANGE		
13	885040114	1	SLEDGE HAMMER 5000G	VORSCHLAGHAMMER		
14	885400114	1	CROWBAR 600 MM	BRECHSTANGE		
15	789038114	1	LADDER	LEITER		
18	885045214	1	SOFT FACE HAMMER 60G	SCHONHAMMER		
19	773930114	1	SHACKLE	SCHAEKEL		
80	11949368	1	MOUNTING TOOL	MONTAGEWERKZEUG		

Pos.	Item	Quantity	Description	Bezeichnung	Serie	K
1	510682014	1	BALL VALVE	KUGELHAHN		
2	511704314	1	QUICK-FITTING THREAD COUPLING	SCHNELLVERSCHRAUBUNGSK		
295	928815314	1	HOSE CPL	SCHLAUCH KPL		
700	470002414	1	FITTING	VERSCHRAUBUNG		
701	471032808	1	FITTING	VERSCHRAUBUNG		
702	477400314	1	FITTING	VERSCHRAUBUNG		
703	477700414	1	FITTING	VERSCHRAUBUNG		
704	481930414	1	FITTING	VERSCHRAUBUNG		
705	485433414	1	FITTING	VERSCHRAUBUNG		

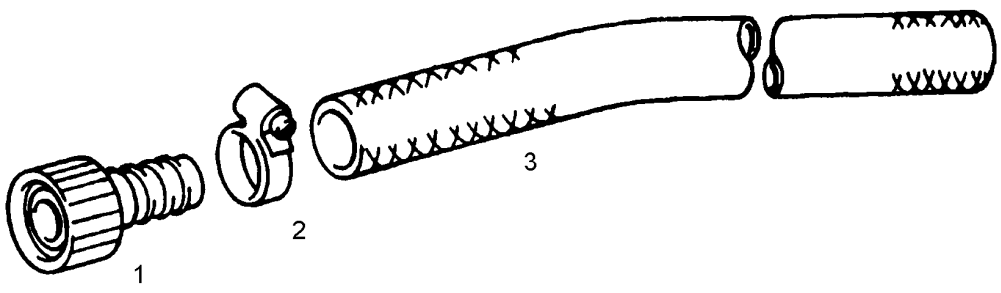

Pos.	Item	Quantity	Description	Bezeichnung	Serie	K
1	7402657	1	DRAIN COUPLING	ABLASSSTUTZEN		
2	4900778	1	HOSE CLAMP	SCHLAUCHSCHELLE		
3	7362451	2.5	HOSE	SCHLAUCH		

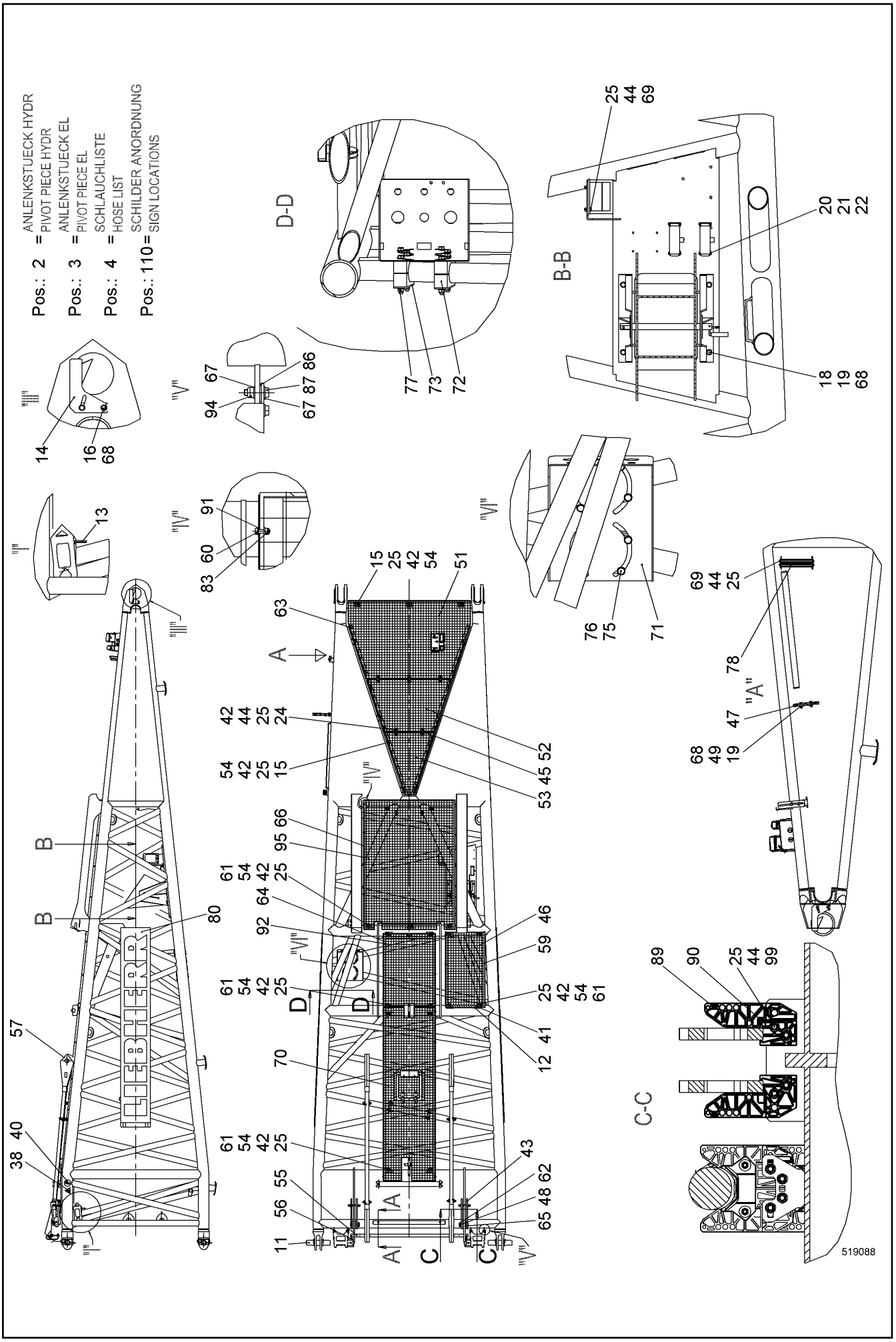
Pos.: 2 = ANLENKSTUECK HYDR / PIVOT PIECE HYDR
Pos.: 3 = ANLENKSTUECK EL / PIVOT PIECE EL
Pos.: 4 = SCHLAUCHLISTE / HOSE LIST
Pos.: 110 = SCHILDER ANORDNUNG / SIGN LOCATIONS
D-D
B-B
C-C
"A"
519088

Pos.	Item	Quantity	Description	Bezeichnung	Serie	K
2	10518261	1	PIVOT PIECE HYDR ⇨ ❑ 508	ANLENKSTUECK HYDR		
3	11901509	1	PIVOT PIECE EL ⇨ ❑ 511	ANLENKSTUECK EL		
4	11232399	1	HOSE LIST ⇨ ❑ 516	SCHLAUCHLISTE		
10	11238202	1	PIVOT PIECE ST. CONST.	ANLENKSTUECK SCHWK		
11	11287264	4	PIN CPL ⇨ ❑ 517	BOLZEN KPL		
12	10582001	1	U-STEEL	U-STAHL		
13	433105008	2	RETAINING SPRING DIN 2194 6MM FS	SICHERUNGSFEDER		
14	970831503	2	WP	WP		
15	10538807	17	HEX SCREW ISO 4017 M8X50 A4-70	SECHSKANTSCHRAUBE		
16	406517314	4	HEX SCREW ISO 4017 M12X30 A4-70	SECHSKANTSCHRAUBE		
17	406518714	2	HEX SCREW ISO 4017 M10X20 A4-70	SECHSKANTSCHRAUBE		
18	406518414	4	HEX SCREW ISO 4017 M12X35 A4-70	SECHSKANTSCHRAUBE		
19	10540495	6	HEX NUT ISO 10511 M12 A4	SECHSKANTMUTTER		
20	10278936	8	SOCKET HEAD SCREW ISO 4762 M5X20 A4-7	ZYLINDERSCHRAUBE		
21	420005214	24	WASHER ISO 7089 5 A4	SCHEIBE		
22	10540484	16	HEX NUT ISO 10511 M5 A4	SECHSKANTMUTTER		
23	11236533	4	SUPPORT CPL ⇨ ❑ 518	AUFLAGE KPL		
24	406501314	10	HEX SCREW ISO 4017 M8X30 A4-70	SECHSKANTSCHRAUBE		
25	10540493	70	HEX NUT ISO 10511 M8 A4	SECHSKANTMUTTER		
26	939662601	1	SAFETY ROLLER	SCHUTZWALZE		
27	956378214	2	AXLE HOLDER	ACHSHALTER		
28	703003014	1	AXLE HOLDER	ACHSHALTER		
29	10536579	4	WEDGE LOCK WASHER M10 254 SMO;EN 10	KEILSICHERUNGSSCHEIBE		
30	406511914	2	HEX SCREW ISO 4017 M10X25 A4-70	SECHSKANTSCHRAUBE		
31	990954814	2	FOOT ST.CONST.	FUSS SCHWK		
33	433206214	2	SPRING PLUG DIN 11024 4	FEDERSTECKER		
34	971303203	1	STRIP	LEISTE		
35	956009714	2	INTERMEDIATE PART	ZWISCHENSTUECK		
36	10530689	2	TIGHTENING STRAP HINGE PIN	GELENKBOLZENSPANNBAND		
37	10538810	2	HEX SCREW ISO 4017 M8X90 A4-70	SECHSKANTSCHRAUBE		
38	10523125	2	SIGN	SCHILD		
39	10558857	2	LOCKING RING 8 A2	SICHERUNGSRING		
40	773194314	2	SIGN	SCHILD		
41	773193414	1	SIGN	SCHILD		
42	10098157	53	DISH	TELLER		
43	10534277	4	COUPLING LINK	KOPPELLASCHE		
44	420001014	40	WASHER ISO 7089 8 A4	SCHEIBE		
46	10222994	1	GRATING	GITTERROST		
47	10445043	1	BULKHEAD PLATE	SCHOTTPLATTE		
48	433010314	2	SPLIT PIN ISO 1234 10X80 A4	SPLINT		
49	406511414	2	HEX SCREW ISO 4017 M12X40 A4-70	SECHSKANTSCHRAUBE		
50	10540082	2	RUBBER	GUMMI		
51	10581980	1	GRATING	GITTERROST		
52	10581981	1	GRATING	GITTERROST		
53	10581982	1	GRATING	GITTERROST		
54	10540510	39	WASHER ISO 7093-1 8 A4	SCHEIBE		
55	289057714	1	TUBE	ROHR		
56	433102508	2	RETAINING SPRING 5MM	SICHERUNGSFEDER		
57	10540549	2	ANCHORING ROD	HALTESTANGE		
58	10538812	4	HEX SCREW ISO 4017 M8X100 A4-70	SECHSKANTSCHRAUBE		
59	10222995	2	U-STEEL	U-STAHL		
60	406532614	24	HEX SCREW ISO 4017 M6X20 A4-70	SECHSKANTSCHRAUBE		

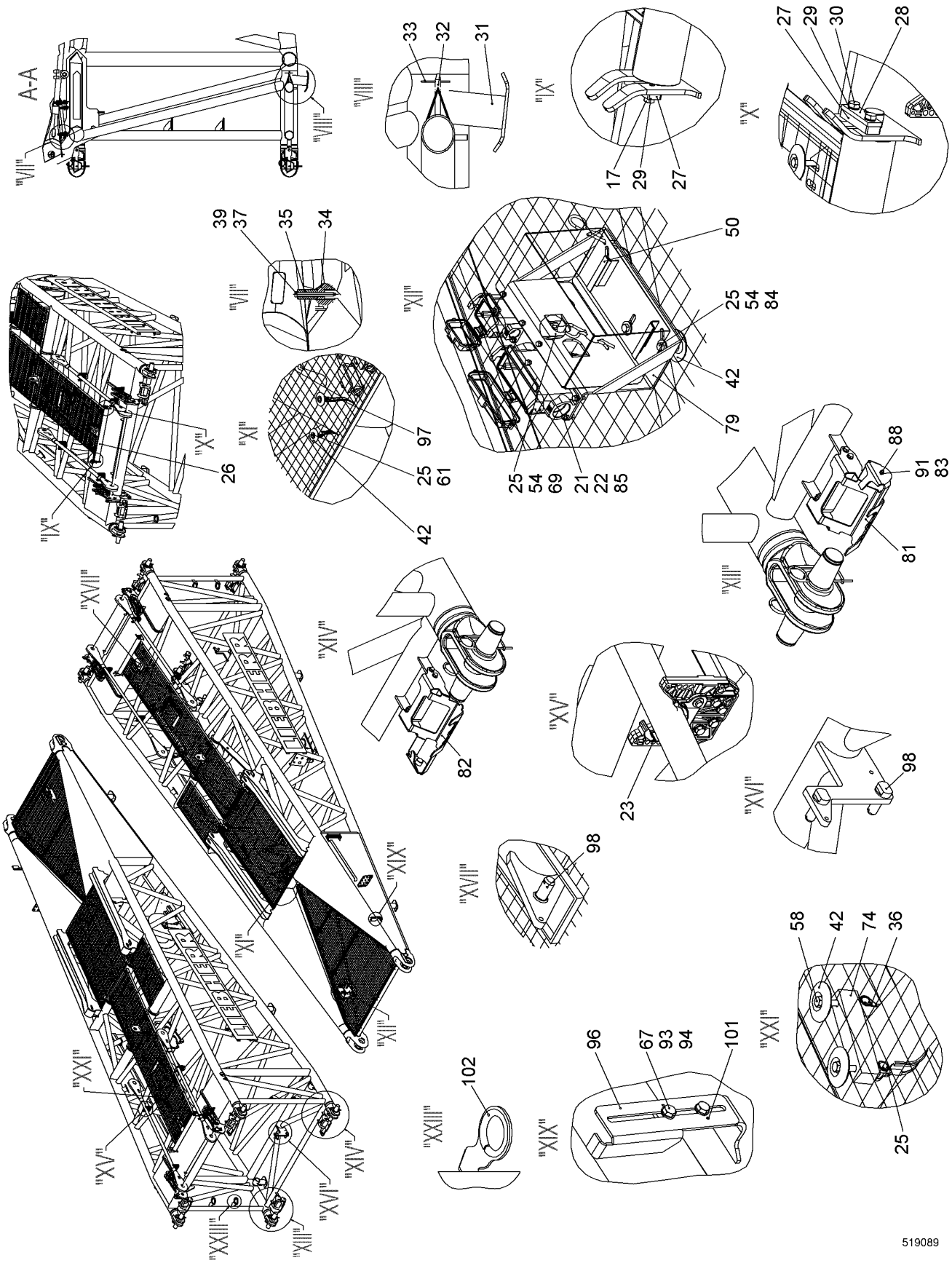

21.6.2017 519089	**138406_ETK_001**	506 (3/4)
LIEBHERR	**PIVOT PIECE CPL** **ANLENKSTUECK KPL**	**11 23 820 4**

Pos.	Item	Quantity	Description	Bezeichnung	Serie	K
61	10331506	19	HEX SCREW ISO 4017 M8X55 A4-70	SECHSKANTSCHRAUBE		
62	421103514	2	WASHER DIN EN 28738 60 ST;	SCHEIBE		
63	10581992	2	L-PROFILE	L-PROFIL		
64	10582020	2	U-STEEL	U-STAHL		
65	958280214	2	PIN	BOLZEN		
67	420001114	36	WASHER ISO 7089 10 A4	SCHEIBE		
68	4901782	16	WASHER ISO 7089 12 A4	SCHEIBE		
69	406501414	9	HEX SCREW ISO 4017 M8X25 A4-70	SECHSKANTSCHRAUBE		
70	10581937	1	GRATING CPL ⇨ ❑ 519	GITTERROST KPL		
72	602017114	8	CLAMP-HALF	KLEMMHAELFTE		
73	602016514	4	LID PLATE	DECKPLATTE		
74	10589204	2	SHEET	PLATTE		
75	10543975	8	HEX SCREW ISO 4014 M16X160 10.9	SECHSKANTSCHRAUBE		
76	10544172	16	WASHER ISO 7089 16	SCHEIBE		
77	10544155	8	HEX NUT DIN 985 M16 10	SECHSKANTMUTTER		
78	916183314	1	HOSE HOLDER HYDR.ST.CONST. CPL	SCHLAUCHHALTER SCHWK HYD		
79	11218236	1	HOLDER	HALTER		
80	993419814	2	LIEBHERR SIGN ⇨ ❑ 520	SCHILD LIEBHERR		
81	10349598	2	SUPPORT SHEET	AUFLAGEBLECH		
82	10349599	2	SUPPORT SHEET	AUFLAGEBLECH		
83	10540492	28	HEX NUT ISO 10511 M6 A4	SECHSKANTMUTTER		
84	406508014	3	HEX SCREW ISO 4017 M8X45 A4-70	SECHSKANTSCHRAUBE		
85	406501814	8	HEX SCREW ISO 4017 M5X20 A4-70	SECHSKANTSCHRAUBE		
86	10540511	16	WASHER ISO 7093-1 10 A4	SCHEIBE		
87	406509314	16	HEX SCREW ISO 4017 M10X35 A4-70	SECHSKANTSCHRAUBE		
88	726612214	4	RUBBER MOUNT	LAGER GUMMI		
89	11219265	4	SUPPORT	AUFLAGE		
90	11219851	4	SHEET	PLATTE		
91	420000414	52	WASHER ISO 7089 6 A4	SCHEIBE		
92	11239010	1	GRATING	GITTERROST		
93	406511614	2	HEX SCREW ISO 4017 M10X30 A4-70	SECHSKANTSCHRAUBE		
94	10540494	18	HEX NUT ISO 10511 M10 A4	SECHSKANTMUTTER		
95	11275747	1	GRATING	GITTERROST		
96	971363403	1	PLATE	BLECH		
97	10531873	2	TIGHTENING STRAP HINGE PIN	GELENKBOLZENSPANNBAND		
98	11946386	3	PIN	BOLZEN		
99	406517614	8	HEX SCREW ISO 4017 M8X35 A4-70	SECHSKANTSCHRAUBE		
101	432003714	2	DOWEL PIN ISO 8752 5X16	SPANNSTIFT		
102	226017802	4	EDGE PROTECTION METER WARE	KANTENSCHUTZ METERWARE		
110	11266945	1	SIGN LOCATIONS ⇨ ❑ 521	SCHILDER ANORD		

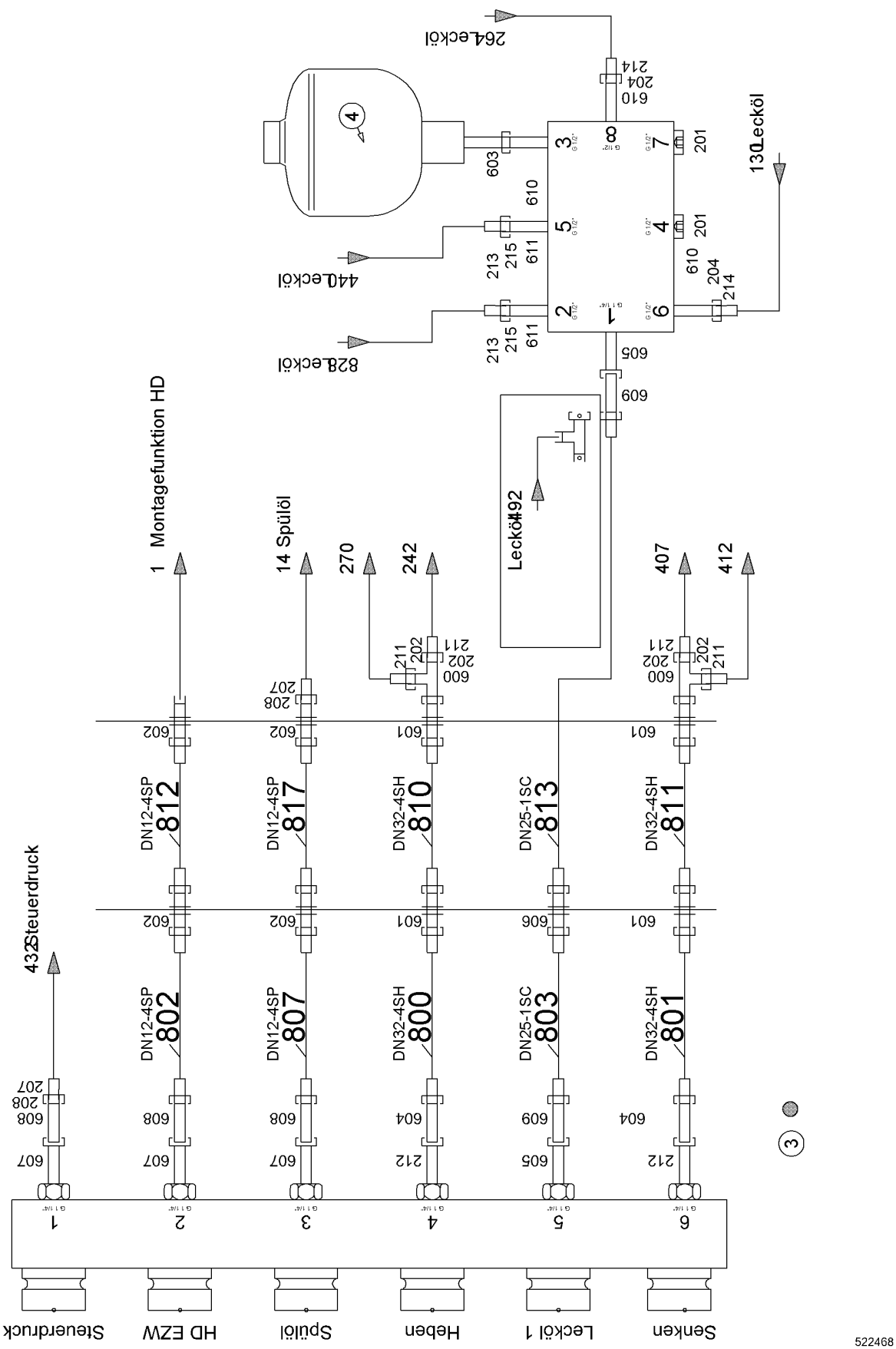

21.6.2017 522468 LIEBHERR	**138406_ETK_001** **PIVOT PIECE HYDR** **ANLENKSTUECK HYDR**	❑ 508 (1/2) **10 51 826 1**

Pos.	Item	Quantity	Description	Bezeichnung	Serie	K
2	10551576	1	QUICK RELEASE FITTING ⇨ ❑ 510	SCHNELLVERSCHLUSSKUPPLUN		
3	10445126	1	ENCLOSURE CPL	GEHAEUSE KPL		
4	592274714	1	DIAPHRAGM ACCUMULATOR	MEMBRANSPEICHER		
5	943958914	1	BLOCK	BLOCK		
201	247112702	2	FITTING	VERSCHRAUBUNG		
202	477401014	4	FITTING	VERSCHRAUBUNG		
204	247049102	2	FITTING	VERSCHRAUBUNG		
207	477701114	2	FITTING	VERSCHRAUBUNG		
208	477400614	2	FITTING	VERSCHRAUBUNG		
211	477701814	4	FITTING	VERSCHRAUBUNG		
212	475503314	2	FITTING	VERSCHRAUBUNG		
213	477700514	2	FITTING	VERSCHRAUBUNG		
214	477700114	2	FITTING	VERSCHRAUBUNG		
215	247048802	2	FITTING	VERSCHRAUBUNG		
600	482331914	2	FITTING	VERSCHRAUBUNG		
601	474033014	4	FITTING	VERSCHRAUBUNG		
602	474032614	4	FITTING	VERSCHRAUBUNG		
603	247011602	1	FITTING	VERSCHRAUBUNG		
604	471034414	2	FITTING	VERSCHRAUBUNG		
605	247042702	2	FITTING	VERSCHRAUBUNG		
606	247027402	1	FITTING	VERSCHRAUBUNG		
607	247116402	3	FITTING	VERSCHRAUBUNG		
608	471033214	3	FITTING	VERSCHRAUBUNG		
609	247010102	2	FITTING	VERSCHRAUBUNG		
610	247009702	3	FITTING	VERSCHRAUBUNG		
611	247009202	2	FITTING	VERSCHRAUBUNG		

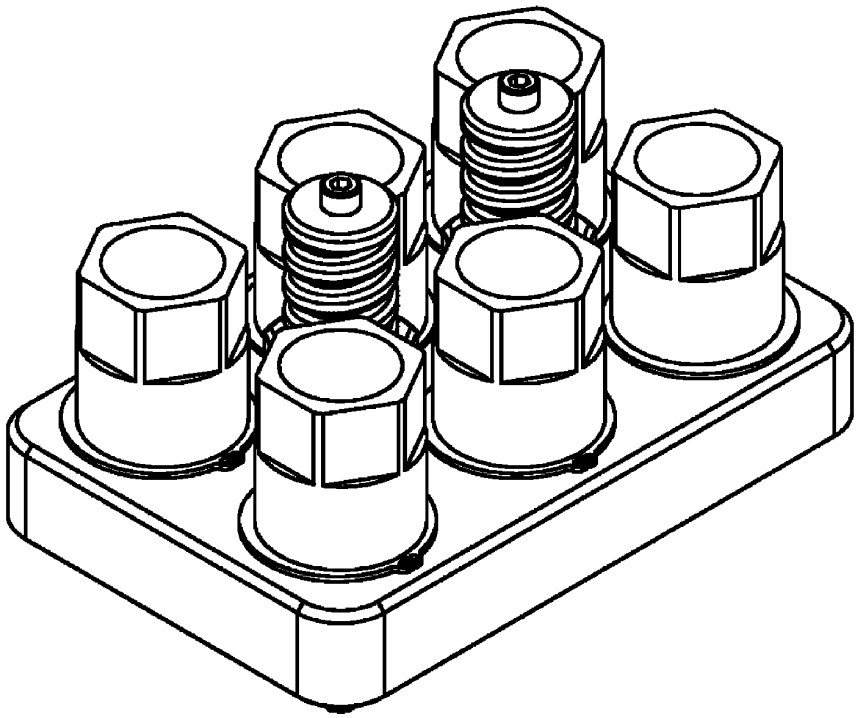

514780

Pos.	Item	Quantity	Description	Bezeichnung	Serie	K
1	10572236	2	GUIDING BOLT	FUEHRUNGSBOLZEN		
2	10447747	6	PLUG	STECKER		
3	10572242	1	COVER	DECKEL		

OHNE BILD
WITHOUT ILLUSTRATION
SANS PLANCHE
SIN FIG.
SEM ILUSTRAÇÃO
БЕЗ ИЗОБРАЖЕНИЯ

600000

Pos.	Item	Quantity	Description	Bezeichnung	Serie	K
10	11286324	1	ANGLE TRANSMITTER	WINKELGEBER		
21	11901511	1	CABLE LOOM 1 PIVOT PIECE EL ⇨ ❑ 512	KABELSATZ 1 ANLENKSTUECK E		
31	919252814	1	CABLE DRUM ⇨ ❑ 514	KABELTROMMEL		

OHNE BILD
WITHOUT ILLUSTRATION
SANS PLANCHE
SIN FIG.
SEM ILUSTRAÇÃO
БЕЗ ИЗОБРАЖЕНИЯ

600000

Pos.	Item	Quantity	Description	Bezeichnung	Serie	K
20	10572531	1	CLAMPING SOCKET	KLEMMDOSE		
21	10045155	2	CABLE GLAND	KABELVERSCHRAUBUNG		
22	10045157	1	CABLE GLAND	KABELVERSCHRAUBUNG		
23	602440301	1	CABLE GLAND	KABELVERSCHRAUBUNG		
24	693061414	8	STOPPER PLUG	BLINDSTOPFEN		
25	693061314	1	STOPPER PLUG	BLINDSTOPFEN		
26	693061214	15	STOPPER PLUG	BLINDSTOPFEN		
27	606774714	1	SIGN	SCHILD		
31	600385314	10.5	CONTROL LEAD	STEUERLEITUNG		
32	693155014	1	SOCKET SHELL	TUELLENGEHAEUSE		
33	605604714	1	MALE INSERT	STIFTEINSATZ		
34	605619814	14	PIN CONTACT	STIFTKONTAKT		
35	605601701	5	CONTACT PIN	KONTAKTSTIFT		
36	605615814	5	PIN CONTACT	STIFTKONTAKT		
37	10045157	1	CABLE GLAND	KABELVERSCHRAUBUNG		
41	260318602	10.5	LEAD	LEITUNG		
42	10036809	1	SOCKET SHELL	TUELLENGEHAEUSE		
43	605611814	1	MALE INSERT	STIFTEINSATZ		
44	605608401	24	CRIMPING CONTACT	CRIMPKONTAKT		
45	602440301	1	CABLE GLAND	KABELVERSCHRAUBUNG		
46	260493702	1	REDUCER	REDUZIERUNG		
51	693106214	1.5	CONTROL LEAD	STEUERLEITUNG		
52	605013408	1	PLUG	STECKER		
53	605013508	1	DUST CAP	STAUBKAPPE		
61	693157114	1	BS HOUSING	SOCKELGEHAEUSE		
62	605609514	1	FEMALE INSERT	BUCHSENEINSATZ		

OHNE BILD
WITHOUT ILLUSTRATION
SANS PLANCHE
SIN FIG.
SEM ILUSTRAÇÃO
БЕЗ ИЗОБРАЖЕНИЯ

600000

Pos.	Item	Quantity	Description	Bezeichnung	Serie	K
63	693061514	2	STOPPER PLUG	BLINDSTOPFEN		
71	693157214	1	BS HOUSING	SOCKELGEHAEUSE		
72	605612014	1	FEMALE INSERT	BUCHSENEINSATZ		
73	693061314	2	STOPPER PLUG	BLINDSTOPFEN		
91	10226573	1	WIRING HARNESS	KABELSTRANG		
92	10296818	1	DEVICE PLUG	GERAETESTECKER		
93	10530322	1	COUNTER NUT M20X1.5 POLYAMID	GEGENMUTTER		

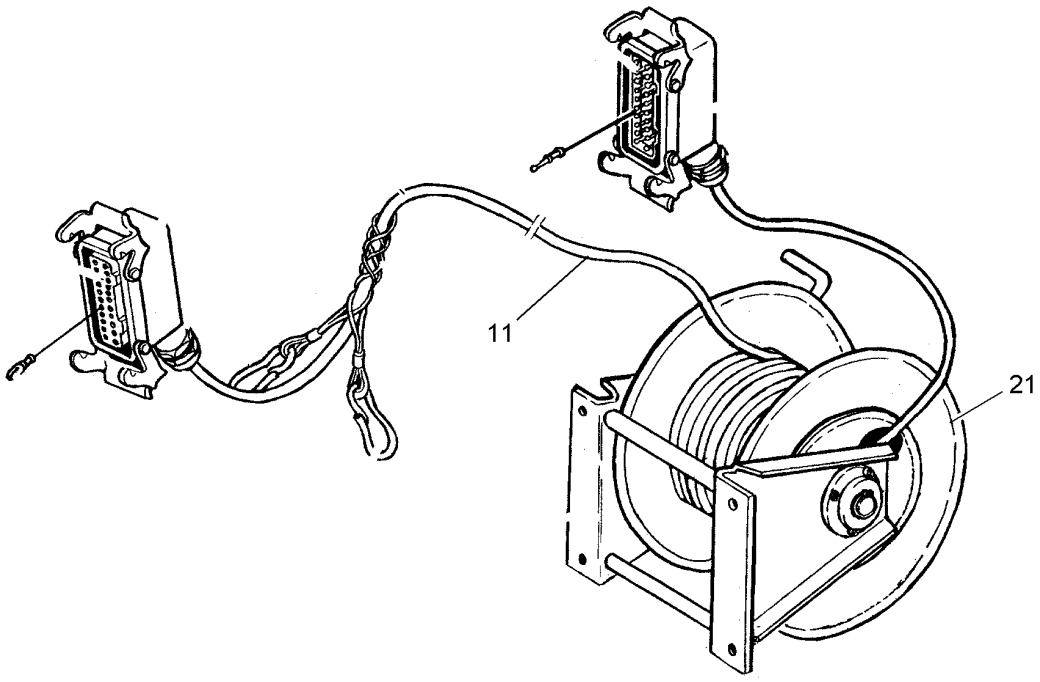

Pos.	Item	Quantity	Description	Bezeichnung	Serie	K
11	11265111	1	WIRING HARNESS	KABELSTRANG		
21	616154114	1	CABLE DRUM ⇨ ❑ 515	KABELTROMMEL		
22	226016702	0.45	EDGE PROTECTION METER WARE	KANTENSCHUTZ METERWARE		

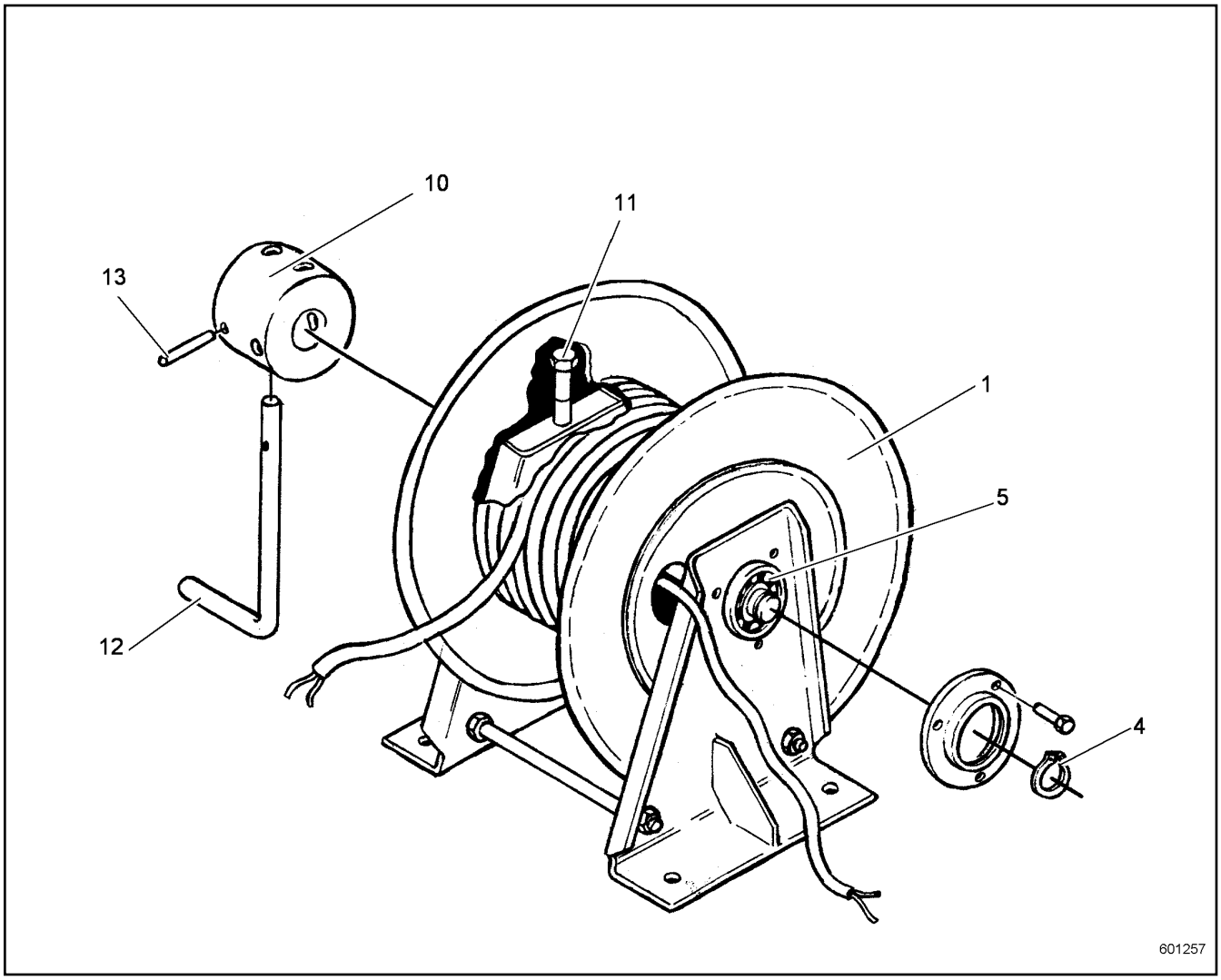

Pos.	Item	Quantity	Description	Bezeichnung	Serie	K
1	10227104	1	DRUM BODY	TROMMELKOERPER		
3	4280020	3	LOCKING RING DIN 471 25X1.2	SICHERUNGSRING		
4	616155214	2	DEEP GROOVE BALL BEARING	RILLENKUGELLAGER		
7	10227128	1	LOCKING DEVICE	ARRETIERUNG		
8	10227126	1	BUSHING	BUCHSE		
9	10227129	1	PIN M12X1.5 NIROSTA	BOLZEN		
10	616155414	1	CRANK HANDLE	HANDKURBEL		
11	616155514	1	TENSION PIN	SCHWERSPANNSTIFT		

ACHTUNG !
ATTENTION !
ATTENTION !
ATENCIÓN !
ATENÇÃO !
ВНИМАНИЕ

Für Schlauchbestellungen kann über die Schlauchnummer, in der entsprechenden Schlauchliste, die Identnummer festgestellt werden.

For ordering flexible hoses you can find the identification number through the hose-number in the corresponding hose-list.

Pour des ordres de tuyau flexible le nombre d'identification on voit dans la liste de tuyau flexible correspondente.

Para el pedido de manguera, indicar el número de identificación de la manguera de la lista respectiva.

Para se encomendar uma mangueira, consulte o número de identificaçao na respectiva lista de mangueiras.

Для оформления заказов на шланги/рукавы идент. № может быть определен при помощи номера шланга/рукава, указанного в соотетствующем перечне шлангов/рукавов.

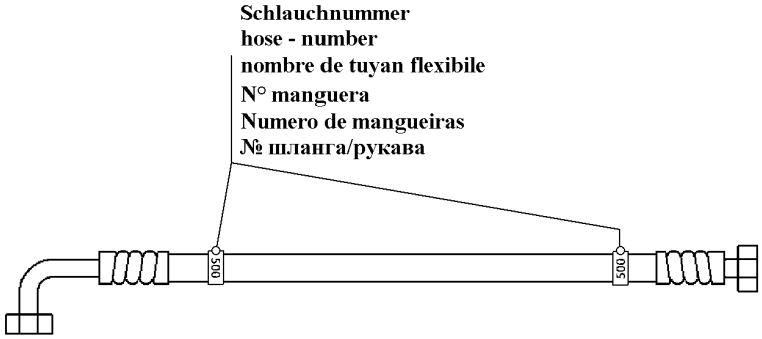

500000

Pos.	Item	Quantity	Description	Bezeichnung	Serie	K
800	993226114	1	HOSE CPL	SCHLAUCH KPL		
801	993226114	1	HOSE CPL	SCHLAUCH KPL		
802	928318214	1	HOSE CPL	SCHLAUCH KPL		
803	992893114	1	HOSE CPL	SCHLAUCH KPL		
807	928318214	1	HOSE CPL	SCHLAUCH KPL		
810	991198814	1	HOSE CPL	SCHLAUCH KPL		
811	991198814	1	HOSE CPL	SCHLAUCH KPL		
812	991563114	1	HOSE CPL	SCHLAUCH KPL		
813	992504214	1	HOSE CPL	SCHLAUCH KPL		
817	991563114	1	HOSE CPL	SCHLAUCH KPL		

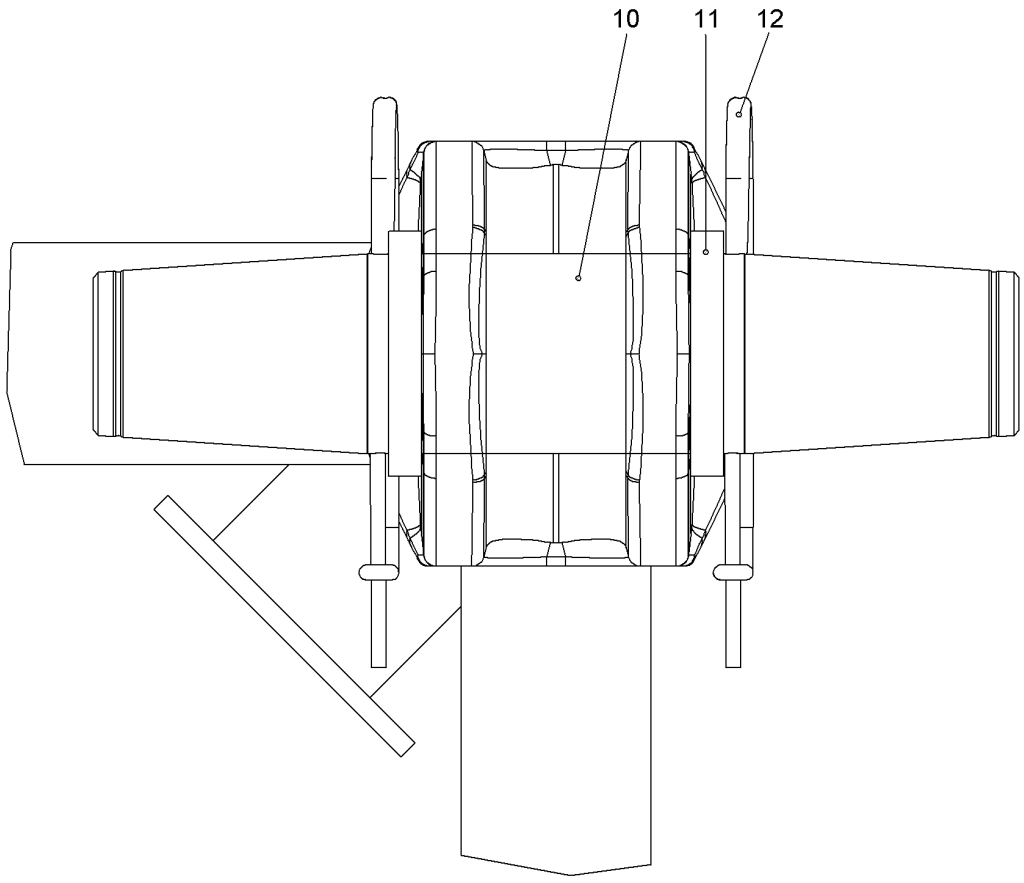

Pos.	Item	Quantity	Description	Bezeichnung	Serie	K
10	950581614	1	PIN 80X371 LHRD900-40;10019758	BOLZEN		
11	421103814	2	WASHER DIN EN 28738 80 ST;	SCHEIBE		
12	433105008	2	RETAINING SPRING DIN 2194 6MM FS	SICHERUNGSFEDER		

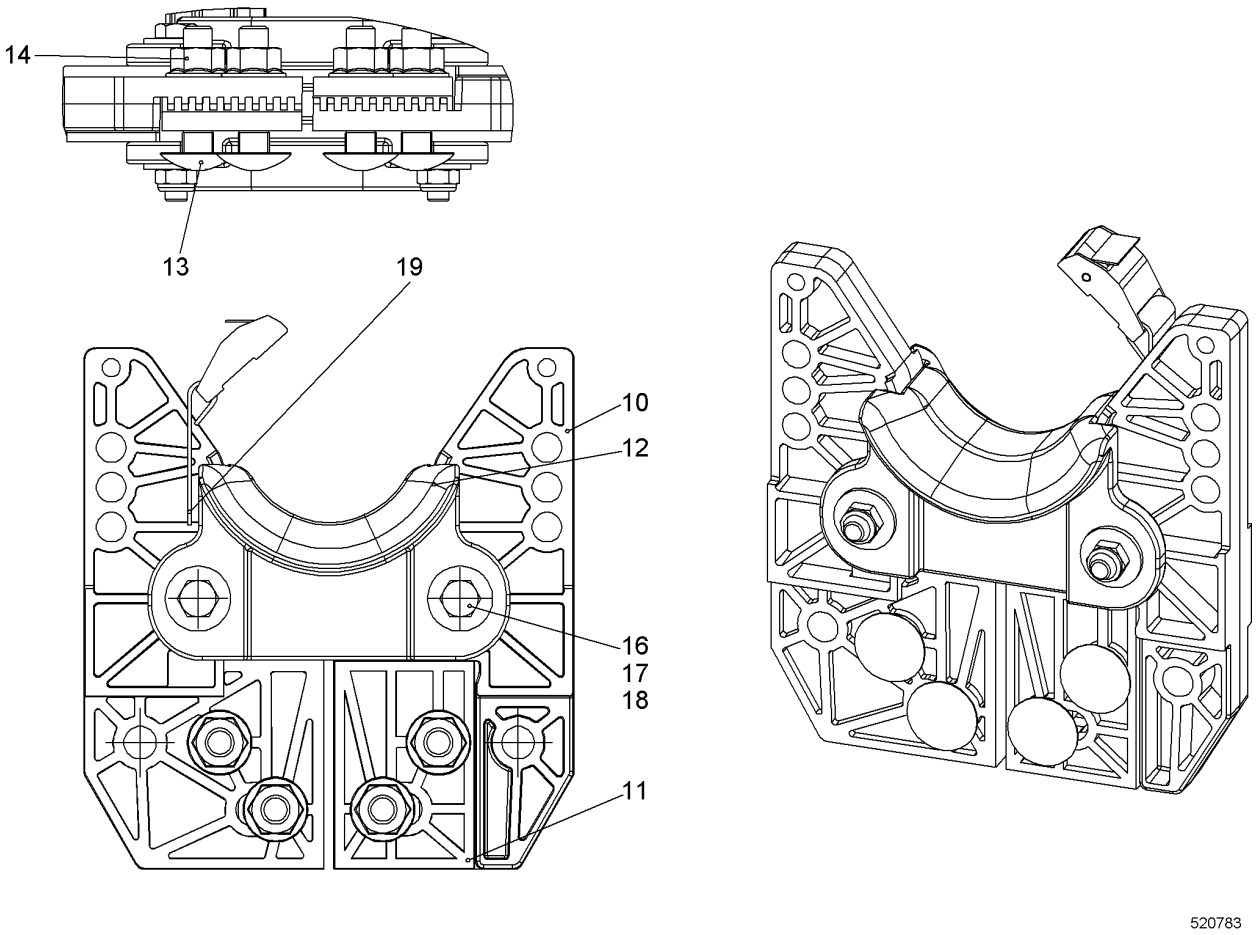

Pos.	Item	Quantity	Description	Bezeichnung	Serie	K
10	11219265	2	SUPPORT	AUFLAGE		
11	11219851	2	SHEET	PLATTE		
12	11247161	1	SUPPORT	AUFLAGE		
13	11314349	4	CHEESE HEAD SCREW DIN 603 M8X35 A4-70	FLACHRUNDSCHRAUBE		
14	11314341	4	HEX NUT DIN EN 1663 M8 A4	SECHSKANTMUTTER		
16	10538799	2	HEX SCREW ISO 4017 M6X45 A4-70	SECHSKANTSCHRAUBE		
17	10540500	4	WASHER ISO 7093-1 6 A4	SCHEIBE		
18	10540492	2	HEX NUT ISO 10511 M6 A4	SECHSKANTMUTTER		
19	10020519	1	LASHING STRAP	ZURRGURT		

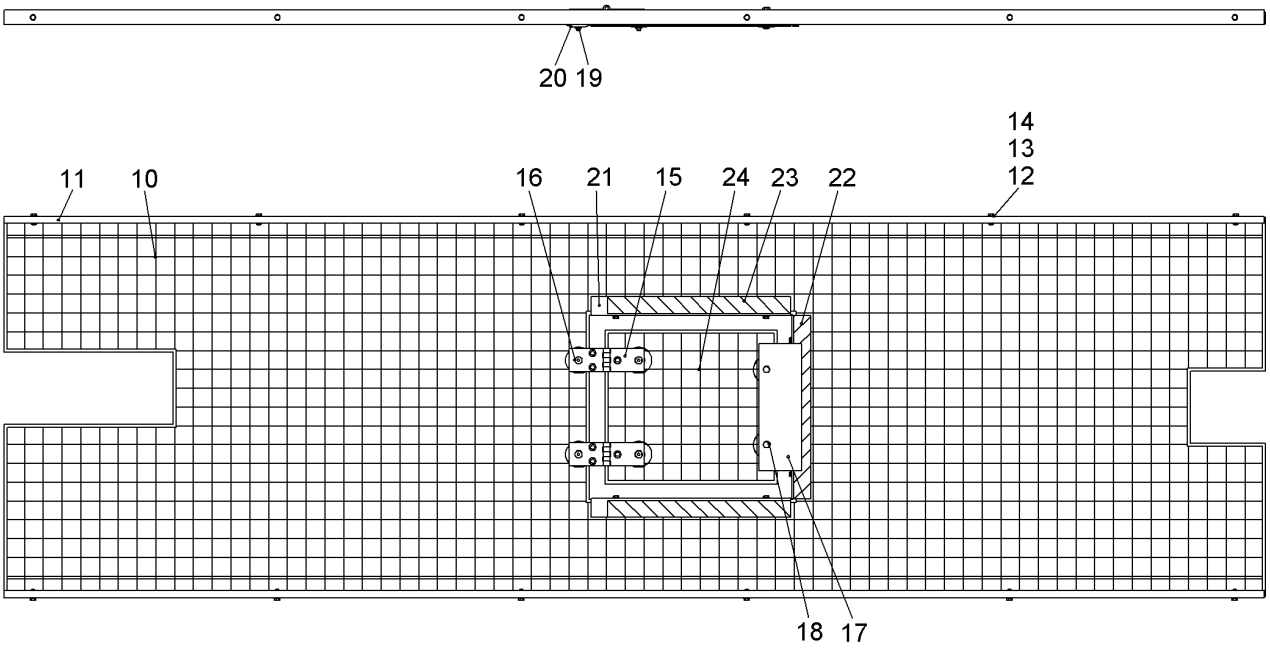

Pos.	Item	Quantity	Description	Bezeichnung	Serie	K
10	10598959	1	GRATING	GITTERROST		
11	10565639	2	U-STEEL	U-STAHL		
12	420000414	36	WASHER ISO 7089 6 A4	SCHEIBE		
13	406532614	18	HEX SCREW ISO 4017 M6X20 A4-70	SECHSKANTSCHRAUBE		
14	10540492	18	HEX NUT ISO 10511 M6 A4	SECHSKANTMUTTER		
15	954560603	2	HINGE	SCHARNIER		
16	408601008	4	COUNTERSUNK SCREW DIN 7991 M8X45 8.8;	SENKSCHRAUBE		
17	958908914	1	LIMIT STOP PLATE	ANSCHLAGPLATTE		
18	406532914	2	HEX SCREW ISO 4017 M8X40 A4-70	SECHSKANTSCHRAUBE		
19	10540493	6	HEX NUT ISO 10511 M8 A4	SECHSKANTMUTTER		
20	10098157	6	DISH	TELLER		
21	10581999	2	U-STEEL	U-STAHL		
22	10582001	1	U-STEEL	U-STAHL		
23	773193414	1	SIGN	SCHILD		
24	10599053	1	GRATING	GITTERROST		

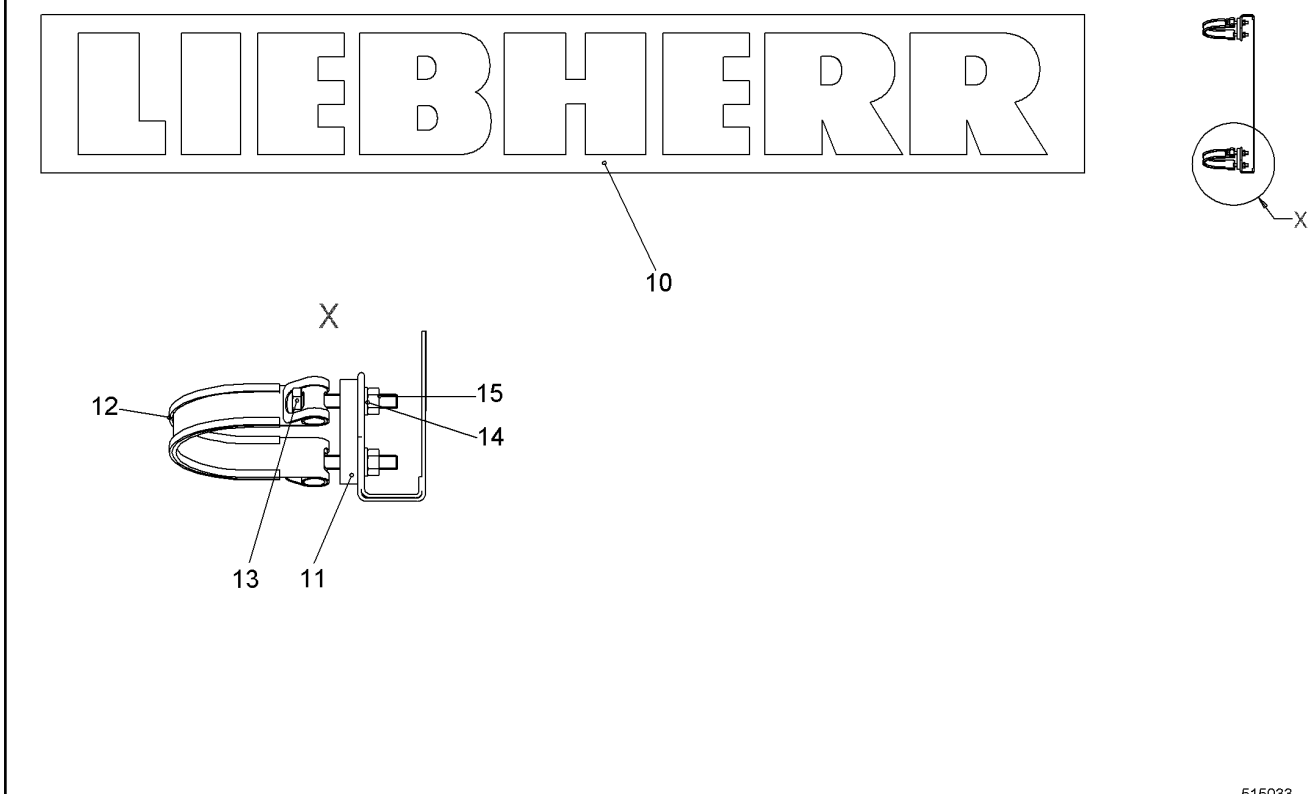

Pos.	Item	Quantity	Description	Bezeichnung	Serie	K
11	10350084	4	REINFORCING PLATE	VERSTAERKUNGSPLATTE		
12	10530689	4	TIGHTENING STRAP HINGE PIN	GELENKBOLZENSPANNBAND		
13	10331506	8	HEX SCREW ISO 4017 M8X55 A4-70	SECHSKANTSCHRAUBE		
14	420001014	8	WASHER ISO 7089 8 A4	SCHEIBE		
15	10540493	8	HEX NUT ISO 10511 M8 A4	SECHSKANTMUTTER		

OHNE BILD
WITHOUT ILLUSTRATION
SANS PLANCHE
SIN FIG.
SEM ILUSTRAÇÃO
БЕЗ ИЗОБРАЖЕНИЯ

600000

Pos.	Item	Quantity	Description	Bezeichnung	Serie	K
10	9402377	4	INFORMATION SIGN	HINWEISSCHILD		
11	11265497	4	SIGN	SCHILD		
12	11265425	2	SIGN	SCHILD		

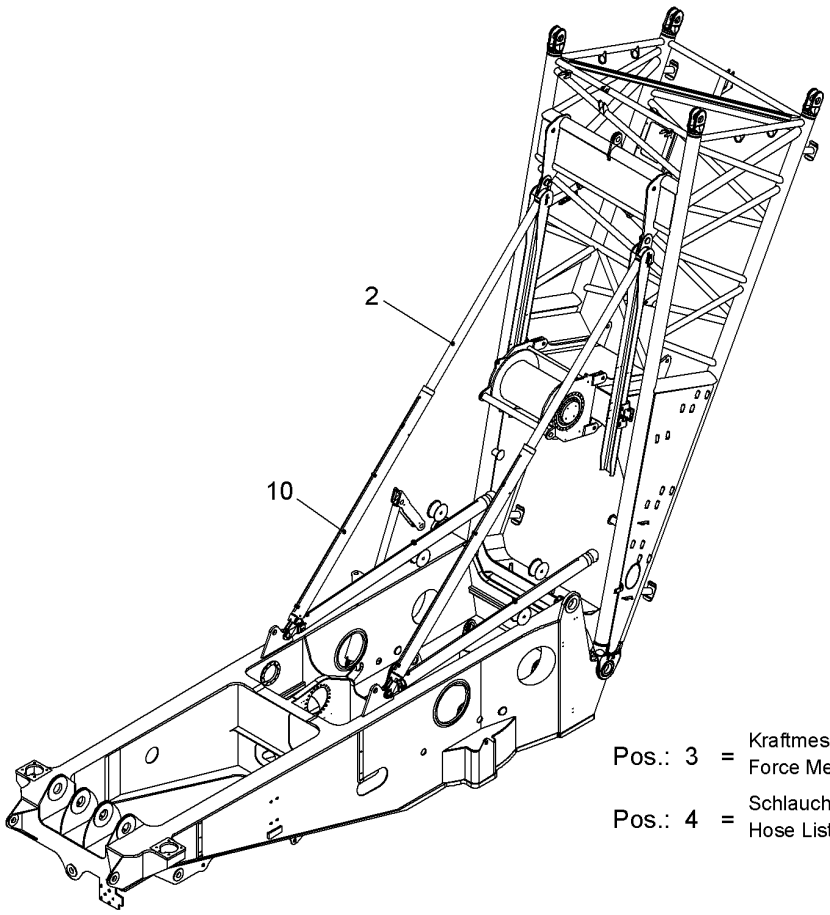

Pos.	Item	Quantity	Description	Bezeichnung	Serie	K
2	10585108	1	TILTING-BACK SUPPORTS HYDR RFK ⇨ ❑ 523	RUECKFALLSTUETZEN HYDR NR		
3	11292596	1	FORCE MEASURING AXLE EL ⇨ ❑ 530	KRAFTMESSACHSE EL		
4	11229706	1	HOSE LIST ⇨ ❑ 531	SCHLAUCHLISTE		
10	11275365	1	TILT-BACK SUPPORTS INSTAL. ⇨ ❑ 532	RUECKFALLSTUETZEN EINBAU		

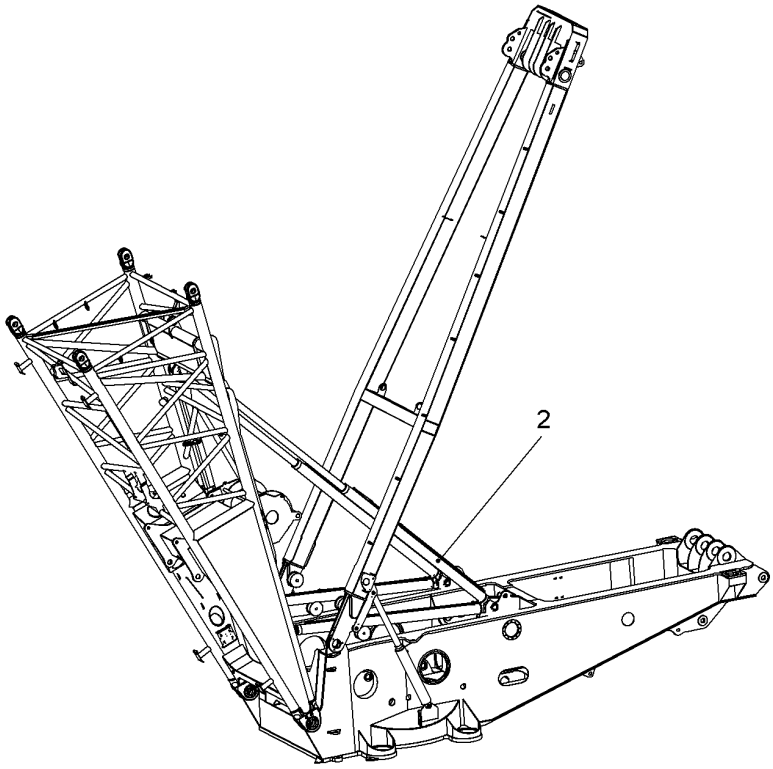

Pos.	Item	Quantity	Description	Bezeichnung	Serie	K
2	10519591	1	TUBING HYDR ⇨ ❑ 524	VERROHRUNG HYDR		

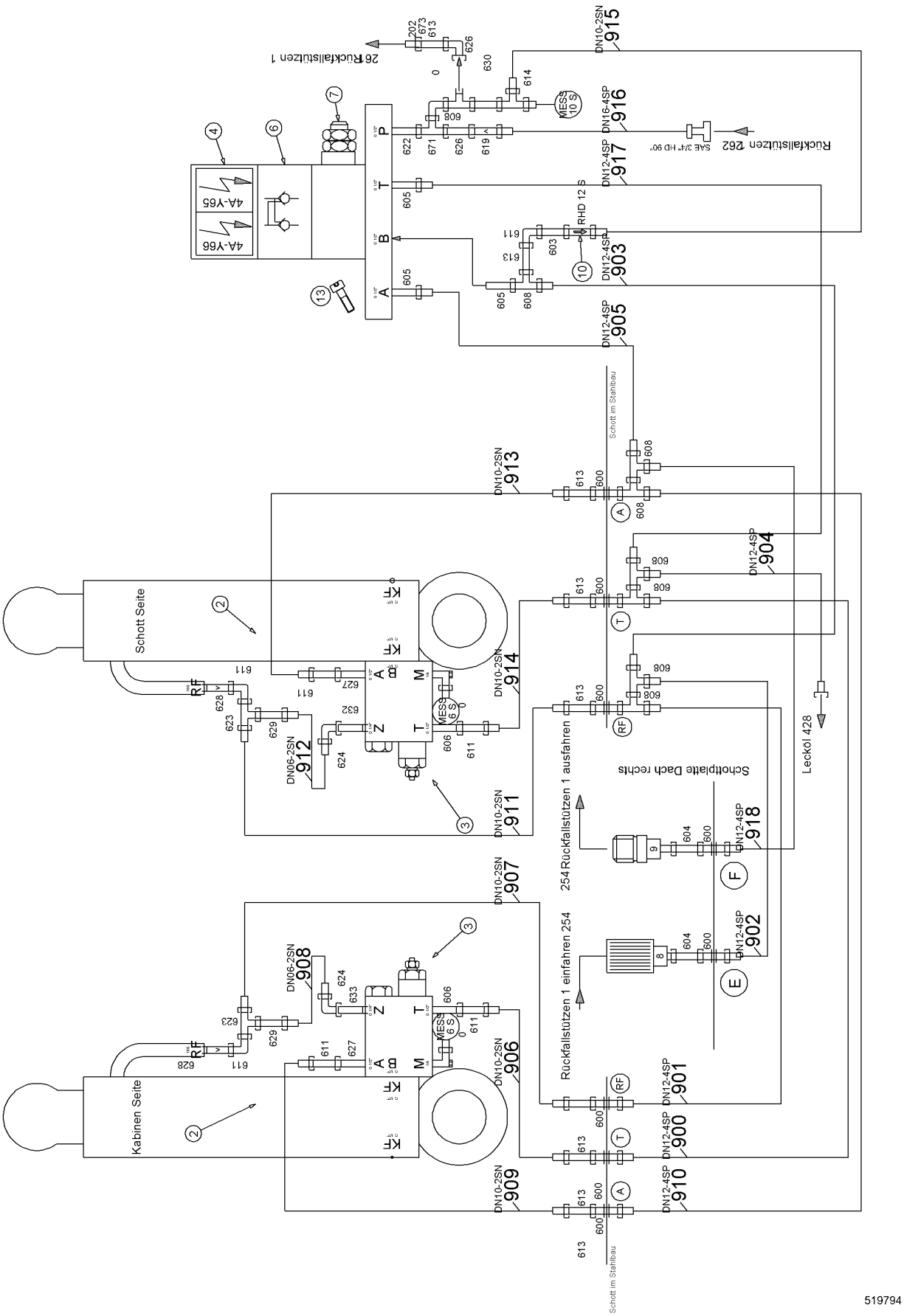
Schott Seite
Kabinen Seite
Schott im Stahlbau
Schott im Stahlbau
Schottplatte Dach rechts
Leckol 428
Rückfallstützen 1 einfahren 254
254 Rückfallstützen 1 ausfahren
26 Rückfallstützen 1
Rückfallstützen 262
SAE 3/4" HD 90°
RHD 12 S
MESS 10 S
MESS 6 S
4A-Y65
4A-Y66
DN10-2SN 915
DN16-4SP 916
DN12-4SP 917
DN12-4SP 903
DN12-4SP 905
DN10-2SN 913
DN12-4SP 904
DN10-2SN 914
DN06-2SN 912
DN10-2SN 911
DN12-4SP 918
DN10-2SN 907
DN12-4SP 902
DN06-2SN 908
DN10-2SN 906
DN12-4SP 901
DN12-4SP 900
DN10-2SN 909
DN12-4SP 910
519794

Pos.	Item	Quantity	Description	Bezeichnung	Serie	K
2	10099173	2	DOUBLE-ACTING CYL ⇨ ❑ 526	DOPPELWIRKZYL		
3	592022414	2	LOAD HOLDING VALVE ⇨ ❑ 527	LASTHALTEVENTIL		
4	510429214	1	DIRECTIONAL CONTROL VALVE ⇨ ❑ 528	WEGEVENTIL		
5	510427914	1	CONNECTING PLATE	ANSCHLUSSPLATTE		
6	511607014	1	DOUBLE NON-RETURN VALVE	DOPPELRUECKSCHLAGVENTIL		
7	511475514	1	PRESSURE LIMITING VALVE ⇨ ❑ 529	DRUCKBEGRENZUNGSVENTIL		
8	510572214	1	QUICK-FITTING THREAD COUPLING	SCHNELLVERSCHRAUBUNGSK		
9	510571914	1	QUICK-FITTING THREAD COUPLING ⇨ ❑ 29	SCHNELLVERSCHRAUBUNGSK		
10	510411614	1	NON-RETURN VALVE	RUECKSCHLAGVENTIL		
13	404203514	4	SOCKET HEAD SCREW ISO 4762 M6X140 10.9	ZYLINDERSCHRAUBE		
201	510694514	1	GAUGE CONNECTION	MESSSTUTZEN		
202	477700514	1	FITTING	VERSCHRAUBUNG		
600	474032614	8	FITTING	VERSCHRAUBUNG		
603	471100714	1	FITTING	VERSCHRAUBUNG		
604	471100114	2	FITTING	VERSCHRAUBUNG		
605	471033214	3	FITTING	VERSCHRAUBUNG		
606	471032608	2	FITTING	VERSCHRAUBUNG		
608	7407098	8	FITTING	VERSCHRAUBUNG		
611	7617354	7	FITTING	VERSCHRAUBUNG		
613	485433314	8	FITTING	VERSCHRAUBUNG		
614	7367776	1	FITTING	VERSCHRAUBUNG		
619	475033614	1	FITTING	VERSCHRAUBUNG		
622	481930614	1	FITTING	VERSCHRAUBUNG		
623	7617461	2	FITTING	VERSCHRAUBUNG		
624	472531508	2	FITTING	VERSCHRAUBUNG		
626	7617460	2	FITTING	VERSCHRAUBUNG		
627	471032708	2	FITTING	VERSCHRAUBUNG		
628	475002514	2	FITTING	VERSCHRAUBUNG		
629	485433414	2	FITTING	VERSCHRAUBUNG		
630	485433514	1	FITTING	VERSCHRAUBUNG		
632	473210214	1	FITTING	VERSCHRAUBUNG		
633	473231214	1	FITTING	VERSCHRAUBUNG		
650	510587514	2	FLANGE HALF	FLANSCHHAELFTE		
660	10490784	1	RECTANGULAR SECTION RING	RECHTECKRING		
670	4001246	4	HEX SCREW ISO 4017 M10X35 10.9	SECHSKANTSCHRAUBE		
671	482431514	1	FITTING	VERSCHRAUBUNG		
673	477400414	1	FITTING	VERSCHRAUBUNG		

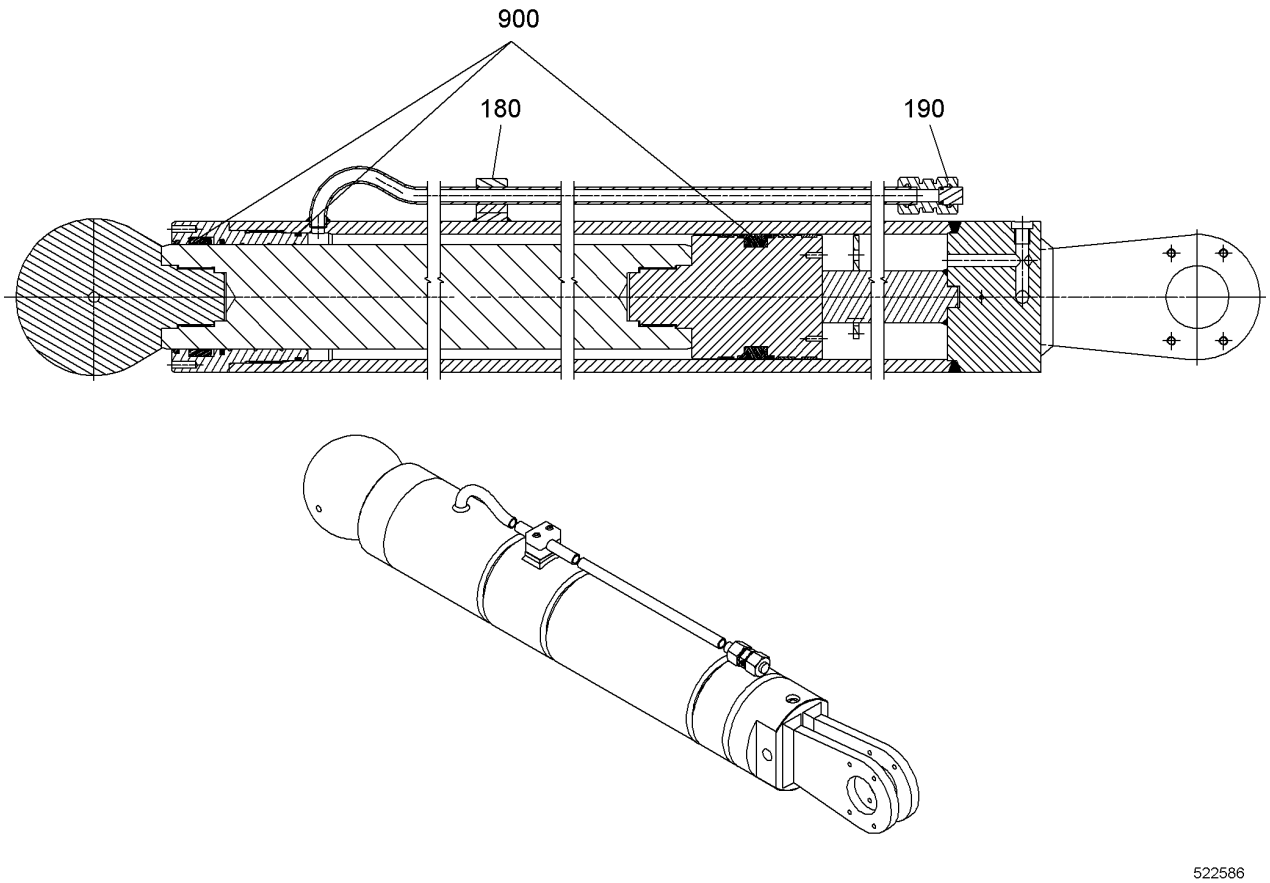

Pos.	Item	Quantity	Description	Bezeichnung	Serie	K
40	11310567	1	GUIDE BUSHING 145/100X130	FUEHRUNGSBUCHSE		
50	10505322	1	BALL JOINT	KUGELGELENK		
100	11910323	1	TUBE	ROHR		
110	11910327	1	O-RING	O-RING		
111	11910328	1	SUPPORTING RING	STUETZRING		
180	11910324	2	PIPE CLAMP	ROHRSCHELLE		
190	11910325	1	FITTING	VERSCHRAUBUNG		
220	10445040	1	VALVE	VENTIL		
900	10352446	1	SEALING SET CPL CYL	DS KPL ZYL		

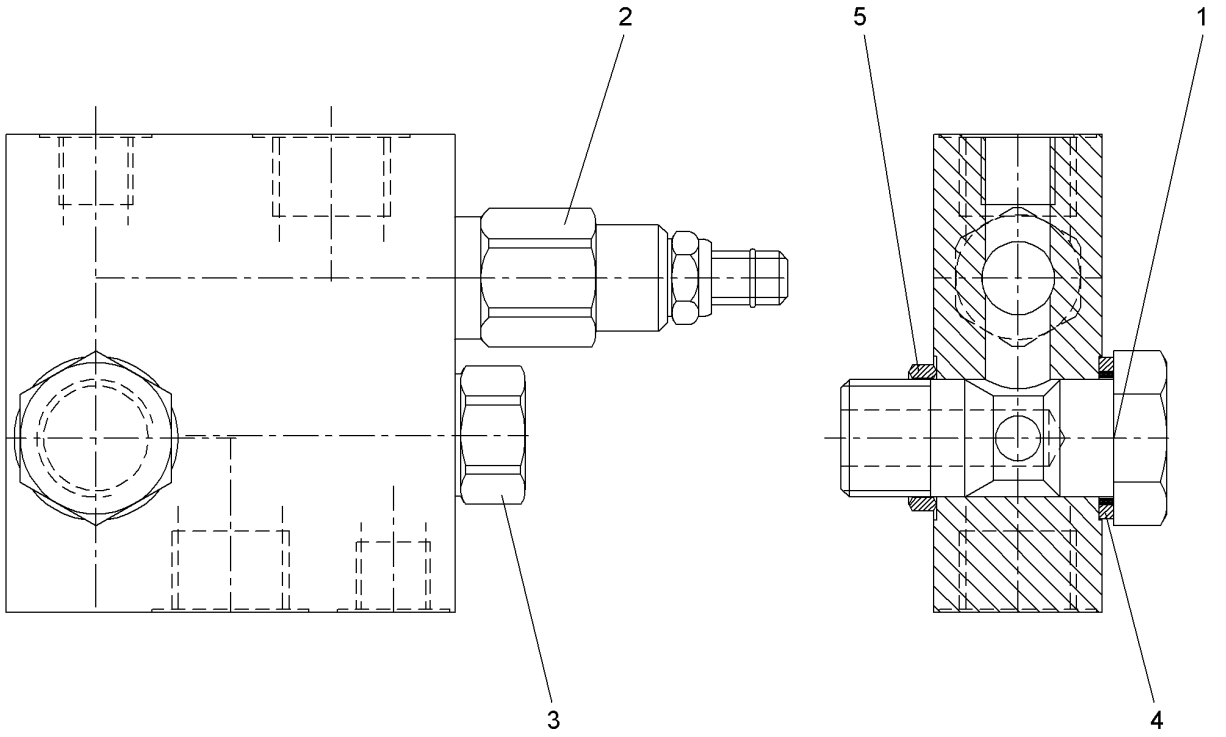

Pos.	Item	Quantity	Description	Bezeichnung	Serie	K
1	10588723	1	HOLLOW SCREW R1/2"	HOHLSCHRAUBE		
2	11233731	1	PRESSURE LIMITING VALVE	DRUCKBEGRENZUNGSVENTIL		
3	11270155	1	NON-RETURN VALVE	RUECKSCHLAGVENTIL		
4	10588725	1	FLAT SEALING RING	FLACHDICHTRING		
5	10588729	1	EDGE SEALING RING	DICHTKANTENRING		

OHNE BILD
WITHOUT ILLUSTRATION
SANS PLANCHE
SIN FIG.
SEM ILUSTRAÇÃO
БЕЗ ИЗОБРАЖЕНИЯ

600000

Pos.	Item	Quantity	Description	Bezeichnung	Serie	K
1	10215806	2	MAGNET COIL	MAGNETSPULE		
999	10215808	1	SEAL KIT	DICHTUNGSSATZ		

OHNE BILD
WITHOUT ILLUSTRATION
SANS PLANCHE
SIN FIG.
SEM ILUSTRAÇÃO
БЕЗ ИЗОБРАЖЕНИЯ

600000

Pos.	Item	Quantity	Description	Bezeichnung	Serie	K
20	511486714	1	PRESSURE LIMITING VALVE	DRUCKBEGRENZUNGSVENTIL		
30	511486614	1	O-RING PLATE	O-RING PLATTE		
70	704274808	5	O-RING	O-RING		

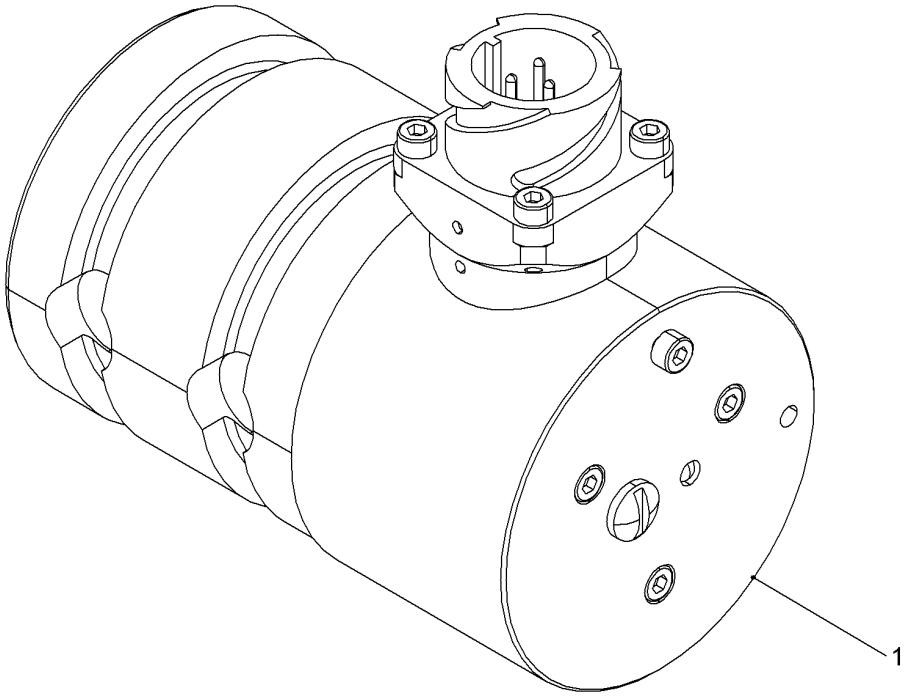

Pos.	Item	Quantity	Description	Bezeichnung	Serie	K
1	11261289	2	FORCE MEASURING AXLE	KRAFTMESSACHSE		

ACHTUNG !
ATTENTION !
ATTENTION !
ATENCIÓN !
ATENÇÃO !
ВНИМАНИЕ

Für Schlauchbestellungen kann über die Schlauchnummer, in der entsprechenden Schlauchliste, die Identnummer festgestellt werden.

For ordering flexible hoses you can find the identification number through the hose-number in the corresponding hose-list.

Pour des ordres de tuyau flexible le nombre d'identification on voit dans la liste de tuyau flexible correspondente.

Para el pedido de manguera, indicar el número de identificación de la manguera de la lista respectiva.

Para se encomendar uma mangueira, consulte o número de identificaçao na respectiva lista de mangueiras.

Для оформления заказов на шланги/рукавы идент. № может быть определен при помощи номера шланга/рукава, указанного в соотетствующем перечне шлангов/рукавов.

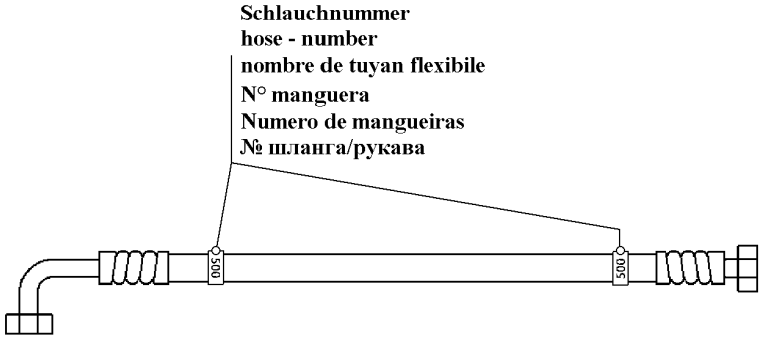

500000

Pos.	Item	Quantity	Description	Bezeichnung	Serie	K
900	994486214	1	HOSE CPL	SCHLAUCH KPL		
901	994486214	1	HOSE CPL	SCHLAUCH KPL		
902	919778814	1	HOSE CPL	SCHLAUCH KPL		
903	918870314	1	HOSE CPL	SCHLAUCH KPL		
904	928014714	1	HOSE CPL	SCHLAUCH KPL		
905	995174014	1	HOSE CPL	SCHLAUCH KPL		
906	928029714	1	HOSE CPL	SCHLAUCH KPL		
907	995865114	1	HOSE CPL	SCHLAUCH KPL		
908	928763814	1	HOSE CPL	SCHLAUCH KPL		
909	928166714	1	HOSE CPL	SCHLAUCH KPL		
910	994486214	1	HOSE CPL	SCHLAUCH KPL		
911	995865114	1	HOSE CPL	SCHLAUCH KPL		
912	928763814	1	HOSE CPL	SCHLAUCH KPL		
913	928166714	1	HOSE CPL	SCHLAUCH KPL		
914	928029714	1	HOSE CPL	SCHLAUCH KPL		
915	991242714	1	HOSE CPL	SCHLAUCH KPL		
917	928121514	1	HOSE CPL	SCHLAUCH KPL		
918	991285814	1	HOSE CPL	SCHLAUCH KPL		

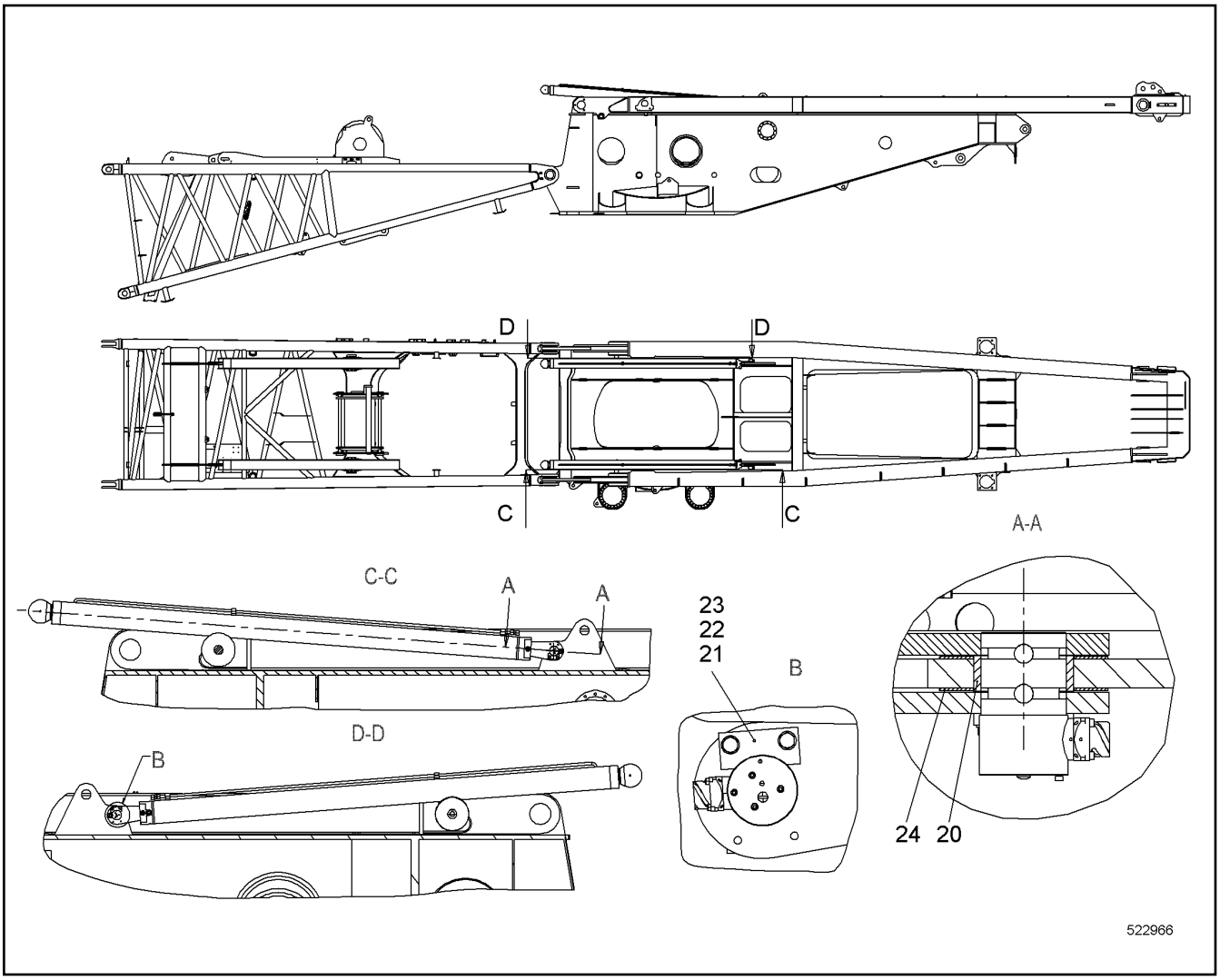

Pos.	Item	Quantity	Description	Bezeichnung	Serie	K
20	10546993	2	BUSHING 60X70X25 CUZN25AL5	BUCHSE		
21	11942341	2	LOCKING PLATE	SICHERUNGSBLECH		
22	420001014	4	WASHER ISO 7089 8 A4	SCHEIBE		
23	406518814	4	HEX SCREW ISO 4017 M8X20 A4-70	SECHSKANTSCHRAUBE		
24	11942312	4	WASHER 1.9X71X118 PA 6 G	SCHEIBE		

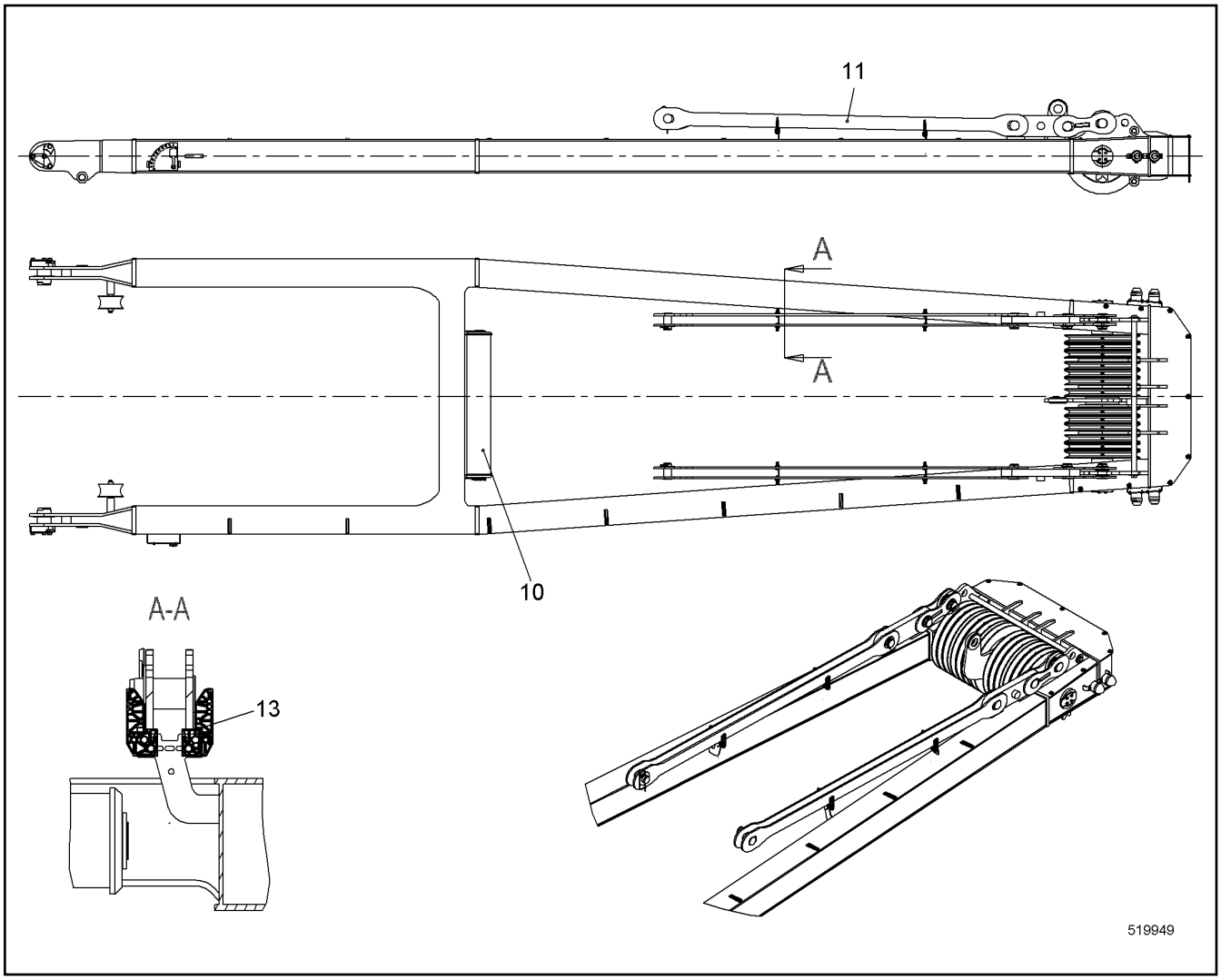

Pos.	Item	Quantity	Description	Bezeichnung	Serie	K
10	11244444	1	A-FRAME 1 CPL ⇨ ❑ 534	A-BOCK 1 KPL		
11	992339414	1	ANCHORING ROD CPL ⇨ ❑ 539	HALTESTANGE KPL		
13	11252042	4	SUPPORT CPL ⇨ ❑ 540	AUFLAGE KPL		

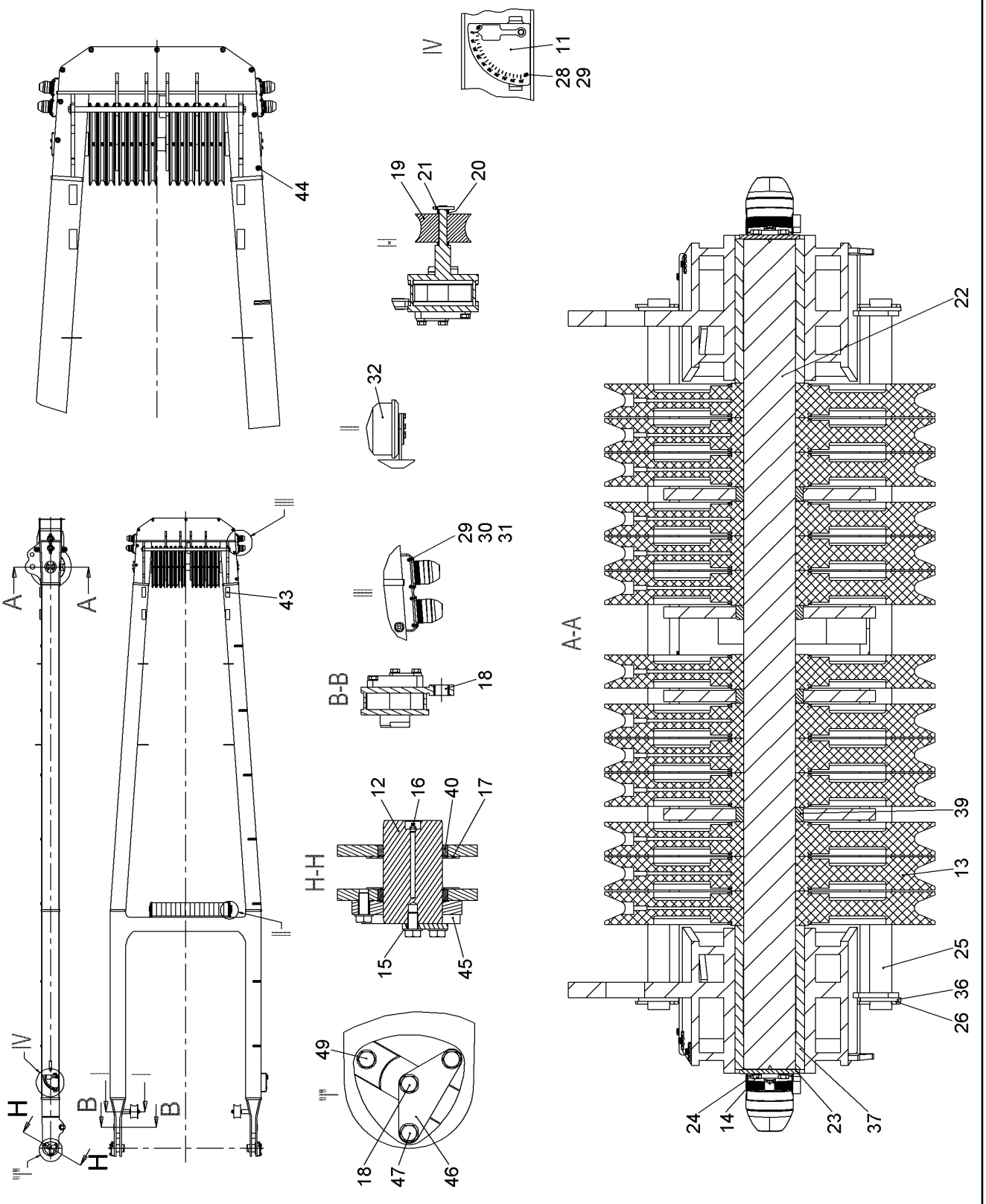

21.6.2017 519818	**138406_ETK_001**	534 (1/2)
LIEBHERR	**A-FRAME 1 CPL** **A-BOCK 1 KPL**	**11 24 444 4**

Pos.	Item	Quantity	Description	Bezeichnung	Serie	K
3	10531207	1	A-FRAME ELECTRICS ⇨ ❑ 536	A-BOCK EL		
11	919058414	1	ANGLE INDICATION ⇨ ❑ 537	WINKELANZEIGE		
12	949389914	2	PIN 115X200 LHRD900-40;10019758	BOLZEN		
13	914690714	13	ROPE PULLEY CPL	SEILROLLE KPL		
14	406517914	8	HEX SCREW ISO 4017 M12X25 A4-70	SECHSKANTSCHRAUBE		
15	10544174	8	WASHER ISO 7089 20	SCHEIBE		
16	7743242	2	HYDRAULIC-TYPE LUBRICAT.NIPPLE	KEGELSCHMIERNIPPEL		
18	11230849	2	BUSHING 50X60X42	BUCHSE		
19	11256217	2	ROLLER	ROLLE		
20	421102414	10	WASHER DIN EN 28738 30 ST;	SCHEIBE		
21	433014214	2	SPLIT PIN ISO 1234 10X63 A4	SPLINT		
22	11239740	1	PIN 100X1606 LHRD900-40;10019758	BOLZEN		
24	10536581	8	WEDGE LOCK WASHER M12 254 SMO;EN 10	KEILSICHERUNGSSCHEIBE		
25	959841814	2	ROPE GUARD TUBE	SEILSCHUTZROHR		
26	433008108	4	SPLIT PIN ISO 1234 6.3X63	SPLINT		
28	10539467	2	SOCKET HEAD SCREW ISO 4762 M6X12 A4-7	ZYLINDERSCHRAUBE		
29	420000414	18	WASHER ISO 7089 6 A4	SCHEIBE		
30	406532614	8	HEX SCREW ISO 4017 M6X20 A4-70	SECHSKANTSCHRAUBE		
31	10540492	8	HEX NUT ISO 10511 M6 A4	SECHSKANTMUTTER		
32	991413714	1	DEFLECTION PULLEY CPL ⇨ ❑ 538	UMLENKROLLE KPL		
36	420003714	4	WASHER ISO 7089 42	SCHEIBE		
37	11239698	2	BUSHING	BUCHSE		
39	959841114	4	BUSHING	BUCHSE		
40	970859103	4	BUSHING 115/135X21 E470;EN 10294-1	BUCHSE		
43	991873614	4	SUPPORT CPL	AUFLAGE KPL		
44	11230237	9	FASTENING BS	BEF SOCKEL		
47	10545854	4	HEX SCREW ISO 4017 M20X75 10.9	SECHSKANTSCHRAUBE		
48	10543919	2	HEX SCREW ISO 4017 M20X35 10.9	SECHSKANTSCHRAUBE		
49	10543921	2	HEX SCREW ISO 4017 M20X45 10.9	SECHSKANTSCHRAUBE		

OHNE BILD
WITHOUT ILLUSTRATION
SANS PLANCHE
SIN FIG.
SEM ILUSTRAÇÃO
БЕЗ ИЗОБРАЖЕНИЯ

600000

Pos.	Item	Quantity	Description	Bezeichnung	Serie	K
31	10530243	2	FORCE MEASURING STRAP	KRAFTMESSLASCHE		
35	10524928	2	FLASHING LIGHT	BLITZLEUCHTE		
37	10524927	2	SIGNAL LAMP	SIGNALLEUCHTE		
41	10563800	1	CABLE LOOM W 40	KABELSTRANG W 40		
50	11314473	1	CABLE LOOM W 40	KABELSTRANG W 40		
51	605013508	2	DUST CAP	STAUBKAPPE		

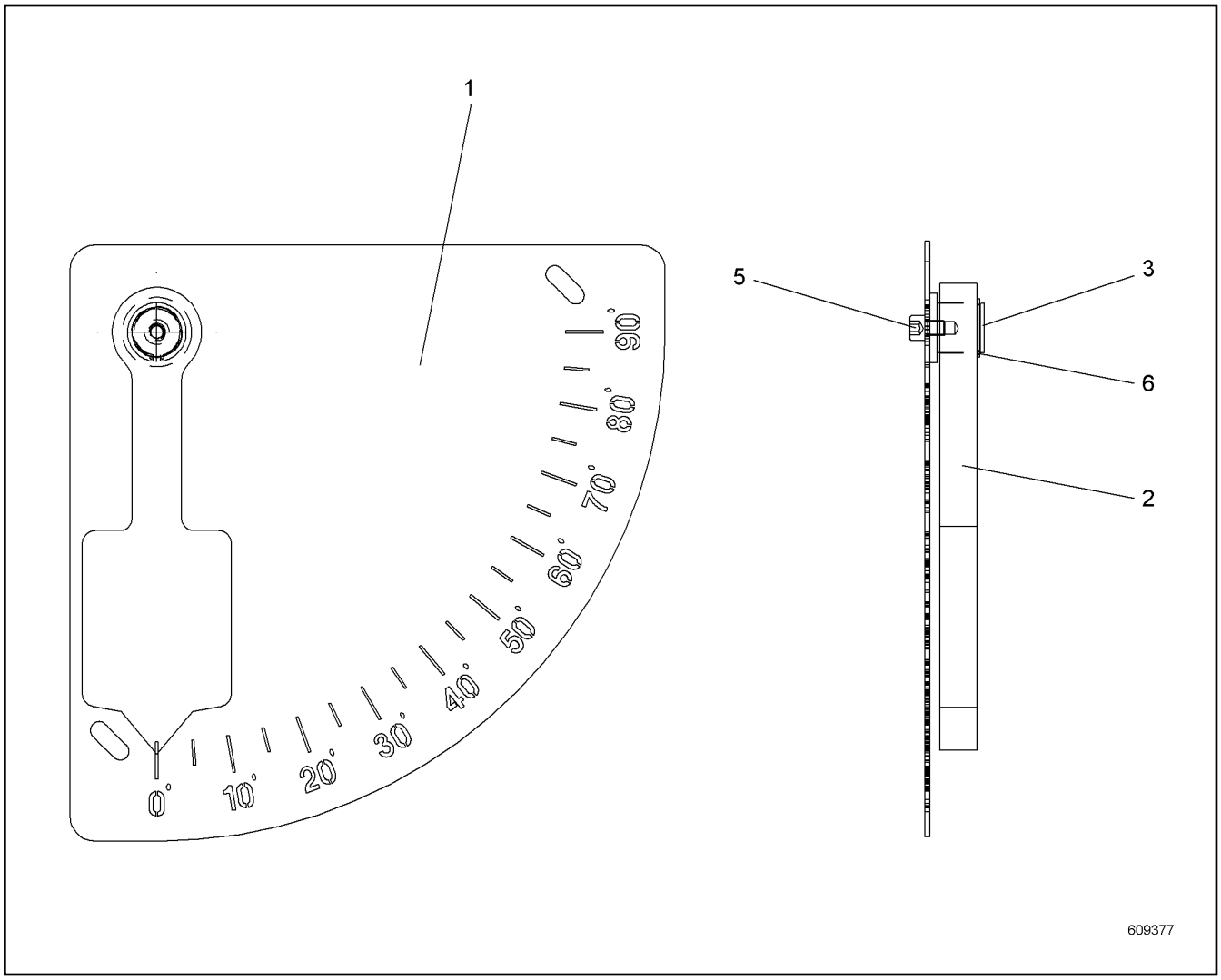

Pos.	Item	Quantity	Description	Bezeichnung	Serie	K
1	956266614	1	WP	WP		
2	956266714	1	WP	WP		
3	956266814	1	PIN 20X23 PA 6 G	BOLZEN		
5	10539466	1	SOCKET HEAD SCREW ISO 4762 M6X8 A4-70	ZYLINDERSCHRAUBE		
6	428001414	1	LOCKING RING DIN 471 20X1.2	SICHERUNGSRING		

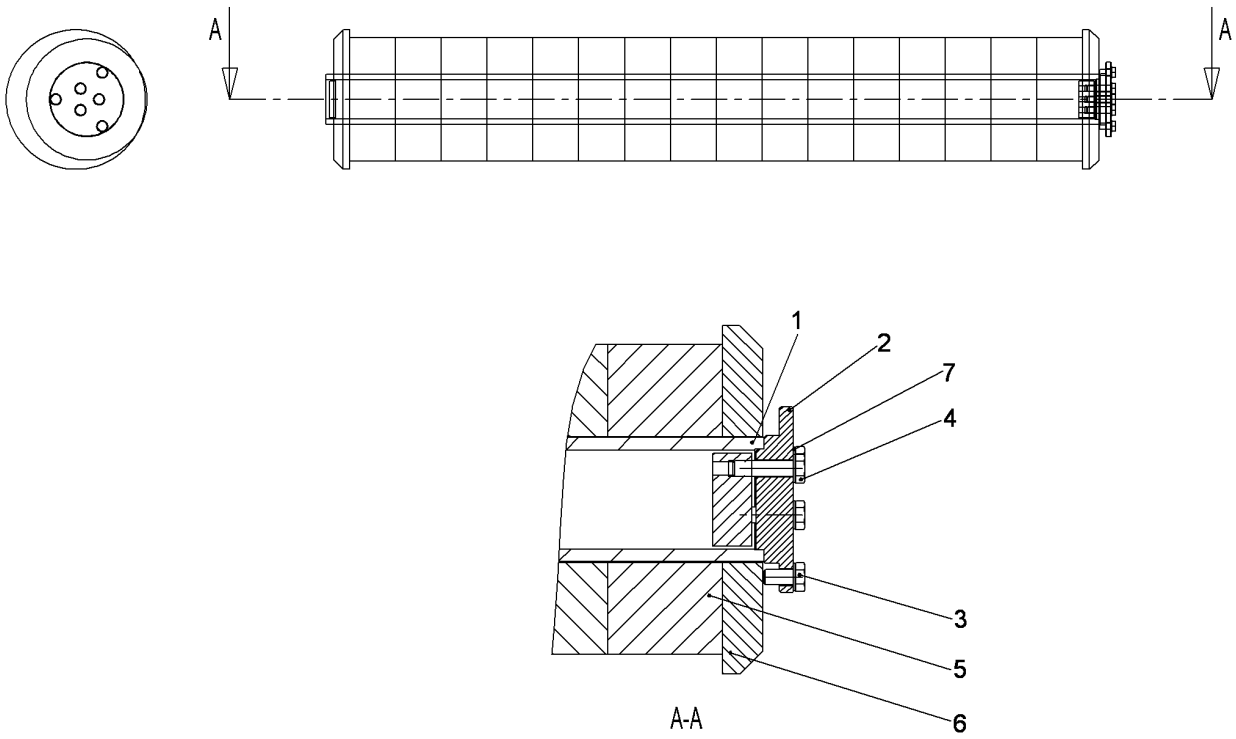

Pos.	Item	Quantity	Description	Bezeichnung	Serie	K
1	991413814	1	AXLE CPL	ACHSE KPL		
3	406518714	3	HEX SCREW ISO 4017 M10X20 A4-70	SECHSKANTSCHRAUBE		
4	406527814	3	HEX SCREW ISO 4017 M10X40 A4-70	SECHSKANTSCHRAUBE		
5	948773814	16	WASHER 81/200X74 PA 6 G	SCHEIBE		
6	970855603	2	WASHER 225/81X26 PA 6 G	SCHEIBE		
7	10447016	6	LOCKING RING 10	SICHERUNGSRING		

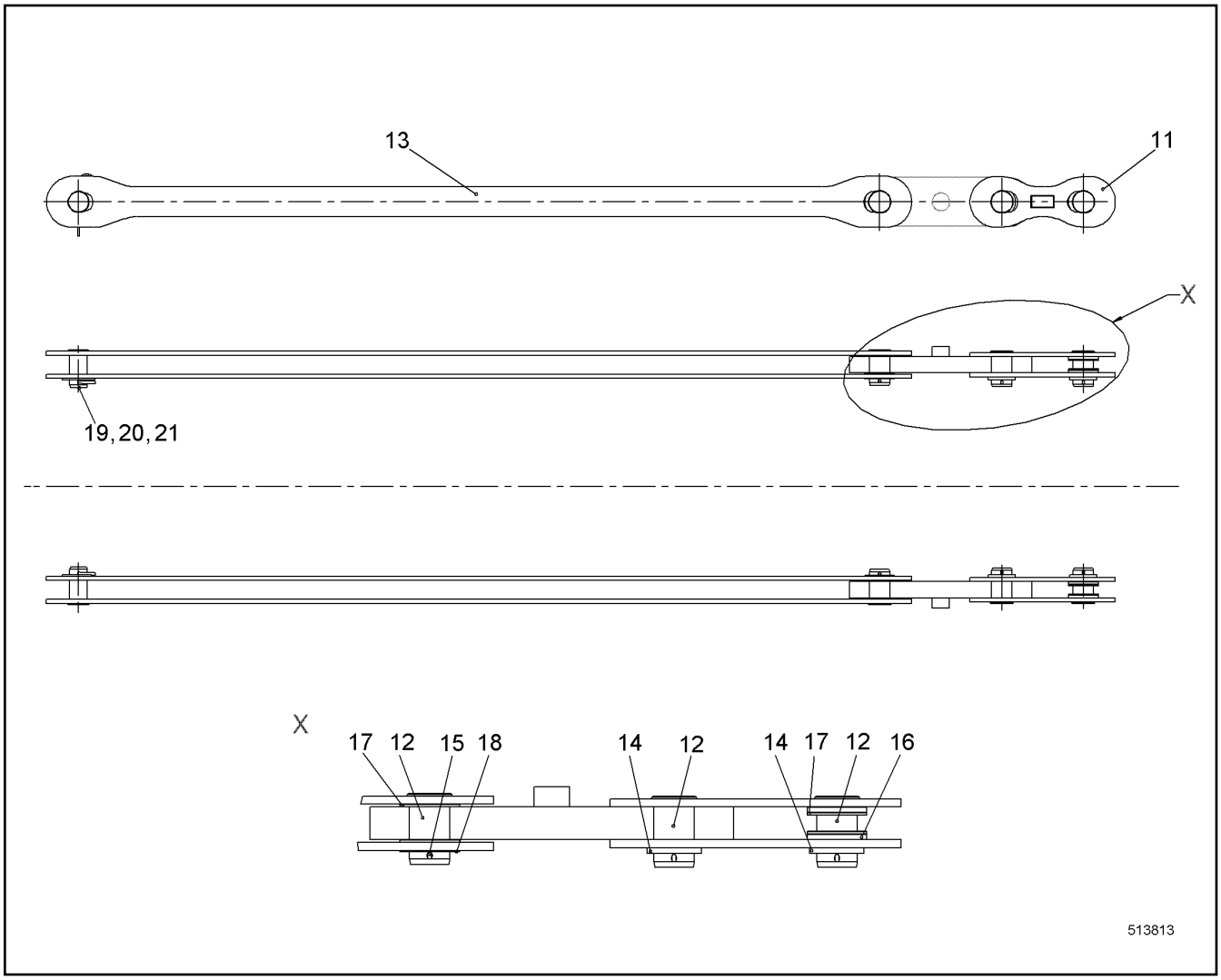

Pos.	Item	Quantity	Description	Bezeichnung	Serie	K
11	10336761	4	COUPLING LINK	KOPPELLASCHE		
12	959921514	6	PIN 83X131 LHRD900-40;10019758	BOLZEN		
14	421103714	4	WASHER DIN EN 28738 75 ST;	SCHEIBE		
15	433009514	6	SPLIT PIN ISO 1234 8X100 A4	SPLINT		
16	10336924	4	BUSHING 75X110X10 POM;DIN EN ISO 9988	BUCHSE		
17	10336926	8	BUSHING 75X110X5 POM;DIN EN ISO 9988	BUCHSE		
18	10336928	2	BUSHING 75.5X110X2.5 POM;DIN EN ISO 9988	BUCHSE		
19	950250014	2	PIN	BOLZEN		
20	958304714	2	WASHER	SCHEIBE		
21	433105008	2	RETAINING SPRING DIN 2194 6MM FS	SICHERUNGSFEDER		

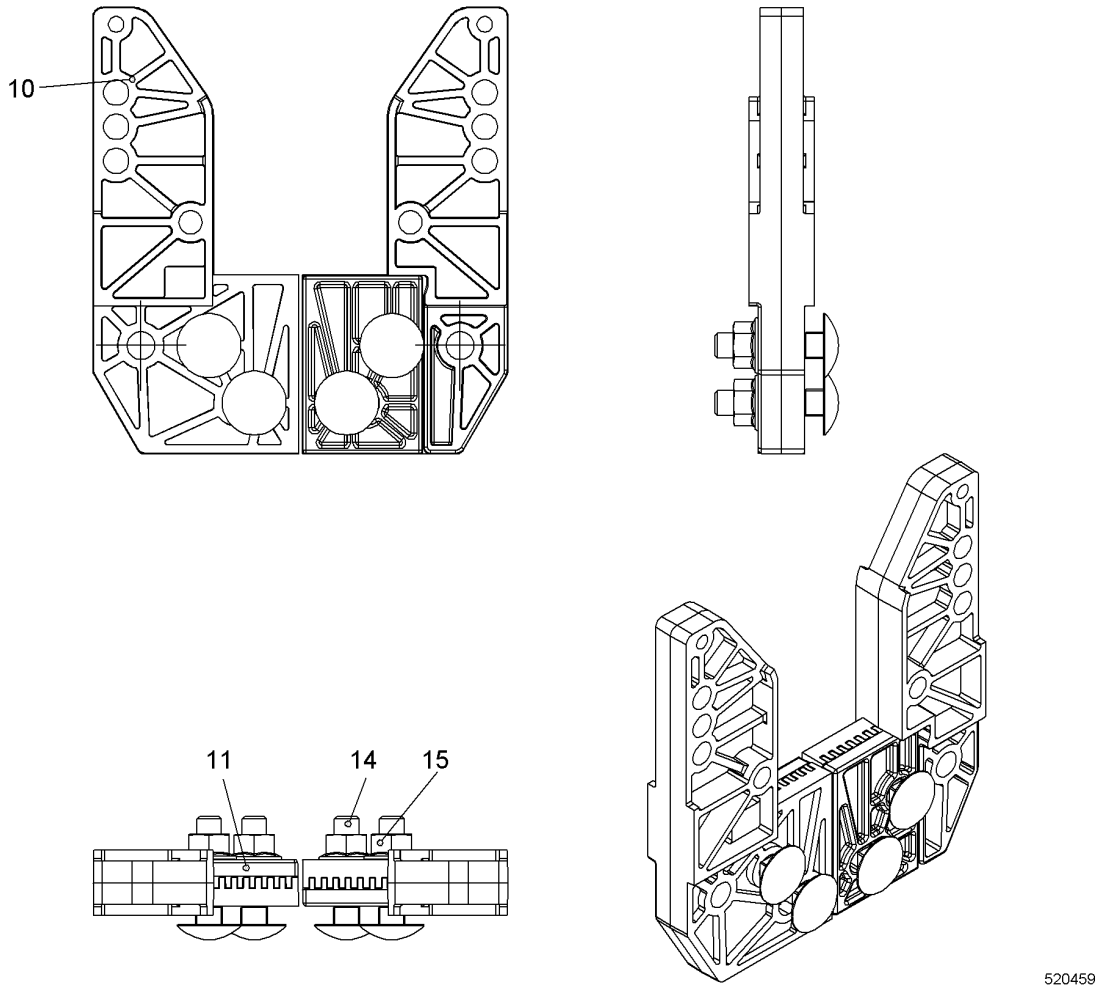

Pos.	Item	Quantity	Description	Bezeichnung	Serie	K
10	11219265	2	SUPPORT	AUFLAGE		
11	11219851	2	SHEET	PLATTE		
12	773400308	0.62	STEEL WIRE ROPE	STAHLDRAHTSEIL		
13	773920008	4	FERRULE	PRESSKLEMME		
14	11314349	4	CHEESE HEAD SCREW DIN 603 M8X35 A4-70	FLACHRUNDSCHRAUBE		
15	11314341	4	HEX NUT DIN EN 1663 M8 A4	SECHSKANTMUTTER		

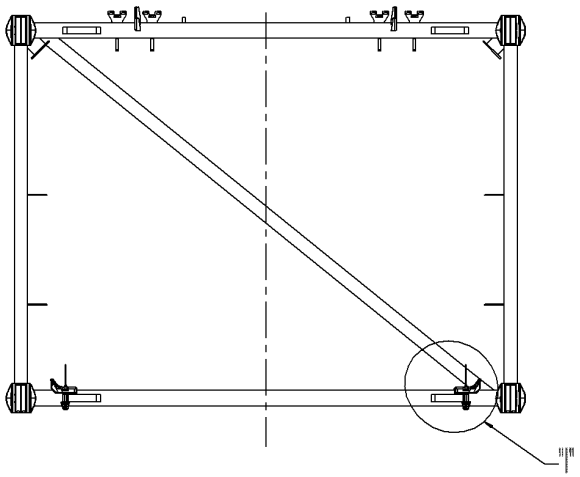

519617

Pos.	Item	Quantity	Description	Bezeichnung	Serie	K
10	992958814	4	SUPPORT ⇨ ❑ 542	AUFLAGE		
11	10350633	2	FASTENER ⇨ ❑ 543	HALTERUNG		

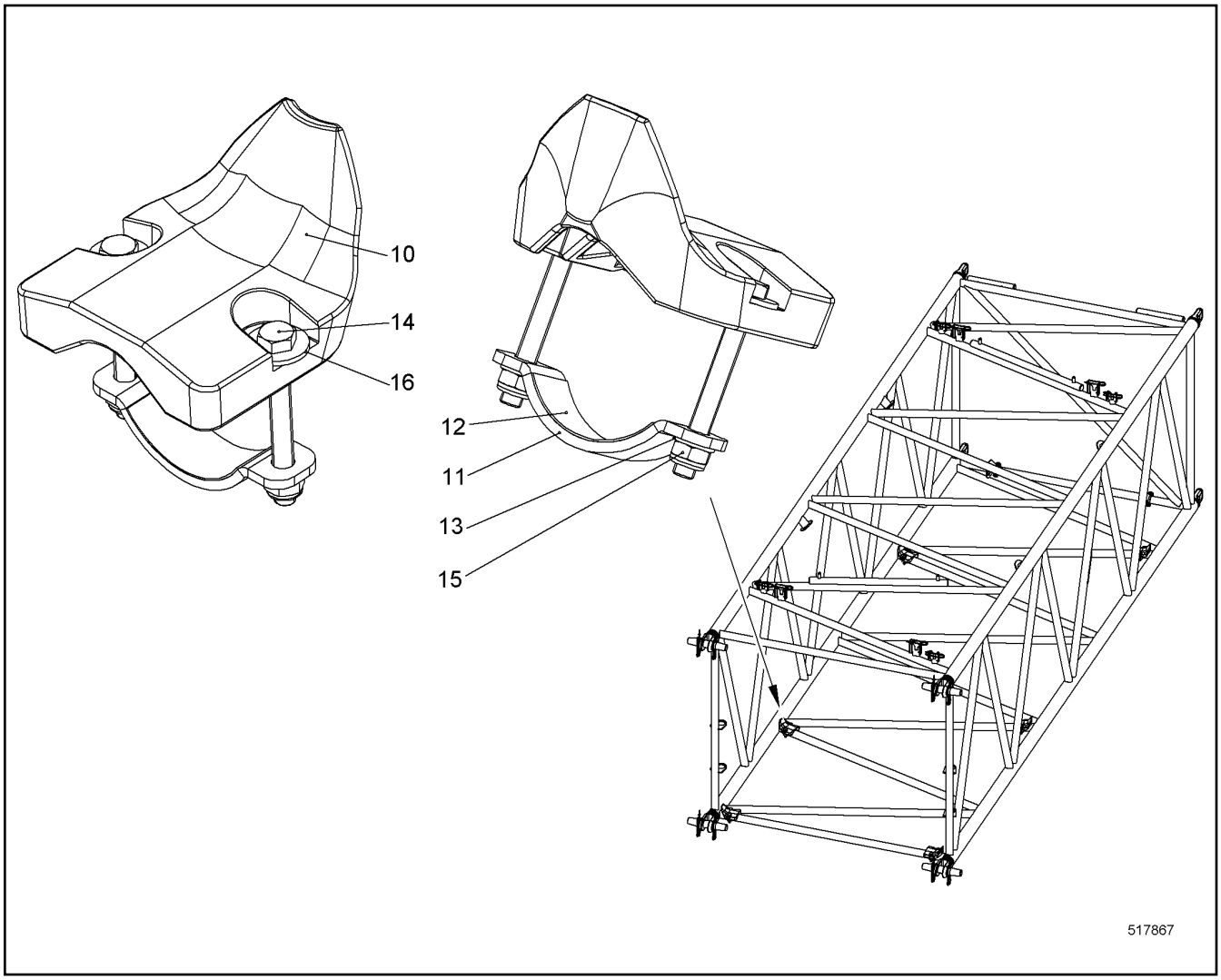

Pos.	Item	Quantity	Description	Bezeichnung	Serie	K
10	289035314	1	SUPPORT	AUFLAGE		
11	10336774	1	CLAMP	SCHELLE		
12	10535526	1	RUBBER	GUMMI		
13	420001114	2	WASHER ISO 7089 10 A4	SCHEIBE		
14	406512114	2	HEX SCREW ISO 4017 M10X90 A4-70	SECHSKANTSCHRAUBE		
15	10540494	2	HEX NUT ISO 10511 M10 A4	SECHSKANTMUTTER		
16	10540511	2	WASHER ISO 7093-1 10 A4	SCHEIBE		

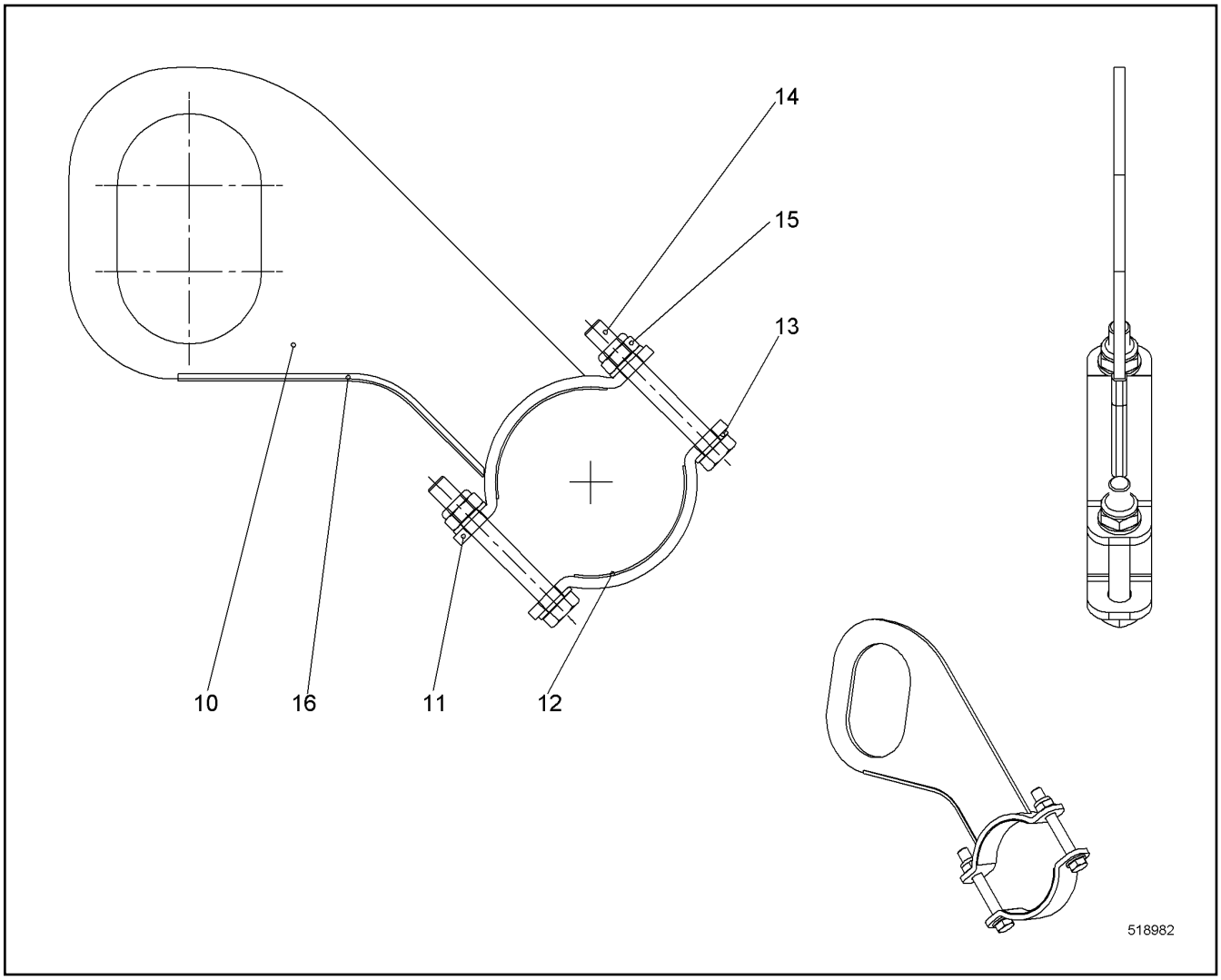

Pos.	Item	Quantity	Description	Bezeichnung	Serie	K
10	10350632	1	FASTENER	HALTERUNG		
11	10336774	2	CLAMP	SCHELLE		
12	10535526	2	RUBBER	GUMMI		
13	420001114	4	WASHER ISO 7089 10 A4	SCHEIBE		
14	406527914	2	HEX SCREW ISO 4017 M10X80 A4-70	SECHSKANTSCHRAUBE		
15	10540494	2	HEX NUT ISO 10511 M10 A4	SECHSKANTMUTTER		
16	262103101	0.16	FLEXIBLE EDGE PROTECTOR	KANTENSCHUTZ FLEXIBEL		

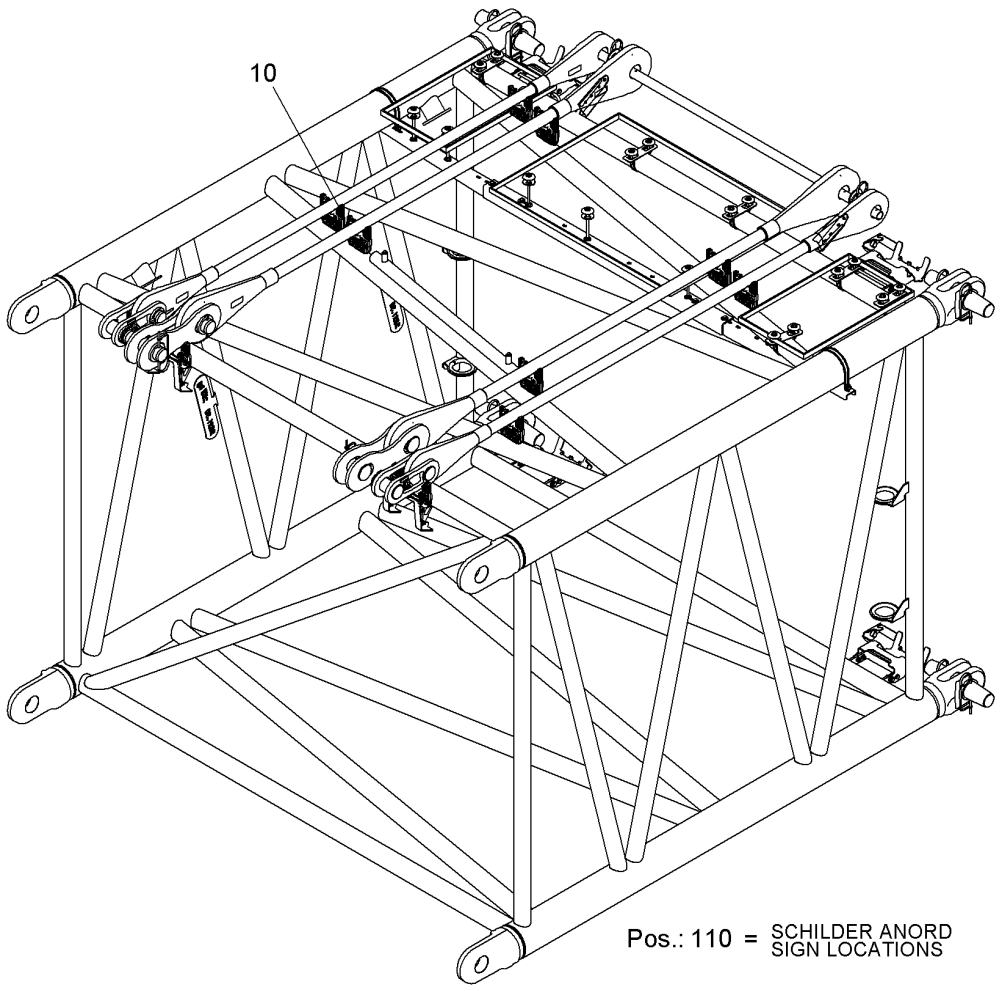

Pos.	Item	Quantity	Description	Bezeichnung	Serie	K
10	11941725	1	ASSEMBLY UNIT ⇨ ❑ 545	MONTAGEEINHEIT		
110	11266901	1	SIGN LOCATIONS	SCHILDER ANORD		

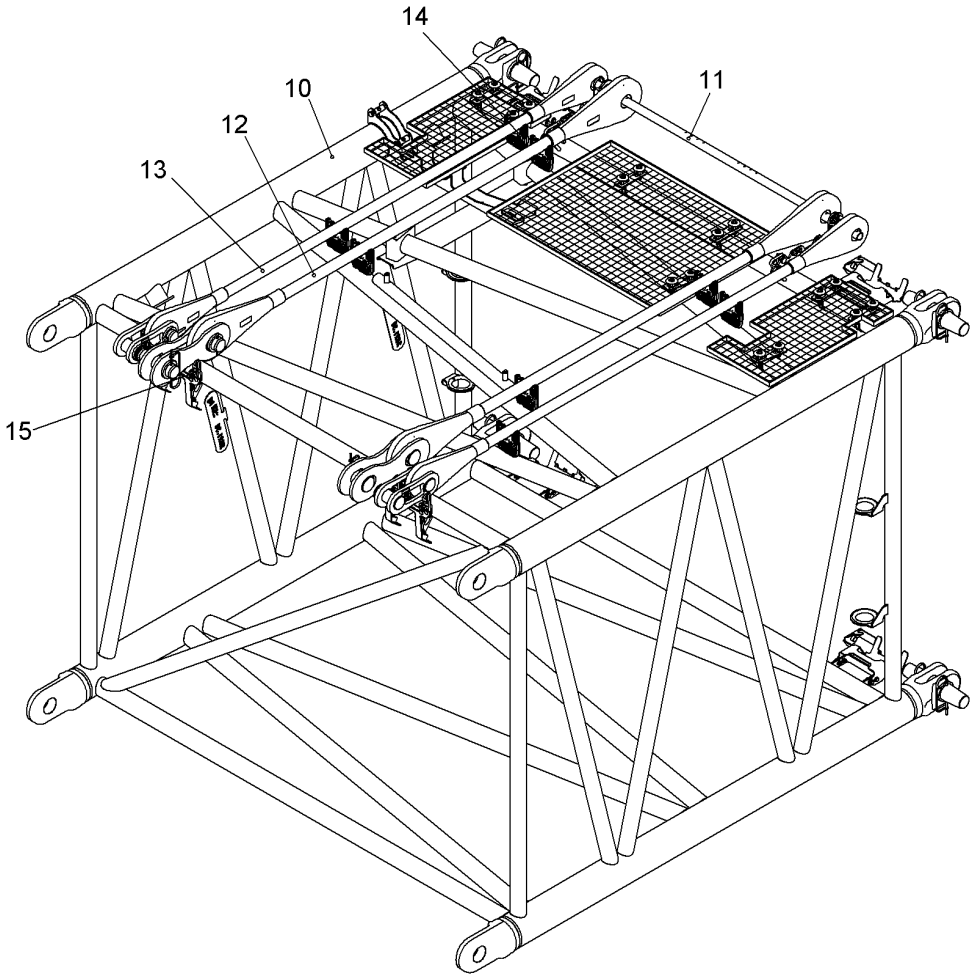

Pos.	Item	Quantity	Description	Bezeichnung	Serie	K
10	11245703	1	BOOM INTERMEDIATE SECTION CPL ⇨ ❑ 546	AL ZWISCHENSTUECK KPL		
11	11940876	1	TRANSPORT LASHING ⇨ ❑ 554	TRANSPORTSICHERUNG		
12	10540548	1	ANCHORING ROD CPL ⇨ ❑ 556	HALTESTANGE KPL		
13	10532162	1	ANCHORING ROD CPL ⇨ ❑ 557	HALTESTANGE KPL		
14	11236533	8	SUPPORT CPL ⇨ ❑ 518	AUFLAGE KPL		
15	11232922	4	SUPPORT CPL ⇨ ❑ 558	AUFLAGE KPL		

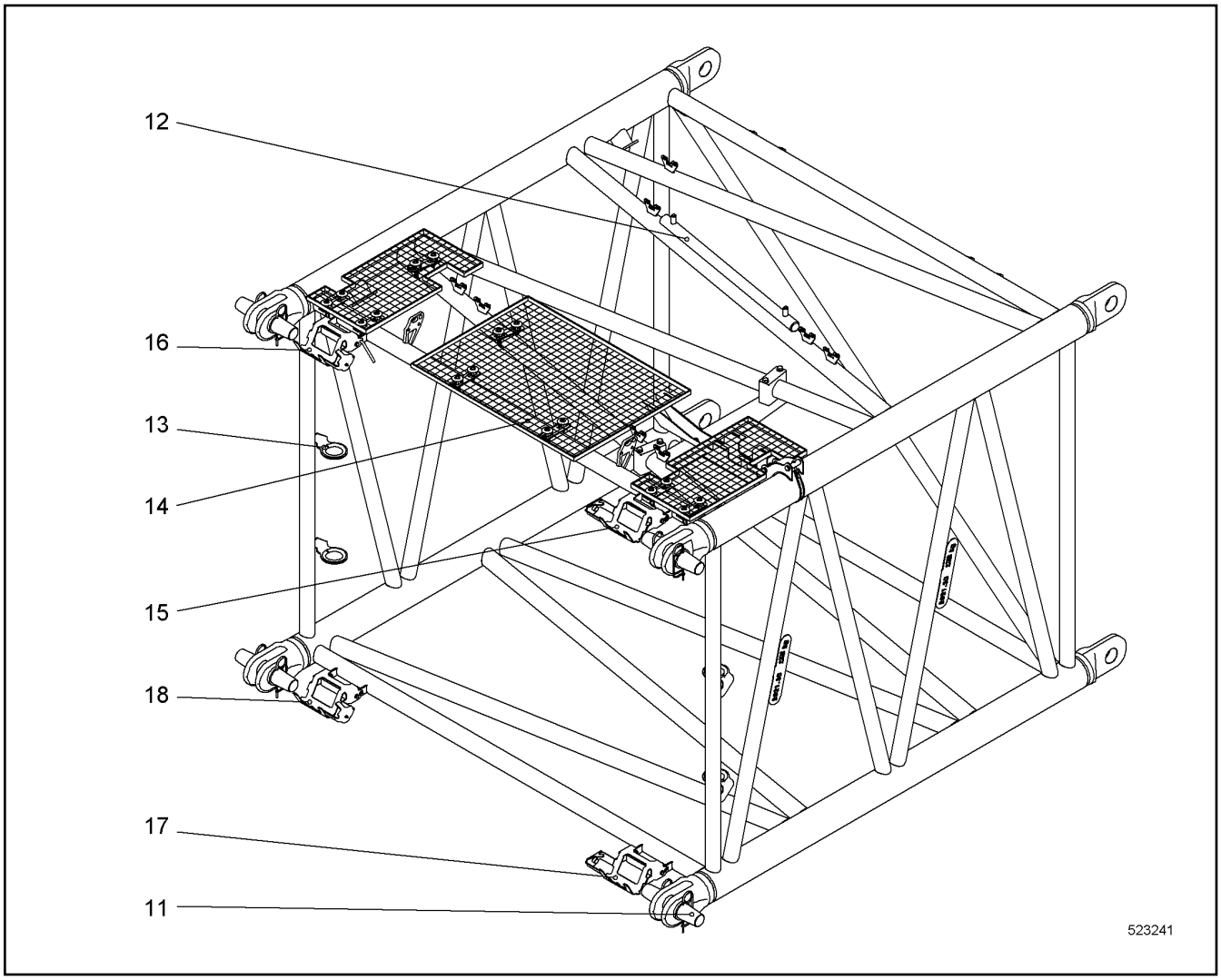

Pos.	Item	Quantity	Description	Bezeichnung	Serie	K
10	11245698	1	BOOM INTERM.SECTION ST.CONST.	AL ZWISCHENSTUECK SCHWK		
11	11287264	4	PIN CPL ⇨ ❑ 517	BOLZEN KPL		
12	11287255	1	ROPE GUARD CPL ⇨ ❑ 547	SEILSCHUTZ KPL		
13	226017802	1.132	EDGE PROTECTION METER WARE	KANTENSCHUTZ METERWARE		
14	11283908	1	BOOM ACCESS ⇨ ❑ 548	AL BEGEHUNG		
15	11283977	1	SUMP PAN CPL ⇨ ❑ 550	AUFFANGWANNE KPL		
16	11283978	1	SUMP PAN CPL ⇨ ❑ 551	AUFFANGWANNE KPL		
17	11283995	1	SUMP PAN CPL ⇨ ❑ 552	AUFFANGWANNE KPL		
18	11283997	1	SUMP PAN CPL ⇨ ❑ 553	AUFFANGWANNE KPL		

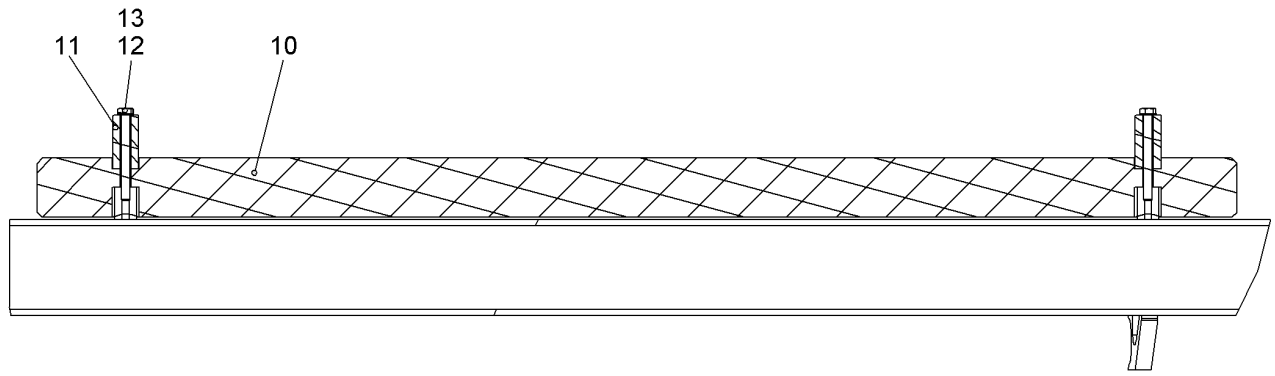

Pos.	Item	Quantity	Description	Bezeichnung	Serie	K
10	971303203	1	STRIP	LEISTE		
11	956009714	2	INTERMEDIATE PART	ZWISCHENSTUECK		
12	10558857	2	LOCKING RING 8 A2	SICHERUNGSRING		
13	10538809	2	HEX SCREW ISO 4017 M8X80 A4-70	SECHSKANTSCHRAUBE		

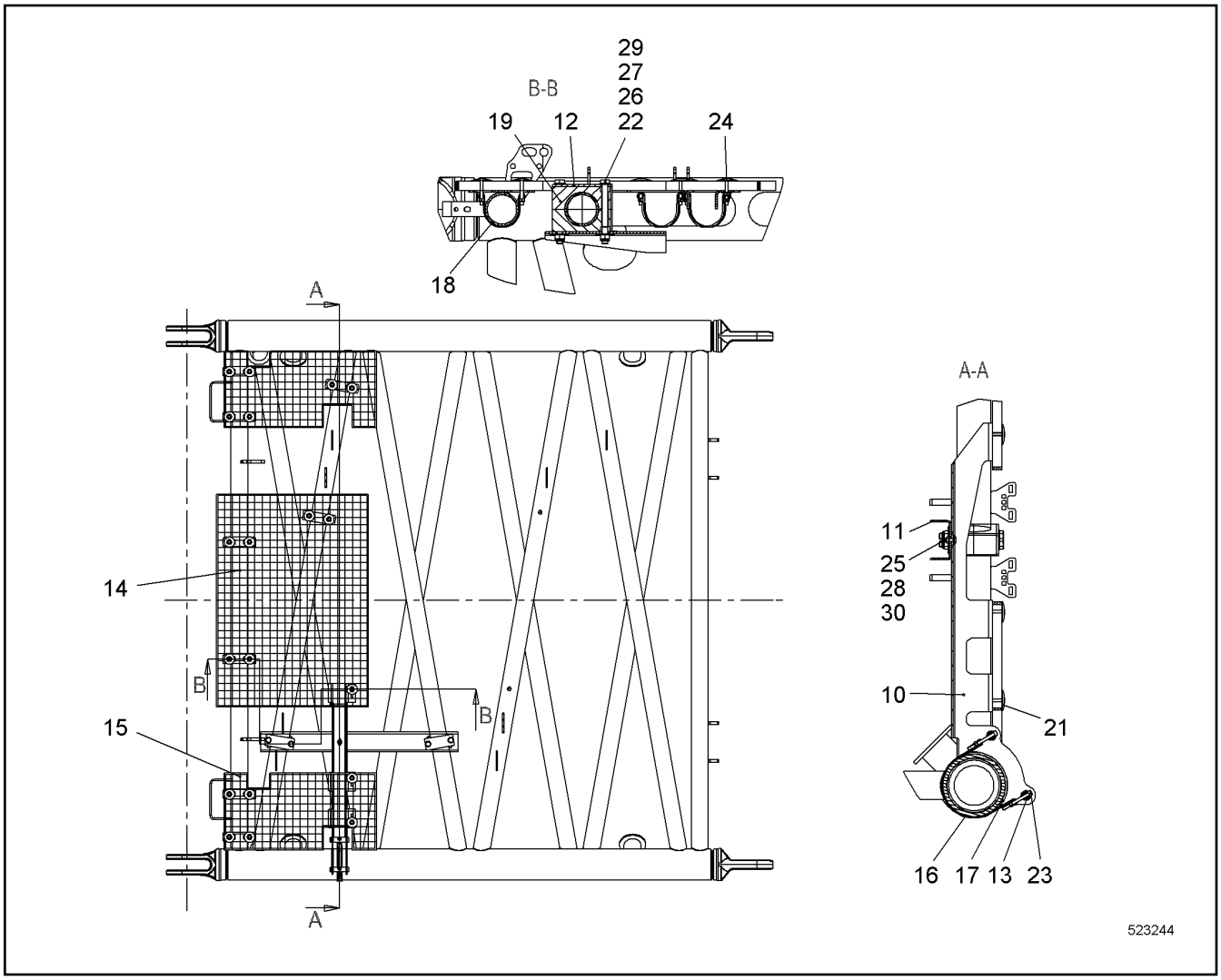

Pos.	Item	Quantity	Description	Bezeichnung	Serie	K
10	11311241	1	PLATE	BLECH		
11	11311262	1	PLATE	BLECH		
12	11310952	2	PLATE	BLECH		
13	11310955	2	AXLE	ACHSE		
14	10530418	1	GRATING	GITTERROST		
15	11311245	2	GRATING	GITTERROST		
16	10531873	1	TIGHTENING STRAP HINGE PIN	GELENKBOLZENSPANNBAND		
17	10352462	0.422	FLEXIBLE EDGE PROTECTOR	KANTENSCHUTZ FLEXIBEL		
18	11283913	8	FIXING CLAMP ⇨ ❑ 549	BEFESTIGUNGSCHELLE		
19	602017114	4	CLAMP-HALF	KLEMMHAELFTE		
21	10098157	3	DISH	TELLER		
22	10543975	4	HEX SCREW ISO 4014 M16X160 10.9	SECHSKANTSCHRAUBE		
23	10539492	2	SOCKET HEAD SCREW ISO 4762 M8X80 A4-7	ZYLINDERSCHRAUBE		
24	10538807	3	HEX SCREW ISO 4017 M8X50 A4-70	SECHSKANTSCHRAUBE		
25	406501414	1	HEX SCREW ISO 4017 M8X25 A4-70	SECHSKANTSCHRAUBE		
26	10544172	4	WASHER ISO 7089 16	SCHEIBE		
27	10544173	4	WASHER ISO 7093-1 16	SCHEIBE		
28	10540510	5	WASHER ISO 7093-1 8 A4	SCHEIBE		
29	10544155	4	HEX NUT DIN 985 M16 10	SECHSKANTMUTTER		
30	10540493	6	HEX NUT ISO 10511 M8 A4	SECHSKANTMUTTER		

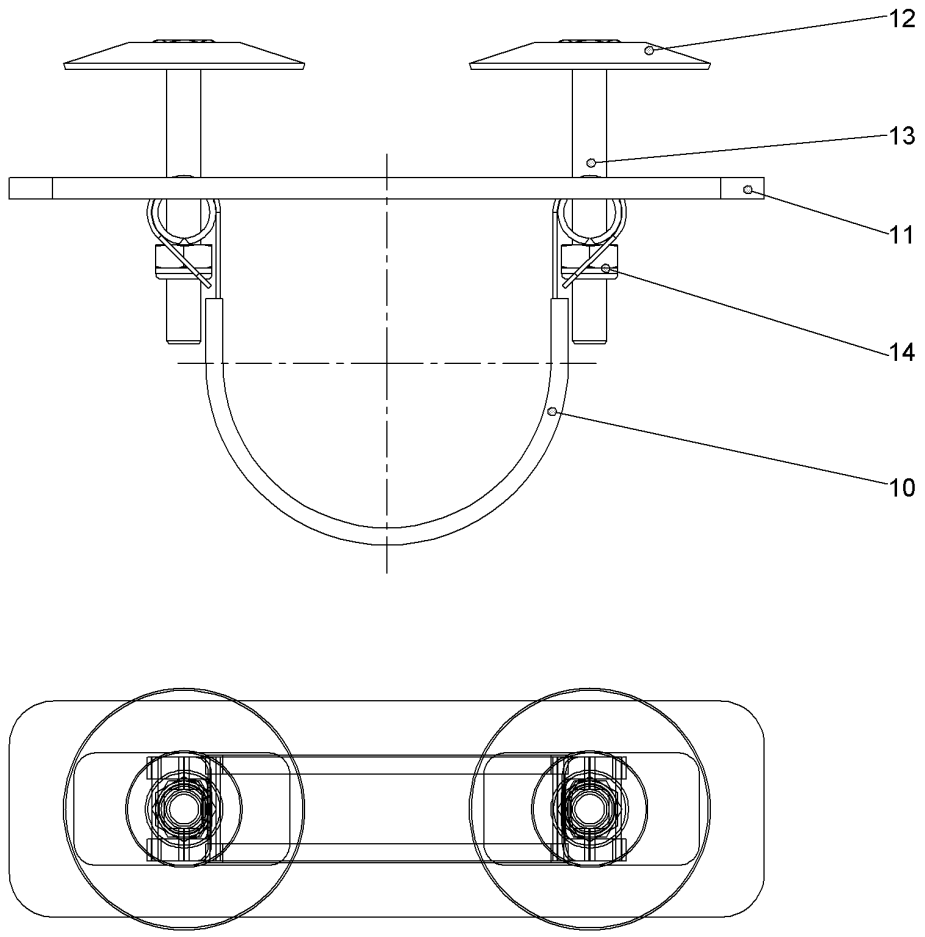

Pos.	Item	Quantity	Description	Bezeichnung	Serie	K
10	10530689	1	TIGHTENING STRAP HINGE PIN	GELENKBOLZENSPANNBAND		
11	11285382	1	RUBBER	GUMMI		
12	10098157	2	DISH	TELLER		
13	10331507	2	HEX SCREW ISO 4017 M8X65 A4-70	SECHSKANTSCHRAUBE		
14	10540493	2	HEX NUT ISO 10511 M8 A4	SECHSKANTMUTTER		

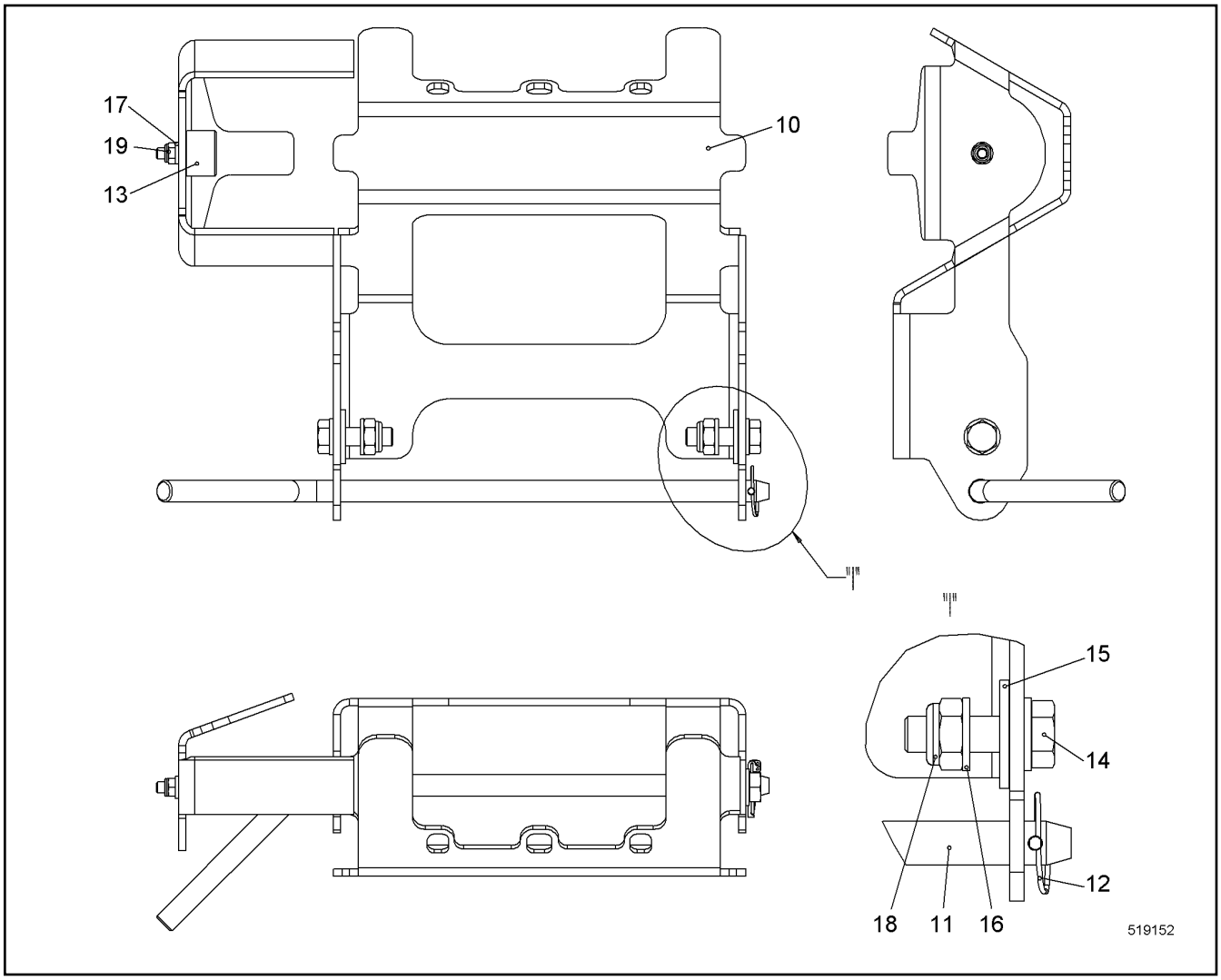

Pos.	Item	Quantity	Description	Bezeichnung	Serie	K
10	10349599	1	SUPPORT SHEET	AUFLAGEBLECH		
11	950490414	1	PLUG	STECKER		
12	485565814	1	SAFETY PLUG W HINGE-LID 4X27	SICHERHEITSKLAPPSTECKER		
13	726612214	1	RUBBER MOUNT	LAGER GUMMI		
14	406509314	2	HEX SCREW ISO 4017 M10X35 A4-70	SECHSKANTSCHRAUBE		
15	10540511	2	WASHER ISO 7093-1 10 A4	SCHEIBE		
16	420001114	4	WASHER ISO 7089 10 A4	SCHEIBE		
17	420000414	1	WASHER ISO 7089 6 A4	SCHEIBE		
18	10540494	2	HEX NUT ISO 10511 M10 A4	SECHSKANTMUTTER		
19	10540492	1	HEX NUT ISO 10511 M6 A4	SECHSKANTMUTTER		

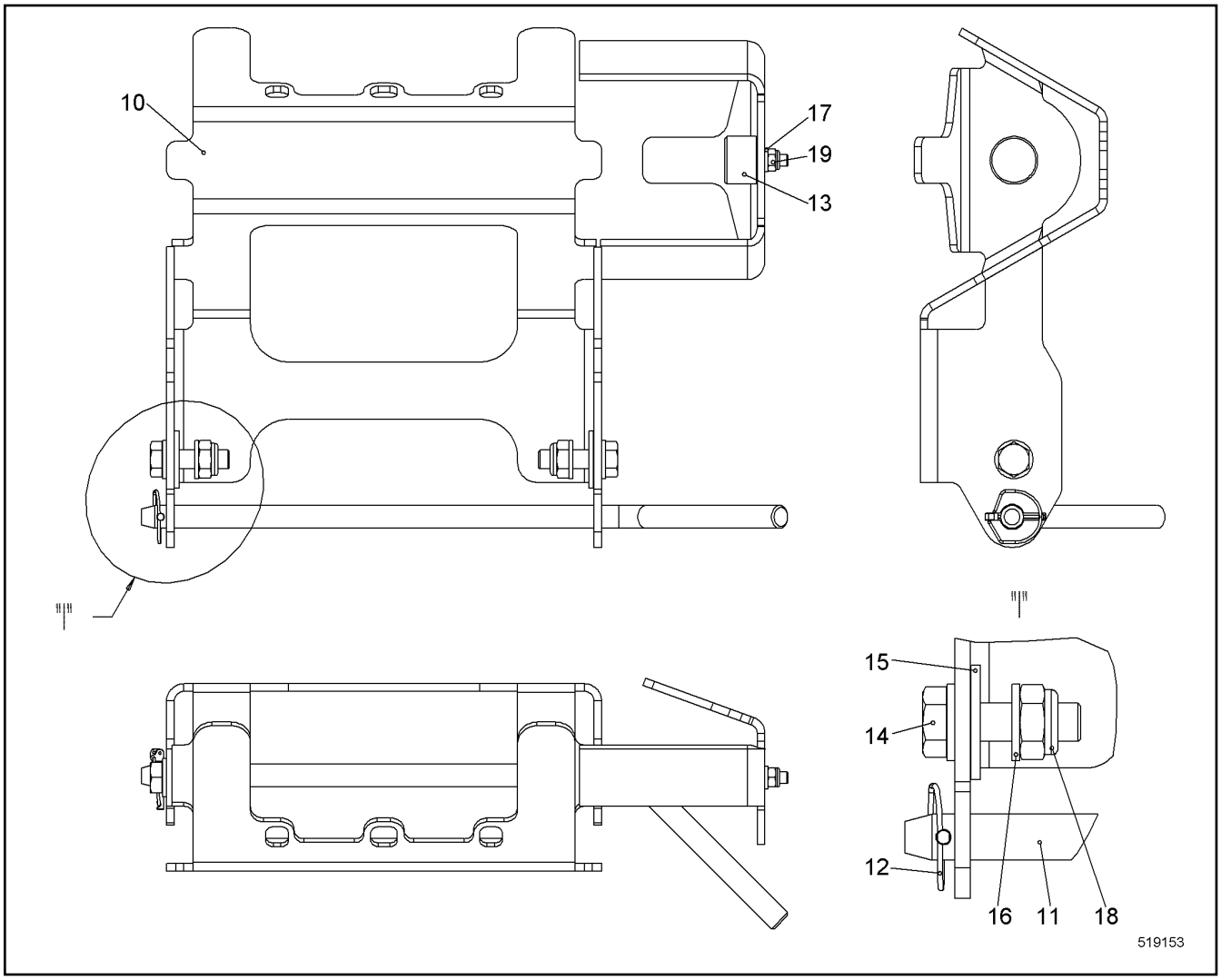

Pos.	Item	Quantity	Description	Bezeichnung	Serie	K
10	10349598	1	SUPPORT SHEET	AUFLAGEBLECH		
11	950490414	1	PLUG	STECKER		
12	485565814	1	SAFETY PLUG W HINGE-LID 4X27	SICHERHEITSKLAPPSTECKER		
13	726612214	1	RUBBER MOUNT	LAGER GUMMI		
14	406509314	2	HEX SCREW ISO 4017 M10X35 A4-70	SECHSKANTSCHRAUBE		
15	10540511	2	WASHER ISO 7093-1 10 A4	SCHEIBE		
16	420001114	4	WASHER ISO 7089 10 A4	SCHEIBE		
17	420000414	1	WASHER ISO 7089 6 A4	SCHEIBE		
18	10540494	2	HEX NUT ISO 10511 M10 A4	SECHSKANTMUTTER		
19	10540492	1	HEX NUT ISO 10511 M6 A4	SECHSKANTMUTTER		

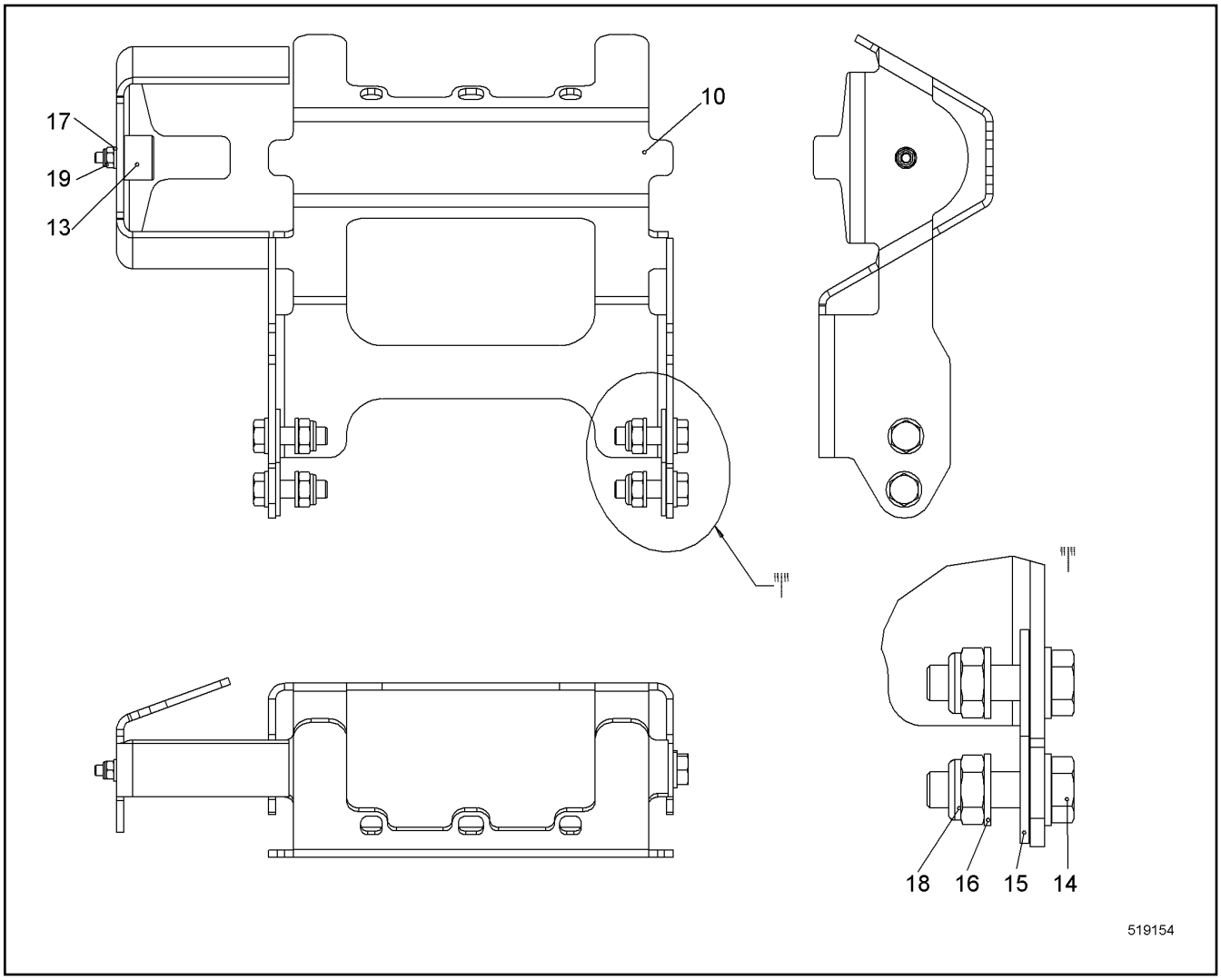

Pos.	Item	Quantity	Description	Bezeichnung	Serie	K
10	10349599	1	SUPPORT SHEET	AUFLAGEBLECH		
13	726612214	1	RUBBER MOUNT	LAGER GUMMI		
14	406509314	4	HEX SCREW ISO 4017 M10X35 A4-70	SECHSKANTSCHRAUBE		
15	10540511	4	WASHER ISO 7093-1 10 A4	SCHEIBE		
16	420001114	8	WASHER ISO 7089 10 A4	SCHEIBE		
17	420000414	1	WASHER ISO 7089 6 A4	SCHEIBE		
18	10540494	4	HEX NUT ISO 10511 M10 A4	SECHSKANTMUTTER		
19	10540492	1	HEX NUT ISO 10511 M6 A4	SECHSKANTMUTTER		

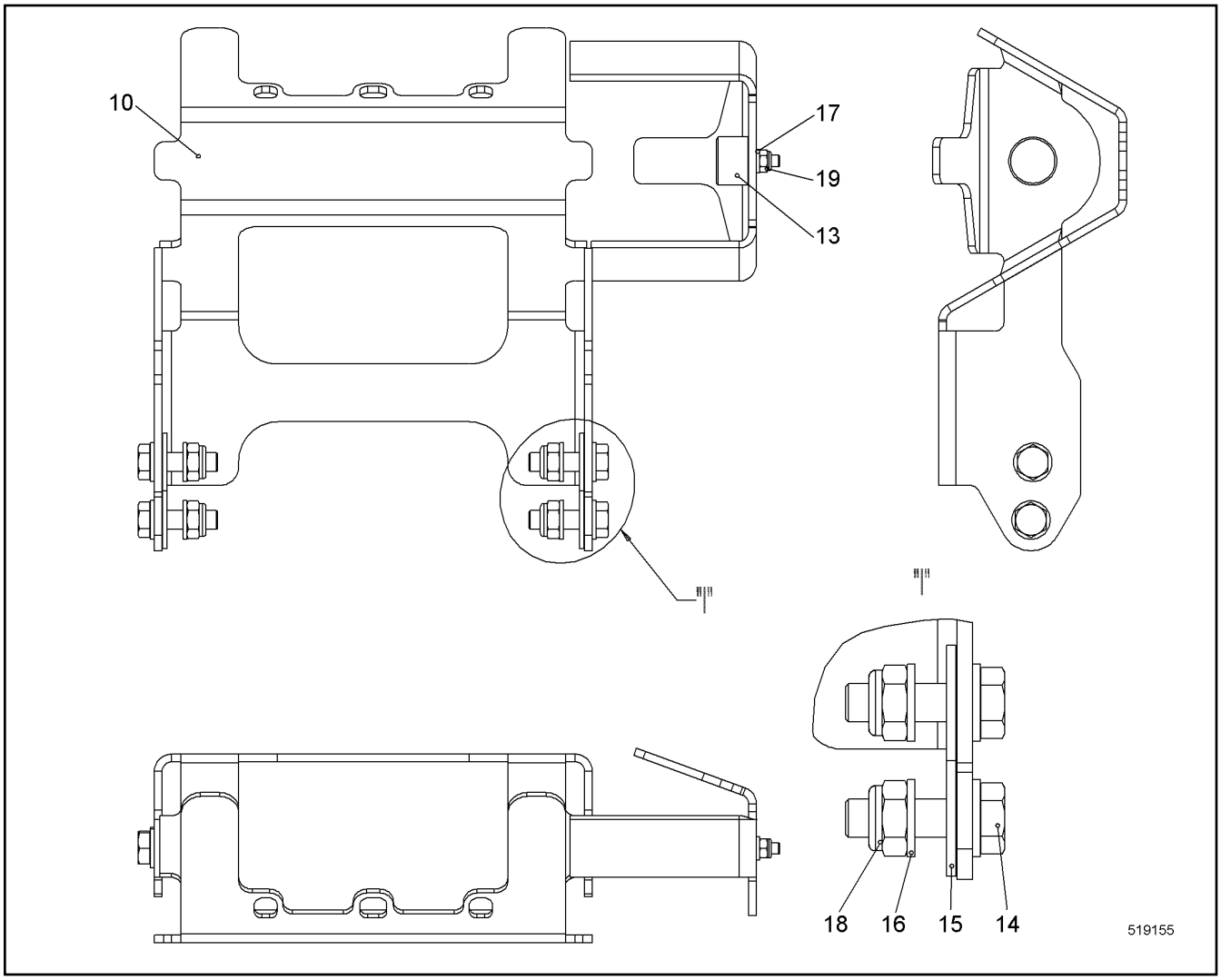

Pos.	Item	Quantity	Description	Bezeichnung	Serie	K
10	10349598	1	SUPPORT SHEET	AUFLAGEBLECH		
13	726612214	1	RUBBER MOUNT	LAGER GUMMI		
14	406509314	4	HEX SCREW ISO 4017 M10X35 A4-70	SECHSKANTSCHRAUBE		
15	10540511	4	WASHER ISO 7093-1 10 A4	SCHEIBE		
16	420001114	8	WASHER ISO 7089 10 A4	SCHEIBE		
17	420000414	1	WASHER ISO 7089 6 A4	SCHEIBE		
18	10540494	4	HEX NUT ISO 10511 M10 A4	SECHSKANTMUTTER		
19	10540492	1	HEX NUT ISO 10511 M6 A4	SECHSKANTMUTTER		

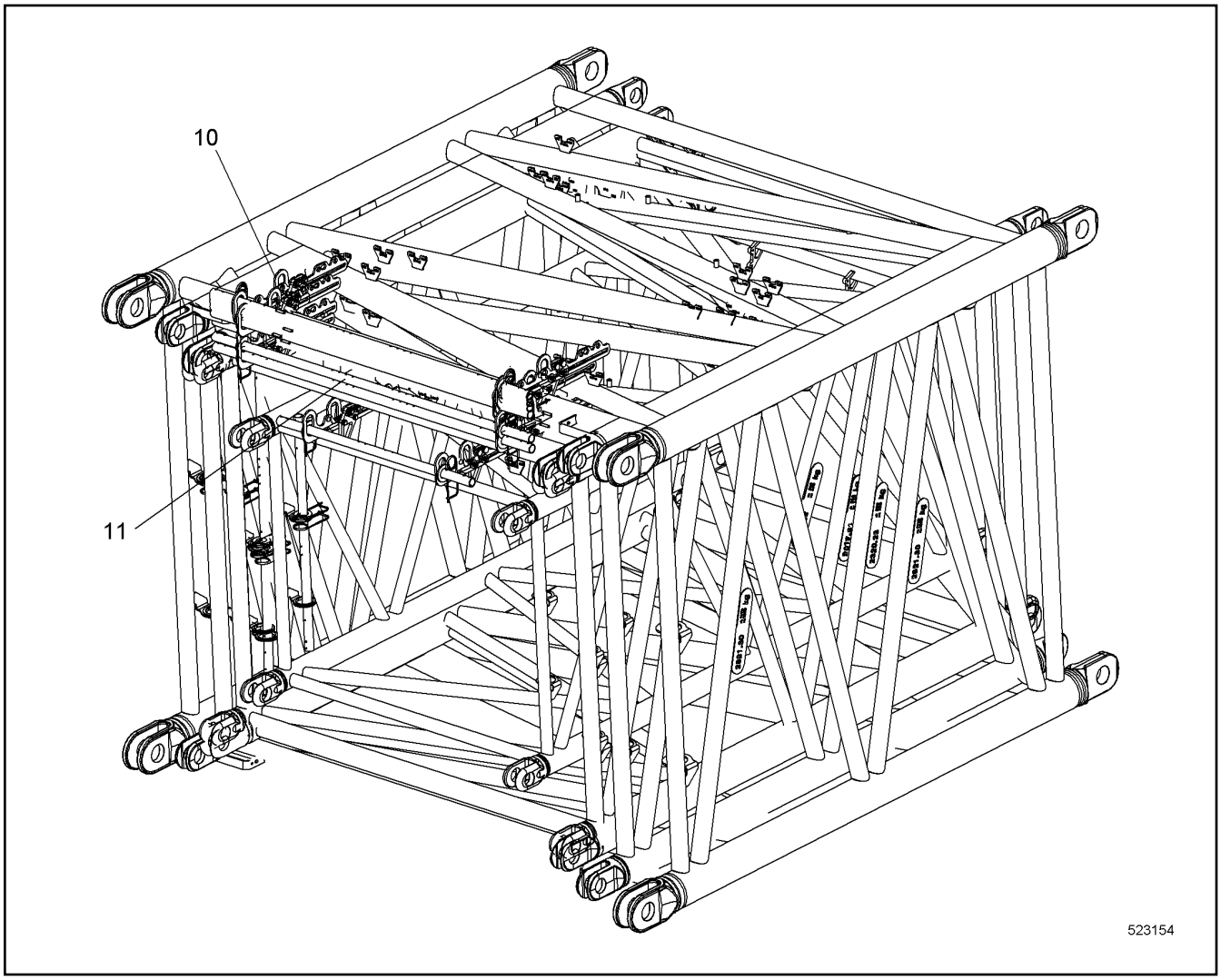

Pos.	Item	Quantity	Description	Bezeichnung	Serie	K
10	11940878	1	ASSEMBLY UNIT ⇨ ❑ 555	MONTAGEEINHEIT		
11	289057714	1	TUBE	ROHR		

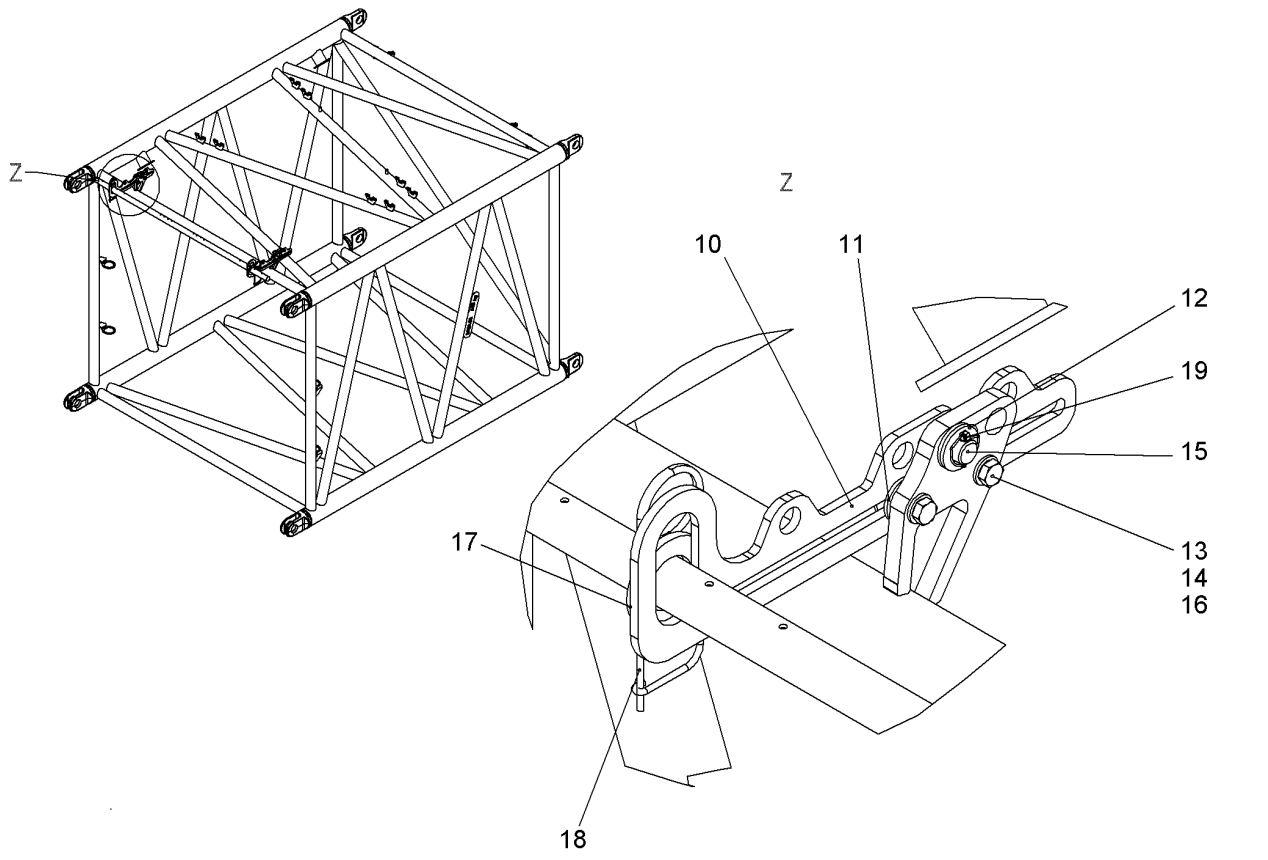

Pos.	Item	Quantity	Description	Bezeichnung	Serie	K
10	11298436	2	HOLDER	HALTER		
11	485568614	8	WASHER DIN 34816 13 PA 6.6	SCHEIBE		
12	10544174	4	WASHER ISO 7089 20	SCHEIBE		
13	10540495	4	HEX NUT ISO 10511 M12 A4	SECHSKANTMUTTER		
14	4901782	4	WASHER ISO 7089 12 A4	SCHEIBE		
15	11949153	2	PIN 30X46 LHRD900-40;10019758	BOLZEN		
16	406512614	4	HEX SCREW ISO 4017 M12X50 A4-70	SECHSKANTSCHRAUBE		
17	420003714	2	WASHER ISO 7089 42	SCHEIBE		
18	433102508	2	RETAINING SPRING 5MM	SICHERUNGSFEDER		
19	485565814	2	SAFETY PLUG W HINGE-LID 4X27	SICHERHEITSKLAPPSTECKER		

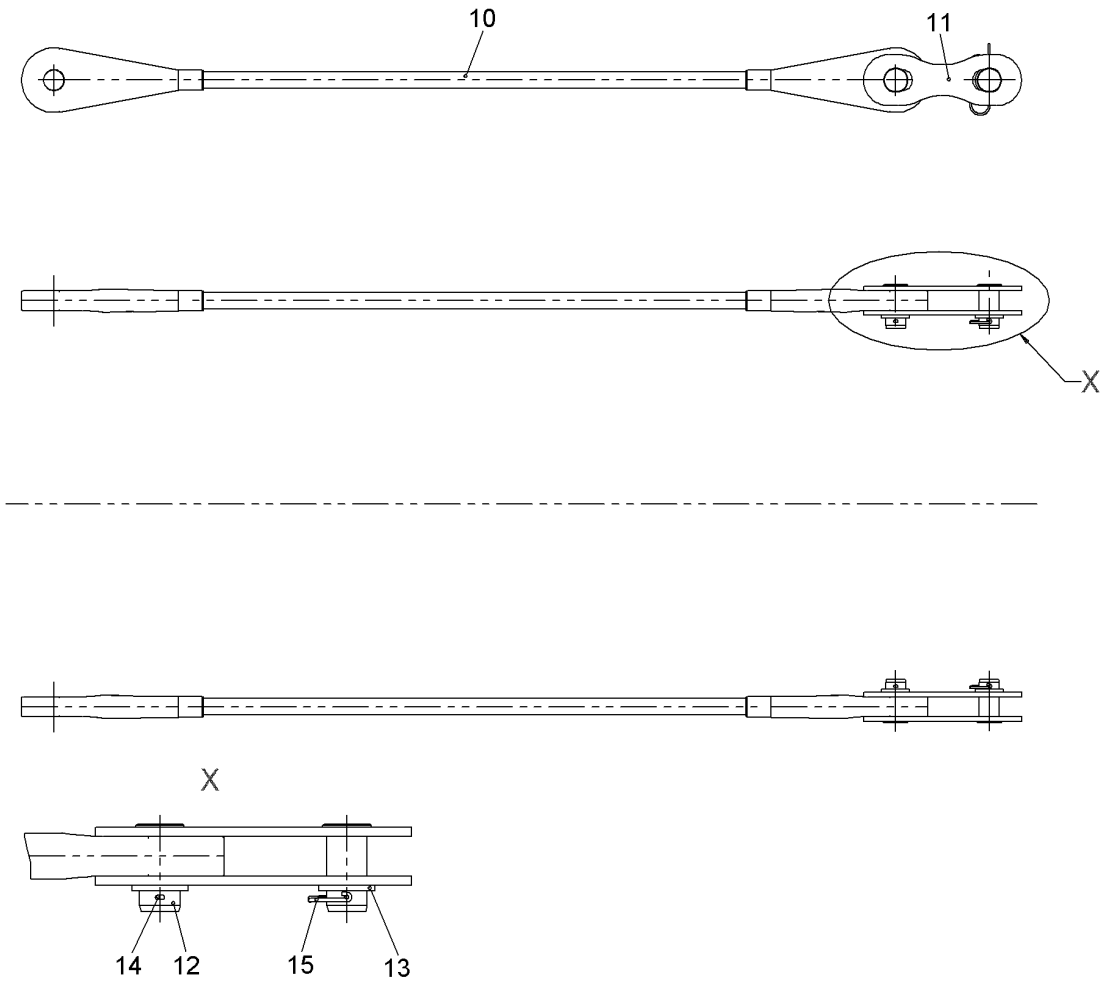

Pos.	Item	Quantity	Description	Bezeichnung	Serie	K
10	10540549	2	ANCHORING ROD	HALTESTANGE		
11	10226402	4	COUPLING LINK	KOPPELLASCHE		
12	950250014	4	PIN	BOLZEN		
13	421103614	4	WASHER DIN EN 28738 65 ST;	SCHEIBE		
14	433009514	2	SPLIT PIN ISO 1234 8X100 A4	SPLINT		
15	433105008	2	RETAINING SPRING DIN 2194 6MM FS	SICHERUNGSFEDER		

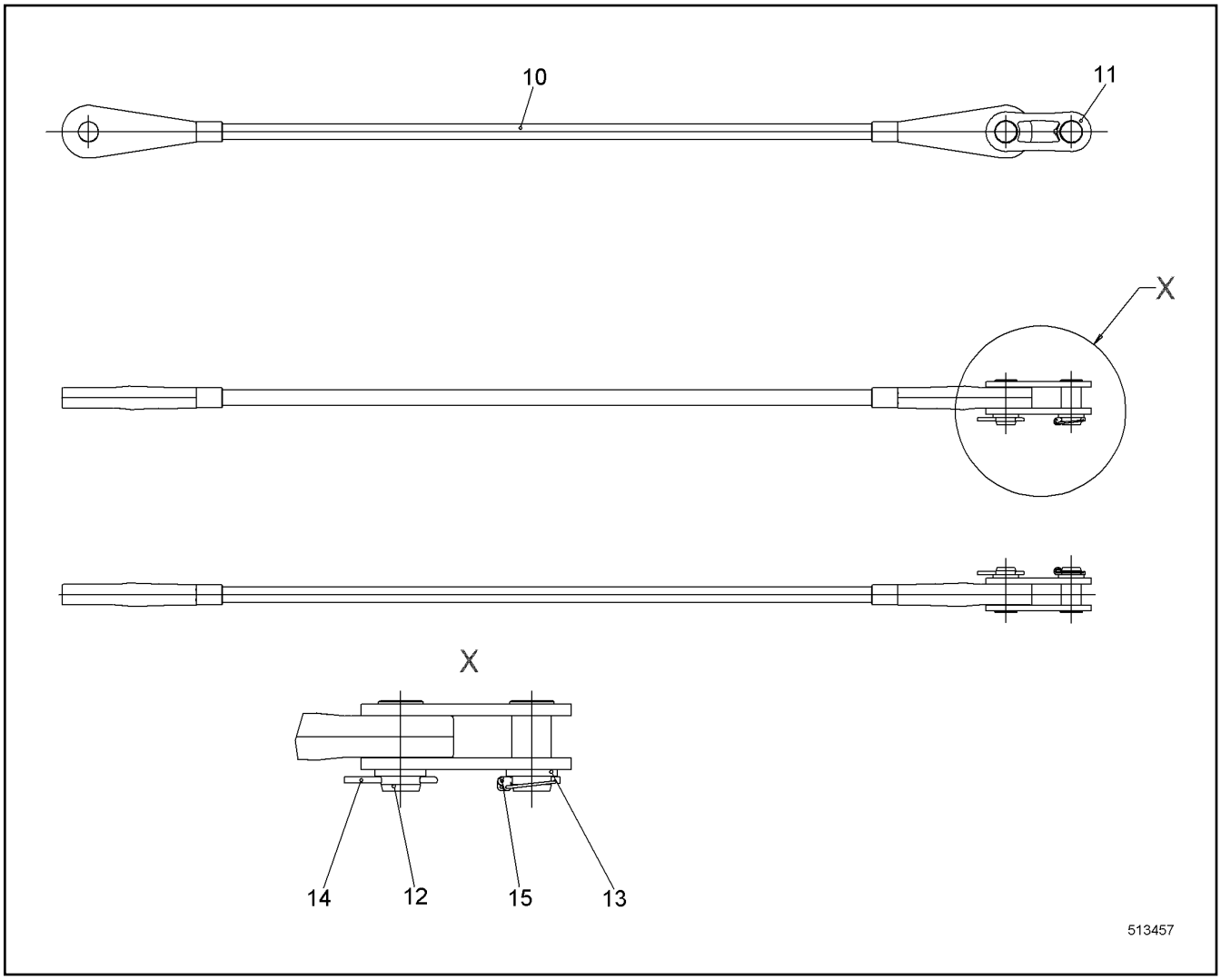

Pos.	Item	Quantity	Description	Bezeichnung	Serie	K
10	10532825	2	ANCHORING ROD	HALTESTANGE		
11	10533594	4	COUPLING LINK	KOPPELLASCHE		
12	958280214	4	PIN	BOLZEN		
13	421103514	4	WASHER DIN EN 28738 60 ST;	SCHEIBE		
14	433010514	2	SPLIT PIN ISO 1234 10X90 A4	SPLINT		
15	485544014	2	SAFETY PLUG W HINGE-LID 12X75	SICHERHEITSKLAPPSTECKER		

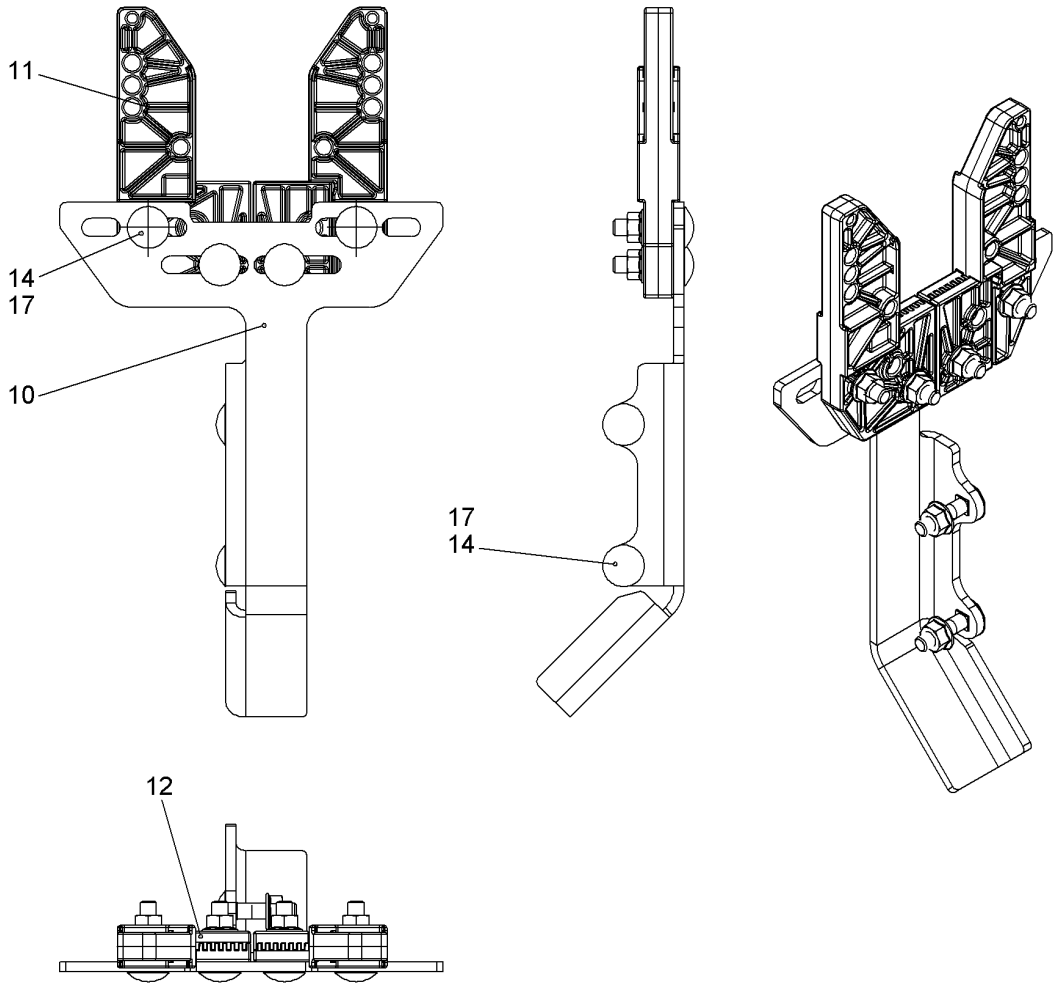

Pos.	Item	Quantity	Description	Bezeichnung	Serie	K
10	11219861	1	FASTENING BRACKET	BEF BUEGEL		
11	11219265	2	SUPPORT	AUFLAGE		
12	11219851	2	SHEET	PLATTE		
14	11314349	6	CHEESE HEAD SCREW DIN 603 M8X35 A4-70	FLACHRUNDSCHRAUBE		
17	11314341	6	HEX NUT DIN EN 1663 M8 A4	SECHSKANTMUTTER		

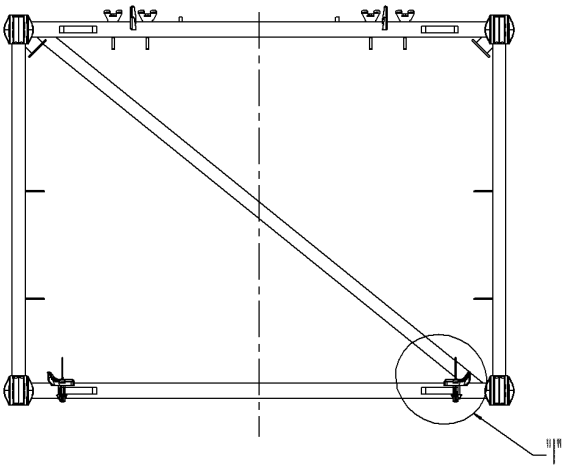

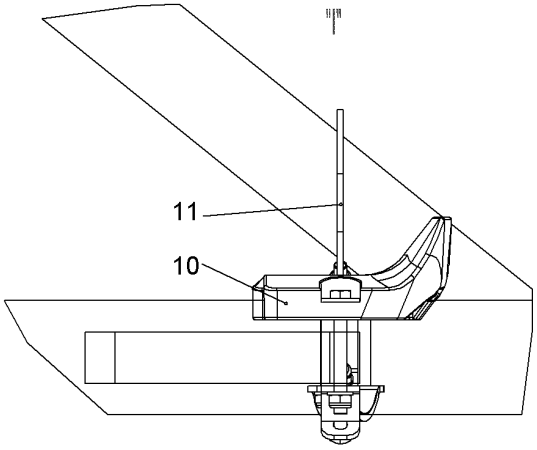

519618

Pos.	Item	Quantity	Description	Bezeichnung	Serie	K
10	992958814	6	SUPPORT ⇨ ❑ 542	AUFLAGE		
11	10350633	2	FASTENER ⇨ ❑ 543	HALTERUNG		

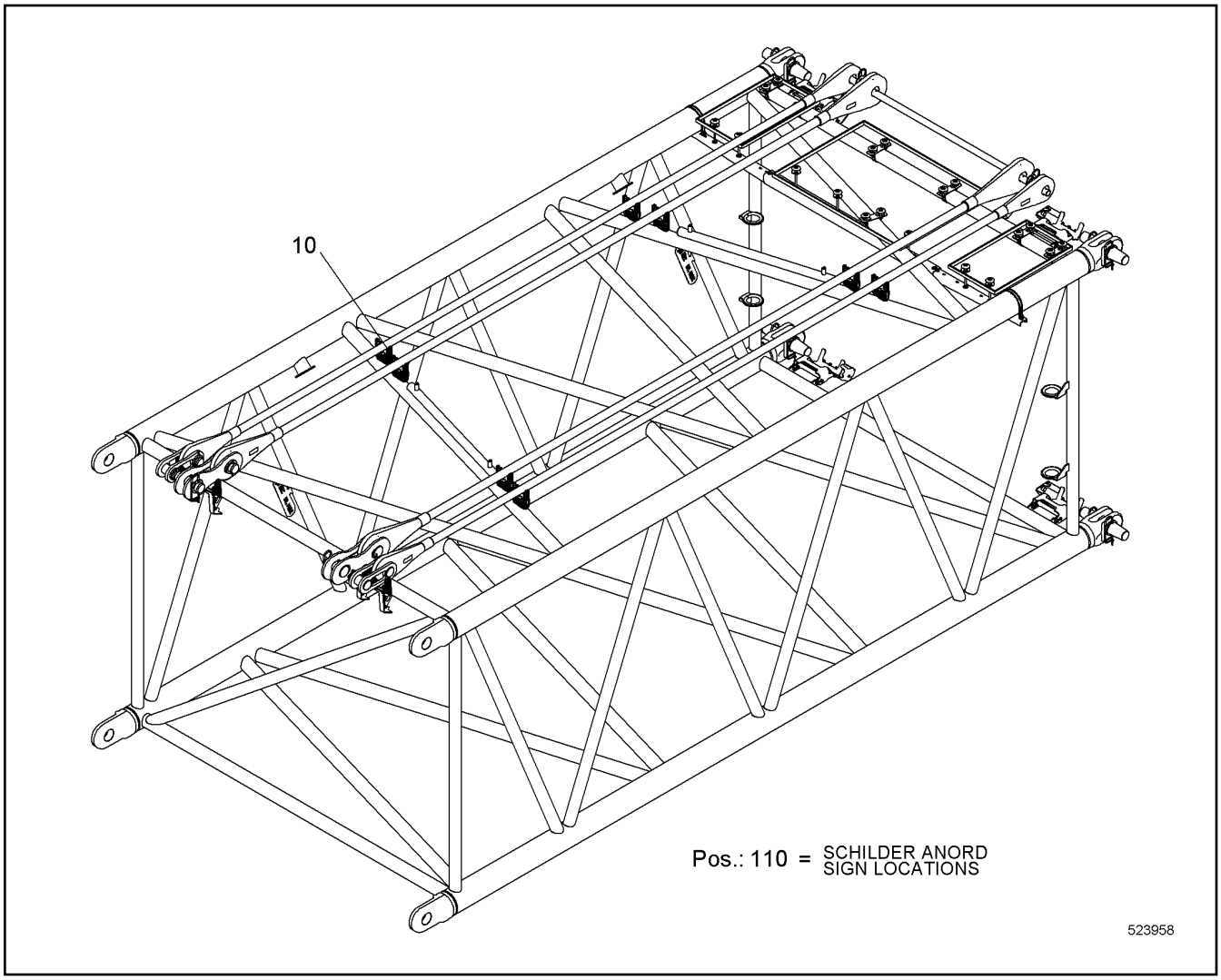

Pos.	Item	Quantity	Description	Bezeichnung	Serie	K
10	11942594	1	ASSEMBLY UNIT ⇨ ❑ 561	MONTAGEEINHEIT		
110	11266901	1	SIGN LOCATIONS	SCHILDER ANORD		

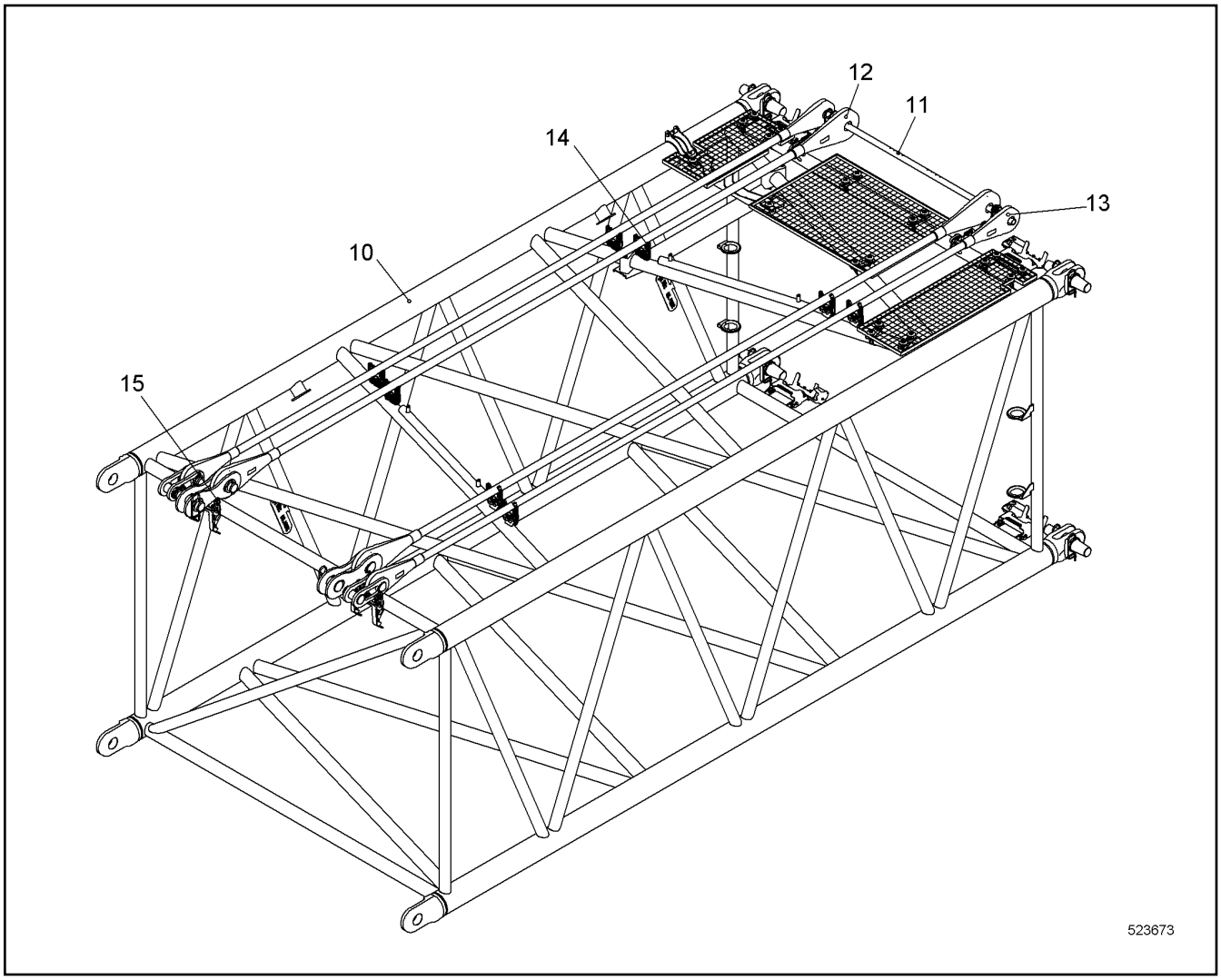

Pos.	Item	Quantity	Description	Bezeichnung	Serie	K
10	11245709	1	BOOM INTERMEDIATE SECTION CPL ⇨ ❑ 562	AL ZWISCHENSTUECK KPL		
11	11940876	1	TRANSPORT LASHING ⇨ ❑ 554	TRANSPORTSICHERUNG		
12	10540551	1	ANCHORING ROD CPL ⇨ ❑ 564	HALTESTANGE KPL		
13	10532163	1	ANCHORING ROD CPL ⇨ ❑ 565	HALTESTANGE KPL		
14	11236533	8	SUPPORT CPL ⇨ ❑ 518	AUFLAGE KPL		
15	11232922	4	SUPPORT CPL ⇨ ❑ 558	AUFLAGE KPL		

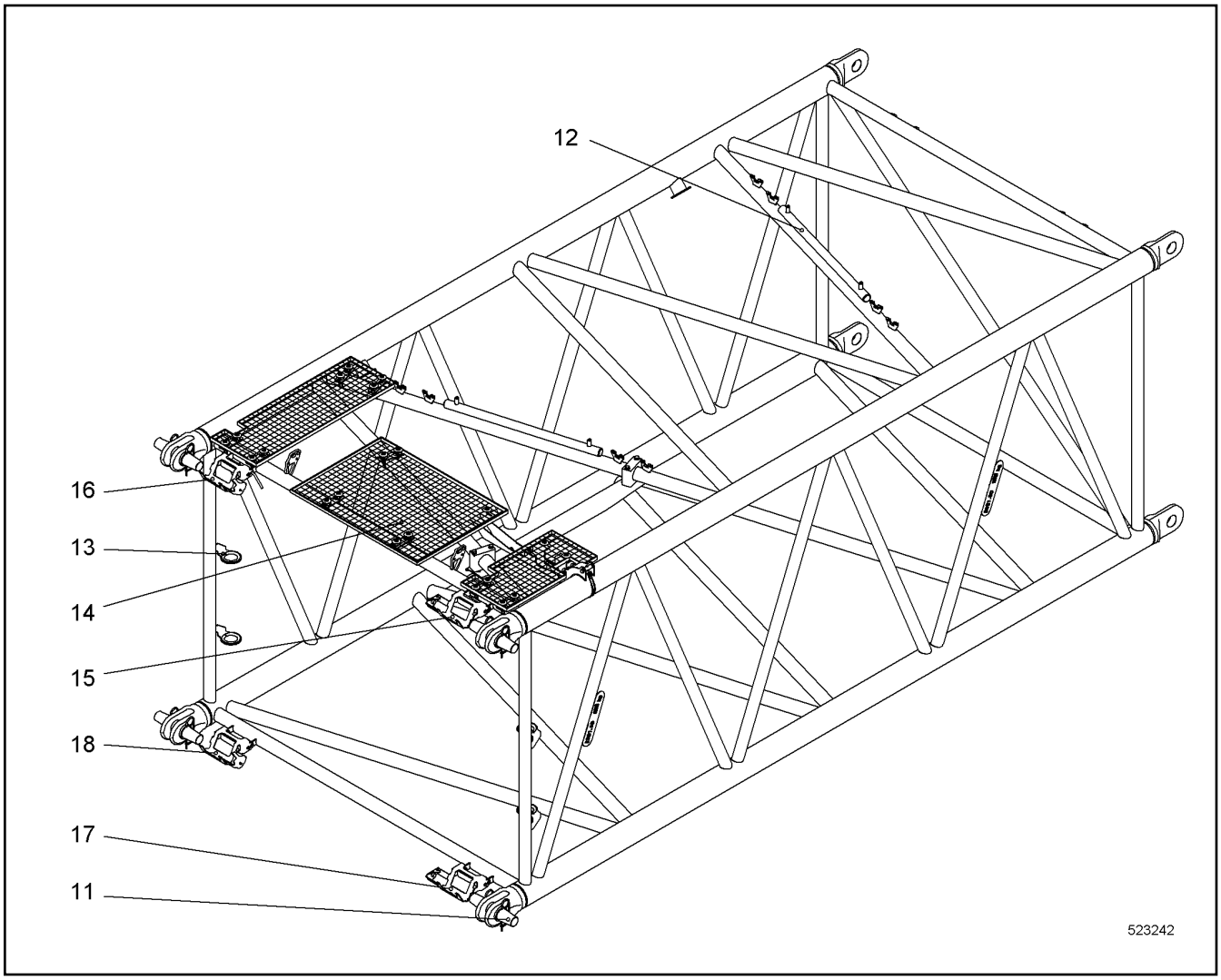

Pos.	Item	Quantity	Description	Bezeichnung	Serie	K
10	11245700	1	BOOM INTERM.SECTION ST.CONST.	AL ZWISCHENSTUECK SCHWK		
11	11287264	4	PIN CPL ⇨ ❑ 517	BOLZEN KPL		
12	11287255	2	ROPE GUARD CPL ⇨ ❑ 547	SEILSCHUTZ KPL		
13	226017802	1.132	EDGE PROTECTION METER WARE	KANTENSCHUTZ METERWARE		
14	11285838	1	BOOM ACCESS ⇨ ❑ 563	AL BEGEHUNG		
15	11283977	1	SUMP PAN CPL ⇨ ❑ 550	AUFFANGWANNE KPL		
16	11283978	1	SUMP PAN CPL ⇨ ❑ 551	AUFFANGWANNE KPL		
17	11283995	1	SUMP PAN CPL ⇨ ❑ 552	AUFFANGWANNE KPL		
18	11283997	1	SUMP PAN CPL ⇨ ❑ 553	AUFFANGWANNE KPL		

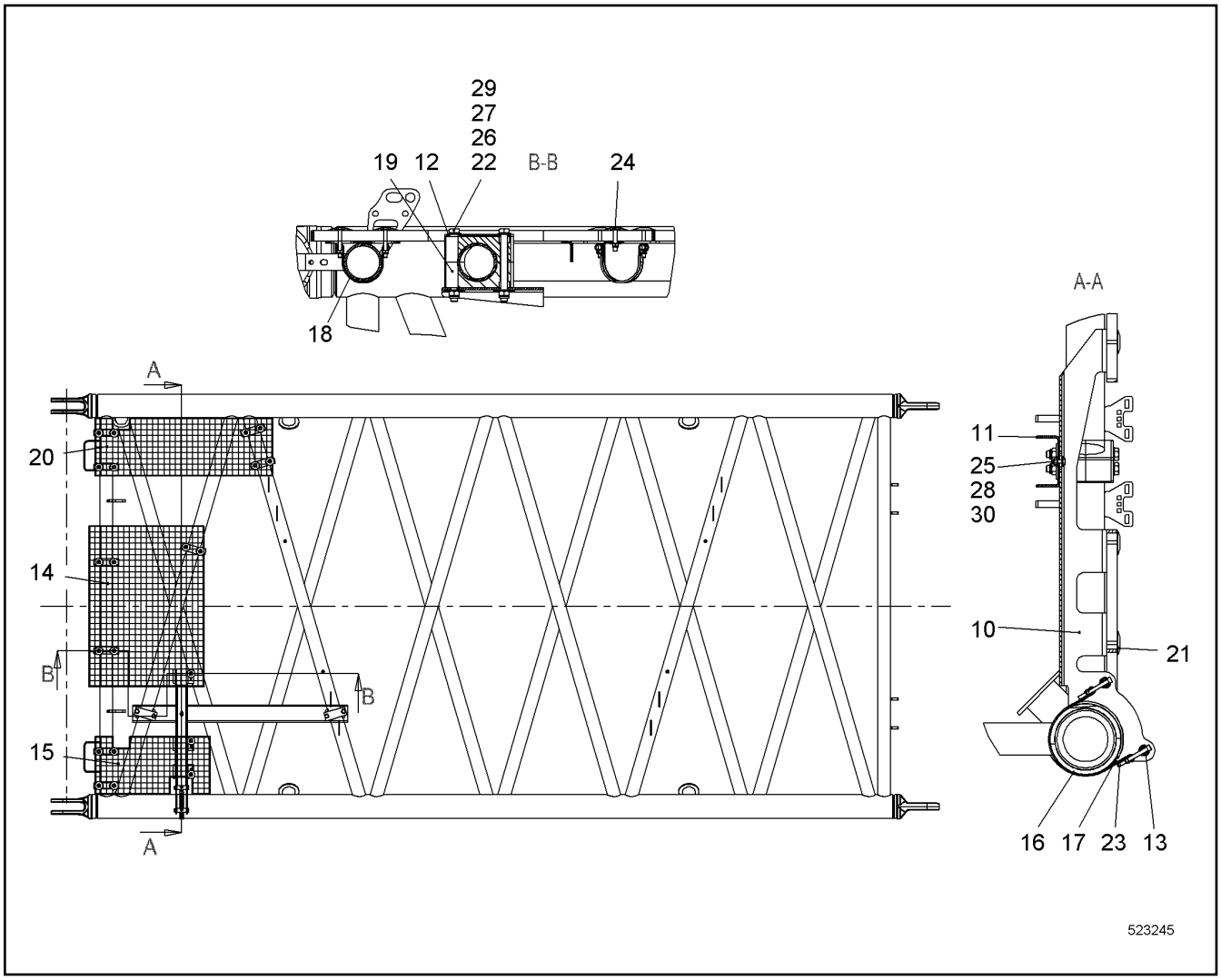

Pos.	Item	Quantity	Description	Bezeichnung	Serie	K
10	11311241	1	PLATE	BLECH		
11	11311336	1	PLATE	BLECH		
12	11310952	2	PLATE	BLECH		
13	11310955	2	AXLE	ACHSE		
14	10530418	1	GRATING	GITTERROST		
15	11311245	1	GRATING	GITTERROST		
16	10531873	1	TIGHTENING STRAP HINGE PIN	GELENKBOLZENSPANNBAND		
17	10352462	0.422	FLEXIBLE EDGE PROTECTOR	KANTENSCHUTZ FLEXIBEL		
18	11283913	9	FIXING CLAMP ⇨ ❑ 549	BEFESTIGUNGSCHELLE		
19	602017114	4	CLAMP-HALF	KLEMMHAELFTE		
20	11311371	1	GRATING	GITTERROST		
21	10098157	3	DISH	TELLER		
22	10543975	4	HEX SCREW ISO 4014 M16X160 10.9	SECHSKANTSCHRAUBE		
23	10539492	2	SOCKET HEAD SCREW ISO 4762 M8X80 A4-7	ZYLINDERSCHRAUBE		
24	10538807	3	HEX SCREW ISO 4017 M8X50 A4-70	SECHSKANTSCHRAUBE		
25	406501414	1	HEX SCREW ISO 4017 M8X25 A4-70	SECHSKANTSCHRAUBE		
26	10544172	4	WASHER ISO 7089 16	SCHEIBE		
27	10544173	4	WASHER ISO 7093-1 16	SCHEIBE		
28	10540510	5	WASHER ISO 7093-1 8 A4	SCHEIBE		
29	10544155	4	HEX NUT DIN 985 M16 10	SECHSKANTMUTTER		
30	10540493	6	HEX NUT ISO 10511 M8 A4	SECHSKANTMUTTER		

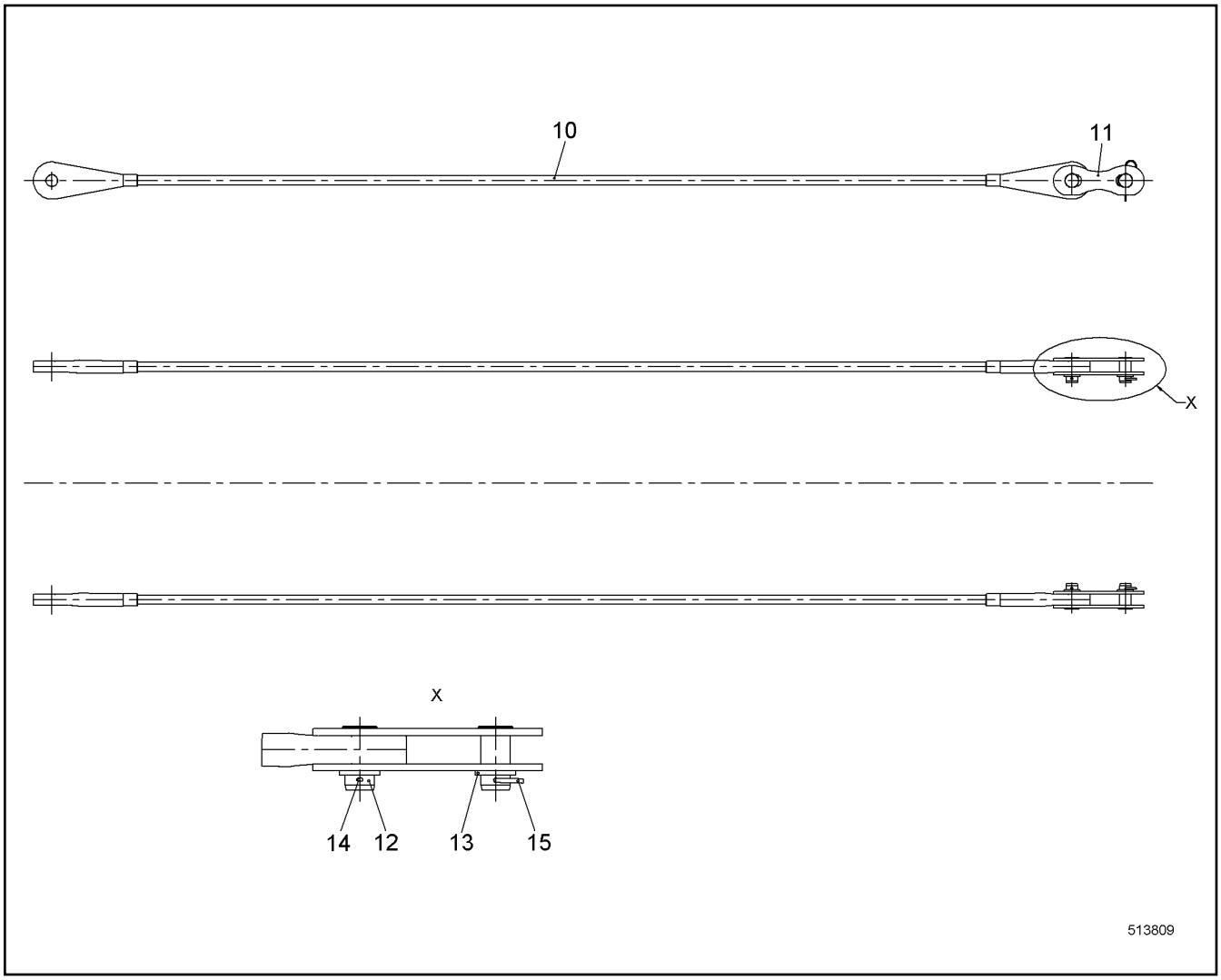

Pos.	Item	Quantity	Description	Bezeichnung	Serie	K
10	10540552	2	ANCHORING ROD	HALTESTANGE		
11	10226402	4	COUPLING LINK	KOPPELLASCHE		
12	950250014	4	PIN	BOLZEN		
13	421103614	4	WASHER DIN EN 28738 65 ST;	SCHEIBE		
14	433009514	2	SPLIT PIN ISO 1234 8X100 A4	SPLINT		
15	433105008	2	RETAINING SPRING DIN 2194 6MM FS	SICHERUNGSFEDER		

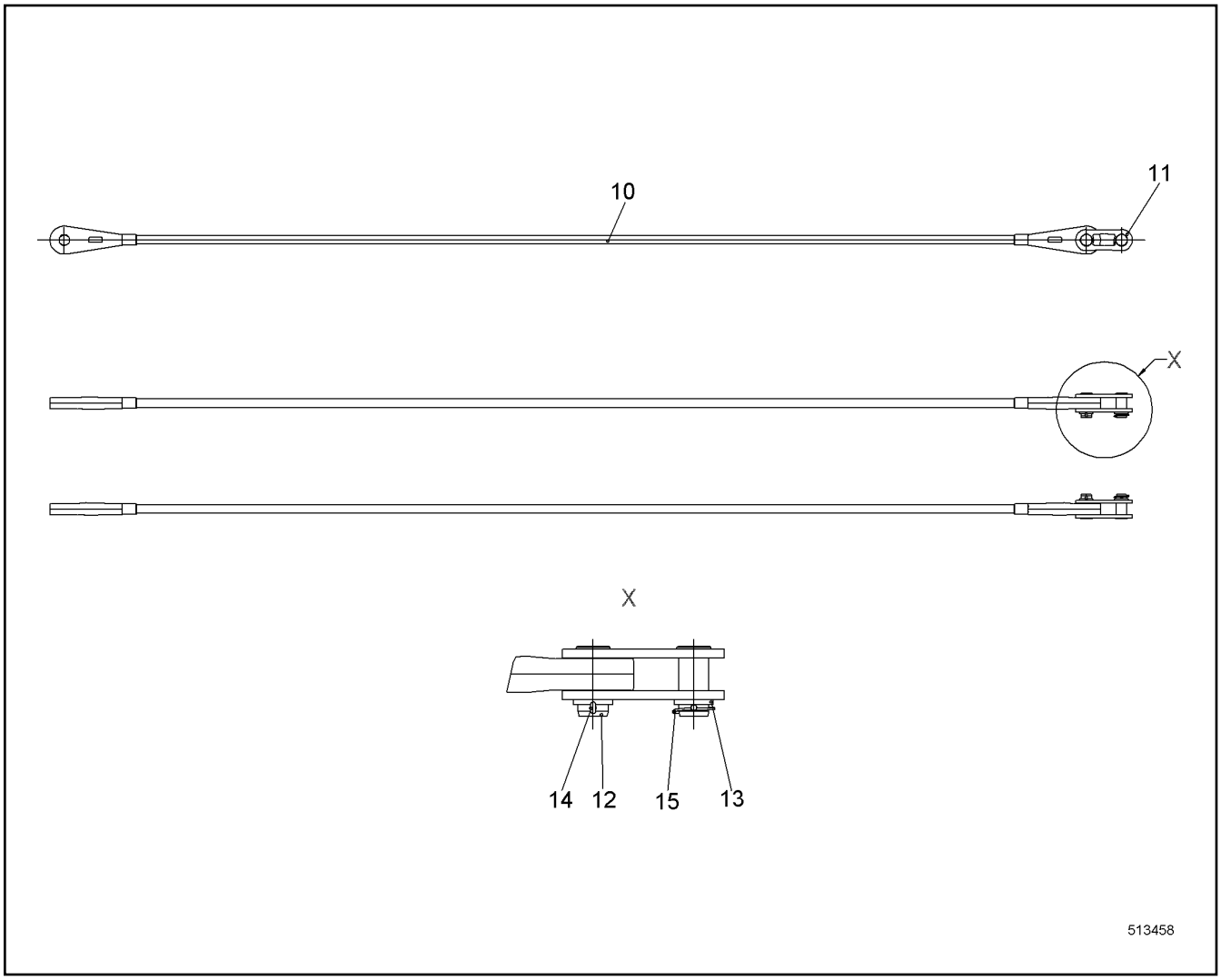

Pos.	Item	Quantity	Description	Bezeichnung	Serie	K
10	10532826	2	ANCHORING ROD	HALTESTANGE		
11	10533594	4	COUPLING LINK	KOPPELLASCHE		
12	958280214	4	PIN	BOLZEN		
13	421103514	4	WASHER DIN EN 28738 60 ST;	SCHEIBE		
14	433010514	2	SPLIT PIN ISO 1234 10X90 A4	SPLINT		
15	485544014	2	SAFETY PLUG W HINGE-LID 12X75	SICHERHEITSKLAPPSTECKER		

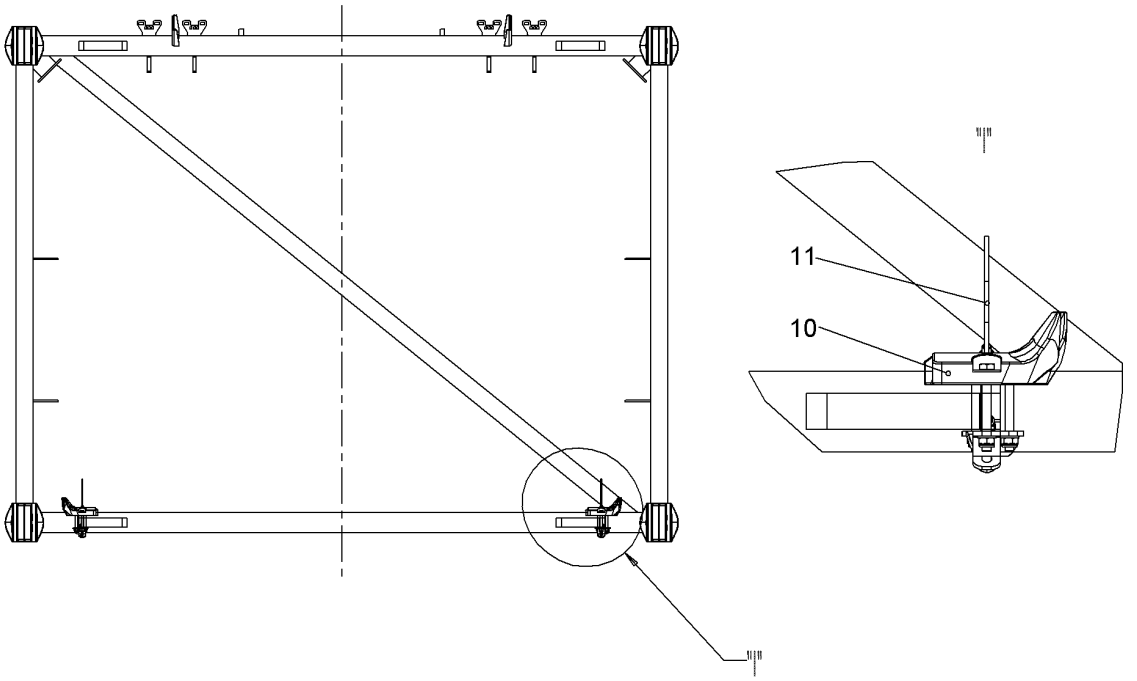

Pos.	Item	Quantity	Description	Bezeichnung	Serie	K
10	992958814	6	SUPPORT ⇨ ❑ 542	AUFLAGE		
11	10350633	2	FASTENER ⇨ ❑ 543	HALTERUNG		

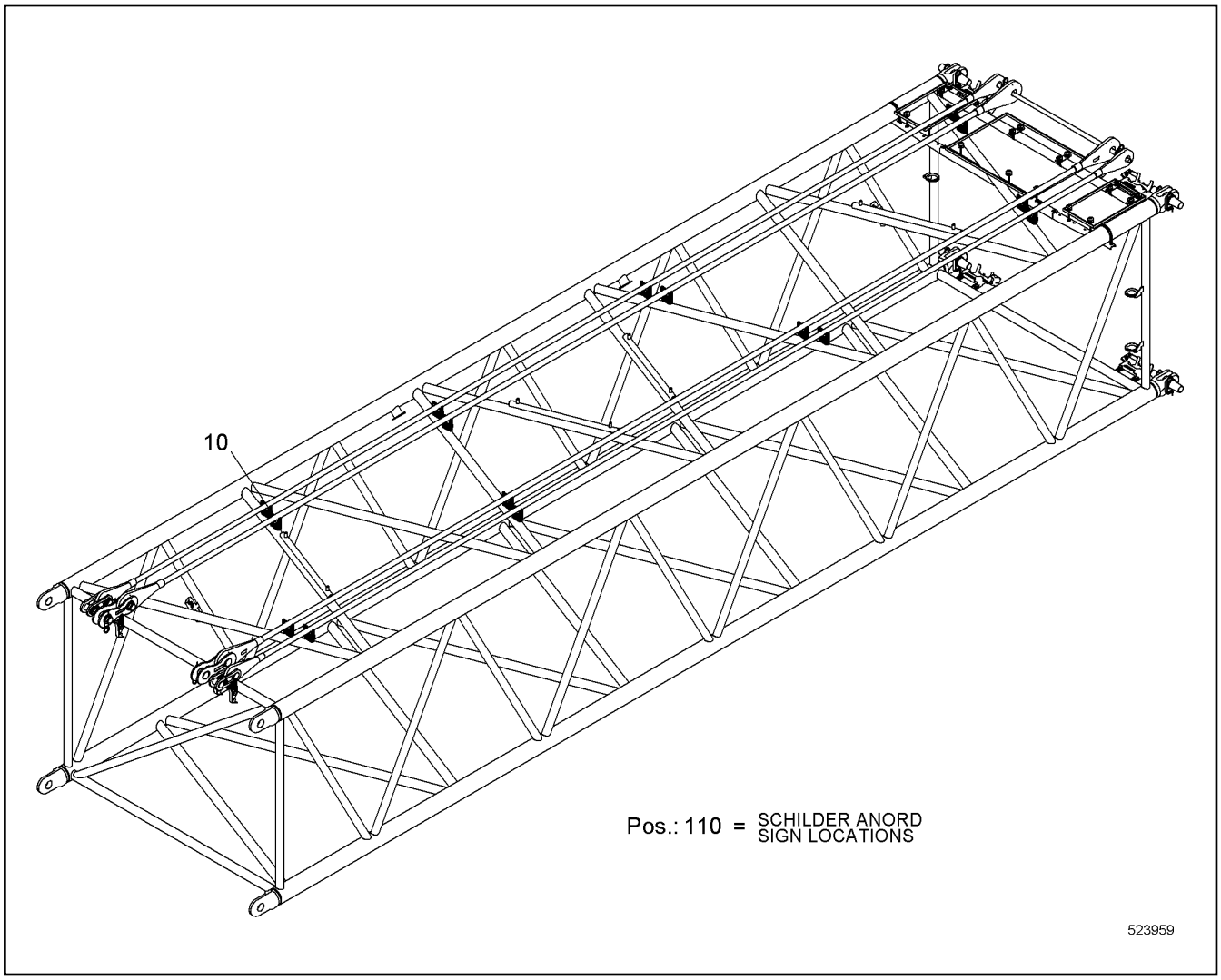

Pos.	Item	Quantity	Description	Bezeichnung	Serie	K
10	11944502	1	ASSEMBLY UNIT ⇨ ❑ 568	MONTAGEEINHEIT		
110	11266901	1	SIGN LOCATIONS	SCHILDER ANORD		

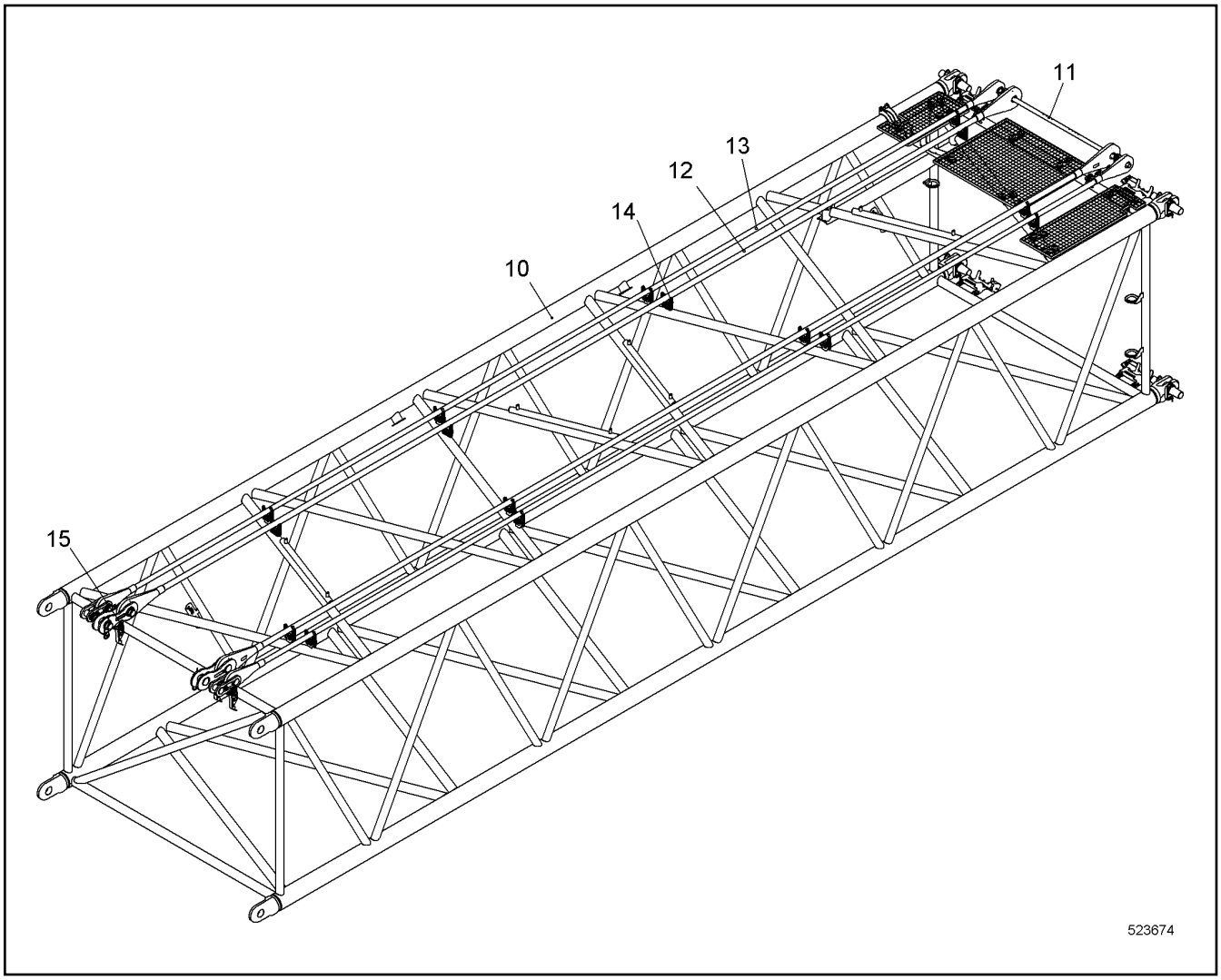

Pos.	Item	Quantity	Description	Bezeichnung	Serie	K
10	11245715	1	BOOM INTERMEDIATE SECTION CPL ⇨ ❑ 569	AL ZWISCHENSTUECK KPL		
11	11940876	1	TRANSPORT LASHING ⇨ ❑ 554	TRANSPORTSICHERUNG		
12	10540555	1	ANCHORING ROD CPL ⇨ ❑ 571	HALTESTANGE KPL		
13	10532164	1	ANCHORING ROD CPL ⇨ ❑ 572	HALTESTANGE KPL		
14	11236533	16	SUPPORT CPL ⇨ ❑ 518	AUFLAGE KPL		
15	11232922	4	SUPPORT CPL ⇨ ❑ 558	AUFLAGE KPL		

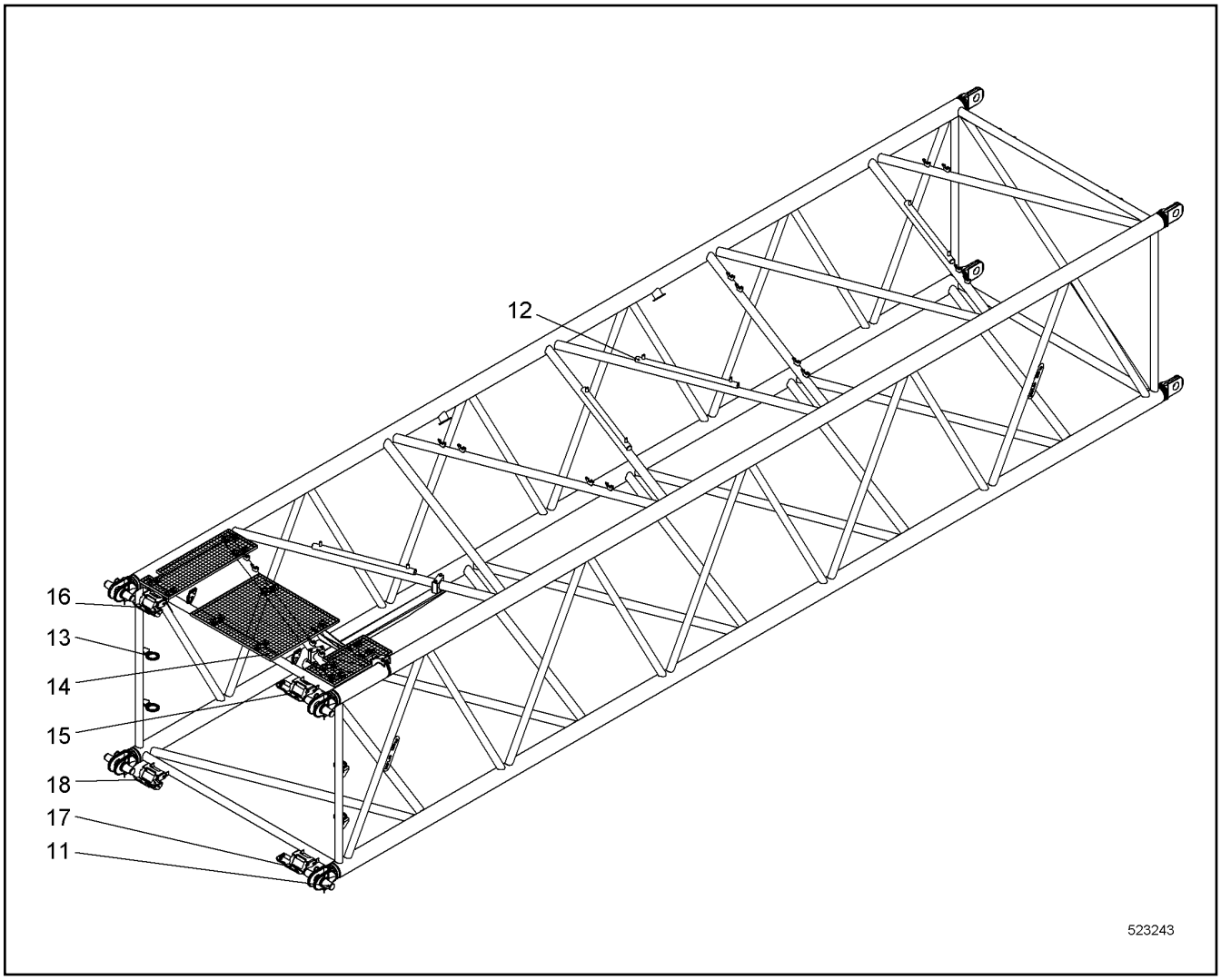

Pos.	Item	Quantity	Description	Bezeichnung	Serie	K
10	11245702	1	BOOM INTERM.SECTION ST.CONST.	AL ZWISCHENSTUECK SCHWK		
11	11287264	4	PIN CPL ⇨ ❑ 517	BOLZEN KPL		
12	11287255	4	ROPE GUARD CPL ⇨ ❑ 547	SEILSCHUTZ KPL		
13	226017802	1.132	EDGE PROTECTION METER WARE	KANTENSCHUTZ METERWARE		
14	11286261	1	BOOM ACCESS ⇨ ❑ 570	AL BEGEHUNG		
15	11283977	1	SUMP PAN CPL ⇨ ❑ 550	AUFFANGWANNE KPL		
16	11283978	1	SUMP PAN CPL ⇨ ❑ 551	AUFFANGWANNE KPL		
17	11283995	1	SUMP PAN CPL ⇨ ❑ 552	AUFFANGWANNE KPL		
18	11283997	1	SUMP PAN CPL ⇨ ❑ 553	AUFFANGWANNE KPL		

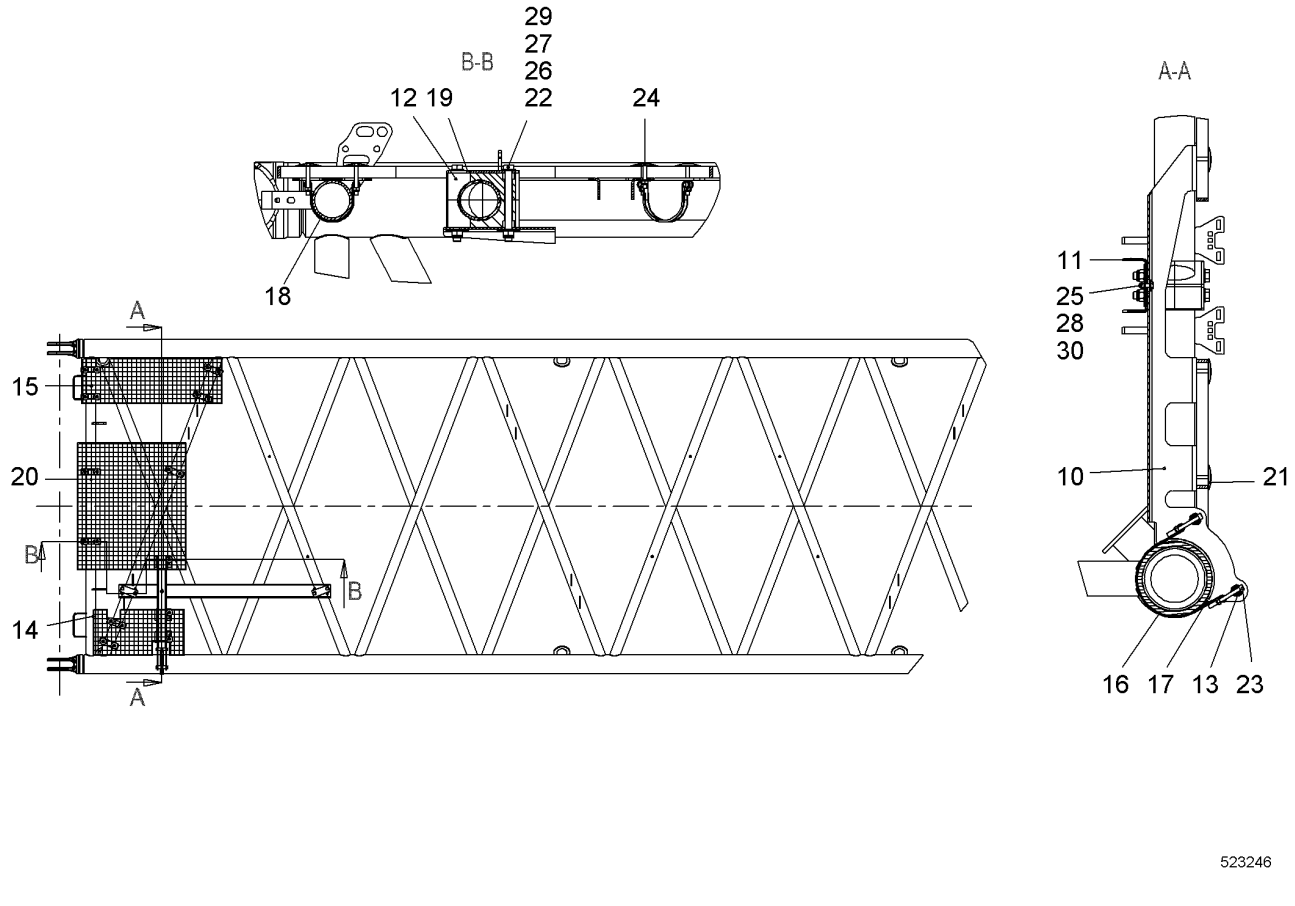

Pos.	Item	Quantity	Description	Bezeichnung	Serie	K
10	11311241	1	PLATE	BLECH		
11	11311393	1	PLATE	BLECH		
12	11310952	2	PLATE	BLECH		
13	11310955	2	AXLE	ACHSE		
14	11311245	1	GRATING	GITTERROST		
15	11311371	1	GRATING	GITTERROST		
16	10531873	1	TIGHTENING STRAP HINGE PIN	GELENKBOLZENSPANNBAND		
17	10352462	0.422	FLEXIBLE EDGE PROTECTOR	KANTENSCHUTZ FLEXIBEL		
18	11283913	9	FIXING CLAMP ⇨ ❑ 549	BEFESTIGUNGSCHELLE		
19	602017114	4	CLAMP-HALF	KLEMMHAELFTE		
20	11311390	1	GRATING	GITTERROST		
21	10098157	3	DISH	TELLER		
22	10543975	4	HEX SCREW ISO 4014 M16X160 10.9	SECHSKANTSCHRAUBE		
23	10539492	2	SOCKET HEAD SCREW ISO 4762 M8X80 A4-7	ZYLINDERSCHRAUBE		
24	10538807	3	HEX SCREW ISO 4017 M8X50 A4-70	SECHSKANTSCHRAUBE		
25	406501414	1	HEX SCREW ISO 4017 M8X25 A4-70	SECHSKANTSCHRAUBE		
26	10544172	4	WASHER ISO 7089 16	SCHEIBE		
27	10544173	4	WASHER ISO 7093-1 16	SCHEIBE		
28	10540510	5	WASHER ISO 7093-1 8 A4	SCHEIBE		
29	10544155	4	HEX NUT DIN 985 M16 10	SECHSKANTMUTTER		
30	10540493	6	HEX NUT ISO 10511 M8 A4	SECHSKANTMUTTER		

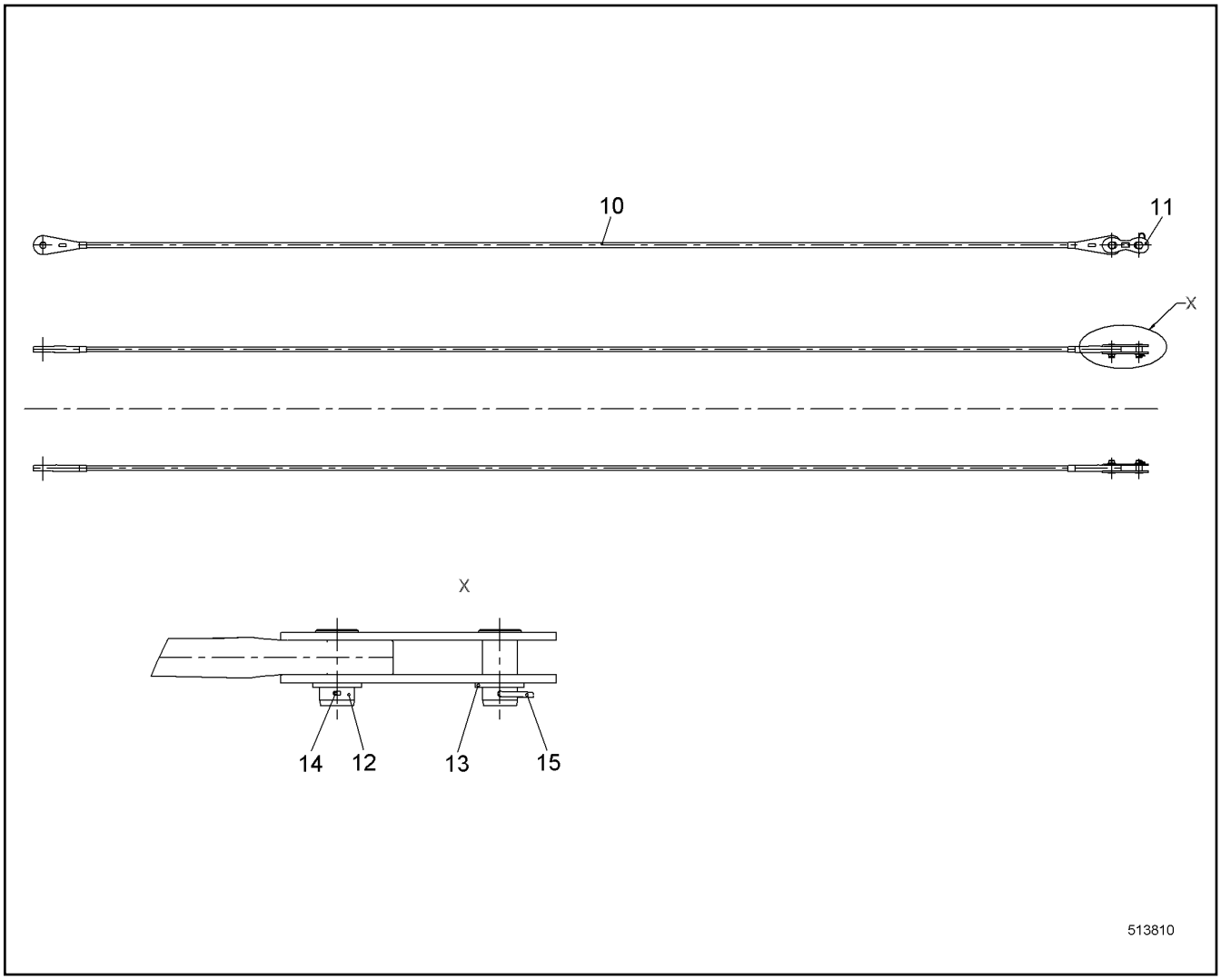

Pos.	Item	Quantity	Description	Bezeichnung	Serie	K
10	10540560	2	ANCHORING ROD	HALTESTANGE		
11	10226402	4	COUPLING LINK	KOPPELLASCHE		
12	950250014	4	PIN	BOLZEN		
13	421103614	4	WASHER DIN EN 28738 65 ST;	SCHEIBE		
14	433009514	2	SPLIT PIN ISO 1234 8X100 A4	SPLINT		
15	433105008	2	RETAINING SPRING DIN 2194 6MM FS	SICHERUNGSFEDER		

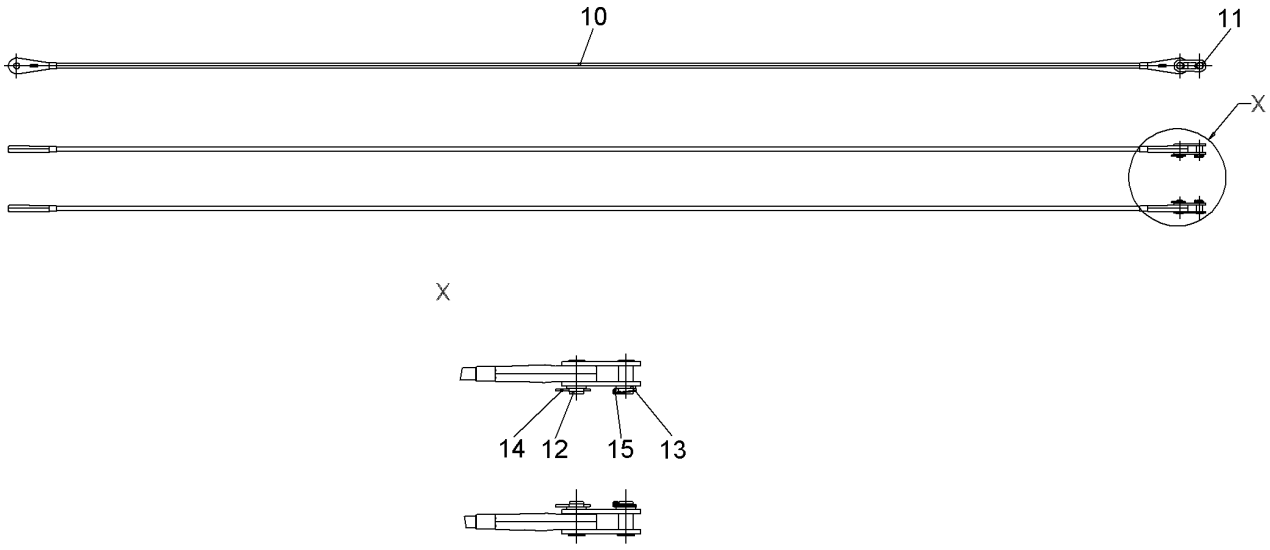

Pos.	Item	Quantity	Description	Bezeichnung	Serie	K
10	10532827	2	ANCHORING ROD	HALTESTANGE		
11	10533594	4	COUPLING LINK	KOPPELLASCHE		
12	958280214	4	PIN	BOLZEN		
13	421103514	4	WASHER DIN EN 28738 60 ST;	SCHEIBE		
14	433010514	2	SPLIT PIN ISO 1234 10X90 A4	SPLINT		
15	485544014	2	SAFETY PLUG W HINGE-LID 12X75	SICHERHEITSKLAPPSTECKER		

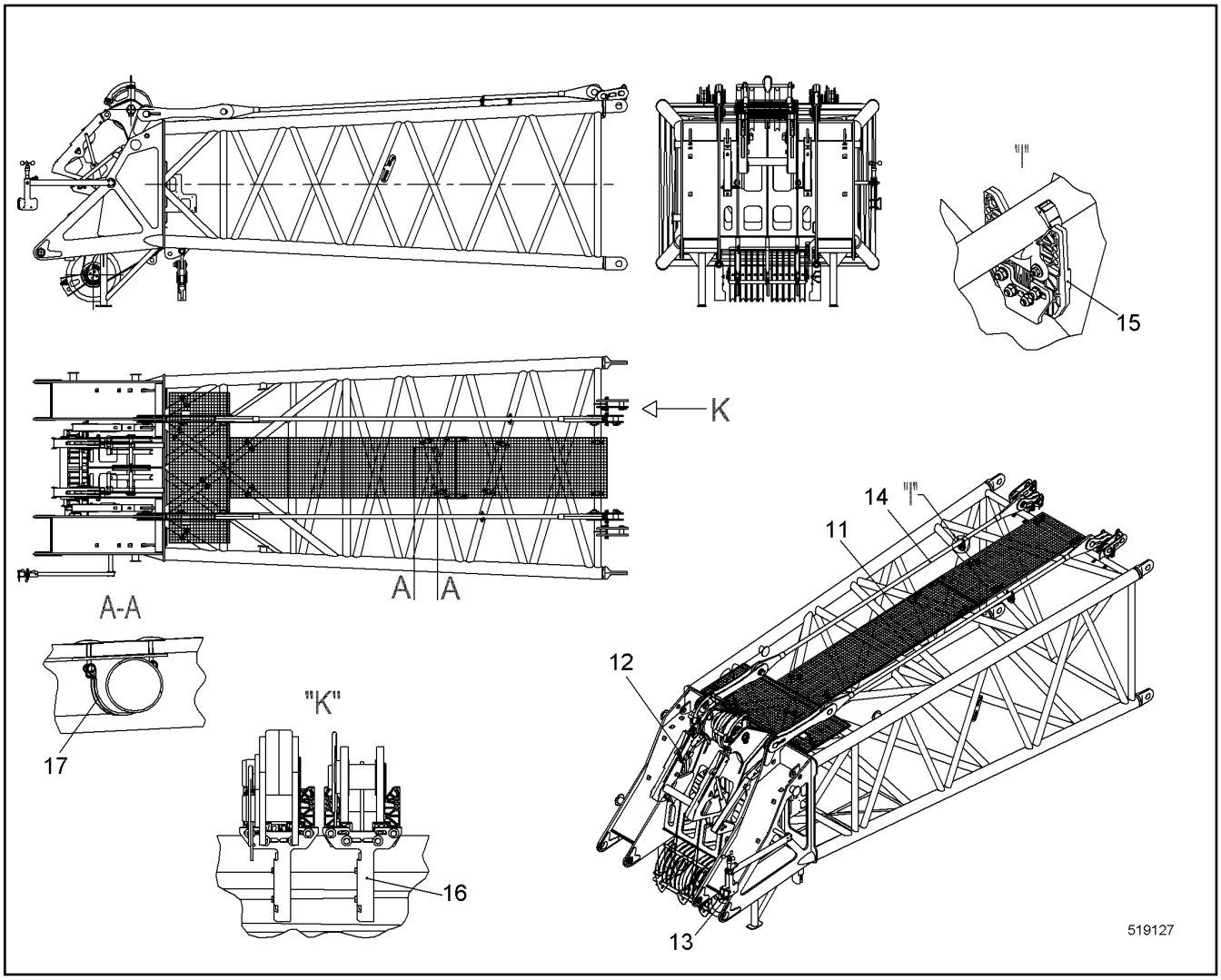

Pos.	Item	Quantity	Description	Bezeichnung	Serie	K
3	10531413	1	BOOM HEAD EL ⇨ ❑ 574	AL KOPF EL		
10	11241323	1	BOOM HEAD ST.CONST. CPL	AL KOPF SCHWK KPL		
11	11286484	1	MOUNTING PARTS ⇨ ❑ 578	MONTAGETEILE		
12	11286105	1	RETAINING DEVICE CPL ⇨ ❑ 580	ARRETIERUNG KPL		
13	990646114	1	ANEMOMETER CPL ⇨ ❑ 581	WINDMESSER KPL		
14	10540567	1	ANCHORING ROD CPL ⇨ ❑ 586	HALTESTANGE KPL		
15	11236533	2	SUPPORT CPL ⇨ ❑ 518	AUFLAGE KPL		
16	11232922	4	SUPPORT CPL ⇨ ❑ 558	AUFLAGE KPL		
17	11283913	12	FIXING CLAMP ⇨ ❑ 549	BEFESTIGUNGSCHELLE		
110	11269727	1	SIGN LOCATIONS	SCHILDER ANORD		

OHNE BILD
WITHOUT ILLUSTRATION
SANS PLANCHE
SIN FIG.
SEM ILUSTRAÇÃO
БЕЗ ИЗОБРАЖЕНИЯ

600000

Pos.	Item	Quantity	Description	Bezeichnung	Serie	K
10	11286324	1	ANGLE TRANSMITTER	WINKELGEBER		
11	693067614	2	PROXIMITY SWITCH	NAEHERUNGSSCHALTER		
21	10575599	1	CABLE LOOM ⇨ ❑ 575	KABELSATZ		

OHNE BILD
WITHOUT ILLUSTRATION
SANS PLANCHE
SIN FIG.
SEM ILUSTRAÇÃO
БЕЗ ИЗОБРАЖЕНИЯ

600000

Pos.	Item	Quantity	Description	Bezeichnung	Serie	K
20	10573292	1	CLAMPING SOCKET	KLEMMDOSE		
21	10045155	12	CABLE GLAND	KABELVERSCHRAUBUNG		
25	693061314	2	STOPPER PLUG	BLINDSTOPFEN		
27	606760014	1	SIGN	SCHILD		
28	602620201	2	REDUCER	REDUZIERUNG		
29	260493402	1	REDUCER	REDUZIERUNG		
30	927521808	2	LIMIT SWITCH HOISTING ABOVE ⇨ ❑ 577	ENDSCHALTER HUB OBEN		
31	600454314	1	CONTROL LEAD	STEUERLEITUNG		
40	993856014	1	CABLE	KABEL		
41	918361414	1	CABLE ANEMOMETER	KABEL WINDGEBER		
50	693155014	1	SOCKET SHELL	TUELLENGEHAEUSE		
51	605604714	1	MALE INSERT	STIFTEINSATZ		
52	693061414	1	STOPPER PLUG	BLINDSTOPFEN		
53	605601701	6	CONTACT PIN	KONTAKTSTIFT		
60	606066314	3	LIMIT SWITCH	ENDSCHALTER		
61	10045155	3	CABLE GLAND	KABELVERSCHRAUBUNG		
62	602620201	3	REDUCER	REDUZIERUNG		
63	600454314	4	CONTROL LEAD	STEUERLEITUNG		
64	600454314	4	CONTROL LEAD	STEUERLEITUNG		
65	600454314	3.1	CONTROL LEAD	STEUERLEITUNG		
70	605252014	2	BUSHING HOUSING	BUCHSENGEHAEUSE		
71	605252214	2	CONTACT LOCK	KONTAKTVERRIEGELUNG		
72	600454314	4	CONTROL LEAD	STEUERLEITUNG		
73	600454314	4	CONTROL LEAD	STEUERLEITUNG		
80	693157014	2	BS HOUSING	SOCKELGEHAEUSE		

OHNE BILD
WITHOUT ILLUSTRATION
SANS PLANCHE
SIN FIG.
SEM ILUSTRAÇÃO
БЕЗ ИЗОБРАЖЕНИЯ

600000

Pos.	Item	Quantity	Description	Bezeichnung	Serie	K
81	605616114	2	FEMALE INSERT	BUCHSENEINSATZ		
82	605618014	2	COVER LID	ABDECKKAPPE		
83	693152314	2	HOSE CLAMP THREADED UNION	SCHLAUCHSCHELLENVERSCH		
84	602620201	2	REDUCER	REDUZIERUNG		
85	600454314	4.5	CONTROL LEAD	STEUERLEITUNG		
86	603000308	1.2	INSULATING HOSE	ISOLIERSCHLAUCH		
90	600454314	6	CONTROL LEAD	STEUERLEITUNG		
91	600454314	6	CONTROL LEAD	STEUERLEITUNG		
92	10336440	2	PLUG	STECKER		
93	6203401	2	DUST CAP	STAUBKAPPE		

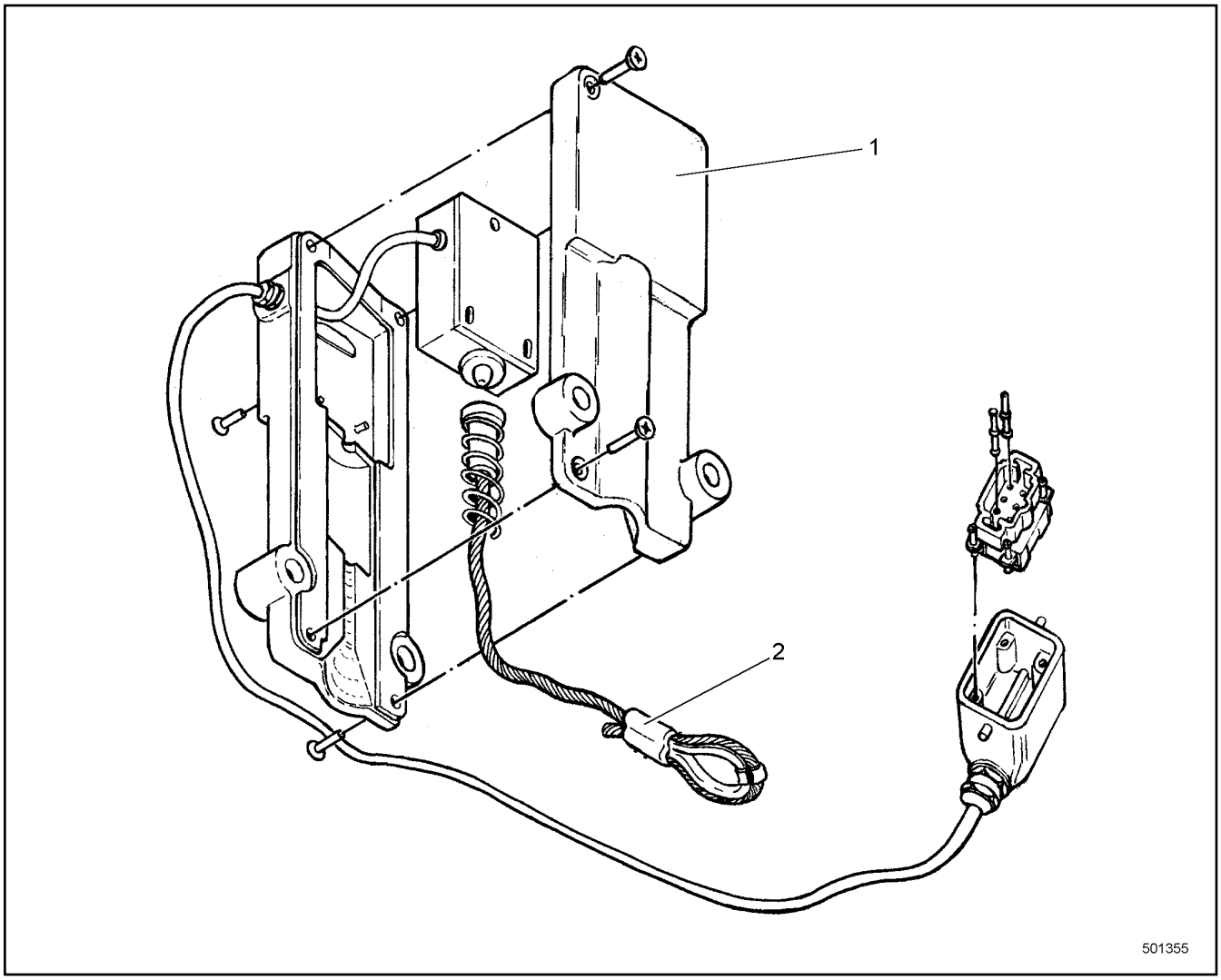

Pos.	Item	Quantity	Description	Bezeichnung	Serie	K
1	606655208	1	SWITCHING ELEMENT	SCHALTELEMENT		
2	606655308	1	AUXILIARY ROPE	HILFSSEIL		

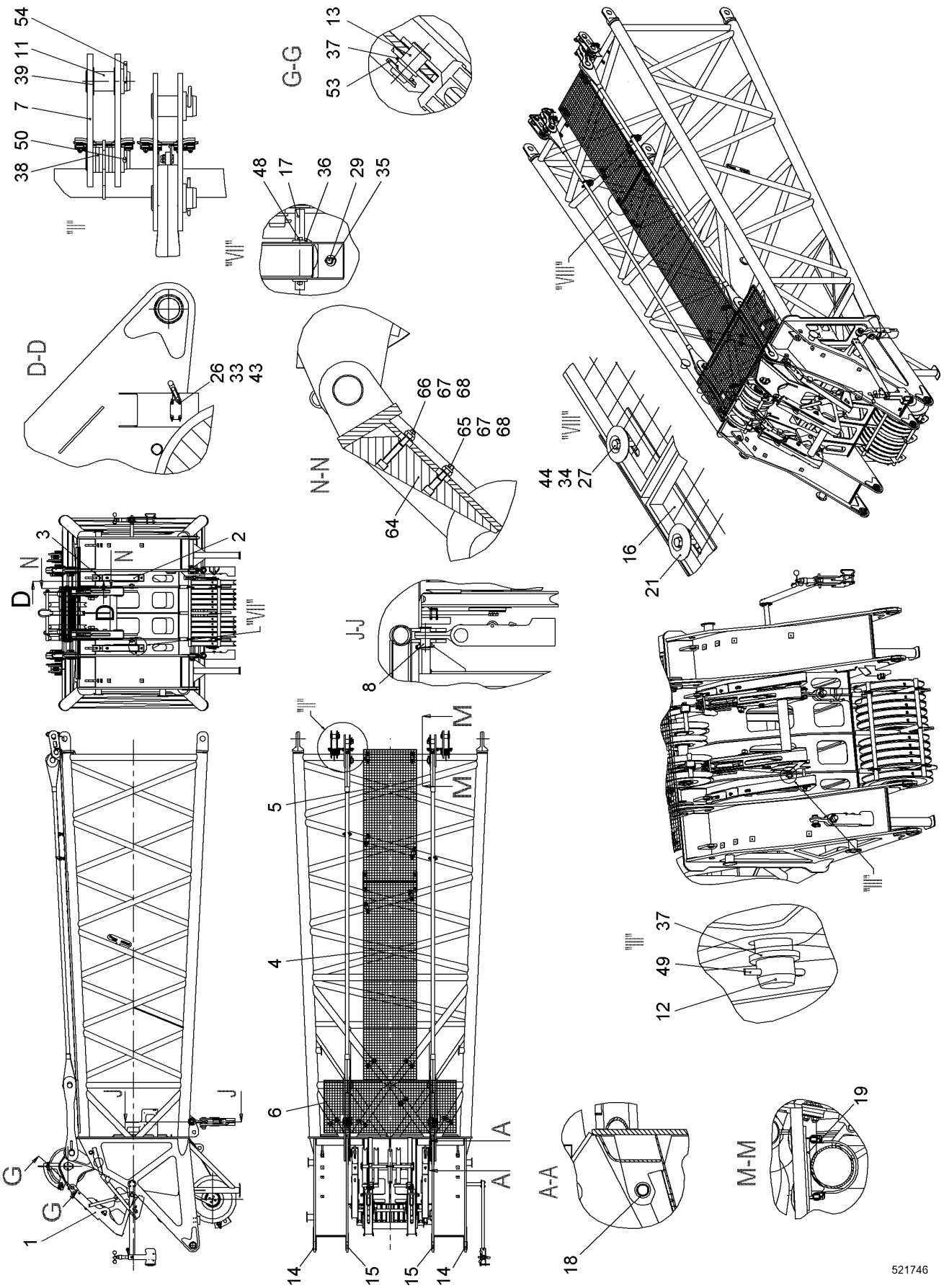

21.6.2017 521746 LIEBHERR	**138406_ETK_001** **MOUNTING PARTS** **MONTAGETEILE**	❑ 578 (1/2) **11 28 648 4**

Pos.	Item	Quantity	Description	Bezeichnung	Serie	K
1	10537682	1	GUIDING RAIL ST.CONST.	FUEHRUNGSSCHIENE SCHWK		
2	919956014	2	GUIDING RAIL ST.CONST.	FUEHRUNGSSCHIENE SCHWK		
3	919956114	2	GUIDING RAIL ST.CONST.	FUEHRUNGSSCHIENE SCHWK		
4	790512414	1	GRATING	GITTERROST		
5	790512314	1	GRATING	GITTERROST		
6	11263492	1	GRATING	GITTERROST		
7	958339514	4	COUPLING LINK	KOPPELLASCHE		
8	910353714	2	BOLT CONNECTION	BOLZENVERBINDUNG		
11	958280214	4	PIN	BOLZEN		
12	10550993	2	PIN 53X67 LHRD900-40;10019758	BOLZEN		
13	949946714	2	PIN 53X82 LHRD900-40;10019758	BOLZEN		
14	385037314	2	BUSHING 90/110X50 E470;EN 10294-1	BUCHSE		
15	954398803	2	BUSHING 100/80X40 E470;EN 10294-1	BUCHSE		
16	970854303	2	WP	WP		
17	957336914	1	TUBE	ROHR		
18	746911614	4	SPHERICAL BEARING	GELENKLAGER		
19	11231673	2	SHEET	PLATTE		
21	10098157	4	DISH	TELLER		
26	10539454	4	SOCKET HEAD SCREW ISO 4762 M5X45 A4-7	ZYLINDERSCHRAUBE		
27	406532914	4	HEX SCREW ISO 4017 M8X40 A4-70	SECHSKANTSCHRAUBE		
29	406527314	8	HEX SCREW ISO 4017 M10X16 A4-70	SECHSKANTSCHRAUBE		
33	420005214	8	WASHER ISO 7089 5 A4	SCHEIBE		
34	10540510	4	WASHER ISO 7093-1 8 A4	SCHEIBE		
35	10540511	8	WASHER ISO 7093-1 10 A4	SCHEIBE		
36	421102214	2	WASHER DIN EN 28738 26 ST;	SCHEIBE		
37	421103214	4	WASHER DIN EN 28738 45 ST;	SCHEIBE		
38	421103514	16	WASHER DIN EN 28738 60 ST;	SCHEIBE		
39	943919114	4	WASHER 61/85X2 PA 6 G	SCHEIBE		
43	10540484	4	HEX NUT ISO 10511 M5 A4	SECHSKANTMUTTER		
44	10540493	4	HEX NUT ISO 10511 M8 A4	SECHSKANTMUTTER		
48	433008814	2	SPLIT PIN ISO 1234 8X50 A4	SPLINT		
49	433009114	2	SPLIT PIN ISO 1234 8X63 A4	SPLINT		
50	433010314	2	SPLIT PIN ISO 1234 10X80 A4	SPLINT		
53	433101208	2	RETAINING SPRING 4MM	SICHERUNGSFEDER		
54	433105008	2	RETAINING SPRING DIN 2194 6MM FS	SICHERUNGSFEDER		
64	11913226	4	SHEET	PLATTE		
65	4001622	4	SOCKET HEAD SCREW ISO 4762 M10X55 10.9	ZYLINDERSCHRAUBE		
66	4900980	4	SOCKET HEAD SCREW ISO 4762 M10X75 10.9	ZYLINDERSCHRAUBE		
67	10540494	8	HEX NUT ISO 10511 M10 A4	SECHSKANTMUTTER		
68	420001114	8	WASHER ISO 7089 10 A4	SCHEIBE		

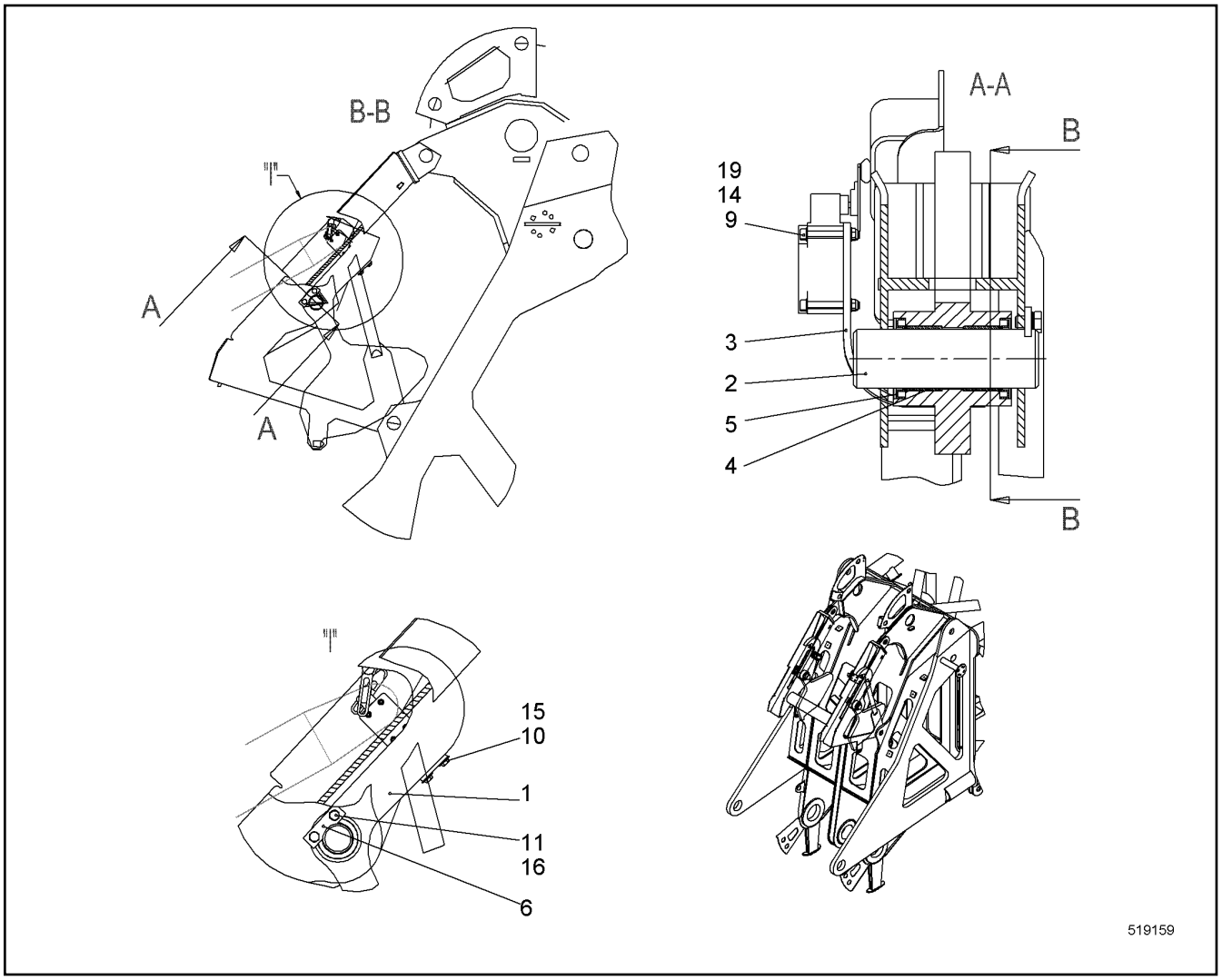

Pos.	Item	Quantity	Description	Bezeichnung	Serie	K
1	919617914	2	LOCKING DEVICE	ARRETIERUNG		
2	956847814	2	PIN 50X157 LHRD900-40;10019758	BOLZEN		
3	956033214	2	WP	WP		
4	708014114	4	BUSHING 50/55X30	BUCHSE		
5	710004514	4	SEALING RING	DICHTRING		
6	703003014	2	AXLE HOLDER	ACHSHALTER		
9	10539454	8	SOCKET HEAD SCREW ISO 4762 M5X45 A4-7	ZYLINDERSCHRAUBE		
10	406501614	4	HEX SCREW ISO 4017 M8X12 A4-70	SECHSKANTSCHRAUBE		
11	406527314	4	HEX SCREW ISO 4017 M10X16 A4-70	SECHSKANTSCHRAUBE		
14	420005214	16	WASHER ISO 7089 5 A4	SCHEIBE		
15	10540510	4	WASHER ISO 7093-1 8 A4	SCHEIBE		
16	10536579	4	WEDGE LOCK WASHER M10 254 SMO;EN 10	KEILSICHERUNGSSCHEIBE		
19	10540484	8	HEX NUT ISO 10511 M5 A4	SECHSKANTMUTTER		

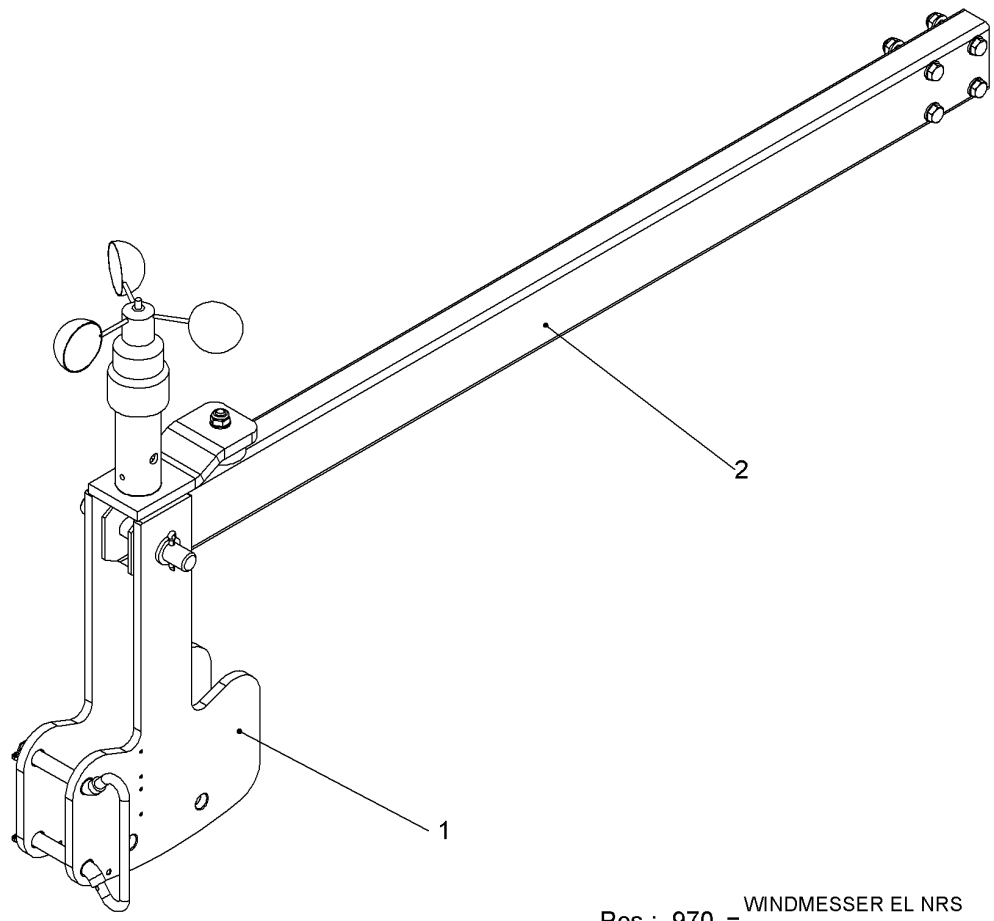

Pos.	Item	Quantity	Description	Bezeichnung	Serie	K
1	10598633	1	PENDULUM CPL ⇨ ❑ 582	PENDEL KPL		
2	11283576	1	MOUNTING PARTS ⇨ ❑ 583	MONTAGETEILE		
970	970720403	1	ANEMOMETER EL RFK ⇨ ❑ 584	WINDMESSER EL NRS		

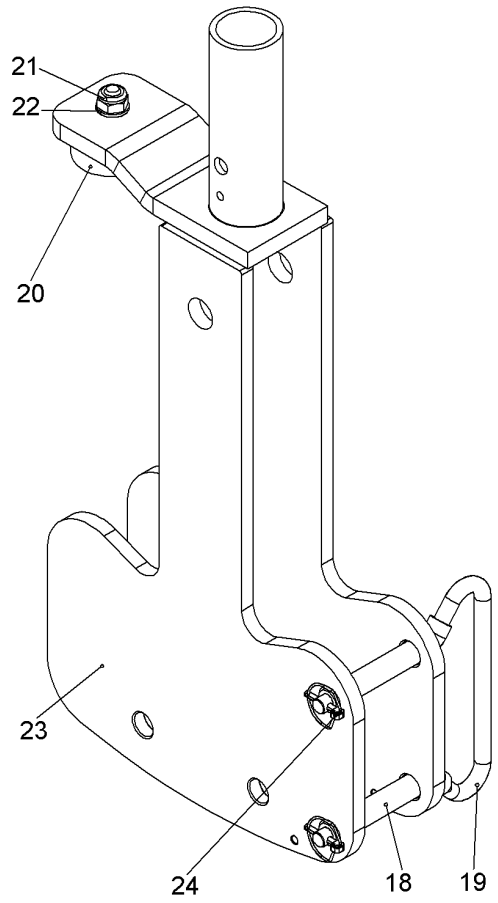

Pos.	Item	Quantity	Description	Bezeichnung	Serie	K
18	603018114	0.2	HEATSHRINK SLEEVING	SCHRUMPFSCHLAUCH		
19	10592334	1	BRACKET	BUEGEL		
20	726613014	1	RUBBER MOUNT	LAGER GUMMI		
21	10540494	1	HEX NUT ISO 10511 M10 A4	SECHSKANTMUTTER		
22	420001114	1	WASHER ISO 7089 10 A4	SCHEIBE		
23	990627014	1	PENDULUM	PENDEL		
24	485565814	2	SAFETY PLUG W HINGE-LID 4X27	SICHERHEITSKLAPPSTECKER		
25	773400308	0.9	STEEL WIRE ROPE	STAHLDRAHTSEIL		
26	773920008	6	FERRULE	PRESSKLEMME		

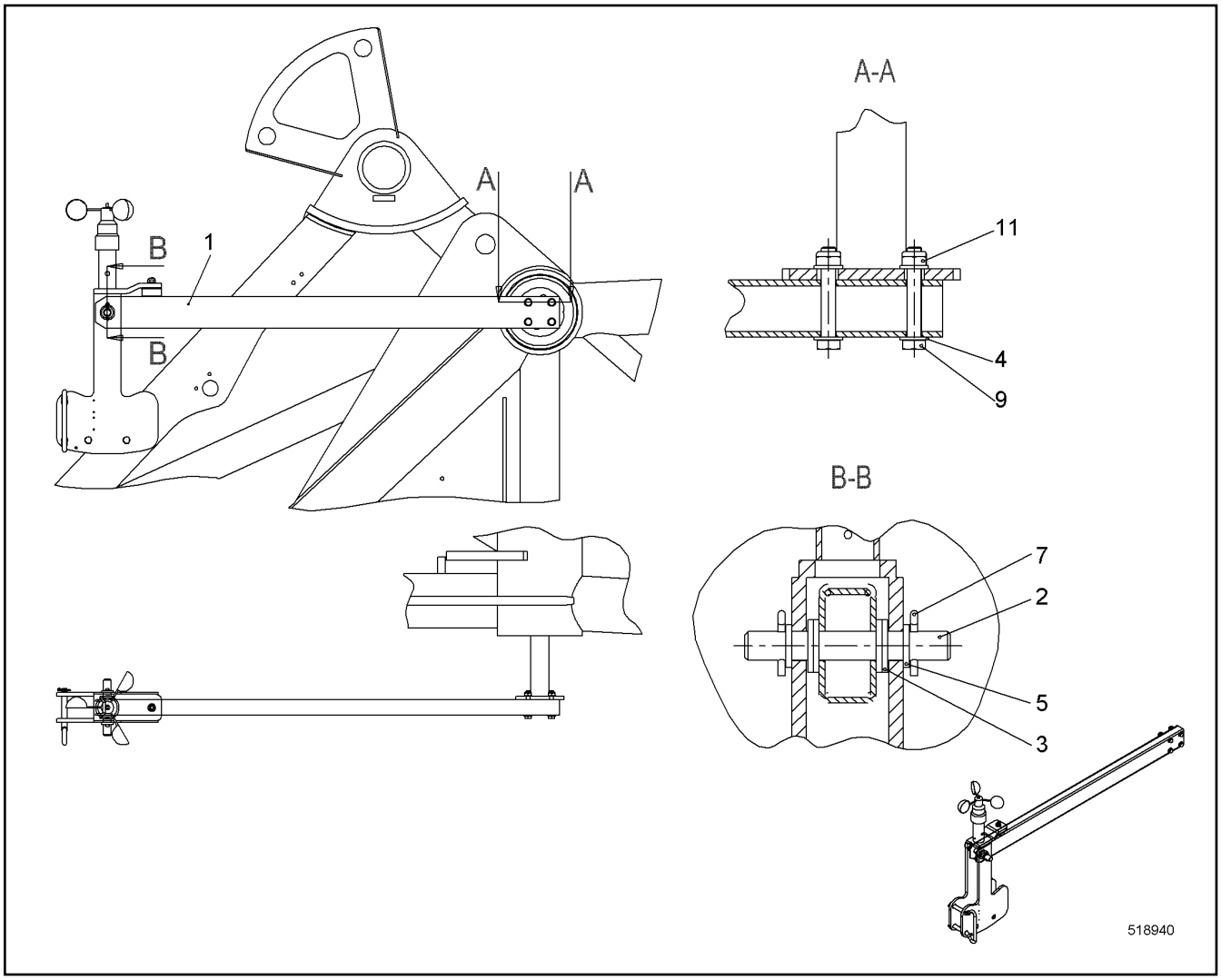

Pos.	Item	Quantity	Description	Bezeichnung	Serie	K
1	11278507	1	SQUARE TUBE	VIERKANTROHR		
2	958214314	1	PIN EN 10278 20X144 S355J2;EN 10025-2	BOLZEN		
3	948967314	4	WASHER 21/37X4 PA 6 G	SCHEIBE		
4	420001114	8	WASHER ISO 7089 10 A4	SCHEIBE		
5	421101714	2	WASHER DIN EN 28738 20 ST;	SCHEIBE		
7	433006314	2	SPLIT PIN ISO 1234 5X32	SPLINT		
9	10538823	4	HEX SCREW ISO 4017 M10X65 A4-70	SECHSKANTSCHRAUBE		
11	10540494	4	HEX NUT ISO 10511 M10 A4	SECHSKANTMUTTER		

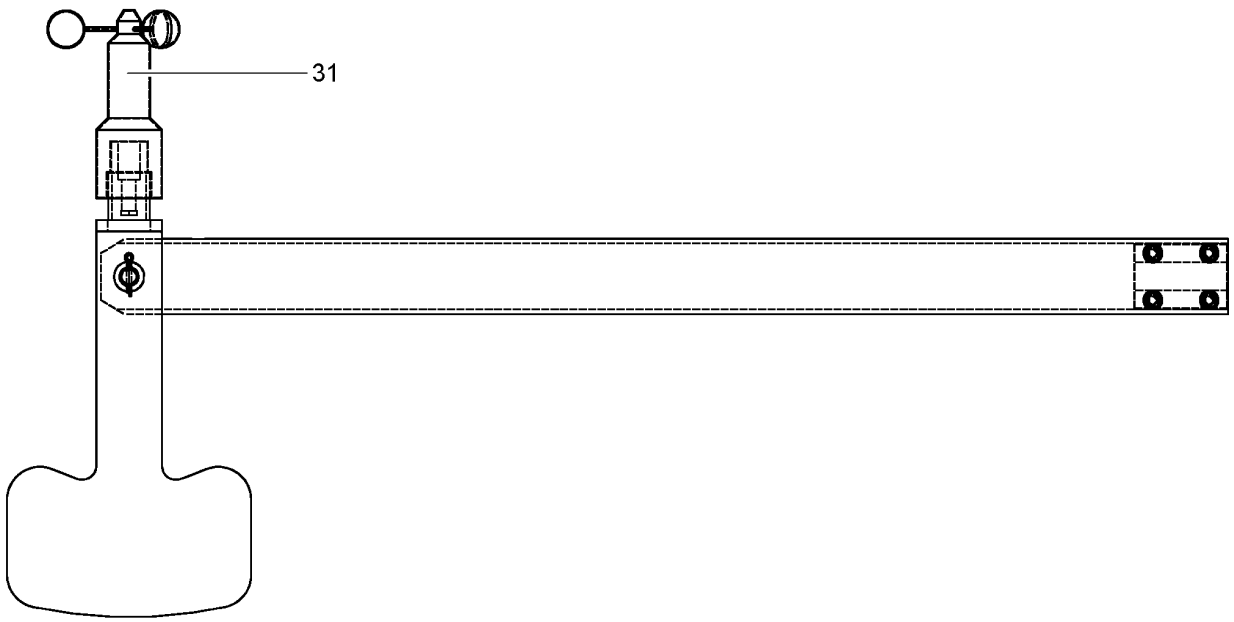

Pos.	Item	Quantity	Description	Bezeichnung	Serie	K
31	692815514	1	WIND TRANSMITTER ⇨ ❑ 585	WINDGEBER		

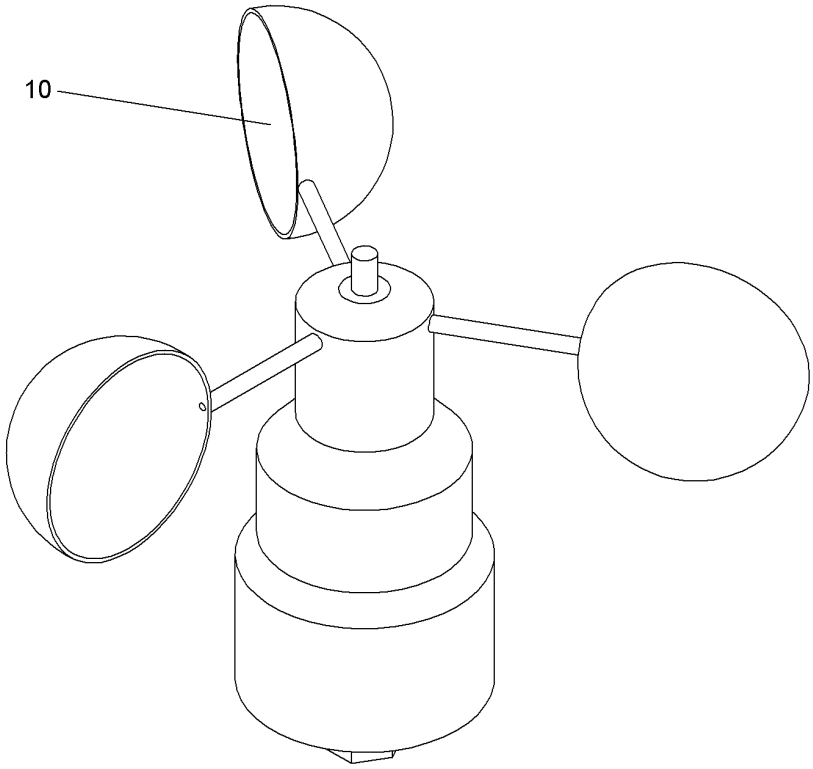

Pos.	Item	Quantity	Description	Bezeichnung	Serie	K
10	11238878	1	VORTEX WHEEL	LOEFFELRAD		

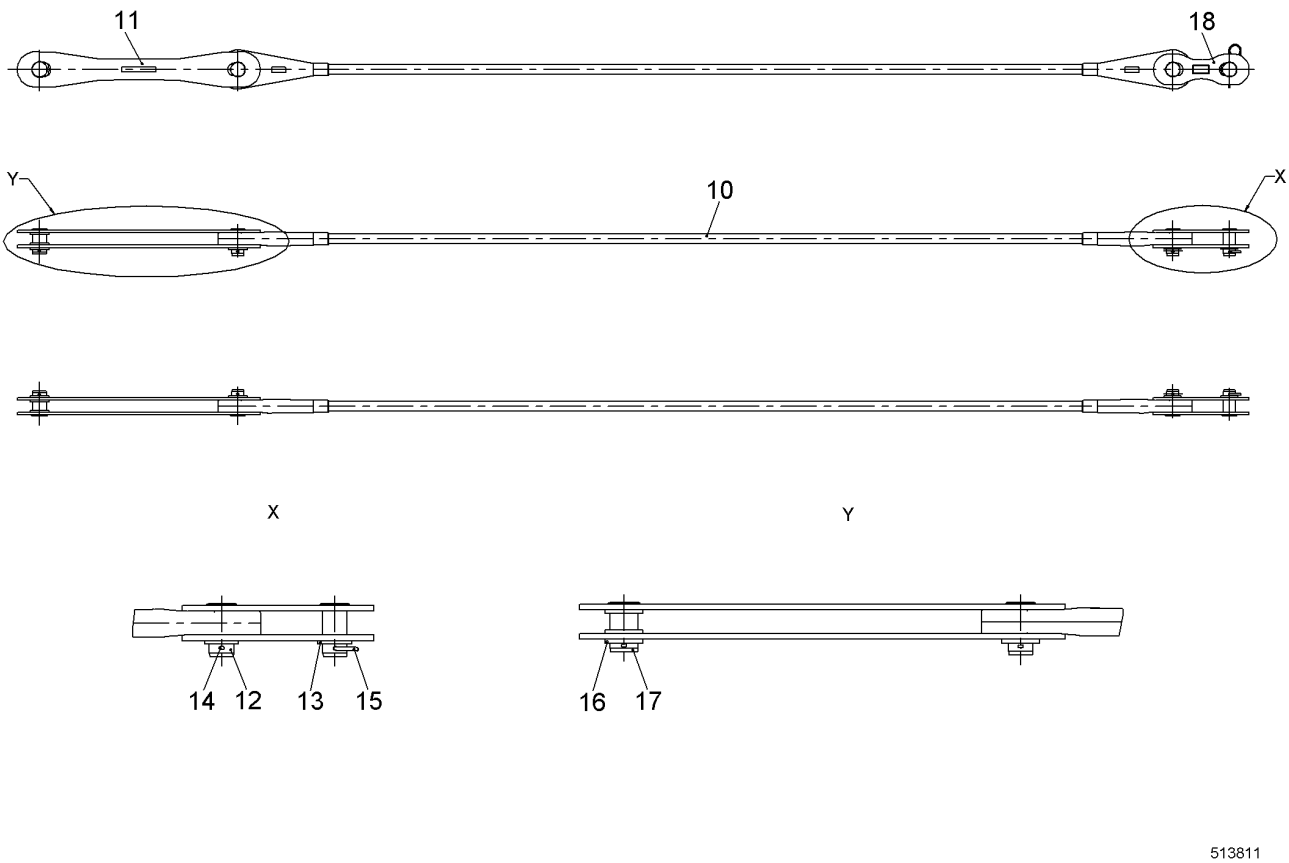

Pos.	Item	Quantity	Description	Bezeichnung	Serie	K
10	10540569	2	ANCHORING ROD	HALTESTANGE		
11	10348886	4	COUPLING LINK	KOPPELLASCHE		
12	950250014	6	PIN	BOLZEN		
13	421103614	6	WASHER DIN EN 28738 65 ST;	SCHEIBE		
14	433009514	6	SPLIT PIN ISO 1234 8X100 A4	SPLINT		
15	433105008	2	RETAINING SPRING DIN 2194 6MM FS	SICHERUNGSFEDER		
16	421103714	6	WASHER DIN EN 28738 75 ST;	SCHEIBE		
17	959921514	2	PIN 83X131 LHRD900-40;10019758	BOLZEN		
18	10226402	4	COUPLING LINK	KOPPELLASCHE		

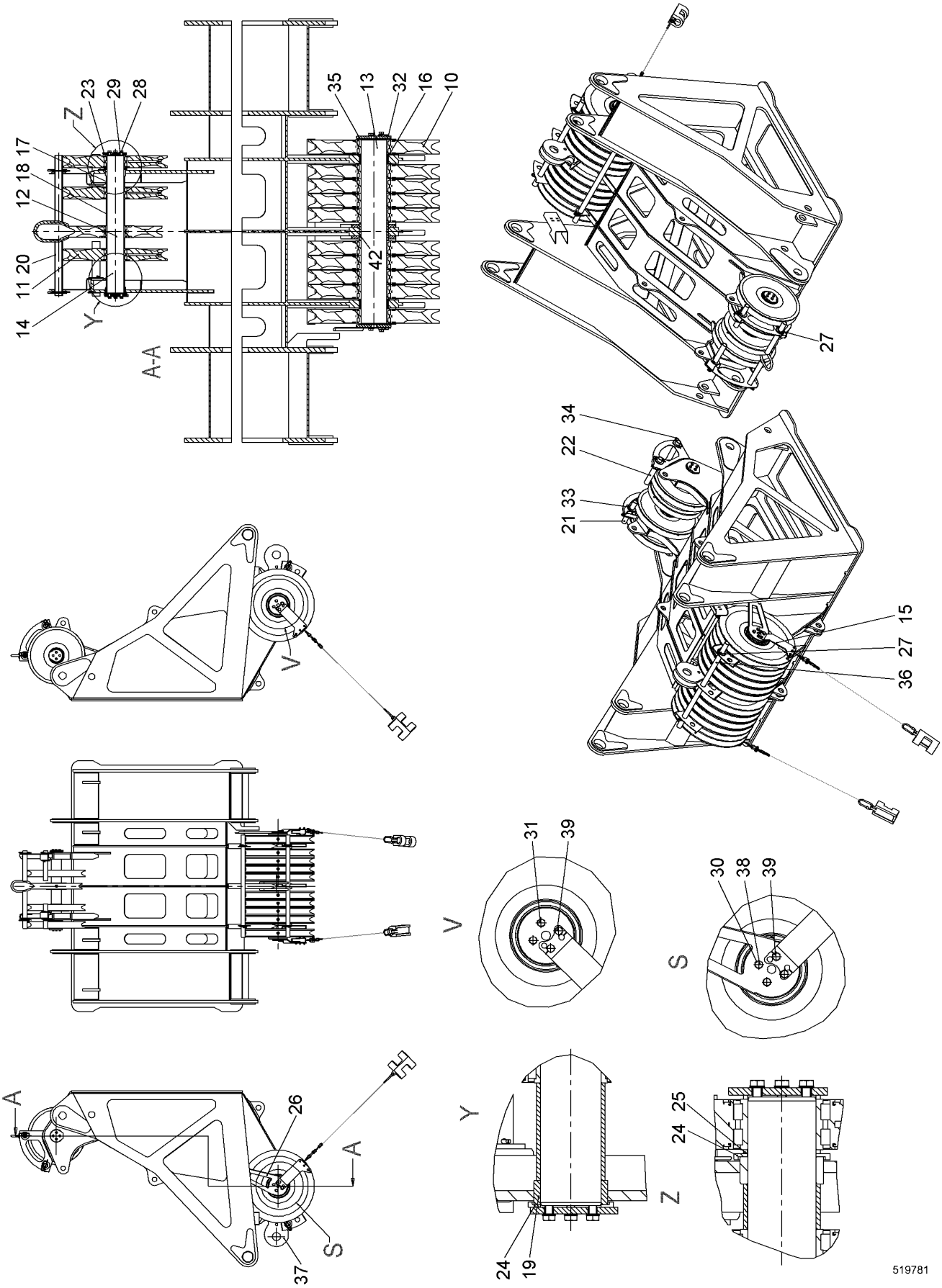

21.6.2017 519781	**138406_ETK_001**	587 (1/2)
LIEBHERR	**ROLLER SET** **ROLLENSATZ**	**99 23 398 14**

Pos.	Item	Quantity	Description	Bezeichnung	Serie	K
10	790202014	10	ROPE PULLEY CPL	SEILROLLE KPL		
11	919279914	3	ROPE PULLEY CPL	SEILROLLE KPL		
12	915523714	1	ROPE PULLEY CPL	SEILROLLE KPL		
13	956802414	1	PIN	BOLZEN		
14	956802514	1	PIN	BOLZEN		
15	993080014	2	HOIST LIMIT SWITCH INSTAL. ⇨ ❑ 589	SPITZENENDSCHALTER EINBAU		
16	956803414	2	BUSHING 140/160X55 LHR355-20;10019728	BUCHSE		
17	956805314	2	BUSHING 91/101.6X60 LHR355-20;10019728	BUCHSE		
18	956805414	2	BUSHING 91/101.6X145 LHR355-20;10019728	BUCHSE		
19	949988214	2	BUSHING 90/110X36 S355J2H;EN 10210-1	BUCHSE		
20	993522914	1	ROPE GUARD ST.CONST.	SEILSCHUTZ SCHWK		
21	956809514	1	ROPE GUARD TUBE	SEILSCHUTZROHR		
22	956213814	1	TUBE	ROHR		
23	949724114	2	COVER	DECKEL		
24	956803514	2	DISTANCE RING 91/127X8 S355J2H;EN 10210-	DISTANZRING		
25	956803714	2	BUSHING 91/101.6X5 LHR355-20;10019728	BUCHSE		
26	956810314	1	WP	WP		
27	420003714	10	WASHER ISO 7089 42	SCHEIBE		
28	406517914	8	HEX SCREW ISO 4017 M12X25 A4-70	SECHSKANTSCHRAUBE		
29	10536581	8	WEDGE LOCK WASHER M12 254 SMO;EN 10	KEILSICHERUNGSSCHEIBE		
30	7024427	8	WEDGE LOCK WASHER M16	KEILSICHERUNGSSCHEIBE		
31	10539317	2	HEX SCREW ISO 4017 M16X35 10.9	SECHSKANTSCHRAUBE		
32	956803214	2	BUSHING EN 10210-2 140.5/159X5 S355J2H;E	BUCHSE		
33	433008108	2	SPLIT PIN ISO 1234 6.3X63	SPLINT		
34	433101208	8	RETAINING SPRING 4MM	SICHERUNGSFEDER		
36	956809314	2	ROPE GUARD TUBE	SEILSCHUTZROHR		
37	950143914	2	PLATE	BLECH		
38	10539318	2	HEX SCREW ISO 4017 M16X40 10.9	SECHSKANTSCHRAUBE		
39	10543902	4	HEX SCREW ISO 4017 M16X45 10.9	SECHSKANTSCHRAUBE		
42	11233062	1	BUSHING 140/160X100 GZ-CUZN25AL5MN4FE	BUCHSE		

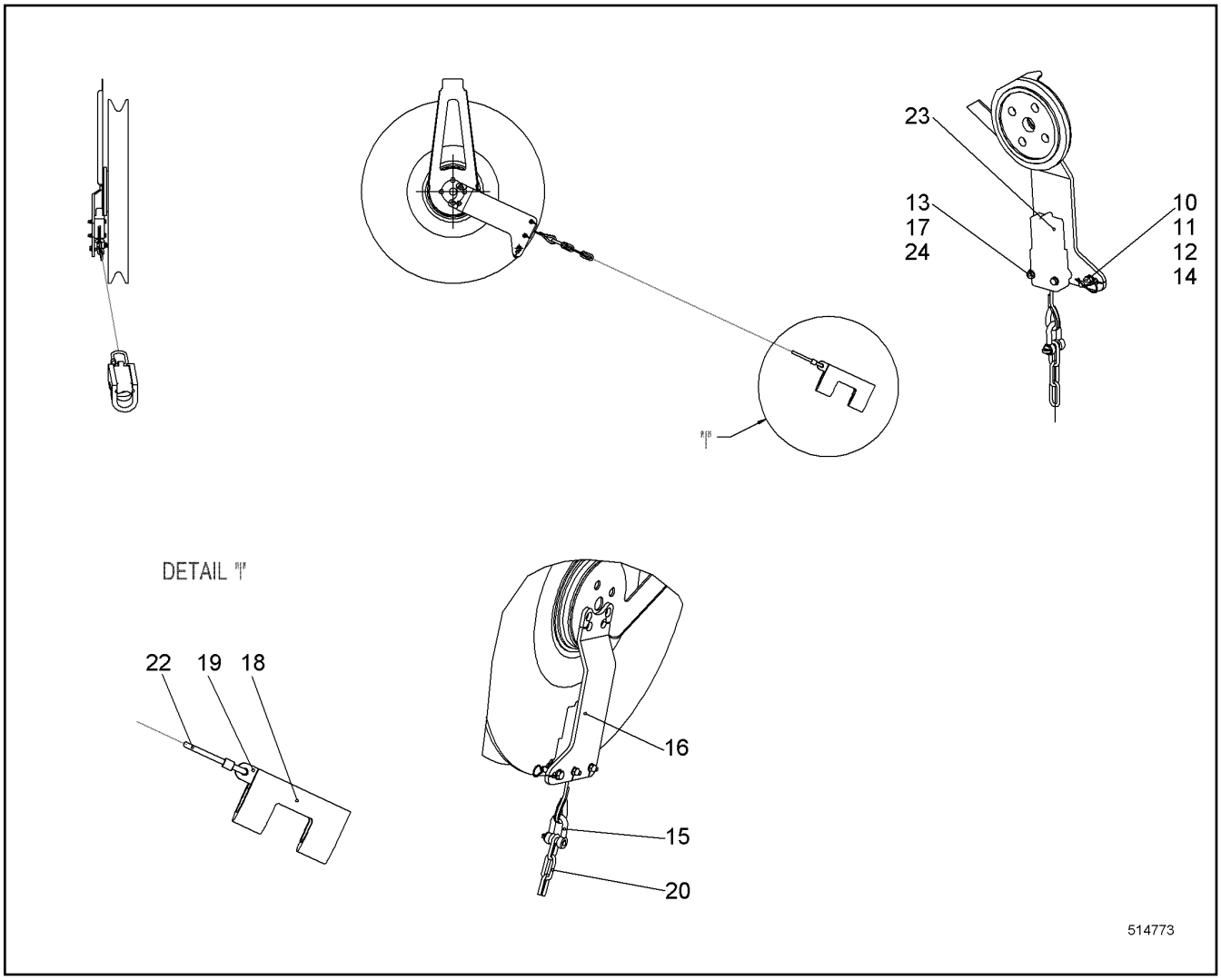

Pos.	Item	Quantity	Description	Bezeichnung	Serie	K
10	420001114	2	WASHER ISO 7089 10 A4	SCHEIBE		
11	10539971	1	HEX SCREW ISO 4017 M10X40 A4-70	SECHSKANTSCHRAUBE		
12	10540494	1	HEX NUT ISO 10511 M10 A4	SECHSKANTMUTTER		
13	420001014	4	WASHER ISO 7089 8 A4	SCHEIBE		
14	433206014	1	SPRING PLUG DIN 11024 2.5	FEDERSTECKER		
15	773939214	1	SHACKLE	SCHAEKEL		
16	950102914	1	PLATE	BLECH		
17	10331507	2	HEX SCREW ISO 4017 M8X65 A4-70	SECHSKANTSCHRAUBE		
18	388283108	1	WEIGHT	GEWICHT		
19	388283208	1	WEIGHT	GEWICHT		
20	740000208	3	CHAIN	KETTE		
22	10473040	1	SCREW CARABINER	SCHRAUBKARABINER		
24	10540493	2	HEX NUT ISO 10511 M8 A4	SECHSKANTMUTTER		

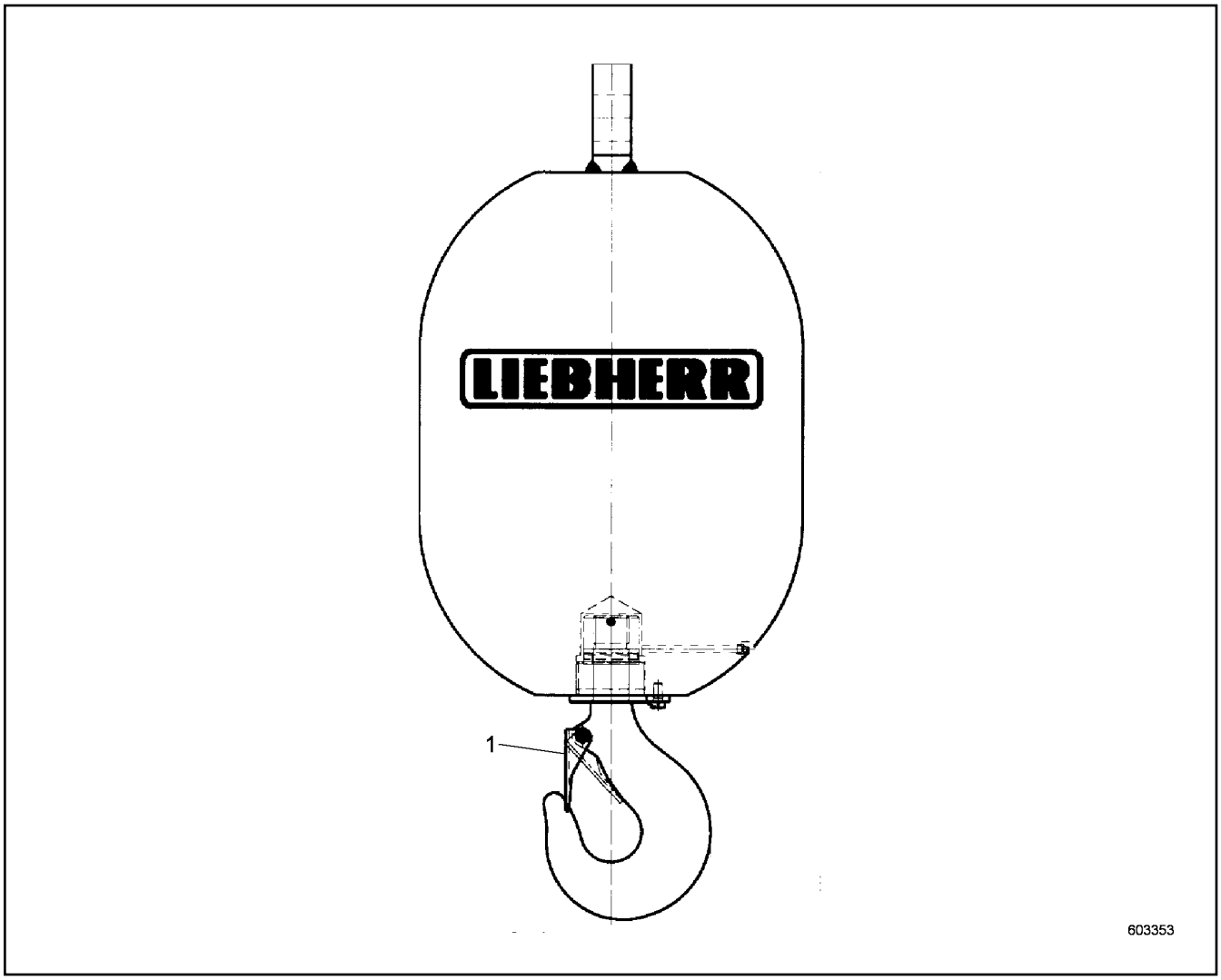

Pos.	Item	Quantity	Description	Bezeichnung	Serie	K
1	10350191	1	SAFETY TRAP	SICHERUNGSFALLE		
2	11303217	1	SINGLE HOOK	EINFACHHAKEN		
19	10522847	1	FLANGED BOLT MO90X4108X53	BUNDSCHRAUBE		
24	10522848	1	ROLLER BEARING	WAELZLAGER		

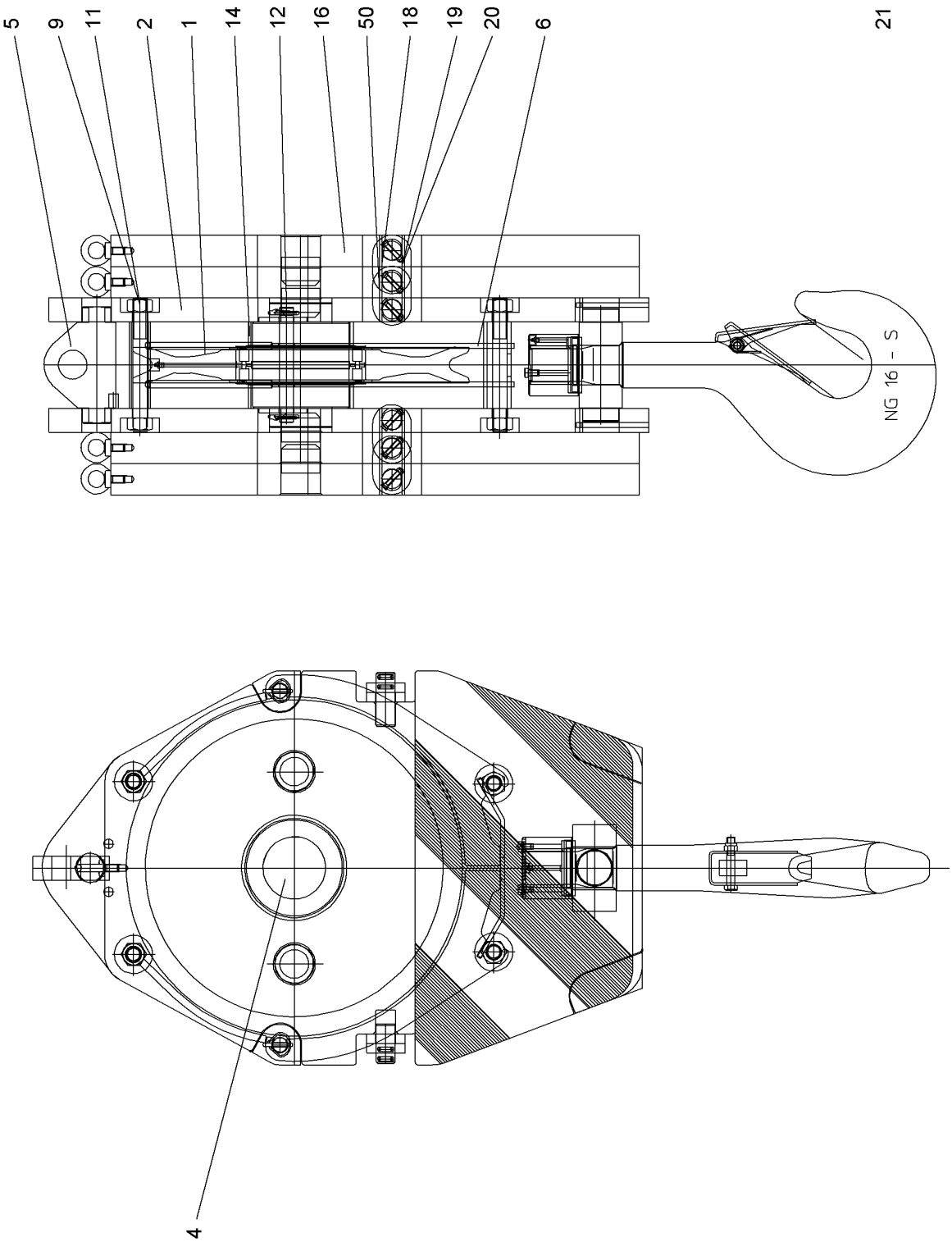
5
9
11
2
1
14
12
16
50
18
19
20
6
21
NG 16 - S
4
607601

Pos.	Item	Quantity	Description	Bezeichnung	Serie	K
1	10504352	1	ROPE PULLEY ⇨ ❑ 593	SEILROLLE		
2	11274624	2	SIDE PLATE	SEITENBLECH		
4	11493575	1	PIN	BOLZEN		
5	11481158	1	ROPE FIXING POINT	SEILFESTPUNKT		
6	11481159	1	ROPE GUARD	SEILSCHUTZ		
9	11237759	4	HEX SCREW DIN 931 M30X250 8.8	SECHSKANTSCHRAUBE		
11	10584965	4	HEX NUT DIN 934 M30 8	SECHSKANTMUTTER		
12	10814912	2	ROPE PROTECTION ROD	SEILSCHUTZSTANGE		
14	11493578	2	DISTANCE TUBE	DISTANZROHR		
16	11274636	4	PLATE	BLECH		
18	10591682	4	BUTT STRAP	LASCHE		
19	11236106	12	SCREW DIN 931 M8X50 8.8	SCHRAUBE		
20	11236108	12	HEX NUT DIN 985 M8 8	SECHSKANTMUTTER		
21	11274638	1	HANGER ⇨ ❑ 594	AUFHAENGUNG		
50	10591681	4	BUTT STRAP	LASCHE		

OHNE BILD
WITHOUT ILLUSTRATION
SANS PLANCHE
SIN FIG.
SEM ILUSTRAÇÃO
БЕЗ ИЗОБРАЖЕНИЯ

600000

Pos.	Item	Quantity	Description	Bezeichnung	Serie	K
1	11271491	1	ROPE SHEAVE	SEILSCHEIBE		
2	10573892	1	CYL ROLLER BEARING	ZYL ROLLENLAGER		
3	10573893	2	LOCKING RING	SICHERUNGSRING		
4	11312502	1	GREASE NIPPLE	SCHMIERNIPPEL		

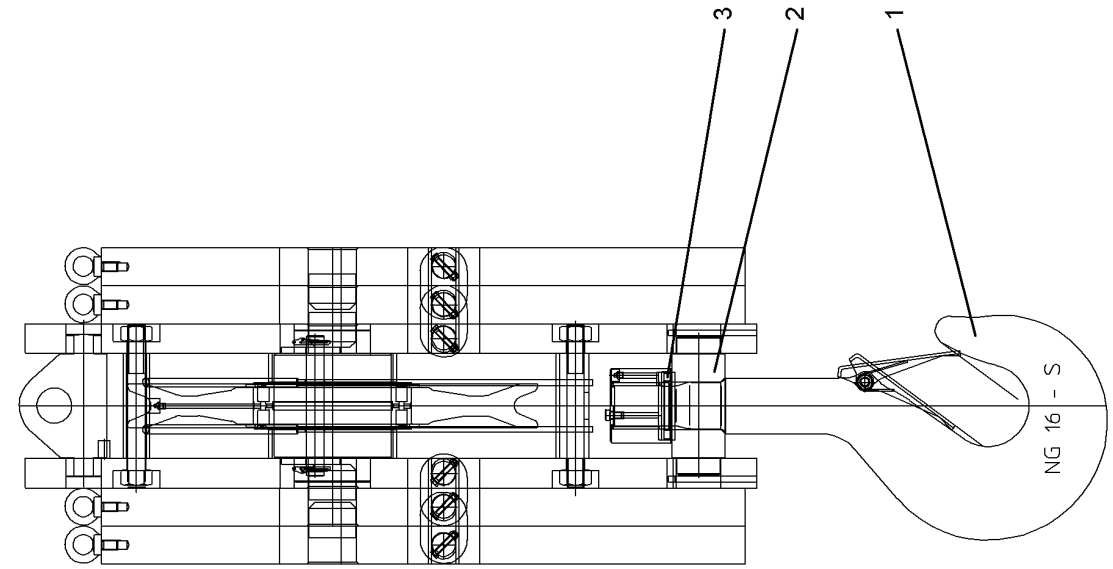

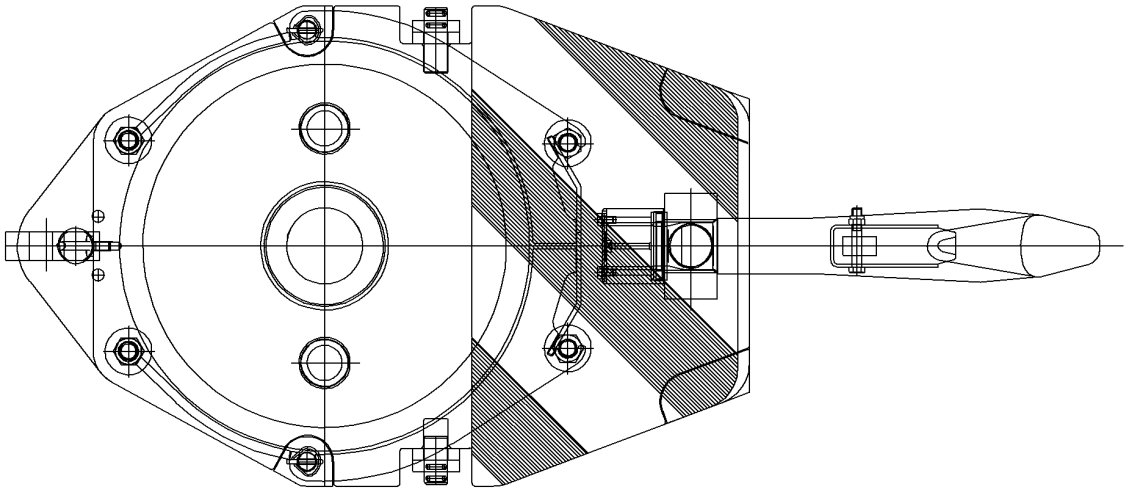

607602

Pos.	Item	Quantity	Description	Bezeichnung	Serie	K
1	11481162	1	SINGLE HOOK ⇨ ❑ 596	EINFACHHAKEN		
2	11274675	1	ROTATABLE BEAM	SCHWENKTRAVERSE		
3	10574043	1	ROLLER BEARING	WAELZLAGER		

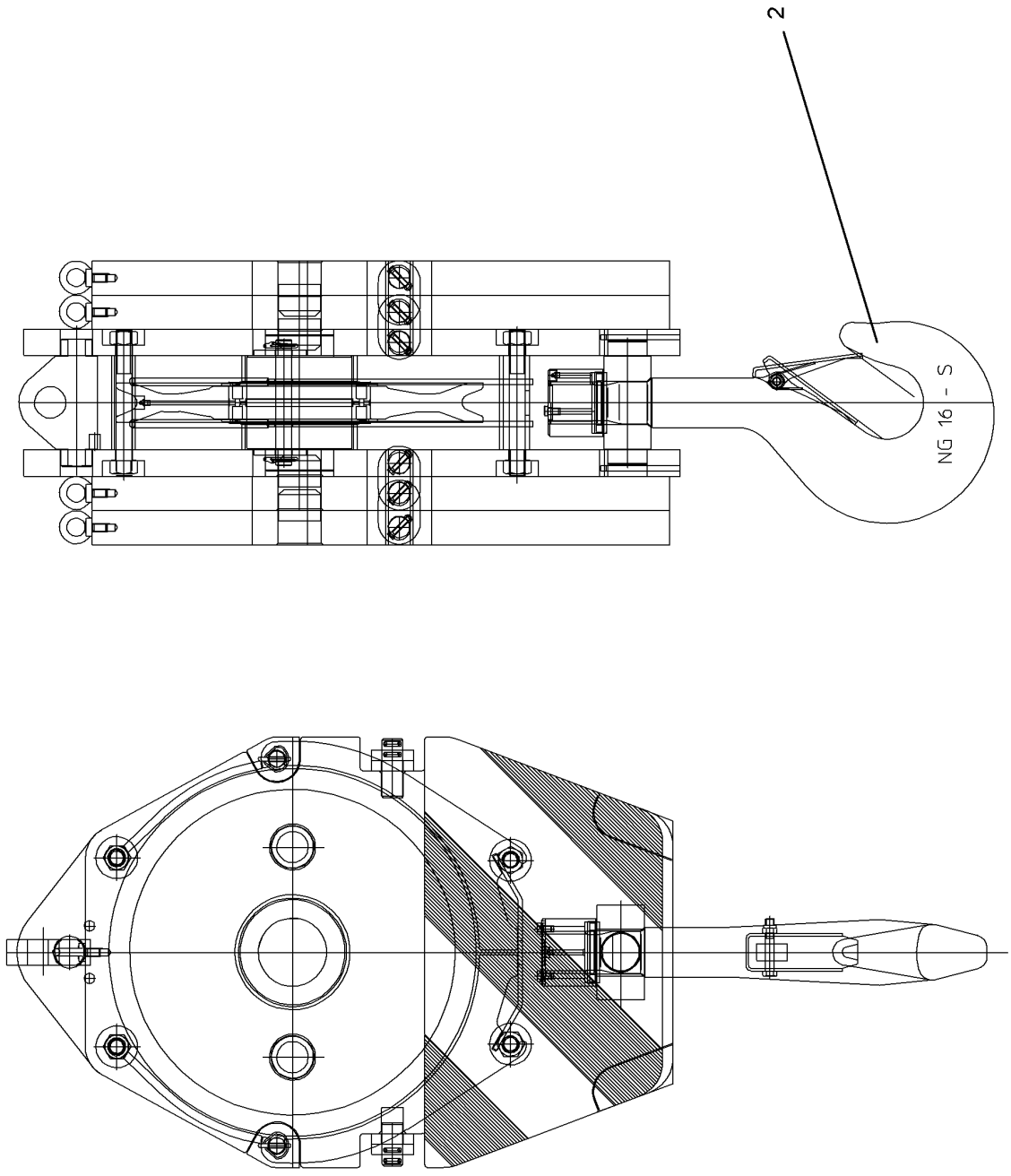

607603

Pos.	Item	Quantity	Description	Bezeichnung	Serie	K
2	10350196	1	SAFETY TRAP	SICHERUNGSFALLE		

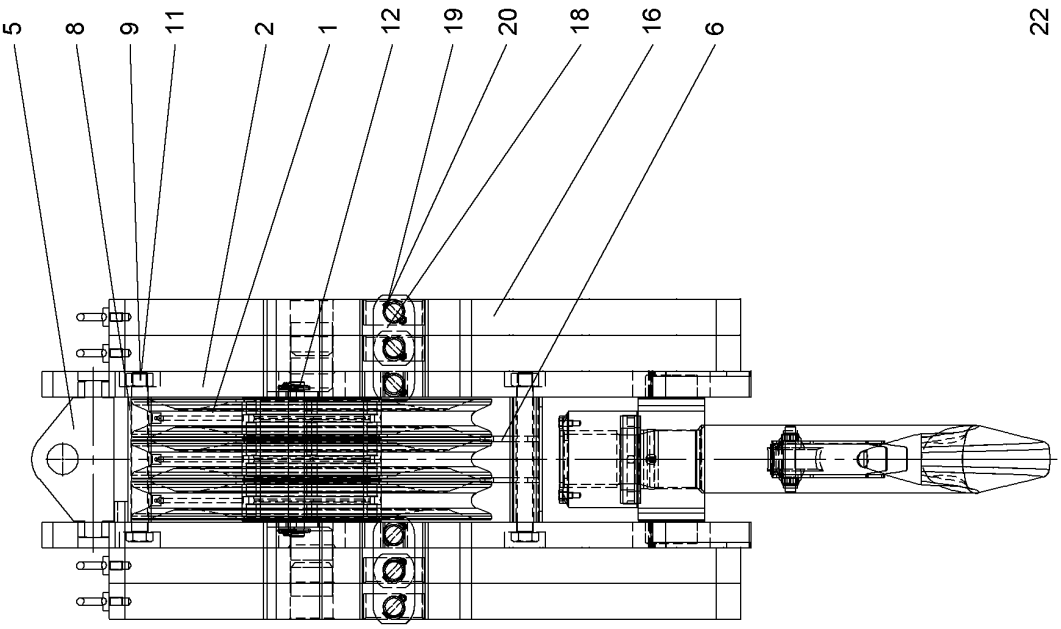

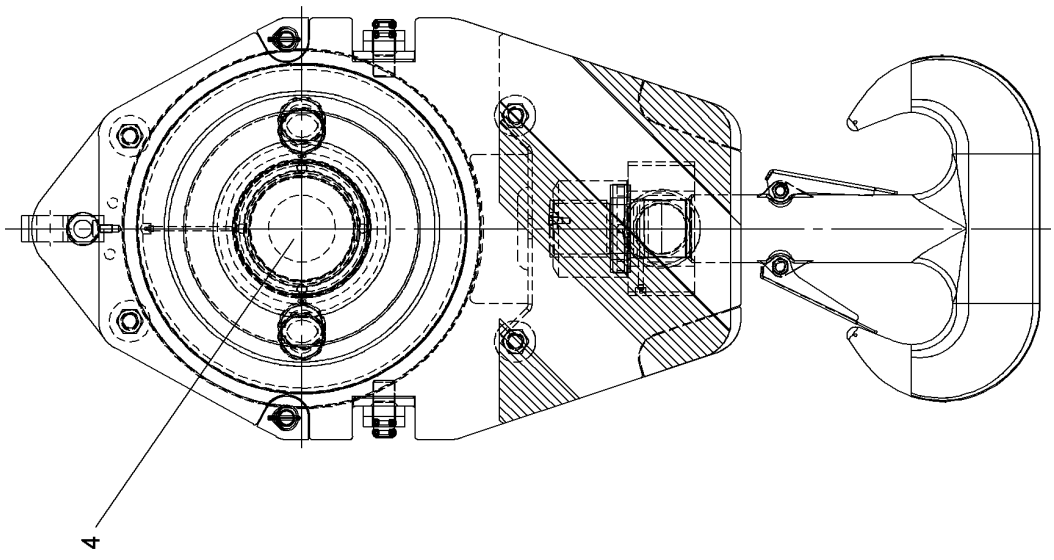

607443

Pos.	Item	Quantity	Description	Bezeichnung	Serie	K
1	10504352	3	ROPE PULLEY ⇨ ❑ 593	SEILROLLE		
2	11271456	2	SIDE PLATE	SEITENBLECH		
4	11271461	1	PIN	BOLZEN		
5	11210606	1	ROPE FIXING POINT	SEILFESTPUNKT		
6	11271479	1	ROPE GUARD	SEILSCHUTZ		
8	10517047	2	DISTANCE TUBE	DISTANZROHR		
9	11490268	4	HEX SCREW DIN 931 M30X310 8.8	SECHSKANTSCHRAUBE		
11	10584965	4	HEX NUT DIN 934 M30 8	SECHSKANTMUTTER		
12	11271482	2	ROPE PROTECTION ROD	SEILSCHUTZSTANGE		
16	11271486	4	PLATE	BLECH		
18	11271487	8	BUTT STRAP	LASCHE		
19	11236106	12	SCREW DIN 931 M8X50 8.8	SCHRAUBE		
20	11236108	12	HEX NUT DIN 985 M8 8	SECHSKANTMUTTER		
22	11271488	1	HANGER ⇨ ❑ 600	AUFHAENGUNG		

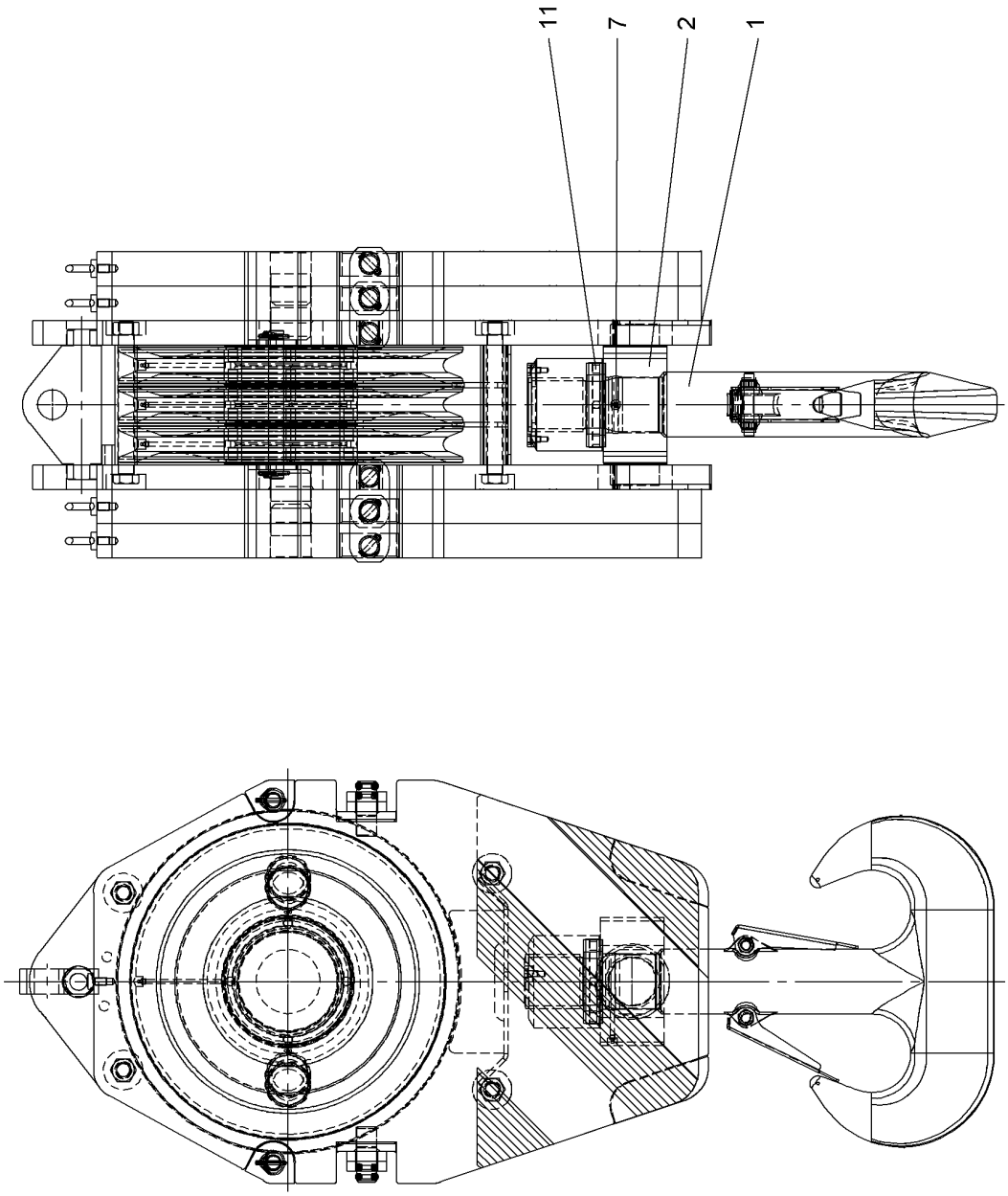
11
7
2
1
607444

Pos.	Item	Quantity	Description	Bezeichnung	Serie	K
1	11271489	1	TWIN HOOK ⇨ ❑ 602	DOPPELHAKEN		
2	11271490	1	ROTATABLE BEAM	SCHWENKTRAVERSE		
7	11312502	1	GREASE NIPPLE	SCHMIERNIPPEL		
11	10573891	1	ROLLER BEARING	WAELZLAGER		

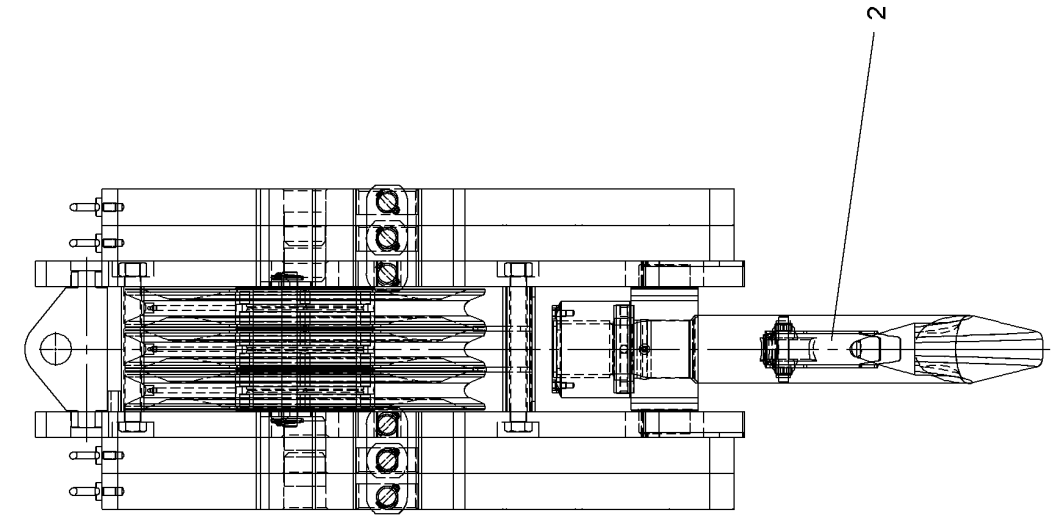

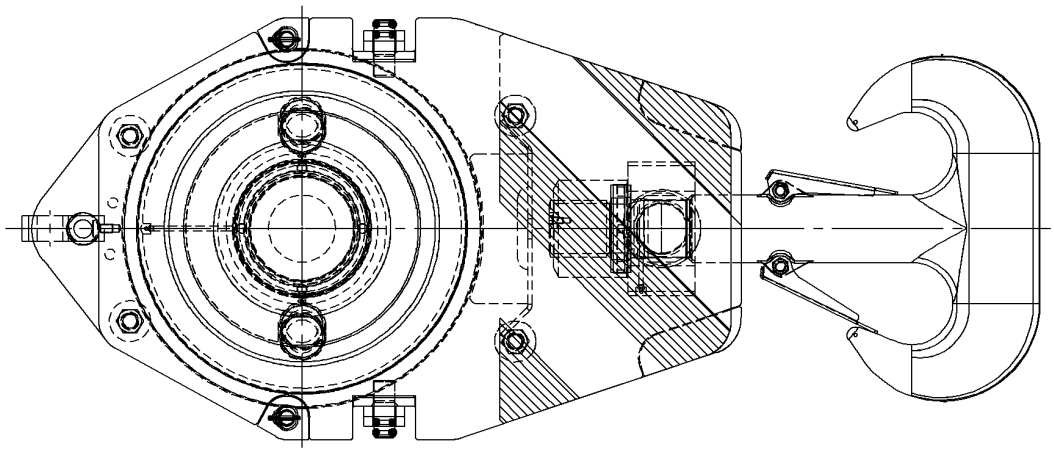

607445

Pos.	Item	Quantity	Description	Bezeichnung	Serie	K
2	10599212	2	SAFETY TRAP	SICHERUNGSFALLE		

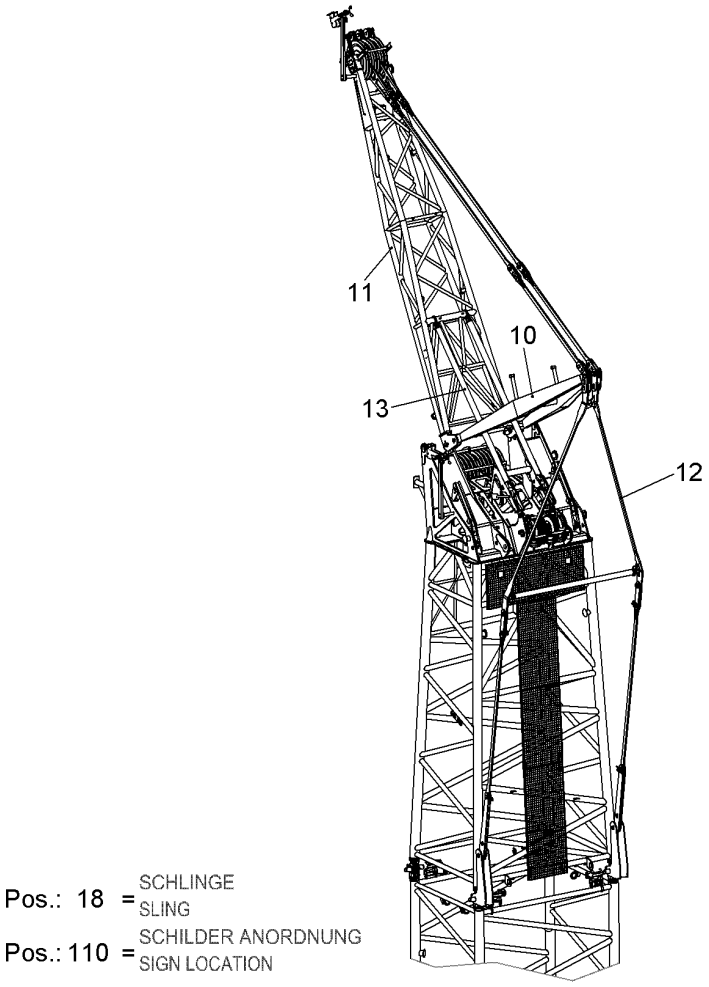

Pos.	Item	Quantity	Description	Bezeichnung	Serie	K
10	990920514	1	A-FRAME CPL ⇨ ❑ 605	A-BOCK KPL		
11	993439414	1	TIP BOOM CPL ⇨ ❑ 607	SPITZEN AL KPL		
12	992341514	1	STAY ROPE ROD ⇨ ❑ 619	RUECKHALTESTANGE		
13	970875703	1	TILTING-BACK SUPPORTS ⇨ ❑ 621	RUECKFALLSTUETZEN		
18	805091714	1	ROUND SLING	RUNDSCHLINGE		
110	11266945	1	SIGN LOCATIONS ⇨ ❑ 521	SCHILDER ANORD		

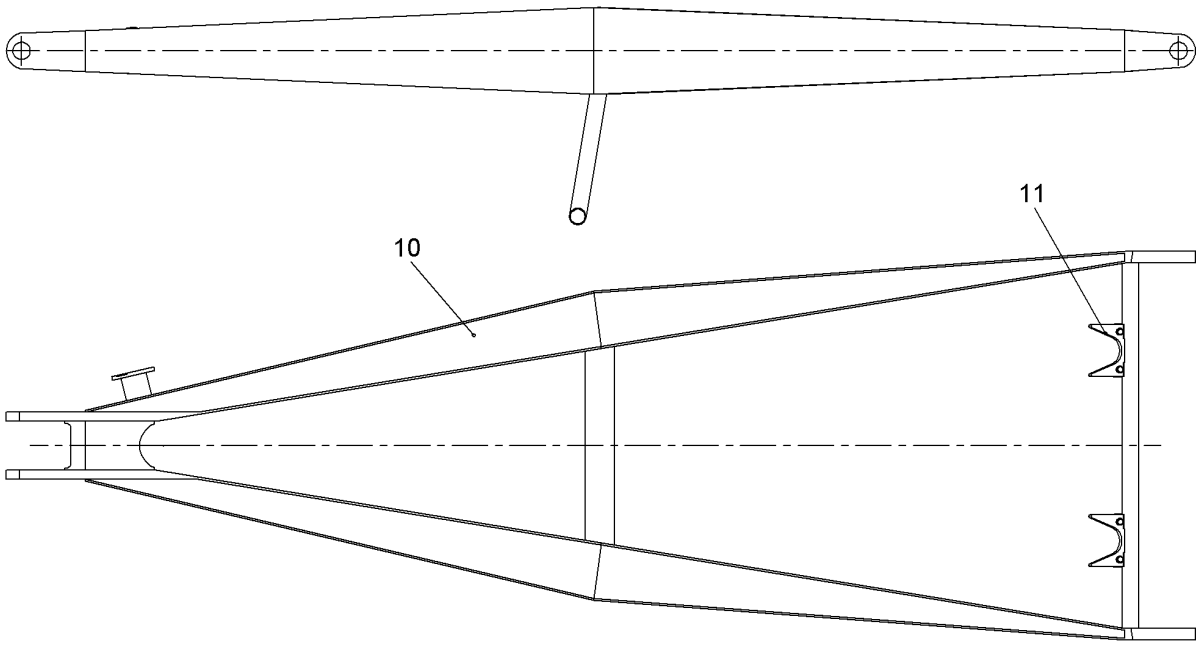

Pos.	Item	Quantity	Description	Bezeichnung	Serie	K
10	990929614	1	A-FRAME ST.CONST.	A-BOCK SCHWK		
11	11301266	1	MOUNTING PARTS ⇨ ❑ 606	MONTAGETEILE		

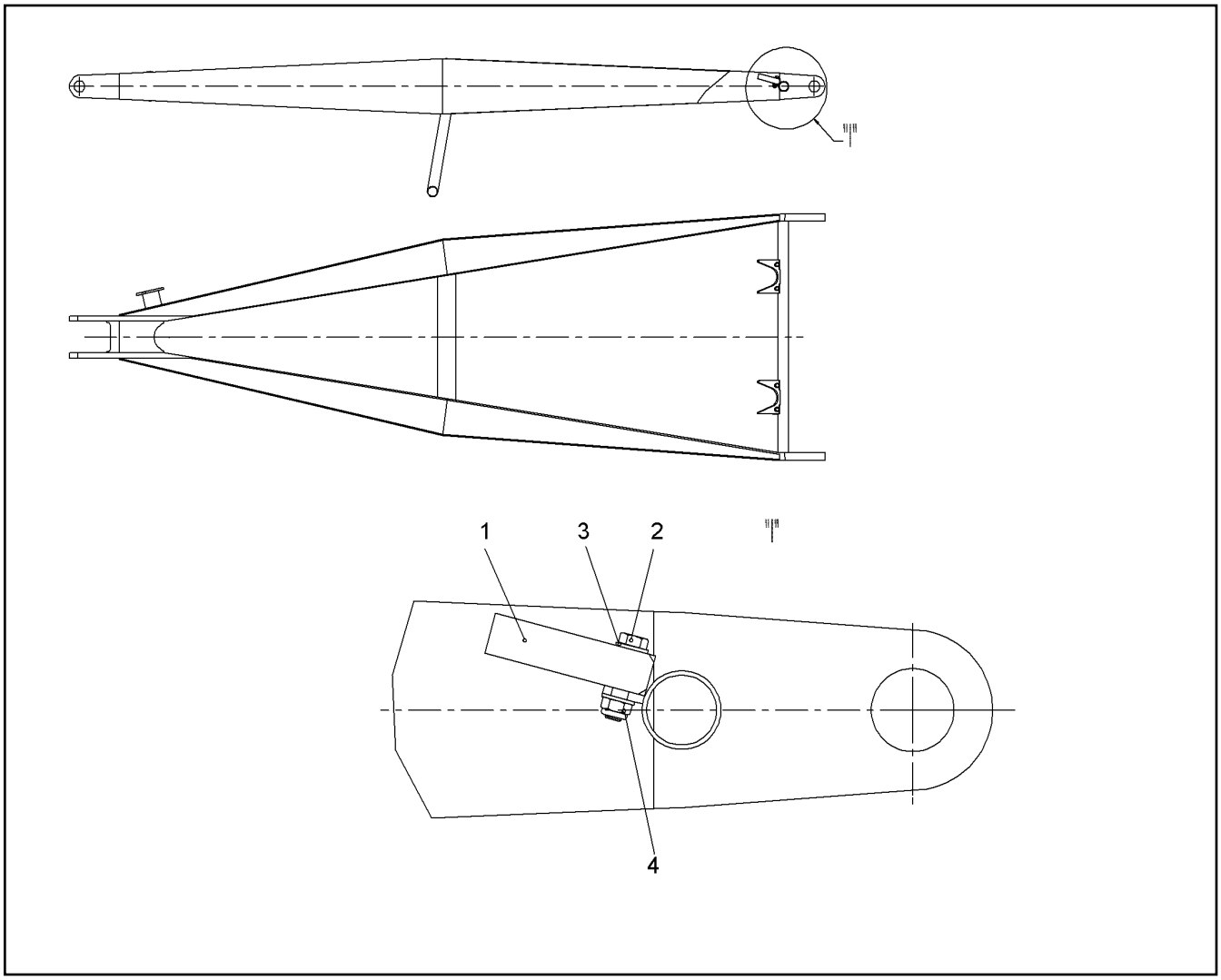

Pos.	Item	Quantity	Description	Bezeichnung	Serie	K
1	289007714	2	SUPPORT	AUFLAGE		
2	406527614	4	HEX SCREW ISO 4017 M12X55 A4-70	SECHSKANTSCHRAUBE		
3	4901782	8	WASHER ISO 7089 12 A4	SCHEIBE		
4	10540495	4	HEX NUT ISO 10511 M12 A4	SECHSKANTMUTTER		

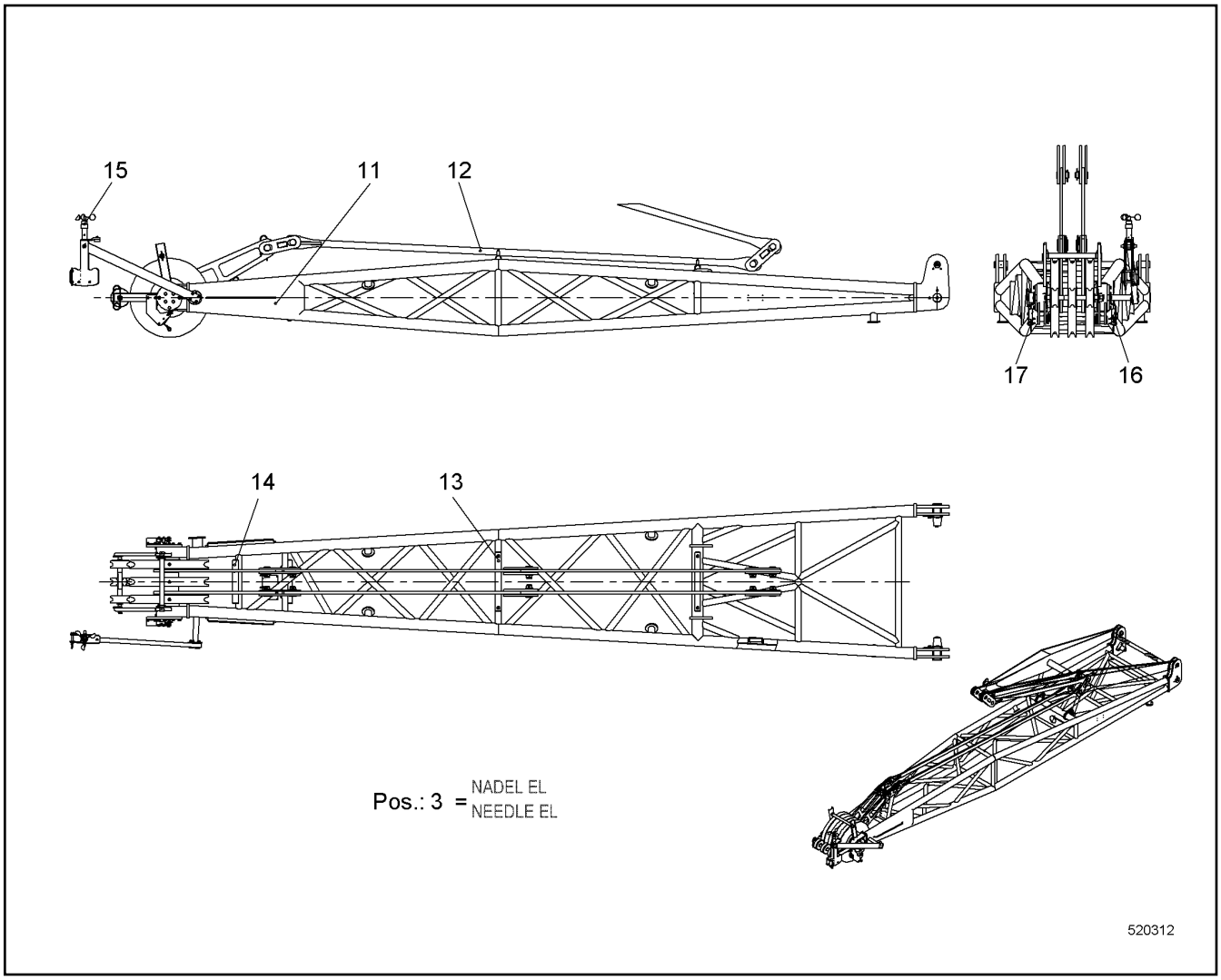

Pos.	Item	Quantity	Description	Bezeichnung	Serie	K
3	993309414	1	NEEDLE EL ⇨ ❑ 608	NADEL EL		
10	990929514	1	TIP BOOM ST.CONST.	SPITZEN AL SCHWK		
11	11287445	1	MOUNTING PARTS ⇨ ❑ 612	MONTAGETEILE		
12	957095614	1	ANCHORING ROD CPL ⇨ ❑ 614	HALTESTANGE KPL		
13	11289080	2	ROPE GUARD CPL ⇨ ❑ 615	SEILSCHUTZ KPL		
14	11294517	2	ROPE GUARD CPL ⇨ ❑ 616	SEILSCHUTZ KPL		
15	990646114	1	ANEMOMETER CPL ⇨ ❑ 581	WINDMESSER KPL		
16	10557537	1	HOIST LIMITSWITCH LEFT INSTAL. ⇨ ❑ 617	SPITZENENDSCHALTER LI EINBA		
17	10557576	1	HOIST LIMITSWITCH RIGHT INSTAL ⇨ ❑ 618	SPITZENENDSCHALTER RE EIN		

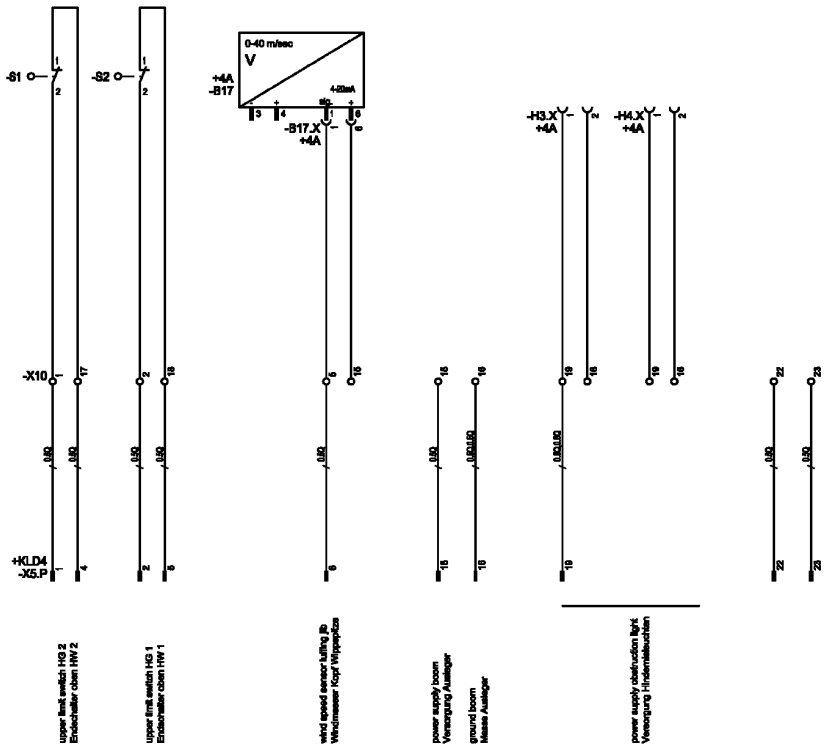

510275

Pos.	Item	Quantity	Description	Bezeichnung	Serie	K
21	10576519	1	CABLE LOOM ⇨ ❑ 609	KABELSATZ		

OHNE BILD
WITHOUT ILLUSTRATION
SANS PLANCHE
SIN FIG.
SEM ILUSTRAÇÃO
БЕЗ ИЗОБРАЖЕНИЯ

600000

Pos.	Item	Quantity	Description	Bezeichnung	Serie	K
20	10576523	1	CLAMPING SOCKET ⇨ ❑ 611	KLEMMDOSE		
21	10045155	4	CABLE GLAND	KABELVERSCHRAUBUNG		
22	10045156	1	CABLE GLAND	KABELVERSCHRAUBUNG		
25	693061314	4	STOPPER PLUG	BLINDSTOPFEN		
27	606644414	1	SIGN	SCHILD		
28	602620401	1	REDUCER	REDUZIERUNG		
30	600376914	12	CONTROL LEAD	STEUERLEITUNG		
31	693155014	1	SOCKET SHELL	TUELLENGEHAEUSE		
32	605604714	1	MALE INSERT	STIFTEINSATZ		
33	605619814	8	PIN CONTACT	STIFTKONTAKT		
34	605601701	2	CONTACT PIN	KONTAKTSTIFT		
35	10045156	1	CABLE GLAND	KABELVERSCHRAUBUNG		
36	602620401	1	REDUCER	REDUZIERUNG		
41	918361414	1	CABLE ANEMOMETER	KABEL WINDGEBER		
50	693157114	1	BS HOUSING	SOCKELGEHAEUSE		
51	605609514	1	FEMALE INSERT	BUCHSENEINSATZ		
52	693061514	2	STOPPER PLUG	BLINDSTOPFEN		
60	927521808	2	LIMIT SWITCH HOISTING ABOVE ⇨ ❑ 577	ENDSCHALTER HUB OBEN		
80	693157014	2	BS HOUSING	SOCKELGEHAEUSE		
81	605616114	2	FEMALE INSERT	BUCHSENEINSATZ		
82	605618014	2	COVER LID	ABDECKKAPPE		
83	693152314	2	HOSE CLAMP THREADED UNION	SCHLAUCHSCHELLENVERSCH		
84	602620201	2	REDUCER	REDUZIERUNG		
85	600454314	4.5	CONTROL LEAD	STEUERLEITUNG		

OHNE BILD
WITHOUT ILLUSTRATION
SANS PLANCHE
SIN FIG.
SEM ILUSTRAÇÃO
БЕЗ ИЗОБРАЖЕНИЯ

600000

Pos.	Item	Quantity	Description	Bezeichnung	Serie	K
86	603000308	1.2	INSULATING HOSE	ISOLIERSCHLAUCH		

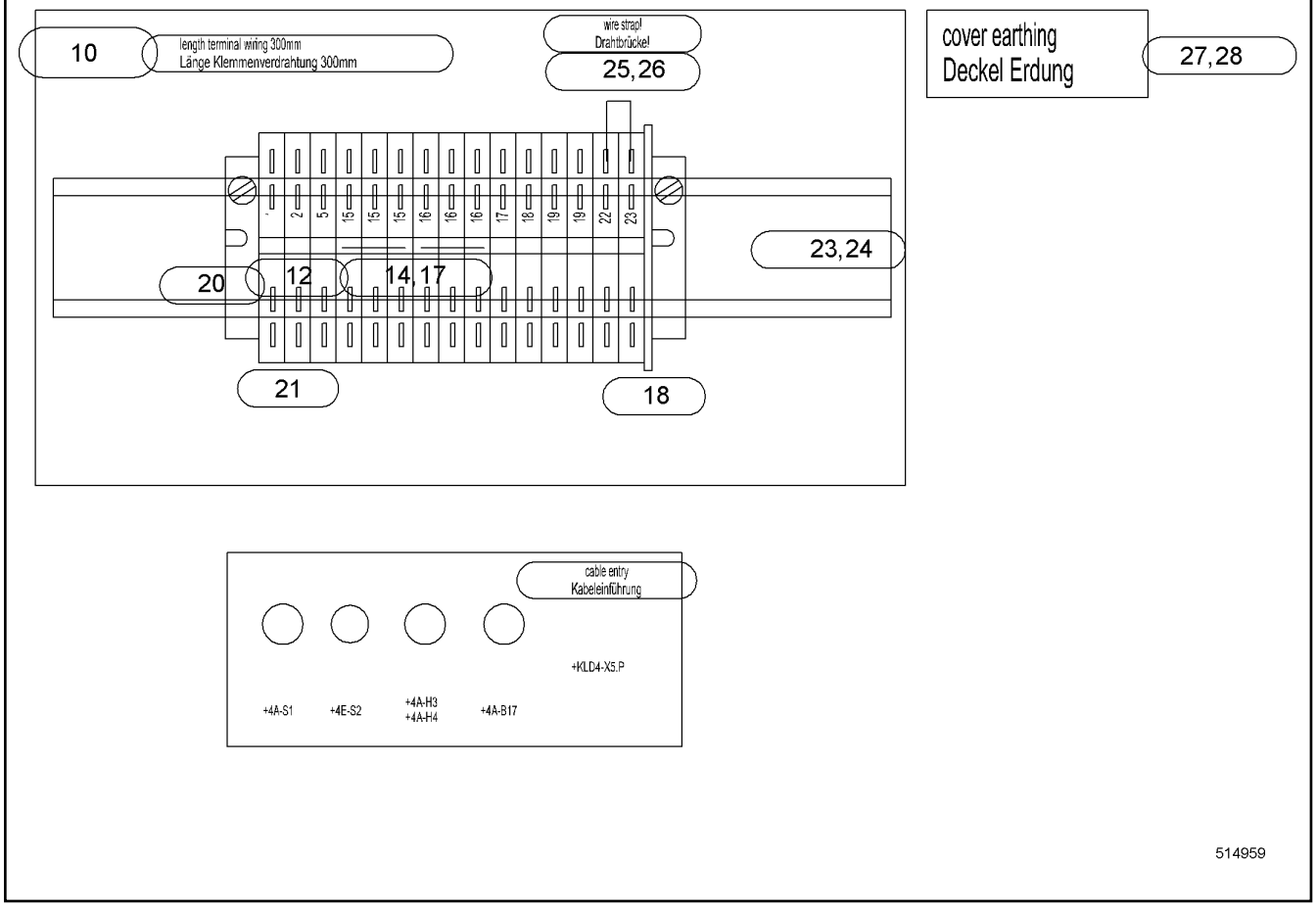

Pos.	Item	Quantity	Description	Bezeichnung	Serie	K
10	917876214	1	HOUSING DRILLED	GEHAEUSE GEBOHRT		
12	602153814	15	SERIES TERMINAL	REIHENKLEMME		
14	602731714	2	CROSS CONNECTOR	QUERVERBINDER		
17	602791714	1	CUTTING-OFF WHEEL	TRENNSCHEIBE		
18	602730714	1	CLOSING PLATE	ABSCHLUSSPLATTE		
20	602720514	2	END ANGLE	ENDWINKEL		
21	602835914	1	DESIGNATION CARD	BEZEICHNUNGSKARTE		
23	602101414	0.2	CARRIER RAIL	TRAGSCHIENE		
24	602134114	2	FASTENING SCREW	BEF SCHRAUBE		
25	602209314	2	RECEPTACLE	STECKHUELSE		
26	10870540	0.12	ELECTR.CABLE	KFZ-LEITUNG		
27	602213314	2	CABLE LUG	KABELSCHUH		
28	600147201	0.2	WIRE BRAID	LITZE		

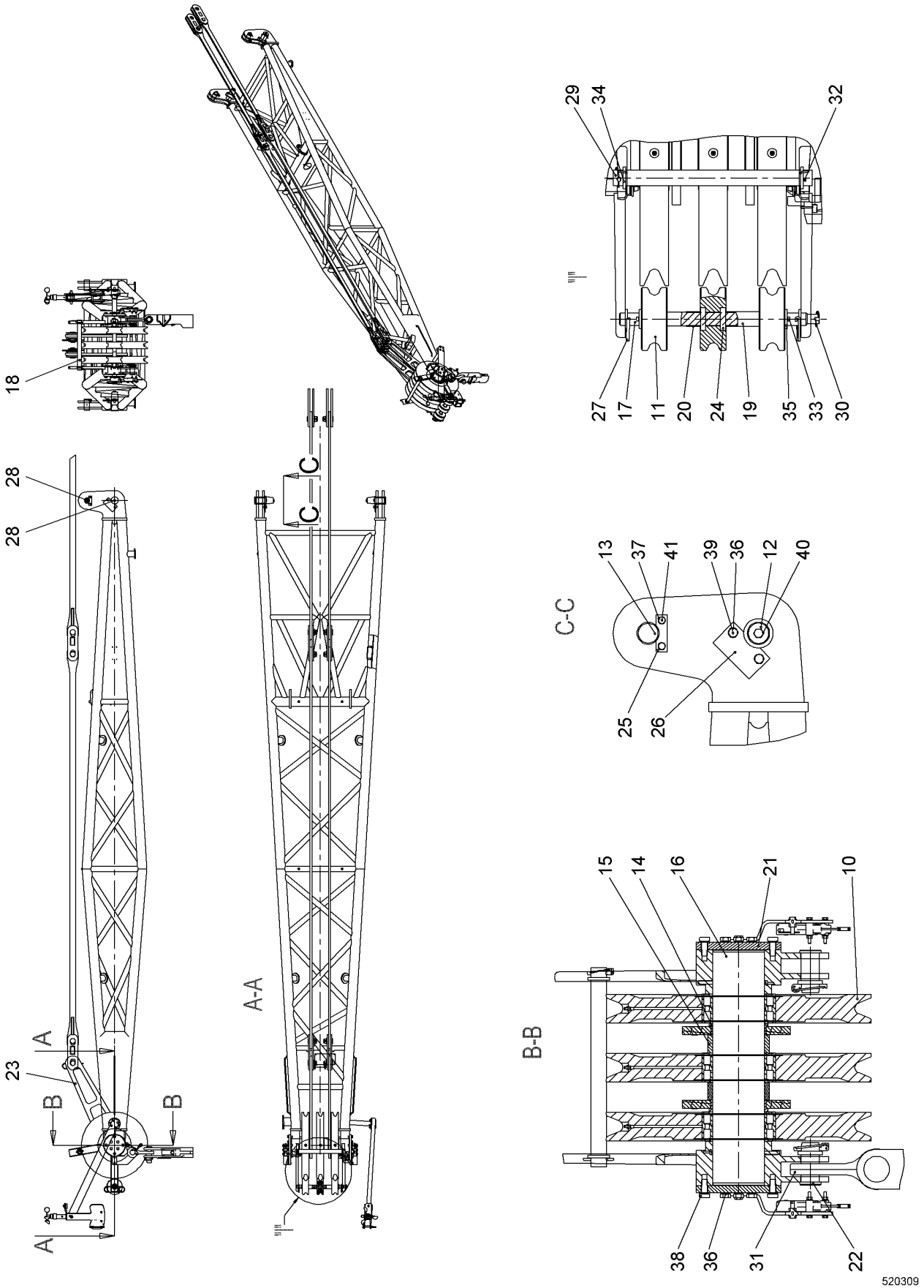
29
34
32
18
27
17
11
20
24
19
35
33
30
28
28
C
C
13
37
41
39
36
12
40
C-C
25
26
A
23
B
B
A
A-A
15
14
16
21
10
B-B
38
36
31
22
520309

Pos.	Item	Quantity	Description	Bezeichnung	Serie	K
10	790202014	3	ROPE PULLEY CPL	SEILROLLE KPL		
11	970961303	3	ROLLER	ROLLE		
12	949761814	2	PIN 80X205 LHRD900-40;10019758	BOLZEN		
13	958554414	2	PIN	BOLZEN		
14	958556114	2	BUSHING	BUCHSE		
15	958556214	2	BUSHING	BUCHSE		
16	958556014	1	AXLE	ACHSE		
17	958904614	1	AXLE	ACHSE		
18	950989914	1	TUBE	ROHR		
21	956385914	2	WP	WP		
22	910353714	2	BOLT CONNECTION	BOLZENVERBINDUNG		
23	919981214	2	COUPLING LINK	KOPPELLASCHE		
24	745120514	6	DEEP GROOVE BALL BEARING	RILLENKUGELLAGER		
25	703003114	2	AXLE HOLDER	ACHSHALTER		
26	956240114	2	WP	WP		
27	433102508	2	RETAINING SPRING 5MM	SICHERUNGSFEDER		
28	7743242	4	HYDRAULIC-TYPE LUBRICAT.NIPPLE	KEGELSCHMIERNIPPEL		
29	10098106	1	SAFETY PLUG W HINGE-LID 10X55	SICHERHEITSKLAPPSTECKER		
30	432016214	1	SAFETY PLUG W HINGE-LID 8X42	SICHERHEITSKLAPPSTECKER		
31	956507814	1	CROSS STRAP	KREUZLASCHE		
32	433008108	1	SPLIT PIN ISO 1234 6.3X63	SPLINT		
33	433007914	2	SPLIT PIN ISO 1234 6.3X56 A4	SPLINT		
34	421103214	2	WASHER DIN EN 28738 45 ST;	SCHEIBE		
35	421102814	4	WASHER DIN EN 28738 35 ST;	SCHEIBE		
36	7024427	20	WEDGE LOCK WASHER M16	KEILSICHERUNGSSCHEIBE		
37	10536581	4	WEDGE LOCK WASHER M12 254 SMO;EN 10	KEILSICHERUNGSSCHEIBE		
38	10539318	16	HEX SCREW ISO 4017 M16X40 10.9	SECHSKANTSCHRAUBE		
39	10539317	4	HEX SCREW ISO 4017 M16X35 10.9	SECHSKANTSCHRAUBE		
40	10539314	2	HEX SCREW ISO 4017 M16X20 10.9	SECHSKANTSCHRAUBE		
41	406517714	4	HEX SCREW ISO 4017 M12X20 A4-70	SECHSKANTSCHRAUBE		

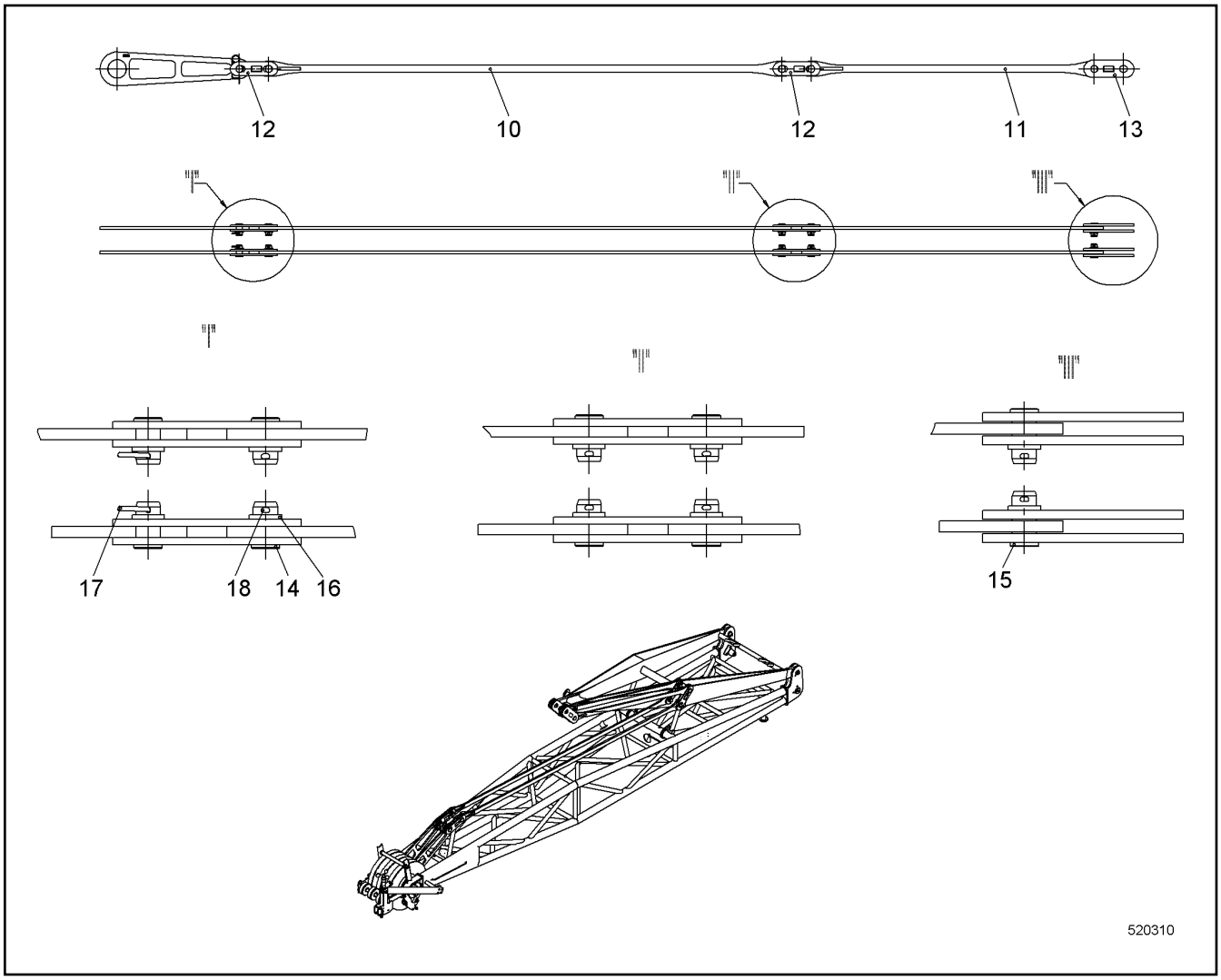

Pos.	Item	Quantity	Description	Bezeichnung	Serie	K
10	385025414	2	ANCHORING ROD	HALTESTANGE		
11	958552214	2	ANCHORING ROD	HALTESTANGE		
12	949911114	8	COUPLING LINK	KOPPELLASCHE		
13	958339714	4	COUPLING LINK	KOPPELLASCHE		
14	948959414	8	PIN 58X95 LHRD900-40;10019758	BOLZEN		
15	949174814	2	PIN 58X113 LHRD900-40;10019758	BOLZEN		
16	421103314	10	WASHER DIN EN 28738 50 ST;	SCHEIBE		
17	433105008	2	RETAINING SPRING DIN 2194 6MM FS	SICHERUNGSFEDER		
18	433010314	8	SPLIT PIN ISO 1234 10X80 A4	SPLINT		

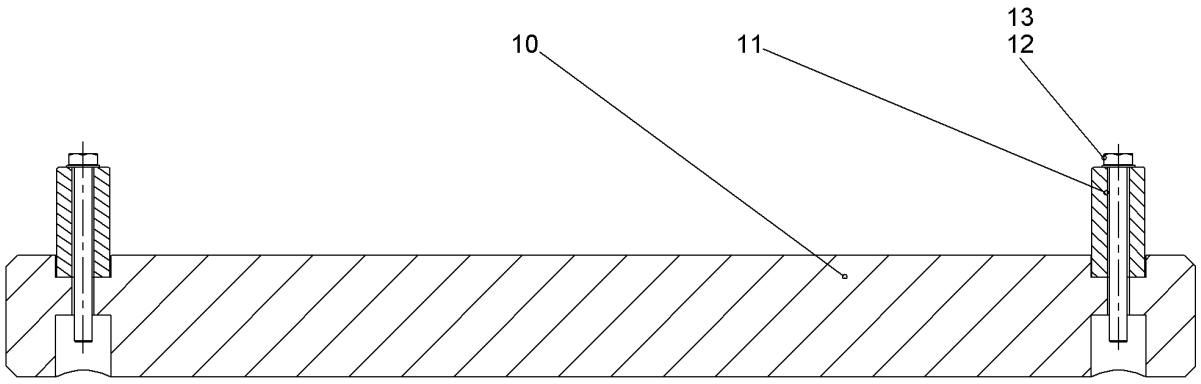

Pos.	Item	Quantity	Description	Bezeichnung	Serie	K
10	289003214	1	STRIP	LEISTE		
11	956009714	2	INTERMEDIATE PART	ZWISCHENSTUECK		
12	10558857	2	LOCKING RING 8 A2	SICHERUNGSRING		
13	10538809	2	HEX SCREW ISO 4017 M8X80 A4-70	SECHSKANTSCHRAUBE		

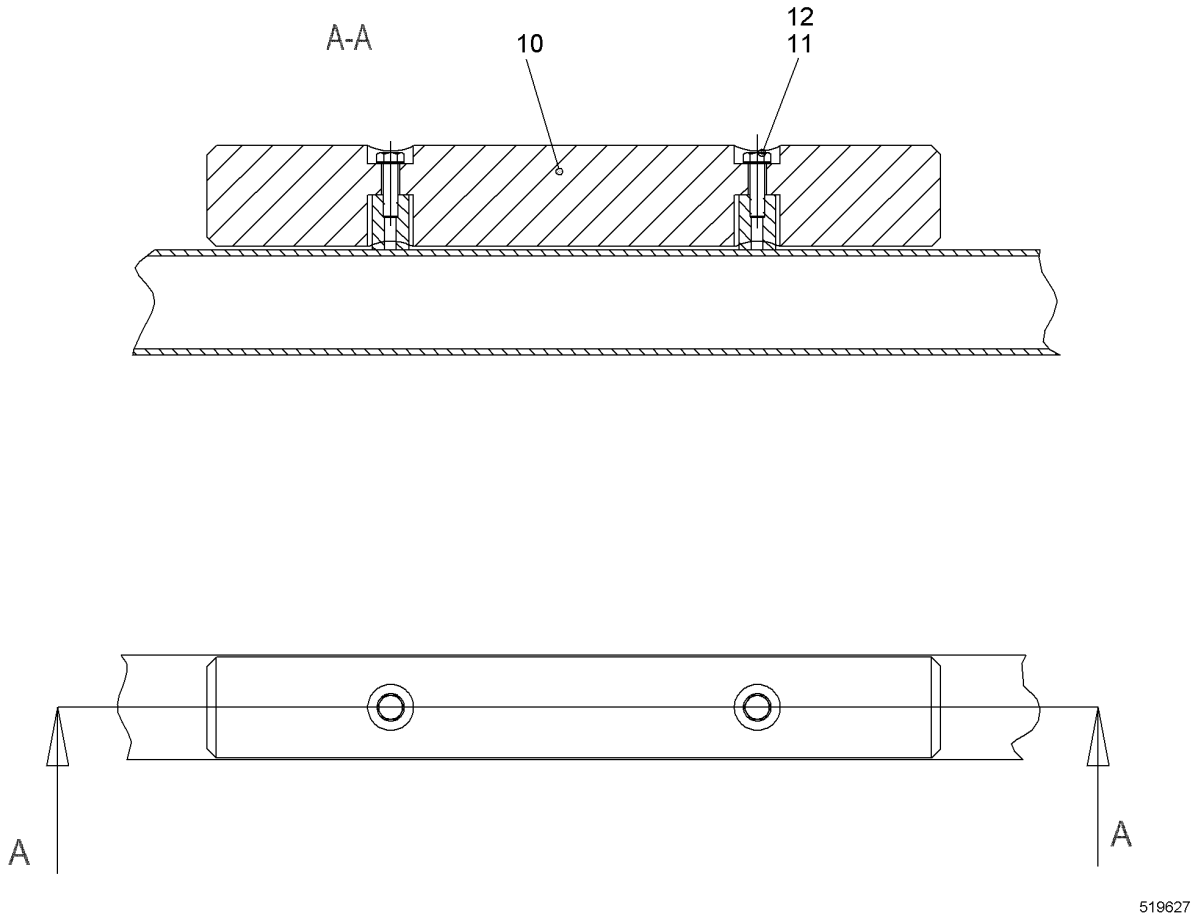

Pos.	Item	Quantity	Description	Bezeichnung	Serie	K
10	289012914	1	STRIP	LEISTE		
11	406501314	2	HEX SCREW ISO 4017 M8X30 A4-70	SECHSKANTSCHRAUBE		
12	10447017	2	LOCKING RING 8	SICHERUNGSRING		

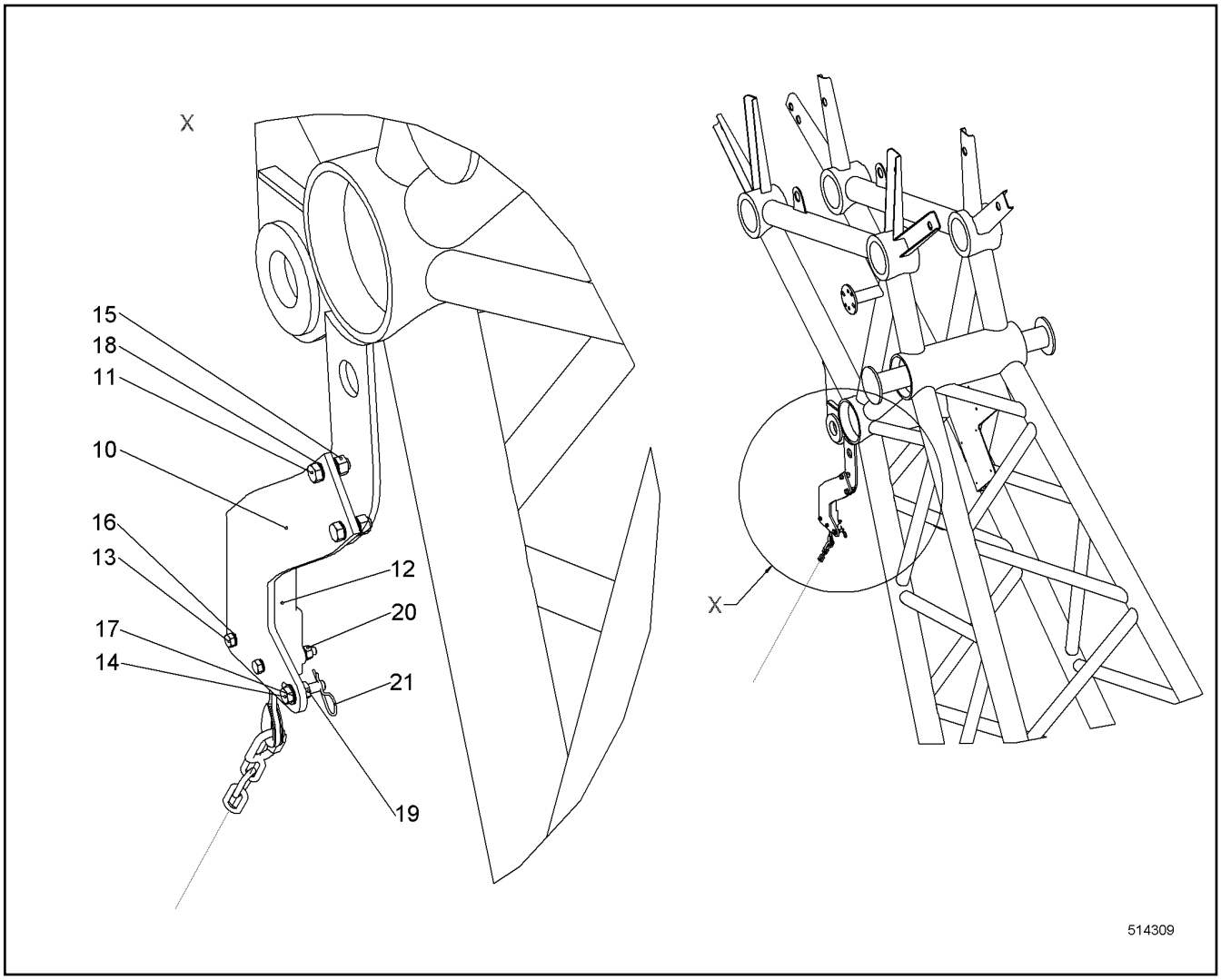

Pos.	Item	Quantity	Description	Bezeichnung	Serie	K
10	971508203	1	WP	WP		
11	406518414	2	HEX SCREW ISO 4017 M12X35 A4-70	SECHSKANTSCHRAUBE		
13	10331507	2	HEX SCREW ISO 4017 M8X65 A4-70	SECHSKANTSCHRAUBE		
14	10539971	1	HEX SCREW ISO 4017 M10X40 A4-70	SECHSKANTSCHRAUBE		
15	411516914	2	HEX NUT ISO 4032 M12 A4-70	SECHSKANTMUTTER		
16	10536577	4	WEDGE LOCK WASHER M8 254 SMO;EN 1008	KEILSICHERUNGSSCHEIBE		
17	10536580	2	WEDGE LOCK WASHER M10 254 SMO;EN 10	KEILSICHERUNGSSCHEIBE		
18	10536581	4	WEDGE LOCK WASHER M12 254 SMO;EN 10	KEILSICHERUNGSSCHEIBE		
19	411514614	1	HEX NUT ISO 4032 M10 A4-70	SECHSKANTMUTTER		
20	411515014	2	HEX NUT ISO 4032 M8 A4-70	SECHSKANTMUTTER		
21	433206014	1	SPRING PLUG DIN 11024 2.5	FEDERSTECKER		

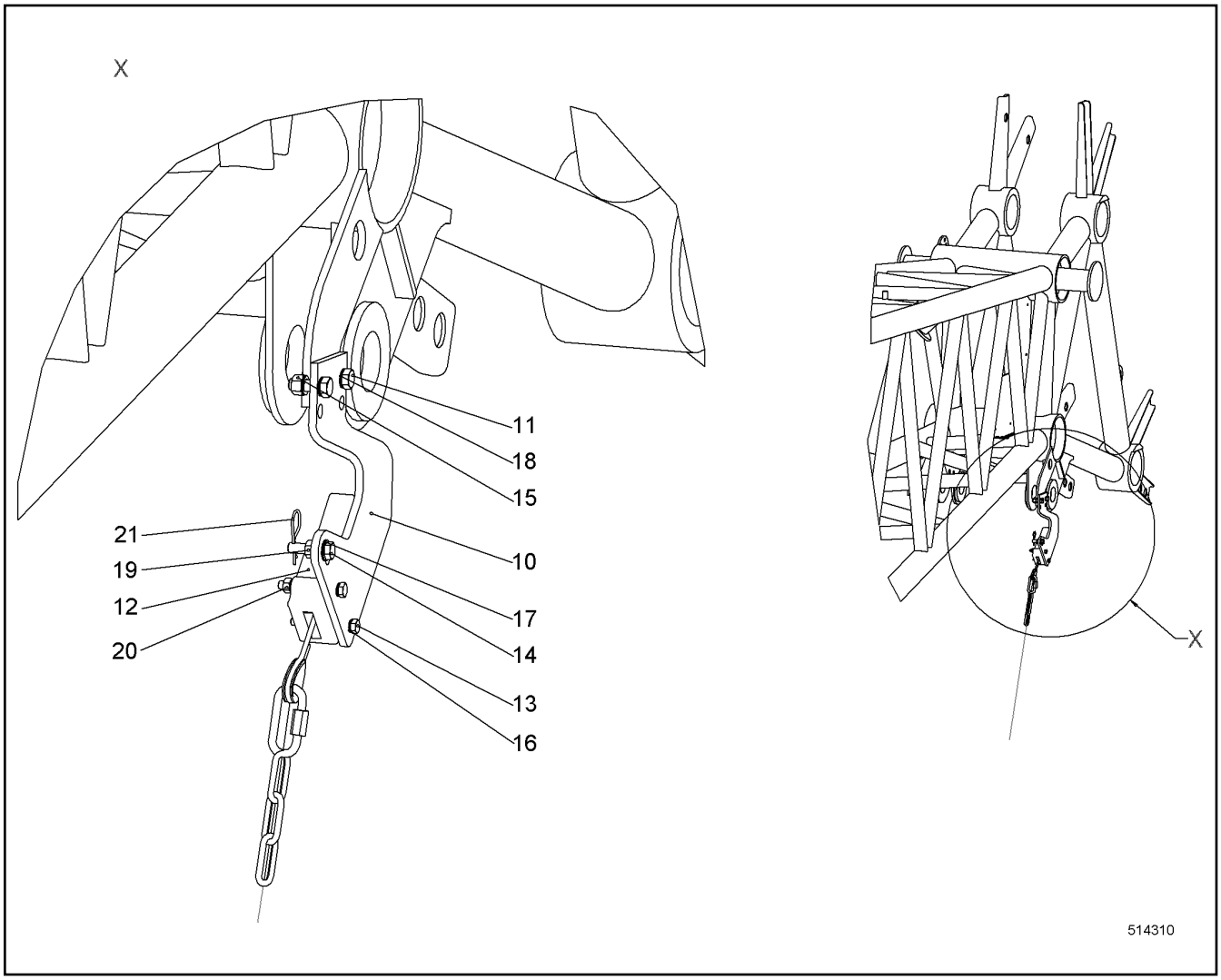

Pos.	Item	Quantity	Description	Bezeichnung	Serie	K
10	971511703	1	WP	WP		
11	406518414	2	HEX SCREW ISO 4017 M12X35 A4-70	SECHSKANTSCHRAUBE		
13	10331507	2	HEX SCREW ISO 4017 M8X65 A4-70	SECHSKANTSCHRAUBE		
14	10539971	1	HEX SCREW ISO 4017 M10X40 A4-70	SECHSKANTSCHRAUBE		
15	411516914	2	HEX NUT ISO 4032 M12 A4-70	SECHSKANTMUTTER		
16	10536577	4	WEDGE LOCK WASHER M8 254 SMO;EN 1008	KEILSICHERUNGSSCHEIBE		
17	10536580	2	WEDGE LOCK WASHER M10 254 SMO;EN 10	KEILSICHERUNGSSCHEIBE		
18	10536581	4	WEDGE LOCK WASHER M12 254 SMO;EN 10	KEILSICHERUNGSSCHEIBE		
19	411514614	1	HEX NUT ISO 4032 M10 A4-70	SECHSKANTMUTTER		
20	411515014	2	HEX NUT ISO 4032 M8 A4-70	SECHSKANTMUTTER		
21	433206014	1	SPRING PLUG DIN 11024 2.5	FEDERSTECKER		

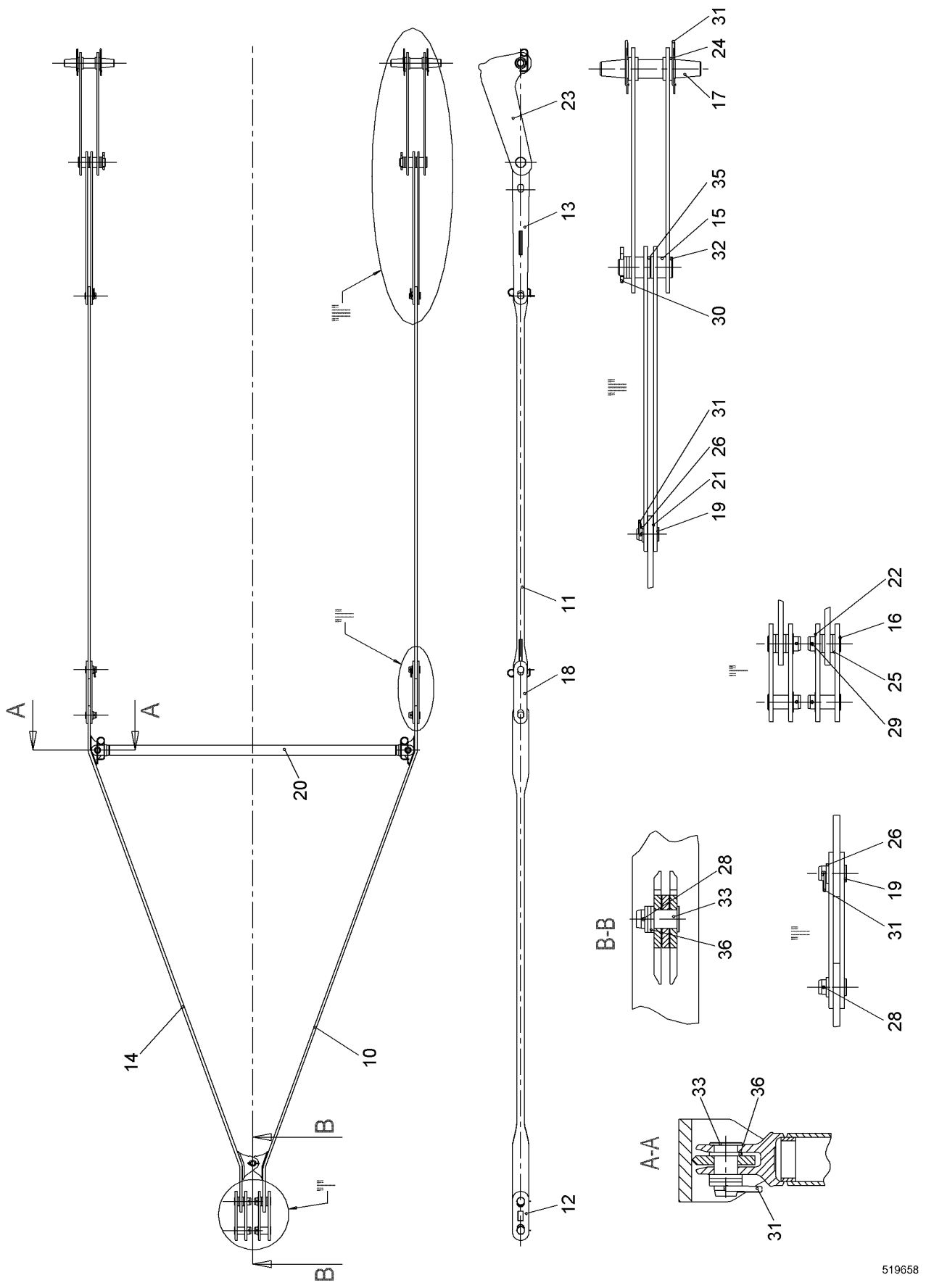

21.6.2017 519659 LIEBHERR	**138406_ETK_001** **STAY ROPE ROD** **RUECKHALTESTANGE**	619 (1/2) **99 23 415 14**

Pos.	Item	Quantity	Description	Bezeichnung	Serie	K
10	993372514	1	CROSSBAR ST.CONST.	TRAVERSE SCHWK		
11	958775914	2	ANCHORING ROD	HALTESTANGE		
12	958339514	4	COUPLING LINK	KOPPELLASCHE		
13	950411414	4	COUPLING LINK	KOPPELLASCHE		
14	993432414	1	CROSSBAR ST.CONST.	TRAVERSE SCHWK		
16	958280214	4	PIN	BOLZEN		
17	956418614	2	PIN	BOLZEN		
18	385043714	4	COUPLING LINK	KOPPELLASCHE		
19	948959414	6	PIN 58X95 LHRD900-40;10019758	BOLZEN		
20	993430014	1	COMPRESSION BAR	DRUCKSTAB		
21	949942814	8	WASHER 58/90X2 GUMMI NBR/SBR-65 GRD	SCHEIBE		
22	943919114	4	WASHER 61/85X2 PA 6 G	SCHEIBE		
23	958556314	4	ANCHORING ROD	HALTESTANGE		
24	421103814	8	WASHER DIN EN 28738 80 ST;	SCHEIBE		
25	421103514	8	WASHER DIN EN 28738 60 ST;	SCHEIBE		
26	421103314	6	WASHER DIN EN 28738 50 ST;	SCHEIBE		
28	433009414	3	SPLIT PIN ISO 1234 8X80 A4	SPLINT		
29	433010514	4	SPLIT PIN ISO 1234 10X90 A4	SPLINT		
30	433010914	2	SPLIT PIN ISO 1234 13X100 A4	SPLINT		
31	433105008	10	RETAINING SPRING DIN 2194 6MM FS	SICHERUNGSFEDER		
32	10350555	2	PIN	BOLZEN		
33	956215014	3	PIN 55X92 LHRD900-40;10019758	BOLZEN		
35	421103914	10	WASHER DIN EN 28738 70 ST;	SCHEIBE		
36	421103014	11	WASHER DIN EN 28738 40 ST	SCHEIBE		

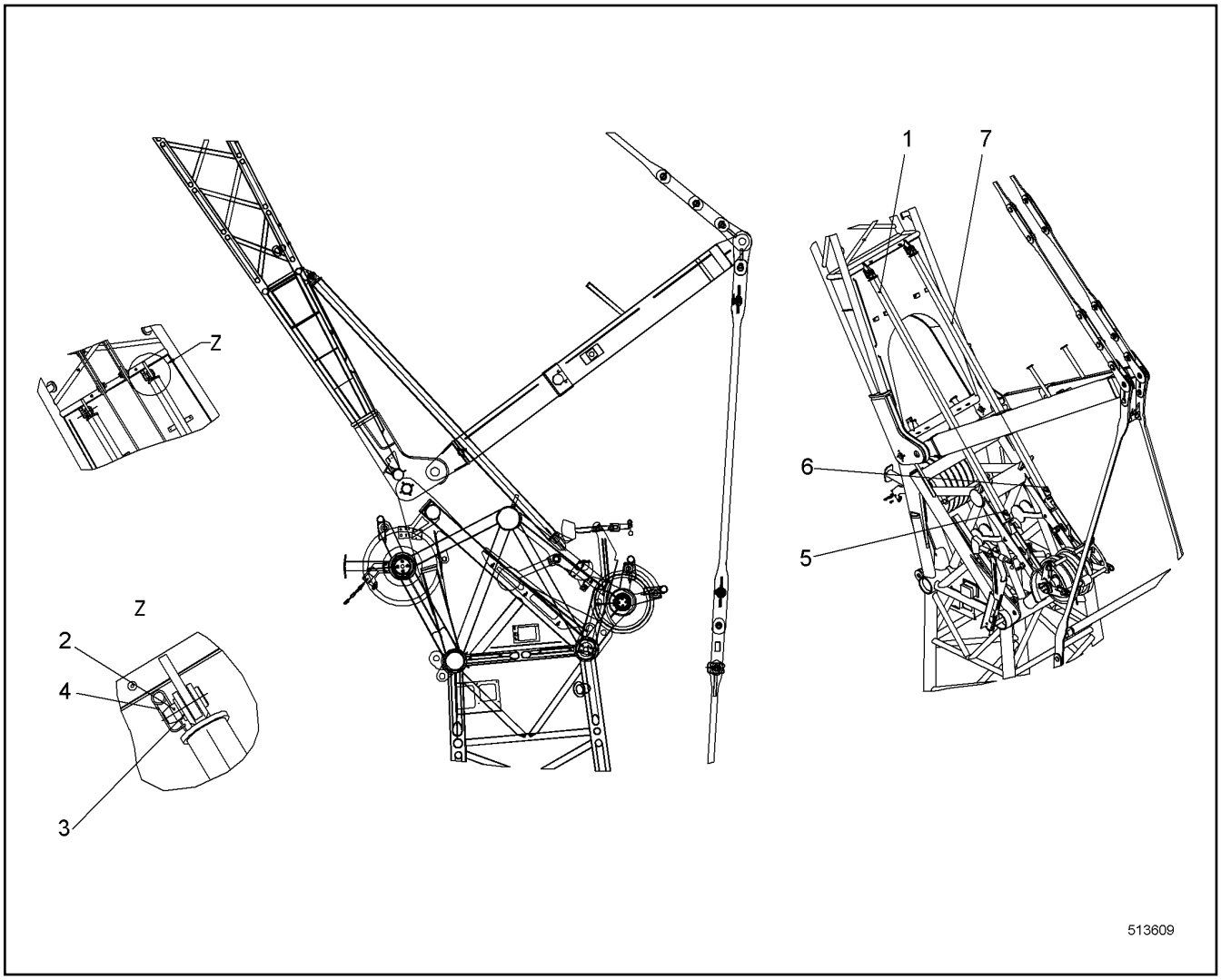

Pos.	Item	Quantity	Description	Bezeichnung	Serie	K
1	919390814	1	TILT-BACK SUPPORT	RUECKFALLSTUETZE		
2	949388414	2	PIN	BOLZEN		
3	421103014	2	WASHER DIN EN 28738 40 ST	SCHEIBE		
4	433101208	2	RETAINING SPRING 4MM	SICHERUNGSFEDER		
5	790485314	1	NAME PLATE TILTING-BACK SUP.	SCHILD RUECKFALLSTUETZEN		
7	994572314	1	TILT-BACK SUPPORT	RUECKFALLSTUETZE		

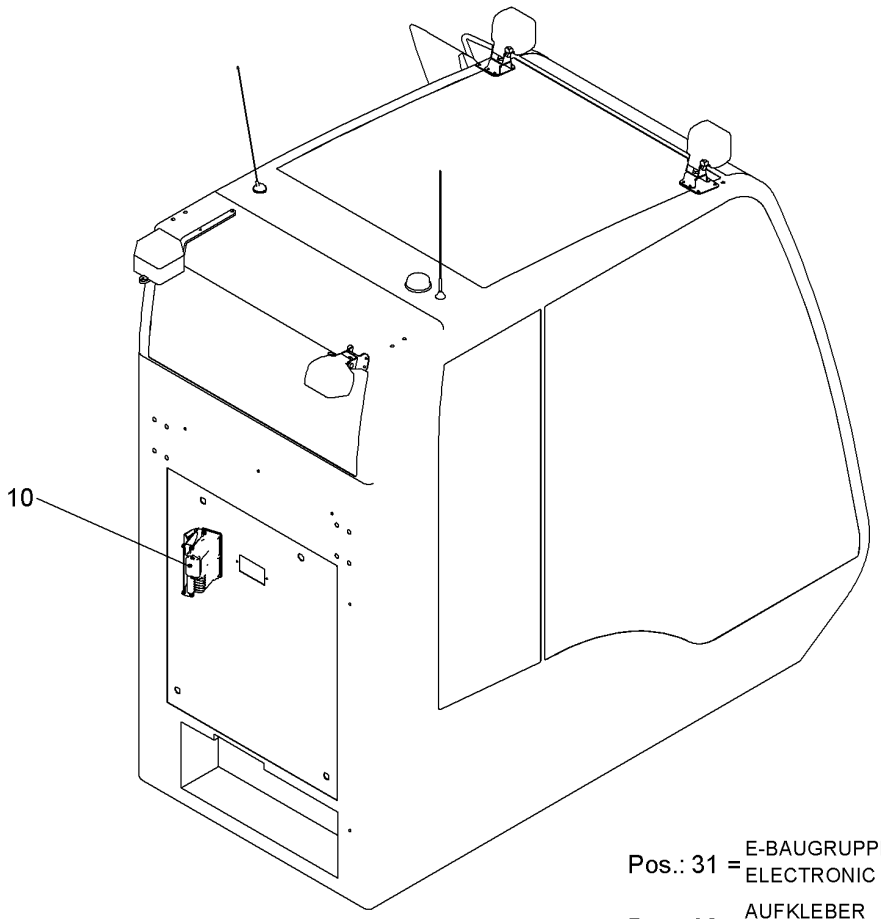

Pos.	Item	Quantity	Description	Bezeichnung	Serie	K
10	11223226	1	MODEM CPL RFK ⇨ ❑ 623	MODEM KPL NRS		
31	10688831	1	ELECTRONIC MODULES	E-BAUGRUPPE		
32	10541838	1	STICKER	AUFKLEBER		

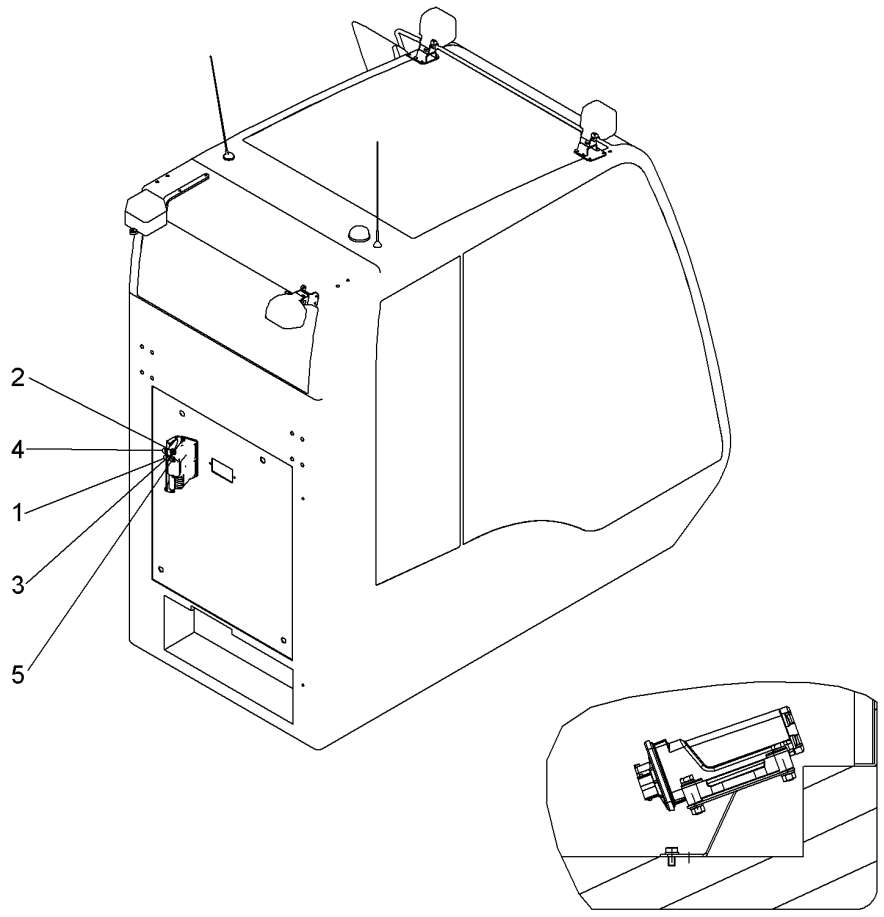

Pos.	Item	Quantity	Description	Bezeichnung	Serie	K
1	11223086	1	WP	WP		
2	10538797	4	HEX SCREW ISO 4017 M6X30 A4-70	SECHSKANTSCHRAUBE		
3	420000414	10	WASHER ISO 7089 6 A4	SCHEIBE		
4	411517114	4	HEX NUT ISO 4032 M6 A4-70	SECHSKANTMUTTER		
5	485557714	2	HEX SCREW ISO 4017 M6X12 A4-70	SECHSKANTSCHRAUBE		

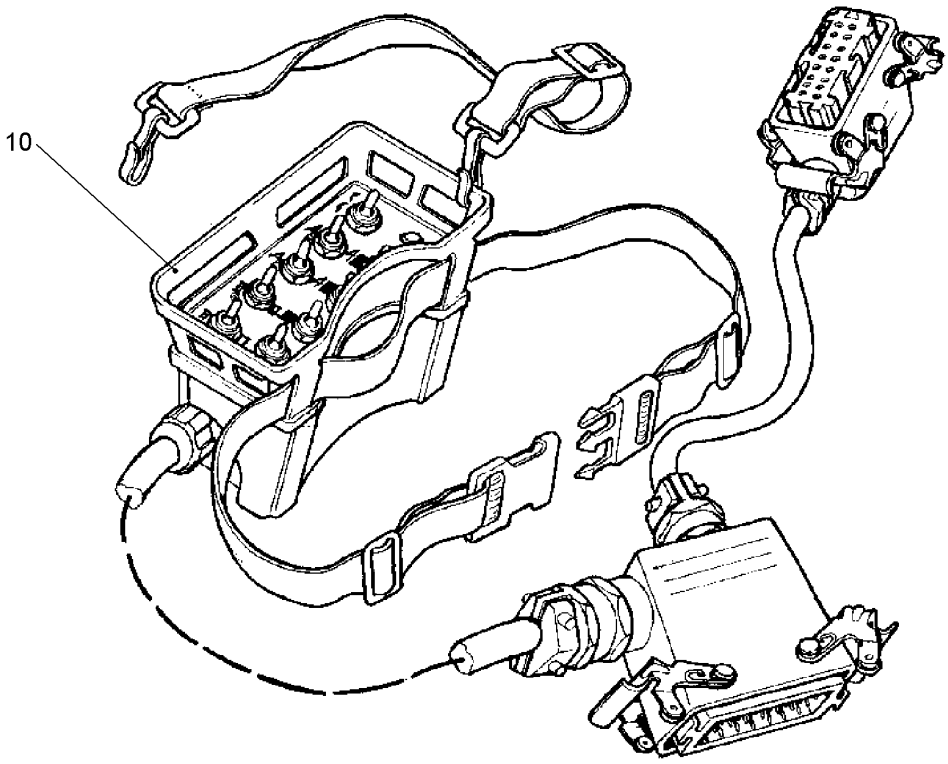

Pos.	Item	Quantity	Description	Bezeichnung	Serie	K
10	11236557	1	CONTROL CONSOLE	STEUERPULT		

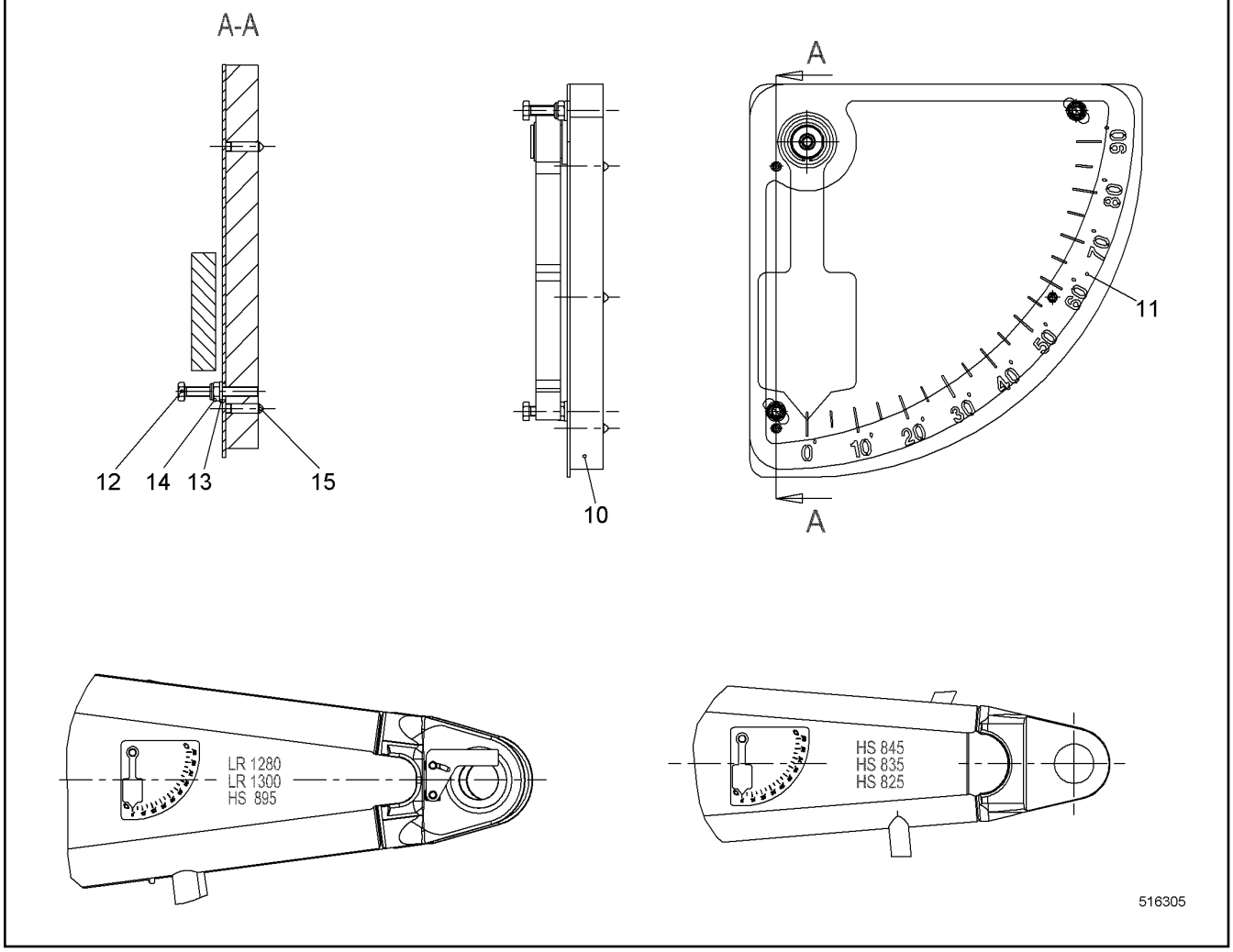

Pos.	Item	Quantity	Description	Bezeichnung	Serie	K
10	11215379	1	SHEET	PLATTE		
11	919058414	1	ANGLE INDICATION ⇨ ❑ 537	WINKELANZEIGE		
12	10538799	2	HEX SCREW ISO 4017 M6X45 A4-70	SECHSKANTSCHRAUBE		
13	420000414	2	WASHER ISO 7089 6 A4	SCHEIBE		
14	10540492	2	HEX NUT ISO 10511 M6 A4	SECHSKANTMUTTER		
15	404601014	3	GRUB SCREW DIN 914 M6X20 45H	GEWINDESTIFT		

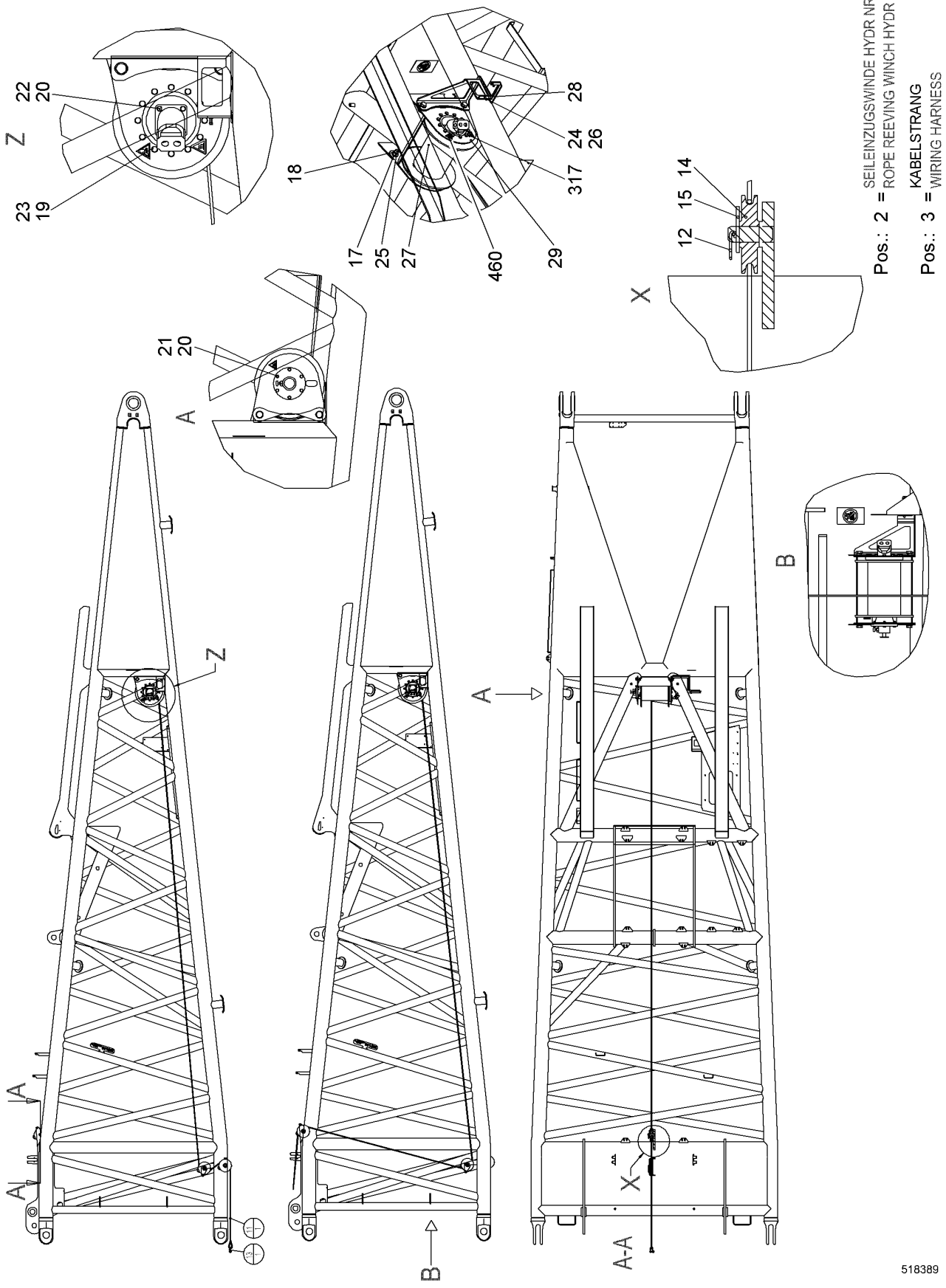

21.6.2017 518389	**138406_ETK_001**	626 (1/2)
LIEBHERR	**ROPE LUG CPL RFK** **SEILEINZIEHWINDE KPL NRS**	**10 51 743 9**

Pos.	Item	Quantity	Description	Bezeichnung	Serie	K
2	10542516	1	ROPE REEVING WINCH HYDR RFK ⇨ ❑ 628	SEILEINZUGSWINDE HYDR NRS		
3	10226574	1	WIRING HARNESS	KABELSTRANG		
4	10524392	1	HOSE LIST ⇨ ❑ 631	SCHLAUCHLISTE		
11	774762314	1	ROPE	SEIL		
12	433105414	2	RETAINING SPRING 4.5 MM	SICHERUNGSFEDER		
13	773930114	1	SHACKLE	SCHAEKEL		
14	967216103	2	ROPE PULLEY CPL ⇨ ❑ 632	SEILROLLE KPL		
15	385031714	2	WP	WP		
17	10544174	8	WASHER ISO 7089 20	SCHEIBE		
18	10544157	4	HEX NUT DIN 985 M20 10	SECHSKANTMUTTER		
19	406511914	12	HEX SCREW ISO 4017 M10X25 A4-70	SECHSKANTSCHRAUBE		
20	10447017	10	LOCKING RING 8	SICHERUNGSRING		
21	406501314	6	HEX SCREW ISO 4017 M8X30 A4-70	SECHSKANTSCHRAUBE		
22	406501414	4	HEX SCREW ISO 4017 M8X25 A4-70	SECHSKANTSCHRAUBE		
23	10447016	12	LOCKING RING 10	SICHERUNGSRING		
24	406532614	2	HEX SCREW ISO 4017 M6X20 A4-70	SECHSKANTSCHRAUBE		
25	10543922	4	HEX SCREW ISO 4017 M20X50 10.9	SECHSKANTSCHRAUBE		
26	420000414	2	WASHER ISO 7089 6 A4	SCHEIBE		
27	592069414	1	WINCH ⇨ ❑ 633	WINDE		
28	994001014	1	VALVE MOUNTING	VENTILHALTERUNG		
29	918678214	1	WINCH FRAME	WINDENRAHMEN		
317	773195214	1	SIGN	SCHILD		
460	773195614	2	NAMEPLATE UVV	SCHILD UVV		

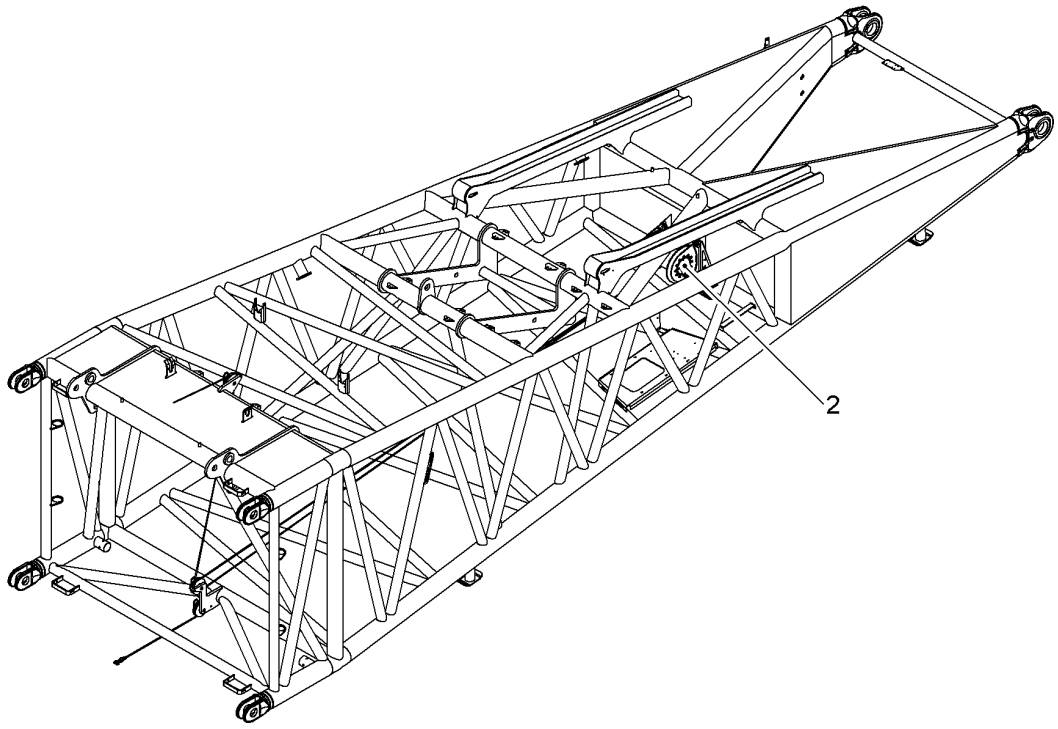

Pos.	Item	Quantity	Description	Bezeichnung	Serie	K
2	10517262	1	TUBING HYDR ⇨ ❑ 629	VERROHRUNG HYDR		

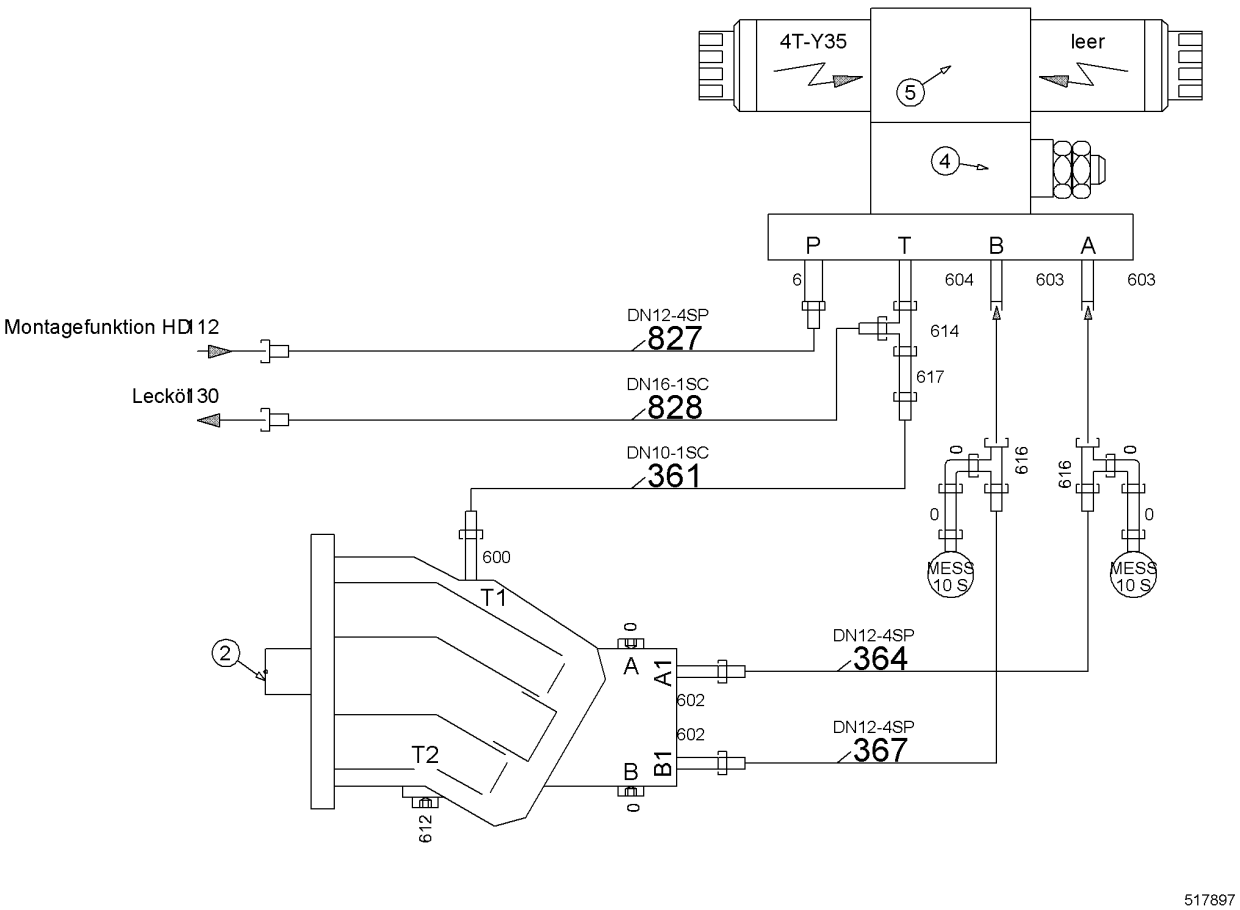

Pos.	Item	Quantity	Description	Bezeichnung	Serie	K
2	510232214	1	OIL MOTOR ⇨ ❑ 630	OELMOTOR		
3	511455014	1	CONNECTING PLATE	ANSCHLUSSPLATTE		
4	511467914	1	PRESSURE LIMITING VALVE	DRUCKBEGRENZUNGSVENTIL		
5	510427214	1	DIRECTIONAL CONTROL VALVE	WEGEVENTIL		
6	929796914	1	RESTRICTOR BODY	DROSSELKOERPER		
7	714002114	1	MAIN JET SOLEX 1.2MM	HAUPTDUESE SOLEX		
8	10099300	1	SIGN	SCHILD		
600	471039708	1	FITTING	VERSCHRAUBUNG		
602	471033014	2	FITTING	VERSCHRAUBUNG		
603	471033214	2	FITTING	VERSCHRAUBUNG		
604	247009702	1	FITTING	VERSCHRAUBUNG		
612	790259414	1	FITTING	VERSCHRAUBUNG		
613	510664814	2	GAUGE CONNECTION	MESSSTUTZEN		
614	247128502	1	FITTING	VERSCHRAUBUNG		
615	485433314	2	FITTING	VERSCHRAUBUNG		
616	7407098	2	FITTING	VERSCHRAUBUNG		
617	485436414	1	FITTING	VERSCHRAUBUNG		

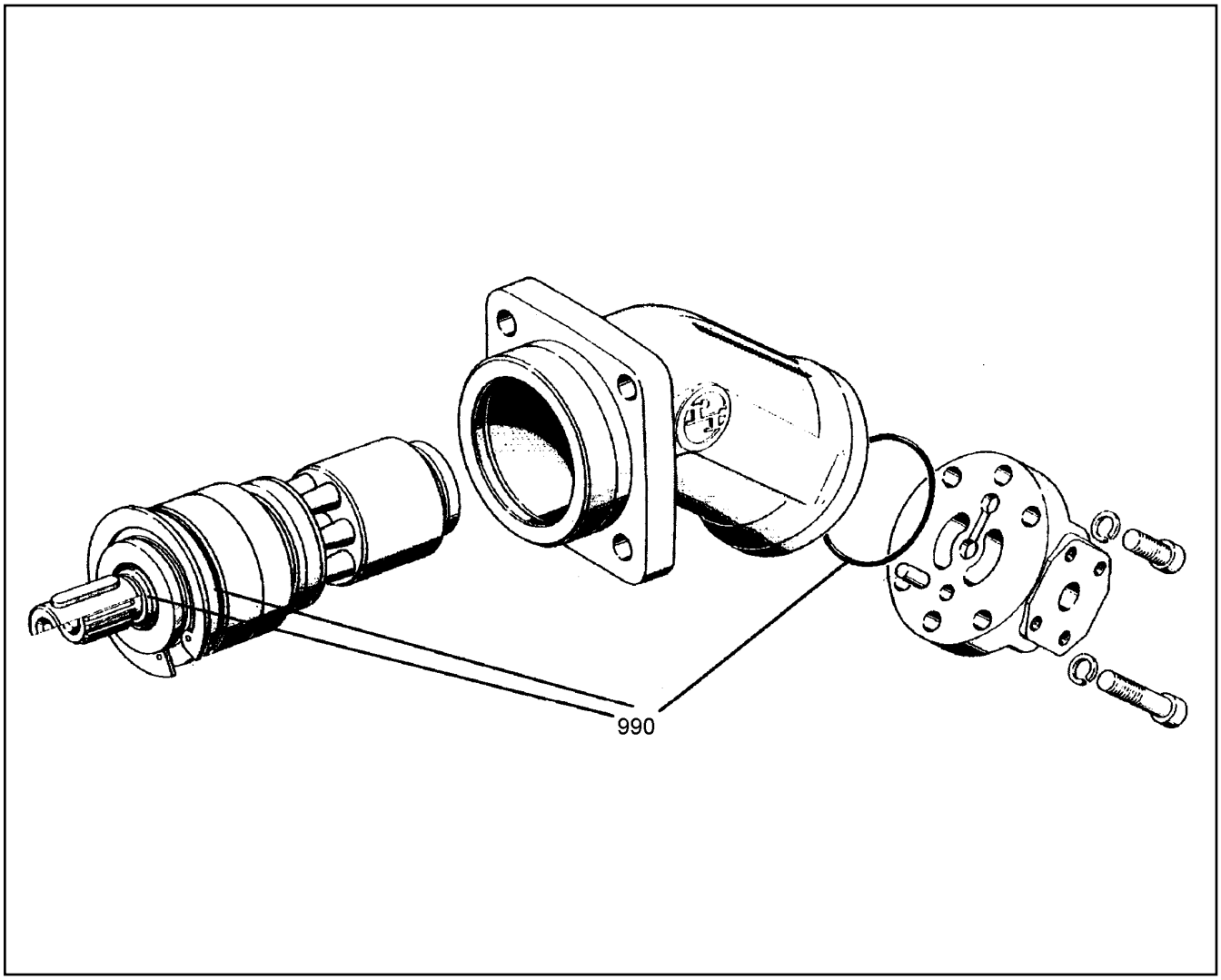

Pos.	Item	Quantity	Description	Bezeichnung	Serie	K
111	7024273	1	CYLINDER	ZYLINDER		
113	7024275	1	CENTER STUD	MITTELZAPFEN		
115	7024277	14	STEEL GASKET	STAHLDICHTRING		
116	570114908	1	SPRING SUPPORT	FEDERTELLER		
117	7024282	4	DISC SPRING	TELLERFEDER		
990	981967114	1	SEALING SET CPL	DS KPL		

ACHTUNG !
ATTENTION !
ATTENTION !
ATENCIÓN !
ATENÇÃO !
ВНИМАНИЕ

Für Schlauchbestellungen kann über die Schlauchnummer, in der entsprechenden Schlauchliste, die Identnummer festgestellt werden.

For ordering flexible hoses you can find the identification number through the hose-number in the corresponding hose-list.

Pour des ordres de tuyau flexible le nombre d'identification on voit dans la liste de tuyau flexible correspondente.

Para el pedido de manguera, indicar el número de identificación de la manguera de la lista respectiva.

Para se encomendar uma mangueira, consulte o número de identificaçao na respectiva lista de mangueiras.

Для оформления заказов на шланги/рукавы идент. № может быть определен при помощи номера шланга/рукава, указанного в соотетствующем перечне шлангов/рукавов.

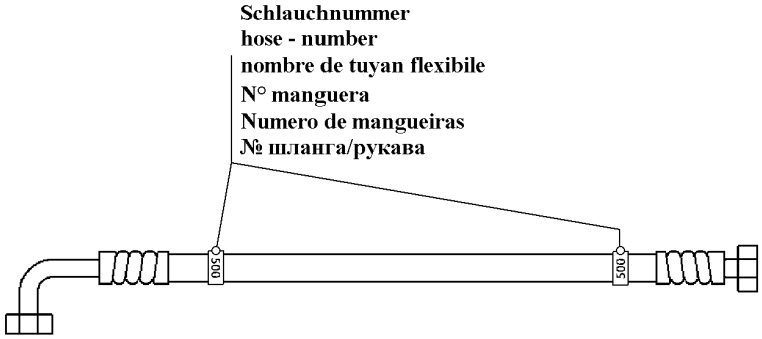

500000

Pos.	Item	Quantity	Description	Bezeichnung	Serie	K
1	10518558	1	ADHESIVE LABEL	HAFTETIKETTE		
2	10518558	5	ADHESIVE LABEL	HAFTETIKETTE		
361	995285414	1	HOSE CPL	SCHLAUCH KPL		
364	991205314	1	HOSE CPL	SCHLAUCH KPL		
367	991195514	1	HOSE CPL	SCHLAUCH KPL		
827	918849914	1	HOSE CPL	SCHLAUCH KPL		
828	929443814	1	HOSE CPL	SCHLAUCH KPL		

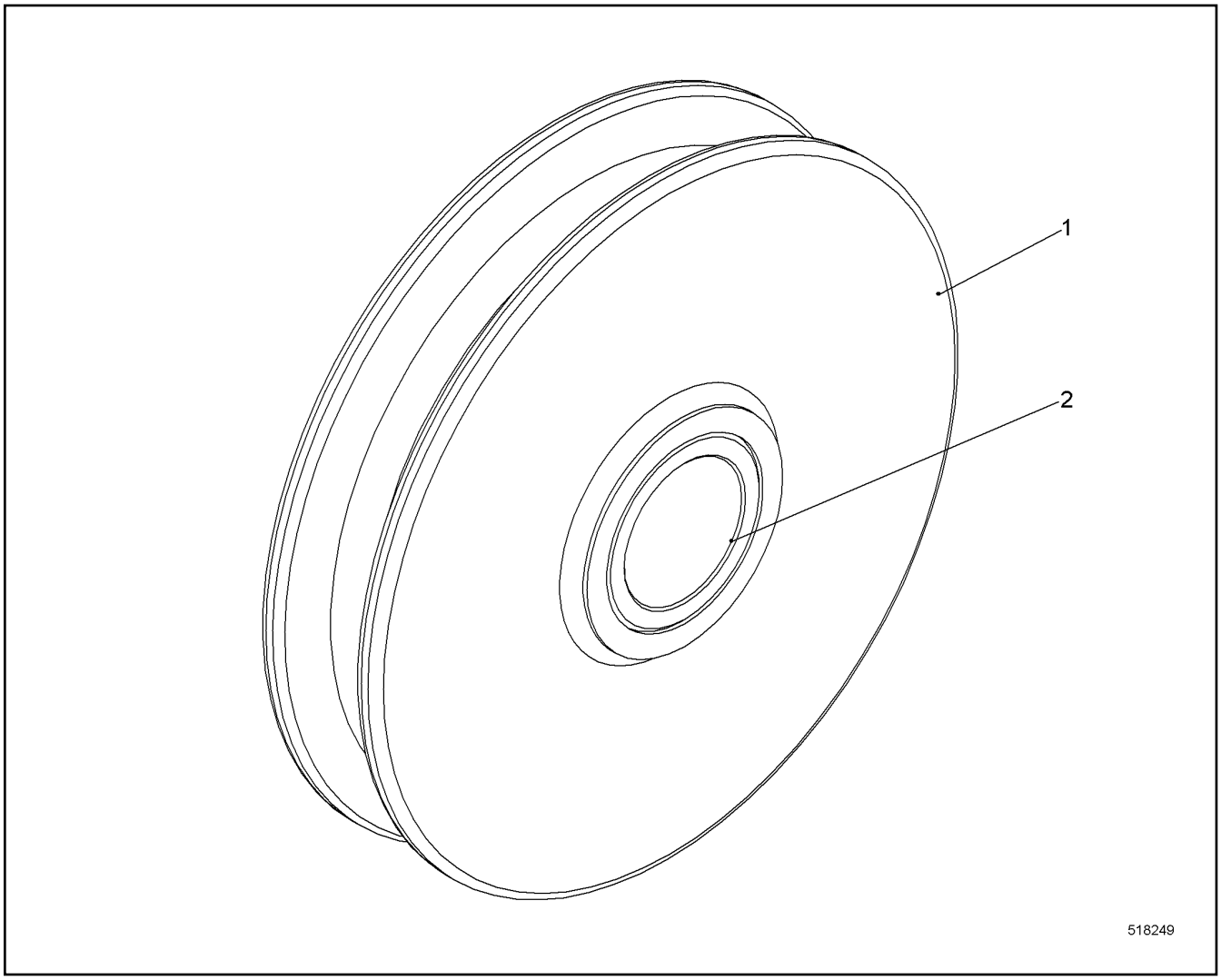

Pos.	Item	Quantity	Description	Bezeichnung	Serie	K
1	967217003	1	ROPE PULLEY	SEILROLLE		
2	967216303	1	BUSHING 30/40X38 GZ-CUSN7ZNPB	BUCHSE		

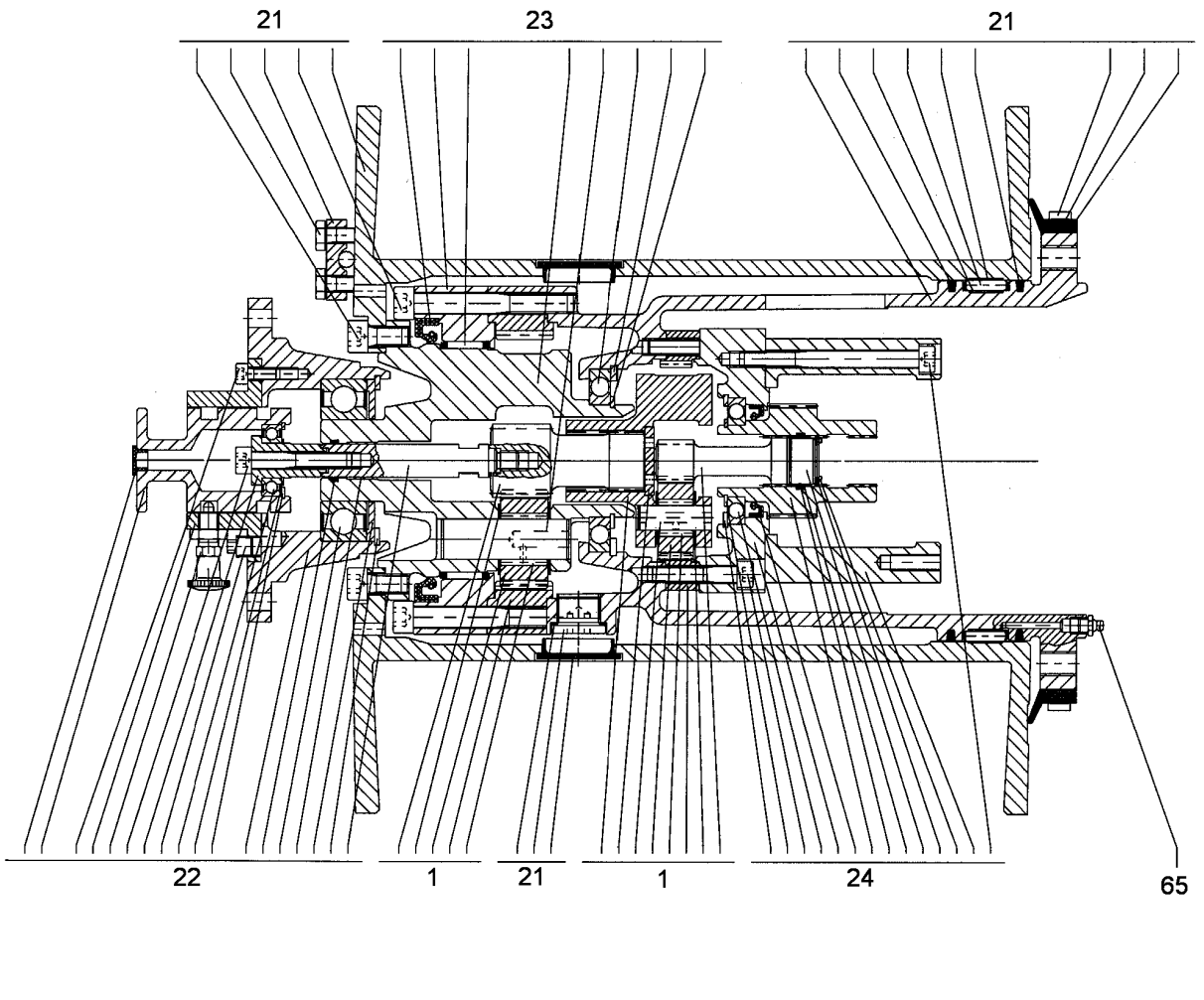

Pos.	Item	Quantity	Description	Bezeichnung	Serie	K
1	540270114	1	PLANETARY STAGE ⇨ ❑ 634	PLANETENSTUFE		
21	540270214	1	ROPE DRUM CPL ⇨ ❑ 635	SEILTROMMEL KPL		
22	540270314	1	FLANGE CPL ⇨ ❑ 636	FLANSCH KPL		
23	540270414	1	POWER TAKE-OFF CPL ⇨ ❑ 637	ABTRIEB KPL		
24	540270514	1	DRIVE UNIT CPL ⇨ ❑ 638	ANTRIEB KPL		
65	774301101	1	HYDRAULIC-TYPE LUBRICAT.NIPPLE	KEGELSCHMIERNIPPEL		

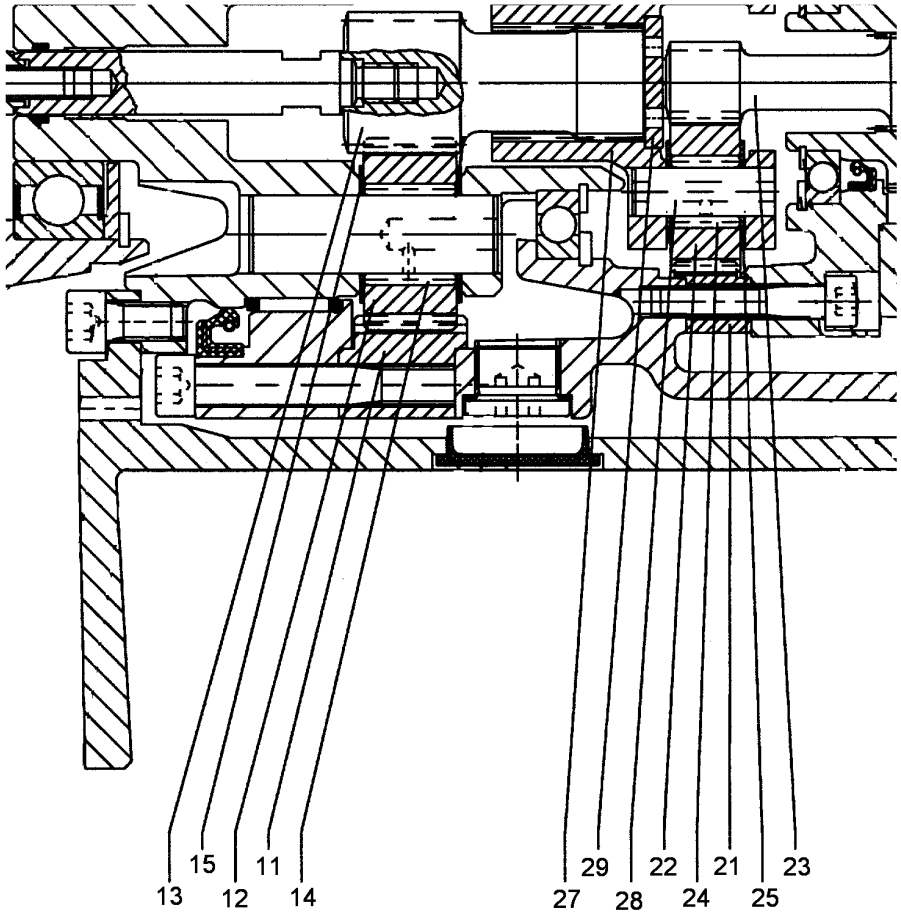

Pos.	Item	Quantity	Description	Bezeichnung	Serie	K
11	512406114	1	INNER WHEEL	INNENRAD		
12	540270614	3	PLANET WHEEL	PLANETENRAD		
13	540270714	1	SUN WHEEL	SONNENRAD		
14	540244214	72	NEEDLES	NADELN		
15	540270814	6	AXIAL WASHER	AXIALSCHEIBE		
21	512406214	1	INNER WHEEL	INNENRAD		
22	540271014	3	PLANET WHEEL	PLANETENRAD		
23	540270914	1	SUN WHEEL	SONNENRAD		
24	540271114	48	NEEDLES	NADELN		
25	540271214	6	WASHER	SCHEIBE		
27	540271314	1	PLANETARY CARRIER	PLANETENTRAEGER		
28	540271414	3	PLANETARY WHEEL AXLE	PLANETENACHSE		
29	540271514	1	WASHER	SCHEIBE		

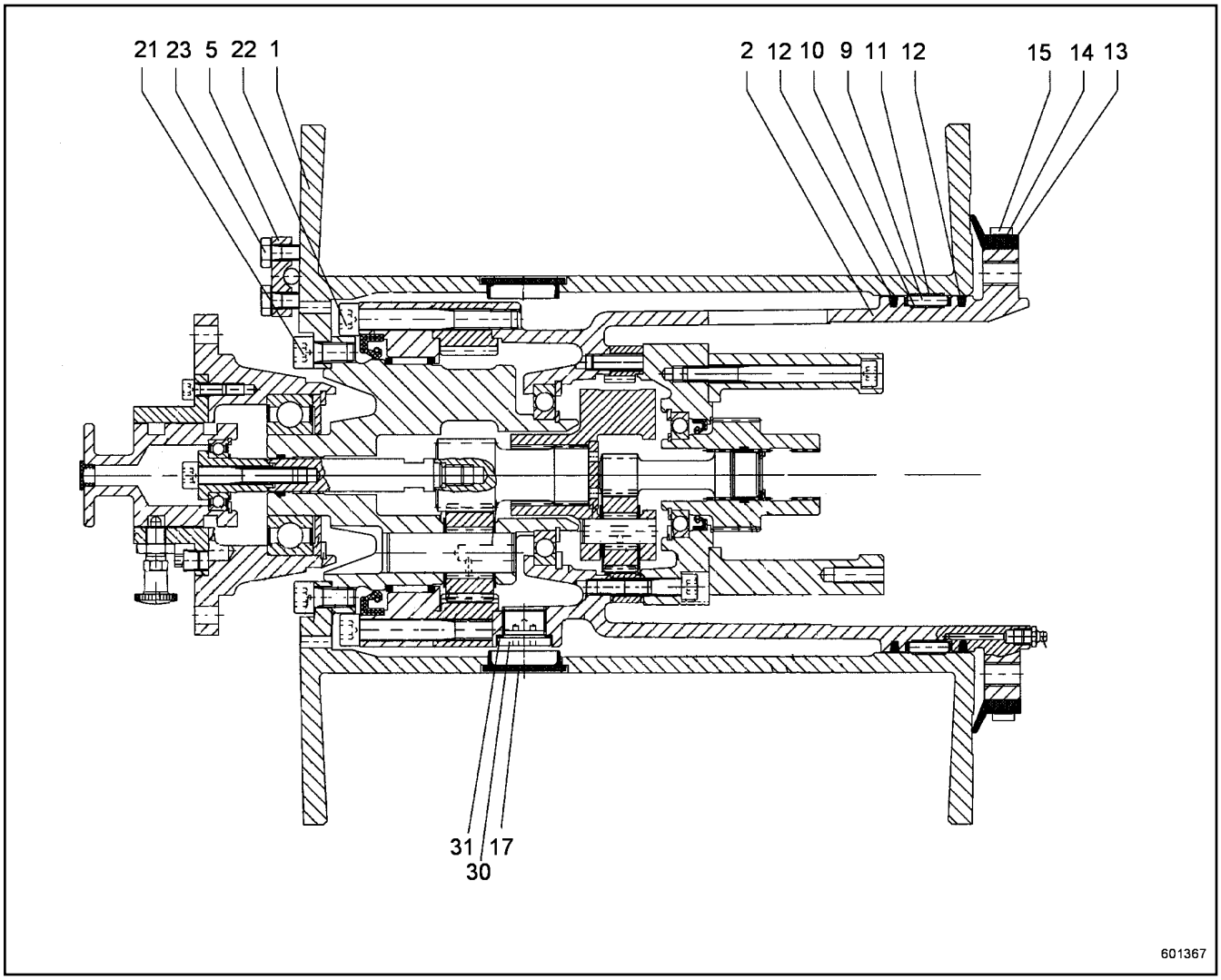

Pos.	Item	Quantity	Description	Bezeichnung	Serie	K
1	540273314	1	ROPE DRUM	SEILTROMMEL		
2	540271614	1	TERMINAL HOUSING	ENDGEHAEUSE		
5	540271714	1	ROPE CLAMP	SEILKLEMME		
9	501532014	1	FLAT CAGE BEARING	FLACHKAEFIG		
10	11278605	1	BEARING	LAGER		
12	10585445	2	FELT STRIP	FILZSTREIFEN		
13	501507014	1	PROFILE CORD	PROFILSCHNUR		
14	501507214	1	FIXING BAND	BEF BAND		
15	501507314	1	SLEEVE 8X0.4	HUELSE		
21	404208814	8	SOCKET HEAD SCREW ISO 4762 M10X20 A4-7	ZYLINDERSCHRAUBE		
22	10539508	6	SOCKET HEAD SCREW ISO 4762 M10X80 A4-7	ZYLINDERSCHRAUBE		
23	485556314	4	SOCKET HEAD SCREW ISO 4762 M8X25 A4-7	ZYLINDERSCHRAUBE		
30	404101608	2	SCREW PLUG DIN 908 M22X1.5 ST	VERSCHLUSSSCHRAUBE		
31	710104514	2	SEALING RING	DICHTRING		

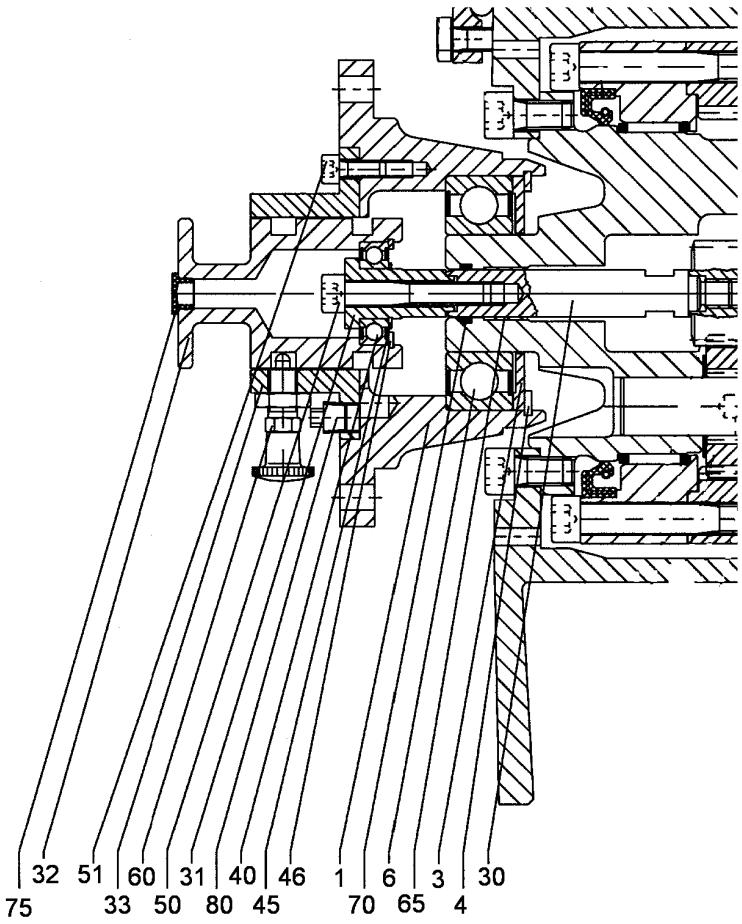

Pos.	Item	Quantity	Description	Bezeichnung	Serie	K
1	540271814	1	FLANGE	FLANSCH		
3	540271914	1	WASHER	SCHEIBE		
4	4281013	1	LOCKING RING DIN 472 80X2.5	SICHERUNGSRING		
6	745906614	1	DEEP GROOVE BALL BEARING	RILLENKUGELLAGER		
30	540272014	1	SHAFT	WELLE		
31	540272114	1	PULL ROD	ZUGSTANGE		
32	540272214	1	SWITCHING JACKET	SCHALTHUELSE		
33	540272314	1	NOTCHED SLEEVE	RASTHUELSE		
40	745128314	1	DEEP GROOVE BALL BEARING	RILLENKUGELLAGER		
45	428001014	1	LOCKING RING DIN 471 17X1	SICHERUNGSRING		
46	428100914	1	LOCKING RING DIN 472 35X1.5	SICHERUNGSRING		
50	10539486	1	SOCKET HEAD SCREW ISO 4762 M8X50 A4-7	ZYLINDERSCHRAUBE		
51	404250914	3	SOCKET HEAD SCREW ISO 4762 M6X16 A4-7	ZYLINDERSCHRAUBE		
60	540272414	1	STOP BOLT M10X1	RASTBOLZEN		
70	726469014	1	O-RING	O-RING		
80	403900101	1	SCREW PLUG DIN 906 M10X1 ST	VERSCHLUSSSCHRAUBE		

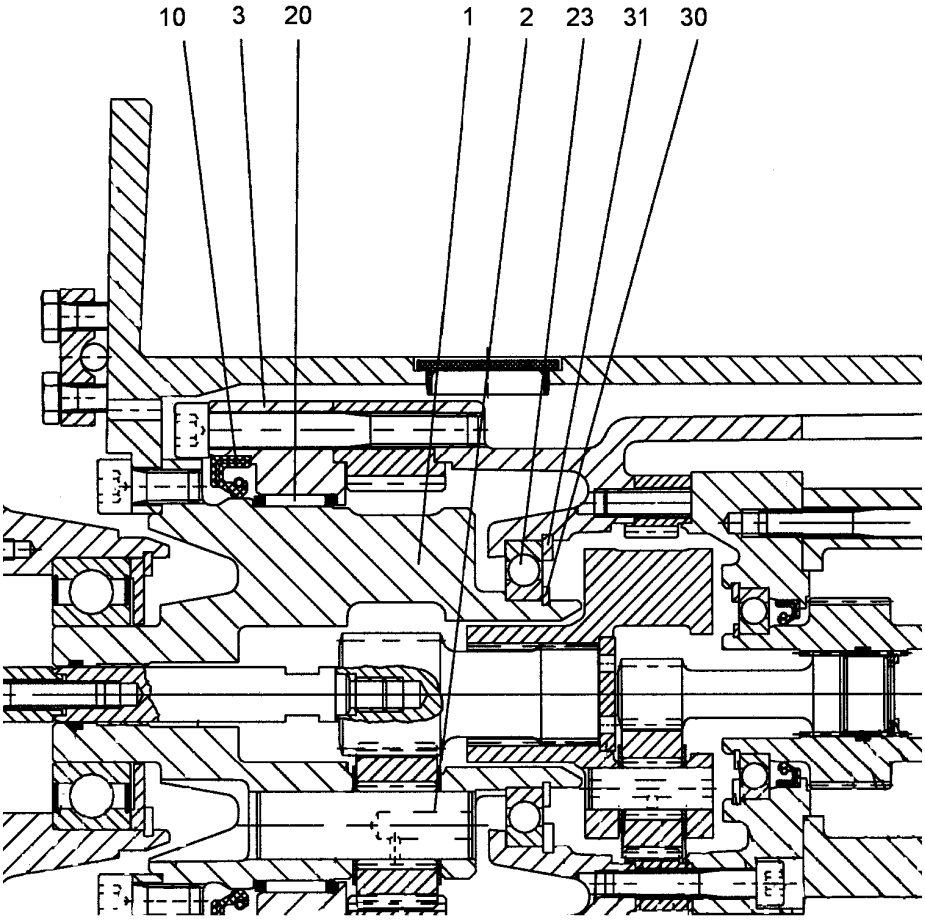

Pos.	Item	Quantity	Description	Bezeichnung	Serie	K
1	540272514	1	PLANETARY CARRIER	PLANETENTRAEGER		
2	540272614	3	PLANETARY WHEEL AXLE	PLANETENACHSE		
3	540272714	1	BEARING RING	LAGERRING		
10	710031014	1	SEALING RING	DICHTRING		
20	747462814	1	NEEDLE CAGE	NADELKAEFIG		
23	745907514	1	DEEP GROOVE BALL BEARING	RILLENKUGELLAGER		
30	428004514	1	LOCKING RING DIN 471 55X2	SICHERUNGSRING		
31	4281016	1	LOCKING RING DIN 472 90X3	SICHERUNGSRING		

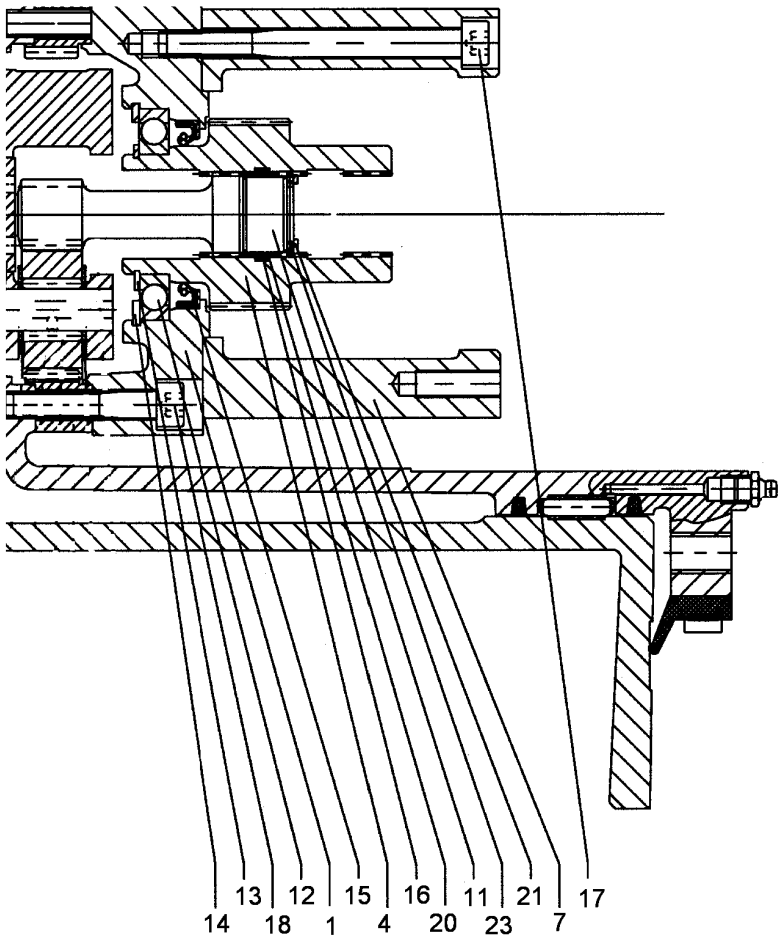

Pos.	Item	Quantity	Description	Bezeichnung	Serie	K
1	540272814	1	BRAKE FLANGE	BREMSFLANSCH		
4	540272914	1	DRIVE SLEEVE	ANTRIEBSHUELSE		
7	540273014	1	MOTOR FLANGE	MOTORFLANSCH		
11	540273114	1	WASHER	SCHEIBE		
12	745194714	1	DEEP GROOVE BALL BEARING	RILLENKUGELLAGER		
13	428002914	1	LOCKING RING DIN 471 35X1.5	SICHERUNGSRING		
14	4281037	1	LOCKING RING DIN 472 62X2	SICHERUNGSRING		
15	710020114	1	SEALING RING	DICHTRING		
16	726424214	1	O-RING	O-RING		
17	10514797	6	SOCKET HEAD SCREW ISO 4762 M8X90 A4-7	ZYLINDERSCHRAUBE		
18	10539485	6	SOCKET HEAD SCREW ISO 4762 M8X45 A4-7	ZYLINDERSCHRAUBE		
20	540273214	1	SPIRAL BACK-UP RING	SPIRALBACKRING		
21	428107714	1	LOCKING RING DIN 472 23X1.2	SICHERUNGSRING		
23	422014001	3	SHIM RING DIN 988 16X22X1 ST	PASSSCHEIBE		

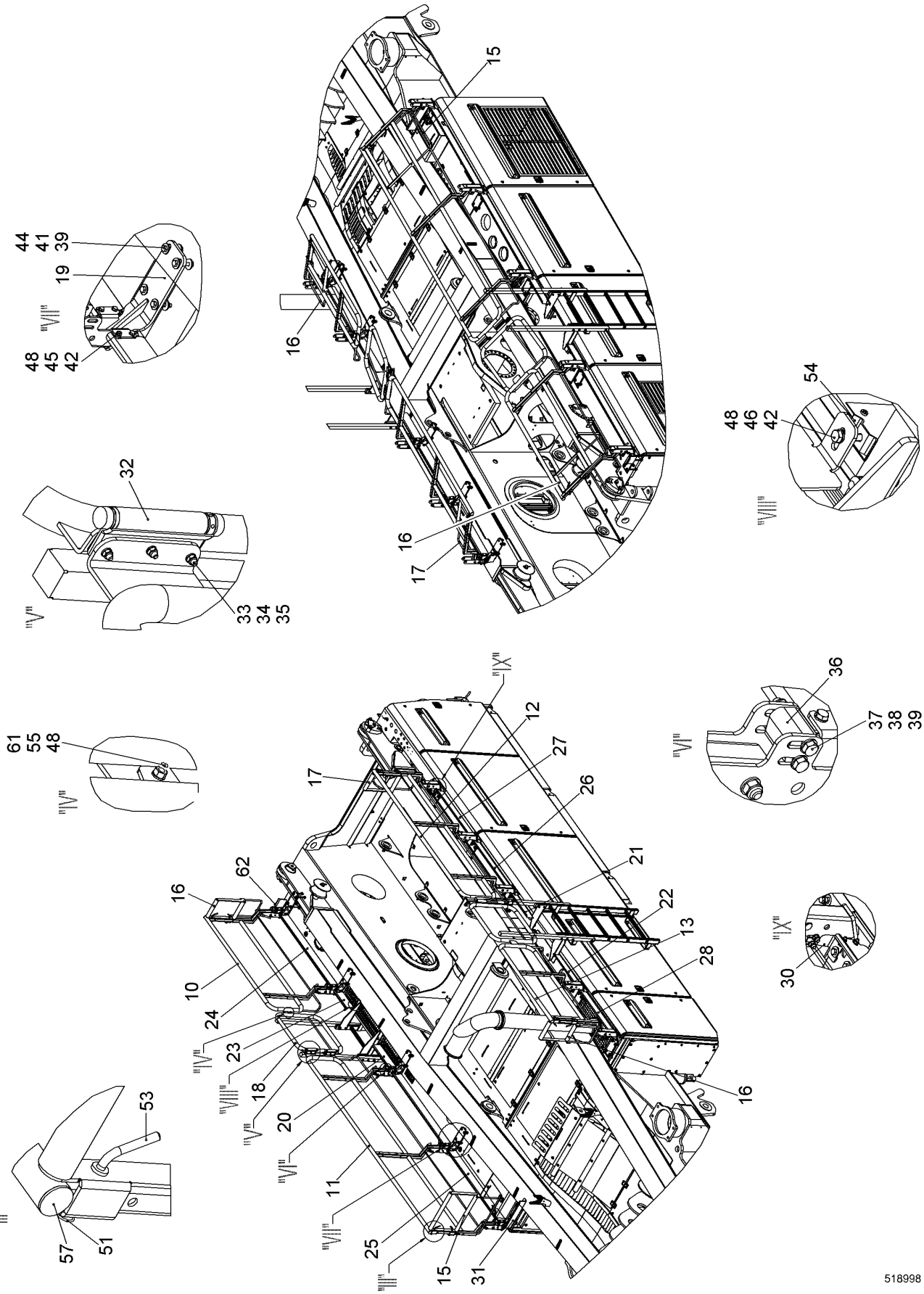

21.6.2017 518998	**138406_ETK_001**	639 (1/4)
LIEBHERR	**ROOF RAILING RFK** **DACHGELAENDER NRS**	**10 55 372 1**

Pos.	Item	Quantity	Description	Bezeichnung	Serie	K
10	10585923	1	RAILING ST.CONST.	GELAENDER SCHWK		
11	10585924	1	RAILING ST.CONST.	GELAENDER SCHWK		
12	10585925	1	RAILING ST.CONST.	GELAENDER SCHWK		
13	10585926	1	RAILING ST.CONST.	GELAENDER SCHWK		
15	10574837	1	BRACKET ST.CONST.	BUEGEL SCHWK		
16	10585933	2	BRACKET ST.CONST.	BUEGEL SCHWK		
17	10585936	1	BRACKET ST.CONST.	BUEGEL SCHWK		
18	10559163	2	RAILING ST.CONST.	GELAENDER SCHWK		
19	10349402	10	RAILING FOOT	GELAENDERFUSS		
20	10585909	1	FOOT STRIP	FUSSLEISTE		
21	10585910	1	FOOT STRIP	FUSSLEISTE		
22	10585911	1	FOOT STRIP	FUSSLEISTE		
23	10585912	1	FOOT STRIP	FUSSLEISTE		
24	10585913	2	FOOT STRIP	FUSSLEISTE		
25	10585914	1	FOOT STRIP	FUSSLEISTE		
26	10585915	1	FOOT STRIP	FUSSLEISTE		
27	10585916	1	FOOT STRIP	FUSSLEISTE		
28	10585917	1	FOOT STRIP	FUSSLEISTE		
30	10585919	1	FOOT STRIP	FUSSLEISTE		
31	10585920	1	FOOT STRIP	FUSSLEISTE		
32	10509153	4	SPIRAL SPRING HINGE PLATE	SPIRALFEDER TUERBAND		
33	408606314	24	COUNTERSUNK SCREW DIN 7991 M6X20 A4-7	SENKSCHRAUBE		

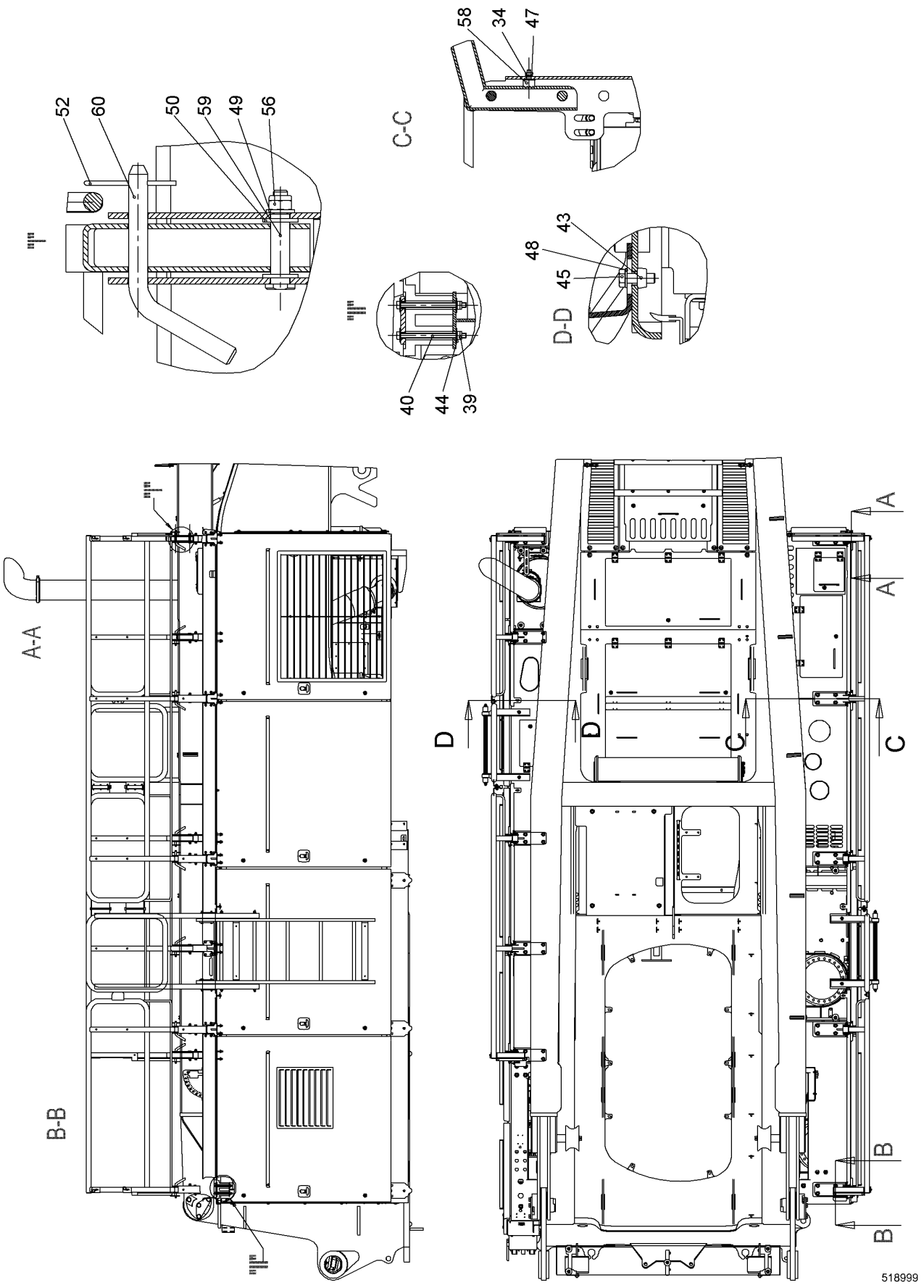

21.6.2017 518999	**138406_ETK_001**	641 (3/4)
LIEBHERR	**ROOF RAILING RFK** **DACHGELAENDER NRS**	**10 55 372 1**

Pos.	Item	Quantity	Description	Bezeichnung	Serie	K
34	420000414	34	WASHER ISO 7089 6 A4	SCHEIBE		
35	10540492	24	HEX NUT ISO 10511 M6 A4	SECHSKANTMUTTER		
37	420001114	32	WASHER ISO 7089 10 A4	SCHEIBE		
38	406527914	16	HEX SCREW ISO 4017 M10X80 A4-70	SECHSKANTSCHRAUBE		
39	10540494	54	HEX NUT ISO 10511 M10 A4	SECHSKANTMUTTER		
40	10538826	4	HEX SCREW ISO 4017 M10X140 A4-70	SECHSKANTSCHRAUBE		
41	10539959	34	HEX SCREW ISO 4017 M10X60 A4-70	SECHSKANTSCHRAUBE		
42	10540493	40	HEX NUT ISO 10511 M8 A4	SECHSKANTMUTTER		
43	485550114	2	CAGE NUT M8-RR-123-47	KAEFIGMUTTER		
44	10540511	78	WASHER ISO 7093-1 10 A4	SCHEIBE		
45	406501414	40	HEX SCREW ISO 4017 M8X25 A4-70	SECHSKANTSCHRAUBE		
46	406508014	2	HEX SCREW ISO 4017 M8X45 A4-70	SECHSKANTSCHRAUBE		
47	411517114	10	HEX NUT ISO 4032 M6 A4-70	SECHSKANTMUTTER		
48	420001014	82	WASHER ISO 7089 8 A4	SCHEIBE		
49	4901782	10	WASHER ISO 7089 12 A4	SCHEIBE		
50	420053101	20	WASHER AEHNL.ISO 7089 16 PA 6.6	SCHEIBE		
51	433206014	8	SPRING PLUG DIN 11024 2.5	FEDERSTECKER		
52	433206214	10	SPRING PLUG DIN 11024 4	FEDERSTECKER		
53	993352014	8	PLUG	STECKER		
54	725810414	2	RETAINING CLIP UPPER PART	HALTEKLAMMER OT		
55	726616208	2	RUBBER MOUNT	LAGER GUMMI		
56	10540495	10	HEX NUT ISO 10511 M12 A4	SECHSKANTMUTTER		
57	779016414	4	BLANKING PLUG	VERSCHLUSSSTOPFEN		
58	726616614	10	RUBBER MOUNT	LAGER GUMMI		
59	950387314	10	PIN 15.9X59X25X83 LHRD750-30;10019758	BOLZEN		
60	971230303	10	PLUG	STECKER		
61	411515014	2	HEX NUT ISO 4032 M8 A4-70	SECHSKANTMUTTER		
62	10586854	1	FOOT STRIP	FUSSLEISTE		

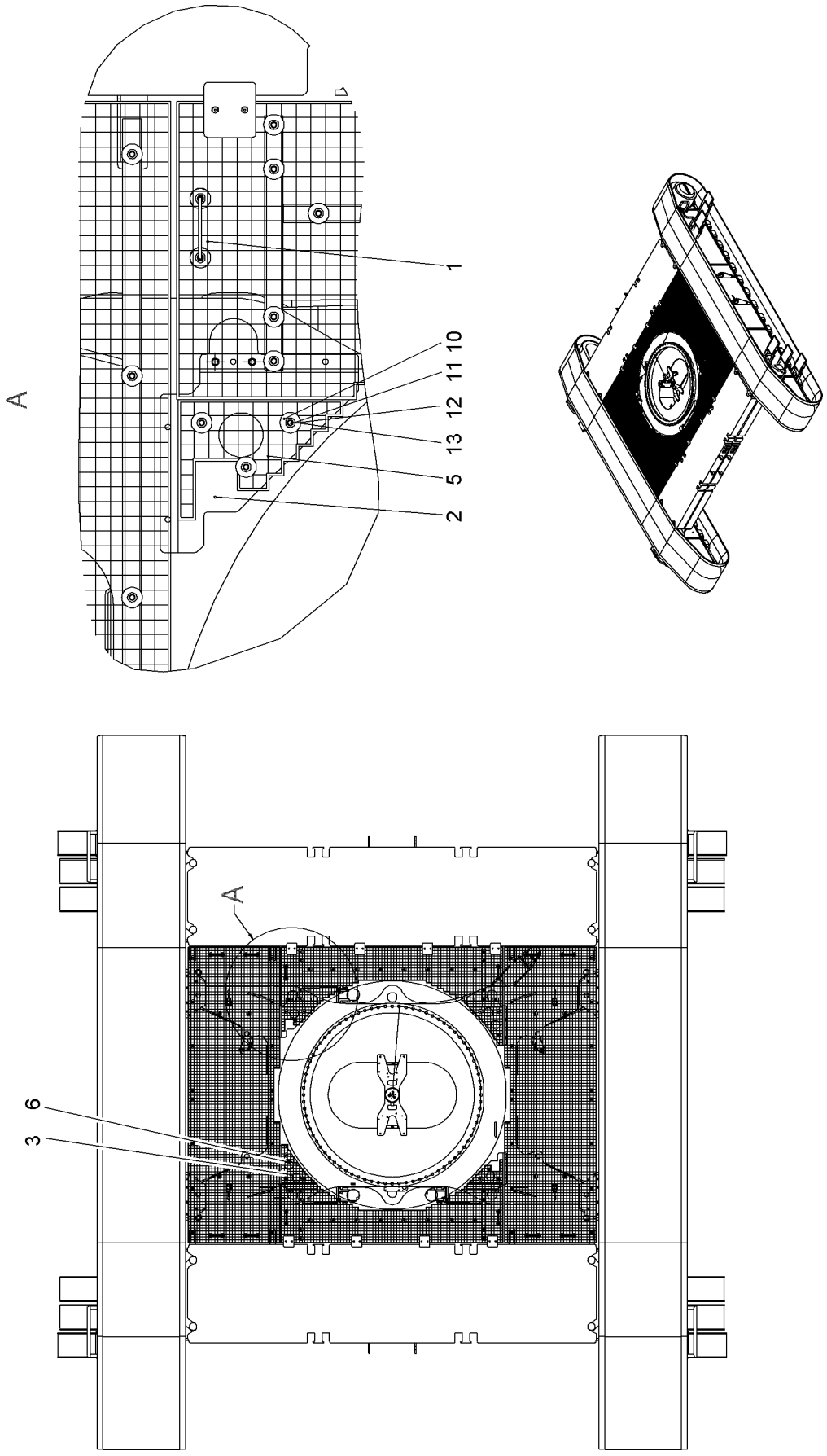
A
1
10
11
12
13
5
2
A
6
3
518402

Pos.	Item	Quantity	Description	Bezeichnung	Serie	K
1	11245755	2	PEDESTAL ⇨ ❑ 645	PODEST		
2	11245759	2	CONSOLE ST. CONST.	KONSOLE SCHWK		
3	11245922	2	CONSOLE ST. CONST.	KONSOLE SCHWK		
5	11245766	2	GRATING	GITTERROST		
6	11245767	2	GRATING	GITTERROST		
10	10098157	12	DISH	TELLER		
11	10538807	12	HEX SCREW ISO 4017 M8X50 A4-70	SECHSKANTSCHRAUBE		
12	10540493	12	HEX NUT ISO 10511 M8 A4	SECHSKANTMUTTER		
13	420001014	12	WASHER ISO 7089 8 A4	SCHEIBE		

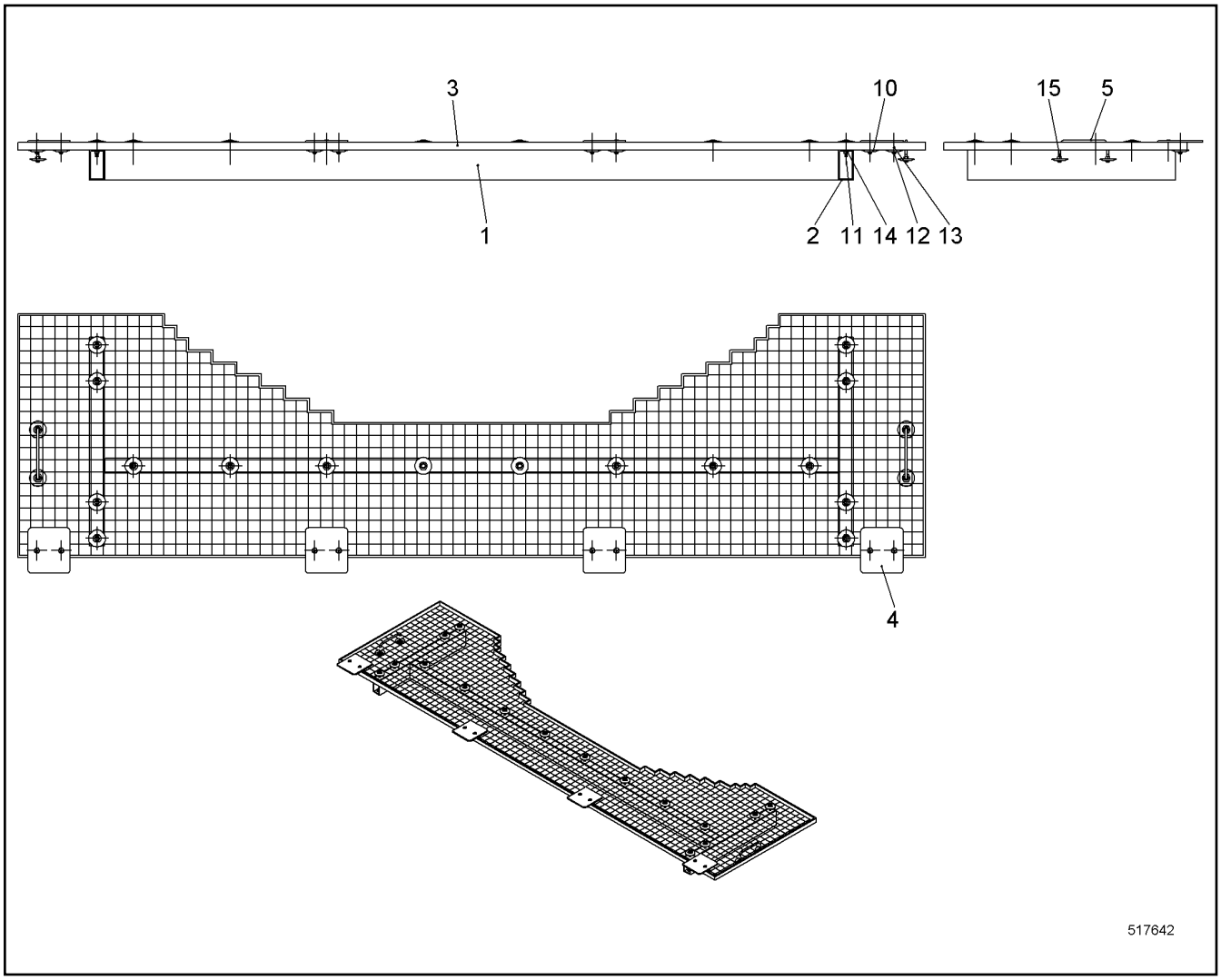

Pos.	Item	Quantity	Description	Bezeichnung	Serie	K
1	11245756	1	BRACING TUBE	TRAGROHR		
2	11245757	2	BRACING TUBE	TRAGROHR		
3	11245758	1	GRATING	GITTERROST		
4	11245760	4	WP	WP		
5	958478414	2	BRACKET	BUEGEL		
10	10098157	28	DISH	TELLER		
11	10538807	16	HEX SCREW ISO 4017 M8X50 A4-70	SECHSKANTSCHRAUBE		
12	10540493	12	HEX NUT ISO 10511 M8 A4	SECHSKANTMUTTER		
13	408601008	8	COUNTERSUNK SCREW DIN 7991 M8X45 8.8;	SENKSCHRAUBE		
14	485569314	16	HEX NUT EN 1661 M8 A2-70	SECHSKANTMUTTER		
15	411515014	4	HEX NUT ISO 4032 M8 A4-70	SECHSKANTMUTTER		

LIEBHERR

21.6.2017
518196

138406_ETK_001

ADDNL.FLOODLIGHT SUPERSTR. RFK
ZUSATZSCHEINWERFER OW NRS

646 (1/6)

10 52 547 1

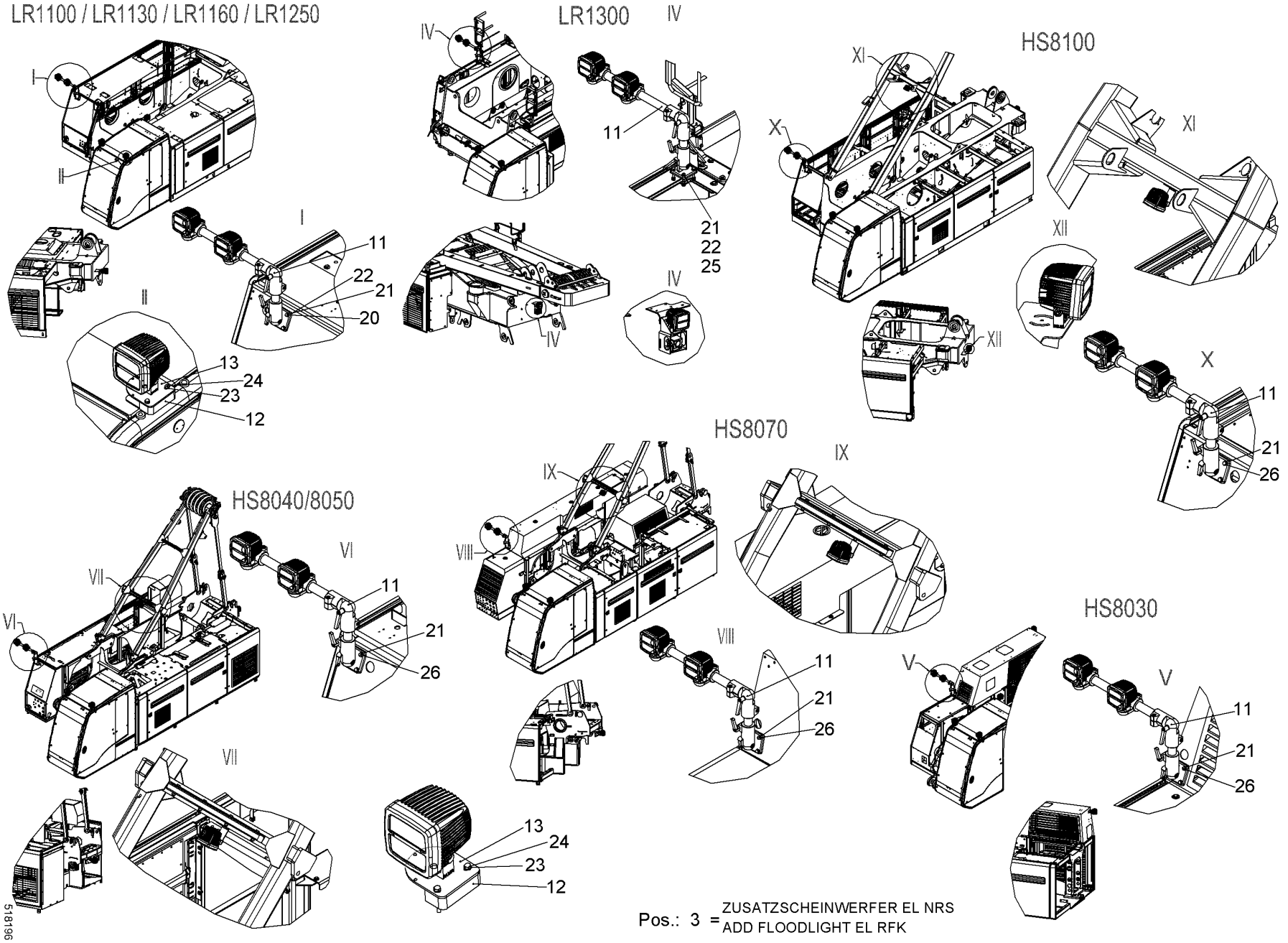

Pos.: 3 = ZUSATZSCHEINWERFER EL NRS
ADD FLOODLIGHT EL RFK

Pos.	Item	Quantity	Description	Bezeichnung	Serie	K
3	10593712	1	ADD FLOODLIGHT EL RFK ⇨ ❑ 652	ZUSATZSCHEINWERFER EL NRS		
11	11228708	1	SEARCHLIGHT SUPPORT CPL ⇨ ❑ 653	SCHEINWERFERHALTER KPL		
12	790509714	2	SPACER BRACKET	DISTANZHALTER		
13	11231072	2	BRACKET	BUEGEL		
20	406527814	4	HEX SCREW ISO 4017 M10X40 A4-70	SECHSKANTSCHRAUBE		

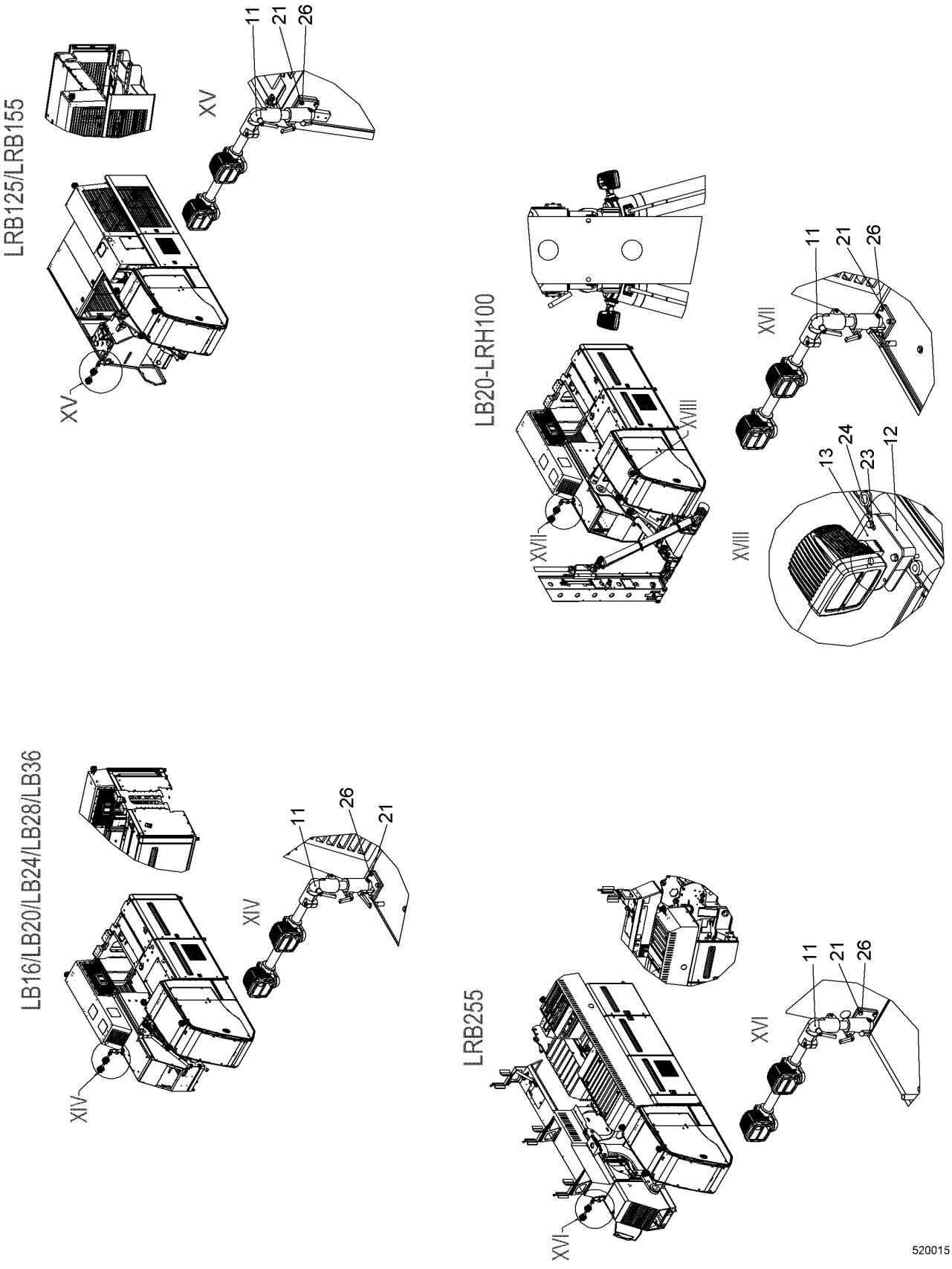
LRB125/LRB155
XV
11
21
26
XV
LB20-LRH100
XVII
XVIII
11
21
26
13
24
23
12
XVII
XVIII
LB16/LB20/LB24/LB28/LB36
XIV
11
26
21
XIV
LRB255
XVI
11
21
26
XVI
520015

Pos.	Item	Quantity	Description	Bezeichnung	Serie	K
21	420001114	8	WASHER ISO 7089 10 A4	SCHEIBE		
22	10540494	4	HEX NUT ISO 10511 M10 A4	SECHSKANTMUTTER		
23	420000414	4	WASHER ISO 7089 6 A4	SCHEIBE		
24	10526837	4	HEX SCREW ISO 4017 M6X50 A4-70	SECHSKANTSCHRAUBE		

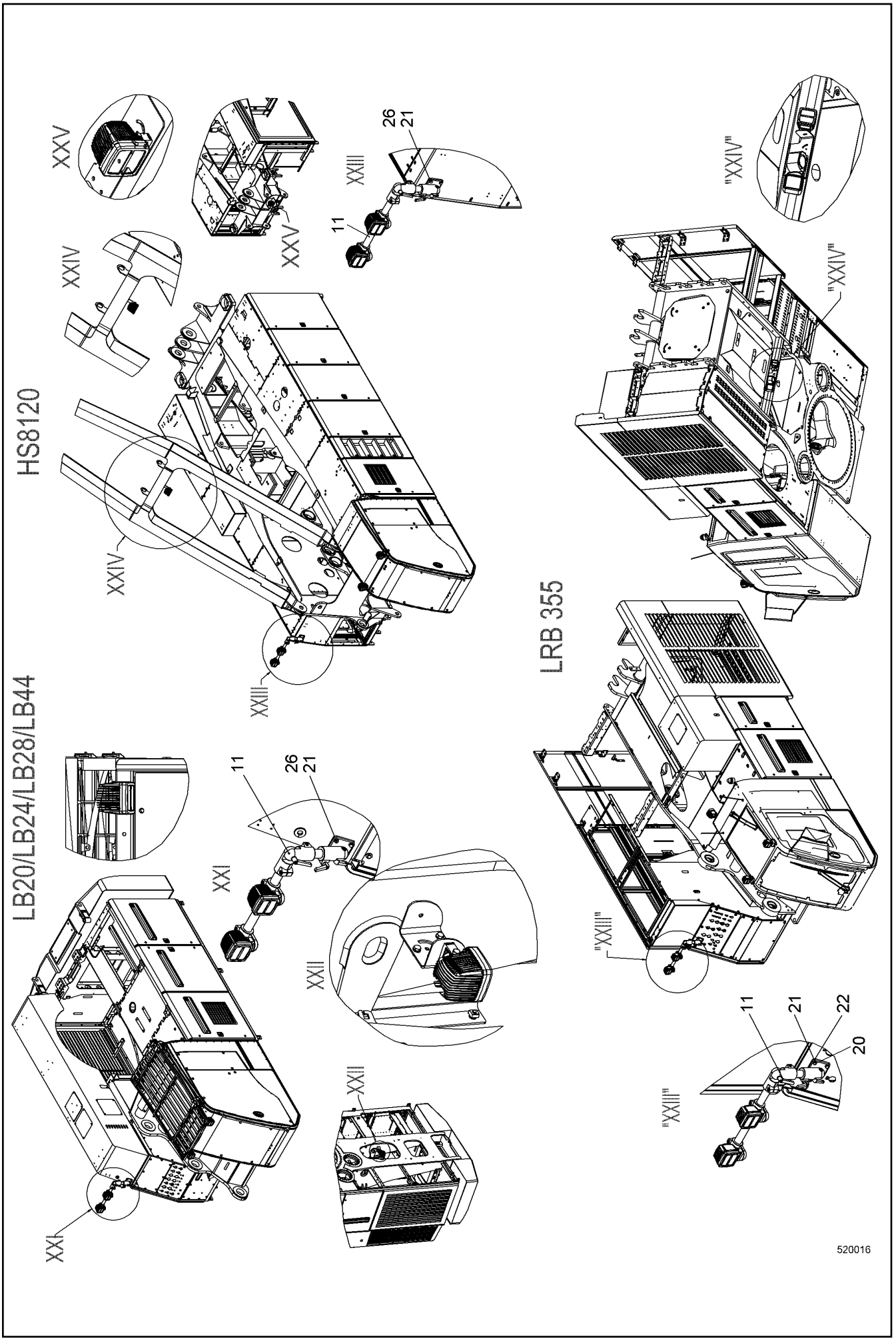

21.6.2017 520016	**138406_ETK_001**	650 (5/6)
LIEBHERR	**ADDNL.FLOODLIGHT SUPERSTR. RFK** **ZUSATZSCHEINWERFER OW NRS**	**10 52 547 1**

Pos.	Item	Quantity	Description	Bezeichnung	Serie	K
25	406511214	4	HEX SCREW ISO 4017 M10X70 A4-70	SECHSKANTSCHRAUBE		
26	406511614	4	HEX SCREW ISO 4017 M10X30 A4-70	SECHSKANTSCHRAUBE		

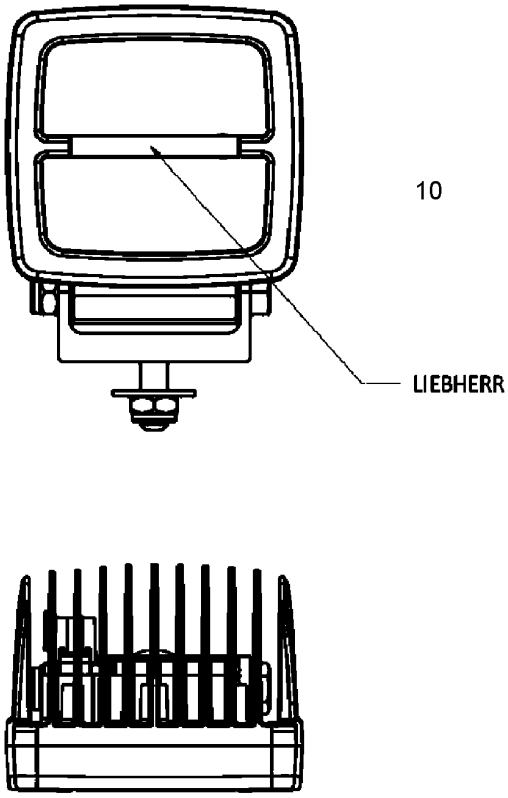

Pos.	Item	Quantity	Description	Bezeichnung	Serie	K
10	10590423	6	WORK LIGHT	ARBEITSSCHEINWERFER		

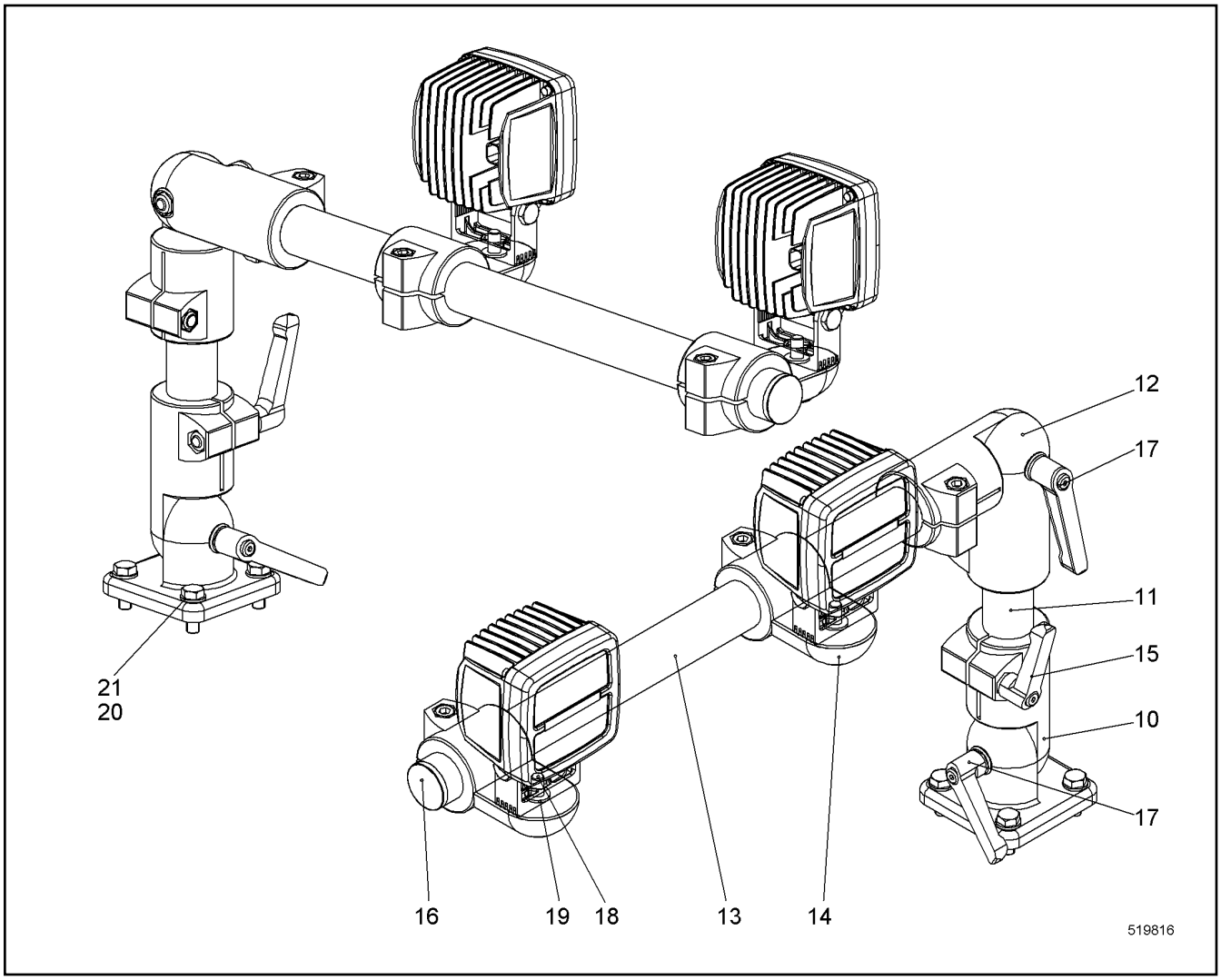

Pos.	Item	Quantity	Description	Bezeichnung	Serie	K
10	11228707	1	PIVOT	GELENK		
11	11228802	1	TUBE	ROHR		
12	11228804	1	PIVOT	GELENK		
13	11228803	1	TUBE	ROHR		
14	11228806	2	BUTT STRAP	LASCHE		
15	11228775	1	CLAMPING LEVER	KLEMMHEBEL		
16	11228794	1	STOP PLUG	STOPFEN		
17	11228777	2	CLAMPING LEVER	KLEMMHEBEL		
18	4043127	2	SOCKET HEAD SCREW ISO 4762 M10X40 10.9	ZYLINDERSCHRAUBE		
19	420005414	2	WASHER AEHNL.ISO 7089 10 PA 6.6	SCHEIBE		
20	406511614	4	HEX SCREW ISO 4017 M10X30 A4-70	SECHSKANTSCHRAUBE		
21	420001114	4	WASHER ISO 7089 10 A4	SCHEIBE		

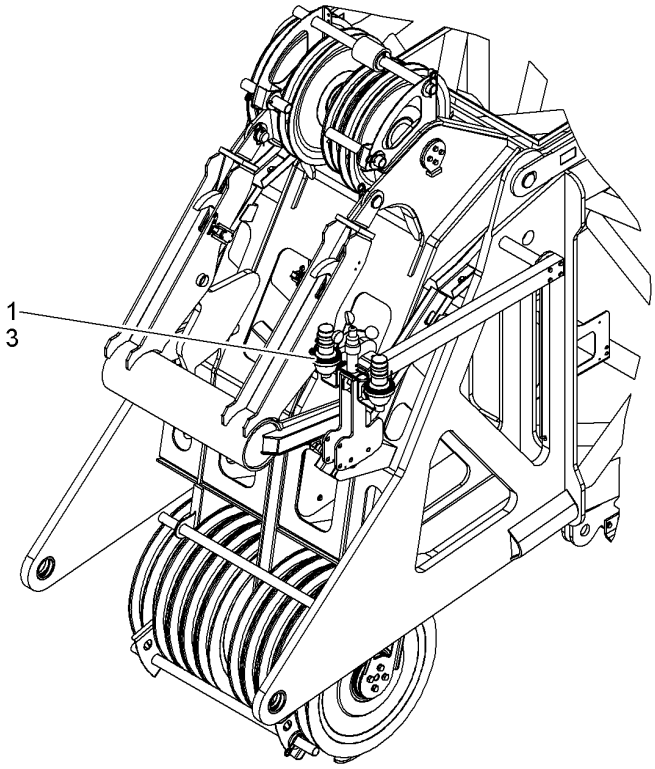

515864

Pos.	Item	Quantity	Description	Bezeichnung	Serie	K
1	11215462	1	WARNING LIGHT INSTALL RFK ⇨ ❑ 655	HELILAMPE EINBAU NRS		
3	11215298	1	WARNING LIGHT EL RFK ⇨ ❑ 656	WARNLICHT EL NRS		

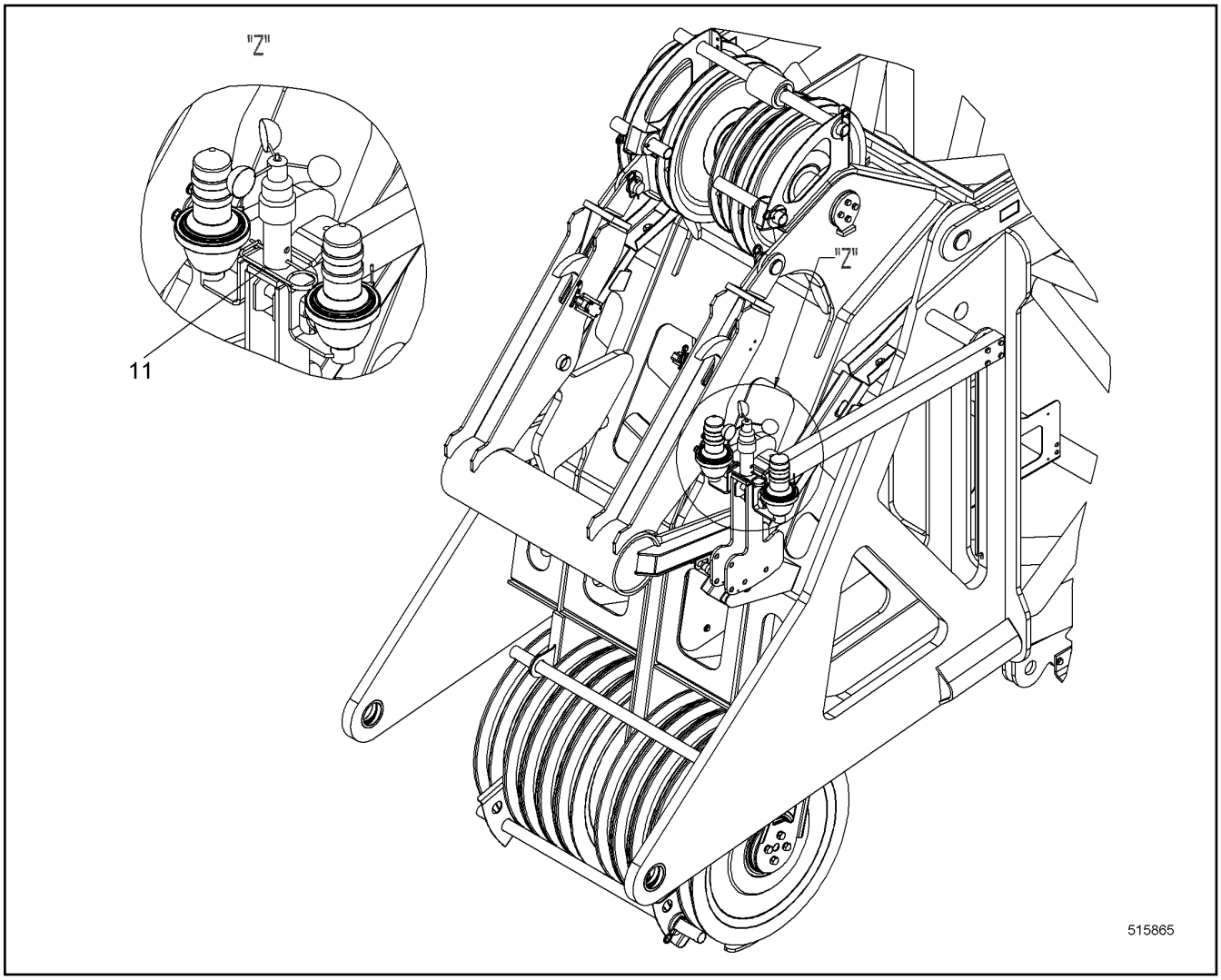

Pos.	Item	Quantity	Description	Bezeichnung	Serie	K
11	433105414	1	RETAINING SPRING 4.5 MM	SICHERUNGSFEDER		

OHNE BILD
WITHOUT ILLUSTRATION
SANS PLANCHE
SIN FIG.
SEM ILUSTRAÇÃO
БЕЗ ИЗОБРАЖЕНИЯ

600000

Pos.	Item	Quantity	Description	Bezeichnung	Serie	K
17	992497814	1	BOOM ELECTRICS ⇨ ❑ 657	AL EL		
50	11215302	1	CABIN REM. EL ⇨ ❑ 658	KABINE REST EL		

OHNE BILD
WITHOUT ILLUSTRATION
SANS PLANCHE
SIN FIG.
SEM ILUSTRAÇÃO
БЕЗ ИЗОБРАЖЕНИЯ

600000

Pos.	Item	Quantity	Description	Bezeichnung	Serie	K
10	992415314	1	HOLDER	HALTER		
31	10226144	2	OBSTRUCTION LIGHT	HINDERNISLEUCHTE		
35	10021236	2	SOCKET SHELL	TUELLENGEHAEUSE		
36	605616014	2	PLUG INSERT	STECKEREINSATZ		
37	602440101	2	CABLE GLAND	KABELVERSCHRAUBUNG		
38	602620201	2	REDUCER	REDUZIERUNG		

OHNE BILD
WITHOUT ILLUSTRATION
SANS PLANCHE
SIN FIG.
SEM ILUSTRAÇÃO
БЕЗ ИЗОБРАЖЕНИЯ

600000

Pos.	Item	Quantity	Description	Bezeichnung	Serie	K
21	10351100	1	CABLE PROTECTION SWITCH	LEITUNGSSCHUTZSCHALTER		
36	6001593	1	LUMINOUS SWITCH CONTACT SENDER	LEUCHTSCHALTKONTAKTGEBE		
37	606667214	1	ILLUMINATED BUTTON	LEUCHTTASTER		
38	260514602	1	LED LAMP	LED-LAMPE		

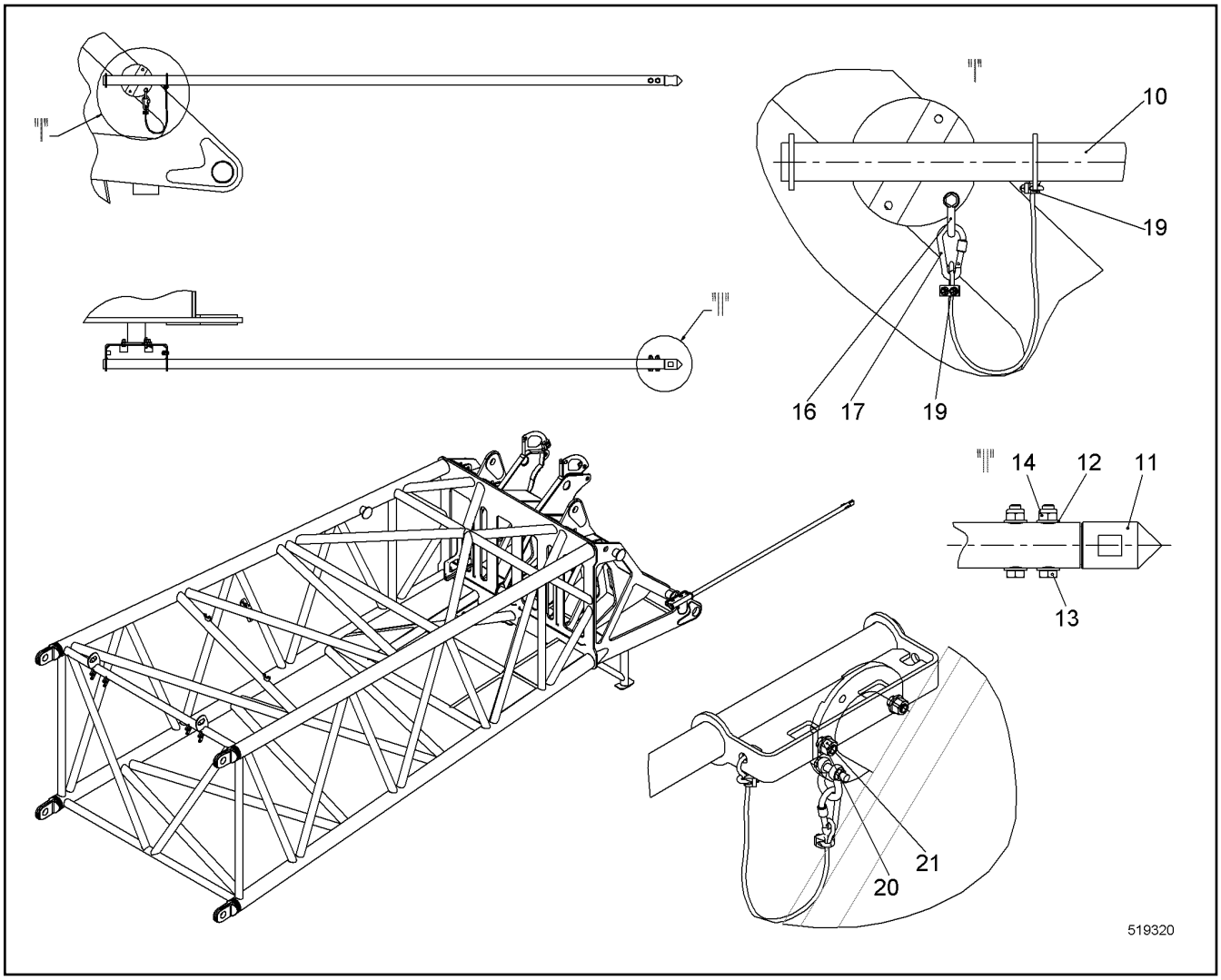

Pos.	Item	Quantity	Description	Bezeichnung	Serie	K
10	11271098	1	HOLDER	HALTER		
11	10574725	1	TIP	SPITZE		
12	4901782	6	WASHER ISO 7089 12 A4	SCHEIBE		
13	406527714	2	HEX SCREW ISO 4017 M12X70 A4-70	SECHSKANTSCHRAUBE		
14	10540495	2	HEX NUT ISO 10511 M12 A4	SECHSKANTMUTTER		
16	11280746	1	SHACKLE	SCHAEKEL		
17	10508505	1	SNAP HOOK	KARABINERHAKEN		
18	773400508	0.6	ROPE	SEIL		
19	773910114	2	ROPE CLAMP	SEILKLEMME		
20	406517314	2	HEX SCREW ISO 4017 M12X30 A4-70	SECHSKANTSCHRAUBE		
21	411516914	2	HEX NUT ISO 4032 M12 A4-70	SECHSKANTMUTTER		

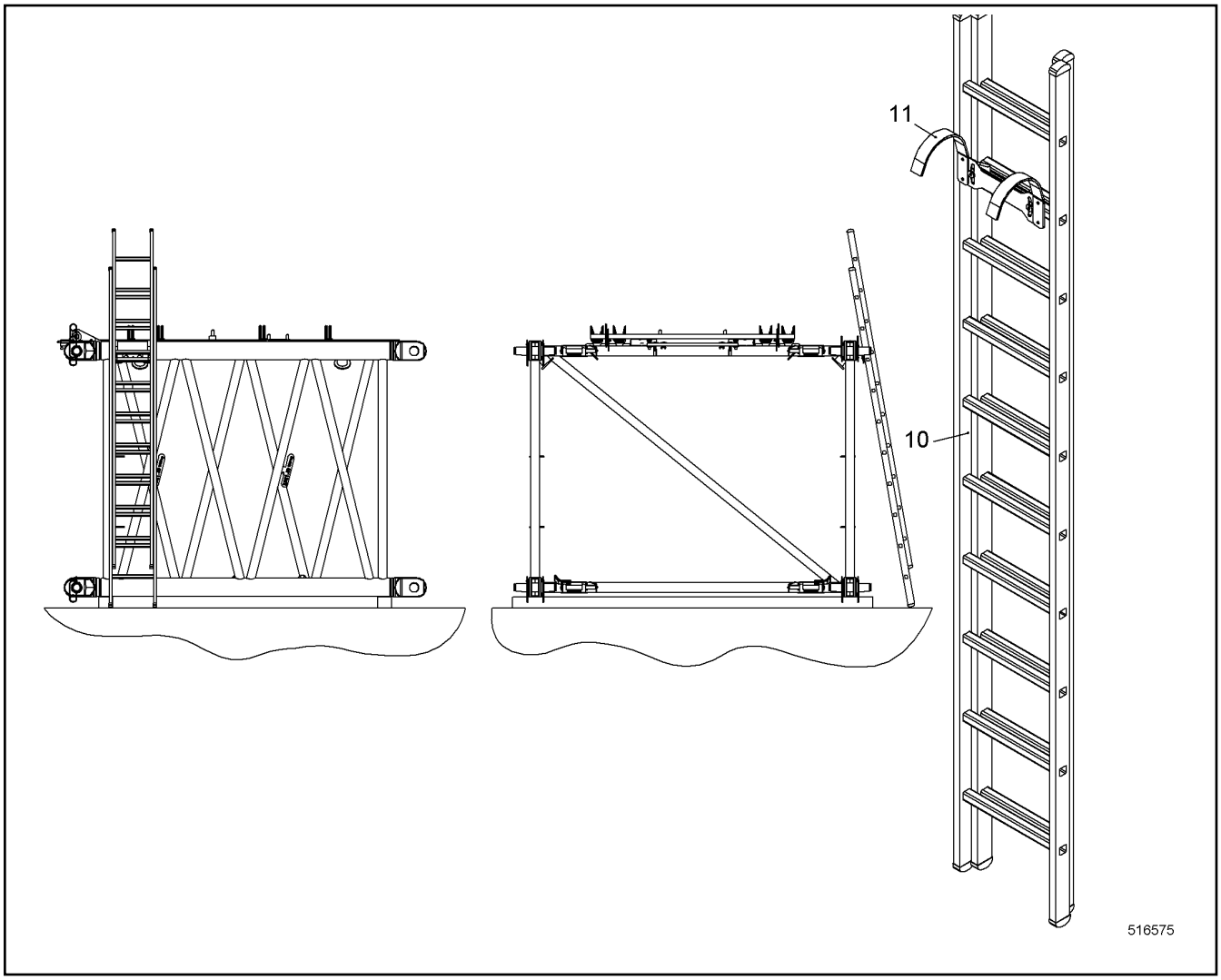

Pos.	Item	Quantity	Description	Bezeichnung	Serie	K
10	11237423	1	LADDER	LEITER		
11	10584890	1	LADDER BRACKET	LEITERHALTERUNG		

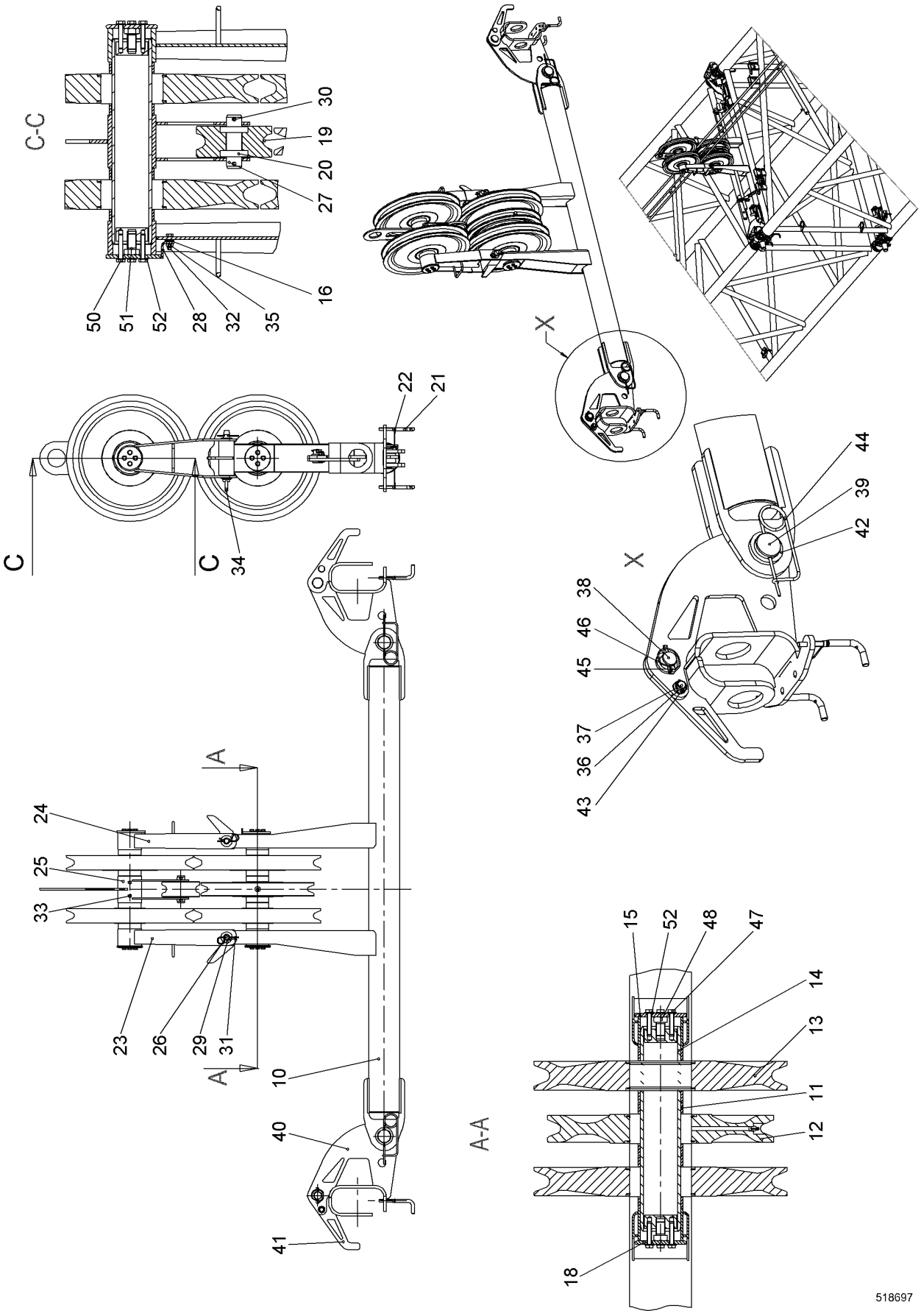
C-C
30
19
20
27
16
50
51
52
28
32
35
X
22
21
C
C
34
44
39
42
X
38
46
45
37
36
43
A
24
25
33
23
26
29
31
A
10
40
41
A-A
15
52
48
47
14
13
11
12
18
518697

Pos.	Item	Quantity	Description	Bezeichnung	Serie	K
10	991011714	1	ROPE GUIDE WELD.CONST.	SEILFUEHRUNG SCHWK		
11	949740614	10	BUSHING 90.5/101.6X26 LHR355-20;10019728	BUCHSE		
12	915523714	1	ROPE PULLEY CPL	SEILROLLE KPL		
13	914941914	4	ROPE PULLEY CPL	SEILROLLE KPL		
14	970901603	2	AXLE ST.CONST.	ACHSE SCHWK		
16	420001114	6	WASHER ISO 7089 10 A4	SCHEIBE		
19	970961303	1	ROLLER	ROLLE		
20	745120514	2	DEEP GROOVE BALL BEARING	RILLENKUGELLAGER		
21	956049414	4	TOGGLE	KNEBEL		
22	773400314	2	STEEL WIRE ROPE	STAHLDRAHTSEIL		
23	919014814	1	OUTRIGGER	ABSTUETZUNG		
24	919017314	1	OUTRIGGER	ABSTUETZUNG		
25	919022714	1	ROLLER CARRIER	ROLLENTRAEGER		
26	942594714	2	PIN EN 10060 28X220X192 X20CR13+QT;EN 1	BOLZEN		
27	953305103	1	PIN 35X 120 LHRD750-30;10019758	BOLZEN		
28	971323803	1	WP	WP		
29	420002601	4	WASHER ISO 7089 27	SCHEIBE		
30	433009014	2	SPLIT PIN ISO 1234 8X56 A4	SPLINT		
31	433206314	2	SPRING PLUG DIN 11024 5	FEDERSTECKER		
32	406501314	2	HEX SCREW ISO 4017 M8X30 A4-70	SECHSKANTSCHRAUBE		
33	10538806	2	HEX SCREW ISO 4017 M8X10 A4-70	SECHSKANTSCHRAUBE		
34	402600314	2	RING BOLT DIN 580 M12 C15E;EN 10084	RINGSCHRAUBE		
35	10540493	2	HEX NUT ISO 10511 M8 A4	SECHSKANTMUTTER		
36	421101714	2	WASHER DIN EN 28738 20 ST;	SCHEIBE		
37	11949153	2	PIN 30X46 LHRD900-40;10019758	BOLZEN		
38	485568414	2	PIN 48X58 LHRD900-40;10019758	BOLZEN		
39	11949158	2	PIN 68X105 LHRD900-40;10019758	BOLZEN		
40	991011914	2	FORK ST.CONST.	GABEL SCHWK		
41	991012214	2	FORK ST.CONST.	GABEL SCHWK		
42	421103514	2	WASHER DIN EN 28738 60 ST;	SCHEIBE		
43	485565814	2	SAFETY PLUG W HINGE-LID 4X27	SICHERHEITSKLAPPSTECKER		
44	433105008	2	RETAINING SPRING DIN 2194 6MM FS	SICHERUNGSFEDER		
45	10098106	2	SAFETY PLUG W HINGE-LID 10X55	SICHERHEITSKLAPPSTECKER		
46	421102914	2	WASHER DIN EN 28738 36 ST;	SCHEIBE		
47	406518614	8	HEX SCREW ISO 4017 M10X50 A4-70	SECHSKANTSCHRAUBE		
48	10543918	2	HEX SCREW ISO 4017 M20X30 10.9	SECHSKANTSCHRAUBE		
50	10538822	8	HEX SCREW ISO 4017 M10X55 A4-70	SECHSKANTSCHRAUBE		
51	10543919	2	HEX SCREW ISO 4017 M20X35 10.9	SECHSKANTSCHRAUBE		
52	10536580	16	WEDGE LOCK WASHER M10 254 SMO;EN 10	KEILSICHERUNGSSCHEIBE		

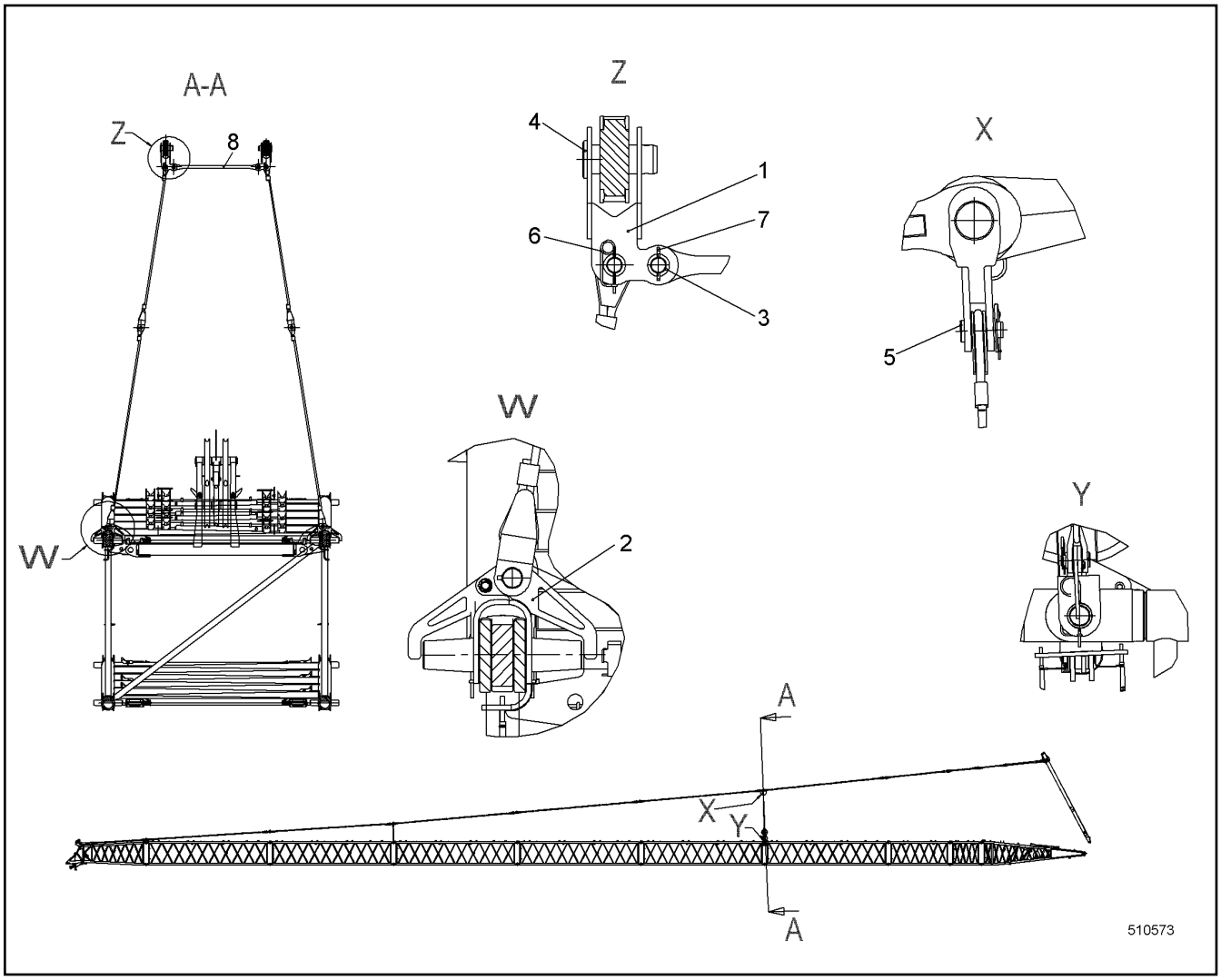

Pos.	Item	Quantity	Description	Bezeichnung	Serie	K
1	993360714	4	FORK	GABEL		
2	991012514	4	FORK ⇨ ❑ 664	GABEL		
3	421102914	12	WASHER DIN EN 28738 36 ST;	SCHEIBE		
4	957056314	4	PIN	BOLZEN		
5	453050914	12	PIN DIN 1435-B 35H11X90X80 S355J2;EN 1002	BOLZEN		
6	433101208	8	RETAINING SPRING 4MM	SICHERUNGSFEDER		
7	433007914	4	SPLIT PIN ISO 1234 6.3X56 A4	SPLINT		
8	919421714	2	ROD	STANGE		

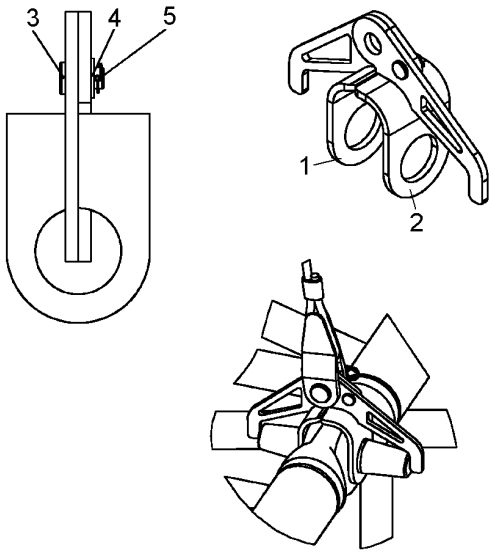

507796

Pos.	Item	Quantity	Description	Bezeichnung	Serie	K
1	991012614	1	FORK ST.CONST.	GABEL SCHWK		
2	991012214	1	FORK ST.CONST.	GABEL SCHWK		
3	11949153	1	PIN 30X46 LHRD900-40;10019758	BOLZEN		
4	10544174	1	WASHER ISO 7089 20	SCHEIBE		
5	485565814	1	SAFETY PLUG W HINGE-LID 4X27	SICHERHEITSKLAPPSTECKER		

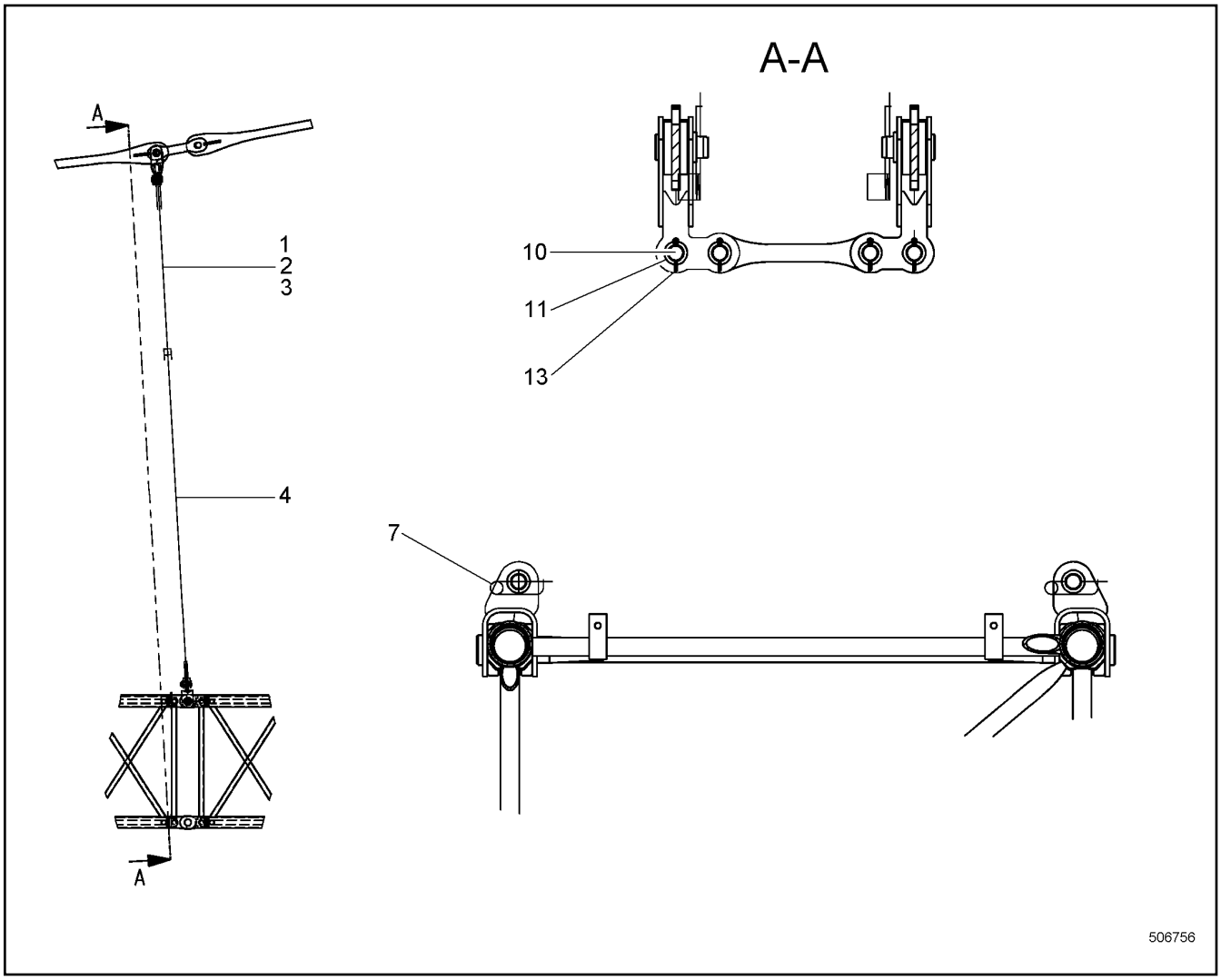

Pos.	Item	Quantity	Description	Bezeichnung	Serie	K
1	774760214	6	GUY ROPE	HALTESEIL		
2	774760514	8	GUY ROPE	HALTESEIL		
3	774760414	6	GUY ROPE	HALTESEIL		
4	774760314	6	GUY ROPE	HALTESEIL		
5	453050914	14	PIN DIN 1435-B 35H11X90X80 S355J2;EN 1002	BOLZEN		
6	421102914	14	WASHER DIN EN 28738 36 ST;	SCHEIBE		
7	433101208	14	RETAINING SPRING 4MM	SICHERUNGSFEDER		
9	790538014	2	GUY ROPE	HALTESEIL		
10	10350539	2	GUY ROPE	HALTESEIL		

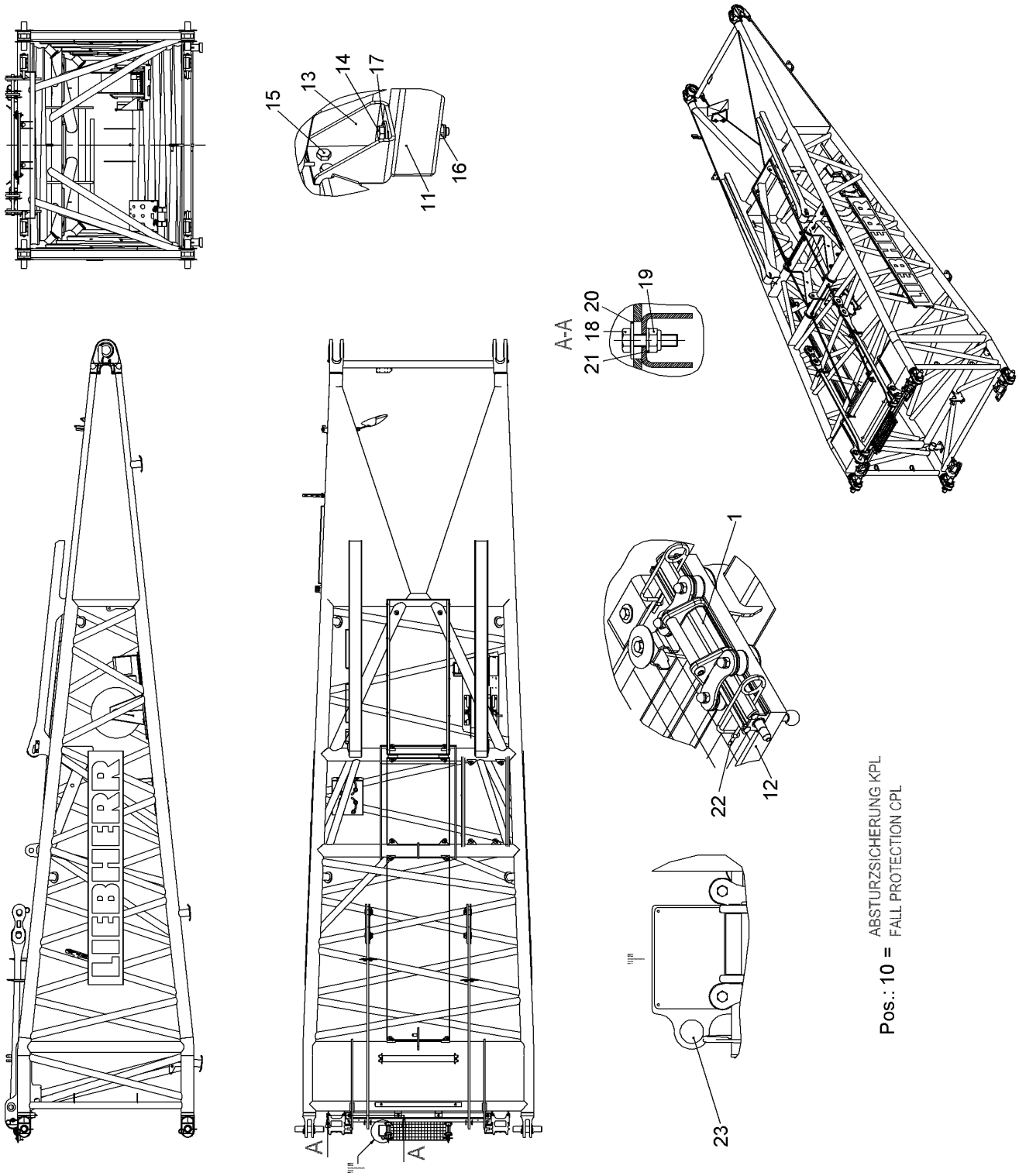

Pos.: 10 = ABSTURZSICHERUNG KPL
FALL PROTECTION CPL

516302

Pos.	Item	Quantity	Description	Bezeichnung	Serie	K
10	10556011	1	FALL PROTECTION CPL ⇨ ❑ 668	ABSTURZSICHERUNG KPL		
11	10557217	1	CROSS BEAM ST.CONST.	QUERTRAEGER SCHWK		
12	10552807	1	GRATING CPL ⇨ ❑ 669	GITTERROST KPL		
13	10557223	2	WP	WP		
14	10539294	2	HEX SCREW ISO 4017 M10X85 A4-70	SECHSKANTSCHRAUBE		
15	406527814	4	HEX SCREW ISO 4017 M10X40 A4-70	SECHSKANTSCHRAUBE		
16	10540494	2	HEX NUT ISO 10511 M10 A4	SECHSKANTMUTTER		
17	10540511	4	WASHER ISO 7093-1 10 A4	SCHEIBE		
18	406501314	2	HEX SCREW ISO 4017 M8X30 A4-70	SECHSKANTSCHRAUBE		
19	10540493	2	HEX NUT ISO 10511 M8 A4	SECHSKANTMUTTER		
20	10540510	2	WASHER ISO 7093-1 8 A4	SCHEIBE		
21	420001014	2	WASHER ISO 7089 8 A4	SCHEIBE		
22	433101208	4	RETAINING SPRING 4MM	SICHERUNGSFEDER		
23	11228734	1	ADHESIVE SIGN	KLEBESCHILD		

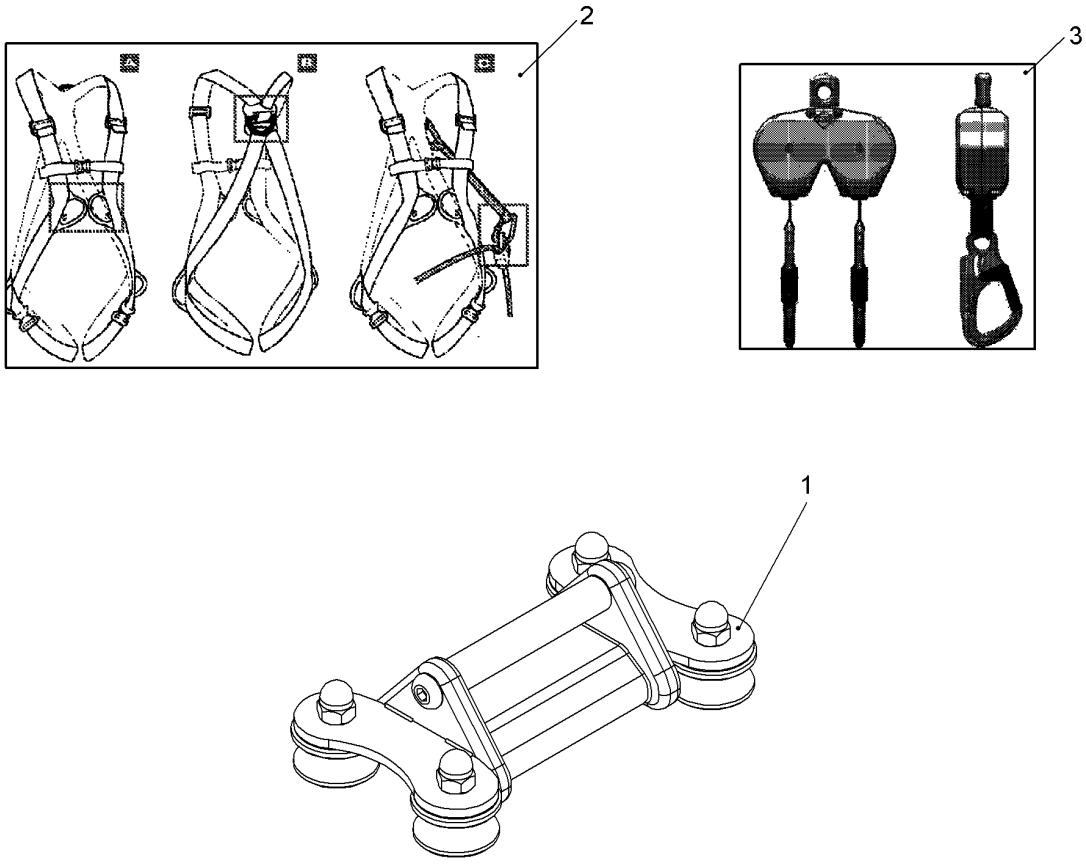

Pos.	Item	Quantity	Description	Bezeichnung	Serie	K
1	11928908	2	ROLLING TRUCK CPL	ROLLWAGEN KPL		
2	10556012	1	HARNESS	TRAGEGURT		
3	10556014	1	HIGHT FIXATION DEVICE	HOEHENSICHERUNGSGERAET		

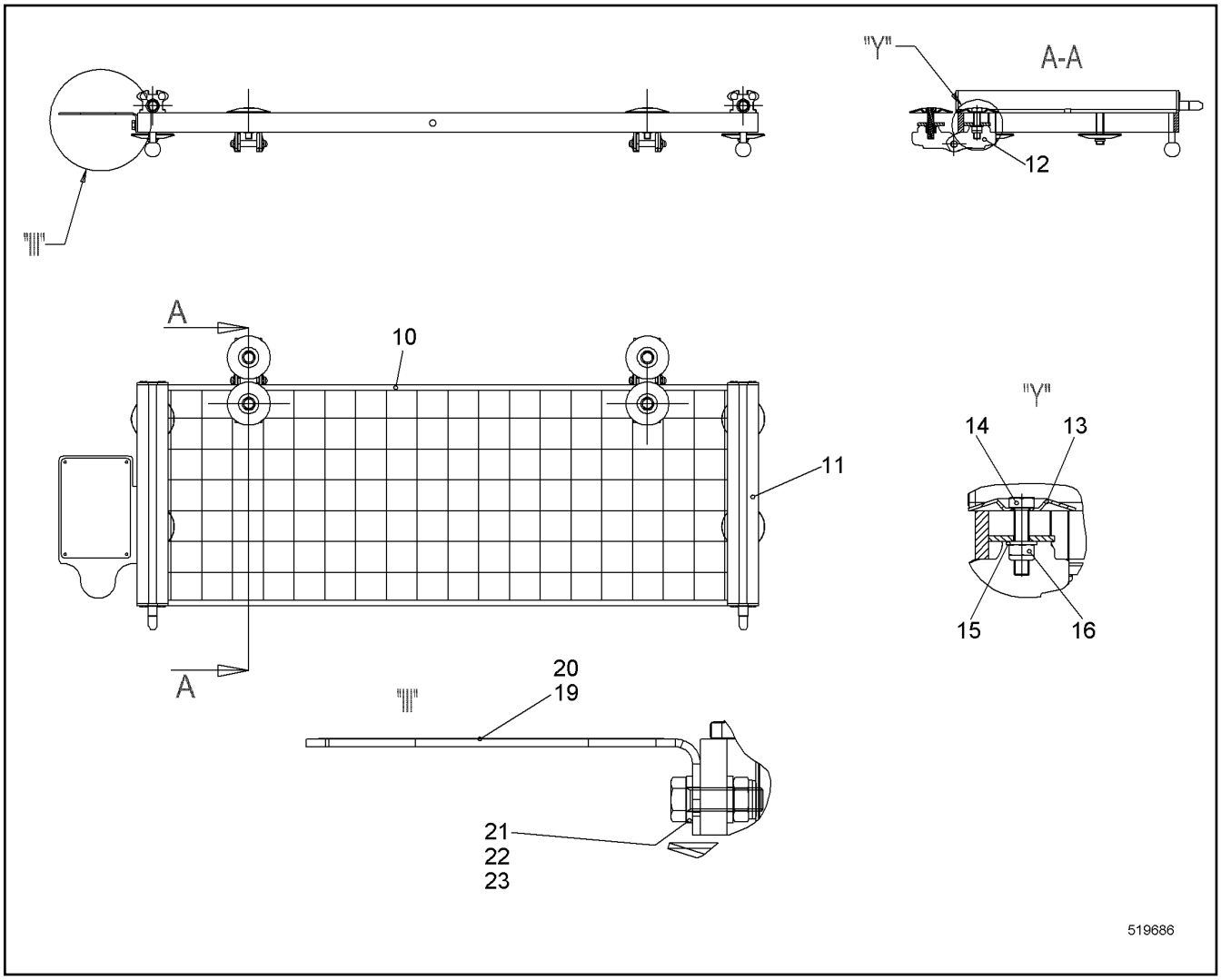

Pos.	Item	Quantity	Description	Bezeichnung	Serie	K
10	10552808	1	GRATING	GITTERROST		
11	10554229	2	RAIL CPL	SCHIENE KPL		
12	10554231	2	HINGE CPL	SCHARNIER KPL		
13	10098157	4	DISH	TELLER		
14	406517614	4	HEX SCREW ISO 4017 M8X35 A4-70	SECHSKANTSCHRAUBE		
15	420001014	4	WASHER ISO 7089 8 A4	SCHEIBE		
16	10540493	4	HEX NUT ISO 10511 M8 A4	SECHSKANTMUTTER		
19	11228766	1	SIGN	SCHILD		
20	11228726	1	ADHESIVE SIGN	KLEBESCHILD		
21	420000414	4	WASHER ISO 7089 6 A4	SCHEIBE		
22	406532614	2	HEX SCREW ISO 4017 M6X20 A4-70	SECHSKANTSCHRAUBE		
23	10540492	2	HEX NUT ISO 10511 M6 A4	SECHSKANTMUTTER		

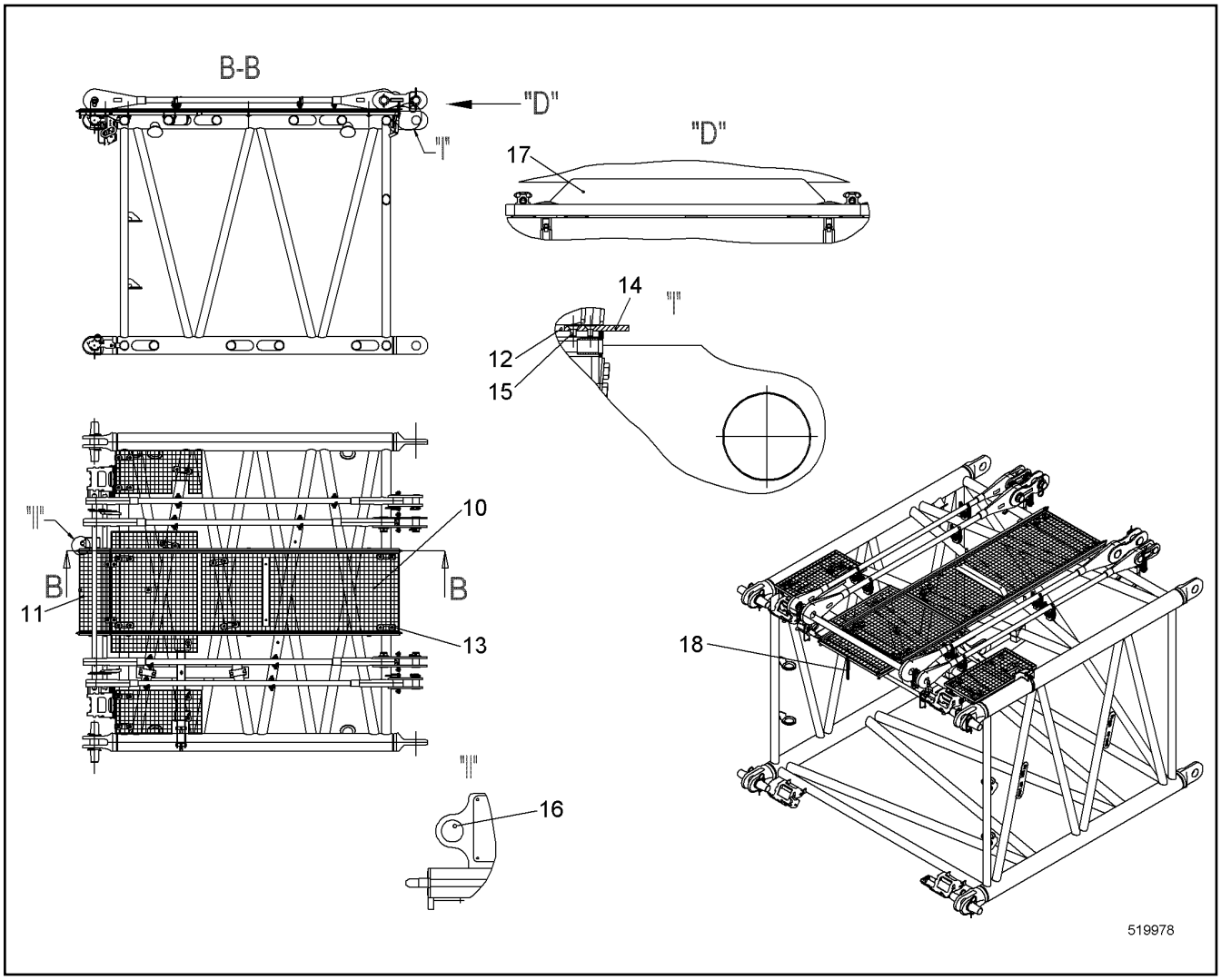

Pos.	Item	Quantity	Description	Bezeichnung	Serie	K
10	10517914	1	GRATING	GITTERROST		
11	10552807	1	GRATING CPL ⇨ ❑ 669	GITTERROST KPL		
12	11306944	2	RAIL CPL ⇨ ❑ 671	SCHIENE KPL		
13	11283913	4	FIXING CLAMP ⇨ ❑ 549	BEFESTIGUNGSCHELLE		
14	10566932	2	LIMIT STOP	ANSCHLAG		
15	10348867	4	COUNTERSUNK SCREW ISO 10642 M5X10 A4	SENKSCHRAUBE		
16	11228734	1	ADHESIVE SIGN	KLEBESCHILD		
17	11238277	1	ROPE GUARD ⇨ ❑ 672	SEILSCHUTZ		
18	11305670	1	TRANSPORT LASHING ⇨ ❑ 673	TRANSPORTSICHERUNG		

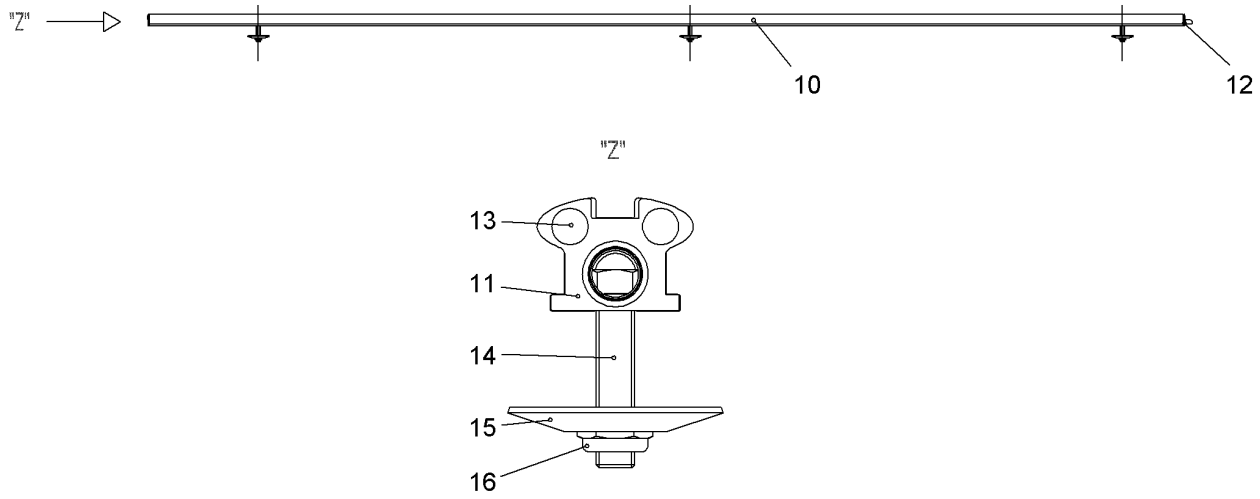

Pos.	Item	Quantity	Description	Bezeichnung	Serie	K
10	11306945	1	RAIL	SCHIENE		
11	10554227	1	COVER	DECKEL		
12	10554228	1	COVER	DECKEL		
13	10555185	4	BLIND RIVET DIN 7337-A 4.8X16 X5CRNI18-10	BLINDNIET		
14	406512014	3	HEX SCREW ISO 4017 M10X45 A4-70	SECHSKANTSCHRAUBE		
15	10098157	3	DISH	TELLER		
16	10540494	3	HEX NUT ISO 10511 M10 A4	SECHSKANTMUTTER		

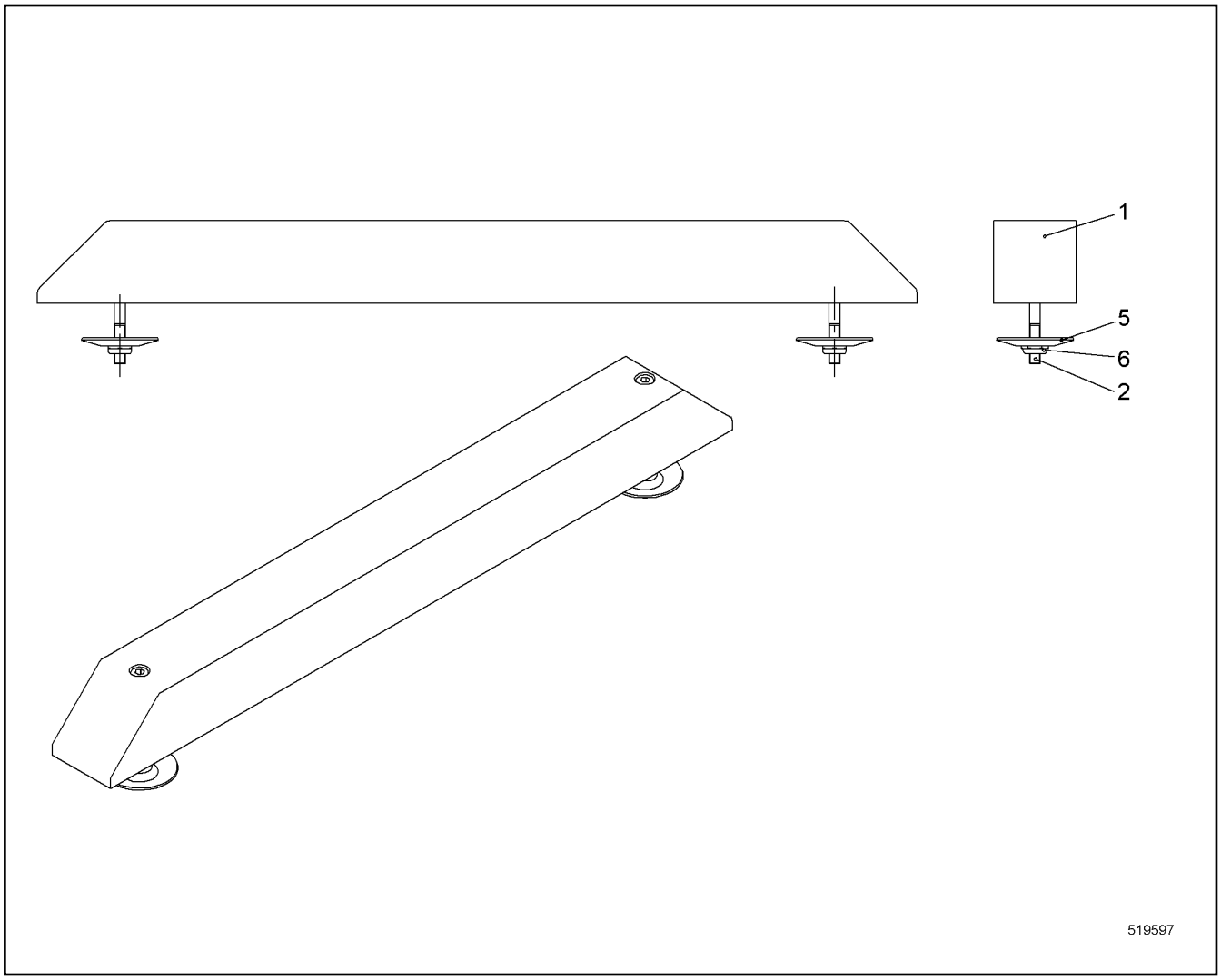

Pos.	Item	Quantity	Description	Bezeichnung	Serie	K
1	11238278	1	STRIP	LEISTE		
2	10539496	2	SOCKET HEAD SCREW ISO 4762 M8X95 A4-7	ZYLINDERSCHRAUBE		
5	10098157	2	DISH	TELLER		
6	10540493	2	HEX NUT ISO 10511 M8 A4	SECHSKANTMUTTER		

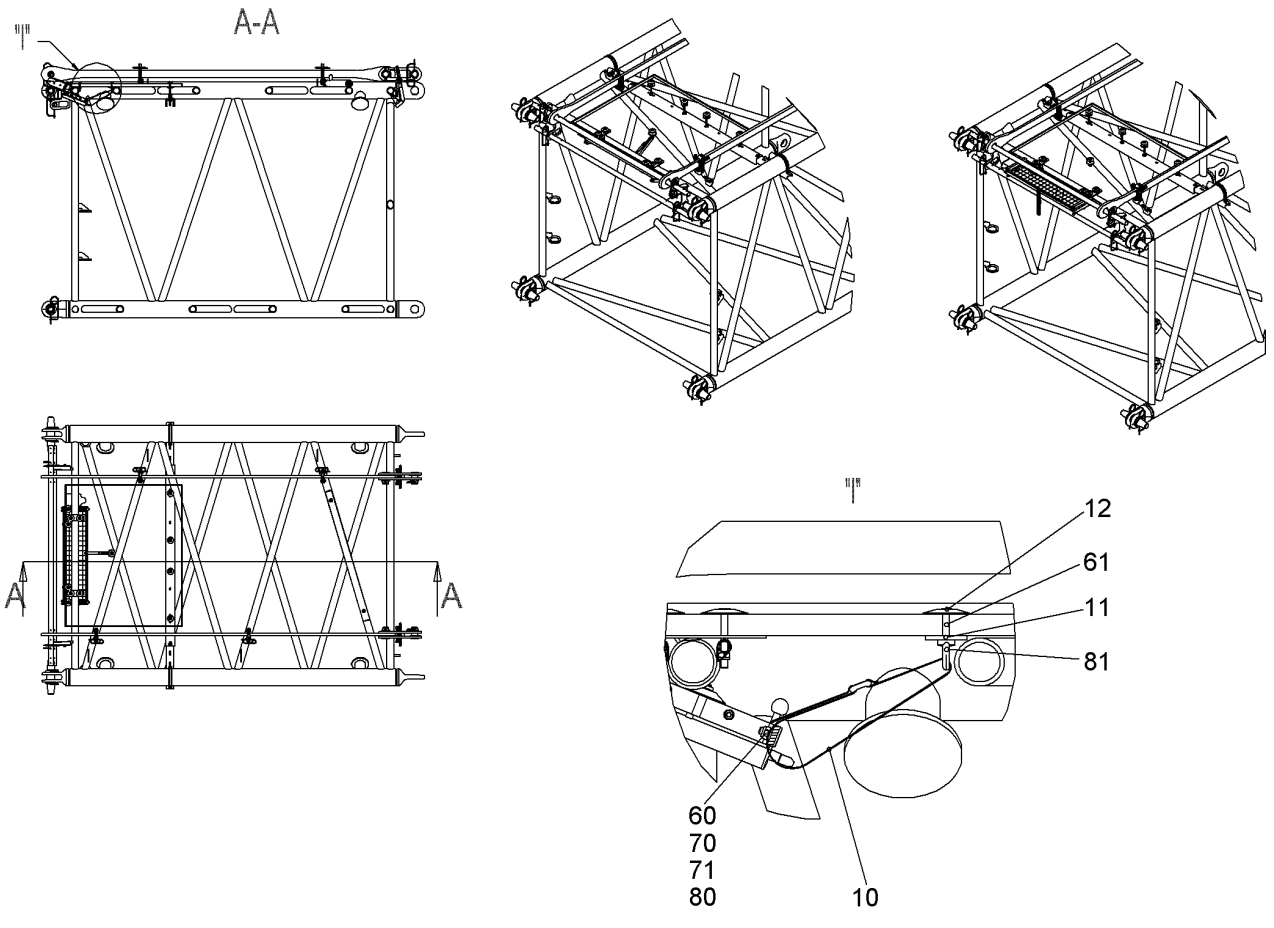

Pos.	Item	Quantity	Description	Bezeichnung	Serie	K
10	10020520	1	LASHING STRAP	ZURRGURT		
12	10098157	1	DISH	TELLER		
60	408606414	1	COUNTERSUNK SCREW DIN 7991 M8X25 A4-7	SENKSCHRAUBE		
61	406532914	1	HEX SCREW ISO 4017 M8X40 A4-70	SECHSKANTSCHRAUBE		
70	420001014	1	WASHER ISO 7089 8 A4	SCHEIBE		
71	460022703	1	WASHER EN 14399-6 12 C45	SCHEIBE		
80	10540493	1	HEX NUT ISO 10511 M8 A4	SECHSKANTMUTTER		
81	411200108	1	RING NUT DIN 582 M8 C15E;EN 10084	RINGMUTTER		

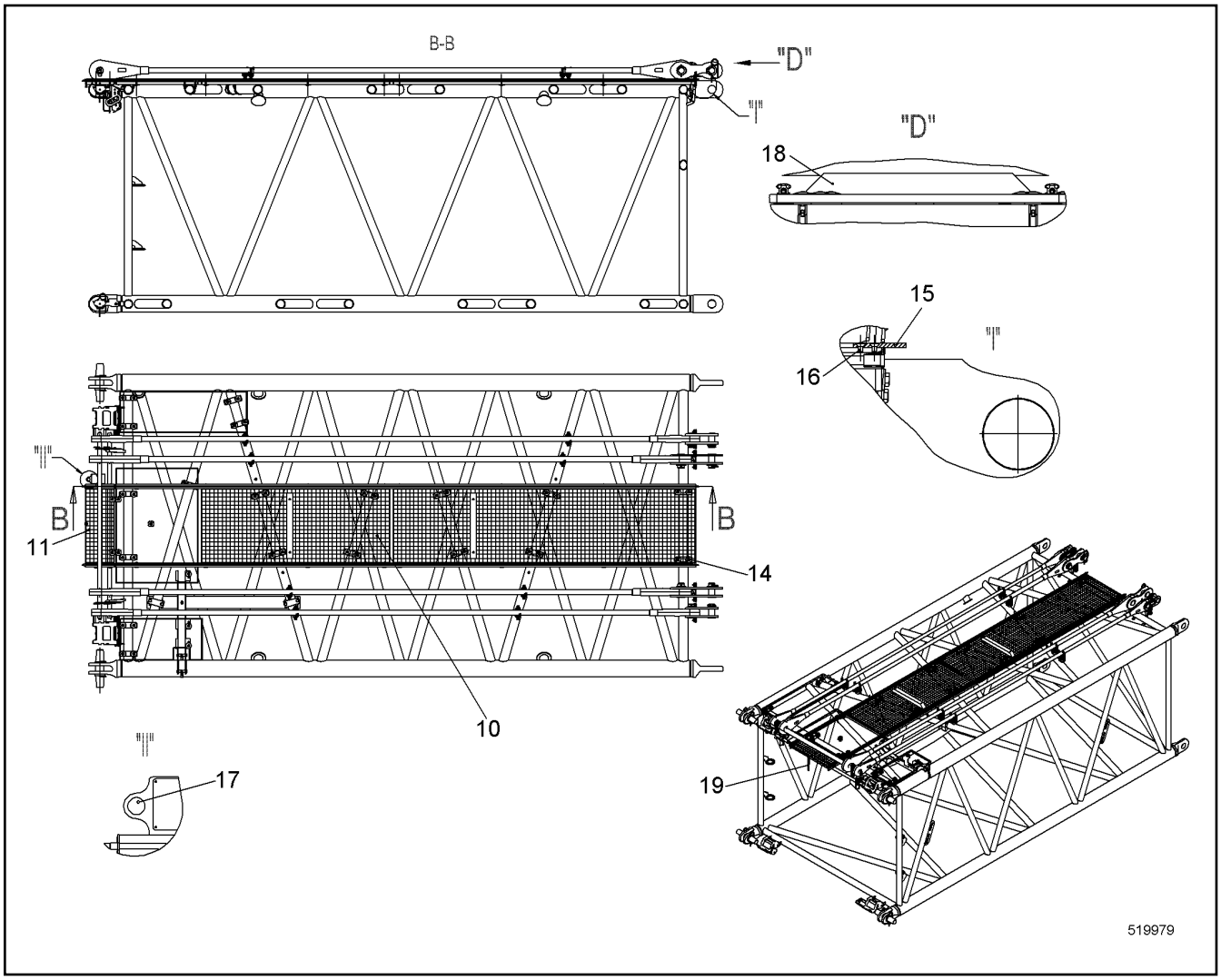

Pos.	Item	Quantity	Description	Bezeichnung	Serie	K
10	10517914	1	GRATING	GITTERROST		
11	10552807	1	GRATING CPL ⇨ ❑ 669	GITTERROST KPL		
12	10553070	1	GRATING	GITTERROST		
13	10554368	2	RAIL CPL	SCHIENE KPL		
14	11283913	10	FIXING CLAMP ⇨ ❑ 549	BEFESTIGUNGSCHELLE		
15	10566932	2	LIMIT STOP	ANSCHLAG		
16	10348867	4	COUNTERSUNK SCREW ISO 10642 M5X10 A4	SENKSCHRAUBE		
17	11228734	1	ADHESIVE SIGN	KLEBESCHILD		
18	11238277	2	ROPE GUARD ⇨ ❑ 672	SEILSCHUTZ		
19	11305670	1	TRANSPORT LASHING ⇨ ❑ 673	TRANSPORTSICHERUNG		

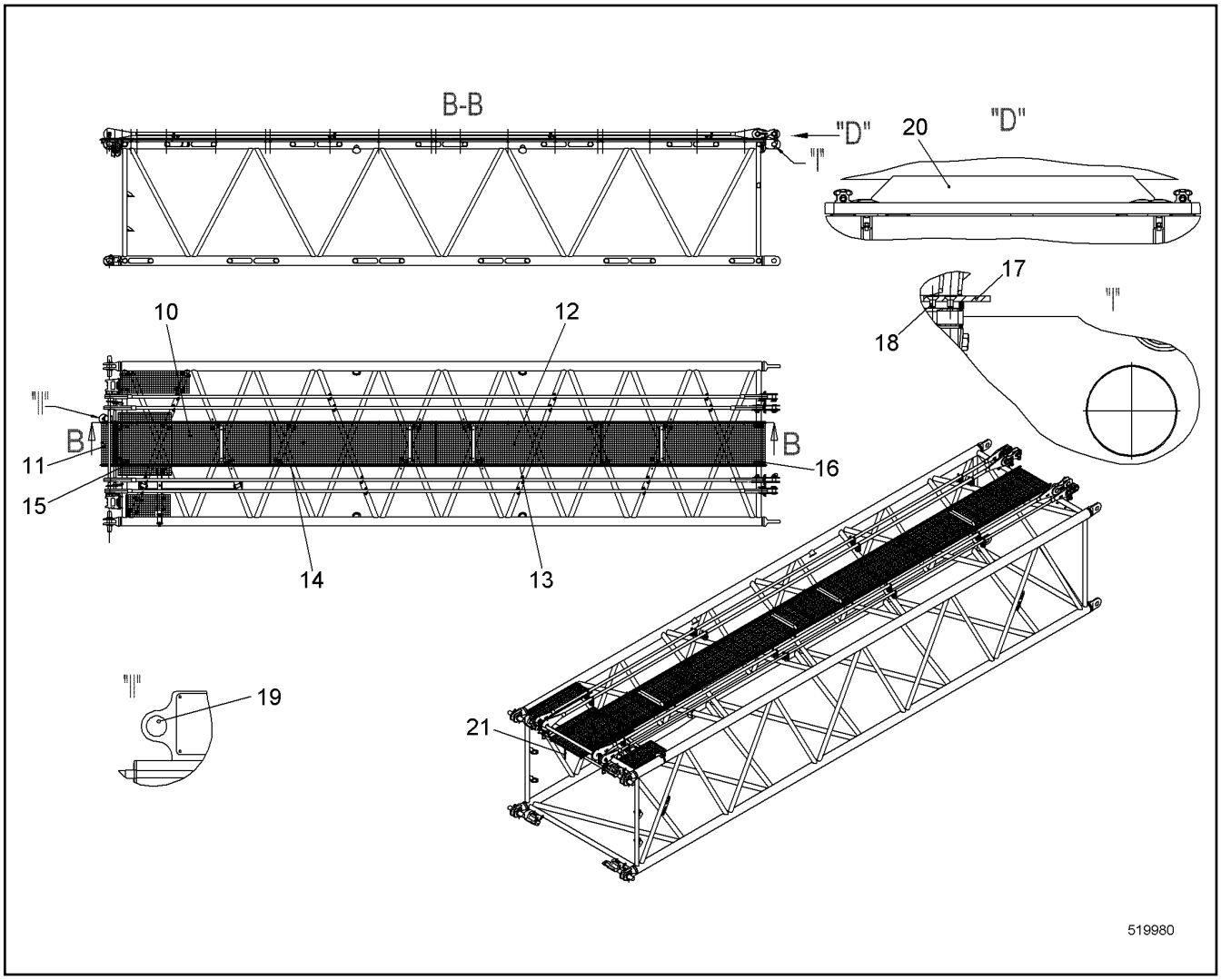

Pos.	Item	Quantity	Description	Bezeichnung	Serie	K
10	11314134	1	GRATING	GITTERROST		
11	10552807	1	GRATING CPL ⇨ ❑ 669	GITTERROST KPL		
12	10553070	3	GRATING	GITTERROST		
13	10554368	2	RAIL CPL	SCHIENE KPL		
14	10554368	2	RAIL CPL	SCHIENE KPL		
15	10554881	2	RAIL CPL	SCHIENE KPL		
16	11283913	14	FIXING CLAMP ⇨ ❑ 549	BEFESTIGUNGSCHELLE		
17	10566932	2	LIMIT STOP	ANSCHLAG		
18	10348867	4	COUNTERSUNK SCREW ISO 10642 M5X10 A4	SENKSCHRAUBE		
19	11228734	1	ADHESIVE SIGN	KLEBESCHILD		
20	11238277	4	ROPE GUARD ⇨ ❑ 672	SEILSCHUTZ		
21	11305670	1	TRANSPORT LASHING ⇨ ❑ 673	TRANSPORTSICHERUNG		

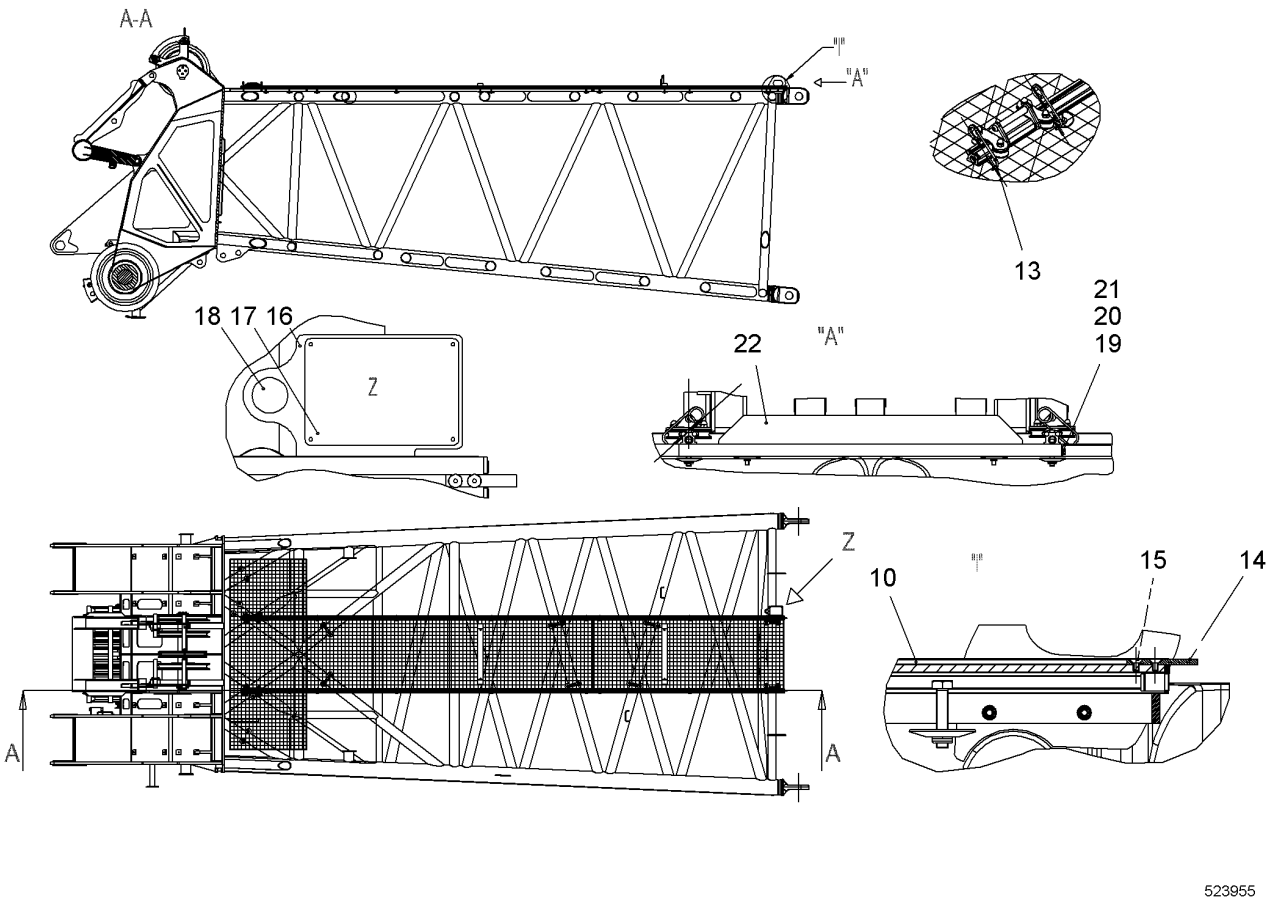

Pos.	Item	Quantity	Description	Bezeichnung	Serie	K
10	10564692	2	RAIL CPL	SCHIENE KPL		
13	433101208	4	RETAINING SPRING 4MM	SICHERUNGSFEDER		
14	10566932	2	LIMIT STOP	ANSCHLAG		
15	10348867	4	COUNTERSUNK SCREW ISO 10642 M5X10 A4	SENKSCHRAUBE		
16	11228766	1	SIGN	SCHILD		
17	11228726	1	ADHESIVE SIGN	KLEBESCHILD		
18	11228734	1	ADHESIVE SIGN	KLEBESCHILD		
19	420000414	4	WASHER ISO 7089 6 A4	SCHEIBE		
20	406532614	2	HEX SCREW ISO 4017 M6X20 A4-70	SECHSKANTSCHRAUBE		
21	10540492	2	HEX NUT ISO 10511 M6 A4	SECHSKANTMUTTER		
22	11238277	2	ROPE GUARD	SEILSCHUTZ		
			⇨ ❑ 672			

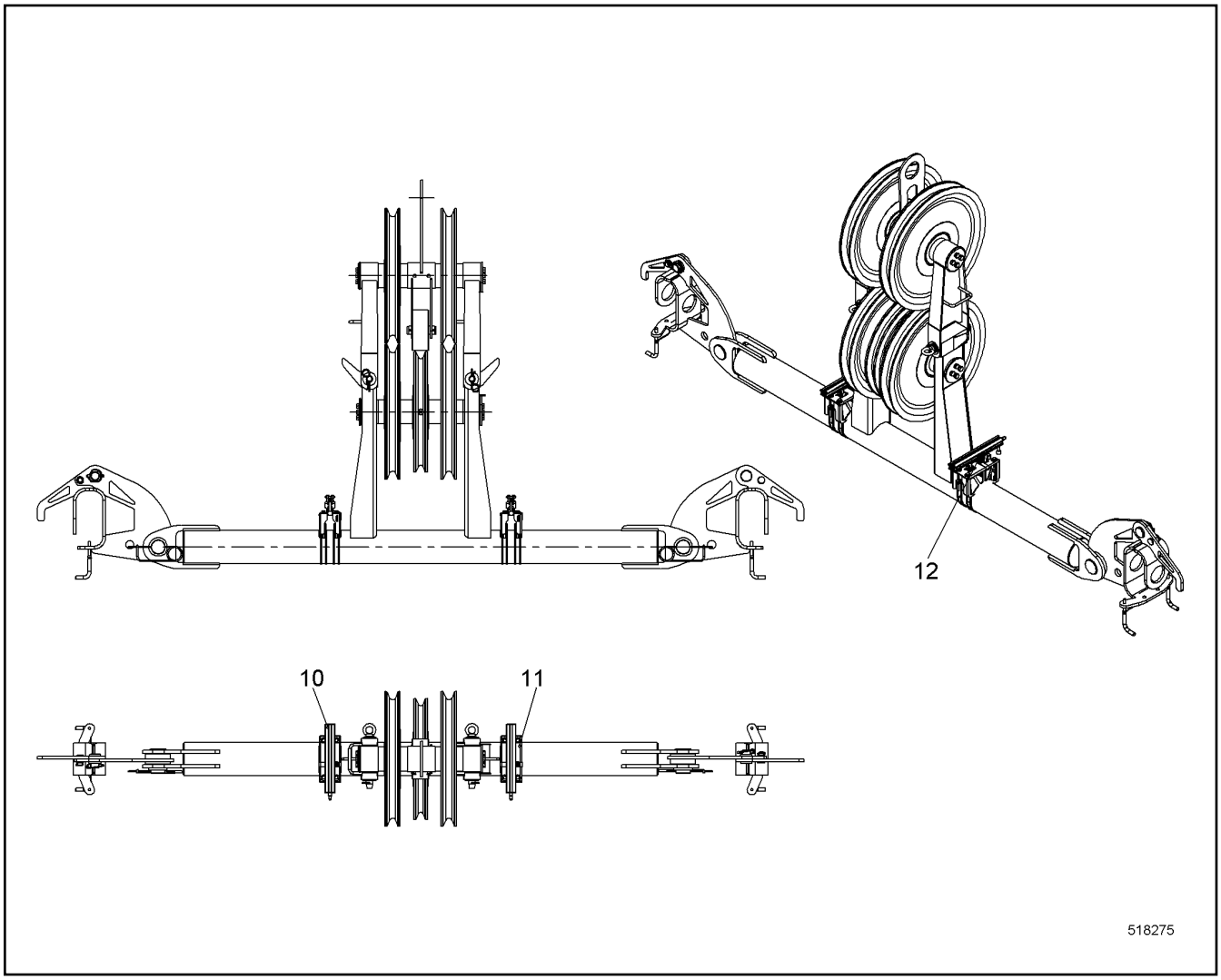

Pos.	Item	Quantity	Description	Bezeichnung	Serie	K
10	10557413	2	RAIL CPL	SCHIENE KPL		
11	11269018	2	HOLDER CPL ⇨ ❑ 678	HALTER KPL		
12	10538796	2	HEX SCREW ISO 4017 M6X8 A4-70	SECHSKANTSCHRAUBE		

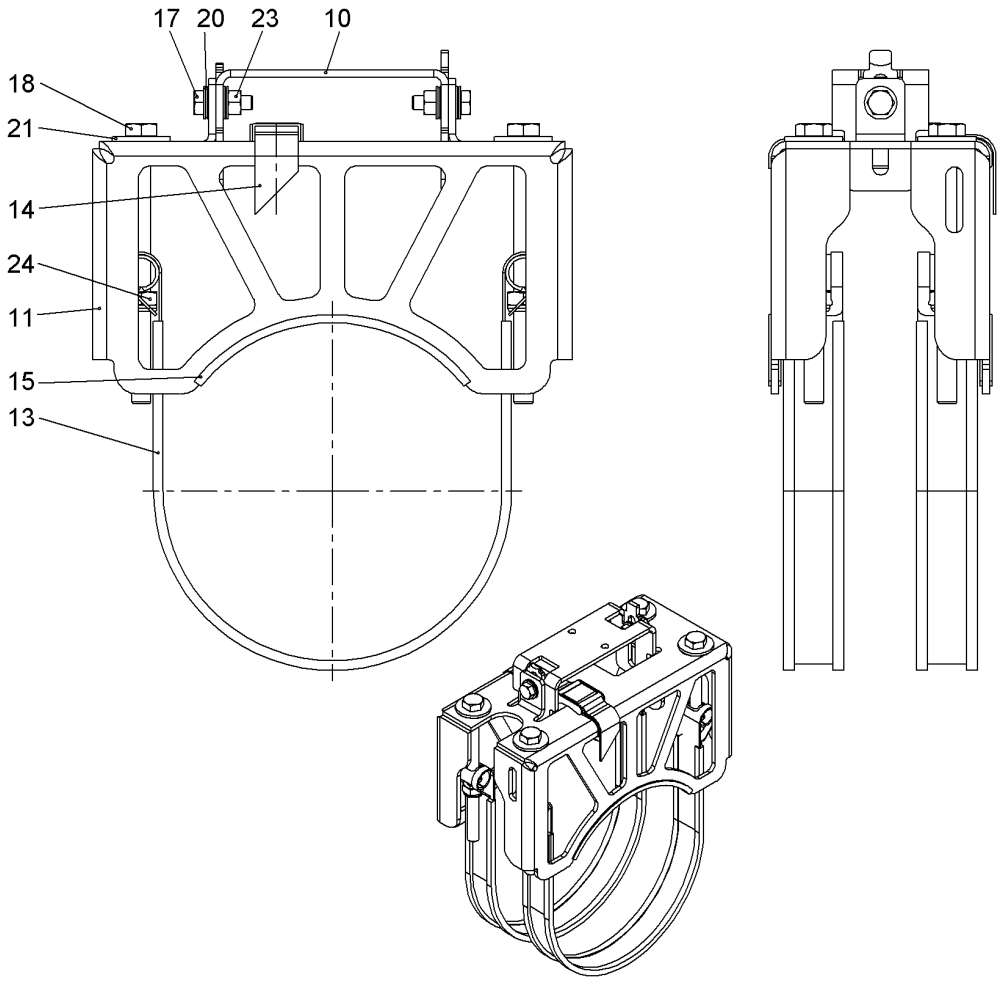

Pos.	Item	Quantity	Description	Bezeichnung	Serie	K
10	11268967	1	WP	WP		
13	10531873	2	TIGHTENING STRAP HINGE PIN	GELENKBOLZENSPANNBAND		
14	7621780	1	LASHING STRAP	ZURRGURT		
15	10352462	0.22	FLEXIBLE EDGE PROTECTOR	KANTENSCHUTZ FLEXIBEL		
17	406532614	2	HEX SCREW ISO 4017 M6X20 A4-70	SECHSKANTSCHRAUBE		
18	10331507	4	HEX SCREW ISO 4017 M8X65 A4-70	SECHSKANTSCHRAUBE		
20	10536576	4	WEDGE LOCK WASHER M6 254 SMO;EN 1008	KEILSICHERUNGSSCHEIBE		
21	10540510	4	WASHER ISO 7093-1 8 A4	SCHEIBE		
23	411517114	2	HEX NUT ISO 4032 M6 A4-70	SECHSKANTMUTTER		
24	10540493	4	HEX NUT ISO 10511 M8 A4	SECHSKANTMUTTER		

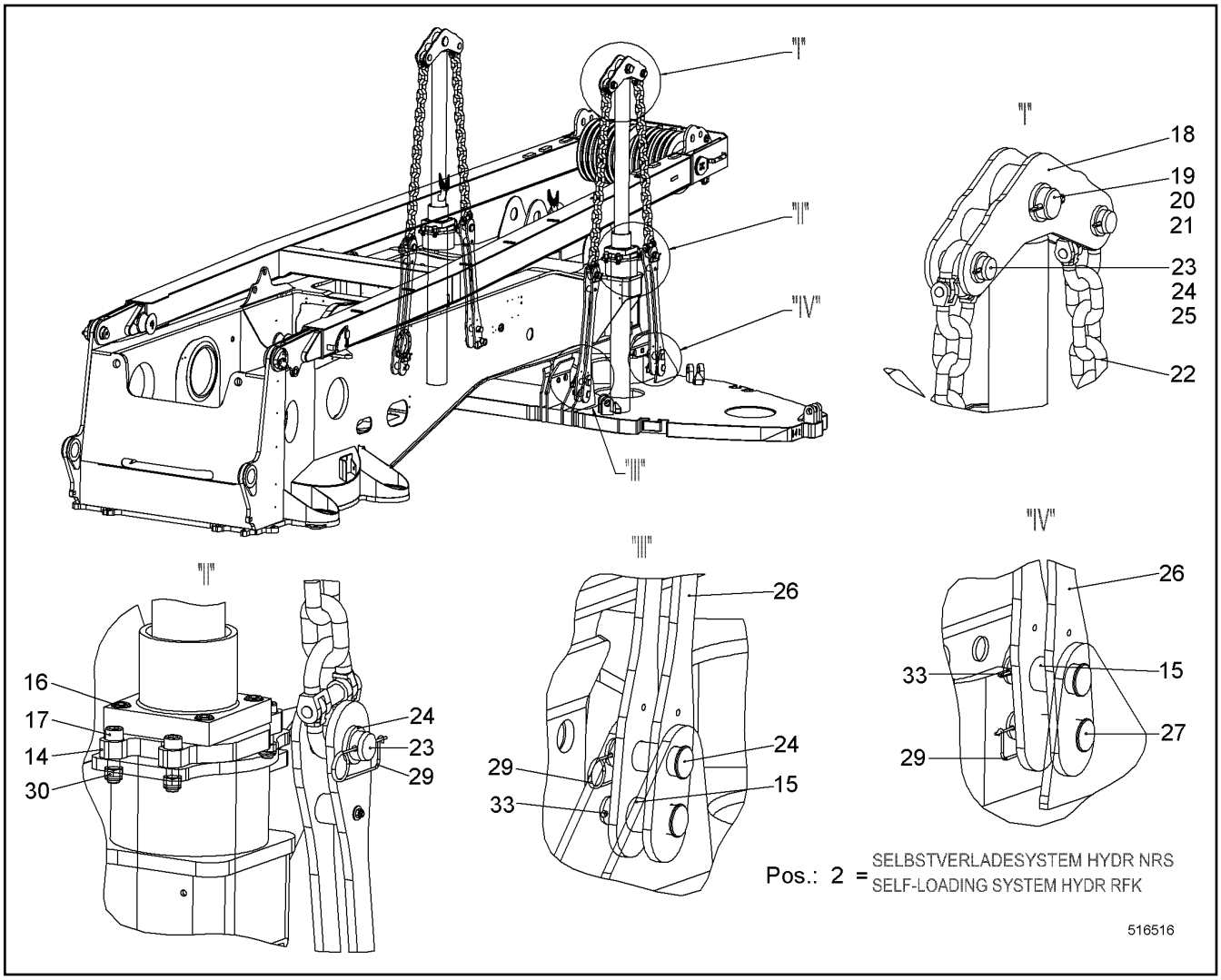

Pos.	Item	Quantity	Description	Bezeichnung	Serie	K
2	10519712	1	SELF-LOADING SYSTEM HYDR RFK ⇨ ❑ 680	SELBSTVERLADESYSTEM HYDR		
4	11229709	1	HOSE LIST ⇨ ❑ 682	SCHLAUCHLISTE		
14	959571914	2	ADAPTER PLATE	ADAPTERBLECH		
16	10544113	8	SOCKET HEAD SCREW ISO 4762 M24X60 10.9	ZYLINDERSCHRAUBE		
17	10544121	8	SOCKET HEAD SCREW ISO 4762 M24X100 10.	ZYLINDERSCHRAUBE		
18	992751514	2	LEVER ST.CONST.	HEBEL SCHWK		
19	485518914	2	PIN DIN EN 22341-B 80H11X160 34CRNIMO6;E	BOLZEN		
20	421103814	2	WASHER DIN EN 28738 80 ST;	SCHEIBE		
21	433011114	2	SPLIT PIN ISO 1234 13X112 A4	SPLINT		
22	10350940	4	CHAIN CPL	KETTE KPL		
23	956711314	8	PIN	BOLZEN		
24	421103514	12	WASHER DIN EN 28738 60 ST;	SCHEIBE		
25	433010314	4	SPLIT PIN ISO 1234 10X80 A4	SPLINT		
26	993560614	4	MOUNTING LINK CPL ⇨ ❑ 683	LASCHE KPL		
27	959799614	8	PIN RD68X175 LHRD900-40;10019758	BOLZEN		
29	433102508	8	RETAINING SPRING 5MM	SICHERUNGSFEDER		
30	10544159	8	HEX NUT DIN 985 M24 10	SECHSKANTMUTTER		
33	433009714	4	SPLIT PIN ISO 1234 8X90	SPLINT		

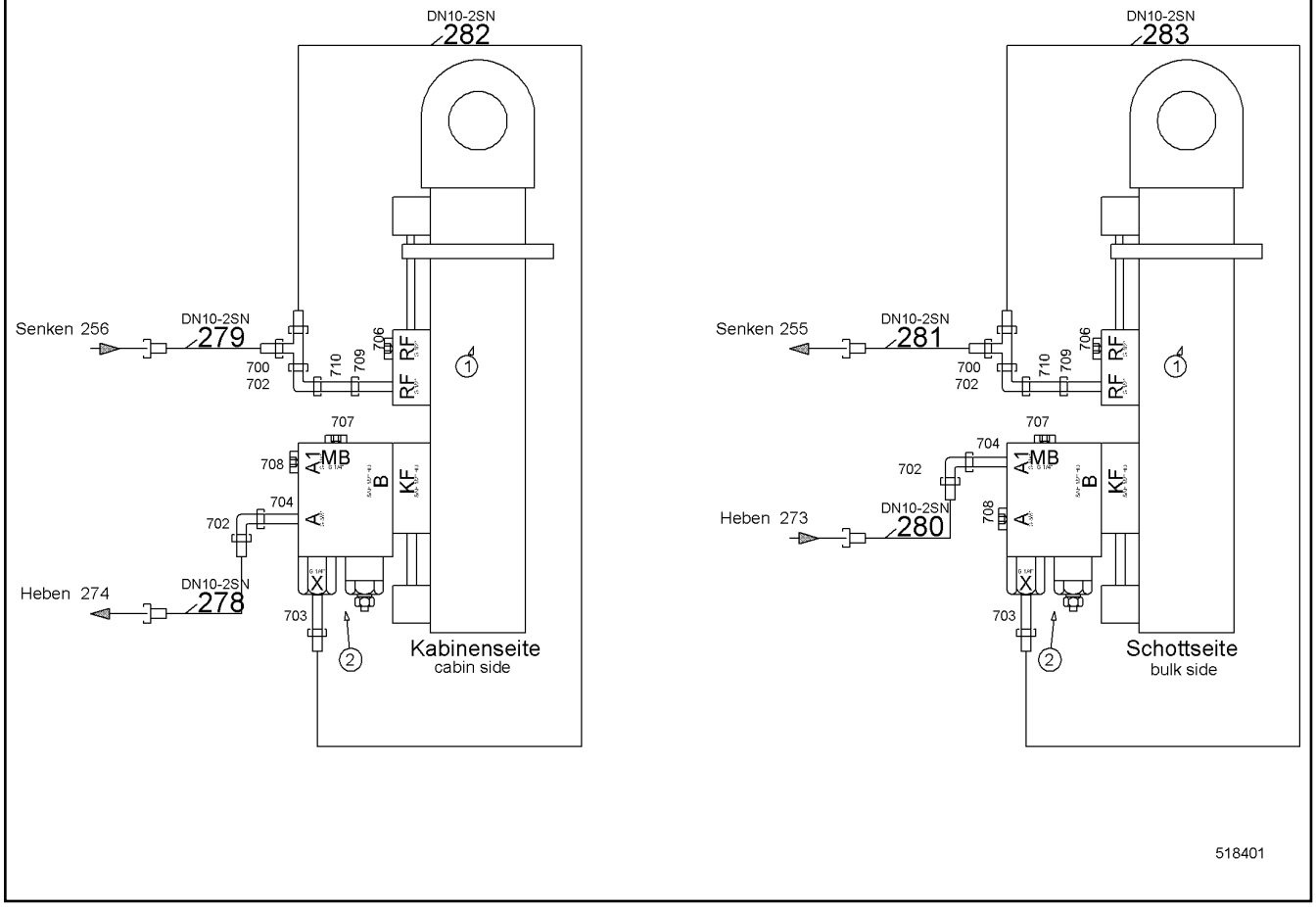

Pos.	Item	Quantity	Description	Bezeichnung	Serie	K
1	10227855	2	DOUBLE-ACTING CYL ⇨ ❑ 681	DOPPELWIRKZYL		
2	10226750	2	LOWERING BRAKE VALVE	SENKBREMSVENTIL		
700	7617461	2	FITTING	VERSCHRAUBUNG		
702	7617354	4	FITTING	VERSCHRAUBUNG		
703	471004514	2	FITTING	VERSCHRAUBUNG		
704	471032708	2	FITTING	VERSCHRAUBUNG		
706	247112702	2	FITTING	VERSCHRAUBUNG		
707	247117302	2	FITTING	VERSCHRAUBUNG		
708	247128402	2	FITTING	VERSCHRAUBUNG		
709	471033214	2	FITTING	VERSCHRAUBUNG		
710	485433314	2	FITTING	VERSCHRAUBUNG		

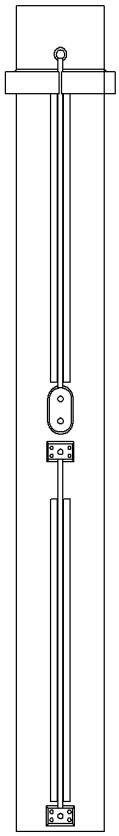

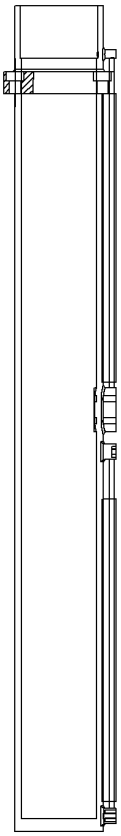

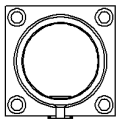

Pos.:1 = DS KPL ZYL
SEALING SET CPL CYL

610754

Pos.	Item	Quantity	Description	Bezeichnung	Serie	K
1	10352447	1	SEALING SET CPL CYL	DS KPL ZYL		

ACHTUNG !
ATTENTION !
ATTENTION !
ATENCIÓN !
ATENÇÃO !
ВНИМАНИЕ

Für Schlauchbestellungen kann über die Schlauchnummer, in der entsprechenden Schlauchliste, die Identnummer festgestellt werden.

For ordering flexible hoses you can find the identification number through the hose-number in the corresponding hose-list.

Pour des ordres de tuyau flexible le nombre d'identification on voit dans la liste de tuyau flexible correspondente.

Para el pedido de manguera, indicar el número de identificación de la manguera de la lista respectiva.

Para se encomendar uma mangueira, consulte o número de identificaçao na respectiva lista de mangueiras.

Для оформления заказов на шланги/рукавы идент. № может быть определен при помощи номера шланга/рукава, указанного в соотетствующем перечне шлангов/рукавов.

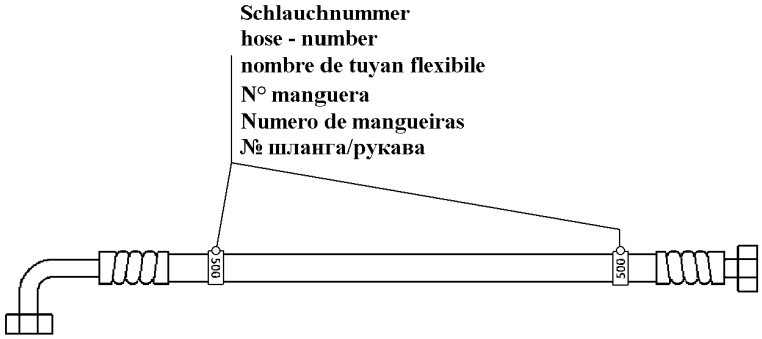

500000

Pos.	Item	Quantity	Description	Bezeichnung	Serie	K
278	928204714	1	HOSE CPL	SCHLAUCH KPL		
279	992296514	1	HOSE CPL	SCHLAUCH KPL		
280	918248414	1	HOSE CPL	SCHLAUCH KPL		
281	995175314	1	HOSE CPL	SCHLAUCH KPL		
282	991109014	1	HOSE CPL	SCHLAUCH KPL		
283	991109014	1	HOSE CPL	SCHLAUCH KPL		

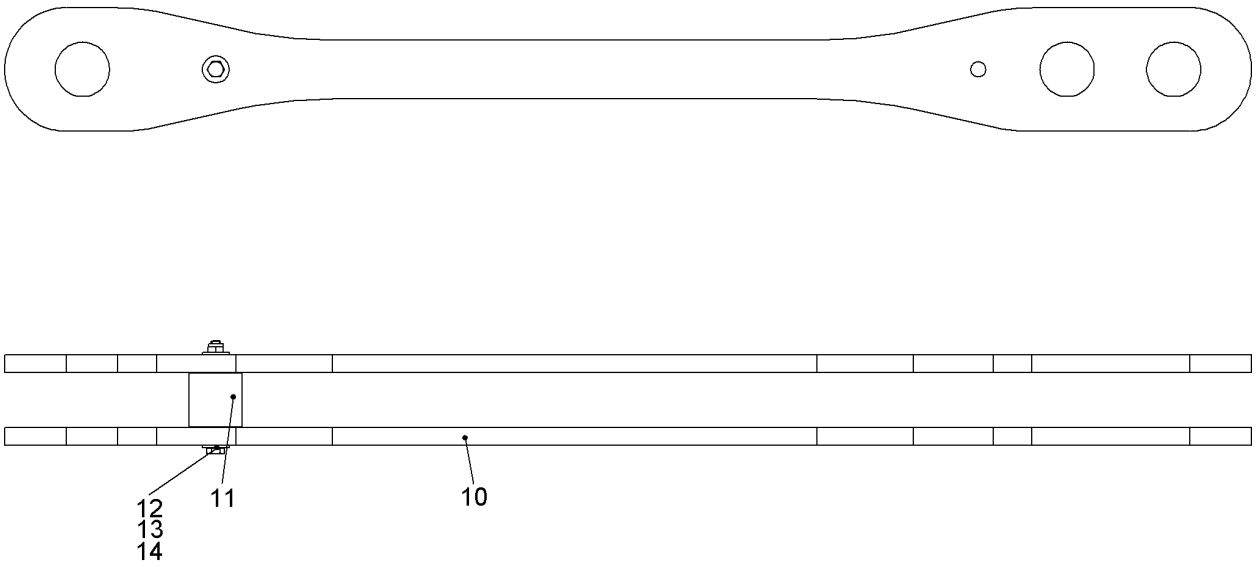

510338

Pos.	Item	Quantity	Description	Bezeichnung	Serie	K
10	950610714	2	BUTT STRAP	LASCHE		
12	10540511	2	WASHER ISO 7093-1 10 A4	SCHEIBE		
13	10539960	1	HEX SCREW ISO 4017 M10X120 A4-70	SECHSKANTSCHRAUBE		
14	10540494	1	HEX NUT ISO 10511 M10 A4	SECHSKANTMUTTER		

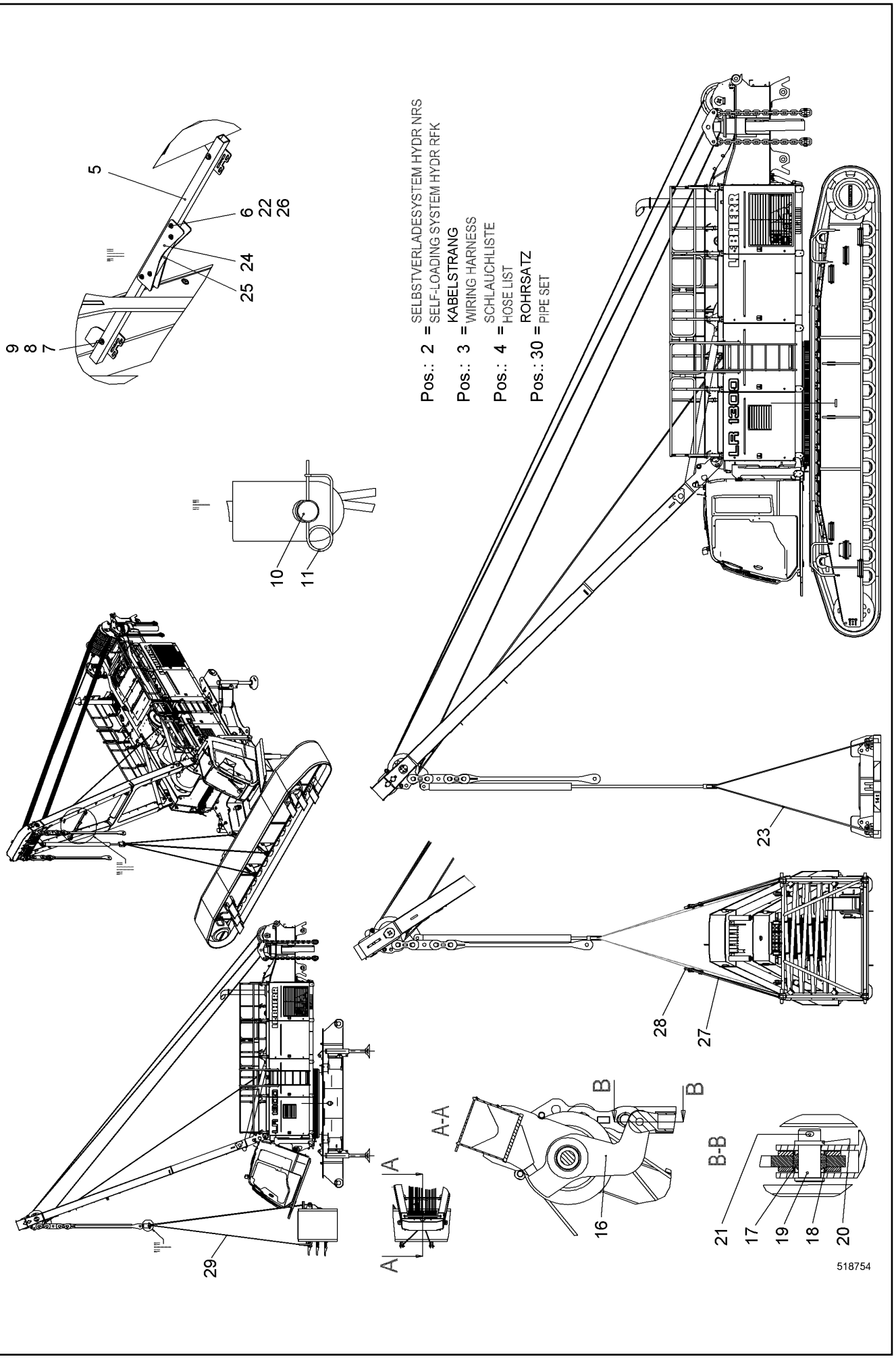

21.6.2017 518754	**138406_ETK_001**	684 (1/2)
LIEBHERR	**SELF-LOADING SYSTEM RFK** **SELBSTVERLADESYSTEM NRS**	**11 23 619 7**

Pos.	Item	Quantity	Description	Bezeichnung	Serie	K
2	10519738	1	SELF-LOADING SYSTEM HYDR RFK ⇨ ❑ 686	SELBSTVERLADESYSTEM HYDR		
4	992774714	1	HOSE LIST ⇨ ❑ 693	SCHLAUCHLISTE		
5	10557117	1	SQUARE TUBE	VIERKANTROHR		
6	10540493	4	HEX NUT ISO 10511 M8 A4	SECHSKANTMUTTER		
7	10540511	4	WASHER ISO 7093-1 10 A4	SCHEIBE		
8	10539293	2	HEX SCREW ISO 4017 M10X75 A4-70	SECHSKANTSCHRAUBE		
9	10540494	2	HEX NUT ISO 10511 M10 A4	SECHSKANTMUTTER		
10	949351814	1	PIN 63X120 LHRD900-40;10019758	BOLZEN		
11	433105008	1	RETAINING SPRING DIN 2194 6MM FS	SICHERUNGSFEDER		
16	11890636	1	HOISTING STRAP CPL	HUBLASCHE KPL		
17	746913614	1	SPHERICAL BEARING	GELENKLAGER		
19	485519214	1	PIN DIN EN 22341-B 50H11X110 34CRNIMO6;E	BOLZEN		
20	421103314	1	WASHER DIN EN 28738 50 ST;	SCHEIBE		
21	433010314	1	SPLIT PIN ISO 1234 10X80 A4	SPLINT		
22	10541592	4	HEX SCREW ISO 4017 M8X75 A4-70	SECHSKANTSCHRAUBE		
23	797027814	1	BALLAST CHAIN	BALLASTIERGEHAENGE		
24	10540513	2	SHEET	PLATTE		
25	11228227	1	SHEET	PLATTE		
26	10540510	8	WASHER ISO 7093-1 8 A4	SCHEIBE		
27	10280543	4	ROUND SLING	RUNDSCHLINGE		
28	773935814	4	SHACKLE	SCHAEKEL		
29	790365114	1	ROUND SLING	RUNDSCHLINGE		
30	10227437	1	PIPE SET	ROHRSATZ		

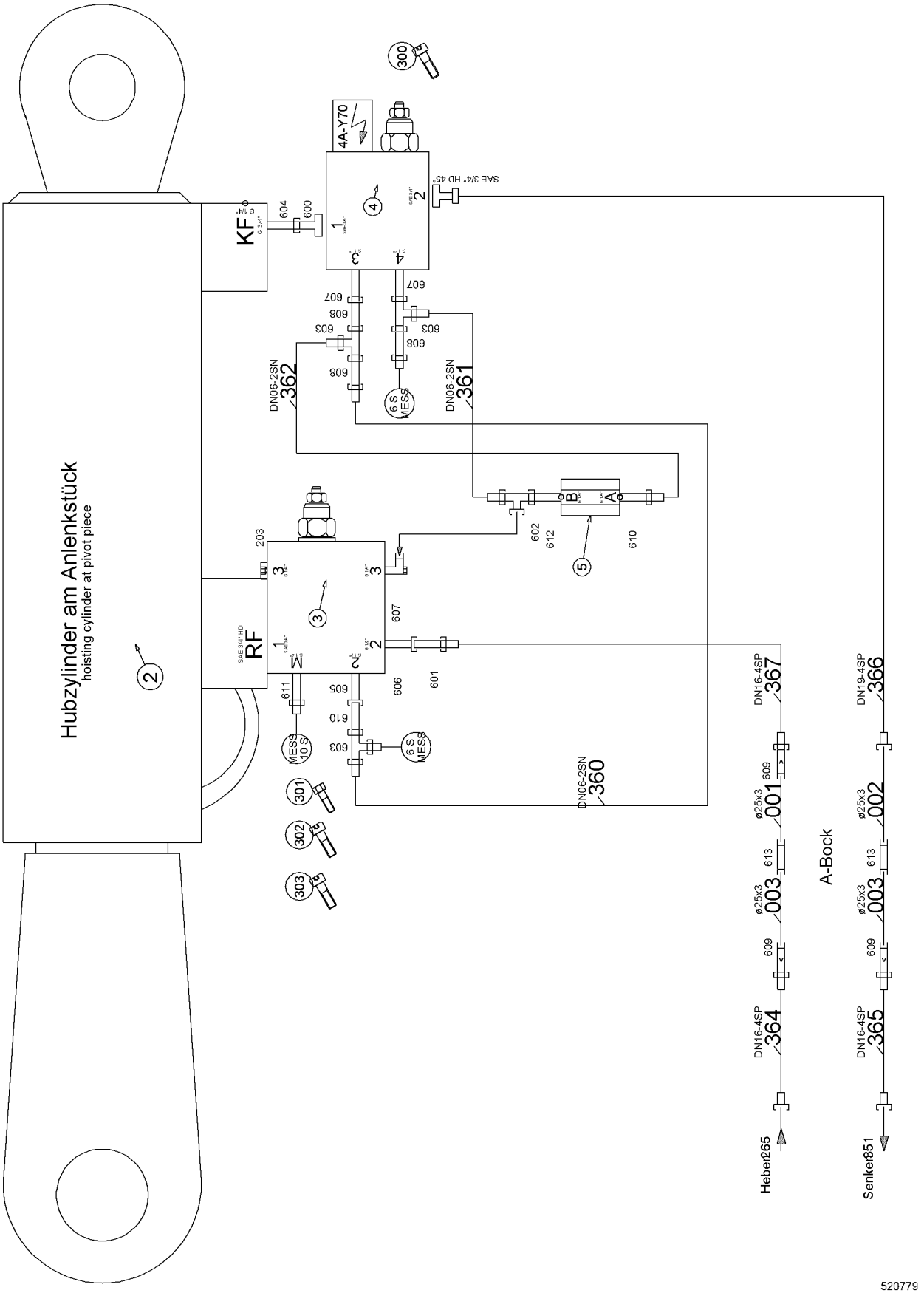
Hubzylinder am Anlenkstück
hoisting cylinder at pivot piece
KF
RF
4A-Y70
SAE 3/4" HD 45°
DN06-2SN 362
DN06-2SN 361
DN06-2SN 360
DN16-4SP 367
DN19-4SP 366
DN16-4SP 364
DN16-4SP 365
ø25x3 001
ø25x3 002
ø25x3 003
A-Block
Heben 265
Senken 851
6 S MESS
MESS 10 S
520779

Pos.	Item	Quantity	Description	Bezeichnung	Serie	K
2	592104214	1	DOUBLE-ACTING CYL ⇨ ❑ 688	DOPPELWIRKZYL		
3	511640414	1	LOWERING BRAKE VALVE ⇨ ❑ 689	SENKBREMSVENTIL		
4	592158414	1	LOWERING BRAKE VALVE ⇨ ❑ 691	SENKBREMSVENTIL		
5	592178314	1	RESTRICTOR VALVE	DROSSELVENTIL		
201	510695314	2	GAUGE CONNECTION	MESSSTUTZEN		
202	510694514	1	GAUGE CONNECTION	MESSSTUTZEN		
203	247117302	1	FITTING	VERSCHRAUBUNG		
300	4043014	2	SOCKET HEAD SCREW ISO 4762 M10X140 10.	ZYLINDERSCHRAUBE		
301	4002195	2	HEX SCREW ISO 4014 M10X100 10.9	SECHSKANTSCHRAUBE		
302	4900980	2	SOCKET HEAD SCREW ISO 4762 M10X75 10.9	ZYLINDERSCHRAUBE		
303	4002442	2	SOCKET HEAD SCREW ISO 4762 M10X130 10.	ZYLINDERSCHRAUBE		
600	510709114	1	FITTING	VERSCHRAUBUNG		
601	491033414	1	FITTING	VERSCHRAUBUNG		
602	482431214	1	FITTING	VERSCHRAUBUNG		
603	482331114	3	FITTING	VERSCHRAUBUNG		
604	481930714	1	FITTING	VERSCHRAUBUNG		
605	247042402	1	FITTING	VERSCHRAUBUNG		
606	475501914	1	FITTING	VERSCHRAUBUNG		
607	473210214	3	FITTING	VERSCHRAUBUNG		
608	472531508	3	FITTING	VERSCHRAUBUNG		
609	475033014	3	FITTING	VERSCHRAUBUNG		
610	471032108	2	FITTING	VERSCHRAUBUNG		
611	471004514	1	FITTING	VERSCHRAUBUNG		
612	481930314	1	FITTING	VERSCHRAUBUNG		
613	247001802	2	FITTING	VERSCHRAUBUNG		
614	510587514	2	FLANGE HALF	FLANSCHHAELFTE		
615	10490784	1	RECTANGULAR SECTION RING	RECHTECKRING		
616	4001246	4	HEX SCREW ISO 4017 M10X35 10.9	SECHSKANTSCHRAUBE		

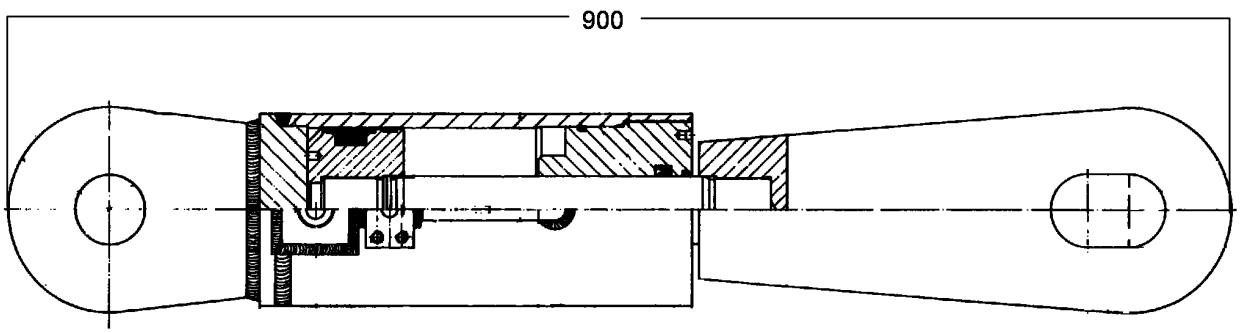

602143

Pos.	Item	Quantity	Description	Bezeichnung	Serie	K
900	790407814	1	SEALING SET CPL CYL	DS KPL ZYL		

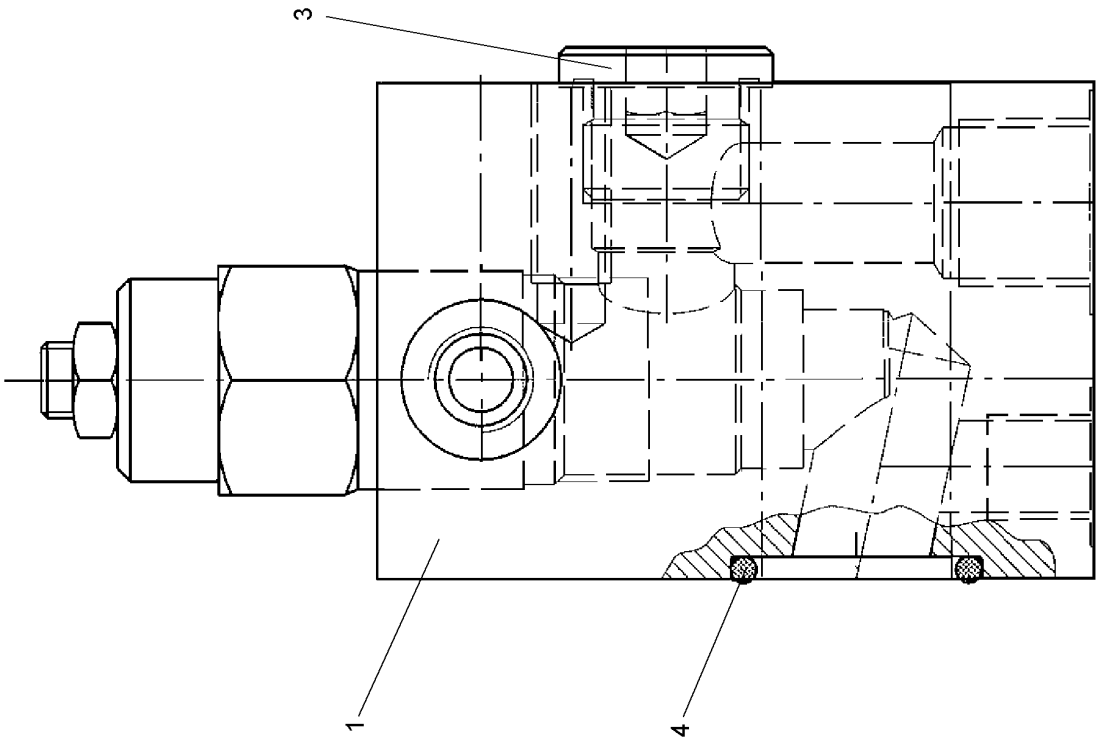

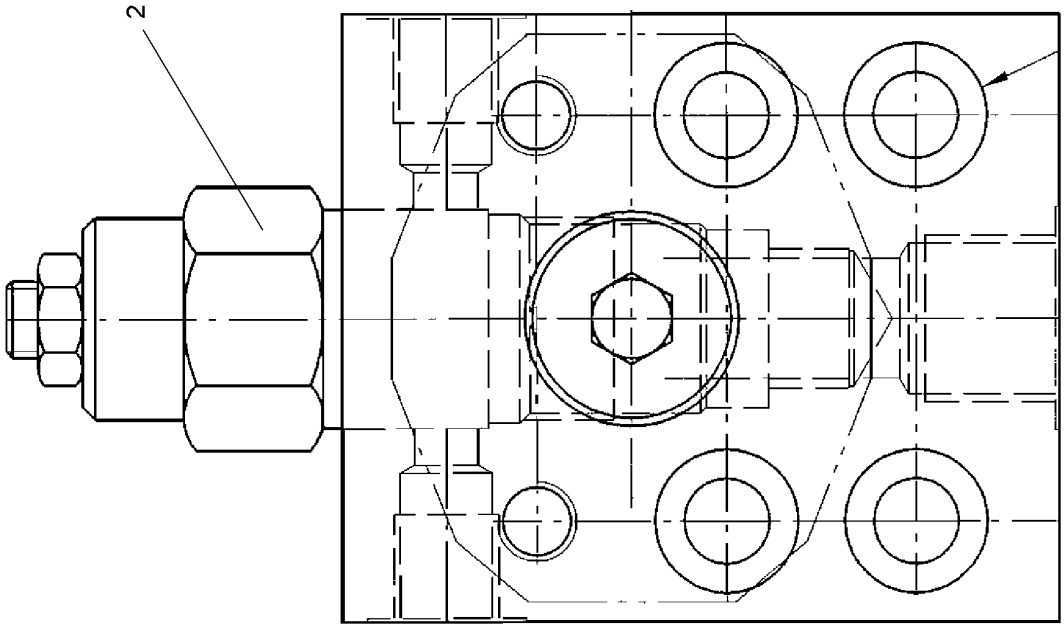

607341

Pos.	Item	Quantity	Description	Bezeichnung	Serie	K
1	11239912	1	HOUSING	GEHAEUSE		
2	11239880	1	LOWERING BRAKE VALVE	SENKBREMSVENTIL		
3	11239915	1	SCREW PLUG DIN 908 G1/2	VERSCHLUSSSCHRAUBE		
4	11239916	1	O-RING	O-RING		

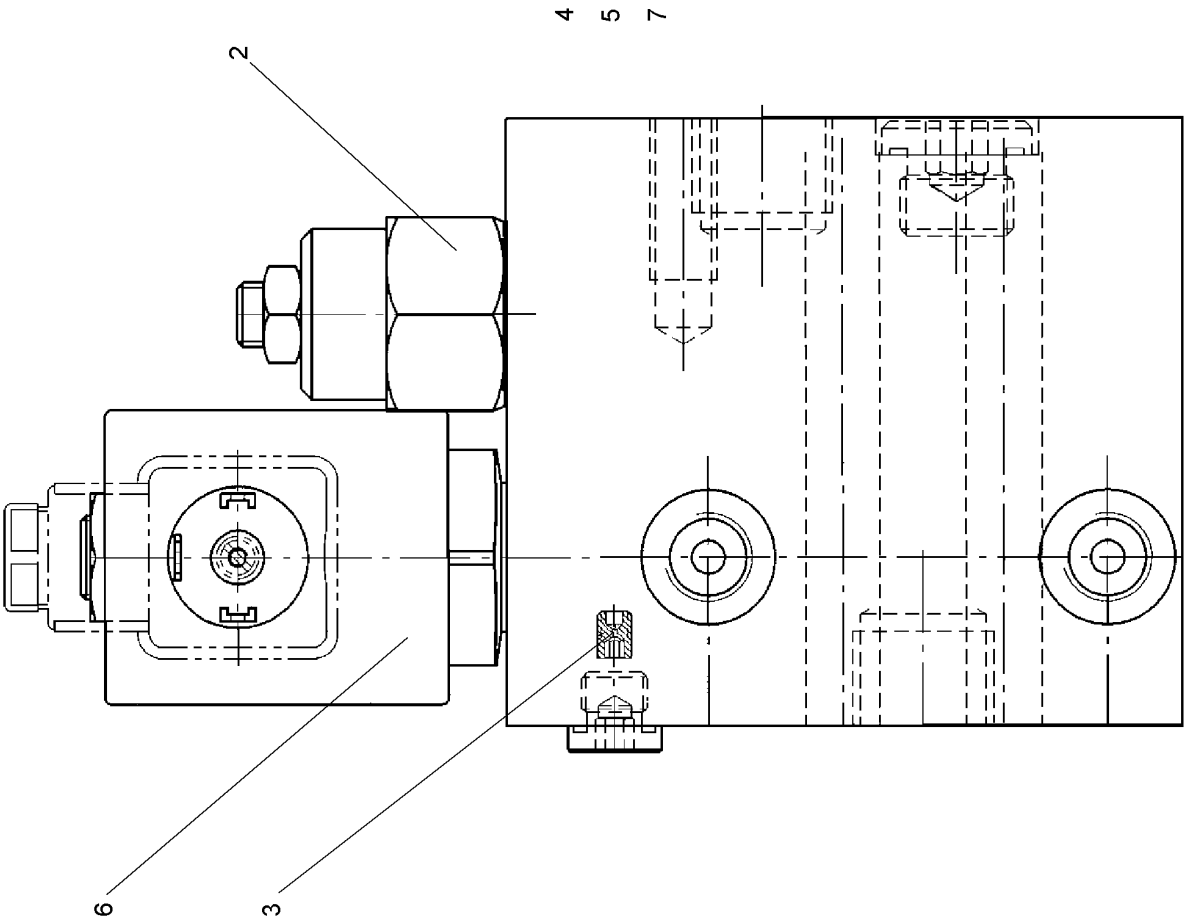

607342

Pos.	Item	Quantity	Description	Bezeichnung	Serie	K
2	11239880	1	LOWERING BRAKE VALVE	SENKBREMSVENTIL		
3	11239895	1	NOZZLE	DUESE		
4	11239897	1	SCREW PLUG DIN 908 G3/8	VERSCHLUSSSCHRAUBE		
5	11239904	1	SCREW PLUG DIN 908 G1/8	VERSCHLUSSSCHRAUBE		
6	11226980	1	SOLENOID VALVE	MAGNETVENTIL		
7	11239908	1	CAP	KAPPE		

ACHTUNG !
ATTENTION !
ATTENTION !
ATENCIÓN !
ATENÇÃO !
ВНИМАНИЕ

Für Schlauchbestellungen kann über die Schlauchnummer, in der entsprechenden Schlauchliste, die Identnummer festgestellt werden.

For ordering flexible hoses you can find the identification number through the hose-number in the corresponding hose-list.

Pour des ordres de tuyau flexible le nombre d'identification on voit dans la liste de tuyau flexible correspondente.

Para el pedido de manguera, indicar el número de identificación de la manguera de la lista respectiva.

Para se encomendar uma mangueira, consulte o número de identificaçao na respectiva lista de mangueiras.

Для оформления заказов на шланги/рукавы идент. № может быть определен при помощи номера шланга/рукава, указанного в соотетствующем перечне шлангов/рукавов.

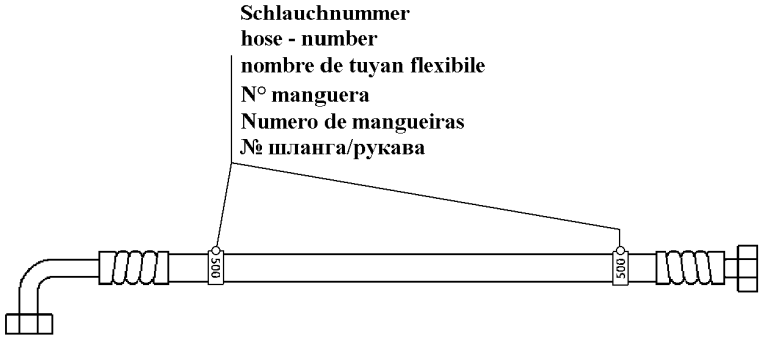

500000

Pos.	Item	Quantity	Description	Bezeichnung	Serie	K
1	10518558	3	ADHESIVE LABEL	HAFTETIKETTE		
360	928619114	1	HOSE CPL	SCHLAUCH KPL		
361	990055814	1	HOSE CPL	SCHLAUCH KPL		
362	990055914	1	HOSE CPL	SCHLAUCH KPL		
364	919126414	1	HOSE CPL	SCHLAUCH KPL		
365	919126414	1	HOSE CPL	SCHLAUCH KPL		
366	992857714	1	HOSE CPL	SCHLAUCH KPL		
367	992837314	1	HOSE CPL	SCHLAUCH KPL		

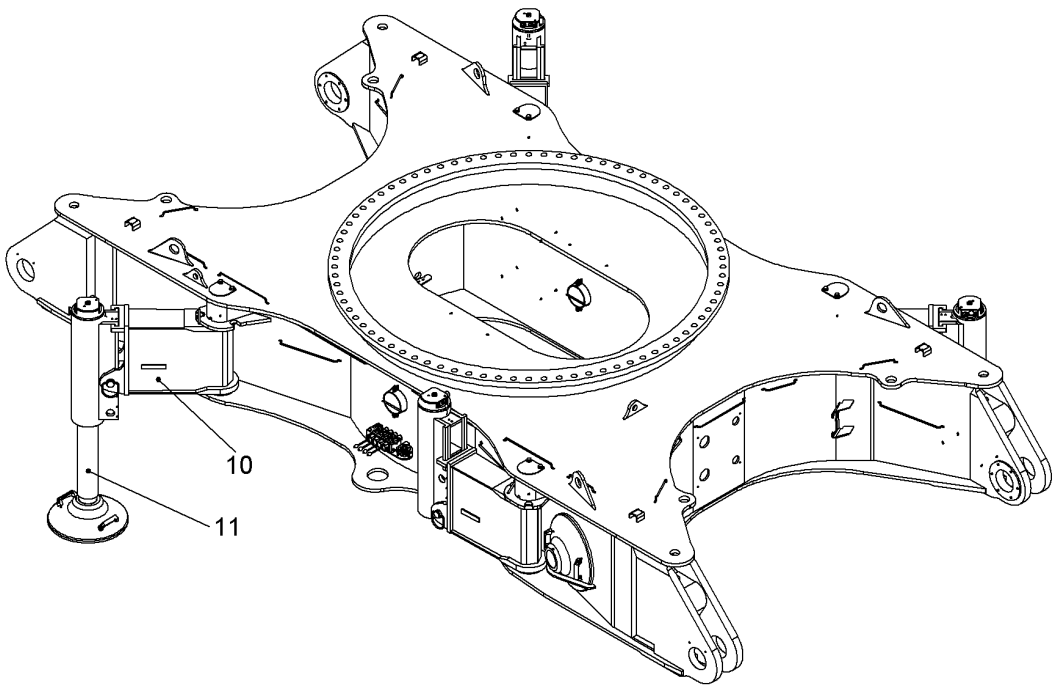

Pos.	Item	Quantity	Description	Bezeichnung	Serie	K
10	11895685	1	SELF-LOADING SYSTEM RFK ⇨ ❑ 695	SELBSTVERLADESYSTEM NRS		
11	11895687	1	SELF-LOADING SYSTEM RFK ⇨ ❑ 701	SELBSTVERLADESYSTEM NRS		

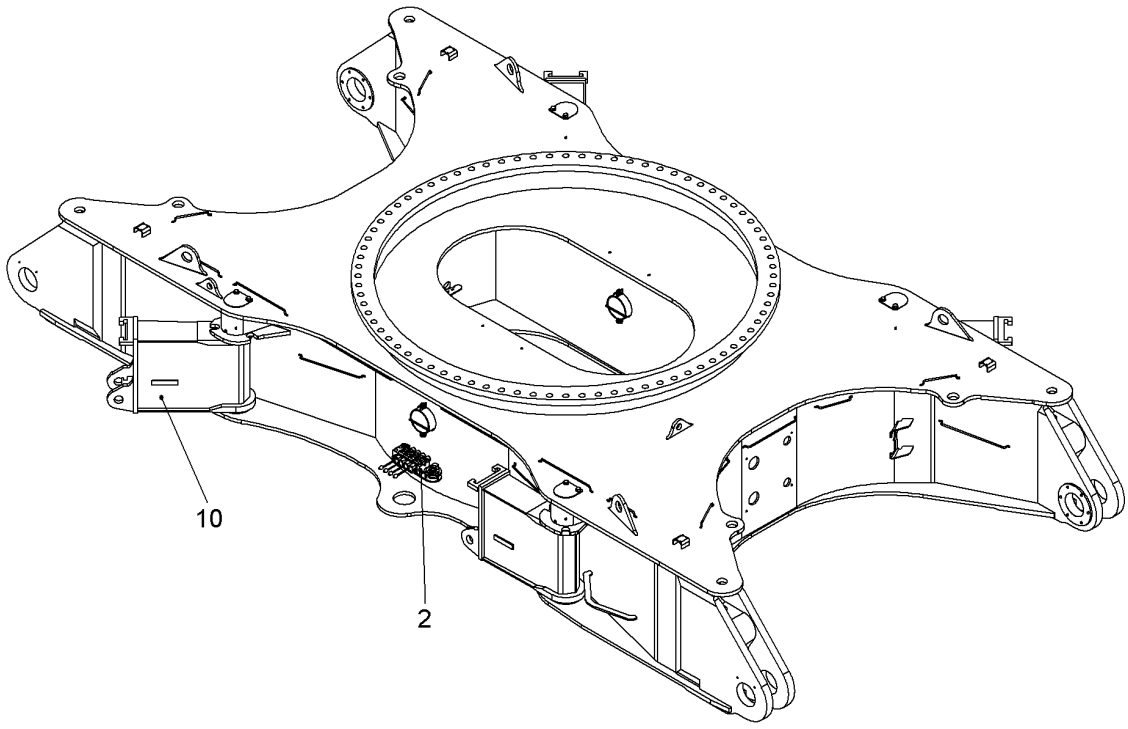

Pos.: 4 = SCHLAUCHLISTE / HOSE LIST

520420

Pos.	Item	Quantity	Description	Bezeichnung	Serie	K
2	11894080	1	JACK-UP SYSTEM HYDR RFK ⇨ ❑ 696	JACK-UP SYSTEM HYDR NRS		
4	11247790	1	HOSE LIST ⇨ ❑ 698	SCHLAUCHLISTE		
10	11895686	1	SELF-LOADING SYSTEM RFK ⇨ ❑ 699	SELBSTVERLADESYSTEM NRS		

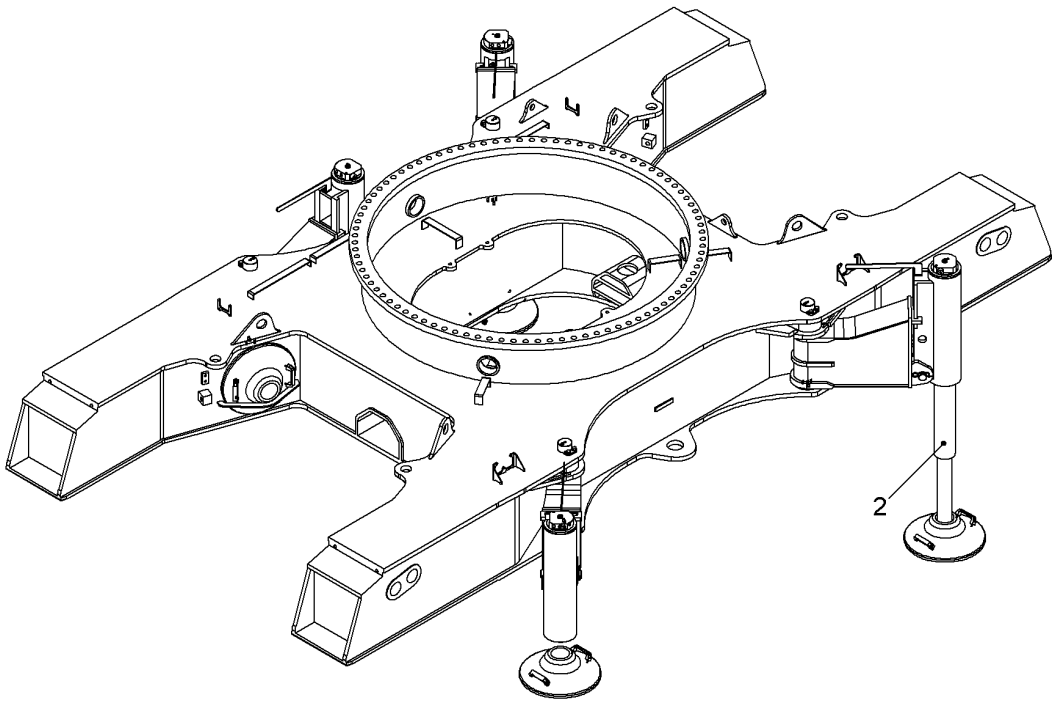

Pos.	Item	Quantity	Description	Bezeichnung	Serie	K
2	11894083	1	TUBING HYDR ⇨ ❑ 697	VERROHRUNG HYDR		

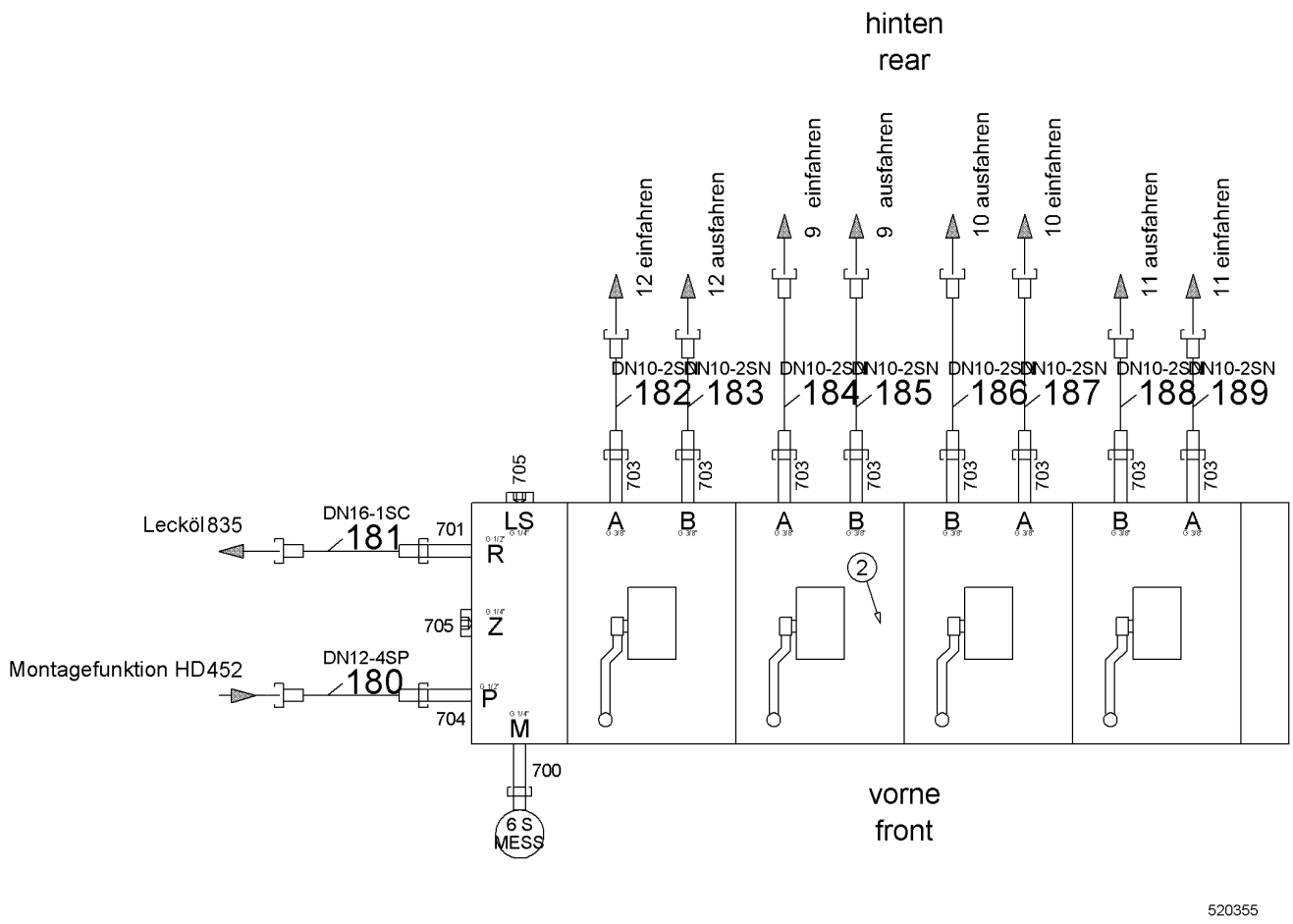

Pos.	Item	Quantity	Description	Bezeichnung	Serie	K
2	10224607	1	DIRECTIONAL CTRL. VALVE	WEGESCHIEBER		
700	473210214	1	FITTING	VERSCHRAUBUNG		
701	247009702	1	FITTING	VERSCHRAUBUNG		
703	471032708	8	FITTING	VERSCHRAUBUNG		
704	471033214	1	FITTING	VERSCHRAUBUNG		
705	247117302	2	FITTING	VERSCHRAUBUNG		
706	510695314	1	GAUGE CONNECTION	MESSSTUTZEN		

ACHTUNG !
ATTENTION !
ATTENTION !
ATENCIÓN !
ATENÇÃO !
ВНИМАНИЕ

Für Schlauchbestellungen kann über die Schlauchnummer, in der entsprechenden Schlauchliste, die Identnummer festgestellt werden.

For ordering flexible hoses you can find the identification number through the hose-number in the corresponding hose-list.

Pour des ordres de tuyau flexible le nombre d'identification on voit dans la liste de tuyau flexible correspondente.

Para el pedido de manguera, indicar el número de identificación de la manguera de la lista respectiva.

Para se encomendar uma mangueira, consulte o número de identificaçao na respectiva lista de mangueiras.

Для оформления заказов на шланги/рукавы идент. № может быть определен при помощи номера шланга/рукава, указанного в соотетствующем перечне шлангов/рукавов.

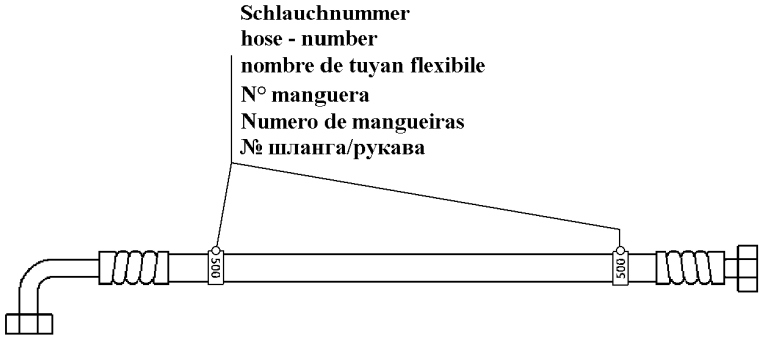

500000

Pos.	Item	Quantity	Description	Bezeichnung	Serie	K
180	992273614	1	HOSE CPL	SCHLAUCH KPL		
181	919144714	1	HOSE CPL	SCHLAUCH KPL		
182	993758914	1	HOSE CPL	SCHLAUCH KPL		
183	993758914	1	HOSE CPL	SCHLAUCH KPL		
184	995226814	1	HOSE CPL	SCHLAUCH KPL		
185	919736714	1	HOSE CPL	SCHLAUCH KPL		
186	919736714	1	HOSE CPL	SCHLAUCH KPL		
187	995226814	1	HOSE CPL	SCHLAUCH KPL		
188	993758914	1	HOSE CPL	SCHLAUCH KPL		
189	993758914	1	HOSE CPL	SCHLAUCH KPL		

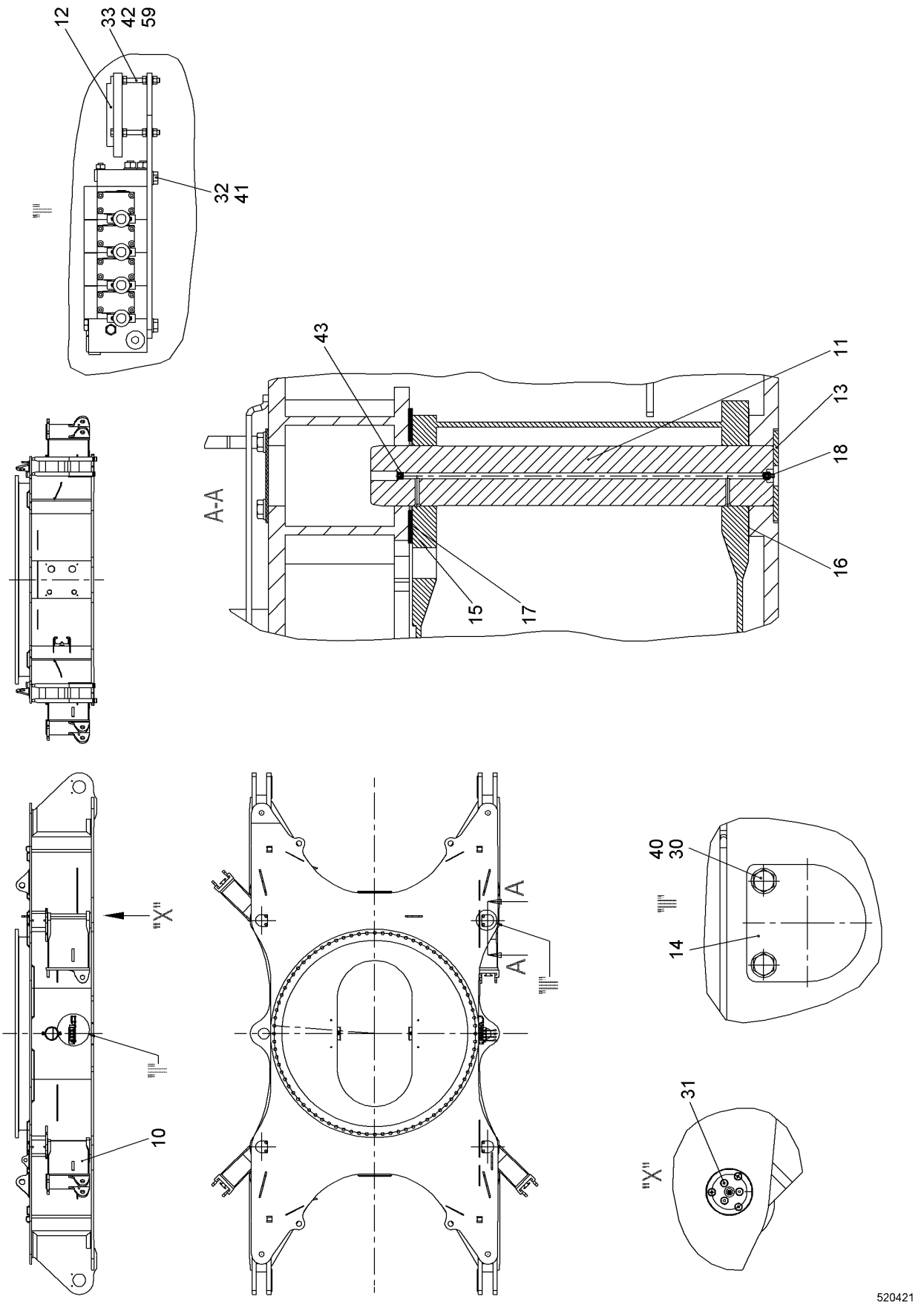
12
33
42
59
32
41
43
11
13
18
16
A-A
15
17
"X"
10
A
A
40
30
14
31
"X"
520421

Pos.	Item	Quantity	Description	Bezeichnung	Serie	K
10	10564433	4	FOLDING BRACKET	KLAPPKONSOLE		
11	10572058	4	PIN	BOLZEN		
12	714000808	1	SPIRIT LEVEL	WASSERWAAGE		
14	10572054	4	COVER	DECKEL		
15	385255314	4	WASHER 200/103X2 DC01;EN 10130	SCHEIBE		
16	385255414	4	WASHER 200/103X1 DC01;EN 10130	SCHEIBE		
17	385255514	4	WASHER 200/103X4 S235JR;EN 10025-2	SCHEIBE		
18	7743242	4	HYDRAULIC-TYPE LUBRICAT.NIPPLE	KEGELSCHMIERNIPPEL		
30	10539316	8	HEX SCREW ISO 4017 M16X30 10.9	SECHSKANTSCHRAUBE		
31	4001967	24	COUNTERSUNK SCREW DIN 7991 M10X20 8.8	SENKSCHRAUBE		
32	406501514	4	HEX SCREW ISO 4017 M8X16 A4-70	SECHSKANTSCHRAUBE		
33	10567564	3	HEX SCREW ISO 4017 M5X55 A4-70	SECHSKANTSCHRAUBE		
40	10544172	8	WASHER ISO 7089 16	SCHEIBE		
41	420001014	4	WASHER ISO 7089 8 A4	SCHEIBE		
42	420005214	9	WASHER ISO 7089 5 A4	SCHEIBE		
43	403900101	4	SCREW PLUG DIN 906 M10X1 ST	VERSCHLUSSSCHRAUBE		
50	411551114	9	HEX NUT ISO 4032 M5 A4-70	SECHSKANTMUTTER		

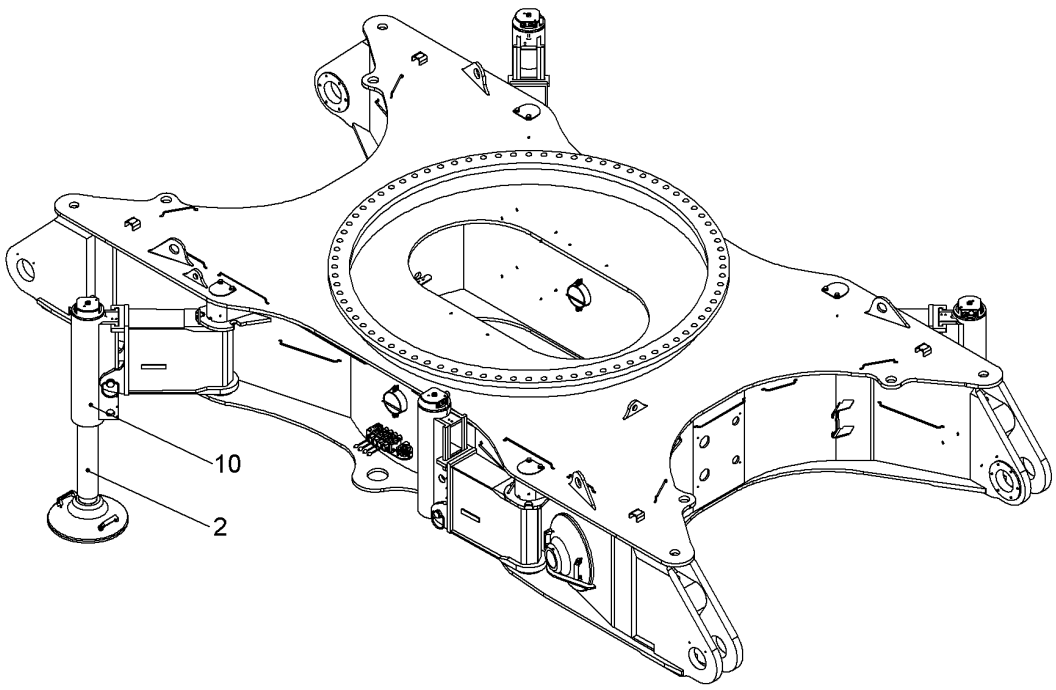

Pos.	Item	Quantity	Description	Bezeichnung	Serie	K
2	11235246	1	JACK-UP SYSTEM HYDR RFK ⇨ ❑ 702	JACK-UP SYSTEM HYDR NRS		
10	11895688	1	SELF-LOADING SYSTEM RFK ⇨ ❑ 706	SELBSTVERLADESYSTEM NRS		

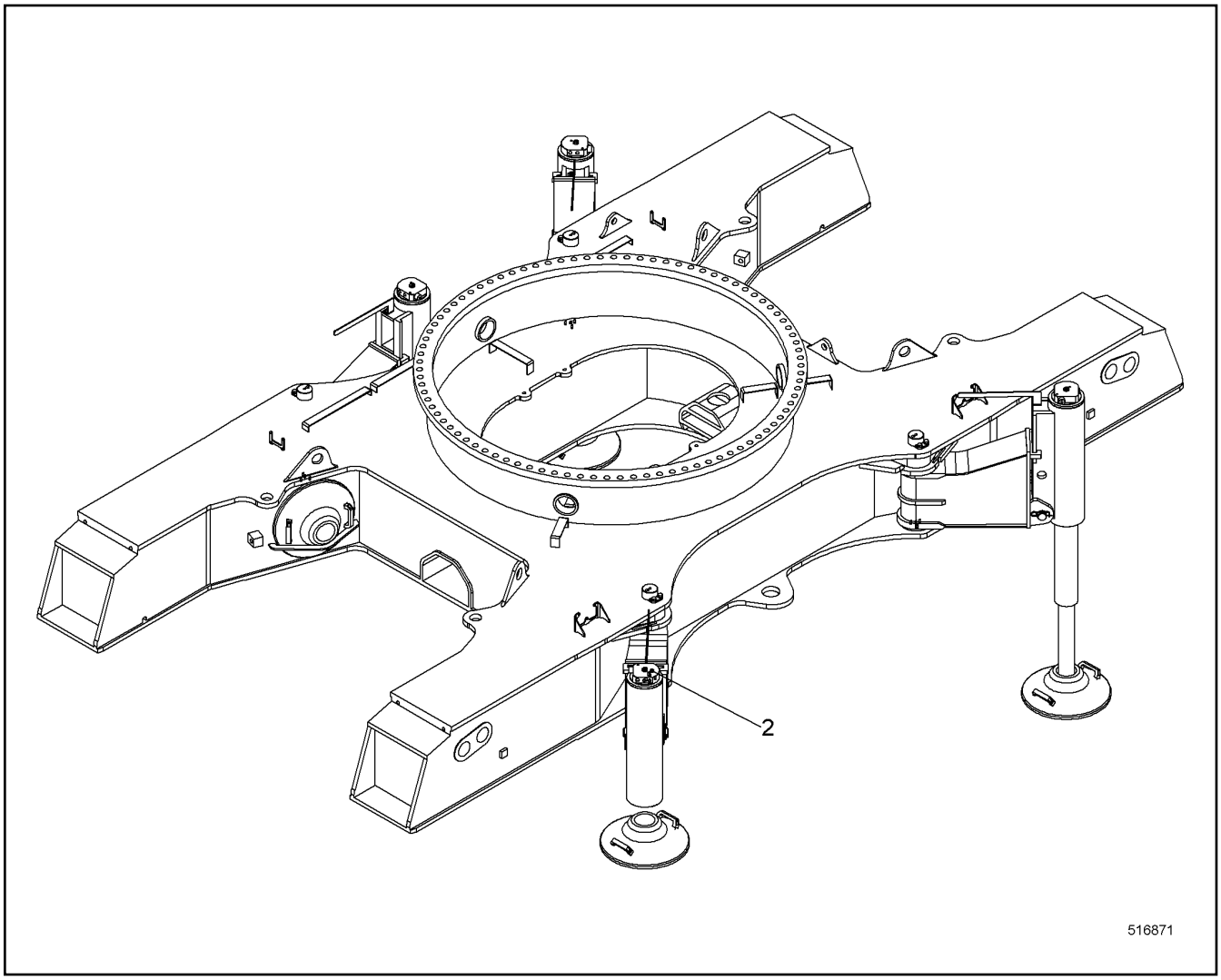

Pos.	Item	Quantity	Description	Bezeichnung	Serie	K
2	11235248	1	TUBING HYDR ⇨ ❑ 703	VERROHRUNG HYDR		

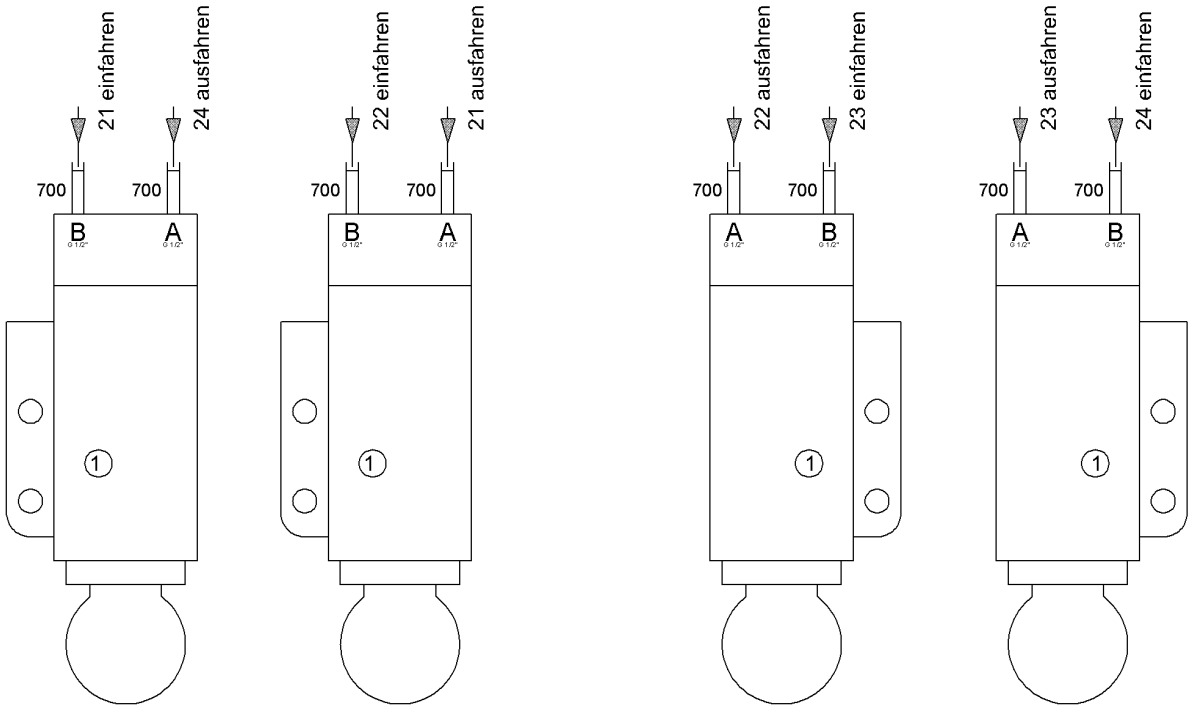

Material: für Montage
material: for assembling

606
605

520364

Pos.	Item	Quantity	Description	Bezeichnung	Serie	K
1	592182614	4	SUPPORT CYLINDER ⇨ ❑ 704	ABSTUETZZYLINDER		
605	477400414	8	FITTING	VERSCHRAUBUNG		
606	477700514	8	FITTING	VERSCHRAUBUNG		
700	471032608	8	FITTING	VERSCHRAUBUNG		

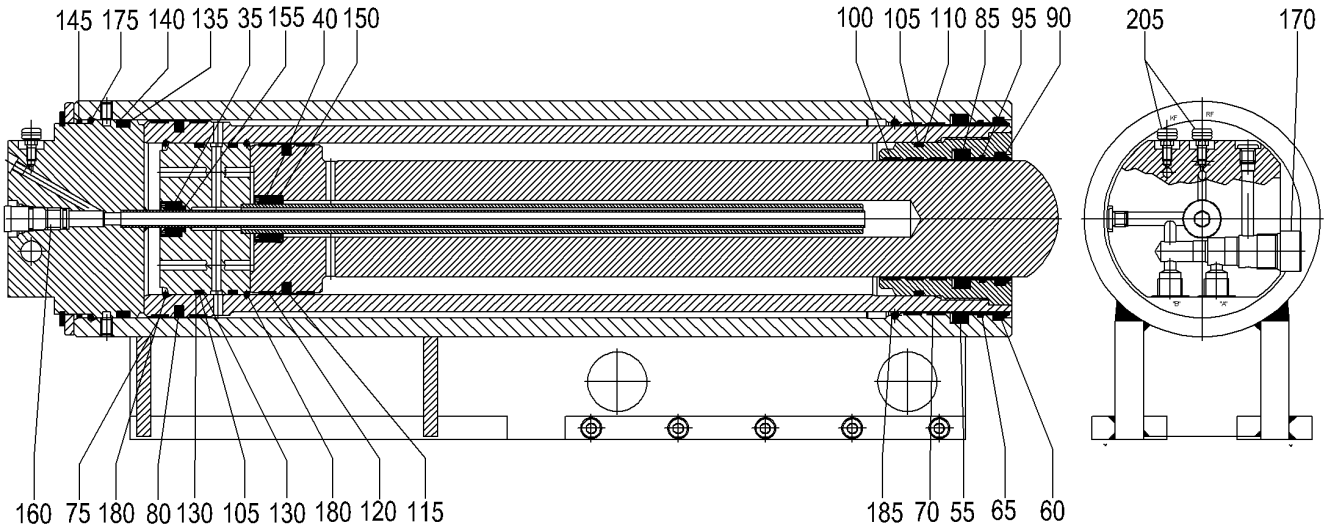

Pos.	Item	Quantity	Description	Bezeichnung	Serie	K
25	11289833	1	FLOOR	BODEN		
35	10352312	1	GUIDE BUSHING M30 X 1.5 X 15.1 X 18	FUEHRUNGSBUCHSE		
40	10352313	1	GUIDE BUSHING M40 X 1.5 X 25.1 X 24	FUEHRUNGSBUCHSE		
55	10352315	1	ROD SEAL	NUTRING		
60	10352319	1	SCRAPER	ABSTREIFER		
65	10352344	1	GUIDE RING	FUEHRUNGSRING		
70	10352349	2	GUIDE RING	FUEHRUNGSRING		
75	10352352	2	GUIDE RING	FUEHRUNGSRING		
80	10352353	1	PISTON PACKING SET	KOLBEN DS		
85	726308514	1	ROD SEAL	NUTRING		
90	749073614	1	SCRAPER	ABSTREIFER		
95	10352354	1	GUIDE RING	FUEHRUNGSRING		
100	726206214	3	GUIDE RING	FUEHRUNGSRING		
105	10352356	3	O-RING	O-RING		
110	10352355	1	BACKING RING	BACKRING		
115	10352357	1	PISTON PACKING SET	KOLBEN DS		
120	10351499	2	GUIDE RING	FUEHRUNGSRING		
130	10352359	4	BACKING RING	BACKRING		
135	10352361	1	O-RING	O-RING		
140	10352368	1	SUPPORTING RING	STUETZRING		
145	10352362	1	O-RING	O-RING		
150	10352364	1	LIFETIME SEAL	GLEITDICHTRING		
155	10352365	1	LIFETIME SEAL	GLEITDICHTRING		
160	11300790	1	LOWERING BRAKE VALVE	SENKBREMSVENTIL		
170	10352371	1	NON-RETURN VALVE	RUECKSCHLAGVENTIL		
175	10352382	1	SNAP RING 5X175	SPRENGRING		

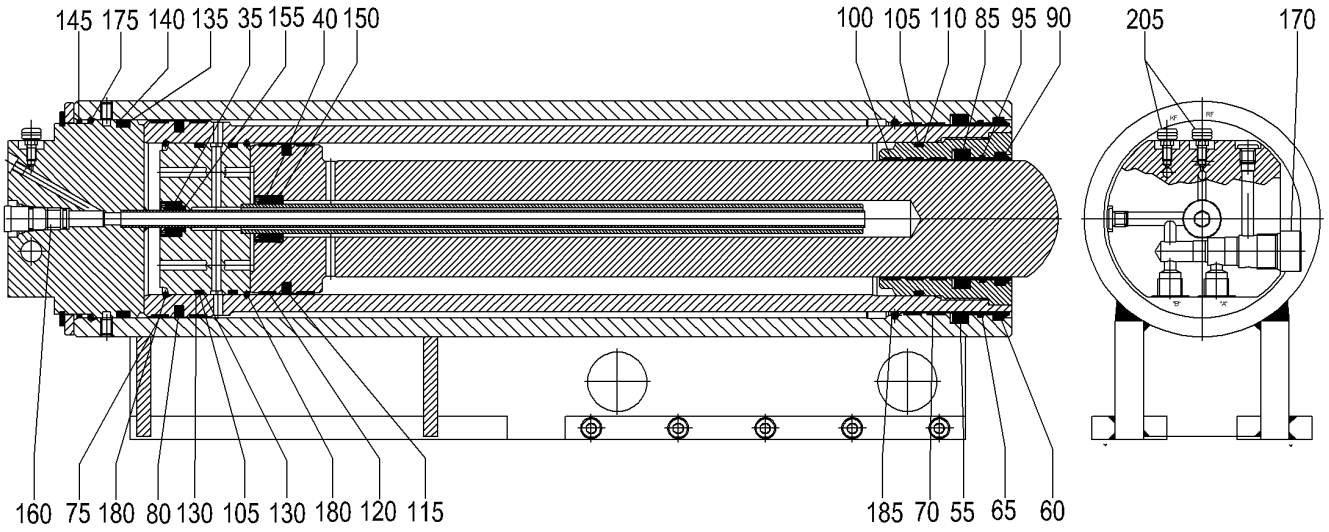

Pos.	Item	Quantity	Description	Bezeichnung	Serie	K
180	10352383	2	SNAP RING 5 X 135	SPRENGRING		
185	10352384	1	SNAP RING 6 X 172	SPRENGRING		
205	10351239	2	VENTILATION VALVE	ENTLUEFTUNGSVENTIL		
900	11904703	1	SEALING SET CPL	DS KPL		

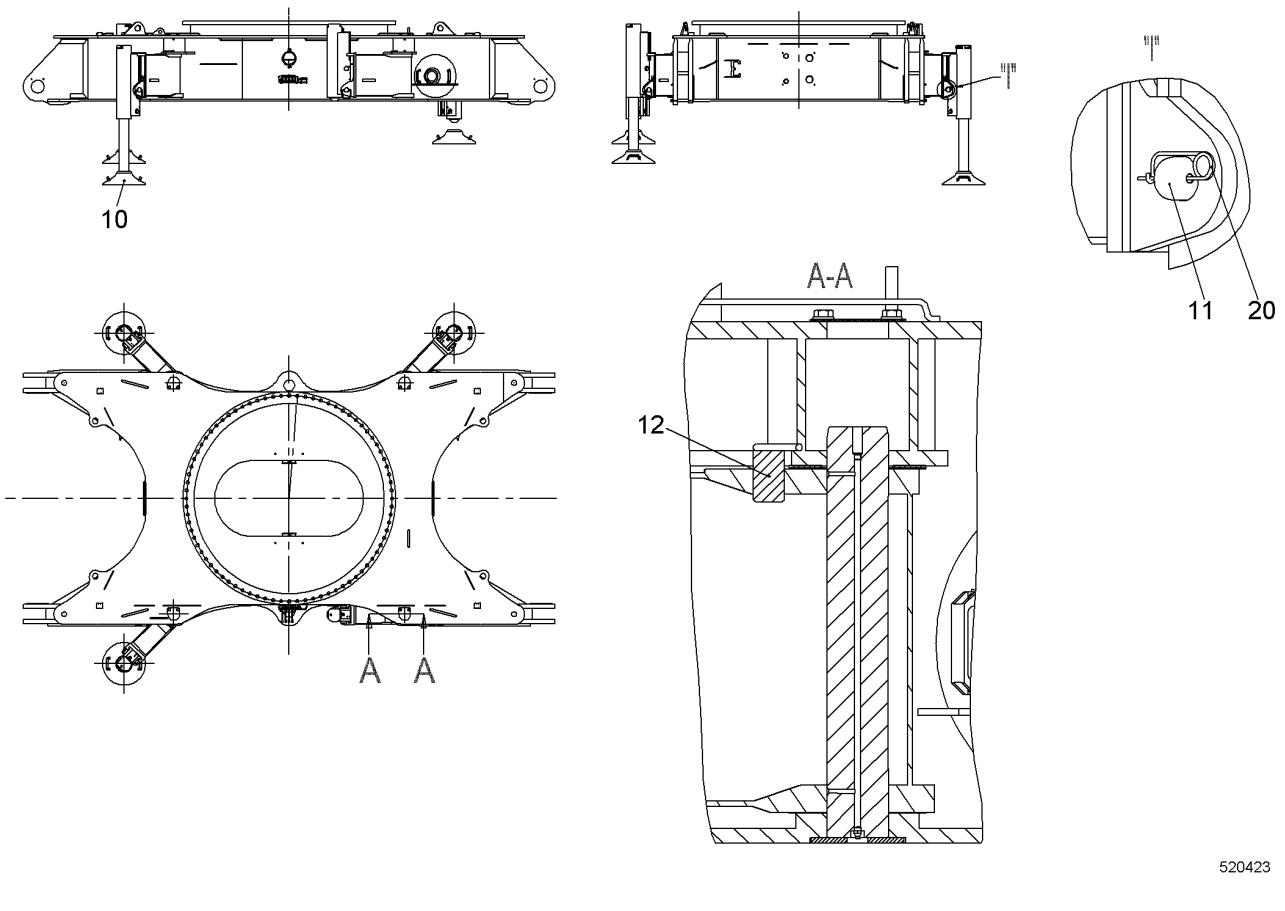

Pos.	Item	Quantity	Description	Bezeichnung	Serie	K
10	990759714	4	SUPPORT PLATE CPL	ABSTUETZPLATTE KPL		
11	11262110	4	PIN CPL	BOLZEN KPL		
12	959835714	4	PIN CPL	BOLZEN KPL		
20	433101208	4	RETAINING SPRING 4MM	SICHERUNGSFEDER		

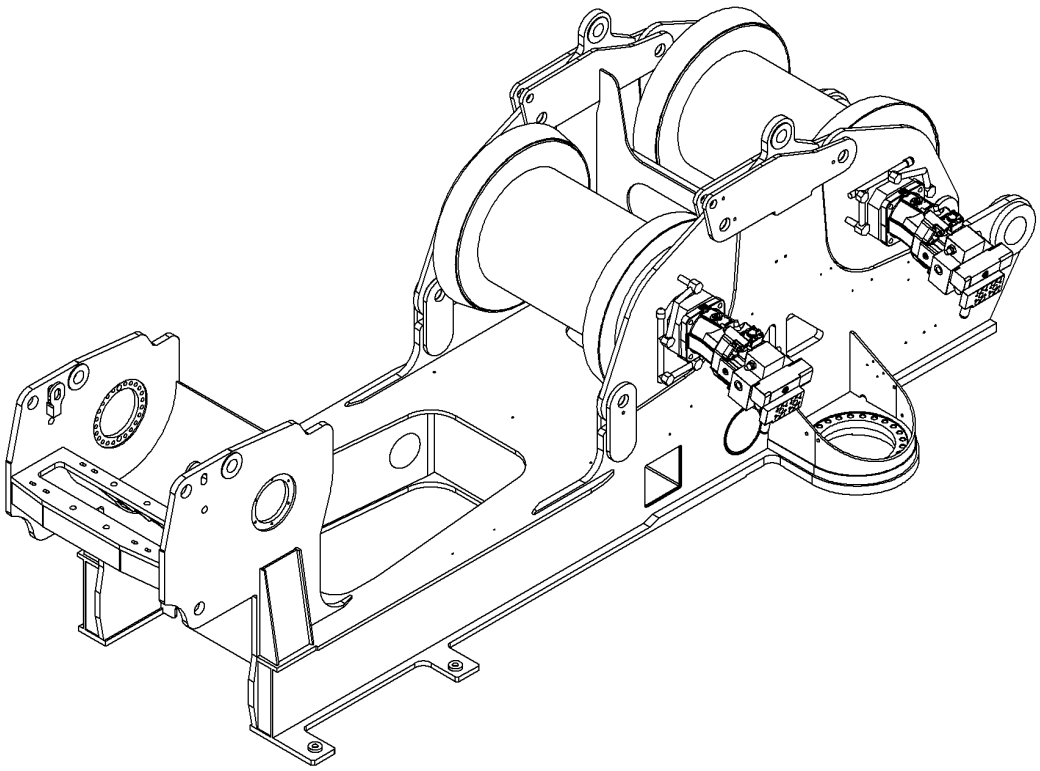

516201

Pos.	Item	Quantity	Description	Bezeichnung	Serie	K
2	10536351	1	SYNCHRONIZING HYDR RFK ⇨ ❑ 708	GLEICHLAUF HYDR NRS		
4	10536352	1	HOSE LIST ⇨ ❑ 710	SCHLAUCHLISTE		

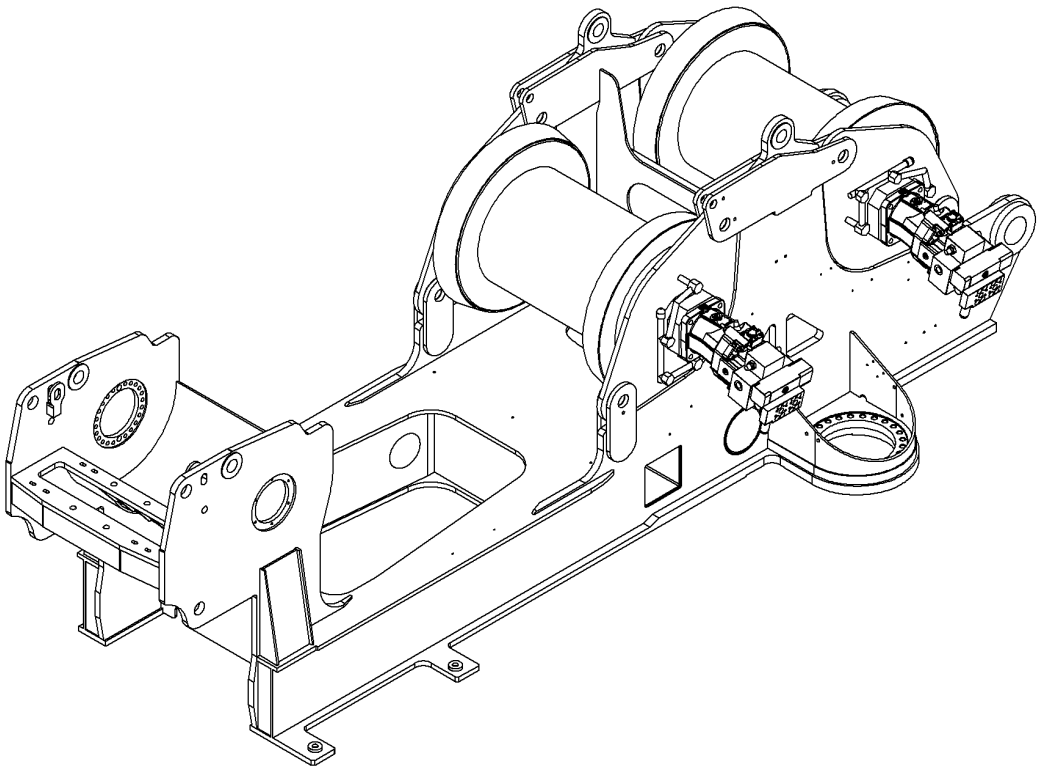

516202

Pos.	Item	Quantity	Description	Bezeichnung	Serie	K
2	10554594	1	TUBING HYDR ⇨ ❑ 709	VERROHRUNG HYDR		

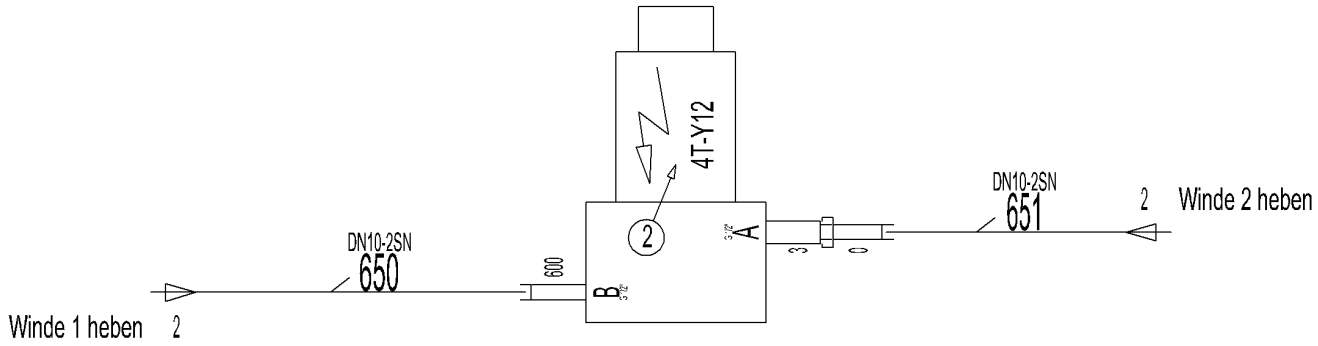

Pos.	Item	Quantity	Description	Bezeichnung	Serie	K
2	511480614	1	DIRECTIONAL CONTROL VALVE	WEGEVENTIL		
3	917906414	1	RESTRICTOR BODY	DROSSELKOERPER		
600	471032608	1	FITTING	VERSCHRAUBUNG		
601	7617354	1	FITTING	VERSCHRAUBUNG		

ACHTUNG !
ATTENTION !
ATTENTION !
ATENCIÓN !
ATENÇÃO !
ВНИМАНИЕ

Für Schlauchbestellungen kann über die Schlauchnummer, in der entsprechenden Schlauchliste, die Identnummer festgestellt werden.

For ordering flexible hoses you can find the identification number through the hose-number in the corresponding hose-list.

Pour des ordres de tuyau flexible le nombre d'identification on voit dans la liste de tuyau flexible correspondente.

Para el pedido de manguera, indicar el número de identificación de la manguera de la lista respectiva.

Para se encomendar uma mangueira, consulte o número de identificaçao na respectiva lista de mangueiras.

Для оформления заказов на шланги/рукавы идент. № может быть определен при помощи номера шланга/рукава, указанного в соотетствующем перечне шлангов/рукавов.

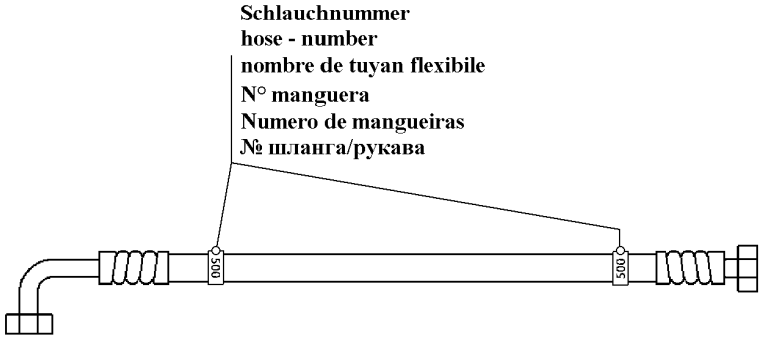

500000

Pos.	Item	Quantity	Description	Bezeichnung	Serie	K
1	10518558	2	ADHESIVE LABEL	HAFTETIKETTE		
650	993227714	1	HOSE CPL	SCHLAUCH KPL		
651	993759614	1	HOSE CPL	SCHLAUCH KPL		

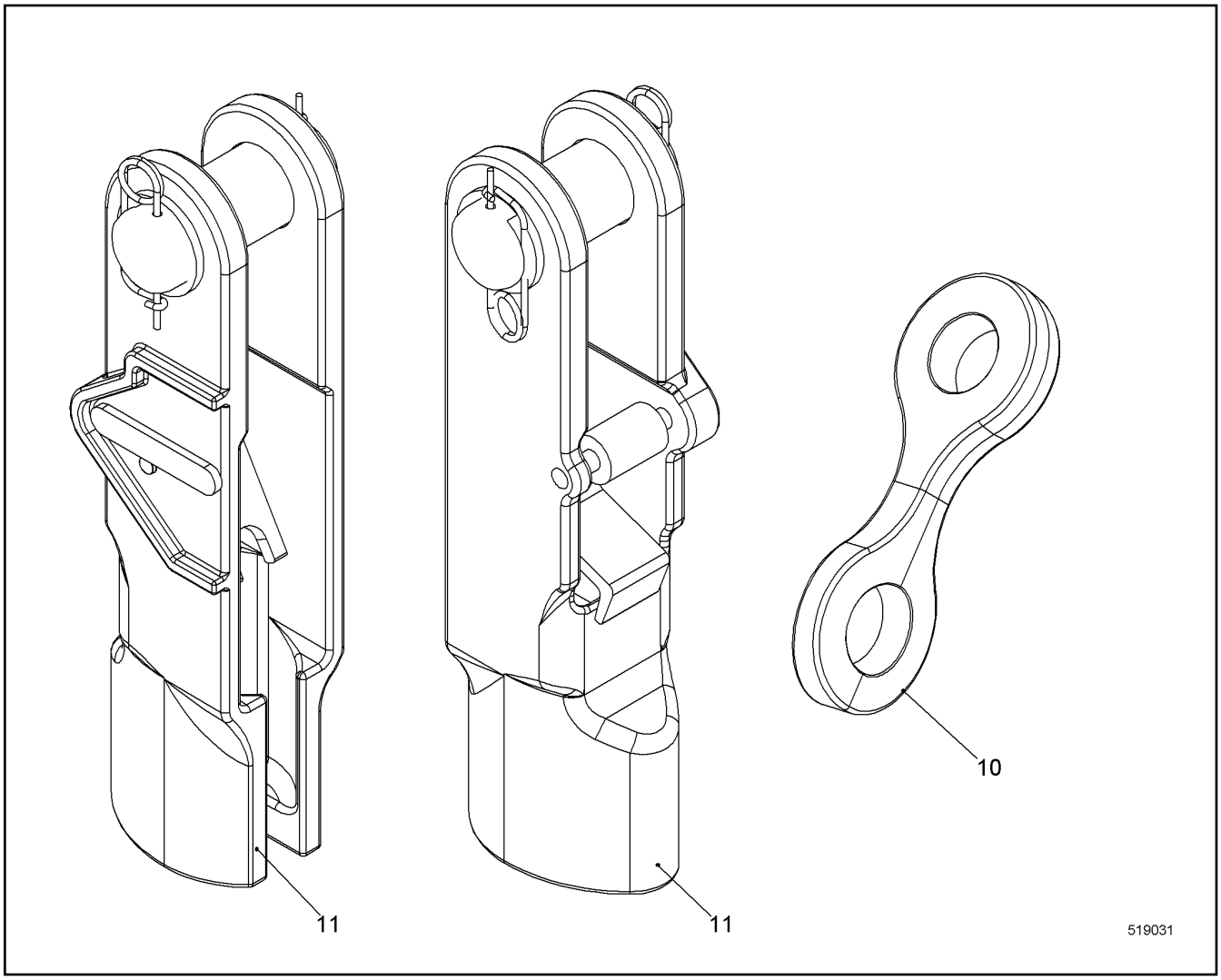

Pos.	Item	Quantity	Description	Bezeichnung	Serie	K
10	956507814	1	CROSS STRAP	KREUZLASCHE		
11	11236233	1	POUCH SOCKET ⇨ ❑ 712	TASCHENSCHLOSS		

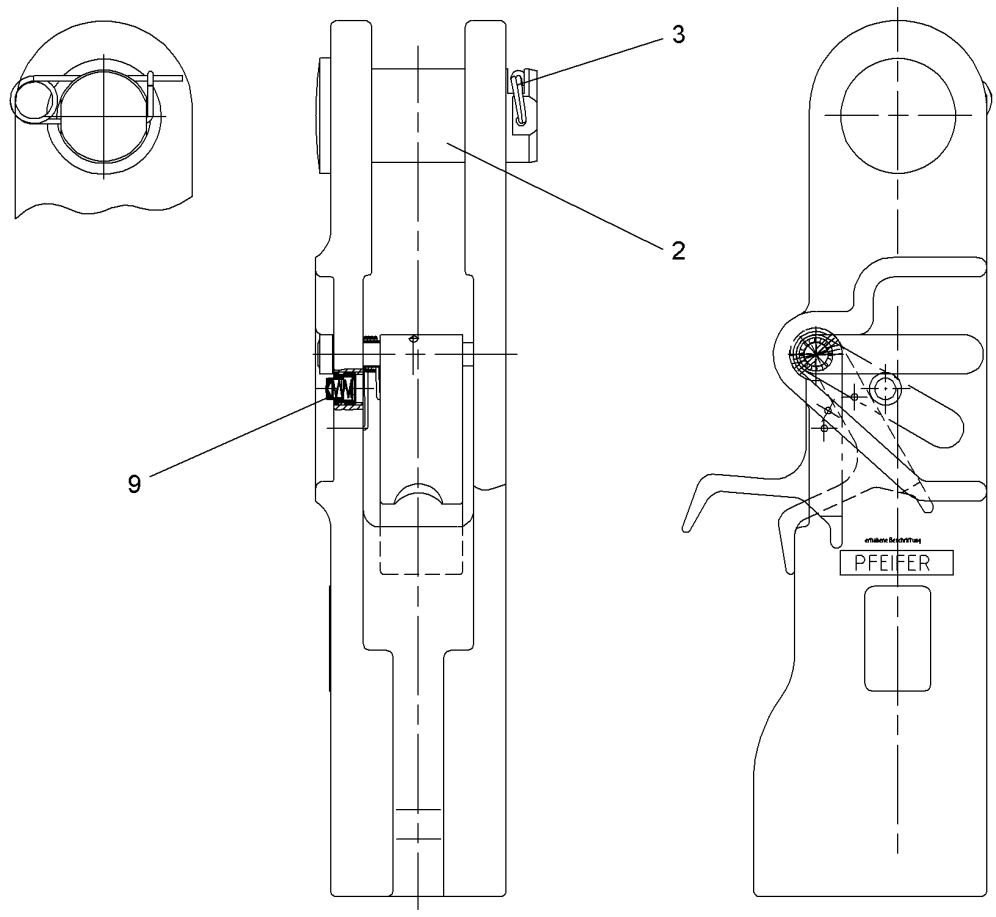

Pos.	Item	Quantity	Description	Bezeichnung	Serie	K
2	11297460	1	COLLER BOLT	BUNDBOLZEN		
3	11297461	1	RETAINING SPRING 3MM	SICHERUNGSFEDER		
6	11306379	1	SPIRAL DOWEL PIN DIN 7344 5.0X26	SPIRALSPANNSTIFT		
9	10504994	1	BUTTON	KNOPF		

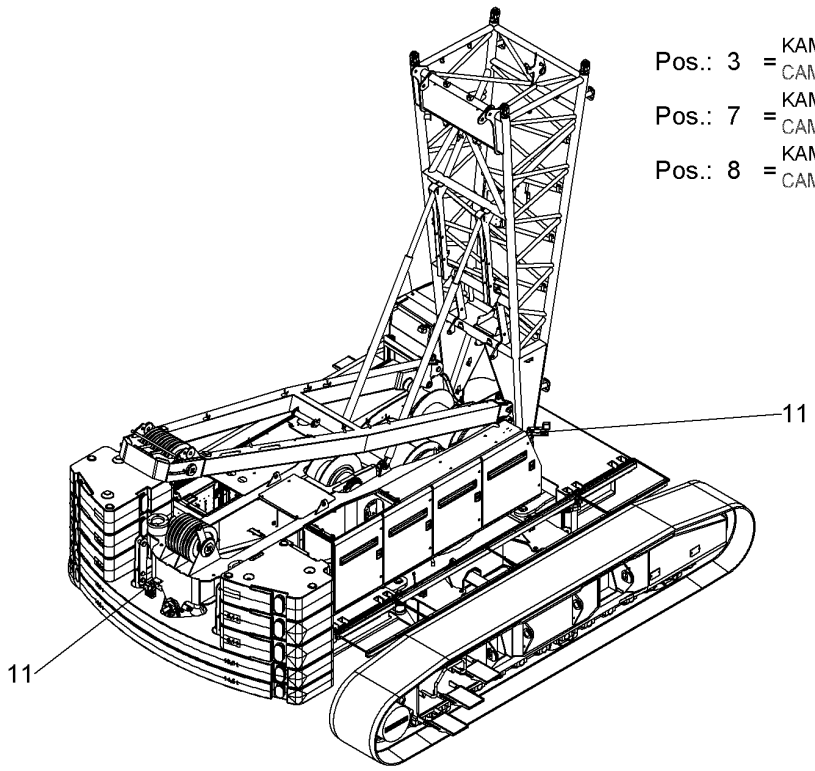

Pos.	Item	Quantity	Description	Bezeichnung	Serie	K
3	11893352	1	CAMERA MONITORING	KAMERAUEBERWACHUNG		
7	10532461	1	CAMERA MONITORING ⇨ ❑ 714	KAMERAUEBERWACHUNG		
8	10507750	1	CAMERA MONITORING ⇨ ❑ 716	KAMERAUEBERWACHUNG		
11	10580647	1	VIDEO MONITORING SYSTEM RFK ⇨ ❑ 717	VIDEOUEBERWACHUNGSANLAG		

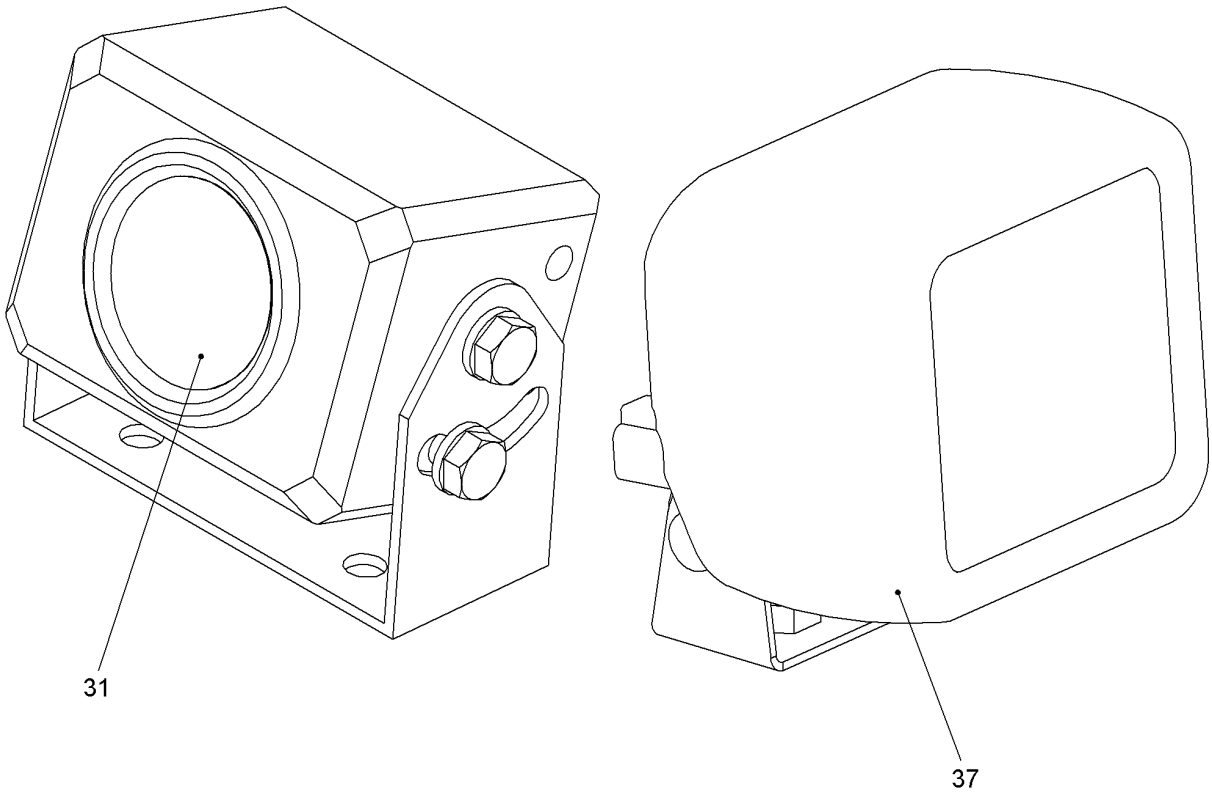

Pos.	Item	Quantity	Description	Bezeichnung	Serie	K
31	10024012	1	CAMERA CCD	KAMERA CCD		
37	7027205	1	WORK LIGHT ⇨ ❑ 36	ARBEITSSCHEINWERFER		
50	10533524	1	CABIN EL ⇨ ❑ 715	KABINE EL		

OHNE BILD
WITHOUT ILLUSTRATION
SANS PLANCHE
SIN FIG.
SEM ILUSTRAÇÃO
БЕЗ ИЗОБРАЖЕНИЯ

600000

Pos.	Item	Quantity	Description	Bezeichnung	Serie	K
1	11240503	1	MONITOR LCD	MONITOR LCD		
3	11240499	1	CABLE	KABEL		
4	10286648	1	BALL JOINT	KUGELGELENK		

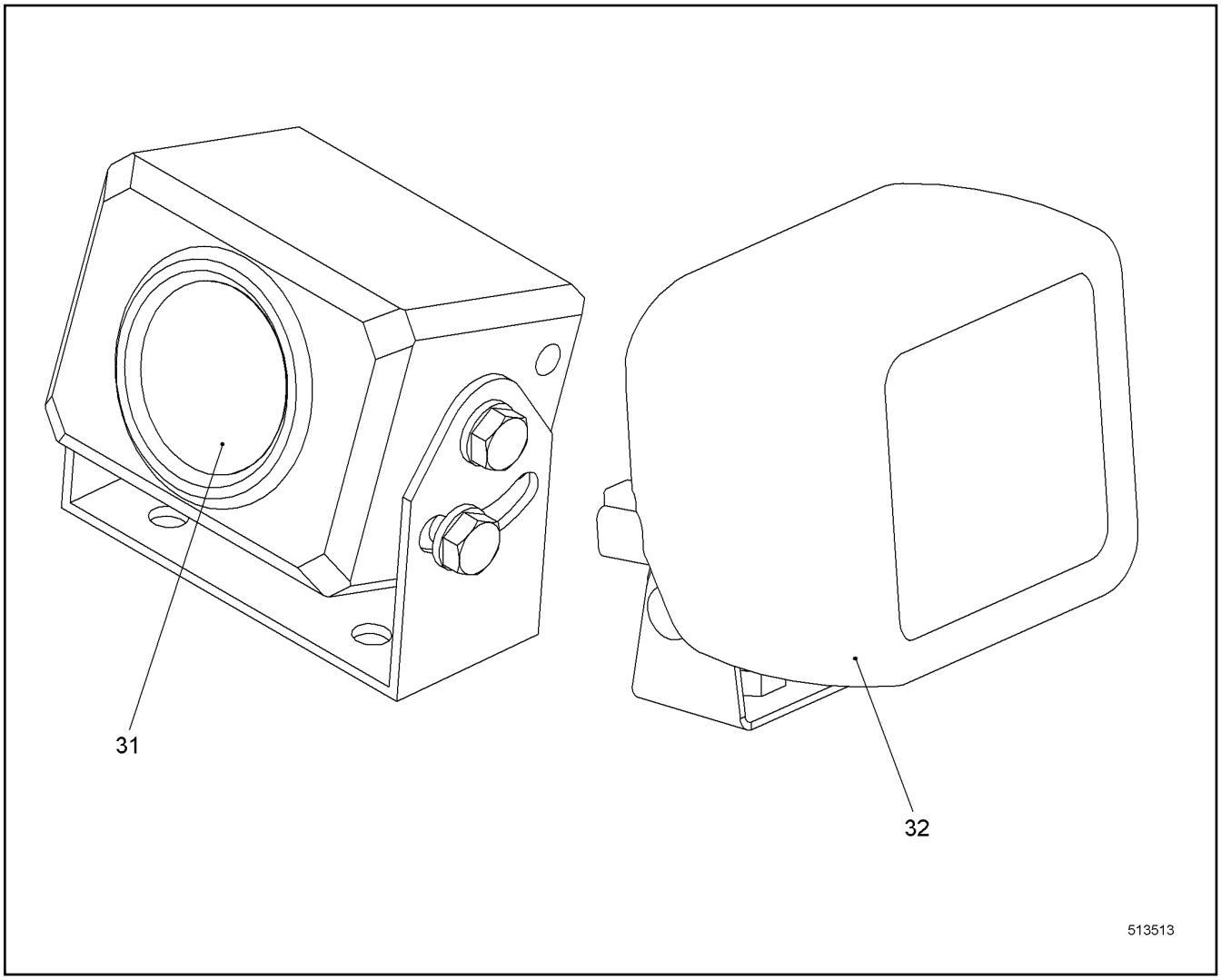

Pos.	Item	Quantity	Description	Bezeichnung	Serie	K
31	10024012	1	CAMERA CCD	KAMERA CCD		
32	7027205	1	WORK LIGHT ⇨ ❑ 36	ARBEITSSCHEINWERFER		

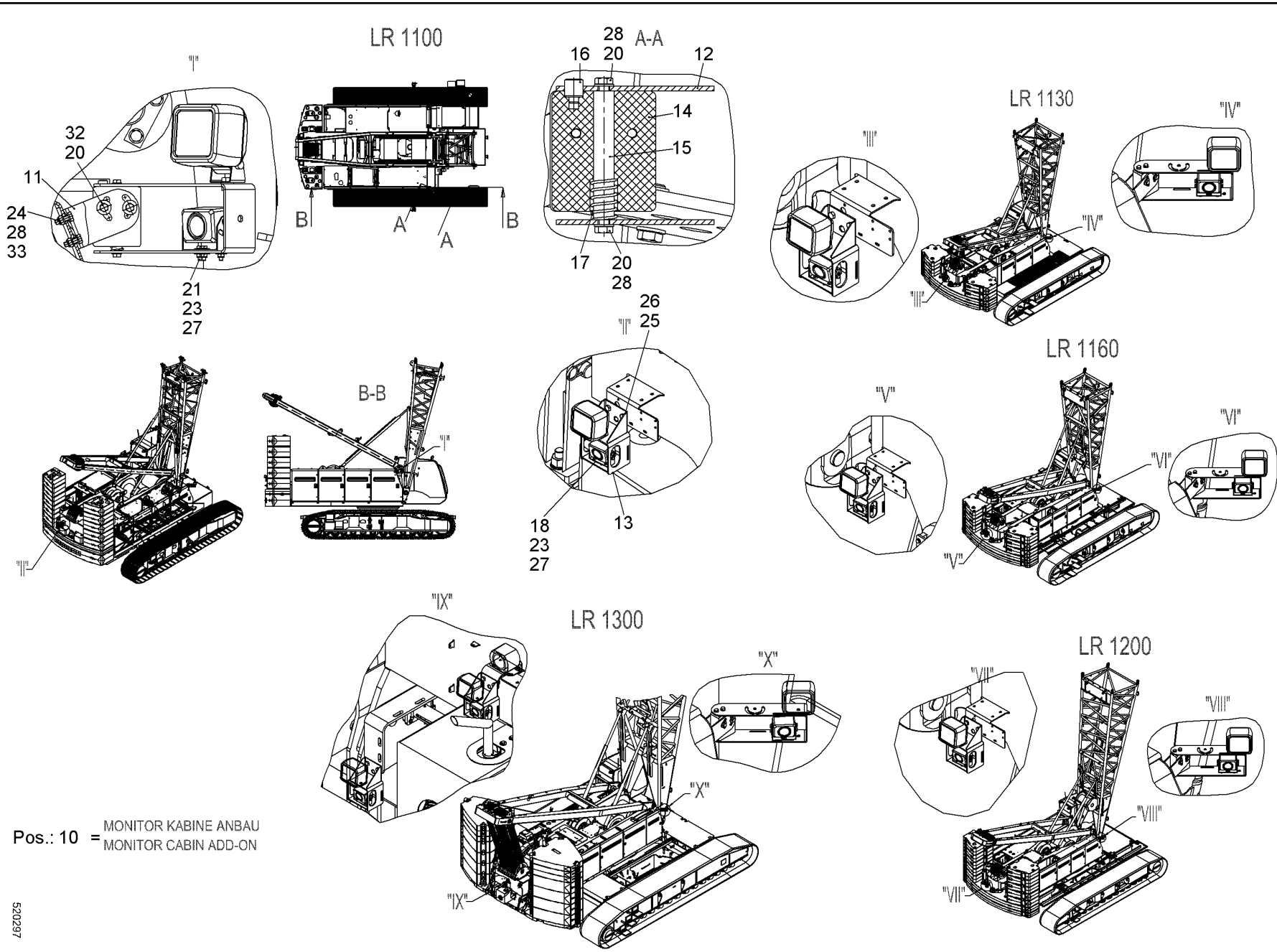

Pos.: 10 = MONITOR KABINE ANBAU
MONITOR CABIN ADD-ON

520297

Pos.	Item	Quantity	Description	Bezeichnung	Serie	K
10	10578486	1	MONITOR CABIN ADD-ON ⇨ ❑ 719	MONITOR KABINE ANBAU		
11	10529071	1	PLATE	BLECH		
12	10529074	1	PLATE	BLECH		
13	385137114	1	HOLDER CAMERA	HALTER KAMERA		
14	10529080	1	TWIST PIVOT	DREHGELENK		
15	10529084	1	PIN	BOLZEN		
16	10529086	1	PIN	BOLZEN		
17	10529089	1	PRESSURE SPRING	DRUCKFEDER		
18	406501714	3	HEX SCREW ISO 4017 M6X16 A4-70	SECHSKANTSCHRAUBE		
20	406518814	6	HEX SCREW ISO 4017 M8X20 A4-70	SECHSKANTSCHRAUBE		
21	406532614	3	HEX SCREW ISO 4017 M6X20 A4-70	SECHSKANTSCHRAUBE		
23	10540492	6	HEX NUT ISO 10511 M6 A4	SECHSKANTMUTTER		
24	10540493	2	HEX NUT ISO 10511 M8 A4	SECHSKANTMUTTER		
25	4901782	2	WASHER ISO 7089 12 A4	SCHEIBE		
26	10540495	2	HEX NUT ISO 10511 M12 A4	SECHSKANTMUTTER		
27	10540500	9	WASHER ISO 7093-1 6 A4	SCHEIBE		
28	420001014	6	WASHER ISO 7089 8 A4	SCHEIBE		
32	10540510	4	WASHER ISO 7093-1 8 A4	SCHEIBE		
33	406501414	2	HEX SCREW ISO 4017 M8X25 A4-70	SECHSKANTSCHRAUBE		

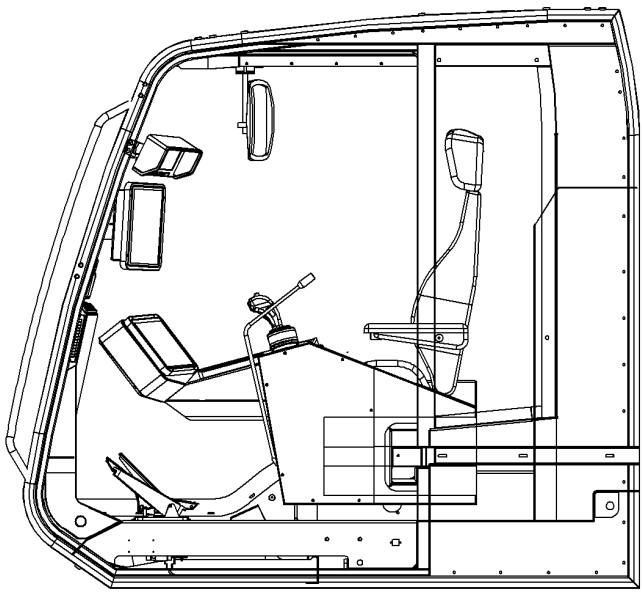

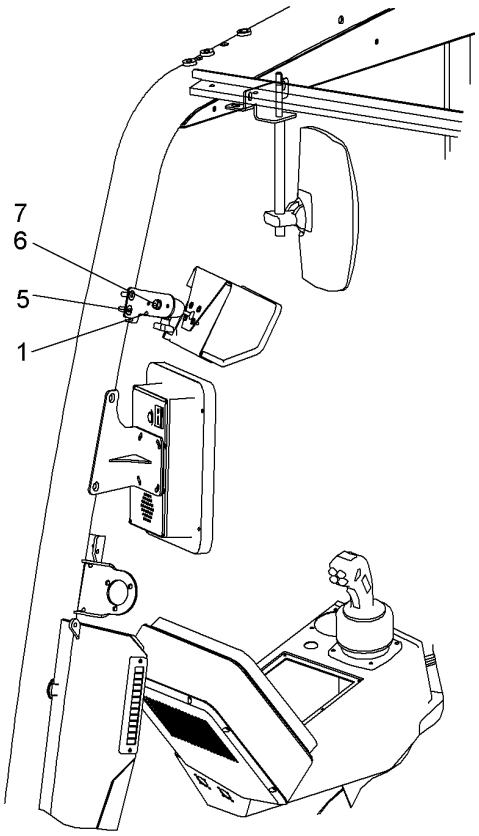

515129

Pos.	Item	Quantity	Description	Bezeichnung	Serie	K
1	10527391	1	HOLDER	HALTER		
5	408606214	2	COUNTERSUNK SCREW DIN 7991 M8X20 A4-7	SENKSCHRAUBE		
6	406501514	1	HEX SCREW ISO 4017 M8X16 A4-70	SECHSKANTSCHRAUBE		
7	420001014	1	WASHER ISO 7089 8 A4	SCHEIBE		

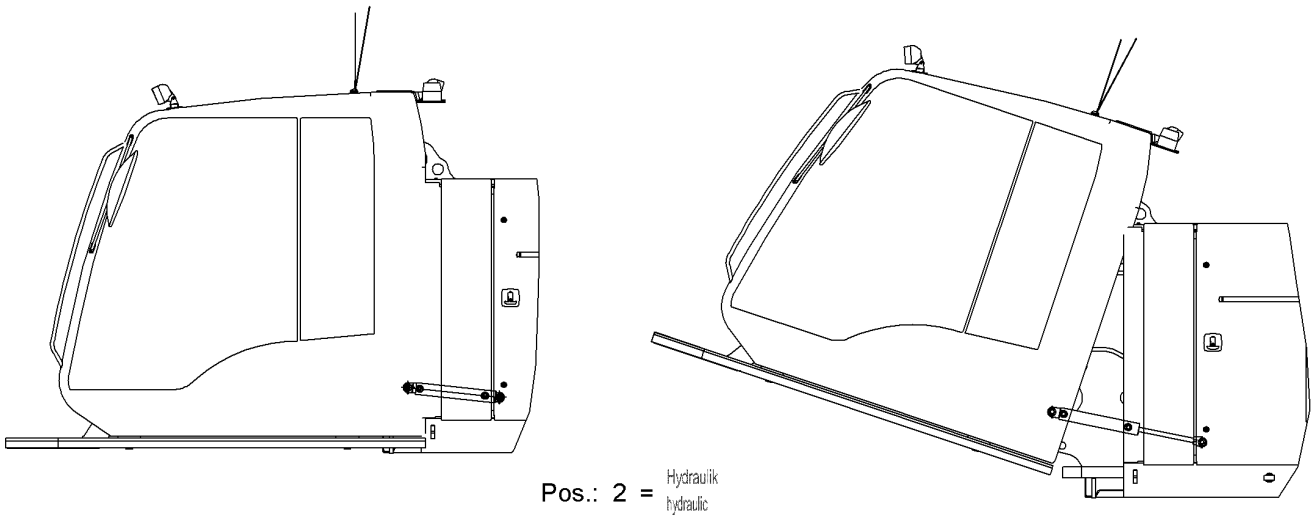

Pos.	Item	Quantity	Description	Bezeichnung	Serie	K
2	10517281	1	TUBING HYDR ⇨ ❑ 721	VERROHRUNG HYDR		
3	10531224	1	CABIN INCLINATION EL RFK	KABINENNEIGUNG EL NRS		
10		-1	TURNBUCKLE	SPANNSCHLOSS		

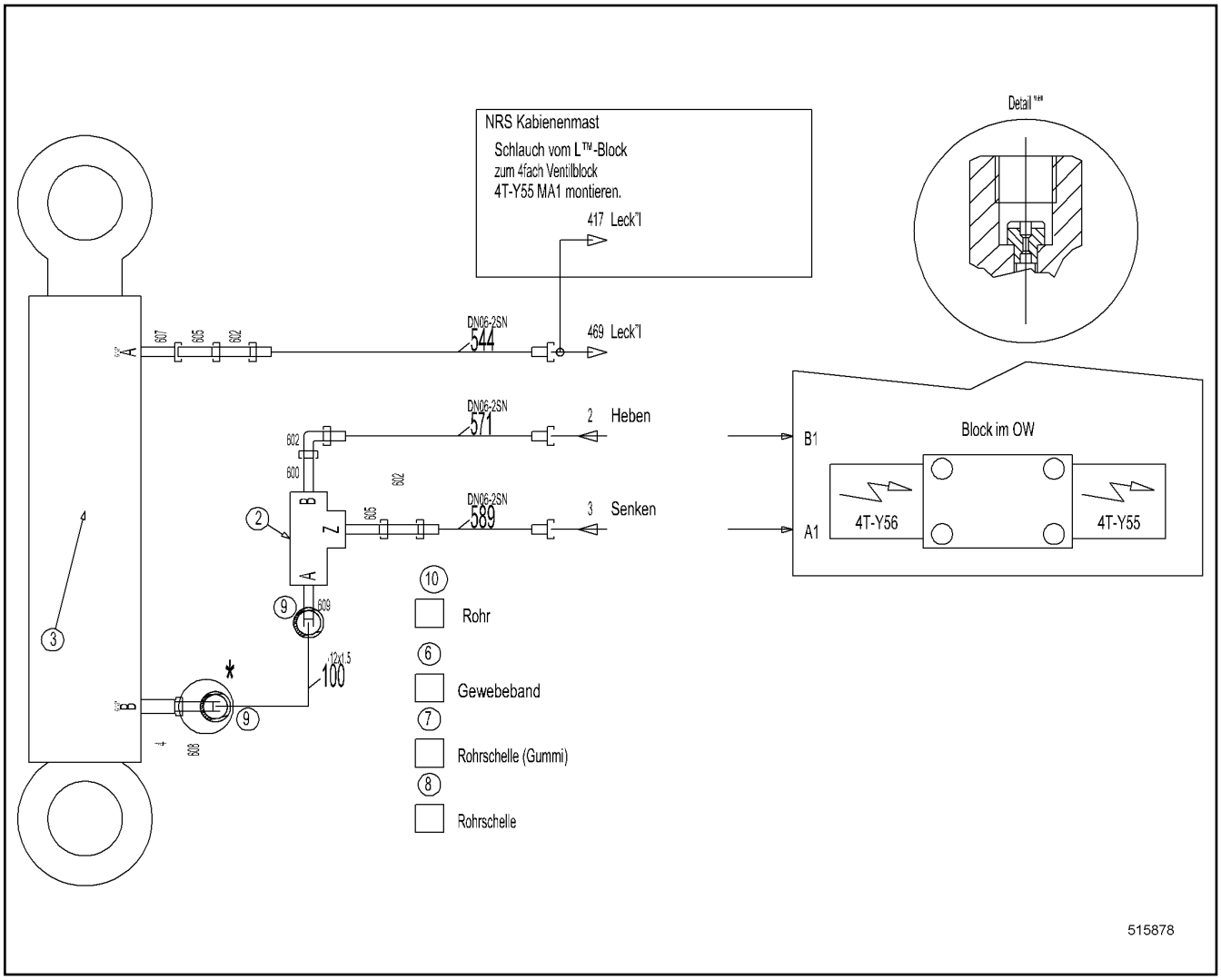

Pos.	Item	Quantity	Description	Bezeichnung	Serie	K
2	510466114	1	PILOT CONTROLLED CHECK VALVE	RUECKSCHLAGVENTIL ENTSPE		
3	592000814	1	DOUBLE-ACTING CYL ⇨ ❑ 722	DOPPELWIRKZYL		
4	917906414	1	RESTRICTOR BODY	DROSSELKOERPER		
5	714001914	1	MAIN JET SOLEX 0.8MM	HAUPTDUESE SOLEX		
7	10579877	1	PIPE CLAMP	ROHRSCHELLE		
8	774214308	1	HOSE CLAMP	SCHLAUCHSCHELLE		
9	790230014	2	SEAL	DICHTUNG		
10	10588224	1	PIPE SET	ROHRSATZ		
600	471032808	1	FITTING	VERSCHRAUBUNG		
602	7617268	3	FITTING	VERSCHRAUBUNG		
605	471004514	2	FITTING	VERSCHRAUBUNG		
607	247042402	1	FITTING	VERSCHRAUBUNG		
608	7617354	1	FITTING	VERSCHRAUBUNG		
609	471032708	1	FITTING	VERSCHRAUBUNG		

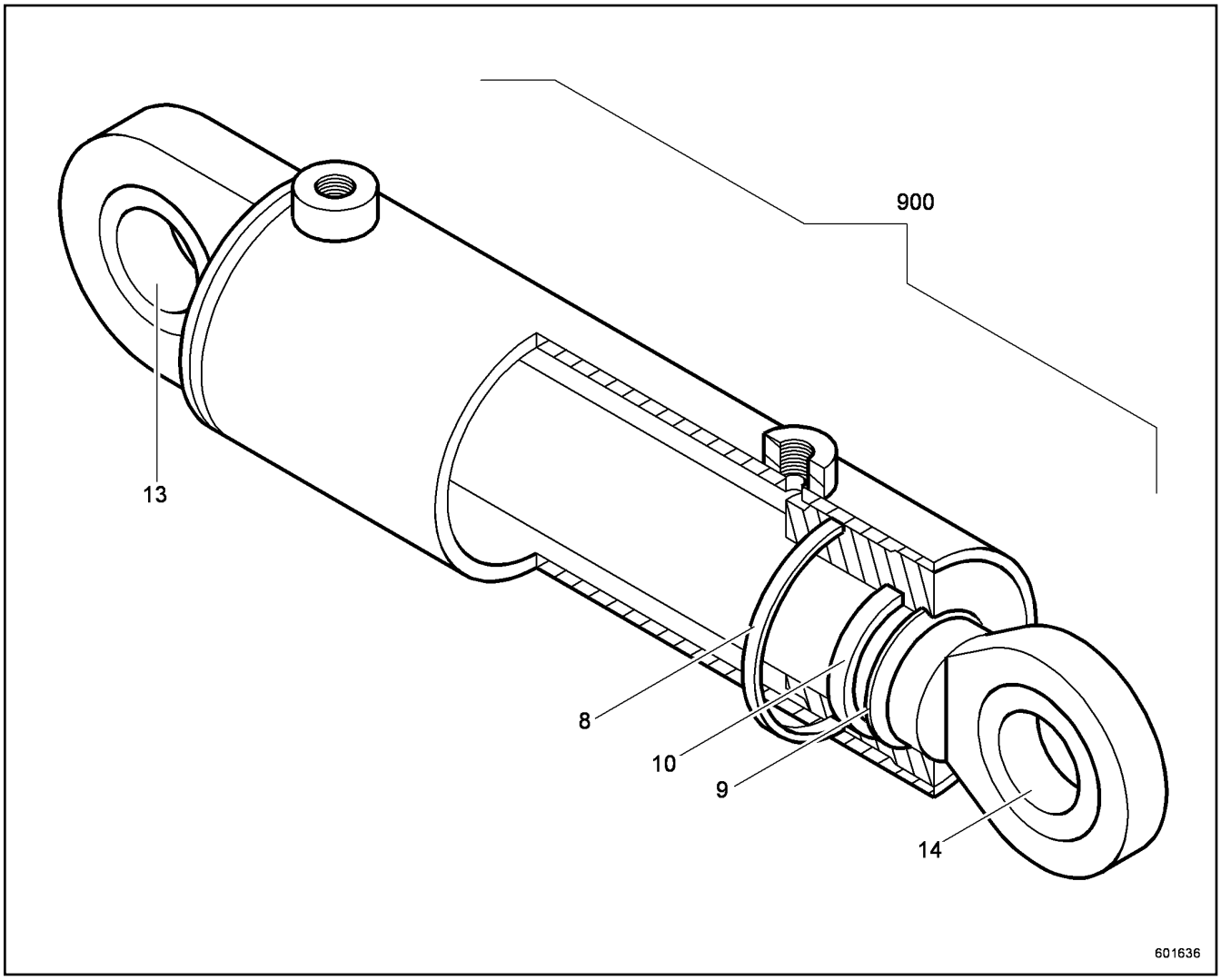

Pos.	Item	Quantity	Description	Bezeichnung	Serie	K
8	726456914	1	O-RING	O-RING		
9	592031814	1	SCRAPER	ABSTREIFER		
10	726306414	1	ROD SEAL	NUTRING		
13	746925314	1	SPHERICAL BEARING	GELENKLAGER		
14	746925314	1	SPHERICAL BEARING	GELENKLAGER		
900	790230614	1	SEALING SET CPL CYL	DS KPL ZYL		

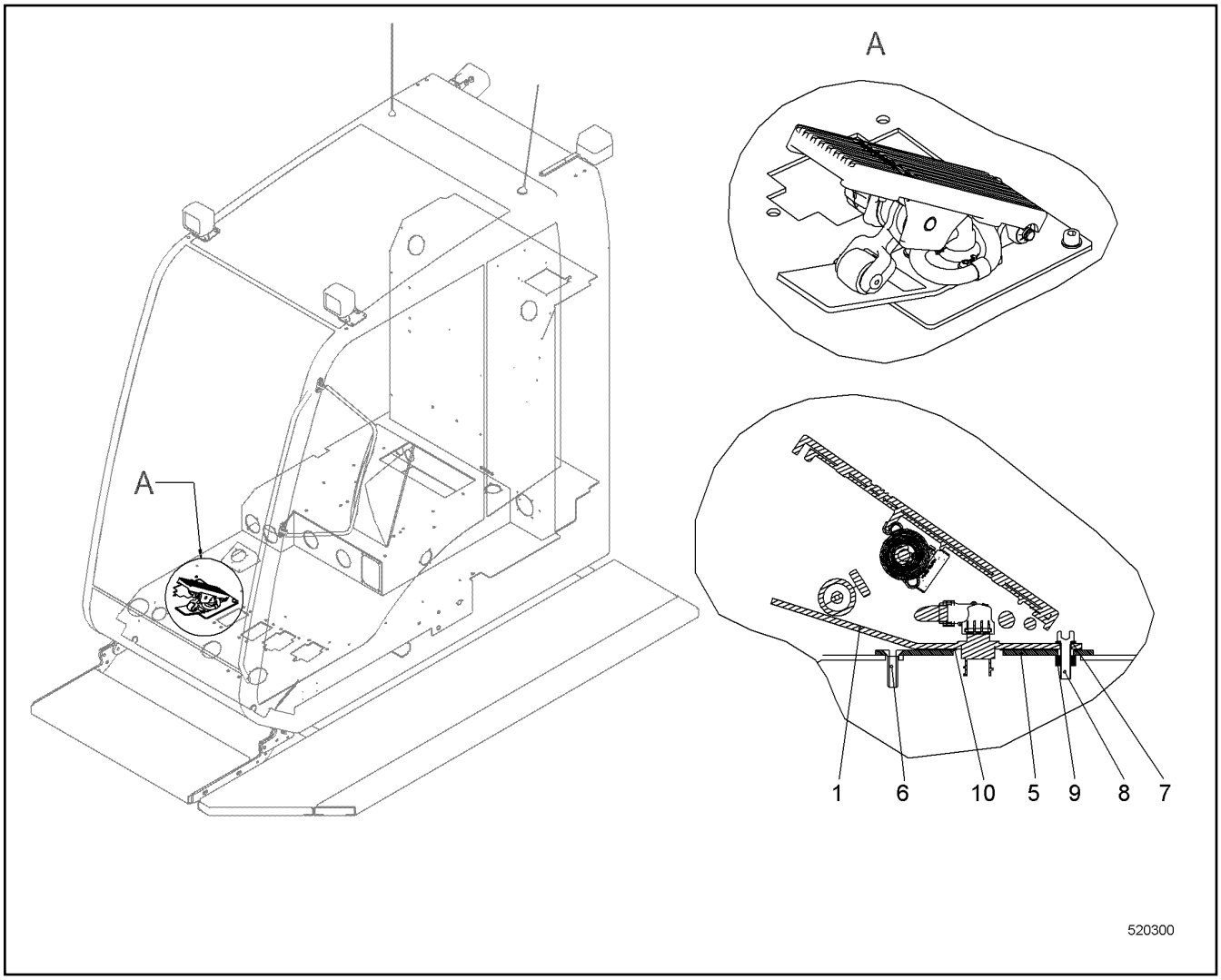

Pos.	Item	Quantity	Description	Bezeichnung	Serie	K
1	11219883	1	FOOT PEDAL	FUSSPEDAL		
5	11220468	1	ADAPTER PLATE	ADAPTERBLECH		
6	408600708	1	COUNTERSUNK SCREW ISO 10642 M8X30 8.8	SENKSCHRAUBE		
7	420001014	4	WASHER ISO 7089 8 A4	SCHEIBE		
8	404206614	4	SOCKET HEAD SCREW ISO 4762 M8X30 A4-7	ZYLINDERSCHRAUBE		
9	413003208	2	CAGE NUT M8-R-123-47 ST	KAEFIGMUTTER		
10	11220477	1	RING	RING		

OHNE BILD
WITHOUT ILLUSTRATION
SANS PLANCHE
SIN FIG.
SEM ILUSTRAÇÃO
БЕЗ ИЗОБРАЖЕНИЯ

600000

Pos.	Item	Quantity	Description	Bezeichnung	Serie	K
11	11217500	1	LIQUEFIER ⇨ ❑ 725	VERFLUESSIGER		
12	10565368	1	SOLENOIDVALVE BUILT-IN KIT RFK ⇨ ❑ 727	MAGNETVENTIL EINBAUSATZ NR		
15	553078814	2.2	COOLANT	KUEHLMITTEL		
17	959465714	1	BRACKET	BUEGEL		
18	11892804	1	INSULATION	ISOLIERUNG		
20	10577909	1	HOSE LIST ⇨ ❑ 729	SCHLAUCHLISTE		
22	11232788	1	SIGN	SCHILD		

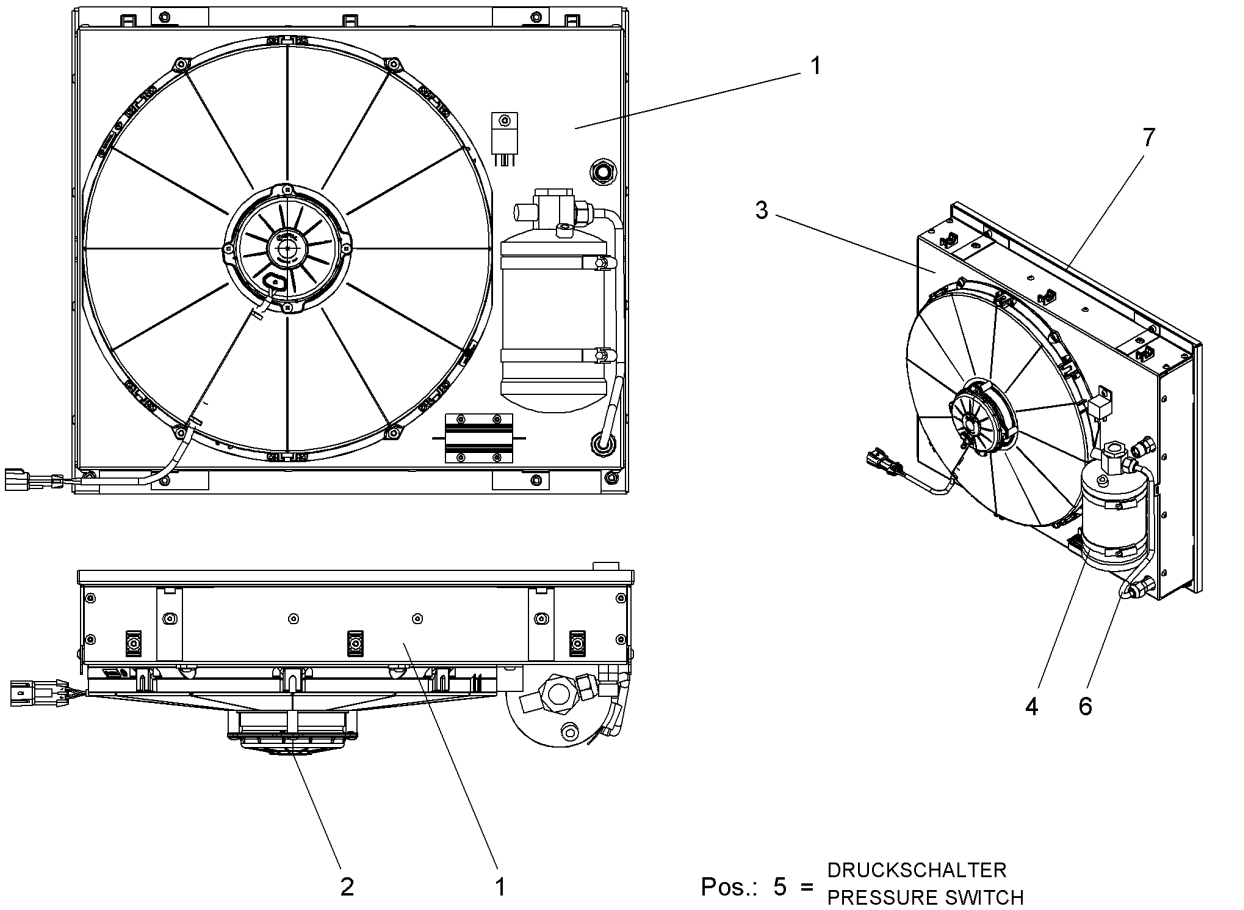

Pos.	Item	Quantity	Description	Bezeichnung	Serie	K
1	11236707	1	HEAT EXCHANGER	WAERMETAUSCHER		
2	11236708	1	FAN MOTOR	LUEFTERMOTOR		
3	11236709	1	COVER	ABDECKUNG		
4	11236711	1	DRYER	TROCKNER		
5	11236712	1	PRESSURE SWITCH	DRUCKSCHALTER		
6	11236713	1	LEAD	LEITUNG		
7	11236714	1	FRAME ⇨ ❑ 726	RAHMEN		

OHNE BILD
WITHOUT ILLUSTRATION
SANS PLANCHE
SIN FIG.
SEM ILUSTRAÇÃO
БЕЗ ИЗОБРАЖЕНИЯ

600000

Pos.	Item	Quantity	Description	Bezeichnung	Serie	K
1	11903519	4	RUBBER BUFFER	GUMMIPUFFER		

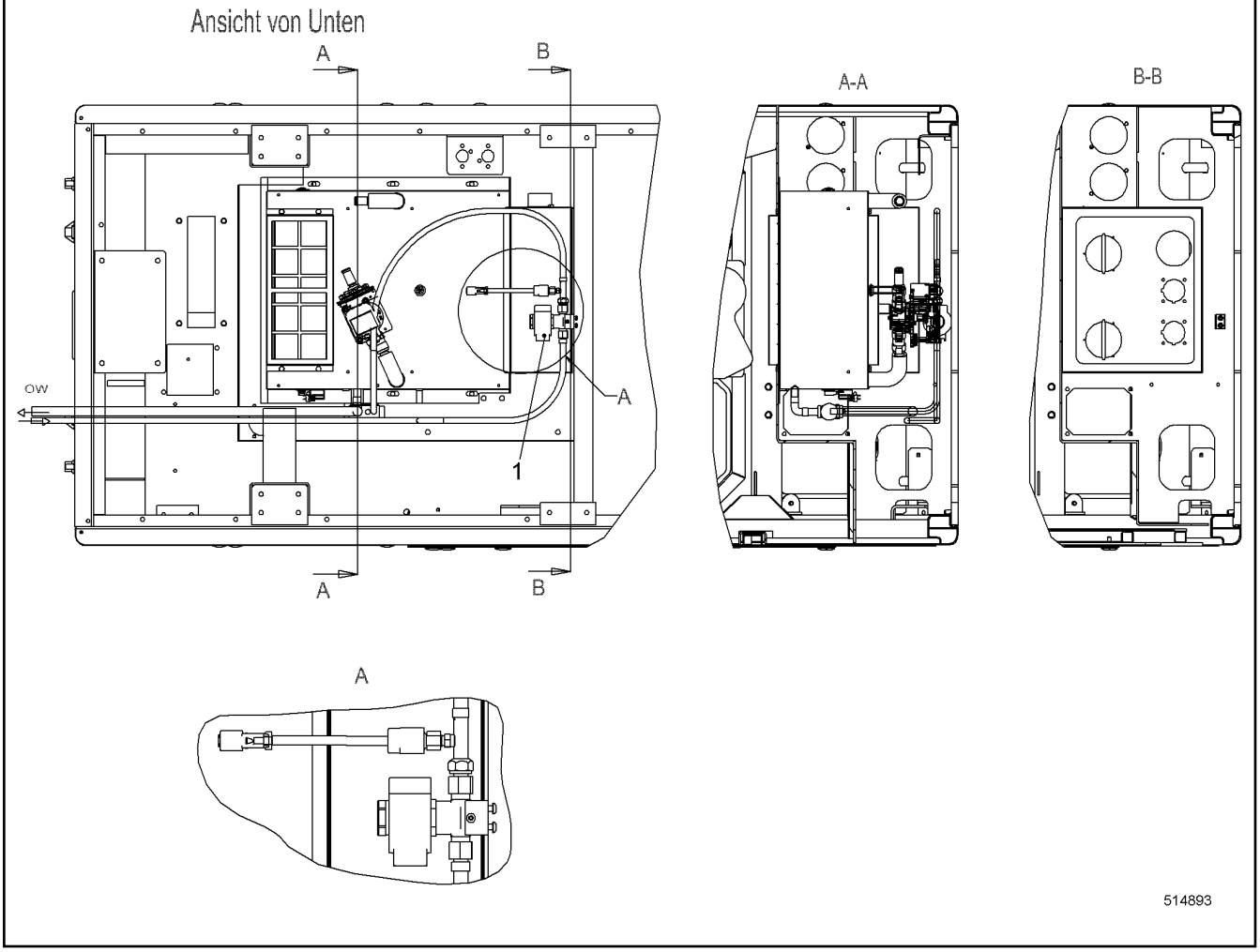

Pos.	Item	Quantity	Description	Bezeichnung	Serie	K
1	10565367	1	SOLENOID VALVE BUILT-IN KIT ⇨ ❑ 728	MAGNETVENTIL EINBAUSATZ		

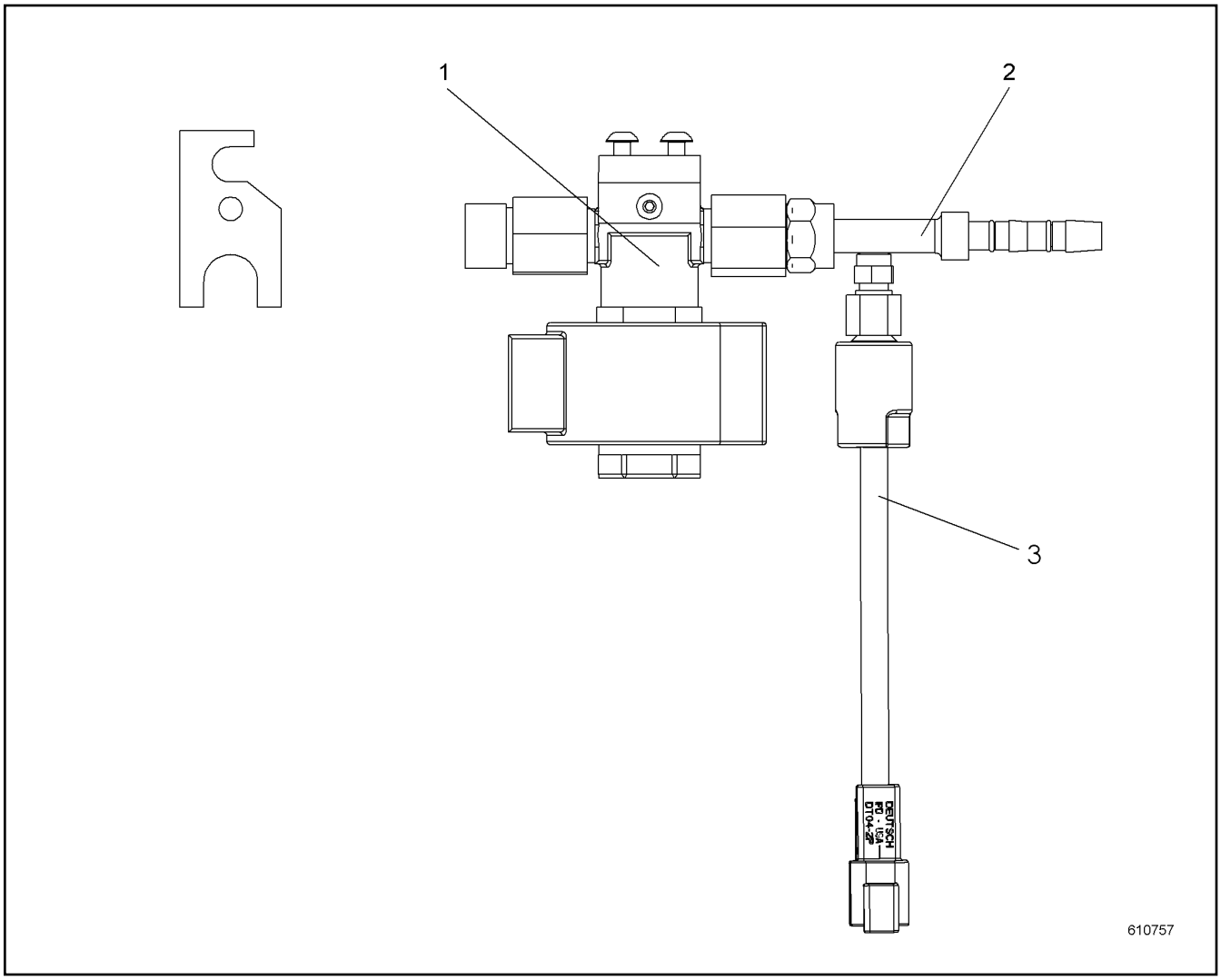

Pos.	Item	Quantity	Description	Bezeichnung	Serie	K
1	11254299	1	SOLENOID VALVE	MAGNETVENTIL		
2	11953398	1	HOSE FITTING	SCHLAUCHARMATUR		
3	11903869	1	PRESSURE SWITCH	DRUCKSCHALTER		

ACHTUNG !
ATTENTION !
ATTENTION !
ATENCIÓN !
ATENÇÃO !
ВНИМАНИЕ

Für Schlauchbestellungen kann über die Schlauchnummer, in der entsprechenden Schlauchliste, die Identnummer festgestellt werden.

For ordering flexible hoses you can find the identification number through the hose-number in the corresponding hose-list.

Pour des ordres de tuyau flexible le nombre d'identification on voit dans la liste de tuyau flexible correspondente.

Para el pedido de manguera, indicar el número de identificación de la manguera de la lista respectiva.

Para se encomendar uma mangueira, consulte o número de identificaçao na respectiva lista de mangueiras.

Для оформления заказов на шланги/рукавы идент. № может быть определен при помощи номера шланга/рукава, указанного в соотетствующем перечне шлангов/рукавов.

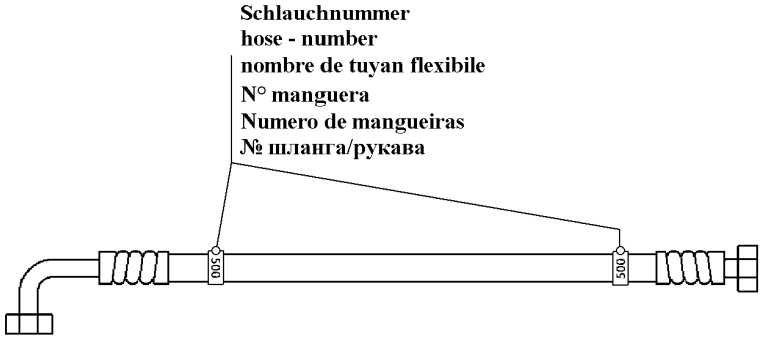

500000

Pos.	Item	Quantity	Description	Bezeichnung	Serie	K
4	10527918	1	HOSE SET CPL	SCHLAUCHSATZ KPL		

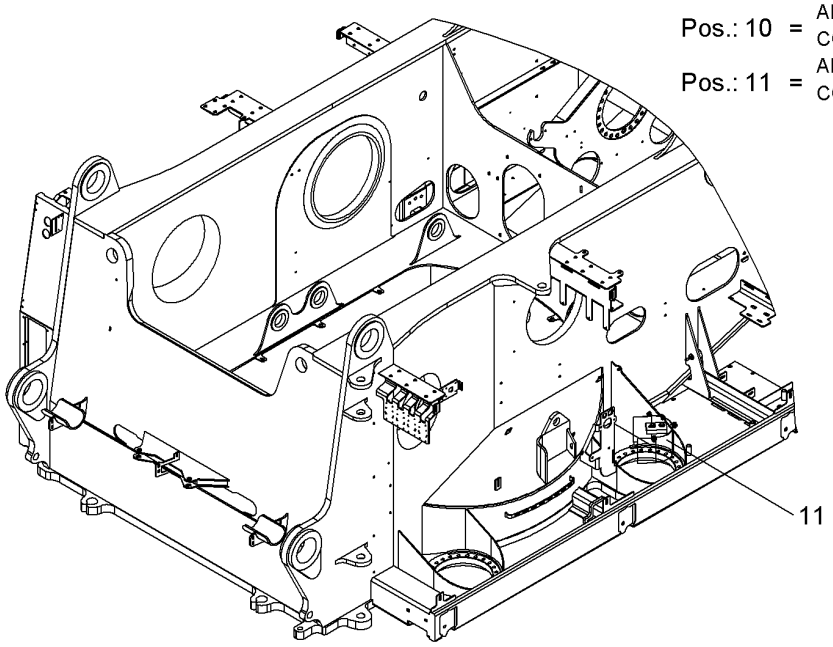

Pos.	Item	Quantity	Description	Bezeichnung	Serie	K
10	11280481	1	CONNECTION PARTS ⇨ ❑ 731	ANSCHLUSSTEILE		
11	11267716	1	MOUNTING PARTS ⇨ ❑ 732	MONTAGETEILE		
12	11297647	1	CONNECTION PIECE	ANSCHLUSSSTUECK		

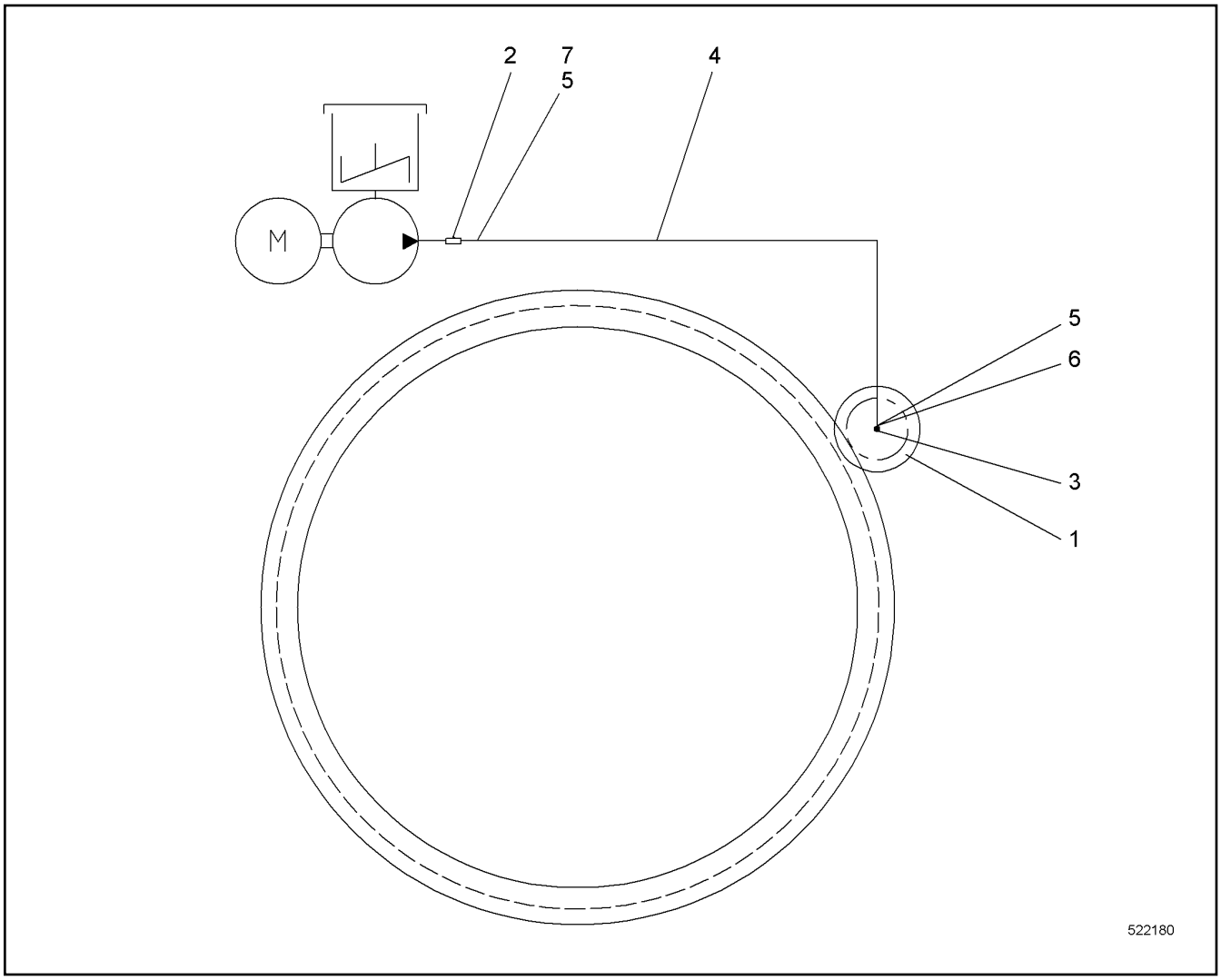

Pos.	Item	Quantity	Description	Bezeichnung	Serie	K
1	11231552	1	LUBRICATING PINION	SCHMIERRITZEL		
2	11274920	1	PASSAGE NIPPLE BLOCK	DURCHGANGSNIPPELBLOCK		
3	11262807	1	FITTING	VERSCHRAUBUNG		
4	10043525	8	HOSE	SCHLAUCH		
5	10012024	2	SCREW SLEEVE	SCHRAUBHUELSE		
6	10040777	2	PIPE SOCKET	ROHRSTUTZEN		
7	11243834	1	PIPE SOCKET	ROHRSTUTZEN		

LR1300

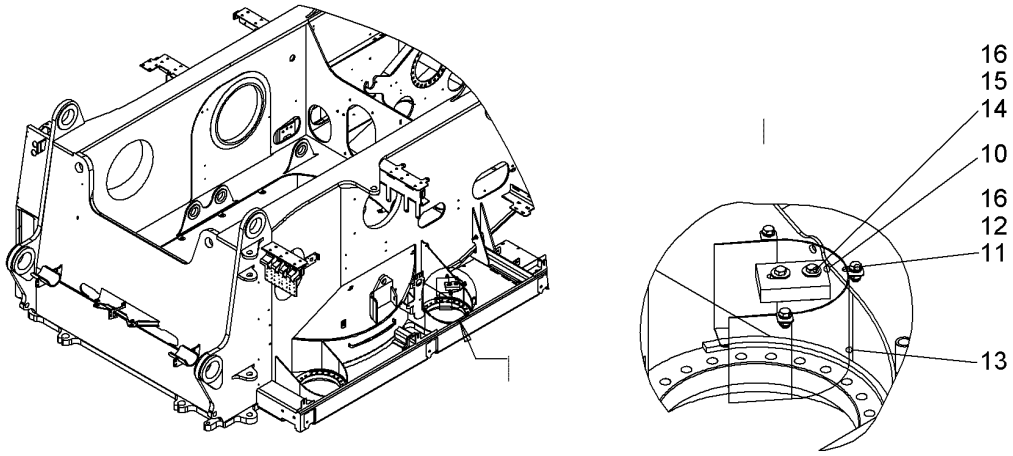

519614

Pos.	Item	Quantity	Description	Bezeichnung	Serie	K
10	11262039	1	SPACER	ABSTANDHALTER		
11	406511914	3	HEX SCREW ISO 4017 M10X25 A4-70	SECHSKANTSCHRAUBE		
12	420001114	6	WASHER ISO 7089 10 A4	SCHEIBE		
13	10227120	1	PINION GUARD	RITZELSCHUTZ		
14	10538822	2	HEX SCREW ISO 4017 M10X55 A4-70	SECHSKANTSCHRAUBE		
15	10540511	4	WASHER ISO 7093-1 10 A4	SCHEIBE		
16	10540494	5	HEX NUT ISO 10511 M10 A4	SECHSKANTMUTTER		

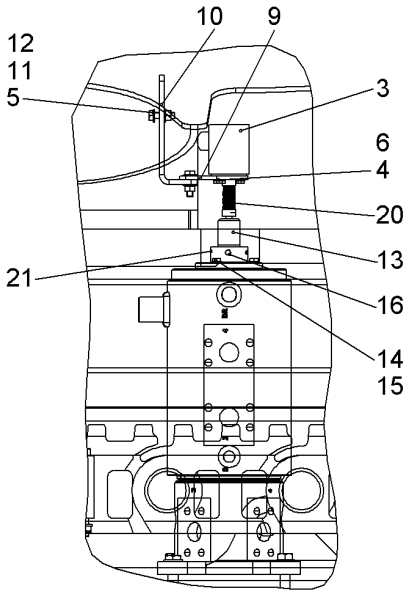

LR1100/HS8100

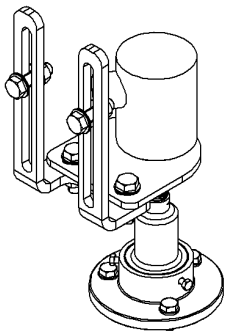

LR1300

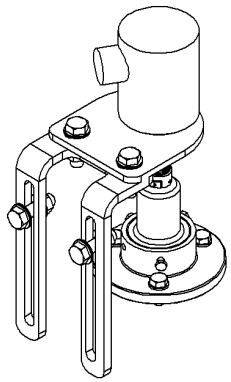

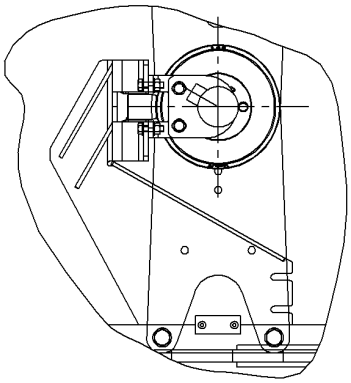

520780

Pos.	Item	Quantity	Description	Bezeichnung	Serie	K
3	10529522	1	SG TACHOGENERATOR RFK ⇨ ❑ 734	DW GEBER NRS		
4	406532614	4	HEX SCREW ISO 4017 M6X20 A4-70	SECHSKANTSCHRAUBE		
5	411514614	4	HEX NUT ISO 4032 M10 A4-70	SECHSKANTMUTTER		
6	420250114	4	WASHER ISO 7092 6 CU;	SCHEIBE		
9	11900503	1	WP	WP		
10	10573951	1	WP	WP		
11	10536580	8	WEDGE LOCK WASHER M10 254 SMO;EN 10	KEILSICHERUNGSSCHEIBE		
12	406509314	4	HEX SCREW ISO 4017 M10X35 A4-70	SECHSKANTSCHRAUBE		
13	10348618	1	DRIVER	MITNEHMER		
14	406518814	3	HEX SCREW ISO 4017 M8X20 A4-70	SECHSKANTSCHRAUBE		
15	420001014	3	WASHER ISO 7089 8 A4	SCHEIBE		
16	485553914	3	HEX SCREW ISO 4017 M5X12 A4-70	SECHSKANTSCHRAUBE		
20	10348619	1	COUPLING	KUPPLUNG		
21	959712714	1	FLANGE	FLANSCH		

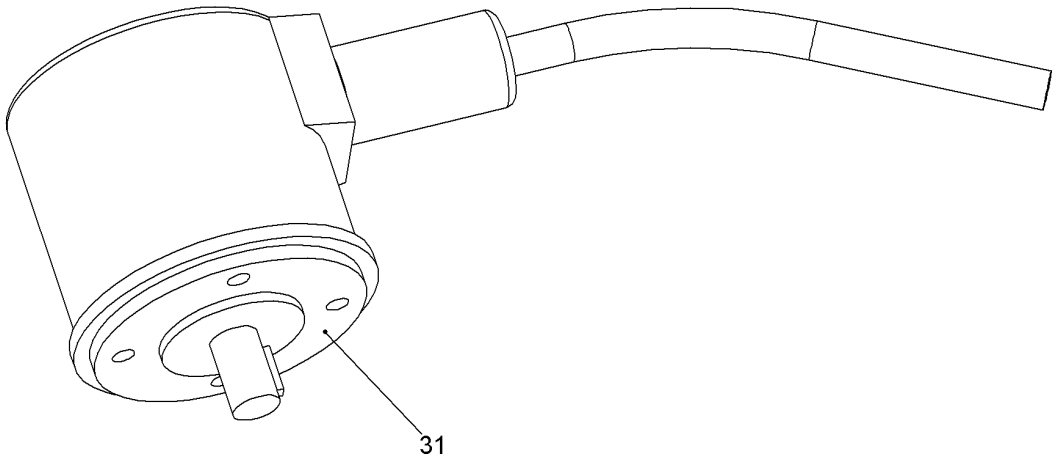

519698

Pos.	Item	Quantity	Description	Bezeichnung	Serie	K
31	10528626	1	SLEWING ANGLE TRANSDUCER	DREHWINKELMESSUMFORMER		

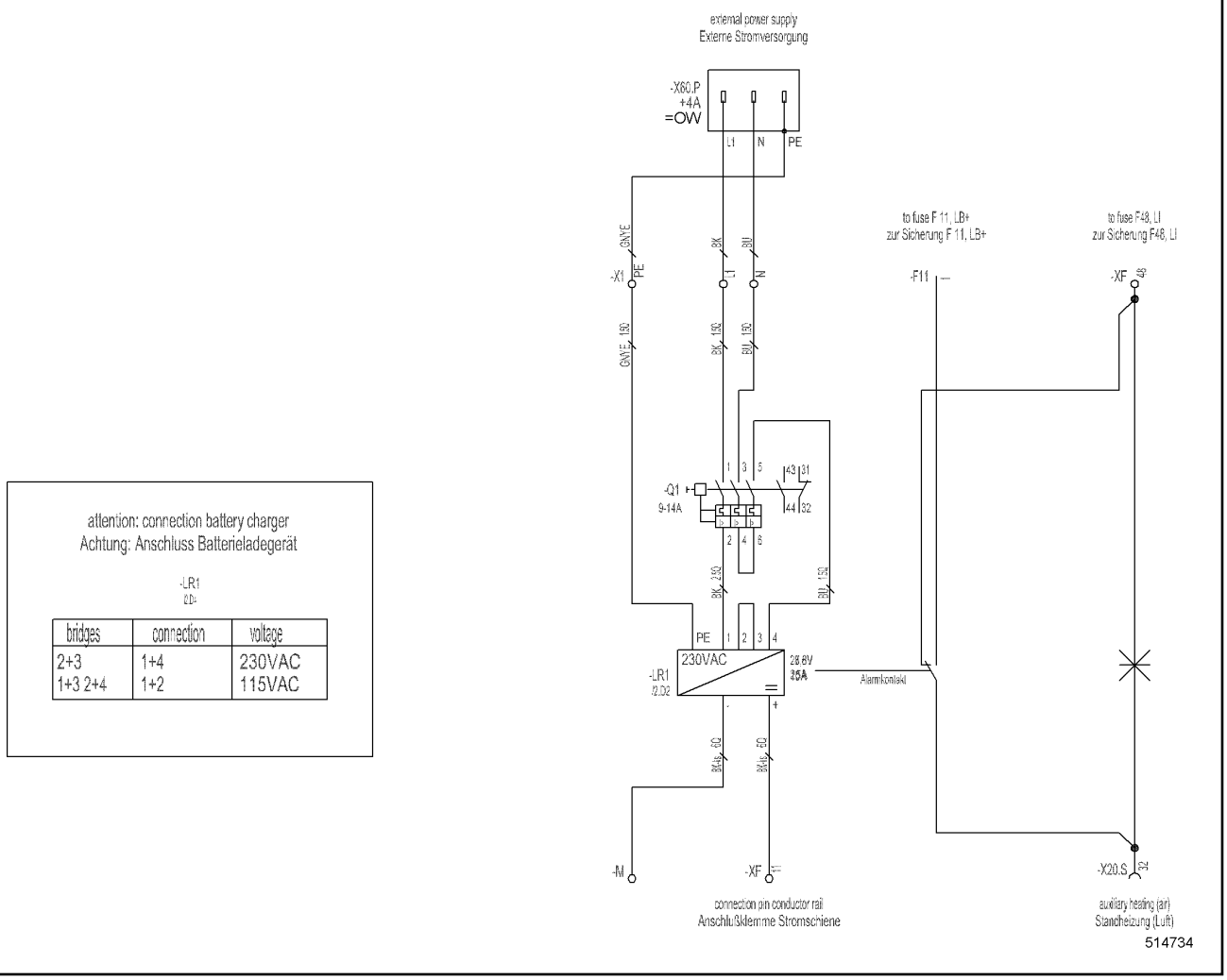

attention: connection battery charger
Achtung: Anschluss Batterieladegerät

-LR1
/2.D2

bridges	connection	voltage
2+3 1+3 2+4	1+4 1+2	230VAC 115VAC

Pos.	Item	Quantity	Description	Bezeichnung	Serie	K
31	10567084	1	CHARGER	LADEGERAET		
32	630170014	1	TIME RELAY	ZEITRELAIS		
41	605010314	1	DEVICE PLUG	GERAETESTECKER		
42	605612214	1	COUPLING SOCKET	KUPPLUNGSDOSE		
45	600204105	5	LEAD	LEITUNG		
50	10337303	1	PROTECTIVE CONDUCTOR TERMINAL	SCHUTZLEITERKLEMME		
51	602153214	2	SERIES TERMINAL	REIHENKLEMME		
53	602153014	1	CLOSING PLATE	ABSCHLUSSPLATTE		
54	602832214	1	END ANGLE	ENDWINKEL		
55	10502692	1	SCREW UN 1206 M10X30	SCHRAUBE		

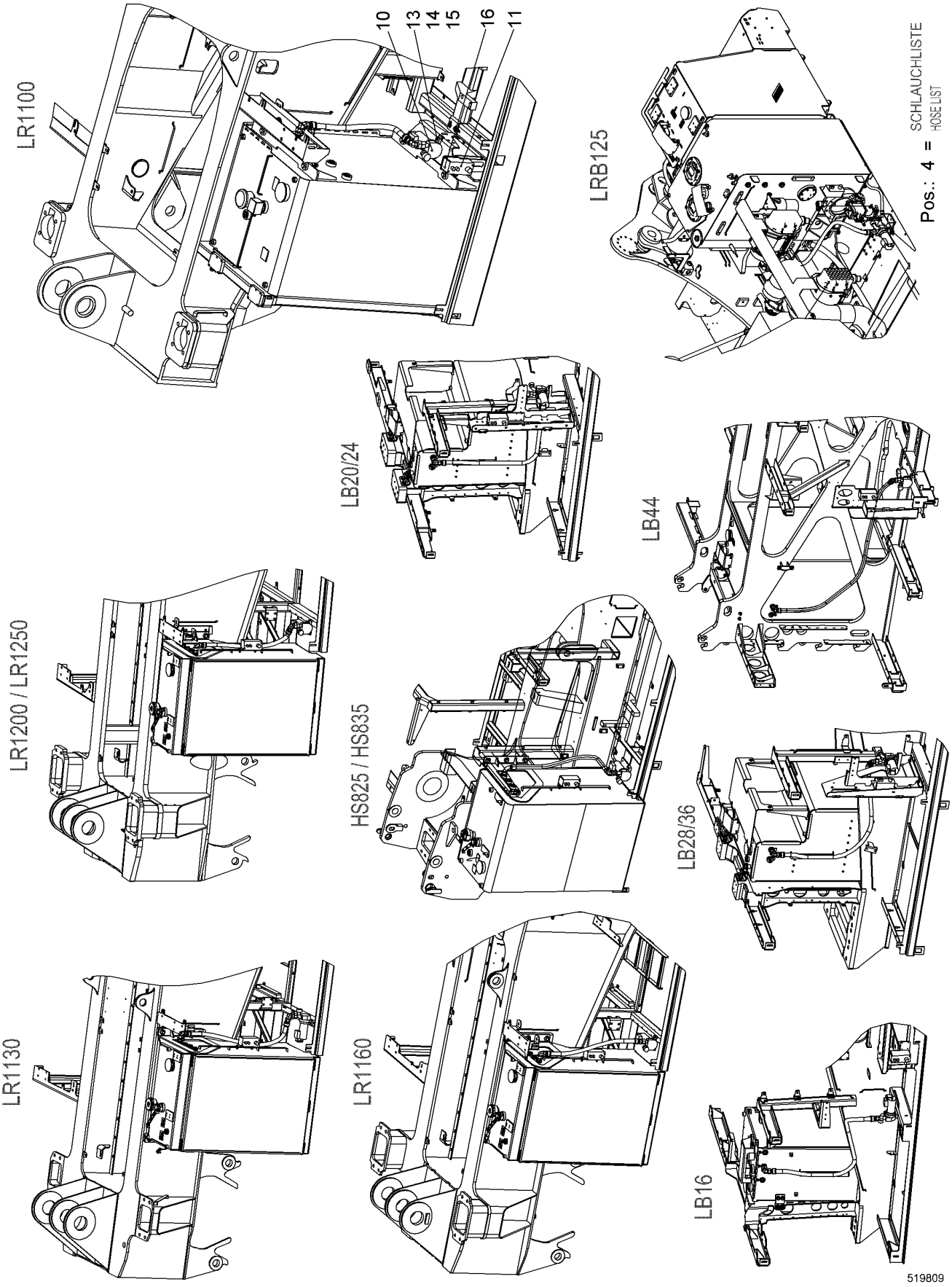
LR1100
10
13
14
15
16
11
LRB125
Pos.: 4 = SCHLAUCHLISTE
HOSE LIST
LB20/24
LB44
LR1200 / LR1250
HS825 / HS835
LB28/36
LR1130
LR1160
LB16
519809

Pos.	Item	Quantity	Description	Bezeichnung	Serie	K
4	10570894	1	HOSE LIST ⇨ ❑ 738	SCHLAUCHLISTE		
10	10529576	1	REFUELLING PUMP CPL ⇨ ❑ 739	BETANKUNGSPUMPE KPL		
11	10521559	1	MODULE REFUELLING SYSTEM ⇨ ❑ 741	MODUL BETANKUNGSANLAGE		
13	406517614	2	HEX SCREW ISO 4017 M8X35 A4-70	SECHSKANTSCHRAUBE		
14	420001014	2	WASHER ISO 7089 8 A4	SCHEIBE		
15	411515014	2	HEX NUT ISO 4032 M8 A4-70	SECHSKANTMUTTER		
16	10541563	2	PAN-HEAD SCREW ISO 7045 M5X25 A2-70	FLACHKOPFSCHRAUBE		
17	420005214	2	WASHER ISO 7089 5 A4	SCHEIBE		
18	10540510	2	WASHER ISO 7093-1 8 A4	SCHEIBE		
19	10541565	2	PAN-HEAD SCREW ISO 7045 M5X35 A2-70	FLACHKOPFSCHRAUBE		
20	10540484	2	HEX NUT ISO 10511 M5 A4	SECHSKANTMUTTER		
103	11288257	1	HOSE LIST ⇨ ❑ 742	SCHLAUCHLISTE		

ACHTUNG !
ATTENTION !
ATTENTION !
ATENCIÓN !
ATENÇÃO !
ВНИМАНИЕ

Für Schlauchbestellungen kann über die Schlauchnummer, in der entsprechenden Schlauchliste, die Identnummer festgestellt werden.

For ordering flexible hoses you can find the identification number through the hose-number in the corresponding hose-list.

Pour des ordres de tuyau flexible le nombre d'identification on voit dans la liste de tuyau flexible correspondente.

Para el pedido de manguera, indicar el número de identificación de la manguera de la lista respectiva.

Para se encomendar uma mangueira, consulte o número de identificaçao na respectiva lista de mangueiras.

Для оформления заказов на шланги/рукавы идент. № может быть определен при помощи номера шланга/рукава, указанного в соотетствующем перечне шлангов/рукавов.

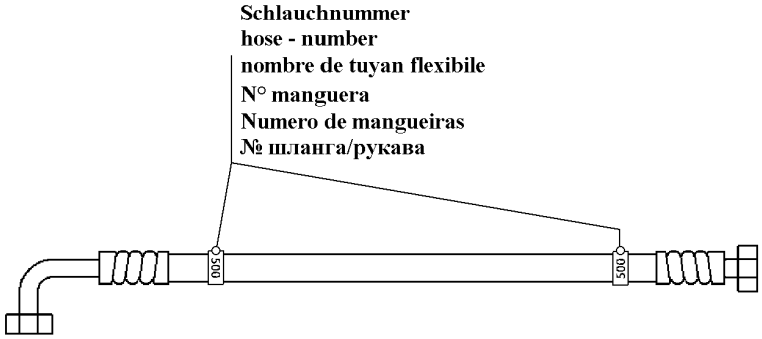

500000

Pos.	Item	Quantity	Description	Bezeichnung	Serie	K
804	995830614	1	HOSE CPL	SCHLAUCH KPL		

OHNE BILD
WITHOUT ILLUSTRATION
SANS PLANCHE
SIN FIG.
SEM ILUSTRAÇÃO
БЕЗ ИЗОБРАЖЕНИЯ

600000

Pos.	Item	Quantity	Description	Bezeichnung	Serie	K
10	510095914	1	REFUEL PUMP ⇨ ❑ 740	BETANKUNGSPUMPE		
11	693013014	1	PLUG	STECKER		
12	693013414	1	CONTACT LOCK	KONTAKTVERRIEGELUNG		
13	6905271	2	PIN CONTACT	STIFTKONTAKT		
14	605614714	2	SEALING PLUG	DICHTSTOPFEN		

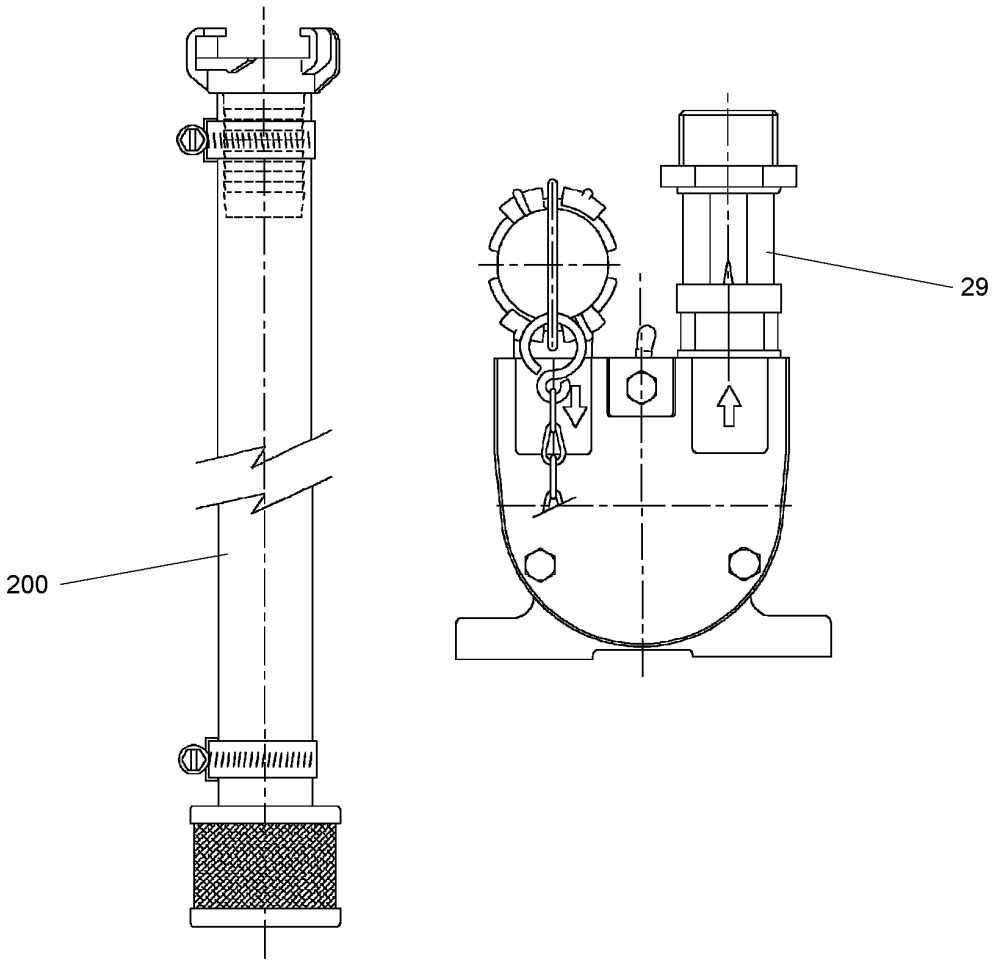

Pos.	Item	Quantity	Description	Bezeichnung	Serie	K
29	592052914	1	NON-RETURN VALVE	RUECKSCHLAGVENTIL		
200	11222864	1	HOSE CPL	SCHLAUCH KPL		

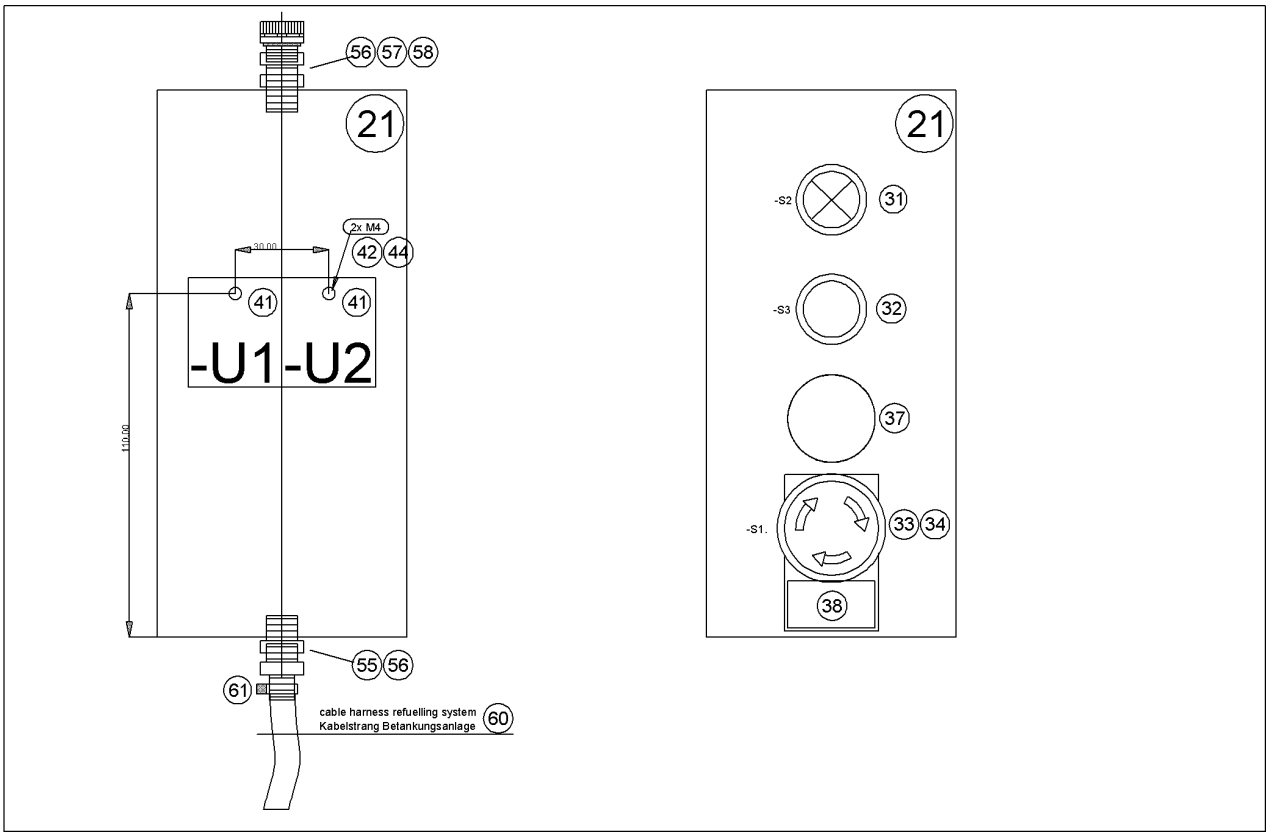

Pos.	Item	Quantity	Description	Bezeichnung	Serie	K
21	611039214	1	HOUSING	GEHAEUSE		
31	693003614	1	ILLUMINATED PUSHBUTTON	LEUCHTDRUCKTASTER		
32	693003414	1	PUSH BUTTON	DRUCKTASTER		
33	693073014	1	EMERGENCY STOP BUTTON	NOT-AUS TASTER		
34	693004614	1	CONTACT ELEMENT	KONTAKTELEMENT		
37	606907114	1	STOPPER PLUG	BLINDSTOPFEN		
38	10575705	1	SIGN	SCHILD		
41	630160214	2	RELAY	RELAIS		
42	10541540	2	PAN-HEAD SCREW ISO 7045 M4X6 A2-70	FLACHKOPFSCHRAUBE		
44	10540497	2	WASHER ISO 7093-1 4 A4	SCHEIBE		
55	693152414	1	HOSE CLAMP THREADED UNION	SCHLAUCHSCHELLENVERSCH		
56	602620401	2	REDUCER	REDUZIERUNG		
57	260493202	1	REDUCER	REDUZIERUNG		
58	11921782	1	PRESSURE COMPENSATION ELEMENT	DRUCKAUSGLEICHSELEMENT		
60	10521560	1	CABLE LOOM REFUELLING SYSTEM	KABELSTRANG BETANKUNGSA		
61	603202208	1	CABLE TIE	KABELBINDER		

ACHTUNG !
ATTENTION !
ATTENTION !
ATENCIÓN !
ATENÇÃO !
ВНИМАНИЕ

Für Schlauchbestellungen kann über die Schlauchnummer, in der entsprechenden Schlauchliste, die Identnummer festgestellt werden.

For ordering flexible hoses you can find the identification number through the hose-number in the corresponding hose-list.

Pour des ordres de tuyau flexible le nombre d'identification on voit dans la liste de tuyau flexible correspondente.

Para el pedido de manguera, indicar el número de identificación de la manguera de la lista respectiva.

Para se encomendar uma mangueira, consulte o número de identificaçao na respectiva lista de mangueiras.

Для оформления заказов на шланги/рукавы идент. № может быть определен при помощи номера шланга/рукава, указанного в соотетствующем перечне шлангов/рукавов.

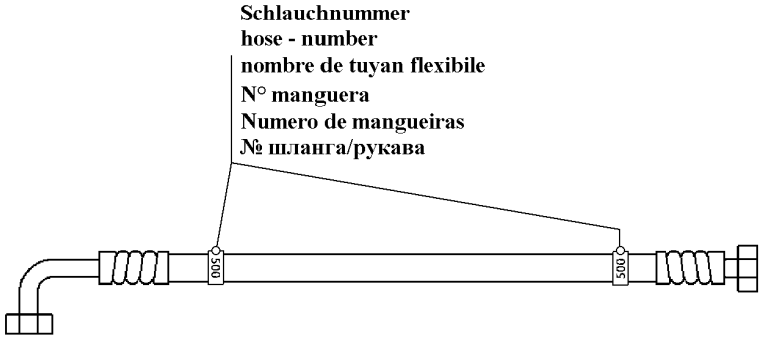

500000

Pos.	Item	Quantity	Description	Bezeichnung	Serie	K
805	919145114	1	HOSE CPL	SCHLAUCH KPL		

Item	Sheet	Assembly	Pos.	Quantity	Item	Sheet	Assembly	Pos.	Quantity
	339	10 51 969 7	500	-1		348	93 88 497 01	82	1
	339	10 51 969 7	501	-1		348	93 88 497 01	83	3
	348	93 88 497 01	1	1		349	93 88 497 01	84	1
	348	93 88 497 01	2	1		349	93 88 497 01	86	2
	348	93 88 497 01	3	1		349	93 88 497 01	87	1
	348	93 88 497 01	4	1		720	10 51 728 0	10	-1
	348	93 88 497 01	5	1	10002167	275	10 14 821 5	4	2
	348	93 88 497 01	6	1	10002309	133	10 12 224 8	24	1
	348	93 88 497 01	7	5	10002309	146	10 13 803 3	24	1
	348	93 88 497 01	8	5	10002310	300	11 41 737 0	3	1
	348	93 88 497 01	9	3	10002552	283	10 14 013 6	132	1
	348	93 88 497 01	10	1	10003366	268	90 78 314	3	1
	348	93 88 497 01	11	1	10004261	219	10 14 768 6	9	1
	348	93 88 497 01	12	1	10005073	243	10 12 948 0	4	4
	348	93 88 497 01	13	1	10005078	230	10 14 671 6	12	3
	348	93 88 497 01	15	1	10005078	261	10 14 588 5	18	1
	348	93 88 497 01	16	38	10005078	285	10 14 622 4	17	4
	348	93 88 497 01	17	114	10005078	296	10 15 028 8	60	3
	348	93 88 497 01	19	2	10005511	226	10 15 529 8	9	1
	348	93 88 497 01	20	1	10005713	245	10 13 394 5	2	1
	348	93 88 497 01	21	24	10006595	392	90 01 376 2	96	1
	348	93 88 497 01	22	1	10007782	223	10 14 201 8	10	6
	348	93 88 497 01	23	1	10007782	260	10 14 333 9	10	2
	348	93 88 497 01	25	1	10007782	296	10 15 028 8	63	1
	348	93 88 497 01	30	1	10007947	448	10 50 351 3	1	1
	348	93 88 497 01	31	1	10007948	449	10 00 794 7	1	1
	348	93 88 497 01	32	3	10007952	449	10 00 794 7	4	7
	348	93 88 497 01	33	3	10007967	449	10 00 794 7	7	1
	348	93 88 497 01	35	1	10007971	448	10 50 351 3	3	1
	348	93 88 497 01	40	1	10008092	165	11 21 593 6	25	1
	348	93 88 497 01	41	1	10008093	163	10 22 601 3	5	1
	348	93 88 497 01	42	3	10008093	165	11 21 593 6	30	1
	348	93 88 497 01	43	3	10009007	274	10 14 273 4	2	5
	348	93 88 497 01	45	1	10009007	278	10 14 274 4	3	1
	348	93 88 497 01	46	1	10011777	247	10 13 382 3	9	2
	348	93 88 497 01	47	3	10011832	219	10 14 768 6	13	1
	348	93 88 497 01	50	1	10011832	243	10 12 948 0	14	1
	348	93 88 497 01	51	1	10011864	261	10 14 588 5	6	17
	348	93 88 497 01	52	12	10011864	285	10 14 622 4	7	2
	348	93 88 497 01	53	12	10011864	302	11 41 475 7	8	2
	348	93 88 497 01	55	1	10011865	251	10 15 278 7	5	2
	348	93 88 497 01	56	12	10011865	261	10 14 588 5	11	2
	348	93 88 497 01	58	1	10011866	261	10 14 588 5	19	3
	348	93 88 497 01	59	2	10011866	276	10 14 821 7	2	11
	348	93 88 497 01	60	1	10011866	278	10 14 274 4	6	1
	348	93 88 497 01	61	1	10011867	284	10 14 511 2	16	2
	348	93 88 497 01	62	1	10011867	302	11 41 475 7	4	8
	348	93 88 497 01	63	2	10011868	229	10 13 451 7	2	1
	348	93 88 497 01	65	1	10011868	251	10 15 278 7	6	4
	348	93 88 497 01	70	1	10011868	260	10 14 333 9	7	14
	348	93 88 497 01	71	12	10011870	265	10 14 736 9	8	1
	348	93 88 497 01	72	1	10011870	283	10 14 013 6	27	1
	348	93 88 497 01	73	1	10011870	299	11 92 891 3	13	1
	348	93 88 497 01	74	1	10011871	261	10 14 588 5	14	2
	348	93 88 497 01	75	1	10012024	731	11 28 048 1	5	2
	348	93 88 497 01	76	1	10012225	237	11 44 800 5	5	2
	348	93 88 497 01	77	8	10012557	237	11 44 800 5	3	2
	348	93 88 497 01	78	8	10012659	103	10 11 834 9	23	8
	348	93 88 497 01	80	1	10013916	270	90 72 906	4	1
	348	93 88 497 01	81	1	10014510	124	92 68 016	35	1

Item	Sheet	Assembly	Pos.	Quantity	Item	Sheet	Assembly	Pos.	Quantity
10014638	264	10 14 736 6	3	6	10045157	512	11 90 151 1	22	1
10014638	271	10 14 286 0	4	2	10045157	512	11 90 151 1	37	1
10014864	261	10 14 588 5	7	1	10097551	99	11 26 744 7	4	1
10016874	145	10 12 226 2	17	2	10098106	438	99 18 041 14	12	2
10016906	258	10 14 679 7	4	2	10098106	613	11 28 744 5	29	1
10016906	265	10 14 736 9	15	2	10098106	662	99 10 116 14	45	2
10016906	291	10 11 912 8	3	4	10098143	77	99 16 061 14	1	2
10016906	292	10 12 843 9	3	1	10098157	310	11 24 409 0	60	11
10016906	296	10 15 028 8	61	22	10098157	324	10 54 591 0	18	20
10016907	223	10 14 201 8	11	3	10098157	479	99 26 718 14	12	28
10016908	300	11 41 737 0	2	3	10098157	505	11 23 820 4	42	53
10016947	147	10 13 803 4	28	2	10098157	519	10 58 193 7	20	6
10017158	225	10 14 844 4	5	1	10098157	548	11 28 390 8	21	3
10017870	141	10 14 131 6	25	4	10098157	549	11 28 391 3	12	2
10018711	268	90 78 314	2	4	10098157	563	11 28 583 8	21	3
10020161	316	10 57 883 5	6	2	10098157	570	11 28 626 1	21	3
10020161	318	10 57 897 6	12	2	10098157	579	11 28 648 4	21	4
10020161	320	10 57 940 0	9	1	10098157	644	11 24 147 8	10	12
10020161	321	10 56 623 7	9	2	10098157	645	11 24 575 5	10	28
10020161	322	10 56 580 8	12	2	10098157	669	10 55 280 7	13	4
10020487	316	10 57 883 5	4	1	10098157	671	11 30 694 4	15	3
10020487	318	10 57 897 6	4	1	10098157	672	11 23 827 7	5	2
10020487	322	10 56 580 8	4	1	10098157	673	11 30 567 0	12	1
10020512	312	11 24 409 1	9	1	10098789	326	11 24 922 2	22	1
10020519	341	10 51 969 8	8	1	10099005	369	99 29 389 14	1	1
10020519	518	11 23 653 3	19	1	10099005	370	99 29 392 14	1	1
10020520	673	11 30 567 0	10	1	10099007	371	99 29 388 14	5	1
10021236	657	99 24 978 14	35	2	10099009	372	99 29 386 14	3	10
10022192	352	93 36 755 01	24	1	10099009	373	99 29 434 14	3	10
10024012	714	10 53 246 1	31	1	10099010	368	99 33 537 14	6	1
10024012	716	10 50 775 0	31	1	10099037	23	10 52 459 5	1	24
10024115	273	11 44 013 4	3	4	10099055	442	11 89 300 5	12	2
10030518	272	10 14 611 7	2	4	10099140	378	10 51 968 2	16	2
10030518	279	10 14 601 2	16	1	10099173	525	10 51 959 1	2	2
10030518	285	10 14 622 4	18	1	10099300	629	10 51 726 2	8	1
10030518	296	10 15 028 8	68	2	10100303	238	10 13 475 1	3	5
10030837	217	11 38 961 7	14	14	10100303	239	10 12 653 5	3	5
10032001	202	10 30 300 7	7	1	10100303	241	10 13 469 6	4	5
10035314	199	11 24 114 4	20	1	10100304	225	10 14 844 4	4	2
10035314	210	11 92 958 8	35	1	10100666	430	10 22 506 8	40	1
10035580	219	10 14 768 6	6	1	10101193	18	11 28 647 6	201	1
10036107	404	10 51 907 9	11	1	10101458	158	10 32 489 2	9	3
10036325	237	11 44 800 5	8	1	10101657	271	10 14 286 0	6	1
10036473	252	10 15 286 7	4	1	10101657	272	10 14 611 7	3	4
10036473	254	10 14 114 0	2	1	10112497	247	10 13 382 3	17	1
10036473	256	10 13 543 2	3	1	10112497	271	10 14 286 0	2	4
10036809	512	11 90 151 1	42	1	10113710	286	10 14 584 5	4	1
10036950	431	70 24 996	17	1	10113711	225	10 14 844 4	2	33
10037312	219	10 14 768 6	4	8	10113731	244	10 15 259 2	3	1
10037623	171	10 22 358 1	1	1	10114153	219	10 14 768 6	5	9
10040777	731	11 28 048 1	6	2	10114975	164	11 21 591 3	2	1
10041876	271	10 14 286 0	17	1	10115224	451	11 22 473 8	6	1
10041903	219	10 14 768 6	10	5	10115230	451	11 22 473 8	11	1
10043525	731	11 28 048 1	4	8	10115232	451	11 22 473 8	13	1
10045155	512	11 90 151 1	21	2	10115237	165	11 21 593 6	28	2
10045155	575	10 57 559 9	21	12	10115237	451	11 22 473 8	25	4
10045155	575	10 57 559 9	61	3	10115240	451	11 22 473 8	27	1
10045155	609	10 57 651 9	21	4	10115241	451	11 22 473 8	49	1
10045156	609	10 57 651 9	22	1	10115304	452	10 44 656 6	3	1
10045156	609	10 57 651 9	35	1	10115523	184	11 94 151 8	100	1

Item	Sheet	Assembly	Pos.	Quantity	Item	Sheet	Assembly	Pos.	Quantity
10115576	290	10 11 557 7	1	1	10125702	267	10 14 967 6	9	2
10115577	215	12 42 545 4	520	1	10125740	283	10 14 013 6	3	1
10115623	283	10 14 013 6	18	1	10126090	223	10 14 201 8	4	1
10115664	215	12 42 545 4	452	1	10126091	223	10 14 201 8	2	1
10116078	259	10 14 675 3	4	1	10126317	230	10 14 671 6	7	1
10116110	215	12 42 545 4	521	1	10126427	225	10 14 844 4	3	1
10116255	269	10 29 998 8	1	1	10126510	238	10 13 475 1	2	1
10116767	271	10 14 286 0	1	1	10126510	239	10 12 653 5	2	1
10116928	231	90 76 458	50	1	10126510	241	10 13 469 6	3	1
10117768	152	10 13 452 1	11	1	10126535	214	12 42 545 4	83	1
10117891	242	10 12 948 1	2	1	10126738	219	10 14 768 6	2	1
10118349	82	11 24 773 5	4	1	10127323	284	10 14 511 2	9	13
10118350	103	10 11 834 9	3	1	10127478	127	10 12 878 7	7	1
10118357	105	10 11 835 0	90	1	10127479	132	10 12 747 8	10	1
10118367	103	10 11 834 9	83	1	10127967	293	10 12 797 9	1	1
10118556	264	10 14 736 6	2	6	10127979	216	12 42 545 4	526	1
10118695	282	10 14 737 0	3	4	10127984	189	11 24 114 1	30	9
10118912	294	10 11 892 9	4	10	10127984	266	10 14 736 4	2	1
10118928	294	10 11 892 9	1	1	10128100	255	10 13 508 0	4	1
10118929	216	12 42 545 4	530	1	10128228	285	10 14 622 4	9	4
10119128	216	12 42 545 4	522	1	10128439	216	12 42 545 4	524	1
10119129	291	10 11 912 8	1	1	10128440	292	10 12 843 9	1	1
10119695	236	10 14 843 8	2	2	10128559	251	10 15 278 7	2	1
10119923	243	10 12 948 0	3	2	10128671	251	10 15 278 7	1	1
10119971	230	10 14 671 6	9	1	10128678	251	10 15 278 7	3	1
10120188	247	10 13 382 3	7	1	10128787	82	11 24 773 5	6	1
10120372	215	12 42 545 4	450	1	10128875	283	10 14 013 6	24	1
10120443	232	10 12 134 5	3	1	10129179	255	10 13 508 0	5	1
10121091	109	90 74 418	1	1	10129218	201	10 55 091 1	4	1
10121335	232	10 12 134 5	2	1	10129382	255	10 13 508 0	7	1
10121345	214	12 42 545 4	52	1	10129385	255	10 13 508 0	10	1
10121893	265	10 14 736 9	10	1	10129420	129	11 36 218 7	9	2
10121893	299	11 92 891 3	11	1	10129479	243	10 12 948 0	1	1
10121952	232	10 12 134 5	1	1	10129480	242	10 12 948 1	1	1
10121971	247	10 13 382 3	2	4	10129481	214	12 42 545 4	130	1
10121982	247	10 13 382 3	5	1	10129501	244	10 15 259 2	4	1
10121983	247	10 13 382 3	4	1	10129819	260	10 14 333 9	8	1
10122245	134	10 13 802 5	7	1	10129873	149	10 12 987 4	11	1
10122246	134	10 13 802 5	8	1	10129874	82	11 24 773 5	12	1
10122248	127	10 12 878 7	80	1	10129874	127	10 12 878 7	300	1
10122262	127	10 12 878 7	85	1	10129904	267	10 14 967 6	4	1
10122265	146	10 13 803 3	4	1	10130005	127	10 12 878 7	301	1
10122317	298	10 14 637 4	1	1	10130007	150	10 13 000 5	11	1
10122692	134	10 13 802 5	4	1	10130757	255	10 13 508 0	2	1
10122693	226	10 15 529 8	10	1	10131081	255	10 13 508 0	1	1
10122841	277	10 14 274 2	2	1	10131350	230	10 14 671 6	1	1
10123210	147	10 13 803 4	4	2	10131768	214	12 42 545 4	80	6
10123214	130	10 12 942 0	90	1	10132069	247	10 13 382 3	1	1
10123236	140	10 14 131 7	2	2	10132073	281	10 14 144 3	10	4
10123256	137	98 85 937	10	2	10132074	247	10 13 382 3	3	1
10123257	137	98 85 937	11	2	10132170	261	10 14 588 5	3	1
10123258	137	98 85 937	12	2	10132180	261	10 14 588 5	20	1
10123528	141	10 14 131 6	3	1	10132357	127	10 12 878 7	302	1
10123671	230	10 14 671 6	3	1	10132360	151	10 13 235 7	11	1
10123876	296	10 15 028 8	103	2	10132558	283	10 14 013 6	4	4
10123877	172	11 24 448 7	12	2	10132935	261	10 14 588 5	16	1
10124239	141	10 14 131 6	4	1	10133077	297	10 14 297 7	20	2
10124798	267	10 14 967 6	5	2	10133334	103	10 11 834 9	8	1
10125386	225	10 14 844 4	6	1	10133641	223	10 14 201 8	3	1
10125439	235	10 13 176 8	3	6	10133667	235	10 13 176 8	2	1

Item	Sheet	Assembly	Pos.	Quantity	Item	Sheet	Assembly	Pos.	Quantity
10133684	247	10 13 382 3	6	1	10140137	283	10 14 013 6	7	1
10133823	246	10 13 394 7	1	1	10140138	283	10 14 013 6	17	1
10133945	214	12 42 545 4	140	1	10140599	231	90 76 458	51	1
10133947	214	12 42 545 4	141	1	10140603	231	90 76 458	52	1
10134348	219	10 14 768 6	3	2	10140969	278	10 14 274 4	5	1
10134517	214	12 42 545 4	22	1	10141051	304	11 40 371 1	30	1
10134521	127	10 12 878 7	304	1	10141140	253	10 15 315 1	200	1
10134561	111	10 13 333 4	12	1	10141215	252	10 15 286 7	210	1
10134695	241	10 13 469 6	1	1	10141216	253	10 15 315 1	210	1
10134696	214	12 42 545 4	84	2	10141216	254	10 14 114 0	12	1
10134698	239	10 12 653 5	1	1	10141261	204	11 92 923 6	16	1
10134750	238	10 13 475 1	1	1	10141316	140	10 14 131 7	1	1
10134751	214	12 42 545 4	82	3	10141317	127	10 12 878 7	83	1
10135080	254	10 14 114 0	1	1	10141438	280	10 14 144 4	7	24
10135432	214	12 42 545 4	192	6	10141440	281	10 14 144 3	1	1
10135434	214	12 42 545 4	193	6	10141442	281	10 14 144 3	2	2
10135441	226	10 15 529 8	2	1	10141443	280	10 14 144 4	1	1
10135472	130	10 12 942 0	10	1	10141444	215	12 42 545 4	410	1
10135885	280	10 14 144 4	2	6	10141520	281	10 14 144 3	5	2
10136800	223	10 14 201 8	1	1	10141549	266	10 14 736 4	1	1
10136801	224	10 13 680 0	1	1	10141790	215	12 42 545 4	217	1
10137108	115	90 77 464	40	1	10141983	214	12 42 545 4	53	1
10137108	141	10 14 131 6	29	3	10141986	260	10 14 333 9	4	1
10137108	146	10 13 803 3	19	1	10141988	260	10 14 333 9	1	1
10137108	147	10 13 803 4	30	3	10141989	260	10 14 333 9	2	1
10137113	146	10 13 803 3	20	3	10142006	261	10 14 588 5	8	1
10137113	147	10 13 803 4	24	4	10142018	214	12 42 545 4	16	1
10137115	141	10 14 131 6	27	2	10142080	260	10 14 333 9	3	1
10137115	147	10 13 803 4	27	2	10142567	181	11 24 113 9	4	1
10137121	103	10 11 834 9	28	2	10142668	278	10 14 274 4	1	1
10137121	126	92 76 408	29	2	10142734	215	12 42 545 4	370	1
10137121	127	10 12 878 7	21	1	10142742	215	12 42 545 4	382	1
10137312	141	10 14 131 6	20	1	10142744	215	12 42 545 4	387	1
10137312	147	10 13 803 4	20	1	10142747	216	12 42 545 4	630	1
10137721	290	10 11 557 7	5	1	10142749	214	12 42 545 4	15	6
10137839	135	10 13 802 6	43	4	10142763	278	10 14 274 4	2	1
10137839	141	10 14 131 6	43	4	10142860	215	12 42 545 4	340	1
10137918	220	10 13 845 0	2	1	10142864	215	12 42 545 4	481	1
10138025	127	10 12 878 7	81	1	10142942	214	12 42 545 4	150	1
10138026	134	10 13 802 5	2	1	10142977	216	12 42 545 4	581	1
10138027	135	10 13 802 6	1	1	10143235	261	10 14 588 5	1	1
10138032	127	10 12 878 7	84	1	10143304	279	10 14 601 2	15	1
10138032	146	10 13 803 3	6	1	10143339	215	12 42 545 4	212	1
10138033	127	10 12 878 7	90	1	10143510	234	10 14 636 7	1	1
10138034	146	10 13 803 3	3	1	10143607	134	10 13 802 5	6	1
10138068	128	10 12 878 7	305	1	10143612	267	10 14 967 6	1	1
10138069	153	10 13 806 8	11	1	10143614	267	10 14 967 6	2	1
10138079	258	10 14 679 7	3	1	10143827	262	10 14 382 8	2	4
10138231	214	12 42 545 4	100	1	10143828	215	12 42 545 4	215	1
10138450	214	12 42 545 4	14	1	10143829	262	10 14 382 8	1	1
10138565	245	10 13 394 5	1	1	10143831	262	10 14 382 8	4	1
10138772	280	10 14 144 4	5	24	10144027	216	12 42 545 4	652	1
10138820	275	10 14 821 5	3	1	10144034	304	11 40 371 1	10	1
10138820	284	10 14 511 2	4	1	10144038	204	11 92 923 6	21	1
10139391	223	10 14 201 8	6	1	10144039	204	11 92 923 6	20	1
10139393	223	10 14 201 8	5	1	10144086	303	11 90 032 5	5	1
10139539	225	10 14 844 4	7	1	10144093	204	11 92 923 6	17	1
10139624	283	10 14 013 6	1	1	10144102	303	11 90 032 5	31	1
10139752	103	10 11 834 9	84	1	10144123	296	10 15 028 8	11	1
10140136	215	12 42 545 4	430	1	10144282	204	11 92 923 6	8	1

Item	Sheet	Assembly	Pos.	Quantity	Item	Sheet	Assembly	Pos.	Quantity
10144297	204	11 92 923 6	9	1	10149676	215	12 42 545 4	230	1
10144699	303	11 90 032 5	20	1	10149699	276	10 14 821 7	1	1
10144861	204	11 92 923 6	18	1	10150144	253	10 15 315 1	2	1
10145100	233	11 34 807 2	2	1	10150287	296	10 15 028 8	2	1
10145101	233	11 34 807 2	3	1	10150288	216	12 42 545 4	580	1
10145112	215	12 42 545 4	432	1	10150743	249	10 15 085 7	1	1
10145229	289	10 14 286 4	1	1	10150743	249	10 15 085 7	200	1
10145373	285	10 14 622 4	2	1	10150857	214	12 42 545 4	171	1
10145395	286	10 14 584 5	6	1	10151634	221	10 14 274 9	1	1
10145845	215	12 42 545 4	440	1	10151636	222	10 15 163 4	1	1
10145864	235	10 13 176 8	1	1	10151637	222	10 15 163 4	2	1
10145885	215	12 42 545 4	214	1	10151825	260	10 14 333 9	5	1
10145889	261	10 14 588 5	13	1	10152036	297	10 14 297 7	2	1
10145914	284	10 14 511 2	12	1	10152592	243	10 12 948 0	10	1
10145918	228	10 14 591 9	2	1	10152593	244	10 15 259 2	1	1
10145919	214	12 42 545 4	21	1	10152594	244	10 15 259 2	2	1
10146012	215	12 42 545 4	388	1	10152787	249	10 15 085 7	210	1
10146018	279	10 14 601 2	1	1	10152787	250	10 15 074 3	4	1
10146117	215	12 42 545 4	342	1	10152867	214	12 42 545 4	190	6
10146224	215	12 42 545 4	436	1	10152874	252	10 15 286 7	200	1
10146274	284	10 14 511 2	3	1	10153118	284	10 14 511 2	1	1
10146358	234	10 14 636 7	5	1	10153151	214	12 42 545 4	191	6
10146367	214	12 42 545 4	70	6	10153373	271	10 14 286 0	5	1
10146374	216	12 42 545 4	656	1	10153606	214	12 42 545 4	180	1
10146405	296	10 15 028 8	14	1	10153669	277	10 14 274 2	1	1
10146415	257	10 13 543 4	1	1	10153973	218	10 15 445 8	1	1
10146538	207	11 24 240 8	6	1	10154385	217	11 38 961 7	1	1
10146587	296	10 15 028 8	10	1	10154458	217	11 38 961 7	80	6
10146716	214	12 42 545 4	25	1	10154459	218	10 15 445 8	2	1
10146753	258	10 14 679 7	1	1	10154798	275	10 14 821 5	2	1
10146795	216	12 42 545 4	571	1	10155297	226	10 15 529 8	1	1
10146797	215	12 42 545 4	201	1	10155298	225	10 14 844 4	1	1
10146836	285	10 14 622 4	3	1	10165637	430	10 22 506 8	65	1
10146838	285	10 14 622 4	4	1	10171583	467	96 93 178 01	49	3
10146839	285	10 14 622 4	5	1	10171585	392	90 01 376 2	72	1
10146840	285	10 14 622 4	6	1	10171594	467	96 93 178 01	29	3
10147364	215	12 42 545 4	224	1	10171632	392	90 01 376 2	67	1
10147366	215	12 42 545 4	220	1	10171632	468	94 44 043 03	7	1
10147368	265	10 14 736 9	2	1	10171636	467	96 93 178 01	73	1
10147369	215	12 42 545 4	221	1	10171639	469	94 44 048 03	7	1
10147370	215	12 42 545 4	415	1	10190120	352	93 36 755 01	10	1
10147371	282	10 14 737 0	1	1	10191905	345	96 96 248 01	6	24
10147437	214	12 42 545 4	50	1	10191905	346	93 88 500 01	11	18
10147686	214	12 42 545 4	12	1	10195680	39	10 56 645 8	31	1
10148088	286	10 14 584 5	1	1	10215806	528	51 04 292 14	1	2
10148200	275	10 14 821 5	1	1	10215808	528	51 04 292 14	999	1
10148215	215	12 42 545 4	380	1	10216718	387	11 94 017 7	7	1
10148217	215	12 42 545 4	381	1	10217777	292	10 12 843 9	2	1
10148254	219	10 14 768 6	1	1	10218013	242	10 12 948 1	3	18
10148438	214	12 42 545 4	81	6	10218370	288	11 38 664 5	2	1
10148444	214	12 42 545 4	20	1	10218953	50	10 51 572 4	3	1
10148669	303	11 90 032 5	4	1	10219458	284	10 14 511 2	7	4
10149013	226	10 15 529 8	11	1	10219458	286	10 14 584 5	3	2
10149145	284	10 14 511 2	2	1	10219869	138	10 14 360 7	22	4
10149191	285	10 14 622 4	1	1	10220937	156	11 22 127 4	25	1
10149198	249	10 15 085 7	220	1	10222935	500	10 56 187 5	92	2
10149198	250	10 15 074 3	5	1	10222994	505	11 23 820 4	46	1
10149360	271	10 14 286 0	3	2	10222995	505	11 23 820 4	59	2
10149477	286	10 14 584 5	2	1	10223180	402	10 55 963 5	31	1
10149655	220	10 13 845 0	1	1	10223208	428	11 93 934 6	30	1

Item	Sheet	Assembly	Pos.	Quantity	Item	Sheet	Assembly	Pos.	Quantity
10223209	428	11 93 934 6	80	1	10227128	515	61 61 541 14	7	1
10223210	428	11 93 934 6	170	1	10227129	515	61 61 541 14	9	1
10223224	398	11 27 970 6	16	1	10227399	342	51 22 527 14	60	1
10223362	316	10 57 883 5	10	1	10227437	685	11 23 619 7	30	1
10223371	366	99 29 258 14	11	1	10227531	204	11 92 923 6	26	4.5
10223446	316	10 57 883 5	19	1	10227531	210	11 92 958 8	16	0.5
10223447	316	10 57 883 5	3	1	10227556	403	99 20 811 14	2	1
10223448	316	10 57 883 5	11	1	10227563	402	10 55 963 5	79	2
10223449	316	10 57 883 5	16	1	10227757	479	99 26 718 14	17	4
10223581	82	11 24 773 5	19	1	10227828	354	99 23 387 14	10	1
10223693	308	11 24 409 0	33	2	10227855	680	10 51 971 2	1	2
10224159	171	10 22 358 1	3	1	10228470	18	11 28 647 6	167	5
10224272	34	11 24 519 0	61	2	10228541	130	10 12 942 0	20	2
10224272	399	11 27 973 6	49	3	10278936	69	10 56 069 4	6	40
10224306	35	10 53 048 9	1	1	10278936	505	11 23 820 4	20	8
10224306	403	99 20 811 14	21	2	10280543	685	11 23 619 7	27	4
10224307	35	10 53 048 9	11	3	10282622	245	10 13 394 5	100	1
10224307	403	99 20 811 14	22	2	10282622	290	10 11 557 7	100	1
10224316	33	11 24 519 0	33	1	10282622	293	10 12 797 9	100	1
10224316	35	10 53 048 9	3	1	10282774	218	10 15 445 8	4	2
10224413	419	10 35 007 6	1	1	10282849	234	10 14 636 7	6	1
10224500	34	11 24 519 0	100	4	10285620	107	10 11 835 7	25	2
10224607	697	11 89 408 3	2	1	10285620	108	92 74 731	27	2
10225045	35	10 53 048 9	4	4	10285708	218	10 15 445 8	100	1
10225068	398	11 27 970 6	11	1	10285708	219	10 14 768 6	100	1
10225291	14	11 29 618 6	710	3	10285708	246	10 13 394 7	100	1
10225408	73	10 51 969 5	4	1	10285708	265	10 14 736 9	100	1
10225695	308	11 24 409 0	37	2	10285708	266	10 14 736 4	100	1
10225925	8	11 29 618 6	21	1	10285708	267	10 14 967 6	100	1
10225991	170	51 14 145 14	10	1	10285708	274	10 14 273 4	100	1
10226013	82	11 24 773 5	9	1	10285708	275	10 14 821 5	100	1
10226144	657	99 24 978 14	31	2	10285708	277	10 14 274 2	100	1
10226190	66	99 08 706 14	1	1	10285708	279	10 14 601 2	100	1
10226402	556	10 54 054 8	11	4	10285708	298	10 14 637 4	100	1
10226402	564	10 54 055 1	11	4	10285708	300	11 41 737 0	100	1
10226402	571	10 54 055 5	11	4	10286648	715	10 53 352 4	4	1
10226402	586	10 54 056 7	18	4	10287664	165	11 21 593 6	1	1
10226454	415	10 35 008 0	2	1	10287665	165	11 21 593 6	2	1
10226457	418	95 95 763 14	9	1	10287725	166	10 28 766 4	1	1
10226458	418	95 95 763 14	15	1	10287733	167	10 28 766 5	1	1
10226459	417	10 22 645 4	222	1	10287741	167	10 28 766 5	6	1
10226461	417	10 22 645 4	228	1	10288174	210	11 92 958 8	32	1
10226462	417	10 22 645 4	300	1	10288438	33	11 24 519 0	52	1
10226463	417	10 22 645 4	305	1	10289804	290	10 11 557 7	8	17
10226471	422	59 22 871 14	14	1	10289931	94	11 21 993 0	24	1
10226472	419	10 35 007 6	18	1	10289973	430	10 22 506 8	41	1
10226473	419	10 35 007 6	19	1	10289975	430	10 22 506 8	43	4
10226477	419	10 35 007 6	24	1	10289976	430	10 22 506 8	72	1
10226478	419	10 35 007 6	21	1	10289988	430	10 22 506 8	2	1
10226479	419	10 35 007 6	5	1	10289990	430	10 22 506 8	70	1
10226505	82	11 24 773 5	8	1	10289993	430	10 22 506 8	50	1
10226573	339	10 51 969 7	3	1	10289994	432	10 28 999 3	55	1
10226573	513	11 90 151 1	91	1	10290537	302	11 41 475 7	10	1
10226574	627	10 51 743 9	3	1	10294170	202	10 30 300 7	9	1
10226635	172	11 24 448 7	21	1	10294171	202	10 30 300 7	4	1
10226750	680	10 51 971 2	2	2	10296818	513	11 90 151 1	92	1
10227104	515	61 61 541 14	1	1	10296909	18	11 28 647 6	133	14
10227120	732	11 26 771 6	13	1	10296919	53	10 56 073 3	13	1
10227124	479	99 26 718 14	11	1	10297295	248	10 14 294 2	1	2
10227126	515	61 61 541 14	8	1	10297876	159	10 35 160 3	2	1

Item	Sheet	Assembly	Pos.	Quantity	Item	Sheet	Assembly	Pos.	Quantity
10297876	168	10 11 497 5	2	1	10337050	94	11 21 993 0	16	1
10299988	268	90 78 314	1	1	10337050	94	11 21 993 0	17	1
10301757	18	11 28 647 6	169	2	10337050	94	11 21 993 0	18	1
10303007	201	10 55 091 1	1	1	10337050	102	11 21 991 8	26	1
10324860	158	10 32 489 2	7	1	10337052	94	11 21 993 0	21	1
10324863	158	10 32 489 2	1	9	10337090	183	11 94 151 8	45	1
10324872	158	10 32 489 2	6	1	10337130	376	99 04 645 14	20	8
10324881	158	10 32 489 2	10	1	10337303	735	10 56 013 7	50	1
10324886	158	10 32 489 2	11	1	10340226	202	10 30 300 7	20	2
10324889	156	11 22 127 4	1	1	10340236	202	10 30 300 7	19	2
10324892	157	10 32 488 9	1	1	10342191	232	10 12 134 5	4	3
10324900	159	10 35 160 3	4	1	10342275	449	10 00 794 7	12	14
10324901	158	10 32 489 2	2	1	10348618	733	10 52 293 0	13	1
10331335	202	10 30 300 7	13	1	10348619	733	10 52 293 0	20	1
10331395	202	10 30 300 7	14	1	10348867	670	11 29 473 7	15	4
10331506	308	11 24 409 0	39	6	10348867	674	11 29 474 2	16	4
10331506	507	11 23 820 4	61	19	10348867	675	11 29 474 3	18	4
10331506	520	99 34 198 14	13	8	10348867	676	10 55 514 8	15	4
10331507	324	10 54 591 0	11	6	10348886	586	10 54 056 7	11	4
10331507	372	99 29 386 14	10	2	10349193	94	11 21 993 0	22	1
10331507	373	99 29 434 14	10	2	10349193	94	11 21 993 0	23	1
10331507	549	11 28 391 3	13	2	10349206	324	10 54 591 0	7	8
10331507	589	99 30 800 14	17	2	10349263	310	11 24 409 0	52	24
10331507	617	10 55 753 7	13	2	10349402	640	10 55 372 1	19	10
10331507	618	10 55 757 6	13	2	10349434	328	11 24 483 7	21	4
10331507	678	11 26 901 8	18	4	10349439	335	99 27 572 14	12	6
10332095	143	10 12 323 6	90	1	10349440	335	99 27 572 14	11	8
10332095	147	10 13 803 4	2	2	10349598	507	11 23 820 4	81	2
10333464	258	10 14 679 7	2	3	10349598	551	11 28 397 8	10	1
10334218	285	10 14 622 4	11	1	10349598	553	11 28 399 7	10	1
10336008	298	10 14 637 4	3	3	10349599	507	11 23 820 4	82	2
10336440	576	10 57 559 9	92	2	10349599	550	11 28 397 7	10	1
10336583	45	10 51 961 6	10	2	10349599	552	11 28 399 5	10	1
10336584	45	10 51 961 6	11	2	10349716	18	11 28 647 6	901	1
10336668	463	11 89 365 0	8	30	10349756	330	11 24 483 7	93	6
10336668	474	11 89 365 1	8	30	10349776	18	11 28 647 6	900	1
10336682	308	11 24 409 0	4	1	10349778	18	11 28 647 6	132	1
10336707	372	99 29 386 14	1	3	10350076	415	10 35 008 0	3	1
10336707	373	99 29 434 14	1	3	10350080	398	11 27 970 6	10	1
10336708	372	99 29 386 14	2	8	10350084	520	99 34 198 14	11	4
10336708	373	99 29 434 14	2	8	10350191	590	79 03 861 14	1	1
10336709	371	99 29 388 14	1	1	10350196	597	11 48 116 2	2	1
10336711	369	99 29 389 14	2	2	10350230	86	11 24 682 0	130	2
10336711	370	99 29 392 14	2	2	10350232	86	11 24 682 0	290	4
10336722	372	99 29 386 14	4	3	10350334	399	11 27 973 6	71	2
10336722	373	99 29 434 14	4	3	10350439	183	11 94 151 8	46	1
10336761	539	99 23 394 14	11	4	10350539	665	97 05 997 03	10	2
10336763	366	99 29 258 14	5	3	10350546	75	10 22 540 8	2	1
10336774	542	99 29 588 14	11	1	10350555	620	99 23 415 14	32	2
10336774	543	10 35 063 3	11	2	10350585	54	11 28 086 8	1	1
10336924	539	99 23 394 14	16	4	10350604	171	10 22 358 1	2	1
10336926	539	99 23 394 14	17	8	10350632	543	10 35 063 3	10	1
10336928	539	99 23 394 14	18	2	10350633	541	11 28 594 7	11	2
10336968	383	51 14 347 14	120	1	10350633	559	11 28 619 1	11	2
10337050	90	11 21 992 7	4	1	10350633	566	11 28 653 4	11	2
10337050	91	11 21 992 9	4	1	10350932	179	10 57 532 2	9	1
10337050	94	11 21 993 0	12	1	10350940	679	10 51 971 3	22	4
10337050	94	11 21 993 0	13	1	10350978	82	11 24 773 5	32	1
10337050	94	11 21 993 0	14	1	10351046	210	11 92 958 8	57	1
10337050	94	11 21 993 0	15	1	10351100	658	11 21 530 2	21	1

Item	Sheet	Assembly	Pos.	Quantity	Item	Sheet	Assembly	Pos.	Quantity
10351101	402	10 55 963 5	60	1	10352384	705	59 21 826 14	185	1
10351102	402	10 55 963 5	61	3	10352446	526	10 09 917 3	900	1
10351103	402	10 55 963 5	62	1	10352447	681	10 22 785 5	1	1
10351104	402	10 55 963 5	63	2	10352453	194	11 92 922 0	17	1
10351105	402	10 55 963 5	64	1	10352462	548	11 28 390 8	17	0.422
10351106	402	10 55 963 5	65	3	10352462	563	11 28 583 8	17	0.422
10351108	402	10 55 963 5	59	2	10352462	570	11 28 626 1	17	0.422
10351188	2	01 38 406 14	8	2	10352462	678	11 26 901 8	15	0.22
10351239	705	59 21 826 14	205	2	10353879	316	10 57 883 5	20	1
10351486	8	11 29 618 6	3	1	10353879	318	10 57 897 6	3	1
10351499	704	59 21 826 14	120	2	10353879	320	10 57 940 0	10	1
10351547	312	11 24 409 1	7	7	10353879	321	10 56 623 7	10	1
10351548	312	11 24 409 1	8	1	10353879	322	10 56 580 8	6	1
10351603	155	11 22 126 8	2	1	10354595	225	10 14 844 4	100	1
10351605	156	11 22 127 4	22	1	10355006	198	11 24 114 3	23	2
10351605	162	10 35 161 0	22	1	10355730	165	11 21 593 6	15	1
10351608	156	11 22 127 4	23	4	10355731	165	11 21 593 6	16	1
10351608	162	10 35 161 0	23	4	10355735	165	11 21 593 6	27	4
10351610	154	10 22 650 5	99	1	10409413	159	10 35 160 3	1	1
10351656	33	11 24 519 0	21	1	10411092	288	11 38 664 5	4	1
10351660	33	11 24 519 0	23	1	10411093	288	11 38 664 5	6	2
10351667	33	11 24 519 0	22	1	10411094	288	11 38 664 5	3	1
10351668	33	11 24 519 0	26	1	10411095	288	11 38 664 5	5	2
10351671	33	11 24 519 0	24	1	10423993	25	10 59 143 5	900	1
10351672	33	11 24 519 0	27	1	10424238	94	11 21 993 0	30	3
10351674	33	11 24 519 0	28	1	10424276	400	11 27 973 6	85	1
10351784	316	10 57 883 5	14	1	10424333	226	10 15 529 8	14	3
10351784	318	10 57 897 6	14	1	10424333	267	10 14 967 6	11	2
10351784	320	10 57 940 0	14	1	10424724	388	10 65 027 0	2	1
10351784	321	10 56 623 7	14	1	10428121	421	11 25 097 0	1	1
10351784	322	10 56 580 8	16	1	10429946	259	10 14 675 3	2	2
10351894	339	10 51 969 7	11	4	10440788	267	10 14 967 6	8	2
10352111	48	10 56 070 1	16	1	10444797	204	11 92 923 6	34	1
10352119	482	11 26 260 6	12	1	10445040	526	10 09 917 3	220	1
10352119	497	11 26 261 1	12	1	10445043	505	11 23 820 4	47	1
10352185	31	10 22 592 5	1	1	10445101	442	11 89 300 5	8	1
10352186	31	10 22 592 5	2	1	10445102	442	11 89 300 5	7	1
10352187	31	10 22 592 5	3	1	10445105	8	11 29 618 6	19	1
10352188	31	10 22 592 5	5	1	10445126	509	10 51 826 1	3	1
10352312	704	59 21 826 14	35	1	10445127	442	11 89 300 5	20	2
10352313	704	59 21 826 14	40	1	10445629	436	11 30 962 5	1	2
10352315	704	59 21 826 14	55	1	10445635	58	11 27 315 5	13	1
10352319	704	59 21 826 14	60	1	10445651	328	11 24 483 7	39	2
10352344	704	59 21 826 14	65	1	10445976	409	69 31 685 14	1	1
10352349	704	59 21 826 14	70	2	10446225	82	11 24 773 5	14	1
10352352	704	59 21 826 14	75	2	10446305	82	11 24 773 5	28	1
10352353	704	59 21 826 14	80	1	10446566	451	11 22 473 8	14	1
10352354	704	59 21 826 14	95	1	10446871	463	11 89 365 0	47	6
10352355	704	59 21 826 14	110	1	10446871	474	11 89 365 1	47	6
10352356	704	59 21 826 14	105	3	10447016	538	99 14 137 14	7	6
10352357	704	59 21 826 14	115	1	10447016	627	10 51 743 9	23	12
10352359	704	59 21 826 14	130	4	10447017	411	91 65 251 14	10	4
10352361	704	59 21 826 14	135	1	10447017	616	11 29 451 7	12	2
10352362	704	59 21 826 14	145	1	10447017	627	10 51 743 9	20	10
10352364	704	59 21 826 14	150	1	10447258	419	10 35 007 6	47	1
10352365	704	59 21 826 14	155	1	10447259	417	10 22 645 4	39	1
10352368	704	59 21 826 14	140	1	10447743	454	10 44 510 1	1	1
10352371	704	59 21 826 14	170	1	10447744	453	10 44 510 2	1	1
10352382	704	59 21 826 14	175	1	10447745	30	10 44 510 5	1	1
10352383	705	59 21 826 14	180	2	10447747	455	10 55 154 8	2	4

Item	Sheet	Assembly	Pos.	Quantity	Item	Sheet	Assembly	Pos.	Quantity
10447747	510	10 55 157 6	2	6	10512966	437	10 51 969 6	10	80
10447748	30	10 44 510 5	4	6	10513459	82	11 24 773 5	17	1
10447748	453	10 44 510 2	4	4	10513605	189	11 24 114 1	31	5
10447748	454	10 44 510 1	4	4	10513605	210	11 92 958 8	46	1
10447749	30	10 44 510 5	5	1	10514797	638	54 02 705 14	17	6
10447749	453	10 44 510 2	5	1	10515473	34	11 24 519 0	66	2
10447749	454	10 44 510 1	5	1	10515724	48	10 56 070 1	12	1
10448187	58	11 27 315 5	14	1	10517047	599	79 04 871 14	8	2
10465711	219	10 14 768 6	15	1	10517262	628	10 54 251 6	2	1
10465711	279	10 14 601 2	11	1	10517280	4	01 38 406 14	719	1
10472425	10	11 29 618 6	109	18	10517281	720	10 51 728 0	2	1
10472425	82	11 24 773 5	70	3	10517426	34	11 24 519 0	81	1
10472425	358	10 51 968 7	616	2	10517439	3	01 38 406 14	550	1
10472425	444	11 89 300 5	631	10	10517914	670	11 29 473 7	10	1
10472425	482	11 26 260 6	740	5	10517914	674	11 29 474 2	10	1
10472425	497	11 26 261 1	740	5	10518261	505	11 23 820 4	2	1
10473040	589	99 30 800 14	22	1	10518461	463	11 89 365 0	41	1
10475718	388	10 65 027 0	4	1	10518461	474	11 89 365 1	42	1
10489016	264	10 14 736 6	4	6	10518558	631	10 52 439 2	1	1
10489016	279	10 14 601 2	14	3	10518558	631	10 52 439 2	2	5
10489376	266	10 14 736 4	3	3	10518558	693	99 27 747 14	1	3
10490781	10	11 29 618 6	110	19	10518558	710	10 53 635 2	1	2
10490781	82	11 24 773 5	72	2	10519025	451	11 22 473 8	30	1
10490781	341	10 51 969 8	630	2	10519079	399	11 27 973 6	10	1
10490781	381	10 55 216 1	641	2	10519082	400	11 27 973 6	201	1
10490784	10	11 29 618 6	106	4	10519084	400	11 27 973 6	203	1
10490784	82	11 24 773 5	71	13	10519085	400	11 27 973 6	204	1
10490784	381	10 55 216 1	640	4	10519481	80	11 92 885 2	15	1
10490784	525	10 51 959 1	660	1	10519591	523	10 58 510 8	2	1
10490784	687	10 51 973 8	615	1	10519616	6	11 24 047 9	14	1
10490785	10	11 29 618 6	107	4	10519631	6	11 24 047 9	21	1
10490787	10	11 29 618 6	108	5	10519682	2	01 38 406 14	27	1
10493626	33	11 24 519 0	50	1	10519683	378	10 51 968 2	2	1
10493626	297	10 14 297 7	1	2	10519686	355	10 51 969 1	1	1
10493890	32	55 09 453 14	901	1	10519687	357	10 51 968 6	2	1
10494116	198	11 24 114 3	21	2	10519691	2	01 38 406 14	25	1
10494116	303	11 90 032 5	21	2	10519694	6	11 24 047 9	51	1
10494117	303	11 90 032 5	22	2	10519695	71	10 51 969 4	2	1
10501620	32	55 09 453 14	1	1	10519696	2	01 38 406 14	31	1
10501783	471	10 50 179 5	1	1	10519697	2	01 38 406 14	23	1
10501795	463	11 89 365 0	32	6	10519698	339	10 51 969 7	2	1
10501795	474	11 89 365 1	32	6	10519712	679	10 51 971 3	2	1
10502692	35	10 53 048 9	5	1	10519713	3	01 38 406 14	642	1
10502692	735	10 56 013 7	55	1	10519738	685	11 23 619 7	2	1
10503477	447	51 24 059 14	13	1	10519789	194	11 92 922 0	74	4
10503513	447	51 24 059 14	1	1	10520078	34	11 24 519 0	131	1
10504352	592	79 04 112 14	1	1	10520927	53	10 56 073 3	14	1
10504352	599	79 04 871 14	1	3	10521183	463	11 89 365 0	12	1
10504737	74	59 21 041 14	190	1	10521183	474	11 89 365 1	12	1
10504994	712	11 23 623 3	9	1	10521397	189	11 24 114 1	35	4
10505322	526	10 09 917 3	50	1	10521554	4	01 38 406 14	858	1
10507750	713	11 89 400 8	8	1	10521559	737	10 52 155 4	11	1
10507964	39	10 56 645 8	56	12	10521560	741	10 52 155 9	60	1
10508505	659	11 27 109 7	17	1	10521602	2	01 38 406 14	15	1
10509133	67	10 56 067 3	3	2	10522188	422	59 22 871 14	4	1
10509153	640	10 55 372 1	32	4	10522189	422	59 22 871 14	7	1
10512048	416	10 35 008 0	101	1	10522190	422	59 22 871 14	5	1
10512061	416	10 35 008 0	89	1	10522847	590	79 03 861 14	19	1
10512662	428	11 93 934 6	40	1	10522848	590	79 03 861 14	24	1
10512821	416	10 35 008 0	88	2	10522930	4	01 38 406 14	828	1

Item	Sheet	Assembly	Pos.	Quantity	Item	Sheet	Assembly	Pos.	Quantity
10523125	505	11 23 820 4	38	2	10532164	568	11 94 450 2	13	1
10523559	463	11 89 365 0	11	1	10532461	713	11 89 400 8	7	1
10523559	474	11 89 365 1	11	1	10532825	557	10 53 216 2	10	2
10524392	627	10 51 743 9	4	1	10532826	565	10 53 216 3	10	2
10524422	3	01 38 406 14	401	1	10532827	572	10 53 216 4	10	2
10524595	22	10 35 148 6	1	1	10533524	714	10 53 246 1	50	1
10524927	400	11 27 973 6	100	1	10533589	377	11 22 703 7	12	1
10524927	536	10 53 120 7	37	2	10533594	557	10 53 216 2	11	4
10524928	400	11 27 973 6	90	1	10533594	565	10 53 216 3	11	4
10524928	536	10 53 120 7	35	2	10533594	572	10 53 216 4	11	4
10525039	94	11 21 993 0	42	1	10533999	71	10 51 969 4	12	2
10525471	3	01 38 406 14	560	1	10534039	71	10 51 969 4	13	4
10526560	334	99 23 386 14	11	1	10534042	71	10 51 969 4	14	8
10526733	48	10 56 070 1	11	1	10534277	505	11 23 820 4	43	4
10526837	398	11 27 970 6	55	1	10534307	82	11 24 773 5	3	2
10526837	476	11 31 390 8	13	16	10535526	542	99 29 588 14	12	1
10526837	649	10 52 547 1	24	4	10535526	543	10 35 063 3	12	2
10526962	402	10 55 963 5	21	1	10536350	4	01 38 406 14	650	1
10527391	719	10 57 848 6	1	1	10536351	707	10 53 635 0	2	1
10527561	392	90 01 376 2	74	12	10536352	707	10 53 635 0	4	1
10527918	729	10 57 790 9	4	1	10536576	678	11 26 901 8	20	4
10528589	53	10 56 073 3	18	1	10536577	617	10 55 753 7	16	4
10528626	734	10 52 952 2	31	1	10536577	618	10 55 757 6	16	4
10529071	718	10 58 064 7	11	1	10536579	505	11 23 820 4	29	4
10529074	718	10 58 064 7	12	1	10536579	580	11 28 610 5	16	4
10529080	718	10 58 064 7	14	1	10536580	617	10 55 753 7	17	2
10529084	718	10 58 064 7	15	1	10536580	618	10 55 757 6	17	2
10529086	718	10 58 064 7	16	1	10536580	662	99 10 116 14	52	16
10529089	718	10 58 064 7	17	1	10536580	733	10 52 293 0	11	8
10529210	48	10 56 070 1	14	1	10536581	535	11 24 444 4	24	8
10529522	733	10 52 293 0	3	1	10536581	588	99 23 398 14	29	8
10529576	737	10 52 155 4	10	1	10536581	613	11 28 744 5	37	4
10529597	402	10 55 963 5	57	1	10536581	617	10 55 753 7	18	4
10530197	86	11 24 682 0	360	8	10536581	618	10 55 757 6	18	4
10530200	86	11 24 682 0	440	12	10536582	357	10 51 968 6	21	13
10530243	536	10 53 120 7	31	2	10536582	366	99 29 258 14	1	8
10530322	513	11 90 151 1	93	1	10536600	357	10 51 968 6	15	22
10530398	480	11 26 260 5	10	1	10537558	435	10 53 756 0	1	1
10530398	495	11 26 261 0	10	1	10537560	398	11 27 970 6	45	1
10530418	548	11 28 390 8	14	1	10537562	435	10 53 756 0	2	1
10530418	563	11 28 583 8	14	1	10537566	435	10 53 756 0	3	1
10530486	35	10 53 048 9	6	1	10537607	22	10 35 148 6	10	2
10530487	35	10 53 048 9	7	1	10537682	579	11 28 648 4	1	1
10530489	33	11 24 519 0	34	1	10538796	677	10 55 722 4	12	2
10530653	82	11 24 773 5	5	2	10538797	623	11 22 322 6	2	4
10530689	505	11 23 820 4	36	2	10538799	204	11 92 923 6	102	4
10530689	520	99 34 198 14	12	4	10538799	518	11 23 653 3	16	2
10530689	549	11 28 391 3	10	1	10538799	625	11 21 552 4	12	2
10531207	535	11 24 444 4	3	1	10538800	210	11 92 958 8	60	2
10531224	720	10 51 728 0	3	1	10538801	476	11 31 390 8	31	8
10531413	573	11 24 133 3	3	1	10538806	662	99 10 116 14	33	2
10531718	404	10 51 907 9	12	1	10538807	308	11 24 409 0	36	5
10531725	83	11 24 773 5	616	1	10538807	479	99 26 718 14	13	16
10531873	507	11 23 820 4	97	2	10538807	505	11 23 820 4	15	17
10531873	548	11 28 390 8	16	1	10538807	548	11 28 390 8	24	3
10531873	563	11 28 583 8	16	1	10538807	563	11 28 583 8	24	3
10531873	570	11 28 626 1	16	1	10538807	570	11 28 626 1	24	3
10531873	678	11 26 901 8	13	2	10538807	644	11 24 147 8	11	12
10532162	545	11 94 172 5	13	1	10538807	645	11 24 575 5	11	16
10532163	561	11 94 259 4	13	1	10538809	176	11 24 113 8	50	2

Item	Sheet	Assembly	Pos.	Quantity	Item	Sheet	Assembly	Pos.	Quantity
10538809	183	11 94 151 8	64	2	10539492	548	11 28 390 8	23	2
10538809	199	11 24 114 4	60	2	10539492	563	11 28 583 8	23	2
10538809	547	11 28 725 5	13	2	10539492	570	11 28 626 1	23	2
10538809	615	11 28 908 0	13	2	10539496	672	11 23 827 7	2	2
10538810	505	11 23 820 4	37	2	10539505	205	11 92 923 6	107	4
10538812	505	11 23 820 4	58	4	10539505	336	10 52 656 0	15	8
10538822	662	99 10 116 14	50	8	10539508	635	54 02 702 14	22	6
10538822	732	11 26 771 6	14	2	10539513	392	90 01 376 2	86	12
10538823	194	11 92 922 0	62	4	10539520	346	93 88 500 01	6	3
10538823	583	11 28 357 6	9	4	10539524	65	10 58 163 4	29	1
10538824	176	11 24 113 8	51	6	10539530	376	99 04 645 14	22	12
10538824	198	11 24 114 3	61	2	10539631	463	11 89 365 0	45	2
10538826	642	10 55 372 1	40	4	10539631	474	11 89 365 1	45	2
10538830	330	11 24 483 7	74	8	10539959	324	10 54 591 0	14	8
10538834	476	11 31 390 8	24	8	10539959	642	10 55 372 1	41	34
10539250	34	11 24 519 0	71	1	10539960	683	99 35 606 14	13	1
10539293	67	10 56 067 3	17	6	10539971	589	99 30 800 14	11	1
10539293	330	11 24 483 7	100	1	10539971	617	10 55 753 7	14	1
10539293	685	11 23 619 7	8	2	10539971	618	10 55 757 6	14	1
10539294	667	10 55 601 0	14	2	10540082	505	11 23 820 4	50	2
10539300	10	11 29 618 6	62	24	10540182	383	51 14 347 14	230	1
10539300	358	10 51 968 7	615	2	10540347	60	11 22 312 3	1	1
10539300	442	11 89 300 5	19	16	10540484	59	11 26 557 2	15	2
10539300	482	11 26 260 6	750	8	10540484	67	10 56 067 3	21	2
10539300	497	11 26 261 1	750	16	10540484	68	11 31 093 2	12	4
10539305	442	11 89 300 5	17	8	10540484	398	11 27 970 6	47	4
10539307	482	11 26 260 6	10	4	10540484	505	11 23 820 4	22	16
10539307	497	11 26 261 1	10	4	10540484	579	11 28 648 4	43	4
10539311	358	10 51 968 7	6	6	10540484	580	11 28 610 5	19	8
10539314	613	11 28 744 5	40	2	10540484	737	10 52 155 4	20	2
10539315	181	11 24 113 9	62	4	10540492	184	11 94 151 8	80	9
10539315	357	10 51 968 6	29	2	10540492	198	11 24 114 3	84	3
10539315	463	11 89 365 0	35	4	10540492	205	11 92 923 6	131	14
10539315	474	11 89 365 1	35	4	10540492	210	11 92 958 8	80	2
10539316	56	10 55 268 1	4	4	10540492	310	11 24 409 0	46	10
10539316	700	11 89 568 6	30	8	10540492	330	11 24 483 7	84	3
10539317	52	10 56 073 2	60	6	10540492	463	11 89 365 0	39	6
10539317	176	11 24 113 8	59	8	10540492	474	11 89 365 1	39	6
10539317	330	11 24 483 7	103	2	10540492	507	11 23 820 4	83	28
10539317	463	11 89 365 0	52	54	10540492	518	11 23 653 3	18	2
10539317	474	11 89 365 1	52	54	10540492	519	10 58 193 7	14	18
10539317	588	99 23 398 14	31	2	10540492	535	11 24 444 4	31	8
10539317	613	11 28 744 5	39	4	10540492	550	11 28 397 7	19	1
10539318	176	11 24 113 8	58	8	10540492	551	11 28 397 8	19	1
10539318	353	96 96 543 01	7	8	10540492	552	11 28 399 5	19	1
10539318	476	11 31 390 8	17	28	10540492	553	11 28 399 7	19	1
10539318	588	99 23 398 14	38	2	10540492	625	11 21 552 4	14	2
10539318	613	11 28 744 5	38	16	10540492	642	10 55 372 1	35	24
10539448	39	10 56 645 8	57	12	10540492	669	10 55 280 7	23	2
10539454	579	11 28 648 4	26	4	10540492	676	10 55 514 8	21	2
10539454	580	11 28 610 5	9	8	10540492	718	10 58 064 7	23	6
10539462	125	92 73 187	74	4	10540493	59	11 26 557 2	16	2
10539466	537	91 90 584 14	5	1	10540493	65	10 58 163 4	17	2
10539467	535	11 24 444 4	28	2	10540493	176	11 24 113 8	84	8
10539483	310	11 24 409 0	40	8	10540493	184	11 94 151 8	81	12
10539483	411	91 65 251 14	9	4	10540493	189	11 24 114 1	80	14
10539485	638	54 02 705 14	18	6	10540493	192	11 28 574 7	80	2
10539486	636	54 02 703 14	50	1	10540493	194	11 92 922 0	80	4
10539488	357	10 51 968 6	25	4	10540493	199	11 24 114 4	80	2
10539492	210	11 92 958 8	62	2	10540493	205	11 92 923 6	132	6

Item	Sheet	Assembly	Pos.	Quantity	Item	Sheet	Assembly	Pos.	Quantity
10540493	210	11 92 958 8	81	6	10540495	67	10 56 067 3	20	2
10540493	310	11 24 409 0	41	23	10540495	177	10 51 948 1	81	6
10540493	330	11 24 483 7	85	37	10540495	198	11 24 114 3	82	4
10540493	357	10 51 968 6	26	4	10540495	205	11 92 923 6	135	1
10540493	372	99 29 386 14	13	2	10540495	330	11 24 483 7	70	8
10540493	373	99 29 434 14	13	2	10540495	357	10 51 968 6	23	2
10540493	479	99 26 718 14	16	8	10540495	463	11 89 365 0	19	152
10540493	505	11 23 820 4	25	70	10540495	474	11 89 365 1	19	152
10540493	519	10 58 193 7	19	6	10540495	505	11 23 820 4	19	6
10540493	520	99 34 198 14	15	8	10540495	555	11 94 087 8	13	4
10540493	548	11 28 390 8	30	6	10540495	606	11 30 126 6	4	4
10540493	549	11 28 391 3	14	2	10540495	642	10 55 372 1	56	10
10540493	563	11 28 583 8	30	6	10540495	659	11 27 109 7	14	2
10540493	570	11 28 626 1	30	6	10540495	718	10 58 064 7	26	2
10540493	579	11 28 648 4	44	4	10540497	741	10 52 155 9	44	2
10540493	589	99 30 800 14	24	2	10540500	198	11 24 114 3	73	6
10540493	642	10 55 372 1	42	40	10540500	330	11 24 483 7	67	6
10540493	644	11 24 147 8	12	12	10540500	518	11 23 653 3	17	4
10540493	645	11 24 575 5	12	12	10540500	718	10 58 064 7	27	9
10540493	662	99 10 116 14	35	2	10540510	63	92 65 477 14	12	2
10540493	667	10 55 601 0	19	2	10540510	65	10 58 163 4	16	4
10540493	669	10 55 280 7	16	4	10540510	210	11 92 958 8	71	6
10540493	672	11 23 827 7	6	2	10540510	310	11 24 409 0	43	13
10540493	673	11 30 567 0	80	1	10540510	330	11 24 483 7	86	34
10540493	678	11 26 901 8	24	4	10540510	357	10 51 968 6	27	4
10540493	685	11 23 619 7	6	4	10540510	372	99 29 386 14	12	2
10540493	718	10 58 064 7	24	2	10540510	373	99 29 434 14	12	2
10540494	45	10 51 961 6	20	2	10540510	505	11 23 820 4	54	39
10540494	48	10 56 070 1	80	4	10540510	548	11 28 390 8	28	5
10540494	56	10 55 268 1	5	1	10540510	563	11 28 583 8	28	5
10540494	67	10 56 067 3	15	4	10540510	570	11 28 626 1	28	5
10540494	184	11 94 151 8	82	18	10540510	579	11 28 648 4	34	4
10540494	189	11 24 114 1	81	10	10540510	580	11 28 610 5	15	4
10540494	198	11 24 114 3	80	2	10540510	667	10 55 601 0	20	2
10540494	205	11 92 923 6	134	2	10540510	678	11 26 901 8	21	4
10540494	210	11 92 958 8	82	11	10540510	685	11 23 619 7	26	8
10540494	306	11 24 114 6	83	6	10540510	718	10 58 064 7	32	4
10540494	308	11 24 409 0	30	54	10540510	737	10 52 155 4	18	2
10540494	324	10 54 591 0	8	4	10540511	45	10 51 961 6	14	14
10540494	326	11 24 922 2	28	12	10540511	56	10 55 268 1	7	2
10540494	330	11 24 483 7	76	83	10540511	65	10 58 163 4	55	4
10540494	507	11 23 820 4	94	18	10540511	67	10 56 067 3	4	4
10540494	542	99 29 588 14	15	2	10540511	210	11 92 958 8	74	18
10540494	543	10 35 063 3	15	2	10540511	306	11 24 114 6	70	51
10540494	550	11 28 397 7	18	2	10540511	308	11 24 409 0	26	134
10540494	551	11 28 397 8	18	2	10540511	326	11 24 922 2	26	89
10540494	552	11 28 399 5	18	4	10540511	330	11 24 483 7	77	125
10540494	553	11 28 399 7	18	4	10540511	398	11 27 970 6	40	8
10540494	579	11 28 648 4	67	8	10540511	507	11 23 820 4	86	16
10540494	582	10 59 863 3	21	1	10540511	542	99 29 588 14	16	2
10540494	583	11 28 357 6	11	4	10540511	550	11 28 397 7	15	2
10540494	589	99 30 800 14	12	1	10540511	551	11 28 397 8	15	2
10540494	642	10 55 372 1	39	54	10540511	552	11 28 399 5	15	4
10540494	649	10 52 547 1	22	4	10540511	553	11 28 399 7	15	4
10540494	667	10 55 601 0	16	2	10540511	579	11 28 648 4	35	8
10540494	671	11 30 694 4	16	3	10540511	642	10 55 372 1	44	78
10540494	683	99 35 606 14	14	1	10540511	667	10 55 601 0	17	4
10540494	685	11 23 619 7	9	2	10540511	683	99 35 606 14	12	2
10540494	732	11 26 771 6	16	5	10540511	685	11 23 619 7	7	4
10540495	65	10 58 163 4	36	4	10540511	732	11 26 771 6	15	4

Item	Sheet	Assembly	Pos.	Quantity	Item	Sheet	Assembly	Pos.	Quantity
10540512	65	10 58 163 4	34	9	10543932	463	11 89 365 0	4	4
10540512	330	11 24 483 7	71	11	10543932	474	11 89 365 1	4	4
10540512	438	99 18 041 14	14	2	10543944	463	11 89 365 0	25	12
10540513	685	11 23 619 7	24	2	10543944	474	11 89 365 1	25	12
10540548	545	11 94 172 5	12	1	10543975	507	11 23 820 4	75	8
10540549	505	11 23 820 4	57	2	10543975	548	11 28 390 8	22	4
10540549	556	10 54 054 8	10	2	10543975	563	11 28 583 8	22	4
10540551	561	11 94 259 4	12	1	10543975	570	11 28 626 1	22	4
10540552	564	10 54 055 1	10	2	10544017	176	11 24 113 8	63	2
10540555	568	11 94 450 2	12	1	10544028	463	11 89 365 0	10	64
10540560	571	10 54 055 5	10	2	10544028	474	11 89 365 1	10	64
10540567	573	11 24 133 3	14	1	10544044	482	11 26 260 6	751	4
10540569	586	10 54 056 7	10	2	10544050	442	11 89 300 5	18	16
10540846	400	11 27 973 6	98	1	10544065	65	10 58 163 4	26	8
10541109	402	10 55 963 5	32	1	10544068	179	10 57 532 2	63	4
10541514	8	11 29 618 6	6	1	10544072	346	93 88 500 01	12	6
10541536	398	11 27 970 6	19	20	10544092	82	11 24 773 5	63	4
10541540	433	11 26 095 6	4	11	10544093	82	11 24 773 5	62	4
10541540	741	10 52 155 9	42	2	10544105	378	10 51 968 2	12	48
10541561	398	11 27 970 6	28	16	10544113	679	10 51 971 3	16	8
10541561	434	97 07 857 03	6	3	10544121	679	10 51 971 3	17	8
10541563	737	10 52 155 4	16	2	10544154	176	11 24 113 8	80	10
10541565	737	10 52 155 4	19	2	10544155	507	11 23 820 4	77	8
10541592	685	11 23 619 7	22	4	10544155	548	11 28 390 8	29	4
10541593	205	11 92 923 6	105	6	10544155	563	11 28 583 8	29	4
10541838	622	11 90 722 6	32	1	10544155	570	11 28 626 1	29	4
10542325	400	11 27 973 6	96	1	10544157	627	10 51 743 9	18	4
10542435	408	38 50 944 14	1	1	10544158	176	11 24 113 8	81	2
10542516	627	10 51 743 9	2	1	10544159	679	10 51 971 3	30	8
10543902	176	11 24 113 8	60	12	10544172	176	11 24 113 8	72	48
10543902	346	93 88 500 01	31	10	10544172	330	11 24 483 7	102	2
10543902	353	96 96 543 01	11	4	10544172	378	10 51 968 2	14	4
10543902	378	10 51 968 2	15	4	10544172	463	11 89 365 0	36	12
10543902	588	99 23 398 14	39	4	10544172	474	11 89 365 1	36	12
10543903	46	10 56 070 0	62	3	10544172	476	11 31 390 8	15	28
10543903	353	96 96 543 01	3	28	10544172	507	11 23 820 4	76	16
10543903	357	10 51 968 6	13	4	10544172	548	11 28 390 8	26	4
10543904	46	10 56 070 0	63	3	10544172	563	11 28 583 8	26	4
10543905	176	11 24 113 8	61	8	10544172	570	11 28 626 1	26	4
10543905	357	10 51 968 6	28	12	10544172	700	11 89 568 6	40	8
10543907	82	11 24 773 5	57	4	10544173	56	10 55 268 1	6	4
10543910	463	11 89 365 0	27	8	10544173	548	11 28 390 8	27	4
10543910	474	11 89 365 1	27	8	10544173	563	11 28 583 8	27	4
10543914	176	11 24 113 8	62	2	10544173	570	11 28 626 1	27	4
10543917	494	10 57 462 9	4	1	10544174	194	11 92 922 0	75	2
10543918	662	99 10 116 14	48	2	10544174	463	11 89 365 0	21	2
10543919	194	11 92 922 0	63	2	10544174	474	11 89 365 1	21	2
10543919	535	11 24 444 4	48	2	10544174	476	11 31 390 8	19	4
10543919	662	99 10 116 14	51	2	10544174	493	11 22 050 0	14	4
10543920	357	10 51 968 6	14	22	10544174	499	11 22 050 1	14	4
10543920	463	11 89 365 0	44	4	10544174	535	11 24 444 4	15	8
10543920	467	96 93 178 01	87	2	10544174	555	11 94 087 8	12	4
10543920	474	11 89 365 1	41	4	10544174	627	10 51 743 9	17	8
10543921	476	11 31 390 8	18	4	10544174	664	99 10 125 14	4	1
10543921	535	11 24 444 4	49	2	10544175	494	10 57 462 9	3	1
10543922	82	11 24 773 5	58	4	10544176	463	11 89 365 0	33	12
10543922	627	10 51 743 9	25	4	10544176	474	11 89 365 1	33	12
10543924	493	11 22 050 0	15	4	10544177	463	11 89 365 0	28	64
10543924	499	11 22 050 1	15	4	10544177	465	10 55 716 2	13	4
10543925	467	96 93 178 01	68	12	10544177	474	11 89 365 1	28	64

Item	Sheet	Assembly	Pos.	Quantity	Item	Sheet	Assembly	Pos.	Quantity
10545451	71	10 51 969 4	4	1	10554881	675	11 29 474 3	15	2
10545854	463	11 89 365 0	22	2	10555148	3	01 38 406 14	625	1
10545854	474	11 89 365 1	22	2	10555185	671	11 30 694 4	13	4
10545854	535	11 24 444 4	47	4	10555411	435	10 53 756 0	9	1
10545910	308	11 24 409 0	2	1	10555973	361	10 55 156 3	2	1
10545911	308	11 24 409 0	3	1	10556010	3	01 38 406 14	620	1
10545914	308	11 24 409 0	5	1	10556011	667	10 55 601 0	10	1
10545915	308	11 24 409 0	6	1	10556012	668	10 55 601 1	2	1
10545916	308	11 24 409 0	7	1	10556014	668	10 55 601 1	3	1
10545917	308	11 24 409 0	8	1	10556597	183	11 94 151 8	12	1
10545918	308	11 24 409 0	10	1	10557117	685	11 23 619 7	5	1
10545957	308	11 24 409 0	11	1	10557161	463	11 89 365 0	2	1
10545958	308	11 24 409 0	12	1	10557161	474	11 89 365 1	2	1
10545968	324	10 54 591 0	3	1	10557162	464	10 55 716 1	1	1
10545969	324	10 54 591 0	4	1	10557163	464	10 55 716 1	2	1
10545970	324	10 54 591 0	5	1	10557217	667	10 55 601 0	11	1
10546335	324	10 54 591 0	6	1	10557223	667	10 55 601 0	13	2
10546407	324	10 54 591 0	9	2	10557224	3	01 38 406 14	626	1
10546993	532	11 27 536 5	20	2	10557413	677	10 55 722 4	10	2
10547876	33	11 24 519 0	32	2	10557537	607	99 34 394 14	16	1
10547904	361	10 55 156 3	10	1	10557576	607	99 34 394 14	17	1
10548543	8	11 29 618 6	35	1	10558762	463	11 89 365 0	34	1
10548553	376	99 04 645 14	59	1	10558762	474	11 89 365 1	34	1
10549545	398	11 27 970 6	53	1	10558857	505	11 23 820 4	39	2
10549547	398	11 27 970 6	51	1	10558857	547	11 28 725 5	12	2
10549800	398	11 27 970 6	52	1	10558857	615	11 28 908 0	12	2
10550739	402	10 55 963 5	75	22	10559163	640	10 55 372 1	18	2
10550911	199	11 24 114 4	10	1	10559635	399	11 27 973 6	8	1
10550970	442	11 89 300 5	2	1	10559638	402	10 55 963 5	25	1
10550993	579	11 28 648 4	12	2	10560137	4	01 38 406 14	843	1
10551191	442	11 89 300 5	21	2	10560228	501	10 56 183 8	1	1
10551548	442	11 89 300 5	9	2	10560673	6	11 24 047 9	45	1
10551563	357	10 51 968 6	10	1	10560674	67	10 56 067 3	1	1
10551576	509	10 51 826 1	2	1	10560687	326	11 24 922 2	10	1
10552085	357	10 51 968 6	4	1	10560688	326	11 24 922 2	17	1
10552161	379	10 51 968 3	2	1	10560690	326	11 24 922 2	16	1
10552306	56	10 55 268 1	1	1	10560691	326	11 24 922 2	11	1
10552633	463	11 89 365 0	14	16	10560692	326	11 24 922 2	12	1
10552633	474	11 89 365 1	14	16	10560694	6	11 24 047 9	49	1
10552681	6	11 24 047 9	20	1	10560700	6	11 24 047 9	15	1
10552807	667	10 55 601 0	12	1	10560701	46	10 56 070 0	3	1
10552807	670	11 29 473 7	11	1	10560703	48	10 56 070 1	3	1
10552807	674	11 29 474 2	11	1	10560732	6	11 24 047 9	16	1
10552807	675	11 29 474 3	11	1	10560733	52	10 56 073 2	10	1
10552808	669	10 55 280 7	10	1	10560734	53	10 56 073 3	10	1
10553070	674	11 29 474 2	12	1	10561780	378	10 51 968 2	4	1
10553070	675	11 29 474 3	12	3	10561838	500	10 56 187 5	1	1
10553403	204	11 92 923 6	55	6	10561875	2	01 38 406 14	50	1
10553721	3	01 38 406 14	553	1	10562107	189	11 24 114 1	28	1
10553922	82	11 24 773 5	11	1	10563073	308	11 24 409 0	16	1
10554227	671	11 30 694 4	11	1	10563082	308	11 24 409 0	25	1
10554228	671	11 30 694 4	12	1	10563099	324	10 54 591 0	1	1
10554229	669	10 55 280 7	11	2	10563643	33	11 24 519 0	13	1
10554231	669	10 55 280 7	12	2	10563800	536	10 53 120 7	41	1
10554335	8	11 29 618 6	54	8	10564158	342	51 22 527 14	14	1
10554336	181	11 24 113 9	70	1	10564433	700	11 89 568 6	10	4
10554368	674	11 29 474 2	13	2	10564692	676	10 55 514 8	10	2
10554368	675	11 29 474 3	13	2	10565367	727	10 56 536 8	1	1
10554368	675	11 29 474 3	14	2	10565368	724	11 93 621 2	12	1
10554594	708	10 53 635 1	2	1	10565639	519	10 58 193 7	11	2

Item	Sheet	Assembly	Pos.	Quantity	Item	Sheet	Assembly	Pos.	Quantity
10565777	322	10 56 580 8	1	1	10575969	328	11 24 483 7	18	1
10565808	312	11 24 409 1	13	1	10575970	328	11 24 483 7	23	8
10565879	322	10 56 580 8	10	1	10575971	328	11 24 483 7	37	3
10565889	322	10 56 580 8	2	1	10575980	328	11 24 483 7	30	3
10566030	31	10 22 592 5	4	1	10575981	328	11 24 483 7	11	1
10566237	312	11 24 409 1	6	1	10575984	328	11 24 483 7	14	1
10566238	321	10 56 623 7	1	1	10575985	328	11 24 483 7	20	2
10566239	321	10 56 623 7	12	1	10576104	328	11 24 483 7	19	1
10566458	34	11 24 519 0	103	1	10576519	608	99 33 094 14	21	1
10566842	312	11 24 409 1	1	1	10576523	609	10 57 651 9	20	1
10566932	670	11 29 473 7	14	2	10577229	204	11 92 923 6	50	1
10566932	674	11 29 474 2	15	2	10577909	724	11 93 621 2	20	1
10566932	675	11 29 474 3	17	2	10578321	65	10 58 163 4	12	1
10566932	676	10 55 514 8	14	2	10578343	65	10 58 163 4	33	1
10567084	735	10 56 013 7	31	1	10578486	718	10 58 064 7	10	1
10567120	86	11 24 682 0	450	1	10578835	312	11 24 409 1	3	1
10567564	700	11 89 568 6	33	3	10578836	316	10 57 883 5	1	1
10567619	183	11 94 151 8	13	2	10578841	316	10 57 883 5	12	1
10567622	183	11 94 151 8	31	4	10578845	6	11 24 047 9	31	2
10567956	463	11 89 365 0	5	8	10578971	318	10 57 897 6	10	1
10567956	474	11 89 365 1	5	8	10578972	318	10 57 897 6	1	1
10570894	737	10 52 155 4	4	1	10578976	312	11 24 409 1	4	5
10571340	183	11 94 151 8	14	2	10579070	179	10 57 532 2	50	6
10572054	700	11 89 568 6	14	4	10579104	177	10 51 948 1	10	1
10572058	700	11 89 568 6	11	4	10579145	321	10 56 623 7	2	1
10572075	417	10 22 645 4	36	1	10579155	179	10 57 532 2	11	2
10572149	428	11 93 934 6	250	1	10579397	320	10 57 940 0	1	1
10572236	455	10 55 154 8	1	1	10579400	312	11 24 409 1	5	1
10572236	510	10 55 157 6	1	2	10579423	320	10 57 940 0	12	1
10572241	455	10 55 154 8	3	1	10579454	320	10 57 940 0	2	1
10572242	510	10 55 157 6	3	1	10579755	176	11 24 113 8	3	2
10572531	512	11 90 151 1	20	1	10579757	328	11 24 483 7	26	1
10572706	56	10 55 268 1	2	2	10579779	176	11 24 113 8	5	1
10573292	575	10 57 559 9	20	1	10579806	204	11 92 923 6	46	1
10573891	601	11 27 148 8	11	1	10579877	721	10 51 728 1	7	1
10573892	593	10 50 435 2	2	1	10579979	67	10 56 067 3	7	1
10573893	593	10 50 435 2	3	2	10580170	80	11 92 885 2	19	1
10573951	733	10 52 293 0	10	1	10580585	45	10 51 961 6	12	1
10574043	595	11 27 463 8	3	1	10580647	713	11 89 400 8	11	1
10574237	183	11 94 151 8	10	1	10581173	204	11 92 923 6	47	2
10574239	189	11 24 114 1	1	1	10581486	320	10 57 940 0	15	1
10574357	314	11 24 409 1	19	2	10581590	314	11 24 409 1	21	1
10574364	314	11 24 409 1	18	2	10581634	6	11 24 047 9	35	1
10574629	493	11 22 050 0	11	4	10581765	183	11 94 151 8	58	1
10574629	499	11 22 050 1	11	4	10581765	204	11 92 923 6	60	1
10574630	494	10 57 462 9	1	1	10581937	507	11 23 820 4	70	1
10574631	494	10 57 462 9	2	1	10581980	505	11 23 820 4	51	1
10574725	659	11 27 109 7	11	1	10581981	505	11 23 820 4	52	1
10574837	640	10 55 372 1	15	1	10581982	505	11 23 820 4	53	1
10575306	183	11 94 151 8	4	1	10581992	507	11 23 820 4	63	2
10575307	183	11 94 151 8	5	1	10581999	519	10 58 193 7	21	2
10575322	177	10 51 948 1	3	1	10582001	505	11 23 820 4	12	1
10575323	179	10 57 532 2	3	1	10582001	519	10 58 193 7	22	1
10575566	189	11 24 114 1	10	1	10582020	507	11 23 820 4	64	2
10575567	189	11 24 114 1	11	1	10583346	306	11 24 114 6	10	1
10575599	574	10 53 141 3	21	1	10583347	306	11 24 114 6	11	1
10575705	741	10 52 155 9	38	1	10583559	326	11 24 922 2	15	1
10575966	328	11 24 483 7	17	1	10583611	326	11 24 922 2	19	1
10575967	328	11 24 483 7	13	1	10583612	326	11 24 922 2	20	1
10575968	328	11 24 483 7	15	1	10583642	310	11 24 409 0	51	1

Item	Sheet	Assembly	Pos.	Quantity	Item	Sheet	Assembly	Pos.	Quantity
10583845	361	10 55 156 3	4	1	10595280	180	10 58 017 0	12	2
10583864	361	10 55 156 3	1	1	10595399	34	11 24 519 0	72	1
10583865	361	10 55 156 3	3	1	10597776	381	10 55 216 1	620	4
10584105	310	11 24 409 0	50	1	10597981	67	10 56 067 3	2	2
10584123	310	11 24 409 0	47	1	10598295	189	11 24 114 1	55	4
10584124	310	11 24 409 0	48	1	10598537	179	10 57 532 2	8	1
10584210	310	11 24 409 0	49	1	10598633	581	99 06 461 14	1	1
10584544	48	10 56 070 1	15	1	10598700	447	51 24 059 14	9	1
10584671	428	11 93 934 6	50	1	10598777	451	11 22 473 8	23	2
10584890	660	11 23 740 7	11	1	10598959	519	10 58 193 7	10	1
10584965	592	79 04 112 14	11	4	10599053	519	10 58 193 7	24	1
10584965	599	79 04 871 14	11	4	10599206	404	10 51 907 9	31	1
10585108	522	11 29 259 8	2	1	10599212	603	11 27 148 9	2	2
10585445	635	54 02 702 14	12	2	10599215	404	10 51 907 9	32	1
10585909	640	10 55 372 1	20	1	10599567	97	11 06 730 4	6	1
10585910	640	10 55 372 1	21	1	10599571	328	11 24 483 7	46	1
10585911	640	10 55 372 1	22	1	10599614	328	11 24 483 7	47	1
10585912	640	10 55 372 1	23	1	10599757	183	11 94 151 8	6	1
10585913	640	10 55 372 1	24	2	10599758	183	11 94 151 8	7	1
10585914	640	10 55 372 1	25	1	10599759	183	11 94 151 8	8	1
10585915	640	10 55 372 1	26	1	10599854	328	11 24 483 7	49	1
10585916	640	10 55 372 1	27	1	10650270	384	51 22 991 14	31	1
10585917	640	10 55 372 1	28	1	10663840	210	11 92 958 8	28	1
10585919	640	10 55 372 1	30	1	10663904	410	11 26 095 7	32	1
10585920	640	10 55 372 1	31	1	10663954	410	11 26 095 7	50	2
10585923	640	10 55 372 1	10	1	10664204	33	11 24 519 0	31	2
10585924	640	10 55 372 1	11	1	10677274	410	11 26 095 7	23	1
10585925	640	10 55 372 1	12	1	10678754	204	11 92 923 6	37	2
10585926	640	10 55 372 1	13	1	10687924	406	10 03 610 7	82	1
10585933	640	10 55 372 1	16	2	10687925	406	10 03 610 7	80	1
10585936	640	10 55 372 1	17	1	10687926	406	10 03 610 7	81	1
10586253	65	10 58 163 4	50	1	10688831	622	11 90 722 6	31	1
10586854	642	10 55 372 1	62	1	10800103	409	69 31 685 14	2	1
10588168	65	10 58 163 4	18	1	10801399	284	10 14 511 2	17	2
10588224	721	10 51 728 1	10	1	10801869	143	10 12 323 6	16	1
10588723	527	59 20 224 14	1	1	10802833	165	11 21 593 6	22	1
10588725	527	59 20 224 14	4	1	10813933	261	10 14 588 5	9	2
10588729	527	59 20 224 14	5	1	10813933	302	11 41 475 7	6	1
10588730	46	10 56 070 0	12	3	10813934	284	10 14 511 2	18	1
10589204	507	11 23 820 4	74	2	10813935	261	10 14 588 5	12	2
10589483	465	10 55 716 2	14	1	10814912	592	79 04 112 14	12	2
10590183	465	10 55 716 2	12	4	10816957	210	11 92 958 8	27	1
10590423	652	10 59 371 2	10	6	10816958	204	11 92 923 6	65	1
10591343	398	11 27 970 6	54	1	10870540	39	10 56 645 8	251	10.7
10591435	22	10 35 148 6	8	1	10870540	611	10 57 652 3	26	0.12
10591681	592	79 04 112 14	50	4	10871759	210	11 92 958 8	25	1
10591682	592	79 04 112 14	18	4	10872307	210	11 92 958 8	9	1
10592334	582	10 59 863 3	19	1	10872598	210	11 92 958 8	30	1
10592555	376	99 04 645 14	30	1	10873086	183	11 94 151 8	49	1
10592569	2	01 38 406 14	14	1	10875360	33	11 24 519 0	39	3
10592619	328	11 24 483 7	43	1	10883842	295	12 42 558 9	1	1
10592621	328	11 24 483 7	44	1	11000593	285	10 14 622 4	13	2
10593096	71	10 51 969 4	23	8	11001743	255	10 13 508 0	6	1
10593474	92	11 21 991 0	3	1	11002988	251	10 15 278 7	4	1
10593504	86	11 24 682 0	320	2	11002988	260	10 14 333 9	9	1
10593544	398	11 27 970 6	48	2	11004752	246	10 13 394 7	2	3
10593554	398	11 27 970 6	49	1	11005281	285	10 14 622 4	10	7
10593712	647	10 52 547 1	3	1	11005554	202	10 30 300 7	17	1
10594064	82	11 24 773 5	13	1	11007749	131	10 12 321 4	14	1
10595126	361	10 55 156 3	200	1	11007751	131	10 12 321 4	13	1

Item	Sheet	Assembly	Pos.	Quantity	Item	Sheet	Assembly	Pos.	Quantity
11008055	265	10 14 736 9	3	1	11219265	558	11 23 292 2	11	2
11008787	204	11 92 923 6	22	2	11219350	87	10 53 430 7	4	1
11060522	194	11 92 922 0	20	1	11219356	88	11 21 990 2	4	1
11066168	245	10 13 394 5	4	1	11219368	92	11 21 991 0	2	1
11066361	245	10 13 394 5	3	2	11219369	92	11 21 991 0	4	1
11067304	92	11 21 991 0	5	1	11219373	100	11 21 935 0	4	8
11067305	92	11 21 991 0	6	1	11219374	100	11 21 935 0	8	1
11067653	201	10 55 091 1	8	2	11219375	101	11 21 991 7	2	2
11082116	252	10 15 286 7	3	1	11219376	102	11 21 991 8	10	1
11082116	256	10 13 543 2	2	1	11219647	402	10 55 963 5	58	1
11082158	204	11 92 923 6	13	2	11219851	507	11 23 820 4	90	4
11082454	204	11 92 923 6	36	2	11219851	518	11 23 653 3	11	2
11088130	229	10 13 451 7	1	1	11219851	540	11 25 204 2	11	2
11101351	207	11 24 240 8	5	1	11219851	558	11 23 292 2	12	2
11118160	220	10 13 845 0	6	1	11219861	558	11 23 292 2	10	1
11170484	141	10 14 131 6	26	2	11219883	723	11 22 037 2	1	1
11170484	147	10 13 803 4	26	2	11219902	87	10 53 430 7	1	1
11181806	289	10 14 286 4	2	2	11219905	87	10 53 430 7	2	1
11210606	599	79 04 871 14	5	1	11219910	87	10 53 430 7	3	1
11212730	97	11 06 730 4	10	1	11219917	87	10 53 430 7	5	1
11214714	448	10 50 351 3	7	1	11219918	87	10 53 430 7	6	1
11214718	448	10 50 351 3	10	1	11219920	88	11 21 990 2	1	1
11214719	448	10 50 351 3	11	1	11219922	88	11 21 990 2	2	1
11214818	404	10 51 907 9	10	1	11219924	88	11 21 990 2	3	1
11214819	332	10 52 160 2	10	1	11219925	89	11 21 990 5	1	1
11214946	452	10 44 656 6	1	1	11219927	89	11 21 990 5	2	1
11215298	654	11 21 546 1	3	1	11219929	89	11 21 990 5	3	1
11215302	656	11 21 529 8	50	1	11219930	92	11 21 991 0	1	1
11215379	625	11 21 552 4	10	1	11219933	92	11 21 991 0	8	1
11215384	176	11 24 113 8	6	1	11219934	101	11 21 991 7	1	1
11215385	194	11 92 922 0	13	1	11219936	102	11 21 991 8	11	8
11215461	3	01 38 406 14	566	1	11220320	451	11 22 473 8	20	2
11215462	654	11 21 546 1	1	1	11220320	451	11 22 473 8	21	2
11215524	3	01 38 406 14	510	1	11220372	4	01 38 406 14	723	1
11215698	163	10 22 601 3	2	1	11220389	156	11 22 127 4	24	1
11215699	163	10 22 601 3	3	1	11220389	162	10 35 161 0	24	1
11215707	165	11 21 593 6	23	4	11220468	723	11 22 037 2	5	1
11215913	163	10 22 601 3	1	1	11220477	723	11 22 037 2	10	1
11215936	164	11 21 591 3	1	1	11220500	480	11 26 260 5	11	1
11215942	168	10 11 497 5	1	1	11220501	495	11 26 261 0	11	1
11215951	159	10 35 160 3	3	4	11220932	154	10 22 650 5	4	1
11215951	168	10 11 497 5	3	4	11221267	154	10 22 650 5	5	1
11216088	65	10 58 163 4	32	1	11221268	154	10 22 650 5	1	1
11216342	480	11 26 260 5	3	1	11221274	155	11 22 126 8	1	1
11216342	495	11 26 261 0	3	1	11221276	155	11 22 126 8	5	1
11217079	90	11 21 992 7	5	3	11221283	161	11 22 127 6	2	1
11217079	91	11 21 992 9	5	3	11222864	740	51 00 959 14	200	1
11217169	204	11 92 923 6	54	6	11223086	623	11 22 322 6	1	1
11217232	308	11 24 409 0	18	4	11223123	58	11 27 315 5	12	1
11217289	179	10 57 532 2	5	1	11223226	622	11 90 722 6	10	1
11217500	724	11 93 621 2	11	1	11223233	376	99 04 645 14	4	1
11217837	156	11 22 127 4	30	1	11223305	26	59 21 458 14	2	2
11218236	507	11 23 820 4	79	1	11223691	400	11 27 973 6	211	1
11219056	201	10 55 091 1	6	2	11223693	414	11 22 369 1	5	2
11219067	201	10 55 091 1	7	2	11223717	400	11 27 973 6	210	2
11219069	201	10 55 091 1	5	2	11224738	447	51 24 059 14	2	1
11219179	34	11 24 519 0	65	2	11224740	447	51 24 059 14	25	1
11219265	507	11 23 820 4	89	4	11224761	451	11 22 473 8	7	1
11219265	518	11 23 653 3	10	2	11224762	451	11 22 473 8	12	2
11219265	540	11 25 204 2	10	2	11224767	451	11 22 473 8	22	4

Item	Sheet	Assembly	Pos.	Quantity	Item	Sheet	Assembly	Pos.	Quantity
11225259	326	11 24 922 2	23	3	11230660	428	11 93 934 6	270	1
11225402	310	11 24 409 0	63	2	11230849	535	11 24 444 4	18	2
11225403	452	10 44 656 6	2	1	11231072	647	10 52 547 1	13	2
11226015	383	51 14 347 14	10	1	11231269	485	10 53 039 8	2	1
11226016	383	51 14 347 14	20	1	11231270	485	10 53 039 8	3	1
11226017	383	51 14 347 14	30	1	11231317	487	11 89 322 8	3	1
11226019	383	51 14 347 14	40	1	11231319	487	11 89 322 8	5	1
11226023	383	51 14 347 14	60	2	11231322	488	11 23 126 9	1	1
11226035	383	51 14 347 14	80	1	11231336	489	11 23 127 0	1	1
11226084	383	51 14 347 14	90	1	11231552	731	11 28 048 1	1	1
11226086	383	51 14 347 14	92	1	11231673	579	11 28 648 4	19	2
11226088	383	51 14 347 14	100	2	11232399	505	11 23 820 4	4	1
11226090	383	51 14 347 14	110	1	11232788	724	11 93 621 2	22	1
11226118	383	51 14 347 14	130	1	11232922	545	11 94 172 5	15	4
11226127	383	51 14 347 14	140	1	11232922	561	11 94 259 4	15	4
11226129	383	51 14 347 14	150	1	11232922	568	11 94 450 2	15	4
11226130	383	51 14 347 14	160	1	11232922	573	11 24 133 3	16	4
11226133	383	51 14 347 14	165	1	11233062	588	99 23 398 14	42	1
11226135	383	51 14 347 14	170	1	11233289	18	11 28 647 6	121	4
11226137	383	51 14 347 14	180	4	11233292	18	11 28 647 6	124	4
11226139	383	51 14 347 14	190	4	11233296	18	11 28 647 6	135	2
11226142	383	51 14 347 14	200	1	11233332	18	11 28 647 6	148	1
11226144	383	51 14 347 14	210	4	11233333	18	11 28 647 6	150	2
11226148	383	51 14 347 14	220	1	11233338	18	11 28 647 6	151	8
11226980	692	59 21 584 14	6	1	11233401	18	11 28 647 6	153	10
11227037	2	01 38 406 14	26	1	11233402	18	11 28 647 6	154	16
11227045	377	11 22 703 7	10	1	11233404	18	11 28 647 6	155	2
11227046	377	11 22 703 7	11	1	11233487	487	11 89 322 8	1	1
11227203	50	10 51 572 4	1	1	11233727	75	10 22 540 8	1	1
11228227	685	11 23 619 7	25	1	11233729	75	10 22 540 8	3	2
11228707	653	11 22 870 8	10	1	11233730	75	10 22 540 8	4	1
11228708	647	10 52 547 1	11	1	11233731	75	10 22 540 8	5	1
11228726	669	10 55 280 7	20	1	11233731	75	10 22 540 8	6	1
11228726	676	10 55 514 8	17	1	11233731	527	59 20 224 14	2	1
11228734	667	10 55 601 0	23	1	11233732	75	10 22 540 8	7	1
11228734	670	11 29 473 7	16	1	11233742	75	10 22 540 8	9	1
11228734	674	11 29 474 2	17	1	11233749	75	10 22 540 8	10	1
11228734	675	11 29 474 3	19	1	11233751	75	10 22 540 8	11	1
11228734	676	10 55 514 8	18	1	11234068	18	11 28 647 6	275	16
11228766	669	10 55 280 7	19	1	11234129	18	11 28 647 6	285	1
11228766	676	10 55 514 8	16	1	11234375	328	11 24 483 7	57	2
11228775	653	11 22 870 8	15	1	11234405	328	11 24 483 7	58	1
11228777	653	11 22 870 8	17	2	11234413	328	11 24 483 7	59	1
11228794	653	11 22 870 8	16	1	11234650	400	11 27 973 6	150	4
11228802	653	11 22 870 8	11	1	11234799	176	11 24 113 8	15	2
11228803	653	11 22 870 8	13	1	11235246	701	11 89 568 7	2	1
11228804	653	11 22 870 8	12	1	11235248	702	11 23 524 6	2	1
11228806	653	11 22 870 8	14	2	11235361	71	10 51 969 4	11	1
11229182	22	10 35 148 6	4	1	11235382	71	10 51 969 4	21	1
11229183	22	10 35 148 6	5	1	11235482	476	11 31 390 8	35	2
11229184	22	10 35 148 6	7	1	11236106	592	79 04 112 14	19	12
11229185	22	10 35 148 6	9	1	11236106	599	79 04 871 14	19	12
11229186	25	10 59 143 5	1	2	11236108	592	79 04 112 14	20	12
11229464	201	10 55 091 1	3	1	11236108	599	79 04 871 14	20	12
11229635	33	11 24 519 0	30	3	11236197	3	01 38 406 14	644	1
11229706	522	11 29 259 8	4	1	11236233	711	11 23 626 6	11	1
11229709	679	10 51 971 3	4	1	11236266	4	01 38 406 14	680	2
11229805	194	11 92 922 0	30	2	11236511	179	10 57 532 2	45	1
11230237	535	11 24 444 4	44	9	11236513	179	10 57 532 2	47	1
11230438	456	51 33 141 14	4	1	11236514	179	10 57 532 2	43	1

Item	Sheet	Assembly	Pos.	Quantity	Item	Sheet	Assembly	Pos.	Quantity
11236515	179	10 57 532 2	41	1	11242597	477	11 24 812 0	10	4
11236517	179	10 57 532 2	40	1	11242757	204	11 92 923 6	48	1
11236518	179	10 57 532 2	46	1	11242988	3	01 38 406 14	647	1
11236533	505	11 23 820 4	23	4	11243834	731	11 28 048 1	7	1
11236533	545	11 94 172 5	14	8	11244040	328	11 24 483 7	52	2
11236533	561	11 94 259 4	14	8	11244090	78	11 92 885 5	11	1
11236533	568	11 94 450 2	14	16	11244091	308	11 24 409 0	1	1
11236533	573	11 24 133 3	15	2	11244092	312	11 24 409 1	2	1
11236557	624	11 25 016 2	10	1	11244094	308	11 24 409 0	28	1
11236707	725	11 21 750 0	1	1	11244444	533	11 24 165 1	10	1
11236708	725	11 21 750 0	2	1	11244487	80	11 92 885 2	3	1
11236709	725	11 21 750 0	3	1	11244498	310	11 24 409 0	53	1
11236711	725	11 21 750 0	4	1	11244758	308	11 24 409 0	14	1
11236712	725	11 21 750 0	5	1	11244837	78	11 92 885 5	14	1
11236713	725	11 21 750 0	6	1	11244865	308	11 24 409 0	13	1
11236714	725	11 21 750 0	7	1	11245190	6	11 24 047 9	3	1
11236937	40	11 23 908 2	10	1	11245698	546	11 24 570 3	10	1
11237407	3	01 38 406 14	583	1	11245700	562	11 24 570 9	10	1
11237423	660	11 23 740 7	10	1	11245702	569	11 24 571 5	10	1
11237759	592	79 04 112 14	9	4	11245703	545	11 94 172 5	10	1
11238202	505	11 23 820 4	10	1	11245707	2	01 38 406 14	67	1
11238204	2	01 38 406 14	59	1	11245709	561	11 94 259 4	10	1
11238277	670	11 29 473 7	17	1	11245713	2	01 38 406 14	71	1
11238277	674	11 29 474 2	18	2	11245715	568	11 94 450 2	10	1
11238277	675	11 29 474 3	20	4	11245719	2	01 38 406 14	79	5
11238277	676	10 55 514 8	22	2	11245755	644	11 24 147 8	1	2
11238278	672	11 23 827 7	1	1	11245756	645	11 24 575 5	1	1
11238878	585	69 28 155 14	10	1	11245757	645	11 24 575 5	2	2
11239010	507	11 23 820 4	92	1	11245758	645	11 24 575 5	3	1
11239082	34	11 24 519 0	111	1	11245759	644	11 24 147 8	2	2
11239085	40	11 23 908 2	11	1	11245760	645	11 24 575 5	4	4
11239595	207	11 24 240 8	3	1	11245766	644	11 24 147 8	5	2
11239698	535	11 24 444 4	37	2	11245767	644	11 24 147 8	6	2
11239740	535	11 24 444 4	22	1	11245922	644	11 24 147 8	3	2
11239880	690	51 16 404 14	2	1	11246790	194	11 92 922 0	10	1
11239880	692	59 21 584 14	2	1	11246820	82	11 24 773 5	1	1
11239895	692	59 21 584 14	3	1	11246836	194	11 92 922 0	15	1
11239897	692	59 21 584 14	4	1	11246919	328	11 24 483 7	42	1
11239904	692	59 21 584 14	5	1	11247011	328	11 24 483 7	38	1
11239908	692	59 21 584 14	7	1	11247023	330	11 24 483 7	61	1
11239912	690	51 16 404 14	1	1	11247029	328	11 24 483 7	28	1
11239915	690	51 16 404 14	3	1	11247121	33	11 24 519 0	11	1
11239916	690	51 16 404 14	4	1	11247122	172	11 24 448 7	11	1
11240479	2	01 38 406 14	5	1	11247131	330	11 24 483 7	62	1
11240499	715	10 53 352 4	3	1	11247158	328	11 24 483 7	48	1
11240503	715	10 53 352 4	1	1	11247161	518	11 23 653 3	12	1
11241005	71	10 51 969 4	22	16	11247207	328	11 24 483 7	50	1
11241137	80	11 92 885 2	4	1	11247208	194	11 92 922 0	12	1
11241138	80	11 92 885 2	12	1	11247375	328	11 24 483 7	22	1
11241139	80	11 92 885 2	20	1	11247464	198	11 24 114 3	9	1
11241141	80	11 92 885 2	29	1	11247607	198	11 24 114 3	8	1
11241143	80	11 92 885 2	40	1	11247688	176	11 24 113 8	1	1
11241144	80	11 92 885 2	50	1	11247735	80	11 92 885 2	2	1
11241146	80	11 92 885 2	90	1	11247790	695	11 89 568 5	4	1
11241323	573	11 24 133 3	10	1	11247791	328	11 24 483 7	29	1
11241333	2	01 38 406 14	81	1	11247792	328	11 24 483 7	31	9
11241478	3	01 38 406 14	554	1	11247799	328	11 24 483 7	32	2
11241651	2	01 38 406 14	63	1	11247808	328	11 24 483 7	33	1
11241756	33	11 24 519 0	40	1	11247913	457	10 55 119 1	1	4
11242408	204	11 92 923 6	6	1	11248120	2	01 38 406 14	37	1

Item	Sheet	Assembly	Pos.	Quantity	Item	Sheet	Assembly	Pos.	Quantity
11248166	198	11 24 114 3	6	1	11253394	362	10 58 386 4	1	1
11248175	198	11 24 114 3	7	1	11253398	363	10 55 597 3	1	1
11248432	198	11 24 114 3	10	1	11253401	364	10 58 386 5	1	1
11248433	198	11 24 114 3	11	1	11253440	365	10 58 384 5	1	1
11248460	198	11 24 114 3	12	1	11253456	446	11 89 617 8	7	7
11248964	308	11 24 409 0	21	1	11253687	82	11 24 773 5	2	1
11248966	308	11 24 409 0	22	1	11253689	82	11 24 773 5	26	2
11248969	308	11 24 409 0	9	2	11254299	728	10 56 536 7	1	1
11248990	308	11 24 409 0	19	2	11256217	535	11 24 444 4	19	2
11248991	308	11 24 409 0	15	2	11257849	330	11 24 483 7	72	1
11248992	308	11 24 409 0	20	2	11257851	330	11 24 483 7	75	3
11249191	74	59 21 041 14	270	1	11258086	33	11 24 519 0	41	1
11249222	78	11 92 885 5	12	1	11258244	6	11 24 047 9	990	1
11249223	326	11 24 922 2	13	1	11259039	400	11 27 973 6	206	1
11249224	326	11 24 922 2	18	1	11259704	428	11 93 934 6	200	1
11249225	326	11 24 922 2	21	1	11259705	428	11 93 934 6	210	1
11249334	181	11 24 113 9	2	1	11260077	410	11 26 095 7	24	1
11249678	326	11 24 922 2	24	1	11260956	398	11 27 970 6	17	1
11249729	199	11 24 114 4	4	1	11260957	399	11 27 973 6	20	1
11249738	199	11 24 114 4	11	2	11261002	181	11 24 113 9	5	2
11249772	445	10 55 097 0	10	3	11261289	530	11 29 259 6	1	2
11249800	176	11 24 113 8	2	2	11261603	400	11 27 973 6	202	1
11249804	446	11 89 617 8	9	1	11262039	732	11 26 771 6	10	1
11249889	176	11 24 113 8	9	2	11262110	706	11 89 568 8	11	4
11250162	3	01 38 406 14	447	1	11262605	2	01 38 406 14	41	1
11250222	176	11 24 113 8	4	2	11262606	480	11 26 260 5	2	1
11250382	183	11 94 151 8	3	1	11262609	480	11 26 260 5	4	1
11250430	189	11 24 114 1	20	1	11262610	2	01 38 406 14	45	1
11250438	189	11 24 114 1	21	1	11262611	495	11 26 261 0	2	1
11250439	189	11 24 114 1	25	1	11262612	495	11 26 261 0	4	1
11250555	183	11 94 151 8	20	1	11262806	59	11 26 557 2	10	1
11250556	183	11 94 151 8	21	1	11262807	731	11 28 048 1	3	1
11250564	183	11 94 151 8	23	1	11262812	433	11 26 095 6	2	1
11250970	420	10 22 441 3	3	1	11262861	306	11 24 114 6	12	1
11250971	421	11 25 097 0	2	1	11262893	433	11 26 095 6	1	1
11250972	86	11 24 682 0	30	1	11262894	433	11 26 095 6	3	1
11250974	86	11 24 682 0	70	3	11263413	176	11 24 113 8	16	1
11250985	192	11 28 574 7	3	1	11263492	579	11 28 648 4	6	1
11250990	86	11 24 682 0	420	4	11263501	176	11 24 113 8	17	1
11250998	86	11 24 682 0	468	8	11263757	176	11 24 113 8	18	1
11251056	189	11 24 114 1	8	1	11265089	330	11 24 483 7	65	1
11251232	482	11 26 260 6	2	1	11265111	514	91 92 528 14	11	1
11251232	497	11 26 261 1	2	1	11265425	521	11 26 694 5	12	2
11251423	446	11 89 617 8	8	2	11265497	521	11 26 694 5	11	4
11251434	446	11 89 617 8	6	1	11265572	58	11 27 315 5	11	1
11251437	446	11 89 617 8	5	1	11265945	328	11 24 483 7	35	1
11252042	533	11 24 165 1	13	4	11266734	57	10 51 963 1	12	76
11252203	306	11 24 114 6	1	1	11266901	544	11 24 570 7	110	1
11252205	306	11 24 114 6	16	1	11266901	560	11 24 571 3	110	1
11252206	306	11 24 114 6	17	1	11266901	567	11 24 571 9	110	1
11252207	306	11 24 114 6	2	1	11266945	507	11 23 820 4	110	1
11252208	306	11 24 114 6	8	1	11266945	604	99 34 387 14	110	1
11252211	306	11 24 114 6	3	1	11266978	437	10 51 969 6	14	80
11252213	306	11 24 114 6	9	1	11267377	90	11 21 992 7	6	1
11252214	306	11 24 114 6	4	1	11267377	91	11 21 992 9	6	1
11252215	306	11 24 114 6	5	1	11267378	90	11 21 992 7	1	1
11252216	306	11 24 114 6	6	1	11267396	91	11 21 992 9	1	1
11252578	306	11 24 114 6	15	1	11267400	94	11 21 993 0	10	2
11253077	86	11 24 682 0	140	2	11267401	94	11 21 993 0	11	2
11253240	109	90 74 418	900	1	11267402	94	11 21 993 0	20	1

Item	Sheet	Assembly	Pos.	Quantity	Item	Sheet	Assembly	Pos.	Quantity
11267403	94	11 21 993 0	28	1	11276851	2	01 38 406 14	53	1
11267405	94	11 21 993 0	46	1	11278507	583	11 28 357 6	1	1
11267415	95	10 59 347 4	1	1	11278605	635	54 02 702 14	10	1
11267416	95	10 59 347 4	6	1	11279013	204	11 92 923 6	51	1
11267417	95	10 59 347 4	7	1	11279036	204	11 92 923 6	52	1
11267418	95	10 59 347 4	9	1	11279237	204	11 92 923 6	53	1
11267418	96	11 21 936 9	8	1	11279706	2	01 38 406 14	30	1
11267421	96	11 21 936 9	1	1	11279736	398	11 27 970 6	3	1
11267439	97	11 06 730 4	1	1	11280481	730	11 28 423 6	10	1
11267440	97	11 06 730 4	2	1	11280482	58	11 27 315 5	10	2
11267441	97	11 06 730 4	4	2	11280746	659	11 27 109 7	16	1
11267442	97	11 06 730 4	5	1	11280868	53	10 56 073 3	12	1
11267447	98	11 06 730 5	1	1	11281448	422	59 22 871 14	1	1
11267451	99	11 26 744 7	1	1	11283576	581	99 06 461 14	2	1
11267453	99	11 26 744 7	3	1	11283908	546	11 24 570 3	14	1
11267455	100	11 21 935 0	10	1	11283913	548	11 28 390 8	18	8
11267554	186	10 57 423 7	9	1	11283913	563	11 28 583 8	18	9
11267555	186	10 57 423 7	10	1	11283913	570	11 28 626 1	18	9
11267556	186	10 57 423 7	11	1	11283913	573	11 24 133 3	17	12
11267557	186	10 57 423 7	12	1	11283913	670	11 29 473 7	13	4
11267558	186	10 57 423 7	13	1	11283913	674	11 29 474 2	14	10
11267559	186	10 57 423 7	26	1	11283913	675	11 29 474 3	16	14
11267560	186	10 57 423 7	29	1	11283977	546	11 24 570 3	15	1
11267716	730	11 28 423 6	11	1	11283977	562	11 24 570 9	15	1
11268711	86	11 24 682 0	610	1	11283977	569	11 24 571 5	15	1
11268816	86	11 24 682 0	380	2	11283978	546	11 24 570 3	16	1
11268967	678	11 26 901 8	10	1	11283978	562	11 24 570 9	16	1
11269018	677	10 55 722 4	11	2	11283978	569	11 24 571 5	16	1
11269259	183	11 94 151 8	19	1	11283995	546	11 24 570 3	17	1
11269498	204	11 92 923 6	2	1	11283995	562	11 24 570 9	17	1
11269727	573	11 24 133 3	110	1	11283995	569	11 24 571 5	17	1
11269800	183	11 94 151 8	9	1	11283997	546	11 24 570 3	18	1
11269954	6	11 24 047 9	4	1	11283997	562	11 24 570 9	18	1
11270026	183	11 94 151 8	44	1	11283997	569	11 24 571 5	18	1
11270155	527	59 20 224 14	3	1	11284236	4	01 38 406 14	821	1
11271097	3	01 38 406 14	580	2	11285382	549	11 28 391 3	11	1
11271098	659	11 27 109 7	10	1	11285709	192	11 28 574 7	4	1
11271456	599	79 04 871 14	2	2	11285747	189	11 24 114 1	3	1
11271461	599	79 04 871 14	4	1	11285838	562	11 24 570 9	14	1
11271479	599	79 04 871 14	6	1	11285947	2	01 38 406 14	65	1
11271482	599	79 04 871 14	12	2	11286105	573	11 24 133 3	12	1
11271486	599	79 04 871 14	16	4	11286191	2	01 38 406 14	69	1
11271487	599	79 04 871 14	18	8	11286261	569	11 24 571 5	14	1
11271488	599	79 04 871 14	22	1	11286324	511	11 90 150 9	10	1
11271489	601	11 27 148 8	1	1	11286324	574	10 53 141 3	10	1
11271490	601	11 27 148 8	2	1	11286476	8	11 29 618 6	1	1
11271491	593	10 50 435 2	1	1	11286481	8	11 29 618 6	2	2
11273155	6	11 24 047 9	23	1	11286484	573	11 24 133 3	11	1
11273242	308	11 24 409 0	17	4	11286534	2	01 38 406 14	77	5
11273458	400	11 27 973 6	212	2	11287255	546	11 24 570 3	12	1
11274624	592	79 04 112 14	2	2	11287255	562	11 24 570 9	12	2
11274636	592	79 04 112 14	16	4	11287255	569	11 24 571 5	12	4
11274638	592	79 04 112 14	21	1	11287264	505	11 23 820 4	11	4
11274675	595	11 27 463 8	2	1	11287264	546	11 24 570 3	11	4
11274707	204	11 92 923 6	14	1	11287264	562	11 24 570 9	11	4
11274708	204	11 92 923 6	15	1	11287264	569	11 24 571 5	11	4
11274920	731	11 28 048 1	2	1	11287445	607	99 34 394 14	11	1
11275365	522	11 29 259 8	10	1	11287692	183	11 94 151 8	18	1
11275747	507	11 23 820 4	95	1	11287715	183	11 94 151 8	24	1
11276612	189	11 24 114 1	5	1	11287796	183	11 94 151 8	25	1

Item	Sheet	Assembly	Pos.	Quantity	Item	Sheet	Assembly	Pos.	Quantity
11288257	737	10 52 155 4	103	1	11310952	570	11 28 626 1	12	2
11289080	607	99 34 394 14	13	2	11310955	548	11 28 390 8	13	2
11289833	704	59 21 826 14	25	1	11310955	563	11 28 583 8	13	2
11290844	86	11 24 682 0	10	1	11310955	570	11 28 626 1	13	2
11290845	86	11 24 682 0	80	1	11311241	548	11 28 390 8	10	1
11290846	86	11 24 682 0	165	2	11311241	563	11 28 583 8	10	1
11290847	86	11 24 682 0	170	1	11311241	570	11 28 626 1	10	1
11290849	86	11 24 682 0	180	1	11311245	548	11 28 390 8	15	2
11290850	86	11 24 682 0	200	2	11311245	563	11 28 583 8	15	1
11290852	86	11 24 682 0	230	1	11311245	570	11 28 626 1	14	1
11290853	86	11 24 682 0	460	1	11311262	548	11 28 390 8	11	1
11290854	86	11 24 682 0	465	1	11311336	563	11 28 583 8	11	1
11290855	86	11 24 682 0	470	2	11311371	563	11 28 583 8	20	1
11290856	86	11 24 682 0	530	1	11311371	570	11 28 626 1	15	1
11290857	86	11 24 682 0	540	1	11311390	570	11 28 626 1	20	1
11291030	196	11 24 679 0	3	1	11311393	570	11 28 626 1	11	1
11291031	196	11 24 679 0	1	1	11312502	593	10 50 435 2	4	1
11292596	522	11 29 259 8	3	1	11312502	601	11 27 148 8	7	1
11292598	2	01 38 406 14	60	1	11313908	439	11 89 364 8	12	1
11292956	453	10 44 510 2	17	1	11314134	675	11 29 474 3	10	1
11293193	453	10 44 510 2	6	1	11314166	426	11 94 091 0	2	1
11293195	453	10 44 510 2	7	1	11314341	518	11 23 653 3	14	4
11293196	453	10 44 510 2	8	1	11314341	540	11 25 204 2	15	4
11293250	26	59 21 458 14	3	2	11314341	558	11 23 292 2	17	6
11293256	8	11 29 618 6	44	4	11314349	518	11 23 653 3	13	4
11293256	179	10 57 532 2	15	1	11314349	540	11 25 204 2	14	4
11294362	86	11 24 682 0	100	1	11314349	558	11 23 292 2	14	6
11294363	86	11 24 682 0	110	4	11314473	536	10 53 120 7	50	1
11294517	607	99 34 394 14	14	2	11348054	233	11 34 807 2	1	1
11294737	3	01 38 406 14	621	1	11348072	214	12 42 545 4	60	6
11294742	3	01 38 406 14	622	1	11349182	204	11 92 923 6	23	2
11294743	3	01 38 406 14	624	5	11351303	234	10 14 636 7	3	1
11296186	6	11 24 047 9	2	1	11354498	274	10 14 273 4	1	1
11297460	712	11 23 623 3	2	1	11357451	273	11 44 013 4	1	1
11297461	712	11 23 623 3	3	1	11357453	273	11 44 013 4	2	1
11297647	730	11 28 423 6	12	1	11362187	127	10 12 878 7	4	1
11298436	555	11 94 087 8	10	2	11368896	208	10 14 653 8	6	1
11299163	198	11 24 114 3	13	1	11373478	204	11 92 923 6	7	1
11299752	465	10 55 716 2	1	1	11376327	216	12 42 545 4	582	1
11300790	704	59 21 826 14	160	1	11381601	284	10 14 511 2	20	1
11301266	605	99 09 205 14	11	1	11386645	287	10 12 037 2	1	1
11301682	23	10 52 459 5	2	10	11389287	262	10 14 382 8	3	2
11301913	18	11 28 647 6	147	1	11389617	214	12 42 545 4	10	1
11303217	590	79 03 861 14	2	1	11403695	304	11 40 371 1	20	1
11305568	376	99 04 645 14	75	16	11403711	303	11 90 032 5	3	1
11305579	376	99 04 645 14	76	16	11403994	252	10 15 286 7	2	1
11305670	670	11 29 473 7	18	1	11403994	256	10 13 543 2	1	1
11305670	674	11 29 474 2	19	1	11404751	267	10 14 967 6	3	1
11305670	675	11 29 474 3	21	1	11410004	302	11 41 475 7	5	1
11306379	712	11 23 623 3	6	1	11414757	299	11 92 891 3	4	1
11306944	670	11 29 473 7	12	2	11414758	299	11 92 891 3	5	1
11306945	671	11 30 694 4	10	1	11414759	302	11 41 475 7	2	1
11308593	198	11 24 114 3	14	1	11414767	302	11 41 475 7	1	1
11308594	198	11 24 114 3	15	1	11415782	264	10 14 736 6	1	1
11309625	398	11 27 970 6	57	1	11417369	300	11 41 737 0	1	1
11309628	436	11 30 962 5	2	1	11417370	299	11 92 891 3	3	1
11310567	526	10 09 917 3	40	1	11425228	296	10 15 028 8	8	1
11310932	6	11 24 047 9	46	1	11440134	272	10 14 611 7	1	1
11310952	548	11 28 390 8	12	2	11443132	260	10 14 333 9	11	2
11310952	563	11 28 583 8	12	2	11444998	265	10 14 736 9	1	1

Item	Sheet	Assembly	Pos.	Quantity	Item	Sheet	Assembly	Pos.	Quantity
11448000	237	11 44 800 5	2	2	11893648	2	01 38 406 14	33	1
11448005	236	10 14 843 8	1	1	11893650	439	11 89 364 8	10	1
11461533	33	11 24 519 0	42	1	11893651	439	11 89 364 8	11	1
11481158	592	79 04 112 14	5	1	11893687	474	11 89 365 1	1	1
11481159	592	79 04 112 14	6	1	11893689	463	11 89 365 0	1	1
11481162	595	11 27 463 8	1	1	11894008	4	01 38 406 14	704	1
11482007	204	11 92 923 6	35	4	11894080	695	11 89 568 5	2	1
11482412	271	10 14 286 0	7	1	11894083	696	11 89 408 0	2	1
11490216	138	10 14 360 7	34	2	11895685	694	11 24 298 8	10	1
11490265	94	11 21 993 0	38	1	11895686	695	11 89 568 5	10	1
11490265	94	11 21 993 0	39	1	11895687	694	11 24 298 8	11	1
11490265	94	11 21 993 0	40	1	11895688	701	11 89 568 7	10	1
11490268	599	79 04 871 14	9	4	11896178	445	10 55 097 0	900	1
11493575	592	79 04 112 14	4	1	11898219	2	01 38 406 14	52	1
11493578	592	79 04 112 14	14	2	11900325	80	11 92 885 2	70	1
11600199	210	11 92 958 8	38	1	11900503	733	10 52 293 0	9	1
11600281	97	11 06 730 4	3	1	11901509	505	11 23 820 4	3	1
11600879	253	10 15 315 1	4	1	11901511	511	11 90 150 9	21	1
11600879	254	10 14 114 0	3	1	11903519	726	11 23 671 4	1	4
11600879	257	10 13 543 4	3	1	11903869	728	10 56 536 7	3	1
11621764	204	11 92 923 6	25	4.5	11903905	384	51 22 991 14	5	1
11621764	210	11 92 958 8	15	0.5	11904703	705	59 21 826 14	900	1
11621769	199	11 24 114 4	5	0.5	11907226	3	01 38 406 14	438	1
11621769	204	11 92 923 6	30	6.5	11909480	428	11 93 934 6	100	1
11621772	183	11 94 151 8	51	1	11909482	428	11 93 934 6	120	1
11621772	204	11 92 923 6	31	2	11909483	428	11 93 934 6	130	1
11621777	183	11 94 151 8	48	1	11909496	428	11 93 934 6	140	1
11622278	253	10 15 315 1	3	1	11909497	428	11 93 934 6	150	1
11622278	257	10 13 543 4	2	1	11909498	428	11 93 934 6	160	1
11645490	399	11 27 973 6	76	1	11909669	74	59 21 041 14	2	1
11651481	18	11 28 647 6	120	4	11910323	526	10 09 917 3	100	1
11656240	265	10 14 736 9	6	1	11910324	526	10 09 917 3	180	2
11656331	183	11 94 151 8	47	1	11910325	526	10 09 917 3	190	1
11690424	284	10 14 511 2	10	1	11910327	526	10 09 917 3	110	1
11694640	255	10 13 508 0	9	1	11910328	526	10 09 917 3	111	1
11696074	202	10 30 300 7	16	1	11910892	310	11 24 409 0	42	6
11699714	331	10 59 256 9	280	1	11912031	400	11 27 973 6	205	1
11833770	226	10 15 529 8	3	2	11913115	98	11 06 730 5	2	1
11833907	208	10 14 653 8	19	1	11913116	98	11 06 730 5	3	1
11835950	18	11 28 647 6	181	4	11913123	99	11 26 744 7	2	1
11835951	18	11 28 647 6	182	12	11913226	579	11 28 648 4	64	4
11837214	210	11 92 958 8	6	1	11918670	316	10 57 883 5	13	4
11837331	210	11 92 958 8	8	1	11918670	318	10 57 897 6	11	4.1
11890145	465	10 55 716 2	2	2	11918670	320	10 57 940 0	13	2.6
11890636	685	11 23 619 7	16	1	11918670	321	10 56 623 7	13	1.35
11892804	724	11 93 621 2	18	1	11918670	322	10 56 580 8	11	2.8
11893001	439	11 89 364 8	4	1	11918725	442	11 89 300 5	25	2
11893003	439	11 89 364 8	2	1	11918996	74	59 21 041 14	90	1
11893005	440	11 89 300 3	2	1	11918997	74	59 21 041 14	181	2
11893213	485	10 53 039 8	1	1	11921102	49	10 52 673 3	17	1
11893214	485	10 53 039 8	4	1	11921782	741	10 52 155 9	58	1
11893215	485	10 53 039 8	5	1	11922544	205	11 92 923 6	210	10
11893216	485	10 53 039 8	6	1	11922654	190	10 57 423 9	13	1
11893228	486	11 89 321 3	1	1	11926906	210	11 92 958 8	26	1
11893250	487	11 89 322 8	2	1	11928852	78	11 92 885 5	10	1
11893252	487	11 89 322 8	4	1	11928855	2	01 38 406 14	6	1
11893253	490	11 89 321 4	1	1	11928908	668	10 55 601 1	1	2
11893254	491	11 89 321 5	1	1	11928913	80	11 92 885 2	67	1
11893255	492	11 89 321 6	1	1	11929220	80	11 92 885 2	30	1
11893352	713	11 89 400 8	3	1	11929236	80	11 92 885 2	60	1

Item	Sheet	Assembly	Pos.	Quantity	Item	Sheet	Assembly	Pos.	Quantity
11929287	194	11 92 922 0	11	1	11946452	428	11 93 934 6	220	1
11929329	194	11 92 922 0	14	1	11946453	428	11 93 934 6	290	1
11929423	210	11 92 958 8	20	1	11946454	428	11 93 934 6	300	1
11929588	80	11 92 885 2	61	1	11946455	428	11 93 934 6	310	1
11929596	210	11 92 958 8	21	1	11946456	428	11 93 934 6	320	1
11929821	210	11 92 958 8	2	1	11946457	428	11 93 934 6	330	1
11930190	210	11 92 958 8	11	1	11946458	428	11 93 934 6	340	1
11930281	210	11 92 958 8	22	1	11946459	428	11 93 934 6	350	1
11930759	210	11 92 958 8	23	1	11946462	428	11 93 934 6	360	1
11930769	210	11 92 958 8	50	1	11946464	428	11 93 934 6	370	1
11931909	210	11 92 958 8	24	1	11947719	328	11 24 483 7	27	2
11932236	190	10 57 423 9	12	4	11949153	555	11 94 087 8	15	2
11932237	190	10 57 423 9	11	1	11949153	662	99 10 116 14	37	2
11932238	190	10 57 423 9	10	16	11949153	664	99 10 125 14	3	1
11932239	190	10 57 423 9	9	4	11949158	662	99 10 116 14	39	2
11932240	190	10 57 423 9	8	4	11949368	501	10 56 183 8	80	1
11932241	190	10 57 423 9	7	12	11950210	376	99 04 645 14	50	1
11932242	190	10 57 423 9	6	1	11950212	376	99 04 645 14	53	1
11932243	190	10 57 423 9	4	1	11951869	207	11 24 240 8	7	1
11932244	190	10 57 423 9	3	1	11952726	400	11 27 973 6	83	1
11932245	190	10 57 423 9	2	1	11953398	728	10 56 536 7	2	1
11932246	190	10 57 423 9	1	1	12207546	296	10 15 028 8	52	2
11932850	28	51 16 576 14	1	1	12207547	285	10 14 622 4	15	2
11932853	28	51 16 576 14	2	1	12401396	249	10 15 085 7	230	1
11933792	413	11 95 272 6	10	1	12403954	296	10 15 028 8	1	1
11934656	18	11 28 647 6	125	4	12425454	80	11 92 885 2	66	1
11936212	4	01 38 406 14	724	1	12425589	216	12 42 545 4	570	1
11938016	438	99 18 041 14	11	2	12428325	267	10 14 967 6	10	1
11938600	22	10 35 148 6	2	3	12455374	259	10 14 675 3	1	1
11939346	426	11 94 091 0	1	1	12476138	234	10 14 636 7	4	1
11940146	384	51 22 991 14	4	1	226016702	326	11 24 922 2	29	2.18
11940147	384	51 22 991 14	6	1	226016702	326	11 24 922 2	30	1.11
11940176	385	70 23 828	1	1	226016702	326	11 24 922 2	31	1.19
11940177	385	70 23 828	2	1	226016702	326	11 24 922 2	33	1.24
11940182	386	11 94 017 6	3	1	226016702	326	11 24 922 2	34	1.29
11940198	386	11 94 017 6	4	7	226016702	326	11 24 922 2	35	0.57
11940199	386	11 94 017 6	7	1	226016702	326	11 24 922 2	36	0.85
11940203	386	11 94 017 6	12	7	226016702	326	11 24 922 2	37	1.2
11940205	387	11 94 017 7	2	1	226016702	326	11 24 922 2	39	0.36
11940207	387	11 94 017 7	11	1	226016702	326	11 24 922 2	40	0.35
11940208	388	10 65 027 0	1	1	226016702	514	91 92 528 14	22	0.45
11940876	545	11 94 172 5	11	1	226017802	507	11 23 820 4	102	4
11940876	561	11 94 259 4	11	1	226017802	546	11 24 570 3	13	1.132
11940876	568	11 94 450 2	11	1	226017802	562	11 24 570 9	13	1.132
11940878	554	11 94 087 6	10	1	226017802	569	11 24 571 5	13	1.132
11940910	416	10 35 008 0	124	1	240217402	115	90 77 464	22	6
11941518	80	11 92 885 2	28	1	247000902	204	11 92 923 6	90	4
11941710	183	11 94 151 8	11	1	247000902	210	11 92 958 8	31	1
11941725	544	11 24 570 7	10	1	247001802	687	10 51 973 8	613	2
11942040	471	10 50 179 5	2	1	247009202	12	11 29 618 6	649	6
11942312	532	11 27 536 5	24	4	247009202	83	11 24 773 5	606	2
11942341	532	11 27 536 5	21	2	247009202	444	11 89 300 5	644	1
11942594	560	11 24 571 3	10	1	247009202	509	10 51 826 1	611	2
11942798	65	10 58 163 4	42	1	247009402	14	11 29 618 6	724	10
11944129	176	11 24 113 8	30	4	247009402	73	10 51 969 5	609	1
11944502	567	11 24 571 9	10	1	247009402	83	11 24 773 5	605	4
11946386	507	11 23 820 4	98	3	247009402	341	10 51 969 8	606	1
11946423	428	11 93 934 6	380	1	247009402	358	10 51 968 7	610	1
11946424	428	11 93 934 6	390	1	247009402	381	10 55 216 1	605	2
11946451	428	11 93 934 6	280	1	247009702	10	11 29 618 6	612	13

Item	Sheet	Assembly	Pos.	Quantity	Item	Sheet	Assembly	Pos.	Quantity
247009702	73	10 51 969 5	608	1	247049102	509	10 51 826 1	204	2
247009702	83	11 24 773 5	602	10	247049202	10	11 29 618 6	631	1
247009702	199	11 24 114 4	21	1	247091002	82	11 24 773 5	302	1
247009702	381	10 55 216 1	604	1	247105602	14	11 29 618 6	732	1
247009702	442	11 89 300 5	603	4	247108302	14	11 29 618 6	734	4
247009702	482	11 26 260 6	711	1	247108302	83	11 24 773 5	612	8
247009702	497	11 26 261 1	711	1	247108302	199	11 24 114 4	24	4
247009702	509	10 51 826 1	610	3	247108302	444	11 89 300 5	641	1
247009702	629	10 51 726 2	604	1	247112702	10	11 29 618 6	624	9
247009702	697	11 89 408 3	701	1	247112702	73	10 51 969 5	202	2
247009902	12	11 29 618 6	675	5	247112702	83	11 24 773 5	686	4
247009902	83	11 24 773 5	610	7	247112702	381	10 55 216 1	603	2
247009902	442	11 89 300 5	601	6	247112702	509	10 51 826 1	201	2
247010102	10	11 29 618 6	611	4	247112702	680	10 51 971 2	706	2
247010102	83	11 24 773 5	604	4	247116402	10	11 29 618 6	605	3
247010102	509	10 51 826 1	609	2	247116402	509	10 51 826 1	607	3
247011602	10	11 29 618 6	610	1	247117302	14	11 29 618 6	752	15
247011602	83	11 24 773 5	307	1	247117302	73	10 51 969 5	616	1
247011602	199	11 24 114 4	22	1	247117302	83	11 24 773 5	628	1
247011602	442	11 89 300 5	613	2	247117302	381	10 55 216 1	600	4
247011602	509	10 51 826 1	603	1	247117302	680	10 51 971 2	707	2
247020902	12	11 29 618 6	654	3	247117302	687	10 51 973 8	203	1
247020902	83	11 24 773 5	316	1	247117302	697	11 89 408 3	705	2
247027002	14	11 29 618 6	716	1	247117702	14	11 29 618 6	704	9
247027202	10	11 29 618 6	609	1	247117702	83	11 24 773 5	308	1
247027302	14	11 29 618 6	718	2	247117702	183	11 94 151 8	35	1
247027302	204	11 92 923 6	84	2	247117702	204	11 92 923 6	88	1
247027302	442	11 89 300 5	602	4	247117702	381	10 55 216 1	204	4
247027402	509	10 51 826 1	606	1	247117702	444	11 89 300 5	632	1
247040302	12	11 29 618 6	680	1	247121102	14	11 29 618 6	727	1
247040302	341	10 51 969 8	605	1	247126202	14	11 29 618 6	735	5
247040902	14	11 29 618 6	739	2	247126202	83	11 24 773 5	641	5
247040902	204	11 92 923 6	85	2	247126202	204	11 92 923 6	83	3
247041102	10	11 29 618 6	203	1	247126202	210	11 92 958 8	37	1
247041102	83	11 24 773 5	608	3	247126202	442	11 89 300 5	610	3
247041102	210	11 92 958 8	39	1	247128402	10	11 29 618 6	626	8
247041102	442	11 89 300 5	608	4	247128402	83	11 24 773 5	627	6
247041402	83	11 24 773 5	607	3	247128402	381	10 55 216 1	608	4
247041502	14	11 29 618 6	749	2	247128402	680	10 51 971 2	708	2
247041502	204	11 92 923 6	82	2	247128502	14	11 29 618 6	731	2
247042402	12	11 29 618 6	681	4	247128502	341	10 51 969 8	604	1
247042402	442	11 89 300 5	611	6	247128502	442	11 89 300 5	605	4
247042402	687	10 51 973 8	605	1	247128502	629	10 51 726 2	614	1
247042402	721	10 51 728 1	607	1	247128602	12	11 29 618 6	653	4
247042502	14	11 29 618 6	746	2	247128602	83	11 24 773 5	625	1
247042702	10	11 29 618 6	607	1	247128602	204	11 92 923 6	87	1
247042702	509	10 51 826 1	605	2	247128602	358	10 51 968 7	605	1
247043102	10	11 29 618 6	606	2	247128602	381	10 55 216 1	602	1
247043102	83	11 24 773 5	614	2	247128602	444	11 89 300 5	648	2
247043102	199	11 24 114 4	23	2	247138602	14	11 29 618 6	729	3
247043202	73	10 51 969 5	615	2	247138602	84	11 24 773 5	692	1
247043502	83	11 24 773 5	613	2	247138602	204	11 92 923 6	86	2
247044302	83	11 24 773 5	652	2	247138602	442	11 89 300 5	609	4
247048802	10	11 29 618 6	625	6	247142002	83	11 24 773 5	653	2
247048802	509	10 51 826 1	215	2	247232702	12	11 29 618 6	660	2
247049002	10	11 29 618 6	618	1	247242302	10	11 29 618 6	629	11
247049002	204	11 92 923 6	92	2	247242302	83	11 24 773 5	317	1
247049002	442	11 89 300 5	22	1	247242302	444	11 89 300 5	638	2
247049102	10	11 29 618 6	627	2	247261802	14	11 29 618 6	708	3
247049102	83	11 24 773 5	617	1	247261802	83	11 24 773 5	621	1

Item	Sheet	Assembly	Pos.	Quantity	Item	Sheet	Assembly	Pos.	Quantity
260318602	512	11 90 151 1	41	10.5	4001622	579	11 28 648 4	65	4
260493202	741	10 52 155 9	57	1	4001664	217	11 38 961 7	3	11
260493402	575	10 57 559 9	29	1	400180214	398	11 27 970 6	35	8
260493702	512	11 90 151 1	46	1	400180214	407	10 53 171 8	30	4
260514602	407	10 53 171 8	25	7	400180314	398	11 27 970 6	36	15
260514602	658	11 21 530 2	38	1	4001967	398	11 27 970 6	24	2
262103101	543	10 35 063 3	16	0.16	4001967	700	11 89 568 6	31	24
262105314	314	11 24 409 1	14	9	400208003	392	90 01 376 2	41	3
262105314	316	10 57 883 5	2	1.1	4002195	177	10 51 948 1	61	4
262107814	67	10 56 067 3	24	6	4002195	687	10 51 973 8	301	2
289003214	615	11 28 908 0	10	1	4002229	144	10 13 803 2	44	1
289007714	606	11 30 126 6	1	2	4002401	433	11 26 095 6	5	4
289012914	616	11 29 451 7	10	1	4002442	467	96 93 178 01	82	12
289031614	482	11 26 260 6	13	1	4002442	687	10 51 973 8	303	2
289031614	497	11 26 261 1	13	1	4002551	369	99 29 389 14	6	4
289035314	542	99 29 588 14	10	1	4002551	370	99 29 392 14	6	4
289057714	505	11 23 820 4	55	1	4002655	330	11 24 483 7	92	10
289057714	554	11 94 087 6	11	1	4002871	398	11 27 970 6	34	24
289058614	67	10 56 067 3	5	0.016	402600114	310	11 24 409 0	62	1
289058614	67	10 56 067 3	8	0.08	402600314	662	99 10 116 14	34	2
289058614	67	10 56 067 3	9	0.023	402600514	337	99 29 803 14	10	6
289059414	439	11 89 364 8	13	1	4038502	226	10 15 529 8	13	3
289064214	357	10 51 968 6	24	4	403900101	636	54 02 703 14	80	1
319719401	346	93 88 500 01	30	5	403900101	700	11 89 568 6	43	4
385025414	614	95 70 956 14	10	2	403900501	141	10 14 131 6	22	1
385031714	627	10 51 743 9	15	2	403900714	48	10 56 070 1	17	4
385037314	579	11 28 648 4	14	2	403900714	53	10 56 073 3	16	1
385043714	620	99 23 415 14	18	4	403900714	179	10 57 532 2	33	2
385072014	65	10 58 163 4	65	2	403900714	183	11 94 151 8	41	1
385094414	407	10 53 171 8	5	1	404101608	635	54 02 702 14	30	2
385123814	366	99 29 258 14	13	2	404203514	525	10 51 959 1	13	4
385137114	718	10 58 064 7	13	1	404206414	398	11 27 970 6	31	12
385151114	366	99 29 258 14	6	1	404206614	723	11 22 037 2	8	4
385204714	316	10 57 883 5	5	2	404208514	86	11 24 682 0	430	58
385204714	318	10 57 897 6	5	2	404208514	384	51 22 991 14	7	6
385204714	320	10 57 940 0	8	2	404208814	346	93 88 500 01	19	6
385204714	321	10 56 623 7	8	2	404208814	635	54 02 702 14	21	8
385204714	322	10 56 580 8	5	2	404214114	68	11 31 093 2	10	4
385255314	700	11 89 568 6	15	4	404250914	293	10 12 797 9	3	1
385255414	700	11 89 568 6	16	4	404250914	636	54 02 703 14	51	3
385255514	700	11 89 568 6	17	4	404251014	183	11 94 151 8	60	3
388283108	589	99 30 800 14	18	1	404251414	183	11 94 151 8	61	6
388283208	589	99 30 800 14	19	1	4043003	357	10 51 968 6	30	8
388291208	463	11 89 365 0	16	72	4043014	687	10 51 973 8	300	2
388291208	474	11 89 365 1	16	72	404302914	341	10 51 969 8	6	1
4000383	479	99 26 718 14	19	4	404302914	358	10 51 968 7	7	4
4000648	183	11 94 151 8	70	9	4043082	283	10 14 013 6	14	2
4000784	392	90 01 376 2	26	8	4043124	82	11 24 773 5	60	4
4000870	392	90 01 376 2	21	5	4043124	467	96 93 178 01	17	12
4000898	86	11 24 682 0	480	9	4043127	653	11 22 870 8	18	2
400093303	467	96 93 178 01	39	3	4043133	82	11 24 773 5	53	4
4001205	371	99 29 388 14	3	7	404313401	8	11 29 618 6	58	4
4001246	8	11 29 618 6	55	16	4043163	103	10 11 834 9	21	8
4001246	82	11 24 773 5	52	4	404333614	82	11 24 773 5	61	12
4001246	381	10 55 216 1	6	16	404403114	398	11 27 970 6	21	1
4001246	525	10 51 959 1	670	4	404601014	625	11 21 552 4	15	3
4001246	687	10 51 973 8	616	4	406144514	337	99 29 803 14	20	6
4001622	181	11 24 113 9	61	12	406154014	463	11 89 365 0	30	45
4001622	249	10 15 085 7	2	4	406154014	474	11 89 365 1	30	45
4001622	250	10 15 074 3	2	4	4062002	10	11 29 618 6	64	16

Item	Sheet	Assembly	Pos.	Quantity	Item	Sheet	Assembly	Pos.	Quantity
4062009	180	10 58 017 0	61	4	406511214	205	11 92 923 6	108	6
406501314	59	11 26 557 2	12	2	406511214	651	10 52 547 1	25	4
406501314	65	10 58 163 4	28	2	406511414	176	11 24 113 8	67	8
406501314	176	11 24 113 8	66	2	406511414	177	10 51 948 1	60	6
406501314	183	11 94 151 8	63	8	406511414	357	10 51 968 6	22	3
406501314	189	11 24 114 1	61	6	406511414	505	11 23 820 4	49	2
406501314	205	11 92 923 6	104	4	406511614	45	10 51 961 6	18	2
406501314	330	11 24 483 7	96	10	406511614	176	11 24 113 8	53	2
406501314	479	99 26 718 14	20	4	406511614	183	11 94 151 8	66	8
406501314	505	11 23 820 4	24	10	406511614	198	11 24 114 3	60	14
406501314	616	11 29 451 7	11	2	406511614	210	11 92 958 8	63	6
406501314	627	10 51 743 9	21	6	406511614	306	11 24 114 6	60	4
406501314	662	99 10 116 14	32	2	406511614	308	11 24 409 0	31	28
406501314	667	10 55 601 0	18	2	406511614	330	11 24 483 7	80	46
406501414	176	11 24 113 8	65	8	406511614	336	10 52 656 0	13	16
406501414	189	11 24 114 1	60	4	406511614	507	11 23 820 4	93	2
406501414	192	11 28 574 7	60	2	406511614	651	10 52 547 1	26	4
406501414	194	11 92 922 0	60	4	406511614	653	11 22 870 8	20	4
406501414	210	11 92 958 8	61	4	406511914	48	10 56 070 1	60	12
406501414	308	11 24 409 0	35	11	406511914	179	10 57 532 2	60	6
406501414	330	11 24 483 7	95	2	406511914	181	11 24 113 9	60	1
406501414	339	10 51 969 7	15	2	406511914	183	11 94 151 8	65	16
406501414	398	11 27 970 6	26	19	406511914	189	11 24 114 1	63	8
406501414	476	11 31 390 8	11	6	406511914	205	11 92 923 6	106	2
406501414	507	11 23 820 4	69	9	406511914	306	11 24 114 6	61	40
406501414	548	11 28 390 8	25	1	406511914	308	11 24 409 0	23	35
406501414	563	11 28 583 8	25	1	406511914	330	11 24 483 7	79	24
406501414	570	11 28 626 1	25	1	406511914	353	96 96 543 01	26	2
406501414	627	10 51 743 9	22	4	406511914	505	11 23 820 4	30	2
406501414	642	10 55 372 1	45	40	406511914	627	10 51 743 9	19	12
406501414	718	10 58 064 7	33	2	406511914	732	11 26 771 6	11	3
406501514	63	92 65 477 14	11	2	406512014	45	10 51 961 6	19	2
406501514	65	10 58 163 4	66	6	406512014	310	11 24 409 0	54	31
406501514	183	11 94 151 8	59	6	406512014	324	10 54 591 0	19	8
406501514	378	10 51 968 2	18	6	406512014	330	11 24 483 7	83	1
406501514	398	11 27 970 6	39	14	406512014	671	11 30 694 4	14	3
406501514	436	11 30 962 5	3	2	406512114	542	99 29 588 14	14	2
406501514	700	11 89 568 6	32	4	406512614	189	11 24 114 1	66	1
406501514	719	10 57 848 6	6	1	406512614	555	11 94 087 8	16	4
406501614	580	11 28 610 5	10	4	406517314	48	10 56 070 1	62	12
406501714	204	11 92 923 6	100	2	406517314	330	11 24 483 7	73	3
406501714	398	11 27 970 6	22	5	406517314	353	96 96 543 01	51	4
406501714	435	10 53 756 0	4	8	406517314	366	99 29 258 14	2	8
406501714	718	10 58 064 7	18	3	406517314	438	99 18 041 14	15	2
406501814	67	10 56 067 3	22	2	406517314	463	11 89 365 0	18	152
406501814	507	11 23 820 4	85	8	406517314	474	11 89 365 1	18	152
406508014	507	11 23 820 4	84	3	406517314	476	11 31 390 8	22	16
406508014	642	10 55 372 1	46	2	406517314	493	11 22 050 0	16	4
406509314	183	11 94 151 8	67	6	406517314	499	11 22 050 1	16	4
406509314	189	11 24 114 1	64	2	406517314	505	11 23 820 4	16	4
406509314	210	11 92 958 8	64	1	406517314	659	11 27 109 7	20	2
406509314	306	11 24 114 6	63	2	406517614	189	11 24 114 1	62	4
406509314	324	10 54 591 0	17	12	406517614	330	11 24 483 7	97	2
406509314	330	11 24 483 7	81	23	406517614	507	11 23 820 4	99	8
406509314	507	11 23 820 4	87	16	406517614	669	10 55 280 7	14	4
406509314	550	11 28 397 7	14	2	406517614	737	10 52 155 4	13	2
406509314	551	11 28 397 8	14	2	406517714	65	10 58 163 4	21	2
406509314	552	11 28 399 5	14	4	406517714	189	11 24 114 1	65	2
406509314	553	11 28 399 7	14	4	406517714	337	99 29 803 14	23	12
406509314	733	10 52 293 0	12	4	406517714	613	11 28 744 5	41	4

Item	Sheet	Assembly	Pos.	Quantity	Item	Sheet	Assembly	Pos.	Quantity
406517914	176	11 24 113 8	56	4	406532614	733	10 52 293 0	4	4
406517914	463	11 89 365 0	24	7	406532914	330	11 24 483 7	98	1
406517914	474	11 89 365 1	24	7	406532914	519	10 58 193 7	18	2
406517914	535	11 24 444 4	14	8	406532914	579	11 28 648 4	27	4
406517914	588	99 23 398 14	28	8	406532914	673	11 30 567 0	61	1
406518414	205	11 92 923 6	109	1	406550714	326	11 24 922 2	27	84
406518414	505	11 23 820 4	18	4	406551114	330	11 24 483 7	69	2
406518414	617	10 55 753 7	11	2	4066093	180	10 58 017 0	64	8
406518414	618	10 55 757 6	11	2	4066098	10	11 29 618 6	67	48
406518514	198	11 24 114 3	63	3	4066098	82	11 24 773 5	59	12
406518514	204	11 92 923 6	101	10	4066098	180	10 58 017 0	63	12
406518614	308	11 24 409 0	24	5	4066122	10	11 29 618 6	65	8
406518614	324	10 54 591 0	21	2	4066122	180	10 58 017 0	65	6
406518614	662	99 10 116 14	47	8	4066124	82	11 24 773 5	56	12
406518714	45	10 51 961 6	17	8	4068017	53	10 56 073 3	60	6
406518714	65	10 58 163 4	56	4	407003014	210	11 92 958 8	66	3
406518714	67	10 56 067 3	16	4	407041214	434	97 07 857 03	3	3
406518714	194	11 92 922 0	61	2	407071114	436	11 30 962 5	4	4
406518714	306	11 24 114 6	62	10	407203008	179	10 57 532 2	65	4
406518714	398	11 27 970 6	25	14	4072083	48	10 56 070 1	61	32
406518714	505	11 23 820 4	17	2	407350208	238	10 13 475 1	4	1
406518714	538	99 14 137 14	3	3	407350208	239	10 12 653 5	6	1
406518814	176	11 24 113 8	54	4	407350208	241	10 13 469 6	5	1
406518814	205	11 92 923 6	103	4	407350208	261	10 14 588 5	22	1
406518814	330	11 24 483 7	94	8	407350208	285	10 14 622 4	16	8
406518814	532	11 27 536 5	23	4	407350208	296	10 15 028 8	54	5
406518814	718	10 58 064 7	20	6	4079160	261	10 14 588 5	5	7
406518814	733	10 52 293 0	14	3	4079160	285	10 14 622 4	8	1
406519214	198	11 24 114 3	62	4	4079160	302	11 41 475 7	7	1
406527314	176	11 24 113 8	64	2	4079240	261	10 14 588 5	17	1
406527314	579	11 28 648 4	29	8	408301208	414	11 22 369 1	7	8
406527314	580	11 28 610 5	11	4	408600708	330	11 24 483 7	99	2
406527414	45	10 51 961 6	16	8	408600708	414	11 22 369 1	6	8
406527414	69	10 56 069 4	3	8	408600708	723	11 22 037 2	6	1
406527414	176	11 24 113 8	57	16	408600808	330	11 24 483 7	91	2
406527614	65	10 58 163 4	35	4	408601008	519	10 58 193 7	16	4
406527614	606	11 30 126 6	2	4	408601008	645	11 24 575 5	13	8
406527714	659	11 27 109 7	13	2	408606214	398	11 27 970 6	37	4
406527814	210	11 92 958 8	65	4	408606214	719	10 57 848 6	5	2
406527814	310	11 24 409 0	45	4	408606314	640	10 55 372 1	33	24
406527814	330	11 24 483 7	82	8	408606414	330	11 24 483 7	90	14
406527814	538	99 14 137 14	4	3	408606414	673	11 30 567 0	60	1
406527814	647	10 52 547 1	20	4	409710601	467	96 93 178 01	67	3
406527814	667	10 55 601 0	15	4	4097529	392	90 01 376 2	79	1
406527914	56	10 55 268 1	3	1	409878214	179	10 57 532 2	62	12
406527914	183	11 94 151 8	68	4	409878414	179	10 57 532 2	64	4
406527914	543	10 35 063 3	14	2	411200108	673	11 30 567 0	81	1
406527914	642	10 55 372 1	38	16	411514614	53	10 56 073 3	80	6
406528014	435	10 53 756 0	5	2	411514614	176	11 24 113 8	82	8
406532614	330	11 24 483 7	68	1	411514614	198	11 24 114 3	81	8
406532614	493	11 22 050 0	13	3	411514614	205	11 92 923 6	133	6
406532614	499	11 22 050 1	13	3	411514614	324	10 54 591 0	20	4
406532614	505	11 23 820 4	60	24	411514614	398	11 27 970 6	32	1
406532614	519	10 58 193 7	13	18	411514614	617	10 55 753 7	19	1
406532614	535	11 24 444 4	30	8	411514614	618	10 55 757 6	19	1
406532614	627	10 51 743 9	24	2	411514614	733	10 52 293 0	5	4
406532614	669	10 55 280 7	22	2	411515014	176	11 24 113 8	83	4
406532614	676	10 55 514 8	20	2	411515014	310	11 24 409 0	57	7
406532614	678	11 26 901 8	17	2	411515014	324	10 54 591 0	15	26
406532614	718	10 58 064 7	21	3	411515014	398	11 27 970 6	38	4

Item	Sheet	Assembly	Pos.	Quantity	Item	Sheet	Assembly	Pos.	Quantity
411515014	617	10 55 753 7	20	2	420001014	194	11 92 922 0	70	4
411515014	618	10 55 757 6	20	2	420001014	199	11 24 114 4	70	4
411515014	642	10 55 372 1	61	2	420001014	205	11 92 923 6	122	26
411515014	645	11 24 575 5	15	4	420001014	210	11 92 958 8	72	6
411515014	737	10 52 155 4	15	2	420001014	308	11 24 409 0	34	21
411516914	176	11 24 113 8	85	8	420001014	324	10 54 591 0	16	12
411516914	476	11 31 390 8	25	8	420001014	330	11 24 483 7	87	26
411516914	617	10 55 753 7	15	2	420001014	339	10 51 969 7	14	2
411516914	618	10 55 757 6	15	2	420001014	378	10 51 968 2	17	6
411516914	659	11 27 109 7	21	2	420001014	398	11 27 970 6	20	18
411517114	398	11 27 970 6	56	2	420001014	436	11 30 962 5	5	2
411517114	435	10 53 756 0	6	4	420001014	476	11 31 390 8	12	6
411517114	476	11 31 390 8	32	8	420001014	505	11 23 820 4	44	40
411517114	623	11 22 322 6	4	4	420001014	520	99 34 198 14	14	8
411517114	642	10 55 372 1	47	10	420001014	532	11 27 536 5	22	4
411517114	678	11 26 901 8	23	2	420001014	589	99 30 800 14	13	4
411551114	205	11 92 923 6	130	2	420001014	642	10 55 372 1	48	82
411551114	700	11 89 568 6	50	9	420001014	644	11 24 147 8	13	12
411551214	434	97 07 857 03	2	9	420001014	667	10 55 601 0	21	2
411880614	198	11 24 114 3	83	4	420001014	669	10 55 280 7	15	4
411901114	35	10 53 048 9	8	1	420001014	673	11 30 567 0	70	1
411901114	177	10 51 948 1	80	4	420001014	700	11 89 568 6	41	4
412705014	437	10 51 969 6	12	80	420001014	718	10 58 064 7	28	6
413003208	723	11 22 037 2	9	2	420001014	719	10 57 848 6	7	1
413003308	306	11 24 114 6	80	32	420001014	723	11 22 037 2	7	4
413003308	326	11 24 922 2	38	18	420001014	733	10 52 293 0	15	3
413003508	306	11 24 114 6	82	10	420001014	737	10 52 155 4	14	2
413003508	310	11 24 409 0	58	4	420001114	45	10 51 961 6	15	8
413004408	306	11 24 114 6	81	8	420001114	48	10 56 070 1	70	44
413004408	324	10 54 591 0	13	24	420001114	53	10 56 073 3	70	6
420000314	434	97 07 857 03	4	3	420001114	67	10 56 067 3	18	4
420000414	39	10 56 645 8	60	4	420001114	69	10 56 069 4	4	8
420000414	205	11 92 923 6	121	30	420001114	176	11 24 113 8	70	42
420000414	210	11 92 958 8	70	4	420001114	177	10 51 948 1	70	4
420000414	310	11 24 409 0	44	10	420001114	179	10 57 532 2	70	6
420000414	398	11 27 970 6	23	14	420001114	184	11 94 151 8	73	28
420000414	435	10 53 756 0	7	8	420001114	205	11 92 923 6	123	4
420000414	463	11 89 365 0	50	6	420001114	210	11 92 958 8	73	4
420000414	474	11 89 365 1	50	6	420001114	306	11 24 114 6	71	11
420000414	476	11 31 390 8	30	24	420001114	310	11 24 409 0	55	40
420000414	493	11 22 050 0	12	3	420001114	324	10 54 591 0	12	36
420000414	499	11 22 050 1	12	3	420001114	330	11 24 483 7	78	53
420000414	507	11 23 820 4	91	52	420001114	336	10 52 656 0	14	16
420000414	519	10 58 193 7	12	36	420001114	398	11 27 970 6	27	6
420000414	535	11 24 444 4	29	18	420001114	507	11 23 820 4	67	36
420000414	550	11 28 397 7	17	1	420001114	542	99 29 588 14	13	2
420000414	551	11 28 397 8	17	1	420001114	543	10 35 063 3	13	4
420000414	552	11 28 399 5	17	1	420001114	550	11 28 397 7	16	4
420000414	553	11 28 399 7	17	1	420001114	551	11 28 397 8	16	4
420000414	623	11 22 322 6	3	10	420001114	552	11 28 399 5	16	8
420000414	625	11 21 552 4	13	2	420001114	553	11 28 399 7	16	8
420000414	627	10 51 743 9	26	2	420001114	579	11 28 648 4	68	8
420000414	642	10 55 372 1	34	34	420001114	582	10 59 863 3	22	1
420000414	649	10 52 547 1	23	4	420001114	583	11 28 357 6	4	8
420000414	669	10 55 280 7	21	4	420001114	589	99 30 800 14	10	2
420000414	676	10 55 514 8	19	4	420001114	642	10 55 372 1	37	32
420001014	59	11 26 557 2	14	4	420001114	649	10 52 547 1	21	8
420001014	65	10 58 163 4	67	6	420001114	653	11 22 870 8	21	4
420001014	176	11 24 113 8	75	16	420001114	662	99 10 116 14	16	6
420001014	183	11 94 151 8	71	6	420001114	732	11 26 771 6	12	6

Item	Sheet	Assembly	Pos.	Quantity	Item	Sheet	Assembly	Pos.	Quantity
420002601	662	99 10 116 14	29	4	421300214	184	11 94 151 8	74	24
420003714	535	11 24 444 4	36	4	421300214	189	11 24 114 1	71	22
420003714	555	11 94 087 8	17	2	421300214	194	11 92 922 0	72	6
420003714	588	99 23 398 14	27	10	421300214	198	11 24 114 3	71	28
420005214	59	11 26 557 2	13	2	421300214	205	11 92 923 6	124	12
420005214	68	11 31 093 2	11	8	421300214	306	11 24 114 6	72	2
420005214	69	10 56 069 4	5	40	421300414	46	10 56 070 0	70	3
420005214	205	11 92 923 6	120	2	421300414	52	10 56 073 2	70	3
420005214	505	11 23 820 4	21	24	421300514	176	11 24 113 8	77	4
420005214	579	11 28 648 4	33	8	421300514	183	11 94 151 8	72	20
420005214	580	11 28 610 5	14	16	421300514	189	11 24 114 1	70	28
420005214	700	11 89 568 6	42	9	421300514	192	11 28 574 7	70	4
420005214	737	10 52 155 4	17	2	421300514	194	11 92 922 0	71	4
420005414	653	11 22 870 8	19	2	421500614	463	11 89 365 0	7	30
420053101	642	10 55 372 1	50	20	421500614	474	11 89 365 1	7	30
420250114	733	10 52 293 0	6	4	421600901	463	11 89 365 0	53	54
420600408	67	10 56 067 3	13	6	421600901	474	11 89 365 1	53	54
421101714	583	11 28 357 6	5	2	421700314	82	11 24 773 5	36	4
421101714	662	99 10 116 14	36	2	421700508	330	11 24 483 7	88	48
421101814	471	10 50 179 5	3	2	422010414	82	11 24 773 5	38	20
421102214	65	10 58 163 4	24	8	422014001	638	54 02 705 14	23	3
421102214	70	99 23 451 14	3	4	4229913	353	96 96 543 01	27	2
421102214	579	11 28 648 4	36	2	4229913	392	90 01 376 2	75	12
421102414	535	11 24 444 4	20	10	4239009	103	10 11 834 9	24	8
421102814	613	11 28 744 5	35	4	423911601	346	93 88 500 01	32	10
421102914	662	99 10 116 14	46	2	423911601	353	96 96 543 01	8	8
421102914	663	99 31 838 14	3	12	423912001	467	96 93 178 01	69	12
421102914	665	97 05 997 03	6	14	425221314	35	10 53 048 9	9	1
421103014	65	10 58 163 4	14	3	425221314	339	10 51 969 7	16	4
421103014	176	11 24 113 8	78	4	4280008	105	10 11 835 0	31	4
421103014	339	10 51 969 7	18	8	428001014	636	54 02 703 14	45	1
421103014	620	99 23 415 14	36	11	428001414	537	91 90 584 14	6	1
421103014	621	97 08 757 03	3	2	4280020	515	61 61 541 14	3	3
421103214	71	10 51 969 4	19	2	428002914	638	54 02 705 14	13	1
421103214	579	11 28 648 4	37	4	4280032	136	10 13 802 7	41	2
421103214	613	11 28 744 5	34	2	4280034	123	98 84 402	41	1
421103314	614	95 70 956 14	16	10	428004514	637	54 02 704 14	30	1
421103314	620	99 23 415 14	26	6	428011301	237	11 44 800 5	7	2
421103314	685	11 23 619 7	20	1	428011901	467	96 93 178 01	19	5
421103514	507	11 23 820 4	62	2	428100914	636	54 02 703 14	46	1
421103514	557	10 53 216 2	13	4	4281013	636	54 02 703 14	4	1
421103514	565	10 53 216 3	13	4	4281016	637	54 02 704 14	31	1
421103514	572	10 53 216 4	13	4	4281017	136	10 13 802 7	40	1
421103514	579	11 28 648 4	38	16	4281017	144	10 13 803 2	40	1
421103514	620	99 23 415 14	25	8	4281037	638	54 02 705 14	14	1
421103514	662	99 10 116 14	42	2	428104201	470	94 44 065 03	7	1
421103514	679	10 51 971 3	24	12	428107101	467	96 93 178 01	76	1
421103614	337	99 29 803 14	18	6	428107714	638	54 02 705 14	21	1
421103614	556	10 54 054 8	13	4	429612001	467	96 93 178 01	57	1
421103614	564	10 54 055 1	13	4	431500401	392	90 01 376 2	92	2
421103614	571	10 54 055 5	13	4	431500401	467	96 93 178 01	96	2
421103614	586	10 54 056 7	13	6	432003714	507	11 23 820 4	101	2
421103714	539	99 23 394 14	14	4	432008001	467	96 93 178 01	78	1
421103714	586	10 54 056 7	16	6	432016214	65	10 58 163 4	40	1
421103814	517	11 28 726 4	11	2	432016214	613	11 28 744 5	30	1
421103814	620	99 23 415 14	24	8	433006314	471	10 50 179 5	4	2
421103814	679	10 51 971 3	20	2	433006314	583	11 28 357 6	7	2
421103914	620	99 23 415 14	35	10	433006614	70	99 23 451 14	4	4
421300214	48	10 56 070 1	72	4	433006714	339	10 51 969 7	12	8
421300214	177	10 51 948 1	71	4	433007508	65	10 58 163 4	31	4

Item	Sheet	Assembly	Pos.	Quantity	Item	Sheet	Assembly	Pos.	Quantity
433007708	65	10 58 163 4	25	4	433206014	589	99 30 800 14	14	1
433007914	613	11 28 744 5	33	2	433206014	617	10 55 753 7	21	1
433007914	663	99 31 838 14	7	4	433206014	618	10 55 757 6	21	1
433008108	535	11 24 444 4	26	4	433206014	642	10 55 372 1	51	8
433008108	588	99 23 398 14	33	2	433206214	505	11 23 820 4	33	2
433008108	613	11 28 744 5	32	1	433206214	642	10 55 372 1	52	10
433008214	71	10 51 969 4	16	4	433206314	337	99 29 803 14	21	6
433008814	579	11 28 648 4	48	2	433206314	662	99 10 116 14	31	2
433009014	176	11 24 113 8	31	4	450052114	65	10 58 163 4	30	2
433009014	662	99 10 116 14	30	2	450052114	70	99 23 451 14	2	2
433009114	65	10 58 163 4	15	2	451436614	65	10 58 163 4	13	1
433009114	579	11 28 648 4	49	2	453050914	663	99 31 838 14	5	12
433009414	620	99 23 415 14	28	3	453050914	665	97 05 997 03	5	14
433009514	539	99 23 394 14	15	6	460014603	176	11 24 113 8	74	2
433009514	556	10 54 054 8	14	2	460014603	463	11 89 365 0	9	45
433009514	564	10 54 055 1	14	2	460014603	474	11 89 365 1	9	45
433009514	571	10 54 055 5	14	2	4600157	372	99 29 386 14	11	16
433009514	586	10 54 056 7	14	6	4600157	373	99 29 434 14	11	16
433009714	679	10 51 971 3	33	4	4600170	370	99 29 392 14	7	8
433010314	71	10 51 969 4	20	2	4600170	372	99 29 386 14	20	12
433010314	505	11 23 820 4	48	2	4600170	373	99 29 434 14	20	12
433010314	579	11 28 648 4	50	2	460022203	378	10 51 968 2	11	48
433010314	614	95 70 956 14	18	8	460022703	82	11 24 773 5	37	14
433010314	679	10 51 971 3	25	4	460022703	330	11 24 483 7	89	34
433010314	685	11 23 619 7	21	1	460022703	369	99 29 389 14	5	4
433010514	557	10 53 216 2	14	2	460022703	370	99 29 392 14	5	4
433010514	565	10 53 216 3	14	2	460022703	372	99 29 386 14	14	16
433010514	572	10 53 216 4	14	2	460022703	373	99 29 434 14	14	16
433010514	620	99 23 415 14	29	4	460022703	673	11 30 567 0	71	1
433010914	620	99 23 415 14	30	2	460023503	8	11 29 618 6	60	8
433011114	679	10 51 971 3	21	2	460024203	357	10 51 968 6	16	2
433014214	535	11 24 444 4	21	2	460024203	370	99 29 392 14	8	8
433101208	579	11 28 648 4	53	2	460024203	372	99 29 386 14	15	6
433101208	588	99 23 398 14	34	8	460024203	373	99 29 434 14	15	6
433101208	621	97 08 757 03	4	2	4600257	371	99 29 388 14	4	7
433101208	663	99 31 838 14	6	8	4600320	376	99 04 645 14	64	1
433101208	665	97 05 997 03	7	14	4600366	10	11 29 618 6	61	36
433101208	667	10 55 601 0	22	4	4600366	341	10 51 969 8	640	8
433101208	676	10 55 514 8	13	4	4600366	381	10 55 216 1	7	8
433101208	706	11 89 568 8	20	4	4600385	180	10 58 017 0	62	8
433102508	505	11 23 820 4	56	2	4600385	236	10 14 843 8	5	2
433102508	555	11 94 087 8	18	2	4600385	290	10 11 557 7	7	15
433102508	613	11 28 744 5	27	2	4600505	8	11 29 618 6	57	8
433102508	679	10 51 971 3	29	8	4600513	150	10 13 000 5	20	4
433105008	337	99 29 803 14	19	6	4600513	151	10 13 235 7	20	4
433105008	505	11 23 820 4	13	2	4600513	152	10 13 452 1	20	4
433105008	517	11 28 726 4	12	2	4600513	153	10 13 806 8	20	4
433105008	539	99 23 394 14	21	2	4600552	8	11 29 618 6	59	28
433105008	556	10 54 054 8	15	2	4600706	339	10 51 969 7	17	4
433105008	564	10 54 055 1	15	2	4601426	286	10 14 584 5	5	2
433105008	571	10 54 055 5	15	2	4630001	392	90 01 376 2	56	3
433105008	579	11 28 648 4	54	2	4630200	48	10 56 070 1	63	4
433105008	586	10 54 056 7	15	2	4630200	381	10 55 216 1	8	8
433105008	614	95 70 956 14	17	2	4630200	467	96 93 178 01	11	15
433105008	620	99 23 415 14	31	10	4635283	177	10 51 948 1	73	12
433105008	662	99 10 116 14	44	2	4635283	198	11 24 114 3	72	8
433105008	685	11 23 619 7	11	1	4635283	205	11 92 923 6	125	2
433105414	336	10 52 656 0	12	4	470002414	502	91 90 239 14	700	1
433105414	627	10 51 743 9	12	2	470400701	352	93 36 755 01	11	1
433105414	655	11 21 546 2	11	1	470400701	352	93 36 755 01	26	1

Item	Sheet	Assembly	Pos.	Quantity	Item	Sheet	Assembly	Pos.	Quantity
470701414	84	11 24 773 5	691	1	471032808	502	91 90 239 14	701	1
470702001	352	93 36 755 01	6	1	471032808	721	10 51 728 1	600	1
470905214	183	11 94 151 8	36	1	471032908	10	11 29 618 6	616	1
470905714	183	11 94 151 8	37	3	471033014	83	11 24 773 5	629	1
471004514	10	11 29 618 6	602	11	471033014	341	10 51 969 8	601	1
471004514	73	10 51 969 5	605	1	471033014	444	11 89 300 5	651	2
471004514	83	11 24 773 5	620	1	471033014	629	10 51 726 2	602	2
471004514	444	11 89 300 5	617	6	471033114	14	11 29 618 6	707	1
471004514	680	10 51 971 2	703	2	471033214	14	11 29 618 6	722	2
471004514	687	10 51 973 8	611	1	471033214	444	11 89 300 5	636	1
471004514	721	10 51 728 1	605	2	471033214	509	10 51 826 1	608	3
471004614	83	11 24 773 5	619	2	471033214	525	10 51 959 1	605	3
471004614	341	10 51 969 8	603	2	471033214	629	10 51 726 2	603	2
471004614	358	10 51 968 7	607	2	471033214	680	10 51 971 2	709	2
471004614	444	11 89 300 5	618	2	471033214	697	11 89 408 3	704	1
471004614	482	11 26 260 6	708	1	471033314	358	10 51 968 7	606	1
471004614	497	11 26 261 1	708	1	471033414	14	11 29 618 6	725	1
471007014	14	11 29 618 6	706	4	471033614	14	11 29 618 6	738	1
471007014	381	10 55 216 1	619	1	471034414	14	11 29 618 6	726	2
471007914	83	11 24 773 5	315	1	471034414	381	10 55 216 1	612	2
471008014	83	11 24 773 5	677	3	471034414	509	10 51 826 1	604	2
471008214	10	11 29 618 6	601	3	471034708	12	11 29 618 6	672	4
471008214	83	11 24 773 5	611	8	471034708	83	11 24 773 5	637	1
471008214	442	11 89 300 5	612	8	471034714	199	11 24 114 4	25	2
471008214	482	11 26 260 6	709	1	471034714	341	10 51 969 8	607	1
471008214	497	11 26 261 1	709	1	471036014	444	11 89 300 5	652	2
471016401	86	11 24 682 0	590	2	471039408	358	10 51 968 7	612	1
471030508	10	11 29 618 6	600	3	471039408	381	10 55 216 1	611	2
471030508	83	11 24 773 5	678	1	471039708	381	10 55 216 1	618	2
471030708	14	11 29 618 6	737	1	471039708	629	10 51 726 2	600	1
471030708	482	11 26 260 6	710	1	471039908	83	11 24 773 5	635	3
471030708	497	11 26 261 1	710	1	471039908	210	11 92 958 8	42	1
471031108	83	11 24 773 5	672	1	471039908	444	11 89 300 5	655	2
471031108	210	11 92 958 8	33	2	471100114	10	11 29 618 6	617	3
471031108	444	11 89 300 5	654	1	471100114	525	10 51 959 1	604	2
471031308	83	11 24 773 5	632	2	471100414	10	11 29 618 6	608	2
471031308	210	11 92 958 8	34	1	471100614	444	11 89 300 5	620	2
471031308	444	11 89 300 5	616	2	471100714	14	11 29 618 6	756	1
471031508	83	11 24 773 5	631	3	471100714	525	10 51 959 1	603	1
471031508	204	11 92 923 6	81	2	472001401	352	93 36 755 01	4	1
471031808	83	11 24 773 5	680	2	472531508	14	11 29 618 6	723	1
471032108	687	10 51 973 8	610	2	472531508	525	10 51 959 1	624	2
471032608	10	11 29 618 6	622	1	472531508	687	10 51 973 8	608	3
471032608	73	10 51 969 5	604	2	473201101	352	93 36 755 01	3	1
471032608	442	11 89 300 5	615	6	473201101	352	93 36 755 01	22	1
471032608	525	10 51 959 1	606	2	473210214	525	10 51 959 1	632	1
471032608	703	11 23 524 8	700	8	473210214	687	10 51 973 8	607	3
471032608	709	10 55 459 4	600	1	473210214	697	11 89 408 3	700	1
471032708	12	11 29 618 6	658	4	473231214	525	10 51 959 1	633	1
471032708	73	10 51 969 5	603	2	474001214	14	11 29 618 6	760	1
471032708	442	11 89 300 5	600	24	474002314	10	11 29 618 6	620	4
471032708	525	10 51 959 1	627	2	474002414	14	11 29 618 6	744	2
471032708	680	10 51 971 2	704	2	474002414	442	11 89 300 5	614	4
471032708	697	11 89 408 3	703	8	474032614	10	11 29 618 6	628	3
471032708	721	10 51 728 1	609	1	474032614	509	10 51 826 1	602	4
471032808	10	11 29 618 6	621	27	474032614	525	10 51 959 1	600	8
471032808	83	11 24 773 5	630	3	474032714	12	11 29 618 6	650	2
471032808	341	10 51 969 8	602	3	474032914	10	11 29 618 6	636	2
471032808	358	10 51 968 7	609	3	474033014	14	11 29 618 6	719	4
471032808	444	11 89 300 5	622	2	474033014	444	11 89 300 5	647	8

Item	Sheet	Assembly	Pos.	Quantity	Item	Sheet	Assembly	Pos.	Quantity
474033014	482	11 26 260 6	714	2	481930514	497	11 26 261 1	703	1
474033014	497	11 26 261 1	714	2	481930614	525	10 51 959 1	622	1
474033014	509	10 51 826 1	601	4	481930714	687	10 51 973 8	604	1
475002514	525	10 51 959 1	628	2	481931114	14	11 29 618 6	761	1
475033014	687	10 51 973 8	609	3	481931614	84	11 24 773 5	687	1
475033614	525	10 51 959 1	619	1	481933014	444	11 89 300 5	623	4
475501414	10	11 29 618 6	635	2	481933614	83	11 24 773 5	319	1
475501414	442	11 89 300 5	604	4	482000814	204	11 92 923 6	57	4
475501914	83	11 24 773 5	685	1	482330814	14	11 29 618 6	730	2
475501914	687	10 51 973 8	606	1	482330814	83	11 24 773 5	675	1
475502514	444	11 89 300 5	625	4	482331114	687	10 51 973 8	603	3
475503314	509	10 51 826 1	212	2	482331914	14	11 29 618 6	721	3
476608008	183	11 94 151 8	39	1	482331914	509	10 51 826 1	600	2
477102814	204	11 92 923 6	91	2	482430314	12	11 29 618 6	693	1
477400314	84	11 24 773 5	690	2	482430314	381	10 55 216 1	201	1
477400314	502	91 90 239 14	702	1	482430614	442	11 89 300 5	606	2
477400414	525	10 51 959 1	673	1	482431214	687	10 51 973 8	602	1
477400414	703	11 23 524 8	605	8	482431314	10	11 29 618 6	204	1
477400614	509	10 51 826 1	208	2	482431314	83	11 24 773 5	643	2
477400714	10	11 29 618 6	633	2	482431314	482	11 26 260 6	705	1
477400814	381	10 55 216 1	624	4	482431314	497	11 26 261 1	705	1
477401014	509	10 51 826 1	202	4	482431414	482	11 26 260 6	706	1
477401814	8	11 29 618 6	46	1	482431414	497	11 26 261 1	706	1
477430614	210	11 92 958 8	41	2	482431514	525	10 51 959 1	671	1
477510201	392	90 01 376 2	2	4	482431714	381	10 55 216 1	623	4
477700114	10	11 29 618 6	639	2	482530814	14	11 29 618 6	755	2
477700114	83	11 24 773 5	655	1	482530814	83	11 24 773 5	660	1
477700114	509	10 51 826 1	214	2	482530914	14	11 29 618 6	736	1
477700214	10	11 29 618 6	619	1	482530914	82	11 24 773 5	301	2
477700214	442	11 89 300 5	23	1	482531614	10	11 29 618 6	615	1
477700414	84	11 24 773 5	689	2	482531814	12	11 29 618 6	652	2
477700414	502	91 90 239 14	703	1	482531814	444	11 89 300 5	649	4
477700514	10	11 29 618 6	638	6	485430714	14	11 29 618 6	748	1
477700514	509	10 51 826 1	213	2	485431214	14	11 29 618 6	714	2
477700514	525	10 51 959 1	202	1	485431214	83	11 24 773 5	683	3
477700514	703	11 23 524 8	606	8	485431314	12	11 29 618 6	666	4
477700714	8	11 29 618 6	47	1	485431414	10	11 29 618 6	205	1
477700814	10	11 29 618 6	634	1	485432814	14	11 29 618 6	759	1
477701114	509	10 51 826 1	207	2	485433314	83	11 24 773 5	684	1
477701414	10	11 29 618 6	632	2	485433314	482	11 26 260 6	713	2
477701514	381	10 55 216 1	625	4	485433314	497	11 26 261 1	713	2
477701814	509	10 51 826 1	211	4	485433314	525	10 51 959 1	613	8
477704514	210	11 92 958 8	40	1	485433314	629	10 51 726 2	615	2
477704514	392	90 01 376 2	78	1	485433314	680	10 51 971 2	710	2
477704514	444	11 89 300 5	650	1	485433414	14	11 29 618 6	758	1
477704614	14	11 29 618 6	720	3	485433414	502	91 90 239 14	705	1
477704614	48	10 56 070 1	19	1	485433414	525	10 51 959 1	629	2
477704614	53	10 56 073 3	17	5	485433514	73	10 51 969 5	610	1
477704614	82	11 24 773 5	300	1	485433514	525	10 51 959 1	630	1
477704914	83	11 24 773 5	306	1	485434214	14	11 29 618 6	747	1
477704914	179	10 57 532 2	32	1	485435014	12	11 29 618 6	651	2
477704914	183	11 94 151 8	38	4	485435714	14	11 29 618 6	713	1
477704914	194	11 92 922 0	64	2	485436414	444	11 89 300 5	629	2
477705114	358	10 51 968 7	202	1	485436414	629	10 51 726 2	617	1
477705214	204	11 92 923 6	80	1	485437514	83	11 24 773 5	313	1
481930314	687	10 51 973 8	612	1	485501714	65	10 58 163 4	23	2
481930414	10	11 29 618 6	630	3	485518914	679	10 51 971 3	19	2
481930414	444	11 89 300 5	624	2	485519214	685	11 23 619 7	19	1
481930414	502	91 90 239 14	704	1	485529714	86	11 24 682 0	370	2
481930514	482	11 26 260 6	703	1	485529814	86	11 24 682 0	410	2

Item	Sheet	Assembly	Pos.	Quantity	Item	Sheet	Assembly	Pos.	Quantity
485544014	557	10 53 216 2	15	2	4901782	65	10 58 163 4	20	2
485544014	565	10 53 216 3	15	2	4901782	67	10 56 067 3	11	2
485544014	572	10 53 216 4	15	2	4901782	176	11 24 113 8	76	4
485546414	436	11 30 962 5	6	4	4901782	180	10 58 017 0	70	20
485546514	398	11 27 970 6	50	12	4901782	189	11 24 114 1	72	3
485546514	436	11 30 962 5	7	4	4901782	210	11 92 958 8	75	3
485549914	45	10 51 961 6	21	2	4901782	435	10 53 756 0	8	2
485549914	69	10 56 069 4	2	8	4901782	463	11 89 365 0	23	15
485549914	326	11 24 922 2	32	53	4901782	474	11 89 365 1	23	15
485550014	67	10 56 067 3	19	4	4901782	476	11 31 390 8	23	24
485550014	308	11 24 409 0	29	21	4901782	507	11 23 820 4	68	16
485550014	326	11 24 922 2	25	2	4901782	555	11 94 087 8	14	4
485550114	310	11 24 409 0	61	5	4901782	606	11 30 126 6	3	8
485550114	369	99 29 389 14	4	4	4901782	642	10 55 372 1	49	10
485550114	370	99 29 392 14	4	4	4901782	659	11 27 109 7	12	6
485550114	372	99 29 386 14	16	2	4901782	718	10 58 064 7	25	2
485550114	373	99 29 434 14	16	2	4901893	181	11 24 113 9	71	4
485550114	398	11 27 970 6	30	3	4902260	180	10 58 017 0	60	10
485550114	642	10 55 372 1	43	2	491033414	687	10 51 973 8	601	1
485553914	733	10 52 293 0	16	3	491101214	14	11 29 618 6	757	1
485555314	67	10 56 067 3	12	2	4980000	246	10 13 394 7	3	1
485556314	635	54 02 702 14	23	4	4980012	290	10 11 557 7	6	2
485557714	346	93 88 500 01	36	3	4980013	103	10 11 834 9	25	16
485557714	398	11 27 970 6	29	8	4980046	107	10 11 835 7	44	2
485557714	623	11 22 322 6	5	2	4980082	141	10 14 131 6	21	1
485559814	67	10 56 067 3	14	2	4980362	217	11 38 961 7	2	6
485565814	66	99 08 706 14	2	2	4980482	234	10 14 636 7	7	2
485565814	550	11 28 397 7	12	1	4980548	103	10 11 834 9	26	8
485565814	551	11 28 397 8	12	1	4980638	139	10 12 224 5	44	2
485565814	555	11 94 087 8	19	2	4980664	261	10 14 588 5	10	1
485565814	582	10 59 863 3	24	2	4980741	284	10 14 511 2	13	1
485565814	662	99 10 116 14	43	2	4980741	302	11 41 475 7	3	4
485565814	664	99 10 125 14	5	1	4980750	114	10 13 975 2	46	1
485568414	662	99 10 116 14	38	2	4980793	89	11 21 990 5	6	1
485568514	370	99 29 392 14	9	4	4980805	247	10 13 382 3	15	1
485568514	372	99 29 386 14	17	12	4980805	266	10 14 736 4	4	3
485568514	373	99 29 434 14	17	12	4980805	286	10 14 584 5	7	1
485568614	555	11 94 087 8	11	8	4980805	287	10 12 037 2	3	3
485569314	479	99 26 718 14	14	16	4980840	109	90 74 418	20	4
485569314	645	11 24 575 5	14	16	4980900	113	92 78 875	20	1
485570714	67	10 56 067 3	23	4	4980920	145	10 12 226 2	21	8
485581914	39	10 56 645 8	54	1	4980938	111	10 13 333 4	20	2
4900093	353	96 96 543 01	52	4	4980947	149	10 12 987 4	20	2
4900093	392	90 01 376 2	27	8	4980977	139	10 12 224 5	46	4
4900125	105	10 11 835 0	30	2	4980986	145	10 12 226 2	20	1
4900262	183	11 94 151 8	32	7	4981029	230	10 14 671 6	8	3
4900778	184	11 94 151 8	91	4	4981077	133	10 12 224 8	22	2
4900778	265	10 14 736 9	11	2	4981218	107	10 11 835 7	43	8
4900778	283	10 14 013 6	25	2	4981218	119	98 89 833	43	4
4900778	503	91 76 658 14	2	1	4981218	122	98 89 832	43	4
4900980	579	11 28 648 4	66	4	4981226	260	10 14 333 9	6	4
4900980	687	10 51 973 8	302	2	4981232	263	10 14 179 0	1	2
4900981	467	96 93 178 01	62	24	4981235	228	10 14 591 9	3	1
4901067	8	11 29 618 6	56	16	4981235	283	10 14 013 6	10	1
4901104	247	10 13 382 3	8	1	5004624	226	10 15 529 8	8	1
4901138	230	10 14 671 6	2	1	5004927	223	10 14 201 8	9	1
4901195	106	92 67 343	13	1	5004929	267	10 14 967 6	6	2
4901450	287	10 12 037 2	4	3	5005525	476	11 31 390 8	41	4
4901782	35	10 53 048 9	10	1	501507014	635	54 02 702 14	13	1
4901782	48	10 56 070 1	71	12	501507214	635	54 02 702 14	14	1

Item	Sheet	Assembly	Pos.	Quantity	Item	Sheet	Assembly	Pos.	Quantity
501507314	635	54 02 702 14	15	1	510641214	82	11 24 773 5	16	1
501532014	635	54 02 702 14	9	1	510662614	8	11 29 618 6	12	2
501540414	376	99 04 645 14	97	8	510662914	8	11 29 618 6	23	3
501540514	376	99 04 645 14	98	7	510662914	341	10 51 969 8	5	1
501559414	376	99 04 645 14	96	1	510662914	358	10 51 968 7	5	1
502027514	376	99 04 645 14	122	1	510664814	10	11 29 618 6	200	2
502027614	376	99 04 645 14	60	2	510664814	482	11 26 260 6	701	2
502037201	467	96 93 178 01	80	1	510664814	497	11 26 261 1	701	2
502038301	392	90 01 376 2	80	1	510664814	629	10 51 726 2	613	2
502050814	187	51 22 501 14	990	1	510682014	8	11 29 618 6	39	1
502050814	191	51 22 394 14	990	1	510682014	502	91 90 239 14	1	1
502661608	210	11 92 958 8	7	1	510690614	48	10 56 070 1	13	1
502919808	210	11 92 958 8	5	1	510694314	501	10 56 183 8	10	2
502921908	210	11 92 958 8	10	1	510694514	10	11 29 618 6	202	19
503192801	351	93 95 895 01	8	10	510694514	73	10 51 969 5	201	2
503192901	351	93 95 895 01	9	9	510694514	83	11 24 773 5	671	14
503199301	393	50 20 383 01	5	9	510694514	341	10 51 969 8	201	2
503199301	395	93 93 478 01	4	9	510694514	358	10 51 968 7	201	2
503199401	395	93 93 478 01	5	7	510694514	381	10 55 216 1	203	2
505104914	86	11 24 682 0	260	1	510694514	442	11 89 300 5	204	8
505105814	86	11 24 682 0	250	2	510694514	482	11 26 260 6	700	2
510095914	739	10 52 957 6	10	1	510694514	497	11 26 261 1	700	2
510232214	629	10 51 726 2	2	1	510694514	525	10 51 959 1	201	1
510403414	442	11 89 300 5	14	4	510694514	687	10 51 973 8	202	1
510411614	525	10 51 959 1	10	1	510695314	687	10 51 973 8	201	2
510427214	22	10 35 148 6	6	2	510695314	697	11 89 408 3	706	1
510427214	629	10 51 726 2	5	1	510701214	14	11 29 618 6	745	1
510427914	525	10 51 959 1	5	1	510701314	12	11 29 618 6	677	2
510429214	525	10 51 959 1	4	1	510701914	14	11 29 618 6	711	2
510438514	442	11 89 300 5	4	2	510702014	14	11 29 618 6	742	1
510466114	721	10 51 728 1	2	1	510702414	14	11 29 618 6	712	1
510493714	482	11 26 260 6	4	1	510702414	482	11 26 260 6	702	1
510493714	497	11 26 261 1	4	1	510703914	14	11 29 618 6	740	1
510497214	82	11 24 773 5	33	1	510704614	12	11 29 618 6	664	1
510511814	463	11 89 365 0	37	5	510705314	8	11 29 618 6	43	2
510511814	474	11 89 365 1	37	5	510709114	687	10 51 973 8	600	1
510548714	10	11 29 618 6	105	8	510709214	83	11 24 773 5	679	1
510571914	8	11 29 618 6	15	1	510710614	442	11 89 300 5	10	4
510571914	525	10 51 959 1	9	1	510713814	51	51 06 906 14	1	1
510572214	8	11 29 618 6	14	2	511414514	82	11 24 773 5	18	1
510572214	525	10 51 959 1	8	1	511419314	82	11 24 773 5	22	1
510574414	10	11 29 618 6	100	8	511432714	8	11 29 618 6	11	5
510574414	179	10 57 532 2	21	2	511432714	341	10 51 969 8	4	1
510586614	10	11 29 618 6	103	12	511432714	358	10 51 968 7	3	1
510586614	358	10 51 968 7	617	4	511434714	381	10 55 216 1	2	1
510586614	444	11 89 300 5	646	16	511442214	82	11 24 773 5	27	1
510586614	482	11 26 260 6	730	8	511455014	629	10 51 726 2	3	1
510586614	497	11 26 261 1	730	8	511458114	442	11 89 300 5	16	4
510586914	10	11 29 618 6	104	18	511458814	482	11 26 260 6	5	1
510586914	341	10 51 969 8	620	4	511458814	497	11 26 261 1	5	1
510586914	381	10 55 216 1	630	4	511467914	629	10 51 726 2	4	1
510587514	10	11 29 618 6	101	8	511475514	525	10 51 959 1	7	1
510587514	83	11 24 773 5	312	2	511476914	341	10 51 969 8	3	1
510587514	381	10 55 216 1	631	8	511476914	358	10 51 968 7	4	1
510587514	525	10 51 959 1	650	2	511480614	709	10 55 459 4	2	1
510587514	687	10 51 973 8	614	2	511486614	529	51 14 755 14	30	1
510587908	179	10 57 532 2	26	1	511486714	529	51 14 755 14	20	1
5106280	48	10 56 070 1	18	4	511491914	8	11 29 618 6	7	2
510629008	83	11 24 773 5	318	1	511491914	442	11 89 300 5	11	2
510629008	442	11 89 300 5	205	2	511493914	342	51 22 527 14	51	2

Item	Sheet	Assembly	Pos.	Quantity	Item	Sheet	Assembly	Pos.	Quantity
511495814	8	11 29 618 6	20	1	540270414	633	59 20 694 14	23	1
511502414	10	11 29 618 6	102	24	540270514	633	59 20 694 14	24	1
511502414	83	11 24 773 5	310	6	540270614	634	54 02 701 14	12	3
511502414	179	10 57 532 2	20	6	540270714	634	54 02 701 14	13	1
511511214	8	11 29 618 6	18	1	540270814	634	54 02 701 14	15	6
511511314	8	11 29 618 6	17	1	540270914	634	54 02 701 14	23	1
511598114	179	10 57 532 2	22	2	540271014	634	54 02 701 14	22	3
511607014	525	10 51 959 1	6	1	540271114	634	54 02 701 14	24	48
511607214	8	11 29 618 6	31	1	540271214	634	54 02 701 14	25	6
511614214	359	51 22 942 14	61	1	540271314	634	54 02 701 14	27	1
511619614	342	51 22 527 14	50	2	540271414	634	54 02 701 14	28	3
511631514	8	11 29 618 6	41	1	540271514	634	54 02 701 14	29	1
511637714	82	11 24 773 5	15	1	540271614	635	54 02 702 14	2	1
511639714	359	51 22 942 14	50	2	540271714	635	54 02 702 14	5	1
511640414	687	10 51 973 8	3	1	540271814	636	54 02 703 14	1	1
511640614	169	51 16 377 14	1	1	540271914	636	54 02 703 14	3	1
511640714	169	51 16 377 14	2	1	540272014	636	54 02 703 14	30	1
511640814	169	51 16 377 14	3	1	540272114	636	54 02 703 14	31	1
511655114	451	11 22 473 8	50	2	540272214	636	54 02 703 14	32	1
511657614	8	11 29 618 6	13	1	540272314	636	54 02 703 14	33	1
511704214	8	11 29 618 6	8	1	540272414	636	54 02 703 14	60	1
511704314	502	91 90 239 14	2	1	540272514	637	54 02 704 14	1	1
511708414	8	11 29 618 6	16	1	540272614	637	54 02 704 14	2	3
511710314	29	51 05 719 14	13	1	540272714	637	54 02 704 14	3	1
511713914	204	11 92 923 6	89	3	540272814	638	54 02 705 14	1	1
512214414	82	11 24 773 5	10	1	540272914	638	54 02 705 14	4	1
512239414	190	10 57 423 9	5	1	540273014	638	54 02 705 14	7	1
512249914	82	11 24 773 5	7	1	540273114	638	54 02 705 14	11	1
512250114	186	10 57 423 7	6	1	540273214	638	54 02 705 14	20	1
512252714	341	10 51 969 8	2	1	540273314	635	54 02 702 14	1	1
512256614	383	51 14 347 14	250	1	540287614	393	50 20 383 01	6	7
512259414	342	51 22 527 14	990	1	550789808	194	11 92 922 0	16	1
512259514	342	51 22 527 14	61	1	550936214	184	11 94 151 8	94	1
512294214	358	10 51 968 7	2	1	550945314	31	10 22 592 5	6	1
512299114	381	10 55 216 1	3	2	552006114	48	10 56 070 1	26	2
512299214	384	51 22 991 14	990	1	552066514	48	10 56 070 1	22	2
512401414	359	51 22 942 14	60	1	553078814	724	11 93 621 2	15	2.2
512401514	359	51 22 942 14	51	2	553079914	398	11 27 970 6	13	1
512402214	359	51 22 942 14	990	1	553087814	204	11 92 923 6	38	1
512405914	442	11 89 300 5	3	2	553128608	183	11 94 151 8	43	2.5
512406114	634	54 02 701 14	11	1	553128608	204	11 92 923 6	33	1.5
512406214	634	54 02 701 14	21	1	553183708	202	10 30 300 7	6	1
512411914	451	11 22 473 8	10	1	5609144	432	10 28 999 3	53	1
512416214	448	10 50 351 3	98	1	5700024	223	10 14 201 8	8	5
512714614	393	50 20 383 01	10	1	5700088	243	10 12 948 0	2	1
512714614	396	93 93 479 01	9	1	570114908	630	51 02 322 14	116	1
512714714	393	50 20 383 01	11	1	570948608	165	11 21 593 6	33	1
512714714	396	93 93 479 01	10	1	570950308	160	70 19 834	1	1
513313914	8	11 29 618 6	10	2	571352308	212	11 83 721 4	1	1
513314114	442	11 89 300 5	13	4	571827308	86	11 24 682 0	400	8
513319014	456	51 33 141 14	99	1	591645108	310	11 24 409 0	64	1
513319214	27	51 33 139 14	99	1	592000814	721	10 51 728 1	3	1
513319614	27	51 33 139 14	13	1	592007514	398	11 27 970 6	14	1
513319814	456	51 33 141 14	17	1	592022414	525	10 51 959 1	3	2
514618508	94	11 21 993 0	47	1	592023914	183	11 94 151 8	40	1
540136314	73	10 51 969 5	3	4	592031814	722	59 20 008 14	9	1
540244214	634	54 02 701 14	14	72	592044714	8	11 29 618 6	33	1
540270114	633	59 20 694 14	1	1	592052914	740	51 00 959 14	29	1
540270214	633	59 20 694 14	21	1	592054714	376	99 04 645 14	95	1
540270314	633	59 20 694 14	22	1	592069414	627	10 51 743 9	27	1

Item	Sheet	Assembly	Pos.	Quantity	Item	Sheet	Assembly	Pos.	Quantity
592070414	179	10 57 532 2	7	1	592290514	416	10 35 008 0	85	1
592070714	18	11 28 647 6	145	2	592290614	424	59 22 905 14	4	1
592071014	18	11 28 647 6	230	1	592290714	424	59 22 905 14	6	1
592072914	18	11 28 647 6	112	1	592290814	424	59 22 905 14	8	1
592089814	376	99 04 645 14	69	1	592291014	416	10 35 008 0	94	1
592104114	73	10 51 969 5	2	2	592291114	416	10 35 008 0	97	1
592104214	687	10 51 973 8	2	1	592291214	416	10 35 008 0	102	1
592145814	8	11 29 618 6	4	1	592291314	416	10 35 008 0	108	1
592158414	687	10 51 973 8	4	1	592291414	416	10 35 008 0	116	1
592178314	687	10 51 973 8	5	1	592291514	425	59 22 914 14	1	1
592178514	86	11 24 682 0	20	1	592291614	425	59 22 914 14	2	1
592178914	86	11 24 682 0	580	1	592291714	425	59 22 914 14	3	1
592182614	703	11 23 524 8	1	4	592291814	416	10 35 008 0	121	1
592200514	82	11 24 773 5	20	1	592291914	416	10 35 008 0	123	1
592257814	179	10 57 532 2	44	1	592293114	428	11 93 934 6	51	1
592274714	442	11 89 300 5	6	2	592293114	429	10 58 467 1	51	1
592274714	509	10 51 826 1	4	1	592293214	428	11 93 934 6	52	1
592285714	419	10 35 007 6	3	1	592293214	429	10 58 467 1	60	1
592285814	419	10 35 007 6	4	1	592293314	428	11 93 934 6	70	1
592286314	419	10 35 007 6	26	1	592293414	428	11 93 934 6	180	1
592286514	415	10 35 008 0	36	1	592293514	428	11 93 934 6	190	1
592286514	419	10 35 007 6	11	5	592293614	428	11 93 934 6	230	1
592286714	415	10 35 008 0	9	2	592293714	428	11 93 934 6	240	2
592286814	415	10 35 008 0	13	1	592293814	428	11 93 934 6	260	1
592286914	415	10 35 008 0	25	1	592300614	18	11 28 647 6	152	13
592287014	415	10 35 008 0	26	1	592309014	18	11 28 647 6	200	1
592287114	415	10 35 008 0	28	1	592309014	18	11 28 647 6	205	1
592287214	422	59 22 871 14	10	1	592316114	86	11 24 682 0	150	1
592287414	422	59 22 871 14	13	1	592316314	86	11 24 682 0	210	1
592287514	422	59 22 871 14	15	1	592316414	86	11 24 682 0	220	1
592287614	422	59 22 871 14	16	1	592317014	86	11 24 682 0	600	1
592287714	422	59 22 871 14	17	1	592323114	442	11 89 300 5	5	4
592287814	422	59 22 871 14	18	1	592323514	312	11 24 409 1	11	7
592287914	422	59 22 871 14	19	1	592323514	324	10 54 591 0	22	3
592288014	422	59 22 871 14	20	1	592330814	179	10 57 532 2	14	1
592288114	422	59 22 871 14	31	1	592333714	422	59 22 871 14	6	1
592288214	422	59 22 871 14	32	1	600147201	611	10 57 652 3	28	0.2
592288314	415	10 35 008 0	33	1	6001593	407	10 53 171 8	21	5
592288314	422	59 22 871 14	12	1	6001593	658	11 21 530 2	36	1
592288414	415	10 35 008 0	34	1	600204105	735	10 56 013 7	45	5
592288514	415	10 35 008 0	43	1	6003031	399	11 27 973 6	47	6
592288614	415	10 35 008 0	44	1	6003031	400	11 27 973 6	95	6
592288714	415	10 35 008 0	45	1	600376914	609	10 57 651 9	30	12
592288814	415	10 35 008 0	46	1	600385314	512	11 90 151 1	31	10.5
592288914	415	10 35 008 0	47	1	600454314	399	11 27 973 6	53	6.5
592289014	415	10 35 008 0	48	1	600454314	575	10 57 559 9	31	1
592289114	415	10 35 008 0	49	1	600454314	575	10 57 559 9	63	4
592289214	415	10 35 008 0	50	1	600454314	575	10 57 559 9	64	4
592289314	415	10 35 008 0	52	1	600454314	575	10 57 559 9	65	3.1
592289414	415	10 35 008 0	53	1	600454314	575	10 57 559 9	72	4
592289514	415	10 35 008 0	57	1	600454314	575	10 57 559 9	73	4
592289614	423	59 22 895 14	2	1	600454314	576	10 57 559 9	85	4.5
592289714	423	59 22 895 14	3	1	600454314	576	10 57 559 9	90	6
592289814	416	10 35 008 0	72	1	600454314	576	10 57 559 9	91	6
592289914	416	10 35 008 0	73	1	600454314	609	10 57 651 9	85	4.5
592290014	416	10 35 008 0	76	1	602008508	183	11 94 151 8	57	6
592290114	416	10 35 008 0	78	1	602008508	210	11 92 958 8	55	2
592290214	416	10 35 008 0	81	1	602008808	476	11 31 390 8	38	4
592290314	416	10 35 008 0	82	1	602010114	476	11 31 390 8	36	16
592290414	416	10 35 008 0	84	1	602016514	507	11 23 820 4	73	4

Item	Sheet	Assembly	Pos.	Quantity	Item	Sheet	Assembly	Pos.	Quantity
602017114	507	11 23 820 4	72	8	602731714	39	10 56 645 8	51	1
602017114	548	11 28 390 8	19	4	602731714	611	10 57 652 3	14	2
602017114	563	11 28 583 8	19	4	602791714	611	10 57 652 3	17	1
602017114	570	11 28 626 1	19	4	602812414	402	10 55 963 5	88	1
602025814	184	11 94 151 8	93	2	602812714	39	10 56 645 8	26	1
602026414	463	11 89 365 0	48	3	602812714	402	10 55 963 5	87	1
602026414	474	11 89 365 1	48	3	602832214	735	10 56 013 7	54	1
602101414	611	10 57 652 3	23	0.2	602832314	402	10 55 963 5	72	1
602106714	39	10 56 645 8	58	0.37	602835914	39	10 56 645 8	52	1
602125114	39	10 56 645 8	22	7	602835914	611	10 57 652 3	21	1
602134114	39	10 56 645 8	59	4	603000308	576	10 57 559 9	86	1.2
602134114	611	10 57 652 3	24	2	603000308	610	10 57 651 9	86	1.2
602151914	402	10 55 963 5	86	4	603000408	314	11 24 409 1	17	2.3
602153014	735	10 56 013 7	53	1	603018114	582	10 59 863 3	18	0.2
602153214	735	10 56 013 7	51	2	603202208	741	10 52 155 9	61	1
602153814	39	10 56 645 8	23	39	603202314	296	10 15 028 8	99	2
602153814	402	10 55 963 5	74	13	604105314	402	10 55 963 5	68	5
602153814	402	10 55 963 5	80	4	604105314	403	99 20 811 14	5	5
602153814	611	10 57 652 3	12	15	604105414	403	99 20 811 14	7	5
602203914	399	11 27 973 6	55	6	604105514	402	10 55 963 5	69	41
602203914	400	11 27 973 6	92	6	604105514	403	99 20 811 14	10	10
602206114	39	10 56 645 8	24	1	604105614	402	10 55 963 5	70	6
602206514	34	11 24 519 0	74	2	604105614	403	99 20 811 14	15	5
602208714	402	10 55 963 5	92	1	605010314	735	10 56 013 7	41	1
602209014	400	11 27 973 6	91	1	605013408	512	11 90 151 1	52	1
602209314	39	10 56 645 8	80	42	605013508	512	11 90 151 1	53	1
602209314	611	10 57 652 3	25	2	605013508	536	10 53 120 7	51	2
602209714	402	10 55 963 5	93	1	605252014	575	10 57 559 9	70	2
602213314	611	10 57 652 3	27	2	605252214	575	10 57 559 9	71	2
602303214	39	10 56 645 8	73	1	605253314	402	10 55 963 5	201	11
602305914	399	11 27 973 6	54	3	605253414	402	10 55 963 5	211	1
602307708	39	10 56 645 8	100	2	605254114	402	10 55 963 5	213	1
602339508	413	11 95 272 6	13	3	605254214	402	10 55 963 5	203	11
602440101	657	99 24 978 14	37	2	605264814	399	11 27 973 6	51	3
602440301	512	11 90 151 1	23	1	605601701	512	11 90 151 1	35	5
602440301	512	11 90 151 1	45	1	605601701	575	10 57 559 9	53	6
602453214	411	91 65 251 14	5	2	605601701	609	10 57 651 9	34	2
602453914	411	91 65 251 14	8	2	605601801	39	10 56 645 8	427	24
602454614	411	91 65 251 14	2	2	605604714	512	11 90 151 1	33	1
602454714	411	91 65 251 14	4	2	605604714	575	10 57 559 9	51	1
602457014	411	91 65 251 14	3	2	605604714	609	10 57 651 9	32	1
602457114	411	91 65 251 14	6	2	605604914	34	11 24 519 0	93	1
602457214	411	91 65 251 14	7	2	605608401	512	11 90 151 1	44	24
602458214	407	10 53 171 8	15	8	605609514	34	11 24 519 0	94	1
602481914	411	91 65 251 14	1	1	605609514	39	10 56 645 8	32	1
602501208	39	10 56 645 8	55	1	605609514	512	11 90 151 1	62	1
602620201	575	10 57 559 9	28	2	605609514	609	10 57 651 9	51	1
602620201	575	10 57 559 9	62	3	605610301	39	10 56 645 8	426	24
602620201	576	10 57 559 9	84	2	605611814	512	11 90 151 1	43	1
602620201	609	10 57 651 9	84	2	605612014	39	10 56 645 8	42	1
602620201	657	99 24 978 14	38	2	605612014	513	11 90 151 1	72	1
602620401	609	10 57 651 9	28	1	605612214	735	10 56 013 7	42	1
602620401	609	10 57 651 9	36	1	605613701	39	10 56 645 8	41	1
602620401	741	10 52 155 9	56	2	605614714	739	10 52 957 6	14	2
602707214	500	10 56 187 5	90	1	605615814	512	11 90 151 1	36	5
602707414	500	10 56 187 5	91	1	605616014	657	99 24 978 14	36	2
602720514	39	10 56 645 8	28	4	605616114	576	10 57 559 9	81	2
602720514	611	10 57 652 3	20	2	605616114	609	10 57 651 9	81	2
602730714	39	10 56 645 8	25	3	605618014	576	10 57 559 9	82	2
602730714	611	10 57 652 3	18	1	605618014	609	10 57 651 9	82	2

Item	Sheet	Assembly	Pos.	Quantity	Item	Sheet	Assembly	Pos.	Quantity
605619814	512	11 90 151 1	34	14	693013014	739	10 52 957 6	11	1
605619814	609	10 57 651 9	33	8	693013414	739	10 52 957 6	12	1
605620008	413	11 95 272 6	14	3	693030914	400	11 27 973 6	97	2
606066314	575	10 57 559 9	60	3	693061214	512	11 90 151 1	26	15
606070908	33	11 24 519 0	35	1	693061314	39	10 56 645 8	29	1
606272314	333	11 21 481 9	1	1	693061314	512	11 90 151 1	25	1
606272314	405	11 21 481 8	1	1	693061314	513	11 90 151 1	73	2
606279014	493	11 22 050 0	20	1	693061314	575	10 57 559 9	25	2
606279014	499	11 22 050 1	20	1	693061314	609	10 57 651 9	25	4
606279214	483	11 21 634 2	1	1	693061414	512	11 90 151 1	24	8
606281014	33	11 24 519 0	45	1	693061414	575	10 57 559 9	52	1
606281114	33	11 24 519 0	46	1	693061514	513	11 90 151 1	63	2
606644414	609	10 57 651 9	27	1	693061514	609	10 57 651 9	52	2
606655108	33	11 24 519 0	43	1	693067614	574	10 53 141 3	11	2
606655208	577	92 75 218 08	1	1	693073014	410	11 26 095 7	33	1
606655308	577	92 75 218 08	2	1	693073014	741	10 52 155 9	33	1
606667214	658	11 21 530 2	37	1	693106214	512	11 90 151 1	51	1.5
606667814	407	10 53 171 8	12	1	693113814	86	11 24 682 0	485	1
606672114	407	10 53 171 8	10	2	693138614	402	10 55 963 5	73	1
606674714	407	10 53 171 8	11	4	693149814	39	10 56 645 8	45	1
606718408	410	11 26 095 7	35	1	693152314	576	10 57 559 9	83	2
606760014	575	10 57 559 9	27	1	693152314	609	10 57 651 9	83	2
606774714	512	11 90 151 1	27	1	693152414	741	10 52 155 9	55	1
606907114	741	10 52 155 9	37	1	693155014	512	11 90 151 1	32	1
607021114	36	70 27 205	15	1	693155014	575	10 57 559 9	50	1
607021714	37	10 22 450 0	1	1	693155014	609	10 57 651 9	31	1
607021714	399	11 27 973 6	42	1	693157014	575	10 57 559 9	80	2
607021714	402	10 55 963 5	42	1	693157014	609	10 57 651 9	80	2
607023214	399	11 27 973 6	43	1	693157114	512	11 90 151 1	61	1
607023214	402	10 55 963 5	43	1	693157114	609	10 57 651 9	50	1
607147008	399	11 27 973 6	41	1	693157214	513	11 90 151 1	71	1
607147008	402	10 55 963 5	41	1	693168514	404	10 51 907 9	41	1
611039214	741	10 52 155 9	21	1	693181114	402	10 55 963 5	71	3
611052614	399	11 27 973 6	61	1	693182314	402	10 55 963 5	78	2
611124514	412	61 10 526 14	1	1	693183914	402	10 55 963 5	91	1
612436814	406	10 03 610 7	11	1	693208614	24	11 22 918 4	1	2
614027114	399	11 27 973 6	74	1	7000329	108	92 74 731	23	2
614046114	399	11 27 973 6	81	1	7000942	18	11 28 647 6	164	7
616154114	514	91 92 528 14	21	1	7001228	71	10 51 969 4	18	2
616155214	515	61 61 541 14	4	2	7002475	501	10 56 183 8	11	2
616155414	515	61 61 541 14	10	1	7004512	103	10 11 834 9	32	1
616155514	515	61 61 541 14	11	1	7004512	126	92 76 408	32	1
6203137	400	11 27 973 6	93	1	7005053	184	11 94 151 8	92	3
6203401	576	10 57 559 9	93	2	7005053	210	11 92 958 8	56	1
6204372	407	10 53 171 8	20	2	7005053	476	11 31 390 8	39	2
6205239	172	11 24 448 7	13	1	7005072	447	51 24 059 14	18	2
630120108	402	10 55 963 5	81	4	7006213	96	11 21 936 9	9	1
630121508	402	10 55 963 5	83	1	7007492	95	10 59 347 4	10	1
630122908	402	10 55 963 5	84	1	7008121	141	10 14 131 6	24	4
630160214	741	10 52 155 9	41	2	7008583	476	11 31 390 8	40	2
630170014	402	10 55 963 5	85	1	7009080	275	10 14 821 5	5	1
630170014	735	10 56 013 7	32	1	7011131	227	50 04 624	2	1
6905271	739	10 52 957 6	13	2	7012971	94	11 21 993 0	29	3
692405708	413	11 95 272 6	15	4	7012971	451	11 22 473 8	31	1
692406008	413	11 95 272 6	11	1	7013116	110	92 73 644	22	1
692406008	413	11 95 272 6	12	1	7013116	113	92 78 875	22	1
692815514	584	97 07 204 03	31	1	7013456	227	50 04 624	3	1
693003414	741	10 52 155 9	32	1	7013563	389	11 94 020 8	1	1
693003614	741	10 52 155 9	31	1	7014257	18	11 28 647 6	271	1
693004614	741	10 52 155 9	34	1	7014524	183	11 94 151 8	42	5

Item	Sheet	Assembly	Pos.	Quantity	Item	Sheet	Assembly	Pos.	Quantity
7014524	306	11 24 114 6	30	4.5	710031014	637	54 02 704 14	10	1
7016208	135	10 13 802 6	106	1	710048501	346	93 88 500 01	17	1
7016208	141	10 14 131 6	106	1	710054401	392	90 01 376 2	4	1
7019733	160	70 19 834	2	1	710058901	392	90 01 376 2	11	2
7019834	155	11 22 126 8	4	1	710069314	482	11 26 260 6	11	1
7021521	283	10 14 013 6	19	1	710069314	497	11 26 261 1	11	1
7022118	147	10 13 803 4	29	2	710069514	156	11 22 127 4	20	1
7022118	447	51 24 059 14	14	1	710069514	162	10 35 161 0	20	1
7022127	156	11 22 127 4	31	1	7101008	226	10 15 529 8	5	1
7022127	165	11 21 593 6	31	1	7101021	220	10 13 845 0	3	1
7022127	451	11 22 473 8	28	5	7101021	226	10 15 529 8	7	1
7022315	389	11 94 020 8	2	1	7101021	227	50 04 624	10	1
7023459	158	10 32 489 2	4	1	7101022	48	10 56 070 1	23	4
7023828	384	51 22 991 14	1	1	7101022	183	11 94 151 8	33	1
7023833	387	11 94 017 7	3	1	710102514	189	11 24 114 1	56	4
7023834	386	11 94 017 6	5	1	710103714	183	11 94 151 8	34	1
7023835	386	11 94 017 6	11	1	710103814	73	10 51 969 5	5	4
7023837	387	11 94 017 7	10	1	710104514	210	11 92 958 8	48	1
7023838	386	11 94 017 6	1	1	710104514	635	54 02 702 14	31	2
7023839	386	11 94 017 6	2	1	710121014	376	99 04 645 14	123	1
7023847	384	51 22 991 14	905	14	714000808	434	97 07 857 03	5	1
7024273	630	51 02 322 14	111	1	714000808	700	11 89 568 6	12	1
7024275	630	51 02 322 14	113	1	714001514	210	11 92 958 8	12	1
7024277	630	51 02 322 14	115	14	714001914	8	11 29 618 6	38	2
7024282	630	51 02 322 14	117	4	714001914	721	10 51 728 1	5	1
7024427	588	99 23 398 14	30	8	714002114	629	10 51 726 2	7	1
7024427	613	11 28 744 5	36	20	720046001	393	50 20 383 01	7	22
7024502	18	11 28 647 6	170	14	720046101	393	50 20 383 01	8	12
7024503	18	11 28 647 6	171	14	721108801	352	93 36 755 01	7	1
7024504	18	11 28 647 6	172	14	725810414	642	10 55 372 1	54	2
7024631	28	51 16 576 14	4	2	726054214	456	51 33 141 14	13	1
7024968	18	11 28 647 6	224	1	726054414	27	51 33 139 14	9	1
7024981	430	10 22 506 8	12	1	726206214	704	59 21 826 14	100	3
7024982	430	10 22 506 8	90	1	726306414	722	59 20 008 14	10	1
7024983	430	10 22 506 8	91	1	726307914	27	51 33 139 14	10	1
7024987	430	10 22 506 8	71	1	726308514	704	59 21 826 14	85	1
7024996	430	10 22 506 8	15	1	726401514	53	10 56 073 3	15	1
7025006	431	70 24 996	20	1	726403201	467	96 93 178 01	89	1
7025007	431	70 24 996	23	1	726403514	29	51 05 719 14	18	1
7025009	432	10 28 999 3	59	1	726404414	180	10 58 017 0	20	4
7026135	18	11 28 647 6	269	2	726408414	29	51 05 719 14	19	1
7026676	18	11 28 647 6	203	1	726409714	179	10 57 532 2	27	1
7027205	34	11 24 519 0	60	2	726409814	48	10 56 070 1	24	3
7027205	399	11 27 973 6	50	3	726410201	467	96 93 178 01	79	1
7027205	714	10 53 246 1	37	1	726411214	82	11 24 773 5	29	3
7027205	716	10 50 775 0	32	1	7264148	392	90 01 376 2	24	1
7027665	230	10 14 671 6	10	1	726424214	638	54 02 705 14	16	1
7027755	202	10 30 300 7	3	1	726428401	467	96 93 178 01	91	1
7028143	95	10 59 347 4	5	1	726428714	48	10 56 070 1	25	2
7028151	451	11 22 473 8	26	1	726429814	99	11 26 744 7	5	1
703003014	505	11 23 820 4	28	1	726431414	179	10 57 532 2	25	2
703003014	580	11 28 610 5	6	2	726431414	179	10 57 532 2	29	1
703003114	613	11 28 744 5	25	2	726435801	392	90 01 376 2	68	1
704214114	314	11 24 409 1	20	2	726450601	467	96 93 178 01	6	2
704274808	529	51 14 755 14	70	5	726453901	392	90 01 376 2	69	1
708014114	580	11 28 610 5	4	4	726456214	376	99 04 645 14	58	1
710004514	580	11 28 610 5	5	4	726456914	27	51 33 139 14	8	1
710020114	638	54 02 705 14	15	1	726456914	722	59 20 008 14	8	1
710022201	392	90 01 376 2	64	2	726459414	447	51 24 059 14	12	1
710029801	346	93 88 500 01	18	1	726461014	442	11 89 300 5	24	2

Item	Sheet	Assembly	Pos.	Quantity	Item	Sheet	Assembly	Pos.	Quantity
726461714	381	10 55 216 1	9	2	7380297	136	10 13 802 7	39	1
7264625	227	50 04 624	1	1	7380297	144	10 13 803 2	39	1
726466314	74	59 21 041 14	180	1	7380297	146	10 13 803 3	31	1
726469014	636	54 02 703 14	70	1	7380297	152	10 13 452 1	21	1
726611214	479	99 26 718 14	18	4	7380348	108	92 74 731	24	2
726612114	189	11 24 114 1	50	4	7380423	226	10 15 529 8	12	1
726612214	507	11 23 820 4	88	4	7380480	467	96 93 178 01	7	1
726612214	550	11 28 397 7	13	1	7380490	141	10 14 131 6	23	2
726612214	551	11 28 397 8	13	1	7380531	124	92 68 016	44	1
726612214	552	11 28 399 5	13	1	7380566	217	11 38 961 7	6	3
726612214	553	11 28 399 7	13	1	7380566	243	10 12 948 0	12	1
726613014	582	10 59 863 3	20	1	7380566	265	10 14 736 9	7	1
726613614	183	11 94 151 8	30	4	7380566	283	10 14 013 6	20	1
726616208	642	10 55 372 1	55	2	7380574	145	10 12 226 2	18	1
726616614	642	10 55 372 1	58	10	7380576	148	10 12 226 5	27	1
726902614	316	10 57 883 5	21	4	7380586	107	10 11 835 7	22	2
726904014	65	10 58 163 4	37	1	7380586	108	92 74 731	20	2
726910114	65	10 58 163 4	19	3	7380596	110	92 73 644	81	1
726922214	45	10 51 961 6	13	4	7380601	150	10 13 000 5	22	1
7361600	110	92 73 644	21	1	7380601	152	10 13 452 1	22	1
7361600	113	92 78 875	21	1	7380605	149	10 12 987 4	22	1
7361601	97	11 06 730 4	11	1	7380605	189	11 24 114 1	40	1
7361601	110	92 73 644	37	2	7380605	266	10 14 736 4	5	1
7361961	352	93 36 755 01	28	1	7380608	148	10 12 226 5	26	1
7362091	10	11 29 618 6	603	12	7380610	147	10 13 803 4	23	2
7362091	73	10 51 969 5	614	1	7380612	110	92 73 644	65	1
7362091	83	11 24 773 5	314	1	7380648	108	92 74 731	32	10
7362091	444	11 89 300 5	637	2	7380648	109	90 74 418	64	5
7362451	503	91 76 658 14	3	2.5	7380648	110	92 73 644	64	5
7362546	204	11 92 923 6	61	16	7380653	219	10 14 768 6	8	2
7363730	501	10 56 183 8	9	2	7380653	290	10 11 557 7	9	1
7365090	183	11 94 151 8	56	6	7380656	115	90 77 464	18	1
7365412	53	10 56 073 3	11	1	7380656	126	92 76 408	18	4
7365616	444	11 89 300 5	653	2	7380657	124	92 68 016	36	1
7366620	430	10 22 506 8	42	1	7380657	298	10 14 637 4	2	1
7367776	10	11 29 618 6	613	12	7380688	259	10 14 675 3	3	2
7367776	83	11 24 773 5	603	4	7380691	151	10 13 235 7	22	1
7367776	341	10 51 969 8	610	1	7380691	153	10 13 806 8	22	1
7367776	358	10 51 968 7	611	1	7380779	247	10 13 382 3	16	2
7367776	444	11 89 300 5	621	4	7380815	107	10 11 835 7	21	4
7367776	482	11 26 260 6	704	1	7380815	108	92 74 731	21	4
7367776	497	11 26 261 1	704	1	7380865	110	92 73 644	62	1
7367776	525	10 51 959 1	614	1	7380868	110	92 73 644	70	1
7367986	12	11 29 618 6	670	3	7380868	117	92 75 443	70	1
7368242	399	11 27 973 6	52	3	7380888	108	92 74 731	56	2
7368248	400	11 27 973 6	94	1	7380888	109	90 74 418	61	1
737022103	398	11 27 970 6	12	1	7380888	110	92 73 644	61	1
7370581	430	10 22 506 8	73	1	7380935	269	10 29 998 8	2	1
7371299	18	11 28 647 6	279	2	7380955	243	10 12 948 0	9	2
7371746	430	10 22 506 8	80	1	7380970	189	11 24 114 1	41	1
7372232	388	10 65 027 0	3	1	7380970	267	10 14 967 6	7	1
7373597	447	51 24 059 14	17	2	7380986	202	10 30 300 7	12	1
7380015	108	92 74 731	22	2	7380987	148	10 12 226 5	21	1
7380070	136	10 13 802 7	33	1	7381004	125	92 73 187	70	1
7380083	277	10 14 274 2	3	1	7381013	133	10 12 224 8	23	2
7380106	123	98 84 402	33	1	7381013	146	10 13 803 3	23	2
7380120	108	92 74 731	28	2	7381056	110	92 73 644	24	1
7380177	217	11 38 961 7	4	3	7381056	113	92 78 875	24	1
7380291	107	10 11 835 7	19	2	7381082	110	92 73 644	82	1
7380291	108	92 74 731	19	2	7381087	110	92 73 644	63	1

Item	Sheet	Assembly	Pos.	Quantity	Item	Sheet	Assembly	Pos.	Quantity
7381103	110	92 73 644	60	1	740000908	472	99 08 357 14	4	0.624
7381103	293	10 12 797 9	2	1	7401726	394	92 76 934 01	5	1
7381127	142	10 12 352 8	21	1	7402657	503	91 76 658 14	1	1
7381127	147	10 13 803 4	21	1	7402781	199	11 24 114 4	12	1
7381128	142	10 12 352 8	20	1	7403569	381	10 55 216 1	202	3
7381128	147	10 13 803 4	22	1	7404678	476	11 31 390 8	37	4
7381182	284	10 14 511 2	11	1	7407098	525	10 51 959 1	608	8
7381225	219	10 14 768 6	14	1	7407098	629	10 51 726 2	616	2
7381225	243	10 12 948 0	13	1	7407108	83	11 24 773 5	305	1
7381292	261	10 14 588 5	21	1	7407108	358	10 51 968 7	603	1
7381292	285	10 14 622 4	12	7	7407108	482	11 26 260 6	707	1
7381367	109	90 74 418	2	1	7407108	497	11 26 261 1	707	1
7381367	110	92 73 644	94	2	740732003	410	11 26 095 7	31	1
7381438	131	10 12 321 4	12	1	7409720	10	11 29 618 6	201	1
7381439	131	10 12 321 4	11	1	7409720	83	11 24 773 5	304	2
7381440	131	10 12 321 4	10	1	7409720	381	10 55 216 1	200	2
7381442	110	92 73 644	23	1	7410455	12	11 29 618 6	640	2
7381442	113	92 78 875	23	1	7410455	444	11 89 300 5	643	8
7381446	148	10 12 226 5	22	1	7412268	33	11 24 519 0	37	2
7381457	217	11 38 961 7	7	2	7412935	202	10 30 300 7	18	1
7381457	265	10 14 736 9	17	1	7412937	202	10 30 300 7	15	1
7381457	283	10 14 013 6	21	1	7412942	202	10 30 300 7	1	1
7381526	278	10 14 274 4	4	1	7413103	463	11 89 365 0	38	12
7381593	223	10 14 201 8	7	2	7413103	474	11 89 365 1	38	12
7381615	279	10 14 601 2	9	1	7413401	165	11 21 593 6	17	2
7381628	296	10 15 028 8	38	2	7413402	165	11 21 593 6	20	1
7381629	230	10 14 671 6	5	3	7414500	451	11 22 473 8	24	3
7381629	296	10 15 028 8	39	6	744010014	458	11 91 872 5	2	1
7381630	296	10 15 028 8	42	2	744010414	472	99 08 357 14	5	2
7381631	265	10 14 736 9	14	1	744011114	312	11 24 409 1	12	5
7381631	265	10 14 736 9	16	1	745120514	613	11 28 744 5	24	6
7381631	296	10 15 028 8	43	1	745120514	662	99 10 116 14	20	2
7381635	296	10 15 028 8	41	3	745128314	636	54 02 703 14	40	1
7381638	243	10 12 948 0	11	1	745141001	392	90 01 376 2	66	1
7381638	267	10 14 967 6	13	1	745141814	86	11 24 682 0	280	6
7381638	290	10 11 557 7	10	2	745194714	638	54 02 705 14	12	1
7381638	298	10 14 637 4	4	1	745906614	636	54 02 703 14	6	1
7381638	302	11 41 475 7	9	2	745907514	637	54 02 704 14	23	1
7381685	246	10 13 394 7	4	1	746001701	346	93 88 500 01	16	1
7381699	135	10 13 802 6	30	21	746171514	357	10 51 968 6	18	2
7381770	296	10 15 028 8	32	4	7462008	392	90 01 376 2	12	1
7381771	296	10 15 028 8	31	1	746224201	392	90 01 376 2	3	1
7381779	219	10 14 768 6	7	2	746225801	467	96 93 178 01	4	1
7381779	279	10 14 601 2	5	2	746310401	470	94 44 065 03	5	2
7382059	245	10 13 394 5	5	1	746413001	469	94 44 048 03	5	2
7382069	217	11 38 961 7	8	1	746506601	468	94 44 043 03	5	2
7382085	296	10 15 028 8	40	2	746911614	579	11 28 648 4	18	4
7382088	261	10 14 588 5	15	1	746913614	685	11 23 619 7	17	1
7382090	296	10 15 028 8	37	5	746923314	176	11 24 113 8	21	2
7382092	296	10 15 028 8	47	2	746925314	722	59 20 008 14	13	1
7382149	115	90 77 464	34	1	746925314	722	59 20 008 14	14	1
7382167	118	98 89 984	31	24	7469905	107	10 11 835 7	64	2
7382167	121	98 89 983	31	24	7469905	123	98 84 402	32	1
7382203	298	10 14 637 4	5	2	747401901	392	90 01 376 2	71	1
7382204	243	10 12 948 0	8	2	747462814	637	54 02 704 14	20	1
7382212	148	10 12 226 5	23	1	749073614	704	59 21 826 14	90	1
7382216	302	11 41 475 7	12	1	750001114	501	10 56 183 8	7	1
740000208	458	11 91 872 5	1	0.4	750003414	501	10 56 183 8	8	1
740000208	589	99 30 800 14	20	3	761001103	467	96 93 178 01	72	1
740000801	314	11 24 409 1	16	2.3	7610021	467	96 93 178 01	12	1

Item	Sheet	Assembly	Pos.	Quantity	Item	Sheet	Assembly	Pos.	Quantity
761008703	467	96 93 178 01	3	1	773939214	458	11 91 872 5	3	1
7610225	352	93 36 755 01	14	1	773939214	589	99 30 800 14	15	1
7610225	394	92 76 934 01	6	1	773941308	354	99 23 387 14	11	1
761022903	352	93 36 755 01	2	1	773954514	500	10 56 187 5	94	2
761022903	352	93 36 755 01	21	1	773954714	472	99 08 357 14	3	2
7610244	467	96 93 178 01	2	1	773967214	472	99 08 357 14	2	4
761032203	392	90 01 376 2	73	1	774204914	183	11 94 151 8	55	6
7615441	29	51 05 719 14	1	1	774204914	199	11 24 114 4	15	1
7615603	451	11 22 473 8	8	1	774204914	204	11 92 923 6	56	14
7615604	451	11 22 473 8	9	1	774206408	183	11 94 151 8	52	4
7615720	417	10 22 645 4	2	1	774209908	194	11 92 922 0	31	2
7617268	14	11 29 618 6	703	13	774212914	82	11 24 773 5	31	2
7617268	73	10 51 969 5	612	1	774214308	721	10 51 728 1	8	1
7617268	83	11 24 773 5	676	3	774217108	194	11 92 922 0	34	1
7617268	358	10 51 968 7	613	1	774218808	183	11 94 151 8	53	9
7617268	444	11 89 300 5	628	6	774241914	194	11 92 922 0	32	1
7617268	721	10 51 728 1	602	3	774247214	194	11 92 922 0	33	2
7617354	73	10 51 969 5	611	1	774255714	183	11 94 151 8	54	4
7617354	444	11 89 300 5	634	11	774256114	179	10 57 532 2	52	2
7617354	525	10 51 959 1	611	7	774301101	633	59 20 694 14	65	1
7617354	680	10 51 971 2	702	4	774322101	392	90 01 376 2	77	2
7617354	709	10 55 459 4	601	1	7743242	70	99 23 451 14	5	2
7617354	721	10 51 728 1	608	1	7743242	345	96 96 248 01	18	1
7617460	14	11 29 618 6	705	1	7743242	535	11 24 444 4	16	2
7617460	73	10 51 969 5	613	1	7743242	613	11 28 744 5	28	4
7617460	444	11 89 300 5	635	2	7743242	700	11 89 568 6	18	4
7617460	525	10 51 959 1	626	2	774730714	354	99 23 387 14	12	40
7617461	12	11 29 618 6	673	3	774760214	665	97 05 997 03	1	6
7617461	73	10 51 969 5	600	1	774760314	665	97 05 997 03	4	6
7617461	444	11 89 300 5	633	3	774760414	665	97 05 997 03	3	6
7617461	525	10 51 959 1	623	2	774760514	665	97 05 997 03	2	8
7617461	680	10 51 971 2	700	2	774762314	627	10 51 743 9	11	1
7617494	12	11 29 618 6	678	2	779002114	398	11 27 970 6	43	1
7617494	83	11 24 773 5	303	1	779006601	392	90 01 376 2	89	1
7617520	432	10 28 999 3	51	2	779006901	467	96 93 178 01	85	1
7621780	341	10 51 969 8	7	1	779009008	255	10 13 508 0	8	1
7621780	678	11 26 901 8	14	1	779014014	310	11 24 409 0	65	2
7621827	210	11 92 958 8	36	1	779016201	392	90 01 376 2	88	1
7622060	482	11 26 260 6	712	2	779016414	642	10 55 372 1	57	4
7622060	497	11 26 261 1	712	2	779016501	467	96 93 178 01	84	1
7623374	357	10 51 968 6	31	16	789000701	345	96 96 248 01	34	1
7623541	18	11 28 647 6	204	1	789011714	2	01 38 406 14	13	1
773193414	505	11 23 820 4	41	1	789038114	501	10 56 183 8	15	1
773193414	519	10 58 193 7	23	1	790036914	501	10 56 183 8	12	1
773194314	505	11 23 820 4	40	2	790042214	501	10 56 183 8	5	1
773195214	339	10 51 969 7	317	1	790042514	501	10 56 183 8	2	1
773195214	627	10 51 743 9	317	1	790042914	501	10 56 183 8	6	1
773195614	339	10 51 969 7	460	2	790202014	588	99 23 398 14	10	10
773195614	627	10 51 743 9	460	2	790202014	613	11 28 744 5	10	3
773400308	34	11 24 519 0	73	0.25	790208814	179	10 57 532 2	51	6
773400308	540	11 25 204 2	12	0.62	790212314	65	10 58 163 4	39	2
773400308	582	10 59 863 3	25	0.9	790227714	8	11 29 618 6	32	1
773400314	662	99 10 116 14	22	2	790230014	721	10 51 728 1	9	2
773400508	659	11 27 109 7	18	0.6	790230614	722	59 20 008 14	900	1
773910114	659	11 27 109 7	19	2	790244814	204	11 92 923 6	58	1
773920008	540	11 25 204 2	13	4	790244814	299	11 92 891 3	12	2
773920008	582	10 59 863 3	26	6	790259414	629	10 51 726 2	612	1
773930114	501	10 56 183 8	19	1	790269114	500	10 56 187 5	93	1
773930114	627	10 51 743 9	13	1	790295414	376	99 04 645 14	61	2
773935814	685	11 23 619 7	28	4	790306414	65	10 58 163 4	64	1

Item	Sheet	Assembly	Pos.	Quantity	Item	Sheet	Assembly	Pos.	Quantity
790311914	82	11 24 773 5	30	1	8655016	248	10 14 294 2	105	1
790346614	86	11 24 682 0	120	1	8655016	287	10 12 037 2	109	1
790347014	86	11 24 682 0	330	1	8655023	105	10 11 835 0	118	1
790347114	86	11 24 682 0	550	11	8655023	217	11 38 961 7	104	1
790347214	86	11 24 682 0	560	1	8655032	107	10 11 835 7	119	1
790365114	685	11 23 619 7	29	1	8700012	122	98 89 832	106	1
790386114	3	01 38 406 14	129	1	883203014	176	11 24 113 8	73	2
790403714	86	11 24 682 0	40	1	885040114	501	10 56 183 8	13	1
790403914	86	11 24 682 0	310	1	885045214	501	10 56 183 8	18	1
790407714	74	59 21 041 14	900	1	885380314	500	10 56 187 5	55	1
790407814	688	59 21 042 14	900	1	885391814	500	10 56 187 5	50	1
790411214	3	01 38 406 14	133	1	885392414	500	10 56 187 5	45	1
790413614	21	59 23 090 14	990	1	885400114	501	10 56 183 8	14	1
790444514	376	99 04 645 14	65	1	885602114	501	10 56 183 8	4	1
790453814	10	11 29 618 6	614	1	886002814	204	11 92 923 6	32	1.3
790453814	83	11 24 773 5	648	3	890035314	310	11 24 409 0	59	21
790485314	621	97 08 757 03	5	1	890100814	63	92 65 477 14	10	1
790487114	3	01 38 406 14	137	1	90013762	378	10 51 968 2	10	2
790509714	647	10 52 547 1	12	2	90022085	392	90 01 376 2	15	1
790512314	579	11 28 648 4	5	1	9072435	115	90 77 464	12	1
790512414	579	11 28 648 4	4	1	9072436	115	90 77 464	70	1
790517214	3	01 38 406 14	121	1	9072437	116	90 72 436	10	1
790517214	3	01 38 406 14	122	1	9072438	116	90 72 436	11	1
790519814	65	10 58 163 4	11	2	9072439	116	90 72 436	12	1
790523314	463	11 89 365 0	15	2	9072440	116	90 72 436	13	1
790523314	474	11 89 365 1	15	2	9072633	247	10 13 382 3	14	1
790538014	665	97 05 997 03	9	2	9072904	270	90 72 906	1	1
790545514	19	59 20 707 14	900	1	9072906	215	12 42 545 4	331	1
790545514	20	59 23 006 14	900	1	9072907	270	90 72 906	2	1
790549214	314	11 24 409 1	15	9	9072908	270	90 72 906	3	1
790549314	316	10 57 883 5	9	1	9072969	148	10 12 226 5	13	1
790549314	318	10 57 897 6	9	1	9073189	302	11 41 475 7	13	1
790549314	320	10 57 940 0	11	1	9073190	302	11 41 475 7	11	1
790549314	321	10 56 623 7	11	1	9073827	107	10 11 835 7	15	1
790549314	322	10 56 580 8	9	1	9074307	116	90 72 436	31	1
790550914	316	10 57 883 5	15	1	9074308	116	90 72 436	32	1
790550914	318	10 57 897 6	13	1	9074332	116	90 72 436	33	1
790550914	320	10 57 940 0	4	1	9074418	103	10 11 834 9	4	2
790550914	321	10 56 623 7	4	1	9074798	290	10 11 557 7	3	2
790550914	322	10 56 580 8	13	1	9075894	119	98 89 833	1	1
790562114	210	11 92 958 8	45	2	9076176	145	10 12 226 2	13	1
790563914	447	51 24 059 14	10	1	9076178	145	10 12 226 2	12	2
790579314	18	11 28 647 6	131	15	9076196	139	10 12 224 5	18	1
790579414	18	11 28 647 6	902	1	9076458	214	12 42 545 4	51	1
797027814	685	11 23 619 7	23	1	9076531	297	10 14 297 7	10	2
797029114	316	10 57 883 5	7	1	9076550	297	10 14 297 7	11	1
797029114	318	10 57 897 6	7	1	9076621	261	10 14 588 5	4	1
797029114	320	10 57 940 0	5	1	9077164	285	10 14 622 4	14	1
797029114	321	10 56 623 7	5	1	9077401	148	10 12 226 5	28	1
797029114	322	10 56 580 8	7	1	9077464	114	10 13 975 2	1	2
805091714	604	99 34 387 14	18	1	9078214	134	10 13 802 5	3	1
811202114	105	10 11 835 0	104	1	9078249	216	12 42 545 4	650	1
811202114	114	10 13 975 2	104	1	9078301	216	12 42 545 4	654	1
811202114	226	10 15 529 8	105	1	9078314	215	12 42 545 4	260	1
811202114	271	10 14 286 0	105	1	9078522	237	11 44 800 5	6	2
811208201	141	10 14 131 6	118	1	9079130	291	10 11 912 8	2	1
8627609	226	10 15 529 8	109	1	9079823	215	12 42 545 4	480	1
8655016	107	10 11 835 7	105	1	9079870	214	12 42 545 4	110	6
8655016	108	92 74 731	105	1	9080466	276	10 14 821 7	3	5
8655016	141	10 14 131 6	105	1	9080660	226	10 15 529 8	6	1

Item	Sheet	Assembly	Pos.	Quantity	Item	Sheet	Assembly	Pos.	Quantity
9080911	268	90 78 314	4	1	919017314	662	99 10 116 14	24	1
910353714	579	11 28 648 4	8	2	919022714	662	99 10 116 14	25	1
910353714	613	11 28 744 5	22	2	919023914	500	10 56 187 5	29	1
911108414	484	11 26 260 9	605	1	919058414	535	11 24 444 4	11	1
911256414	44	11 26 995 4	596	1	919058414	625	11 21 552 4	11	1
911292114	460	11 89 300 1	138	1	919126414	693	99 27 747 14	364	1
9132577	282	10 14 737 0	2	4	919126414	693	99 27 747 14	365	1
9132577	296	10 15 028 8	93	1	919127514	76	10 54 545 1	708	1
9140351	283	10 14 013 6	26	1	919140514	42	11 26 995 4	533	1
9144757	239	10 12 653 5	4	1	919143414	173	11 24 113 7	421	1
9144762	240	91 44 757	3	1	919144714	698	11 24 779 0	181	1
914690714	366	99 29 258 14	4	12	919145114	742	11 28 825 7	805	1
914690714	535	11 24 444 4	13	13	919146814	42	11 26 995 4	543	1
914757914	173	11 24 113 7	404	1	919167714	173	11 24 113 7	422	1
914762914	44	11 26 995 4	592	1	919252814	511	11 90 150 9	31	1
914763014	360	10 55 208 5	655	1	919279914	588	99 23 398 14	11	3
914792514	44	11 26 995 4	5022	1	919390814	621	97 08 757 03	1	1
914794514	43	11 26 995 4	575	1	919421714	663	99 31 838 14	8	2
914798914	43	11 26 995 4	551	1	919617914	580	11 28 610 5	1	2
914941914	662	99 10 116 14	13	4	919706714	42	11 26 995 4	527	1
915523714	588	99 23 398 14	12	1	919714914	43	11 26 995 4	581	1
915523714	662	99 10 116 14	12	1	919735014	42	11 26 995 4	524	1
916183314	507	11 23 820 4	78	1	919736714	698	11 24 779 0	185	1
916525114	399	11 27 973 6	31	1	919736714	698	11 24 779 0	186	1
916526414	179	10 57 532 2	13	1	919757114	498	11 26 261 2	635	1
916793914	69	10 56 069 4	1	2	919778814	531	11 22 970 6	902	1
917585714	402	10 55 963 5	51	1	919791614	76	10 54 545 1	706	1
917665814	500	10 56 187 5	31	1	919956014	579	11 28 648 4	2	2
9177947	179	10 57 532 2	28	1	919956114	579	11 28 648 4	3	2
917876214	611	10 57 652 3	10	1	919981214	613	11 28 744 5	23	2
917906414	709	10 55 459 4	3	1	926547714	62	10 57 884 5	10	1
917906414	721	10 51 728 1	4	1	9266085	113	92 78 875	12	1
918245214	174	11 24 113 7	572	1	9266088	113	92 78 875	14	1
918248414	682	11 22 970 9	280	1	9266680	107	10 11 835 7	18	2
918269214	174	11 24 113 7	430	1	9266847	228	10 14 591 9	1	1
918272514	460	11 89 300 1	127	1	9267340	106	92 67 343	10	1
918276114	459	11 89 300 1	113	1	9267341	106	92 67 343	11	1
918276114	459	11 89 300 1	117	1	9267342	106	92 67 343	12	1
918285814	44	11 26 995 4	598	1	9267343	105	10 11 835 0	6	2
918288114	459	11 89 300 1	112	1	9268016	104	10 11 834 9	96	1
918288114	459	11 89 300 1	116	1	9268016	126	92 76 408	96	1
918291914	41	11 26 995 4	429	1	9268423	103	10 11 834 9	13	1
918361414	575	10 57 559 9	41	1	9268441	110	92 73 644	8	3
918361414	609	10 57 651 9	41	1	9268441	141	10 14 131 6	8	5
918365114	34	11 24 519 0	91	1	9268441	147	10 13 803 4	8	5
918539614	357	10 51 968 6	17	1	9271340	265	10 14 736 9	13	1
918585114	65	10 58 163 4	22	2	9271340	299	11 92 891 3	10	1
918678214	627	10 51 743 9	29	1	9273187	104	10 11 834 9	97	1
918805114	76	10 54 545 1	707	1	9273271	248	10 14 294 2	2	2
918810914	44	11 26 995 4	595	1	9273644	103	10 11 834 9	89	1
918819414	390	10 56 178 0	380	1	9273644	109	90 74 418	90	1
918820914	461	11 89 300 1	162	1	9274731	105	10 11 835 0	91	1
918849914	631	10 52 439 2	827	1	9275003	107	10 11 835 7	20	8
918870314	531	11 22 970 6	903	1	927501901	352	93 36 755 01	13	1
918870914	343	99 33 241 14	826	1	927509501	392	90 01 376 2	13	1
918873814	43	11 26 995 4	556	1	927509601	392	90 01 376 2	14	1
918874514	174	11 24 113 7	432	1	927521808	575	10 57 559 9	30	2
918882614	343	99 33 241 14	824	1	927521808	609	10 57 651 9	60	2
918975514	39	10 56 645 8	21	1	9275428	110	92 73 644	76	1
919014814	662	99 10 116 14	23	1	9275428	117	92 75 443	76	1

Item	Sheet	Assembly	Pos.	Quantity	Item	Sheet	Assembly	Pos.	Quantity
9275429	117	92 75 443	72	1	928265514	459	11 89 300 1	111	1
9275443	103	10 11 834 9	85	1	928265514	459	11 89 300 1	115	1
927562201	392	90 01 376 2	1	1	928266514	173	11 24 113 7	403	1
927562301	392	90 01 376 2	5	1	928272714	173	11 24 113 7	411	1
927562601	392	90 01 376 2	20	5	928318214	516	11 23 239 9	802	1
927562801	392	90 01 376 2	25	1	928318214	516	11 23 239 9	807	1
927562901	392	90 01 376 2	30	1	928326514	343	99 33 241 14	825	1
927563901	392	90 01 376 2	65	1	928357214	43	11 26 995 4	585	1
927564001	392	90 01 376 2	70	1	928443714	41	11 26 995 4	522	1
927564101	392	90 01 376 2	85	1	928445414	42	11 26 995 4	536	1
927586201	352	93 36 755 01	12	1	928456714	42	11 26 995 4	526	1
927586201	352	93 36 755 01	27	1	928461114	42	11 26 995 4	525	1
927596701	392	90 01 376 2	40	3	928536514	484	11 26 260 9	606	1
927597201	392	90 01 376 2	35	1	928538414	76	10 54 545 1	704	1
927597301	392	90 01 376 2	45	1	928538414	460	11 89 300 1	139	1
927610201	352	93 36 755 01	15	1	928589814	41	11 26 995 4	431	1
9276385	103	10 11 834 9	11	1	928591114	76	10 54 545 1	703	1
9276408	104	10 11 834 9	98	1	928611014	174	11 24 113 7	435	1
927651401	392	90 01 376 2	50	1	928619114	693	99 27 747 14	360	1
927651501	392	90 01 376 2	55	3	928712614	44	11 26 995 4	597	1
927651701	392	90 01 376 2	60	1	928757814	211	11 92 982 1	200	1
9276860	103	10 11 834 9	37	2	928763814	531	11 22 970 6	908	1
9276860	126	92 76 408	37	2	928763814	531	11 22 970 6	912	1
927693401	392	90 01 376 2	95	1	928764814	42	11 26 995 4	548	1
927739401	352	93 36 755 01	1	1	928765014	41	11 26 995 4	508	1
927739401	352	93 36 755 01	20	1	928815314	502	91 90 239 14	295	1
9278873	113	92 78 875	11	1	928857314	173	11 24 113 7	407	1
9278874	113	92 78 875	10	1	928861314	343	99 33 241 14	823	1
9278875	112	10 11 836 7	1	1	928865914	460	11 89 300 1	154	1
9278876	113	92 78 875	13	1	928865914	461	11 89 300 1	158	1
928003714	461	11 89 300 1	163	1	928868414	173	11 24 113 7	418	1
928009314	41	11 26 995 4	428	1	928872514	459	11 89 300 1	103	1
928010214	41	11 26 995 4	511	1	928872814	459	11 89 300 1	108	1
928010214	41	11 26 995 4	512	1	928880614	173	11 24 113 7	427	1
928010214	41	11 26 995 4	513	1	928885614	43	11 26 995 4	559	1
928010214	41	11 26 995 4	514	1	928950414	360	10 55 208 5	656	1
928014714	531	11 22 970 6	904	1	928973314	460	11 89 300 1	150	1
928018514	42	11 26 995 4	542	1	928973314	460	11 89 300 1	156	1
928020314	42	11 26 995 4	546	1	929376814	76	10 54 545 1	705	1
928029714	531	11 22 970 6	906	1	929399714	461	11 89 300 1	166	1
928029714	531	11 22 970 6	914	1	929414814	43	11 26 995 4	555	1
928032214	42	11 26 995 4	547	1	929443814	211	11 92 982 1	201	1
928044014	390	10 56 178 0	390	1	929443814	631	10 52 439 2	828	1
928110014	43	11 26 995 4	584	1	929467714	460	11 89 300 1	153	1
928113314	390	10 56 178 0	381	1	929467714	460	11 89 300 1	157	1
928121514	531	11 22 970 6	917	1	929473314	43	11 26 995 4	582	1
928123014	43	11 26 995 4	580	1	929478114	173	11 24 113 7	420	1
928130914	200	11 24 972 9	800	1	929796914	629	10 51 726 2	6	1
928130914	200	11 24 972 9	801	1	932037701	346	93 88 500 01	35	1
928137514	459	11 89 300 1	122	1	933675501	345	96 96 248 01	10	1
928137714	76	10 54 545 1	702	1	933676601	352	93 36 755 01	23	1
928152414	459	11 89 300 1	118	1	933676701	352	93 36 755 01	5	1
928166714	531	11 22 970 6	909	1	938585201	392	90 01 376 2	10	1
928166714	531	11 22 970 6	913	1	938849701	345	96 96 248 01	5	1
928169614	460	11 89 300 1	151	1	938850001	345	96 96 248 01	1	1
928169614	461	11 89 300 1	159	1	938850101	346	93 88 500 01	1	1
928183014	41	11 26 995 4	506	1	938850201	346	93 88 500 01	5	1
928204714	682	11 22 970 9	278	1	938858501	353	96 96 543 01	5	1
928209814	459	11 89 300 1	102	1	938858701	353	96 96 543 01	10	2
928209814	459	11 89 300 1	107	1	939347801	392	90 01 376 2	97	1

Item	Sheet	Assembly	Pos.	Quantity	Item	Sheet	Assembly	Pos.	Quantity
939347901	392	90 01 376 2	98	1	949401114	328	11 24 483 7	16	1
939348001	392	90 01 376 2	99	1	949724114	588	99 23 398 14	23	2
939554301	346	93 88 500 01	20	1	949740514	71	10 51 969 4	15	20
939556201	346	93 88 500 01	15	1	949740614	662	99 10 116 14	11	10
939556301	346	93 88 500 01	9	1	949758314	328	11 24 483 7	24	1
939589501	350	50 20 372 01	1	1	949761814	613	11 28 744 5	12	2
939589601	350	50 20 372 01	2	1	949892214	357	10 51 968 6	20	1
939589701	350	50 20 372 01	3	1	949911114	614	95 70 956 14	12	8
939662601	505	11 23 820 4	26	1	949942814	620	99 23 415 14	21	8
9402377	521	11 26 694 5	10	4	949946714	579	11 28 648 4	13	2
942264714	48	10 56 070 1	21	2	949988214	588	99 23 398 14	19	2
942594714	662	99 10 116 14	26	2	950102914	589	99 30 800 14	16	1
943919114	579	11 28 648 4	39	4	950143914	588	99 23 398 14	37	2
943919114	620	99 23 415 14	22	4	950250014	539	99 23 394 14	19	2
943958914	8	11 29 618 6	30	1	950250014	556	10 54 054 8	12	4
943958914	509	10 51 826 1	5	1	950250014	564	10 54 055 1	12	4
944112203	392	90 01 376 2	51	1	950250014	571	10 54 055 5	12	4
944137814	82	11 24 773 5	24	1	950250014	586	10 54 056 7	12	6
944169103	392	90 01 376 2	36	1	950387314	642	10 55 372 1	59	10
944215103	394	92 76 934 01	1	1	950411414	620	99 23 415 14	13	4
944228903	392	90 01 376 2	16	1	950490414	550	11 28 397 7	11	1
944378403	467	96 93 178 01	40	1	950490414	551	11 28 397 8	11	1
944378903	467	96 93 178 01	60	1	950581614	517	11 28 726 4	10	1
944403703	467	96 93 178 01	8	1	950610714	683	99 35 606 14	10	2
944403803	467	96 93 178 01	10	1	950663614	71	10 51 969 4	17	2
944403903	467	96 93 178 01	15	1	950989914	613	11 28 744 5	18	1
944404303	467	96 93 178 01	18	5	953305103	662	99 10 116 14	27	1
944404403	468	94 44 043 03	1	1	953466003	180	10 58 017 0	10	1
944404503	467	96 93 178 01	20	1	953580303	438	99 18 041 14	10	1
944404603	467	96 93 178 01	25	1	954229003	330	11 24 483 7	101	1
944404803	467	96 93 178 01	28	3	954372503	476	11 31 390 8	14	4
944404903	469	94 44 048 03	1	1	954373603	463	11 89 365 0	31	2
944405203	467	96 93 178 01	30	1	954373603	474	11 89 365 1	31	2
944405903	467	96 93 178 01	70	1	954398703	6	11 24 047 9	60	2
944406203	467	96 93 178 01	75	1	954398803	579	11 28 648 4	15	2
944406403	467	96 93 178 01	35	1	954432003	493	11 22 050 0	17	10
944406503	467	96 93 178 01	38	3	954432003	499	11 22 050 1	17	10
944406603	470	94 44 065 03	1	1	954485303	330	11 24 483 7	64	1
944406703	467	96 93 178 01	65	1	954486503	493	11 22 050 0	18	6
944434703	467	96 93 178 01	48	3	954486503	499	11 22 050 1	18	6
944434903	467	96 93 178 01	50	1	954560603	519	10 58 193 7	15	2
944672614	8	11 29 618 6	42	1	954584908	463	11 89 365 0	17	144
944813514	82	11 24 773 5	25	1	954584908	474	11 89 365 1	17	144
946293614	8	11 29 618 6	9	1	954598503	328	11 24 483 7	12	2
946294214	8	11 29 618 6	25	1	954598503	339	10 51 969 7	13	1
947084514	337	99 29 803 14	22	12	956009714	328	11 24 483 7	10	1
9477429	114	10 13 975 2	18	1	956009714	505	11 23 820 4	35	2
9477439	105	10 11 835 0	13	2	956009714	547	11 28 725 5	11	2
948282314	67	10 56 067 3	6	1	956009714	615	11 28 908 0	11	2
948773814	538	99 14 137 14	5	16	956033214	580	11 28 610 5	3	2
948959414	614	95 70 956 14	14	8	956049414	662	99 10 116 14	21	4
948959414	620	99 23 415 14	19	6	956213814	588	99 23 398 14	22	1
948967314	583	11 28 357 6	3	4	956215014	620	99 23 415 14	33	3
949174814	614	95 70 956 14	15	2	956240114	613	11 28 744 5	26	2
949196514	366	99 29 258 14	8	2	956266614	537	91 90 584 14	1	1
949341514	8	11 29 618 6	45	1	956266714	537	91 90 584 14	2	1
949351814	685	11 23 619 7	10	1	956266814	537	91 90 584 14	3	1
949352914	366	99 29 258 14	12	4	956274314	8	11 29 618 6	28	4
949388414	621	97 08 757 03	2	2	956378214	505	11 23 820 4	27	2
949389914	535	11 24 444 4	12	2	956385814	204	11 92 923 6	39	2

Item	Sheet	Assembly	Pos.	Quantity	Item	Sheet	Assembly	Pos.	Quantity
956385914	613	11 28 744 5	21	2	959571914	679	10 51 971 3	14	2
956418614	620	99 23 415 14	17	2	959576314	417	10 22 645 4	100	1
956507814	613	11 28 744 5	31	1	959712214	70	99 23 451 14	1	2
956507814	711	11 23 626 6	10	1	959712714	733	10 52 293 0	21	1
956711314	679	10 51 971 3	23	8	959799614	679	10 51 971 3	27	8
956802414	588	99 23 398 14	13	1	959835714	706	11 89 568 8	12	4
956802514	588	99 23 398 14	14	1	959841114	535	11 24 444 4	39	4
956803214	588	99 23 398 14	32	2	959841814	535	11 24 444 4	25	2
956803414	588	99 23 398 14	16	2	959866614	366	99 29 258 14	7	1
956803514	588	99 23 398 14	24	2	959869314	366	99 29 258 14	3	3
956803714	588	99 23 398 14	25	2	959912014	337	99 29 803 14	11	6
956805314	588	99 23 398 14	17	2	959912114	337	99 29 803 14	12	6
956805414	588	99 23 398 14	18	2	959912214	337	99 29 803 14	13	6
956809314	588	99 23 398 14	36	2	959912514	337	99 29 803 14	15	12
956809514	588	99 23 398 14	21	1	959912614	337	99 29 803 14	16	6
956810314	588	99 23 398 14	26	1	959912714	337	99 29 803 14	17	6
956847814	580	11 28 610 5	2	2	959921514	539	99 23 394 14	12	6
957056314	663	99 31 838 14	4	4	959921514	586	10 54 056 7	17	2
957095614	607	99 34 394 14	12	1	967216103	627	10 51 743 9	14	2
957336914	579	11 28 648 4	17	1	967216303	632	96 72 161 03	2	1
957831614	336	10 52 656 0	10	4	967217003	632	96 72 161 03	1	1
958097914	479	99 26 718 14	10	2	967313703	328	11 24 483 7	25	1
958214314	583	11 28 357 6	2	1	968523914	65	10 58 163 4	27	1
958280214	507	11 23 820 4	65	2	969317801	463	11 89 365 0	6	1
958280214	557	10 53 216 2	12	4	969317801	474	11 89 365 1	6	1
958280214	565	10 53 216 3	12	4	969329314	8	11 29 618 6	40	1
958280214	572	10 53 216 4	12	4	969392201	467	96 93 178 01	45	1
958280214	579	11 28 648 4	11	4	969624801	339	10 51 969 7	10	1
958280214	620	99 23 415 14	16	4	969641401	353	96 96 543 01	40	1
958304714	539	99 23 394 14	20	2	969641501	353	96 96 543 01	50	1
958339514	579	11 28 648 4	7	4	969654301	345	96 96 248 01	20	1
958339514	620	99 23 415 14	12	4	969655301	353	96 96 543 01	1	1
958339714	614	95 70 956 14	13	4	970588503	6	11 24 047 9	61	2
958471514	316	10 57 883 5	17	1	970599703	3	01 38 406 14	619	1
958471514	318	10 57 897 6	17	1	970720403	581	99 06 461 14	970	1
958471514	320	10 57 940 0	6	1	970726703	493	11 22 050 0	19	4
958471514	321	10 56 623 7	6	1	970726703	499	11 22 050 1	19	4
958471514	322	10 56 580 8	14	1	970785703	398	11 27 970 6	44	1
958471614	316	10 57 883 5	18	1	970827603	366	99 29 258 14	9	1
958471614	318	10 57 897 6	18	1	970831503	505	11 23 820 4	14	2
958471614	320	10 57 940 0	7	1	970854303	579	11 28 648 4	16	2
958471614	321	10 56 623 7	7	1	970855603	538	99 14 137 14	6	2
958471614	322	10 56 580 8	15	1	970857103	308	11 24 409 0	32	1
958478414	310	11 24 409 0	56	2	970859103	535	11 24 444 4	40	4
958478414	324	10 54 591 0	10	10	970875703	604	99 34 387 14	13	1
958478414	479	99 26 718 14	15	4	970901603	662	99 10 116 14	14	2
958478414	645	11 24 575 5	5	2	970961303	613	11 28 744 5	11	3
958552214	614	95 70 956 14	11	2	970961303	662	99 10 116 14	19	1
958554414	613	11 28 744 5	13	2	971230303	642	10 55 372 1	60	10
958556014	613	11 28 744 5	16	1	971303203	505	11 23 820 4	34	1
958556114	613	11 28 744 5	14	2	971303203	547	11 28 725 5	10	1
958556214	613	11 28 744 5	15	2	971304903	472	99 08 357 14	1	2
958556314	620	99 23 415 14	23	4	971323803	662	99 10 116 14	28	1
958775914	620	99 23 415 14	11	2	971333403	463	11 89 365 0	13	1
958904614	613	11 28 744 5	17	1	971333403	474	11 89 365 1	13	1
958908914	519	10 58 193 7	17	1	971333503	463	11 89 365 0	20	3
959001414	366	99 29 258 14	10	1	971333503	474	11 89 365 1	20	3
959019014	52	10 56 073 2	11	3	971361703	357	10 51 968 6	19	1
959465714	308	11 24 409 0	38	2	971363403	507	11 23 820 4	96	1
959465714	724	11 93 621 2	17	1	971460103	4	01 38 406 14	651	1

Item	Sheet	Assembly	Pos.	Quantity	Item	Sheet	Assembly	Pos.	Quantity
971508203	617	10 55 753 7	10	1	990835714	474	11 89 365 1	40	1
971511703	618	10 55 757 6	10	1	990870614	3	01 38 406 14	555	1
979323301	352	93 36 755 01	30	1	990870614	6	11 24 047 9	40	1
979896808	198	11 24 114 3	30	2	990920514	604	99 34 387 14	10	1
981809914	4	01 38 406 14	999	1	990929514	607	99 34 394 14	10	1
981953714	4	01 38 406 14	992	1	990929614	605	99 09 205 14	10	1
981967114	630	51 02 322 14	990	1	990954814	505	11 23 820 4	31	2
9874345	6	11 24 047 9	12	1	991011614	3	01 38 406 14	605	1
9881114	107	10 11 835 7	33	2	991011714	662	99 10 116 14	10	1
9881609	141	10 14 131 6	7	2	991011914	662	99 10 116 14	40	2
9881609	146	10 13 803 3	8	2	991012214	662	99 10 116 14	41	2
9881609	147	10 13 803 4	7	2	991012214	664	99 10 125 14	2	1
9882207	103	10 11 834 9	15	2	991012514	663	99 31 838 14	2	4
9882207	126	92 76 408	15	2	991012614	664	99 10 125 14	1	1
9884402	104	10 11 834 9	95	1	991109014	682	11 22 970 9	282	1
9885628	124	92 68 016	17	1	991109014	682	11 22 970 9	283	1
9885660	105	10 11 835 0	16	2	991139814	173	11 24 113 7	401	1
9885661	105	10 11 835 0	17	2	991168714	41	11 26 995 4	509	1
9885924	118	98 89 984	39	1	991170814	360	10 55 208 5	652	1
9885924	121	98 89 983	39	1	991194914	174	11 24 113 7	628	1
9885937	135	10 13 802 6	29	1	991195514	631	10 52 439 2	367	1
9886591	243	10 12 948 0	6	1	991198814	516	11 23 239 9	810	1
9886756	243	10 12 948 0	7	1	991198814	516	11 23 239 9	811	1
9887035	119	98 89 833	2	1	991205314	631	10 52 439 2	364	1
9887828	105	10 11 835 0	14	2	991209514	44	11 26 995 4	5020	1
9887948	138	10 14 360 7	14	2	991216914	173	11 24 113 7	405	1
9888133	114	10 13 975 2	19	1	991242714	531	11 22 970 6	915	1
9889809	114	10 13 975 2	15	1	991253814	43	11 26 995 4	579	1
9889809	118	98 89 984	15	1	991276414	460	11 89 300 1	136	1
9889809	121	98 89 983	15	1	991276414	460	11 89 300 1	144	1
9889831	118	98 89 984	1	9	991285814	531	11 22 970 6	918	1
9889831	121	98 89 983	1	1	991312114	460	11 89 300 1	152	1
9889832	121	98 89 983	2	1	991312114	460	11 89 300 1	155	1
9889833	118	98 89 984	2	1	991375814	44	11 26 995 4	587	1
9889929	120	98 89 988	1	1	991384314	390	10 56 178 0	388	1
9889930	120	98 89 988	2	1	991390514	174	11 24 113 7	570	1
9889977	104	10 11 834 9	93	1	991391814	484	11 26 260 9	602	1
9889983	104	10 11 834 9	94	1	991413714	535	11 24 444 4	32	1
9889984	104	10 11 834 9	92	1	991413814	538	99 14 137 14	1	1
9889988	118	98 89 984	14	1	991487414	8	11 29 618 6	26	1
9889988	121	98 89 983	14	1	991528514	43	11 26 995 4	586	1
990038114	43	11 26 995 4	583	1	991547014	173	11 24 113 7	419	1
990045814	460	11 89 300 1	135	1	991563114	516	11 23 239 9	812	1
990045814	460	11 89 300 1	145	1	991563114	516	11 23 239 9	817	1
990053014	173	11 24 113 7	408	1	991587514	174	11 24 113 7	552	1
990055814	693	99 27 747 14	361	1	991606114	6	11 24 047 9	63	1
990055914	693	99 27 747 14	362	1	991804114	437	10 51 969 6	13	1
990443514	316	10 57 883 5	8	2	991867414	8	11 29 618 6	37	1
990443514	318	10 57 897 6	8	2	991873614	535	11 24 444 4	43	4
990443514	320	10 57 940 0	3	2	991961214	460	11 89 300 1	137	1
990443514	321	10 56 623 7	3	2	991964414	173	11 24 113 7	406	1
990443514	322	10 56 580 8	8	2	992081114	402	10 55 963 5	56	1
990464514	374	99 04 941 14	10	1	992258514	43	11 26 995 4	569	1
990494114	355	10 51 969 1	2	1	992261314	43	11 26 995 4	577	1
990627014	582	10 59 863 3	23	1	992261414	41	11 26 995 4	520	1
990646114	573	11 24 133 3	13	1	992273614	698	11 24 779 0	180	1
990646114	607	99 34 394 14	15	1	992296514	682	11 22 970 9	279	1
990706901	57	10 51 963 1	10	1	992298714	44	11 26 995 4	591	1
990759714	706	11 89 568 8	10	4	992338614	2	01 38 406 14	18	1
990835714	463	11 89 365 0	40	1	992338714	2	01 38 406 14	24	1

Item	Sheet	Assembly	Pos.	Quantity	Item	Sheet	Assembly	Pos.	Quantity
992338914	2	01 38 406 14	38	1	993560614	679	10 51 971 3	26	4
992339414	533	11 24 165 1	11	1	993623814	343	99 33 241 14	822	1
992339814	3	01 38 406 14	82	1	993643514	173	11 24 113 7	409	1
992341514	604	99 34 387 14	12	1	993657714	41	11 26 995 4	516	1
992345114	6	11 24 047 9	50	1	993685614	498	11 26 261 2	633	1
992415314	657	99 24 978 14	10	1	993694214	173	11 24 113 7	382	1
992497814	656	11 21 529 8	17	1	993734014	42	11 26 995 4	535	1
992504214	516	11 23 239 9	813	1	993751514	360	10 55 208 5	654	1
992511514	484	11 26 260 9	604	1	993758914	698	11 24 779 0	182	1
992519014	44	11 26 995 4	594	1	993758914	698	11 24 779 0	183	1
992552014	390	10 56 178 0	389	1	993758914	698	11 24 779 0	188	1
992564614	460	11 89 300 1	131	1	993758914	698	11 24 779 0	189	1
992564614	460	11 89 300 1	143	1	993759614	710	10 53 635 2	651	1
992569114	43	11 26 995 4	557	1	993774614	42	11 26 995 4	537	1
992671814	478	99 23 389 14	1	2	993775014	44	11 26 995 4	5021	1
992741214	335	99 27 572 14	10	1	993856014	575	10 57 559 9	40	1
992751514	679	10 51 971 3	18	2	994001014	627	10 51 743 9	28	1
992757214	334	99 23 386 14	10	1	994460114	42	11 26 995 4	545	1
992757514	336	10 52 656 0	11	4	994465914	41	11 26 995 4	519	1
992774714	685	11 23 619 7	4	1	994486214	531	11 22 970 6	900	1
992835314	173	11 24 113 7	400	1	994486214	531	11 22 970 6	901	1
992837314	693	99 27 747 14	367	1	994486214	531	11 22 970 6	910	1
992857714	693	99 27 747 14	366	1	994572314	621	97 08 757 03	7	1
992879314	498	11 26 261 2	634	1	994905314	498	11 26 261 2	636	1
992890714	211	11 92 982 1	203	1	995006114	43	11 26 995 4	578	1
992893114	516	11 23 239 9	803	1	995027514	42	11 26 995 4	532	1
992921714	463	11 89 365 0	29	2	995060114	41	11 26 995 4	521	1
992921714	474	11 89 365 1	29	2	995082614	390	10 56 178 0	382	1
992925814	357	10 51 968 6	11	1	995085214	460	11 89 300 1	133	1
992925914	357	10 51 968 6	12	1	995085214	460	11 89 300 1	134	1
992938614	368	99 33 537 14	4	1	995174014	531	11 22 970 6	905	1
992938814	368	99 33 537 14	3	4	995175314	682	11 22 970 9	281	1
992938914	368	99 33 537 14	1	1	995176314	42	11 26 995 4	538	1
992939214	368	99 33 537 14	2	1	995180714	173	11 24 113 7	416	1
992943414	368	99 33 537 14	5	1	995207914	42	11 26 995 4	540	1
992958814	541	11 28 594 7	10	4	995219914	460	11 89 300 1	140	1
992958814	559	11 28 619 1	10	6	995226814	698	11 24 779 0	184	1
992958814	566	11 28 653 4	10	6	995226814	698	11 24 779 0	187	1
992980314	334	99 23 386 14	13	1	995240114	461	11 89 300 1	167	1
992982314	337	99 29 803 14	14	6	995263914	173	11 24 113 7	425	1
993080014	588	99 23 398 14	15	2	995264214	43	11 26 995 4	566	1
993183814	3	01 38 406 14	616	1	995285414	631	10 52 439 2	361	1
993204614	459	11 89 300 1	104	1	995421014	173	11 24 113 7	402	1
993204614	459	11 89 300 1	109	1	995437214	459	11 89 300 1	119	1
993213714	360	10 55 208 5	653	1	995440614	43	11 26 995 4	576	1
993226114	516	11 23 239 9	800	1	995512314	173	11 24 113 7	410	1
993226114	516	11 23 239 9	801	1	995537614	211	11 92 982 1	202	1
993227714	710	10 53 635 2	650	1	995830614	738	10 57 089 4	804	1
993309414	607	99 34 394 14	3	1	995865114	531	11 22 970 6	907	1
993324114	339	10 51 969 7	4	1	995865114	531	11 22 970 6	911	1
993352014	642	10 55 372 1	53	8	995943114	484	11 26 260 9	600	1
993353714	367	99 29 259 14	1	1	995943514	174	11 24 113 7	619	1
993360714	663	99 31 838 14	1	4	995943514	484	11 26 260 9	619	1
993372514	620	99 23 415 14	10	1	995943614	174	11 24 113 7	620	1
993419814	507	11 23 820 4	80	2	995943614	484	11 26 260 9	620	1
993430014	620	99 23 415 14	20	1	995943714	498	11 26 261 2	628	1
993432414	620	99 23 415 14	14	1	995943814	174	11 24 113 7	629	1
993438714	3	01 38 406 14	180	1	995943814	498	11 26 261 2	629	1
993439414	604	99 34 387 14	11	1	995944014	498	11 26 261 2	631	1
993522914	588	99 23 398 14	20	1	995944114	498	11 26 261 2	632	1

Item	Sheet	Assembly	Pos.	Quantity
995944214	390	10 56 178 0	384	1
995944314	390	10 56 178 0	387	1
995944414	390	10 56 178 0	391	1
995951214	390	10 56 178 0	392	1
995951314	360	10 55 208 5	650	1
995951414	360	10 55 208 5	651	1
995959114	174	11 24 113 7	916	1
995961914	173	11 24 113 7	424	1
995962014	41	11 26 995 4	426	1
995972114	41	11 26 995 4	500	1
995972214	41	11 26 995 4	501	1
995972314	41	11 26 995 4	502	1
995972414	41	11 26 995 4	503	1
995972514	174	11 24 113 7	504	1
995972614	174	11 24 113 7	505	1
995972814	41	11 26 995 4	510	1
995972914	41	11 26 995 4	515	1
995973014	41	11 26 995 4	518	1
995973214	42	11 26 995 4	523	1
995973514	42	11 26 995 4	530	1
995973614	42	11 26 995 4	531	1
995973714	42	11 26 995 4	539	1
995973814	41	11 26 995 4	517	1
995974114	42	11 26 995 4	550	1
995974214	43	11 26 995 4	558	1
995974314	174	11 24 113 7	560	1
995974414	43	11 26 995 4	561	1
995974614	43	11 26 995 4	562	1
995974714	43	11 26 995 4	563	1
995974814	43	11 26 995 4	564	1
995974914	43	11 26 995 4	565	1
995976414	44	11 26 995 4	5023	1
995976414	44	11 26 995 4	5024	1
995976514	44	11 26 995 4	5025	1
995976514	44	11 26 995 4	5026	1
995991314	498	11 26 261 2	630	1
996000214	459	11 89 300 1	120	1
996026214	459	11 89 300 1	121	1
996026214	460	11 89 300 1	129	1
996026214	484	11 26 260 9	601	1
996037814	42	11 26 995 4	528	1
996037914	42	11 26 995 4	529	1
996038114	390	10 56 178 0	377	1
996038214	390	10 56 178 0	383	1
996084314	461	11 89 300 1	161	1
996084314	461	11 89 300 1	164	1
996084614	459	11 89 300 1	100	1
996084614	459	11 89 300 1	105	1
996087014	459	11 89 300 1	101	1
996087014	459	11 89 300 1	106	1
996089814	459	11 89 300 1	124	1
996204514	459	11 89 300 1	123	1
996204614	459	11 89 300 1	126	1
996204714	460	11 89 300 1	141	1
996204814	461	11 89 300 1	160	1
996204814	461	11 89 300 1	165	1
996367614	484	11 26 260 9	603	1
996450714	460	11 89 300 1	130	1
996450714	460	11 89 300 1	142	1
996459514	173	11 24 113 7	412	1
996459714	174	11 24 113 7	434	1
996466614	41	11 26 995 4	507	1
996466814	42	11 26 995 4	534	1
996467014	43	11 26 995 4	567	1
996467114	44	11 26 995 4	590	1
996625314	343	99 33 241 14	820	1
996625414	343	99 33 241 14	821	1
996735814	173	11 24 113 7	413	1
996770614	174	11 24 113 7	822	1
996770714	206	11 26 949 8	823	1
996770814	206	11 26 949 8	824	1
996771014	206	11 26 949 8	826	1
996771114	206	11 26 949 8	827	1
996778614	42	11 26 995 4	541	1
996779514	173	11 24 113 7	391	1
996779614	173	11 24 113 7	392	1
996779714	200	11 24 972 9	803	1
996848514	41	11 26 995 4	415	1
996972614	460	11 89 300 1	132	1
996991514	459	11 89 300 1	110	1
996991514	459	11 89 300 1	114	1
997040201	353	96 96 543 01	25	1
997058014	174	11 24 113 7	825	1
999832101	352	93 36 755 01	25	1

Description	Item	Pos.	Quantity	Sheet	Assembly	Description
12-SIDED SCREW M10X30 X5	10132558	4	4	283	10 14 013 6	EXHAUST TC MOUNTING
A-FRAME 1 ASSEMBLY UNIT	11241651	63	1	2	01 38 406 14	LR 1300 SX
A-FRAME 1 CPL	11244444	10	1	533	11 24 165 1	A-FRAME 1 ASSEMBLY UNIT
A-FRAME CPL	990920514	10	1	604	99 34 387 14	NEEDLE ADD-ON PARTS
A-FRAME ELECTRICS	10531207	3	1	535	11 24 444 4	A-FRAME 1 CPL
A-FRAME ERECTION CYL INST	10519694	51	1	6	11 24 047 9	SUPERSTRUCTURE CPL
A-FRAME ERECTION HYDR	10519695	2	1	71	10 51 969 4	A-FRAME ERECTION CYL INST
A-FRAME ST.CONST.	990929614	10	1	605	99 09 205 14	A-FRAME CPL
ACCESS CPL	10501795	32	6	463	11 89 365 0	CRAWLER CARRIER RIGHT CP
ACCESS CPL	10501795	32	6	474	11 89 365 1	CRAWLER CARRIER LEFT CP
ACCESS LADDER CPL RFK	11237407	583	1	3	01 38 406 14	LR 1300 SX
ACCESSORIES AIR COMPRES	11414757	4	1	299	11 92 891 3	COMPRESSOR RFK
ACTUATING UNIT	592054714	95	1	376	99 04 645 14	DRIVE
ADAPTER FRAME	10599215	32	1	404	10 51 907 9	CONTROL STAND LEFT
ADAPTER PLATE	11220468	5	1	723	11 22 037 2	FOOT PEDAL EL INSTALLATIO
ADAPTER PLATE	11223693	5	2	414	11 22 369 1	FOOT PEDAL EL INSTALLATIO
ADAPTER PLATE	959571914	14	2	679	10 51 971 3	SELF-LOADING SYSTEM RFK
ADAPTOR	10121091	1	1	109	90 74 418	REGULATING VALVE
ADAPTOR	11221276	5	1	155	11 22 126 8	PUMP ELEMENT
ADAPTOR	570950308	1	1	160	70 19 834	ADAPTOR
ADAPTOR	7019834	4	1	155	11 22 126 8	PUMP ELEMENT
ADAPTOR 5X84X90 PA 6	10549545	53	1	398	11 27 970 6	CABIN CPL
ADD FLOODLIGHT EL RFK	10593712	3	1	647	10 52 547 1	ADDNL.FLOODLIGHT SUPERS
ADD-ON FLANGE	11250972	30	1	86	11 24 682 0	DISTRIBUTOR GEARBOX
ADD-ON FLANGE	11250974	70	3	86	11 24 682 0	DISTRIBUTOR GEARBOX
ADD-ON FLANGE	11290845	80	1	86	11 24 682 0	DISTRIBUTOR GEARBOX
ADD-ON FLANGE	790403714	40	1	86	11 24 682 0	DISTRIBUTOR GEARBOX
ADD-ON HOUSING	10195680	31	1	39	10 56 645 8	TERMINAL BOX
ADD-ON HOUSING	605613701	41	1	39	10 56 645 8	TERMINAL BOX
ADD-ON HOUSING	693149814	45	1	39	10 56 645 8	TERMINAL BOX
ADD-ON PARTS DIESEL ENGIN	11241139	20	1	80	11 92 885 2	CENTRAL POWER UNIT CPL
ADD-ON PRELIMINARY FUEL F	10550911	10	1	199	11 24 114 4	FUEL SYSTEM
ADDITIONAL BALLAST	10349439	12	6	335	99 27 572 14	BASEPLATE CPL
ADDITIONAL BALLAST	10349440	11	8	335	99 27 572 14	BASEPLATE CPL
ADDNL.FLOODLIGHT SUPERS	10525471	560	1	3	01 38 406 14	LR 1300 SX
ADHESIVE LABEL	10518558	1	1	631	10 52 439 2	HOSE LIST
ADHESIVE LABEL	10518558	2	5	631	10 52 439 2	HOSE LIST
ADHESIVE LABEL	10518558	1	3	693	99 27 747 14	HOSE LIST
ADHESIVE LABEL	10518558	1	2	710	10 53 635 2	HOSE LIST
ADHESIVE SIGN	11228726	20	1	669	10 55 280 7	GRATING CPL
ADHESIVE SIGN	11228726	17	1	676	10 55 514 8	FALL PROTECTION RFK
ADHESIVE SIGN	11228734	23	1	667	10 55 601 0	FALL PROTECTION RFK
ADHESIVE SIGN	11228734	16	1	670	11 29 473 7	GANGWAY INTERM. SECTION
ADHESIVE SIGN	11228734	17	1	674	11 29 474 2	GANGWAY INTERM. SECTION
ADHESIVE SIGN	11228734	19	1	675	11 29 474 3	GANGWAY INTERM. SECTION
ADHESIVE SIGN	11228734	18	1	676	10 55 514 8	FALL PROTECTION RFK
ADJUSTING NUT	944403703	8	1	467	96 93 178 01	TRACTION DRIVE
ADJUSTING PIECE	10287665	2	1	165	11 21 593 6	PUMP ELEMENT
ADJUSTING PISTON	11219925	1	1	89	11 21 990 5	ADJUSTMENT
ADJUSTING SCREW	10599567	6	1	97	11 06 730 4	SHUTDOWN VALVE
ADJUSTING SCREW M10X1	10012225	5	2	237	11 44 800 5	ROCKER ARM BRACKET PRE
ADJUSTMENT	11219905	2	1	87	10 53 430 7	V PUMP
ADJUSTMENT	11224738	2	1	447	51 24 059 14	VARIABLE DISPLACEMENT MO
AERATION FILTER	11280868	12	1	53	10 56 073 3	FUEL TANK CPL
AERATION FILTER	510690614	13	1	48	10 56 070 1	TANK HYDR CPL
AGGREGATE DIESEL ENGINE	11928855	6	1	2	01 38 406 14	LR 1300 SX
AGGREGATE SUPPORT PRE-A	10148254	1	1	219	10 14 768 6	POWER UNIT SUPPORT ATT
AIR COMPRESSOR	11417370	3	1	299	11 92 891 3	COMPRESSOR RFK
AIR COMPRESSOR PRE-ASSY	11417369	1	1	300	11 41 737 0	AIR COMPRESSOR
AIR COND. COMPRESSOR A	10142860	340	1	215	12 42 545 4	DIESEL ENGINE

Description	Item	Pos.	Quantity	Sheet	Assembly	Description
AIR CONDITIONER RFK	11940910	124	1	416	10 35 008 0	CABIN
AIR CONDITIONING	11939346	1	1	426	11 94 091 0	AIR CONDITIONER RFK
AIR CONDITIONING COMPRES	10116767	1	1	271	10 14 286 0	AIR COND. COMPRESSOR A
AIR CONDITIONING UNIT RFK	11936212	724	1	4	01 38 406 14	LR 1300 SX
AIR DRYER	11837214	6	1	210	11 92 958 8	AIR DUCT CPL
AIR DUCT CPL	11929588	61	1	80	11 92 885 2	CENTRAL POWER UNIT CPL
AIR FILTER	11246790	10	1	194	11 92 922 0	SUCTION UNIT AIR
AIR FILTER HOLDER	11946424	390	1	428	11 93 934 6	AIR CONDITIONING
AIR INTAKE ASSEMBLY	10147364	224	1	215	12 42 545 4	DIESEL ENGINE
AIR INTAKE PIPE ASS.	10147366	220	1	215	12 42 545 4	DIESEL ENGINE
AIR NOZZLE	592289314	52	1	415	10 35 008 0	CABIN
AIR PIPE	11621764	25	4.5	204	11 92 923 6	ASSEMBLY INSTAL.
AIR PIPE	11621764	15	0.5	210	11 92 958 8	AIR DUCT CPL
AIR SUCTION PIPE	11415782	1	1	264	10 14 736 6	AIR INTAKE PIPE ASS.
AIR TANK	502919808	5	1	210	11 92 958 8	AIR DUCT CPL
ANCHORING ROD	10532825	10	2	557	10 53 216 2	ANCHORING ROD CPL
ANCHORING ROD	10532826	10	2	565	10 53 216 3	ANCHORING ROD CPL
ANCHORING ROD	10532827	10	2	572	10 53 216 4	ANCHORING ROD CPL
ANCHORING ROD	10540549	57	2	505	11 23 820 4	PIVOT PIECE CPL
ANCHORING ROD	10540549	10	2	556	10 54 054 8	ANCHORING ROD CPL
ANCHORING ROD	10540552	10	2	564	10 54 055 1	ANCHORING ROD CPL
ANCHORING ROD	10540560	10	2	571	10 54 055 5	ANCHORING ROD CPL
ANCHORING ROD	10540569	10	2	586	10 54 056 7	ANCHORING ROD CPL
ANCHORING ROD	385025414	10	2	614	95 70 956 14	ANCHORING ROD CPL
ANCHORING ROD	958552214	11	2	614	95 70 956 14	ANCHORING ROD CPL
ANCHORING ROD	958556314	23	4	620	99 23 415 14	STAY ROPE ROD
ANCHORING ROD	958775914	11	2	620	99 23 415 14	STAY ROPE ROD
ANCHORING ROD CPL	10532162	13	1	545	11 94 172 5	ASSEMBLY UNIT
ANCHORING ROD CPL	10532163	13	1	561	11 94 259 4	ASSEMBLY UNIT
ANCHORING ROD CPL	10532164	13	1	568	11 94 450 2	ASSEMBLY UNIT
ANCHORING ROD CPL	10540548	12	1	545	11 94 172 5	ASSEMBLY UNIT
ANCHORING ROD CPL	10540551	12	1	561	11 94 259 4	ASSEMBLY UNIT
ANCHORING ROD CPL	10540555	12	1	568	11 94 450 2	ASSEMBLY UNIT
ANCHORING ROD CPL	10540567	14	1	573	11 24 133 3	BOOM HEAD CPL
ANCHORING ROD CPL	957095614	12	1	607	99 34 394 14	TIP BOOM CPL
ANCHORING ROD CPL	992339414	11	1	533	11 24 165 1	A-FRAME 1 ASSEMBLY UNIT
ANEMOMETER CPL	990646114	13	1	573	11 24 133 3	BOOM HEAD CPL
ANEMOMETER CPL	990646114	15	1	607	99 34 394 14	TIP BOOM CPL
ANEMOMETER EL RFK	970720403	970	1	581	99 06 461 14	ANEMOMETER CPL
ANGLE	10563082	25	1	308	11 24 409 0	PANELLING SUPERSTR. INSTA
ANGLE	10574364	18	2	314	11 24 409 1	COVERS
ANGLE	11244498	53	1	310	11 24 409 0	PANELLING SUPERSTR. INSTA
ANGLE	11263757	18	1	176	11 24 113 8	MOTOR BEARING CPL
ANGLE	11290852	230	1	86	11 24 682 0	DISTRIBUTOR GEARBOX
ANGLE INDICATION	919058414	11	1	535	11 24 444 4	A-FRAME 1 CPL
ANGLE INDICATION	919058414	11	1	625	11 21 552 4	ANGLE INDICATION RFK
ANGLE INDICATION RFK	11215524	510	1	3	01 38 406 14	LR 1300 SX
ANGLE TRANSMITTER	11286324	10	1	511	11 90 150 9	PIVOT PIECE EL
ANGLE TRANSMITTER	11286324	10	1	574	10 53 141 3	BOOM HEAD EL
ANTENNA	11645490	76	1	399	11 27 973 6	CABIN EL
ANTI-SLIP SURFACE	11258244	990	1	6	11 24 047 9	SUPERSTRUCTURE CPL
ANTITHEFT LOCK	10663904	32	1	410	11 26 095 7	CONTROL STAND RIGHT
ARM REST LEFT	7024982	90	1	430	10 22 506 8	OPERATOR SEAT
ARM REST RIGHT	7024983	91	1	430	10 22 506 8	OPERATOR SEAT
ASSEMBLY INSTAL.	11929236	60	1	80	11 92 885 2	CENTRAL POWER UNIT CPL
ASSEMBLY UNIT	11940878	10	1	554	11 94 087 6	TRANSPORT LASHING
ASSEMBLY UNIT	11941725	10	1	544	11 24 570 7	INTERMEDIATE PIECE ASSE
ASSEMBLY UNIT	11942594	10	1	560	11 24 571 3	INTERMEDIATE PIECE ASSE
ASSEMBLY UNIT	11944502	10	1	567	11 24 571 9	INTERMEDIATE PIECE ASSE
ATTACHABLE SLEEVE HOUSIN	602209714	93	1	402	10 55 963 5	SWITCH CABINET X1

Description	Item	Pos.	Quantity	Sheet	Assembly	Description
ATTACHMENT CHAIN	990835714	40	1	463	11 89 365 0	CRAWLER CARRIER RIGHT CP
ATTACHMENT CHAIN	990835714	40	1	474	11 89 365 1	CRAWLER CARRIER LEFT CP
AUXILIARY ROPE	606655308	2	1	577	92 75 218 08	LIMIT SWITCH HOISTING ABOV
AXIAL FACE SEAL	7610244	2	1	467	96 93 178 01	TRACTION DRIVE
AXIAL WASHER	540270814	15	6	634	54 02 701 14	PLANETARY STAGE
AXLE	11310955	13	2	548	11 28 390 8	BOOM ACCESS
AXLE	11310955	13	2	563	11 28 583 8	BOOM ACCESS
AXLE	11310955	13	2	570	11 28 626 1	BOOM ACCESS
AXLE	918539614	17	1	357	10 51 968 6	LUG SUPERSTRUCTURE CPL
AXLE	958556014	16	1	613	11 28 744 5	MOUNTING PARTS
AXLE	958904614	17	1	613	11 28 744 5	MOUNTING PARTS
AXLE CPL	991413814	1	1	538	99 14 137 14	DEFLECTION PULLEY CPL
AXLE HOLDER	703003014	28	1	505	11 23 820 4	PIVOT PIECE CPL
AXLE HOLDER	703003014	6	2	580	11 28 610 5	RETAINING DEVICE CPL
AXLE HOLDER	703003114	25	2	613	11 28 744 5	MOUNTING PARTS
AXLE HOLDER	954372503	14	4	476	11 31 390 8	CENTRE PART CPL
AXLE HOLDER	956378214	27	2	505	11 23 820 4	PIVOT PIECE CPL
AXLE HOLDER	997040201	25	1	353	96 96 543 01	WINCH FRAME
AXLE ST.CONST.	970901603	14	2	662	99 10 116 14	ROPE GUIDE
BACK PART	10289988	2	1	430	10 22 506 8	OPERATOR SEAT
BACK-UP RING CUT	11007749	14	1	131	10 12 321 4	SEAL KIT PRESSUR.CONTROL
BACK-UP RING CUT	11007751	13	1	131	10 12 321 4	SEAL KIT PRESSUR.CONTROL
BACK-UP RING CUT	7382212	23	1	148	10 12 226 5	SEAL KIT REGULATING VALVE
BACK-UP-ALARM	10288438	52	1	33	11 24 519 0	SUPERSTRUCTURE EL
BACKING RING	10352355	110	1	704	59 21 826 14	SUPPORT CYLINDER
BACKING RING	10352359	130	4	704	59 21 826 14	SUPPORT CYLINDER
BALL	11225403	2	1	452	10 44 656 6	SHUTTLE VALVE
BALL	4901195	13	1	106	92 67 343	VENTILATION VALVE
BALL JOINT	10286648	4	1	715	10 53 352 4	CABIN EL
BALL JOINT	10505322	50	1	526	10 09 917 3	DOUBLE-ACTING CYL
BALL PIVOT	592288314	33	1	415	10 35 008 0	CABIN
BALL PIVOT	592288314	12	1	422	59 22 871 14	FRONT WINDOW CPL
BALL VALVE	510682014	39	1	8	11 29 618 6	SUPERSTRUCTURE HYDR
BALL VALVE	510682014	1	1	502	91 90 239 14	CABLE HYDR
BALLAST CHAIN	797027814	23	1	685	11 23 619 7	SELF-LOADING SYSTEM RFK
BAR SEAL KIT	11267400	10	2	94	11 21 993 0	PUMP HOUSING
BASE PLATE	10098143	1	2	77	99 16 061 14	SUPPORT CPL
BASEPLATE CPL	992757214	10	1	334	99 23 386 14	COUNTERWEIGHT ARRANGEM
BASEPLATE ST.CONST.	992741214	10	1	335	99 27 572 14	BASEPLATE CPL
BATTERY	10664204	31	2	33	11 24 519 0	SUPERSTRUCTURE EL
BATTERY COVER	10560674	1	1	67	10 56 067 3	BATTERY INSTALLATION CPL
BATTERY INSTALLATION CPL	10560673	45	1	6	11 24 047 9	SUPERSTRUCTURE CPL
BATTERY MAIN SWITCH	606070908	35	1	33	11 24 519 0	SUPERSTRUCTURE EL
BATTERY TERMINAL CLAMP	10224316	33	1	33	11 24 519 0	SUPERSTRUCTURE EL
BATTERY TERMINAL CLAMP	10224316	3	1	35	10 53 048 9	FUSE HOLDER
BATTERY TERMINAL CLAMP	10547876	32	2	33	11 24 519 0	SUPERSTRUCTURE EL
BEARING	11278605	10	1	635	54 02 702 14	ROPE DRUM CPL
BEARING	11909482	120	1	428	11 93 934 6	AIR CONDITIONING
BEARING	7025009	59	1	432	10 28 999 3	VIBRATING SYSTEM
BEARING BUSH 22X25X13	10121971	2	4	247	10 13 382 3	SUCTION PUMP PRE-ASS.
BEARING COVER	9072908	3	1	270	90 72 906	INTERMEDIATE GEAR CPL.
BEARING FLANGE	11219918	6	1	87	10 53 430 7	V PUMP
BEARING HOLDER	9887948	14	2	138	10 14 360 7	REPAIR SET SWIVEL BEARIN
BEARING RING		15	1	348	93 88 497 01	PLANETARY GEARBOX
BEARING RING	540272714	3	1	637	54 02 704 14	POWER TAKE-OFF CPL
BEARING RING	7023833	3	1	387	11 94 017 7	DRIVING SHAFT
BEARING SHELL	7413401	17	2	165	11 21 593 6	PUMP ELEMENT
BLADDER ACCUMULATOR	510641214	16	1	82	11 24 773 5	HYDR POWER UNIT
BLANKING PLUG		74	1	348	93 88 497 01	PLANETARY GEARBOX
BLANKING PLUG	11922544	210	10	205	11 92 923 6	ASSEMBLY INSTAL.

Description	Item	Pos.	Quantity	Sheet	Assembly	Description
BLANKING PLUG	11951869	7	1	207	11 24 240 8	UREA CONTAINER
BLANKING PLUG	4097529	79	1	392	90 01 376 2	SLEWING GEAR DRIVE
BLANKING PLUG	591645108	64	1	310	11 24 409 0	PANELLING SUPERSTR. INSTA
BLANKING PLUG	779014014	65	2	310	11 24 409 0	PANELLING SUPERSTR. INSTA
BLANKING PLUG	779016201	88	1	392	90 01 376 2	SLEWING GEAR DRIVE
BLANKING PLUG	779016414	57	4	642	10 55 372 1	ROOF RAILING RFK
BLANKING PLUG	779016501	84	1	467	96 93 178 01	TRACTION DRIVE
BLIND RIVET DIN 7337-A 4.8X	10555185	13	4	671	11 30 694 4	RAIL CPL
BLOCK	11226015	10	1	383	51 14 347 14	SG SAFETY BLOCK
BLOCK	943958914	30	1	8	11 29 618 6	SUPERSTRUCTURE HYDR
BLOCK	943958914	5	1	509	10 51 826 1	PIVOT PIECE HYDR
BLOCK	946294214	25	1	8	11 29 618 6	SUPERSTRUCTURE HYDR
BODY	11932850	1	1	28	51 16 576 14	TEMPERATURE CONTROLLER
BOLT CONNECTION	910353714	8	2	579	11 28 648 4	MOUNTING PARTS
BOLT CONNECTION	910353714	22	2	613	11 28 744 5	MOUNTING PARTS
BOOM ACCESS	11283908	14	1	546	11 24 570 3	BOOM INTERMEDIATE SECTIO
BOOM ACCESS	11285838	14	1	562	11 24 570 9	BOOM INTERMEDIATE SECTIO
BOOM ACCESS	11286261	14	1	569	11 24 571 5	BOOM INTERMEDIATE SECTIO
BOOM ELECTRICS	992497814	17	1	656	11 21 529 8	WARNING LIGHT EL RFK
BOOM HEAD CPL	11241333	81	1	2	01 38 406 14	LR 1300 SX
BOOM HEAD EL	10531413	3	1	573	11 24 133 3	BOOM HEAD CPL
BOOM HEAD ST.CONST. CPL	11241323	10	1	573	11 24 133 3	BOOM HEAD CPL
BOOM INTERM.SECTION ST.C	11245698	10	1	546	11 24 570 3	BOOM INTERMEDIATE SECTIO
BOOM INTERM.SECTION ST.C	11245700	10	1	562	11 24 570 9	BOOM INTERMEDIATE SECTIO
BOOM INTERM.SECTION ST.C	11245702	10	1	569	11 24 571 5	BOOM INTERMEDIATE SECTIO
BOOM INTERMEDIATE SECTIO	11245703	10	1	545	11 94 172 5	ASSEMBLY UNIT
BOOM INTERMEDIATE SECTIO	11245709	10	1	561	11 94 259 4	ASSEMBLY UNIT
BOOM INTERMEDIATE SECTIO	11245715	10	1	568	11 94 450 2	ASSEMBLY UNIT
BOTTOM HOOK BLOCK	790411214	133	1	3	01 38 406 14	LR 1300 SX
BOTTOM HOOK BLOCK	790487114	137	1	3	01 38 406 14	LR 1300 SX
BOW-TYPE CLAMP	10144699	20	1	303	11 90 032 5	EXHAUST GAS SYSTEM
BOWDEN PULL SYSTEM	11230660	270	1	428	11 93 934 6	AIR CONDITIONING
BOWL	10331395	14	1	202	10 30 300 7	FUEL PREFILTER
BOWLEN SEALING	10294170	9	1	202	10 30 300 7	FUEL PREFILTER
BOX NUT M14X1.5 AISI 316 TI	10816957	27	1	210	11 92 958 8	AIR DUCT CPL
BRACING TUBE	11245756	1	1	645	11 24 575 5	PEDESTAL
BRACING TUBE	11245757	2	2	645	11 24 575 5	PEDESTAL
BRACING TUBE	958097914	10	2	479	99 26 718 14	PEDESTAL
BRACKET	10099007	5	1	371	99 29 388 14	BRACKET CPL
BRACKET	10099010	6	1	368	99 33 537 14	ROPE GUARD LUG CPL
BRACKET	10289976	72	1	430	10 22 506 8	OPERATOR SEAT
BRACKET	10336583	10	2	45	10 51 961 6	OIL COOLER INSTALLATION
BRACKET	10336584	11	2	45	10 51 961 6	OIL COOLER INSTALLATION
BRACKET	10336709	1	1	371	99 29 388 14	BRACKET CPL
BRACKET	10336711	2	2	369	99 29 389 14	SIDE COMPONENT
BRACKET	10336711	2	2	370	99 29 392 14	SIDE COMPONENT
BRACKET	10349206	7	8	324	10 54 591 0	MOTOR COWLING
BRACKET	10445651	39	2	328	11 24 483 7	MOUNTING PARTS SUPERST
BRACKET	10575967	13	1	328	11 24 483 7	MOUNTING PARTS SUPERST
BRACKET	10575968	15	1	328	11 24 483 7	MOUNTING PARTS SUPERST
BRACKET	10575969	18	1	328	11 24 483 7	MOUNTING PARTS SUPERST
BRACKET	10575970	23	8	328	11 24 483 7	MOUNTING PARTS SUPERST
BRACKET	10575971	37	3	328	11 24 483 7	MOUNTING PARTS SUPERST
BRACKET	10575985	20	2	328	11 24 483 7	MOUNTING PARTS SUPERST
BRACKET	10579757	26	1	328	11 24 483 7	MOUNTING PARTS SUPERST
BRACKET	10592334	19	1	582	10 59 863 3	PENDULUM CPL
BRACKET	10592619	43	1	328	11 24 483 7	MOUNTING PARTS SUPERST
BRACKET	10592621	44	1	328	11 24 483 7	MOUNTING PARTS SUPERST
BRACKET	10597981	2	2	67	10 56 067 3	BATTERY INSTALLATION CPL
BRACKET	11231072	13	2	647	10 52 547 1	ADDNL.FLOODLIGHT SUPERS

Description	Item	Pos.	Quantity	Sheet	Assembly	Description
BRACKET	11234405	58	1	328	11 24 483 7	MOUNTING PARTS SUPERST
BRACKET	11234413	59	1	328	11 24 483 7	MOUNTING PARTS SUPERST
BRACKET	11247011	38	1	328	11 24 483 7	MOUNTING PARTS SUPERST
BRACKET	11247375	22	1	328	11 24 483 7	MOUNTING PARTS SUPERST
BRACKET	11247791	29	1	328	11 24 483 7	MOUNTING PARTS SUPERST
BRACKET	11247808	33	1	328	11 24 483 7	MOUNTING PARTS SUPERST
BRACKET	11248460	12	1	198	11 24 114 3	EXHAUST GAS SYSTEM
BRACKET	11248969	9	2	308	11 24 409 0	PANELLING SUPERSTR. INSTA
BRACKET	11257849	72	1	330	11 24 483 7	MOUNTING PARTS SUPERST
BRACKET	11257851	75	3	330	11 24 483 7	MOUNTING PARTS SUPERST
BRACKET	11263413	16	1	176	11 24 113 8	MOTOR BEARING CPL
BRACKET	11265945	35	1	328	11 24 483 7	MOUNTING PARTS SUPERST
BRACKET	11279036	52	1	204	11 92 923 6	ASSEMBLY INSTAL.
BRACKET	11279237	53	1	204	11 92 923 6	ASSEMBLY INSTAL.
BRACKET	11308593	14	1	198	11 24 114 3	EXHAUST GAS SYSTEM
BRACKET	11308594	15	1	198	11 24 114 3	EXHAUST GAS SYSTEM
BRACKET	7370581	73	1	430	10 22 506 8	OPERATOR SEAT
BRACKET	949758314	24	1	328	11 24 483 7	MOUNTING PARTS SUPERST
BRACKET	958478414	56	2	310	11 24 409 0	PANELLING SUPERSTR. INSTA
BRACKET	958478414	10	10	324	10 54 591 0	MOTOR COWLING
BRACKET	958478414	15	4	479	99 26 718 14	PEDESTAL
BRACKET	958478414	5	2	645	11 24 575 5	PEDESTAL
BRACKET	959465714	38	2	308	11 24 409 0	PANELLING SUPERSTR. INSTA
BRACKET	959465714	17	1	724	11 93 621 2	AIR CONDITIONING UNIT RFK
BRACKET	967313703	25	1	328	11 24 483 7	MOUNTING PARTS SUPERST
BRACKET	971304903	1	2	472	99 08 357 14	ATTACHMENT CHAIN
BRACKET CPL	992938614	4	1	368	99 33 537 14	ROPE GUARD LUG CPL
BRACKET CPL	992938814	3	4	368	99 33 537 14	ROPE GUARD LUG CPL
BRACKET CPL	992943414	5	1	368	99 33 537 14	ROPE GUARD LUG CPL
BRACKET REAR	11262893	1	1	433	11 26 095 6	STEERING CONSOLE RIGHT
BRACKET ST.CONST.	10574837	15	1	640	10 55 372 1	ROOF RAILING RFK
BRACKET ST.CONST.	10575981	11	1	328	11 24 483 7	MOUNTING PARTS SUPERST
BRACKET ST.CONST.	10575984	14	1	328	11 24 483 7	MOUNTING PARTS SUPERST
BRACKET ST.CONST.	10576104	19	1	328	11 24 483 7	MOUNTING PARTS SUPERST
BRACKET ST.CONST.	10585933	16	2	640	10 55 372 1	ROOF RAILING RFK
BRACKET ST.CONST.	10585936	17	1	640	10 55 372 1	ROOF RAILING RFK
BRAKE ACTUATING UNIT	10006595	96	1	392	90 01 376 2	SLEWING GEAR DRIVE
BRAKE FLANGE	540272814	1	1	638	54 02 705 14	DRIVE UNIT CPL
BRAKE MULTI-DISC SET	939347801	97	1	392	90 01 376 2	SLEWING GEAR DRIVE
BRAKE MULTI-DISC SET	939589501	1	1	350	50 20 372 01	SPRING LOADED MULTI-DISC
BRAKE PACKING SET	939347901	98	1	392	90 01 376 2	SLEWING GEAR DRIVE
BRAKE PACKING SET	939589601	2	1	350	50 20 372 01	SPRING LOADED MULTI-DISC
BRAKE SPRING SET	939348001	99	1	392	90 01 376 2	SLEWING GEAR DRIVE
BRAKE SPRING SET	939589701	3	1	350	50 20 372 01	SPRING LOADED MULTI-DISC
BRAKE VALVE	10227399	60	1	342	51 22 527 14	OIL MOTOR
BRAKE VALVE	512401414	60	1	359	51 22 942 14	OIL MOTOR
BRAKE VALVE	512411914	10	1	451	11 22 473 8	ADJUSTMENT
BS HOUSING	605604914	93	1	34	11 24 519 0	SUPERSTRUCTURE EL
BS HOUSING	693157014	80	2	575	10 57 559 9	CABLE LOOM
BS HOUSING	693157014	80	2	609	10 57 651 9	CABLE LOOM
BS HOUSING	693157114	61	1	512	11 90 151 1	CABLE LOOM 1 PIVOT PIECE E
BS HOUSING	693157114	50	1	609	10 57 651 9	CABLE LOOM
BS HOUSING	693157214	71	1	513	11 90 151 1	CABLE LOOM 1 PIVOT PIECE E
BUFFER	10567622	31	4	183	11 94 151 8	COOLER INSTALLATION WATE
BUFFER	592286814	13	1	415	10 35 008 0	CABIN
BUILT-IN VALVE	511640714	2	1	169	51 16 377 14	VALVE BLOCK FEED PRESSUR
BULKHEAD PLATE	10020512	9	1	312	11 24 409 1	COVERS
BULKHEAD PLATE	10445043	47	1	505	11 23 820 4	PIVOT PIECE CPL
BUSBAR	10529597	57	1	402	10 55 963 5	SWITCH CABINET X1
BUSBAR	11219647	58	1	402	10 55 963 5	SWITCH CABINET X1

Description	Item	Pos.	Quantity	Sheet	Assembly	Description
BUSHING	10115304	3	1	452	10 44 656 6	SHUTTLE VALVE
BUSHING	10145395	6	1	286	10 14 584 5	GENERATOR, PRE-ASSEMBLE
BUSHING	10227126	8	1	515	61 61 541 14	CABLE DRUM
BUSHING	11239698	37	2	535	11 24 444 4	A-FRAME 1 CPL
BUSHING	11890145	2	2	465	10 55 716 2	GUIDE WHEEL CPL
BUSHING	958556114	14	2	613	11 28 744 5	MOUNTING PARTS
BUSHING	958556214	15	2	613	11 28 744 5	MOUNTING PARTS
BUSHING	959001414	10	1	366	99 29 258 14	LUG SHEAVE SET
BUSHING	959019014	11	3	52	10 56 073 2	FUEL TANK ASSY.
BUSHING	959841114	39	4	535	11 24 444 4	A-FRAME 1 CPL
BUSHING 100/130X33 S770QL	10336763	5	3	366	99 29 258 14	LUG SHEAVE SET
BUSHING 100/130X36 S770QL	959869314	3	3	366	99 29 258 14	LUG SHEAVE SET
BUSHING 100/80X40 E470;EN	954398803	15	2	579	11 28 648 4	MOUNTING PARTS
BUSHING 115/135X21 E470;EN	970859103	40	4	535	11 24 444 4	A-FRAME 1 CPL
BUSHING 115/135X56 E470;EN	970588503	61	2	6	11 24 047 9	SUPERSTRUCTURE CPL
BUSHING 120/150X88 E470;EN	954398703	60	2	6	11 24 047 9	SUPERSTRUCTURE CPL
BUSHING 120X130X30 KUNST	10223371	11	1	366	99 29 258 14	LUG SHEAVE SET
BUSHING 13/28X15 S355J2;EN	970726703	19	4	493	11 22 050 0	WINCHES INSTALLATION
BUSHING 13/28X15 S355J2;EN	970726703	19	4	499	11 22 050 1	WINCHES INSTALLATION
BUSHING 140/160X100 GZ-CU	11233062	42	1	588	99 23 398 14	ROLLER SET
BUSHING 140/160X55 LHR355-	956803414	16	2	588	99 23 398 14	ROLLER SET
BUSHING 20X24.9X31.9 POM;	958471514	17	1	316	10 57 883 5	DOOR
BUSHING 20X24.9X31.9 POM;	958471514	17	1	318	10 57 897 6	DOOR
BUSHING 20X24.9X31.9 POM;	958471514	6	1	320	10 57 940 0	DOOR
BUSHING 20X24.9X31.9 POM;	958471514	6	1	321	10 56 623 7	DOOR
BUSHING 20X24.9X31.9 POM;	958471514	14	1	322	10 56 580 8	DOOR
BUSHING 20X24X30 POM;DIN	797029114	7	1	316	10 57 883 5	DOOR
BUSHING 20X24X30 POM;DIN	797029114	7	1	318	10 57 897 6	DOOR
BUSHING 20X24X30 POM;DIN	797029114	5	1	320	10 57 940 0	DOOR
BUSHING 20X24X30 POM;DIN	797029114	5	1	321	10 56 623 7	DOOR
BUSHING 20X24X30 POM;DIN	797029114	7	1	322	10 56 580 8	DOOR
BUSHING 25/40X56	790212314	39	2	65	10 58 163 4	CABIN SUSPENSION CPL
BUSHING 30/40X38 GZ-CUSN	967216303	2	1	632	96 72 161 03	ROPE PULLEY CPL
BUSHING 50/55X30	708014114	4	4	580	11 28 610 5	RETAINING DEVICE CPL
BUSHING 50/60X35 CUZN25AL	10504737	190	1	74	59 21 041 14	DOUBLE-ACTING CYL
BUSHING 50X60X42	11230849	18	2	535	11 24 444 4	A-FRAME 1 CPL
BUSHING 51/70X13.5 POLYAMI	10534042	14	8	71	10 51 969 4	A-FRAME ERECTION CYL INST
BUSHING 60X70X25 CUZN25AL	10546993	20	2	532	11 27 536 5	TILT-BACK SUPPORTS INSTAL
BUSHING 75.5X110X2.5 POM;	10336928	18	2	539	99 23 394 14	ANCHORING ROD CPL
BUSHING 75X110X10 POM;DIN	10336924	16	4	539	99 23 394 14	ANCHORING ROD CPL
BUSHING 75X110X5 POM;DIN	10336926	17	8	539	99 23 394 14	ANCHORING ROD CPL
BUSHING 90.5/101.6X26 LHR35	949740614	11	10	662	99 10 116 14	ROPE GUIDE
BUSHING 90/110X36 S355J2H	949988214	19	2	588	99 23 398 14	ROLLER SET
BUSHING 90/110X50 E470;EN	385037314	14	2	579	11 28 648 4	MOUNTING PARTS
BUSHING 91/101.6X145 LHR35	956805414	18	2	588	99 23 398 14	ROLLER SET
BUSHING 91/101.6X5 LHR355-	956803714	25	2	588	99 23 398 14	ROLLER SET
BUSHING 91/101.6X60 LHR355-	956805314	17	2	588	99 23 398 14	ROLLER SET
BUSHING EN 10060 17.5X26.5	10588730	12	3	46	10 56 070 0	TANK INSTALLATION HYDR
BUSHING EN 10210-2 140.5/159	956803214	32	2	588	99 23 398 14	ROLLER SET
BUSHING HOUSING	605252014	70	2	575	10 57 559 9	CABLE LOOM
BUSHING HOUSING	6203137	93	1	400	11 27 973 6	CABIN EL
BUTT STRAP	10591681	50	4	592	79 04 112 14	BOTTOM HOOK BLOCK
BUTT STRAP	10591682	18	4	592	79 04 112 14	BOTTOM HOOK BLOCK
BUTT STRAP	11228806	14	2	653	11 22 870 8	SEARCHLIGHT SUPPORT CPL
BUTT STRAP	11271487	18	8	599	79 04 871 14	BOTTOM HOOK BLOCK
BUTT STRAP	950610714	10	2	683	99 35 606 14	MOUNTING LINK CPL
BUTT STRAP	953580303	10	1	438	99 18 041 14	LASHING SUPERSTRUCTURE
BUTT STRAP	959912014	11	6	337	99 29 803 14	LASHING BALLAST
BUTT STRAP	959912514	15	12	337	99 29 803 14	LASHING BALLAST
BUTTON	10289975	43	4	430	10 22 506 8	OPERATOR SEAT

Description	Item	Pos.	Quantity	Sheet	Assembly	Description
BUTTON	10504994	9	1	712	11 23 623 3	POUCH SOCKET
BYPASS CONNECTOR	918365114	91	1	34	11 24 519 0	SUPERSTRUCTURE EL
C-RAIL ST.CONST.	10599614	47	1	328	11 24 483 7	MOUNTING PARTS SUPERST
CABIN	10350080	10	1	398	11 27 970 6	CABIN CPL
CABIN CPL	11279706	30	1	2	01 38 406 14	LR 1300 SX
CABIN EL	10533524	50	1	714	10 53 246 1	CAMERA MONITORING
CABIN EL	11279736	3	1	398	11 27 970 6	CABIN CPL
CABIN INCLINATION EL RFK	10531224	3	1	720	10 51 728 0	CABIN INCLINATION RFK
CABIN INCLINATION RFK	10517280	719	1	4	01 38 406 14	LR 1300 SX
CABIN REM. EL	11215302	50	1	656	11 21 529 8	WARNING LIGHT EL RFK
CABIN SUSPENSION CPL	10581634	35	1	6	11 24 047 9	SUPERSTRUCTURE CPL
CABLE	11234650	150	4	400	11 27 973 6	CABIN EL
CABLE	11240499	3	1	715	10 53 352 4	CABIN EL
CABLE	993856014	40	1	575	10 57 559 9	CABLE LOOM
CABLE ANEMOMETER	918361414	41	1	575	10 57 559 9	CABLE LOOM
CABLE ANEMOMETER	918361414	41	1	609	10 57 651 9	CABLE LOOM
CABLE DRUM	616154114	21	1	514	91 92 528 14	CABLE DRUM
CABLE DRUM	919252814	31	1	511	11 90 150 9	PIVOT PIECE EL
CABLE DUCT CABINET 1	916525114	31	1	399	11 27 973 6	CABIN EL
CABLE GLAND	10045155	21	2	512	11 90 151 1	CABLE LOOM 1 PIVOT PIECE E
CABLE GLAND	10045155	21	12	575	10 57 559 9	CABLE LOOM
CABLE GLAND	10045155	61	3	575	10 57 559 9	CABLE LOOM
CABLE GLAND	10045155	21	4	609	10 57 651 9	CABLE LOOM
CABLE GLAND	10045156	22	1	609	10 57 651 9	CABLE LOOM
CABLE GLAND	10045156	35	1	609	10 57 651 9	CABLE LOOM
CABLE GLAND	10045157	22	1	512	11 90 151 1	CABLE LOOM 1 PIVOT PIECE E
CABLE GLAND	10045157	37	1	512	11 90 151 1	CABLE LOOM 1 PIVOT PIECE E
CABLE GLAND	602440101	37	2	657	99 24 978 14	BOOM ELECTRICS
CABLE GLAND	602440301	23	1	512	11 90 151 1	CABLE LOOM 1 PIVOT PIECE E
CABLE GLAND	602440301	45	1	512	11 90 151 1	CABLE LOOM 1 PIVOT PIECE E
CABLE HARNESS	12403954	1	1	296	10 15 028 8	CABLE HARNESS MOUNTING
CABLE HARNESS MOUNTING	10150288	580	1	216	12 42 545 4	DIESEL ENGINE
CABLE HYDR	919023914	29	1	500	10 56 187 5	TOOL EQUIPMENT
CABLE LADDER ST.CONST.	11246919	42	1	328	11 24 483 7	MOUNTING PARTS SUPERST
CABLE LADDER ST.CONST.	11247023	61	1	330	11 24 483 7	MOUNTING PARTS SUPERST
CABLE LADDER ST.CONST.	11247131	62	1	330	11 24 483 7	MOUNTING PARTS SUPERST
CABLE LADDER ST.CONST.	11247158	48	1	328	11 24 483 7	MOUNTING PARTS SUPERST
CABLE LADDER ST.CONST.	11247207	50	1	328	11 24 483 7	MOUNTING PARTS SUPERST
CABLE LADDER ST.CONST.	11265089	65	1	330	11 24 483 7	MOUNTING PARTS SUPERST
CABLE LOOM	10223208	30	1	428	11 93 934 6	AIR CONDITIONING
CABLE LOOM	10575599	21	1	574	10 53 141 3	BOOM HEAD EL
CABLE LOOM	10576519	21	1	608	99 33 094 14	NEEDLE EL
CABLE LOOM	11376327	582	1	216	12 42 545 4	DIESEL ENGINE
CABLE LOOM	11946453	290	1	428	11 93 934 6	AIR CONDITIONING
CABLE LOOM	11946454	300	1	428	11 93 934 6	AIR CONDITIONING
CABLE LOOM	11946455	310	1	428	11 93 934 6	AIR CONDITIONING
CABLE LOOM 1 PIVOT PIECE E	11901511	21	1	511	11 90 150 9	PIVOT PIECE EL
CABLE LOOM REFUELLING S	10521560	60	1	741	10 52 155 9	MODULE REFUELLING SYSTE
CABLE LOOM W 1	11247122	11	1	172	11 24 448 7	CENTRAL POWER UNIT EL
CABLE LOOM W 10	10559638	25	1	402	10 55 963 5	SWITCH CABINET X1
CABLE LOOM W 19	10519082	201	1	400	11 27 973 6	CABIN EL
CABLE LOOM W 2	11247121	11	1	33	11 24 519 0	SUPERSTRUCTURE EL
CABLE LOOM W 20	11261603	202	1	400	11 27 973 6	CABIN EL
CABLE LOOM W 22	10519085	204	1	400	11 27 973 6	CABIN EL
CABLE LOOM W 3	10563643	13	1	33	11 24 519 0	SUPERSTRUCTURE EL
CABLE LOOM W 40	10563800	41	1	536	10 53 120 7	A-FRAME ELECTRICS
CABLE LOOM W 40	11314473	50	1	536	10 53 120 7	A-FRAME ELECTRICS
CABLE LUG	602206114	24	1	39	10 56 645 8	TERMINAL BOX
CABLE LUG	602206514	74	2	34	11 24 519 0	SUPERSTRUCTURE EL
CABLE LUG	602213314	27	2	611	10 57 652 3	CLAMPING SOCKET

Description	Item	Pos.	Quantity	Sheet	Assembly	Description
CABLE PROTECTION SWITCH	10351100	21	1	658	11 21 530 2	CABIN REM. EL
CABLE PROTECTION SWITCH	10351101	60	1	402	10 55 963 5	SWITCH CABINET X1
CABLE PROTECTION SWITCH	10351102	61	3	402	10 55 963 5	SWITCH CABINET X1
CABLE PROTECTION SWITCH	10351103	62	1	402	10 55 963 5	SWITCH CABINET X1
CABLE PROTECTION SWITCH	10351104	63	2	402	10 55 963 5	SWITCH CABINET X1
CABLE PROTECTION SWITCH	10351105	64	1	402	10 55 963 5	SWITCH CABINET X1
CABLE PROTECTION SWITCH	10351106	65	3	402	10 55 963 5	SWITCH CABINET X1
CABLE SLEEVE	11946462	360	1	428	11 93 934 6	AIR CONDITIONING
CABLE SOCK	602707214	90	1	500	10 56 187 5	TOOL EQUIPMENT
CABLE SOCK	602707414	91	1	500	10 56 187 5	TOOL EQUIPMENT
CABLE TIE	603202208	61	1	741	10 52 155 9	MODULE REFUELLING SYSTE
CABLE TIE	603202314	99	2	296	10 15 028 8	CABLE HARNESS MOUNTING
CAGE NUT M10-R-140-32	413003308	80	32	306	11 24 114 6	COVER
CAGE NUT M10-R-140-32	413003308	38	18	326	11 24 922 2	COVER UNDERSIDE
CAGE NUT M10-R-140-47	413003508	82	10	306	11 24 114 6	COVER
CAGE NUT M10-R-140-47	413003508	58	4	310	11 24 409 0	PANELLING SUPERSTR. INSTA
CAGE NUT M10-R-140-62	413004408	81	8	306	11 24 114 6	COVER
CAGE NUT M10-R-140-62	413004408	13	24	324	10 54 591 0	MOTOR COWLING
CAGE NUT M10-RR-140-47	485549914	21	2	45	10 51 961 6	OIL COOLER INSTALLATION
CAGE NUT M10-RR-140-47	485549914	2	8	69	10 56 069 4	MODULES INSTALLATION
CAGE NUT M10-RR-140-47	485549914	32	53	326	11 24 922 2	COVER UNDERSIDE
CAGE NUT M10-RR-140-62	485550014	19	4	67	10 56 067 3	BATTERY INSTALLATION CPL
CAGE NUT M10-RR-140-62	485550014	29	21	308	11 24 409 0	PANELLING SUPERSTR. INSTA
CAGE NUT M10-RR-140-62	485550014	25	2	326	11 24 922 2	COVER UNDERSIDE
CAGE NUT M8-R-123-47 ST	413003208	9	2	723	11 22 037 2	FOOT PEDAL EL INSTALLATIO
CAGE NUT M8-RR-123-47	485550114	61	5	310	11 24 409 0	PANELLING SUPERSTR. INSTA
CAGE NUT M8-RR-123-47	485550114	4	4	369	99 29 389 14	SIDE COMPONENT
CAGE NUT M8-RR-123-47	485550114	4	4	370	99 29 392 14	SIDE COMPONENT
CAGE NUT M8-RR-123-47	485550114	16	2	372	99 29 386 14	BRACKET CPL
CAGE NUT M8-RR-123-47	485550114	16	2	373	99 29 434 14	BRACKET CPL
CAGE NUT M8-RR-123-47	485550114	30	3	398	11 27 970 6	CABIN CPL
CAGE NUT M8-RR-123-47	485550114	43	2	642	10 55 372 1	ROOF RAILING RFK
CAMERA CCD	10024012	31	1	714	10 53 246 1	CAMERA MONITORING
CAMERA CCD	10024012	31	1	716	10 50 775 0	CAMERA MONITORING
CAMERA MONITORING	10507750	8	1	713	11 89 400 8	VIDEO MONITORING SYSTEM
CAMERA MONITORING	10532461	7	1	713	11 89 400 8	VIDEO MONITORING SYSTEM
CAMERA MONITORING	11893352	3	1	713	11 89 400 8	VIDEO MONITORING SYSTEM
CAMS LIMIT SWITCH	606281014	45	1	33	11 24 519 0	SUPERSTRUCTURE EL
CAMSHAFT CPL.	10138231	100	1	214	12 42 545 4	DIESEL ENGINE
CAN MODULE	10351656	21	1	33	11 24 519 0	SUPERSTRUCTURE EL
CAN MODULE	10351660	23	1	33	11 24 519 0	SUPERSTRUCTURE EL
CAN MODULE	10351667	22	1	33	11 24 519 0	SUPERSTRUCTURE EL
CAN MODULE	10351668	26	1	33	11 24 519 0	SUPERSTRUCTURE EL
CAN MODULE	10351671	24	1	33	11 24 519 0	SUPERSTRUCTURE EL
CAN MODULE	10351672	27	1	33	11 24 519 0	SUPERSTRUCTURE EL
CAN MODULE	10351674	28	1	33	11 24 519 0	SUPERSTRUCTURE EL
CAN MODULE	10677274	23	1	410	11 26 095 7	CONTROL STAND RIGHT
CAP	11239908	7	1	692	59 21 584 14	LOWERING BRAKE VALVE
CAR RADIO	11699714	280	1	331	10 59 256 9	RADIO RFK
CARRIER RAIL	602101414	23	0.2	611	10 57 652 3	CLAMPING SOCKET
CARRIER RAIL	602106714	58	0.37	39	10 56 645 8	TERMINAL BOX
CARRYING ROLLER CPL	790523314	15	2	463	11 89 365 0	CRAWLER CARRIER RIGHT CP
CARRYING ROLLER CPL	790523314	15	2	474	11 89 365 1	CRAWLER CARRIER LEFT CP
CARTOUCHE	571352308	1	1	212	11 83 721 4	AIR DRYER
CELL RUBBER	262107814	24	6	67	10 56 067 3	BATTERY INSTALLATION CPL
CENTER STUD	11940182	3	1	386	11 94 017 6	HYDRAULIC PARTS DRIVING G
CENTER STUD	7024275	113	1	630	51 02 322 14	OIL MOTOR
CENTER-ZERO RELAY	11946464	370	1	428	11 93 934 6	AIR CONDITIONING
CENTER-ZERO RELAY	630121508	83	1	402	10 55 963 5	SWITCH CABINET X1
CENTRAL COUNTERW. ST.C	11242597	10	4	477	11 24 812 0	CENTRAL COUNTERWEIGHT

Description	Item	Pos.	Quantity	Sheet	Assembly	Description
CENTRAL COUNTERWEIGHT	11248120	37	1	2	01 38 406 14	LR 1300 SX
CENTRAL GREASING	11273155	23	1	6	11 24 047 9	SUPERSTRUCTURE CPL
CENTRAL LUBRICATION PUM	11223123	12	1	58	11 27 315 5	CENTRAL GREASING
CENTRAL LUBRICATION RFK	11284236	821	1	4	01 38 406 14	LR 1300 SX
CENTRAL POWER UNIT CPL	11928852	10	1	78	11 92 885 5	AGGREGATE DIESEL ENGINE
CENTRAL POWER UNIT EL	11244487	3	1	80	11 92 885 2	CENTRAL POWER UNIT CPL
CENTRE PART CPL	11313908	12	1	439	11 89 364 8	UC CPL
CHAIN	740000208	1	0.4	458	11 91 872 5	CHAIN CPL
CHAIN	740000208	20	3	589	99 30 800 14	HOIST LIMIT SWITCH INSTAL.
CHAIN	740000908	4	0.624	472	99 08 357 14	ATTACHMENT CHAIN
CHAIN CONNECTION LOCK	773967214	2	4	472	99 08 357 14	ATTACHMENT CHAIN
CHAIN CPL	10350940	22	4	679	10 51 971 3	SELF-LOADING SYSTEM RFK
CHAIN CPL	11918725	25	2	442	11 89 300 5	TUBING HYDR
CHARGE AIR COOLER	11932246	1	1	190	10 57 423 9	COOLER MOTOR
CHARGE AIR CORRUGATED H	10521397	35	4	189	11 24 114 1	COOLER INSTALLATION CHA
CHARGE AIR LINE	10143612	1	1	267	10 14 967 6	CONNECTING LINE ADD-ON
CHARGE AIR LINE	10143614	2	1	267	10 14 967 6	CONNECTING LINE ADD-ON
CHARGE AIR PIPE	10562107	28	1	189	11 24 114 1	COOLER INSTALLATION CHA
CHARGE AIR PIPE	11250430	20	1	189	11 24 114 1	COOLER INSTALLATION CHA
CHARGE AIR PIPE	11250438	21	1	189	11 24 114 1	COOLER INSTALLATION CHA
CHARGE AIR PIPE	11250439	25	1	189	11 24 114 1	COOLER INSTALLATION CHA
CHARGER	10567084	31	1	735	10 56 013 7	MAINS SUPPLY BATTERY
CHECK SCREW M10X101 31CR	9076176	13	1	145	10 12 226 2	REGULATION REPAIR KIT
CHECK VALVE	11226088	100	2	383	51 14 347 14	SG SAFETY BLOCK
CHEESE HEAD SCREW DIN 60	11314349	13	4	518	11 23 653 3	SUPPORT CPL
CHEESE HEAD SCREW DIN 60	11314349	14	4	540	11 25 204 2	SUPPORT CPL
CHEESE HEAD SCREW DIN 60	11314349	14	6	558	11 23 292 2	SUPPORT CPL
CLAMP	10122693	10	1	226	10 15 529 8	OIL SUMP PRE-ASS.
CLAMP	10129179	5	1	255	10 13 508 0	HIGH PRESSURE CONNECTO
CLAMP	10336774	11	1	542	99 29 588 14	SUPPORT
CLAMP	10336774	11	2	543	10 35 063 3	FASTENER
CLAMP	10513605	31	5	189	11 24 114 1	COOLER INSTALLATION CHA
CLAMP	10513605	46	1	210	11 92 958 8	AIR DUCT CPL
CLAMP	11000593	13	2	285	10 14 622 4	REGULATION BOOST PRESS
CLAMP	11229805	30	2	194	11 92 922 0	SUCTION UNIT AIR
CLAMP	11946451	280	1	428	11 93 934 6	AIR CONDITIONING
CLAMP	7381292	21	1	261	10 14 588 5	LEAK OIL RETURN LINE
CLAMP	7381292	12	7	285	10 14 622 4	REGULATION BOOST PRESS
CLAMP	7381628	38	2	296	10 15 028 8	CABLE HARNESS MOUNTING
CLAMP	7381629	5	3	230	10 14 671 6	OIL LINE PRE-ASSEMBLY
CLAMP	7381629	39	6	296	10 15 028 8	CABLE HARNESS MOUNTING
CLAMP	7381630	42	2	296	10 15 028 8	CABLE HARNESS MOUNTING
CLAMP	7381631	14	1	265	10 14 736 9	INTAKE STACK ASSEMBLY
CLAMP	7381631	16	1	265	10 14 736 9	INTAKE STACK ASSEMBLY
CLAMP	7381631	43	1	296	10 15 028 8	CABLE HARNESS MOUNTING
CLAMP	7381635	41	3	296	10 15 028 8	CABLE HARNESS MOUNTING
CLAMP	7381770	32	4	296	10 15 028 8	CABLE HARNESS MOUNTING
CLAMP	7381771	31	1	296	10 15 028 8	CABLE HARNESS MOUNTING
CLAMP	7382088	15	1	261	10 14 588 5	LEAK OIL RETURN LINE
CLAMP	7382090	37	5	296	10 15 028 8	CABLE HARNESS MOUNTING
CLAMP	7382092	47	2	296	10 15 028 8	CABLE HARNESS MOUNTING
CLAMP	774212914	31	2	82	11 24 773 5	HYDR POWER UNIT
CLAMP	774255714	54	4	183	11 94 151 8	COOLER INSTALLATION WATE
CLAMP	790562114	45	2	210	11 92 958 8	AIR DUCT CPL
CLAMP - ADD-ON UNIT	10146587	10	1	296	10 15 028 8	CABLE HARNESS MOUNTING
CLAMP-HALF	602008508	57	6	183	11 94 151 8	COOLER INSTALLATION WATE
CLAMP-HALF	602008508	55	2	210	11 92 958 8	AIR DUCT CPL
CLAMP-HALF	602008808	38	4	476	11 31 390 8	CENTRE PART CPL
CLAMP-HALF	602010114	36	16	476	11 31 390 8	CENTRE PART CPL
CLAMP-HALF	602017114	72	8	507	11 23 820 4	PIVOT PIECE CPL

Description	Item	Pos.	Quantity	Sheet	Assembly	Description
CLAMP-HALF	602017114	19	4	548	11 28 390 8	BOOM ACCESS
CLAMP-HALF	602017114	19	4	563	11 28 583 8	BOOM ACCESS
CLAMP-HALF	602017114	19	4	570	11 28 626 1	BOOM ACCESS
CLAMP-HALF	7365090	56	6	183	11 94 151 8	COOLER INSTALLATION WATE
CLAMP-HALF	7404678	37	4	476	11 31 390 8	CENTRE PART CPL
CLAMP-HALF	7413103	38	12	463	11 89 365 0	CRAWLER CARRIER RIGHT CP
CLAMP-HALF	7413103	38	12	474	11 89 365 1	CRAWLER CARRIER LEFT CP
CLAMPING BRACKET	10509133	3	2	67	10 56 067 3	BATTERY INSTALLATION CPL
CLAMPING LEVER	10555411	9	1	435	10 53 756 0	LAMP HOLDER CPL
CLAMPING LEVER	11228775	15	1	653	11 22 870 8	SEARCHLIGHT SUPPORT CPL
CLAMPING LEVER	11228777	17	2	653	11 22 870 8	SEARCHLIGHT SUPPORT CPL
CLAMPING PIECE	319719401	30	5	346	93 88 500 01	ROPE DRUM
CLAMPING PROFILE	7014524	42	5	183	11 94 151 8	COOLER INSTALLATION WATE
CLAMPING PROFILE	7014524	30	4.5	306	11 24 114 6	COVER
CLAMPING RING	979896808	30	2	198	11 24 114 3	EXHAUST GAS SYSTEM
CLAMPING SOCKET	10572531	20	1	512	11 90 151 1	CABLE LOOM 1 PIVOT PIECE E
CLAMPING SOCKET	10573292	20	1	575	10 57 559 9	CABLE LOOM
CLAMPING SOCKET	10576523	20	1	609	10 57 651 9	CABLE LOOM
CLIP	11909483	130	1	428	11 93 934 6	AIR CONDITIONING
CLIP	11909497	150	1	428	11 93 934 6	AIR CONDITIONING
CLOGGING INDICATOR	592200514	20	1	82	11 24 773 5	HYDR POWER UNIT
CLOSING FLANGE	944672614	42	1	8	11 29 618 6	SUPERSTRUCTURE HYDR
CLOSING FLANGE	949341514	45	1	8	11 29 618 6	SUPERSTRUCTURE HYDR
CLOSING PIN	592333714	6	1	422	59 22 871 14	FRONT WINDOW CPL
CLOSING PIN	7615720	2	1	417	10 22 645 4	DOOR ACCESSORIES
CLOSING PLATE	602153014	53	1	735	10 56 013 7	MAINS SUPPLY BATTERY
CLOSING PLATE	602730714	25	3	39	10 56 645 8	TERMINAL BOX
CLOSING PLATE	602730714	18	1	611	10 57 652 3	CLAMPING SOCKET
CLOSING PLATE	602812714	26	1	39	10 56 645 8	TERMINAL BOX
CLOSING PLATE	602812714	87	1	402	10 55 963 5	SWITCH CABINET X1
CLOSING PLATE	693182314	78	2	402	10 55 963 5	SWITCH CABINET X1
CLOSING RING	10650270	31	1	384	51 22 991 14	OIL MOTOR
CLOSING RING	11940208	1	1	388	10 65 027 0	CLOSING RING
CLOSING RING	7013563	1	1	389	11 94 020 8	CLOSING RING
CLOSING RING	9885628	17	1	124	92 68 016	REPAIR KIT LOCK RING
COAT HOOK	592290014	76	1	416	10 35 008 0	CABIN
COLLAR NUT M14X1.5	514618508	47	1	94	11 21 993 0	PUMP HOUSING
COLLER BOLT	11297460	2	1	712	11 23 623 3	POUCH SOCKET
COLLER BUSHING	592290614	4	1	424	59 22 905 14	MIRROR + SUNN VISOR
COLLER BUSHING 40/80X51	790519814	11	2	65	10 58 163 4	CABIN SUSPENSION CPL
COMPENSATOR	10141520	5	2	281	10 14 144 3	EXHAUST PIPE PRE-ASS.
COMPENSATOR	10149145	2	1	284	10 14 511 2	EXHAUST NOZZLE ATTACHM
COMPRESSION BAR	993430014	20	1	620	99 23 415 14	STAY ROPE ROD
COMPRESSOR RFK	11928913	67	1	80	11 92 885 2	CENTRAL POWER UNIT CPL
CONICAL MOUNT	746923314	21	2	176	11 24 113 8	MOTOR BEARING CPL
CONICAL PLUG		23	1	348	93 88 497 01	PLANETARY GEARBOX
CONICAL PLUG	779006601	89	1	392	90 01 376 2	SLEWING GEAR DRIVE
CONICAL PLUG	779006901	85	1	467	96 93 178 01	TRACTION DRIVE
CONNECTING FLANGE SAE	790227714	32	1	8	11 29 618 6	SUPERSTRUCTURE HYDR
CONNECTING LINE	10141549	1	1	266	10 14 736 4	AIR INTAKE ASSEMBLY
CONNECTING LINE ADD-ON	10149676	230	1	215	12 42 545 4	DIESEL ENGINE
CONNECTING LINK	9887828	14	2	105	10 11 835 0	CONNECTION HOUSING
CONNECTING PIECE PRE-ASS	10141790	217	1	215	12 42 545 4	DIESEL ENGINE
CONNECTING PIPE	10444797	34	1	204	11 92 923 6	ASSEMBLY INSTAL.
CONNECTING PLATE	11940146	4	1	384	51 22 991 14	OIL MOTOR
CONNECTING PLATE	510427914	5	1	525	10 51 959 1	TUBING HYDR
CONNECTING PLATE	510662614	12	2	8	11 29 618 6	SUPERSTRUCTURE HYDR
CONNECTING PLATE	510662914	23	3	8	11 29 618 6	SUPERSTRUCTURE HYDR
CONNECTING PLATE	510662914	5	1	341	10 51 969 8	NEEDLE LUFFING WINCH HYD
CONNECTING PLATE	510662914	5	1	358	10 51 968 7	MAIN LUG HYDR

Description	Item	Pos.	Quantity	Sheet	Assembly	Description
CONNECTING PLATE	511455014	3	1	629	10 51 726 2	TUBING HYDR
CONNECTING ROD BEARING	10145100	2	1	233	11 34 807 2	CONROD
CONNECTING ROD BEARING	10145101	3	1	233	11 34 807 2	CONROD
CONNECTION CARRIER		1	1	348	93 88 497 01	PLANETARY GEARBOX
CONNECTION FLANGE	10132074	3	1	247	10 13 382 3	SUCTION PUMP PRE-ASS.
CONNECTION FLANGE	9268423	13	1	103	10 11 834 9	DOUBLE V-PUMP
CONNECTION FLANGE	9276385	11	1	103	10 11 834 9	DOUBLE V-PUMP
CONNECTION HOUSING	10118350	3	1	103	10 11 834 9	DOUBLE V-PUMP
CONNECTION PARTS	11280481	10	1	730	11 28 423 6	CENTRAL LUBRICATION RFK
CONNECTION PARTS	11280482	10	2	58	11 27 315 5	CENTRAL GREASING
CONNECTION PIECE	10139391	6	1	223	10 14 201 8	CRANKCASE BREATHER ASS
CONNECTION PIECE	10139393	5	1	223	10 14 201 8	CRANKCASE BREATHER ASS
CONNECTION PIECE	11297647	12	1	730	11 28 423 6	CENTRAL LUBRICATION RFK
CONNECTION PIECE	7024968	224	1	18	11 28 647 6	VALVE BLOCK
CONNECTION PLATE	938858501	5	1	353	96 96 543 01	WINCH FRAME
CONNECTION PLATE	969655301	1	1	353	96 96 543 01	WINCH FRAME
CONNECTION STUB	10128100	4	1	255	10 13 508 0	HIGH PRESSURE CONNECTO
CONNECTION STUB	927586201	12	1	352	93 36 755 01	OIL-GAUGING INSTRUMENT
CONNECTION STUB	927586201	27	1	352	93 36 755 01	OIL-GAUGING INSTRUMENT
CONNECTION SUPERSTR UC	10519696	31	1	2	01 38 406 14	LR 1300 SX
CONROD	11348054	1	1	233	11 34 807 2	CONROD
CONROD	11348072	60	6	214	12 42 545 4	DIESEL ENGINE
CONSOLE	10552306	1	1	56	10 55 268 1	DRIVER INSTALLATION
CONSOLE	10579755	3	2	176	11 24 113 8	MOTOR BEARING CPL
CONSOLE	10579779	5	1	176	11 24 113 8	MOTOR BEARING CPL
CONSOLE	10579979	7	1	67	10 56 067 3	BATTERY INSTALLATION CPL
CONSOLE	11215384	6	1	176	11 24 113 8	MOTOR BEARING CPL
CONSOLE	11215385	13	1	194	11 92 922 0	SUCTION UNIT AIR
CONSOLE	11247208	12	1	194	11 92 922 0	SUCTION UNIT AIR
CONSOLE	11247464	9	1	198	11 24 114 3	EXHAUST GAS SYSTEM
CONSOLE	11247607	8	1	198	11 24 114 3	EXHAUST GAS SYSTEM
CONSOLE	11249800	2	2	176	11 24 113 8	MOTOR BEARING CPL
CONSOLE	11249889	9	2	176	11 24 113 8	MOTOR BEARING CPL
CONSOLE	11250222	4	2	176	11 24 113 8	MOTOR BEARING CPL
CONSOLE	11263501	17	1	176	11 24 113 8	MOTOR BEARING CPL
CONSOLE	11404751	3	1	267	10 14 967 6	CONNECTING LINE ADD-ON
CONSOLE	918585114	22	2	65	10 58 163 4	CABIN SUSPENSION CPL
CONSOLE	954485303	64	1	330	11 24 483 7	MOUNTING PARTS SUPERST
CONSOLE	992757514	11	4	336	10 52 656 0	MOUNTING PARTS
CONSOLE ST. CONST.	11245759	2	2	644	11 24 147 8	UC PLATFORM
CONSOLE ST. CONST.	11245922	3	2	644	11 24 147 8	UC PLATFORM
CONSTRUCTION KIT OUTPUT	10132357	302	1	127	10 12 878 7	V PUMP
CONTACT BUSHING	605601801	427	24	39	10 56 645 8	TERMINAL BOX
CONTACT BUSHING	605610301	426	24	39	10 56 645 8	TERMINAL BOX
CONTACT ELEMENT	693004614	34	1	741	10 52 155 9	MODULE REFUELLING SYSTE
CONTACT GUARD	10351108	59	2	402	10 55 963 5	SWITCH CABINET X1
CONTACT LOCK	605252214	71	2	575	10 57 559 9	CABLE LOOM
CONTACT LOCK	693013414	12	1	739	10 52 957 6	REFUELLING PUMP CPL
CONTACT LOCK	7368242	52	3	399	11 27 973 6	CABIN EL
CONTACT LOCK	7368248	94	1	400	11 27 973 6	CABIN EL
CONTACT PIN	605601701	35	5	512	11 90 151 1	CABLE LOOM 1 PIVOT PIECE E
CONTACT PIN	605601701	53	6	575	10 57 559 9	CABLE LOOM
CONTACT PIN	605601701	34	2	609	10 57 651 9	CABLE LOOM
CONTAINER	11837331	8	1	210	11 92 958 8	AIR DUCT CPL
CONTAINER	592286714	9	2	415	10 35 008 0	CABIN
CONTROL AREA	612436814	11	1	406	10 03 610 7	KEYBOARD OPERATING PANE
CONTROL BLOCK	511640614	1	1	169	51 16 377 14	VALVE BLOCK FEED PRESSUR
CONTROL BOX ANNEXE	10146795	571	1	216	12 42 545 4	DIESEL ENGINE
CONTROL CONSOLE	11236557	10	1	624	11 25 016 2	EMERGENCY OPERATION EL
CONTROL CONSOLE	11236937	10	1	40	11 23 908 2	CONTROL CONSOLE

Description	Item	Pos.	Quantity	Sheet	Assembly	Description
CONTROL CONSOLE	11239082	111	1	34	11 24 519 0	SUPERSTRUCTURE EL
CONTROL GEAR	10144039	20	1	204	11 92 923 6	ASSEMBLY INSTAL.
CONTROL GEAR	11219917	5	1	87	10 53 430 7	V PUMP
CONTROL LEAD	600376914	30	12	609	10 57 651 9	CABLE LOOM
CONTROL LEAD	600385314	31	10.5	512	11 90 151 1	CABLE LOOM 1 PIVOT PIECE E
CONTROL LEAD	600454314	53	6.5	399	11 27 973 6	CABIN EL
CONTROL LEAD	600454314	31	1	575	10 57 559 9	CABLE LOOM
CONTROL LEAD	600454314	63	4	575	10 57 559 9	CABLE LOOM
CONTROL LEAD	600454314	64	4	575	10 57 559 9	CABLE LOOM
CONTROL LEAD	600454314	65	3.1	575	10 57 559 9	CABLE LOOM
CONTROL LEAD	600454314	72	4	575	10 57 559 9	CABLE LOOM
CONTROL LEAD	600454314	73	4	575	10 57 559 9	CABLE LOOM
CONTROL LEAD	600454314	85	4.5	576	10 57 559 9	CABLE LOOM
CONTROL LEAD	600454314	90	6	576	10 57 559 9	CABLE LOOM
CONTROL LEAD	600454314	91	6	576	10 57 559 9	CABLE LOOM
CONTROL LEAD	600454314	85	4.5	609	10 57 651 9	CABLE LOOM
CONTROL LEAD	693030914	97	2	400	11 27 973 6	CABIN EL
CONTROL LEAD	693106214	51	1.5	512	11 90 151 1	CABLE LOOM 1 PIVOT PIECE E
CONTROL LID	511640814	3	1	169	51 16 377 14	VALVE BLOCK FEED PRESSUR
CONTROL LIGHT	11258086	41	1	33	11 24 519 0	SUPERSTRUCTURE EL
CONTROL PARTS	9079870	110	6	214	12 42 545 4	DIESEL ENGINE
CONTROL PLATE LEFT	9887035	2	1	119	98 89 833	RK CYLINDER+CONTROL PLAT
CONTROL STAND LEFT	10519079	10	1	399	11 27 973 6	CABIN EL
CONTROL STAND RIGHT	11260957	20	1	399	11 27 973 6	CABIN EL
CONTROL SYSTEM	10223180	31	1	402	10 55 963 5	SWITCH CABINET X1
CONTROL UNIT	11219934	1	1	101	11 21 991 7	CONTROL GEAR
CONTROL VALVE	10114975	2	1	164	11 21 591 3	PUMP ELEMENT
CONTROL VALVE	10351603	2	1	155	11 22 126 8	PUMP ELEMENT
CONTROL VALVE	10409413	1	1	159	10 35 160 3	CONTROL VALVE
CONTROL VALVE	11215942	1	1	168	10 11 497 5	CONTROL VALVE
COOLANT	553078814	15	2.2	724	11 93 621 2	AIR CONDITIONING UNIT RFK
COOLANT PIPE BEND ADD-ON	10142742	382	1	215	12 42 545 4	DIESEL ENGINE
COOLER	11267560	29	1	186	10 57 423 7	COOLER MOTOR
COOLER INSTALLATION CHA	11241141	29	1	80	11 92 885 2	CENTRAL POWER UNIT CPL
COOLER INSTALLATION WATE	11941518	28	1	80	11 92 885 2	CENTRAL POWER UNIT CPL
COOLER MOTOR	10225925	21	1	8	11 29 618 6	SUPERSTRUCTURE HYDR
COOLER MOTOR	10574237	10	1	183	11 94 151 8	COOLER INSTALLATION WATE
COOLER MOTOR	10574239	1	1	189	11 24 114 1	COOLER INSTALLATION CHA
COOLING WATER AIR BLEED	10142744	387	1	215	12 42 545 4	DIESEL ENGINE
COOLING WATER HOSE	10873086	49	1	183	11 94 151 8	COOLER INSTALLATION WATE
COOLING WATER HOSE	11621769	5	0.5	199	11 24 114 4	FUEL SYSTEM
COOLING WATER HOSE	11621769	30	6.5	204	11 92 923 6	ASSEMBLY INSTAL.
COOLING WATER HOSE	11621772	51	1	183	11 94 151 8	COOLER INSTALLATION WATE
COOLING WATER HOSE	11621772	31	2	204	11 92 923 6	ASSEMBLY INSTAL.
COOLING WATER HOSE	11621777	48	1	183	11 94 151 8	COOLER INSTALLATION WATE
COOLING WATER HOSE	11656331	47	1	183	11 94 151 8	COOLER INSTALLATION WATE
COOLING WATER LINE	11381601	20	1	284	10 14 511 2	EXHAUST NOZZLE ATTACHM
COOLING WATER LINE	11414759	2	1	302	11 41 475 7	ACCESSORIES AIR COMPRES
COOLING WATER LINE	11414767	1	1	302	11 41 475 7	ACCESSORIES AIR COMPRES
COOLING WATER PIPE	11250555	20	1	183	11 94 151 8	COOLER INSTALLATION WATE
COOLING WATER PIPE	11250556	21	1	183	11 94 151 8	COOLER INSTALLATION WATE
COOLING WATER PIPE	11269259	19	1	183	11 94 151 8	COOLER INSTALLATION WATE
COOLING WATER PIPE	11287692	18	1	183	11 94 151 8	COOLER INSTALLATION WATE
COPPER PASTE	10002552	132	1	283	10 14 013 6	EXHAUST TC MOUNTING
CORRUGATED PIPE	10227531	26	4.5	204	11 92 923 6	ASSEMBLY INSTAL.
CORRUGATED PIPE	10227531	16	0.5	210	11 92 958 8	AIR DUCT CPL
COUNTER NUT M20X1.5 POL	10530322	93	1	513	11 90 151 1	CABLE LOOM 1 PIVOT PIECE E
COUNTERSUNK SCREW DIN 7	4001967	24	2	398	11 27 970 6	CABIN CPL
COUNTERSUNK SCREW DIN 7	4001967	31	24	700	11 89 568 6	SELF-LOADING SYSTEM RFK
COUNTERSUNK SCREW DIN 7	4600170	7	8	370	99 29 392 14	SIDE COMPONENT

Description	Item	Pos.	Quantity	Sheet	Assembly	Description
COUNTERSUNK SCREW DIN 7	4600170	20	12	372	99 29 386 14	BRACKET CPL
COUNTERSUNK SCREW DIN 7	4600170	20	12	373	99 29 434 14	BRACKET CPL
COUNTERSUNK SCREW DIN	407071114	4	4	436	11 30 962 5	HOLDER CPL
COUNTERSUNK SCREW DIN 7	408606314	33	24	640	10 55 372 1	ROOF RAILING RFK
COUNTERSUNK SCREW DIN 7	4600257	4	7	371	99 29 388 14	BRACKET CPL
COUNTERSUNK SCREW DIN 7	4001205	3	7	371	99 29 388 14	BRACKET CPL
COUNTERSUNK SCREW DIN	4600157	11	16	372	99 29 386 14	BRACKET CPL
COUNTERSUNK SCREW DIN	4600157	11	16	373	99 29 434 14	BRACKET CPL
COUNTERSUNK SCREW DIN 7	408606214	37	4	398	11 27 970 6	CABIN CPL
COUNTERSUNK SCREW DIN 7	408606214	5	2	719	10 57 848 6	MONITOR CABIN ADD-ON
COUNTERSUNK SCREW DIN 7	4002551	6	4	369	99 29 389 14	SIDE COMPONENT
COUNTERSUNK SCREW DIN 7	4002551	6	4	370	99 29 392 14	SIDE COMPONENT
COUNTERSUNK SCREW DIN 7	408606414	90	14	330	11 24 483 7	MOUNTING PARTS SUPERST
COUNTERSUNK SCREW DIN 7	408606414	60	1	673	11 30 567 0	TRANSPORT LASHING
COUNTERSUNK SCREW DIN	408601008	16	4	519	10 58 193 7	GRATING CPL
COUNTERSUNK SCREW DIN	408601008	13	8	645	11 24 575 5	PEDESTAL
COUNTERSUNK SCREW ISO	10348867	15	4	670	11 29 473 7	GANGWAY INTERM. SECTION
COUNTERSUNK SCREW ISO	10348867	16	4	674	11 29 474 2	GANGWAY INTERM. SECTION
COUNTERSUNK SCREW ISO	10348867	18	4	675	11 29 474 3	GANGWAY INTERM. SECTION
COUNTERSUNK SCREW ISO	10348867	15	4	676	10 55 514 8	FALL PROTECTION RFK
COUNTERSUNK SCREW ISO	408600708	99	2	330	11 24 483 7	MOUNTING PARTS SUPERST
COUNTERSUNK SCREW ISO	408600708	6	8	414	11 22 369 1	FOOT PEDAL EL INSTALLATIO
COUNTERSUNK SCREW ISO	408600708	6	1	723	11 22 037 2	FOOT PEDAL EL INSTALLATIO
COUNTERSUNK SCREW ISO	10349756	93	6	330	11 24 483 7	MOUNTING PARTS SUPERST
COUNTERSUNK SCREW ISO	408600808	91	2	330	11 24 483 7	MOUNTING PARTS SUPERST
COUNTERSUNK SCREW ISO	11910892	42	6	310	11 24 409 0	PANELLING SUPERSTR. INSTA
COUNTERSUNK SCREW ISO	4002655	92	10	330	11 24 483 7	MOUNTING PARTS SUPERST
COUNTERSUNK SCREW ISO	10342191	4	3	232	10 12 134 5	RK CRANKSHAFT SEAL
COUNTERSUNK SCREW ISO 2	407041214	3	3	434	97 07 857 03	SPIRIT LEVEL ASSY.
COUNTERSUNK SCREW ISO 7	4002871	34	24	398	11 27 970 6	CABIN CPL
COUNTERSUNK SCREW ISO 7	4002401	5	4	433	11 26 095 6	STEERING CONSOLE RIGHT
COUNTERWEIGHT ARRANGEM	992338614	18	1	2	01 38 406 14	LR 1300 SX
COUPLING	10348619	20	1	733	10 52 293 0	SG TACHOGENERATOR RFK
COUPLING	11249334	2	1	181	11 24 113 9	ADD-ON PARTS DIESEL ENGIN
COUPLING FERRULE	10117768	11	1	152	10 13 452 1	THROUGH DRIVE
COUPLING FERRULE	10129873	11	1	149	10 12 987 4	THROUGH DRIVE
COUPLING FERRULE	10130007	11	1	150	10 13 000 5	THROUGH DRIVE
COUPLING FERRULE	10132360	11	1	151	10 13 235 7	CONSTRUCTION KIT OUTPUT
COUPLING FERRULE	10138069	11	1	153	10 13 806 8	THROUGH DRIVE
COUPLING FERRULE	9073827	15	1	107	10 11 835 7	REPAIR KIT CONNECTION HO
COUPLING LINK	10226402	11	4	556	10 54 054 8	ANCHORING ROD CPL
COUPLING LINK	10226402	11	4	564	10 54 055 1	ANCHORING ROD CPL
COUPLING LINK	10226402	11	4	571	10 54 055 5	ANCHORING ROD CPL
COUPLING LINK	10226402	18	4	586	10 54 056 7	ANCHORING ROD CPL
COUPLING LINK	10336761	11	4	539	99 23 394 14	ANCHORING ROD CPL
COUPLING LINK	10348886	11	4	586	10 54 056 7	ANCHORING ROD CPL
COUPLING LINK	10533594	11	4	557	10 53 216 2	ANCHORING ROD CPL
COUPLING LINK	10533594	11	4	565	10 53 216 3	ANCHORING ROD CPL
COUPLING LINK	10533594	11	4	572	10 53 216 4	ANCHORING ROD CPL
COUPLING LINK	10534277	43	4	505	11 23 820 4	PIVOT PIECE CPL
COUPLING LINK	385043714	18	4	620	99 23 415 14	STAY ROPE ROD
COUPLING LINK	919981214	23	2	613	11 28 744 5	MOUNTING PARTS
COUPLING LINK	949911114	12	8	614	95 70 956 14	ANCHORING ROD CPL
COUPLING LINK	950411414	13	4	620	99 23 415 14	STAY ROPE ROD
COUPLING LINK	958339514	7	4	579	11 28 648 4	MOUNTING PARTS
COUPLING LINK	958339514	12	4	620	99 23 415 14	STAY ROPE ROD
COUPLING LINK	958339714	13	4	614	95 70 956 14	ANCHORING ROD CPL
COUPLING PIECE	10594064	13	1	82	11 24 773 5	HYDR POWER UNIT
COUPLING PIECE	11290850	200	2	86	11 24 682 0	DISTRIBUTOR GEARBOX
COUPLING SOCKET	605612214	42	1	735	10 56 013 7	MAINS SUPPLY BATTERY

Description	Item	Pos.	Quantity	Sheet	Assembly	Description
COVER	10122317	1	1	298	10 14 637 4	LOCKING PIECES
COVER	10127967	1	1	293	10 12 797 9	LOCKING PIECES
COVER	10133334	8	1	103	10 11 834 9	DOUBLE V-PUMP
COVER	10134561	12	1	111	10 13 333 4	COVER
COVER	10149013	11	1	226	10 15 529 8	OIL SUMP PRE-ASS.
COVER	10520927	14	1	53	10 56 073 3	FUEL TANK CPL
COVER	10530487	7	1	35	10 53 048 9	FUSE HOLDER
COVER	10554227	11	1	671	11 30 694 4	RAIL CPL
COVER	10554228	12	1	671	11 30 694 4	RAIL CPL
COVER	10572054	14	4	700	11 89 568 6	SELF-LOADING SYSTEM RFK
COVER	10572241	3	1	455	10 55 154 8	QUICK RELEASE FITTING
COVER	10572242	3	1	510	10 55 157 6	QUICK RELEASE FITTING
COVER	10583346	10	1	306	11 24 114 6	COVER
COVER	10583347	11	1	306	11 24 114 6	COVER
COVER	10593544	48	2	398	11 27 970 6	CABIN CPL
COVER	10593554	49	1	398	11 27 970 6	CABIN CPL
COVER	10595280	12	2	180	10 58 017 0	RETURN PIPE
COVER	10687924	82	1	406	10 03 610 7	KEYBOARD OPERATING PANE
COVER	11217289	5	1	179	10 57 532 2	INTAKE PIPE OIL CPL
COVER	11219927	2	1	89	11 21 990 5	ADJUSTMENT
COVER	11219929	3	1	89	11 21 990 5	ADJUSTMENT
COVER	11226090	110	1	383	51 14 347 14	SG SAFETY BLOCK
COVER	11233332	148	1	18	11 28 647 6	VALVE BLOCK
COVER	11233333	150	2	18	11 28 647 6	VALVE BLOCK
COVER	11233338	151	8	18	11 28 647 6	VALVE BLOCK
COVER	11236709	3	1	725	11 21 750 0	LIQUEFIER
COVER	11241146	90	1	80	11 92 885 2	CENTRAL POWER UNIT CPL
COVER	11252203	1	1	306	11 24 114 6	COVER
COVER	11252205	16	1	306	11 24 114 6	COVER
COVER	11252206	17	1	306	11 24 114 6	COVER
COVER	11252207	2	1	306	11 24 114 6	COVER
COVER	11252208	8	1	306	11 24 114 6	COVER
COVER	11252211	3	1	306	11 24 114 6	COVER
COVER	11252213	9	1	306	11 24 114 6	COVER
COVER	11252214	4	1	306	11 24 114 6	COVER
COVER	11252215	5	1	306	11 24 114 6	COVER
COVER	11252216	6	1	306	11 24 114 6	COVER
COVER	11262861	12	1	306	11 24 114 6	COVER
COVER	11267378	1	1	90	11 21 992 7	COVER
COVER	11267396	1	1	91	11 21 992 9	COVER
COVER	11301913	147	1	18	11 28 647 6	VALVE BLOCK
COVER	11357451	1	1	273	11 44 013 4	COVER PRE-ASS.
COVER	11357453	2	1	273	11 44 013 4	COVER PRE-ASS.
COVER	385072014	65	2	65	10 58 163 4	CABIN SUSPENSION CPL
COVER	592287814	18	1	422	59 22 871 14	FRONT WINDOW CPL
COVER	7027755	3	1	202	10 30 300 7	FUEL PREFILTER
COVER	9275429	72	1	117	92 75 443	REPAIR SET LID
COVER	932037701	35	1	346	93 88 500 01	ROPE DRUM
COVER	939554301	20	1	346	93 88 500 01	ROPE DRUM
COVER	942264714	21	2	48	10 56 070 1	TANK HYDR CPL
COVER	949196514	8	2	366	99 29 258 14	LUG SHEAVE SET
COVER	949724114	23	2	588	99 23 398 14	ROLLER SET
COVER	971333403	13	1	463	11 89 365 0	CRAWLER CARRIER RIGHT CP
COVER	971333403	13	1	474	11 89 365 1	CRAWLER CARRIER LEFT CP
COVER LID	10036950	17	1	431	70 24 996	SEAT FRAME
COVER LID	10129382	7	1	255	10 13 508 0	HIGH PRESSURE CONNECTO
COVER LID	10129385	10	1	255	10 13 508 0	HIGH PRESSURE CONNECTO
COVER LID	11946452	220	1	428	11 93 934 6	AIR CONDITIONING
COVER LID	605618014	82	2	576	10 57 559 9	CABLE LOOM
COVER LID	605618014	82	2	609	10 57 651 9	CABLE LOOM

Description	Item	Pos.	Quantity	Sheet	Assembly	Description
COVER PLATE	927509601	14	1	392	90 01 376 2	SLEWING GEAR DRIVE
COVER PRE-ASS.	11440134	1	1	272	10 14 611 7	COVERING ASSEMBLY
COVER UNDERSIDE	11249222	12	1	78	11 92 885 5	AGGREGATE DIESEL ENGINE
COVERING ASSEMBLY	10146117	342	1	215	12 42 545 4	DIESEL ENGINE
COVERS	11244091	1	1	308	11 24 409 0	PANELLING SUPERSTR. INSTA
COVERS	592290114	78	1	416	10 35 008 0	CABIN
CRADLE	11219922	2	1	88	11 21 990 2	DRIVING GEAR
CRANK HANDLE	616155414	10	1	515	61 61 541 14	CABLE DRUM
CRANKCASE BREATHER	10136800	1	1	223	10 14 201 8	CRANKCASE BREATHER ASS
CRANKCASE BREATHER ASS	10142018	16	1	214	12 42 545 4	DIESEL ENGINE
CRANKCASE CPL. WITH CYLIN	11389617	10	1	214	12 42 545 4	DIESEL ENGINE
CRANKCASE PRE-ASSY.	10154385	1	1	217	11 38 961 7	CRANKCASE CPL. WITH CYLIN
CRANKSHAFT ADD-ON PARTS	10141983	53	1	214	12 42 545 4	DIESEL ENGINE
CRANKSHAFT WITH GEAR	10147437	50	1	214	12 42 545 4	DIESEL ENGINE
CRAWLER CARRIER LEFT CP	11893651	11	1	439	11 89 364 8	UC CPL
CRAWLER CARRIER RIGHT CP	11893650	10	1	439	11 89 364 8	UC CPL
CRAWLER CARRIER ST.CON	11893689	1	1	463	11 89 365 0	CRAWLER CARRIER RIGHT CP
CRAWLERCARRIER LEFT ST.	11893687	1	1	474	11 89 365 1	CRAWLER CARRIER LEFT CP
CRIMPING CONTACT	605608401	44	24	512	11 90 151 1	CABLE LOOM 1 PIVOT PIECE E
CROSS BEAM ST.CONST.	10557217	11	1	667	10 55 601 0	FALL PROTECTION RFK
CROSS CONNECTOR	602731714	51	1	39	10 56 645 8	TERMINAL BOX
CROSS CONNECTOR	602731714	14	2	611	10 57 652 3	CLAMPING SOCKET
CROSS CONNECTOR	602812414	88	1	402	10 55 963 5	SWITCH CABINET X1
CROSS CONNECTOR	693138614	73	1	402	10 55 963 5	SWITCH CABINET X1
CROSS HANDLE 1 "	885391814	50	1	500	10 56 187 5	TOOL EQUIPMENT
CROSS MASTER SWITCH EL	10521602	15	1	2	01 38 406 14	LR 1300 SX
CROSS STRAP	956507814	31	1	613	11 28 744 5	MOUNTING PARTS
CROSS STRAP	956507814	10	1	711	11 23 626 6	ROPE MOUNTING RFK
CROSSBAR ST.CONST.	993372514	10	1	620	99 23 415 14	STAY ROPE ROD
CROSSBAR ST.CONST.	993432414	14	1	620	99 23 415 14	STAY ROPE ROD
CROWBAR 1200 MM	790036914	12	1	501	10 56 183 8	TOOL
CROWBAR 600 MM	885400114	14	1	501	10 56 183 8	TOOL
CUTOFF RELAY	630120108	81	4	402	10 55 963 5	SWITCH CABINET X1
CUTTING-OFF WHEEL	602791714	17	1	611	10 57 652 3	CLAMPING SOCKET
CYCLE VALVE	10149191	1	1	285	10 14 622 4	REGULATION BOOST PRESS
CYL HEAD ADD-ON	10131768	80	6	214	12 42 545 4	DIESEL ENGINE
CYL LOCK	10542435	1	1	408	38 50 944 14	SWITCHING HOUSING
CYL ROLLER BEARING	10573892	2	1	593	10 50 435 2	ROPE PULLEY
CYL ROLLER BEARING	11490216	34	2	138	10 14 360 7	REPAIR SET SWIVEL BEARIN
CYL ROLLER BEARING	7382149	34	1	115	90 77 464	RS FLANGE
CYL ROLLER BEARING	761001103	72	1	467	96 93 178 01	TRACTION DRIVE
CYL ROLLER BEARING	7610021	12	1	467	96 93 178 01	TRACTION DRIVE
CYL.NEEDLE BEARING	7469905	64	2	107	10 11 835 7	REPAIR KIT CONNECTION HO
CYL.NEEDLE BEARING	7469905	32	1	123	98 84 402	REPAIR KIT SHAFT
CYL.ROLLER		17	114	348	93 88 497 01	PLANETARY GEARBOX
CYLINDER	10007948	1	1	449	10 00 794 7	HYDRAULIC PARTS DRIVING G
CYLINDER	10154458	80	6	217	11 38 961 7	CRANKCASE CPL. WITH CYLIN
CYLINDER	10324901	2	1	158	10 32 489 2	DRIVING GEAR
CYLINDER	7023838	1	1	386	11 94 017 6	HYDRAULIC PARTS DRIVING G
CYLINDER	7024273	111	1	630	51 02 322 14	OIL MOTOR
CYLINDER BUSHING	10153973	1	1	218	10 15 445 8	CYLINDER
CYLINDER HEAD COVER	10134695	1	1	241	10 13 469 6	CYLINDER HEAD COVER ASS
CYLINDER HEAD COVER	10134698	1	1	239	10 12 653 5	CYLINDER HEAD COVER ASS
CYLINDER HEAD COVER	10134750	1	1	238	10 13 475 1	CYLINDER HEAD COVER ASS
CYLINDER HEAD COVER ASS	10126535	83	1	214	12 42 545 4	DIESEL ENGINE
CYLINDER HEAD COVER ASS	10134696	84	2	214	12 42 545 4	DIESEL ENGINE
CYLINDER HEAD COVER ASS	10134751	82	3	214	12 42 545 4	DIESEL ENGINE
CYLINDER HEAD GASKET	10133667	2	1	235	10 13 176 8	CYL HEAD ADD-ON
CYLINDER HEAD PRE-ASSY.	10145864	1	1	235	10 13 176 8	CYL HEAD ADD-ON
CYLINDER LOCK	592289714	3	1	423	59 22 895 14	FLAP CPL

Description	Item	Pos.	Quantity	Sheet	Assembly	Description
CYLINDER WITH BUSHING	9075894	1	1	119	98 89 833	RK CYLINDER+CONTROL PLAT
CYLINDRICAL ROLLER BEARIN	7380070	33	1	136	10 13 802 7	REPAIR KIT SHAFT
CYLINDRICAL ROLLER BEARIN	7380106	33	1	123	98 84 402	REPAIR KIT SHAFT
CYLINDRICAL ROLLER BEARIN	746310401	5	2	470	94 44 065 03	PLANET WHEEL
CYLINDRICAL ROLLER BEARIN	746413001	5	2	469	94 44 048 03	PLANET WHEEL
CYLINDRICAL ROLLER BEARIN	746506601	5	2	468	94 44 043 03	PLANET WHEEL
DATA CARD CF2	10541109	32	1	402	10 55 963 5	SWITCH CABINET X1
DEEP GROOVE BALL BEARIN		3	1	348	93 88 497 01	PLANETARY GEARBOX
DEEP GROOVE BALL BEARIN	10350232	290	4	86	11 24 682 0	DISTRIBUTOR GEARBOX
DEEP GROOVE BALL BEARIN	10592555	30	1	376	99 04 645 14	DRIVE
DEEP GROOVE BALL BEARIN	616155214	4	2	515	61 61 541 14	CABLE DRUM
DEEP GROOVE BALL BEARIN	745120514	24	6	613	11 28 744 5	MOUNTING PARTS
DEEP GROOVE BALL BEARIN	745120514	20	2	662	99 10 116 14	ROPE GUIDE
DEEP GROOVE BALL BEARIN	745128314	40	1	636	54 02 703 14	FLANGE CPL
DEEP GROOVE BALL BEARIN	745141001	66	1	392	90 01 376 2	SLEWING GEAR DRIVE
DEEP GROOVE BALL BEARIN	745141814	280	6	86	11 24 682 0	DISTRIBUTOR GEARBOX
DEEP GROOVE BALL BEARIN	745194714	12	1	638	54 02 705 14	DRIVE UNIT CPL
DEEP GROOVE BALL BEARIN	745906614	6	1	636	54 02 703 14	FLANGE CPL
DEEP GROOVE BALL BEARIN	745907514	23	1	637	54 02 704 14	POWER TAKE-OFF CPL
DEEP GROOVE BALL BEARIN	746171514	18	2	357	10 51 968 6	LUG SUPERSTRUCTURE CPL
DEFLECTION PULLEY CPL	991413714	32	1	535	11 24 444 4	A-FRAME 1 CPL
DESIGNATION CARD	602835914	52	1	39	10 56 645 8	TERMINAL BOX
DESIGNATION CARD	602835914	21	1	611	10 57 652 3	CLAMPING SOCKET
DEVICE PLUG	10296818	92	1	513	11 90 151 1	CABLE LOOM 1 PIVOT PIECE E
DEVICE PLUG	605010314	41	1	735	10 56 013 7	MAINS SUPPLY BATTERY
DIAPHRAGM	10558762	34	1	463	11 89 365 0	CRAWLER CARRIER RIGHT CP
DIAPHRAGM	10558762	34	1	474	11 89 365 1	CRAWLER CARRIER LEFT CP
DIAPHRAGM	11235482	35	2	476	11 31 390 8	CENTRE PART CPL
DIAPHRAGM ACCUMULATOR	592274714	6	2	442	11 89 300 5	TUBING HYDR
DIAPHRAGM ACCUMULATOR	592274714	4	1	509	10 51 826 1	PIVOT PIECE HYDR
DIESEL ENGINE	12425454	66	1	80	11 92 885 2	CENTRAL POWER UNIT CPL
DIRECTIONAL CONTROL VALV	10540182	230	1	383	51 14 347 14	SG SAFETY BLOCK
DIRECTIONAL CONTROL VALV	10591435	8	1	22	10 35 148 6	VALVE BLOCK
DIRECTIONAL CONTROL VALV	11223305	2	2	26	59 21 458 14	VALVE BLOCK
DIRECTIONAL CONTROL VALV	11229184	7	1	22	10 35 148 6	VALVE BLOCK
DIRECTIONAL CONTROL VALV	11233727	1	1	75	10 22 540 8	VALVE BLOCK
DIRECTIONAL CONTROL VALV	11286481	2	2	8	11 29 618 6	SUPERSTRUCTURE HYDR
DIRECTIONAL CONTROL VALV	510427214	6	2	22	10 35 148 6	VALVE BLOCK
DIRECTIONAL CONTROL VALV	510427214	5	1	629	10 51 726 2	TUBING HYDR
DIRECTIONAL CONTROL VALV	510429214	4	1	525	10 51 959 1	TUBING HYDR
DIRECTIONAL CONTROL VALV	511432714	11	5	8	11 29 618 6	SUPERSTRUCTURE HYDR
DIRECTIONAL CONTROL VALV	511432714	4	1	341	10 51 969 8	NEEDLE LUFFING WINCH HYD
DIRECTIONAL CONTROL VALV	511432714	3	1	358	10 51 968 7	MAIN LUG HYDR
DIRECTIONAL CONTROL VALV	511480614	2	1	709	10 55 459 4	TUBING HYDR
DIRECTIONAL CTRL. VALVE	10224607	2	1	697	11 89 408 3	TUBING HYDR
DIRECTIONAL CTRL. VALVE	510403414	14	4	442	11 89 300 5	TUBING HYDR
DISC SPRING	7024282	117	4	630	51 02 322 14	OIL MOTOR
DISH	10098157	60	11	310	11 24 409 0	PANELLING SUPERSTR. INSTA
DISH	10098157	18	20	324	10 54 591 0	MOTOR COWLING
DISH	10098157	12	28	479	99 26 718 14	PEDESTAL
DISH	10098157	42	53	505	11 23 820 4	PIVOT PIECE CPL
DISH	10098157	20	6	519	10 58 193 7	GRATING CPL
DISH	10098157	21	3	548	11 28 390 8	BOOM ACCESS
DISH	10098157	12	2	549	11 28 391 3	FIXING CLAMP
DISH	10098157	21	3	563	11 28 583 8	BOOM ACCESS
DISH	10098157	21	3	570	11 28 626 1	BOOM ACCESS
DISH	10098157	21	4	579	11 28 648 4	MOUNTING PARTS
DISH	10098157	10	12	644	11 24 147 8	UC PLATFORM
DISH	10098157	10	28	645	11 24 575 5	PEDESTAL
DISH	10098157	13	4	669	10 55 280 7	GRATING CPL

Description	Item	Pos.	Quantity	Sheet	Assembly	Description
DISH	10098157	15	3	671	11 30 694 4	RAIL CPL
DISH	10098157	5	2	672	11 23 827 7	ROPE GUARD
DISH	10098157	12	1	673	11 30 567 0	TRANSPORT LASHING
DISPLACEMENT PISTON	10287733	1	1	167	10 28 766 5	ADJUSTING PIECE
DISTANCE RING 42X51X1.3 C	9072437	10	1	116	90 72 436	SPACER RING SET
DISTANCE RING 42X51X1.4 C	9072438	11	1	116	90 72 436	SPACER RING SET
DISTANCE RING 42X51X1.5 C	9072439	12	1	116	90 72 436	SPACER RING SET
DISTANCE RING 42X51X1.6 C	9072440	13	1	116	90 72 436	SPACER RING SET
DISTANCE RING 42X51X1.9 C	9074332	33	1	116	90 72 436	SPACER RING SET
DISTANCE RING 91/127X8 S35	956803514	24	2	588	99 23 398 14	ROLLER SET
DISTANCE RING CK75;DIN 17	9074307	31	1	116	90 72 436	SPACER RING SET
DISTANCE RING CK75;DIN 17	9074308	32	1	116	90 72 436	SPACER RING SET
DISTANCE SLEEVE	11217169	54	6	204	11 92 923 6	ASSEMBLY INSTAL.
DISTANCE SLEEVE 11X21X45	10141438	7	24	280	10 14 144 4	EXHAUST PIPE ASSEMBLY
DISTANCE SLEEVE 18X8.5X10	9132577	2	4	282	10 14 737 0	HEAT PROTECTION W.FASTEN
DISTANCE SLEEVE 18X8.5X10	9132577	93	1	296	10 15 028 8	CABLE HARNESS MOUNTING
DISTANCE TUBE	10517047	8	2	599	79 04 871 14	BOTTOM HOOK BLOCK
DISTANCE TUBE	11493578	14	2	592	79 04 112 14	BOTTOM HOOK BLOCK
DISTANCE WASHER	10226471	14	1	422	59 22 871 14	FRONT WINDOW CPL
DISTANCE WASHER RD30X1	10349263	52	24	310	11 24 409 0	PANELLING SUPERSTR. INSTA
DISTRIBUTOR BLOCK	10151825	5	1	260	10 14 333 9	FUEL LINES
DISTRIBUTOR GEARBOX	11246820	1	1	82	11 24 773 5	HYDR POWER UNIT
DOOR	10565777	1	1	322	10 56 580 8	DOOR
DOOR	10565808	13	1	312	11 24 409 1	COVERS
DOOR	10566237	6	1	312	11 24 409 1	COVERS
DOOR	10566238	1	1	321	10 56 623 7	DOOR
DOOR	10578835	3	1	312	11 24 409 1	COVERS
DOOR	10578836	1	1	316	10 57 883 5	DOOR
DOOR	10578972	1	1	318	10 57 897 6	DOOR
DOOR	10578976	4	5	312	11 24 409 1	COVERS
DOOR	10579397	1	1	320	10 57 940 0	DOOR
DOOR	10579400	5	1	312	11 24 409 1	COVERS
DOOR ACCESSORIES	10226454	2	1	415	10 35 008 0	CABIN
DOOR HANDLE INTERNAL	10226473	19	1	419	10 35 007 6	SLIDING DOOR
DOOR HANDLE INTERNAL	10226478	21	1	419	10 35 007 6	SLIDING DOOR
DOOR LOCK	10353879	20	1	316	10 57 883 5	DOOR
DOOR LOCK	10353879	3	1	318	10 57 897 6	DOOR
DOOR LOCK	10353879	10	1	320	10 57 940 0	DOOR
DOOR LOCK	10353879	10	1	321	10 56 623 7	DOOR
DOOR LOCK	10353879	6	1	322	10 56 580 8	DOOR
DOOR SEAL	592285714	3	1	419	10 35 007 6	SLIDING DOOR
DOOR WEDGE	790549214	15	9	314	11 24 409 1	COVERS
DOOR WEDGE STOP	790549314	9	1	316	10 57 883 5	DOOR
DOOR WEDGE STOP	790549314	9	1	318	10 57 897 6	DOOR
DOOR WEDGE STOP	790549314	11	1	320	10 57 940 0	DOOR
DOOR WEDGE STOP	790549314	11	1	321	10 56 623 7	DOOR
DOOR WEDGE STOP	790549314	9	1	322	10 56 580 8	DOOR
DOUBLE BANJO BOLT 6X6 9S	10014864	7	1	261	10 14 588 5	LEAK OIL RETURN LINE
DOUBLE NON-RETURN VALVE	511607014	6	1	525	10 51 959 1	TUBING HYDR
DOUBLE PLUG	10424238	30	3	94	11 21 993 0	PUMP HOUSING
DOUBLE PLUG	7012971	29	3	94	11 21 993 0	PUMP HOUSING
DOUBLE PLUG	7012971	31	1	451	11 22 473 8	ADJUSTMENT
DOUBLE PLUG	7022127	31	1	156	11 22 127 4	PUMP ELEMENT
DOUBLE PLUG	7022127	31	1	165	11 21 593 6	PUMP ELEMENT
DOUBLE PLUG	7022127	28	5	451	11 22 473 8	ADJUSTMENT
DOUBLE PRESSURE LIMITING	10537607	10	2	22	10 35 148 6	VALVE BLOCK
DOUBLE V-PUMP	10118349	4	1	82	11 24 773 5	HYDR POWER UNIT
DOUBLE-ACTING CYL	10099173	2	2	525	10 51 959 1	TUBING HYDR
DOUBLE-ACTING CYL	10227855	1	2	680	10 51 971 2	SELF-LOADING SYSTEM HYD
DOUBLE-ACTING CYL	513313914	10	2	8	11 29 618 6	SUPERSTRUCTURE HYDR

Description	Item	Pos.	Quantity	Sheet	Assembly	Description
DOUBLE-ACTING CYL	513314114	13	4	442	11 89 300 5	TUBING HYDR
DOUBLE-ACTING CYL	592000814	3	1	721	10 51 728 1	TUBING HYDR
DOUBLE-ACTING CYL	592104114	2	2	73	10 51 969 5	A-FRAME ERECTION HYDR
DOUBLE-ACTING CYL	592104214	2	1	687	10 51 973 8	SELF-LOADING SYSTEM HYD
DOUBLE-ENDED STUD DIN 835	10489376	3	3	266	10 14 736 4	AIR INTAKE ASSEMBLY
DOUBLE-ENDED STUD DIN 835	4901450	4	3	287	10 12 037 2	STARTER INSTALLATION
DOUBLE-ENDED STUD DIN 83	4038502	13	3	226	10 15 529 8	OIL SUMP PRE-ASS.
DOUBLE-ENDED STUD DIN 939	4068017	60	6	53	10 56 073 3	FUEL TANK CPL
DOUBLE-ENDED STUD DIN 93	11934656	125	4	18	11 28 647 6	VALVE BLOCK
DOUBLE-ENDED STUD DIN 93	11690424	10	1	284	10 14 511 2	EXHAUST NOZZLE ATTACHM
DOUBLE-ENDED STUD M16X1.	9275003	20	8	107	10 11 835 7	REPAIR KIT CONNECTION HO
DOWEL PIN DIN 1481 5X16 ST	11226135	170	1	383	51 14 347 14	SG SAFETY BLOCK
DOWEL PIN ISO 13337 8X10 S	4980638	44	2	139	10 12 224 5	REPAIR KIT LEVER
DOWEL PIN ISO 8752 2X6 ST	11001743	6	1	255	10 13 508 0	HIGH PRESSURE CONNECTO
DOWEL PIN ISO 8752 5X12 ST		59	2	348	93 88 497 01	PLANETARY GEARBOX
DOWEL PIN ISO 8752 5X16	432003714	101	2	507	11 23 820 4	PIVOT PIECE CPL
DOWEL PIN ISO 8752 8X16 ST		72	1	348	93 88 497 01	PLANETARY GEARBOX
DOWEL PIN ISO 8752 8X16 ST	432008001	78	1	467	96 93 178 01	TRACTION DRIVE
DRAIN COUPLING	7402657	1	1	503	91 76 658 14	DRAIN HOSE CPL
DRAIN HOSE CPL	917665814	31	1	500	10 56 187 5	TOOL EQUIPMENT
DRAIN TAP	11696074	16	1	202	10 30 300 7	FUEL PREFILTER
DRIVE	11893214	4	1	485	10 53 039 8	WINCH
DRIVE	990464514	10	1	374	99 04 941 14	DRIVE UNIT
DRIVE FLANGE	606279014	20	1	493	11 22 050 0	WINCHES INSTALLATION
DRIVE FLANGE	606279014	20	1	499	11 22 050 1	WINCHES INSTALLATION
DRIVE FLANGE	606281114	46	1	33	11 24 519 0	SUPERSTRUCTURE EL
DRIVE SHAFT		5	1	348	93 88 497 01	PLANETARY GEARBOX
DRIVE SHAFT	944434903	50	1	467	96 93 178 01	TRACTION DRIVE
DRIVE SLEEVE	11223233	4	1	376	99 04 645 14	DRIVE
DRIVE SLEEVE	540272914	4	1	638	54 02 705 14	DRIVE UNIT CPL
DRIVE UNIT	990494114	2	1	355	10 51 969 1	LUG SUPERSTRUCTURE CPL
DRIVE UNIT CPL	540270514	24	1	633	59 20 694 14	WINCH
DRIVER	10348618	13	1	733	10 52 293 0	SG TACHOGENERATOR RFK
DRIVER INSTALLATION	10552681	20	1	6	11 24 047 9	SUPERSTRUCTURE CPL
DRIVING GEAR	10287664	1	1	165	11 21 593 6	PUMP ELEMENT
DRIVING GEAR	10287725	1	1	166	10 28 766 4	DRIVING GEAR
DRIVING GEAR	10324889	1	1	156	11 22 127 4	PUMP ELEMENT
DRIVING GEAR	10324892	1	1	157	10 32 488 9	DRIVING GEAR
DRIVING GEAR	10503513	1	1	447	51 24 059 14	VARIABLE DISPLACEMENT MO
DRIVING GEAR	11219902	1	1	87	10 53 430 7	V PUMP
DRIVING GEAR	7023828	1	1	384	51 22 991 14	OIL MOTOR
DRIVING SHAFT	11219920	1	1	88	11 21 990 2	DRIVING GEAR
DRIVING SHAFT	11940177	2	1	385	70 23 828	DRIVING GEAR
DRIVING SHAFT	11940205	2	1	387	11 94 017 7	DRIVING SHAFT
DRUM	938850101	1	1	346	93 88 500 01	ROPE DRUM
DRUM BODY	10227104	1	1	515	61 61 541 14	CABLE DRUM
DRYER	11236711	4	1	725	11 21 750 0	LIQUEFIER
DSF RING	10146358	5	1	234	10 14 636 7	PISTON CPL.
DUST CAP	605013508	53	1	512	11 90 151 1	CABLE LOOM 1 PIVOT PIECE E
DUST CAP	605013508	51	2	536	10 53 120 7	A-FRAME ELECTRICS
DUST CAP	6203401	93	2	576	10 57 559 9	CABLE LOOM
EARTH CONNECTION PLATE	9080911	4	1	268	90 78 314	HEATING FLANGE ADD-ON
EASY-CHANGE FILTER	10297295	1	2	248	10 14 294 2	LUBE OIL FILTER ASSEMBLY
ECCENTRIC SCREW	11267405	46	1	94	11 21 993 0	PUMP HOUSING
EDGE PROTECTION METER W	226016702	29	2.18	326	11 24 922 2	COVER UNDERSIDE
EDGE PROTECTION METER W	226016702	30	1.11	326	11 24 922 2	COVER UNDERSIDE
EDGE PROTECTION METER W	226016702	31	1.19	326	11 24 922 2	COVER UNDERSIDE
EDGE PROTECTION METER W	226016702	33	1.24	326	11 24 922 2	COVER UNDERSIDE
EDGE PROTECTION METER W	226016702	34	1.29	326	11 24 922 2	COVER UNDERSIDE
EDGE PROTECTION METER W	226016702	35	0.57	326	11 24 922 2	COVER UNDERSIDE

Description	Item	Pos.	Quantity	Sheet	Assembly	Description
EDGE PROTECTION METER W	226016702	36	0.85	326	11 24 922 2	COVER UNDERSIDE
EDGE PROTECTION METER W	226016702	37	1.2	326	11 24 922 2	COVER UNDERSIDE
EDGE PROTECTION METER W	226016702	39	0.36	326	11 24 922 2	COVER UNDERSIDE
EDGE PROTECTION METER W	226016702	40	0.35	326	11 24 922 2	COVER UNDERSIDE
EDGE PROTECTION METER W	226016702	22	0.45	514	91 92 528 14	CABLE DRUM
EDGE PROTECTION METER W	226017802	102	4	507	11 23 820 4	PIVOT PIECE CPL
EDGE PROTECTION METER W	226017802	13	1.132	546	11 24 570 3	BOOM INTERMEDIATE SECTIO
EDGE PROTECTION METER W	226017802	13	1.132	562	11 24 570 9	BOOM INTERMEDIATE SECTIO
EDGE PROTECTION METER W	226017802	13	1.132	569	11 24 571 5	BOOM INTERMEDIATE SECTIO
EDGE SEALING RING	10588729	5	1	527	59 20 224 14	LOAD HOLDING VALVE
ELBOW	10153669	1	1	277	10 14 274 2	COOLANT PIPE BEND ADD-ON
ELBOW	550789808	16	1	194	11 92 922 0	SUCTION UNIT AIR
ELBOW PIECE	592287714	17	1	422	59 22 871 14	FRONT WINDOW CPL
ELBOW PIECE	7412268	37	2	33	11 24 519 0	SUPERSTRUCTURE EL
ELECTR.CABLE	10870540	251	10.7	39	10 56 645 8	TERMINAL BOX
ELECTR.CABLE	10870540	26	0.12	611	10 57 652 3	CLAMPING SOCKET
ELECTRONIC MODULES	10688831	31	1	622	11 90 722 6	MODEM RFK
EMERGENCY OPERATION EL	11250162	447	1	3	01 38 406 14	LR 1300 SX
EMERGENCY STOP BUTTON	10875360	39	3	33	11 24 519 0	SUPERSTRUCTURE EL
EMERGENCY STOP BUTTON	693073014	33	1	410	11 26 095 7	CONTROL STAND RIGHT
EMERGENCY STOP BUTTON	693073014	33	1	741	10 52 155 9	MODULE REFUELLING SYSTE
EMERGENCY STOP SIGN	606718408	35	1	410	11 26 095 7	CONTROL STAND RIGHT
ENCLOSURE CPL	10445126	3	1	509	10 51 826 1	PIVOT PIECE HYDR
ENCLOSURE CPL	10445127	20	2	442	11 89 300 5	TUBING HYDR
END ANGLE	602720514	28	4	39	10 56 645 8	TERMINAL BOX
END ANGLE	602720514	20	2	611	10 57 652 3	CLAMPING SOCKET
END ANGLE	602832214	54	1	735	10 56 013 7	MAINS SUPPLY BATTERY
END COVER	4001664	3	11	217	11 38 961 7	CRANKCASE CPL. WITH CYLIN
END COVER	4980362	2	6	217	11 38 961 7	CRANKCASE CPL. WITH CYLIN
END COVER	9144757	4	1	239	10 12 653 5	CYLINDER HEAD COVER ASS
END WASHER EL	939556301	9	1	346	93 88 500 01	ROPE DRUM
ENGINE CONTROL SENSORS	10142977	581	1	216	12 42 545 4	DIESEL ENGINE
EQUALIZING RESERVOIR	11941710	11	1	183	11 94 151 8	COOLER INSTALLATION WATE
EQUIPMENT MOUNTING	10445629	1	2	436	11 30 962 5	HOLDER CPL
EVAPORATOR	592293614	230	1	428	11 93 934 6	AIR CONDITIONING
EXHAUST FLAP	10153118	1	1	284	10 14 511 2	EXHAUST NOZZLE ATTACHM
EXHAUST FLAP	11299163	13	1	198	11 24 114 3	EXHAUST GAS SYSTEM
EXHAUST GAS SYSTEM	11241143	40	1	80	11 92 885 2	CENTRAL POWER UNIT CPL
EXHAUST GAS SYSTEM	11900325	70	1	80	11 92 885 2	CENTRAL POWER UNIT CPL
EXHAUST MIXING PIPE	10148669	4	1	303	11 90 032 5	EXHAUST GAS SYSTEM
EXHAUST NOZZLE	10146274	3	1	284	10 14 511 2	EXHAUST NOZZLE ATTACHM
EXHAUST NOZZLE ATTACHM	10145112	432	1	215	12 42 545 4	DIESEL ENGINE
EXHAUST PIPE ASSEMBLY	10141444	410	1	215	12 42 545 4	DIESEL ENGINE
EXHAUST PIPE PRE-ASS.	10141443	1	1	280	10 14 144 4	EXHAUST PIPE ASSEMBLY
EXHAUST TAIL PIPE	11248175	7	1	198	11 24 114 3	EXHAUST GAS SYSTEM
EXHAUST TC MOUNTING	10140136	430	1	215	12 42 545 4	DIESEL ENGINE
EXPANSION VALVE	10223210	170	1	428	11 93 934 6	AIR CONDITIONING
EXTENSION 1 " X 410MM	885392414	45	1	500	10 56 187 5	TOOL EQUIPMENT
EXTENSION CABLE	614027114	74	1	399	11 27 973 6	CABIN EL
FALL PROTECTION CPL	10556011	10	1	667	10 55 601 0	FALL PROTECTION RFK
FALL PROTECTION RFK	10555148	625	1	3	01 38 406 14	LR 1300 SX
FALL PROTECTION RFK	10556010	620	1	3	01 38 406 14	LR 1300 SX
FALL PROTECTION RFK	10557224	626	1	3	01 38 406 14	LR 1300 SX
FAN	10223209	80	1	428	11 93 934 6	AIR CONDITIONING
FAN	10352188	5	1	31	10 22 592 5	COOLER MOTOR
FAN	11267555	10	1	186	10 57 423 7	COOLER MOTOR
FAN	11932243	4	1	190	10 57 423 9	COOLER MOTOR
FAN BOX	11946423	380	1	428	11 93 934 6	AIR CONDITIONING
FAN COVER	10223362	10	1	316	10 57 883 5	DOOR
FAN COVER	10565889	2	1	322	10 56 580 8	DOOR

Description	Item	Pos.	Quantity	Sheet	Assembly	Description
FAN COWL	10352186	2	1	31	10 22 592 5	COOLER MOTOR
FAN COWL	11932245	2	1	190	10 57 423 9	COOLER MOTOR
FAN MOTOR	11236708	2	1	725	11 21 750 0	LIQUEFIER
FASTENER	10350632	10	1	543	10 35 063 3	FASTENER
FASTENER	10350633	11	2	541	11 28 594 7	SUPPORT CPL
FASTENER	10350633	11	2	559	11 28 619 1	SUPPORT CPL
FASTENER	10350633	11	2	566	11 28 653 4	SUPPORT CPL
FASTENER	10588168	18	1	65	10 58 163 4	CABIN SUSPENSION CPL
FASTENING BRACKET	11219861	10	1	558	11 23 292 2	SUPPORT CPL
FASTENING BS	11230237	44	9	535	11 24 444 4	A-FRAME 1 CPL
FASTENING CLAMP	7362546	61	16	204	11 92 923 6	ASSEMBLY INSTAL.
FASTENING CLAMP	7382085	40	2	296	10 15 028 8	CABLE HARNESS MOUNTING
FASTENING CLIP	10350978	32	1	82	11 24 773 5	HYDR POWER UNIT
FASTENING DEVICE	10153373	5	1	271	10 14 286 0	AIR COND. COMPRESSOR A
FASTENING SCREW	602134114	59	4	39	10 56 645 8	TERMINAL BOX
FASTENING SCREW	602134114	24	2	611	10 57 652 3	CLAMPING SOCKET
FELT STRIP	10585445	12	2	635	54 02 702 14	ROPE DRUM CPL
FEMALE INSERT	605609514	94	1	34	11 24 519 0	SUPERSTRUCTURE EL
FEMALE INSERT	605609514	32	1	39	10 56 645 8	TERMINAL BOX
FEMALE INSERT	605609514	62	1	512	11 90 151 1	CABLE LOOM 1 PIVOT PIECE E
FEMALE INSERT	605609514	51	1	609	10 57 651 9	CABLE LOOM
FEMALE INSERT	605612014	42	1	39	10 56 645 8	TERMINAL BOX
FEMALE INSERT	605612014	72	1	513	11 90 151 1	CABLE LOOM 1 PIVOT PIECE E
FEMALE INSERT	605616114	81	2	576	10 57 559 9	CABLE LOOM
FEMALE INSERT	605616114	81	2	609	10 57 651 9	CABLE LOOM
FERRULE	773920008	13	4	540	11 25 204 2	SUPPORT CPL
FERRULE	773920008	26	6	582	10 59 863 3	PENDULUM CPL
FILING DESK	970857103	32	1	308	11 24 409 0	PANELLING SUPERSTR. INSTA
FILLER NECK	944215103	1	1	394	92 76 934 01	OIL FILLER NECK
FILLER NECK CONNECTION	10448187	14	1	58	11 27 315 5	CENTRAL GREASING
FILLER SIEVE	10296919	13	1	53	10 56 073 3	FUEL TANK CPL
FILTER	11490265	38	1	94	11 21 993 0	PUMP HOUSING
FILTER	11490265	39	1	94	11 21 993 0	PUMP HOUSING
FILTER	11490265	40	1	94	11 21 993 0	PUMP HOUSING
FILTER	592293714	240	2	428	11 93 934 6	AIR CONDITIONING
FILTER BLOWER INSTALLATIO	611052614	61	1	399	11 27 973 6	CABIN EL
FILTER BRACKET	12455374	1	1	259	10 14 675 3	FUEL FINE FILTER
FILTER ELEMENT	11291031	1	1	196	11 24 679 0	AIR FILTER
FILTER ELEMENT	510713814	1	1	51	51 06 906 14	AERATION FILTER
FILTER ELEMENT	553183708	6	1	202	10 30 300 7	FUEL PREFILTER
FILTER INSERT	10037623	1	1	171	10 22 358 1	PRESSURE FILTER
FILTER INSERT	11227203	1	1	50	10 51 572 4	RETURN FILTER
FILTER MAT	611124514	1	1	412	61 10 526 14	FILTER BLOWER INSTALLATIO
FINAL CONTROL VALVE	10138450	14	1	214	12 42 545 4	DIESEL ENGINE
FIRE EXTINGUISHER	890100814	10	1	63	92 65 477 14	FIRE EXTINGUISHER RFK
FIRE EXTINGUISHER MOUNT	10578845	31	2	6	11 24 047 9	SUPERSTRUCTURE CPL
FIRE EXTINGUISHER RFK	926547714	10	1	62	10 57 884 5	FIRE EXTINGUISHER MOUNT
FIRST-AID KIT	789011714	13	1	2	01 38 406 14	LR 1300 SX
FITTING		80	1	348	93 88 497 01	PLANETARY GEARBOX
FITTING		83	3	348	93 88 497 01	PLANETARY GEARBOX
FITTING	10035314	20	1	199	11 24 114 4	FUEL SYSTEM
FITTING	10035314	35	1	210	11 92 958 8	AIR DUCT CPL
FITTING	10225291	710	3	14	11 29 618 6	SUPERSTRUCTURE HYDR
FITTING	10288174	32	1	210	11 92 958 8	AIR DUCT CPL
FITTING	10531725	616	1	83	11 24 773 5	HYDR POWER UNIT
FITTING	10597776	620	4	381	10 55 216 1	TUBING HYDR
FITTING	10663840	28	1	210	11 92 958 8	AIR DUCT CPL
FITTING	10801399	17	2	284	10 14 511 2	EXHAUST NOZZLE ATTACHM
FITTING	10813933	9	2	261	10 14 588 5	LEAK OIL RETURN LINE
FITTING	10813933	6	1	302	11 41 475 7	ACCESSORIES AIR COMPRES

Description	Item	Pos.	Quantity	Sheet	Assembly	Description
FITTING	10813934	18	1	284	10 14 511 2	EXHAUST NOZZLE ATTACHM
FITTING	10813935	12	2	261	10 14 588 5	LEAK OIL RETURN LINE
FITTING	10816958	65	1	204	11 92 923 6	ASSEMBLY INSTAL.
FITTING	10872598	30	1	210	11 92 958 8	AIR DUCT CPL
FITTING	11002988	4	1	251	10 15 278 7	SEAL KIT HIGH PRESSURE P
FITTING	11002988	9	1	260	10 14 333 9	FUEL LINES
FITTING	11067653	8	2	201	10 55 091 1	ADD-ON PRELIMINARY FUEL F
FITTING	11229464	3	1	201	10 55 091 1	ADD-ON PRELIMINARY FUEL F
FITTING	11262806	10	1	59	11 26 557 2	MOUNTING PARTS
FITTING	11262807	3	1	731	11 28 048 1	CONNECTION PARTS
FITTING	11600199	38	1	210	11 92 958 8	AIR DUCT CPL
FITTING	11910325	190	1	526	10 09 917 3	DOUBLE-ACTING CYL
FITTING	11926906	26	1	210	11 92 958 8	AIR DUCT CPL
FITTING	247000902	90	4	204	11 92 923 6	ASSEMBLY INSTAL.
FITTING	247000902	31	1	210	11 92 958 8	AIR DUCT CPL
FITTING	247001802	613	2	687	10 51 973 8	SELF-LOADING SYSTEM HYD
FITTING	247009202	649	6	12	11 29 618 6	SUPERSTRUCTURE HYDR
FITTING	247009202	606	2	83	11 24 773 5	HYDR POWER UNIT
FITTING	247009202	644	1	444	11 89 300 5	TUBING HYDR
FITTING	247009202	611	2	509	10 51 826 1	PIVOT PIECE HYDR
FITTING	247009402	724	10	14	11 29 618 6	SUPERSTRUCTURE HYDR
FITTING	247009402	609	1	73	10 51 969 5	A-FRAME ERECTION HYDR
FITTING	247009402	605	4	83	11 24 773 5	HYDR POWER UNIT
FITTING	247009402	606	1	341	10 51 969 8	NEEDLE LUFFING WINCH HYD
FITTING	247009402	610	1	358	10 51 968 7	MAIN LUG HYDR
FITTING	247009402	605	2	381	10 55 216 1	TUBING HYDR
FITTING	247009702	612	13	10	11 29 618 6	SUPERSTRUCTURE HYDR
FITTING	247009702	608	1	73	10 51 969 5	A-FRAME ERECTION HYDR
FITTING	247009702	602	10	83	11 24 773 5	HYDR POWER UNIT
FITTING	247009702	21	1	199	11 24 114 4	FUEL SYSTEM
FITTING	247009702	604	1	381	10 55 216 1	TUBING HYDR
FITTING	247009702	603	4	442	11 89 300 5	TUBING HYDR
FITTING	247009702	711	1	482	11 26 260 6	WINCH 1 HYDR
FITTING	247009702	711	1	497	11 26 261 1	WINCH 2 HYDR
FITTING	247009702	610	3	509	10 51 826 1	PIVOT PIECE HYDR
FITTING	247009702	604	1	629	10 51 726 2	TUBING HYDR
FITTING	247009702	701	1	697	11 89 408 3	TUBING HYDR
FITTING	247009902	675	5	12	11 29 618 6	SUPERSTRUCTURE HYDR
FITTING	247009902	610	7	83	11 24 773 5	HYDR POWER UNIT
FITTING	247009902	601	6	442	11 89 300 5	TUBING HYDR
FITTING	247010102	611	4	10	11 29 618 6	SUPERSTRUCTURE HYDR
FITTING	247010102	604	4	83	11 24 773 5	HYDR POWER UNIT
FITTING	247010102	609	2	509	10 51 826 1	PIVOT PIECE HYDR
FITTING	247011602	610	1	10	11 29 618 6	SUPERSTRUCTURE HYDR
FITTING	247011602	307	1	83	11 24 773 5	HYDR POWER UNIT
FITTING	247011602	22	1	199	11 24 114 4	FUEL SYSTEM
FITTING	247011602	613	2	442	11 89 300 5	TUBING HYDR
FITTING	247011602	603	1	509	10 51 826 1	PIVOT PIECE HYDR
FITTING	247020902	654	3	12	11 29 618 6	SUPERSTRUCTURE HYDR
FITTING	247020902	316	1	83	11 24 773 5	HYDR POWER UNIT
FITTING	247027002	716	1	14	11 29 618 6	SUPERSTRUCTURE HYDR
FITTING	247027202	609	1	10	11 29 618 6	SUPERSTRUCTURE HYDR
FITTING	247027302	718	2	14	11 29 618 6	SUPERSTRUCTURE HYDR
FITTING	247027302	84	2	204	11 92 923 6	ASSEMBLY INSTAL.
FITTING	247027302	602	4	442	11 89 300 5	TUBING HYDR
FITTING	247027402	606	1	509	10 51 826 1	PIVOT PIECE HYDR
FITTING	247040302	680	1	12	11 29 618 6	SUPERSTRUCTURE HYDR
FITTING	247040302	605	1	341	10 51 969 8	NEEDLE LUFFING WINCH HYD
FITTING	247040902	739	2	14	11 29 618 6	SUPERSTRUCTURE HYDR
FITTING	247040902	85	2	204	11 92 923 6	ASSEMBLY INSTAL.

Description	Item	Pos.	Quantity	Sheet	Assembly	Description
FITTING	247041102	203	1	10	11 29 618 6	SUPERSTRUCTURE HYDR
FITTING	247041102	608	3	83	11 24 773 5	HYDR POWER UNIT
FITTING	247041102	39	1	210	11 92 958 8	AIR DUCT CPL
FITTING	247041102	608	4	442	11 89 300 5	TUBING HYDR
FITTING	247041402	607	3	83	11 24 773 5	HYDR POWER UNIT
FITTING	247041502	749	2	14	11 29 618 6	SUPERSTRUCTURE HYDR
FITTING	247041502	82	2	204	11 92 923 6	ASSEMBLY INSTAL.
FITTING	247042402	681	4	12	11 29 618 6	SUPERSTRUCTURE HYDR
FITTING	247042402	611	6	442	11 89 300 5	TUBING HYDR
FITTING	247042402	605	1	687	10 51 973 8	SELF-LOADING SYSTEM HYD
FITTING	247042402	607	1	721	10 51 728 1	TUBING HYDR
FITTING	247042502	746	2	14	11 29 618 6	SUPERSTRUCTURE HYDR
FITTING	247042702	607	1	10	11 29 618 6	SUPERSTRUCTURE HYDR
FITTING	247042702	605	2	509	10 51 826 1	PIVOT PIECE HYDR
FITTING	247043102	606	2	10	11 29 618 6	SUPERSTRUCTURE HYDR
FITTING	247043102	614	2	83	11 24 773 5	HYDR POWER UNIT
FITTING	247043102	23	2	199	11 24 114 4	FUEL SYSTEM
FITTING	247043202	615	2	73	10 51 969 5	A-FRAME ERECTION HYDR
FITTING	247043502	613	2	83	11 24 773 5	HYDR POWER UNIT
FITTING	247044302	652	2	83	11 24 773 5	HYDR POWER UNIT
FITTING	247048802	625	6	10	11 29 618 6	SUPERSTRUCTURE HYDR
FITTING	247048802	215	2	509	10 51 826 1	PIVOT PIECE HYDR
FITTING	247049002	618	1	10	11 29 618 6	SUPERSTRUCTURE HYDR
FITTING	247049002	92	2	204	11 92 923 6	ASSEMBLY INSTAL.
FITTING	247049002	22	1	442	11 89 300 5	TUBING HYDR
FITTING	247049102	627	2	10	11 29 618 6	SUPERSTRUCTURE HYDR
FITTING	247049102	617	1	83	11 24 773 5	HYDR POWER UNIT
FITTING	247049102	204	2	509	10 51 826 1	PIVOT PIECE HYDR
FITTING	247049202	631	1	10	11 29 618 6	SUPERSTRUCTURE HYDR
FITTING	247091002	302	1	82	11 24 773 5	HYDR POWER UNIT
FITTING	247105602	732	1	14	11 29 618 6	SUPERSTRUCTURE HYDR
FITTING	247108302	734	4	14	11 29 618 6	SUPERSTRUCTURE HYDR
FITTING	247108302	612	8	83	11 24 773 5	HYDR POWER UNIT
FITTING	247108302	24	4	199	11 24 114 4	FUEL SYSTEM
FITTING	247108302	641	1	444	11 89 300 5	TUBING HYDR
FITTING	247112702	624	9	10	11 29 618 6	SUPERSTRUCTURE HYDR
FITTING	247112702	202	2	73	10 51 969 5	A-FRAME ERECTION HYDR
FITTING	247112702	686	4	83	11 24 773 5	HYDR POWER UNIT
FITTING	247112702	603	2	381	10 55 216 1	TUBING HYDR
FITTING	247112702	201	2	509	10 51 826 1	PIVOT PIECE HYDR
FITTING	247112702	706	2	680	10 51 971 2	SELF-LOADING SYSTEM HYD
FITTING	247116402	605	3	10	11 29 618 6	SUPERSTRUCTURE HYDR
FITTING	247116402	607	3	509	10 51 826 1	PIVOT PIECE HYDR
FITTING	247117302	752	15	14	11 29 618 6	SUPERSTRUCTURE HYDR
FITTING	247117302	616	1	73	10 51 969 5	A-FRAME ERECTION HYDR
FITTING	247117302	628	1	83	11 24 773 5	HYDR POWER UNIT
FITTING	247117302	600	4	381	10 55 216 1	TUBING HYDR
FITTING	247117302	707	2	680	10 51 971 2	SELF-LOADING SYSTEM HYD
FITTING	247117302	203	1	687	10 51 973 8	SELF-LOADING SYSTEM HYD
FITTING	247117302	705	2	697	11 89 408 3	TUBING HYDR
FITTING	247117702	704	9	14	11 29 618 6	SUPERSTRUCTURE HYDR
FITTING	247117702	308	1	83	11 24 773 5	HYDR POWER UNIT
FITTING	247117702	35	1	183	11 94 151 8	COOLER INSTALLATION WATE
FITTING	247117702	88	1	204	11 92 923 6	ASSEMBLY INSTAL.
FITTING	247117702	204	4	381	10 55 216 1	TUBING HYDR
FITTING	247117702	632	1	444	11 89 300 5	TUBING HYDR
FITTING	247121102	727	1	14	11 29 618 6	SUPERSTRUCTURE HYDR
FITTING	247126202	735	5	14	11 29 618 6	SUPERSTRUCTURE HYDR
FITTING	247126202	641	5	83	11 24 773 5	HYDR POWER UNIT
FITTING	247126202	83	3	204	11 92 923 6	ASSEMBLY INSTAL.

Description	Item	Pos.	Quantity	Sheet	Assembly	Description
FITTING	247126202	37	1	210	11 92 958 8	AIR DUCT CPL
FITTING	247126202	610	3	442	11 89 300 5	TUBING HYDR
FITTING	247128402	626	8	10	11 29 618 6	SUPERSTRUCTURE HYDR
FITTING	247128402	627	6	83	11 24 773 5	HYDR POWER UNIT
FITTING	247128402	608	4	381	10 55 216 1	TUBING HYDR
FITTING	247128402	708	2	680	10 51 971 2	SELF-LOADING SYSTEM HYD
FITTING	247128502	731	2	14	11 29 618 6	SUPERSTRUCTURE HYDR
FITTING	247128502	604	1	341	10 51 969 8	NEEDLE LUFFING WINCH HYD
FITTING	247128502	605	4	442	11 89 300 5	TUBING HYDR
FITTING	247128502	614	1	629	10 51 726 2	TUBING HYDR
FITTING	247128602	653	4	12	11 29 618 6	SUPERSTRUCTURE HYDR
FITTING	247128602	625	1	83	11 24 773 5	HYDR POWER UNIT
FITTING	247128602	87	1	204	11 92 923 6	ASSEMBLY INSTAL.
FITTING	247128602	605	1	358	10 51 968 7	MAIN LUG HYDR
FITTING	247128602	602	1	381	10 55 216 1	TUBING HYDR
FITTING	247128602	648	2	444	11 89 300 5	TUBING HYDR
FITTING	247138602	729	3	14	11 29 618 6	SUPERSTRUCTURE HYDR
FITTING	247138602	692	1	84	11 24 773 5	HYDR POWER UNIT
FITTING	247138602	86	2	204	11 92 923 6	ASSEMBLY INSTAL.
FITTING	247138602	609	4	442	11 89 300 5	TUBING HYDR
FITTING	247142002	653	2	83	11 24 773 5	HYDR POWER UNIT
FITTING	247232702	660	2	12	11 29 618 6	SUPERSTRUCTURE HYDR
FITTING	247242302	629	11	10	11 29 618 6	SUPERSTRUCTURE HYDR
FITTING	247242302	317	1	83	11 24 773 5	HYDR POWER UNIT
FITTING	247242302	638	2	444	11 89 300 5	TUBING HYDR
FITTING	247261802	708	3	14	11 29 618 6	SUPERSTRUCTURE HYDR
FITTING	247261802	621	1	83	11 24 773 5	HYDR POWER UNIT
FITTING	470002414	700	1	502	91 90 239 14	CABLE HYDR
FITTING	470400701	11	1	352	93 36 755 01	OIL-GAUGING INSTRUMENT
FITTING	470400701	26	1	352	93 36 755 01	OIL-GAUGING INSTRUMENT
FITTING	470701414	691	1	84	11 24 773 5	HYDR POWER UNIT
FITTING	470702001	6	1	352	93 36 755 01	OIL-GAUGING INSTRUMENT
FITTING	470905214	36	1	183	11 94 151 8	COOLER INSTALLATION WATE
FITTING	470905714	37	3	183	11 94 151 8	COOLER INSTALLATION WATE
FITTING	471004514	602	11	10	11 29 618 6	SUPERSTRUCTURE HYDR
FITTING	471004514	605	1	73	10 51 969 5	A-FRAME ERECTION HYDR
FITTING	471004514	620	1	83	11 24 773 5	HYDR POWER UNIT
FITTING	471004514	617	6	444	11 89 300 5	TUBING HYDR
FITTING	471004514	703	2	680	10 51 971 2	SELF-LOADING SYSTEM HYD
FITTING	471004514	611	1	687	10 51 973 8	SELF-LOADING SYSTEM HYD
FITTING	471004514	605	2	721	10 51 728 1	TUBING HYDR
FITTING	471004614	619	2	83	11 24 773 5	HYDR POWER UNIT
FITTING	471004614	603	2	341	10 51 969 8	NEEDLE LUFFING WINCH HYD
FITTING	471004614	607	2	358	10 51 968 7	MAIN LUG HYDR
FITTING	471004614	618	2	444	11 89 300 5	TUBING HYDR
FITTING	471004614	708	1	482	11 26 260 6	WINCH 1 HYDR
FITTING	471004614	708	1	497	11 26 261 1	WINCH 2 HYDR
FITTING	471007014	706	4	14	11 29 618 6	SUPERSTRUCTURE HYDR
FITTING	471007014	619	1	381	10 55 216 1	TUBING HYDR
FITTING	471007914	315	1	83	11 24 773 5	HYDR POWER UNIT
FITTING	471008014	677	3	83	11 24 773 5	HYDR POWER UNIT
FITTING	471008214	601	3	10	11 29 618 6	SUPERSTRUCTURE HYDR
FITTING	471008214	611	8	83	11 24 773 5	HYDR POWER UNIT
FITTING	471008214	612	8	442	11 89 300 5	TUBING HYDR
FITTING	471008214	709	1	482	11 26 260 6	WINCH 1 HYDR
FITTING	471008214	709	1	497	11 26 261 1	WINCH 2 HYDR
FITTING	471016401	590	2	86	11 24 682 0	DISTRIBUTOR GEARBOX
FITTING	471030508	600	3	10	11 29 618 6	SUPERSTRUCTURE HYDR
FITTING	471030508	678	1	83	11 24 773 5	HYDR POWER UNIT
FITTING	471030708	737	1	14	11 29 618 6	SUPERSTRUCTURE HYDR

Description	Item	Pos.	Quantity	Sheet	Assembly	Description
FITTING	471030708	710	1	482	11 26 260 6	WINCH 1 HYDR
FITTING	471030708	710	1	497	11 26 261 1	WINCH 2 HYDR
FITTING	471031108	672	1	83	11 24 773 5	HYDR POWER UNIT
FITTING	471031108	33	2	210	11 92 958 8	AIR DUCT CPL
FITTING	471031108	654	1	444	11 89 300 5	TUBING HYDR
FITTING	471031308	632	2	83	11 24 773 5	HYDR POWER UNIT
FITTING	471031308	34	1	210	11 92 958 8	AIR DUCT CPL
FITTING	471031308	616	2	444	11 89 300 5	TUBING HYDR
FITTING	471031508	631	3	83	11 24 773 5	HYDR POWER UNIT
FITTING	471031508	81	2	204	11 92 923 6	ASSEMBLY INSTAL.
FITTING	471031808	680	2	83	11 24 773 5	HYDR POWER UNIT
FITTING	471032108	610	2	687	10 51 973 8	SELF-LOADING SYSTEM HYD
FITTING	471032608	622	1	10	11 29 618 6	SUPERSTRUCTURE HYDR
FITTING	471032608	604	2	73	10 51 969 5	A-FRAME ERECTION HYDR
FITTING	471032608	615	6	442	11 89 300 5	TUBING HYDR
FITTING	471032608	606	2	525	10 51 959 1	TUBING HYDR
FITTING	471032608	700	8	703	11 23 524 8	TUBING HYDR
FITTING	471032608	600	1	709	10 55 459 4	TUBING HYDR
FITTING	471032708	658	4	12	11 29 618 6	SUPERSTRUCTURE HYDR
FITTING	471032708	603	2	73	10 51 969 5	A-FRAME ERECTION HYDR
FITTING	471032708	600	24	442	11 89 300 5	TUBING HYDR
FITTING	471032708	627	2	525	10 51 959 1	TUBING HYDR
FITTING	471032708	704	2	680	10 51 971 2	SELF-LOADING SYSTEM HYD
FITTING	471032708	703	8	697	11 89 408 3	TUBING HYDR
FITTING	471032708	609	1	721	10 51 728 1	TUBING HYDR
FITTING	471032808	621	27	10	11 29 618 6	SUPERSTRUCTURE HYDR
FITTING	471032808	630	3	83	11 24 773 5	HYDR POWER UNIT
FITTING	471032808	602	3	341	10 51 969 8	NEEDLE LUFFING WINCH HYD
FITTING	471032808	609	3	358	10 51 968 7	MAIN LUG HYDR
FITTING	471032808	622	2	444	11 89 300 5	TUBING HYDR
FITTING	471032808	701	1	502	91 90 239 14	CABLE HYDR
FITTING	471032808	600	1	721	10 51 728 1	TUBING HYDR
FITTING	471032908	616	1	10	11 29 618 6	SUPERSTRUCTURE HYDR
FITTING	471033014	629	1	83	11 24 773 5	HYDR POWER UNIT
FITTING	471033014	601	1	341	10 51 969 8	NEEDLE LUFFING WINCH HYD
FITTING	471033014	651	2	444	11 89 300 5	TUBING HYDR
FITTING	471033014	602	2	629	10 51 726 2	TUBING HYDR
FITTING	471033114	707	1	14	11 29 618 6	SUPERSTRUCTURE HYDR
FITTING	471033214	722	2	14	11 29 618 6	SUPERSTRUCTURE HYDR
FITTING	471033214	636	1	444	11 89 300 5	TUBING HYDR
FITTING	471033214	608	3	509	10 51 826 1	PIVOT PIECE HYDR
FITTING	471033214	605	3	525	10 51 959 1	TUBING HYDR
FITTING	471033214	603	2	629	10 51 726 2	TUBING HYDR
FITTING	471033214	709	2	680	10 51 971 2	SELF-LOADING SYSTEM HYD
FITTING	471033214	704	1	697	11 89 408 3	TUBING HYDR
FITTING	471033314	606	1	358	10 51 968 7	MAIN LUG HYDR
FITTING	471033414	725	1	14	11 29 618 6	SUPERSTRUCTURE HYDR
FITTING	471033614	738	1	14	11 29 618 6	SUPERSTRUCTURE HYDR
FITTING	471034414	726	2	14	11 29 618 6	SUPERSTRUCTURE HYDR
FITTING	471034414	612	2	381	10 55 216 1	TUBING HYDR
FITTING	471034414	604	2	509	10 51 826 1	PIVOT PIECE HYDR
FITTING	471034708	672	4	12	11 29 618 6	SUPERSTRUCTURE HYDR
FITTING	471034708	637	1	83	11 24 773 5	HYDR POWER UNIT
FITTING	471034714	25	2	199	11 24 114 4	FUEL SYSTEM
FITTING	471034714	607	1	341	10 51 969 8	NEEDLE LUFFING WINCH HYD
FITTING	471036014	652	2	444	11 89 300 5	TUBING HYDR
FITTING	471039408	612	1	358	10 51 968 7	MAIN LUG HYDR
FITTING	471039408	611	2	381	10 55 216 1	TUBING HYDR
FITTING	471039708	618	2	381	10 55 216 1	TUBING HYDR
FITTING	471039708	600	1	629	10 51 726 2	TUBING HYDR

Description	Item	Pos.	Quantity	Sheet	Assembly	Description
FITTING	471039908	635	3	83	11 24 773 5	HYDR POWER UNIT
FITTING	471039908	42	1	210	11 92 958 8	AIR DUCT CPL
FITTING	471039908	655	2	444	11 89 300 5	TUBING HYDR
FITTING	471100114	617	3	10	11 29 618 6	SUPERSTRUCTURE HYDR
FITTING	471100114	604	2	525	10 51 959 1	TUBING HYDR
FITTING	471100414	608	2	10	11 29 618 6	SUPERSTRUCTURE HYDR
FITTING	471100614	620	2	444	11 89 300 5	TUBING HYDR
FITTING	471100714	756	1	14	11 29 618 6	SUPERSTRUCTURE HYDR
FITTING	471100714	603	1	525	10 51 959 1	TUBING HYDR
FITTING	472001401	4	1	352	93 36 755 01	OIL-GAUGING INSTRUMENT
FITTING	472531508	723	1	14	11 29 618 6	SUPERSTRUCTURE HYDR
FITTING	472531508	624	2	525	10 51 959 1	TUBING HYDR
FITTING	472531508	608	3	687	10 51 973 8	SELF-LOADING SYSTEM HYD
FITTING	473201101	3	1	352	93 36 755 01	OIL-GAUGING INSTRUMENT
FITTING	473201101	22	1	352	93 36 755 01	OIL-GAUGING INSTRUMENT
FITTING	473210214	632	1	525	10 51 959 1	TUBING HYDR
FITTING	473210214	607	3	687	10 51 973 8	SELF-LOADING SYSTEM HYD
FITTING	473210214	700	1	697	11 89 408 3	TUBING HYDR
FITTING	473231214	633	1	525	10 51 959 1	TUBING HYDR
FITTING	474001214	760	1	14	11 29 618 6	SUPERSTRUCTURE HYDR
FITTING	474002314	620	4	10	11 29 618 6	SUPERSTRUCTURE HYDR
FITTING	474002414	744	2	14	11 29 618 6	SUPERSTRUCTURE HYDR
FITTING	474002414	614	4	442	11 89 300 5	TUBING HYDR
FITTING	474032614	628	3	10	11 29 618 6	SUPERSTRUCTURE HYDR
FITTING	474032614	602	4	509	10 51 826 1	PIVOT PIECE HYDR
FITTING	474032614	600	8	525	10 51 959 1	TUBING HYDR
FITTING	474032714	650	2	12	11 29 618 6	SUPERSTRUCTURE HYDR
FITTING	474032914	636	2	10	11 29 618 6	SUPERSTRUCTURE HYDR
FITTING	474033014	719	4	14	11 29 618 6	SUPERSTRUCTURE HYDR
FITTING	474033014	647	8	444	11 89 300 5	TUBING HYDR
FITTING	474033014	714	2	482	11 26 260 6	WINCH 1 HYDR
FITTING	474033014	714	2	497	11 26 261 1	WINCH 2 HYDR
FITTING	474033014	601	4	509	10 51 826 1	PIVOT PIECE HYDR
FITTING	475002514	628	2	525	10 51 959 1	TUBING HYDR
FITTING	475033014	609	3	687	10 51 973 8	SELF-LOADING SYSTEM HYD
FITTING	475033614	619	1	525	10 51 959 1	TUBING HYDR
FITTING	475501414	635	2	10	11 29 618 6	SUPERSTRUCTURE HYDR
FITTING	475501414	604	4	442	11 89 300 5	TUBING HYDR
FITTING	475501914	685	1	83	11 24 773 5	HYDR POWER UNIT
FITTING	475501914	606	1	687	10 51 973 8	SELF-LOADING SYSTEM HYD
FITTING	475502514	625	4	444	11 89 300 5	TUBING HYDR
FITTING	475503314	212	2	509	10 51 826 1	PIVOT PIECE HYDR
FITTING	476608008	39	1	183	11 94 151 8	COOLER INSTALLATION WATE
FITTING	477102814	91	2	204	11 92 923 6	ASSEMBLY INSTAL.
FITTING	477400314	690	2	84	11 24 773 5	HYDR POWER UNIT
FITTING	477400314	702	1	502	91 90 239 14	CABLE HYDR
FITTING	477400414	673	1	525	10 51 959 1	TUBING HYDR
FITTING	477400414	605	8	703	11 23 524 8	TUBING HYDR
FITTING	477400614	208	2	509	10 51 826 1	PIVOT PIECE HYDR
FITTING	477400714	633	2	10	11 29 618 6	SUPERSTRUCTURE HYDR
FITTING	477400814	624	4	381	10 55 216 1	TUBING HYDR
FITTING	477401014	202	4	509	10 51 826 1	PIVOT PIECE HYDR
FITTING	477401814	46	1	8	11 29 618 6	SUPERSTRUCTURE HYDR
FITTING	477430614	41	2	210	11 92 958 8	AIR DUCT CPL
FITTING	477700114	639	2	10	11 29 618 6	SUPERSTRUCTURE HYDR
FITTING	477700114	655	1	83	11 24 773 5	HYDR POWER UNIT
FITTING	477700114	214	2	509	10 51 826 1	PIVOT PIECE HYDR
FITTING	477700214	619	1	10	11 29 618 6	SUPERSTRUCTURE HYDR
FITTING	477700214	23	1	442	11 89 300 5	TUBING HYDR
FITTING	477700414	689	2	84	11 24 773 5	HYDR POWER UNIT

Description	Item	Pos.	Quantity	Sheet	Assembly	Description
FITTING	477700414	703	1	502	91 90 239 14	CABLE HYDR
FITTING	477700514	638	6	10	11 29 618 6	SUPERSTRUCTURE HYDR
FITTING	477700514	213	2	509	10 51 826 1	PIVOT PIECE HYDR
FITTING	477700514	202	1	525	10 51 959 1	TUBING HYDR
FITTING	477700514	606	8	703	11 23 524 8	TUBING HYDR
FITTING	477700714	47	1	8	11 29 618 6	SUPERSTRUCTURE HYDR
FITTING	477700814	634	1	10	11 29 618 6	SUPERSTRUCTURE HYDR
FITTING	477701114	207	2	509	10 51 826 1	PIVOT PIECE HYDR
FITTING	477701414	632	2	10	11 29 618 6	SUPERSTRUCTURE HYDR
FITTING	477701514	625	4	381	10 55 216 1	TUBING HYDR
FITTING	477701814	211	4	509	10 51 826 1	PIVOT PIECE HYDR
FITTING	477704514	40	1	210	11 92 958 8	AIR DUCT CPL
FITTING	477704514	78	1	392	90 01 376 2	SLEWING GEAR DRIVE
FITTING	477704514	650	1	444	11 89 300 5	TUBING HYDR
FITTING	477704614	720	3	14	11 29 618 6	SUPERSTRUCTURE HYDR
FITTING	477704614	19	1	48	10 56 070 1	TANK HYDR CPL
FITTING	477704614	17	5	53	10 56 073 3	FUEL TANK CPL
FITTING	477704614	300	1	82	11 24 773 5	HYDR POWER UNIT
FITTING	477704914	306	1	83	11 24 773 5	HYDR POWER UNIT
FITTING	477704914	32	1	179	10 57 532 2	INTAKE PIPE OIL CPL
FITTING	477704914	38	4	183	11 94 151 8	COOLER INSTALLATION WATE
FITTING	477704914	64	2	194	11 92 922 0	SUCTION UNIT AIR
FITTING	477705114	202	1	358	10 51 968 7	MAIN LUG HYDR
FITTING	477705214	80	1	204	11 92 923 6	ASSEMBLY INSTAL.
FITTING	481930314	612	1	687	10 51 973 8	SELF-LOADING SYSTEM HYD
FITTING	481930414	630	3	10	11 29 618 6	SUPERSTRUCTURE HYDR
FITTING	481930414	624	2	444	11 89 300 5	TUBING HYDR
FITTING	481930414	704	1	502	91 90 239 14	CABLE HYDR
FITTING	481930514	703	1	482	11 26 260 6	WINCH 1 HYDR
FITTING	481930514	703	1	497	11 26 261 1	WINCH 2 HYDR
FITTING	481930614	622	1	525	10 51 959 1	TUBING HYDR
FITTING	481930714	604	1	687	10 51 973 8	SELF-LOADING SYSTEM HYD
FITTING	481931114	761	1	14	11 29 618 6	SUPERSTRUCTURE HYDR
FITTING	481931614	687	1	84	11 24 773 5	HYDR POWER UNIT
FITTING	481933014	623	4	444	11 89 300 5	TUBING HYDR
FITTING	481933614	319	1	83	11 24 773 5	HYDR POWER UNIT
FITTING	482330814	730	2	14	11 29 618 6	SUPERSTRUCTURE HYDR
FITTING	482330814	675	1	83	11 24 773 5	HYDR POWER UNIT
FITTING	482331114	603	3	687	10 51 973 8	SELF-LOADING SYSTEM HYD
FITTING	482331914	721	3	14	11 29 618 6	SUPERSTRUCTURE HYDR
FITTING	482331914	600	2	509	10 51 826 1	PIVOT PIECE HYDR
FITTING	482430314	693	1	12	11 29 618 6	SUPERSTRUCTURE HYDR
FITTING	482430314	201	1	381	10 55 216 1	TUBING HYDR
FITTING	482430614	606	2	442	11 89 300 5	TUBING HYDR
FITTING	482431214	602	1	687	10 51 973 8	SELF-LOADING SYSTEM HYD
FITTING	482431314	204	1	10	11 29 618 6	SUPERSTRUCTURE HYDR
FITTING	482431314	643	2	83	11 24 773 5	HYDR POWER UNIT
FITTING	482431314	705	1	482	11 26 260 6	WINCH 1 HYDR
FITTING	482431314	705	1	497	11 26 261 1	WINCH 2 HYDR
FITTING	482431414	706	1	482	11 26 260 6	WINCH 1 HYDR
FITTING	482431414	706	1	497	11 26 261 1	WINCH 2 HYDR
FITTING	482431514	671	1	525	10 51 959 1	TUBING HYDR
FITTING	482431714	623	4	381	10 55 216 1	TUBING HYDR
FITTING	482530814	755	2	14	11 29 618 6	SUPERSTRUCTURE HYDR
FITTING	482530814	660	1	83	11 24 773 5	HYDR POWER UNIT
FITTING	482530914	736	1	14	11 29 618 6	SUPERSTRUCTURE HYDR
FITTING	482530914	301	2	82	11 24 773 5	HYDR POWER UNIT
FITTING	482531614	615	1	10	11 29 618 6	SUPERSTRUCTURE HYDR
FITTING	482531814	652	2	12	11 29 618 6	SUPERSTRUCTURE HYDR
FITTING	482531814	649	4	444	11 89 300 5	TUBING HYDR

Description	Item	Pos.	Quantity	Sheet	Assembly	Description
FITTING	485430714	748	1	14	11 29 618 6	SUPERSTRUCTURE HYDR
FITTING	485431214	714	2	14	11 29 618 6	SUPERSTRUCTURE HYDR
FITTING	485431214	683	3	83	11 24 773 5	HYDR POWER UNIT
FITTING	485431314	666	4	12	11 29 618 6	SUPERSTRUCTURE HYDR
FITTING	485431414	205	1	10	11 29 618 6	SUPERSTRUCTURE HYDR
FITTING	485432814	759	1	14	11 29 618 6	SUPERSTRUCTURE HYDR
FITTING	485433314	684	1	83	11 24 773 5	HYDR POWER UNIT
FITTING	485433314	713	2	482	11 26 260 6	WINCH 1 HYDR
FITTING	485433314	713	2	497	11 26 261 1	WINCH 2 HYDR
FITTING	485433314	613	8	525	10 51 959 1	TUBING HYDR
FITTING	485433314	615	2	629	10 51 726 2	TUBING HYDR
FITTING	485433314	710	2	680	10 51 971 2	SELF-LOADING SYSTEM HYD
FITTING	485433414	758	1	14	11 29 618 6	SUPERSTRUCTURE HYDR
FITTING	485433414	705	1	502	91 90 239 14	CABLE HYDR
FITTING	485433414	629	2	525	10 51 959 1	TUBING HYDR
FITTING	485433514	610	1	73	10 51 969 5	A-FRAME ERECTION HYDR
FITTING	485433514	630	1	525	10 51 959 1	TUBING HYDR
FITTING	485434214	747	1	14	11 29 618 6	SUPERSTRUCTURE HYDR
FITTING	485435014	651	2	12	11 29 618 6	SUPERSTRUCTURE HYDR
FITTING	485435714	713	1	14	11 29 618 6	SUPERSTRUCTURE HYDR
FITTING	485436414	629	2	444	11 89 300 5	TUBING HYDR
FITTING	485436414	617	1	629	10 51 726 2	TUBING HYDR
FITTING	485437514	313	1	83	11 24 773 5	HYDR POWER UNIT
FITTING	491033414	601	1	687	10 51 973 8	SELF-LOADING SYSTEM HYD
FITTING	491101214	757	1	14	11 29 618 6	SUPERSTRUCTURE HYDR
FITTING	4981232	1	2	263	10 14 179 0	CONNECTING PIECE PRE-ASS
FITTING	4981235	3	1	228	10 14 591 9	OIL DIPSTICK WITH PIPE
FITTING	4981235	10	1	283	10 14 013 6	EXHAUST TC MOUNTING
FITTING	510701214	745	1	14	11 29 618 6	SUPERSTRUCTURE HYDR
FITTING	510701314	677	2	12	11 29 618 6	SUPERSTRUCTURE HYDR
FITTING	510701914	711	2	14	11 29 618 6	SUPERSTRUCTURE HYDR
FITTING	510702014	742	1	14	11 29 618 6	SUPERSTRUCTURE HYDR
FITTING	510702414	712	1	14	11 29 618 6	SUPERSTRUCTURE HYDR
FITTING	510702414	702	1	482	11 26 260 6	WINCH 1 HYDR
FITTING	510703914	740	1	14	11 29 618 6	SUPERSTRUCTURE HYDR
FITTING	510704614	664	1	12	11 29 618 6	SUPERSTRUCTURE HYDR
FITTING	510709114	600	1	687	10 51 973 8	SELF-LOADING SYSTEM HYD
FITTING	510709214	679	1	83	11 24 773 5	HYDR POWER UNIT
FITTING	592286514	36	1	415	10 35 008 0	CABIN
FITTING	592286514	11	5	419	10 35 007 6	SLIDING DOOR
FITTING	7021521	19	1	283	10 14 013 6	EXHAUST TC MOUNTING
FITTING	7027665	10	1	230	10 14 671 6	OIL LINE PRE-ASSEMBLY
FITTING	7362091	603	12	10	11 29 618 6	SUPERSTRUCTURE HYDR
FITTING	7362091	614	1	73	10 51 969 5	A-FRAME ERECTION HYDR
FITTING	7362091	314	1	83	11 24 773 5	HYDR POWER UNIT
FITTING	7362091	637	2	444	11 89 300 5	TUBING HYDR
FITTING	7365616	653	2	444	11 89 300 5	TUBING HYDR
FITTING	7367776	613	12	10	11 29 618 6	SUPERSTRUCTURE HYDR
FITTING	7367776	603	4	83	11 24 773 5	HYDR POWER UNIT
FITTING	7367776	610	1	341	10 51 969 8	NEEDLE LUFFING WINCH HYD
FITTING	7367776	611	1	358	10 51 968 7	MAIN LUG HYDR
FITTING	7367776	621	4	444	11 89 300 5	TUBING HYDR
FITTING	7367776	704	1	482	11 26 260 6	WINCH 1 HYDR
FITTING	7367776	704	1	497	11 26 261 1	WINCH 2 HYDR
FITTING	7367776	614	1	525	10 51 959 1	TUBING HYDR
FITTING	7367986	670	3	12	11 29 618 6	SUPERSTRUCTURE HYDR
FITTING	7403569	202	3	381	10 55 216 1	TUBING HYDR
FITTING	7407098	608	8	525	10 51 959 1	TUBING HYDR
FITTING	7407098	616	2	629	10 51 726 2	TUBING HYDR
FITTING	7407108	305	1	83	11 24 773 5	HYDR POWER UNIT

Description	Item	Pos.	Quantity	Sheet	Assembly	Description
FITTING	7407108	603	1	358	10 51 968 7	MAIN LUG HYDR
FITTING	7407108	707	1	482	11 26 260 6	WINCH 1 HYDR
FITTING	7407108	707	1	497	11 26 261 1	WINCH 2 HYDR
FITTING	7410455	640	2	12	11 29 618 6	SUPERSTRUCTURE HYDR
FITTING	7410455	643	8	444	11 89 300 5	TUBING HYDR
FITTING	7617268	703	13	14	11 29 618 6	SUPERSTRUCTURE HYDR
FITTING	7617268	612	1	73	10 51 969 5	A-FRAME ERECTION HYDR
FITTING	7617268	676	3	83	11 24 773 5	HYDR POWER UNIT
FITTING	7617268	613	1	358	10 51 968 7	MAIN LUG HYDR
FITTING	7617268	628	6	444	11 89 300 5	TUBING HYDR
FITTING	7617268	602	3	721	10 51 728 1	TUBING HYDR
FITTING	7617354	611	1	73	10 51 969 5	A-FRAME ERECTION HYDR
FITTING	7617354	634	11	444	11 89 300 5	TUBING HYDR
FITTING	7617354	611	7	525	10 51 959 1	TUBING HYDR
FITTING	7617354	702	4	680	10 51 971 2	SELF-LOADING SYSTEM HYD
FITTING	7617354	601	1	709	10 55 459 4	TUBING HYDR
FITTING	7617354	608	1	721	10 51 728 1	TUBING HYDR
FITTING	7617460	705	1	14	11 29 618 6	SUPERSTRUCTURE HYDR
FITTING	7617460	613	1	73	10 51 969 5	A-FRAME ERECTION HYDR
FITTING	7617460	635	2	444	11 89 300 5	TUBING HYDR
FITTING	7617460	626	2	525	10 51 959 1	TUBING HYDR
FITTING	7617461	673	3	12	11 29 618 6	SUPERSTRUCTURE HYDR
FITTING	7617461	600	1	73	10 51 969 5	A-FRAME ERECTION HYDR
FITTING	7617461	633	3	444	11 89 300 5	TUBING HYDR
FITTING	7617461	623	2	525	10 51 959 1	TUBING HYDR
FITTING	7617461	700	2	680	10 51 971 2	SELF-LOADING SYSTEM HYD
FITTING	7617494	678	2	12	11 29 618 6	SUPERSTRUCTURE HYDR
FITTING	7617494	303	1	83	11 24 773 5	HYDR POWER UNIT
FITTING	7621827	36	1	210	11 92 958 8	AIR DUCT CPL
FITTING	7622060	712	2	482	11 26 260 6	WINCH 1 HYDR
FITTING	7622060	712	2	497	11 26 261 1	WINCH 2 HYDR
FITTING	790259414	612	1	629	10 51 726 2	TUBING HYDR
FITTING	790453814	614	1	10	11 29 618 6	SUPERSTRUCTURE HYDR
FITTING	790453814	648	3	83	11 24 773 5	HYDR POWER UNIT
FITTING KEY DIN 6885 B28X1	571827308	400	8	86	11 24 682 0	DISTRIBUTOR GEARBOX
FITTING KEY DIN 6885 B32X18	485529814	410	2	86	11 24 682 0	DISTRIBUTOR GEARBOX
FITTING KEY DIN 6885 B8X7X1	10567120	450	1	86	11 24 682 0	DISTRIBUTOR GEARBOX
FITTINGS	10334218	11	1	285	10 14 622 4	REGULATION BOOST PRESS
FITTINGS	9273271	2	2	248	10 14 294 2	LUBE OIL FILTER ASSEMBLY
FITTINGS	956385814	39	2	204	11 92 923 6	ASSEMBLY INSTAL.
FIXING BAND	501507214	14	1	635	54 02 702 14	ROPE DRUM CPL
FIXING CLAMP	11283913	18	8	548	11 28 390 8	BOOM ACCESS
FIXING CLAMP	11283913	18	9	563	11 28 583 8	BOOM ACCESS
FIXING CLAMP	11283913	18	9	570	11 28 626 1	BOOM ACCESS
FIXING CLAMP	11283913	17	12	573	11 24 133 3	BOOM HEAD CPL
FIXING CLAMP	11283913	13	4	670	11 29 473 7	GANGWAY INTERM. SECTION
FIXING CLAMP	11283913	14	10	674	11 29 474 2	GANGWAY INTERM. SECTION
FIXING CLAMP	11283913	16	14	675	11 29 474 3	GANGWAY INTERM. SECTION
FIXING PARTS	10289973	41	1	430	10 22 506 8	OPERATOR SEAT
FLANGE	10583864	1	1	361	10 55 156 3	WINCH
FLANGE	540271814	1	1	636	54 02 703 14	FLANGE CPL
FLANGE	552066514	22	2	48	10 56 070 1	TANK HYDR CPL
FLANGE	9072435	12	1	115	90 77 464	RS FLANGE
FLANGE	944137814	24	1	82	11 24 773 5	HYDR POWER UNIT
FLANGE	944813514	25	1	82	11 24 773 5	HYDR POWER UNIT
FLANGE	956274314	28	4	8	11 29 618 6	SUPERSTRUCTURE HYDR
FLANGE	959712714	21	1	733	10 52 293 0	SG TACHOGENERATOR RFK
FLANGE BEARING	11231270	3	1	485	10 53 039 8	WINCH
FLANGE COVER	11215698	2	1	163	10 22 601 3	V PUMP
FLANGE COVER	11215699	3	1	163	10 22 601 3	V PUMP

Description	Item	Pos.	Quantity	Sheet	Assembly	Description
FLANGE CPL	540270314	22	1	633	59 20 694 14	WINCH
FLANGE HALF	510548714	105	8	10	11 29 618 6	SUPERSTRUCTURE HYDR
FLANGE HALF	510574414	100	8	10	11 29 618 6	SUPERSTRUCTURE HYDR
FLANGE HALF	510574414	21	2	179	10 57 532 2	INTAKE PIPE OIL CPL
FLANGE HALF	510586614	103	12	10	11 29 618 6	SUPERSTRUCTURE HYDR
FLANGE HALF	510586614	617	4	358	10 51 968 7	MAIN LUG HYDR
FLANGE HALF	510586614	646	16	444	11 89 300 5	TUBING HYDR
FLANGE HALF	510586614	730	8	482	11 26 260 6	WINCH 1 HYDR
FLANGE HALF	510586614	730	8	497	11 26 261 1	WINCH 2 HYDR
FLANGE HALF	510586914	104	18	10	11 29 618 6	SUPERSTRUCTURE HYDR
FLANGE HALF	510586914	620	4	341	10 51 969 8	NEEDLE LUFFING WINCH HYD
FLANGE HALF	510586914	630	4	381	10 55 216 1	TUBING HYDR
FLANGE HALF	510587514	101	8	10	11 29 618 6	SUPERSTRUCTURE HYDR
FLANGE HALF	510587514	312	2	83	11 24 773 5	HYDR POWER UNIT
FLANGE HALF	510587514	631	8	381	10 55 216 1	TUBING HYDR
FLANGE HALF	510587514	650	2	525	10 51 959 1	TUBING HYDR
FLANGE HALF	510587514	614	2	687	10 51 973 8	SELF-LOADING SYSTEM HYD
FLANGE HALF	511502414	102	24	10	11 29 618 6	SUPERSTRUCTURE HYDR
FLANGE HALF	511502414	310	6	83	11 24 773 5	HYDR POWER UNIT
FLANGE HALF	511502414	20	6	179	10 57 532 2	INTAKE PIPE OIL CPL
FLANGE HALF	511598114	22	2	179	10 57 532 2	INTAKE PIPE OIL CPL
FLANGED BOLT M33X220 10.9	11266734	12	76	57	10 51 963 1	SUPERSTR. SLEWING RING IN
FLANGED BOLT M33X245 10.9	10512966	10	80	437	10 51 969 6	CONNECTION SUPERSTR UC
FLANGED BOLT MO90X4108X5	10522847	19	1	590	79 03 861 14	LOAD HOOK
FLAP	11909480	100	1	428	11 93 934 6	AIR CONDITIONING
FLAP CPL	592289514	57	1	415	10 35 008 0	CABIN
FLASHING LIGHT	10524928	90	1	400	11 27 973 6	CABIN EL
FLASHING LIGHT	10524928	35	2	536	10 53 120 7	A-FRAME ELECTRICS
FLAT CAGE BEARING	501532014	9	1	635	54 02 702 14	ROPE DRUM CPL
FLAT COPPER EL	10530486	6	1	35	10 53 048 9	FUSE HOLDER
FLAT FUSE LINK	604105314	68	5	402	10 55 963 5	SWITCH CABINET X1
FLAT FUSE LINK	604105314	5	5	403	99 20 811 14	RESERVE FUSES
FLAT FUSE LINK	604105414	7	5	403	99 20 811 14	RESERVE FUSES
FLAT FUSE LINK	604105514	69	41	402	10 55 963 5	SWITCH CABINET X1
FLAT FUSE LINK	604105514	10	10	403	99 20 811 14	RESERVE FUSES
FLAT FUSE LINK	604105614	70	6	402	10 55 963 5	SWITCH CABINET X1
FLAT FUSE LINK	604105614	15	5	403	99 20 811 14	RESERVE FUSES
FLAT GASKET	9276860	37	2	103	10 11 834 9	DOUBLE V-PUMP
FLAT GASKET	9276860	37	2	126	92 76 408	SEAL KIT DOUBLE PUMP
FLAT PLUG	602203914	55	6	399	11 27 973 6	CABIN EL
FLAT PLUG	602203914	92	6	400	11 27 973 6	CABIN EL
FLAT PLUG HOUSING	602208714	92	1	402	10 55 963 5	SWITCH CABINET X1
FLAT PLUG HOUSING	602209014	91	1	400	11 27 973 6	CABIN EL
FLAT PLUG HOUSING	602305914	54	3	399	11 27 973 6	CABIN EL
FLAT SEALING RING	10588725	4	1	527	59 20 224 14	LOAD HOLDING VALVE
FLEXIBLE EDGE PROTECTOR	10352462	17	0.422	548	11 28 390 8	BOOM ACCESS
FLEXIBLE EDGE PROTECTOR	10352462	17	0.422	563	11 28 583 8	BOOM ACCESS
FLEXIBLE EDGE PROTECTOR	10352462	17	0.422	570	11 28 626 1	BOOM ACCESS
FLEXIBLE EDGE PROTECTOR	10352462	15	0.22	678	11 26 901 8	HOLDER CPL
FLEXIBLE EDGE PROTECTOR	262103101	16	0.16	543	10 35 063 3	FASTENER
FLEXIBLE EDGE PROTECTOR	262105314	14	9	314	11 24 409 1	COVERS
FLEXIBLE EDGE PROTECTOR	262105314	2	1.1	316	10 57 883 5	DOOR
FLOOR	11289833	25	1	704	59 21 826 14	SUPPORT CYLINDER
FLOOR MAT	592286914	25	1	415	10 35 008 0	CABIN
FLOOR PLATE	388291208	16	72	463	11 89 365 0	CRAWLER CARRIER RIGHT CP
FLOOR PLATE	388291208	16	72	474	11 89 365 1	CRAWLER CARRIER LEFT CP
FLOW REGULATING CHECK	11233730	4	1	75	10 22 540 8	VALVE BLOCK
FLOW REGULATING CHECK	7623541	204	1	18	11 28 647 6	VALVE BLOCK
FLUE GAS PIPE CPL	11248166	6	1	198	11 24 114 3	EXHAUST GAS SYSTEM
FLYWHEEL ASSEMBLY	10118929	530	1	216	12 42 545 4	DIESEL ENGINE

Description	Item	Pos.	Quantity	Sheet	Assembly	Description
FLYWHEEL HOUSING MOUNT	10115577	520	1	215	12 42 545 4	DIESEL ENGINE
FLYWHEEL HOUSING PRE-A	10115576	1	1	290	10 11 557 7	FLYWHEEL HOUSING MOUNT
FLYWHEEL PRE-ASS.	10118928	1	1	294	10 11 892 9	FLYWHEEL ASSEMBLY
FOLDING BRACKET	10564433	10	4	700	11 89 568 6	SELF-LOADING SYSTEM RFK
FOOT PEDAL	11219883	1	1	723	11 22 037 2	FOOT PEDAL EL INSTALLATIO
FOOT PEDAL	11223717	210	2	400	11 27 973 6	CABIN EL
FOOT PEDAL EL INSTALLATIO	11220372	723	1	4	01 38 406 14	LR 1300 SX
FOOT PEDAL EL INSTALLATIO	11223691	211	1	400	11 27 973 6	CABIN EL
FOOT ST.CONST.	990954814	31	2	505	11 23 820 4	PIVOT PIECE CPL
FOOT STRIP	10585909	20	1	640	10 55 372 1	ROOF RAILING RFK
FOOT STRIP	10585910	21	1	640	10 55 372 1	ROOF RAILING RFK
FOOT STRIP	10585911	22	1	640	10 55 372 1	ROOF RAILING RFK
FOOT STRIP	10585912	23	1	640	10 55 372 1	ROOF RAILING RFK
FOOT STRIP	10585913	24	2	640	10 55 372 1	ROOF RAILING RFK
FOOT STRIP	10585914	25	1	640	10 55 372 1	ROOF RAILING RFK
FOOT STRIP	10585915	26	1	640	10 55 372 1	ROOF RAILING RFK
FOOT STRIP	10585916	27	1	640	10 55 372 1	ROOF RAILING RFK
FOOT STRIP	10585917	28	1	640	10 55 372 1	ROOF RAILING RFK
FOOT STRIP	10585919	30	1	640	10 55 372 1	ROOF RAILING RFK
FOOT STRIP	10585920	31	1	640	10 55 372 1	ROOF RAILING RFK
FOOT STRIP	10586854	62	1	642	10 55 372 1	ROOF RAILING RFK
FORCE MEASURING AXLE	11261289	1	2	530	11 29 259 6	FORCE MEASURING AXLE EL
FORCE MEASURING AXLE EL	11292596	3	1	522	11 29 259 8	TILT-BACK SUPPORT
FORCE MEASURING STRAP	10530243	31	2	536	10 53 120 7	A-FRAME ELECTRICS
FORK	991012514	2	4	663	99 31 838 14	INTERMEDIATE TENSIONING
FORK	993360714	1	4	663	99 31 838 14	INTERMEDIATE TENSIONING
FORK ST.CONST.	991011914	40	2	662	99 10 116 14	ROPE GUIDE
FORK ST.CONST.	991012214	41	2	662	99 10 116 14	ROPE GUIDE
FORK ST.CONST.	991012214	2	1	664	99 10 125 14	FORK
FORK ST.CONST.	991012614	1	1	664	99 10 125 14	FORK
FORM HOSE	10337090	45	1	183	11 94 151 8	COOLER INSTALLATION WATE
FORM HOSE	10350439	46	1	183	11 94 151 8	COOLER INSTALLATION WATE
FORM HOSE	11246836	15	1	194	11 92 922 0	SUCTION UNIT AIR
FORM HOSE	11270026	44	1	183	11 94 151 8	COOLER INSTALLATION WATE
FORM HOSE	11287796	25	1	183	11 94 151 8	COOLER INSTALLATION WATE
FORM HOSE	550936214	94	1	184	11 94 151 8	COOLER INSTALLATION WATE
FOUR LIPPED SEALS	10099037	1	24	23	10 52 459 5	SEALING SET
FOUR LIPPED SEALS	11301682	2	10	23	10 52 459 5	SEALING SET
FRAME	10566842	1	1	312	11 24 409 1	COVERS
FRAME	11236714	7	1	725	11 21 750 0	LIQUEFIER
FRAME	11244092	2	1	312	11 24 409 1	COVERS
FRAME	11281448	1	1	422	59 22 871 14	FRONT WINDOW CPL
FRAME	602481914	1	1	411	91 65 251 14	CABLE DUCT CABINET 1
FRAME CPL	11247688	1	1	176	11 24 113 8	MOTOR BEARING CPL
FRAME ST.CONST.	10578321	12	1	65	10 58 163 4	CABIN SUSPENSION CPL
FRONT WINDOW	592287214	10	1	422	59 22 871 14	FRONT WINDOW CPL
FRONT WINDOW CPL	592287114	28	1	415	10 35 008 0	CABIN
FRONT WINDOW CPL	592288414	34	1	415	10 35 008 0	CABIN
FUEL FINE FILTER	10146753	1	1	258	10 14 679 7	FUEL FINE-FILTER ASSEMBLY
FUEL FINE FILTER	10429946	2	2	259	10 14 675 3	FUEL FINE FILTER
FUEL FINE-FILTER ASSEMBLY	10146797	201	1	215	12 42 545 4	DIESEL ENGINE
FUEL HOSE	553128608	43	2.5	183	11 94 151 8	COOLER INSTALLATION WATE
FUEL HOSE	553128608	33	1.5	204	11 92 923 6	ASSEMBLY INSTAL.
FUEL LINE	9076621	4	1	261	10 14 588 5	LEAK OIL RETURN LINE
FUEL LINES	10143339	212	1	215	12 42 545 4	DIESEL ENGINE
FUEL PREFILTER	10303007	1	1	201	10 55 091 1	ADD-ON PRELIMINARY FUEL F
FUEL SYSTEM	11241144	50	1	80	11 92 885 2	CENTRAL POWER UNIT CPL
FUEL TANK ASSY.	10560732	16	1	6	11 24 047 9	SUPERSTRUCTURE CPL
FUEL TANK CPL	10560733	10	1	52	10 56 073 2	FUEL TANK ASSY.
FUEL TANK ST.CONST.	10560734	10	1	53	10 56 073 3	FUEL TANK CPL

Description	Item	Pos.	Quantity	Sheet	Assembly	Description
FUSE ASSAYER	10227556	2	1	403	99 20 811 14	RESERVE FUSES
FUSE CARTRIDGE	10224306	1	1	35	10 53 048 9	FUSE HOLDER
FUSE CARTRIDGE	10224306	21	2	403	99 20 811 14	RESERVE FUSES
FUSE CARTRIDGE	10224307	11	3	35	10 53 048 9	FUSE HOLDER
FUSE CARTRIDGE	10224307	22	2	403	99 20 811 14	RESERVE FUSES
FUSE HOLDER	10530489	34	1	33	11 24 519 0	SUPERSTRUCTURE EL
GANGWAY INTERM. SECTION	11294737	621	1	3	01 38 406 14	LR 1300 SX
GANGWAY INTERM. SECTION	11294742	622	1	3	01 38 406 14	LR 1300 SX
GANGWAY INTERM. SECTION	11294743	624	5	3	01 38 406 14	LR 1300 SX
GAS OPERATED SPRING	10800103	2	1	409	69 31 685 14	SAFETY LEVER CPL
GAS SPRING	592287414	13	1	422	59 22 871 14	FRONT WINDOW CPL
GAS SPRING	592323514	11	7	312	11 24 409 1	COVERS
GAS SPRING	592323514	22	3	324	10 54 591 0	MOTOR COWLING
GASKET KIT INT.FLANGE	10138034	3	1	146	10 13 803 3	SEAL KIT CPL.
GAUGE CONNECTION	510629008	318	1	83	11 24 773 5	HYDR POWER UNIT
GAUGE CONNECTION	510629008	205	2	442	11 89 300 5	TUBING HYDR
GAUGE CONNECTION	510664814	200	2	10	11 29 618 6	SUPERSTRUCTURE HYDR
GAUGE CONNECTION	510664814	701	2	482	11 26 260 6	WINCH 1 HYDR
GAUGE CONNECTION	510664814	701	2	497	11 26 261 1	WINCH 2 HYDR
GAUGE CONNECTION	510664814	613	2	629	10 51 726 2	TUBING HYDR
GAUGE CONNECTION	510694514	202	19	10	11 29 618 6	SUPERSTRUCTURE HYDR
GAUGE CONNECTION	510694514	201	2	73	10 51 969 5	A-FRAME ERECTION HYDR
GAUGE CONNECTION	510694514	671	14	83	11 24 773 5	HYDR POWER UNIT
GAUGE CONNECTION	510694514	201	2	341	10 51 969 8	NEEDLE LUFFING WINCH HYD
GAUGE CONNECTION	510694514	201	2	358	10 51 968 7	MAIN LUG HYDR
GAUGE CONNECTION	510694514	203	2	381	10 55 216 1	TUBING HYDR
GAUGE CONNECTION	510694514	204	8	442	11 89 300 5	TUBING HYDR
GAUGE CONNECTION	510694514	700	2	482	11 26 260 6	WINCH 1 HYDR
GAUGE CONNECTION	510694514	700	2	497	11 26 261 1	WINCH 2 HYDR
GAUGE CONNECTION	510694514	201	1	525	10 51 959 1	TUBING HYDR
GAUGE CONNECTION	510694514	202	1	687	10 51 973 8	SELF-LOADING SYSTEM HYD
GAUGE CONNECTION	510695314	201	2	687	10 51 973 8	SELF-LOADING SYSTEM HYD
GAUGE CONNECTION	510695314	706	1	697	11 89 408 3	TUBING HYDR
GAUGE CONNECTION	7409720	201	1	10	11 29 618 6	SUPERSTRUCTURE HYDR
GAUGE CONNECTION	7409720	304	2	83	11 24 773 5	HYDR POWER UNIT
GAUGE CONNECTION	7409720	200	2	381	10 55 216 1	TUBING HYDR
GEAR CAM LIMITSWITCH	606279214	1	1	483	11 21 634 2	WINCH EL
GEAR PUMP	512214414	10	1	82	11 24 773 5	HYDR POWER UNIT
GEAR PUMP	512249914	7	1	82	11 24 773 5	HYDR POWER UNIT
GEAR WHEEL	10121982	5	1	247	10 13 382 3	SUCTION PUMP PRE-ASS.
GEAR WHEEL	10121983	4	1	247	10 13 382 3	SUCTION PUMP PRE-ASS.
GEAR WHEEL	10133684	6	1	247	10 13 382 3	SUCTION PUMP PRE-ASS.
GEARBOX	10583865	3	1	361	10 55 156 3	WINCH
GEARBOX	11893213	1	1	485	10 53 039 8	WINCH
GEARBOX COVER	927563901	65	1	392	90 01 376 2	SLEWING GEAR DRIVE
GENERATOR, PRE-ASSEMBLE	10145845	440	1	215	12 42 545 4	DIESEL ENGINE
GLUE	811208201	118	1	141	10 14 131 6	TERMINAL BOARD PRE-ASS.
GLUE	8655023	118	1	105	10 11 835 0	CONNECTION HOUSING
GLUE	8655023	104	1	217	11 38 961 7	CRANKCASE CPL. WITH CYLIN
GLUE	8655032	119	1	107	10 11 835 7	REPAIR KIT CONNECTION HO
GRATING		500	-1	339	10 51 969 7	NEEDLE LUFFING WINCH
GRATING		501	-1	339	10 51 969 7	NEEDLE LUFFING WINCH
GRATING	10222994	46	1	505	11 23 820 4	PIVOT PIECE CPL
GRATING	10227124	11	1	479	99 26 718 14	PEDESTAL
GRATING	10517914	10	1	670	11 29 473 7	GANGWAY INTERM. SECTION
GRATING	10517914	10	1	674	11 29 474 2	GANGWAY INTERM. SECTION
GRATING	10530418	14	1	548	11 28 390 8	BOOM ACCESS
GRATING	10530418	14	1	563	11 28 583 8	BOOM ACCESS
GRATING	10545915	6	1	308	11 24 409 0	PANELLING SUPERSTR. INSTA
GRATING	10552808	10	1	669	10 55 280 7	GRATING CPL

Description	Item	Pos.	Quantity	Sheet	Assembly	Description
GRATING	10553070	12	1	674	11 29 474 2	GANGWAY INTERM. SECTION
GRATING	10553070	12	3	675	11 29 474 3	GANGWAY INTERM. SECTION
GRATING	10581980	51	1	505	11 23 820 4	PIVOT PIECE CPL
GRATING	10581981	52	1	505	11 23 820 4	PIVOT PIECE CPL
GRATING	10581982	53	1	505	11 23 820 4	PIVOT PIECE CPL
GRATING	10584105	50	1	310	11 24 409 0	PANELLING SUPERSTR. INSTA
GRATING	10598959	10	1	519	10 58 193 7	GRATING CPL
GRATING	10599053	24	1	519	10 58 193 7	GRATING CPL
GRATING	11239010	92	1	507	11 23 820 4	PIVOT PIECE CPL
GRATING	11245758	3	1	645	11 24 575 5	PEDESTAL
GRATING	11245766	5	2	644	11 24 147 8	UC PLATFORM
GRATING	11245767	6	2	644	11 24 147 8	UC PLATFORM
GRATING	11263492	6	1	579	11 28 648 4	MOUNTING PARTS
GRATING	11275747	95	1	507	11 23 820 4	PIVOT PIECE CPL
GRATING	11311245	15	2	548	11 28 390 8	BOOM ACCESS
GRATING	11311245	15	1	563	11 28 583 8	BOOM ACCESS
GRATING	11311245	14	1	570	11 28 626 1	BOOM ACCESS
GRATING	11311371	20	1	563	11 28 583 8	BOOM ACCESS
GRATING	11311371	15	1	570	11 28 626 1	BOOM ACCESS
GRATING	11311390	20	1	570	11 28 626 1	BOOM ACCESS
GRATING	11314134	10	1	675	11 29 474 3	GANGWAY INTERM. SECTION
GRATING	790512314	5	1	579	11 28 648 4	MOUNTING PARTS
GRATING	790512414	4	1	579	11 28 648 4	MOUNTING PARTS
GRATING CPL	10552807	12	1	667	10 55 601 0	FALL PROTECTION RFK
GRATING CPL	10552807	11	1	670	11 29 473 7	GANGWAY INTERM. SECTION
GRATING CPL	10552807	11	1	674	11 29 474 2	GANGWAY INTERM. SECTION
GRATING CPL	10552807	11	1	675	11 29 474 3	GANGWAY INTERM. SECTION
GRATING CPL	10581937	70	1	507	11 23 820 4	PIVOT PIECE CPL
GREASE	10282622	100	1	245	10 13 394 5	LUBRICATING OIL PUMP
GREASE	10282622	100	1	290	10 11 557 7	FLYWHEEL HOUSING MOUNT
GREASE	10282622	100	1	293	10 12 797 9	LOCKING PIECES
GREASE	10285708	100	1	218	10 15 445 8	CYLINDER
GREASE	10285708	100	1	219	10 14 768 6	POWER UNIT SUPPORT ATT
GREASE	10285708	100	1	246	10 13 394 7	SUCTION PUMP WITH FASTEN
GREASE	10285708	100	1	265	10 14 736 9	INTAKE STACK ASSEMBLY
GREASE	10285708	100	1	266	10 14 736 4	AIR INTAKE ASSEMBLY
GREASE	10285708	100	1	267	10 14 967 6	CONNECTING LINE ADD-ON
GREASE	10285708	100	1	274	10 14 273 4	WATER PUMP WITH FASTENIN
GREASE	10285708	100	1	275	10 14 821 5	THERMOSTAT HOUSING ASS
GREASE	10285708	100	1	277	10 14 274 2	COOLANT PIPE BEND ADD-ON
GREASE	10285708	100	1	279	10 14 601 2	MANIFOLD FOR WATER CPL.
GREASE	10285708	100	1	298	10 14 637 4	LOCKING PIECES
GREASE	10285708	100	1	300	11 41 737 0	AIR COMPRESSOR
GREASE NIPPLE	11312502	4	1	593	10 50 435 2	ROPE PULLEY
GREASE NIPPLE	11312502	7	1	601	11 27 148 8	HANGER
GRIP	10020487	4	1	316	10 57 883 5	DOOR
GRIP	10020487	4	1	318	10 57 897 6	DOOR
GRIP	10020487	4	1	322	10 56 580 8	DOOR
GRIP	10428121	1	1	421	11 25 097 0	SLIDING WINDOW
GRIP	10579145	2	1	321	10 56 623 7	DOOR
GRIP	10579454	2	1	320	10 57 940 0	DOOR
GRIP	7025006	20	1	431	70 24 996	SEAT FRAME
GRIP SHELL	10226472	18	1	419	10 35 007 6	SLIDING DOOR
GRIP SHELL	592289614	2	1	423	59 22 895 14	FLAP CPL
GROMMET	11225402	63	2	310	11 24 409 0	PANELLING SUPERSTR. INSTA
GROMMET NUT M6	7361600	21	1	110	92 73 644	SEAL KIT REGULATING VALVE
GROMMET NUT M6	7361600	21	1	113	92 78 875	PRESSURE CUT-OFF
GROMMET NUT M8	7361601	11	1	97	11 06 730 4	SHUTDOWN VALVE
GROMMET NUT M8	7361601	37	2	110	92 73 644	SEAL KIT REGULATING VALVE
GROOVED NAIL ISO 8746 2X6	431500401	92	2	392	90 01 376 2	SLEWING GEAR DRIVE

Description	Item	Pos.	Quantity	Sheet	Assembly	Description
GROOVED NAIL ISO 8746 2X6	431500401	96	2	467	96 93 178 01	TRACTION DRIVE
GROOVING BLOCK	9076196	18	1	139	10 12 224 5	REPAIR KIT LEVER
GRUB SCREW	11267417	7	1	95	10 59 347 4	PRESSURE LIMITING VALVE
GRUB SCREW	7373597	17	2	447	51 24 059 14	VARIABLE DISPLACEMENT MO
GRUB SCREW DIN 913 22H	4980900	20	1	113	92 78 875	PRESSURE CUT-OFF
GRUB SCREW DIN 913 M6X6	4980082	21	1	141	10 14 131 6	TERMINAL BOARD PRE-ASS.
GRUB SCREW DIN 914 M6X20	404601014	15	3	625	11 21 552 4	ANGLE INDICATION RFK
GRUB SCREW ISO 4026 M10X4	404403114	21	1	398	11 27 970 6	CABIN CPL
GUARD	10566030	4	1	31	10 22 592 5	COOLER MOTOR
GUARD	11267554	9	1	186	10 57 423 7	COOLER MOTOR
GUARD	11932244	3	1	190	10 57 423 9	COOLER MOTOR
GUARD RING	10120443	3	1	232	10 12 134 5	RK CRANKSHAFT SEAL
GUIDE	10512821	88	2	416	10 35 008 0	CABIN
GUIDE	11292956	17	1	453	10 44 510 2	QUICK RELEASE FITTING
GUIDE BUSHING 145/100X130	11310567	40	1	526	10 09 917 3	DOUBLE-ACTING CYL
GUIDE BUSHING M30 X 1.5 X	10352312	35	1	704	59 21 826 14	SUPPORT CYLINDER
GUIDE BUSHING M40 X 1.5 X	10352313	40	1	704	59 21 826 14	SUPPORT CYLINDER
GUIDE CPL	959576314	100	1	417	10 22 645 4	DOOR ACCESSORIES
GUIDE PLATE	7023839	2	1	386	11 94 017 6	HYDRAULIC PARTS DRIVING G
GUIDE PULLEY COMPL.	10149360	3	2	271	10 14 286 0	AIR COND. COMPRESSOR A
GUIDE RING	10351499	120	2	704	59 21 826 14	SUPPORT CYLINDER
GUIDE RING	10352344	65	1	704	59 21 826 14	SUPPORT CYLINDER
GUIDE RING	10352349	70	2	704	59 21 826 14	SUPPORT CYLINDER
GUIDE RING	10352352	75	2	704	59 21 826 14	SUPPORT CYLINDER
GUIDE RING	10352354	95	1	704	59 21 826 14	SUPPORT CYLINDER
GUIDE RING	11267401	11	2	94	11 21 993 0	PUMP HOUSING
GUIDE RING	726206214	100	3	704	59 21 826 14	SUPPORT CYLINDER
GUIDE RING	9266680	18	2	107	10 11 835 7	REPAIR KIT CONNECTION HO
GUIDE RING	9881114	33	2	107	10 11 835 7	REPAIR KIT CONNECTION HO
GUIDE WHEEL	11299752	1	1	465	10 55 716 2	GUIDE WHEEL CPL
GUIDE WHEEL CPL	10557162	1	1	464	10 55 716 1	GUIDE WHEEL UNIT CPL
GUIDE WHEEL UNIT CPL	10557161	2	1	463	11 89 365 0	CRAWLER CARRIER RIGHT CP
GUIDE WHEEL UNIT CPL	10557161	2	1	474	11 89 365 1	CRAWLER CARRIER LEFT CP
GUIDING BOLT	10572236	1	1	455	10 55 154 8	QUICK RELEASE FITTING
GUIDING BOLT	10572236	1	2	510	10 55 157 6	QUICK RELEASE FITTING
GUIDING BRACKET ABOVE	10226463	305	1	417	10 22 645 4	DOOR ACCESSORIES
GUIDING BRACKET BELOW	10226461	228	1	417	10 22 645 4	DOOR ACCESSORIES
GUIDING BRACKET CENTRE	10226458	15	1	418	95 95 763 14	GUIDE CPL
GUIDING PIPE	9266847	1	1	228	10 14 591 9	OIL DIPSTICK WITH PIPE
GUIDING RAIL	10226457	9	1	418	95 95 763 14	GUIDE CPL
GUIDING RAIL	10226459	222	1	417	10 22 645 4	DOOR ACCESSORIES
GUIDING RAIL	10226462	300	1	417	10 22 645 4	DOOR ACCESSORIES
GUIDING RAIL ST.CONST.	10537682	1	1	579	11 28 648 4	MOUNTING PARTS
GUIDING RAIL ST.CONST.	919956014	2	2	579	11 28 648 4	MOUNTING PARTS
GUIDING RAIL ST.CONST.	919956114	3	2	579	11 28 648 4	MOUNTING PARTS
GUY ROPE	10350539	10	2	665	97 05 997 03	INTERMEDIATE TENSIONING
GUY ROPE	774760214	1	6	665	97 05 997 03	INTERMEDIATE TENSIONING
GUY ROPE	774760314	4	6	665	97 05 997 03	INTERMEDIATE TENSIONING
GUY ROPE	774760414	3	6	665	97 05 997 03	INTERMEDIATE TENSIONING
GUY ROPE	774760514	2	8	665	97 05 997 03	INTERMEDIATE TENSIONING
GUY ROPE	790538014	9	2	665	97 05 997 03	INTERMEDIATE TENSIONING
HAND LEVER PRESS 400B	885602114	4	1	501	10 56 183 8	TOOL
HANDLE CAP	11694640	9	1	255	10 13 508 0	HIGH PRESSURE CONNECTO
HANDRAIL	10518461	41	1	463	11 89 365 0	CRAWLER CARRIER RIGHT CP
HANDRAIL	10518461	42	1	474	11 89 365 1	CRAWLER CARRIER LEFT CP
HANDRAIL	10523559	11	1	463	11 89 365 0	CRAWLER CARRIER RIGHT CP
HANDRAIL	10523559	11	1	474	11 89 365 1	CRAWLER CARRIER LEFT CP
HANDWHEEL	5609144	53	1	432	10 28 999 3	VIBRATING SYSTEM
HANGER	11271488	22	1	599	79 04 871 14	BOTTOM HOOK BLOCK
HANGER	11274638	21	1	592	79 04 112 14	BOTTOM HOOK BLOCK

Description	Item	Pos.	Quantity	Sheet	Assembly	Description
HARNESS	10556012	2	1	668	10 55 601 1	FALL PROTECTION CPL
HEAD REST	737022103	12	1	398	11 27 970 6	CABIN CPL
HEAT EXCHANGER	10446225	14	1	82	11 24 773 5	HYDR POWER UNIT
HEAT EXCHANGER	10512662	40	1	428	11 93 934 6	AIR CONDITIONING
HEAT EXCHANGER	11236707	1	1	725	11 21 750 0	LIQUEFIER
HEAT PROTECTION SHEET	10147371	1	1	282	10 14 737 0	HEAT PROTECTION W.FASTEN
HEAT PROTECTION SHEET	12428325	10	1	267	10 14 967 6	CONNECTING LINE ADD-ON
HEAT PROTECTION W.FASTEN	10147370	415	1	215	12 42 545 4	DIESEL ENGINE
HEATING FLANGE ADD-ON	9078314	260	1	215	12 42 545 4	DIESEL ENGINE
HEATING FLANGE PRE.ASS.	10299988	1	1	268	90 78 314	HEATING FLANGE ADD-ON
HEATSHRINK SLEEVING	603018114	18	0.2	582	10 59 863 3	PENDULUM CPL
HEX NUT 8	10411095	5	2	288	11 38 664 5	STARTER
HEX NUT AEHNL.ISO 7042 M8	7381182	11	1	284	10 14 511 2	EXHAUST NOZZLE ATTACHM
HEX NUT DIN 934 M30 8	10584965	11	4	592	79 04 112 14	BOTTOM HOOK BLOCK
HEX NUT DIN 934 M30 8	10584965	11	4	599	79 04 871 14	BOTTOM HOOK BLOCK
HEX NUT DIN 985 M10 10	411901114	8	1	35	10 53 048 9	FUSE HOLDER
HEX NUT DIN 985 M10 10	411901114	80	4	177	10 51 948 1	SUCTION PIPE OIL
HEX NUT DIN 985 M16 10	10544155	77	8	507	11 23 820 4	PIVOT PIECE CPL
HEX NUT DIN 985 M16 10	10544155	29	4	548	11 28 390 8	BOOM ACCESS
HEX NUT DIN 985 M16 10	10544155	29	4	563	11 28 583 8	BOOM ACCESS
HEX NUT DIN 985 M16 10	10544155	29	4	570	11 28 626 1	BOOM ACCESS
HEX NUT DIN 985 M20 10	10544157	18	4	627	10 51 743 9	ROPE LUG CPL RFK
HEX NUT DIN 985 M24 10	10544159	30	8	679	10 51 971 3	SELF-LOADING SYSTEM RFK
HEX NUT DIN 985 M8 8	11236108	20	12	592	79 04 112 14	BOTTOM HOOK BLOCK
HEX NUT DIN 985 M8 8	11236108	20	12	599	79 04 871 14	BOTTOM HOOK BLOCK
HEX NUT DIN EN 1663 M8 A4	11314341	14	4	518	11 23 653 3	SUPPORT CPL
HEX NUT DIN EN 1663 M8 A4	11314341	15	4	540	11 25 204 2	SUPPORT CPL
HEX NUT DIN EN 1663 M8 A4	11314341	17	6	558	11 23 292 2	SUPPORT CPL
HEX NUT EN 1661 M10 8	4980805	15	1	247	10 13 382 3	SUCTION PUMP PRE-ASS.
HEX NUT EN 1661 M10 8	4980805	4	3	266	10 14 736 4	AIR INTAKE ASSEMBLY
HEX NUT EN 1661 M10 8	4980805	7	1	286	10 14 584 5	GENERATOR, PRE-ASSEMBLE
HEX NUT EN 1661 M10 8	4980805	3	3	287	10 12 037 2	STARTER INSTALLATION
HEX NUT EN 1661 M8 8	10424333	14	3	226	10 15 529 8	OIL SUMP PRE-ASS.
HEX NUT EN 1661 M8 8	10424333	11	2	267	10 14 967 6	CONNECTING LINE ADD-ON
HEX NUT EN 1661 M8 A2-70	485569314	14	16	479	99 26 718 14	PEDESTAL
HEX NUT EN 1661 M8 A2-70	485569314	14	16	645	11 24 575 5	PEDESTAL
HEX NUT ISO 10511 M10 A4	10540494	20	2	45	10 51 961 6	OIL COOLER INSTALLATION
HEX NUT ISO 10511 M10 A4	10540494	80	4	48	10 56 070 1	TANK HYDR CPL
HEX NUT ISO 10511 M10 A4	10540494	5	1	56	10 55 268 1	DRIVER INSTALLATION
HEX NUT ISO 10511 M10 A4	10540494	15	4	67	10 56 067 3	BATTERY INSTALLATION CPL
HEX NUT ISO 10511 M10 A4	10540494	82	18	184	11 94 151 8	COOLER INSTALLATION WATE
HEX NUT ISO 10511 M10 A4	10540494	81	10	189	11 24 114 1	COOLER INSTALLATION CHA
HEX NUT ISO 10511 M10 A4	10540494	80	2	198	11 24 114 3	EXHAUST GAS SYSTEM
HEX NUT ISO 10511 M10 A4	10540494	134	2	205	11 92 923 6	ASSEMBLY INSTAL.
HEX NUT ISO 10511 M10 A4	10540494	82	11	210	11 92 958 8	AIR DUCT CPL
HEX NUT ISO 10511 M10 A4	10540494	83	6	306	11 24 114 6	COVER
HEX NUT ISO 10511 M10 A4	10540494	30	54	308	11 24 409 0	PANELLING SUPERSTR. INSTA
HEX NUT ISO 10511 M10 A4	10540494	8	4	324	10 54 591 0	MOTOR COWLING
HEX NUT ISO 10511 M10 A4	10540494	28	12	326	11 24 922 2	COVER UNDERSIDE
HEX NUT ISO 10511 M10 A4	10540494	76	83	330	11 24 483 7	MOUNTING PARTS SUPERST
HEX NUT ISO 10511 M10 A4	10540494	94	18	507	11 23 820 4	PIVOT PIECE CPL
HEX NUT ISO 10511 M10 A4	10540494	15	2	542	99 29 588 14	SUPPORT
HEX NUT ISO 10511 M10 A4	10540494	15	2	543	10 35 063 3	FASTENER
HEX NUT ISO 10511 M10 A4	10540494	18	2	550	11 28 397 7	SUMP PAN CPL
HEX NUT ISO 10511 M10 A4	10540494	18	2	551	11 28 397 8	SUMP PAN CPL
HEX NUT ISO 10511 M10 A4	10540494	18	4	552	11 28 399 5	SUMP PAN CPL
HEX NUT ISO 10511 M10 A4	10540494	18	4	553	11 28 399 7	SUMP PAN CPL
HEX NUT ISO 10511 M10 A4	10540494	67	8	579	11 28 648 4	MOUNTING PARTS
HEX NUT ISO 10511 M10 A4	10540494	21	1	582	10 59 863 3	PENDULUM CPL
HEX NUT ISO 10511 M10 A4	10540494	11	4	583	11 28 357 6	MOUNTING PARTS

Description	Item	Pos.	Quantity	Sheet	Assembly	Description
HEX NUT ISO 10511 M10 A4	10540494	12	1	589	99 30 800 14	HOIST LIMIT SWITCH INSTAL.
HEX NUT ISO 10511 M10 A4	10540494	39	54	642	10 55 372 1	ROOF RAILING RFK
HEX NUT ISO 10511 M10 A4	10540494	22	4	649	10 52 547 1	ADDNL.FLOODLIGHT SUPERS
HEX NUT ISO 10511 M10 A4	10540494	16	2	667	10 55 601 0	FALL PROTECTION RFK
HEX NUT ISO 10511 M10 A4	10540494	16	3	671	11 30 694 4	RAIL CPL
HEX NUT ISO 10511 M10 A4	10540494	14	1	683	99 35 606 14	MOUNTING LINK CPL
HEX NUT ISO 10511 M10 A4	10540494	9	2	685	11 23 619 7	SELF-LOADING SYSTEM RFK
HEX NUT ISO 10511 M10 A4	10540494	16	5	732	11 26 771 6	MOUNTING PARTS
HEX NUT ISO 10511 M12 A4	10540495	36	4	65	10 58 163 4	CABIN SUSPENSION CPL
HEX NUT ISO 10511 M12 A4	10540495	20	2	67	10 56 067 3	BATTERY INSTALLATION CPL
HEX NUT ISO 10511 M12 A4	10540495	81	6	177	10 51 948 1	SUCTION PIPE OIL
HEX NUT ISO 10511 M12 A4	10540495	82	4	198	11 24 114 3	EXHAUST GAS SYSTEM
HEX NUT ISO 10511 M12 A4	10540495	135	1	205	11 92 923 6	ASSEMBLY INSTAL.
HEX NUT ISO 10511 M12 A4	10540495	70	8	330	11 24 483 7	MOUNTING PARTS SUPERST
HEX NUT ISO 10511 M12 A4	10540495	23	2	357	10 51 968 6	LUG SUPERSTRUCTURE CPL
HEX NUT ISO 10511 M12 A4	10540495	19	152	463	11 89 365 0	CRAWLER CARRIER RIGHT CP
HEX NUT ISO 10511 M12 A4	10540495	19	152	474	11 89 365 1	CRAWLER CARRIER LEFT CP
HEX NUT ISO 10511 M12 A4	10540495	19	6	505	11 23 820 4	PIVOT PIECE CPL
HEX NUT ISO 10511 M12 A4	10540495	13	4	555	11 94 087 8	ASSEMBLY UNIT
HEX NUT ISO 10511 M12 A4	10540495	4	4	606	11 30 126 6	MOUNTING PARTS
HEX NUT ISO 10511 M12 A4	10540495	56	10	642	10 55 372 1	ROOF RAILING RFK
HEX NUT ISO 10511 M12 A4	10540495	14	2	659	11 27 109 7	LIGHTNING ROD RFK
HEX NUT ISO 10511 M12 A4	10540495	26	2	718	10 58 064 7	VIDEO MONITORING SYSTEM
HEX NUT ISO 10511 M5 A4	10540484	15	2	59	11 26 557 2	MOUNTING PARTS
HEX NUT ISO 10511 M5 A4	10540484	21	2	67	10 56 067 3	BATTERY INSTALLATION CPL
HEX NUT ISO 10511 M5 A4	10540484	12	4	68	11 31 093 2	LIMIT SWITCH INSTALLATION
HEX NUT ISO 10511 M5 A4	10540484	47	4	398	11 27 970 6	CABIN CPL
HEX NUT ISO 10511 M5 A4	10540484	22	16	505	11 23 820 4	PIVOT PIECE CPL
HEX NUT ISO 10511 M5 A4	10540484	43	4	579	11 28 648 4	MOUNTING PARTS
HEX NUT ISO 10511 M5 A4	10540484	19	8	580	11 28 610 5	RETAINING DEVICE CPL
HEX NUT ISO 10511 M5 A4	10540484	20	2	737	10 52 155 4	REFUELLING SYSTEM RFK
HEX NUT ISO 10511 M6 A4	10540492	80	9	184	11 94 151 8	COOLER INSTALLATION WATE
HEX NUT ISO 10511 M6 A4	10540492	84	3	198	11 24 114 3	EXHAUST GAS SYSTEM
HEX NUT ISO 10511 M6 A4	10540492	131	14	205	11 92 923 6	ASSEMBLY INSTAL.
HEX NUT ISO 10511 M6 A4	10540492	80	2	210	11 92 958 8	AIR DUCT CPL
HEX NUT ISO 10511 M6 A4	10540492	46	10	310	11 24 409 0	PANELLING SUPERSTR. INSTA
HEX NUT ISO 10511 M6 A4	10540492	84	3	330	11 24 483 7	MOUNTING PARTS SUPERST
HEX NUT ISO 10511 M6 A4	10540492	39	6	463	11 89 365 0	CRAWLER CARRIER RIGHT CP
HEX NUT ISO 10511 M6 A4	10540492	39	6	474	11 89 365 1	CRAWLER CARRIER LEFT CP
HEX NUT ISO 10511 M6 A4	10540492	83	28	507	11 23 820 4	PIVOT PIECE CPL
HEX NUT ISO 10511 M6 A4	10540492	18	2	518	11 23 653 3	SUPPORT CPL
HEX NUT ISO 10511 M6 A4	10540492	14	18	519	10 58 193 7	GRATING CPL
HEX NUT ISO 10511 M6 A4	10540492	31	8	535	11 24 444 4	A-FRAME 1 CPL
HEX NUT ISO 10511 M6 A4	10540492	19	1	550	11 28 397 7	SUMP PAN CPL
HEX NUT ISO 10511 M6 A4	10540492	19	1	551	11 28 397 8	SUMP PAN CPL
HEX NUT ISO 10511 M6 A4	10540492	19	1	552	11 28 399 5	SUMP PAN CPL
HEX NUT ISO 10511 M6 A4	10540492	19	1	553	11 28 399 7	SUMP PAN CPL
HEX NUT ISO 10511 M6 A4	10540492	14	2	625	11 21 552 4	ANGLE INDICATION RFK
HEX NUT ISO 10511 M6 A4	10540492	35	24	642	10 55 372 1	ROOF RAILING RFK
HEX NUT ISO 10511 M6 A4	10540492	23	2	669	10 55 280 7	GRATING CPL
HEX NUT ISO 10511 M6 A4	10540492	21	2	676	10 55 514 8	FALL PROTECTION RFK
HEX NUT ISO 10511 M6 A4	10540492	23	6	718	10 58 064 7	VIDEO MONITORING SYSTEM
HEX NUT ISO 10511 M8 A4	10540493	16	2	59	11 26 557 2	MOUNTING PARTS
HEX NUT ISO 10511 M8 A4	10540493	17	2	65	10 58 163 4	CABIN SUSPENSION CPL
HEX NUT ISO 10511 M8 A4	10540493	84	8	176	11 24 113 8	MOTOR BEARING CPL
HEX NUT ISO 10511 M8 A4	10540493	81	12	184	11 94 151 8	COOLER INSTALLATION WATE
HEX NUT ISO 10511 M8 A4	10540493	80	14	189	11 24 114 1	COOLER INSTALLATION CHA
HEX NUT ISO 10511 M8 A4	10540493	80	2	192	11 28 574 7	WP
HEX NUT ISO 10511 M8 A4	10540493	80	4	194	11 92 922 0	SUCTION UNIT AIR
HEX NUT ISO 10511 M8 A4	10540493	80	2	199	11 24 114 4	FUEL SYSTEM

Description	Item	Pos.	Quantity	Sheet	Assembly	Description
HEX NUT ISO 10511 M8 A4	10540493	132	6	205	11 92 923 6	ASSEMBLY INSTAL.
HEX NUT ISO 10511 M8 A4	10540493	81	6	210	11 92 958 8	AIR DUCT CPL
HEX NUT ISO 10511 M8 A4	10540493	41	23	310	11 24 409 0	PANELLING SUPERSTR. INSTA
HEX NUT ISO 10511 M8 A4	10540493	85	37	330	11 24 483 7	MOUNTING PARTS SUPERST
HEX NUT ISO 10511 M8 A4	10540493	26	4	357	10 51 968 6	LUG SUPERSTRUCTURE CPL
HEX NUT ISO 10511 M8 A4	10540493	13	2	372	99 29 386 14	BRACKET CPL
HEX NUT ISO 10511 M8 A4	10540493	13	2	373	99 29 434 14	BRACKET CPL
HEX NUT ISO 10511 M8 A4	10540493	16	8	479	99 26 718 14	PEDESTAL
HEX NUT ISO 10511 M8 A4	10540493	25	70	505	11 23 820 4	PIVOT PIECE CPL
HEX NUT ISO 10511 M8 A4	10540493	19	6	519	10 58 193 7	GRATING CPL
HEX NUT ISO 10511 M8 A4	10540493	15	8	520	99 34 198 14	LIEBHERR SIGN
HEX NUT ISO 10511 M8 A4	10540493	30	6	548	11 28 390 8	BOOM ACCESS
HEX NUT ISO 10511 M8 A4	10540493	14	2	549	11 28 391 3	FIXING CLAMP
HEX NUT ISO 10511 M8 A4	10540493	30	6	563	11 28 583 8	BOOM ACCESS
HEX NUT ISO 10511 M8 A4	10540493	30	6	570	11 28 626 1	BOOM ACCESS
HEX NUT ISO 10511 M8 A4	10540493	44	4	579	11 28 648 4	MOUNTING PARTS
HEX NUT ISO 10511 M8 A4	10540493	24	2	589	99 30 800 14	HOIST LIMIT SWITCH INSTAL.
HEX NUT ISO 10511 M8 A4	10540493	42	40	642	10 55 372 1	ROOF RAILING RFK
HEX NUT ISO 10511 M8 A4	10540493	12	12	644	11 24 147 8	UC PLATFORM
HEX NUT ISO 10511 M8 A4	10540493	12	12	645	11 24 575 5	PEDESTAL
HEX NUT ISO 10511 M8 A4	10540493	35	2	662	99 10 116 14	ROPE GUIDE
HEX NUT ISO 10511 M8 A4	10540493	19	2	667	10 55 601 0	FALL PROTECTION RFK
HEX NUT ISO 10511 M8 A4	10540493	16	4	669	10 55 280 7	GRATING CPL
HEX NUT ISO 10511 M8 A4	10540493	6	2	672	11 23 827 7	ROPE GUARD
HEX NUT ISO 10511 M8 A4	10540493	80	1	673	11 30 567 0	TRANSPORT LASHING
HEX NUT ISO 10511 M8 A4	10540493	24	4	678	11 26 901 8	HOLDER CPL
HEX NUT ISO 10511 M8 A4	10540493	6	4	685	11 23 619 7	SELF-LOADING SYSTEM RFK
HEX NUT ISO 10511 M8 A4	10540493	24	2	718	10 58 064 7	VIDEO MONITORING SYSTEM
HEX NUT ISO 4032 M10 10	4000383	19	4	479	99 26 718 14	PEDESTAL
HEX NUT ISO 4032 M10 8.8	11932239	9	4	190	10 57 423 9	COOLER MOTOR
HEX NUT ISO 4032 M10 A4-70	411514614	80	6	53	10 56 073 3	FUEL TANK CPL
HEX NUT ISO 4032 M10 A4-70	411514614	82	8	176	11 24 113 8	MOTOR BEARING CPL
HEX NUT ISO 4032 M10 A4-70	411514614	81	8	198	11 24 114 3	EXHAUST GAS SYSTEM
HEX NUT ISO 4032 M10 A4-70	411514614	133	6	205	11 92 923 6	ASSEMBLY INSTAL.
HEX NUT ISO 4032 M10 A4-70	411514614	20	4	324	10 54 591 0	MOTOR COWLING
HEX NUT ISO 4032 M10 A4-70	411514614	32	1	398	11 27 970 6	CABIN CPL
HEX NUT ISO 4032 M10 A4-70	411514614	19	1	617	10 55 753 7	HOIST LIMITSWITCH LEFT IN
HEX NUT ISO 4032 M10 A4-70	411514614	19	1	618	10 55 757 6	HOIST LIMITSWITCH RIGHT I
HEX NUT ISO 4032 M10 A4-70	411514614	5	4	733	10 52 293 0	SG TACHOGENERATOR RFK
HEX NUT ISO 4032 M12 10	11233292	124	4	18	11 28 647 6	VALVE BLOCK
HEX NUT ISO 4032 M12 A4-70	411516914	85	8	176	11 24 113 8	MOTOR BEARING CPL
HEX NUT ISO 4032 M12 A4-70	411516914	25	8	476	11 31 390 8	CENTRE PART CPL
HEX NUT ISO 4032 M12 A4-70	411516914	15	2	617	10 55 753 7	HOIST LIMITSWITCH LEFT IN
HEX NUT ISO 4032 M12 A4-70	411516914	15	2	618	10 55 757 6	HOIST LIMITSWITCH RIGHT I
HEX NUT ISO 4032 M12 A4-70	411516914	21	2	659	11 27 109 7	LIGHTNING ROD RFK
HEX NUT ISO 4032 M16 10	10544154	80	10	176	11 24 113 8	MOTOR BEARING CPL
HEX NUT ISO 4032 M24 10	10544158	81	2	176	11 24 113 8	MOTOR BEARING CPL
HEX NUT ISO 4032 M3 A4-70	485546514	50	12	398	11 27 970 6	CABIN CPL
HEX NUT ISO 4032 M3 A4-70	485546514	7	4	436	11 30 962 5	HOLDER CPL
HEX NUT ISO 4032 M4 A4-70	411551214	2	9	434	97 07 857 03	SPIRIT LEVEL ASSY.
HEX NUT ISO 4032 M5 A4-70	411551114	130	2	205	11 92 923 6	ASSEMBLY INSTAL.
HEX NUT ISO 4032 M5 A4-70	411551114	50	9	700	11 89 568 6	SELF-LOADING SYSTEM RFK
HEX NUT ISO 4032 M6 A4-70	411517114	56	2	398	11 27 970 6	CABIN CPL
HEX NUT ISO 4032 M6 A4-70	411517114	6	4	435	10 53 756 0	LAMP HOLDER CPL
HEX NUT ISO 4032 M6 A4-70	411517114	32	8	476	11 31 390 8	CENTRE PART CPL
HEX NUT ISO 4032 M6 A4-70	411517114	4	4	623	11 22 322 6	MODEM CPL RFK
HEX NUT ISO 4032 M6 A4-70	411517114	47	10	642	10 55 372 1	ROOF RAILING RFK
HEX NUT ISO 4032 M6 A4-70	411517114	23	2	678	11 26 901 8	HOLDER CPL
HEX NUT ISO 4032 M8 A4-70	411515014	83	4	176	11 24 113 8	MOTOR BEARING CPL
HEX NUT ISO 4032 M8 A4-70	411515014	57	7	310	11 24 409 0	PANELLING SUPERSTR. INSTA

Description	Item	Pos.	Quantity	Sheet	Assembly	Description
HEX NUT ISO 4032 M8 A4-70	411515014	15	26	324	10 54 591 0	MOTOR COWLING
HEX NUT ISO 4032 M8 A4-70	411515014	38	4	398	11 27 970 6	CABIN CPL
HEX NUT ISO 4032 M8 A4-70	411515014	20	2	617	10 55 753 7	HOIST LIMITSWITCH LEFT IN
HEX NUT ISO 4032 M8 A4-70	411515014	20	2	618	10 55 757 6	HOIST LIMITSWITCH RIGHT I
HEX NUT ISO 4032 M8 A4-70	411515014	61	2	642	10 55 372 1	ROOF RAILING RFK
HEX NUT ISO 4032 M8 A4-70	411515014	15	4	645	11 24 575 5	PEDESTAL
HEX NUT ISO 4032 M8 A4-70	411515014	15	2	737	10 52 155 4	REFUELLING SYSTEM RFK
HEX NUT ISO 4035 M12 5	4900125	30	2	105	10 11 835 0	CONNECTION HOUSING
HEX NUT ISO 7042 M10 8	411880614	83	4	198	11 24 114 3	EXHAUST GAS SYSTEM
HEX NUT ISO 8673 8	4980986	20	1	145	10 12 226 2	REGULATION REPAIR KIT
HEX NUT ISO 8673 M16X1.5 10	4980548	26	8	103	10 11 834 9	DOUBLE V-PUMP
HEX NUT ISO 8675 M16X1.5 4	4980793	6	1	89	11 21 990 5	ADJUSTMENT
HEX NUT M10X1 8	10012557	3	2	237	11 44 800 5	ROCKER ARM BRACKET PRE
HEX NUT M6	11290855	470	2	86	11 24 682 0	DISTRIBUTOR GEARBOX
HEX NUT M6 8	10411094	3	1	288	11 38 664 5	STARTER
HEX SCREW ASME B18.2.1 UN	409878414	64	4	179	10 57 532 2	INTAKE PIPE OIL CPL
HEX SCREW ASME B18.2.1 U	409878214	62	12	179	10 57 532 2	INTAKE PIPE OIL CPL
HEX SCREW DIN 6921 M10X25	10336008	3	3	298	10 14 637 4	LOCKING PIECES
HEX SCREW DIN 6921 M10X30	10219458	7	4	284	10 14 511 2	EXHAUST NOZZLE ATTACHM
HEX SCREW DIN 6921 M10X30	10219458	3	2	286	10 14 584 5	GENERATOR, PRE-ASSEMBLE
HEX SCREW DIN 6921 M10X35	10333464	2	3	258	10 14 679 7	FUEL FINE-FILTER ASSEMBLY
HEX SCREW DIN 6921 M10X40	10112497	17	1	247	10 13 382 3	SUCTION PUMP PRE-ASS.
HEX SCREW DIN 6921 M10X40	10112497	2	4	271	10 14 286 0	AIR COND. COMPRESSOR A
HEX SCREW DIN 6921 M10X50	10035580	6	1	219	10 14 768 6	POWER UNIT SUPPORT ATT
HEX SCREW DIN 6921 M10X70	10114153	5	9	219	10 14 768 6	POWER UNIT SUPPORT ATT
HEX SCREW DIN 6921 M10X90	10489016	4	6	264	10 14 736 6	AIR INTAKE PIPE ASS.
HEX SCREW DIN 6921 M10X90	10489016	14	3	279	10 14 601 2	MANIFOLD FOR WATER CPL.
HEX SCREW DIN 6921 M16X50	11181806	2	2	289	10 14 286 4	TRANSPORT DEVICE ATTACH
HEX SCREW DIN 6921 M6X20	10018711	2	4	268	90 78 314	HEATING FLANGE ADD-ON
HEX SCREW DIN 6921 M6X40	11656240	6	1	265	10 14 736 9	INTAKE STACK ASSEMBLY
HEX SCREW DIN 6921 M8X25	11004752	2	3	246	10 13 394 7	SUCTION PUMP WITH FASTEN
HEX SCREW DIN 6921 M8X30	11833770	3	2	226	10 15 529 8	OIL SUMP PRE-ASS.
HEX SCREW DIN 6921 M8X45	10005713	2	1	245	10 13 394 5	LUBRICATING OIL PUMP
HEX SCREW DIN 6921 M8X55	10218013	3	18	242	10 12 948 1	OIL COOLER ADD-ON
HEX SCREW DIN 6921 M8X90	11066361	3	2	245	10 13 394 5	LUBRICATING OIL PUMP
HEX SCREW DIN 931 M30X250	11237759	9	4	592	79 04 112 14	BOTTOM HOOK BLOCK
HEX SCREW DIN 931 M30X310	11490268	9	4	599	79 04 871 14	BOTTOM HOOK BLOCK
HEX SCREW DIN EN 1665 M8	10005511	9	1	226	10 15 529 8	OIL SUMP PRE-ASS.
HEX SCREW EN 1665 M10X120	10037312	4	8	219	10 14 768 6	POWER UNIT SUPPORT ATT
HEX SCREW EN 1665 M10X12	10113710	4	1	286	10 14 584 5	GENERATOR, PRE-ASSEMBLE
HEX SCREW EN 1665 M10X20	10030518	2	4	272	10 14 611 7	COVERING ASSEMBLY
HEX SCREW EN 1665 M10X20	10030518	16	1	279	10 14 601 2	MANIFOLD FOR WATER CPL.
HEX SCREW EN 1665 M10X20	10030518	18	1	285	10 14 622 4	REGULATION BOOST PRESS
HEX SCREW EN 1665 M10X20	10030518	68	2	296	10 15 028 8	CABLE HARNESS MOUNTING
HEX SCREW EN 1665 M10X30	10016908	2	3	300	11 41 737 0	AIR COMPRESSOR
HEX SCREW EN 1665 M10X30	406550714	27	84	326	11 24 922 2	COVER UNDERSIDE
HEX SCREW EN 1665 M10X60	10014638	3	6	264	10 14 736 6	AIR INTAKE PIPE ASS.
HEX SCREW EN 1665 M10X60	10014638	4	2	271	10 14 286 0	AIR COND. COMPRESSOR A
HEX SCREW EN 1665 M10X80	10101657	6	1	271	10 14 286 0	AIR COND. COMPRESSOR A
HEX SCREW EN 1665 M10X80	10101657	3	4	272	10 14 611 7	COVERING ASSEMBLY
HEX SCREW EN 1665 M12X40	4601426	5	2	286	10 14 584 5	GENERATOR, PRE-ASSEMBLE
HEX SCREW EN 1665 M5X10 8.	12207546	52	2	296	10 15 028 8	CABLE HARNESS MOUNTING
HEX SCREW EN 1665 M5X16 8.	12207547	15	2	285	10 14 622 4	REGULATION BOOST PRESS
HEX SCREW EN 1665 M6X16 8.	407350208	4	1	238	10 13 475 1	CYLINDER HEAD COVER ASS
HEX SCREW EN 1665 M6X16 8.	407350208	6	1	239	10 12 653 5	CYLINDER HEAD COVER ASS
HEX SCREW EN 1665 M6X16 8.	407350208	5	1	241	10 13 469 6	CYLINDER HEAD COVER ASS
HEX SCREW EN 1665 M6X16 8.	407350208	22	1	261	10 14 588 5	LEAK OIL RETURN LINE
HEX SCREW EN 1665 M6X16 8.	407350208	16	8	285	10 14 622 4	REGULATION BOOST PRESS
HEX SCREW EN 1665 M6X16 8.	407350208	54	5	296	10 15 028 8	CABLE HARNESS MOUNTING
HEX SCREW EN 1665 M6X30 8.	10290537	10	1	302	11 41 475 7	ACCESSORIES AIR COMPRES

Description	Item	Pos.	Quantity	Sheet	Assembly	Description
HEX SCREW EN 1665 M8X12 8.	10024115	3	4	273	11 44 013 4	COVER PRE-ASS.
HEX SCREW EN 1665 M8X120	10017158	5	1	225	10 14 844 4	OIL SUMP WITH FASTENING
HEX SCREW EN 1665 M8X16 8.	10005078	12	3	230	10 14 671 6	OIL LINE PRE-ASSEMBLY
HEX SCREW EN 1665 M8X16 8.	10005078	18	1	261	10 14 588 5	LEAK OIL RETURN LINE
HEX SCREW EN 1665 M8X16 8.	10005078	17	4	285	10 14 622 4	REGULATION BOOST PRESS
HEX SCREW EN 1665 M8X16 8.	10005078	60	3	296	10 15 028 8	CABLE HARNESS MOUNTING
HEX SCREW EN 1665 M8X20 8.	10016906	4	2	258	10 14 679 7	FUEL FINE-FILTER ASSEMBLY
HEX SCREW EN 1665 M8X20 8.	10016906	15	2	265	10 14 736 9	INTAKE STACK ASSEMBLY
HEX SCREW EN 1665 M8X20 8.	10016906	3	4	291	10 11 912 8	LOCKING PIECES
HEX SCREW EN 1665 M8X20 8.	10016906	3	1	292	10 12 843 9	LOCKING PIECES
HEX SCREW EN 1665 M8X20 8.	10016906	61	22	296	10 15 028 8	CABLE HARNESS MOUNTING
HEX SCREW EN 1665 M8X25 8.	10009007	2	5	274	10 14 273 4	WATER PUMP WITH FASTENIN
HEX SCREW EN 1665 M8X25 8.	10009007	3	1	278	10 14 274 4	COOLING WATER AIR BLEED
HEX SCREW EN 1665 M8X30 8.	10007782	10	6	223	10 14 201 8	CRANKCASE BREATHER ASS
HEX SCREW EN 1665 M8X30 8.	10007782	10	2	260	10 14 333 9	FUEL LINES
HEX SCREW EN 1665 M8X30 8.	10007782	63	1	296	10 15 028 8	CABLE HARNESS MOUNTING
HEX SCREW EN 1665 M8X35 8.	10113711	2	33	225	10 14 844 4	OIL SUMP WITH FASTENING
HEX SCREW EN 1665 M8X40 8.	10440788	8	2	267	10 14 967 6	CONNECTING LINE ADD-ON
HEX SCREW EN 1665 M8X45 8.	10016907	11	3	223	10 14 201 8	CRANKCASE BREATHER ASS
HEX SCREW EN 1665 M8X50 8.	10005073	4	4	243	10 12 948 0	OIL COOLER, PRE-ASSEMBLE
HEX SCREW EN 1665 M8X65 8.	10100304	4	2	225	10 14 844 4	OIL SUMP WITH FASTENING
HEX SCREW EN 1665 M8X90 8.	10100303	3	5	238	10 13 475 1	CYLINDER HEAD COVER ASS
HEX SCREW EN 1665 M8X90 8.	10100303	3	5	239	10 12 653 5	CYLINDER HEAD COVER ASS
HEX SCREW EN 1665 M8X90 8.	10100303	4	5	241	10 13 469 6	CYLINDER HEAD COVER ASS
HEX SCREW ISO 4014 M10X1	4002195	61	4	177	10 51 948 1	SUCTION PIPE OIL
HEX SCREW ISO 4014 M10X1	4002195	301	2	687	10 51 973 8	SELF-LOADING SYSTEM HYD
HEX SCREW ISO 4014 M12X50	4062009	61	4	180	10 58 017 0	RETURN PIPE
HEX SCREW ISO 4014 M12X65	10013916	4	1	270	90 72 906	INTERMEDIATE GEAR CPL.
HEX SCREW ISO 4014 M12X80	460023503	60	8	8	11 29 618 6	SUPERSTRUCTURE HYDR
HEX SCREW ISO 4014 M16X1	10543975	75	8	507	11 23 820 4	PIVOT PIECE CPL
HEX SCREW ISO 4014 M16X1	10543975	22	4	548	11 28 390 8	BOOM ACCESS
HEX SCREW ISO 4014 M16X1	10543975	22	4	563	11 28 583 8	BOOM ACCESS
HEX SCREW ISO 4014 M16X1	10543975	22	4	570	11 28 626 1	BOOM ACCESS
HEX SCREW ISO 4014 M24X2	10544017	63	2	176	11 24 113 8	MOTOR BEARING CPL
HEX SCREW ISO 4014 M30X1	10544028	10	64	463	11 89 365 0	CRAWLER CARRIER RIGHT CP
HEX SCREW ISO 4014 M30X1	10544028	10	64	474	11 89 365 1	CRAWLER CARRIER LEFT CP
HEX SCREW ISO 4014 M36X23	406144514	20	6	337	99 29 803 14	LASHING BALLAST
HEX SCREW ISO 4017 M10X11	10538824	51	6	176	11 24 113 8	MOTOR BEARING CPL
HEX SCREW ISO 4017 M10X11	10538824	61	2	198	11 24 114 3	EXHAUST GAS SYSTEM
HEX SCREW ISO 4017 M10X12	10539960	13	1	683	99 35 606 14	MOUNTING LINK CPL
HEX SCREW ISO 4017 M10X14	10538826	40	4	642	10 55 372 1	ROOF RAILING RFK
HEX SCREW ISO 4017 M10X16	406527314	64	2	176	11 24 113 8	MOTOR BEARING CPL
HEX SCREW ISO 4017 M10X16	406527314	29	8	579	11 28 648 4	MOUNTING PARTS
HEX SCREW ISO 4017 M10X16	406527314	11	4	580	11 28 610 5	RETAINING DEVICE CPL
HEX SCREW ISO 4017 M10X18	406527414	16	8	45	10 51 961 6	OIL COOLER INSTALLATION
HEX SCREW ISO 4017 M10X18	406527414	3	8	69	10 56 069 4	MODULES INSTALLATION
HEX SCREW ISO 4017 M10X18	406527414	57	16	176	11 24 113 8	MOTOR BEARING CPL
HEX SCREW ISO 4017 M10X20	406518714	17	8	45	10 51 961 6	OIL COOLER INSTALLATION
HEX SCREW ISO 4017 M10X20	406518714	56	4	65	10 58 163 4	CABIN SUSPENSION CPL
HEX SCREW ISO 4017 M10X20	406518714	16	4	67	10 56 067 3	BATTERY INSTALLATION CPL
HEX SCREW ISO 4017 M10X20	406518714	61	2	194	11 92 922 0	SUCTION UNIT AIR
HEX SCREW ISO 4017 M10X20	406518714	62	10	306	11 24 114 6	COVER
HEX SCREW ISO 4017 M10X20	406518714	25	14	398	11 27 970 6	CABIN CPL
HEX SCREW ISO 4017 M10X20	406518714	17	2	505	11 23 820 4	PIVOT PIECE CPL
HEX SCREW ISO 4017 M10X20	406518714	3	3	538	99 14 137 14	DEFLECTION PULLEY CPL
HEX SCREW ISO 4017 M10X25	11932241	7	12	190	10 57 423 9	COOLER MOTOR
HEX SCREW ISO 4017 M10X25	4066093	64	8	180	10 58 017 0	RETURN PIPE
HEX SCREW ISO 4017 M10X25	406511914	60	12	48	10 56 070 1	TANK HYDR CPL
HEX SCREW ISO 4017 M10X25	406511914	60	6	179	10 57 532 2	INTAKE PIPE OIL CPL
HEX SCREW ISO 4017 M10X25	406511914	60	1	181	11 24 113 9	ADD-ON PARTS DIESEL ENGIN

Description	Item	Pos.	Quantity	Sheet	Assembly	Description
HEX SCREW ISO 4017 M10X25	406511914	65	16	183	11 94 151 8	COOLER INSTALLATION WATE
HEX SCREW ISO 4017 M10X25	406511914	63	8	189	11 24 114 1	COOLER INSTALLATION CHA
HEX SCREW ISO 4017 M10X25	406511914	106	2	205	11 92 923 6	ASSEMBLY INSTAL.
HEX SCREW ISO 4017 M10X25	406511914	61	40	306	11 24 114 6	COVER
HEX SCREW ISO 4017 M10X25	406511914	23	35	308	11 24 409 0	PANELLING SUPERSTR. INSTA
HEX SCREW ISO 4017 M10X25	406511914	79	24	330	11 24 483 7	MOUNTING PARTS SUPERST
HEX SCREW ISO 4017 M10X25	406511914	26	2	353	96 96 543 01	WINCH FRAME
HEX SCREW ISO 4017 M10X25	406511914	30	2	505	11 23 820 4	PIVOT PIECE CPL
HEX SCREW ISO 4017 M10X25	406511914	19	12	627	10 51 743 9	ROPE LUG CPL RFK
HEX SCREW ISO 4017 M10X25	406511914	11	3	732	11 26 771 6	MOUNTING PARTS
HEX SCREW ISO 4017 M10X30	4066098	67	48	10	11 29 618 6	SUPERSTRUCTURE HYDR
HEX SCREW ISO 4017 M10X30	4066098	59	12	82	11 24 773 5	HYDR POWER UNIT
HEX SCREW ISO 4017 M10X30	4066098	63	12	180	10 58 017 0	RETURN PIPE
HEX SCREW ISO 4017 M10X30	406511614	18	2	45	10 51 961 6	OIL COOLER INSTALLATION
HEX SCREW ISO 4017 M10X30	406511614	53	2	176	11 24 113 8	MOTOR BEARING CPL
HEX SCREW ISO 4017 M10X30	406511614	66	8	183	11 94 151 8	COOLER INSTALLATION WATE
HEX SCREW ISO 4017 M10X30	406511614	60	14	198	11 24 114 3	EXHAUST GAS SYSTEM
HEX SCREW ISO 4017 M10X30	406511614	63	6	210	11 92 958 8	AIR DUCT CPL
HEX SCREW ISO 4017 M10X30	406511614	60	4	306	11 24 114 6	COVER
HEX SCREW ISO 4017 M10X30	406511614	31	28	308	11 24 409 0	PANELLING SUPERSTR. INSTA
HEX SCREW ISO 4017 M10X30	406511614	80	46	330	11 24 483 7	MOUNTING PARTS SUPERST
HEX SCREW ISO 4017 M10X30	406511614	13	16	336	10 52 656 0	MOUNTING PARTS
HEX SCREW ISO 4017 M10X30	406511614	93	2	507	11 23 820 4	PIVOT PIECE CPL
HEX SCREW ISO 4017 M10X30	406511614	26	4	651	10 52 547 1	ADDNL.FLOODLIGHT SUPERS
HEX SCREW ISO 4017 M10X30	406511614	20	4	653	11 22 870 8	SEARCHLIGHT SUPPORT CPL
HEX SCREW ISO 4017 M10X35	4001246	55	16	8	11 29 618 6	SUPERSTRUCTURE HYDR
HEX SCREW ISO 4017 M10X35	4001246	52	4	82	11 24 773 5	HYDR POWER UNIT
HEX SCREW ISO 4017 M10X35	4001246	6	16	381	10 55 216 1	TUBING HYDR
HEX SCREW ISO 4017 M10X35	4001246	670	4	525	10 51 959 1	TUBING HYDR
HEX SCREW ISO 4017 M10X35	4001246	616	4	687	10 51 973 8	SELF-LOADING SYSTEM HYD
HEX SCREW ISO 4017 M10X35	406509314	67	6	183	11 94 151 8	COOLER INSTALLATION WATE
HEX SCREW ISO 4017 M10X35	406509314	64	2	189	11 24 114 1	COOLER INSTALLATION CHA
HEX SCREW ISO 4017 M10X35	406509314	64	1	210	11 92 958 8	AIR DUCT CPL
HEX SCREW ISO 4017 M10X35	406509314	63	2	306	11 24 114 6	COVER
HEX SCREW ISO 4017 M10X35	406509314	17	12	324	10 54 591 0	MOTOR COWLING
HEX SCREW ISO 4017 M10X35	406509314	81	23	330	11 24 483 7	MOUNTING PARTS SUPERST
HEX SCREW ISO 4017 M10X35	406509314	87	16	507	11 23 820 4	PIVOT PIECE CPL
HEX SCREW ISO 4017 M10X35	406509314	14	2	550	11 28 397 7	SUMP PAN CPL
HEX SCREW ISO 4017 M10X35	406509314	14	2	551	11 28 397 8	SUMP PAN CPL
HEX SCREW ISO 4017 M10X35	406509314	14	4	552	11 28 399 5	SUMP PAN CPL
HEX SCREW ISO 4017 M10X35	406509314	14	4	553	11 28 399 7	SUMP PAN CPL
HEX SCREW ISO 4017 M10X35	406509314	12	4	733	10 52 293 0	SG TACHOGENERATOR RFK
HEX SCREW ISO 4017 M10X40	11932240	8	4	190	10 57 423 9	COOLER MOTOR
HEX SCREW ISO 4017 M10X40	10539971	11	1	589	99 30 800 14	HOIST LIMIT SWITCH INSTAL.
HEX SCREW ISO 4017 M10X40	10539971	14	1	617	10 55 753 7	HOIST LIMITSWITCH LEFT IN
HEX SCREW ISO 4017 M10X40	10539971	14	1	618	10 55 757 6	HOIST LIMITSWITCH RIGHT I
HEX SCREW ISO 4017 M10X40	406527814	65	4	210	11 92 958 8	AIR DUCT CPL
HEX SCREW ISO 4017 M10X40	406527814	45	4	310	11 24 409 0	PANELLING SUPERSTR. INSTA
HEX SCREW ISO 4017 M10X40	406527814	82	8	330	11 24 483 7	MOUNTING PARTS SUPERST
HEX SCREW ISO 4017 M10X40	406527814	4	3	538	99 14 137 14	DEFLECTION PULLEY CPL
HEX SCREW ISO 4017 M10X40	406527814	20	4	647	10 52 547 1	ADDNL.FLOODLIGHT SUPERS
HEX SCREW ISO 4017 M10X40	406527814	15	4	667	10 55 601 0	FALL PROTECTION RFK
HEX SCREW ISO 4017 M10X45	406512014	19	2	45	10 51 961 6	OIL COOLER INSTALLATION
HEX SCREW ISO 4017 M10X45	406512014	54	31	310	11 24 409 0	PANELLING SUPERSTR. INSTA
HEX SCREW ISO 4017 M10X45	406512014	19	8	324	10 54 591 0	MOTOR COWLING
HEX SCREW ISO 4017 M10X45	406512014	83	1	330	11 24 483 7	MOUNTING PARTS SUPERST
HEX SCREW ISO 4017 M10X45	406512014	14	3	671	11 30 694 4	RAIL CPL
HEX SCREW ISO 4017 M10X50	406518614	24	5	308	11 24 409 0	PANELLING SUPERSTR. INSTA
HEX SCREW ISO 4017 M10X50	406518614	21	2	324	10 54 591 0	MOTOR COWLING
HEX SCREW ISO 4017 M10X50	406518614	47	8	662	99 10 116 14	ROPE GUIDE

Description	Item	Pos.	Quantity	Sheet	Assembly	Description
HEX SCREW ISO 4017 M10X55	10538822	50	8	662	99 10 116 14	ROPE GUIDE
HEX SCREW ISO 4017 M10X55	10538822	14	2	732	11 26 771 6	MOUNTING PARTS
HEX SCREW ISO 4017 M10X60	10539959	14	8	324	10 54 591 0	MOTOR COWLING
HEX SCREW ISO 4017 M10X60	10539959	41	34	642	10 55 372 1	ROOF RAILING RFK
HEX SCREW ISO 4017 M10X65	10538823	62	4	194	11 92 922 0	SUCTION UNIT AIR
HEX SCREW ISO 4017 M10X65	10538823	9	4	583	11 28 357 6	MOUNTING PARTS
HEX SCREW ISO 4017 M10X70	406511214	108	6	205	11 92 923 6	ASSEMBLY INSTAL.
HEX SCREW ISO 4017 M10X70	406511214	25	4	651	10 52 547 1	ADDNL.FLOODLIGHT SUPERS
HEX SCREW ISO 4017 M10X75	10539293	17	6	67	10 56 067 3	BATTERY INSTALLATION CPL
HEX SCREW ISO 4017 M10X75	10539293	100	1	330	11 24 483 7	MOUNTING PARTS SUPERST
HEX SCREW ISO 4017 M10X75	10539293	8	2	685	11 23 619 7	SELF-LOADING SYSTEM RFK
HEX SCREW ISO 4017 M10X80	406527914	3	1	56	10 55 268 1	DRIVER INSTALLATION
HEX SCREW ISO 4017 M10X80	406527914	68	4	183	11 94 151 8	COOLER INSTALLATION WATE
HEX SCREW ISO 4017 M10X80	406527914	14	2	543	10 35 063 3	FASTENER
HEX SCREW ISO 4017 M10X80	406527914	38	16	642	10 55 372 1	ROOF RAILING RFK
HEX SCREW ISO 4017 M10X85	10539294	14	2	667	10 55 601 0	FALL PROTECTION RFK
HEX SCREW ISO 4017 M10X90	406512114	14	2	542	99 29 588 14	SUPPORT
HEX SCREW ISO 4017 M12X13	10538834	24	8	476	11 31 390 8	CENTRE PART CPL
HEX SCREW ISO 4017 M12X16	406528014	5	2	435	10 53 756 0	LAMP HOLDER CPL
HEX SCREW ISO 4017 M12X20	406517714	21	2	65	10 58 163 4	CABIN SUSPENSION CPL
HEX SCREW ISO 4017 M12X20	406517714	65	2	189	11 24 114 1	COOLER INSTALLATION CHA
HEX SCREW ISO 4017 M12X20	406517714	23	12	337	99 29 803 14	LASHING BALLAST
HEX SCREW ISO 4017 M12X20	406517714	41	4	613	11 28 744 5	MOUNTING PARTS
HEX SCREW ISO 4017 M12X25	4980977	46	4	139	10 12 224 5	REPAIR KIT LEVER
HEX SCREW ISO 4017 M12X25	406517914	56	4	176	11 24 113 8	MOTOR BEARING CPL
HEX SCREW ISO 4017 M12X25	406517914	24	7	463	11 89 365 0	CRAWLER CARRIER RIGHT CP
HEX SCREW ISO 4017 M12X25	406517914	24	7	474	11 89 365 1	CRAWLER CARRIER LEFT CP
HEX SCREW ISO 4017 M12X25	406517914	14	8	535	11 24 444 4	A-FRAME 1 CPL
HEX SCREW ISO 4017 M12X25	406517914	28	8	588	99 23 398 14	ROLLER SET
HEX SCREW ISO 4017 M12X30	4066124	56	12	82	11 24 773 5	HYDR POWER UNIT
HEX SCREW ISO 4017 M12X30	406517314	62	12	48	10 56 070 1	TANK HYDR CPL
HEX SCREW ISO 4017 M12X30	406517314	73	3	330	11 24 483 7	MOUNTING PARTS SUPERST
HEX SCREW ISO 4017 M12X30	406517314	51	4	353	96 96 543 01	WINCH FRAME
HEX SCREW ISO 4017 M12X30	406517314	2	8	366	99 29 258 14	LUG SHEAVE SET
HEX SCREW ISO 4017 M12X30	406517314	15	2	438	99 18 041 14	LASHING SUPERSTRUCTURE
HEX SCREW ISO 4017 M12X30	406517314	18	152	463	11 89 365 0	CRAWLER CARRIER RIGHT CP
HEX SCREW ISO 4017 M12X30	406517314	18	152	474	11 89 365 1	CRAWLER CARRIER LEFT CP
HEX SCREW ISO 4017 M12X30	406517314	22	16	476	11 31 390 8	CENTRE PART CPL
HEX SCREW ISO 4017 M12X30	406517314	16	4	493	11 22 050 0	WINCHES INSTALLATION
HEX SCREW ISO 4017 M12X30	406517314	16	4	499	11 22 050 1	WINCHES INSTALLATION
HEX SCREW ISO 4017 M12X30	406517314	16	4	505	11 23 820 4	PIVOT PIECE CPL
HEX SCREW ISO 4017 M12X30	406517314	20	2	659	11 27 109 7	LIGHTNING ROD RFK
HEX SCREW ISO 4017 M12X35	4066122	65	8	10	11 29 618 6	SUPERSTRUCTURE HYDR
HEX SCREW ISO 4017 M12X35	4066122	65	6	180	10 58 017 0	RETURN PIPE
HEX SCREW ISO 4017 M12X35	406518414	109	1	205	11 92 923 6	ASSEMBLY INSTAL.
HEX SCREW ISO 4017 M12X35	406518414	18	4	505	11 23 820 4	PIVOT PIECE CPL
HEX SCREW ISO 4017 M12X35	406518414	11	2	617	10 55 753 7	HOIST LIMITSWITCH LEFT IN
HEX SCREW ISO 4017 M12X35	406518414	11	2	618	10 55 757 6	HOIST LIMITSWITCH RIGHT I
HEX SCREW ISO 4017 M12X40	4600366	61	36	10	11 29 618 6	SUPERSTRUCTURE HYDR
HEX SCREW ISO 4017 M12X40	4600366	640	8	341	10 51 969 8	NEEDLE LUFFING WINCH HYD
HEX SCREW ISO 4017 M12X40	4600366	7	8	381	10 55 216 1	TUBING HYDR
HEX SCREW ISO 4017 M12X40	406511414	67	8	176	11 24 113 8	MOTOR BEARING CPL
HEX SCREW ISO 4017 M12X40	406511414	60	6	177	10 51 948 1	SUCTION PIPE OIL
HEX SCREW ISO 4017 M12X40	406511414	22	3	357	10 51 968 6	LUG SUPERSTRUCTURE CPL
HEX SCREW ISO 4017 M12X40	406511414	49	2	505	11 23 820 4	PIVOT PIECE CPL
HEX SCREW ISO 4017 M12X45	4600706	17	4	339	10 51 969 7	NEEDLE LUFFING WINCH
HEX SCREW ISO 4017 M12X45	406519214	62	4	198	11 24 114 3	EXHAUST GAS SYSTEM
HEX SCREW ISO 4017 M12X50	406512614	66	1	189	11 24 114 1	COOLER INSTALLATION CHA
HEX SCREW ISO 4017 M12X50	406512614	16	4	555	11 94 087 8	ASSEMBLY UNIT
HEX SCREW ISO 4017 M12X55	4902260	60	10	180	10 58 017 0	RETURN PIPE

Description	Item	Pos.	Quantity	Sheet	Assembly	Description
HEX SCREW ISO 4017 M12X55	406527614	35	4	65	10 58 163 4	CABIN SUSPENSION CPL
HEX SCREW ISO 4017 M12X55	406527614	2	4	606	11 30 126 6	MOUNTING PARTS
HEX SCREW ISO 4017 M12X70	10554335	54	8	8	11 29 618 6	SUPERSTRUCTURE HYDR
HEX SCREW ISO 4017 M12X70	406527714	13	2	659	11 27 109 7	LIGHTNING ROD RFK
HEX SCREW ISO 4017 M12X80	10538830	74	8	330	11 24 483 7	MOUNTING PARTS SUPERST
HEX SCREW ISO 4017 M14X1	10539311	6	6	358	10 51 968 7	MAIN LUG HYDR
HEX SCREW ISO 4017 M14X45	10539300	62	24	10	11 29 618 6	SUPERSTRUCTURE HYDR
HEX SCREW ISO 4017 M14X45	10539300	615	2	358	10 51 968 7	MAIN LUG HYDR
HEX SCREW ISO 4017 M14X45	10539300	19	16	442	11 89 300 5	TUBING HYDR
HEX SCREW ISO 4017 M14X45	10539300	750	8	482	11 26 260 6	WINCH 1 HYDR
HEX SCREW ISO 4017 M14X45	10539300	750	16	497	11 26 261 1	WINCH 2 HYDR
HEX SCREW ISO 4017 M14X70	10539305	17	8	442	11 89 300 5	TUBING HYDR
HEX SCREW ISO 4017 M14X90	10539307	10	4	482	11 26 260 6	WINCH 1 HYDR
HEX SCREW ISO 4017 M14X90	10539307	10	4	497	11 26 261 1	WINCH 2 HYDR
HEX SCREW ISO 4017 M16X1	10543914	62	2	176	11 24 113 8	MOTOR BEARING CPL
HEX SCREW ISO 4017 M16X20	10539314	40	2	613	11 28 744 5	MOUNTING PARTS
HEX SCREW ISO 4017 M16X25	10539315	62	4	181	11 24 113 9	ADD-ON PARTS DIESEL ENGIN
HEX SCREW ISO 4017 M16X25	10539315	29	2	357	10 51 968 6	LUG SUPERSTRUCTURE CPL
HEX SCREW ISO 4017 M16X25	10539315	35	4	463	11 89 365 0	CRAWLER CARRIER RIGHT CP
HEX SCREW ISO 4017 M16X25	10539315	35	4	474	11 89 365 1	CRAWLER CARRIER LEFT CP
HEX SCREW ISO 4017 M16X30	10539316	4	4	56	10 55 268 1	DRIVER INSTALLATION
HEX SCREW ISO 4017 M16X30	10539316	30	8	700	11 89 568 6	SELF-LOADING SYSTEM RFK
HEX SCREW ISO 4017 M16X35	10539317	60	6	52	10 56 073 2	FUEL TANK ASSY.
HEX SCREW ISO 4017 M16X35	10539317	59	8	176	11 24 113 8	MOTOR BEARING CPL
HEX SCREW ISO 4017 M16X35	10539317	103	2	330	11 24 483 7	MOUNTING PARTS SUPERST
HEX SCREW ISO 4017 M16X35	10539317	52	54	463	11 89 365 0	CRAWLER CARRIER RIGHT CP
HEX SCREW ISO 4017 M16X35	10539317	52	54	474	11 89 365 1	CRAWLER CARRIER LEFT CP
HEX SCREW ISO 4017 M16X35	10539317	31	2	588	99 23 398 14	ROLLER SET
HEX SCREW ISO 4017 M16X35	10539317	39	4	613	11 28 744 5	MOUNTING PARTS
HEX SCREW ISO 4017 M16X40	10539318	58	8	176	11 24 113 8	MOTOR BEARING CPL
HEX SCREW ISO 4017 M16X40	10539318	7	8	353	96 96 543 01	WINCH FRAME
HEX SCREW ISO 4017 M16X40	10539318	17	28	476	11 31 390 8	CENTRE PART CPL
HEX SCREW ISO 4017 M16X40	10539318	38	2	588	99 23 398 14	ROLLER SET
HEX SCREW ISO 4017 M16X40	10539318	38	16	613	11 28 744 5	MOUNTING PARTS
HEX SCREW ISO 4017 M16X45	10543902	60	12	176	11 24 113 8	MOTOR BEARING CPL
HEX SCREW ISO 4017 M16X45	10543902	31	10	346	93 88 500 01	ROPE DRUM
HEX SCREW ISO 4017 M16X45	10543902	11	4	353	96 96 543 01	WINCH FRAME
HEX SCREW ISO 4017 M16X45	10543902	15	4	378	10 51 968 2	SG SUPERSTRUCTURE
HEX SCREW ISO 4017 M16X45	10543902	39	4	588	99 23 398 14	ROLLER SET
HEX SCREW ISO 4017 M16X50	10543903	62	3	46	10 56 070 0	TANK INSTALLATION HYDR
HEX SCREW ISO 4017 M16X50	10543903	3	28	353	96 96 543 01	WINCH FRAME
HEX SCREW ISO 4017 M16X50	10543903	13	4	357	10 51 968 6	LUG SUPERSTRUCTURE CPL
HEX SCREW ISO 4017 M16X55	10543904	63	3	46	10 56 070 0	TANK INSTALLATION HYDR
HEX SCREW ISO 4017 M16X60	10543905	61	8	176	11 24 113 8	MOTOR BEARING CPL
HEX SCREW ISO 4017 M16X60	10543905	28	12	357	10 51 968 6	LUG SUPERSTRUCTURE CPL
HEX SCREW ISO 4017 M16X70	10543907	57	4	82	11 24 773 5	HYDR POWER UNIT
HEX SCREW ISO 4017 M16X90	10543910	27	8	463	11 89 365 0	CRAWLER CARRIER RIGHT CP
HEX SCREW ISO 4017 M16X90	10543910	27	8	474	11 89 365 1	CRAWLER CARRIER LEFT CP
HEX SCREW ISO 4017 M20X1	10543932	4	4	463	11 89 365 0	CRAWLER CARRIER RIGHT CP
HEX SCREW ISO 4017 M20X1	10543932	4	4	474	11 89 365 1	CRAWLER CARRIER LEFT CP
HEX SCREW ISO 4017 M20X25	10543917	4	1	494	10 57 462 9	PIN CPL
HEX SCREW ISO 4017 M20X30	10543918	48	2	662	99 10 116 14	ROPE GUIDE
HEX SCREW ISO 4017 M20X35	10543919	63	2	194	11 92 922 0	SUCTION UNIT AIR
HEX SCREW ISO 4017 M20X35	10543919	48	2	535	11 24 444 4	A-FRAME 1 CPL
HEX SCREW ISO 4017 M20X35	10543919	51	2	662	99 10 116 14	ROPE GUIDE
HEX SCREW ISO 4017 M20X40	10543920	14	22	357	10 51 968 6	LUG SUPERSTRUCTURE CPL
HEX SCREW ISO 4017 M20X40	10543920	44	4	463	11 89 365 0	CRAWLER CARRIER RIGHT CP
HEX SCREW ISO 4017 M20X40	10543920	87	2	467	96 93 178 01	TRACTION DRIVE
HEX SCREW ISO 4017 M20X40	10543920	41	4	474	11 89 365 1	CRAWLER CARRIER LEFT CP
HEX SCREW ISO 4017 M20X45	10543921	18	4	476	11 31 390 8	CENTRE PART CPL

Description	Item	Pos.	Quantity	Sheet	Assembly	Description
HEX SCREW ISO 4017 M20X45	10543921	49	2	535	11 24 444 4	A-FRAME 1 CPL
HEX SCREW ISO 4017 M20X50	10543922	58	4	82	11 24 773 5	HYDR POWER UNIT
HEX SCREW ISO 4017 M20X50	10543922	25	4	627	10 51 743 9	ROPE LUG CPL RFK
HEX SCREW ISO 4017 M20X60	10543924	15	4	493	11 22 050 0	WINCHES INSTALLATION
HEX SCREW ISO 4017 M20X60	10543924	15	4	499	11 22 050 1	WINCHES INSTALLATION
HEX SCREW ISO 4017 M20X65	10543925	68	12	467	96 93 178 01	TRACTION DRIVE
HEX SCREW ISO 4017 M20X75	10545854	22	2	463	11 89 365 0	CRAWLER CARRIER RIGHT CP
HEX SCREW ISO 4017 M20X75	10545854	22	2	474	11 89 365 1	CRAWLER CARRIER LEFT CP
HEX SCREW ISO 4017 M20X75	10545854	47	4	535	11 24 444 4	A-FRAME 1 CPL
HEX SCREW ISO 4017 M24X80	10543944	25	12	463	11 89 365 0	CRAWLER CARRIER RIGHT CP
HEX SCREW ISO 4017 M24X80	10543944	25	12	474	11 89 365 1	CRAWLER CARRIER LEFT CP
HEX SCREW ISO 4017 M5X12	11250998	468	8	86	11 24 682 0	DISTRIBUTOR GEARBOX
HEX SCREW ISO 4017 M5X12	485553914	16	3	733	10 52 293 0	SG TACHOGENERATOR RFK
HEX SCREW ISO 4017 M5X20	406501814	22	2	67	10 56 067 3	BATTERY INSTALLATION CPL
HEX SCREW ISO 4017 M5X20	406501814	85	8	507	11 23 820 4	PIVOT PIECE CPL
HEX SCREW ISO 4017 M5X55	10567564	33	3	700	11 89 568 6	SELF-LOADING SYSTEM RFK
HEX SCREW ISO 4017 M6X12	485557714	36	3	346	93 88 500 01	ROPE DRUM
HEX SCREW ISO 4017 M6X12	485557714	29	8	398	11 27 970 6	CABIN CPL
HEX SCREW ISO 4017 M6X12	485557714	5	2	623	11 22 322 6	MODEM CPL RFK
HEX SCREW ISO 4017 M6X16	406501714	100	2	204	11 92 923 6	ASSEMBLY INSTAL.
HEX SCREW ISO 4017 M6X16	406501714	22	5	398	11 27 970 6	CABIN CPL
HEX SCREW ISO 4017 M6X16	406501714	4	8	435	10 53 756 0	LAMP HOLDER CPL
HEX SCREW ISO 4017 M6X16	406501714	18	3	718	10 58 064 7	VIDEO MONITORING SYSTEM
HEX SCREW ISO 4017 M6X20	406532614	68	1	330	11 24 483 7	MOUNTING PARTS SUPERST
HEX SCREW ISO 4017 M6X20	406532614	13	3	493	11 22 050 0	WINCHES INSTALLATION
HEX SCREW ISO 4017 M6X20	406532614	13	3	499	11 22 050 1	WINCHES INSTALLATION
HEX SCREW ISO 4017 M6X20	406532614	60	24	505	11 23 820 4	PIVOT PIECE CPL
HEX SCREW ISO 4017 M6X20	406532614	13	18	519	10 58 193 7	GRATING CPL
HEX SCREW ISO 4017 M6X20	406532614	30	8	535	11 24 444 4	A-FRAME 1 CPL
HEX SCREW ISO 4017 M6X20	406532614	24	2	627	10 51 743 9	ROPE LUG CPL RFK
HEX SCREW ISO 4017 M6X20	406532614	22	2	669	10 55 280 7	GRATING CPL
HEX SCREW ISO 4017 M6X20	406532614	20	2	676	10 55 514 8	FALL PROTECTION RFK
HEX SCREW ISO 4017 M6X20	406532614	17	2	678	11 26 901 8	HOLDER CPL
HEX SCREW ISO 4017 M6X20	406532614	21	3	718	10 58 064 7	VIDEO MONITORING SYSTEM
HEX SCREW ISO 4017 M6X20	406532614	4	4	733	10 52 293 0	SG TACHOGENERATOR RFK
HEX SCREW ISO 4017 M6X25	406518514	63	3	198	11 24 114 3	EXHAUST GAS SYSTEM
HEX SCREW ISO 4017 M6X25	406518514	101	10	204	11 92 923 6	ASSEMBLY INSTAL.
HEX SCREW ISO 4017 M6X30	10538797	2	4	623	11 22 322 6	MODEM CPL RFK
HEX SCREW ISO 4017 M6X35	406551114	69	2	330	11 24 483 7	MOUNTING PARTS SUPERST
HEX SCREW ISO 4017 M6X45	10538799	102	4	204	11 92 923 6	ASSEMBLY INSTAL.
HEX SCREW ISO 4017 M6X45	10538799	16	2	518	11 23 653 3	SUPPORT CPL
HEX SCREW ISO 4017 M6X45	10538799	12	2	625	11 21 552 4	ANGLE INDICATION RFK
HEX SCREW ISO 4017 M6X50	10526837	55	1	398	11 27 970 6	CABIN CPL
HEX SCREW ISO 4017 M6X50	10526837	13	16	476	11 31 390 8	CENTRE PART CPL
HEX SCREW ISO 4017 M6X50	10526837	24	4	649	10 52 547 1	ADDNL.FLOODLIGHT SUPERS
HEX SCREW ISO 4017 M6X55	10538800	60	2	210	11 92 958 8	AIR DUCT CPL
HEX SCREW ISO 4017 M6X60	10538801	31	8	476	11 31 390 8	CENTRE PART CPL
HEX SCREW ISO 4017 M6X8 A4	10538796	12	2	677	10 55 722 4	FALL PROTECTION RFK
HEX SCREW ISO 4017 M8X10	10538806	33	2	662	99 10 116 14	ROPE GUIDE
HEX SCREW ISO 4017 M8X100	10538812	58	4	505	11 23 820 4	PIVOT PIECE CPL
HEX SCREW ISO 4017 M8X12	406501614	10	4	580	11 28 610 5	RETAINING DEVICE CPL
HEX SCREW ISO 4017 M8X16	406501514	11	2	63	92 65 477 14	FIRE EXTINGUISHER RFK
HEX SCREW ISO 4017 M8X16	406501514	66	6	65	10 58 163 4	CABIN SUSPENSION CPL
HEX SCREW ISO 4017 M8X16	406501514	59	6	183	11 94 151 8	COOLER INSTALLATION WATE
HEX SCREW ISO 4017 M8X16	406501514	18	6	378	10 51 968 2	SG SUPERSTRUCTURE
HEX SCREW ISO 4017 M8X16	406501514	39	14	398	11 27 970 6	CABIN CPL
HEX SCREW ISO 4017 M8X16	406501514	3	2	436	11 30 962 5	HOLDER CPL
HEX SCREW ISO 4017 M8X16	406501514	32	4	700	11 89 568 6	SELF-LOADING SYSTEM RFK
HEX SCREW ISO 4017 M8X16	406501514	6	1	719	10 57 848 6	MONITOR CABIN ADD-ON
HEX SCREW ISO 4017 M8X20	406518814	54	4	176	11 24 113 8	MOTOR BEARING CPL

Description	Item	Pos.	Quantity	Sheet	Assembly	Description
HEX SCREW ISO 4017 M8X20	406518814	103	4	205	11 92 923 6	ASSEMBLY INSTAL.
HEX SCREW ISO 4017 M8X20	406518814	94	8	330	11 24 483 7	MOUNTING PARTS SUPERST
HEX SCREW ISO 4017 M8X20	406518814	23	4	532	11 27 536 5	TILT-BACK SUPPORTS INSTAL
HEX SCREW ISO 4017 M8X20	406518814	20	6	718	10 58 064 7	VIDEO MONITORING SYSTEM
HEX SCREW ISO 4017 M8X20	406518814	14	3	733	10 52 293 0	SG TACHOGENERATOR RFK
HEX SCREW ISO 4017 M8X25	406501414	65	8	176	11 24 113 8	MOTOR BEARING CPL
HEX SCREW ISO 4017 M8X25	406501414	60	4	189	11 24 114 1	COOLER INSTALLATION CHA
HEX SCREW ISO 4017 M8X25	406501414	60	2	192	11 28 574 7	WP
HEX SCREW ISO 4017 M8X25	406501414	60	4	194	11 92 922 0	SUCTION UNIT AIR
HEX SCREW ISO 4017 M8X25	406501414	61	4	210	11 92 958 8	AIR DUCT CPL
HEX SCREW ISO 4017 M8X25	406501414	35	11	308	11 24 409 0	PANELLING SUPERSTR. INSTA
HEX SCREW ISO 4017 M8X25	406501414	95	2	330	11 24 483 7	MOUNTING PARTS SUPERST
HEX SCREW ISO 4017 M8X25	406501414	15	2	339	10 51 969 7	NEEDLE LUFFING WINCH
HEX SCREW ISO 4017 M8X25	406501414	26	19	398	11 27 970 6	CABIN CPL
HEX SCREW ISO 4017 M8X25	406501414	11	6	476	11 31 390 8	CENTRE PART CPL
HEX SCREW ISO 4017 M8X25	406501414	69	9	507	11 23 820 4	PIVOT PIECE CPL
HEX SCREW ISO 4017 M8X25	406501414	25	1	548	11 28 390 8	BOOM ACCESS
HEX SCREW ISO 4017 M8X25	406501414	25	1	563	11 28 583 8	BOOM ACCESS
HEX SCREW ISO 4017 M8X25	406501414	25	1	570	11 28 626 1	BOOM ACCESS
HEX SCREW ISO 4017 M8X25	406501414	22	4	627	10 51 743 9	ROPE LUG CPL RFK
HEX SCREW ISO 4017 M8X25	406501414	45	40	642	10 55 372 1	ROOF RAILING RFK
HEX SCREW ISO 4017 M8X25	406501414	33	2	718	10 58 064 7	VIDEO MONITORING SYSTEM
HEX SCREW ISO 4017 M8X30 1	4062002	64	16	10	11 29 618 6	SUPERSTRUCTURE HYDR
HEX SCREW ISO 4017 M8X30	406501314	12	2	59	11 26 557 2	MOUNTING PARTS
HEX SCREW ISO 4017 M8X30	406501314	28	2	65	10 58 163 4	CABIN SUSPENSION CPL
HEX SCREW ISO 4017 M8X30	406501314	66	2	176	11 24 113 8	MOTOR BEARING CPL
HEX SCREW ISO 4017 M8X30	406501314	63	8	183	11 94 151 8	COOLER INSTALLATION WATE
HEX SCREW ISO 4017 M8X30	406501314	61	6	189	11 24 114 1	COOLER INSTALLATION CHA
HEX SCREW ISO 4017 M8X30	406501314	104	4	205	11 92 923 6	ASSEMBLY INSTAL.
HEX SCREW ISO 4017 M8X30	406501314	96	10	330	11 24 483 7	MOUNTING PARTS SUPERST
HEX SCREW ISO 4017 M8X30	406501314	20	4	479	99 26 718 14	PEDESTAL
HEX SCREW ISO 4017 M8X30	406501314	24	10	505	11 23 820 4	PIVOT PIECE CPL
HEX SCREW ISO 4017 M8X30	406501314	11	2	616	11 29 451 7	ROPE GUARD CPL
HEX SCREW ISO 4017 M8X30	406501314	21	6	627	10 51 743 9	ROPE LUG CPL RFK
HEX SCREW ISO 4017 M8X30	406501314	32	2	662	99 10 116 14	ROPE GUIDE
HEX SCREW ISO 4017 M8X30	406501314	18	2	667	10 55 601 0	FALL PROTECTION RFK
HEX SCREW ISO 4017 M8X35	406517614	62	4	189	11 24 114 1	COOLER INSTALLATION CHA
HEX SCREW ISO 4017 M8X35	406517614	97	2	330	11 24 483 7	MOUNTING PARTS SUPERST
HEX SCREW ISO 4017 M8X35	406517614	99	8	507	11 23 820 4	PIVOT PIECE CPL
HEX SCREW ISO 4017 M8X35	406517614	14	4	669	10 55 280 7	GRATING CPL
HEX SCREW ISO 4017 M8X35	406517614	13	2	737	10 52 155 4	REFUELLING SYSTEM RFK
HEX SCREW ISO 4017 M8X40	11932242	6	1	190	10 57 423 9	COOLER MOTOR
HEX SCREW ISO 4017 M8X40	406532914	98	1	330	11 24 483 7	MOUNTING PARTS SUPERST
HEX SCREW ISO 4017 M8X40	406532914	18	2	519	10 58 193 7	GRATING CPL
HEX SCREW ISO 4017 M8X40	406532914	27	4	579	11 28 648 4	MOUNTING PARTS
HEX SCREW ISO 4017 M8X40	406532914	61	1	673	11 30 567 0	TRANSPORT LASHING
HEX SCREW ISO 4017 M8X45	406508014	84	3	507	11 23 820 4	PIVOT PIECE CPL
HEX SCREW ISO 4017 M8X45	406508014	46	2	642	10 55 372 1	ROOF RAILING RFK
HEX SCREW ISO 4017 M8X50	10538807	36	5	308	11 24 409 0	PANELLING SUPERSTR. INSTA
HEX SCREW ISO 4017 M8X50	10538807	13	16	479	99 26 718 14	PEDESTAL
HEX SCREW ISO 4017 M8X50	10538807	15	17	505	11 23 820 4	PIVOT PIECE CPL
HEX SCREW ISO 4017 M8X50	10538807	24	3	548	11 28 390 8	BOOM ACCESS
HEX SCREW ISO 4017 M8X50	10538807	24	3	563	11 28 583 8	BOOM ACCESS
HEX SCREW ISO 4017 M8X50	10538807	24	3	570	11 28 626 1	BOOM ACCESS
HEX SCREW ISO 4017 M8X50	10538807	11	12	644	11 24 147 8	UC PLATFORM
HEX SCREW ISO 4017 M8X50	10538807	11	16	645	11 24 575 5	PEDESTAL
HEX SCREW ISO 4017 M8X55	10331506	39	6	308	11 24 409 0	PANELLING SUPERSTR. INSTA
HEX SCREW ISO 4017 M8X55	10331506	61	19	507	11 23 820 4	PIVOT PIECE CPL
HEX SCREW ISO 4017 M8X55	10331506	13	8	520	99 34 198 14	LIEBHERR SIGN
HEX SCREW ISO 4017 M8X65	10331507	11	6	324	10 54 591 0	MOTOR COWLING

Description	Item	Pos.	Quantity	Sheet	Assembly	Description
HEX SCREW ISO 4017 M8X65	10331507	10	2	372	99 29 386 14	BRACKET CPL
HEX SCREW ISO 4017 M8X65	10331507	10	2	373	99 29 434 14	BRACKET CPL
HEX SCREW ISO 4017 M8X65	10331507	13	2	549	11 28 391 3	FIXING CLAMP
HEX SCREW ISO 4017 M8X65	10331507	17	2	589	99 30 800 14	HOIST LIMIT SWITCH INSTAL.
HEX SCREW ISO 4017 M8X65	10331507	13	2	617	10 55 753 7	HOIST LIMITSWITCH LEFT IN
HEX SCREW ISO 4017 M8X65	10331507	13	2	618	10 55 757 6	HOIST LIMITSWITCH RIGHT I
HEX SCREW ISO 4017 M8X65	10331507	18	4	678	11 26 901 8	HOLDER CPL
HEX SCREW ISO 4017 M8X75	10541592	22	4	685	11 23 619 7	SELF-LOADING SYSTEM RFK
HEX SCREW ISO 4017 M8X80	10538809	50	2	176	11 24 113 8	MOTOR BEARING CPL
HEX SCREW ISO 4017 M8X80	10538809	64	2	183	11 94 151 8	COOLER INSTALLATION WATE
HEX SCREW ISO 4017 M8X80	10538809	60	2	199	11 24 114 4	FUEL SYSTEM
HEX SCREW ISO 4017 M8X80	10538809	13	2	547	11 28 725 5	ROPE GUARD CPL
HEX SCREW ISO 4017 M8X80	10538809	13	2	615	11 28 908 0	ROPE GUARD CPL
HEX SCREW ISO 4017 M8X85	10541593	105	6	205	11 92 923 6	ASSEMBLY INSTAL.
HEX SCREW ISO 4017 M8X90	10538810	37	2	505	11 23 820 4	PIVOT PIECE CPL
HEX SCREW ISO 8676 M12X1.5	407003014	66	3	210	11 92 958 8	AIR DUCT CPL
HEX SCREW ISO 8765 M24X2	406154014	30	45	463	11 89 365 0	CRAWLER CARRIER RIGHT CP
HEX SCREW ISO 8765 M24X2	406154014	30	45	474	11 89 365 1	CRAWLER CARRIER LEFT CP
HEXALOBULAR HEAD SCREW	10138772	5	24	280	10 14 144 4	EXHAUST PIPE ASSEMBLY
HEXALOBULAR HEAD SCREW	10118912	4	10	294	10 11 892 9	FLYWHEEL ASSEMBLY
HEXALOBULAR HEAD SCREW	10125439	3	6	235	10 13 176 8	CYL HEAD ADD-ON
HEXALOBULAR HEAD SCREW	10127323	9	13	284	10 14 511 2	EXHAUST NOZZLE ATTACHM
HEXALOBULAR HEAD SCREW	10118695	3	4	282	10 14 737 0	HEAT PROTECTION W.FASTEN
HEXALOBULAR HEAD SCREW	10125702	9	2	267	10 14 967 6	CONNECTING LINE ADD-ON
HIGH PRESS.CONNECTOR W.	10153151	191	6	214	12 42 545 4	DIESEL ENGINE
HIGH PRESSURE CONNECTO	10131081	1	1	255	10 13 508 0	HIGH PRESSURE CONNECTO
HIGH PRESSURE CONNECTO	10135080	1	1	254	10 14 114 0	RK HIGH PRESSURE CONNEC
HIGH PRESSURE PUMP W.FA	10150857	171	1	214	12 42 545 4	DIESEL ENGINE
HIGHT FIXATION DEVICE	10556014	3	1	668	10 55 601 1	FALL PROTECTION CPL
HINGE	385204714	5	2	316	10 57 883 5	DOOR
HINGE	385204714	5	2	318	10 57 897 6	DOOR
HINGE	385204714	8	2	320	10 57 940 0	DOOR
HINGE	385204714	8	2	321	10 56 623 7	DOOR
HINGE	385204714	5	2	322	10 56 580 8	DOOR
HINGE	954560603	15	2	519	10 58 193 7	GRATING CPL
HINGE CPL	10554231	12	2	669	10 55 280 7	GRATING CPL
HIP BELT	7371746	80	1	430	10 22 506 8	OPERATOR SEAT
HOIST LIMIT SWITCH INSTAL.	993080014	15	2	588	99 23 398 14	ROLLER SET
HOIST LIMITSWITCH LEFT IN	10557537	16	1	607	99 34 394 14	TIP BOOM CPL
HOIST LIMITSWITCH RIGHT I	10557576	17	1	607	99 34 394 14	TIP BOOM CPL
HOISTING STRAP CPL	11890636	16	1	685	11 23 619 7	SELF-LOADING SYSTEM RFK
HOLDER	10041876	17	1	271	10 14 286 0	AIR COND. COMPRESSOR A
HOLDER	10138079	3	1	258	10 14 679 7	FUEL FINE-FILTER ASSEMBLY
HOLDER	10144123	11	1	296	10 15 028 8	CABLE HARNESS MOUNTING
HOLDER	10145373	2	1	285	10 14 622 4	REGULATION BOOST PRESS
HOLDER	10146405	14	1	296	10 15 028 8	CABLE HARNESS MOUNTING
HOLDER	10146836	3	1	285	10 14 622 4	REGULATION BOOST PRESS
HOLDER	10223693	33	2	308	11 24 409 0	PANELLING SUPERSTR. INSTA
HOLDER	10224272	61	2	34	11 24 519 0	SUPERSTRUCTURE EL
HOLDER	10224272	49	3	399	11 27 973 6	CABIN EL
HOLDER	10527391	1	1	719	10 57 848 6	MONITOR CABIN ADD-ON
HOLDER	10556597	12	1	183	11 94 151 8	COOLER INSTALLATION WATE
HOLDER	10575980	30	3	328	11 24 483 7	MOUNTING PARTS SUPERST
HOLDER	10579104	10	1	177	10 51 948 1	SUCTION PIPE OIL
HOLDER	10584123	47	1	310	11 24 409 0	PANELLING SUPERSTR. INSTA
HOLDER	10584124	48	1	310	11 24 409 0	PANELLING SUPERSTR. INSTA
HOLDER	10591343	54	1	398	11 27 970 6	CABIN CPL
HOLDER	11218236	79	1	507	11 23 820 4	PIVOT PIECE CPL
HOLDER	11242757	48	1	204	11 92 923 6	ASSEMBLY INSTAL.
HOLDER	11250382	3	1	183	11 94 151 8	COOLER INSTALLATION WATE

Description	Item	Pos.	Quantity	Sheet	Assembly	Description
HOLDER	11251056	8	1	189	11 24 114 1	COOLER INSTALLATION CHA
HOLDER	11262894	3	1	433	11 26 095 6	STEERING CONSOLE RIGHT
HOLDER	11271098	10	1	659	11 27 109 7	LIGHTNING ROD RFK
HOLDER	11298436	10	2	555	11 94 087 8	ASSEMBLY UNIT
HOLDER	592290214	81	1	416	10 35 008 0	CABIN
HOLDER	592290314	82	1	416	10 35 008 0	CABIN
HOLDER	592290414	84	1	416	10 35 008 0	CABIN
HOLDER	954229003	101	1	330	11 24 483 7	MOUNTING PARTS SUPERST
HOLDER	969641501	50	1	353	96 96 543 01	WINCH FRAME
HOLDER	992415314	10	1	657	99 24 978 14	BOOM ELECTRICS
HOLDER CAMERA	385137114	13	1	718	10 58 064 7	VIDEO MONITORING SYSTEM
HOLDER CPL	10584210	49	1	310	11 24 409 0	PANELLING SUPERSTR. INSTA
HOLDER CPL	11269018	11	2	677	10 55 722 4	FALL PROTECTION RFK
HOLDER CPL	11309625	57	1	398	11 27 970 6	CABIN CPL
HOLDER ST.CONST.	10579806	46	1	204	11 92 923 6	ASSEMBLY INSTAL.
HOLDER ST.CONST.	11929329	14	1	194	11 92 922 0	SUCTION UNIT AIR
HOLDING PLATE	11259704	200	1	428	11 93 934 6	AIR CONDITIONING
HOLDING PLATE	11259705	210	1	428	11 93 934 6	AIR CONDITIONING
HOLLOW SCREW	10151637	2	1	222	10 15 163 4	PISTON COOLING PRE-ASS.
HOLLOW SCREW	11443132	11	2	260	10 14 333 9	FUEL LINES
HOLLOW SCREW 10X1 9SMN	9080466	3	5	276	10 14 821 7	PIPELINE INSTALLATION
HOLLOW SCREW DIN 7643 10X	4079240	17	1	261	10 14 588 5	LEAK OIL RETURN LINE
HOLLOW SCREW DIN 7643 12X	4980741	13	1	284	10 14 511 2	EXHAUST NOZZLE ATTACHM
HOLLOW SCREW DIN 7643 12X	4980741	3	4	302	11 41 475 7	ACCESSORIES AIR COMPRES
HOLLOW SCREW DIN 7643 15	4981226	6	4	260	10 14 333 9	FUEL LINES
HOLLOW SCREW DIN 7643 15X	10129819	8	1	260	10 14 333 9	FUEL LINES
HOLLOW SCREW DIN 7643 8X	4980664	10	1	261	10 14 588 5	LEAK OIL RETURN LINE
HOLLOW SCREW DIN 7643 M1	4079160	5	7	261	10 14 588 5	LEAK OIL RETURN LINE
HOLLOW SCREW DIN 7643 M1	4079160	8	1	285	10 14 622 4	REGULATION BOOST PRESS
HOLLOW SCREW DIN 7643 M1	4079160	7	1	302	11 41 475 7	ACCESSORIES AIR COMPRES
HOLLOW SCREW R1/2"	10588723	1	1	527	59 20 224 14	LOAD HOLDING VALVE
HOOTER	614046114	81	1	399	11 27 973 6	CABIN EL
HOSE	10043525	4	8	731	11 28 048 1	CONNECTION PARTS
HOSE	10352453	17	1	194	11 92 922 0	SUCTION UNIT AIR
HOSE	7362451	3	2.5	503	91 76 658 14	DRAIN HOSE CPL
HOSE	886002814	32	1.3	204	11 92 923 6	ASSEMBLY INSTAL.
HOSE BEND	11946456	320	1	428	11 93 934 6	AIR CONDITIONING
HOSE BEND	11946458	340	1	428	11 93 934 6	AIR CONDITIONING
HOSE CLAMP	10579070	50	6	179	10 57 532 2	INTAKE PIPE OIL CPL
HOSE CLAMP	10581765	58	1	183	11 94 151 8	COOLER INSTALLATION WATE
HOSE CLAMP	10581765	60	1	204	11 92 923 6	ASSEMBLY INSTAL.
HOSE CLAMP	11005281	10	7	285	10 14 622 4	REGULATION BOOST PRESS
HOSE CLAMP	11833907	19	1	208	10 14 653 8	SUCTION MODUL
HOSE CLAMP	482000814	57	4	204	11 92 923 6	ASSEMBLY INSTAL.
HOSE CLAMP	4900778	91	4	184	11 94 151 8	COOLER INSTALLATION WATE
HOSE CLAMP	4900778	11	2	265	10 14 736 9	INTAKE STACK ASSEMBLY
HOSE CLAMP	4900778	25	2	283	10 14 013 6	EXHAUST TC MOUNTING
HOSE CLAMP	4900778	2	1	503	91 76 658 14	DRAIN HOSE CPL
HOSE CLAMP	4901138	2	1	230	10 14 671 6	OIL LINE PRE-ASSEMBLY
HOSE CLAMP	4981029	8	3	230	10 14 671 6	OIL LINE PRE-ASSEMBLY
HOSE CLAMP	5004927	9	1	223	10 14 201 8	CRANKCASE BREATHER ASS
HOSE CLAMP	5004929	6	2	267	10 14 967 6	CONNECTING LINE ADD-ON
HOSE CLAMP	5700024	8	5	223	10 14 201 8	CRANKCASE BREATHER ASS
HOSE CLAMP	774204914	55	6	183	11 94 151 8	COOLER INSTALLATION WATE
HOSE CLAMP	774204914	15	1	199	11 24 114 4	FUEL SYSTEM
HOSE CLAMP	774204914	56	14	204	11 92 923 6	ASSEMBLY INSTAL.
HOSE CLAMP	774206408	52	4	183	11 94 151 8	COOLER INSTALLATION WATE
HOSE CLAMP	774209908	31	2	194	11 92 922 0	SUCTION UNIT AIR
HOSE CLAMP	774214308	8	1	721	10 51 728 1	TUBING HYDR
HOSE CLAMP	774217108	34	1	194	11 92 922 0	SUCTION UNIT AIR

Description	Item	Pos.	Quantity	Sheet	Assembly	Description
HOSE CLAMP	774218808	53	9	183	11 94 151 8	COOLER INSTALLATION WATE
HOSE CLAMP	774241914	32	1	194	11 92 922 0	SUCTION UNIT AIR
HOSE CLAMP	774247214	33	2	194	11 92 922 0	SUCTION UNIT AIR
HOSE CLAMP	774256114	52	2	179	10 57 532 2	INTAKE PIPE OIL CPL
HOSE CLAMP	790208814	51	6	179	10 57 532 2	INTAKE PIPE OIL CPL
HOSE CLAMP	790244814	58	1	204	11 92 923 6	ASSEMBLY INSTAL.
HOSE CLAMP	790244814	12	2	299	11 92 891 3	COMPRESSOR RFK
HOSE CLAMP THREADED UN	693152314	83	2	576	10 57 559 9	CABLE LOOM
HOSE CLAMP THREADED UN	693152314	83	2	609	10 57 651 9	CABLE LOOM
HOSE CLAMP THREADED UN	693152414	55	1	741	10 52 155 9	MODULE REFUELLING SYSTE
HOSE CPL	11222864	200	1	740	51 00 959 14	REFUEL PUMP
HOSE CPL	11267556	11	1	186	10 57 423 7	COOLER MOTOR
HOSE CPL	11267557	12	1	186	10 57 423 7	COOLER MOTOR
HOSE CPL	11267558	13	1	186	10 57 423 7	COOLER MOTOR
HOSE CPL	553079914	13	1	398	11 27 970 6	CABIN CPL
HOSE CPL	592007514	14	1	398	11 27 970 6	CABIN CPL
HOSE CPL	911108414	605	1	484	11 26 260 9	HOSE LIST
HOSE CPL	911256414	596	1	44	11 26 995 4	HOSE LIST
HOSE CPL	911292114	138	1	460	11 89 300 1	HOSE LIST
HOSE CPL	914757914	404	1	173	11 24 113 7	HOSE LIST
HOSE CPL	914762914	592	1	44	11 26 995 4	HOSE LIST
HOSE CPL	914763014	655	1	360	10 55 208 5	HOSE LIST
HOSE CPL	914792514	5022	1	44	11 26 995 4	HOSE LIST
HOSE CPL	914794514	575	1	43	11 26 995 4	HOSE LIST
HOSE CPL	914798914	551	1	43	11 26 995 4	HOSE LIST
HOSE CPL	918245214	572	1	174	11 24 113 7	HOSE LIST
HOSE CPL	918248414	280	1	682	11 22 970 9	HOSE LIST
HOSE CPL	918269214	430	1	174	11 24 113 7	HOSE LIST
HOSE CPL	918272514	127	1	460	11 89 300 1	HOSE LIST
HOSE CPL	918276114	113	1	459	11 89 300 1	HOSE LIST
HOSE CPL	918276114	117	1	459	11 89 300 1	HOSE LIST
HOSE CPL	918285814	598	1	44	11 26 995 4	HOSE LIST
HOSE CPL	918288114	112	1	459	11 89 300 1	HOSE LIST
HOSE CPL	918288114	116	1	459	11 89 300 1	HOSE LIST
HOSE CPL	918291914	429	1	41	11 26 995 4	HOSE LIST
HOSE CPL	918805114	707	1	76	10 54 545 1	HOSE LIST
HOSE CPL	918810914	595	1	44	11 26 995 4	HOSE LIST
HOSE CPL	918819414	380	1	390	10 56 178 0	HOSE LIST
HOSE CPL	918820914	162	1	461	11 89 300 1	HOSE LIST
HOSE CPL	918849914	827	1	631	10 52 439 2	HOSE LIST
HOSE CPL	918870314	903	1	531	11 22 970 6	HOSE LIST
HOSE CPL	918870914	826	1	343	99 33 241 14	HOSE LIST
HOSE CPL	918873814	556	1	43	11 26 995 4	HOSE LIST
HOSE CPL	918874514	432	1	174	11 24 113 7	HOSE LIST
HOSE CPL	918882614	824	1	343	99 33 241 14	HOSE LIST
HOSE CPL	919126414	364	1	693	99 27 747 14	HOSE LIST
HOSE CPL	919126414	365	1	693	99 27 747 14	HOSE LIST
HOSE CPL	919127514	708	1	76	10 54 545 1	HOSE LIST
HOSE CPL	919140514	533	1	42	11 26 995 4	HOSE LIST
HOSE CPL	919143414	421	1	173	11 24 113 7	HOSE LIST
HOSE CPL	919144714	181	1	698	11 24 779 0	HOSE LIST
HOSE CPL	919145114	805	1	742	11 28 825 7	HOSE LIST
HOSE CPL	919146814	543	1	42	11 26 995 4	HOSE LIST
HOSE CPL	919167714	422	1	173	11 24 113 7	HOSE LIST
HOSE CPL	919706714	527	1	42	11 26 995 4	HOSE LIST
HOSE CPL	919714914	581	1	43	11 26 995 4	HOSE LIST
HOSE CPL	919735014	524	1	42	11 26 995 4	HOSE LIST
HOSE CPL	919736714	185	1	698	11 24 779 0	HOSE LIST
HOSE CPL	919736714	186	1	698	11 24 779 0	HOSE LIST
HOSE CPL	919757114	635	1	498	11 26 261 2	HOSE LIST

Description	Item	Pos.	Quantity	Sheet	Assembly	Description
HOSE CPL	919778814	902	1	531	11 22 970 6	HOSE LIST
HOSE CPL	919791614	706	1	76	10 54 545 1	HOSE LIST
HOSE CPL	928003714	163	1	461	11 89 300 1	HOSE LIST
HOSE CPL	928009314	428	1	41	11 26 995 4	HOSE LIST
HOSE CPL	928010214	511	1	41	11 26 995 4	HOSE LIST
HOSE CPL	928010214	512	1	41	11 26 995 4	HOSE LIST
HOSE CPL	928010214	513	1	41	11 26 995 4	HOSE LIST
HOSE CPL	928010214	514	1	41	11 26 995 4	HOSE LIST
HOSE CPL	928014714	904	1	531	11 22 970 6	HOSE LIST
HOSE CPL	928018514	542	1	42	11 26 995 4	HOSE LIST
HOSE CPL	928020314	546	1	42	11 26 995 4	HOSE LIST
HOSE CPL	928029714	906	1	531	11 22 970 6	HOSE LIST
HOSE CPL	928029714	914	1	531	11 22 970 6	HOSE LIST
HOSE CPL	928032214	547	1	42	11 26 995 4	HOSE LIST
HOSE CPL	928044014	390	1	390	10 56 178 0	HOSE LIST
HOSE CPL	928110014	584	1	43	11 26 995 4	HOSE LIST
HOSE CPL	928113314	381	1	390	10 56 178 0	HOSE LIST
HOSE CPL	928121514	917	1	531	11 22 970 6	HOSE LIST
HOSE CPL	928123014	580	1	43	11 26 995 4	HOSE LIST
HOSE CPL	928130914	800	1	200	11 24 972 9	HOSE LIST
HOSE CPL	928130914	801	1	200	11 24 972 9	HOSE LIST
HOSE CPL	928137514	122	1	459	11 89 300 1	HOSE LIST
HOSE CPL	928137714	702	1	76	10 54 545 1	HOSE LIST
HOSE CPL	928152414	118	1	459	11 89 300 1	HOSE LIST
HOSE CPL	928166714	909	1	531	11 22 970 6	HOSE LIST
HOSE CPL	928166714	913	1	531	11 22 970 6	HOSE LIST
HOSE CPL	928169614	151	1	460	11 89 300 1	HOSE LIST
HOSE CPL	928169614	159	1	461	11 89 300 1	HOSE LIST
HOSE CPL	928183014	506	1	41	11 26 995 4	HOSE LIST
HOSE CPL	928204714	278	1	682	11 22 970 9	HOSE LIST
HOSE CPL	928209814	102	1	459	11 89 300 1	HOSE LIST
HOSE CPL	928209814	107	1	459	11 89 300 1	HOSE LIST
HOSE CPL	928265514	111	1	459	11 89 300 1	HOSE LIST
HOSE CPL	928265514	115	1	459	11 89 300 1	HOSE LIST
HOSE CPL	928266514	403	1	173	11 24 113 7	HOSE LIST
HOSE CPL	928272714	411	1	173	11 24 113 7	HOSE LIST
HOSE CPL	928318214	802	1	516	11 23 239 9	HOSE LIST
HOSE CPL	928318214	807	1	516	11 23 239 9	HOSE LIST
HOSE CPL	928326514	825	1	343	99 33 241 14	HOSE LIST
HOSE CPL	928357214	585	1	43	11 26 995 4	HOSE LIST
HOSE CPL	928443714	522	1	41	11 26 995 4	HOSE LIST
HOSE CPL	928445414	536	1	42	11 26 995 4	HOSE LIST
HOSE CPL	928456714	526	1	42	11 26 995 4	HOSE LIST
HOSE CPL	928461114	525	1	42	11 26 995 4	HOSE LIST
HOSE CPL	928536514	606	1	484	11 26 260 9	HOSE LIST
HOSE CPL	928538414	704	1	76	10 54 545 1	HOSE LIST
HOSE CPL	928538414	139	1	460	11 89 300 1	HOSE LIST
HOSE CPL	928589814	431	1	41	11 26 995 4	HOSE LIST
HOSE CPL	928591114	703	1	76	10 54 545 1	HOSE LIST
HOSE CPL	928611014	435	1	174	11 24 113 7	HOSE LIST
HOSE CPL	928619114	360	1	693	99 27 747 14	HOSE LIST
HOSE CPL	928712614	597	1	44	11 26 995 4	HOSE LIST
HOSE CPL	928757814	200	1	211	11 92 982 1	HOSE LIST
HOSE CPL	928763814	908	1	531	11 22 970 6	HOSE LIST
HOSE CPL	928763814	912	1	531	11 22 970 6	HOSE LIST
HOSE CPL	928764814	548	1	42	11 26 995 4	HOSE LIST
HOSE CPL	928765014	508	1	41	11 26 995 4	HOSE LIST
HOSE CPL	928815314	295	1	502	91 90 239 14	CABLE HYDR
HOSE CPL	928857314	407	1	173	11 24 113 7	HOSE LIST
HOSE CPL	928861314	823	1	343	99 33 241 14	HOSE LIST

Description	Item	Pos.	Quantity	Sheet	Assembly	Description
HOSE CPL	928865914	154	1	460	11 89 300 1	HOSE LIST
HOSE CPL	928865914	158	1	461	11 89 300 1	HOSE LIST
HOSE CPL	928868414	418	1	173	11 24 113 7	HOSE LIST
HOSE CPL	928872514	103	1	459	11 89 300 1	HOSE LIST
HOSE CPL	928872814	108	1	459	11 89 300 1	HOSE LIST
HOSE CPL	928880614	427	1	173	11 24 113 7	HOSE LIST
HOSE CPL	928885614	559	1	43	11 26 995 4	HOSE LIST
HOSE CPL	928950414	656	1	360	10 55 208 5	HOSE LIST
HOSE CPL	928973314	150	1	460	11 89 300 1	HOSE LIST
HOSE CPL	928973314	156	1	460	11 89 300 1	HOSE LIST
HOSE CPL	929376814	705	1	76	10 54 545 1	HOSE LIST
HOSE CPL	929399714	166	1	461	11 89 300 1	HOSE LIST
HOSE CPL	929414814	555	1	43	11 26 995 4	HOSE LIST
HOSE CPL	929443814	201	1	211	11 92 982 1	HOSE LIST
HOSE CPL	929443814	828	1	631	10 52 439 2	HOSE LIST
HOSE CPL	929467714	153	1	460	11 89 300 1	HOSE LIST
HOSE CPL	929467714	157	1	460	11 89 300 1	HOSE LIST
HOSE CPL	929473314	582	1	43	11 26 995 4	HOSE LIST
HOSE CPL	929478114	420	1	173	11 24 113 7	HOSE LIST
HOSE CPL	990038114	583	1	43	11 26 995 4	HOSE LIST
HOSE CPL	990045814	135	1	460	11 89 300 1	HOSE LIST
HOSE CPL	990045814	145	1	460	11 89 300 1	HOSE LIST
HOSE CPL	990053014	408	1	173	11 24 113 7	HOSE LIST
HOSE CPL	990055814	361	1	693	99 27 747 14	HOSE LIST
HOSE CPL	990055914	362	1	693	99 27 747 14	HOSE LIST
HOSE CPL	991109014	282	1	682	11 22 970 9	HOSE LIST
HOSE CPL	991109014	283	1	682	11 22 970 9	HOSE LIST
HOSE CPL	991139814	401	1	173	11 24 113 7	HOSE LIST
HOSE CPL	991168714	509	1	41	11 26 995 4	HOSE LIST
HOSE CPL	991170814	652	1	360	10 55 208 5	HOSE LIST
HOSE CPL	991194914	628	1	174	11 24 113 7	HOSE LIST
HOSE CPL	991195514	367	1	631	10 52 439 2	HOSE LIST
HOSE CPL	991198814	810	1	516	11 23 239 9	HOSE LIST
HOSE CPL	991198814	811	1	516	11 23 239 9	HOSE LIST
HOSE CPL	991205314	364	1	631	10 52 439 2	HOSE LIST
HOSE CPL	991209514	5020	1	44	11 26 995 4	HOSE LIST
HOSE CPL	991216914	405	1	173	11 24 113 7	HOSE LIST
HOSE CPL	991242714	915	1	531	11 22 970 6	HOSE LIST
HOSE CPL	991253814	579	1	43	11 26 995 4	HOSE LIST
HOSE CPL	991276414	136	1	460	11 89 300 1	HOSE LIST
HOSE CPL	991276414	144	1	460	11 89 300 1	HOSE LIST
HOSE CPL	991285814	918	1	531	11 22 970 6	HOSE LIST
HOSE CPL	991312114	152	1	460	11 89 300 1	HOSE LIST
HOSE CPL	991312114	155	1	460	11 89 300 1	HOSE LIST
HOSE CPL	991375814	587	1	44	11 26 995 4	HOSE LIST
HOSE CPL	991384314	388	1	390	10 56 178 0	HOSE LIST
HOSE CPL	991390514	570	1	174	11 24 113 7	HOSE LIST
HOSE CPL	991391814	602	1	484	11 26 260 9	HOSE LIST
HOSE CPL	991528514	586	1	43	11 26 995 4	HOSE LIST
HOSE CPL	991547014	419	1	173	11 24 113 7	HOSE LIST
HOSE CPL	991563114	812	1	516	11 23 239 9	HOSE LIST
HOSE CPL	991563114	817	1	516	11 23 239 9	HOSE LIST
HOSE CPL	991587514	552	1	174	11 24 113 7	HOSE LIST
HOSE CPL	991961214	137	1	460	11 89 300 1	HOSE LIST
HOSE CPL	991964414	406	1	173	11 24 113 7	HOSE LIST
HOSE CPL	992258514	569	1	43	11 26 995 4	HOSE LIST
HOSE CPL	992261314	577	1	43	11 26 995 4	HOSE LIST
HOSE CPL	992261414	520	1	41	11 26 995 4	HOSE LIST
HOSE CPL	992273614	180	1	698	11 24 779 0	HOSE LIST
HOSE CPL	992296514	279	1	682	11 22 970 9	HOSE LIST

Description	Item	Pos.	Quantity	Sheet	Assembly	Description
HOSE CPL	992298714	591	1	44	11 26 995 4	HOSE LIST
HOSE CPL	992504214	813	1	516	11 23 239 9	HOSE LIST
HOSE CPL	992511514	604	1	484	11 26 260 9	HOSE LIST
HOSE CPL	992519014	594	1	44	11 26 995 4	HOSE LIST
HOSE CPL	992552014	389	1	390	10 56 178 0	HOSE LIST
HOSE CPL	992564614	131	1	460	11 89 300 1	HOSE LIST
HOSE CPL	992564614	143	1	460	11 89 300 1	HOSE LIST
HOSE CPL	992569114	557	1	43	11 26 995 4	HOSE LIST
HOSE CPL	992835314	400	1	173	11 24 113 7	HOSE LIST
HOSE CPL	992837314	367	1	693	99 27 747 14	HOSE LIST
HOSE CPL	992857714	366	1	693	99 27 747 14	HOSE LIST
HOSE CPL	992879314	634	1	498	11 26 261 2	HOSE LIST
HOSE CPL	992890714	203	1	211	11 92 982 1	HOSE LIST
HOSE CPL	992893114	803	1	516	11 23 239 9	HOSE LIST
HOSE CPL	993204614	104	1	459	11 89 300 1	HOSE LIST
HOSE CPL	993204614	109	1	459	11 89 300 1	HOSE LIST
HOSE CPL	993213714	653	1	360	10 55 208 5	HOSE LIST
HOSE CPL	993226114	800	1	516	11 23 239 9	HOSE LIST
HOSE CPL	993226114	801	1	516	11 23 239 9	HOSE LIST
HOSE CPL	993227714	650	1	710	10 53 635 2	HOSE LIST
HOSE CPL	993623814	822	1	343	99 33 241 14	HOSE LIST
HOSE CPL	993643514	409	1	173	11 24 113 7	HOSE LIST
HOSE CPL	993657714	516	1	41	11 26 995 4	HOSE LIST
HOSE CPL	993685614	633	1	498	11 26 261 2	HOSE LIST
HOSE CPL	993694214	382	1	173	11 24 113 7	HOSE LIST
HOSE CPL	993734014	535	1	42	11 26 995 4	HOSE LIST
HOSE CPL	993751514	654	1	360	10 55 208 5	HOSE LIST
HOSE CPL	993758914	182	1	698	11 24 779 0	HOSE LIST
HOSE CPL	993758914	183	1	698	11 24 779 0	HOSE LIST
HOSE CPL	993758914	188	1	698	11 24 779 0	HOSE LIST
HOSE CPL	993758914	189	1	698	11 24 779 0	HOSE LIST
HOSE CPL	993759614	651	1	710	10 53 635 2	HOSE LIST
HOSE CPL	993774614	537	1	42	11 26 995 4	HOSE LIST
HOSE CPL	993775014	5021	1	44	11 26 995 4	HOSE LIST
HOSE CPL	994460114	545	1	42	11 26 995 4	HOSE LIST
HOSE CPL	994465914	519	1	41	11 26 995 4	HOSE LIST
HOSE CPL	994486214	900	1	531	11 22 970 6	HOSE LIST
HOSE CPL	994486214	901	1	531	11 22 970 6	HOSE LIST
HOSE CPL	994486214	910	1	531	11 22 970 6	HOSE LIST
HOSE CPL	994905314	636	1	498	11 26 261 2	HOSE LIST
HOSE CPL	995006114	578	1	43	11 26 995 4	HOSE LIST
HOSE CPL	995027514	532	1	42	11 26 995 4	HOSE LIST
HOSE CPL	995060114	521	1	41	11 26 995 4	HOSE LIST
HOSE CPL	995082614	382	1	390	10 56 178 0	HOSE LIST
HOSE CPL	995085214	133	1	460	11 89 300 1	HOSE LIST
HOSE CPL	995085214	134	1	460	11 89 300 1	HOSE LIST
HOSE CPL	995174014	905	1	531	11 22 970 6	HOSE LIST
HOSE CPL	995175314	281	1	682	11 22 970 9	HOSE LIST
HOSE CPL	995176314	538	1	42	11 26 995 4	HOSE LIST
HOSE CPL	995180714	416	1	173	11 24 113 7	HOSE LIST
HOSE CPL	995207914	540	1	42	11 26 995 4	HOSE LIST
HOSE CPL	995219914	140	1	460	11 89 300 1	HOSE LIST
HOSE CPL	995226814	184	1	698	11 24 779 0	HOSE LIST
HOSE CPL	995226814	187	1	698	11 24 779 0	HOSE LIST
HOSE CPL	995240114	167	1	461	11 89 300 1	HOSE LIST
HOSE CPL	995263914	425	1	173	11 24 113 7	HOSE LIST
HOSE CPL	995264214	566	1	43	11 26 995 4	HOSE LIST
HOSE CPL	995285414	361	1	631	10 52 439 2	HOSE LIST
HOSE CPL	995421014	402	1	173	11 24 113 7	HOSE LIST
HOSE CPL	995437214	119	1	459	11 89 300 1	HOSE LIST

Description	Item	Pos.	Quantity	Sheet	Assembly	Description
HOSE CPL	995440614	576	1	43	11 26 995 4	HOSE LIST
HOSE CPL	995512314	410	1	173	11 24 113 7	HOSE LIST
HOSE CPL	995537614	202	1	211	11 92 982 1	HOSE LIST
HOSE CPL	995830614	804	1	738	10 57 089 4	HOSE LIST
HOSE CPL	995865114	907	1	531	11 22 970 6	HOSE LIST
HOSE CPL	995865114	911	1	531	11 22 970 6	HOSE LIST
HOSE CPL	995943114	600	1	484	11 26 260 9	HOSE LIST
HOSE CPL	995943514	619	1	174	11 24 113 7	HOSE LIST
HOSE CPL	995943514	619	1	484	11 26 260 9	HOSE LIST
HOSE CPL	995943614	620	1	174	11 24 113 7	HOSE LIST
HOSE CPL	995943614	620	1	484	11 26 260 9	HOSE LIST
HOSE CPL	995943714	628	1	498	11 26 261 2	HOSE LIST
HOSE CPL	995943814	629	1	174	11 24 113 7	HOSE LIST
HOSE CPL	995943814	629	1	498	11 26 261 2	HOSE LIST
HOSE CPL	995944014	631	1	498	11 26 261 2	HOSE LIST
HOSE CPL	995944114	632	1	498	11 26 261 2	HOSE LIST
HOSE CPL	995944214	384	1	390	10 56 178 0	HOSE LIST
HOSE CPL	995944314	387	1	390	10 56 178 0	HOSE LIST
HOSE CPL	995944414	391	1	390	10 56 178 0	HOSE LIST
HOSE CPL	995951214	392	1	390	10 56 178 0	HOSE LIST
HOSE CPL	995951314	650	1	360	10 55 208 5	HOSE LIST
HOSE CPL	995951414	651	1	360	10 55 208 5	HOSE LIST
HOSE CPL	995959114	916	1	174	11 24 113 7	HOSE LIST
HOSE CPL	995961914	424	1	173	11 24 113 7	HOSE LIST
HOSE CPL	995962014	426	1	41	11 26 995 4	HOSE LIST
HOSE CPL	995972114	500	1	41	11 26 995 4	HOSE LIST
HOSE CPL	995972214	501	1	41	11 26 995 4	HOSE LIST
HOSE CPL	995972314	502	1	41	11 26 995 4	HOSE LIST
HOSE CPL	995972414	503	1	41	11 26 995 4	HOSE LIST
HOSE CPL	995972514	504	1	174	11 24 113 7	HOSE LIST
HOSE CPL	995972614	505	1	174	11 24 113 7	HOSE LIST
HOSE CPL	995972814	510	1	41	11 26 995 4	HOSE LIST
HOSE CPL	995972914	515	1	41	11 26 995 4	HOSE LIST
HOSE CPL	995973014	518	1	41	11 26 995 4	HOSE LIST
HOSE CPL	995973214	523	1	42	11 26 995 4	HOSE LIST
HOSE CPL	995973514	530	1	42	11 26 995 4	HOSE LIST
HOSE CPL	995973614	531	1	42	11 26 995 4	HOSE LIST
HOSE CPL	995973714	539	1	42	11 26 995 4	HOSE LIST
HOSE CPL	995973814	517	1	41	11 26 995 4	HOSE LIST
HOSE CPL	995974114	550	1	42	11 26 995 4	HOSE LIST
HOSE CPL	995974214	558	1	43	11 26 995 4	HOSE LIST
HOSE CPL	995974314	560	1	174	11 24 113 7	HOSE LIST
HOSE CPL	995974414	561	1	43	11 26 995 4	HOSE LIST
HOSE CPL	995974614	562	1	43	11 26 995 4	HOSE LIST
HOSE CPL	995974714	563	1	43	11 26 995 4	HOSE LIST
HOSE CPL	995974814	564	1	43	11 26 995 4	HOSE LIST
HOSE CPL	995974914	565	1	43	11 26 995 4	HOSE LIST
HOSE CPL	995976414	5023	1	44	11 26 995 4	HOSE LIST
HOSE CPL	995976414	5024	1	44	11 26 995 4	HOSE LIST
HOSE CPL	995976514	5025	1	44	11 26 995 4	HOSE LIST
HOSE CPL	995976514	5026	1	44	11 26 995 4	HOSE LIST
HOSE CPL	995991314	630	1	498	11 26 261 2	HOSE LIST
HOSE CPL	996000214	120	1	459	11 89 300 1	HOSE LIST
HOSE CPL	996026214	121	1	459	11 89 300 1	HOSE LIST
HOSE CPL	996026214	129	1	460	11 89 300 1	HOSE LIST
HOSE CPL	996026214	601	1	484	11 26 260 9	HOSE LIST
HOSE CPL	996037814	528	1	42	11 26 995 4	HOSE LIST
HOSE CPL	996037914	529	1	42	11 26 995 4	HOSE LIST
HOSE CPL	996038114	377	1	390	10 56 178 0	HOSE LIST
HOSE CPL	996038214	383	1	390	10 56 178 0	HOSE LIST

Description	Item	Pos.	Quantity	Sheet	Assembly	Description
HOSE CPL	996084314	161	1	461	11 89 300 1	HOSE LIST
HOSE CPL	996084314	164	1	461	11 89 300 1	HOSE LIST
HOSE CPL	996084614	100	1	459	11 89 300 1	HOSE LIST
HOSE CPL	996084614	105	1	459	11 89 300 1	HOSE LIST
HOSE CPL	996087014	101	1	459	11 89 300 1	HOSE LIST
HOSE CPL	996087014	106	1	459	11 89 300 1	HOSE LIST
HOSE CPL	996089814	124	1	459	11 89 300 1	HOSE LIST
HOSE CPL	996204514	123	1	459	11 89 300 1	HOSE LIST
HOSE CPL	996204614	126	1	459	11 89 300 1	HOSE LIST
HOSE CPL	996204714	141	1	460	11 89 300 1	HOSE LIST
HOSE CPL	996204814	160	1	461	11 89 300 1	HOSE LIST
HOSE CPL	996204814	165	1	461	11 89 300 1	HOSE LIST
HOSE CPL	996367614	603	1	484	11 26 260 9	HOSE LIST
HOSE CPL	996450714	130	1	460	11 89 300 1	HOSE LIST
HOSE CPL	996450714	142	1	460	11 89 300 1	HOSE LIST
HOSE CPL	996459514	412	1	173	11 24 113 7	HOSE LIST
HOSE CPL	996459714	434	1	174	11 24 113 7	HOSE LIST
HOSE CPL	996466614	507	1	41	11 26 995 4	HOSE LIST
HOSE CPL	996466814	534	1	42	11 26 995 4	HOSE LIST
HOSE CPL	996467014	567	1	43	11 26 995 4	HOSE LIST
HOSE CPL	996467114	590	1	44	11 26 995 4	HOSE LIST
HOSE CPL	996625314	820	1	343	99 33 241 14	HOSE LIST
HOSE CPL	996625414	821	1	343	99 33 241 14	HOSE LIST
HOSE CPL	996735814	413	1	173	11 24 113 7	HOSE LIST
HOSE CPL	996770614	822	1	174	11 24 113 7	HOSE LIST
HOSE CPL	996770714	823	1	206	11 26 949 8	HOSE LIST
HOSE CPL	996770814	824	1	206	11 26 949 8	HOSE LIST
HOSE CPL	996771014	826	1	206	11 26 949 8	HOSE LIST
HOSE CPL	996771114	827	1	206	11 26 949 8	HOSE LIST
HOSE CPL	996778614	541	1	42	11 26 995 4	HOSE LIST
HOSE CPL	996779514	391	1	173	11 24 113 7	HOSE LIST
HOSE CPL	996779614	392	1	173	11 24 113 7	HOSE LIST
HOSE CPL	996779714	803	1	200	11 24 972 9	HOSE LIST
HOSE CPL	996848514	415	1	41	11 26 995 4	HOSE LIST
HOSE CPL	996972614	132	1	460	11 89 300 1	HOSE LIST
HOSE CPL	996991514	110	1	459	11 89 300 1	HOSE LIST
HOSE CPL	996991514	114	1	459	11 89 300 1	HOSE LIST
HOSE CPL	997058014	825	1	174	11 24 113 7	HOSE LIST
HOSE FITTING	11953398	2	1	728	10 56 536 7	SOLENOID VALVE BUILT-IN KI
HOSE FITTING	511713914	89	3	204	11 92 923 6	ASSEMBLY INSTAL.
HOSE FITTING	592023914	40	1	183	11 94 151 8	COOLER INSTALLATION WATE
HOSE HOLDER HYDR.ST.CON	916183314	78	1	507	11 23 820 4	PIVOT PIECE CPL
HOSE HOLDER ST.CONST. CP	949401114	16	1	328	11 24 483 7	MOUNTING PARTS SUPERST
HOSE LINE	10144282	8	1	204	11 92 923 6	ASSEMBLY INSTAL.
HOSE LINE	10144297	9	1	204	11 92 923 6	ASSEMBLY INSTAL.
HOSE LINE	790042214	5	1	501	10 56 183 8	TOOL
HOSE LINE	790042914	6	1	501	10 56 183 8	TOOL
HOSE LIST	10524392	4	1	627	10 51 743 9	ROPE LUG CPL RFK
HOSE LIST	10536352	4	1	707	10 53 635 0	SYNCHRONIZING HYDR RFK
HOSE LIST	10545451	4	1	71	10 51 969 4	A-FRAME ERECTION CYL INST
HOSE LIST	10552085	4	1	357	10 51 968 6	LUG SUPERSTRUCTURE CPL
HOSE LIST	10561780	4	1	378	10 51 968 2	SG SUPERSTRUCTURE
HOSE LIST	10570894	4	1	737	10 52 155 4	REFUELLING SYSTEM RFK
HOSE LIST	10577909	20	1	724	11 93 621 2	AIR CONDITIONING UNIT RFK
HOSE LIST	11229706	4	1	522	11 29 259 8	TILT-BACK SUPPORT
HOSE LIST	11229709	4	1	679	10 51 971 3	SELF-LOADING SYSTEM RFK
HOSE LIST	11232399	4	1	505	11 23 820 4	PIVOT PIECE CPL
HOSE LIST	11241137	4	1	80	11 92 885 2	CENTRAL POWER UNIT CPL
HOSE LIST	11247790	4	1	695	11 89 568 5	SELF-LOADING SYSTEM RFK
HOSE LIST	11249729	4	1	199	11 24 114 4	FUEL SYSTEM

Description	Item	Pos.	Quantity	Sheet	Assembly	Description
HOSE LIST	11262609	4	1	480	11 26 260 5	WINCH 1 CRANE
HOSE LIST	11262612	4	1	495	11 26 261 0	WINCH 2 CRANE
HOSE LIST	11269498	2	1	204	11 92 923 6	ASSEMBLY INSTAL.
HOSE LIST	11269954	4	1	6	11 24 047 9	SUPERSTRUCTURE CPL
HOSE LIST	11288257	103	1	737	10 52 155 4	REFUELLING SYSTEM RFK
HOSE LIST	11893001	4	1	439	11 89 364 8	UC CPL
HOSE LIST	11929821	2	1	210	11 92 958 8	AIR DUCT CPL
HOSE LIST	992774714	4	1	685	11 23 619 7	SELF-LOADING SYSTEM RFK
HOSE LIST	993324114	4	1	339	10 51 969 7	NEEDLE LUFFING WINCH
HOSE NIPPLE	10115523	100	1	184	11 94 151 8	COOLER INSTALLATION WATE
HOSE NIPPLE	10121893	10	1	265	10 14 736 9	INTAKE STACK ASSEMBLY
HOSE NIPPLE	10121893	11	1	299	11 92 891 3	COMPRESSOR RFK
HOSE NIPPLE	10140969	5	1	278	10 14 274 4	COOLING WATER AIR BLEED
HOSE NIPPLE	10142668	1	1	278	10 14 274 4	COOLING WATER AIR BLEED
HOSE NIPPLE	9140351	26	1	283	10 14 013 6	EXHAUST TC MOUNTING
HOSE SET CPL	10527918	4	1	729	10 57 790 9	HOSE LIST
HOUSING	10447743	1	1	454	10 44 510 1	QUICK RELEASE FITTING
HOUSING	10447744	1	1	453	10 44 510 2	QUICK RELEASE FITTING
HOUSING	10447745	1	1	30	10 44 510 5	QUICK RELEASE FITTING
HOUSING	11239912	1	1	690	51 16 404 14	LOWERING BRAKE VALVE
HOUSING	11290844	10	1	86	11 24 682 0	DISTRIBUTOR GEARBOX
HOUSING	611039214	21	1	741	10 52 155 9	MODULE REFUELLING SYSTE
HOUSING DRILLED	917876214	10	1	611	10 57 652 3	CLAMPING SOCKET
HOUSING DRILLED	918975514	21	1	39	10 56 645 8	TERMINAL BOX
HUB	10120188	7	1	247	10 13 382 3	SUCTION PUMP PRE-ASS.
HUB	11293193	6	1	453	10 44 510 2	QUICK RELEASE FITTING
HYDR POWER UNIT	11247735	2	1	80	11 92 885 2	CENTRAL POWER UNIT CPL
HYDRAULIC HOSE	510511814	37	5	463	11 89 365 0	CRAWLER CARRIER RIGHT CP
HYDRAULIC HOSE	510511814	37	5	474	11 89 365 1	CRAWLER CARRIER LEFT CP
HYDRAULIC PARTS DRIVING G	10007947	1	1	448	10 50 351 3	DRIVING GEAR
HYDRAULIC PARTS DRIVING G	11219924	3	1	88	11 21 990 2	DRIVING GEAR
HYDRAULIC PARTS DRIVING G	11940176	1	1	385	70 23 828	DRIVING GEAR
HYDRAULIC-TYPE LUBRICAT.N	7001228	18	2	71	10 51 969 4	A-FRAME ERECTION CYL INST
HYDRAULIC-TYPE LUBRICAT.N	774301101	65	1	633	59 20 694 14	WINCH
HYDRAULIC-TYPE LUBRICAT.N	7743242	5	2	70	99 23 451 14	PIVOT BOLT INSTALLATION
HYDRAULIC-TYPE LUBRICAT.N	7743242	18	1	345	96 96 248 01	WINCH
HYDRAULIC-TYPE LUBRICAT.N	7743242	16	2	535	11 24 444 4	A-FRAME 1 CPL
HYDRAULIC-TYPE LUBRICAT.N	7743242	28	4	613	11 28 744 5	MOUNTING PARTS
HYDRAULIC-TYPE LUBRICAT.N	7743242	18	4	700	11 89 568 6	SELF-LOADING SYSTEM RFK
IGNITION STARTER SWITCH	740732003	31	1	410	11 26 095 7	CONTROL STAND RIGHT
ILLUMINATED BUTTON	606667214	37	1	658	11 21 530 2	CABIN REM. EL
ILLUMINATED BUTTON	606667814	12	1	407	10 53 171 8	KEYBOARD
ILLUMINATED BUTTON	606672114	10	2	407	10 53 171 8	KEYBOARD
ILLUMINATED BUTTON	606674714	11	4	407	10 53 171 8	KEYBOARD
ILLUMINATED PUSHBUTTON	693003614	31	1	741	10 52 155 9	MODULE REFUELLING SYSTE
INFORMATION SIGN	9402377	10	4	521	11 26 694 5	SIGN LOCATIONS
INJECTION LINE	10143827	2	4	262	10 14 382 8	INJECTION LINES
INJECTION LINE	10143829	1	1	262	10 14 382 8	INJECTION LINES
INJECTION LINE	10143831	4	1	262	10 14 382 8	INJECTION LINES
INJECTION LINES	10143828	215	1	215	12 42 545 4	DIESEL ENGINE
INJECTOR CPL.	10144093	17	1	204	11 92 923 6	ASSEMBLY INSTAL.
INJECTOR FASTENING	10135432	192	6	214	12 42 545 4	DIESEL ENGINE
INJECTOR WITH FASTENING	10152867	190	6	214	12 42 545 4	DIESEL ENGINE
INLET MODULE	10144034	10	1	304	11 40 371 1	SCR CPL.
INNER RING	747401901	71	1	392	90 01 376 2	SLEWING GEAR DRIVE
INNER WHEEL		20	1	348	93 88 497 01	PLANETARY GEARBOX
INNER WHEEL		55	1	348	93 88 497 01	PLANETARY GEARBOX
INNER WHEEL	512406114	11	1	634	54 02 701 14	PLANETARY STAGE
INNER WHEEL	512406214	21	1	634	54 02 701 14	PLANETARY STAGE
INNER WHEEL	927562801	25	1	392	90 01 376 2	SLEWING GEAR DRIVE

Description	Item	Pos.	Quantity	Sheet	Assembly	Description
INNER WHEEL	944378903	60	1	467	96 93 178 01	TRACTION DRIVE
INNER WHEEL	944403803	10	1	467	96 93 178 01	TRACTION DRIVE
INNER WHEEL	944406703	65	1	467	96 93 178 01	TRACTION DRIVE
INSCRIPTION	10351188	8	2	2	01 38 406 14	LR 1300 SX
INSULATING ELEMENT	10227563	79	2	402	10 55 963 5	SWITCH CABINET X1
INSULATING HOSE	603000308	86	1.2	576	10 57 559 9	CABLE LOOM
INSULATING HOSE	603000308	86	1.2	610	10 57 651 9	CABLE LOOM
INSULATING HOSE	603000408	17	2.3	314	11 24 409 1	COVERS
INSULATION	11892804	18	1	724	11 93 621 2	AIR CONDITIONING UNIT RFK
INTAKE PIPE	953466003	10	1	180	10 58 017 0	RETURN PIPE
INTAKE PIPE CPL	10350932	9	1	179	10 57 532 2	INTAKE PIPE OIL CPL
INTAKE PIPE CPL	10579155	11	2	179	10 57 532 2	INTAKE PIPE OIL CPL
INTAKE PIPE CPL	10598537	8	1	179	10 57 532 2	INTAKE PIPE OIL CPL
INTAKE PIPE CPL	592070414	7	1	179	10 57 532 2	INTAKE PIPE OIL CPL
INTAKE PIPE CPL	592330814	14	1	179	10 57 532 2	INTAKE PIPE OIL CPL
INTAKE PIPE CPL	916526414	13	1	179	10 57 532 2	INTAKE PIPE OIL CPL
INTAKE PIPE OIL CPL	10575322	3	1	177	10 51 948 1	SUCTION PIPE OIL
INTAKE STACK	11444998	1	1	265	10 14 736 9	INTAKE STACK ASSEMBLY
INTAKE STACK ASSEMBLY	10147369	221	1	215	12 42 545 4	DIESEL ENGINE
INTERMEDIATE FLANGE SAE	510710614	10	4	442	11 89 300 5	TUBING HYDR
INTERMEDIATE GEAR CPL.	9072906	331	1	215	12 42 545 4	DIESEL ENGINE
INTERMEDIATE GEAR PRE-AS	9072633	14	1	247	10 13 382 3	SUCTION PUMP PRE-ASS.
INTERMEDIATE GEAR PRE-AS	9072904	1	1	270	90 72 906	INTERMEDIATE GEAR CPL.
INTERMEDIATE PART	10132935	16	1	261	10 14 588 5	LEAK OIL RETURN LINE
INTERMEDIATE PART	956009714	10	1	328	11 24 483 7	MOUNTING PARTS SUPERST
INTERMEDIATE PART	956009714	35	2	505	11 23 820 4	PIVOT PIECE CPL
INTERMEDIATE PART	956009714	11	2	547	11 28 725 5	ROPE GUARD CPL
INTERMEDIATE PART	956009714	11	2	615	11 28 908 0	ROPE GUARD CPL
INTERMEDIATE PIECE ASSE	11245707	67	1	2	01 38 406 14	LR 1300 SX
INTERMEDIATE PIECE ASSE	11245713	71	1	2	01 38 406 14	LR 1300 SX
INTERMEDIATE PIECE ASSE	11245719	79	5	2	01 38 406 14	LR 1300 SX
INTERMEDIATE PLATE	511495814	20	1	8	11 29 618 6	SUPERSTRUCTURE HYDR
INTERMEDIATE SHAFT	944405903	70	1	467	96 93 178 01	TRACTION DRIVE
INTERMEDIATE TENSIONING	970599703	619	1	3	01 38 406 14	LR 1300 SX
INTERMEDIATE TENSIONING	993183814	616	1	3	01 38 406 14	LR 1300 SX
INTERMEDIATE WHEEL AXLE	9072907	2	1	270	90 72 906	INTERMEDIATE GEAR CPL.
INTERNAL LIGHT	607147008	41	1	399	11 27 973 6	CABIN EL
INTERNAL LIGHT	607147008	41	1	402	10 55 963 5	SWITCH CABINET X1
INTERNAL MULTI-DISC	501540514	98	7	376	99 04 645 14	DRIVE
INTERNAL MULTI-DISC	503192901	9	9	351	93 95 895 01	BRAKE MULTI-DISC SET
INTERNAL MULTI-DISC	503199401	5	7	395	93 93 478 01	BRAKE MULTI-DISC SET
INTERNAL MULTI-DISC	540287614	6	7	393	50 20 383 01	MULTI-DISK BRAKE
JACK-UP SYSTEM HYDR RFK	11235246	2	1	701	11 89 568 7	SELF-LOADING SYSTEM RFK
JACK-UP SYSTEM HYDR RFK	11894080	2	1	695	11 89 568 5	SELF-LOADING SYSTEM RFK
JAW	10146415	1	1	257	10 13 543 4	PRESSURE ADAPTER FASTEN
JAW	10150144	2	1	253	10 15 315 1	HIGH PRESS.CONNECTOR W.
JAW	11403994	2	1	252	10 15 286 7	INJECTOR WITH FASTENING
JAW	11403994	1	1	256	10 13 543 2	INJECTOR FASTENING
KBA-RING	11351303	3	1	234	10 14 636 7	PISTON CPL.
KEY	10663954	50	2	410	11 26 095 7	CONTROL STAND RIGHT
KEY	981809914	999	1	4	01 38 406 14	LR 1300 SX
KEY COLLAR	10447258	47	1	419	10 35 007 6	SLIDING DOOR
KEY RING RD 25	704214114	20	2	314	11 24 409 1	COVERS
KEY SWITCH	10539250	71	1	34	11 24 519 0	SUPERSTRUCTURE EL
KEYBOARD	10531718	12	1	404	10 51 907 9	CONTROL STAND LEFT
KEYBOARD OPERATING PANE	10036107	11	1	404	10 51 907 9	CONTROL STAND LEFT
KEYRING PENDANT	10595399	72	1	34	11 24 519 0	SUPERSTRUCTURE EL
KNOTTED-LINK CHAIN	740000801	16	2.3	314	11 24 409 1	COVERS
L RING JL50X2	429612001	57	1	467	96 93 178 01	TRACTION DRIVE
L-PROFILE	10581992	63	2	507	11 23 820 4	PIVOT PIECE CPL

Description	Item	Pos.	Quantity	Sheet	Assembly	Description
LADDER	11237423	10	1	660	11 23 740 7	ACCESS LADDER CPL RFK
LADDER	789038114	15	1	501	10 56 183 8	TOOL
LADDER BRACKET	10584890	11	1	660	11 23 740 7	ACCESS LADDER CPL RFK
LADDER CPL	10226190	1	1	66	99 08 706 14	LADDER MOUNTING
LADDER MOUNTING	990870614	555	1	3	01 38 406 14	LR 1300 SX
LADDER MOUNTING	990870614	40	1	6	11 24 047 9	SUPERSTRUCTURE CPL
LAMP HOLDER	10537562	2	1	435	10 53 756 0	LAMP HOLDER CPL
LAMP HOLDER CPL	10537560	45	1	398	11 27 970 6	CABIN CPL
LASHING BALLAST	992980314	13	1	334	99 23 386 14	COUNTERWEIGHT ARRANGEM
LASHING STRAP	10020519	8	1	341	10 51 969 8	NEEDLE LUFFING WINCH HYD
LASHING STRAP	10020519	19	1	518	11 23 653 3	SUPPORT CPL
LASHING STRAP	10020520	10	1	673	11 30 567 0	TRANSPORT LASHING
LASHING STRAP	7621780	7	1	341	10 51 969 8	NEEDLE LUFFING WINCH HYD
LASHING STRAP	7621780	14	1	678	11 26 901 8	HOLDER CPL
LASHING SUPERSTRUCTURE	991804114	13	1	437	10 51 969 6	CONNECTION SUPERSTR UC
LATCHING DEVICE CPL	7025007	23	1	431	70 24 996	SEAT FRAME
LEAD	11236713	6	1	725	11 21 750 0	LIQUEFIER
LEAD	260318602	41	10.5	512	11 90 151 1	CABLE LOOM 1 PIVOT PIECE E
LEAD	600204105	45	5	735	10 56 013 7	MAINS SUPPLY BATTERY
LEAK OIL RETURN LINE	10145885	214	1	215	12 42 545 4	DIESEL ENGINE
LED LAMP	260514602	25	7	407	10 53 171 8	KEYBOARD
LED LAMP	260514602	38	1	658	11 21 530 2	CABIN REM. EL
LEVEL PROBE	10517426	81	1	34	11 24 519 0	SUPERSTRUCTURE EL
LEVEL SENSOR	10134517	22	1	214	12 42 545 4	DIESEL ENGINE
LEVEL SENSOR	10528589	18	1	53	10 56 073 3	FUEL TANK CPL
LEVEL SENSOR	10529210	14	1	48	10 56 070 1	TANK HYDR CPL
LEVEL SENSOR	11088130	1	1	229	10 13 451 7	LEVEL SENSOR
LEVER	10447749	5	1	30	10 44 510 5	QUICK RELEASE FITTING
LEVER	10447749	5	1	453	10 44 510 2	QUICK RELEASE FITTING
LEVER	10447749	5	1	454	10 44 510 1	QUICK RELEASE FITTING
LEVER	11909498	160	1	428	11 93 934 6	AIR CONDITIONING
LEVER ST.CONST.	992751514	18	2	679	10 51 971 3	SELF-LOADING SYSTEM RFK
LEVER TYPE HAND GREASE	10445635	13	1	58	11 27 315 5	CENTRAL GREASING
LID CPL	10501620	1	1	32	55 09 453 14	OIL MOTOR
LID CPL	10548543	35	1	8	11 29 618 6	SUPERSTRUCTURE HYDR
LID CPL	10551191	21	2	442	11 89 300 5	TUBING HYDR
LID PLATE	5005525	41	4	476	11 31 390 8	CENTRE PART CPL
LID PLATE	602016514	73	4	507	11 23 820 4	PIVOT PIECE CPL
LID PLATE	602025814	93	2	184	11 94 151 8	COOLER INSTALLATION WATE
LID PLATE	602026414	48	3	463	11 89 365 0	CRAWLER CARRIER RIGHT CP
LID PLATE	602026414	48	3	474	11 89 365 1	CRAWLER CARRIER LEFT CP
LID PLATE	7005053	92	3	184	11 94 151 8	COOLER INSTALLATION WATE
LID PLATE	7005053	56	1	210	11 92 958 8	AIR DUCT CPL
LID PLATE	7005053	39	2	476	11 31 390 8	CENTRE PART CPL
LID PLATE	7008583	40	2	476	11 31 390 8	CENTRE PART CPL
LIEBHERR SIGN	993419814	80	2	507	11 23 820 4	PIVOT PIECE CPL
LIFETIME SEAL	10352364	150	1	704	59 21 826 14	SUPPORT CYLINDER
LIFETIME SEAL	10352365	155	1	704	59 21 826 14	SUPPORT CYLINDER
LIFETIME SEAL	11253456	7	7	446	11 89 617 8	SEALING SET
LIGHT BULB	607021114	15	1	36	70 27 205	WORK LIGHT
LIGHT BULB	607021714	1	1	37	10 22 450 0	WORK LIGHT
LIGHT BULB	607021714	42	1	399	11 27 973 6	CABIN EL
LIGHT BULB	607021714	42	1	402	10 55 963 5	SWITCH CABINET X1
LIGHT BULB	607023214	43	1	399	11 27 973 6	CABIN EL
LIGHT BULB	607023214	43	1	402	10 55 963 5	SWITCH CABINET X1
LIGHTNING ROD RFK	11271097	580	2	3	01 38 406 14	LR 1300 SX
LIMIT SENSOR	606655108	43	1	33	11 24 519 0	SUPERSTRUCTURE EL
LIMIT STOP	10539631	45	2	463	11 89 365 0	CRAWLER CARRIER RIGHT CP
LIMIT STOP	10539631	45	2	474	11 89 365 1	CRAWLER CARRIER LEFT CP
LIMIT STOP	10566932	14	2	670	11 29 473 7	GANGWAY INTERM. SECTION

Description	Item	Pos.	Quantity	Sheet	Assembly	Description
LIMIT STOP	10566932	15	2	674	11 29 474 2	GANGWAY INTERM. SECTION
LIMIT STOP	10566932	17	2	675	11 29 474 3	GANGWAY INTERM. SECTION
LIMIT STOP	10566932	14	2	676	10 55 514 8	FALL PROTECTION RFK
LIMIT STOP	11913115	2	1	98	11 06 730 5	SHUTTLE VALVE
LIMIT STOP	990443514	8	2	316	10 57 883 5	DOOR
LIMIT STOP	990443514	8	2	318	10 57 897 6	DOOR
LIMIT STOP	990443514	3	2	320	10 57 940 0	DOOR
LIMIT STOP	990443514	3	2	321	10 56 623 7	DOOR
LIMIT STOP	990443514	8	2	322	10 56 580 8	DOOR
LIMIT STOP BUFFER	592291314	108	1	416	10 35 008 0	CABIN
LIMIT STOP PLATE	958908914	17	1	519	10 58 193 7	GRATING CPL
LIMIT STOP SCREW M12X38 42	9885661	17	2	105	10 11 835 0	CONNECTION HOUSING
LIMIT SWITCH	11921102	17	1	49	10 52 673 3	SHUT OFF DEVICE
LIMIT SWITCH	606066314	60	3	575	10 57 559 9	CABLE LOOM
LIMIT SWITCH HOISTING ABOV	927521808	30	2	575	10 57 559 9	CABLE LOOM
LIMIT SWITCH HOISTING ABOV	927521808	60	2	609	10 57 651 9	CABLE LOOM
LIMIT SWITCH INSTALLATION	11310932	46	1	6	11 24 047 9	SUPERSTRUCTURE CPL
LIMMIT DISK	938850201	5	1	346	93 88 500 01	ROPE DRUM
LIQUEFIER	11217500	11	1	724	11 93 621 2	AIR CONDITIONING UNIT RFK
LOAD HOLDING VALVE	592022414	3	2	525	10 51 959 1	TUBING HYDR
LOAD HOOK	790386114	129	1	3	01 38 406 14	LR 1300 SX
LOCK NUT DIN 985	11219056	6	2	201	10 55 091 1	ADD-ON PRELIMINARY FUEL F
LOCK WASHER 10.5/16X2 VS1		53	12	348	93 88 497 01	PLANETARY GEARBOX
LOCK WASHER 10.5/16X2 VS1	4229913	27	2	353	96 96 543 01	WINCH FRAME
LOCK WASHER 10.5/16X2 VS1	4229913	75	12	392	90 01 376 2	SLEWING GEAR DRIVE
LOCK WASHER 12X13X18X2.1	4900093	52	4	353	96 96 543 01	WINCH FRAME
LOCK WASHER 12X13X18X2.1	4900093	27	8	392	90 01 376 2	SLEWING GEAR DRIVE
LOCK WASHER 16X17X24X2.6	423911601	32	10	346	93 88 500 01	ROPE DRUM
LOCK WASHER 16X17X24X2.6	423911601	8	8	353	96 96 543 01	WINCH FRAME
LOCK WASHER 17X24X2.6	4239009	24	8	103	10 11 834 9	DOUBLE V-PUMP
LOCK WASHER 20X21X30X2.8	423912001	69	12	467	96 93 178 01	TRACTION DRIVE
LOCKABLE TANK CAP	11101351	5	1	207	11 24 240 8	UREA CONTAINER
LOCKABLE TANK CAP	7365412	11	1	53	10 56 073 3	FUEL TANK CPL
LOCKABLE TANK CAP	7401726	5	1	394	92 76 934 01	OIL FILLER NECK
LOCKING	10572075	36	1	417	10 22 645 4	DOOR ACCESSORIES
LOCKING BAR	10351784	14	1	316	10 57 883 5	DOOR
LOCKING BAR	10351784	14	1	318	10 57 897 6	DOOR
LOCKING BAR	10351784	14	1	320	10 57 940 0	DOOR
LOCKING BAR	10351784	14	1	321	10 56 623 7	DOOR
LOCKING BAR	10351784	16	1	322	10 56 580 8	DOOR
LOCKING DEVICE	10227128	7	1	515	61 61 541 14	CABLE DRUM
LOCKING DEVICE	919617914	1	2	580	11 28 610 5	RETAINING DEVICE CPL
LOCKING PIECES	10115664	452	1	215	12 42 545 4	DIESEL ENGINE
LOCKING PIECES	10116110	521	1	215	12 42 545 4	DIESEL ENGINE
LOCKING PIECES	10119128	522	1	216	12 42 545 4	DIESEL ENGINE
LOCKING PIECES	10127979	526	1	216	12 42 545 4	DIESEL ENGINE
LOCKING PIECES	10128439	524	1	216	12 42 545 4	DIESEL ENGINE
LOCKING PIECES	10128440	1	1	292	10 12 843 9	LOCKING PIECES
LOCKING PIECES	10142747	630	1	216	12 42 545 4	DIESEL ENGINE
LOCKING PIECES	10143304	15	1	279	10 14 601 2	MANIFOLD FOR WATER CPL.
LOCKING PIECES	10144027	652	1	216	12 42 545 4	DIESEL ENGINE
LOCKING PIECES	10146374	656	1	216	12 42 545 4	DIESEL ENGINE
LOCKING PIECES	9078249	650	1	216	12 42 545 4	DIESEL ENGINE
LOCKING PIECES	9078301	654	1	216	12 42 545 4	DIESEL ENGINE
LOCKING PLATE	11942341	21	2	532	11 27 536 5	TILT-BACK SUPPORTS INSTAL
LOCKING PLATE	959912714	17	6	337	99 29 803 14	LASHING BALLAST
LOCKING RING	10216718	7	1	387	11 94 017 7	DRIVING SHAFT
LOCKING RING	10573893	3	2	593	10 50 435 2	ROPE PULLEY
LOCKING RING	10598700	9	1	447	51 24 059 14	VARIABLE DISPLACEMENT MO
LOCKING RING	11214714	7	1	448	10 50 351 3	DRIVING GEAR

Description	Item	Pos.	Quantity	Sheet	Assembly	Description
LOCKING RING 10	10447016	7	6	538	99 14 137 14	DEFLECTION PULLEY CPL
LOCKING RING 10	10447016	23	12	627	10 51 743 9	ROPE LUG CPL RFK
LOCKING RING 4	10507964	56	12	39	10 56 645 8	TERMINAL BOX
LOCKING RING 8	10447017	10	4	411	91 65 251 14	CABLE DUCT CABINET 1
LOCKING RING 8	10447017	12	2	616	11 29 451 7	ROPE GUARD CPL
LOCKING RING 8	10447017	20	10	627	10 51 743 9	ROPE LUG CPL RFK
LOCKING RING 8 A2	10558857	39	2	505	11 23 820 4	PIVOT PIECE CPL
LOCKING RING 8 A2	10558857	12	2	547	11 28 725 5	ROPE GUARD CPL
LOCKING RING 8 A2	10558857	12	2	615	11 28 908 0	ROPE GUARD CPL
LOCKING RING AEHNL.DIN 98	10220937	25	1	156	11 22 127 4	PUMP ELEMENT
LOCKING RING DIN 471	10171594	29	3	467	96 93 178 01	TRACTION DRIVE
LOCKING RING DIN 471	10424724	2	1	388	10 65 027 0	CLOSING RING
LOCKING RING DIN 471 100X4	428011901	19	5	467	96 93 178 01	TRACTION DRIVE
LOCKING RING DIN 471 12X1	4280008	31	4	105	10 11 835 0	CONNECTION HOUSING
LOCKING RING DIN 471 14X1 F	11293196	8	1	453	10 44 510 2	QUICK RELEASE FITTING
LOCKING RING DIN 471 17X1	428001014	45	1	636	54 02 703 14	FLANGE CPL
LOCKING RING DIN 471 20X1.2	428001414	6	1	537	91 90 584 14	ANGLE INDICATION
LOCKING RING DIN 471 25X1.2	4280020	3	3	515	61 61 541 14	CABLE DRUM
LOCKING RING DIN 471 28X2		43	3	348	93 88 497 01	PLANETARY GEARBOX
LOCKING RING DIN 471 28X2	4630001	56	3	392	90 01 376 2	SLEWING GEAR DRIVE
LOCKING RING DIN 471 34X1.5	428011301	7	2	237	11 44 800 5	ROCKER ARM BRACKET PRE
LOCKING RING DIN 471 35X1.5	428002914	13	1	638	54 02 705 14	DRIVE UNIT CPL
LOCKING RING DIN 471 40X2.5		33	3	348	93 88 497 01	PLANETARY GEARBOX
LOCKING RING DIN 471 40X2.5	400208003	41	3	392	90 01 376 2	SLEWING GEAR DRIVE
LOCKING RING DIN 471 45X1.7	10171583	49	3	467	96 93 178 01	TRACTION DRIVE
LOCKING RING DIN 471 45X1.7	4280032	41	2	136	10 13 802 7	REPAIR KIT SHAFT
LOCKING RING DIN 471 45X2.5	4000870	21	5	392	90 01 376 2	SLEWING GEAR DRIVE
LOCKING RING DIN 471 50X2	10171585	72	1	392	90 01 376 2	SLEWING GEAR DRIVE
LOCKING RING DIN 471 50X2	4280034	41	1	123	98 84 402	REPAIR KIT SHAFT
LOCKING RING DIN 471 55X2	428004514	30	1	637	54 02 704 14	POWER TAKE-OFF CPL
LOCKING RING DIN 471 55X3		8	5	348	93 88 497 01	PLANETARY GEARBOX
LOCKING RING DIN 471 55X3	400093303	39	3	467	96 93 178 01	TRACTION DRIVE
LOCKING RING DIN 471 A100X	10530197	360	8	86	11 24 682 0	DISTRIBUTOR GEARBOX
LOCKING RING DIN 471 A125X	485529714	370	2	86	11 24 682 0	DISTRIBUTOR GEARBOX
LOCKING RING DIN 472 100X4	428104201	7	1	470	94 44 065 03	PLANET WHEEL
LOCKING RING DIN 472 110X4	10171636	73	1	467	96 93 178 01	TRACTION DRIVE
LOCKING RING DIN 472 130X4	10171639	7	1	469	94 44 048 03	PLANET WHEEL
LOCKING RING DIN 472 23X1.2	428107714	21	1	638	54 02 705 14	DRIVE UNIT CPL
LOCKING RING DIN 472 35X1.5	428100914	46	1	636	54 02 703 14	FLANGE CPL
LOCKING RING DIN 472 46X1.7	428107101	76	1	467	96 93 178 01	TRACTION DRIVE
LOCKING RING DIN 472 62X2	4281037	14	1	638	54 02 705 14	DRIVE UNIT CPL
LOCKING RING DIN 472 80X2.5	4281013	4	1	636	54 02 703 14	FLANGE CPL
LOCKING RING DIN 472 85X3		4	1	348	93 88 497 01	PLANETARY GEARBOX
LOCKING RING DIN 472 90X3	10171632	67	1	392	90 01 376 2	SLEWING GEAR DRIVE
LOCKING RING DIN 472 90X3	10171632	7	1	468	94 44 043 03	PLANET WHEEL
LOCKING RING DIN 472 90X3	4281016	31	1	637	54 02 704 14	POWER TAKE-OFF CPL
LOCKING RING DIN 472 95X3	4281017	40	1	136	10 13 802 7	REPAIR KIT SHAFT
LOCKING RING DIN 472 95X3	4281017	40	1	144	10 13 803 2	REPAIR KIT LOCK RING
LOCKING RING DIN 472 J56X2	11268816	380	2	86	11 24 682 0	DISTRIBUTOR GEARBOX
LOCKING RING DIN 984 35X1.5	10008092	25	1	165	11 21 593 6	PUMP ELEMENT
LOCKING SET	11219369	4	1	92	11 21 991 0	PUMP HOUSING
LOUDSPEAKER	10350334	71	2	399	11 27 973 6	CABIN EL
LOWERING BRAKE VALVE	10226750	2	2	680	10 51 971 2	SELF-LOADING SYSTEM HYD
LOWERING BRAKE VALVE	11239880	2	1	690	51 16 404 14	LOWERING BRAKE VALVE
LOWERING BRAKE VALVE	11239880	2	1	692	59 21 584 14	LOWERING BRAKE VALVE
LOWERING BRAKE VALVE	11300790	160	1	704	59 21 826 14	SUPPORT CYLINDER
LOWERING BRAKE VALVE	511640414	3	1	687	10 51 973 8	SELF-LOADING SYSTEM HYD
LOWERING BRAKE VALVE	592158414	4	1	687	10 51 973 8	SELF-LOADING SYSTEM HYD
LUBE OIL FILTER ASSEMBLY	10142942	150	1	214	12 42 545 4	DIESEL ENGINE
LUBRICATING OIL LINE	10140137	7	1	283	10 14 013 6	EXHAUST TC MOUNTING

Description	Item	Pos.	Quantity	Sheet	Assembly	Description
LUBRICATING OIL PUMP	10133945	140	1	214	12 42 545 4	DIESEL ENGINE
LUBRICATING OIL PUMP	10138565	1	1	245	10 13 394 5	LUBRICATING OIL PUMP
LUBRICATING OIL PUMP	592178914	580	1	86	11 24 682 0	DISTRIBUTOR GEARBOX
LUBRICATING PINION	11231552	1	1	731	11 28 048 1	CONNECTION PARTS
LUG SHEAVE SET	992925814	11	1	357	10 51 968 6	LUG SUPERSTRUCTURE CPL
LUG SUPERSTRUCTURE CPL	10519686	1	1	355	10 51 969 1	LUG SUPERSTRUCTURE CPL
LUG SUPERSTRUCTURE CPL	10519691	25	1	2	01 38 406 14	LR 1300 SX
LUMINOUS PUSH BUTTON CO	6204372	20	2	407	10 53 171 8	KEYBOARD
LUMINOUS SWITCH CONTACT	6001593	21	5	407	10 53 171 8	KEYBOARD
LUMINOUS SWITCH CONTACT	6001593	36	1	658	11 21 530 2	CABIN REM. EL
MAGNET COIL	10215806	1	2	528	51 04 292 14	DIRECTIONAL CONTROL VALV
MAGNET COIL	11229186	1	2	25	10 59 143 5	DIRECTIONAL CONTROL VALV
MAGNET COIL	693208614	1	2	24	11 22 918 4	DIRECTIONAL CONTROL VALV
MAIN JET SOLEX 0.8MM	714001914	38	2	8	11 29 618 6	SUPERSTRUCTURE HYDR
MAIN JET SOLEX 0.8MM	714001914	5	1	721	10 51 728 1	TUBING HYDR
MAIN JET SOLEX 1.2MM	714002114	7	1	629	10 51 726 2	TUBING HYDR
MAIN JET SOLEX 1MM	714001514	12	1	210	11 92 958 8	AIR DUCT CPL
MAIN LUG HYDR	10519687	2	1	357	10 51 968 6	LUG SUPERSTRUCTURE CPL
MAINS SUPPLY BATTERY	10560137	843	1	4	01 38 406 14	LR 1300 SX
MAINTENANCE SWITCH	11060522	20	1	194	11 92 922 0	SUCTION UNIT AIR
MALE INSERT	605604714	33	1	512	11 90 151 1	CABLE LOOM 1 PIVOT PIECE E
MALE INSERT	605604714	51	1	575	10 57 559 9	CABLE LOOM
MALE INSERT	605604714	32	1	609	10 57 651 9	CABLE LOOM
MALE INSERT	605611814	43	1	512	11 90 151 1	CABLE LOOM 1 PIVOT PIECE E
MANIFOLD FOR WATER CPL.	10146012	388	1	215	12 42 545 4	DIESEL ENGINE
MANUAL VENTILATION PUMP	10129218	4	1	201	10 55 091 1	ADD-ON PRELIMINARY FUEL F
MASTER SWITCH	11214818	10	1	404	10 51 907 9	CONTROL STAND LEFT
MASTER SWITCH	11214819	10	1	332	10 52 160 2	CROSS MASTER SWITCH EL
MEASURING HOSE	7002475	11	2	501	10 56 183 8	TOOL
MIRROR	592290814	8	1	424	59 22 905 14	MIRROR + SUNN VISOR
MIRROR + SUNN VISOR	592290514	85	1	416	10 35 008 0	CABIN
MIXER	10144086	5	1	303	11 90 032 5	EXHAUST GAS SYSTEM
MODEM CPL RFK	11223226	10	1	622	11 90 722 6	MODEM RFK
MODEM RFK	11907226	438	1	3	01 38 406 14	LR 1300 SX
MODULE ASSEMBLY GROUP	916793914	1	2	69	10 56 069 4	MODULES INSTALLATION
MODULE REFUELLING SYSTE	10521559	11	1	737	10 52 155 4	REFUELLING SYSTEM RFK
MODULES INSTALLATION	10560694	49	1	6	11 24 047 9	SUPERSTRUCTURE CPL
MOISTURE SENSOR	10141261	16	1	204	11 92 923 6	ASSEMBLY INSTAL.
MONITOR CABIN ADD-ON	10578486	10	1	718	10 58 064 7	VIDEO MONITORING SYSTEM
MONITOR LCD	11240503	1	1	715	10 53 352 4	CABIN EL
MONITOR LCD CPL	11260077	24	1	410	11 26 095 7	CONTROL STAND RIGHT
MONITOR SCREEN HOUSING	11262812	2	1	433	11 26 095 6	STEERING CONSOLE RIGHT
MOTOR	592293214	52	1	428	11 93 934 6	AIR CONDITIONING
MOTOR	592293214	60	1	429	10 58 467 1	WATER VALVE
MOTOR BEARING CPL	11241138	12	1	80	11 92 885 2	CENTRAL POWER UNIT CPL
MOTOR CONTROL DEVICE	10883842	1	1	295	12 42 558 9	MOTOR CONTROL DEVICE
MOTOR CONTROL DEVICE	12425589	570	1	216	12 42 545 4	DIESEL ENGINE
MOTOR COWLING	10545910	2	1	308	11 24 409 0	PANELLING SUPERSTR. INSTA
MOTOR FLANGE		75	1	348	93 88 497 01	PLANETARY GEARBOX
MOTOR FLANGE	540273014	7	1	638	54 02 705 14	DRIVE UNIT CPL
MOTOR FLANGE	927564101	85	1	392	90 01 376 2	SLEWING GEAR DRIVE
MOTOR HOLDER	11267559	26	1	186	10 57 423 7	COOLER MOTOR
MOUNTING BRACKET	10578343	33	1	65	10 58 163 4	CABIN SUSPENSION CPL
MOUNTING LINK CPL	993560614	26	4	679	10 51 971 3	SELF-LOADING SYSTEM RFK
MOUNTING LINK LEFT CPL	11235361	11	1	71	10 51 969 4	A-FRAME ERECTION CYL INST
MOUNTING LINK RIGHT CPL	11235382	21	1	71	10 51 969 4	A-FRAME ERECTION CYL INST
MOUNTING LINK ST. CONST.	992982314	14	6	337	99 29 803 14	LASHING BALLAST
MOUNTING PARTS	10526560	11	1	334	99 23 386 14	COUNTERWEIGHT ARRANGEM
MOUNTING PARTS	11265572	11	1	58	11 27 315 5	CENTRAL GREASING
MOUNTING PARTS	11267716	11	1	730	11 28 423 6	CENTRAL LUBRICATION RFK

Description	Item	Pos.	Quantity	Sheet	Assembly	Description
MOUNTING PARTS	11283576	2	1	581	99 06 461 14	ANEMOMETER CPL
MOUNTING PARTS	11286484	11	1	573	11 24 133 3	BOOM HEAD CPL
MOUNTING PARTS	11287445	11	1	607	99 34 394 14	TIP BOOM CPL
MOUNTING PARTS	11301266	11	1	605	99 09 205 14	A-FRAME CPL
MOUNTING PARTS SUPERST	11244837	14	1	78	11 92 885 5	AGGREGATE DIESEL ENGINE
MOUNTING SHEET	10149477	2	1	286	10 14 584 5	GENERATOR, PRE-ASSEMBLE
MOUNTING TOOL	11949368	80	1	501	10 56 183 8	TOOL
MULTI-DISC CARRIER		65	1	348	93 88 497 01	PLANETARY GEARBOX
MULTI-DISC CARRIER	501559414	96	1	376	99 04 645 14	DRIVE
MULTI-DISC CARRIER	927564001	70	1	392	90 01 376 2	SLEWING GEAR DRIVE
MULTI-DISC CARRIER	944406203	75	1	467	96 93 178 01	TRACTION DRIVE
MULTI-DISK BRAKE	502038301	80	1	392	90 01 376 2	SLEWING GEAR DRIVE
MUSHROOM BUTTON	592289914	73	1	416	10 35 008 0	CABIN
NAME PLATE TILTING-BACK S	790485314	5	1	621	97 08 757 03	TILTING-BACK SUPPORTS
NAMEPLATE ACCIDENT PRE	11461533	42	1	33	11 24 519 0	SUPERSTRUCTURE EL
NAMEPLATE CONTROL PLATE	10549547	51	1	398	11 27 970 6	CABIN CPL
NAMEPLATE CONTROL PLATE	10549800	52	1	398	11 27 970 6	CABIN CPL
NAMEPLATE UVV	773195614	460	2	339	10 51 969 7	NEEDLE LUFFING WINCH
NAMEPLATE UVV	773195614	460	2	627	10 51 743 9	ROPE LUG CPL RFK
NEEDLE ADD-ON PARTS	993438714	180	1	3	01 38 406 14	LR 1300 SX
NEEDLE CAGE	747462814	20	1	637	54 02 704 14	POWER TAKE-OFF CPL
NEEDLE EL	993309414	3	1	607	99 34 394 14	TIP BOOM CPL
NEEDLE LUFFING WINCH	10519697	23	1	2	01 38 406 14	LR 1300 SX
NEEDLE LUFFING WINCH HYD	10519698	2	1	339	10 51 969 7	NEEDLE LUFFING WINCH
NEEDLES	540244214	14	72	634	54 02 701 14	PLANETARY STAGE
NEEDLES	540271114	24	48	634	54 02 701 14	PLANETARY STAGE
NON-RETURN VALVE	10099055	12	2	442	11 89 300 5	TUBING HYDR
NON-RETURN VALVE	10119971	9	1	230	10 14 671 6	OIL LINE PRE-ASSEMBLY
NON-RETURN VALVE	10352371	170	1	704	59 21 826 14	SUPPORT CYLINDER
NON-RETURN VALVE	11229182	4	1	22	10 35 148 6	VALVE BLOCK
NON-RETURN VALVE	11233729	3	2	75	10 22 540 8	VALVE BLOCK
NON-RETURN VALVE	11233742	9	1	75	10 22 540 8	VALVE BLOCK
NON-RETURN VALVE	11233749	10	1	75	10 22 540 8	VALVE BLOCK
NON-RETURN VALVE	11233751	11	1	75	10 22 540 8	VALVE BLOCK
NON-RETURN VALVE	11270155	3	1	527	59 20 224 14	LOAD HOLDING VALVE
NON-RETURN VALVE	11835950	181	4	18	11 28 647 6	VALVE BLOCK
NON-RETURN VALVE	510411614	10	1	525	10 51 959 1	TUBING HYDR
NON-RETURN VALVE	510493714	4	1	482	11 26 260 6	WINCH 1 HYDR
NON-RETURN VALVE	510493714	4	1	497	11 26 261 1	WINCH 2 HYDR
NON-RETURN VALVE	511419314	22	1	82	11 24 773 5	HYDR POWER UNIT
NON-RETURN VALVE	511458114	16	4	442	11 89 300 5	TUBING HYDR
NON-RETURN VALVE	511458814	5	1	482	11 26 260 6	WINCH 1 HYDR
NON-RETURN VALVE	511458814	5	1	497	11 26 261 1	WINCH 2 HYDR
NON-RETURN VALVE	511607214	31	1	8	11 29 618 6	SUPERSTRUCTURE HYDR
NON-RETURN VALVE	511631514	41	1	8	11 29 618 6	SUPERSTRUCTURE HYDR
NON-RETURN VALVE	592044714	33	1	8	11 29 618 6	SUPERSTRUCTURE HYDR
NON-RETURN VALVE	592052914	29	1	740	51 00 959 14	REFUEL PUMP
NON-RETURN VALVE	592071014	230	1	18	11 28 647 6	VALVE BLOCK
NOTCHED SLEEVE	540272314	33	1	636	54 02 703 14	FLANGE CPL
NOZZLE	11226142	200	1	383	51 14 347 14	SG SAFETY BLOCK
NOZZLE	11233732	7	1	75	10 22 540 8	VALVE BLOCK
NOZZLE	11239895	3	1	692	59 21 584 14	LOWERING BRAKE VALVE
NOZZLE	11249191	270	1	74	59 21 041 14	DOUBLE-ACTING CYL
NOZZLE	7014257	271	1	18	11 28 647 6	VALVE BLOCK
NOZZLE	7026135	269	2	18	11 28 647 6	VALVE BLOCK
NOZZLE HOLDER	592289414	53	1	415	10 35 008 0	CABIN
NUT LWN 8-60-106 M33 10	412705014	12	80	437	10 51 969 6	CONNECTION SUPERSTR UC
NUT M18X1.5 9SMNPB28K	9278873	11	1	113	92 78 875	PRESSURE CUT-OFF
NUT M22X1.5 11SMNPB30+C;E	9072969	13	1	148	10 12 226 5	SEAL KIT REGULATING VALVE
NUT M24X1 9SMNPB28K	9077401	28	1	148	10 12 226 5	SEAL KIT REGULATING VALVE

Description	Item	Pos.	Quantity	Sheet	Assembly	Description
O-RING		13	1	348	93 88 497 01	PLANETARY GEARBOX
O-RING		19	2	348	93 88 497 01	PLANETARY GEARBOX
O-RING		22	1	348	93 88 497 01	PLANETARY GEARBOX
O-RING		51	1	348	93 88 497 01	PLANETARY GEARBOX
O-RING		61	1	348	93 88 497 01	PLANETARY GEARBOX
O-RING		73	1	348	93 88 497 01	PLANETARY GEARBOX
O-RING		76	1	348	93 88 497 01	PLANETARY GEARBOX
O-RING		78	8	348	93 88 497 01	PLANETARY GEARBOX
O-RING	10002167	4	2	275	10 14 821 5	THERMOSTAT HOUSING ASS
O-RING	10002309	24	1	133	10 12 224 8	RK ADDITIONAL PARTS
O-RING	10002309	24	1	146	10 13 803 3	SEAL KIT CPL.
O-RING	10002310	3	1	300	11 41 737 0	AIR COMPRESSOR
O-RING	10004261	9	1	219	10 14 768 6	POWER UNIT SUPPORT ATT
O-RING	10016874	17	2	145	10 12 226 2	REGULATION REPAIR KIT
O-RING	10016947	28	2	147	10 13 803 4	GASKET KIT INT.FLANGE
O-RING	10097551	4	1	99	11 26 744 7	SHUTTLE VALVE
O-RING	10115240	27	1	451	11 22 473 8	ADJUSTMENT
O-RING	10116255	1	1	269	10 29 998 8	HEATING FLANGE PRE.ASS.
O-RING	10128559	2	1	251	10 15 278 7	SEAL KIT HIGH PRESSURE P
O-RING	10128671	1	1	251	10 15 278 7	SEAL KIT HIGH PRESSURE P
O-RING	10128678	3	1	251	10 15 278 7	SEAL KIT HIGH PRESSURE P
O-RING	10130757	2	1	255	10 13 508 0	HIGH PRESSURE CONNECTO
O-RING	10217777	2	1	292	10 12 843 9	LOCKING PIECES
O-RING	10218370	2	1	288	11 38 664 5	STARTER
O-RING	10218953	3	1	50	10 51 572 4	RETURN FILTER
O-RING	10225991	10	1	170	51 14 145 14	PRESSURE LIMITING VALVE
O-RING	10282774	4	2	218	10 15 445 8	CYLINDER
O-RING	10340226	20	2	202	10 30 300 7	FUEL PREFILTER
O-RING	10350604	2	1	171	10 22 358 1	PRESSURE FILTER
O-RING	10351605	22	1	156	11 22 127 4	PUMP ELEMENT
O-RING	10351605	22	1	162	10 35 161 0	SEALING SET CPL
O-RING	10351608	23	4	156	11 22 127 4	PUMP ELEMENT
O-RING	10351608	23	4	162	10 35 161 0	SEALING SET CPL
O-RING	10352356	105	3	704	59 21 826 14	SUPPORT CYLINDER
O-RING	10352361	135	1	704	59 21 826 14	SUPPORT CYLINDER
O-RING	10352362	145	1	704	59 21 826 14	SUPPORT CYLINDER
O-RING	10548553	59	1	376	99 04 645 14	DRIVE
O-RING	10593504	320	2	86	11 24 682 0	DISTRIBUTOR GEARBOX
O-RING	10802833	22	1	165	11 21 593 6	PUMP ELEMENT
O-RING	11008055	3	1	265	10 14 736 9	INTAKE STACK ASSEMBLY
O-RING	11066168	4	1	245	10 13 394 5	LUBRICATING OIL PUMP
O-RING	11212730	10	1	97	11 06 730 4	SHUTDOWN VALVE
O-RING	11215707	23	4	165	11 21 593 6	PUMP ELEMENT
O-RING	11219374	8	1	100	11 21 935 0	PUMP COVER
O-RING	11219376	10	1	102	11 21 991 8	BEARING FLANGE
O-RING	11220389	24	1	156	11 22 127 4	PUMP ELEMENT
O-RING	11220389	24	1	162	10 35 161 0	SEALING SET CPL
O-RING	11221283	2	1	161	11 22 127 6	ADAPTOR
O-RING	11224740	25	1	447	51 24 059 14	VARIABLE DISPLACEMENT MO
O-RING	11226084	90	1	383	51 14 347 14	SG SAFETY BLOCK
O-RING	11226144	210	4	383	51 14 347 14	SG SAFETY BLOCK
O-RING	11239916	4	1	690	51 16 404 14	LOWERING BRAKE VALVE
O-RING	11249804	9	1	446	11 89 617 8	SEALING SET
O-RING	11251423	8	2	446	11 89 617 8	SEALING SET
O-RING	11267377	6	1	90	11 21 992 7	COVER
O-RING	11267377	6	1	91	11 21 992 9	COVER
O-RING	11267418	9	1	95	10 59 347 4	PRESSURE LIMITING VALVE
O-RING	11267418	8	1	96	11 21 936 9	LOCKING SET
O-RING	11910327	110	1	526	10 09 917 3	DOUBLE-ACTING CYL
O-RING	11940147	6	1	384	51 22 991 14	OIL MOTOR

Description	Item	Pos.	Quantity	Sheet	Assembly	Description
O-RING	510587908	26	1	179	10 57 532 2	INTAKE PIPE OIL CPL
O-RING	592293414	180	1	428	11 93 934 6	AIR CONDITIONING
O-RING	592293514	190	1	428	11 93 934 6	AIR CONDITIONING
O-RING	7000329	23	2	108	92 74 731	SEAL KIT CONNECTING HOUS
O-RING	7004512	32	1	103	10 11 834 9	DOUBLE V-PUMP
O-RING	7004512	32	1	126	92 76 408	SEAL KIT DOUBLE PUMP
O-RING	7006213	9	1	96	11 21 936 9	LOCKING SET
O-RING	7007492	10	1	95	10 59 347 4	PRESSURE LIMITING VALVE
O-RING	7009080	5	1	275	10 14 821 5	THERMOSTAT HOUSING ASS
O-RING	7019733	2	1	160	70 19 834	ADAPTOR
O-RING	7022118	29	2	147	10 13 803 4	GASKET KIT INT.FLANGE
O-RING	7022118	14	1	447	51 24 059 14	VARIABLE DISPLACEMENT MO
O-RING	7028151	26	1	451	11 22 473 8	ADJUSTMENT
O-RING	704274808	70	5	529	51 14 755 14	PRESSURE LIMITING VALVE
O-RING	726401514	15	1	53	10 56 073 3	FUEL TANK CPL
O-RING	726403201	89	1	467	96 93 178 01	TRACTION DRIVE
O-RING	726403514	18	1	29	51 05 719 14	QUICK-FITTING THREAD COU
O-RING	726404414	20	4	180	10 58 017 0	RETURN PIPE
O-RING	726408414	19	1	29	51 05 719 14	QUICK-FITTING THREAD COU
O-RING	726409714	27	1	179	10 57 532 2	INTAKE PIPE OIL CPL
O-RING	726409814	24	3	48	10 56 070 1	TANK HYDR CPL
O-RING	726410201	79	1	467	96 93 178 01	TRACTION DRIVE
O-RING	726411214	29	3	82	11 24 773 5	HYDR POWER UNIT
O-RING	7264148	24	1	392	90 01 376 2	SLEWING GEAR DRIVE
O-RING	726424214	16	1	638	54 02 705 14	DRIVE UNIT CPL
O-RING	726428401	91	1	467	96 93 178 01	TRACTION DRIVE
O-RING	726428714	25	2	48	10 56 070 1	TANK HYDR CPL
O-RING	726429814	5	1	99	11 26 744 7	SHUTTLE VALVE
O-RING	726431414	25	2	179	10 57 532 2	INTAKE PIPE OIL CPL
O-RING	726431414	29	1	179	10 57 532 2	INTAKE PIPE OIL CPL
O-RING	726435801	68	1	392	90 01 376 2	SLEWING GEAR DRIVE
O-RING	726450601	6	2	467	96 93 178 01	TRACTION DRIVE
O-RING	726453901	69	1	392	90 01 376 2	SLEWING GEAR DRIVE
O-RING	726456214	58	1	376	99 04 645 14	DRIVE
O-RING	726456914	8	1	27	51 33 139 14	DOUBLE-ACTING CYL
O-RING	726456914	8	1	722	59 20 008 14	DOUBLE-ACTING CYL
O-RING	726459414	12	1	447	51 24 059 14	VARIABLE DISPLACEMENT MO
O-RING	726461014	24	2	442	11 89 300 5	TUBING HYDR
O-RING	726461714	9	2	381	10 55 216 1	TUBING HYDR
O-RING	7264625	1	1	227	50 04 624	OIL DRAIN PLUG
O-RING	726466314	180	1	74	59 21 041 14	DOUBLE-ACTING CYL
O-RING	726469014	70	1	636	54 02 703 14	FLANGE CPL
O-RING	7372232	3	1	388	10 65 027 0	CLOSING RING
O-RING	7380015	22	2	108	92 74 731	SEAL KIT CONNECTING HOUS
O-RING	7380083	3	1	277	10 14 274 2	COOLANT PIPE BEND ADD-ON
O-RING	7380120	28	2	108	92 74 731	SEAL KIT CONNECTING HOUS
O-RING	7380297	39	1	136	10 13 802 7	REPAIR KIT SHAFT
O-RING	7380297	39	1	144	10 13 803 2	REPAIR KIT LOCK RING
O-RING	7380297	31	1	146	10 13 803 3	SEAL KIT CPL.
O-RING	7380297	21	1	152	10 13 452 1	THROUGH DRIVE
O-RING	7380348	24	2	108	92 74 731	SEAL KIT CONNECTING HOUS
O-RING	7380423	12	1	226	10 15 529 8	OIL SUMP PRE-ASS.
O-RING	7380574	18	1	145	10 12 226 2	REGULATION REPAIR KIT
O-RING	7380576	27	1	148	10 12 226 5	SEAL KIT REGULATING VALVE
O-RING	7380596	81	1	110	92 73 644	SEAL KIT REGULATING VALVE
O-RING	7380601	22	1	150	10 13 000 5	THROUGH DRIVE
O-RING	7380601	22	1	152	10 13 452 1	THROUGH DRIVE
O-RING	7380605	22	1	149	10 12 987 4	THROUGH DRIVE
O-RING	7380605	40	1	189	11 24 114 1	COOLER INSTALLATION CHA
O-RING	7380605	5	1	266	10 14 736 4	AIR INTAKE ASSEMBLY

Description	Item	Pos.	Quantity	Sheet	Assembly	Description
O-RING	7380608	26	1	148	10 12 226 5	SEAL KIT REGULATING VALVE
O-RING	7380610	23	2	147	10 13 803 4	GASKET KIT INT.FLANGE
O-RING	7380612	65	1	110	92 73 644	SEAL KIT REGULATING VALVE
O-RING	7380648	32	10	108	92 74 731	SEAL KIT CONNECTING HOUS
O-RING	7380648	64	5	109	90 74 418	REGULATING VALVE
O-RING	7380648	64	5	110	92 73 644	SEAL KIT REGULATING VALVE
O-RING	7380653	8	2	219	10 14 768 6	POWER UNIT SUPPORT ATT
O-RING	7380653	9	1	290	10 11 557 7	FLYWHEEL HOUSING MOUNT
O-RING	7380656	18	1	115	90 77 464	RS FLANGE
O-RING	7380656	18	4	126	92 76 408	SEAL KIT DOUBLE PUMP
O-RING	7380657	36	1	124	92 68 016	REPAIR KIT LOCK RING
O-RING	7380657	2	1	298	10 14 637 4	LOCKING PIECES
O-RING	7380691	22	1	151	10 13 235 7	CONSTRUCTION KIT OUTPUT
O-RING	7380691	22	1	153	10 13 806 8	THROUGH DRIVE
O-RING	7380865	62	1	110	92 73 644	SEAL KIT REGULATING VALVE
O-RING	7380868	70	1	110	92 73 644	SEAL KIT REGULATING VALVE
O-RING	7380868	70	1	117	92 75 443	REPAIR SET LID
O-RING	7380888	56	2	108	92 74 731	SEAL KIT CONNECTING HOUS
O-RING	7380888	61	1	109	90 74 418	REGULATING VALVE
O-RING	7380888	61	1	110	92 73 644	SEAL KIT REGULATING VALVE
O-RING	7380935	2	1	269	10 29 998 8	HEATING FLANGE PRE.ASS.
O-RING	7380955	9	2	243	10 12 948 0	OIL COOLER, PRE-ASSEMBLE
O-RING	7380970	41	1	189	11 24 114 1	COOLER INSTALLATION CHA
O-RING	7380970	7	1	267	10 14 967 6	CONNECTING LINE ADD-ON
O-RING	7380986	12	1	202	10 30 300 7	FUEL PREFILTER
O-RING	7380987	21	1	148	10 12 226 5	SEAL KIT REGULATING VALVE
O-RING	7381004	70	1	125	92 73 187	REPAIR KIT MAGNET
O-RING	7381013	23	2	133	10 12 224 8	RK ADDITIONAL PARTS
O-RING	7381013	23	2	146	10 13 803 3	SEAL KIT CPL.
O-RING	7381056	24	1	110	92 73 644	SEAL KIT REGULATING VALVE
O-RING	7381056	24	1	113	92 78 875	PRESSURE CUT-OFF
O-RING	7381082	82	1	110	92 73 644	SEAL KIT REGULATING VALVE
O-RING	7381087	63	1	110	92 73 644	SEAL KIT REGULATING VALVE
O-RING	7381103	60	1	110	92 73 644	SEAL KIT REGULATING VALVE
O-RING	7381103	2	1	293	10 12 797 9	LOCKING PIECES
O-RING	7381127	21	1	142	10 12 352 8	STOP PLUG
O-RING	7381127	21	1	147	10 13 803 4	GASKET KIT INT.FLANGE
O-RING	7381128	20	1	142	10 12 352 8	STOP PLUG
O-RING	7381128	22	1	147	10 13 803 4	GASKET KIT INT.FLANGE
O-RING	7381438	12	1	131	10 12 321 4	SEAL KIT PRESSUR.CONTROL
O-RING	7381439	11	1	131	10 12 321 4	SEAL KIT PRESSUR.CONTROL
O-RING	7381440	10	1	131	10 12 321 4	SEAL KIT PRESSUR.CONTROL
O-RING	7381442	23	1	110	92 73 644	SEAL KIT REGULATING VALVE
O-RING	7381442	23	1	113	92 78 875	PRESSURE CUT-OFF
O-RING	7381446	22	1	148	10 12 226 5	SEAL KIT REGULATING VALVE
O-RING	7381526	4	1	278	10 14 274 4	COOLING WATER AIR BLEED
O-RING	7381593	7	2	223	10 14 201 8	CRANKCASE BREATHER ASS
O-RING	7381615	9	1	279	10 14 601 2	MANIFOLD FOR WATER CPL.
O-RING	7381685	4	1	246	10 13 394 7	SUCTION PUMP WITH FASTEN
O-RING	7381779	7	2	219	10 14 768 6	POWER UNIT SUPPORT ATT
O-RING	7381779	5	2	279	10 14 601 2	MANIFOLD FOR WATER CPL.
O-RING	7382059	5	1	245	10 13 394 5	LUBRICATING OIL PUMP
O-RING	7412937	15	1	202	10 30 300 7	FUEL PREFILTER
O-RING	761032203	73	1	392	90 01 376 2	SLEWING GEAR DRIVE
O-RING	790311914	30	1	82	11 24 773 5	HYDR POWER UNIT
O-RING	790347014	330	1	86	11 24 682 0	DISTRIBUTOR GEARBOX
O-RING	9177947	28	1	179	10 57 532 2	INTAKE PIPE OIL CPL
O-RING PLATE	511486614	30	1	529	51 14 755 14	PRESSURE LIMITING VALVE
OBSTRUCTION LIGHT	10226144	31	2	657	99 24 978 14	BOOM ELECTRICS
OIL COOLER	10352185	1	1	31	10 22 592 5	COOLER MOTOR

Description	Item	Pos.	Quantity	Sheet	Assembly	Description
OIL COOLER	5700088	2	1	243	10 12 948 0	OIL COOLER, PRE-ASSEMBLE
OIL COOLER ADD-ON	10129481	130	1	214	12 42 545 4	DIESEL ENGINE
OIL COOLER HOUSING	10129479	1	1	243	10 12 948 0	OIL COOLER, PRE-ASSEMBLE
OIL COOLER INSTALLATION	10519616	14	1	6	11 24 047 9	SUPERSTRUCTURE CPL
OIL COOLER, PRE-ASSEMBLE	10129480	1	1	242	10 12 948 1	OIL COOLER ADD-ON
OIL DIPSTICK	10145918	2	1	228	10 14 591 9	OIL DIPSTICK WITH PIPE
OIL DIPSTICK	11290849	180	1	86	11 24 682 0	DISTRIBUTOR GEARBOX
OIL DIPSTICK	927610201	15	1	352	93 36 755 01	OIL-GAUGING INSTRUMENT
OIL DIPSTICK CPL.	10142567	4	1	181	11 24 113 9	ADD-ON PARTS DIESEL ENGIN
OIL DIPSTICK WITH PIPE	10145919	21	1	214	12 42 545 4	DIESEL ENGINE
OIL DRAIN PLUG	5004624	8	1	226	10 15 529 8	OIL SUMP PRE-ASS.
OIL DRAIN PLUG G1"X11 MS	403900714	17	4	48	10 56 070 1	TANK HYDR CPL
OIL DRAIN PLUG G1"X11 MS	403900714	16	1	53	10 56 073 3	FUEL TANK CPL
OIL DRAIN PLUG G1"X11 MS	403900714	33	2	179	10 57 532 2	INTAKE PIPE OIL CPL
OIL DRAIN PLUG G1"X11 MS	403900714	41	1	183	11 94 151 8	COOLER INSTALLATION WATE
OIL DRAIN PLUG M22X1.5	511442214	27	1	82	11 24 773 5	HYDR POWER UNIT
OIL FILLER NECK	927693401	95	1	392	90 01 376 2	SLEWING GEAR DRIVE
OIL LEVEL SIGHT GLASS	10022192	24	1	352	93 36 755 01	OIL-GAUGING INSTRUMENT
OIL LEVEL SIGHT GLASS	774322101	77	2	392	90 01 376 2	SLEWING GEAR DRIVE
OIL LINE	10583845	4	1	361	10 55 156 3	WINCH
OIL LINE	11893216	6	1	485	10 53 039 8	WINCH
OIL LINE PRE-ASSEMBLY	10146716	25	1	214	12 42 545 4	DIESEL ENGINE
OIL MOTOR	510232214	2	1	629	10 51 726 2	TUBING HYDR
OIL MOTOR	512239414	5	1	190	10 57 423 9	COOLER MOTOR
OIL MOTOR	512250114	6	1	186	10 57 423 7	COOLER MOTOR
OIL MOTOR	512252714	2	1	341	10 51 969 8	NEEDLE LUFFING WINCH HYD
OIL MOTOR	512294214	2	1	358	10 51 968 7	MAIN LUG HYDR
OIL MOTOR	512299114	3	2	381	10 55 216 1	TUBING HYDR
OIL MOTOR	550945314	6	1	31	10 22 592 5	COOLER MOTOR
OIL RETURN PIPE	10131350	1	1	230	10 14 671 6	OIL LINE PRE-ASSEMBLY
OIL RETURN PIPE	10140138	17	1	283	10 14 013 6	EXHAUST TC MOUNTING
OIL SIGHT GLASS	5106280	18	4	48	10 56 070 1	TANK HYDR CPL
OIL SUMP	10155297	1	1	226	10 15 529 8	OIL SUMP PRE-ASS.
OIL SUMP PRE-ASS.	10155298	1	1	225	10 14 844 4	OIL SUMP WITH FASTENING
OIL SUMP WITH FASTENING	10148444	20	1	214	12 42 545 4	DIESEL ENGINE
OIL-GAUGING INSTRUMENT	933675501	10	1	345	96 96 248 01	WINCH
OMNIFIT	7016208	106	1	135	10 13 802 6	RK CYL.+CONTROL PLATE+SH
OMNIFIT	7016208	106	1	141	10 14 131 6	TERMINAL BOARD PRE-ASS.
OPERATING HOURS COUNTE	10599206	31	1	404	10 51 907 9	CONTROL STAND LEFT
OPERATIONAL CONTROL	592291914	123	1	416	10 35 008 0	CABIN
OPERATOR SEAT	10225068	11	1	398	11 27 970 6	CABIN CPL
ORIFICE	10226479	5	1	419	10 35 007 6	SLIDING DOOR
ORIFICE	11248964	21	1	308	11 24 409 0	PANELLING SUPERSTR. INSTA
ORIFICE	11248966	22	1	308	11 24 409 0	PANELLING SUPERSTR. INSTA
ORIFICE	11248990	19	2	308	11 24 409 0	PANELLING SUPERSTR. INSTA
ORIFICE	11248991	15	2	308	11 24 409 0	PANELLING SUPERSTR. INSTA
ORIFICE	11248992	20	2	308	11 24 409 0	PANELLING SUPERSTR. INSTA
OUTER MULTI-DISC	501540414	97	8	376	99 04 645 14	DRIVE
OUTER MULTI-DISC	503192801	8	10	351	93 95 895 01	BRAKE MULTI-DISC SET
OUTER MULTI-DISC	503199301	5	9	393	50 20 383 01	MULTI-DISK BRAKE
OUTER MULTI-DISC	503199301	4	9	395	93 93 478 01	BRAKE MULTI-DISC SET
OUTLET MANIFOLD	10141440	1	1	281	10 14 144 3	EXHAUST PIPE PRE-ASS.
OUTLET MANIFOLD	10141442	2	2	281	10 14 144 3	EXHAUST PIPE PRE-ASS.
OUTLET MODULE	11403695	20	1	304	11 40 371 1	SCR CPL.
OUTPUT SHAFT	938585201	10	1	392	90 01 376 2	SLEWING GEAR DRIVE
OUTPUT SHAFT HOUSING	927562201	1	1	392	90 01 376 2	SLEWING GEAR DRIVE
OUTRIGGER	919014814	23	1	662	99 10 116 14	ROPE GUIDE
OUTRIGGER	919017314	24	1	662	99 10 116 14	ROPE GUIDE
OUTSIDE MIRROR	779002114	43	1	398	11 27 970 6	CABIN CPL
OVAL SCREW M6X20 10.9	10342275	12	14	449	10 00 794 7	HYDRAULIC PARTS DRIVING G

Description	Item	Pos.	Quantity	Sheet	Assembly	Description
OVERPRESSURE VALVE	10152592	10	1	243	10 12 948 0	OIL COOLER, PRE-ASSEMBLE
PAN-HEAD SCREW	11940203	12	7	386	11 94 017 6	HYDRAULIC PARTS DRIVING G
PAN-HEAD SCREW ISO 7045	10541536	19	20	398	11 27 970 6	CABIN CPL
PAN-HEAD SCREW ISO 7045 M	10541540	4	11	433	11 26 095 6	STEERING CONSOLE RIGHT
PAN-HEAD SCREW ISO 7045 M	10541540	42	2	741	10 52 155 9	MODULE REFUELLING SYSTE
PAN-HEAD SCREW ISO 7045	10541561	28	16	398	11 27 970 6	CABIN CPL
PAN-HEAD SCREW ISO 7045	10541561	6	3	434	97 07 857 03	SPIRIT LEVEL ASSY.
PAN-HEAD SCREW ISO 7045	400180214	35	8	398	11 27 970 6	CABIN CPL
PAN-HEAD SCREW ISO 7045	400180214	30	4	407	10 53 171 8	KEYBOARD
PAN-HEAD SCREW ISO 7045	10541563	16	2	737	10 52 155 4	REFUELLING SYSTEM RFK
PAN-HEAD SCREW ISO 7045	10541565	19	2	737	10 52 155 4	REFUELLING SYSTEM RFK
PAN-HEAD SCREW ISO 7045	400180314	36	15	398	11 27 970 6	CABIN CPL
PANEL SCREW	11219933	8	1	92	11 21 991 0	PUMP HOUSING
PANELLING RIGHT	592289814	72	1	416	10 35 008 0	CABIN
PANELLING SUPERSTR. INSTA	11244090	11	1	78	11 92 885 5	AGGREGATE DIESEL ENGINE
PAPER FLEECE	10350585	1	1	54	11 28 086 8	AERATION FILTER
PARALLEL PIN	10598777	23	2	451	11 22 473 8	ADJUSTMENT
PARALLEL PIN	11903905	5	1	384	51 22 991 14	OIL MOTOR
PARALLEL PIN 8M6X24 ST 2 K	10011777	9	2	247	10 13 382 3	SUCTION PUMP PRE-ASS.
PARALLEL PIN ISO 2338 6M6X	570948608	33	1	165	11 21 593 6	PUMP ELEMENT
PARALLEL PIN ISO 8734 10M6X	4981077	22	2	133	10 12 224 8	RK ADDITIONAL PARTS
PARALLEL PIN ISO 8734 4M6X	4901104	8	1	247	10 13 382 3	SUCTION PUMP PRE-ASS.
PARALLEL PIN ISO 8734 5M6X	4980046	44	2	107	10 11 835 7	REPAIR KIT CONNECTION HO
PARALLEL PIN ISO 8734 6M6X	4980000	3	1	246	10 13 394 7	SUCTION PUMP WITH FASTEN
PARTITION	602832314	72	1	402	10 55 963 5	SWITCH CABINET X1
PASSAGE NIPPLE BLOCK	11274920	2	1	731	11 28 048 1	CONNECTION PARTS
PC-BOARD PLATE 1	917585714	51	1	402	10 55 963 5	SWITCH CABINET X1
PEDESTAL	10512048	101	1	416	10 35 008 0	CABIN
PEDESTAL	10512061	89	1	416	10 35 008 0	CABIN
PEDESTAL	11245755	1	2	644	11 24 147 8	UC PLATFORM
PEDESTAL	992671814	1	2	478	99 23 389 14	UC PLATFORM
PENDULUM	990627014	23	1	582	10 59 863 3	PENDULUM CPL
PENDULUM CPL	10598633	1	1	581	99 06 461 14	ANEMOMETER CPL
PERFORATED PLATE	10135441	2	1	226	10 15 529 8	OIL SUMP PRE-ASS.
PERFORATED PLATE	10565879	10	1	322	10 56 580 8	DOOR
PERFORATED PLATE	10566239	12	1	321	10 56 623 7	DOOR
PERFORATED PLATE	10578841	12	1	316	10 57 883 5	DOOR
PERFORATED PLATE	10578971	10	1	318	10 57 897 6	DOOR
PERFORATED PLATE	10579423	12	1	320	10 57 940 0	DOOR
PERFORATED PLATE	11290846	165	2	86	11 24 682 0	DISTRIBUTOR GEARBOX
PILOT CONTROLLED CHECK	510466114	2	1	721	10 51 728 1	TUBING HYDR
PIN	10115230	11	1	451	11 22 473 8	ADJUSTMENT
PIN	10350555	32	2	620	99 23 415 14	STAY ROPE ROD
PIN	10529084	15	1	718	10 58 064 7	VIDEO MONITORING SYSTEM
PIN	10529086	16	1	718	10 58 064 7	VIDEO MONITORING SYSTEM
PIN	10572058	11	4	700	11 89 568 6	SELF-LOADING SYSTEM RFK
PIN	10574630	1	1	494	10 57 462 9	PIN CPL
PIN	11271461	4	1	599	79 04 871 14	BOTTOM HOOK BLOCK
PIN	11493575	4	1	592	79 04 112 14	BOTTOM HOOK BLOCK
PIN	11942798	42	1	65	10 58 163 4	CABIN SUSPENSION CPL
PIN	11944129	30	4	176	11 24 113 8	MOTOR BEARING CPL
PIN	11946386	98	3	507	11 23 820 4	PIVOT PIECE CPL
PIN	11947719	27	2	328	11 24 483 7	MOUNTING PARTS SUPERST
PIN	592291514	1	1	425	59 22 914 14	PLATFORM FIXATION CPL
PIN	9477429	18	1	114	10 13 975 2	REPAIR SET SWIVEL YOKE
PIN	9477439	13	2	105	10 11 835 0	CONNECTION HOUSING
PIN	949388414	2	2	621	97 08 757 03	TILTING-BACK SUPPORTS
PIN	950250014	19	2	539	99 23 394 14	ANCHORING ROD CPL
PIN	950250014	12	4	556	10 54 054 8	ANCHORING ROD CPL
PIN	950250014	12	4	564	10 54 055 1	ANCHORING ROD CPL

Description	Item	Pos.	Quantity	Sheet	Assembly	Description
PIN	950250014	12	4	571	10 54 055 5	ANCHORING ROD CPL
PIN	950250014	12	6	586	10 54 056 7	ANCHORING ROD CPL
PIN	956418614	17	2	620	99 23 415 14	STAY ROPE ROD
PIN	956711314	23	8	679	10 51 971 3	SELF-LOADING SYSTEM RFK
PIN	956802414	13	1	588	99 23 398 14	ROLLER SET
PIN	956802514	14	1	588	99 23 398 14	ROLLER SET
PIN	957056314	4	4	663	99 31 838 14	INTERMEDIATE TENSIONING
PIN	958280214	65	2	507	11 23 820 4	PIVOT PIECE CPL
PIN	958280214	12	4	557	10 53 216 2	ANCHORING ROD CPL
PIN	958280214	12	4	565	10 53 216 3	ANCHORING ROD CPL
PIN	958280214	12	4	572	10 53 216 4	ANCHORING ROD CPL
PIN	958280214	11	4	579	11 28 648 4	MOUNTING PARTS
PIN	958280214	16	4	620	99 23 415 14	STAY ROPE ROD
PIN	958554414	13	2	613	11 28 744 5	MOUNTING PARTS
PIN	959866614	7	1	366	99 29 258 14	LUG SHEAVE SET
PIN	959912614	16	6	337	99 29 803 14	LASHING BALLAST
PIN	968523914	27	1	65	10 58 163 4	CABIN SUSPENSION CPL
PIN	9888133	19	1	114	10 13 975 2	REPAIR SET SWIVEL YOKE
PIN 100X1606 LHRD900-40;100	11239740	22	1	535	11 24 444 4	A-FRAME 1 CPL
PIN 110X198 LHRD900-40;100	959912214	13	6	337	99 29 803 14	LASHING BALLAST
PIN 115X200 LHRD900-40;100	949389914	12	2	535	11 24 444 4	A-FRAME 1 CPL
PIN 120X270 35NICRMOV125	959712214	1	2	70	99 23 451 14	PIVOT BOLT INSTALLATION
PIN 15.9X59X25X83 LHRD750-	950387314	59	10	642	10 55 372 1	ROOF RAILING RFK
PIN 150X330	11230438	4	1	456	51 33 141 14	DOUBLE-ACTING CYL
PIN 20X23 PA 6 G	956266814	3	1	537	91 90 584 14	ANGLE INDICATION
PIN 30X46 LHRD900-40;10019	11949153	15	2	555	11 94 087 8	ASSEMBLY UNIT
PIN 30X46 LHRD900-40;10019	11949153	37	2	662	99 10 116 14	ROPE GUIDE
PIN 30X46 LHRD900-40;10019	11949153	3	1	664	99 10 125 14	FORK
PIN 35X 120 LHRD750-30;10019	953305103	27	1	662	99 10 116 14	ROPE GUIDE
PIN 40X182 LHRD900-40;10019	10351894	11	4	339	10 51 969 7	NEEDLE LUFFING WINCH
PIN 48X58 LHRD900-40;10019	485568414	38	2	662	99 10 116 14	ROPE GUIDE
PIN 50X138 LHRD900-40;10019	10534039	13	4	71	10 51 969 4	A-FRAME ERECTION CYL INST
PIN 50X157 LHRD900-40;10019	956847814	2	2	580	11 28 610 5	RETAINING DEVICE CPL
PIN 50X95 LHRD900-40;10019	11938016	11	2	438	99 18 041 14	LASHING SUPERSTRUCTURE
PIN 53X67 LHRD900-40;10019	10550993	12	2	579	11 28 648 4	MOUNTING PARTS
PIN 53X82 LHRD900-40;10019	949946714	13	2	579	11 28 648 4	MOUNTING PARTS
PIN 55X92 LHRD900-40;10019	956215014	33	3	620	99 23 415 14	STAY ROPE ROD
PIN 58X113 LHRD900-40;10019	949174814	15	2	614	95 70 956 14	ANCHORING ROD CPL
PIN 58X95 LHRD900-40;10019	948959414	14	8	614	95 70 956 14	ANCHORING ROD CPL
PIN 58X95 LHRD900-40;10019	948959414	19	6	620	99 23 415 14	STAY ROPE ROD
PIN 60X110 LHRD750-30;10019	950663614	17	2	71	10 51 969 4	A-FRAME ERECTION CYL INST
PIN 63X120 LHRD900-40;10019	949351814	10	1	685	11 23 619 7	SELF-LOADING SYSTEM RFK
PIN 65X193 LHRD900-40;10019	957831614	10	4	336	10 52 656 0	MOUNTING PARTS
PIN 68X105 LHRD900-40;10019	11949158	39	2	662	99 10 116 14	ROPE GUIDE
PIN 75X240 LHRD900-40;10019	959912114	12	6	337	99 29 803 14	LASHING BALLAST
PIN 80X205 LHRD900-40;10019	949761814	12	2	613	11 28 744 5	MOUNTING PARTS
PIN 80X371 LHRD900-40;10019	950581614	10	1	517	11 28 726 4	PIN CPL
PIN 83X131 LHRD900-40;10019	959921514	12	6	539	99 23 394 14	ANCHORING ROD CPL
PIN 83X131 LHRD900-40;10019	959921514	17	2	586	10 54 056 7	ANCHORING ROD CPL
PIN CONTACT	605615814	36	5	512	11 90 151 1	CABLE LOOM 1 PIVOT PIECE E
PIN CONTACT	605619814	34	14	512	11 90 151 1	CABLE LOOM 1 PIVOT PIECE E
PIN CONTACT	605619814	33	8	609	10 57 651 9	CABLE LOOM
PIN CONTACT	6905271	13	2	739	10 52 957 6	REFUELLING PUMP CPL
PIN CPL	10574629	11	4	493	11 22 050 0	WINCHES INSTALLATION
PIN CPL	10574629	11	4	499	11 22 050 1	WINCHES INSTALLATION
PIN CPL	11262110	11	4	706	11 89 568 8	SELF-LOADING SYSTEM RFK
PIN CPL	11287264	11	4	505	11 23 820 4	PIVOT PIECE CPL
PIN CPL	11287264	11	4	546	11 24 570 3	BOOM INTERMEDIATE SECTIO
PIN CPL	11287264	11	4	562	11 24 570 9	BOOM INTERMEDIATE SECTIO
PIN CPL	11287264	11	4	569	11 24 571 5	BOOM INTERMEDIATE SECTIO

Description	Item	Pos.	Quantity	Sheet	Assembly	Description
PIN CPL	959835714	12	4	706	11 89 568 8	SELF-LOADING SYSTEM RFK
PIN CPL	992921714	29	2	463	11 89 365 0	CRAWLER CARRIER RIGHT CP
PIN CPL	992921714	29	2	474	11 89 365 1	CRAWLER CARRIER LEFT CP
PIN DIN 1435-B 35H11X90X80	453050914	5	12	663	99 31 838 14	INTERMEDIATE TENSIONING
PIN DIN 1435-B 35H11X90X80	453050914	5	14	665	97 05 997 03	INTERMEDIATE TENSIONING
PIN DIN EN 22340-B 25F7X120	485501714	23	2	65	10 58 163 4	CABIN SUSPENSION CPL
PIN DIN EN 22340-B 25F8X88	450052114	30	2	65	10 58 163 4	CABIN SUSPENSION CPL
PIN DIN EN 22340-B 25F8X88	450052114	2	2	70	99 23 451 14	PIVOT BOLT INSTALLATION
PIN DIN EN 22341-B 40H11X11	451436614	13	1	65	10 58 163 4	CABIN SUSPENSION CPL
PIN DIN EN 22341-B 50H11X110	485519214	19	1	685	11 23 619 7	SELF-LOADING SYSTEM RFK
PIN DIN EN 22341-B 80H11X160	485518914	19	2	679	10 51 971 3	SELF-LOADING SYSTEM RFK
PIN EN 10060 28X220X192 X20	942594714	26	2	662	99 10 116 14	ROPE GUIDE
PIN EN 10278 20X144 S355J2;E	958214314	2	1	583	11 28 357 6	MOUNTING PARTS
PIN M12X1.5 NIROSTA	10227129	9	1	515	61 61 541 14	CABLE DRUM
PIN RD20X394 LHRD900-40;100	11942040	2	1	471	10 50 179 5	ACCESS CPL
PIN RD68X175 LHRD900-40;100	959799614	27	8	679	10 51 971 3	SELF-LOADING SYSTEM RFK
PINION GUARD	10099140	16	2	378	10 51 968 2	SG SUPERSTRUCTURE
PINION GUARD	10227120	13	1	732	11 26 771 6	MOUNTING PARTS
PIPE CLAMP	10579877	7	1	721	10 51 728 1	TUBING HYDR
PIPE CLAMP	11290856	530	1	86	11 24 682 0	DISTRIBUTOR GEARBOX
PIPE CLAMP	11910324	180	2	526	10 09 917 3	DOUBLE-ACTING CYL
PIPE CLAMP	7382216	12	1	302	11 41 475 7	ACCESSORIES AIR COMPRES
PIPE CLAMP	9077164	14	1	285	10 14 622 4	REGULATION BOOST PRESS
PIPE SET	10227437	30	1	685	11 23 619 7	SELF-LOADING SYSTEM RFK
PIPE SET	10588224	10	1	721	10 51 728 1	TUBING HYDR
PIPE SOCKET	10040777	6	2	731	11 28 048 1	CONNECTION PARTS
PIPE SOCKET	11243834	7	1	731	11 28 048 1	CONNECTION PARTS
PIPELINE	10132170	3	1	261	10 14 588 5	LEAK OIL RETURN LINE
PIPELINE	10132180	20	1	261	10 14 588 5	LEAK OIL RETURN LINE
PIPELINE	10141986	4	1	260	10 14 333 9	FUEL LINES
PIPELINE	10141988	1	1	260	10 14 333 9	FUEL LINES
PIPELINE	10141989	2	1	260	10 14 333 9	FUEL LINES
PIPELINE	10142006	8	1	261	10 14 588 5	LEAK OIL RETURN LINE
PIPELINE	10142080	3	1	260	10 14 333 9	FUEL LINES
PIPELINE	10143235	1	1	261	10 14 588 5	LEAK OIL RETURN LINE
PIPELINE	10145889	13	1	261	10 14 588 5	LEAK OIL RETURN LINE
PIPELINE	10145914	12	1	284	10 14 511 2	EXHAUST NOZZLE ATTACHM
PIPELINE	10146838	4	1	285	10 14 622 4	REGULATION BOOST PRESS
PIPELINE	10146839	5	1	285	10 14 622 4	REGULATION BOOST PRESS
PIPELINE	10146840	6	1	285	10 14 622 4	REGULATION BOOST PRESS
PIPELINE	10147368	2	1	265	10 14 736 9	INTAKE STACK ASSEMBLY
PIPELINE	10149699	1	1	276	10 14 821 7	PIPELINE INSTALLATION
PIPELINE	11410004	5	1	302	11 41 475 7	ACCESSORIES AIR COMPRES
PIPELINE INSTALLATION	10139539	7	1	225	10 14 844 4	OIL SUMP WITH FASTENING
PIPELINE INSTALLATION	10148217	381	1	215	12 42 545 4	DIESEL ENGINE
PIPELINE INSTALLATION	11414758	5	1	299	11 92 891 3	COMPRESSOR RFK
PISTON	10007952	4	7	449	10 00 794 7	HYDRAULIC PARTS DRIVING G
PISTON	10143510	1	1	234	10 14 636 7	PISTON CPL.
PISTON	10149655	1	1	220	10 13 845 0	FINAL CONTROL VALVE
PISTON	10152593	1	1	244	10 15 259 2	OVERPRESSURE VALVE
PISTON	10324863	1	9	158	10 32 489 2	DRIVING GEAR
PISTON	11226017	30	1	383	51 14 347 14	SG SAFETY BLOCK
PISTON	11913123	2	1	99	11 26 744 7	SHUTTLE VALVE
PISTON	9886591	6	1	243	10 12 948 0	OIL COOLER, PRE-ASSEMBLE
PISTON BOLT 52X80 16MNCR	10282849	6	1	234	10 14 636 7	PISTON CPL.
PISTON COOLING	10142749	15	6	214	12 42 545 4	DIESEL ENGINE
PISTON COOLING NOZZLE	10151636	1	1	222	10 15 163 4	PISTON COOLING PRE-ASS.
PISTON COOLING PRE-ASS.	10151634	1	1	221	10 14 274 9	PISTON COOLING
PISTON CPL.	10146367	70	6	214	12 42 545 4	DIESEL ENGINE
PISTON PACKING SET	10352353	80	1	704	59 21 826 14	SUPPORT CYLINDER

Description	Item	Pos.	Quantity	Sheet	Assembly	Description
PISTON PACKING SET	10352357	115	1	704	59 21 826 14	SUPPORT CYLINDER
PISTON RING MG	12476138	4	1	234	10 14 636 7	PISTON CPL.
PISTON WITH PISTON RINGS	11940198	4	7	386	11 94 017 6	HYDRAULIC PARTS DRIVING G
PIVOT	11228707	10	1	653	11 22 870 8	SEARCHLIGHT SUPPORT CPL
PIVOT	11228804	12	1	653	11 22 870 8	SEARCHLIGHT SUPPORT CPL
PIVOT BOLT INSTALLATION	992345114	50	1	6	11 24 047 9	SUPERSTRUCTURE CPL
PIVOT HEAD	513319614	13	1	27	51 33 139 14	DOUBLE-ACTING CYL
PIVOT PIECE CPL	11238204	59	1	2	01 38 406 14	LR 1300 SX
PIVOT PIECE EL	11901509	3	1	505	11 23 820 4	PIVOT PIECE CPL
PIVOT PIECE HYDR	10518261	2	1	505	11 23 820 4	PIVOT PIECE CPL
PIVOT PIECE ST. CONST.	11238202	10	1	505	11 23 820 4	PIVOT PIECE CPL
PLANET WHEEL		7	5	348	93 88 497 01	PLANETARY GEARBOX
PLANET WHEEL		32	3	348	93 88 497 01	PLANETARY GEARBOX
PLANET WHEEL		42	3	348	93 88 497 01	PLANETARY GEARBOX
PLANET WHEEL	540270614	12	3	634	54 02 701 14	PLANETARY STAGE
PLANET WHEEL	540271014	22	3	634	54 02 701 14	PLANETARY STAGE
PLANET WHEEL	927562601	20	5	392	90 01 376 2	SLEWING GEAR DRIVE
PLANET WHEEL	927596701	40	3	392	90 01 376 2	SLEWING GEAR DRIVE
PLANET WHEEL	927651501	55	3	392	90 01 376 2	SLEWING GEAR DRIVE
PLANET WHEEL	944404303	18	5	467	96 93 178 01	TRACTION DRIVE
PLANET WHEEL	944404403	1	1	468	94 44 043 03	PLANET WHEEL
PLANET WHEEL	944404803	28	3	467	96 93 178 01	TRACTION DRIVE
PLANET WHEEL	944404903	1	1	469	94 44 048 03	PLANET WHEEL
PLANET WHEEL	944406503	38	3	467	96 93 178 01	TRACTION DRIVE
PLANET WHEEL	944406603	1	1	470	94 44 065 03	PLANET WHEEL
PLANET WHEEL	944434703	48	3	467	96 93 178 01	TRACTION DRIVE
PLANETARY CARRIER		30	1	348	93 88 497 01	PLANETARY GEARBOX
PLANETARY CARRIER		40	1	348	93 88 497 01	PLANETARY GEARBOX
PLANETARY CARRIER	540271314	27	1	634	54 02 701 14	PLANETARY STAGE
PLANETARY CARRIER	540272514	1	1	637	54 02 704 14	POWER TAKE-OFF CPL
PLANETARY CARRIER	90022085	15	1	392	90 01 376 2	SLEWING GEAR DRIVE
PLANETARY CARRIER	927597201	35	1	392	90 01 376 2	SLEWING GEAR DRIVE
PLANETARY CARRIER	927651401	50	1	392	90 01 376 2	SLEWING GEAR DRIVE
PLANETARY CARRIER	944403903	15	1	467	96 93 178 01	TRACTION DRIVE
PLANETARY CARRIER	944404603	25	1	467	96 93 178 01	TRACTION DRIVE
PLANETARY CARRIER	944406403	35	1	467	96 93 178 01	TRACTION DRIVE
PLANETARY CARRIER	969392201	45	1	467	96 93 178 01	TRACTION DRIVE
PLANETARY GEARBOX	938849701	5	1	345	96 96 248 01	WINCH
PLANETARY STAGE	11893250	2	1	487	11 89 322 8	REPAIR KIT
PLANETARY STAGE	11893252	4	1	487	11 89 322 8	REPAIR KIT
PLANETARY STAGE	540270114	1	1	633	59 20 694 14	WINCH
PLANETARY WHEEL AXLE	540271414	28	3	634	54 02 701 14	PLANETARY STAGE
PLANETARY WHEEL AXLE	540272614	2	3	637	54 02 704 14	POWER TAKE-OFF CPL
PLATE	10142763	2	1	278	10 14 274 4	COOLING WATER AIR BLEED
PLATE	10529071	11	1	718	10 58 064 7	VIDEO MONITORING SYSTEM
PLATE	10529074	12	1	718	10 58 064 7	VIDEO MONITORING SYSTEM
PLATE	10574357	19	2	314	11 24 409 1	COVERS
PLATE	10581590	21	1	314	11 24 409 1	COVERS
PLATE	11217232	18	4	308	11 24 409 0	PANELLING SUPERSTR. INSTA
PLATE	11271486	16	4	599	79 04 871 14	BOTTOM HOOK BLOCK
PLATE	11274636	16	4	592	79 04 112 14	BOTTOM HOOK BLOCK
PLATE	11310952	12	2	548	11 28 390 8	BOOM ACCESS
PLATE	11310952	12	2	563	11 28 583 8	BOOM ACCESS
PLATE	11310952	12	2	570	11 28 626 1	BOOM ACCESS
PLATE	11311241	10	1	548	11 28 390 8	BOOM ACCESS
PLATE	11311241	10	1	563	11 28 583 8	BOOM ACCESS
PLATE	11311241	10	1	570	11 28 626 1	BOOM ACCESS
PLATE	11311262	11	1	548	11 28 390 8	BOOM ACCESS
PLATE	11311336	11	1	563	11 28 583 8	BOOM ACCESS
PLATE	11311393	11	1	570	11 28 626 1	BOOM ACCESS

Description	Item	Pos.	Quantity	Sheet	Assembly	Description
PLATE	950102914	16	1	589	99 30 800 14	HOIST LIMIT SWITCH INSTAL.
PLATE	950143914	37	2	588	99 23 398 14	ROLLER SET
PLATE	954432003	17	10	493	11 22 050 0	WINCHES INSTALLATION
PLATE	954432003	17	10	499	11 22 050 1	WINCHES INSTALLATION
PLATE	954486503	18	6	493	11 22 050 0	WINCHES INSTALLATION
PLATE	954486503	18	6	499	11 22 050 1	WINCHES INSTALLATION
PLATE	971363403	96	1	507	11 23 820 4	PIVOT PIECE CPL
PLATFORM FIXATION CPL	592291414	116	1	416	10 35 008 0	CABIN
PLUG	10336440	92	2	576	10 57 559 9	CABLE LOOM
PLUG	10447747	2	4	455	10 55 154 8	QUICK RELEASE FITTING
PLUG	10447747	2	6	510	10 55 157 6	QUICK RELEASE FITTING
PLUG	11247913	1	4	457	10 55 119 1	LID CPL
PLUG	605013408	52	1	512	11 90 151 1	CABLE LOOM 1 PIVOT PIECE E
PLUG	605253314	201	11	402	10 55 963 5	SWITCH CABINET X1
PLUG	605253414	211	1	402	10 55 963 5	SWITCH CABINET X1
PLUG	605254114	213	1	402	10 55 963 5	SWITCH CABINET X1
PLUG	605254214	203	11	402	10 55 963 5	SWITCH CABINET X1
PLUG	605264814	51	3	399	11 27 973 6	CABIN EL
PLUG	693013014	11	1	739	10 52 957 6	REFUELLING PUMP CPL
PLUG	950490414	11	1	550	11 28 397 7	SUMP PAN CPL
PLUG	950490414	11	1	551	11 28 397 8	SUMP PAN CPL
PLUG	971230303	60	10	642	10 55 372 1	ROOF RAILING RFK
PLUG	993352014	53	8	642	10 55 372 1	ROOF RAILING RFK
PLUG COUPLING	10678754	37	2	204	11 92 923 6	ASSEMBLY INSTAL.
PLUG COUPLING	11082454	36	2	204	11 92 923 6	ASSEMBLY INSTAL.
PLUG COUPLING	11482007	35	4	204	11 92 923 6	ASSEMBLY INSTAL.
PLUG INSERT	605616014	36	2	657	99 24 978 14	BOOM ELECTRICS
PLUG-IN PIPE	10125386	6	1	225	10 14 844 4	OIL SUMP WITH FASTENING
PLUG-IN SLEEVE	10871759	25	1	210	11 92 958 8	AIR DUCT CPL
POUCH SOCKET	11236233	11	1	711	11 23 626 6	ROPE MOUNTING RFK
POUCH SOCKET	773941308	11	1	354	99 23 387 14	ROPES LUG NEEDLE BOOM
POWER TAKE-OFF CPL	540270414	23	1	633	59 20 694 14	WINCH
POWER TAKE-OFF FLANGE		10	1	348	93 88 497 01	PLANETARY GEARBOX
POWER UNIT SUPPORT ATT	10147686	12	1	214	12 42 545 4	DIESEL ENGINE
PRESSURE ADAPTER FASTEN	10135434	193	6	214	12 42 545 4	DIESEL ENGINE
PRESSURE COMPENSATION	11921782	58	1	741	10 52 155 9	MODULE REFUELLING SYSTE
PRESSURE CONTROL VALVE	10115241	49	1	451	11 22 473 8	ADJUSTMENT
PRESSURE CUT-OFF	9278875	1	1	112	10 11 836 7	RK PRESSUR CUT-OFF
PRESSURE FEEDER VALVE	10123236	2	2	140	10 14 131 7	REPAIR KIT CONNECTING PL
PRESSURE FEEDER VALVE	10135472	10	1	130	10 12 942 0	PRESSURE REDUCTION VALV
PRESSURE FEEDER VALVE	11835951	182	12	18	11 28 647 6	VALVE BLOCK
PRESSURE FILTER	10223581	19	1	82	11 24 773 5	HYDR POWER UNIT
PRESSURE GAUGE	750001114	7	1	501	10 56 183 8	TOOL
PRESSURE GAUGE	750003414	8	1	501	10 56 183 8	TOOL
PRESSURE GAUGE CONNECT	7363730	9	2	501	10 56 183 8	TOOL
PRESSURE LIMITING CARTRI	592309014	200	1	18	11 28 647 6	VALVE BLOCK
PRESSURE LIMITING CARTRI	592309014	205	1	18	11 28 647 6	VALVE BLOCK
PRESSURE LIMITING VALVE	10350546	2	1	75	10 22 540 8	VALVE BLOCK
PRESSURE LIMITING VALVE	10593474	3	1	92	11 21 991 0	PUMP HOUSING
PRESSURE LIMITING VALVE	10872307	9	1	210	11 92 958 8	AIR DUCT CPL
PRESSURE LIMITING VALVE	11219368	2	1	92	11 21 991 0	PUMP HOUSING
PRESSURE LIMITING VALVE	11233731	5	1	75	10 22 540 8	VALVE BLOCK
PRESSURE LIMITING VALVE	11233731	6	1	75	10 22 540 8	VALVE BLOCK
PRESSURE LIMITING VALVE	11233731	2	1	527	59 20 224 14	LOAD HOLDING VALVE
PRESSURE LIMITING VALVE	11293250	3	2	26	59 21 458 14	VALVE BLOCK
PRESSURE LIMITING VALVE	511414514	18	1	82	11 24 773 5	HYDR POWER UNIT
PRESSURE LIMITING VALVE	511467914	4	1	629	10 51 726 2	TUBING HYDR
PRESSURE LIMITING VALVE	511475514	7	1	525	10 51 959 1	TUBING HYDR
PRESSURE LIMITING VALVE	511486714	20	1	529	51 14 755 14	PRESSURE LIMITING VALVE
PRESSURE LIMITING VALVE	511619614	50	2	342	51 22 527 14	OIL MOTOR

Description	Item	Pos.	Quantity	Sheet	Assembly	Description
PRESSURE LIMITING VALVE	511639714	50	2	359	51 22 942 14	OIL MOTOR
PRESSURE LIMITING VALVE	511655114	50	2	451	11 22 473 8	ADJUSTMENT
PRESSURE LIMITING VALVE	592323114	5	4	442	11 89 300 5	TUBING HYDR
PRESSURE PIN	10101458	9	3	158	10 32 489 2	DRIVING GEAR
PRESSURE REDUCTION VALV	10129420	9	2	129	11 36 218 7	REGULATING VALVE
PRESSURE REDUCTION VALV	510438514	4	2	442	11 89 300 5	TUBING HYDR
PRESSURE REDUCTION VALV	511476914	3	1	341	10 51 969 8	NEEDLE LUFFING WINCH HYD
PRESSURE REDUCTION VALV	511476914	4	1	358	10 51 968 7	MAIN LUG HYDR
PRESSURE SENSOR	10515473	66	2	34	11 24 519 0	SUPERSTRUCTURE EL
PRESSURE SENSOR	11219179	65	2	34	11 24 519 0	SUPERSTRUCTURE EL
PRESSURE SPRING	10007967	7	1	449	10 00 794 7	HYDRAULIC PARTS DRIVING G
PRESSURE SPRING	10115224	6	1	451	11 22 473 8	ADJUSTMENT
PRESSURE SPRING	10129501	4	1	244	10 15 259 2	OVERPRESSURE VALVE
PRESSURE SPRING	10296909	133	14	18	11 28 647 6	VALVE BLOCK
PRESSURE SPRING	10349778	132	1	18	11 28 647 6	VALVE BLOCK
PRESSURE SPRING	10529089	17	1	718	10 58 064 7	VIDEO MONITORING SYSTEM
PRESSURE SPRING	11118160	6	1	220	10 13 845 0	FINAL CONTROL VALVE
PRESSURE SPRING	11226019	40	1	383	51 14 347 14	SG SAFETY BLOCK
PRESSURE SPRING	11267416	6	1	95	10 59 347 4	PRESSURE LIMITING VALVE
PRESSURE SPRING	11267442	5	1	97	11 06 730 4	SHUTDOWN VALVE
PRESSURE SPRING	11305568	75	16	376	99 04 645 14	DRIVE
PRESSURE SPRING	11305579	76	16	376	99 04 645 14	DRIVE
PRESSURE SPRING	11940199	7	1	386	11 94 017 6	HYDRAULIC PARTS DRIVING G
PRESSURE SPRING	7000942	164	7	18	11 28 647 6	VALVE BLOCK
PRESSURE SPRING	7024503	171	14	18	11 28 647 6	VALVE BLOCK
PRESSURE SPRING	7028143	5	1	95	10 59 347 4	PRESSURE LIMITING VALVE
PRESSURE SPRING	720046001	7	22	393	50 20 383 01	MULTI-DISK BRAKE
PRESSURE SPRING	720046101	8	12	393	50 20 383 01	MULTI-DISK BRAKE
PRESSURE SPRING	7381699	30	21	135	10 13 802 6	RK CYL.+CONTROL PLATE+SH
PRESSURE SPRING	7382167	31	24	118	98 89 984	REPAIR KIT DRIVING MECHAN
PRESSURE SPRING	7382167	31	24	121	98 89 983	REPAIR KIT DRIVING MECHAN
PRESSURE SPRING	9266088	14	1	113	92 78 875	PRESSURE CUT-OFF
PRESSURE SPRING	9267342	12	1	106	92 67 343	VENTILATION VALVE
PRESSURE SPRING	9886756	7	1	243	10 12 948 0	OIL COOLER, PRE-ASSEMBLE
PRESSURE SWITCH	10352111	16	1	48	10 56 070 1	TANK HYDR CPL
PRESSURE SWITCH	11236712	5	1	725	11 21 750 0	LIQUEFIER
PRESSURE SWITCH	11903869	3	1	728	10 56 536 7	SOLENOID VALVE BUILT-IN KI
PRESSURE SWITCH ON	10352119	12	1	482	11 26 260 6	WINCH 1 HYDR
PRESSURE SWITCH ON	10352119	12	1	497	11 26 261 1	WINCH 2 HYDR
PRESSURE TRANSMITTER	9076531	10	2	297	10 14 297 7	ENGINE CONTROL SENSORS
PRESSURE TRANSMITTER C	9076550	11	1	297	10 14 297 7	ENGINE CONTROL SENSORS
PRESSURE VALVE	11229183	5	1	22	10 35 148 6	VALVE BLOCK
PRESSURE VALVE	11229185	9	1	22	10 35 148 6	VALVE BLOCK
PRESSUREGAUGE DIRECTC	510694314	10	2	501	10 56 183 8	TOOL
PROFIL CLAMP	10141051	30	1	304	11 40 371 1	SCR CPL.
PROFIL CLAMP	10494116	21	2	198	11 24 114 3	EXHAUST GAS SYSTEM
PROFIL CLAMP	10494116	21	2	303	11 90 032 5	EXHAUST GAS SYSTEM
PROFIL CLAMP	10494117	22	2	303	11 90 032 5	EXHAUST GAS SYSTEM
PROFILE	592291114	97	1	416	10 35 008 0	CABIN
PROFILE CORD	501507014	13	1	635	54 02 702 14	ROPE DRUM CPL
PROFILE HOLLOW SHAFT	10350230	130	2	86	11 24 682 0	DISTRIBUTOR GEARBOX
PROFILE HOLLOW SHAFT	11253077	140	2	86	11 24 682 0	DISTRIBUTOR GEARBOX
PROPORTIONAL MAGNET	11219375	2	2	101	11 21 991 7	CONTROL GEAR
PROTECTING CAP	10542325	96	1	400	11 27 973 6	CABIN EL
PROTECTING CAP	10801869	16	1	143	10 12 323 6	PRESSURE FEEDER VALVE
PROTECTING CAP	11266978	14	80	437	10 51 969 6	CONNECTION SUPERSTR UC
PROTECTING CAP	7013456	3	1	227	50 04 624	OIL DRAIN PLUG
PROTECTING CAP	789000701	34	1	345	96 96 248 01	WINCH
PROTECTION GUARD	10580585	12	1	45	10 51 961 6	OIL COOLER INSTALLATION
PROTECTIVE CONDUCTOR T	10337303	50	1	735	10 56 013 7	MAINS SUPPLY BATTERY

Description	Item	Pos.	Quantity	Sheet	Assembly	Description
PROXIMITY SWITCH	693067614	11	2	574	10 53 141 3	BOOM HEAD EL
PULL ROD	540272114	31	1	636	54 02 703 14	FLANGE CPL
PULL-BACK BALL	10324872	6	1	158	10 32 489 2	DRIVING GEAR
PULL-BACK BALL	9889929	1	1	120	98 89 988	RK PULL-BACK BALL+PULL-B.
PULL-BACK PLATE	7023459	4	1	158	10 32 489 2	DRIVING GEAR
PULL-BACK PLATE	7023835	11	1	386	11 94 017 6	HYDRAULIC PARTS DRIVING G
PULL-BACK PLATE	9889930	2	1	120	98 89 988	RK PULL-BACK BALL+PULL-B.
PUMP	11373478	7	1	204	11 92 923 6	ASSEMBLY INSTAL.
PUMP COVER	11219350	4	1	87	10 53 430 7	V PUMP
PUMP ELEMENT	10540347	1	1	60	11 22 312 3	CENTRAL LUBRICATION PUM
PUMP ELEMENT	11215913	1	1	163	10 22 601 3	V PUMP
PUMP ELEMENT	11215936	1	1	164	11 21 591 3	PUMP ELEMENT
PUMP ELEMENT	11221268	1	1	154	10 22 650 5	V PUMP
PUMP ELEMENT	11221274	1	1	155	11 22 126 8	PUMP ELEMENT
PUMP HOUSING	10132069	1	1	247	10 13 382 3	SUCTION PUMP PRE-ASS.
PUMP HOUSING	11219910	3	1	87	10 53 430 7	V PUMP
PUMP HOUSING	11219930	1	1	92	11 21 991 0	PUMP HOUSING
PUSH BUTTON	693003414	32	1	741	10 52 155 9	MODULE REFUELLING SYSTE
QUICK RELEASE FITTING	10445101	8	1	442	11 89 300 5	TUBING HYDR
QUICK RELEASE FITTING	10445102	7	1	442	11 89 300 5	TUBING HYDR
QUICK RELEASE FITTING	10445105	19	1	8	11 29 618 6	SUPERSTRUCTURE HYDR
QUICK RELEASE FITTING	10551548	9	2	442	11 89 300 5	TUBING HYDR
QUICK RELEASE FITTING	10551576	2	1	509	10 51 826 1	PIVOT PIECE HYDR
QUICK-FITTING THREAD COU	510571914	15	1	8	11 29 618 6	SUPERSTRUCTURE HYDR
QUICK-FITTING THREAD COU	510571914	9	1	525	10 51 959 1	TUBING HYDR
QUICK-FITTING THREAD COU	510572214	14	2	8	11 29 618 6	SUPERSTRUCTURE HYDR
QUICK-FITTING THREAD COU	510572214	8	1	525	10 51 959 1	TUBING HYDR
QUICK-FITTING THREAD COU	511511214	18	1	8	11 29 618 6	SUPERSTRUCTURE HYDR
QUICK-FITTING THREAD COU	511511314	17	1	8	11 29 618 6	SUPERSTRUCTURE HYDR
QUICK-FITTING THREAD COU	511704214	8	1	8	11 29 618 6	SUPERSTRUCTURE HYDR
QUICK-FITTING THREAD COU	511704314	2	1	502	91 90 239 14	CABLE HYDR
QUICK-FITTING THREAD COU	511708414	16	1	8	11 29 618 6	SUPERSTRUCTURE HYDR
RADIO RFK	10592569	14	1	2	01 38 406 14	LR 1300 SX
RAIL	11306945	10	1	671	11 30 694 4	RAIL CPL
RAIL CPL	10554229	11	2	669	10 55 280 7	GRATING CPL
RAIL CPL	10554368	13	2	674	11 29 474 2	GANGWAY INTERM. SECTION
RAIL CPL	10554368	13	2	675	11 29 474 3	GANGWAY INTERM. SECTION
RAIL CPL	10554368	14	2	675	11 29 474 3	GANGWAY INTERM. SECTION
RAIL CPL	10554881	15	2	675	11 29 474 3	GANGWAY INTERM. SECTION
RAIL CPL	10557413	10	2	677	10 55 722 4	FALL PROTECTION RFK
RAIL CPL	10564692	10	2	676	10 55 514 8	FALL PROTECTION RFK
RAIL CPL	11306944	12	2	670	11 29 473 7	GANGWAY INTERM. SECTION
RAILING FOOT	10349402	19	10	640	10 55 372 1	ROOF RAILING RFK
RAILING ST.CONST.	10559163	18	2	640	10 55 372 1	ROOF RAILING RFK
RAILING ST.CONST.	10585923	10	1	640	10 55 372 1	ROOF RAILING RFK
RAILING ST.CONST.	10585924	11	1	640	10 55 372 1	ROOF RAILING RFK
RAILING ST.CONST.	10585925	12	1	640	10 55 372 1	ROOF RAILING RFK
RAILING ST.CONST.	10585926	13	1	640	10 55 372 1	ROOF RAILING RFK
REAR WINDOW	592289014	48	1	415	10 35 008 0	CABIN
RECEPTACLE	602209314	80	42	39	10 56 645 8	TERMINAL BOX
RECEPTACLE	602209314	25	2	611	10 57 652 3	CLAMPING SOCKET
RECEPTACLE	602303214	73	1	39	10 56 645 8	TERMINAL BOX
RECTANGULAR SECTION RIN	10472425	109	18	10	11 29 618 6	SUPERSTRUCTURE HYDR
RECTANGULAR SECTION RIN	10472425	70	3	82	11 24 773 5	HYDR POWER UNIT
RECTANGULAR SECTION RIN	10472425	616	2	358	10 51 968 7	MAIN LUG HYDR
RECTANGULAR SECTION RIN	10472425	631	10	444	11 89 300 5	TUBING HYDR
RECTANGULAR SECTION RIN	10472425	740	5	482	11 26 260 6	WINCH 1 HYDR
RECTANGULAR SECTION RIN	10472425	740	5	497	11 26 261 1	WINCH 2 HYDR
RECTANGULAR SECTION RIN	10490781	110	19	10	11 29 618 6	SUPERSTRUCTURE HYDR
RECTANGULAR SECTION RIN	10490781	72	2	82	11 24 773 5	HYDR POWER UNIT

Description	Item	Pos.	Quantity	Sheet	Assembly	Description
RECTANGULAR SECTION RIN	10490781	630	2	341	10 51 969 8	NEEDLE LUFFING WINCH HYD
RECTANGULAR SECTION RIN	10490781	641	2	381	10 55 216 1	TUBING HYDR
RECTANGULAR SECTION RIN	10490784	106	4	10	11 29 618 6	SUPERSTRUCTURE HYDR
RECTANGULAR SECTION RIN	10490784	71	13	82	11 24 773 5	HYDR POWER UNIT
RECTANGULAR SECTION RIN	10490784	640	4	381	10 55 216 1	TUBING HYDR
RECTANGULAR SECTION RIN	10490784	660	1	525	10 51 959 1	TUBING HYDR
RECTANGULAR SECTION RIN	10490784	615	1	687	10 51 973 8	SELF-LOADING SYSTEM HYD
RECTANGULAR SECTION RIN	10490785	107	4	10	11 29 618 6	SUPERSTRUCTURE HYDR
RECTANGULAR SECTION RIN	10490787	108	5	10	11 29 618 6	SUPERSTRUCTURE HYDR
REDUCER	11946457	330	1	428	11 93 934 6	AIR CONDITIONING
REDUCER	260493202	57	1	741	10 52 155 9	MODULE REFUELLING SYSTE
REDUCER	260493402	29	1	575	10 57 559 9	CABLE LOOM
REDUCER	260493702	46	1	512	11 90 151 1	CABLE LOOM 1 PIVOT PIECE E
REDUCER	602620201	28	2	575	10 57 559 9	CABLE LOOM
REDUCER	602620201	62	3	575	10 57 559 9	CABLE LOOM
REDUCER	602620201	84	2	576	10 57 559 9	CABLE LOOM
REDUCER	602620201	84	2	609	10 57 651 9	CABLE LOOM
REDUCER	602620201	38	2	657	99 24 978 14	BOOM ELECTRICS
REDUCER	602620401	28	1	609	10 57 651 9	CABLE LOOM
REDUCER	602620401	36	1	609	10 57 651 9	CABLE LOOM
REDUCER	602620401	56	2	741	10 52 155 9	MODULE REFUELLING SYSTE
REDUCING PIECE	11234129	285	1	18	11 28 647 6	VALVE BLOCK
REDUCING STUD	11290857	540	1	86	11 24 682 0	DISTRIBUTOR GEARBOX
REFUEL PUMP	510095914	10	1	739	10 52 957 6	REFUELLING PUMP CPL
REFUELLING PUMP CPL	10529576	10	1	737	10 52 155 4	REFUELLING SYSTEM RFK
REFUELLING SYSTEM RFK	10521554	858	1	4	01 38 406 14	LR 1300 SX
REGULATING VALVE	10127478	7	1	127	10 12 878 7	V PUMP
REGULATING VALVE	10127479	10	1	132	10 12 747 8	REGULATING VALVE
REGULATING VALVE	11362187	4	1	127	10 12 878 7	V PUMP
REGULATING VALVE	9074418	4	2	103	10 11 834 9	DOUBLE V-PUMP
REGULATION BOOST PRESS	10146224	436	1	215	12 42 545 4	DIESEL ENGINE
REGULATION REPAIR KIT	10122262	85	1	127	10 12 878 7	V PUMP
REINFORCING PLATE	10350084	11	4	520	99 34 198 14	LIEBHERR SIGN
RELAY	10226635	21	1	172	11 24 448 7	CENTRAL POWER UNIT EL
RELAY	630160214	41	2	741	10 52 155 9	MODULE REFUELLING SYSTE
RELAY SOCKET	630122908	84	1	402	10 55 963 5	SWITCH CABINET X1
REPAIR KIT	11231317	3	1	487	11 89 322 8	REPAIR KIT
REPAIR KIT	11231319	5	1	487	11 89 322 8	REPAIR KIT
REPAIR KIT	11231322	1	1	488	11 23 126 9	ROPE DRUM
REPAIR KIT	11231336	1	1	489	11 23 127 0	FLANGE BEARING
REPAIR KIT	11233487	1	1	487	11 89 322 8	REPAIR KIT
REPAIR KIT	11253394	1	1	362	10 58 386 4	FLANGE
REPAIR KIT	11253398	1	1	363	10 55 597 3	ROPE DRUM
REPAIR KIT	11253401	1	1	364	10 58 386 5	GEARBOX
REPAIR KIT	11253440	1	1	365	10 58 384 5	OIL LINE
REPAIR KIT	11893228	1	1	486	11 89 321 3	GEARBOX
REPAIR KIT	11893254	1	1	491	11 89 321 5	WINCH TRESTLE
REPAIR KIT	11893255	1	1	492	11 89 321 6	OIL LINE
REPAIR KIT CONNECTING PL	10141317	83	1	127	10 12 878 7	V PUMP
REPAIR KIT CONNECTION HO	10118357	90	1	105	10 11 835 0	CONNECTION HOUSING
REPAIR KIT DRIVING MECHAN	10138025	81	1	127	10 12 878 7	V PUMP
REPAIR KIT DRIVING MECHAN	9889983	94	1	104	10 11 834 9	DOUBLE V-PUMP
REPAIR KIT DRIVING MECHAN	9889984	92	1	104	10 11 834 9	DOUBLE V-PUMP
REPAIR KIT LEVER	10122245	7	1	134	10 13 802 5	REPAIR KIT DRIVING MECHAN
REPAIR KIT LOCK RING	10138032	84	1	127	10 12 878 7	V PUMP
REPAIR KIT LOCK RING	10138032	6	1	146	10 13 803 3	SEAL KIT CPL.
REPAIR KIT LOCK RING	9268016	96	1	104	10 11 834 9	DOUBLE V-PUMP
REPAIR KIT LOCK RING	9268016	96	1	126	92 76 408	SEAL KIT DOUBLE PUMP
REPAIR KIT MAGNET	9273187	97	1	104	10 11 834 9	DOUBLE V-PUMP
REPAIR KIT SHAFT	10138027	1	1	135	10 13 802 6	RK CYL.+CONTROL PLATE+SH

Description	Item	Pos.	Quantity	Sheet	Assembly	Description
REPAIR KIT SHAFT	9884402	95	1	104	10 11 834 9	DOUBLE V-PUMP
REPAIR KIT SHAFT	9889977	93	1	104	10 11 834 9	DOUBLE V-PUMP
REPAIR SET DRIVE	10153606	180	1	214	12 42 545 4	DIESEL ENGINE
REPAIR SET DRIVE	11893253	1	1	490	11 89 321 4	DRIVE
REPAIR SET LID	9275443	85	1	103	10 11 834 9	DOUBLE V-PUMP
REPAIR SET SWIVEL BEARIN	10143607	6	1	134	10 13 802 5	REPAIR KIT DRIVING MECHAN
REPAIR SET SWIVEL YOKE	10122246	8	1	134	10 13 802 5	REPAIR KIT DRIVING MECHAN
REPAIR SET SWIVEL YOKE	10139752	84	1	103	10 11 834 9	DOUBLE V-PUMP
RESERVE FUSES	992081114	56	1	402	10 55 963 5	SWITCH CABINET X1
RESTRICTOR BODY	11253687	2	1	82	11 24 773 5	HYDR POWER UNIT
RESTRICTOR BODY	11253689	26	2	82	11 24 773 5	HYDR POWER UNIT
RESTRICTOR BODY	11930190	11	1	210	11 92 958 8	AIR DUCT CPL
RESTRICTOR BODY	917906414	3	1	709	10 55 459 4	TUBING HYDR
RESTRICTOR BODY	917906414	4	1	721	10 51 728 1	TUBING HYDR
RESTRICTOR BODY	929796914	6	1	629	10 51 726 2	TUBING HYDR
RESTRICTOR BODY	946293614	9	1	8	11 29 618 6	SUPERSTRUCTURE HYDR
RESTRICTOR BODY	991487414	26	1	8	11 29 618 6	SUPERSTRUCTURE HYDR
RESTRICTOR BODY	991867414	37	1	8	11 29 618 6	SUPERSTRUCTURE HYDR
RESTRICTOR VALVE	510497214	33	1	82	11 24 773 5	HYDR POWER UNIT
RESTRICTOR VALVE	592070714	145	2	18	11 28 647 6	VALVE BLOCK
RESTRICTOR VALVE	592178314	5	1	687	10 51 973 8	SELF-LOADING SYSTEM HYD
RETAINER CLIP	10122841	2	1	277	10 14 274 2	COOLANT PIPE BEND ADD-ON
RETAINER CLIP	10124798	5	2	267	10 14 967 6	CONNECTING LINE ADD-ON
RETAINER CLIP	10127984	30	9	189	11 24 114 1	COOLER INSTALLATION CHA
RETAINER CLIP	10127984	2	1	266	10 14 736 4	AIR INTAKE ASSEMBLY
RETAINER CLIP	10132073	10	4	281	10 14 144 3	EXHAUST PIPE PRE-ASS.
RETAINER CLIP	10138820	3	1	275	10 14 821 5	THERMOSTAT HOUSING ASS
RETAINER CLIP	10138820	4	1	284	10 14 511 2	EXHAUST NOZZLE ATTACHM
RETAINING CLIP UPPER PART	725810414	54	2	642	10 55 372 1	ROOF RAILING RFK
RETAINING DEVICE CPL	11286105	12	1	573	11 24 133 3	BOOM HEAD CPL
RETAINING DISK		6	1	348	93 88 497 01	PLANETARY GEARBOX
RETAINING DISK	944112203	51	1	392	90 01 376 2	SLEWING GEAR DRIVE
RETAINING DISK	944169103	36	1	392	90 01 376 2	SLEWING GEAR DRIVE
RETAINING DISK	944228903	16	1	392	90 01 376 2	SLEWING GEAR DRIVE
RETAINING DISK 115X55X6		31	1	348	93 88 497 01	PLANETARY GEARBOX
RETAINING DISK 115X55X6		41	1	348	93 88 497 01	PLANETARY GEARBOX
RETAINING SPRING 3MM	11297461	3	1	712	11 23 623 3	POUCH SOCKET
RETAINING SPRING 4.5 MM	433105414	12	4	336	10 52 656 0	MOUNTING PARTS
RETAINING SPRING 4.5 MM	433105414	12	2	627	10 51 743 9	ROPE LUG CPL RFK
RETAINING SPRING 4.5 MM	433105414	11	1	655	11 21 546 2	WARNING LIGHT INSTALL RFK
RETAINING SPRING 4MM	433101208	53	2	579	11 28 648 4	MOUNTING PARTS
RETAINING SPRING 4MM	433101208	34	8	588	99 23 398 14	ROLLER SET
RETAINING SPRING 4MM	433101208	4	2	621	97 08 757 03	TILTING-BACK SUPPORTS
RETAINING SPRING 4MM	433101208	6	8	663	99 31 838 14	INTERMEDIATE TENSIONING
RETAINING SPRING 4MM	433101208	7	14	665	97 05 997 03	INTERMEDIATE TENSIONING
RETAINING SPRING 4MM	433101208	22	4	667	10 55 601 0	FALL PROTECTION RFK
RETAINING SPRING 4MM	433101208	13	4	676	10 55 514 8	FALL PROTECTION RFK
RETAINING SPRING 4MM	433101208	20	4	706	11 89 568 8	SELF-LOADING SYSTEM RFK
RETAINING SPRING 5MM	433102508	56	2	505	11 23 820 4	PIVOT PIECE CPL
RETAINING SPRING 5MM	433102508	18	2	555	11 94 087 8	ASSEMBLY UNIT
RETAINING SPRING 5MM	433102508	27	2	613	11 28 744 5	MOUNTING PARTS
RETAINING SPRING 5MM	433102508	29	8	679	10 51 971 3	SELF-LOADING SYSTEM RFK
RETAINING SPRING DIN 2194 6	433105008	19	6	337	99 29 803 14	LASHING BALLAST
RETAINING SPRING DIN 2194 6	433105008	13	2	505	11 23 820 4	PIVOT PIECE CPL
RETAINING SPRING DIN 2194 6	433105008	12	2	517	11 28 726 4	PIN CPL
RETAINING SPRING DIN 2194 6	433105008	21	2	539	99 23 394 14	ANCHORING ROD CPL
RETAINING SPRING DIN 2194 6	433105008	15	2	556	10 54 054 8	ANCHORING ROD CPL
RETAINING SPRING DIN 2194 6	433105008	15	2	564	10 54 055 1	ANCHORING ROD CPL
RETAINING SPRING DIN 2194 6	433105008	15	2	571	10 54 055 5	ANCHORING ROD CPL
RETAINING SPRING DIN 2194 6	433105008	54	2	579	11 28 648 4	MOUNTING PARTS

Description	Item	Pos.	Quantity	Sheet	Assembly	Description
RETAINING SPRING DIN 2194 6	433105008	15	2	586	10 54 056 7	ANCHORING ROD CPL
RETAINING SPRING DIN 2194 6	433105008	17	2	614	95 70 956 14	ANCHORING ROD CPL
RETAINING SPRING DIN 2194 6	433105008	31	10	620	99 23 415 14	STAY ROPE ROD
RETAINING SPRING DIN 2194 6	433105008	44	2	662	99 10 116 14	ROPE GUIDE
RETAINING SPRING DIN 2194 6	433105008	11	1	685	11 23 619 7	SELF-LOADING SYSTEM RFK
RETURN FILTER	10515724	12	1	48	10 56 070 1	TANK HYDR CPL
RETURN PIPE	10580170	19	1	80	11 92 885 2	CENTRAL POWER UNIT CPL
RIBBED HEX NUT M6 10	10003366	3	1	268	90 78 314	HEATING FLANGE ADD-ON
RING		12	1	348	93 88 497 01	PLANETARY GEARBOX
RING	11220477	10	1	723	11 22 037 2	FOOT PEDAL EL INSTALLATIO
RING	11267455	10	1	100	11 21 935 0	PUMP COVER
RING	9267341	11	1	106	92 67 343	VENTILATION VALVE
RING BOLT DIN 580 M12 C15E	402600314	34	2	662	99 10 116 14	ROPE GUIDE
RING BOLT DIN 580 M16 C15E	402600514	10	6	337	99 29 803 14	LASHING BALLAST
RING BOLT DIN 580 M8 C15E;E	402600114	62	1	310	11 24 409 0	PANELLING SUPERSTR. INSTA
RING NUT DIN 582 M8 C15E;E	411200108	81	1	673	11 30 567 0	TRANSPORT LASHING
RK ADDITIONAL PARTS	10122248	80	1	127	10 12 878 7	V PUMP
RK CRANKSHAFT BEARING	10116928	50	1	231	90 76 458	SET MAIN BEARINGS
RK CRANKSHAFT SEAL	10121335	2	1	232	10 12 134 5	RK CRANKSHAFT SEAL
RK CRANKSHAFT SEAL	10121345	52	1	214	12 42 545 4	DIESEL ENGINE
RK CRANKSHAFT SEAL	10121952	1	1	232	10 12 134 5	RK CRANKSHAFT SEAL
RK CYL.+CONTROL PLATE+SH	10138026	2	1	134	10 13 802 5	REPAIR KIT DRIVING MECHAN
RK CYLINDER+CONTROL PLAT	9889832	2	1	121	98 89 983	REPAIR KIT DRIVING MECHAN
RK CYLINDER+CONTROL PLAT	9889833	2	1	118	98 89 984	REPAIR KIT DRIVING MECHAN
RK HIGH PRESSURE CONNEC	10141140	200	1	253	10 15 315 1	HIGH PRESS.CONNECTOR W.
RK HIGH PRESSURE PUMP	10150743	1	1	249	10 15 085 7	HIGH PRESSURE PUMP W.FA
RK HIGH PRESSURE PUMP	10150743	200	1	249	10 15 085 7	HIGH PRESSURE PUMP W.FA
RK INJECTOR	10152874	200	1	252	10 15 286 7	INJECTOR WITH FASTENING
RK PISTON WITH GUIDE SHO	10122692	4	1	134	10 13 802 5	REPAIR KIT DRIVING MECHAN
RK PISTON WITH GUIDE SHO	9889831	1	9	118	98 89 984	REPAIR KIT DRIVING MECHAN
RK PISTON WITH GUIDE SHO	9889831	1	1	121	98 89 983	REPAIR KIT DRIVING MECHAN
RK PRE-FEED PUMP	10149198	220	1	249	10 15 085 7	HIGH PRESSURE PUMP W.FA
RK PRE-FEED PUMP	10149198	5	1	250	10 15 074 3	RK HIGH PRESSURE PUMP
RK PRESSUR CUT-OFF	10118367	83	1	103	10 11 834 9	DOUBLE V-PUMP
RK PULL-BACK BALL+PULL-B.	9078214	3	1	134	10 13 802 5	REPAIR KIT DRIVING MECHAN
RK PULL-BACK BALL+PULL-B.	9889988	14	1	118	98 89 984	REPAIR KIT DRIVING MECHAN
RK PULL-BACK BALL+PULL-B.	9889988	14	1	121	98 89 983	REPAIR KIT DRIVING MECHAN
RK1 MAIN BEARING CPL.	10140599	51	1	231	90 76 458	SET MAIN BEARINGS
RK2 MAIN BEARING CPL.	10140603	52	1	231	90 76 458	SET MAIN BEARINGS
ROCKER ARM BRACKET CPL.	10148438	81	6	214	12 42 545 4	DIESEL ENGINE
ROCKER ARM BRACKET PRE	11448005	1	1	236	10 14 843 8	ROCKER ARM BRACKET CPL.
ROCKER ARM PRE-ASSY.	11448000	2	2	237	11 44 800 5	ROCKER ARM BRACKET PRE
ROCKER ST.CONST.	10533999	12	2	71	10 51 969 4	A-FRAME ERECTION CYL INST
ROD	919421714	8	2	663	99 31 838 14	INTERMEDIATE TENSIONING
ROD CPL	11273458	212	2	400	11 27 973 6	CABIN EL
ROD EYE	11918996	90	1	74	59 21 041 14	DOUBLE-ACTING CYL
ROD GUIDE RING	513319814	17	1	456	51 33 141 14	DOUBLE-ACTING CYL
ROD SEAL	10352315	55	1	704	59 21 826 14	SUPPORT CYLINDER
ROD SEAL	726306414	10	1	722	59 20 008 14	DOUBLE-ACTING CYL
ROD SEAL	726307914	10	1	27	51 33 139 14	DOUBLE-ACTING CYL
ROD SEAL	726308514	85	1	704	59 21 826 14	SUPPORT CYLINDER
ROLLER	11256217	19	2	535	11 24 444 4	A-FRAME 1 CPL
ROLLER	970961303	11	3	613	11 28 744 5	MOUNTING PARTS
ROLLER	970961303	19	1	662	99 10 116 14	ROPE GUIDE
ROLLER BEARING	10522848	24	1	590	79 03 861 14	LOAD HOOK
ROLLER BEARING	10573891	11	1	601	11 27 148 8	HANGER
ROLLER BEARING	10574043	3	1	595	11 27 463 8	HANGER
ROLLER CAGE		16	38	348	93 88 497 01	PLANETARY GEARBOX
ROLLER CARRIER	919022714	25	1	662	99 10 116 14	ROPE GUIDE
ROLLER SET	992339814	82	1	3	01 38 406 14	LR 1300 SX

Description	Item	Pos.	Quantity	Sheet	Assembly	Description
ROLLER ST.CONST.	971361703	19	1	357	10 51 968 6	LUG SUPERSTRUCTURE CPL
ROLLING TRUCK CPL	11928908	1	2	668	10 55 601 1	FALL PROTECTION CPL
ROOF	10545911	3	1	308	11 24 409 0	PANELLING SUPERSTR. INSTA
ROOF	10545914	5	1	308	11 24 409 0	PANELLING SUPERSTR. INSTA
ROOF	10545916	7	1	308	11 24 409 0	PANELLING SUPERSTR. INSTA
ROOF	10545917	8	1	308	11 24 409 0	PANELLING SUPERSTR. INSTA
ROOF	10545957	11	1	308	11 24 409 0	PANELLING SUPERSTR. INSTA
ROOF	10545958	12	1	308	11 24 409 0	PANELLING SUPERSTR. INSTA
ROOF	10545968	3	1	324	10 54 591 0	MOTOR COWLING
ROOF	10545969	4	1	324	10 54 591 0	MOTOR COWLING
ROOF	10545970	5	1	324	10 54 591 0	MOTOR COWLING
ROOF	10546335	6	1	324	10 54 591 0	MOTOR COWLING
ROOF	10563073	16	1	308	11 24 409 0	PANELLING SUPERSTR. INSTA
ROOF	10563099	1	1	324	10 54 591 0	MOTOR COWLING
ROOF	11244758	14	1	308	11 24 409 0	PANELLING SUPERSTR. INSTA
ROOF	11244865	13	1	308	11 24 409 0	PANELLING SUPERSTR. INSTA
ROOF RAILING RFK	10553721	553	1	3	01 38 406 14	LR 1300 SX
ROOF WINDOW	592288614	44	1	415	10 35 008 0	CABIN
ROPE	773400508	18	0.6	659	11 27 109 7	LIGHTNING ROD RFK
ROPE	774730714	12	40	354	99 23 387 14	ROPES LUG NEEDLE BOOM
ROPE	774762314	11	1	627	10 51 743 9	ROPE LUG CPL RFK
ROPE CLAMP	540271714	5	1	635	54 02 702 14	ROPE DRUM CPL
ROPE CLAMP	773910114	19	2	659	11 27 109 7	LIGHTNING ROD RFK
ROPE DRUM	10555973	2	1	361	10 55 156 3	WINCH
ROPE DRUM	11231269	2	1	485	10 53 039 8	WINCH
ROPE DRUM	540273314	1	1	635	54 02 702 14	ROPE DRUM CPL
ROPE DRUM	938850001	1	1	345	96 96 248 01	WINCH
ROPE DRUM CPL	540270214	21	1	633	59 20 694 14	WINCH
ROPE FIXING POINT	11210606	5	1	599	79 04 871 14	BOTTOM HOOK BLOCK
ROPE FIXING POINT	11481158	5	1	592	79 04 112 14	BOTTOM HOOK BLOCK
ROPE FIXING POINT STRAP	970827603	9	1	366	99 29 258 14	LUG SHEAVE SET
ROPE GUARD	11238277	17	1	670	11 29 473 7	GANGWAY INTERM. SECTION
ROPE GUARD	11238277	18	2	674	11 29 474 2	GANGWAY INTERM. SECTION
ROPE GUARD	11238277	20	4	675	11 29 474 3	GANGWAY INTERM. SECTION
ROPE GUARD	11238277	22	2	676	10 55 514 8	FALL PROTECTION RFK
ROPE GUARD	11271479	6	1	599	79 04 871 14	BOTTOM HOOK BLOCK
ROPE GUARD	11481159	6	1	592	79 04 112 14	BOTTOM HOOK BLOCK
ROPE GUARD CPL	11287255	12	1	546	11 24 570 3	BOOM INTERMEDIATE SECTIO
ROPE GUARD CPL	11287255	12	2	562	11 24 570 9	BOOM INTERMEDIATE SECTIO
ROPE GUARD CPL	11287255	12	4	569	11 24 571 5	BOOM INTERMEDIATE SECTIO
ROPE GUARD CPL	11289080	13	2	607	99 34 394 14	TIP BOOM CPL
ROPE GUARD CPL	11294517	14	2	607	99 34 394 14	TIP BOOM CPL
ROPE GUARD LUG CPL	992925914	12	1	357	10 51 968 6	LUG SUPERSTRUCTURE CPL
ROPE GUARD LUG CPL	993353714	1	1	367	99 29 259 14	ROPE GUARD LUG CPL
ROPE GUARD ST.CONST.	993522914	20	1	588	99 23 398 14	ROLLER SET
ROPE GUARD TUBE	956809314	36	2	588	99 23 398 14	ROLLER SET
ROPE GUARD TUBE	956809514	21	1	588	99 23 398 14	ROLLER SET
ROPE GUARD TUBE	959841814	25	2	535	11 24 444 4	A-FRAME 1 CPL
ROPE GUIDE	991011614	605	1	3	01 38 406 14	LR 1300 SX
ROPE GUIDE WELD.CONST.	991011714	10	1	662	99 10 116 14	ROPE GUIDE
ROPE LEFT	11227045	10	1	377	11 22 703 7	ROPES LUG MAIN BOOM
ROPE LEFT	790517214	121	1	3	01 38 406 14	LR 1300 SX
ROPE LEFT	790517214	122	1	3	01 38 406 14	LR 1300 SX
ROPE LUG CPL RFK	10517439	550	1	3	01 38 406 14	LR 1300 SX
ROPE MOUNTING RFK	11236266	680	2	4	01 38 406 14	LR 1300 SX
ROPE PROTECTION ROD	10814912	12	2	592	79 04 112 14	BOTTOM HOOK BLOCK
ROPE PROTECTION ROD	11271482	12	2	599	79 04 871 14	BOTTOM HOOK BLOCK
ROPE PULL	592286314	26	1	419	10 35 007 6	SLIDING DOOR
ROPE PULLEY	10504352	1	1	592	79 04 112 14	BOTTOM HOOK BLOCK
ROPE PULLEY	10504352	1	3	599	79 04 871 14	BOTTOM HOOK BLOCK

Description	Item	Pos.	Quantity	Sheet	Assembly	Description
ROPE PULLEY	967217003	1	1	632	96 72 161 03	ROPE PULLEY CPL
ROPE PULLEY CPL	790202014	10	10	588	99 23 398 14	ROLLER SET
ROPE PULLEY CPL	790202014	10	3	613	11 28 744 5	MOUNTING PARTS
ROPE PULLEY CPL	914690714	4	12	366	99 29 258 14	LUG SHEAVE SET
ROPE PULLEY CPL	914690714	13	13	535	11 24 444 4	A-FRAME 1 CPL
ROPE PULLEY CPL	914941914	13	4	662	99 10 116 14	ROPE GUIDE
ROPE PULLEY CPL	915523714	12	1	588	99 23 398 14	ROLLER SET
ROPE PULLEY CPL	915523714	12	1	662	99 10 116 14	ROPE GUIDE
ROPE PULLEY CPL	919279914	11	3	588	99 23 398 14	ROLLER SET
ROPE PULLEY CPL	967216103	14	2	627	10 51 743 9	ROPE LUG CPL RFK
ROPE REEVING WINCH HYDR	10542516	2	1	627	10 51 743 9	ROPE LUG CPL RFK
ROPE RIGHT	10227828	10	1	354	99 23 387 14	ROPES LUG NEEDLE BOOM
ROPE SHEAVE	11271491	1	1	593	10 50 435 2	ROPE PULLEY
ROPES LUG MAIN BOOM	11227037	26	1	2	01 38 406 14	LR 1300 SX
ROPES LUG NEEDLE BOOM	992338714	24	1	2	01 38 406 14	LR 1300 SX
ROTARY FEED THROUGH HYD	10550970	2	1	442	11 89 300 5	TUBING HYDR
ROTARY LOCK	592285814	4	1	419	10 35 007 6	SLIDING DOOR
ROTARY SHAFT LIP SEAL		11	1	348	93 88 497 01	PLANETARY GEARBOX
ROTARY SHAFT LIP SEAL		63	2	348	93 88 497 01	PLANETARY GEARBOX
ROTARY SHAFT LIP SEAL	10014510	35	1	124	92 68 016	REPAIR KIT LOCK RING
ROTARY SHAFT LIP SEAL	11950212	53	1	376	99 04 645 14	DRIVE
ROTARY SHAFT LIP SEAL	710022201	64	2	392	90 01 376 2	SLEWING GEAR DRIVE
ROTARY SHAFT LIP SEAL	710029801	18	1	346	93 88 500 01	ROPE DRUM
ROTARY SHAFT LIP SEAL	710048501	17	1	346	93 88 500 01	ROPE DRUM
ROTARY SHAFT LIP SEAL	710054401	4	1	392	90 01 376 2	SLEWING GEAR DRIVE
ROTARY SHAFT LIP SEAL	710058901	11	2	392	90 01 376 2	SLEWING GEAR DRIVE
ROTATABLE BEAM	11271490	2	1	601	11 27 148 8	HANGER
ROTATABLE BEAM	11274675	2	1	595	11 27 463 8	HANGER
ROTATING BAR CPL	10020161	6	2	316	10 57 883 5	DOOR
ROTATING BAR CPL	10020161	12	2	318	10 57 897 6	DOOR
ROTATING BAR CPL	10020161	9	1	320	10 57 940 0	DOOR
ROTATING BAR CPL	10020161	9	2	321	10 56 623 7	DOOR
ROTATING BAR CPL	10020161	12	2	322	10 56 580 8	DOOR
ROTATIONAL SPEED SENSOR	10133077	20	2	297	10 14 297 7	ENGINE CONTROL SENSORS
ROUND SLING	10222935	92	2	500	10 56 187 5	TOOL EQUIPMENT
ROUND SLING	10280543	27	4	685	11 23 619 7	SELF-LOADING SYSTEM RFK
ROUND SLING	790269114	93	1	500	10 56 187 5	TOOL EQUIPMENT
ROUND SLING	790365114	29	1	685	11 23 619 7	SELF-LOADING SYSTEM RFK
ROUND SLING	805091714	18	1	604	99 34 387 14	NEEDLE ADD-ON PARTS
ROUND STEEL	954584908	17	144	463	11 89 365 0	CRAWLER CARRIER RIGHT CP
ROUND STEEL	954584908	17	144	474	11 89 365 1	CRAWLER CARRIER LEFT CP
RS FLANGE	9077464	1	2	114	10 13 975 2	REPAIR SET SWIVEL YOKE
RUBBER	10522190	5	1	422	59 22 871 14	FRONT WINDOW CPL
RUBBER	10535526	12	1	542	99 29 588 14	SUPPORT
RUBBER	10535526	12	2	543	10 35 063 3	FASTENER
RUBBER	10540082	50	2	505	11 23 820 4	PIVOT PIECE CPL
RUBBER	11269800	9	1	183	11 94 151 8	COOLER INSTALLATION WATE
RUBBER	11285382	11	1	549	11 28 391 3	FIXING CLAMP
RUBBER	289058614	5	0.016	67	10 56 067 3	BATTERY INSTALLATION CPL
RUBBER	289058614	8	0.08	67	10 56 067 3	BATTERY INSTALLATION CPL
RUBBER	289058614	9	0.023	67	10 56 067 3	BATTERY INSTALLATION CPL
RUBBER BELLOWS	10100666	40	1	430	10 22 506 8	OPERATOR SEAT
RUBBER BELLOWS	606272314	1	1	333	11 21 481 9	MASTER SWITCH
RUBBER BELLOWS	606272314	1	1	405	11 21 481 8	MASTER SWITCH
RUBBER BELLOWS	7366620	42	1	430	10 22 506 8	OPERATOR SEAT
RUBBER BUFFER	11903519	1	4	726	11 23 671 4	FRAME
RUBBER CONNECTION	10123671	3	1	230	10 14 671 6	OIL LINE PRE-ASSEMBLY
RUBBER CONNECTION	10126090	4	1	223	10 14 201 8	CRANKCASE BREATHER ASS
RUBBER CONNECTION	10126091	2	1	223	10 14 201 8	CRANKCASE BREATHER ASS
RUBBER CONNECTION	10126317	7	1	230	10 14 671 6	OIL LINE PRE-ASSEMBLY

Description	Item	Pos.	Quantity	Sheet	Assembly	Description
RUBBER CONNECTION	10128228	9	4	285	10 14 622 4	REGULATION BOOST PRESS
RUBBER CONNECTION	10128875	24	1	283	10 14 013 6	EXHAUST TC MOUNTING
RUBBER CONNECTION	10129904	4	1	267	10 14 967 6	CONNECTING LINE ADD-ON
RUBBER CONNECTION	10133641	3	1	223	10 14 201 8	CRANKCASE BREATHER ASS
RUBBER CONNECTION	9271340	13	1	265	10 14 736 9	INTAKE STACK ASSEMBLY
RUBBER CONNECTION	9271340	10	1	299	11 92 891 3	COMPRESSOR RFK
RUBBER MOUNT	726611214	18	4	479	99 26 718 14	PEDESTAL
RUBBER MOUNT	726612114	50	4	189	11 24 114 1	COOLER INSTALLATION CHA
RUBBER MOUNT	726612214	88	4	507	11 23 820 4	PIVOT PIECE CPL
RUBBER MOUNT	726612214	13	1	550	11 28 397 7	SUMP PAN CPL
RUBBER MOUNT	726612214	13	1	551	11 28 397 8	SUMP PAN CPL
RUBBER MOUNT	726612214	13	1	552	11 28 399 5	SUMP PAN CPL
RUBBER MOUNT	726612214	13	1	553	11 28 399 7	SUMP PAN CPL
RUBBER MOUNT	726613014	20	1	582	10 59 863 3	PENDULUM CPL
RUBBER MOUNT	726613614	30	4	183	11 94 151 8	COOLER INSTALLATION WATE
RUBBER MOUNT	726616208	55	2	642	10 55 372 1	ROOF RAILING RFK
RUBBER MOUNT	726616614	58	10	642	10 55 372 1	ROOF RAILING RFK
RUBBER MOUNT	726902614	21	4	316	10 57 883 5	DOOR
RUBBER MOUNT	726904014	37	1	65	10 58 163 4	CABIN SUSPENSION CPL
RUBBER MOUNT	726910114	19	3	65	10 58 163 4	CABIN SUSPENSION CPL
RUBBER MOUNT	726922214	13	4	45	10 51 961 6	OIL COOLER INSTALLATION
RUBBER RING	10123876	103	2	296	10 15 028 8	CABLE HARNESS MOUNTING
RUBBER RING	10123877	12	2	172	11 24 448 7	CENTRAL POWER UNIT EL
RUNNING ROLLER CPL	10552633	14	16	463	11 89 365 0	CRAWLER CARRIER RIGHT CP
RUNNING ROLLER CPL	10552633	14	16	474	11 89 365 1	CRAWLER CARRIER LEFT CP
SAFETY ELEMENT	11291030	3	1	196	11 24 679 0	AIR FILTER
SAFETY LEVER CPL	693168514	41	1	404	10 51 907 9	CONTROL STAND LEFT
SAFETY PLUG W HINGE-LID 10	10098106	12	2	438	99 18 041 14	LASHING SUPERSTRUCTURE
SAFETY PLUG W HINGE-LID 10	10098106	29	1	613	11 28 744 5	MOUNTING PARTS
SAFETY PLUG W HINGE-LID 10	10098106	45	2	662	99 10 116 14	ROPE GUIDE
SAFETY PLUG W HINGE-LID 12	485544014	15	2	557	10 53 216 2	ANCHORING ROD CPL
SAFETY PLUG W HINGE-LID 12	485544014	15	2	565	10 53 216 3	ANCHORING ROD CPL
SAFETY PLUG W HINGE-LID 12	485544014	15	2	572	10 53 216 4	ANCHORING ROD CPL
SAFETY PLUG W HINGE-LID 4	485565814	2	2	66	99 08 706 14	LADDER MOUNTING
SAFETY PLUG W HINGE-LID 4	485565814	12	1	550	11 28 397 7	SUMP PAN CPL
SAFETY PLUG W HINGE-LID 4	485565814	12	1	551	11 28 397 8	SUMP PAN CPL
SAFETY PLUG W HINGE-LID 4	485565814	19	2	555	11 94 087 8	ASSEMBLY UNIT
SAFETY PLUG W HINGE-LID 4	485565814	24	2	582	10 59 863 3	PENDULUM CPL
SAFETY PLUG W HINGE-LID 4	485565814	43	2	662	99 10 116 14	ROPE GUIDE
SAFETY PLUG W HINGE-LID 4	485565814	5	1	664	99 10 125 14	FORK
SAFETY PLUG W HINGE-LID 8	432016214	40	1	65	10 58 163 4	CABIN SUSPENSION CPL
SAFETY PLUG W HINGE-LID 8	432016214	30	1	613	11 28 744 5	MOUNTING PARTS
SAFETY ROLLER	939662601	26	1	505	11 23 820 4	PIVOT PIECE CPL
SAFETY ROLLER	969641401	40	1	353	96 96 543 01	WINCH FRAME
SAFETY TRAP	10350191	1	1	590	79 03 861 14	LOAD HOOK
SAFETY TRAP	10350196	2	1	597	11 48 116 2	SINGLE HOOK
SAFETY TRAP	10599212	2	2	603	11 27 148 9	TWIN HOOK
SASH LOCK	10581486	15	1	320	10 57 940 0	DOOR
SCR CPL.	11403711	3	1	303	11 90 032 5	EXHAUST GAS SYSTEM
SCRAPER	10352319	60	1	704	59 21 826 14	SUPPORT CYLINDER
SCRAPER	592031814	9	1	722	59 20 008 14	DOUBLE-ACTING CYL
SCRAPER	749073614	90	1	704	59 21 826 14	SUPPORT CYLINDER
SCRAPER RING	726054214	13	1	456	51 33 141 14	DOUBLE-ACTING CYL
SCRAPER RING	726054414	9	1	27	51 33 139 14	DOUBLE-ACTING CYL
SCREW	592287514	15	1	422	59 22 871 14	FRONT WINDOW CPL
SCREW CAP	779009008	8	1	255	10 13 508 0	HIGH PRESSURE CONNECTO
SCREW CARABINER	10473040	22	1	589	99 30 800 14	HOIST LIMIT SWITCH INSTAL.
SCREW DIN 7500C M2.5X5.3	7024631	4	2	28	51 16 576 14	TEMPERATURE CONTROLLER
SCREW DIN 931 M8X50 8.8	11236106	19	12	592	79 04 112 14	BOTTOM HOOK BLOCK
SCREW DIN 931 M8X50 8.8	11236106	19	12	599	79 04 871 14	BOTTOM HOOK BLOCK

Description	Item	Pos.	Quantity	Sheet	Assembly	Description
SCREW FITTING CPL	11253240	900	1	109	90 74 418	REGULATING VALVE
SCREW LOCKING	10547904	10	1	361	10 55 156 3	WINCH
SCREW LOCKING	811202114	104	1	105	10 11 835 0	CONNECTION HOUSING
SCREW LOCKING	811202114	104	1	114	10 13 975 2	REPAIR SET SWIVEL YOKE
SCREW LOCKING	811202114	105	1	226	10 15 529 8	OIL SUMP PRE-ASS.
SCREW LOCKING	811202114	105	1	271	10 14 286 0	AIR COND. COMPRESSOR A
SCREW LOCKING	8655016	105	1	107	10 11 835 7	REPAIR KIT CONNECTION HO
SCREW LOCKING	8655016	105	1	108	92 74 731	SEAL KIT CONNECTING HOUS
SCREW LOCKING	8655016	105	1	141	10 14 131 6	TERMINAL BOARD PRE-ASS.
SCREW LOCKING	8655016	105	1	248	10 14 294 2	LUBE OIL FILTER ASSEMBLY
SCREW LOCKING	8655016	109	1	287	10 12 037 2	STARTER INSTALLATION
SCREW LOCKING	8700012	106	1	122	98 89 832	RK CYLINDER+CONTROL PLAT
SCREW M12X30	11249772	10	3	445	10 55 097 0	ROTARY FEED THROUGH HYD
SCREW M30X1.5X150	10590183	12	4	465	10 55 716 2	GUIDE WHEEL CPL
SCREW PLUG		84	1	349	93 88 497 01	PLANETARY GEARBOX
SCREW PLUG		86	2	349	93 88 497 01	PLANETARY GEARBOX
SCREW PLUG	10041903	10	5	219	10 14 768 6	POWER UNIT SUPPORT ATT
SCREW PLUG	10115232	13	1	451	11 22 473 8	ADJUSTMENT
SCREW PLUG	10116078	4	1	259	10 14 675 3	FUEL FINE FILTER
SCREW PLUG	10137108	40	1	115	90 77 464	RS FLANGE
SCREW PLUG	10137108	29	3	141	10 14 131 6	TERMINAL BOARD PRE-ASS.
SCREW PLUG	10137108	19	1	146	10 13 803 3	SEAL KIT CPL.
SCREW PLUG	10137108	30	3	147	10 13 803 4	GASKET KIT INT.FLANGE
SCREW PLUG	10137113	20	3	146	10 13 803 3	SEAL KIT CPL.
SCREW PLUG	10137113	24	4	147	10 13 803 4	GASKET KIT INT.FLANGE
SCREW PLUG	10137115	27	2	141	10 14 131 6	TERMINAL BOARD PRE-ASS.
SCREW PLUG	10137115	27	2	147	10 13 803 4	GASKET KIT INT.FLANGE
SCREW PLUG	10137121	28	2	103	10 11 834 9	DOUBLE V-PUMP
SCREW PLUG	10137121	29	2	126	92 76 408	SEAL KIT DOUBLE PUMP
SCREW PLUG	10137121	21	1	127	10 12 878 7	V PUMP
SCREW PLUG	10137312	20	1	141	10 14 131 6	TERMINAL BOARD PRE-ASS.
SCREW PLUG	10137312	20	1	147	10 13 803 4	GASKET KIT INT.FLANGE
SCREW PLUG	10519025	30	1	451	11 22 473 8	ADJUSTMENT
SCREW PLUG	10598295	55	4	189	11 24 114 1	COOLER INSTALLATION CHA
SCREW PLUG	11217837	30	1	156	11 22 127 4	PUMP ELEMENT
SCREW PLUG	11224761	7	1	451	11 22 473 8	ADJUSTMENT
SCREW PLUG	11267402	20	1	94	11 21 993 0	PUMP HOUSING
SCREW PLUG	11267403	28	1	94	11 21 993 0	PUMP HOUSING
SCREW PLUG	11267415	1	1	95	10 59 347 4	PRESSURE LIMITING VALVE
SCREW PLUG	11267421	1	1	96	11 21 936 9	LOCKING SET
SCREW PLUG	11267439	1	1	97	11 06 730 4	SHUTDOWN VALVE
SCREW PLUG	11267451	1	1	99	11 26 744 7	SHUTTLE VALVE
SCREW PLUG	477510201	2	4	392	90 01 376 2	SLEWING GEAR DRIVE
SCREW PLUG	592316314	210	1	86	11 24 682 0	DISTRIBUTOR GEARBOX
SCREW PLUG	7361961	28	1	352	93 36 755 01	OIL-GAUGING INSTRUMENT
SCREW PLUG	7380177	4	3	217	11 38 961 7	CRANKCASE CPL. WITH CYLIN
SCREW PLUG	7380566	6	3	217	11 38 961 7	CRANKCASE CPL. WITH CYLIN
SCREW PLUG	7380566	12	1	243	10 12 948 0	OIL COOLER, PRE-ASSEMBLE
SCREW PLUG	7380566	7	1	265	10 14 736 9	INTAKE STACK ASSEMBLY
SCREW PLUG	7380566	20	1	283	10 14 013 6	EXHAUST TC MOUNTING
SCREW PLUG	7380688	3	2	259	10 14 675 3	FUEL FINE FILTER
SCREW PLUG	7381457	7	2	217	11 38 961 7	CRANKCASE CPL. WITH CYLIN
SCREW PLUG	7381457	17	1	265	10 14 736 9	INTAKE STACK ASSEMBLY
SCREW PLUG	7381457	21	1	283	10 14 013 6	EXHAUST TC MOUNTING
SCREW PLUG	7381638	11	1	243	10 12 948 0	OIL COOLER, PRE-ASSEMBLE
SCREW PLUG	7381638	13	1	267	10 14 967 6	CONNECTING LINE ADD-ON
SCREW PLUG	7381638	10	2	290	10 11 557 7	FLYWHEEL HOUSING MOUNT
SCREW PLUG	7381638	4	1	298	10 14 637 4	LOCKING PIECES
SCREW PLUG	7381638	9	2	302	11 41 475 7	ACCESSORIES AIR COMPRES
SCREW PLUG	7382203	5	2	298	10 14 637 4	LOCKING PIECES

Description	Item	Pos.	Quantity	Sheet	Assembly	Description
SCREW PLUG	7382204	8	2	243	10 12 948 0	OIL COOLER, PRE-ASSEMBLE
SCREW PLUG	7414500	24	3	451	11 22 473 8	ADJUSTMENT
SCREW PLUG	933676601	23	1	352	93 36 755 01	OIL-GAUGING INSTRUMENT
SCREW PLUG 11SMNPB30+C	10137918	2	1	220	10 13 845 0	FINAL CONTROL VALVE
SCREW PLUG 3/4"-16UNF	10008093	5	1	163	10 22 601 3	V PUMP
SCREW PLUG 3/4"-16UNF	10008093	30	1	165	11 21 593 6	PUMP ELEMENT
SCREW PLUG 7/16-20UNF-2A	10324900	4	1	159	10 35 160 3	CONTROL VALVE
SCREW PLUG AEHNL.DIN 908	409710601	67	3	467	96 93 178 01	TRACTION DRIVE
SCREW PLUG D26X26 G1/2"	505105814	250	2	86	11 24 682 0	DISTRIBUTOR GEARBOX
SCREW PLUG DIN 906 M10X1	403900101	80	1	636	54 02 703 14	FLANGE CPL
SCREW PLUG DIN 906 M10X1	403900101	43	4	700	11 89 568 6	SELF-LOADING SYSTEM RFK
SCREW PLUG DIN 906 ST	403900501	22	1	141	10 14 131 6	TERMINAL BOARD PRE-ASS.
SCREW PLUG DIN 908 G1/2	11239915	3	1	690	51 16 404 14	LOWERING BRAKE VALVE
SCREW PLUG DIN 908 G1/8	11239904	5	1	692	59 21 584 14	LOWERING BRAKE VALVE
SCREW PLUG DIN 908 G3/8	11239897	4	1	692	59 21 584 14	LOWERING BRAKE VALVE
SCREW PLUG DIN 908 M10X1	502027614	60	2	376	99 04 645 14	DRIVE
SCREW PLUG DIN 908 M12X1.	502027514	122	1	376	99 04 645 14	DRIVE
SCREW PLUG DIN 908 M18X1.	4600320	64	1	376	99 04 645 14	DRIVE
SCREW PLUG DIN 908 M22X1.5	404101608	30	2	635	54 02 702 14	ROPE DRUM CPL
SCREW PLUG DIN 910 R1/2" 5.	4000898	480	9	86	11 24 682 0	DISTRIBUTOR GEARBOX
SCREW PLUG G1/2"-ED	11226023	60	2	383	51 14 347 14	SG SAFETY BLOCK
SCREW PLUG G1/4"-ED	11226129	150	1	383	51 14 347 14	SG SAFETY BLOCK
SCREW PLUG G1/8"-ED	11226130	160	1	383	51 14 347 14	SG SAFETY BLOCK
SCREW PLUG G3/8"-ED	11226133	165	1	383	51 14 347 14	SG SAFETY BLOCK
SCREW PLUG M10X1	10115237	28	2	165	11 21 593 6	PUMP ELEMENT
SCREW PLUG M10X1	10115237	25	4	451	11 22 473 8	ADJUSTMENT
SCREW PLUG M14X1.5 NBR	10337050	4	1	90	11 21 992 7	COVER
SCREW PLUG M14X1.5 NBR	10337050	4	1	91	11 21 992 9	COVER
SCREW PLUG M14X1.5 NBR	10337050	12	1	94	11 21 993 0	PUMP HOUSING
SCREW PLUG M14X1.5 NBR	10337050	13	1	94	11 21 993 0	PUMP HOUSING
SCREW PLUG M14X1.5 NBR	10337050	14	1	94	11 21 993 0	PUMP HOUSING
SCREW PLUG M14X1.5 NBR	10337050	15	1	94	11 21 993 0	PUMP HOUSING
SCREW PLUG M14X1.5 NBR	10337050	16	1	94	11 21 993 0	PUMP HOUSING
SCREW PLUG M14X1.5 NBR	10337050	17	1	94	11 21 993 0	PUMP HOUSING
SCREW PLUG M14X1.5 NBR	10337050	18	1	94	11 21 993 0	PUMP HOUSING
SCREW PLUG M14X1.5 NBR	10337050	26	1	102	11 21 991 8	BEARING FLANGE
SCREW PLUG M14X1.5 ST	7371299	279	2	18	11 28 647 6	VALVE BLOCK
SCREW PLUG M14X1.5X41	11234068	275	16	18	11 28 647 6	VALVE BLOCK
SCREW PLUG M18X1.5 NBR	10337052	21	1	94	11 21 993 0	PUMP HOUSING
SCREW PLUG M22X1.5	10340236	19	2	202	10 30 300 7	FUEL PREFILTER
SCREW PLUG M22X1.5	10349193	22	1	94	11 21 993 0	PUMP HOUSING
SCREW PLUG M22X1.5	10349193	23	1	94	11 21 993 0	PUMP HOUSING
SCREW PLUG M24X1.5X20	7024504	172	14	18	11 28 647 6	VALVE BLOCK
SCREW PLUG M26X1.5	10503477	13	1	447	51 24 059 14	VARIABLE DISPLACEMENT MO
SCREW PLUG M30X40 ETG 10	10152594	2	1	244	10 15 259 2	OVERPRESSURE VALVE
SCREW PLUG M33X2 NBR	10289931	24	1	94	11 21 993 0	PUMP HOUSING
SCREW PLUG M39X1.5X36.5	10228470	167	5	18	11 28 647 6	VALVE BLOCK
SCREW PLUG M39X1.5X36.5	10301757	169	2	18	11 28 647 6	VALVE BLOCK
SCREW PLUG M48X2	10525039	42	1	94	11 21 993 0	PUMP HOUSING
SCREW PLUG M48X2	9885660	16	2	105	10 11 835 0	CONNECTION HOUSING
SCREW PLUG M6	9268441	8	3	110	92 73 644	SEAL KIT REGULATING VALVE
SCREW PLUG M6	9268441	8	5	141	10 14 131 6	TERMINAL BOARD PRE-ASS.
SCREW PLUG M6	9268441	8	5	147	10 13 803 4	GASKET KIT INT.FLANGE
SCREW PLUG M8X1	9881609	7	2	141	10 14 131 6	TERMINAL BOARD PRE-ASS.
SCREW PLUG M8X1	9881609	8	2	146	10 13 803 3	SEAL KIT CPL.
SCREW PLUG M8X1	9881609	7	2	147	10 13 803 4	GASKET KIT INT.FLANGE
SCREW SLEEVE	10012024	5	2	731	11 28 048 1	CONNECTION PARTS
SCREW UN 1206 M10X30	10502692	5	1	35	10 53 048 9	FUSE HOLDER
SCREW UN 1206 M10X30	10502692	55	1	735	10 56 013 7	MAINS SUPPLY BATTERY
SEAL	10115623	18	1	283	10 14 013 6	EXHAUST TC MOUNTING

Description	Item	Pos.	Quantity	Sheet	Assembly	Description
SEAL	10117891	2	1	242	10 12 948 1	OIL COOLER ADD-ON
SEAL	10118556	2	6	264	10 14 736 6	AIR INTAKE PIPE ASS.
SEAL	10119923	3	2	243	10 12 948 0	OIL COOLER, PRE-ASSEMBLE
SEAL	10125740	3	1	283	10 14 013 6	EXHAUST TC MOUNTING
SEAL	10126427	3	1	225	10 14 844 4	OIL SUMP WITH FASTENING
SEAL	10126510	2	1	238	10 13 475 1	CYLINDER HEAD COVER ASS
SEAL	10126510	2	1	239	10 12 653 5	CYLINDER HEAD COVER ASS
SEAL	10126510	3	1	241	10 13 469 6	CYLINDER HEAD COVER ASS
SEAL	10126738	2	1	219	10 14 768 6	POWER UNIT SUPPORT ATT
SEAL	10135885	2	6	280	10 14 144 4	EXHAUST PIPE ASSEMBLY
SEAL	10137721	5	1	290	10 11 557 7	FLYWHEEL HOUSING MOUNT
SEAL	10144102	31	1	303	11 90 032 5	EXHAUST GAS SYSTEM
SEAL	10144861	18	1	204	11 92 923 6	ASSEMBLY INSTAL.
SEAL	10294171	4	1	202	10 30 300 7	FUEL PREFILTER
SEAL	10297876	2	1	159	10 35 160 3	CONTROL VALVE
SEAL	10297876	2	1	168	10 11 497 5	CONTROL VALVE
SEAL	11250971	2	1	421	11 25 097 0	SLIDING WINDOW
SEAL	11251434	6	1	446	11 89 617 8	SEALING SET
SEAL	552006114	26	2	48	10 56 070 1	TANK HYDR CPL
SEAL	7011131	2	1	227	50 04 624	OIL DRAIN PLUG
SEAL	7412935	18	1	202	10 30 300 7	FUEL PREFILTER
SEAL	790230014	9	2	721	10 51 728 1	TUBING HYDR
SEAL	9079130	2	1	291	10 11 912 8	LOCKING PIECES
SEAL	9144762	3	1	240	91 44 757	END COVER
SEAL	9275428	76	1	110	92 73 644	SEAL KIT REGULATING VALVE
SEAL	9275428	76	1	117	92 75 443	REPAIR SET LID
SEAL	9882207	15	2	103	10 11 834 9	DOUBLE V-PUMP
SEAL	9882207	15	2	126	92 76 408	SEAL KIT DOUBLE PUMP
SEAL KIT	10215808	999	1	528	51 04 292 14	DIRECTIONAL CONTROL VALV
SEAL KIT CONNECTING HOUS	9274731	91	1	105	10 11 835 0	CONNECTION HOUSING
SEAL KIT CPL.	10138033	90	1	127	10 12 878 7	V PUMP
SEAL KIT CPL.	512402214	990	1	359	51 22 942 14	OIL MOTOR
SEAL KIT DOUBLE PUMP	9276408	98	1	104	10 11 834 9	DOUBLE V-PUMP
SEAL KIT DRIVE SHAFT	512416214	98	1	448	10 50 351 3	DRIVING GEAR
SEAL KIT GEAR WHEEL MOTO	10493890	901	1	32	55 09 453 14	OIL MOTOR
SEAL KIT HIGH PRESS.CONN	10141216	210	1	253	10 15 315 1	HIGH PRESS.CONNECTOR W.
SEAL KIT HIGH PRESS.CONN	10141216	12	1	254	10 14 114 0	RK HIGH PRESSURE CONNEC
SEAL KIT HIGH PRESSURE P	10152787	210	1	249	10 15 085 7	HIGH PRESSURE PUMP W.FA
SEAL KIT HIGH PRESSURE P	10152787	4	1	250	10 15 074 3	RK HIGH PRESSURE PUMP
SEAL KIT INJECTOR	10141215	210	1	252	10 15 286 7	INJECTOR WITH FASTENING
SEAL KIT PRESSUR.CONTROL	10123210	4	2	147	10 13 803 4	GASKET KIT INT.FLANGE
SEAL KIT PRESSUR.CONTROL	10123214	90	1	130	10 12 942 0	PRESSURE REDUCTION VALV
SEAL KIT PRESSURE VALVE	10332095	90	1	143	10 12 323 6	PRESSURE FEEDER VALVE
SEAL KIT PRESSURE VALVE	10332095	2	2	147	10 13 803 4	GASKET KIT INT.FLANGE
SEAL KIT REGULATING VALVE	10122265	4	1	146	10 13 803 3	SEAL KIT CPL.
SEAL KIT REGULATING VALVE	9273644	89	1	103	10 11 834 9	DOUBLE V-PUMP
SEAL KIT REGULATING VALVE	9273644	90	1	109	90 74 418	REGULATING VALVE
SEALANT	8627609	109	1	226	10 15 529 8	OIL SUMP PRE-ASS.
SEALING FLANGE SAE	11293256	44	4	8	11 29 618 6	SUPERSTRUCTURE HYDR
SEALING FLANGE SAE	11293256	15	1	179	10 57 532 2	INTAKE PIPE OIL CPL
SEALING FLANGE SAE	510705314	43	2	8	11 29 618 6	SUPERSTRUCTURE HYDR
SEALING MODULE	602453214	5	2	411	91 65 251 14	CABLE DUCT CABINET 1
SEALING MODULE	602453914	8	2	411	91 65 251 14	CABLE DUCT CABINET 1
SEALING MODULE	602454614	2	2	411	91 65 251 14	CABLE DUCT CABINET 1
SEALING MODULE	602454714	4	2	411	91 65 251 14	CABLE DUCT CABINET 1
SEALING MODULE	602457014	3	2	411	91 65 251 14	CABLE DUCT CABINET 1
SEALING MODULE	602457114	6	2	411	91 65 251 14	CABLE DUCT CABINET 1
SEALING MODULE	602457214	7	2	411	91 65 251 14	CABLE DUCT CABINET 1
SEALING NUT M12X1.75	7005072	18	2	447	51 24 059 14	VARIABLE DISPLACEMENT MO
SEALING PLUG		2	1	348	93 88 497 01	PLANETARY GEARBOX

Description	Item	Pos.	Quantity	Sheet	Assembly	Description
SEALING PLUG		9	3	348	93 88 497 01	PLANETARY GEARBOX
SEALING PLUG	10030837	14	14	217	11 38 961 7	CRANKCASE CPL. WITH CYLIN
SEALING PLUG	10036325	8	1	237	11 44 800 5	ROCKER ARM BRACKET PRE
SEALING PLUG	10465711	15	1	219	10 14 768 6	POWER UNIT SUPPORT ATT
SEALING PLUG	10465711	11	1	279	10 14 601 2	MANIFOLD FOR WATER CPL.
SEALING PLUG	11389287	3	2	262	10 14 382 8	INJECTION LINES
SEALING PLUG	605614714	14	2	739	10 52 957 6	REFUELLING PUMP CPL
SEALING PLUG	7008121	24	4	141	10 14 131 6	TERMINAL BOARD PRE-ASS.
SEALING PLUG	7380480	7	1	467	96 93 178 01	TRACTION DRIVE
SEALING PLUG	7380490	23	2	141	10 14 131 6	TERMINAL BOARD PRE-ASS.
SEALING PLUG	7380779	16	2	247	10 13 382 3	SUCTION PUMP PRE-ASS.
SEALING PLUG	7382069	8	1	217	11 38 961 7	CRANKCASE CPL. WITH CYLIN
SEALING PROFILE	11918670	13	4	316	10 57 883 5	DOOR
SEALING PROFILE	11918670	11	4.1	318	10 57 897 6	DOOR
SEALING PROFILE	11918670	13	2.6	320	10 57 940 0	DOOR
SEALING PROFILE	11918670	13	1.35	321	10 56 623 7	DOOR
SEALING PROFILE	11918670	11	2.8	322	10 56 580 8	DOOR
SEALING RING		81	1	348	93 88 497 01	PLANETARY GEARBOX
SEALING RING		87	1	349	93 88 497 01	PLANETARY GEARBOX
SEALING RING	10011864	6	17	261	10 14 588 5	LEAK OIL RETURN LINE
SEALING RING	10011864	7	2	285	10 14 622 4	REGULATION BOOST PRESS
SEALING RING	10011864	8	2	302	11 41 475 7	ACCESSORIES AIR COMPRES
SEALING RING	10011865	5	2	251	10 15 278 7	SEAL KIT HIGH PRESSURE P
SEALING RING	10011865	11	2	261	10 14 588 5	LEAK OIL RETURN LINE
SEALING RING	10011866	19	3	261	10 14 588 5	LEAK OIL RETURN LINE
SEALING RING	10011866	2	11	276	10 14 821 7	PIPELINE INSTALLATION
SEALING RING	10011866	6	1	278	10 14 274 4	COOLING WATER AIR BLEED
SEALING RING	10011867	16	2	284	10 14 511 2	EXHAUST NOZZLE ATTACHM
SEALING RING	10011867	4	8	302	11 41 475 7	ACCESSORIES AIR COMPRES
SEALING RING	10011868	2	1	229	10 13 451 7	LEVEL SENSOR
SEALING RING	10011868	6	4	251	10 15 278 7	SEAL KIT HIGH PRESSURE P
SEALING RING	10011868	7	14	260	10 14 333 9	FUEL LINES
SEALING RING	10011870	8	1	265	10 14 736 9	INTAKE STACK ASSEMBLY
SEALING RING	10011870	27	1	283	10 14 013 6	EXHAUST TC MOUNTING
SEALING RING	10011870	13	1	299	11 92 891 3	COMPRESSOR RFK
SEALING RING	10011871	14	2	261	10 14 588 5	LEAK OIL RETURN LINE
SEALING RING	10113731	3	1	244	10 15 259 2	OVERPRESSURE VALVE
SEALING RING	10285620	25	2	107	10 11 835 7	REPAIR KIT CONNECTION HO
SEALING RING	10285620	27	2	108	92 74 731	SEAL KIT CONNECTING HOUS
SEALING RING	11226035	80	1	383	51 14 347 14	SG SAFETY BLOCK
SEALING RING	11226086	92	1	383	51 14 347 14	SG SAFETY BLOCK
SEALING RING	4900262	32	7	183	11 94 151 8	COOLER INSTALLATION WATE
SEALING RING	7013116	22	1	110	92 73 644	SEAL KIT REGULATING VALVE
SEALING RING	7013116	22	1	113	92 78 875	PRESSURE CUT-OFF
SEALING RING	710004514	5	4	580	11 28 610 5	RETAINING DEVICE CPL
SEALING RING	710020114	15	1	638	54 02 705 14	DRIVE UNIT CPL
SEALING RING	710031014	10	1	637	54 02 704 14	POWER TAKE-OFF CPL
SEALING RING	710069314	11	1	482	11 26 260 6	WINCH 1 HYDR
SEALING RING	710069314	11	1	497	11 26 261 1	WINCH 2 HYDR
SEALING RING	7101008	5	1	226	10 15 529 8	OIL SUMP PRE-ASS.
SEALING RING	7101021	3	1	220	10 13 845 0	FINAL CONTROL VALVE
SEALING RING	7101021	7	1	226	10 15 529 8	OIL SUMP PRE-ASS.
SEALING RING	7101021	10	1	227	50 04 624	OIL DRAIN PLUG
SEALING RING	7101022	23	4	48	10 56 070 1	TANK HYDR CPL
SEALING RING	7101022	33	1	183	11 94 151 8	COOLER INSTALLATION WATE
SEALING RING	710102514	56	4	189	11 24 114 1	COOLER INSTALLATION CHA
SEALING RING	710103714	34	1	183	11 94 151 8	COOLER INSTALLATION WATE
SEALING RING	710103814	5	4	73	10 51 969 5	A-FRAME ERECTION HYDR
SEALING RING	710104514	48	1	210	11 92 958 8	AIR DUCT CPL
SEALING RING	710104514	31	2	635	54 02 702 14	ROPE DRUM CPL

Description	Item	Pos.	Quantity	Sheet	Assembly	Description
SEALING RING	710121014	123	1	376	99 04 645 14	DRIVE
SEALING RING	7381225	14	1	219	10 14 768 6	POWER UNIT SUPPORT ATT
SEALING RING	7381225	13	1	243	10 12 948 0	OIL COOLER, PRE-ASSEMBLE
SEALING RING	7381367	2	1	109	90 74 418	REGULATING VALVE
SEALING RING	7381367	94	2	110	92 73 644	SEAL KIT REGULATING VALVE
SEALING RING	7610225	14	1	352	93 36 755 01	OIL-GAUGING INSTRUMENT
SEALING RING	7610225	6	1	394	92 76 934 01	OIL FILLER NECK
SEALING RING	761022903	2	1	352	93 36 755 01	OIL-GAUGING INSTRUMENT
SEALING RING	761022903	21	1	352	93 36 755 01	OIL-GAUGING INSTRUMENT
SEALING RING	790295414	61	2	376	99 04 645 14	DRIVE
SEALING RING	790347114	550	11	86	11 24 682 0	DISTRIBUTOR GEARBOX
SEALING RING	790347214	560	1	86	11 24 682 0	DISTRIBUTOR GEARBOX
SEALING RING	790403914	310	1	86	11 24 682 0	DISTRIBUTOR GEARBOX
SEALING RING	790444514	65	1	376	99 04 645 14	DRIVE
SEALING RING COVER	592178514	20	1	86	11 24 682 0	DISTRIBUTOR GEARBOX
SEALING SCREW	11220932	4	1	154	10 22 650 5	V PUMP
SEALING SCREW	11221267	5	1	154	10 22 650 5	V PUMP
SEALING SET	10423993	900	1	25	10 59 143 5	DIRECTIONAL CONTROL VALV
SEALING SET	10524595	1	1	22	10 35 148 6	VALVE BLOCK
SEALING SET	11219356	4	1	88	11 21 990 2	DRIVING GEAR
SEALING SET	11896178	900	1	445	10 55 097 0	ROTARY FEED THROUGH HYD
SEALING SET	511493914	51	2	342	51 22 527 14	OIL MOTOR
SEALING SET	511614214	61	1	359	51 22 942 14	OIL MOTOR
SEALING SET	512259414	990	1	342	51 22 527 14	OIL MOTOR
SEALING SET	512259514	61	1	342	51 22 527 14	OIL MOTOR
SEALING SET	512401514	51	2	359	51 22 942 14	OIL MOTOR
SEALING SET	512714614	10	1	393	50 20 383 01	MULTI-DISK BRAKE
SEALING SET	512714614	9	1	396	93 93 479 01	BRAKE PACKING SET
SEALING SET	512714714	11	1	393	50 20 383 01	MULTI-DISK BRAKE
SEALING SET	512714714	10	1	396	93 93 479 01	BRAKE PACKING SET
SEALING SET	790413614	990	1	21	59 23 090 14	PRESSURE LIMITING CARTRI
SEALING SET	790545514	900	1	19	59 20 707 14	RESTRICTOR VALVE
SEALING SET	790545514	900	1	20	59 23 006 14	SOLENOID VALVE
SEALING SET CPL	10224159	3	1	171	10 22 358 1	PRESSURE FILTER
SEALING SET CPL	10351610	99	1	154	10 22 650 5	V PUMP
SEALING SET CPL	10595126	200	1	361	10 55 156 3	WINCH
SEALING SET CPL	11904703	900	1	705	59 21 826 14	SUPPORT CYLINDER
SEALING SET CPL	502050814	990	1	187	51 22 501 14	OIL MOTOR
SEALING SET CPL	502050814	990	1	191	51 22 394 14	OIL MOTOR
SEALING SET CPL	512256614	250	1	383	51 14 347 14	SG SAFETY BLOCK
SEALING SET CPL	512299214	990	1	384	51 22 991 14	OIL MOTOR
SEALING SET CPL	790579414	902	1	18	11 28 647 6	VALVE BLOCK
SEALING SET CPL	981967114	990	1	630	51 02 322 14	OIL MOTOR
SEALING SET CPL CYL	10352446	900	1	526	10 09 917 3	DOUBLE-ACTING CYL
SEALING SET CPL CYL	10352447	1	1	681	10 22 785 5	DOUBLE-ACTING CYL
SEALING SET CPL CYL	513319014	99	1	456	51 33 141 14	DOUBLE-ACTING CYL
SEALING SET CPL CYL	513319214	99	1	27	51 33 139 14	DOUBLE-ACTING CYL
SEALING SET CPL CYL	790230614	900	1	722	59 20 008 14	DOUBLE-ACTING CYL
SEALING SET CPL CYL	790407714	900	1	74	59 21 041 14	DOUBLE-ACTING CYL
SEALING SET CPL CYL	790407814	900	1	688	59 21 042 14	DOUBLE-ACTING CYL
SEALING SET MONOBLOCK	10349716	901	1	18	11 28 647 6	VALVE BLOCK
SEALING SET MONOBLOCK	10349776	900	1	18	11 28 647 6	VALVE BLOCK
SEARCHLIGHT SUPPORT CPL	11228708	11	1	647	10 52 547 1	ADDNL.FLOODLIGHT SUPERS
SEAT	11226118	130	1	383	51 14 347 14	SG SAFETY BLOCK
SEAT FRAME	7024996	15	1	430	10 22 506 8	OPERATOR SEAT
SEAT PART CPL	7024981	12	1	430	10 22 506 8	OPERATOR SEAT
SEAT VAT	10165637	65	1	430	10 22 506 8	OPERATOR SEAT
SECURING CHAIN	592291614	2	1	425	59 22 914 14	PLATFORM FIXATION CPL
SELF-ALIGNING ROLLER BEAR	746001701	16	1	346	93 88 500 01	ROPE DRUM
SELF-LOADING SYSTEM HYD	10519712	2	1	679	10 51 971 3	SELF-LOADING SYSTEM RFK

Description	Item	Pos.	Quantity	Sheet	Assembly	Description
SELF-LOADING SYSTEM HYD	10519738	2	1	685	11 23 619 7	SELF-LOADING SYSTEM RFK
SELF-LOADING SYSTEM RFK	10519713	642	1	3	01 38 406 14	LR 1300 SX
SELF-LOADING SYSTEM RFK	11236197	644	1	3	01 38 406 14	LR 1300 SX
SELF-LOADING SYSTEM RFK	11242988	647	1	3	01 38 406 14	LR 1300 SX
SELF-LOADING SYSTEM RFK	11895685	10	1	694	11 24 298 8	SELF-LOADING SYSTEM RFK
SELF-LOADING SYSTEM RFK	11895686	10	1	695	11 89 568 5	SELF-LOADING SYSTEM RFK
SELF-LOADING SYSTEM RFK	11895687	11	1	694	11 24 298 8	SELF-LOADING SYSTEM RFK
SELF-LOADING SYSTEM RFK	11895688	10	1	701	11 89 568 7	SELF-LOADING SYSTEM RFK
SENSOR	10144038	21	1	204	11 92 923 6	ASSEMBLY INSTAL.
SENSOR	11008787	22	2	204	11 92 923 6	ASSEMBLY INSTAL.
SERIES TERMINAL	10550739	75	22	402	10 55 963 5	SWITCH CABINET X1
SERIES TERMINAL	602125114	22	7	39	10 56 645 8	TERMINAL BOX
SERIES TERMINAL	602151914	86	4	402	10 55 963 5	SWITCH CABINET X1
SERIES TERMINAL	602153214	51	2	735	10 56 013 7	MAINS SUPPLY BATTERY
SERIES TERMINAL	602153814	23	39	39	10 56 645 8	TERMINAL BOX
SERIES TERMINAL	602153814	74	13	402	10 55 963 5	SWITCH CABINET X1
SERIES TERMINAL	602153814	80	4	402	10 55 963 5	SWITCH CABINET X1
SERIES TERMINAL	602153814	12	15	611	10 57 652 3	CLAMPING SOCKET
SERIES TERMINAL	693181114	71	3	402	10 55 963 5	SWITCH CABINET X1
SERRATED LOCK WASHER DI	425221314	9	1	35	10 53 048 9	FUSE HOLDER
SERRATED LOCK WASHER DI	425221314	16	4	339	10 51 969 7	NEEDLE LUFFING WINCH
SET MAIN BEARINGS	9076458	51	1	214	12 42 545 4	DIESEL ENGINE
SG HYDR	10519683	2	1	378	10 51 968 2	SG SUPERSTRUCTURE
SG SAFETY BLOCK	511434714	2	1	381	10 55 216 1	TUBING HYDR
SG SUPERSTRUCTURE	10519682	27	1	2	01 38 406 14	LR 1300 SX
SG TACHOGENERATOR RFK	10522930	828	1	4	01 38 406 14	LR 1300 SX
SG TACHOGENERATOR RFK	10529522	3	1	733	10 52 293 0	SG TACHOGENERATOR RFK
SHACKLE	11280746	16	1	659	11 27 109 7	LIGHTNING ROD RFK
SHACKLE	773930114	19	1	501	10 56 183 8	TOOL
SHACKLE	773930114	13	1	627	10 51 743 9	ROPE LUG CPL RFK
SHACKLE	773935814	28	4	685	11 23 619 7	SELF-LOADING SYSTEM RFK
SHACKLE	773939214	3	1	458	11 91 872 5	CHAIN CPL
SHACKLE	773939214	15	1	589	99 30 800 14	HOIST LIMIT SWITCH INSTAL.
SHACKLE	773954514	94	2	500	10 56 187 5	TOOL EQUIPMENT
SHACKLE	773954714	3	2	472	99 08 357 14	ATTACHMENT CHAIN
SHAFT	540272014	30	1	636	54 02 703 14	FLANGE CPL
SHAFT SEAL	10564158	14	1	342	51 22 527 14	OIL MOTOR
SHAFT SEAL	11950210	50	1	376	99 04 645 14	DRIVE
SHAFT SEAL	7022315	2	1	389	11 94 020 8	CLOSING RING
SHAFT SEAL	710069514	20	1	156	11 22 127 4	PUMP ELEMENT
SHAFT SEAL	710069514	20	1	162	10 35 161 0	SEALING SET CPL
SHAFT SEAL	7413402	20	1	165	11 21 593 6	PUMP ELEMENT
SHAFT SEAL	790563914	10	1	447	51 24 059 14	VARIABLE DISPLACEMENT MO
SHEET	10098789	22	1	326	11 24 922 2	COVER UNDERSIDE
SHEET	10099005	1	1	369	99 29 389 14	SIDE COMPONENT
SHEET	10099005	1	1	370	99 29 392 14	SIDE COMPONENT
SHEET	10099009	3	10	372	99 29 386 14	BRACKET CPL
SHEET	10099009	3	10	373	99 29 434 14	BRACKET CPL
SHEET	10119129	1	1	291	10 11 912 8	LOCKING PIECES
SHEET	10225695	37	2	308	11 24 409 0	PANELLING SUPERSTR. INSTA
SHEET	10226477	24	1	419	10 35 007 6	SLIDING DOOR
SHEET	10336707	1	3	372	99 29 386 14	BRACKET CPL
SHEET	10336707	1	3	373	99 29 434 14	BRACKET CPL
SHEET	10336708	2	8	372	99 29 386 14	BRACKET CPL
SHEET	10336708	2	8	373	99 29 434 14	BRACKET CPL
SHEET	10336722	4	3	372	99 29 386 14	BRACKET CPL
SHEET	10336722	4	3	373	99 29 434 14	BRACKET CPL
SHEET	10447259	39	1	417	10 22 645 4	DOOR ACCESSORIES
SHEET	10522189	7	1	422	59 22 871 14	FRONT WINDOW CPL
SHEET	10540513	24	2	685	11 23 619 7	SELF-LOADING SYSTEM RFK

Description	Item	Pos.	Quantity	Sheet	Assembly	Description
SHEET	10545918	10	1	308	11 24 409 0	PANELLING SUPERSTR. INSTA
SHEET	10560687	10	1	326	11 24 922 2	COVER UNDERSIDE
SHEET	10560688	17	1	326	11 24 922 2	COVER UNDERSIDE
SHEET	10560690	16	1	326	11 24 922 2	COVER UNDERSIDE
SHEET	10560691	11	1	326	11 24 922 2	COVER UNDERSIDE
SHEET	10560692	12	1	326	11 24 922 2	COVER UNDERSIDE
SHEET	10583559	15	1	326	11 24 922 2	COVER UNDERSIDE
SHEET	10583611	19	1	326	11 24 922 2	COVER UNDERSIDE
SHEET	10583612	20	1	326	11 24 922 2	COVER UNDERSIDE
SHEET	10583642	51	1	310	11 24 409 0	PANELLING SUPERSTR. INSTA
SHEET	10589204	74	2	507	11 23 820 4	PIVOT PIECE CPL
SHEET	11215379	10	1	625	11 21 552 4	ANGLE INDICATION RFK
SHEET	11219851	90	4	507	11 23 820 4	PIVOT PIECE CPL
SHEET	11219851	11	2	518	11 23 653 3	SUPPORT CPL
SHEET	11219851	11	2	540	11 25 204 2	SUPPORT CPL
SHEET	11219851	12	2	558	11 23 292 2	SUPPORT CPL
SHEET	11228227	25	1	685	11 23 619 7	SELF-LOADING SYSTEM RFK
SHEET	11231673	19	2	579	11 28 648 4	MOUNTING PARTS
SHEET	11244094	28	1	308	11 24 409 0	PANELLING SUPERSTR. INSTA
SHEET	11249223	13	1	326	11 24 922 2	COVER UNDERSIDE
SHEET	11249224	18	1	326	11 24 922 2	COVER UNDERSIDE
SHEET	11249225	21	1	326	11 24 922 2	COVER UNDERSIDE
SHEET	11249678	24	1	326	11 24 922 2	COVER UNDERSIDE
SHEET	11909496	140	1	428	11 93 934 6	AIR CONDITIONING
SHEET	11913226	64	4	579	11 28 648 4	MOUNTING PARTS
SHEET	592072914	112	1	18	11 28 647 6	VALVE BLOCK
SHEET GASKET	10154459	2	1	218	10 15 445 8	CYLINDER
SHEET GASKET	592288114	31	1	422	59 22 871 14	FRONT WINDOW CPL
SHIM RING	10007971	3	1	448	10 50 351 3	DRIVING GEAR
SHIM RING 55X65X1.5 ST	7380531	44	1	124	92 68 016	REPAIR KIT LOCK RING
SHIM RING 70X95X0.5	10475718	4	1	388	10 65 027 0	CLOSING RING
SHIM RING DIN 988 16X22X1 S	422014001	23	3	638	54 02 705 14	DRIVE UNIT CPL
SHIM RING DIN 988 50X62X1.5	4002229	44	1	144	10 13 803 2	REPAIR KIT LOCK RING
SHOCK ABSORBER	10289994	55	1	432	10 28 999 3	VIBRATING SYSTEM
SHUT OFF DEVICE	10526733	11	1	48	10 56 070 1	TANK HYDR CPL
SHUTDOWN VALVE	11067304	5	1	92	11 21 991 0	PUMP HOUSING
SHUTTLE VALVE	10124239	4	1	141	10 14 131 6	TERMINAL BOARD PRE-ASS.
SHUTTLE VALVE	10446566	14	1	451	11 22 473 8	ADJUSTMENT
SHUTTLE VALVE	11067305	6	1	92	11 21 991 0	PUMP HOUSING
SHUTTLE VALVE	11267447	1	1	98	11 06 730 5	SHUTTLE VALVE
SHUTTLE VALVE	11938600	2	3	22	10 35 148 6	VALVE BLOCK
SHUTTLE VALVE	511491914	7	2	8	11 29 618 6	SUPERSTRUCTURE HYDR
SHUTTLE VALVE	511491914	11	2	442	11 89 300 5	TUBING HYDR
SIDE COMPONENT	992938914	1	1	368	99 33 537 14	ROPE GUARD LUG CPL
SIDE COMPONENT	992939214	2	1	368	99 33 537 14	ROPE GUARD LUG CPL
SIDE PANE LEFT	592288514	43	1	415	10 35 008 0	CABIN
SIDE PANE RIGHT	592289114	49	1	415	10 35 008 0	CABIN
SIDE PANE RIGHT	592289214	50	1	415	10 35 008 0	CABIN
SIDE PLATE	11271456	2	2	599	79 04 871 14	BOTTOM HOOK BLOCK
SIDE PLATE	11274624	2	2	592	79 04 112 14	BOTTOM HOOK BLOCK
SIEVE	11239595	3	1	207	11 24 240 8	UREA CONTAINER
SIGN	10099300	8	1	629	10 51 726 2	TUBING HYDR
SIGN	10523125	38	2	505	11 23 820 4	PIVOT PIECE CPL
SIGN	10533589	12	1	377	11 22 703 7	ROPES LUG MAIN BOOM
SIGN	10575705	38	1	741	10 52 155 9	MODULE REFUELLING SYSTE
SIGN	10584544	15	1	48	10 56 070 1	TANK HYDR CPL
SIGN	11227046	11	1	377	11 22 703 7	ROPES LUG MAIN BOOM
SIGN	11228766	19	1	669	10 55 280 7	GRATING CPL
SIGN	11228766	16	1	676	10 55 514 8	FALL PROTECTION RFK
SIGN	11232788	22	1	724	11 93 621 2	AIR CONDITIONING UNIT RFK

Description	Item	Pos.	Quantity	Sheet	Assembly	Description
SIGN	11265425	12	2	521	11 26 694 5	SIGN LOCATIONS
SIGN	11265497	11	4	521	11 26 694 5	SIGN LOCATIONS
SIGN	11274707	14	1	204	11 92 923 6	ASSEMBLY INSTAL.
SIGN	11274708	15	1	204	11 92 923 6	ASSEMBLY INSTAL.
SIGN	606644414	27	1	609	10 57 651 9	CABLE LOOM
SIGN	606760014	27	1	575	10 57 559 9	CABLE LOOM
SIGN	606774714	27	1	512	11 90 151 1	CABLE LOOM 1 PIVOT PIECE E
SIGN	773193414	41	1	505	11 23 820 4	PIVOT PIECE CPL
SIGN	773193414	23	1	519	10 58 193 7	GRATING CPL
SIGN	773194314	40	2	505	11 23 820 4	PIVOT PIECE CPL
SIGN	773195214	317	1	339	10 51 969 7	NEEDLE LUFFING WINCH
SIGN	773195214	317	1	627	10 51 743 9	ROPE LUG CPL RFK
SIGN LOCATIONS	11266901	110	1	544	11 24 570 7	INTERMEDIATE PIECE ASSE
SIGN LOCATIONS	11266901	110	1	560	11 24 571 3	INTERMEDIATE PIECE ASSE
SIGN LOCATIONS	11266901	110	1	567	11 24 571 9	INTERMEDIATE PIECE ASSE
SIGN LOCATIONS	11266945	110	1	507	11 23 820 4	PIVOT PIECE CPL
SIGN LOCATIONS	11266945	110	1	604	99 34 387 14	NEEDLE ADD-ON PARTS
SIGN LOCATIONS	11269727	110	1	573	11 24 133 3	BOOM HEAD CPL
SIGN LOCATIONS	11898219	52	1	2	01 38 406 14	LR 1300 SX
SIGNAL LAMP	10524927	100	1	400	11 27 973 6	CABIN EL
SIGNAL LAMP	10524927	37	2	536	10 53 120 7	A-FRAME ELECTRICS
SILENCER	502661608	7	1	210	11 92 958 8	AIR DUCT CPL
SINGLE HOOK	11303217	2	1	590	79 03 861 14	LOAD HOOK
SINGLE HOOK	11481162	1	1	595	11 27 463 8	HANGER
SINGLE STRAND SEALING	605620008	14	3	413	11 95 272 6	SOUND TRANSMITTER EL
SIPHON PIPE	11236511	45	1	179	10 57 532 2	INTAKE PIPE OIL CPL
SIPHON PIPE	11236513	47	1	179	10 57 532 2	INTAKE PIPE OIL CPL
SIPHON PIPE	11236514	43	1	179	10 57 532 2	INTAKE PIPE OIL CPL
SIPHON PIPE	11236515	41	1	179	10 57 532 2	INTAKE PIPE OIL CPL
SIPHON PIPE	11236517	40	1	179	10 57 532 2	INTAKE PIPE OIL CPL
SIPHON PIPE	11236518	46	1	179	10 57 532 2	INTAKE PIPE OIL CPL
SIPHON PIPE	592257814	44	1	179	10 57 532 2	INTAKE PIPE OIL CPL
SLEDGE HAMMER 5000G	885040114	13	1	501	10 56 183 8	TOOL
SLEEVE		60	1	348	93 88 497 01	PLANETARY GEARBOX
SLEEVE	10447748	4	6	30	10 44 510 5	QUICK RELEASE FITTING
SLEEVE	10447748	4	4	453	10 44 510 2	QUICK RELEASE FITTING
SLEEVE	10447748	4	4	454	10 44 510 1	QUICK RELEASE FITTING
SLEEVE	11267440	2	1	97	11 06 730 4	SHUTDOWN VALVE
SLEEVE	11267453	3	1	99	11 26 744 7	SHUTTLE VALVE
SLEEVE 14/25X26 S235JRH;EN	11276612	5	1	189	11 24 114 1	COOLER INSTALLATION CHA
SLEEVE 20/13.5X44 AISI 316	10571340	14	2	183	11 94 151 8	COOLER INSTALLATION WATE
SLEEVE 8X0.4	501507314	15	1	635	54 02 702 14	ROPE DRUM CPL
SLEEVE CONTACT	6003031	47	6	399	11 27 973 6	CABIN EL
SLEEVE CONTACT	6003031	95	6	400	11 27 973 6	CABIN EL
SLEEVE CONTACT	602339508	13	3	413	11 95 272 6	SOUND TRANSMITTER EL
SLEEVE NG32/RD60/23X85	11226016	20	1	383	51 14 347 14	SG SAFETY BLOCK
SLEW RING ROLLER BEARING	990706901	10	1	57	10 51 963 1	SUPERSTR. SLEWING RING IN
SLEWING ANGLE TRANSDUCE	10528626	31	1	734	10 52 952 2	SG TACHOGENERATOR RFK
SLEWING GEAR DRIVE	90013762	10	2	378	10 51 968 2	SG SUPERSTRUCTURE
SLIDE SEAT GUIDE	10289990	70	1	430	10 22 506 8	OPERATOR SEAT
SLIDE SEAT GUIDE	7024987	71	1	430	10 22 506 8	OPERATOR SEAT
SLIDEWAY 8/14X35 POM	11273242	17	4	308	11 24 409 0	PANELLING SUPERSTR. INSTA
SLIDING DISC 72X152X6	9889809	15	1	114	10 13 975 2	REPAIR SET SWIVEL YOKE
SLIDING DISC 72X152X6	9889809	15	1	118	98 89 984	REPAIR KIT DRIVING MECHAN
SLIDING DISC 72X152X6	9889809	15	1	121	98 89 983	REPAIR KIT DRIVING MECHAN
SLIDING DOOR	10350076	3	1	415	10 35 008 0	CABIN
SLIDING WINDOW	10224413	1	1	419	10 35 007 6	SLIDING DOOR
SLIDING WINDOW	11250970	3	1	420	10 22 441 3	SLIDING WINDOW
SLOTTED NUT M120X2 C45	927509501	13	1	392	90 01 376 2	SLEWING GEAR DRIVE
SLOTTED STRIP	11234375	57	2	328	11 24 483 7	MOUNTING PARTS SUPERST

Description	Item	Pos.	Quantity	Sheet	Assembly	Description
SLOTTED STRIP	11244040	52	2	328	11 24 483 7	MOUNTING PARTS SUPERST
SLOTTED STRIP	11247029	28	1	328	11 24 483 7	MOUNTING PARTS SUPERST
SLOTTED STRIP	11247792	31	9	328	11 24 483 7	MOUNTING PARTS SUPERST
SLOTTED STRIP	11247799	32	2	328	11 24 483 7	MOUNTING PARTS SUPERST
SLOTTED TAPE STEEL	11234799	15	2	176	11 24 113 8	MOTOR BEARING CPL
SNAP HOOK	10508505	17	1	659	11 27 109 7	LIGHTNING ROD RFK
SNAP HOOK	744010014	2	1	458	11 91 872 5	CHAIN CPL
SNAP HOOK	744010414	5	2	472	99 08 357 14	ATTACHMENT CHAIN
SNAP HOOK	744011114	12	5	312	11 24 409 1	COVERS
SNAP RING 5 X 135	10352383	180	2	705	59 21 826 14	SUPPORT CYLINDER
SNAP RING 52X2 FST	4980482	7	2	234	10 14 636 7	PISTON CPL.
SNAP RING 5X175	10352382	175	1	704	59 21 826 14	SUPPORT CYLINDER
SNAP RING 6 X 172	10352384	185	1	705	59 21 826 14	SUPPORT CYLINDER
SNAP RING AV45X1.75		62	1	348	93 88 497 01	PLANETARY GEARBOX
SNIB	592291014	94	1	416	10 35 008 0	CABIN
SOCKET	10520078	131	1	34	11 24 519 0	SUPERSTRUCTURE EL
SOCKET	6205239	13	1	172	11 24 448 7	CENTRAL POWER UNIT EL
SOCKET DUST-PROOF	7615441	1	1	29	51 05 719 14	QUICK-FITTING THREAD COU
SOCKET HEAD SCREW	11215951	3	4	159	10 35 160 3	CONTROL VALVE
SOCKET HEAD SCREW	11215951	3	4	168	10 11 497 5	CONTROL VALVE
SOCKET HEAD SCREW	11217079	5	3	90	11 21 992 7	COVER
SOCKET HEAD SCREW	11217079	5	3	91	11 21 992 9	COVER
SOCKET HEAD SCREW	11219373	4	8	100	11 21 935 0	PUMP COVER
SOCKET HEAD SCREW	11219936	11	8	102	11 21 991 8	BEARING FLANGE
SOCKET HEAD SCREW	11220320	20	2	451	11 22 473 8	ADJUSTMENT
SOCKET HEAD SCREW	11220320	21	2	451	11 22 473 8	ADJUSTMENT
SOCKET HEAD SCREW	11224767	22	4	451	11 22 473 8	ADJUSTMENT
SOCKET HEAD SCREW	11913116	3	1	98	11 06 730 5	SHUTTLE VALVE
SOCKET HEAD SCREW DIN 6	4980750	46	1	114	10 13 975 2	REPAIR SET SWIVEL YOKE
SOCKET HEAD SCREW DIN 69	407203008	65	4	179	10 57 532 2	INTAKE PIPE OIL CPL
SOCKET HEAD SCREW DIN 6	240217402	22	6	115	90 77 464	RS FLANGE
SOCKET HEAD SCREW DIN 7	4072083	61	32	48	10 56 070 1	TANK HYDR CPL
SOCKET HEAD SCREW DIN 79	408301208	7	8	414	11 22 369 1	FOOT PEDAL EL INSTALLATIO
SOCKET HEAD SCREW DIN 9	11226139	190	4	383	51 14 347 14	SG SAFETY BLOCK
SOCKET HEAD SCREW DIN 91	10336668	8	30	463	11 89 365 0	CRAWLER CARRIER RIGHT CP
SOCKET HEAD SCREW DIN 91	10336668	8	30	474	11 89 365 1	CRAWLER CARRIER LEFT CP
SOCKET HEAD SCREW DIN 91	11226137	180	4	383	51 14 347 14	SG SAFETY BLOCK
SOCKET HEAD SCREW ISO 1	11600879	4	1	253	10 15 315 1	HIGH PRESS.CONNECTOR W.
SOCKET HEAD SCREW ISO 1	11600879	3	1	254	10 14 114 0	RK HIGH PRESSURE CONNEC
SOCKET HEAD SCREW ISO 1	11600879	3	1	257	10 13 543 4	PRESSURE ADAPTER FASTEN
SOCKET HEAD SCREW ISO 1	4981218	43	8	107	10 11 835 7	REPAIR KIT CONNECTION HO
SOCKET HEAD SCREW ISO 1	4981218	43	4	119	98 89 833	RK CYLINDER+CONTROL PLAT
SOCKET HEAD SCREW ISO 1	4981218	43	4	122	98 89 832	RK CYLINDER+CONTROL PLAT
SOCKET HEAD SCREW ISO 1	11082116	3	1	252	10 15 286 7	INJECTOR WITH FASTENING
SOCKET HEAD SCREW ISO 1	11082116	2	1	256	10 13 543 2	INJECTOR FASTENING
SOCKET HEAD SCREW ISO 4	10539513	86	12	392	90 01 376 2	SLEWING GEAR DRIVE
SOCKET HEAD SCREW ISO 47		71	12	348	93 88 497 01	PLANETARY GEARBOX
SOCKET HEAD SCREW ISO 47	4002442	82	12	467	96 93 178 01	TRACTION DRIVE
SOCKET HEAD SCREW ISO 47	4002442	303	2	687	10 51 973 8	SELF-LOADING SYSTEM HYD
SOCKET HEAD SCREW ISO 47	4043014	300	2	687	10 51 973 8	SELF-LOADING SYSTEM HYD
SOCKET HEAD SCREW ISO 47	404208814	19	6	346	93 88 500 01	ROPE DRUM
SOCKET HEAD SCREW ISO 47	404208814	21	8	635	54 02 702 14	ROPE DRUM CPL
SOCKET HEAD SCREW ISO 4	4043124	60	4	82	11 24 773 5	HYDR POWER UNIT
SOCKET HEAD SCREW ISO 4	4043124	17	12	467	96 93 178 01	TRACTION DRIVE
SOCKET HEAD SCREW ISO 47		52	12	348	93 88 497 01	PLANETARY GEARBOX
SOCKET HEAD SCREW ISO 47	404208514	430	58	86	11 24 682 0	DISTRIBUTOR GEARBOX
SOCKET HEAD SCREW ISO 47	404208514	7	6	384	51 22 991 14	OIL MOTOR
SOCKET HEAD SCREW ISO 4	11651481	120	4	18	11 28 647 6	VALVE BLOCK
SOCKET HEAD SCREW ISO 4	4043127	18	2	653	11 22 870 8	SEARCHLIGHT SUPPORT CPL
SOCKET HEAD SCREW ISO 4	4900981	62	24	467	96 93 178 01	TRACTION DRIVE

Description	Item	Pos.	Quantity	Sheet	Assembly	Description
SOCKET HEAD SCREW ISO 47		56	12	348	93 88 497 01	PLANETARY GEARBOX
SOCKET HEAD SCREW ISO 4	4001622	61	12	181	11 24 113 9	ADD-ON PARTS DIESEL ENGIN
SOCKET HEAD SCREW ISO 4	4001622	2	4	249	10 15 085 7	HIGH PRESSURE PUMP W.FA
SOCKET HEAD SCREW ISO 4	4001622	2	4	250	10 15 074 3	RK HIGH PRESSURE PUMP
SOCKET HEAD SCREW ISO 4	4001622	65	4	579	11 28 648 4	MOUNTING PARTS
SOCKET HEAD SCREW ISO 47	10527561	74	12	392	90 01 376 2	SLEWING GEAR DRIVE
SOCKET HEAD SCREW ISO 47	10539505	107	4	205	11 92 923 6	ASSEMBLY INSTAL.
SOCKET HEAD SCREW ISO 47	10539505	15	8	336	10 52 656 0	MOUNTING PARTS
SOCKET HEAD SCREW ISO 4	4630200	63	4	48	10 56 070 1	TANK HYDR CPL
SOCKET HEAD SCREW ISO 4	4630200	8	8	381	10 55 216 1	TUBING HYDR
SOCKET HEAD SCREW ISO 4	4630200	11	15	467	96 93 178 01	TRACTION DRIVE
SOCKET HEAD SCREW ISO 4	4043133	53	4	82	11 24 773 5	HYDR POWER UNIT
SOCKET HEAD SCREW ISO 4	4900980	66	4	579	11 28 648 4	MOUNTING PARTS
SOCKET HEAD SCREW ISO 4	4900980	302	2	687	10 51 973 8	SELF-LOADING SYSTEM HYD
SOCKET HEAD SCREW ISO 47	10539508	22	6	635	54 02 702 14	ROPE DRUM CPL
SOCKET HEAD SCREW ISO 47	4600385	62	8	180	10 58 017 0	RETURN PIPE
SOCKET HEAD SCREW ISO 47	4600385	5	2	236	10 14 843 8	ROCKER ARM BRACKET CPL.
SOCKET HEAD SCREW ISO 47	4600385	7	15	290	10 11 557 7	FLYWHEEL HOUSING MOUNT
SOCKET HEAD SCREW ISO 47	404313401	58	4	8	11 29 618 6	SUPERSTRUCTURE HYDR
SOCKET HEAD SCREW ISO 4	10539530	22	12	376	99 04 645 14	DRIVE
SOCKET HEAD SCREW ISO 47	4980938	20	2	111	10 13 333 4	COVER
SOCKET HEAD SCREW ISO 4	4043163	21	8	103	10 11 834 9	DOUBLE V-PUMP
SOCKET HEAD SCREW ISO 4	4980947	20	2	149	10 12 987 4	THROUGH DRIVE
SOCKET HEAD SCREW ISO 47	485555314	12	2	67	10 56 067 3	BATTERY INSTALLATION CPL
SOCKET HEAD SCREW ISO 4	4043003	30	8	357	10 51 968 6	LUG SUPERSTRUCTURE CPL
SOCKET HEAD SCREW ISO 4	4980012	6	2	290	10 11 557 7	FLYWHEEL HOUSING MOUNT
SOCKET HEAD SCREW ISO 47		77	8	348	93 88 497 01	PLANETARY GEARBOX
SOCKET HEAD SCREW ISO 47	10337130	20	8	376	99 04 645 14	DRIVE
SOCKET HEAD SCREW ISO 4	10012659	23	8	103	10 11 834 9	DOUBLE V-PUMP
SOCKET HEAD SCREW ISO 4	4000784	26	8	392	90 01 376 2	SLEWING GEAR DRIVE
SOCKET HEAD SCREW ISO 47	10539520	6	3	346	93 88 500 01	ROPE DRUM
SOCKET HEAD SCREW ISO 4	4901067	56	16	8	11 29 618 6	SUPERSTRUCTURE HYDR
SOCKET HEAD SCREW ISO 4	4600505	57	8	8	11 29 618 6	SUPERSTRUCTURE HYDR
SOCKET HEAD SCREW ISO 47	10539524	29	1	65	10 58 163 4	CABIN SUSPENSION CPL
SOCKET HEAD SCREW ISO 4	4600513	20	4	150	10 13 000 5	THROUGH DRIVE
SOCKET HEAD SCREW ISO 4	4600513	20	4	151	10 13 235 7	CONSTRUCTION KIT OUTPUT
SOCKET HEAD SCREW ISO 4	4600513	20	4	152	10 13 452 1	THROUGH DRIVE
SOCKET HEAD SCREW ISO 4	4600513	20	4	153	10 13 806 8	THROUGH DRIVE
SOCKET HEAD SCREW ISO 4	10544044	751	4	482	11 26 260 6	WINCH 1 HYDR
SOCKET HEAD SCREW ISO 4	10544050	18	16	442	11 89 300 5	TUBING HYDR
SOCKET HEAD SCREW ISO 47		21	24	348	93 88 497 01	PLANETARY GEARBOX
SOCKET HEAD SCREW ISO 4	10544065	26	8	65	10 58 163 4	CABIN SUSPENSION CPL
SOCKET HEAD SCREW ISO 4	10544068	63	4	179	10 57 532 2	INTAKE PIPE OIL CPL
SOCKET HEAD SCREW ISO 47	10530200	440	12	86	11 24 682 0	DISTRIBUTOR GEARBOX
SOCKET HEAD SCREW ISO 4	10544072	12	6	346	93 88 500 01	ROPE DRUM
SOCKET HEAD SCREW ISO 4	10017870	25	4	141	10 14 131 6	TERMINAL BOARD PRE-ASS.
SOCKET HEAD SCREW ISO 4	10191905	6	24	345	96 96 248 01	WINCH
SOCKET HEAD SCREW ISO 4	10191905	11	18	346	93 88 500 01	ROPE DRUM
SOCKET HEAD SCREW ISO 47	10544105	12	48	378	10 51 968 2	SG SUPERSTRUCTURE
SOCKET HEAD SCREW ISO 4	10544092	63	4	82	11 24 773 5	HYDR POWER UNIT
SOCKET HEAD SCREW ISO 4	10544093	62	4	82	11 24 773 5	HYDR POWER UNIT
SOCKET HEAD SCREW ISO 47	10544121	17	8	679	10 51 971 3	SELF-LOADING SYSTEM RFK
SOCKET HEAD SCREW ISO 4	10544113	16	8	679	10 51 971 3	SELF-LOADING SYSTEM RFK
SOCKET HEAD SCREW ISO 47	10228541	20	2	130	10 12 942 0	PRESSURE REDUCTION VALV
SOCKET HEAD SCREW ISO 4	10539448	57	12	39	10 56 645 8	TERMINAL BOX
SOCKET HEAD SCREW ISO 4	10278936	6	40	69	10 56 069 4	MODULES INSTALLATION
SOCKET HEAD SCREW ISO 4	10278936	20	8	505	11 23 820 4	PIVOT PIECE CPL
SOCKET HEAD SCREW ISO 47	404214114	10	4	68	11 31 093 2	LIMIT SWITCH INSTALLATION
SOCKET HEAD SCREW ISO 4	10539454	26	4	579	11 28 648 4	MOUNTING PARTS
SOCKET HEAD SCREW ISO 4	10539454	9	8	580	11 28 610 5	RETAINING DEVICE CPL

Description	Item	Pos.	Quantity	Sheet	Assembly	Description
SOCKET HEAD SCREW ISO 47	4600552	59	28	8	11 29 618 6	SUPERSTRUCTURE HYDR
SOCKET HEAD SCREW ISO 4	11250990	420	4	86	11 24 682 0	DISTRIBUTOR GEARBOX
SOCKET HEAD SCREW ISO 4	10539462	74	4	125	92 73 187	REPAIR KIT MAGNET
SOCKET HEAD SCREW ISO 47	404302914	6	1	341	10 51 969 8	NEEDLE LUFFING WINCH HYD
SOCKET HEAD SCREW ISO 47	404302914	7	4	358	10 51 968 7	MAIN LUG HYDR
SOCKET HEAD SCREW ISO 4	10539467	28	2	535	11 24 444 4	A-FRAME 1 CPL
SOCKET HEAD SCREW ISO 4	404203514	13	4	525	10 51 959 1	TUBING HYDR
SOCKET HEAD SCREW ISO 4	10446871	47	6	463	11 89 365 0	CRAWLER CARRIER RIGHT CP
SOCKET HEAD SCREW ISO 4	10446871	47	6	474	11 89 365 1	CRAWLER CARRIER LEFT CP
SOCKET HEAD SCREW ISO 4	11233296	135	2	18	11 28 647 6	VALVE BLOCK
SOCKET HEAD SCREW ISO 4	404250914	3	1	293	10 12 797 9	LOCKING PIECES
SOCKET HEAD SCREW ISO 4	404250914	51	3	636	54 02 703 14	FLANGE CPL
SOCKET HEAD SCREW ISO 4	404251014	60	3	183	11 94 151 8	COOLER INSTALLATION WATE
SOCKET HEAD SCREW ISO 4	11233404	155	2	18	11 28 647 6	VALVE BLOCK
SOCKET HEAD SCREW ISO 4	404251414	61	6	183	11 94 151 8	COOLER INSTALLATION WATE
SOCKET HEAD SCREW ISO 4	11233402	154	16	18	11 28 647 6	VALVE BLOCK
SOCKET HEAD SCREW ISO 47	11233401	153	10	18	11 28 647 6	VALVE BLOCK
SOCKET HEAD SCREW ISO 47	10539466	5	1	537	91 90 584 14	ANGLE INDICATION
SOCKET HEAD SCREW ISO 4	10219869	22	4	138	10 14 360 7	REPAIR SET SWIVEL BEARIN
SOCKET HEAD SCREW ISO 4	10539483	40	8	310	11 24 409 0	PANELLING SUPERSTR. INSTA
SOCKET HEAD SCREW ISO 4	10539483	9	4	411	91 65 251 14	CABLE DUCT CABINET 1
SOCKET HEAD SCREW ISO 47	4043082	14	2	283	10 14 013 6	EXHAUST TC MOUNTING
SOCKET HEAD SCREW ISO 4	404206414	31	12	398	11 27 970 6	CABIN CPL
SOCKET HEAD SCREW ISO 4	485556314	23	4	635	54 02 702 14	ROPE DRUM CPL
SOCKET HEAD SCREW ISO 4	404206614	8	4	723	11 22 037 2	FOOT PEDAL EL INSTALLATIO
SOCKET HEAD SCREW ISO 47	4980920	21	8	145	10 12 226 2	REGULATION REPAIR KIT
SOCKET HEAD SCREW ISO 47	4980840	20	4	109	90 74 418	REGULATING VALVE
SOCKET HEAD SCREW ISO 4	10539485	18	6	638	54 02 705 14	DRIVE UNIT CPL
SOCKET HEAD SCREW ISO 4	10539486	50	1	636	54 02 703 14	FLANGE CPL
SOCKET HEAD SCREW ISO 4	10539488	25	4	357	10 51 968 6	LUG SUPERSTRUCTURE CPL
SOCKET HEAD SCREW ISO 47	11170484	26	2	141	10 14 131 6	TERMINAL BOARD PRE-ASS.
SOCKET HEAD SCREW ISO 47	11170484	26	2	147	10 13 803 4	GASKET KIT INT.FLANGE
SOCKET HEAD SCREW ISO 4	10539492	62	2	210	11 92 958 8	AIR DUCT CPL
SOCKET HEAD SCREW ISO 4	10539492	23	2	548	11 28 390 8	BOOM ACCESS
SOCKET HEAD SCREW ISO 4	10539492	23	2	563	11 28 583 8	BOOM ACCESS
SOCKET HEAD SCREW ISO 4	10539492	23	2	570	11 28 626 1	BOOM ACCESS
SOCKET HEAD SCREW ISO 4	10514797	17	6	638	54 02 705 14	DRIVE UNIT CPL
SOCKET HEAD SCREW ISO 4	10539496	2	2	672	11 23 827 7	ROPE GUARD
SOCKET HEAD SCREW ISO 47	404333614	61	12	82	11 24 773 5	HYDR POWER UNIT
SOCKET HEAD SCREW ISO476	11290853	460	1	86	11 24 682 0	DISTRIBUTOR GEARBOX
SOCKET HEAD SCREW ISO476	11290854	465	1	86	11 24 682 0	DISTRIBUTOR GEARBOX
SOCKET HEAD SCREW M10X3	10355735	27	4	165	11 21 593 6	PUMP ELEMENT
SOCKET HEAD SCREW M5X55	11219069	5	2	201	10 55 091 1	ADD-ON PRELIMINARY FUEL F
SOCKET HEAD SCREW UN 120	10225045	4	4	35	10 53 048 9	FUSE HOLDER
SOCKET SHELL	10021236	35	2	657	99 24 978 14	BOOM ELECTRICS
SOCKET SHELL	10036809	42	1	512	11 90 151 1	CABLE LOOM 1 PIVOT PIECE E
SOCKET SHELL	693155014	32	1	512	11 90 151 1	CABLE LOOM 1 PIVOT PIECE E
SOCKET SHELL	693155014	50	1	575	10 57 559 9	CABLE LOOM
SOCKET SHELL	693155014	31	1	609	10 57 651 9	CABLE LOOM
SOFT FACE HAMMER 60G	885045214	18	1	501	10 56 183 8	TOOL
SOFTWARE	10524422	401	1	3	01 38 406 14	LR 1300 SX
SOLENOID VALVE	10336968	120	1	383	51 14 347 14	SG SAFETY BLOCK
SOLENOID VALVE	11226980	6	1	692	59 21 584 14	LOWERING BRAKE VALVE
SOLENOID VALVE	11254299	1	1	728	10 56 536 7	SOLENOID VALVE BUILT-IN KI
SOLENOID VALVE	592300614	152	13	18	11 28 647 6	VALVE BLOCK
SOLENOID VALVE BUILT-IN KI	10565367	1	1	727	10 56 536 8	SOLENOIDVALVE BUILT-IN KIT
SOLENOIDVALVE BUILT-IN KIT	10565368	12	1	724	11 93 621 2	AIR CONDITIONING UNIT RFK
SOUND REDUCTION	981953714	992	1	4	01 38 406 14	LR 1300 SX
SOUND TRANSMITTER EL	11952726	83	1	400	11 27 973 6	CABIN EL
SOUNDER	11933792	10	1	413	11 95 272 6	SOUND TRANSMITTER EL

Description	Item	Pos.	Quantity	Sheet	Assembly	Description
SPACER	11262039	10	1	732	11 26 771 6	MOUNTING PARTS
SPACER BRACKET	790509714	12	2	647	10 52 547 1	ADDNL.FLOODLIGHT SUPERS
SPACER PIECE	10227757	17	4	479	99 26 718 14	PEDESTAL
SPACER PIECE	11216088	32	1	65	10 58 163 4	CABIN SUSPENSION CPL
SPACER PIECE	289064214	24	4	357	10 51 968 6	LUG SUPERSTRUCTURE CPL
SPACER RING SET	9072436	70	1	115	90 77 464	RS FLANGE
SPARE ELEMENT	10136801	1	1	224	10 13 680 0	CRANKCASE BREATHER
SPECIAL THREADED UNION	10446305	28	1	82	11 24 773 5	HYDR POWER UNIT
SPECIAL THREADED UNION	289031614	13	1	482	11 26 260 6	WINCH 1 HYDR
SPECIAL THREADED UNION	289031614	13	1	497	11 26 261 1	WINCH 2 HYDR
SPHERICAL BEARING	746911614	18	4	579	11 28 648 4	MOUNTING PARTS
SPHERICAL BEARING	746913614	17	1	685	11 23 619 7	SELF-LOADING SYSTEM RFK
SPHERICAL BEARING	746925314	13	1	722	59 20 008 14	DOUBLE-ACTING CYL
SPHERICAL BEARING	746925314	14	1	722	59 20 008 14	DOUBLE-ACTING CYL
SPHERICAL WASHER DIN 631	10036473	4	1	252	10 15 286 7	INJECTOR WITH FASTENING
SPHERICAL WASHER DIN 631	10036473	2	1	254	10 14 114 0	RK HIGH PRESSURE CONNEC
SPHERICAL WASHER DIN 631	10036473	3	1	256	10 13 543 2	INJECTOR FASTENING
SPHERICAL WASHER DIN 631	11622278	3	1	253	10 15 315 1	HIGH PRESS.CONNECTOR W.
SPHERICAL WASHER DIN 631	11622278	2	1	257	10 13 543 4	PRESSURE ADAPTER FASTEN
SPIRAL BACK-UP RING	540273214	20	1	638	54 02 705 14	DRIVE UNIT CPL
SPIRAL DOWEL PIN DIN 7344 5	11306379	6	1	712	11 23 623 3	POUCH SOCKET
SPIRAL SPRING HINGE PLATE	10509153	32	4	640	10 55 372 1	ROOF RAILING RFK
SPIRIT LEVEL	714000808	5	1	434	97 07 857 03	SPIRIT LEVEL ASSY.
SPIRIT LEVEL	714000808	12	1	700	11 89 568 6	SELF-LOADING SYSTEM RFK
SPIRIT LEVEL ASSY.	970785703	44	1	398	11 27 970 6	CABIN CPL
SPLINE SHAFT	790346614	120	1	86	11 24 682 0	DISTRIBUTOR GEARBOX
SPLIT PIN ISO 1234 10X63 A4	433014214	21	2	535	11 24 444 4	A-FRAME 1 CPL
SPLIT PIN ISO 1234 10X80 A4	433010314	20	2	71	10 51 969 4	A-FRAME ERECTION CYL INST
SPLIT PIN ISO 1234 10X80 A4	433010314	48	2	505	11 23 820 4	PIVOT PIECE CPL
SPLIT PIN ISO 1234 10X80 A4	433010314	50	2	579	11 28 648 4	MOUNTING PARTS
SPLIT PIN ISO 1234 10X80 A4	433010314	18	8	614	95 70 956 14	ANCHORING ROD CPL
SPLIT PIN ISO 1234 10X80 A4	433010314	25	4	679	10 51 971 3	SELF-LOADING SYSTEM RFK
SPLIT PIN ISO 1234 10X80 A4	433010314	21	1	685	11 23 619 7	SELF-LOADING SYSTEM RFK
SPLIT PIN ISO 1234 10X90 A4	433010514	14	2	557	10 53 216 2	ANCHORING ROD CPL
SPLIT PIN ISO 1234 10X90 A4	433010514	14	2	565	10 53 216 3	ANCHORING ROD CPL
SPLIT PIN ISO 1234 10X90 A4	433010514	14	2	572	10 53 216 4	ANCHORING ROD CPL
SPLIT PIN ISO 1234 10X90 A4	433010514	29	4	620	99 23 415 14	STAY ROPE ROD
SPLIT PIN ISO 1234 13X100 A4	433010914	30	2	620	99 23 415 14	STAY ROPE ROD
SPLIT PIN ISO 1234 13X112 A4	433011114	21	2	679	10 51 971 3	SELF-LOADING SYSTEM RFK
SPLIT PIN ISO 1234 5X32	433006314	4	2	471	10 50 179 5	ACCESS CPL
SPLIT PIN ISO 1234 5X32	433006314	7	2	583	11 28 357 6	MOUNTING PARTS
SPLIT PIN ISO 1234 5X45	433006614	4	4	70	99 23 451 14	PIVOT BOLT INSTALLATION
SPLIT PIN ISO 1234 5X50	433006714	12	8	339	10 51 969 7	NEEDLE LUFFING WINCH
SPLIT PIN ISO 1234 6.3X32 ST	433007508	31	4	65	10 58 163 4	CABIN SUSPENSION CPL
SPLIT PIN ISO 1234 6.3X45	433007708	25	4	65	10 58 163 4	CABIN SUSPENSION CPL
SPLIT PIN ISO 1234 6.3X56 A4	433007914	33	2	613	11 28 744 5	MOUNTING PARTS
SPLIT PIN ISO 1234 6.3X56 A4	433007914	7	4	663	99 31 838 14	INTERMEDIATE TENSIONING
SPLIT PIN ISO 1234 6.3X63	433008108	26	4	535	11 24 444 4	A-FRAME 1 CPL
SPLIT PIN ISO 1234 6.3X63	433008108	33	2	588	99 23 398 14	ROLLER SET
SPLIT PIN ISO 1234 6.3X63	433008108	32	1	613	11 28 744 5	MOUNTING PARTS
SPLIT PIN ISO 1234 6.3X71 A4	433008214	16	4	71	10 51 969 4	A-FRAME ERECTION CYL INST
SPLIT PIN ISO 1234 8X100 A4	433009514	15	6	539	99 23 394 14	ANCHORING ROD CPL
SPLIT PIN ISO 1234 8X100 A4	433009514	14	2	556	10 54 054 8	ANCHORING ROD CPL
SPLIT PIN ISO 1234 8X100 A4	433009514	14	2	564	10 54 055 1	ANCHORING ROD CPL
SPLIT PIN ISO 1234 8X100 A4	433009514	14	2	571	10 54 055 5	ANCHORING ROD CPL
SPLIT PIN ISO 1234 8X100 A4	433009514	14	6	586	10 54 056 7	ANCHORING ROD CPL
SPLIT PIN ISO 1234 8X50 A4	433008814	48	2	579	11 28 648 4	MOUNTING PARTS
SPLIT PIN ISO 1234 8X56 A4	433009014	31	4	176	11 24 113 8	MOTOR BEARING CPL
SPLIT PIN ISO 1234 8X56 A4	433009014	30	2	662	99 10 116 14	ROPE GUIDE
SPLIT PIN ISO 1234 8X63 A4	433009114	15	2	65	10 58 163 4	CABIN SUSPENSION CPL

Description	Item	Pos.	Quantity	Sheet	Assembly	Description
SPLIT PIN ISO 1234 8X63 A4	433009114	49	2	579	11 28 648 4	MOUNTING PARTS
SPLIT PIN ISO 1234 8X80 A4	433009414	28	3	620	99 23 415 14	STAY ROPE ROD
SPLIT PIN ISO 1234 8X90	433009714	33	4	679	10 51 971 3	SELF-LOADING SYSTEM RFK
SPOOL	11600281	3	1	97	11 06 730 4	SHUTDOWN VALVE
SPRING	10287741	6	1	167	10 28 766 5	ADJUSTING PIECE
SPRING	10324860	7	1	158	10 32 489 2	DRIVING GEAR
SPRING ELEMENT	10032001	7	1	202	10 30 300 7	FUEL PREFILTER
SPRING LOADED MULTI-DISC		70	1	348	93 88 497 01	PLANETARY GEARBOX
SPRING LOADED MULTI-DISC	502037201	80	1	467	96 93 178 01	TRACTION DRIVE
SPRING PLUG	592291714	3	1	425	59 22 914 14	PLATFORM FIXATION CPL
SPRING PLUG DIN 11024 2.5	433206014	14	1	589	99 30 800 14	HOIST LIMIT SWITCH INSTAL.
SPRING PLUG DIN 11024 2.5	433206014	21	1	617	10 55 753 7	HOIST LIMITSWITCH LEFT IN
SPRING PLUG DIN 11024 2.5	433206014	21	1	618	10 55 757 6	HOIST LIMITSWITCH RIGHT I
SPRING PLUG DIN 11024 2.5	433206014	51	8	642	10 55 372 1	ROOF RAILING RFK
SPRING PLUG DIN 11024 4	433206214	33	2	505	11 23 820 4	PIVOT PIECE CPL
SPRING PLUG DIN 11024 4	433206214	52	10	642	10 55 372 1	ROOF RAILING RFK
SPRING PLUG DIN 11024 5	433206314	21	6	337	99 29 803 14	LASHING BALLAST
SPRING PLUG DIN 11024 5	433206314	31	2	662	99 10 116 14	ROPE GUIDE
SPRING SUPPORT	11267441	4	2	97	11 06 730 4	SHUTDOWN VALVE
SPRING SUPPORT	570114908	116	1	630	51 02 322 14	OIL MOTOR
SPRING SUPPORT	790579314	131	15	18	11 28 647 6	VALVE BLOCK
SPRING SUPPORT	9076178	12	2	145	10 12 226 2	REGULATION REPAIR KIT
SPRING SUPPORT	9278876	13	1	113	92 78 875	PRESSURE CUT-OFF
SPRING WASHER DIN 137 X10	10411092	4	1	288	11 38 664 5	STARTER
SPRING WASHER DIN 137 X10	10411093	6	2	288	11 38 664 5	STARTER
SPROCKET	10521183	12	1	463	11 89 365 0	CRAWLER CARRIER RIGHT CP
SPROCKET	10521183	12	1	474	11 89 365 1	CRAWLER CARRIER LEFT CP
SPUR WHEEL	11294362	100	1	86	11 24 682 0	DISTRIBUTOR GEARBOX
SPUR WHEEL	11294363	110	4	86	11 24 682 0	DISTRIBUTOR GEARBOX
SQUARE TUBE	10557117	5	1	685	11 23 619 7	SELF-LOADING SYSTEM RFK
SQUARE TUBE	11278507	1	1	583	11 28 357 6	MOUNTING PARTS
STARTER	11386645	1	1	287	10 12 037 2	STARTER INSTALLATION
STARTER INSTALLATION	10120372	450	1	215	12 42 545 4	DIESEL ENGINE
STAY ROPE ROD	992341514	12	1	604	99 34 387 14	NEEDLE ADD-ON PARTS
STEEL BALL	11226127	140	1	383	51 14 347 14	SG SAFETY BLOCK
STEEL GASKET	7023847	905	14	384	51 22 991 14	OIL MOTOR
STEEL GASKET	7024277	115	14	630	51 02 322 14	OIL MOTOR
STEEL WIRE ROPE	773400308	73	0.25	34	11 24 519 0	SUPERSTRUCTURE EL
STEEL WIRE ROPE	773400308	12	0.62	540	11 25 204 2	SUPPORT CPL
STEEL WIRE ROPE	773400308	25	0.9	582	10 59 863 3	PENDULUM CPL
STEEL WIRE ROPE	773400314	22	2	662	99 10 116 14	ROPE GUIDE
STEERING CONSOLE LEFT CP	10223224	16	1	398	11 27 970 6	CABIN CPL
STEERING CONSOLE RIGHT	11260956	17	1	398	11 27 970 6	CABIN CPL
STEP	10501783	1	1	471	10 50 179 5	ACCESS CPL
STICKER	10541838	32	1	622	11 90 722 6	MODEM RFK
STICKER SOUND VOLUME LE	9874345	12	1	6	11 24 047 9	SUPERSTRUCTURE CPL
STOP BOLT M10X1	540272414	60	1	636	54 02 703 14	FLANGE CPL
STOP PLUG	10123528	3	1	141	10 14 131 6	TERMINAL BOARD PRE-ASS.
STOP PLUG	11228794	16	1	653	11 22 870 8	SEARCHLIGHT SUPPORT CPL
STOPPER PLUG	602458214	15	8	407	10 53 171 8	KEYBOARD
STOPPER PLUG	606907114	37	1	741	10 52 155 9	MODULE REFUELLING SYSTE
STOPPER PLUG	692405708	15	4	413	11 95 272 6	SOUND TRANSMITTER EL
STOPPER PLUG	693061214	26	15	512	11 90 151 1	CABLE LOOM 1 PIVOT PIECE E
STOPPER PLUG	693061314	29	1	39	10 56 645 8	TERMINAL BOX
STOPPER PLUG	693061314	25	1	512	11 90 151 1	CABLE LOOM 1 PIVOT PIECE E
STOPPER PLUG	693061314	73	2	513	11 90 151 1	CABLE LOOM 1 PIVOT PIECE E
STOPPER PLUG	693061314	25	2	575	10 57 559 9	CABLE LOOM
STOPPER PLUG	693061314	25	4	609	10 57 651 9	CABLE LOOM
STOPPER PLUG	693061414	24	8	512	11 90 151 1	CABLE LOOM 1 PIVOT PIECE E
STOPPER PLUG	693061414	52	1	575	10 57 559 9	CABLE LOOM

Description	Item	Pos.	Quantity	Sheet	Assembly	Description
STOPPER PLUG	693061514	63	2	513	11 90 151 1	CABLE LOOM 1 PIVOT PIECE E
STOPPER PLUG	693061514	52	2	609	10 57 651 9	CABLE LOOM
STRAINER FILTER	11368896	6	1	208	10 14 653 8	SUCTION MODUL
STRIP	10349434	21	4	328	11 24 483 7	MOUNTING PARTS SUPERST
STRIP	10546407	9	2	324	10 54 591 0	MOTOR COWLING
STRIP	11238278	1	1	672	11 23 827 7	ROPE GUARD
STRIP	289003214	10	1	615	11 28 908 0	ROPE GUARD CPL
STRIP	289012914	10	1	616	11 29 451 7	ROPE GUARD CPL
STRIP	592287014	26	1	415	10 35 008 0	CABIN
STRIP	948282314	6	1	67	10 56 067 3	BATTERY INSTALLATION CPL
STRIP	971303203	34	1	505	11 23 820 4	PIVOT PIECE CPL
STRIP	971303203	10	1	547	11 28 725 5	ROPE GUARD CPL
STRUT	938858701	10	2	353	96 96 543 01	WINCH FRAME
SUBPLATE	10526962	21	1	402	10 55 963 5	SWITCH CABINET X1
SUCTION MODUL	10146538	6	1	207	11 24 240 8	UREA CONTAINER
SUCTION PIPE AIR	11252578	15	1	306	11 24 114 6	COVER
SUCTION PIPE AIR	11929287	11	1	194	11 92 922 0	SUCTION UNIT AIR
SUCTION PIPE OIL	10519481	15	1	80	11 92 885 2	CENTRAL POWER UNIT CPL
SUCTION PIPE OIL ST.CONST.	10575323	3	1	179	10 57 532 2	INTAKE PIPE OIL CPL
SUCTION PUMP PRE-ASS.	10133823	1	1	246	10 13 394 7	SUCTION PUMP WITH FASTEN
SUCTION PUMP WITH FASTEN	10133947	141	1	214	12 42 545 4	DIESEL ENGINE
SUCTION UNIT AIR	11929220	30	1	80	11 92 885 2	CENTRAL POWER UNIT CPL
SUMP PAN CPL	11283977	15	1	546	11 24 570 3	BOOM INTERMEDIATE SECTIO
SUMP PAN CPL	11283977	15	1	562	11 24 570 9	BOOM INTERMEDIATE SECTIO
SUMP PAN CPL	11283977	15	1	569	11 24 571 5	BOOM INTERMEDIATE SECTIO
SUMP PAN CPL	11283978	16	1	546	11 24 570 3	BOOM INTERMEDIATE SECTIO
SUMP PAN CPL	11283978	16	1	562	11 24 570 9	BOOM INTERMEDIATE SECTIO
SUMP PAN CPL	11283978	16	1	569	11 24 571 5	BOOM INTERMEDIATE SECTIO
SUMP PAN CPL	11283995	17	1	546	11 24 570 3	BOOM INTERMEDIATE SECTIO
SUMP PAN CPL	11283995	17	1	562	11 24 570 9	BOOM INTERMEDIATE SECTIO
SUMP PAN CPL	11283995	17	1	569	11 24 571 5	BOOM INTERMEDIATE SECTIO
SUMP PAN CPL	11283997	18	1	546	11 24 570 3	BOOM INTERMEDIATE SECTIO
SUMP PAN CPL	11283997	18	1	562	11 24 570 9	BOOM INTERMEDIATE SECTIO
SUMP PAN CPL	11283997	18	1	569	11 24 571 5	BOOM INTERMEDIATE SECTIO
SUN VISOR	592290714	6	1	424	59 22 905 14	MIRROR + SUNN VISOR
SUN WHEEL		25	1	348	93 88 497 01	PLANETARY GEARBOX
SUN WHEEL		35	1	348	93 88 497 01	PLANETARY GEARBOX
SUN WHEEL		45	1	348	93 88 497 01	PLANETARY GEARBOX
SUN WHEEL	540270714	13	1	634	54 02 701 14	PLANETARY STAGE
SUN WHEEL	540270914	23	1	634	54 02 701 14	PLANETARY STAGE
SUN WHEEL	927562901	30	1	392	90 01 376 2	SLEWING GEAR DRIVE
SUN WHEEL	927597301	45	1	392	90 01 376 2	SLEWING GEAR DRIVE
SUN WHEEL	927651701	60	1	392	90 01 376 2	SLEWING GEAR DRIVE
SUN WHEEL	944378403	40	1	467	96 93 178 01	TRACTION DRIVE
SUN WHEEL	944404503	20	1	467	96 93 178 01	TRACTION DRIVE
SUN WHEEL	944405203	30	1	467	96 93 178 01	TRACTION DRIVE
SUNSHADE	592291214	102	1	416	10 35 008 0	CABIN
SUPERSTR. SLEWING RING IN	10519631	21	1	6	11 24 047 9	SUPERSTRUCTURE CPL
SUPERSTRUCTURE CPL	11240479	5	1	2	01 38 406 14	LR 1300 SX
SUPERSTRUCTURE EL	11245190	3	1	6	11 24 047 9	SUPERSTRUCTURE CPL
SUPERSTRUCTURE HYDR	11296186	2	1	6	11 24 047 9	SUPERSTRUCTURE CPL
SUPPORT	11219265	89	4	507	11 23 820 4	PIVOT PIECE CPL
SUPPORT	11219265	10	2	518	11 23 653 3	SUPPORT CPL
SUPPORT	11219265	10	2	540	11 25 204 2	SUPPORT CPL
SUPPORT	11219265	11	2	558	11 23 292 2	SUPPORT CPL
SUPPORT	11247161	12	1	518	11 23 653 3	SUPPORT CPL
SUPPORT	289007714	1	2	606	11 30 126 6	MOUNTING PARTS
SUPPORT	289035314	10	1	542	99 29 588 14	SUPPORT
SUPPORT	992958814	10	4	541	11 28 594 7	SUPPORT CPL
SUPPORT	992958814	10	6	559	11 28 619 1	SUPPORT CPL

Description	Item	Pos.	Quantity	Sheet	Assembly	Description
SUPPORT	992958814	10	6	566	11 28 653 4	SUPPORT CPL
SUPPORT CPL	11232922	15	4	545	11 94 172 5	ASSEMBLY UNIT
SUPPORT CPL	11232922	15	4	561	11 94 259 4	ASSEMBLY UNIT
SUPPORT CPL	11232922	15	4	568	11 94 450 2	ASSEMBLY UNIT
SUPPORT CPL	11232922	16	4	573	11 24 133 3	BOOM HEAD CPL
SUPPORT CPL	11236533	23	4	505	11 23 820 4	PIVOT PIECE CPL
SUPPORT CPL	11236533	14	8	545	11 94 172 5	ASSEMBLY UNIT
SUPPORT CPL	11236533	14	8	561	11 94 259 4	ASSEMBLY UNIT
SUPPORT CPL	11236533	14	16	568	11 94 450 2	ASSEMBLY UNIT
SUPPORT CPL	11236533	15	2	573	11 24 133 3	BOOM HEAD CPL
SUPPORT CPL	11252042	13	4	533	11 24 165 1	A-FRAME 1 ASSEMBLY UNIT
SUPPORT CPL	11285947	65	1	2	01 38 406 14	LR 1300 SX
SUPPORT CPL	11286191	69	1	2	01 38 406 14	LR 1300 SX
SUPPORT CPL	11286534	77	5	2	01 38 406 14	LR 1300 SX
SUPPORT CPL	991606114	63	1	6	11 24 047 9	SUPERSTRUCTURE CPL
SUPPORT CPL	991873614	43	4	535	11 24 444 4	A-FRAME 1 CPL
SUPPORT CYLINDER	592182614	1	4	703	11 23 524 8	TUBING HYDR
SUPPORT FLANGE		50	1	348	93 88 497 01	PLANETARY GEARBOX
SUPPORT FLANGE	939556201	15	1	346	93 88 500 01	ROPE DRUM
SUPPORT PLATE	9073189	13	1	302	11 41 475 7	ACCESSORIES AIR COMPRES
SUPPORT PLATE	9073190	11	1	302	11 41 475 7	ACCESSORIES AIR COMPRES
SUPPORT PLATE CPL	990759714	10	4	706	11 89 568 8	SELF-LOADING SYSTEM RFK
SUPPORT SHEET	10349598	81	2	507	11 23 820 4	PIVOT PIECE CPL
SUPPORT SHEET	10349598	10	1	551	11 28 397 8	SUMP PAN CPL
SUPPORT SHEET	10349598	10	1	553	11 28 399 7	SUMP PAN CPL
SUPPORT SHEET	10349599	82	2	507	11 23 820 4	PIVOT PIECE CPL
SUPPORT SHEET	10349599	10	1	550	11 28 397 7	SUMP PAN CPL
SUPPORT SHEET	10349599	10	1	552	11 28 399 5	SUMP PAN CPL
SUPPORTING RING	10352368	140	1	704	59 21 826 14	SUPPORT CYLINDER
SUPPORTING RING	11910328	111	1	526	10 09 917 3	DOUBLE-ACTING CYL
SUPPORTING RING	11918997	181	2	74	59 21 041 14	DOUBLE-ACTING CYL
SUPPORTING RING	511710314	13	1	29	51 05 719 14	QUICK-FITTING THREAD COU
SUPPORTING WASHER	10324886	11	1	158	10 32 489 2	DRIVING GEAR
SUPPORTING WASHER 45X5	10123256	10	2	137	98 85 937	WASHER SET
SUPPORTING WASHER 45X5	10123257	11	2	137	98 85 937	WASHER SET
SUPPORTING WASHER 45X5	10123258	12	2	137	98 85 937	WASHER SET
SUPPORTING WASHER DIN 98		47	3	348	93 88 497 01	PLANETARY GEARBOX
SUPPORTING WASHER S32X4	7380815	21	4	107	10 11 835 7	REPAIR KIT CONNECTION HO
SUPPORTING WASHER S32X4	7380815	21	4	108	92 74 731	SEAL KIT CONNECTING HOUS
SUPPORTING WASHER S32X4	7380586	22	2	107	10 11 835 7	REPAIR KIT CONNECTION HO
SUPPORTING WASHER S32X4	7380586	20	2	108	92 74 731	SEAL KIT CONNECTING HOUS
SUPPORTING WASHER S32X4	7380291	19	2	107	10 11 835 7	REPAIR KIT CONNECTION HO
SUPPORTING WASHER S32X4	7380291	19	2	108	92 74 731	SEAL KIT CONNECTING HOUS
SURFACE SEALING	10354595	100	1	225	10 14 844 4	OIL SUMP WITH FASTENING
SWITCH	10445976	1	1	409	69 31 685 14	SAFETY LEVER CPL
SWITCH	592291814	121	1	416	10 35 008 0	CABIN
SWITCH CABINET X1	10559635	8	1	399	11 27 973 6	CABIN EL
SWITCHING ELEMENT	606655208	1	1	577	92 75 218 08	LIMIT SWITCH HOISTING ABOV
SWITCHING HOUSING	385094414	5	1	407	10 53 171 8	KEYBOARD
SWITCHING JACKET	540272214	32	1	636	54 02 703 14	FLANGE CPL
SWIVEL BOLT BRACKET CLAM	10355006	23	2	198	11 24 114 3	EXHAUST GAS SYSTEM
SYNCHRONIZING HYDR RFK	10536350	650	1	4	01 38 406 14	LR 1300 SX
SYNCHRONIZING HYDR RFK	10536351	2	1	707	10 53 635 0	SYNCHRONIZING HYDR RFK
T-NUT M10X12	890035314	59	21	310	11 24 409 0	PANELLING SUPERSTR. INSTA
TALLOW-DROP SCREW M6X16	10137839	43	4	135	10 13 802 6	RK CYL.+CONTROL PLATE+SH
TALLOW-DROP SCREW M6X16	10137839	43	4	141	10 14 131 6	TERMINAL BOARD PRE-ASS.
TANK HYDR CPL	10560701	3	1	46	10 56 070 0	TANK INSTALLATION HYDR
TANK HYDR ST.CONST.	10560703	3	1	48	10 56 070 1	TANK HYDR CPL
TANK INSTALLATION HYDR	10560700	15	1	6	11 24 047 9	SUPERSTRUCTURE CPL
TANK MOUNTING	11314166	2	1	426	11 94 091 0	AIR CONDITIONER RFK

Description	Item	Pos.	Quantity	Sheet	Assembly	Description
TAPER	7024502	170	14	18	11 28 647 6	VALVE BLOCK
TAPER	9266085	12	1	113	92 78 875	PRESSURE CUT-OFF
TAPERED ROLLER BEARING	10355730	15	1	165	11 21 593 6	PUMP ELEMENT
TAPERED ROLLER BEARING	10355731	16	1	165	11 21 593 6	PUMP ELEMENT
TAPERED ROLLER BEARING	11214718	10	1	448	10 50 351 3	DRIVING GEAR
TAPERED ROLLER BEARING	11214719	11	1	448	10 50 351 3	DRIVING GEAR
TAPERED ROLLER BEARING	11940207	11	1	387	11 94 017 7	DRIVING SHAFT
TAPERED ROLLER BEARING	7023837	10	1	387	11 94 017 7	DRIVING SHAFT
TAPERED ROLLER BEARING	7462008	12	1	392	90 01 376 2	SLEWING GEAR DRIVE
TAPERED ROLLER BEARING	746224201	3	1	392	90 01 376 2	SLEWING GEAR DRIVE
TAPERED ROLLER BEARING	746225801	4	1	467	96 93 178 01	TRACTION DRIVE
TAPERED ROLLER BEARING	761008703	3	1	467	96 93 178 01	TRACTION DRIVE
TEE	553087814	38	1	204	11 92 923 6	ASSEMBLY INSTAL.
TELESCOPE	11909669	2	1	74	59 21 041 14	DOUBLE-ACTING CYL
TEMPERATURE CONTROLLER	511657614	13	1	8	11 29 618 6	SUPERSTRUCTURE HYDR
TEMPERATURE PROBE CPL.	10152036	2	1	297	10 14 297 7	ENGINE CONTROL SENSORS
TEMPERATURE SENSOR	10424276	85	1	400	11 27 973 6	CABIN EL
TEMPERATURE SENSOR	10493626	50	1	33	11 24 519 0	SUPERSTRUCTURE EL
TEMPERATURE SENSOR	10493626	1	2	297	10 14 297 7	ENGINE CONTROL SENSORS
TEMPERATURE SENSOR	11241756	40	1	33	11 24 519 0	SUPERSTRUCTURE EL
TEMPERATURE SENSOR	11349182	23	2	204	11 92 923 6	ASSEMBLY INSTAL.
TEMPERATURE SWITCH	10513459	17	1	82	11 24 773 5	HYDR POWER UNIT
TENSION JACK HYDR CPL	10557163	2	1	464	10 55 716 1	GUIDE WHEEL UNIT CPL
TENSION PIN	616155514	11	1	515	61 61 541 14	CABLE DRUM
TENSION SPRING	7617520	51	2	432	10 28 999 3	VIBRATING SYSTEM
TERMINAL BOARD PRE-ASS.	10141316	1	1	140	10 14 131 7	REPAIR KIT CONNECTING PL
TERMINAL BOX	10566458	103	1	34	11 24 519 0	SUPERSTRUCTURE EL
TERMINAL CAP	11229635	30	3	33	11 24 519 0	SUPERSTRUCTURE EL
TERMINAL HOLDER B30	10537558	1	1	435	10 53 756 0	LAMP HOLDER CPL
TERMINAL HOUSING	540271614	2	1	635	54 02 702 14	ROPE DRUM CPL
TERMINAL HOUSING	692406008	11	1	413	11 95 272 6	SOUND TRANSMITTER EL
TERMINAL HOUSING	692406008	12	1	413	11 95 272 6	SOUND TRANSMITTER EL
THERMOSTAT	10154798	2	1	275	10 14 821 5	THERMOSTAT HOUSING ASS
THERMOSTAT	592293814	260	1	428	11 93 934 6	AIR CONDITIONING
THERMOSTAT HOUSING	10148200	1	1	275	10 14 821 5	THERMOSTAT HOUSING ASS
THERMOSTAT HOUSING ASS	10148215	380	1	215	12 42 545 4	DIESEL ENGINE
THREADED CONNECTION PI	927739401	1	1	352	93 36 755 01	OIL-GAUGING INSTRUMENT
THREADED CONNECTION PI	927739401	20	1	352	93 36 755 01	OIL-GAUGING INSTRUMENT
THREADED ELBOW JOINT	11268711	610	1	86	11 24 682 0	DISTRIBUTOR GEARBOX
THREADED ELBOW JOINT	592317014	600	1	86	11 24 682 0	DISTRIBUTOR GEARBOX
THREADED PIPE	592316114	150	1	86	11 24 682 0	DISTRIBUTOR GEARBOX
THREE PHASE CURRENT GE	10148088	1	1	286	10 14 584 5	GENERATOR, PRE-ASSEMBLE
THROTTLE SCREW	7615603	8	1	451	11 22 473 8	ADJUSTMENT
THROTTLE SCREW	7615604	9	1	451	11 22 473 8	ADJUSTMENT
THROUGH DRIVE	10129874	12	1	82	11 24 773 5	HYDR POWER UNIT
THROUGH DRIVE	10129874	300	1	127	10 12 878 7	V PUMP
THROUGH DRIVE	10130005	301	1	127	10 12 878 7	V PUMP
THROUGH DRIVE	10134521	304	1	127	10 12 878 7	V PUMP
THROUGH DRIVE	10138068	305	1	128	10 12 878 7	V PUMP
THROUGH DRIVE	10553922	11	1	82	11 24 773 5	HYDR POWER UNIT
THROUGH-VALVE	7402781	12	1	199	11 24 114 4	FUEL SYSTEM
THRUST PIECE M12X26 X8C	790550914	15	1	316	10 57 883 5	DOOR
THRUST PIECE M12X26 X8C	790550914	13	1	318	10 57 897 6	DOOR
THRUST PIECE M12X26 X8C	790550914	4	1	320	10 57 940 0	DOOR
THRUST PIECE M12X26 X8C	790550914	4	1	321	10 56 623 7	DOOR
THRUST PIECE M12X26 X8C	790550914	13	1	322	10 56 580 8	DOOR
THRUST WASHER		46	1	348	93 88 497 01	PLANETARY GEARBOX
TIGHT FIT SLEEVE 16X20X20	10134348	3	2	219	10 14 768 6	POWER UNIT SUPPORT ATT
TIGHT FIT SLEEVE 16X20X20	9074798	3	2	290	10 11 557 7	FLYWHEEL HOUSING MOUNT
TIGHTENING STRAP HINGE PI	10530689	36	2	505	11 23 820 4	PIVOT PIECE CPL

Description	Item	Pos.	Quantity	Sheet	Assembly	Description
TIGHTENING STRAP HINGE PI	10530689	12	4	520	99 34 198 14	LIEBHERR SIGN
TIGHTENING STRAP HINGE PI	10530689	10	1	549	11 28 391 3	FIXING CLAMP
TIGHTENING STRAP HINGE PI	10531873	97	2	507	11 23 820 4	PIVOT PIECE CPL
TIGHTENING STRAP HINGE PI	10531873	16	1	548	11 28 390 8	BOOM ACCESS
TIGHTENING STRAP HINGE PI	10531873	16	1	563	11 28 583 8	BOOM ACCESS
TIGHTENING STRAP HINGE PI	10531873	16	1	570	11 28 626 1	BOOM ACCESS
TIGHTENING STRAP HINGE PI	10531873	13	2	678	11 26 901 8	HOLDER CPL
TIGHTENING STRAP HINGE PI	10581173	47	2	204	11 92 923 6	ASSEMBLY INSTAL.
TILT-BACK SUPPORT	11292598	60	1	2	01 38 406 14	LR 1300 SX
TILT-BACK SUPPORT	919390814	1	1	621	97 08 757 03	TILTING-BACK SUPPORTS
TILT-BACK SUPPORT	994572314	7	1	621	97 08 757 03	TILTING-BACK SUPPORTS
TILT-BACK SUPPORTS INSTAL	11275365	10	1	522	11 29 259 8	TILT-BACK SUPPORT
TILTING-BACK SUPPORTS	970875703	13	1	604	99 34 387 14	NEEDLE ADD-ON PARTS
TILTING-BACK SUPPORTS H	10585108	2	1	522	11 29 259 8	TILT-BACK SUPPORT
TIME RELAY	630170014	85	1	402	10 55 963 5	SWITCH CABINET X1
TIME RELAY	630170014	32	1	735	10 56 013 7	MAINS SUPPLY BATTERY
TIP	10574725	11	1	659	11 27 109 7	LIGHTNING ROD RFK
TIP BOOM CPL	993439414	11	1	604	99 34 387 14	NEEDLE ADD-ON PARTS
TIP BOOM ST.CONST.	990929514	10	1	607	99 34 394 14	TIP BOOM CPL
TOGGLE	956049414	21	4	662	99 10 116 14	ROPE GUIDE
TOOL	10560228	1	1	501	10 56 183 8	TOOL
TOOL	10561838	1	1	500	10 56 187 5	TOOL EQUIPMENT
TOOL BOX	790042514	2	1	501	10 56 183 8	TOOL
TOOL EQUIPMENT	10561875	50	1	2	01 38 406 14	LR 1300 SX
TRACTION DRIVE	969317801	6	1	463	11 89 365 0	CRAWLER CARRIER RIGHT CP
TRACTION DRIVE	969317801	6	1	474	11 89 365 1	CRAWLER CARRIER LEFT CP
TRANSPORT BRACKET CPL	971333503	20	3	463	11 89 365 0	CRAWLER CARRIER RIGHT CP
TRANSPORT BRACKET CPL	971333503	20	3	474	11 89 365 1	CRAWLER CARRIER LEFT CP
TRANSPORT DEVICE ATTACH	10142864	481	1	215	12 42 545 4	DIESEL ENGINE
TRANSPORT DEVICE ATTACH	9079823	480	1	215	12 42 545 4	DIESEL ENGINE
TRANSPORT LASHING	11305670	18	1	670	11 29 473 7	GANGWAY INTERM. SECTION
TRANSPORT LASHING	11305670	19	1	674	11 29 474 2	GANGWAY INTERM. SECTION
TRANSPORT LASHING	11305670	21	1	675	11 29 474 3	GANGWAY INTERM. SECTION
TRANSPORT LASHING	11940876	11	1	545	11 94 172 5	ASSEMBLY UNIT
TRANSPORT LASHING	11940876	11	1	561	11 94 259 4	ASSEMBLY UNIT
TRANSPORT LASHING	11940876	11	1	568	11 94 450 2	ASSEMBLY UNIT
TRANSPORTER CONSOLE	10145229	1	1	289	10 14 286 4	TRANSPORT DEVICE ATTACH
TRAVERSE	10589483	14	1	465	10 55 716 2	GUIDE WHEEL CPL
TUBE	10190120	10	1	352	93 36 755 01	OIL-GAUGING INSTRUMENT
TUBE	11228802	11	1	653	11 22 870 8	SEARCHLIGHT SUPPORT CPL
TUBE	11228803	13	1	653	11 22 870 8	SEARCHLIGHT SUPPORT CPL
TUBE	11250564	23	1	183	11 94 151 8	COOLER INSTALLATION WATE
TUBE	11287715	24	1	183	11 94 151 8	COOLER INSTALLATION WATE
TUBE	11290847	170	1	86	11 24 682 0	DISTRIBUTOR GEARBOX
TUBE	11910323	100	1	526	10 09 917 3	DOUBLE-ACTING CYL
TUBE	11930769	50	1	210	11 92 958 8	AIR DUCT CPL
TUBE	289057714	55	1	505	11 23 820 4	PIVOT PIECE CPL
TUBE	289057714	11	1	554	11 94 087 6	TRANSPORT LASHING
TUBE	592316414	220	1	86	11 24 682 0	DISTRIBUTOR GEARBOX
TUBE	9080660	6	1	226	10 15 529 8	OIL SUMP PRE-ASS.
TUBE	933676701	5	1	352	93 36 755 01	OIL-GAUGING INSTRUMENT
TUBE	950989914	18	1	613	11 28 744 5	MOUNTING PARTS
TUBE	956213814	22	1	588	99 23 398 14	ROLLER SET
TUBE	957336914	17	1	579	11 28 648 4	MOUNTING PARTS
TUBE	979323301	30	1	352	93 36 755 01	OIL-GAUGING INSTRUMENT
TUBE	999832101	25	1	352	93 36 755 01	OIL-GAUGING INSTRUMENT
TUBING HYDR	10517262	2	1	628	10 54 251 6	ROPE REEVING WINCH HYDR
TUBING HYDR	10517281	2	1	720	10 51 728 0	CABIN INCLINATION RFK
TUBING HYDR	10519591	2	1	523	10 58 510 8	TILTING-BACK SUPPORTS H
TUBING HYDR	10552161	2	1	379	10 51 968 3	SG HYDR

Description	Item	Pos.	Quantity	Sheet	Assembly	Description
TUBING HYDR	10554594	2	1	708	10 53 635 1	SYNCHRONIZING HYDR RFK
TUBING HYDR	11235248	2	1	702	11 23 524 6	JACK-UP SYSTEM HYDR RFK
TUBING HYDR	11893005	2	1	440	11 89 300 3	UC HYDR
TUBING HYDR	11894083	2	1	696	11 89 408 0	JACK-UP SYSTEM HYDR RFK
TURBOCHARGER	10139624	1	1	283	10 14 013 6	EXHAUST TC MOUNTING
TURNBUCKLE		10	-1	720	10 51 728 0	CABIN INCLINATION RFK
TURNBUCKLE	790306414	64	1	65	10 58 163 4	CABIN SUSPENSION CPL
TURNING KNOB	10687925	80	1	406	10 03 610 7	KEYBOARD OPERATING PANE
TWIN HOOK	11271489	1	1	601	11 27 148 8	HANGER
TWIST PIVOT	10529080	14	1	718	10 58 064 7	VIDEO MONITORING SYSTEM
TWO-HOLE NUT AL	11005554	17	1	202	10 30 300 7	FUEL PREFILTER
TYPE PLATE	11226148	220	1	383	51 14 347 14	SG SAFETY BLOCK
TYPE PLATE	11276851	53	1	2	01 38 406 14	LR 1300 SX
U-PROFILE	11225259	23	3	326	11 24 922 2	COVER UNDERSIDE
U-STEEL	10222995	59	2	505	11 23 820 4	PIVOT PIECE CPL
U-STEEL	10565639	11	2	519	10 58 193 7	GRATING CPL
U-STEEL	10581999	21	2	519	10 58 193 7	GRATING CPL
U-STEEL	10582001	12	1	505	11 23 820 4	PIVOT PIECE CPL
U-STEEL	10582001	22	1	519	10 58 193 7	GRATING CPL
U-STEEL	10582020	64	2	507	11 23 820 4	PIVOT PIECE CPL
UC CPL	11893648	33	1	2	01 38 406 14	LR 1300 SX
UC HYDR	11893003	2	1	439	11 89 364 8	UC CPL
UC PLATFORM	11241478	554	1	3	01 38 406 14	LR 1300 SX
UC PLATFORM	992338914	38	1	2	01 38 406 14	LR 1300 SX
UREA CONTAINER	11242408	6	1	204	11 92 923 6	ASSEMBLY INSTAL.
V PUMP	10128787	6	1	82	11 24 773 5	HYDR POWER UNIT
V PUMP	10226013	9	1	82	11 24 773 5	HYDR POWER UNIT
V PUMP	10226505	8	1	82	11 24 773 5	HYDR POWER UNIT
V PUMP	10530653	5	2	82	11 24 773 5	HYDR POWER UNIT
V PUMP	10534307	3	2	82	11 24 773 5	HYDR POWER UNIT
V-RING	10324881	10	1	158	10 32 489 2	DRIVING GEAR
V-RING	11251437	5	1	446	11 89 617 8	SEALING SET
V-RIPPED BELT	11482412	7	1	271	10 14 286 0	AIR COND. COMPRESSOR A
VALVE	10011832	13	1	219	10 14 768 6	POWER UNIT SUPPORT ATT
VALVE	10011832	14	1	243	10 12 948 0	OIL COOLER, PRE-ASSEMBLE
VALVE	10101193	201	1	18	11 28 647 6	VALVE BLOCK
VALVE	10445040	220	1	526	10 09 917 3	DOUBLE-ACTING CYL
VALVE	11224762	12	2	451	11 22 473 8	ADJUSTMENT
VALVE	11932853	2	1	28	51 16 576 14	TEMPERATURE CONTROLLER
VALVE	592293314	70	1	428	11 93 934 6	AIR CONDITIONING
VALVE	7026676	203	1	18	11 28 647 6	VALVE BLOCK
VALVE BLOCK	10225408	4	1	73	10 51 969 5	A-FRAME ERECTION HYDR
VALVE BLOCK	10351486	3	1	8	11 29 618 6	SUPERSTRUCTURE HYDR
VALVE BLOCK	11286476	1	1	8	11 29 618 6	SUPERSTRUCTURE HYDR
VALVE BLOCK	592145814	4	1	8	11 29 618 6	SUPERSTRUCTURE HYDR
VALVE BLOCK FEED PRESSUR	511637714	15	1	82	11 24 773 5	HYDR POWER UNIT
VALVE BLOCK SINGLE DISK	10541514	6	1	8	11 29 618 6	SUPERSTRUCTURE HYDR
VALVE BRIDGE	10119695	2	2	236	10 14 843 8	ROCKER ARM BRACKET CPL.
VALVE HOLDER	954598503	12	2	328	11 24 483 7	MOUNTING PARTS SUPERST
VALVE HOLDER	954598503	13	1	339	10 51 969 7	NEEDLE LUFFING WINCH
VALVE MOUNTING	994001014	28	1	627	10 51 743 9	ROPE LUG CPL RFK
VALVE PLATE	10575966	17	1	328	11 24 483 7	MOUNTING PARTS SUPERST
VALVE SCREW	11214946	1	1	452	10 44 656 6	SHUTTLE VALVE
VALVE SEAT	9278874	10	1	113	92 78 875	PRESSURE CUT-OFF
VALVE SLEEVE	9267340	10	1	106	92 67 343	VENTILATION VALVE
VARIABLE DISPLACEMENT MO	11251232	2	1	482	11 26 260 6	WINCH 1 HYDR
VARIABLE DISPLACEMENT MO	11251232	2	1	497	11 26 261 1	WINCH 2 HYDR
VARIABLE DISPLACEMENT MO	512405914	3	2	442	11 89 300 5	TUBING HYDR
VENTILATION AND AERATION	721108801	7	1	352	93 36 755 01	OIL-GAUGING INSTRUMENT
VENTILATION CONNECTING PI	927501901	13	1	352	93 36 755 01	OIL-GAUGING INSTRUMENT

Description	Item	Pos.	Quantity	Sheet	Assembly	Description
VENTILATION FILTER	505104914	260	1	86	11 24 682 0	DISTRIBUTOR GEARBOX
VENTILATION FILTER	693113814	485	1	86	11 24 682 0	DISTRIBUTOR GEARBOX
VENTILATION SCREW	485581914	54	1	39	10 56 645 8	TERMINAL BOX
VENTILATION SCREW	7412942	1	1	202	10 30 300 7	FUEL PREFILTER
VENTILATION VALVE		82	1	348	93 88 497 01	PLANETARY GEARBOX
VENTILATION VALVE	10351239	205	2	705	59 21 826 14	SUPPORT CYLINDER
VENTILATION VALVE	540136314	3	4	73	10 51 969 5	A-FRAME ERECTION HYDR
VENTILATION VALVE	592089814	69	1	376	99 04 645 14	DRIVE
VENTILATION VALVE	9267343	6	2	105	10 11 835 0	CONNECTION HOUSING
VENTILATOR RING	10352187	3	1	31	10 22 592 5	COOLER MOTOR
VIBRATING SYSTEM	10289993	50	1	430	10 22 506 8	OPERATOR SEAT
VIDEO MONITORING SYSTEM	10580647	11	1	713	11 89 400 8	VIDEO MONITORING SYSTEM
VIDEO MONITORING SYSTEM	11894008	704	1	4	01 38 406 14	LR 1300 SX
VOLTAGE TRANSFORMER	693183914	91	1	402	10 55 963 5	SWITCH CABINET X1
VOLUM CONTROL VALVE	12401396	230	1	249	10 15 085 7	HIGH PRESSURE PUMP W.FA
VORTEX WHEEL	11238878	10	1	585	69 28 155 14	WIND TRANSMITTER
WARNING LIGHT EL RFK	11215298	3	1	654	11 21 546 1	WARNING LIGHT RFK
WARNING LIGHT INSTALL RFK	11215462	1	1	654	11 21 546 1	WARNING LIGHT RFK
WARNING LIGHT RFK	11215461	566	1	3	01 38 406 14	LR 1300 SX
WASHER		58	1	348	93 88 497 01	PLANETARY GEARBOX
WASHER	10522188	4	1	422	59 22 871 14	FRONT WINDOW CPL
WASHER	10687926	81	1	406	10 03 610 7	KEYBOARD OPERATING PANE
WASHER	11293195	7	1	453	10 44 510 2	QUICK RELEASE FITTING
WASHER	11922654	13	1	190	10 57 423 9	COOLER MOTOR
WASHER	540271214	25	6	634	54 02 701 14	PLANETARY STAGE
WASHER	540271514	29	1	634	54 02 701 14	PLANETARY STAGE
WASHER	540271914	3	1	636	54 02 703 14	FLANGE CPL
WASHER	540273114	11	1	638	54 02 705 14	DRIVE UNIT CPL
WASHER	592288214	32	1	422	59 22 871 14	FRONT WINDOW CPL
WASHER	7023834	5	1	386	11 94 017 6	HYDRAULIC PARTS DRIVING G
WASHER	927562301	5	1	392	90 01 376 2	SLEWING GEAR DRIVE
WASHER	958304714	20	2	539	99 23 394 14	ANCHORING ROD CPL
WASHER 1.9X71X118 PA 6 G	11942312	24	4	532	11 27 536 5	TILT-BACK SUPPORTS INSTAL
WASHER 10/30X50 S355J2;EN	11249738	11	2	199	11 24 114 4	FUEL SYSTEM
WASHER 12/30X30 S355J2;EN	10519789	74	4	194	11 92 922 0	SUCTION UNIT AIR
WASHER 12/50X5 POLYURE.	10351046	57	1	210	11 92 958 8	AIR DUCT CPL
WASHER 129/102X2 ST 12.03	385151114	6	1	366	99 29 258 14	LUG SHEAVE SET
WASHER 165/132X1 ST 12.03	385123814	13	2	366	99 29 258 14	LUG SHEAVE SET
WASHER 165/132X2 ST 12.03	949352914	12	4	366	99 29 258 14	LUG SHEAVE SET
WASHER 200/103X1 DC01;EN	385255414	16	4	700	11 89 568 6	SELF-LOADING SYSTEM RFK
WASHER 200/103X2 DC01;EN	385255314	15	4	700	11 89 568 6	SELF-LOADING SYSTEM RFK
WASHER 200/103X4 S235JR;E	385255514	17	4	700	11 89 568 6	SELF-LOADING SYSTEM RFK
WASHER 21/37X4 PA 6 G	948967314	3	4	583	11 28 357 6	MOUNTING PARTS
WASHER 225/81X26 PA 6 G	970855603	6	2	538	99 14 137 14	DEFLECTION PULLEY CPL
WASHER 25.2/32X3 POM	958471614	18	1	316	10 57 883 5	DOOR
WASHER 25.2/32X3 POM	958471614	18	1	318	10 57 897 6	DOOR
WASHER 25.2/32X3 POM	958471614	7	1	320	10 57 940 0	DOOR
WASHER 25.2/32X3 POM	958471614	7	1	321	10 56 623 7	DOOR
WASHER 25.2/32X3 POM	958471614	15	1	322	10 56 580 8	DOOR
WASHER 34X45X1	9078522	6	2	237	11 44 800 5	ROCKER ARM BRACKET PRE
WASHER 46/70X2 POLYAMID	10593096	23	8	71	10 51 969 4	A-FRAME ERECTION CYL INST
WASHER 52/92X1 PA 6 G	11241005	22	16	71	10 51 969 4	A-FRAME ERECTION CYL INST
WASHER 52/92X3 PA 6 G	949740514	15	20	71	10 51 969 4	A-FRAME ERECTION CYL INST
WASHER 53/10X5 AISI 316	10567619	13	2	183	11 94 151 8	COOLER INSTALLATION WATE
WASHER 58/90X2 GUMMI NBR	949942814	21	8	620	99 23 415 14	STAY ROPE ROD
WASHER 61/85X2 PA 6 G	943919114	39	4	579	11 28 648 4	MOUNTING PARTS
WASHER 61/85X2 PA 6 G	943919114	22	4	620	99 23 415 14	STAY ROPE ROD
WASHER 76/13X6 LH355-40;1	947084514	22	12	337	99 29 803 14	LASHING BALLAST
WASHER 81/200X74 PA 6 G	948773814	5	16	538	99 14 137 14	DEFLECTION PULLEY CPL
WASHER 9/16X25 S355J2;EN	10553403	55	6	204	11 92 923 6	ASSEMBLY INSTAL.

Description	Item	Pos.	Quantity	Sheet	Assembly	Description
WASHER AEHNL.ISO 7089 10 P	420005414	19	2	653	11 22 870 8	SEARCHLIGHT SUPPORT CPL
WASHER AEHNL.ISO 7089 16 P	420053101	50	20	642	10 55 372 1	ROOF RAILING RFK
WASHER DIN 34816 10.5 PA 6.	485568514	9	4	370	99 29 392 14	SIDE COMPONENT
WASHER DIN 34816 10.5 PA 6.	485568514	17	12	372	99 29 386 14	BRACKET CPL
WASHER DIN 34816 10.5 PA 6.	485568514	17	12	373	99 29 434 14	BRACKET CPL
WASHER DIN 34816 13 PA 6.6	485568614	11	8	555	11 94 087 8	ASSEMBLY UNIT
WASHER DIN 440 R11 ST	420600408	13	6	67	10 56 067 3	BATTERY INSTALLATION CPL
WASHER DIN 6340 10.5 C35	421300214	72	4	48	10 56 070 1	TANK HYDR CPL
WASHER DIN 6340 10.5 C35	421300214	71	4	177	10 51 948 1	SUCTION PIPE OIL
WASHER DIN 6340 10.5 C35	421300214	74	24	184	11 94 151 8	COOLER INSTALLATION WATE
WASHER DIN 6340 10.5 C35	421300214	71	22	189	11 24 114 1	COOLER INSTALLATION CHA
WASHER DIN 6340 10.5 C35	421300214	72	6	194	11 92 922 0	SUCTION UNIT AIR
WASHER DIN 6340 10.5 C35	421300214	71	28	198	11 24 114 3	EXHAUST GAS SYSTEM
WASHER DIN 6340 10.5 C35	421300214	124	12	205	11 92 923 6	ASSEMBLY INSTAL.
WASHER DIN 6340 10.5 C35	421300214	72	2	306	11 24 114 6	COVER
WASHER DIN 6340 13 ST	4635283	73	12	177	10 51 948 1	SUCTION PIPE OIL
WASHER DIN 6340 13 ST	4635283	72	8	198	11 24 114 3	EXHAUST GAS SYSTEM
WASHER DIN 6340 13 ST	4635283	125	2	205	11 92 923 6	ASSEMBLY INSTAL.
WASHER DIN 6340 17 C35	421300414	70	3	46	10 56 070 0	TANK INSTALLATION HYDR
WASHER DIN 6340 17 C35	421300414	70	3	52	10 56 073 2	FUEL TANK ASSY.
WASHER DIN 6340 21 C35	10567956	5	8	463	11 89 365 0	CRAWLER CARRIER RIGHT CP
WASHER DIN 6340 21 C35	10567956	5	8	474	11 89 365 1	CRAWLER CARRIER LEFT CP
WASHER DIN 6340 25	883203014	73	2	176	11 24 113 8	MOTOR BEARING CPL
WASHER DIN 6340 8.4 C35	421300514	77	4	176	11 24 113 8	MOTOR BEARING CPL
WASHER DIN 6340 8.4 C35	421300514	72	20	183	11 94 151 8	COOLER INSTALLATION WATE
WASHER DIN 6340 8.4 C35	421300514	70	28	189	11 24 114 1	COOLER INSTALLATION CHA
WASHER DIN 6340 8.4 C35	421300514	70	4	192	11 28 574 7	WP
WASHER DIN 6340 8.4 C35	421300514	71	4	194	11 92 922 0	SUCTION UNIT AIR
WASHER DIN 6916 17 C45	460024203	16	2	357	10 51 968 6	LUG SUPERSTRUCTURE CPL
WASHER DIN 6916 17 C45	460024203	8	8	370	99 29 392 14	SIDE COMPONENT
WASHER DIN 6916 17 C45	460024203	15	6	372	99 29 386 14	BRACKET CPL
WASHER DIN 6916 17 C45	460024203	15	6	373	99 29 434 14	BRACKET CPL
WASHER DIN 6916 21 C45	460022203	11	48	378	10 51 968 2	SG SUPERSTRUCTURE
WASHER DIN 6916 25 C45	460014603	74	2	176	11 24 113 8	MOTOR BEARING CPL
WASHER DIN 6916 25 C45	460014603	9	45	463	11 89 365 0	CRAWLER CARRIER RIGHT CP
WASHER DIN 6916 25 C45	460014603	9	45	474	11 89 365 1	CRAWLER CARRIER LEFT CP
WASHER DIN 7349 17 ST	421600901	53	54	463	11 89 365 0	CRAWLER CARRIER RIGHT CP
WASHER DIN 7349 17 ST	421600901	53	54	474	11 89 365 1	CRAWLER CARRIER LEFT CP
WASHER DIN 7349 6.4	4000648	70	9	183	11 94 151 8	COOLER INSTALLATION WATE
WASHER DIN 7989 11 ST	421700508	88	48	330	11 24 483 7	MOUNTING PARTS SUPERST
WASHER DIN 7989-B 18 ST;	421700314	36	4	82	11 24 773 5	HYDR POWER UNIT
WASHER DIN EN 28738 20 ST;	421101714	5	2	583	11 28 357 6	MOUNTING PARTS
WASHER DIN EN 28738 20 ST;	421101714	36	2	662	99 10 116 14	ROPE GUIDE
WASHER DIN EN 28738 22 ST;	421101814	3	2	471	10 50 179 5	ACCESS CPL
WASHER DIN EN 28738 26 ST;	421102214	24	8	65	10 58 163 4	CABIN SUSPENSION CPL
WASHER DIN EN 28738 26 ST;	421102214	3	4	70	99 23 451 14	PIVOT BOLT INSTALLATION
WASHER DIN EN 28738 26 ST;	421102214	36	2	579	11 28 648 4	MOUNTING PARTS
WASHER DIN EN 28738 30 ST;	421102414	20	10	535	11 24 444 4	A-FRAME 1 CPL
WASHER DIN EN 28738 35 ST;	421102814	35	4	613	11 28 744 5	MOUNTING PARTS
WASHER DIN EN 28738 36 ST;	421102914	46	2	662	99 10 116 14	ROPE GUIDE
WASHER DIN EN 28738 36 ST;	421102914	3	12	663	99 31 838 14	INTERMEDIATE TENSIONING
WASHER DIN EN 28738 36 ST;	421102914	6	14	665	97 05 997 03	INTERMEDIATE TENSIONING
WASHER DIN EN 28738 40 ST	421103014	14	3	65	10 58 163 4	CABIN SUSPENSION CPL
WASHER DIN EN 28738 40 ST	421103014	78	4	176	11 24 113 8	MOTOR BEARING CPL
WASHER DIN EN 28738 40 ST	421103014	18	8	339	10 51 969 7	NEEDLE LUFFING WINCH
WASHER DIN EN 28738 40 ST	421103014	36	11	620	99 23 415 14	STAY ROPE ROD
WASHER DIN EN 28738 40 ST	421103014	3	2	621	97 08 757 03	TILTING-BACK SUPPORTS
WASHER DIN EN 28738 45 ST;	421103214	19	2	71	10 51 969 4	A-FRAME ERECTION CYL INST
WASHER DIN EN 28738 45 ST;	421103214	37	4	579	11 28 648 4	MOUNTING PARTS
WASHER DIN EN 28738 45 ST;	421103214	34	2	613	11 28 744 5	MOUNTING PARTS

Description	Item	Pos.	Quantity	Sheet	Assembly	Description
WASHER DIN EN 28738 50 ST;	421103314	16	10	614	95 70 956 14	ANCHORING ROD CPL
WASHER DIN EN 28738 50 ST;	421103314	26	6	620	99 23 415 14	STAY ROPE ROD
WASHER DIN EN 28738 50 ST;	421103314	20	1	685	11 23 619 7	SELF-LOADING SYSTEM RFK
WASHER DIN EN 28738 60 ST;	421103514	62	2	507	11 23 820 4	PIVOT PIECE CPL
WASHER DIN EN 28738 60 ST;	421103514	13	4	557	10 53 216 2	ANCHORING ROD CPL
WASHER DIN EN 28738 60 ST;	421103514	13	4	565	10 53 216 3	ANCHORING ROD CPL
WASHER DIN EN 28738 60 ST;	421103514	13	4	572	10 53 216 4	ANCHORING ROD CPL
WASHER DIN EN 28738 60 ST;	421103514	38	16	579	11 28 648 4	MOUNTING PARTS
WASHER DIN EN 28738 60 ST;	421103514	25	8	620	99 23 415 14	STAY ROPE ROD
WASHER DIN EN 28738 60 ST;	421103514	42	2	662	99 10 116 14	ROPE GUIDE
WASHER DIN EN 28738 60 ST;	421103514	24	12	679	10 51 971 3	SELF-LOADING SYSTEM RFK
WASHER DIN EN 28738 65 ST;	421103614	18	6	337	99 29 803 14	LASHING BALLAST
WASHER DIN EN 28738 65 ST;	421103614	13	4	556	10 54 054 8	ANCHORING ROD CPL
WASHER DIN EN 28738 65 ST;	421103614	13	4	564	10 54 055 1	ANCHORING ROD CPL
WASHER DIN EN 28738 65 ST;	421103614	13	4	571	10 54 055 5	ANCHORING ROD CPL
WASHER DIN EN 28738 65 ST;	421103614	13	6	586	10 54 056 7	ANCHORING ROD CPL
WASHER DIN EN 28738 70 ST;	421103914	35	10	620	99 23 415 14	STAY ROPE ROD
WASHER DIN EN 28738 75 ST;	421103714	14	4	539	99 23 394 14	ANCHORING ROD CPL
WASHER DIN EN 28738 75 ST;	421103714	16	6	586	10 54 056 7	ANCHORING ROD CPL
WASHER DIN EN 28738 80 ST;	421103814	11	2	517	11 28 726 4	PIN CPL
WASHER DIN EN 28738 80 ST;	421103814	24	8	620	99 23 415 14	STAY ROPE ROD
WASHER DIN EN 28738 80 ST;	421103814	20	2	679	10 51 971 3	SELF-LOADING SYSTEM RFK
WASHER EN 14399-6 12 C45	460022703	37	14	82	11 24 773 5	HYDR POWER UNIT
WASHER EN 14399-6 12 C45	460022703	89	34	330	11 24 483 7	MOUNTING PARTS SUPERST
WASHER EN 14399-6 12 C45	460022703	5	4	369	99 29 389 14	SIDE COMPONENT
WASHER EN 14399-6 12 C45	460022703	5	4	370	99 29 392 14	SIDE COMPONENT
WASHER EN 14399-6 12 C45	460022703	14	16	372	99 29 386 14	BRACKET CPL
WASHER EN 14399-6 12 C45	460022703	14	16	373	99 29 434 14	BRACKET CPL
WASHER EN 14399-6 12 C45	460022703	71	1	673	11 30 567 0	TRANSPORT LASHING
WASHER EN 14399-6 30 ST	421500614	7	30	463	11 89 365 0	CRAWLER CARRIER RIGHT CP
WASHER EN 14399-6 30 ST	421500614	7	30	474	11 89 365 1	CRAWLER CARRIER LEFT CP
WASHER ISO 7089	11219067	7	2	201	10 55 091 1	ADD-ON PRELIMINARY FUEL F
WASHER ISO 7089 10	11932238	10	16	190	10 57 423 9	COOLER MOTOR
WASHER ISO 7089 10 A4	420001114	15	8	45	10 51 961 6	OIL COOLER INSTALLATION
WASHER ISO 7089 10 A4	420001114	70	44	48	10 56 070 1	TANK HYDR CPL
WASHER ISO 7089 10 A4	420001114	70	6	53	10 56 073 3	FUEL TANK CPL
WASHER ISO 7089 10 A4	420001114	18	4	67	10 56 067 3	BATTERY INSTALLATION CPL
WASHER ISO 7089 10 A4	420001114	4	8	69	10 56 069 4	MODULES INSTALLATION
WASHER ISO 7089 10 A4	420001114	70	42	176	11 24 113 8	MOTOR BEARING CPL
WASHER ISO 7089 10 A4	420001114	70	4	177	10 51 948 1	SUCTION PIPE OIL
WASHER ISO 7089 10 A4	420001114	70	6	179	10 57 532 2	INTAKE PIPE OIL CPL
WASHER ISO 7089 10 A4	420001114	73	28	184	11 94 151 8	COOLER INSTALLATION WATE
WASHER ISO 7089 10 A4	420001114	123	4	205	11 92 923 6	ASSEMBLY INSTAL.
WASHER ISO 7089 10 A4	420001114	73	4	210	11 92 958 8	AIR DUCT CPL
WASHER ISO 7089 10 A4	420001114	71	11	306	11 24 114 6	COVER
WASHER ISO 7089 10 A4	420001114	55	40	310	11 24 409 0	PANELLING SUPERSTR. INSTA
WASHER ISO 7089 10 A4	420001114	12	36	324	10 54 591 0	MOTOR COWLING
WASHER ISO 7089 10 A4	420001114	78	53	330	11 24 483 7	MOUNTING PARTS SUPERST
WASHER ISO 7089 10 A4	420001114	14	16	336	10 52 656 0	MOUNTING PARTS
WASHER ISO 7089 10 A4	420001114	27	6	398	11 27 970 6	CABIN CPL
WASHER ISO 7089 10 A4	420001114	67	36	507	11 23 820 4	PIVOT PIECE CPL
WASHER ISO 7089 10 A4	420001114	13	2	542	99 29 588 14	SUPPORT
WASHER ISO 7089 10 A4	420001114	13	4	543	10 35 063 3	FASTENER
WASHER ISO 7089 10 A4	420001114	16	4	550	11 28 397 7	SUMP PAN CPL
WASHER ISO 7089 10 A4	420001114	16	4	551	11 28 397 8	SUMP PAN CPL
WASHER ISO 7089 10 A4	420001114	16	8	552	11 28 399 5	SUMP PAN CPL
WASHER ISO 7089 10 A4	420001114	16	8	553	11 28 399 7	SUMP PAN CPL
WASHER ISO 7089 10 A4	420001114	68	8	579	11 28 648 4	MOUNTING PARTS
WASHER ISO 7089 10 A4	420001114	22	1	582	10 59 863 3	PENDULUM CPL
WASHER ISO 7089 10 A4	420001114	4	8	583	11 28 357 6	MOUNTING PARTS

Description	Item	Pos.	Quantity	Sheet	Assembly	Description
WASHER ISO 7089 10 A4	420001114	10	2	589	99 30 800 14	HOIST LIMIT SWITCH INSTAL.
WASHER ISO 7089 10 A4	420001114	37	32	642	10 55 372 1	ROOF RAILING RFK
WASHER ISO 7089 10 A4	420001114	21	8	649	10 52 547 1	ADDNL.FLOODLIGHT SUPERS
WASHER ISO 7089 10 A4	420001114	21	4	653	11 22 870 8	SEARCHLIGHT SUPPORT CPL
WASHER ISO 7089 10 A4	420001114	16	6	662	99 10 116 14	ROPE GUIDE
WASHER ISO 7089 10 A4	420001114	12	6	732	11 26 771 6	MOUNTING PARTS
WASHER ISO 7089 10 ST	10554336	70	1	181	11 24 113 9	ADD-ON PARTS DIESEL ENGIN
WASHER ISO 7089 12 A4	4901782	10	1	35	10 53 048 9	FUSE HOLDER
WASHER ISO 7089 12 A4	4901782	71	12	48	10 56 070 1	TANK HYDR CPL
WASHER ISO 7089 12 A4	4901782	20	2	65	10 58 163 4	CABIN SUSPENSION CPL
WASHER ISO 7089 12 A4	4901782	11	2	67	10 56 067 3	BATTERY INSTALLATION CPL
WASHER ISO 7089 12 A4	4901782	76	4	176	11 24 113 8	MOTOR BEARING CPL
WASHER ISO 7089 12 A4	4901782	70	20	180	10 58 017 0	RETURN PIPE
WASHER ISO 7089 12 A4	4901782	72	3	189	11 24 114 1	COOLER INSTALLATION CHA
WASHER ISO 7089 12 A4	4901782	75	3	210	11 92 958 8	AIR DUCT CPL
WASHER ISO 7089 12 A4	4901782	8	2	435	10 53 756 0	LAMP HOLDER CPL
WASHER ISO 7089 12 A4	4901782	23	15	463	11 89 365 0	CRAWLER CARRIER RIGHT CP
WASHER ISO 7089 12 A4	4901782	23	15	474	11 89 365 1	CRAWLER CARRIER LEFT CP
WASHER ISO 7089 12 A4	4901782	23	24	476	11 31 390 8	CENTRE PART CPL
WASHER ISO 7089 12 A4	4901782	68	16	507	11 23 820 4	PIVOT PIECE CPL
WASHER ISO 7089 12 A4	4901782	14	4	555	11 94 087 8	ASSEMBLY UNIT
WASHER ISO 7089 12 A4	4901782	3	8	606	11 30 126 6	MOUNTING PARTS
WASHER ISO 7089 12 A4	4901782	49	10	642	10 55 372 1	ROOF RAILING RFK
WASHER ISO 7089 12 A4	4901782	12	6	659	11 27 109 7	LIGHTNING ROD RFK
WASHER ISO 7089 12 A4	4901782	25	2	718	10 58 064 7	VIDEO MONITORING SYSTEM
WASHER ISO 7089 13	10289804	8	17	290	10 11 557 7	FLYWHEEL HOUSING MOUNT
WASHER ISO 7089 16	10544172	72	48	176	11 24 113 8	MOTOR BEARING CPL
WASHER ISO 7089 16	10544172	102	2	330	11 24 483 7	MOUNTING PARTS SUPERST
WASHER ISO 7089 16	10544172	14	4	378	10 51 968 2	SG SUPERSTRUCTURE
WASHER ISO 7089 16	10544172	36	12	463	11 89 365 0	CRAWLER CARRIER RIGHT CP
WASHER ISO 7089 16	10544172	36	12	474	11 89 365 1	CRAWLER CARRIER LEFT CP
WASHER ISO 7089 16	10544172	15	28	476	11 31 390 8	CENTRE PART CPL
WASHER ISO 7089 16	10544172	76	16	507	11 23 820 4	PIVOT PIECE CPL
WASHER ISO 7089 16	10544172	26	4	548	11 28 390 8	BOOM ACCESS
WASHER ISO 7089 16	10544172	26	4	563	11 28 583 8	BOOM ACCESS
WASHER ISO 7089 16	10544172	26	4	570	11 28 626 1	BOOM ACCESS
WASHER ISO 7089 16	10544172	40	8	700	11 89 568 6	SELF-LOADING SYSTEM RFK
WASHER ISO 7089 17/30X3 A4	4901893	71	4	181	11 24 113 9	ADD-ON PARTS DIESEL ENGIN
WASHER ISO 7089 20	10544174	75	2	194	11 92 922 0	SUCTION UNIT AIR
WASHER ISO 7089 20	10544174	21	2	463	11 89 365 0	CRAWLER CARRIER RIGHT CP
WASHER ISO 7089 20	10544174	21	2	474	11 89 365 1	CRAWLER CARRIER LEFT CP
WASHER ISO 7089 20	10544174	19	4	476	11 31 390 8	CENTRE PART CPL
WASHER ISO 7089 20	10544174	14	4	493	11 22 050 0	WINCHES INSTALLATION
WASHER ISO 7089 20	10544174	14	4	499	11 22 050 1	WINCHES INSTALLATION
WASHER ISO 7089 20	10544174	15	8	535	11 24 444 4	A-FRAME 1 CPL
WASHER ISO 7089 20	10544174	12	4	555	11 94 087 8	ASSEMBLY UNIT
WASHER ISO 7089 20	10544174	17	8	627	10 51 743 9	ROPE LUG CPL RFK
WASHER ISO 7089 20	10544174	4	1	664	99 10 125 14	FORK
WASHER ISO 7089 24	10544176	33	12	463	11 89 365 0	CRAWLER CARRIER RIGHT CP
WASHER ISO 7089 24	10544176	33	12	474	11 89 365 1	CRAWLER CARRIER LEFT CP
WASHER ISO 7089 24/13X2.5 S	11233289	121	4	18	11 28 647 6	VALVE BLOCK
WASHER ISO 7089 27	420002601	29	4	662	99 10 116 14	ROPE GUIDE
WASHER ISO 7089 3 A4	485546414	6	4	436	11 30 962 5	HOLDER CPL
WASHER ISO 7089 30	10544177	28	64	463	11 89 365 0	CRAWLER CARRIER RIGHT CP
WASHER ISO 7089 30	10544177	13	4	465	10 55 716 2	GUIDE WHEEL CPL
WASHER ISO 7089 30	10544177	28	64	474	11 89 365 1	CRAWLER CARRIER LEFT CP
WASHER ISO 7089 4 A4	420000314	4	3	434	97 07 857 03	SPIRIT LEVEL ASSY.
WASHER ISO 7089 42	420003714	36	4	535	11 24 444 4	A-FRAME 1 CPL
WASHER ISO 7089 42	420003714	17	2	555	11 94 087 8	ASSEMBLY UNIT
WASHER ISO 7089 42	420003714	27	10	588	99 23 398 14	ROLLER SET

Description	Item	Pos.	Quantity	Sheet	Assembly	Description
WASHER ISO 7089 5 A4	420005214	13	2	59	11 26 557 2	MOUNTING PARTS
WASHER ISO 7089 5 A4	420005214	11	8	68	11 31 093 2	LIMIT SWITCH INSTALLATION
WASHER ISO 7089 5 A4	420005214	5	40	69	10 56 069 4	MODULES INSTALLATION
WASHER ISO 7089 5 A4	420005214	120	2	205	11 92 923 6	ASSEMBLY INSTAL.
WASHER ISO 7089 5 A4	420005214	21	24	505	11 23 820 4	PIVOT PIECE CPL
WASHER ISO 7089 5 A4	420005214	33	8	579	11 28 648 4	MOUNTING PARTS
WASHER ISO 7089 5 A4	420005214	14	16	580	11 28 610 5	RETAINING DEVICE CPL
WASHER ISO 7089 5 A4	420005214	42	9	700	11 89 568 6	SELF-LOADING SYSTEM RFK
WASHER ISO 7089 5 A4	420005214	17	2	737	10 52 155 4	REFUELLING SYSTEM RFK
WASHER ISO 7089 6 A4	420000414	60	4	39	10 56 645 8	TERMINAL BOX
WASHER ISO 7089 6 A4	420000414	121	30	205	11 92 923 6	ASSEMBLY INSTAL.
WASHER ISO 7089 6 A4	420000414	70	4	210	11 92 958 8	AIR DUCT CPL
WASHER ISO 7089 6 A4	420000414	44	10	310	11 24 409 0	PANELLING SUPERSTR. INSTA
WASHER ISO 7089 6 A4	420000414	23	14	398	11 27 970 6	CABIN CPL
WASHER ISO 7089 6 A4	420000414	7	8	435	10 53 756 0	LAMP HOLDER CPL
WASHER ISO 7089 6 A4	420000414	50	6	463	11 89 365 0	CRAWLER CARRIER RIGHT CP
WASHER ISO 7089 6 A4	420000414	50	6	474	11 89 365 1	CRAWLER CARRIER LEFT CP
WASHER ISO 7089 6 A4	420000414	30	24	476	11 31 390 8	CENTRE PART CPL
WASHER ISO 7089 6 A4	420000414	12	3	493	11 22 050 0	WINCHES INSTALLATION
WASHER ISO 7089 6 A4	420000414	12	3	499	11 22 050 1	WINCHES INSTALLATION
WASHER ISO 7089 6 A4	420000414	91	52	507	11 23 820 4	PIVOT PIECE CPL
WASHER ISO 7089 6 A4	420000414	12	36	519	10 58 193 7	GRATING CPL
WASHER ISO 7089 6 A4	420000414	29	18	535	11 24 444 4	A-FRAME 1 CPL
WASHER ISO 7089 6 A4	420000414	17	1	550	11 28 397 7	SUMP PAN CPL
WASHER ISO 7089 6 A4	420000414	17	1	551	11 28 397 8	SUMP PAN CPL
WASHER ISO 7089 6 A4	420000414	17	1	552	11 28 399 5	SUMP PAN CPL
WASHER ISO 7089 6 A4	420000414	17	1	553	11 28 399 7	SUMP PAN CPL
WASHER ISO 7089 6 A4	420000414	3	10	623	11 22 322 6	MODEM CPL RFK
WASHER ISO 7089 6 A4	420000414	13	2	625	11 21 552 4	ANGLE INDICATION RFK
WASHER ISO 7089 6 A4	420000414	26	2	627	10 51 743 9	ROPE LUG CPL RFK
WASHER ISO 7089 6 A4	420000414	34	34	642	10 55 372 1	ROOF RAILING RFK
WASHER ISO 7089 6 A4	420000414	23	4	649	10 52 547 1	ADDNL.FLOODLIGHT SUPERS
WASHER ISO 7089 6 A4	420000414	21	4	669	10 55 280 7	GRATING CPL
WASHER ISO 7089 6 A4	420000414	19	4	676	10 55 514 8	FALL PROTECTION RFK
WASHER ISO 7089 8 A4	420001014	14	4	59	11 26 557 2	MOUNTING PARTS
WASHER ISO 7089 8 A4	420001014	67	6	65	10 58 163 4	CABIN SUSPENSION CPL
WASHER ISO 7089 8 A4	420001014	75	16	176	11 24 113 8	MOTOR BEARING CPL
WASHER ISO 7089 8 A4	420001014	71	6	183	11 94 151 8	COOLER INSTALLATION WATE
WASHER ISO 7089 8 A4	420001014	70	4	194	11 92 922 0	SUCTION UNIT AIR
WASHER ISO 7089 8 A4	420001014	70	4	199	11 24 114 4	FUEL SYSTEM
WASHER ISO 7089 8 A4	420001014	122	26	205	11 92 923 6	ASSEMBLY INSTAL.
WASHER ISO 7089 8 A4	420001014	72	6	210	11 92 958 8	AIR DUCT CPL
WASHER ISO 7089 8 A4	420001014	34	21	308	11 24 409 0	PANELLING SUPERSTR. INSTA
WASHER ISO 7089 8 A4	420001014	16	12	324	10 54 591 0	MOTOR COWLING
WASHER ISO 7089 8 A4	420001014	87	26	330	11 24 483 7	MOUNTING PARTS SUPERST
WASHER ISO 7089 8 A4	420001014	14	2	339	10 51 969 7	NEEDLE LUFFING WINCH
WASHER ISO 7089 8 A4	420001014	17	6	378	10 51 968 2	SG SUPERSTRUCTURE
WASHER ISO 7089 8 A4	420001014	20	18	398	11 27 970 6	CABIN CPL
WASHER ISO 7089 8 A4	420001014	5	2	436	11 30 962 5	HOLDER CPL
WASHER ISO 7089 8 A4	420001014	12	6	476	11 31 390 8	CENTRE PART CPL
WASHER ISO 7089 8 A4	420001014	44	40	505	11 23 820 4	PIVOT PIECE CPL
WASHER ISO 7089 8 A4	420001014	14	8	520	99 34 198 14	LIEBHERR SIGN
WASHER ISO 7089 8 A4	420001014	22	4	532	11 27 536 5	TILT-BACK SUPPORTS INSTAL
WASHER ISO 7089 8 A4	420001014	13	4	589	99 30 800 14	HOIST LIMIT SWITCH INSTAL.
WASHER ISO 7089 8 A4	420001014	48	82	642	10 55 372 1	ROOF RAILING RFK
WASHER ISO 7089 8 A4	420001014	13	12	644	11 24 147 8	UC PLATFORM
WASHER ISO 7089 8 A4	420001014	21	2	667	10 55 601 0	FALL PROTECTION RFK
WASHER ISO 7089 8 A4	420001014	15	4	669	10 55 280 7	GRATING CPL
WASHER ISO 7089 8 A4	420001014	70	1	673	11 30 567 0	TRANSPORT LASHING
WASHER ISO 7089 8 A4	420001014	41	4	700	11 89 568 6	SELF-LOADING SYSTEM RFK

Description	Item	Pos.	Quantity	Sheet	Assembly	Description
WASHER ISO 7089 8 A4	420001014	28	6	718	10 58 064 7	VIDEO MONITORING SYSTEM
WASHER ISO 7089 8 A4	420001014	7	1	719	10 57 848 6	MONITOR CABIN ADD-ON
WASHER ISO 7089 8 A4	420001014	7	4	723	11 22 037 2	FOOT PEDAL EL INSTALLATIO
WASHER ISO 7089 8 A4	420001014	15	3	733	10 52 293 0	SG TACHOGENERATOR RFK
WASHER ISO 7089 8 A4	420001014	14	2	737	10 52 155 4	REFUELLING SYSTEM RFK
WASHER ISO 7092 6 CU;	420250114	6	4	733	10 52 293 0	SG TACHOGENERATOR RFK
WASHER ISO 7093-1 10	11932236	12	4	190	10 57 423 9	COOLER MOTOR
WASHER ISO 7093-1 10 A4	10540511	14	14	45	10 51 961 6	OIL COOLER INSTALLATION
WASHER ISO 7093-1 10 A4	10540511	7	2	56	10 55 268 1	DRIVER INSTALLATION
WASHER ISO 7093-1 10 A4	10540511	55	4	65	10 58 163 4	CABIN SUSPENSION CPL
WASHER ISO 7093-1 10 A4	10540511	4	4	67	10 56 067 3	BATTERY INSTALLATION CPL
WASHER ISO 7093-1 10 A4	10540511	74	18	210	11 92 958 8	AIR DUCT CPL
WASHER ISO 7093-1 10 A4	10540511	70	51	306	11 24 114 6	COVER
WASHER ISO 7093-1 10 A4	10540511	26	134	308	11 24 409 0	PANELLING SUPERSTR. INSTA
WASHER ISO 7093-1 10 A4	10540511	26	89	326	11 24 922 2	COVER UNDERSIDE
WASHER ISO 7093-1 10 A4	10540511	77	125	330	11 24 483 7	MOUNTING PARTS SUPERST
WASHER ISO 7093-1 10 A4	10540511	40	8	398	11 27 970 6	CABIN CPL
WASHER ISO 7093-1 10 A4	10540511	86	16	507	11 23 820 4	PIVOT PIECE CPL
WASHER ISO 7093-1 10 A4	10540511	16	2	542	99 29 588 14	SUPPORT
WASHER ISO 7093-1 10 A4	10540511	15	2	550	11 28 397 7	SUMP PAN CPL
WASHER ISO 7093-1 10 A4	10540511	15	2	551	11 28 397 8	SUMP PAN CPL
WASHER ISO 7093-1 10 A4	10540511	15	4	552	11 28 399 5	SUMP PAN CPL
WASHER ISO 7093-1 10 A4	10540511	15	4	553	11 28 399 7	SUMP PAN CPL
WASHER ISO 7093-1 10 A4	10540511	35	8	579	11 28 648 4	MOUNTING PARTS
WASHER ISO 7093-1 10 A4	10540511	44	78	642	10 55 372 1	ROOF RAILING RFK
WASHER ISO 7093-1 10 A4	10540511	17	4	667	10 55 601 0	FALL PROTECTION RFK
WASHER ISO 7093-1 10 A4	10540511	12	2	683	99 35 606 14	MOUNTING LINK CPL
WASHER ISO 7093-1 10 A4	10540511	7	4	685	11 23 619 7	SELF-LOADING SYSTEM RFK
WASHER ISO 7093-1 10 A4	10540511	15	4	732	11 26 771 6	MOUNTING PARTS
WASHER ISO 7093-1 12 A4	10540512	34	9	65	10 58 163 4	CABIN SUSPENSION CPL
WASHER ISO 7093-1 12 A4	10540512	71	11	330	11 24 483 7	MOUNTING PARTS SUPERST
WASHER ISO 7093-1 12 A4	10540512	14	2	438	99 18 041 14	LASHING SUPERSTRUCTURE
WASHER ISO 7093-1 16	10544173	6	4	56	10 55 268 1	DRIVER INSTALLATION
WASHER ISO 7093-1 16	10544173	27	4	548	11 28 390 8	BOOM ACCESS
WASHER ISO 7093-1 16	10544173	27	4	563	11 28 583 8	BOOM ACCESS
WASHER ISO 7093-1 16	10544173	27	4	570	11 28 626 1	BOOM ACCESS
WASHER ISO 7093-1 20	10544175	3	1	494	10 57 462 9	PIN CPL
WASHER ISO 7093-1 4 A4	10540497	44	2	741	10 52 155 9	MODULE REFUELLING SYSTE
WASHER ISO 7093-1 5 A4	485570714	23	4	67	10 56 067 3	BATTERY INSTALLATION CPL
WASHER ISO 7093-1 6 A4	10540500	73	6	198	11 24 114 3	EXHAUST GAS SYSTEM
WASHER ISO 7093-1 6 A4	10540500	67	6	330	11 24 483 7	MOUNTING PARTS SUPERST
WASHER ISO 7093-1 6 A4	10540500	17	4	518	11 23 653 3	SUPPORT CPL
WASHER ISO 7093-1 6 A4	10540500	27	9	718	10 58 064 7	VIDEO MONITORING SYSTEM
WASHER ISO 7093-1 8	11932237	11	1	190	10 57 423 9	COOLER MOTOR
WASHER ISO 7093-1 8 A4	10540510	12	2	63	92 65 477 14	FIRE EXTINGUISHER RFK
WASHER ISO 7093-1 8 A4	10540510	16	4	65	10 58 163 4	CABIN SUSPENSION CPL
WASHER ISO 7093-1 8 A4	10540510	71	6	210	11 92 958 8	AIR DUCT CPL
WASHER ISO 7093-1 8 A4	10540510	43	13	310	11 24 409 0	PANELLING SUPERSTR. INSTA
WASHER ISO 7093-1 8 A4	10540510	86	34	330	11 24 483 7	MOUNTING PARTS SUPERST
WASHER ISO 7093-1 8 A4	10540510	27	4	357	10 51 968 6	LUG SUPERSTRUCTURE CPL
WASHER ISO 7093-1 8 A4	10540510	12	2	372	99 29 386 14	BRACKET CPL
WASHER ISO 7093-1 8 A4	10540510	12	2	373	99 29 434 14	BRACKET CPL
WASHER ISO 7093-1 8 A4	10540510	54	39	505	11 23 820 4	PIVOT PIECE CPL
WASHER ISO 7093-1 8 A4	10540510	28	5	548	11 28 390 8	BOOM ACCESS
WASHER ISO 7093-1 8 A4	10540510	28	5	563	11 28 583 8	BOOM ACCESS
WASHER ISO 7093-1 8 A4	10540510	28	5	570	11 28 626 1	BOOM ACCESS
WASHER ISO 7093-1 8 A4	10540510	34	4	579	11 28 648 4	MOUNTING PARTS
WASHER ISO 7093-1 8 A4	10540510	15	4	580	11 28 610 5	RETAINING DEVICE CPL
WASHER ISO 7093-1 8 A4	10540510	20	2	667	10 55 601 0	FALL PROTECTION RFK
WASHER ISO 7093-1 8 A4	10540510	21	4	678	11 26 901 8	HOLDER CPL

Description	Item	Pos.	Quantity	Sheet	Assembly	Description
WASHER ISO 7093-1 8 A4	10540510	26	8	685	11 23 619 7	SELF-LOADING SYSTEM RFK
WASHER ISO 7093-1 8 A4	10540510	32	4	718	10 58 064 7	VIDEO MONITORING SYSTEM
WASHER ISO 7093-1 8 A4	10540510	18	2	737	10 52 155 4	REFUELLING SYSTEM RFK
WASHER RD 34/20.4X5 30 CRM	422010414	38	20	82	11 24 773 5	HYDR POWER UNIT
WASHER SET	9885924	39	1	118	98 89 984	REPAIR KIT DRIVING MECHAN
WASHER SET	9885924	39	1	121	98 89 983	REPAIR KIT DRIVING MECHAN
WASHER SET	9885937	29	1	135	10 13 802 6	RK CYL.+CONTROL PLATE+SH
WASHER SPRING DIN 7980 12	4980013	25	16	103	10 11 834 9	DOUBLE V-PUMP
WATER COLLECTING PIPE	10146018	1	1	279	10 14 601 2	MANIFOLD FOR WATER CPL.
WATER DRAIN CPL	10572149	250	1	428	11 93 934 6	AIR CONDITIONING
WATER DRAIN PLUG	602501208	55	1	39	10 56 645 8	TERMINAL BOX
WATER DRAIN VALVE	502921908	10	1	210	11 92 958 8	AIR DUCT CPL
WATER HOSE	11946459	350	1	428	11 93 934 6	AIR CONDITIONING
WATER PUMP WITH FASTENIN	10142734	370	1	215	12 42 545 4	DIESEL ENGINE
WATER PUMP, PRE-ASSEMB	11354498	1	1	274	10 14 273 4	WATER PUMP WITH FASTENIN
WATER SENSOR	10331335	13	1	202	10 30 300 7	FUEL PREFILTER
WATER VALVE	10584671	50	1	428	11 93 934 6	AIR CONDITIONING
WATER VALVE	11082158	13	2	204	11 92 923 6	ASSEMBLY INSTAL.
WATER VALVE	592293114	51	1	428	11 93 934 6	AIR CONDITIONING
WATER VALVE	592293114	51	1	429	10 58 467 1	WATER VALVE
WEDGE LOCK WASHER M10 2	10536579	29	4	505	11 23 820 4	PIVOT PIECE CPL
WEDGE LOCK WASHER M10 2	10536579	16	4	580	11 28 610 5	RETAINING DEVICE CPL
WEDGE LOCK WASHER M10 2	10536580	17	2	617	10 55 753 7	HOIST LIMITSWITCH LEFT IN
WEDGE LOCK WASHER M10 2	10536580	17	2	618	10 55 757 6	HOIST LIMITSWITCH RIGHT I
WEDGE LOCK WASHER M10 2	10536580	52	16	662	99 10 116 14	ROPE GUIDE
WEDGE LOCK WASHER M10 2	10536580	11	8	733	10 52 293 0	SG TACHOGENERATOR RFK
WEDGE LOCK WASHER M12 2	10536581	24	8	535	11 24 444 4	A-FRAME 1 CPL
WEDGE LOCK WASHER M12 2	10536581	29	8	588	99 23 398 14	ROLLER SET
WEDGE LOCK WASHER M12 2	10536581	37	4	613	11 28 744 5	MOUNTING PARTS
WEDGE LOCK WASHER M12 2	10536581	18	4	617	10 55 753 7	HOIST LIMITSWITCH LEFT IN
WEDGE LOCK WASHER M12 2	10536581	18	4	618	10 55 757 6	HOIST LIMITSWITCH RIGHT I
WEDGE LOCK WASHER M12 2	10536582	21	13	357	10 51 968 6	LUG SUPERSTRUCTURE CPL
WEDGE LOCK WASHER M12 2	10536582	1	8	366	99 29 258 14	LUG SHEAVE SET
WEDGE LOCK WASHER M16	7024427	30	8	588	99 23 398 14	ROLLER SET
WEDGE LOCK WASHER M16	7024427	36	20	613	11 28 744 5	MOUNTING PARTS
WEDGE LOCK WASHER M16	7623374	31	16	357	10 51 968 6	LUG SUPERSTRUCTURE CPL
WEDGE LOCK WASHER M20	10536600	15	22	357	10 51 968 6	LUG SUPERSTRUCTURE CPL
WEDGE LOCK WASHER M6 2	10536576	20	4	678	11 26 901 8	HOLDER CPL
WEDGE LOCK WASHER M8 2	10536577	16	4	617	10 55 753 7	HOIST LIMITSWITCH LEFT IN
WEDGE LOCK WASHER M8 2	10536577	16	4	618	10 55 757 6	HOIST LIMITSWITCH RIGHT I
WEIGHT	388283108	18	1	589	99 30 800 14	HOIST LIMIT SWITCH INSTAL.
WEIGHT	388283208	19	1	589	99 30 800 14	HOIST LIMIT SWITCH INSTAL.
WELD PLATE	969329314	40	1	8	11 29 618 6	SUPERSTRUCTURE HYDR
WINCH	10530398	10	1	480	11 26 260 5	WINCH 1 CRANE
WINCH	10530398	10	1	495	11 26 261 0	WINCH 2 CRANE
WINCH	10551563	10	1	357	10 51 968 6	LUG SUPERSTRUCTURE CPL
WINCH	592069414	27	1	627	10 51 743 9	ROPE LUG CPL RFK
WINCH	969624801	10	1	339	10 51 969 7	NEEDLE LUFFING WINCH
WINCH 1 CRANE	11262605	41	1	2	01 38 406 14	LR 1300 SX
WINCH 1 HYDR	11262606	2	1	480	11 26 260 5	WINCH 1 CRANE
WINCH 2 CRANE	11262610	45	1	2	01 38 406 14	LR 1300 SX
WINCH 2 HYDR	11262611	2	1	495	11 26 261 0	WINCH 2 CRANE
WINCH EL	11216342	3	1	480	11 26 260 5	WINCH 1 CRANE
WINCH EL	11216342	3	1	495	11 26 261 0	WINCH 2 CRANE
WINCH FRAME	918678214	29	1	627	10 51 743 9	ROPE LUG CPL RFK
WINCH FRAME	969654301	20	1	345	96 96 248 01	WINCH
WINCH SYNCHRONIZATION E	971460103	651	1	4	01 38 406 14	LR 1300 SX
WINCH TRESTLE	11893215	5	1	485	10 53 039 8	WINCH
WINCHES INSTALLATION	11220500	11	1	480	11 26 260 5	WINCH 1 CRANE
WINCHES INSTALLATION	11220501	11	1	495	11 26 261 0	WINCH 2 CRANE

Description	Item	Pos.	Quantity	Sheet	Assembly	Description
WIND TRANSMITTER	692815514	31	1	584	97 07 204 03	ANEMOMETER EL RFK
WING SCREW DIN 316 M10X80	485559814	14	2	67	10 56 067 3	BATTERY INSTALLATION CPL
WIPER ARM	592287914	19	1	422	59 22 871 14	FRONT WINDOW CPL
WIPER ARM	592288814	46	1	415	10 35 008 0	CABIN
WIPER BLADE	592288014	20	1	422	59 22 871 14	FRONT WINDOW CPL
WIPER BLADE	592288914	47	1	415	10 35 008 0	CABIN
WIPER MOTOR	592287614	16	1	422	59 22 871 14	FRONT WINDOW CPL
WIPER MOTOR	592288714	45	1	415	10 35 008 0	CABIN
WIRE BRAID	600147201	28	0.2	611	10 57 652 3	CLAMPING SOCKET
WIRED END FERRULE	602307708	100	2	39	10 56 645 8	TERMINAL BOX
WIRING HARNESS	10226573	3	1	339	10 51 969 7	NEEDLE LUFFING WINCH
WIRING HARNESS	10226573	91	1	513	11 90 151 1	CABLE LOOM 1 PIVOT PIECE E
WIRING HARNESS	10226574	3	1	627	10 51 743 9	ROPE LUG CPL RFK
WIRING HARNESS	10519084	203	1	400	11 27 973 6	CABIN EL
WIRING HARNESS	10540846	98	1	400	11 27 973 6	CABIN EL
WIRING HARNESS	11239085	11	1	40	11 23 908 2	CONTROL CONSOLE
WIRING HARNESS	11259039	206	1	400	11 27 973 6	CABIN EL
WIRING HARNESS	11265111	11	1	514	91 92 528 14	CABLE DRUM
WIRING HARNESS	11912031	205	1	400	11 27 973 6	CABIN EL
WIRING HARNESS ASSEMBLY	10150287	2	1	296	10 15 028 8	CABLE HARNESS MOUNTING
WIRING HARNESS ASSEMBLY	11425228	8	1	296	10 15 028 8	CABLE HARNESS MOUNTING
WORK LIGHT	10224500	100	4	34	11 24 519 0	SUPERSTRUCTURE EL
WORK LIGHT	10590423	10	6	652	10 59 371 2	ADD FLOODLIGHT EL RFK
WORK LIGHT	7027205	60	2	34	11 24 519 0	SUPERSTRUCTURE EL
WORK LIGHT	7027205	50	3	399	11 27 973 6	CABIN EL
WORK LIGHT	7027205	37	1	714	10 53 246 1	CAMERA MONITORING
WORK LIGHT	7027205	32	1	716	10 50 775 0	CAMERA MONITORING
WP	10223446	19	1	316	10 57 883 5	DOOR
WP	10223447	3	1	316	10 57 883 5	DOOR
WP	10223448	11	1	316	10 57 883 5	DOOR
WP	10223449	16	1	316	10 57 883 5	DOOR
WP	10336682	4	1	308	11 24 409 0	PANELLING SUPERSTR. INSTA
WP	10351547	7	7	312	11 24 409 1	COVERS
WP	10351548	8	1	312	11 24 409 1	COVERS
WP	10537566	3	1	435	10 53 756 0	LAMP HOLDER CPL
WP	10557223	13	2	667	10 55 601 0	FALL PROTECTION RFK
WP	10572706	2	2	56	10 55 268 1	DRIVER INSTALLATION
WP	10573951	10	1	733	10 52 293 0	SG TACHOGENERATOR RFK
WP	10574631	2	1	494	10 57 462 9	PIN CPL
WP	10575306	4	1	183	11 94 151 8	COOLER INSTALLATION WATE
WP	10575307	5	1	183	11 94 151 8	COOLER INSTALLATION WATE
WP	10575566	10	1	189	11 24 114 1	COOLER INSTALLATION CHA
WP	10575567	11	1	189	11 24 114 1	COOLER INSTALLATION CHA
WP	10577229	50	1	204	11 92 923 6	ASSEMBLY INSTAL.
WP	10586253	50	1	65	10 58 163 4	CABIN SUSPENSION CPL
WP	10599571	46	1	328	11 24 483 7	MOUNTING PARTS SUPERST
WP	10599757	6	1	183	11 94 151 8	COOLER INSTALLATION WATE
WP	10599758	7	1	183	11 94 151 8	COOLER INSTALLATION WATE
WP	10599759	8	1	183	11 94 151 8	COOLER INSTALLATION WATE
WP	10599854	49	1	328	11 24 483 7	MOUNTING PARTS SUPERST
WP	11223086	1	1	623	11 22 322 6	MODEM CPL RFK
WP	11245760	4	4	645	11 24 575 5	PEDESTAL
WP	11248432	10	1	198	11 24 114 3	EXHAUST GAS SYSTEM
WP	11248433	11	1	198	11 24 114 3	EXHAUST GAS SYSTEM
WP	11250985	3	1	192	11 28 574 7	WP
WP	11261002	5	2	181	11 24 113 9	ADD-ON PARTS DIESEL ENGIN
WP	11268967	10	1	678	11 26 901 8	HOLDER CPL
WP	11279013	51	1	204	11 92 923 6	ASSEMBLY INSTAL.
WP	11285709	4	1	192	11 28 574 7	WP
WP	11285747	3	1	189	11 24 114 1	COOLER INSTALLATION CHA

Description	Item	Pos.	Quantity	Sheet	Assembly	Description
WP	11309628	2	1	436	11 30 962 5	HOLDER CPL
WP	11900503	9	1	733	10 52 293 0	SG TACHOGENERATOR RFK
WP	11929423	20	1	210	11 92 958 8	AIR DUCT CPL
WP	11929596	21	1	210	11 92 958 8	AIR DUCT CPL
WP	11930281	22	1	210	11 92 958 8	AIR DUCT CPL
WP	11930759	23	1	210	11 92 958 8	AIR DUCT CPL
WP	11931909	24	1	210	11 92 958 8	AIR DUCT CPL
WP	289059414	13	1	439	11 89 364 8	UC CPL
WP	385031714	15	2	627	10 51 743 9	ROPE LUG CPL RFK
WP	949892214	20	1	357	10 51 968 6	LUG SUPERSTRUCTURE CPL
WP	954373603	31	2	463	11 89 365 0	CRAWLER CARRIER RIGHT CP
WP	954373603	31	2	474	11 89 365 1	CRAWLER CARRIER LEFT CP
WP	956033214	3	2	580	11 28 610 5	RETAINING DEVICE CPL
WP	956240114	26	2	613	11 28 744 5	MOUNTING PARTS
WP	956266614	1	1	537	91 90 584 14	ANGLE INDICATION
WP	956266714	2	1	537	91 90 584 14	ANGLE INDICATION
WP	956385914	21	2	613	11 28 744 5	MOUNTING PARTS
WP	956810314	26	1	588	99 23 398 14	ROLLER SET
WP	970831503	14	2	505	11 23 820 4	PIVOT PIECE CPL
WP	970854303	16	2	579	11 28 648 4	MOUNTING PARTS
WP	971323803	28	1	662	99 10 116 14	ROPE GUIDE
WP	971508203	10	1	617	10 55 753 7	HOIST LIMITSWITCH LEFT IN
WP	971511703	10	1	618	10 55 757 6	HOIST LIMITSWITCH RIGHT I
WRENCH SOCKET 36 X 1 "	885380314	55	1	500	10 56 187 5	TOOL EQUIPMENT

Bezeichnung	Artikel	Pos.	Menge	Blatt	Baugruppe	Bezeichnung
A-BOCK 1 KPL	11244444	10	1	533	11 24 165 1	A-BOCK 1 MONTAGEEINHEIT
A-BOCK 1 MONTAGEEINHEIT	11241651	63	1	2	01 38 406 14	LR 1300 SX
A-BOCK AUFRICHTZYL EINBA	10519694	51	1	6	11 24 047 9	OW KPL
A-BOCK AUFRICHTZYL HYDR	10519695	2	1	71	10 51 969 4	A-BOCK AUFRICHTZYL EINBA
A-BOCK EL	10531207	3	1	535	11 24 444 4	A-BOCK 1 KPL
A-BOCK KPL	990920514	10	1	604	99 34 387 14	NADELANBAUTEILE
A-BOCK SCHWK	990929614	10	1	605	99 09 205 14	A-BOCK KPL
ABDECKBLECH	927509601	14	1	392	90 01 376 2	DREHWERKANTRIEB
ABDECKKAPPE	10036950	17	1	431	70 24 996	SITZRAHMEN
ABDECKKAPPE	10129382	7	1	255	10 13 508 0	DRUCKROHRSTUTZEN
ABDECKKAPPE	10129385	10	1	255	10 13 508 0	DRUCKROHRSTUTZEN
ABDECKKAPPE	11946452	220	1	428	11 93 934 6	KLIMAANLAGE
ABDECKKAPPE	605618014	82	2	576	10 57 559 9	KABELSATZ
ABDECKKAPPE	605618014	82	2	609	10 57 651 9	KABELSATZ
ABDECKUNG	10530487	7	1	35	10 53 048 9	SICHERUNGSHALTER
ABDECKUNG	10583346	10	1	306	11 24 114 6	ABDECKUNG
ABDECKUNG	10583347	11	1	306	11 24 114 6	ABDECKUNG
ABDECKUNG	11236709	3	1	725	11 21 750 0	VERFLUESSIGER
ABDECKUNG	11241146	90	1	80	11 92 885 2	ZENTRALAGGREGAT KPL
ABDECKUNG	11252203	1	1	306	11 24 114 6	ABDECKUNG
ABDECKUNG	11252205	16	1	306	11 24 114 6	ABDECKUNG
ABDECKUNG	11252206	17	1	306	11 24 114 6	ABDECKUNG
ABDECKUNG	11252207	2	1	306	11 24 114 6	ABDECKUNG
ABDECKUNG	11252208	8	1	306	11 24 114 6	ABDECKUNG
ABDECKUNG	11252211	3	1	306	11 24 114 6	ABDECKUNG
ABDECKUNG	11252213	9	1	306	11 24 114 6	ABDECKUNG
ABDECKUNG	11252214	4	1	306	11 24 114 6	ABDECKUNG
ABDECKUNG	11252215	5	1	306	11 24 114 6	ABDECKUNG
ABDECKUNG	11252216	6	1	306	11 24 114 6	ABDECKUNG
ABDECKUNG	11262861	12	1	306	11 24 114 6	ABDECKUNG
ABDECKUNG	11357451	1	1	273	11 44 013 4	ABDECKUNG VORM.
ABDECKUNG	11357453	2	1	273	11 44 013 4	ABDECKUNG VORM.
ABDECKUNG	592287814	18	1	422	59 22 871 14	FRONTSCHEIBE KPL
ABDECKUNG ANBAU	10146117	342	1	215	12 42 545 4	DIESELMOTOR
ABDECKUNG UNTERSEITE	11249222	12	1	78	11 92 885 5	AGGREGAT DIESELMOTOR
ABDECKUNG VORM.	11440134	1	1	272	10 14 611 7	ABDECKUNG ANBAU
ABGASANLAGE	11241143	40	1	80	11 92 885 2	ZENTRALAGGREGAT KPL
ABGASANLAGE	11900325	70	1	80	11 92 885 2	ZENTRALAGGREGAT KPL
ABGASENDROHR	11248175	7	1	198	11 24 114 3	ABGASANLAGE
ABGASKLAPPE	10153118	1	1	284	10 14 511 2	ABGASSTUTZEN ANBAU
ABGASKRUEMMER	10141440	1	1	281	10 14 144 3	ABGASROHR VORM.
ABGASKRUEMMER	10141442	2	2	281	10 14 144 3	ABGASROHR VORM.
ABGASMISCHROHR	10148669	4	1	303	11 90 032 5	ABGASANLAGE
ABGASROHR ANBAU	10141444	410	1	215	12 42 545 4	DIESELMOTOR
ABGASROHR KPL	11248166	6	1	198	11 24 114 3	ABGASANLAGE
ABGASROHR VORM.	10141443	1	1	280	10 14 144 4	ABGASROHR ANBAU
ABGASSTUTZEN	10146274	3	1	284	10 14 511 2	ABGASSTUTZEN ANBAU
ABGASSTUTZEN ANBAU	10145112	432	1	215	12 42 545 4	DIESELMOTOR
ABLASSHAHN	11696074	16	1	202	10 30 300 7	KRAFTSTOFFVORFILTER
ABLASSSCHLAUCH KPL	917665814	31	1	500	10 56 187 5	WERKZEUGAUSRUESTUNG
ABLASSSTUTZEN	7402657	1	1	503	91 76 658 14	ABLASSSCHLAUCH KPL
ABSAUGPUMPE MIT BEFEST.	10133947	141	1	214	12 42 545 4	DIESELMOTOR
ABSAUGPUMPE VORM.	10133823	1	1	246	10 13 394 7	ABSAUGPUMPE MIT BEFEST.
ABSCHALTVENTIL	11067304	5	1	92	11 21 991 0	PUMPENGEHAEUSE
ABSCHLUSSPLATTE	602153014	53	1	735	10 56 013 7	FREMDEINSPEISUNG BATTERI
ABSCHLUSSPLATTE	602730714	25	3	39	10 56 645 8	KLEMMKASTEN
ABSCHLUSSPLATTE	602730714	18	1	611	10 57 652 3	KLEMMDOSE
ABSCHLUSSPLATTE	602812714	26	1	39	10 56 645 8	KLEMMKASTEN
ABSCHLUSSPLATTE	602812714	87	1	402	10 55 963 5	SCHALTSCHR X1
ABSCHLUSSPLATTE	693182314	78	2	402	10 55 963 5	SCHALTSCHR X1

Bezeichnung	Artikel	Pos.	Menge	Blatt	Baugruppe	Bezeichnung
ABSPERRORGAN	10526733	11	1	48	10 56 070 1	TANK HYDR KPL
ABSTANDHALTER	11262039	10	1	732	11 26 771 6	MONTAGETEILE
ABSTREIFER	10352319	60	1	704	59 21 826 14	ABSTUETZZYLINDER
ABSTREIFER	592031814	9	1	722	59 20 008 14	DOPPELWIRKZYL
ABSTREIFER	749073614	90	1	704	59 21 826 14	ABSTUETZZYLINDER
ABSTREIFRING	726054214	13	1	456	51 33 141 14	DOPPELWIRKZYL
ABSTREIFRING	726054414	9	1	27	51 33 139 14	DOPPELWIRKZYL
ABSTUETZPLATTE KPL	990759714	10	4	706	11 89 568 8	SELBSTVERLADESYSTEM NR
ABSTUETZUNG	919014814	23	1	662	99 10 116 14	SEILFUEHRUNG
ABSTUETZUNG	919017314	24	1	662	99 10 116 14	SEILFUEHRUNG
ABSTUETZZYLINDER	592182614	1	4	703	11 23 524 8	VERROHRUNG HYDR
ABSTURZSICHERUNG KPL	10556011	10	1	667	10 55 601 0	STURZSICHERUNG NRS
ABTRIEB KPL	540270414	23	1	633	59 20 694 14	WINDE
ABTRIEBSFLANSCH		10	1	348	93 88 497 01	PLANETENGETRIEBE
ABTRIEBSWELLE	938585201	10	1	392	90 01 376 2	DREHWERKANTRIEB
ABTRIEBSWELLENGEHAEUSE	927562201	1	1	392	90 01 376 2	DREHWERKANTRIEB
ACHSE	11310955	13	2	548	11 28 390 8	AL BEGEHUNG
ACHSE	11310955	13	2	563	11 28 583 8	AL BEGEHUNG
ACHSE	11310955	13	2	570	11 28 626 1	AL BEGEHUNG
ACHSE	918539614	17	1	357	10 51 968 6	EZW OW EINBAU KPL
ACHSE	958556014	16	1	613	11 28 744 5	MONTAGETEILE
ACHSE	958904614	17	1	613	11 28 744 5	MONTAGETEILE
ACHSE KPL	991413814	1	1	538	99 14 137 14	UMLENKROLLE KPL
ACHSE SCHWK	970901603	14	2	662	99 10 116 14	SEILFUEHRUNG
ACHSHALTER	703003014	28	1	505	11 23 820 4	ANLENKSTUECK KPL
ACHSHALTER	703003014	6	2	580	11 28 610 5	ARRETIERUNG KPL
ACHSHALTER	703003114	25	2	613	11 28 744 5	MONTAGETEILE
ACHSHALTER	954372503	14	4	476	11 31 390 8	MITTELTEIL KPL
ACHSHALTER	956378214	27	2	505	11 23 820 4	ANLENKSTUECK KPL
ACHSHALTER	997040201	25	1	353	96 96 543 01	WINDENRAHMEN
ADAPTER	10121091	1	1	109	90 74 418	REGELVENTIL
ADAPTER	11221276	5	1	155	11 22 126 8	PUMPENELEMENT
ADAPTER	570950308	1	1	160	70 19 834	ADAPTER
ADAPTER	7019834	4	1	155	11 22 126 8	PUMPENELEMENT
ADAPTER 5X84X90 PA 6	10549545	53	1	398	11 27 970 6	KABINE KPL
ADAPTERBLECH	11220468	5	1	723	11 22 037 2	FUSSPEDAL EL EINBAU
ADAPTERBLECH	11223693	5	2	414	11 22 369 1	FUSSPEDAL EL EINBAU
ADAPTERBLECH	959571914	14	2	679	10 51 971 3	SELBSTVERLADESYSTEM NR
ADAPTERRAHMEN	10599215	32	1	404	10 51 907 9	STEUERSTAND LI
ADERENDHUELSE	602307708	100	2	39	10 56 645 8	KLEMMKASTEN
AGGREGAT DIESELMOTOR	11928855	6	1	2	01 38 406 14	LR 1300 SX
AGGREGAT HYDR	11247735	2	1	80	11 92 885 2	ZENTRALAGGREGAT KPL
AGGREGATETRAEGER ANBA	10147686	12	1	214	12 42 545 4	DIESELMOTOR
AGGREGATETRAEGER VORM	10148254	1	1	219	10 14 768 6	AGGREGATETRAEGER ANBA
AL BEGEHUNG	11283908	14	1	546	11 24 570 3	AL ZWISCHENSTUECK KPL
AL BEGEHUNG	11285838	14	1	562	11 24 570 9	AL ZWISCHENSTUECK KPL
AL BEGEHUNG	11286261	14	1	569	11 24 571 5	AL ZWISCHENSTUECK KPL
AL EL	992497814	17	1	656	11 21 529 8	WARNLICHT EL NRS
AL KOPF EL	10531413	3	1	573	11 24 133 3	AL KOPF KPL
AL KOPF KPL	11241333	81	1	2	01 38 406 14	LR 1300 SX
AL KOPF SCHWK KPL	11241323	10	1	573	11 24 133 3	AL KOPF KPL
AL ZWISCHENSTUECK KPL	11245703	10	1	545	11 94 172 5	MONTAGEEINHEIT
AL ZWISCHENSTUECK KPL	11245709	10	1	561	11 94 259 4	MONTAGEEINHEIT
AL ZWISCHENSTUECK KPL	11245715	10	1	568	11 94 450 2	MONTAGEEINHEIT
AL ZWISCHENSTUECK SCHW	11245698	10	1	546	11 24 570 3	AL ZWISCHENSTUECK KPL
AL ZWISCHENSTUECK SCHW	11245700	10	1	562	11 24 570 9	AL ZWISCHENSTUECK KPL
AL ZWISCHENSTUECK SCHW	11245702	10	1	569	11 24 571 5	AL ZWISCHENSTUECK KPL
ANBAUFLANSCH	11250972	30	1	86	11 24 682 0	VERTEILERGETRIEBE
ANBAUFLANSCH	11250974	70	3	86	11 24 682 0	VERTEILERGETRIEBE
ANBAUFLANSCH	11290845	80	1	86	11 24 682 0	VERTEILERGETRIEBE

Bezeichnung	Artikel	Pos.	Menge	Blatt	Baugruppe	Bezeichnung
ANBAUFLANSCH	790403714	40	1	86	11 24 682 0	VERTEILERGETRIEBE
ANBAUGEHAEUSE	10195680	31	1	39	10 56 645 8	KLEMMKASTEN
ANBAUGEHAEUSE	605613701	41	1	39	10 56 645 8	KLEMMKASTEN
ANBAUGEHAEUSE	693149814	45	1	39	10 56 645 8	KLEMMKASTEN
ANBAUSATZ DURCHTRIEB	10132357	302	1	127	10 12 878 7	V.PUMPE
ANBAUTEILE DIESELMOTOR	11241139	20	1	80	11 92 885 2	ZENTRALAGGREGAT KPL
ANBAUTEILE LUFTPRESSER	11414757	4	1	299	11 92 891 3	KOMPRESSOR NRS
ANHAENGEKETTE	990835714	40	1	463	11 89 365 0	RAUPENTRAEGER RE KPL
ANHAENGEKETTE	990835714	40	1	474	11 89 365 1	RAUPENTRAEGER LI KPL
ANLAGE HARNSTOFF EINBAU	11929236	60	1	80	11 92 885 2	ZENTRALAGGREGAT KPL
ANLAUFSCHEIBE		46	1	348	93 88 497 01	PLANETENGETRIEBE
ANLENKBOLZEN EINBAU	992345114	50	1	6	11 24 047 9	OW KPL
ANLENKSTUECK EL	11901509	3	1	505	11 23 820 4	ANLENKSTUECK KPL
ANLENKSTUECK HYDR	10518261	2	1	505	11 23 820 4	ANLENKSTUECK KPL
ANLENKSTUECK KPL	11238204	59	1	2	01 38 406 14	LR 1300 SX
ANLENKSTUECK SCHWK	11238202	10	1	505	11 23 820 4	ANLENKSTUECK KPL
ANSAUGANLAGE LUFT	11929220	30	1	80	11 92 885 2	ZENTRALAGGREGAT KPL
ANSAUGROHR	953466003	10	1	180	10 58 017 0	RUECKLAUFROHR
ANSAUGROHR KPL	10350932	9	1	179	10 57 532 2	ANSAUGROHR OEL KPL
ANSAUGROHR KPL	10579155	11	2	179	10 57 532 2	ANSAUGROHR OEL KPL
ANSAUGROHR KPL	10598537	8	1	179	10 57 532 2	ANSAUGROHR OEL KPL
ANSAUGROHR KPL	592070414	7	1	179	10 57 532 2	ANSAUGROHR OEL KPL
ANSAUGROHR KPL	592330814	14	1	179	10 57 532 2	ANSAUGROHR OEL KPL
ANSAUGROHR KPL	916526414	13	1	179	10 57 532 2	ANSAUGROHR OEL KPL
ANSAUGROHR LUFT	11252578	15	1	306	11 24 114 6	ABDECKUNG
ANSAUGROHR LUFT	11929287	11	1	194	11 92 922 0	ANSAUGANLAGE LUFT
ANSAUGROHR OEL	10519481	15	1	80	11 92 885 2	ZENTRALAGGREGAT KPL
ANSAUGROHR OEL KPL	10575322	3	1	177	10 51 948 1	ANSAUGROHR OEL
ANSAUGROHR OEL SCHWK	10575323	3	1	179	10 57 532 2	ANSAUGROHR OEL KPL
ANSAUGSTUTZEN	11444998	1	1	265	10 14 736 9	ANSAUGSTUTZEN ANBAU
ANSAUGSTUTZEN ANBAU	10147369	221	1	215	12 42 545 4	DIESELMOTOR
ANSCHLAG	10539631	45	2	463	11 89 365 0	RAUPENTRAEGER RE KPL
ANSCHLAG	10539631	45	2	474	11 89 365 1	RAUPENTRAEGER LI KPL
ANSCHLAG	10566932	14	2	670	11 29 473 7	LAUFSTEG ZWISCHENSTUEC
ANSCHLAG	10566932	15	2	674	11 29 474 2	LAUFSTEG ZWISCHENSTUEC
ANSCHLAG	10566932	17	2	675	11 29 474 3	LAUFSTEG ZWISCHENSTUEC
ANSCHLAG	10566932	14	2	676	10 55 514 8	STURZSICHERUNG NRS
ANSCHLAG	11913115	2	1	98	11 06 730 5	WECHSELVENTIL
ANSCHLAG	990443514	8	2	316	10 57 883 5	TUER
ANSCHLAG	990443514	8	2	318	10 57 897 6	TUER
ANSCHLAG	990443514	3	2	320	10 57 940 0	TUER
ANSCHLAG	990443514	3	2	321	10 56 623 7	TUER
ANSCHLAG	990443514	8	2	322	10 56 580 8	TUER
ANSCHLAGPLATTE	958908914	17	1	519	10 58 193 7	GITTERROST KPL
ANSCHLAGPUFFER	592291314	108	1	416	10 35 008 0	KABINE
ANSCHLAGSCHRAUBE M12X3	9885661	17	2	105	10 11 835 0	ANSCHLUSSGEHAEUSE
ANSCHLUSSFLANSCH	10132074	3	1	247	10 13 382 3	ABSAUGPUMPE VORM.
ANSCHLUSSFLANSCH	9268423	13	1	103	10 11 834 9	DOPPELV.PUMPE
ANSCHLUSSFLANSCH	9276385	11	1	103	10 11 834 9	DOPPELV.PUMPE
ANSCHLUSSGEHAEUSE	10118350	3	1	103	10 11 834 9	DOPPELV.PUMPE
ANSCHLUSSPLATTE	11940146	4	1	384	51 22 991 14	OELMOTOR
ANSCHLUSSPLATTE	510427914	5	1	525	10 51 959 1	VERROHRUNG HYDR
ANSCHLUSSPLATTE	510662614	12	2	8	11 29 618 6	OW HYDR
ANSCHLUSSPLATTE	510662914	23	3	8	11 29 618 6	OW HYDR
ANSCHLUSSPLATTE	510662914	5	1	341	10 51 969 8	NADELEINZIEHWINDE HYDR
ANSCHLUSSPLATTE	510662914	5	1	358	10 51 968 7	HAUPT EZW HYDR
ANSCHLUSSPLATTE	511455014	3	1	629	10 51 726 2	VERROHRUNG HYDR
ANSCHLUSSPLATTE VORM.	10141316	1	1	140	10 14 131 7	RS ANSCHLUSSPLATTE
ANSCHLUSSSCHILD	938858501	5	1	353	96 96 543 01	WINDENRAHMEN
ANSCHLUSSSCHILD	969655301	1	1	353	96 96 543 01	WINDENRAHMEN

Bezeichnung	Artikel	Pos.	Menge	Blatt	Baugruppe	Bezeichnung
ANSCHLUSSSTUECK	10139391	6	1	223	10 14 201 8	KURBELGEHAEUSEENTLUEF
ANSCHLUSSSTUECK	10139393	5	1	223	10 14 201 8	KURBELGEHAEUSEENTLUEF
ANSCHLUSSSTUECK	11297647	12	1	730	11 28 423 6	ZENTRALSCHMIERUNG NRS
ANSCHLUSSSTUECK	7024968	224	1	18	11 28 647 6	VENTILBLOCK
ANSCHLUSSSTUECK VORM.	10141790	217	1	215	12 42 545 4	DIESELMOTOR
ANSCHLUSSSTUTZEN	10128100	4	1	255	10 13 508 0	DRUCKROHRSTUTZEN
ANSCHLUSSSTUTZEN	927586201	12	1	352	93 36 755 01	OELMESSEINRICHTUNG
ANSCHLUSSSTUTZEN	927586201	27	1	352	93 36 755 01	OELMESSEINRICHTUNG
ANSCHLUSSTEILE	11280481	10	1	730	11 28 423 6	ZENTRALSCHMIERUNG NRS
ANSCHLUSSTEILE	11280482	10	2	58	11 27 315 5	ZENTRALSCHMIERUNG
ANSCHLUSSTRAEGER		1	1	348	93 88 497 01	PLANETENGETRIEBE
ANSCHWEISSPLATTE	969329314	40	1	8	11 29 618 6	OW HYDR
ANSTEUERGERAET	11219934	1	1	101	11 21 991 7	STEUERGERAET
ANTENNE	11645490	76	1	399	11 27 973 6	KABINE EL
ANTIRUTSCHBELAG	11258244	990	1	6	11 24 047 9	OW KPL
ANTRIEB	11893214	4	1	485	10 53 039 8	WINDE
ANTRIEB	990464514	10	1	374	99 04 941 14	ANTRIEBSEINHEIT
ANTRIEB KPL	540270514	24	1	633	59 20 694 14	WINDE
ANTRIEBSEINHEIT	990494114	2	1	355	10 51 969 1	EZW OW EINBAU KPL
ANTRIEBSFLANSCH	606279014	20	1	493	11 22 050 0	WINDEN EINBAU
ANTRIEBSFLANSCH	606279014	20	1	499	11 22 050 1	WINDEN EINBAU
ANTRIEBSFLANSCH	606281114	46	1	33	11 24 519 0	OW EL
ANTRIEBSHUELSE	11223233	4	1	376	99 04 645 14	ANTRIEB
ANTRIEBSHUELSE	540272914	4	1	638	54 02 705 14	ANTRIEB KPL
ANTRIEBSWELLE		5	1	348	93 88 497 01	PLANETENGETRIEBE
ANTRIEBSWELLE	944434903	50	1	467	96 93 178 01	FAHRANTRIEB
ARBEITSSCHEINWERFER	10224500	100	4	34	11 24 519 0	OW EL
ARBEITSSCHEINWERFER	10590423	10	6	652	10 59 371 2	ZUSATZSCHEINWERFER EL
ARBEITSSCHEINWERFER	7027205	60	2	34	11 24 519 0	OW EL
ARBEITSSCHEINWERFER	7027205	50	3	399	11 27 973 6	KABINE EL
ARBEITSSCHEINWERFER	7027205	37	1	714	10 53 246 1	KAMERAUEBERWACHUNG
ARBEITSSCHEINWERFER	7027205	32	1	716	10 50 775 0	KAMERAUEBERWACHUNG
ARMLEHNE LINKS	7024982	90	1	430	10 22 506 8	FAHRERSITZ
ARMLEHNE RE	7024983	91	1	430	10 22 506 8	FAHRERSITZ
ARRETIERUNG	10227128	7	1	515	61 61 541 14	KABELTROMMEL
ARRETIERUNG	919617914	1	2	580	11 28 610 5	ARRETIERUNG KPL
ARRETIERUNG KPL	11286105	12	1	573	11 24 133 3	AL KOPF KPL
ATL-ANBAU	10140136	430	1	215	12 42 545 4	DIESELMOTOR
AUFFANGWANNE KPL	11283977	15	1	546	11 24 570 3	AL ZWISCHENSTUECK KPL
AUFFANGWANNE KPL	11283977	15	1	562	11 24 570 9	AL ZWISCHENSTUECK KPL
AUFFANGWANNE KPL	11283977	15	1	569	11 24 571 5	AL ZWISCHENSTUECK KPL
AUFFANGWANNE KPL	11283978	16	1	546	11 24 570 3	AL ZWISCHENSTUECK KPL
AUFFANGWANNE KPL	11283978	16	1	562	11 24 570 9	AL ZWISCHENSTUECK KPL
AUFFANGWANNE KPL	11283978	16	1	569	11 24 571 5	AL ZWISCHENSTUECK KPL
AUFFANGWANNE KPL	11283995	17	1	546	11 24 570 3	AL ZWISCHENSTUECK KPL
AUFFANGWANNE KPL	11283995	17	1	562	11 24 570 9	AL ZWISCHENSTUECK KPL
AUFFANGWANNE KPL	11283995	17	1	569	11 24 571 5	AL ZWISCHENSTUECK KPL
AUFFANGWANNE KPL	11283997	18	1	546	11 24 570 3	AL ZWISCHENSTUECK KPL
AUFFANGWANNE KPL	11283997	18	1	562	11 24 570 9	AL ZWISCHENSTUECK KPL
AUFFANGWANNE KPL	11283997	18	1	569	11 24 571 5	AL ZWISCHENSTUECK KPL
AUFHAENGUNG	11271488	22	1	599	79 04 871 14	UNTERFLASCHE
AUFHAENGUNG	11274638	21	1	592	79 04 112 14	UNTERFLASCHE
AUFKLEBER	10541838	32	1	622	11 90 722 6	MODEM NRS
AUFKLEBER SCHALLEISTUN	9874345	12	1	6	11 24 047 9	OW KPL
AUFLAGE	11219265	89	4	507	11 23 820 4	ANLENKSTUECK KPL
AUFLAGE	11219265	10	2	518	11 23 653 3	AUFLAGE KPL
AUFLAGE	11219265	10	2	540	11 25 204 2	AUFLAGE KPL
AUFLAGE	11219265	11	2	558	11 23 292 2	AUFLAGE KPL
AUFLAGE	11247161	12	1	518	11 23 653 3	AUFLAGE KPL
AUFLAGE	289007714	1	2	606	11 30 126 6	MONTAGETEILE

Bezeichnung	Artikel	Pos.	Menge	Blatt	Baugruppe	Bezeichnung
AUFLAGE	289035314	10	1	542	99 29 588 14	AUFLAGE
AUFLAGE	992958814	10	4	541	11 28 594 7	AUFLAGE KPL
AUFLAGE	992958814	10	6	559	11 28 619 1	AUFLAGE KPL
AUFLAGE	992958814	10	6	566	11 28 653 4	AUFLAGE KPL
AUFLAGE KPL	11232922	15	4	545	11 94 172 5	MONTAGEEINHEIT
AUFLAGE KPL	11232922	15	4	561	11 94 259 4	MONTAGEEINHEIT
AUFLAGE KPL	11232922	15	4	568	11 94 450 2	MONTAGEEINHEIT
AUFLAGE KPL	11232922	16	4	573	11 24 133 3	AL KOPF KPL
AUFLAGE KPL	11236533	23	4	505	11 23 820 4	ANLENKSTUECK KPL
AUFLAGE KPL	11236533	14	8	545	11 94 172 5	MONTAGEEINHEIT
AUFLAGE KPL	11236533	14	8	561	11 94 259 4	MONTAGEEINHEIT
AUFLAGE KPL	11236533	14	16	568	11 94 450 2	MONTAGEEINHEIT
AUFLAGE KPL	11236533	15	2	573	11 24 133 3	AL KOPF KPL
AUFLAGE KPL	11252042	13	4	533	11 24 165 1	A-BOCK 1 MONTAGEEINHEIT
AUFLAGE KPL	11285947	65	1	2	01 38 406 14	LR 1300 SX
AUFLAGE KPL	11286191	69	1	2	01 38 406 14	LR 1300 SX
AUFLAGE KPL	11286534	77	5	2	01 38 406 14	LR 1300 SX
AUFLAGE KPL	991606114	63	1	6	11 24 047 9	OW KPL
AUFLAGE KPL	991873614	43	4	535	11 24 444 4	A-BOCK 1 KPL
AUFLAGEBLECH	10349598	81	2	507	11 23 820 4	ANLENKSTUECK KPL
AUFLAGEBLECH	10349598	10	1	551	11 28 397 8	AUFFANGWANNE KPL
AUFLAGEBLECH	10349598	10	1	553	11 28 399 7	AUFFANGWANNE KPL
AUFLAGEBLECH	10349599	82	2	507	11 23 820 4	ANLENKSTUECK KPL
AUFLAGEBLECH	10349599	10	1	550	11 28 397 7	AUFFANGWANNE KPL
AUFLAGEBLECH	10349599	10	1	552	11 28 399 5	AUFFANGWANNE KPL
AUFLAGEPLATTE	10098143	1	2	77	99 16 061 14	AUFLAGE KPL
AUFSTIEG KPL	10501795	32	6	463	11 89 365 0	RAUPENTRAEGER RE KPL
AUFSTIEG KPL	10501795	32	6	474	11 89 365 1	RAUPENTRAEGER LI KPL
AUFSTIEGSLEITER KPL NRS	11237407	583	1	3	01 38 406 14	LR 1300 SX
AUSGANGSMODUL	11403695	20	1	304	11 40 371 1	SCR KPL.
AUSGLEICHSBEHAELTER	11941710	11	1	183	11 94 151 8	KUEHLER EINBAU WASSER
AUSPUFFKLAPPE	11299163	13	1	198	11 24 114 3	ABGASANLAGE
AUSSENLAMELLE	501540414	97	8	376	99 04 645 14	ANTRIEB
AUSSENLAMELLE	503192801	8	10	351	93 95 895 01	BREMSLAMELLENSATZ
AUSSENLAMELLE	503199301	5	9	393	50 20 383 01	LAMELLENBREMSE
AUSSENLAMELLE	503199301	4	9	395	93 93 478 01	BREMSLAMELLENSATZ
AUSSENSPIEGEL	779002114	43	1	398	11 27 970 6	KABINE KPL
AUTORADIO	11699714	280	1	331	10 59 256 9	RADIO NRS
AXIALSCHEIBE	540270814	15	6	634	54 02 701 14	PLANETENSTUFE
BACK-UP-ALARM	10288438	52	1	33	11 24 519 0	OW EL
BACKRING	10352355	110	1	704	59 21 826 14	ABSTUETZZYLINDER
BACKRING	10352359	130	4	704	59 21 826 14	ABSTUETZZYLINDER
BALLASTGEWICHT ANORD	992338614	18	1	2	01 38 406 14	LR 1300 SX
BALLASTIERGEHAENGE	797027814	23	1	685	11 23 619 7	SELBSTVERLADESYSTEM NR
BATTERIE	10664204	31	2	33	11 24 519 0	OW EL
BATTERIE EINBAU KPL	10560673	45	1	6	11 24 047 9	OW KPL
BATTERIEABDECKUNG	10560674	1	1	67	10 56 067 3	BATTERIE EINBAU KPL
BATTERIEHAUPTSCHALTER	606070908	35	1	33	11 24 519 0	OW EL
BATTERIEKLEMME	10224316	33	1	33	11 24 519 0	OW EL
BATTERIEKLEMME	10224316	3	1	35	10 53 048 9	SICHERUNGSHALTER
BATTERIEKLEMME	10547876	32	2	33	11 24 519 0	OW EL
BE-UND ENTLUEFTUNGSFILTE	721108801	7	1	352	93 36 755 01	OELMESSEINRICHTUNG
BECKENGURT	7371746	80	1	430	10 22 506 8	FAHRERSITZ
BEDIENELEMENT	592291914	123	1	416	10 35 008 0	KABINE
BEDIENFELD	612436814	11	1	406	10 03 610 7	TASTATUR BEDIENPULT X11
BEF BAND	501507214	14	1	635	54 02 702 14	SEILTROMMEL KPL
BEF BUEGEL	11219861	10	1	558	11 23 292 2	AUFLAGE KPL
BEF SCHELLE	10350978	32	1	82	11 24 773 5	AGGREGAT HYDR
BEF SCHRAUBE	602134114	59	4	39	10 56 645 8	KLEMMKASTEN
BEF SCHRAUBE	602134114	24	2	611	10 57 652 3	KLEMMDOSE

Bezeichnung	Artikel	Pos.	Menge	Blatt	Baugruppe	Bezeichnung
BEF SOCKEL	11230237	44	9	535	11 24 444 4	A-BOCK 1 KPL
BEF-TEILE OW	11244837	14	1	78	11 92 885 5	AGGREGAT DIESELMOTOR
BEFESTIGUNG DRUCKROHR	10135434	193	6	214	12 42 545 4	DIESELMOTOR
BEFESTIGUNG INJEKTOR	10135432	192	6	214	12 42 545 4	DIESELMOTOR
BEFESTIGUNGSBLECH	10149477	2	1	286	10 14 584 5	GENERATOR VORM.
BEFESTIGUNGSBUEGEL	10578343	33	1	65	10 58 163 4	KABINENAUFHAENGUNG KPL
BEFESTIGUNGSCHELLE	11283913	18	8	548	11 28 390 8	AL BEGEHUNG
BEFESTIGUNGSCHELLE	11283913	18	9	563	11 28 583 8	AL BEGEHUNG
BEFESTIGUNGSCHELLE	11283913	18	9	570	11 28 626 1	AL BEGEHUNG
BEFESTIGUNGSCHELLE	11283913	17	12	573	11 24 133 3	AL KOPF KPL
BEFESTIGUNGSCHELLE	11283913	13	4	670	11 29 473 7	LAUFSTEG ZWISCHENSTUEC
BEFESTIGUNGSCHELLE	11283913	14	10	674	11 29 474 2	LAUFSTEG ZWISCHENSTUEC
BEFESTIGUNGSCHELLE	11283913	16	14	675	11 29 474 3	LAUFSTEG ZWISCHENSTUEC
BEFESTIGUNGSTEILE	10289973	41	1	430	10 22 506 8	FAHRERSITZ
BEHAELTER	11837331	8	1	210	11 92 958 8	LUFTFUEHRUNG KPL
BEHAELTER	592286714	9	2	415	10 35 008 0	KABINE
BELUEFTUNGSFILTER	11280868	12	1	53	10 56 073 3	KRAFTSTOFFTANK KPL
BELUEFTUNGSFILTER	510690614	13	1	48	10 56 070 1	TANK HYDR KPL
BERUEHRUNGSSCHUTZ	10351108	59	2	402	10 55 963 5	SCHALTSCHR X1
BESEILUNG EZW HAUPT AL	11227037	26	1	2	01 38 406 14	LR 1300 SX
BESEILUNG EZW NADEL AL	992338714	24	1	2	01 38 406 14	LR 1300 SX
BETAETIGUNGSEINHEIT	592054714	95	1	376	99 04 645 14	ANTRIEB
BETANKUNGSANLAGE NRS	10521554	858	1	4	01 38 406 14	LR 1300 SX
BETANKUNGSPUMPE	510095914	10	1	739	10 52 957 6	BETANKUNGSPUMPE KPL
BETANKUNGSPUMPE KPL	10529576	10	1	737	10 52 155 4	BETANKUNGSANLAGE NRS
BETRIEBSSTUNDENZAEHLER	10599206	31	1	404	10 51 907 9	STEUERSTAND LI
BEZEICHNUNGSKARTE	602835914	52	1	39	10 56 645 8	KLEMMKASTEN
BEZEICHNUNGSKARTE	602835914	21	1	611	10 57 652 3	KLEMMDOSE
BILDSCHIRMGEHAEUSE	11262812	2	1	433	11 26 095 6	STEUERKONSOLE RE KPL
BLASENSPEICHER	510641214	16	1	82	11 24 773 5	AGGREGAT HYDR
BLECH	10142763	2	1	278	10 14 274 4	KUEHLWASSERENTLUEFTUN
BLECH	10529071	11	1	718	10 58 064 7	VIDEOUEBERWACHUNGSANL
BLECH	10529074	12	1	718	10 58 064 7	VIDEOUEBERWACHUNGSANL
BLECH	10574357	19	2	314	11 24 409 1	VERKLEIDUNG
BLECH	10581590	21	1	314	11 24 409 1	VERKLEIDUNG
BLECH	11217232	18	4	308	11 24 409 0	VERKLEIDUNG OW EINBAU KP
BLECH	11271486	16	4	599	79 04 871 14	UNTERFLASCHE
BLECH	11274636	16	4	592	79 04 112 14	UNTERFLASCHE
BLECH	11310952	12	2	548	11 28 390 8	AL BEGEHUNG
BLECH	11310952	12	2	563	11 28 583 8	AL BEGEHUNG
BLECH	11310952	12	2	570	11 28 626 1	AL BEGEHUNG
BLECH	11311241	10	1	548	11 28 390 8	AL BEGEHUNG
BLECH	11311241	10	1	563	11 28 583 8	AL BEGEHUNG
BLECH	11311241	10	1	570	11 28 626 1	AL BEGEHUNG
BLECH	11311262	11	1	548	11 28 390 8	AL BEGEHUNG
BLECH	11311336	11	1	563	11 28 583 8	AL BEGEHUNG
BLECH	11311393	11	1	570	11 28 626 1	AL BEGEHUNG
BLECH	950102914	16	1	589	99 30 800 14	SPITZENENDSCHALTER EINBA
BLECH	950143914	37	2	588	99 23 398 14	ROLLENSATZ
BLECH	954432003	17	10	493	11 22 050 0	WINDEN EINBAU
BLECH	954432003	17	10	499	11 22 050 1	WINDEN EINBAU
BLECH	954486503	18	6	493	11 22 050 0	WINDEN EINBAU
BLECH	954486503	18	6	499	11 22 050 1	WINDEN EINBAU
BLECH	971363403	96	1	507	11 23 820 4	ANLENKSTUECK KPL
BLENDE	10226479	5	1	419	10 35 007 6	SCHIEBETUER
BLENDE	11248964	21	1	308	11 24 409 0	VERKLEIDUNG OW EINBAU KP
BLENDE	11248966	22	1	308	11 24 409 0	VERKLEIDUNG OW EINBAU KP
BLENDE	11248990	19	2	308	11 24 409 0	VERKLEIDUNG OW EINBAU KP
BLENDE	11248991	15	2	308	11 24 409 0	VERKLEIDUNG OW EINBAU KP
BLENDE	11248992	20	2	308	11 24 409 0	VERKLEIDUNG OW EINBAU KP

Bezeichnung	Artikel	Pos.	Menge	Blatt	Baugruppe	Bezeichnung
BLENDENSCHRAUBE	11219933	8	1	92	11 21 991 0	PUMPENGEHAEUSE
BLINDNIET DIN 7337-A 4.8X16	10555185	13	4	671	11 30 694 4	SCHIENE KPL
BLINDSTOPFEN	602458214	15	8	407	10 53 171 8	TASTATUR
BLINDSTOPFEN	606907114	37	1	741	10 52 155 9	MODUL BETANKUNGSANLAG
BLINDSTOPFEN	692405708	15	4	413	11 95 272 6	SCHALLGEBER EL
BLINDSTOPFEN	693061214	26	15	512	11 90 151 1	KABELSATZ 1 ANLENKSTUECK
BLINDSTOPFEN	693061314	29	1	39	10 56 645 8	KLEMMKASTEN
BLINDSTOPFEN	693061314	25	1	512	11 90 151 1	KABELSATZ 1 ANLENKSTUECK
BLINDSTOPFEN	693061314	73	2	513	11 90 151 1	KABELSATZ 1 ANLENKSTUECK
BLINDSTOPFEN	693061314	25	2	575	10 57 559 9	KABELSATZ
BLINDSTOPFEN	693061314	25	4	609	10 57 651 9	KABELSATZ
BLINDSTOPFEN	693061414	24	8	512	11 90 151 1	KABELSATZ 1 ANLENKSTUECK
BLINDSTOPFEN	693061414	52	1	575	10 57 559 9	KABELSATZ
BLINDSTOPFEN	693061514	63	2	513	11 90 151 1	KABELSATZ 1 ANLENKSTUECK
BLINDSTOPFEN	693061514	52	2	609	10 57 651 9	KABELSATZ
BLITZLEUCHTE	10524928	90	1	400	11 27 973 6	KABINE EL
BLITZLEUCHTE	10524928	35	2	536	10 53 120 7	A-BOCK EL
BLOCK	11226015	10	1	383	51 14 347 14	DW SICHERUNGSBLOCK
BLOCK	943958914	30	1	8	11 29 618 6	OW HYDR
BLOCK	943958914	5	1	509	10 51 826 1	ANLENKSTUECK HYDR
BLOCK	946294214	25	1	8	11 29 618 6	OW HYDR
BODEN	11289833	25	1	704	59 21 826 14	ABSTUETZZYLINDER
BODENMATTE	592286914	25	1	415	10 35 008 0	KABINE
BODENPLATTE	388291208	16	72	463	11 89 365 0	RAUPENTRAEGER RE KPL
BODENPLATTE	388291208	16	72	474	11 89 365 1	RAUPENTRAEGER LI KPL
BOLZEN	10350555	32	2	620	99 23 415 14	RUECKHALTESTANGE
BOLZEN	10529084	15	1	718	10 58 064 7	VIDEOUEBERWACHUNGSANL
BOLZEN	10529086	16	1	718	10 58 064 7	VIDEOUEBERWACHUNGSANL
BOLZEN	10572058	11	4	700	11 89 568 6	SELBSTVERLADESYSTEM NR
BOLZEN	10574630	1	1	494	10 57 462 9	BOLZEN KPL
BOLZEN	11271461	4	1	599	79 04 871 14	UNTERFLASCHE
BOLZEN	11493575	4	1	592	79 04 112 14	UNTERFLASCHE
BOLZEN	11942798	42	1	65	10 58 163 4	KABINENAUFHAENGUNG KPL
BOLZEN	11944129	30	4	176	11 24 113 8	MOTORLAGER KPL
BOLZEN	11946386	98	3	507	11 23 820 4	ANLENKSTUECK KPL
BOLZEN	11947719	27	2	328	11 24 483 7	BEF-TEILE OW
BOLZEN	592291514	1	1	425	59 22 914 14	PODESTSICHERUNG KPL
BOLZEN	9477429	18	1	114	10 13 975 2	RS SCHWENKJOCH
BOLZEN	9477439	13	2	105	10 11 835 0	ANSCHLUSSGEHAEUSE
BOLZEN	949388414	2	2	621	97 08 757 03	RUECKFALLSTUETZEN
BOLZEN	950250014	19	2	539	99 23 394 14	HALTESTANGE KPL
BOLZEN	950250014	12	4	556	10 54 054 8	HALTESTANGE KPL
BOLZEN	950250014	12	4	564	10 54 055 1	HALTESTANGE KPL
BOLZEN	950250014	12	4	571	10 54 055 5	HALTESTANGE KPL
BOLZEN	950250014	12	6	586	10 54 056 7	HALTESTANGE KPL
BOLZEN	956418614	17	2	620	99 23 415 14	RUECKHALTESTANGE
BOLZEN	956711314	23	8	679	10 51 971 3	SELBSTVERLADESYSTEM NR
BOLZEN	956802414	13	1	588	99 23 398 14	ROLLENSATZ
BOLZEN	956802514	14	1	588	99 23 398 14	ROLLENSATZ
BOLZEN	957056314	4	4	663	99 31 838 14	ZWISCHENABSPANNUNG NR
BOLZEN	958280214	65	2	507	11 23 820 4	ANLENKSTUECK KPL
BOLZEN	958280214	12	4	557	10 53 216 2	HALTESTANGE KPL
BOLZEN	958280214	12	4	565	10 53 216 3	HALTESTANGE KPL
BOLZEN	958280214	12	4	572	10 53 216 4	HALTESTANGE KPL
BOLZEN	958280214	11	4	579	11 28 648 4	MONTAGETEILE
BOLZEN	958280214	16	4	620	99 23 415 14	RUECKHALTESTANGE
BOLZEN	958554414	13	2	613	11 28 744 5	MONTAGETEILE
BOLZEN	959866614	7	1	366	99 29 258 14	EZW ROLLENPAKET
BOLZEN	959912614	16	6	337	99 29 803 14	VERZURRUNG BALLAST
BOLZEN	968523914	27	1	65	10 58 163 4	KABINENAUFHAENGUNG KPL

Bezeichnung	Artikel	Pos.	Menge	Blatt	Baugruppe	Bezeichnung
BOLZEN 100X1606 LHRD900-40	11239740	22	1	535	11 24 444 4	A-BOCK 1 KPL
BOLZEN 110X198 LHRD900-40	959912214	13	6	337	99 29 803 14	VERZURRUNG BALLAST
BOLZEN 115X200 LHRD900-40	949389914	12	2	535	11 24 444 4	A-BOCK 1 KPL
BOLZEN 120X270 35NICRMOV	959712214	1	2	70	99 23 451 14	ANLENKBOLZEN EINBAU
BOLZEN 15.9X59X25X83 LHRD	950387314	59	10	642	10 55 372 1	DACHGELAENDER NRS
BOLZEN 150X330	11230438	4	1	456	51 33 141 14	DOPPELWIRKZYL
BOLZEN 20X23 PA 6 G	956266814	3	1	537	91 90 584 14	WINKELANZEIGE
BOLZEN 30X46 LHRD900-40;1	11949153	15	2	555	11 94 087 8	MONTAGEEINHEIT
BOLZEN 30X46 LHRD900-40;1	11949153	37	2	662	99 10 116 14	SEILFUEHRUNG
BOLZEN 30X46 LHRD900-40;1	11949153	3	1	664	99 10 125 14	GABEL
BOLZEN 35X 120 LHRD750-30;1	953305103	27	1	662	99 10 116 14	SEILFUEHRUNG
BOLZEN 40X182 LHRD900-40;1	10351894	11	4	339	10 51 969 7	NADELEINZIEHWINDE
BOLZEN 48X58 LHRD900-40;1	485568414	38	2	662	99 10 116 14	SEILFUEHRUNG
BOLZEN 50X138 LHRD900-40;1	10534039	13	4	71	10 51 969 4	A-BOCK AUFRICHTZYL EINBA
BOLZEN 50X157 LHRD900-40;1	956847814	2	2	580	11 28 610 5	ARRETIERUNG KPL
BOLZEN 50X95 LHRD900-40;1	11938016	11	2	438	99 18 041 14	VERZURRUNG OW
BOLZEN 53X67 LHRD900-40;1	10550993	12	2	579	11 28 648 4	MONTAGETEILE
BOLZEN 53X82 LHRD900-40;1	949946714	13	2	579	11 28 648 4	MONTAGETEILE
BOLZEN 55X92 LHRD900-40;1	956215014	33	3	620	99 23 415 14	RUECKHALTESTANGE
BOLZEN 58X113 LHRD900-40;1	949174814	15	2	614	95 70 956 14	HALTESTANGE KPL
BOLZEN 58X95 LHRD900-40;1	948959414	14	8	614	95 70 956 14	HALTESTANGE KPL
BOLZEN 58X95 LHRD900-40;1	948959414	19	6	620	99 23 415 14	RUECKHALTESTANGE
BOLZEN 60X110 LHRD750-30;1	950663614	17	2	71	10 51 969 4	A-BOCK AUFRICHTZYL EINBA
BOLZEN 63X120 LHRD900-40;1	949351814	10	1	685	11 23 619 7	SELBSTVERLADESYSTEM NR
BOLZEN 65X193 LHRD900-40;1	957831614	10	4	336	10 52 656 0	MONTAGETEILE
BOLZEN 68X105 LHRD900-40;1	11949158	39	2	662	99 10 116 14	SEILFUEHRUNG
BOLZEN 75X240 LHRD900-40;1	959912114	12	6	337	99 29 803 14	VERZURRUNG BALLAST
BOLZEN 80X205 LHRD900-40;1	949761814	12	2	613	11 28 744 5	MONTAGETEILE
BOLZEN 80X371 LHRD900-40;1	950581614	10	1	517	11 28 726 4	BOLZEN KPL
BOLZEN 83X131 LHRD900-40;1	959921514	12	6	539	99 23 394 14	HALTESTANGE KPL
BOLZEN 83X131 LHRD900-40;1	959921514	17	2	586	10 54 056 7	HALTESTANGE KPL
BOLZEN DIN 1435-B 35H11X90	453050914	5	12	663	99 31 838 14	ZWISCHENABSPANNUNG NR
BOLZEN DIN 1435-B 35H11X90	453050914	5	14	665	97 05 997 03	ZWISCHENABSPANNUNG NR
BOLZEN DIN EN 22340-B 25F7X	485501714	23	2	65	10 58 163 4	KABINENAUFHAENGUNG KPL
BOLZEN DIN EN 22340-B 25F8	450052114	30	2	65	10 58 163 4	KABINENAUFHAENGUNG KPL
BOLZEN DIN EN 22340-B 25F8	450052114	2	2	70	99 23 451 14	ANLENKBOLZEN EINBAU
BOLZEN DIN EN 22341-B 40H1	451436614	13	1	65	10 58 163 4	KABINENAUFHAENGUNG KPL
BOLZEN DIN EN 22341-B 50H11	485519214	19	1	685	11 23 619 7	SELBSTVERLADESYSTEM NR
BOLZEN DIN EN 22341-B 80H11	485518914	19	2	679	10 51 971 3	SELBSTVERLADESYSTEM NR
BOLZEN EN 10060 28X220X192	942594714	26	2	662	99 10 116 14	SEILFUEHRUNG
BOLZEN EN 10278 20X144 S3	958214314	2	1	583	11 28 357 6	MONTAGETEILE
BOLZEN KPL	10574629	11	4	493	11 22 050 0	WINDEN EINBAU
BOLZEN KPL	10574629	11	4	499	11 22 050 1	WINDEN EINBAU
BOLZEN KPL	11262110	11	4	706	11 89 568 8	SELBSTVERLADESYSTEM NR
BOLZEN KPL	11287264	11	4	505	11 23 820 4	ANLENKSTUECK KPL
BOLZEN KPL	11287264	11	4	546	11 24 570 3	AL ZWISCHENSTUECK KPL
BOLZEN KPL	11287264	11	4	562	11 24 570 9	AL ZWISCHENSTUECK KPL
BOLZEN KPL	11287264	11	4	569	11 24 571 5	AL ZWISCHENSTUECK KPL
BOLZEN KPL	959835714	12	4	706	11 89 568 8	SELBSTVERLADESYSTEM NR
BOLZEN KPL	992921714	29	2	463	11 89 365 0	RAUPENTRAEGER RE KPL
BOLZEN KPL	992921714	29	2	474	11 89 365 1	RAUPENTRAEGER LI KPL
BOLZEN M12X1.5 NIROSTA	10227129	9	1	515	61 61 541 14	KABELTROMMEL
BOLZEN RD20X394 LHRD900-	11942040	2	1	471	10 50 179 5	AUFSTIEG KPL
BOLZEN RD68X175 LHRD900-	959799614	27	8	679	10 51 971 3	SELBSTVERLADESYSTEM NR
BOLZENVERBINDUNG	910353714	8	2	579	11 28 648 4	MONTAGETEILE
BOLZENVERBINDUNG	910353714	22	2	613	11 28 744 5	MONTAGETEILE
BOWDENZUG	11230660	270	1	428	11 93 934 6	KLIMAANLAGE
BOWLE	10331395	14	1	202	10 30 300 7	KRAFTSTOFFVORFILTER
BOWLENDICHTUNG	10294170	9	1	202	10 30 300 7	KRAFTSTOFFVORFILTER
BRECHSTANGE 1200 MM	790036914	12	1	501	10 56 183 8	WERKZEUG

Bezeichnung	Artikel	Pos.	Menge	Blatt	Baugruppe	Bezeichnung
BRECHSTANGE 600 MM	885400114	14	1	501	10 56 183 8	WERKZEUG
BREMSBETAETIGUNGSEINHEI	10006595	96	1	392	90 01 376 2	DREHWERKANTRIEB
BREMSE DS	939347901	98	1	392	90 01 376 2	DREHWERKANTRIEB
BREMSE-DICHTUNGSSATZ	939589601	2	1	350	50 20 372 01	FEDERDRUCKLAMELLENBRE
BREMSFEDERSATZ	939348001	99	1	392	90 01 376 2	DREHWERKANTRIEB
BREMSFEDERSATZ	939589701	3	1	350	50 20 372 01	FEDERDRUCKLAMELLENBRE
BREMSFLANSCH	540272814	1	1	638	54 02 705 14	ANTRIEB KPL
BREMSLAMELLENSATZ	939347801	97	1	392	90 01 376 2	DREHWERKANTRIEB
BREMSLAMELLENSATZ	939589501	1	1	350	50 20 372 01	FEDERDRUCKLAMELLENBRE
BREMSVENTIL	10227399	60	1	342	51 22 527 14	OELMOTOR
BREMSVENTIL	512401414	60	1	359	51 22 942 14	OELMOTOR
BREMSVENTIL	512411914	10	1	451	11 22 473 8	VERSTELLUNG
BUCHSE	10115304	3	1	452	10 44 656 6	WECHSELVENTIL
BUCHSE	10145395	6	1	286	10 14 584 5	GENERATOR VORM.
BUCHSE	10227126	8	1	515	61 61 541 14	KABELTROMMEL
BUCHSE	11239698	37	2	535	11 24 444 4	A-BOCK 1 KPL
BUCHSE	11890145	2	2	465	10 55 716 2	LEITRAD KPL
BUCHSE	958556114	14	2	613	11 28 744 5	MONTAGETEILE
BUCHSE	958556214	15	2	613	11 28 744 5	MONTAGETEILE
BUCHSE	959001414	10	1	366	99 29 258 14	EZW ROLLENPAKET
BUCHSE	959019014	11	3	52	10 56 073 2	KRAFTSTOFFTANK EINBAU
BUCHSE	959841114	39	4	535	11 24 444 4	A-BOCK 1 KPL
BUCHSE 100/130X33 S770QL;E	10336763	5	3	366	99 29 258 14	EZW ROLLENPAKET
BUCHSE 100/130X36 S770QL;E	959869314	3	3	366	99 29 258 14	EZW ROLLENPAKET
BUCHSE 100/80X40 E470;EN 10	954398803	15	2	579	11 28 648 4	MONTAGETEILE
BUCHSE 115/135X21 E470;EN	970859103	40	4	535	11 24 444 4	A-BOCK 1 KPL
BUCHSE 115/135X56 E470;EN	970588503	61	2	6	11 24 047 9	OW KPL
BUCHSE 120/150X88 E470;EN	954398703	60	2	6	11 24 047 9	OW KPL
BUCHSE 120X130X30 KUNST	10223371	11	1	366	99 29 258 14	EZW ROLLENPAKET
BUCHSE 13/28X15 S355J2;EN	970726703	19	4	493	11 22 050 0	WINDEN EINBAU
BUCHSE 13/28X15 S355J2;EN	970726703	19	4	499	11 22 050 1	WINDEN EINBAU
BUCHSE 140/160X100 GZ-CU	11233062	42	1	588	99 23 398 14	ROLLENSATZ
BUCHSE 140/160X55 LHR355-	956803414	16	2	588	99 23 398 14	ROLLENSATZ
BUCHSE 20X24.9X31.9 POM;DI	958471514	17	1	316	10 57 883 5	TUER
BUCHSE 20X24.9X31.9 POM;DI	958471514	17	1	318	10 57 897 6	TUER
BUCHSE 20X24.9X31.9 POM;DI	958471514	6	1	320	10 57 940 0	TUER
BUCHSE 20X24.9X31.9 POM;DI	958471514	6	1	321	10 56 623 7	TUER
BUCHSE 20X24.9X31.9 POM;DI	958471514	14	1	322	10 56 580 8	TUER
BUCHSE 20X24X30 POM;DIN	797029114	7	1	316	10 57 883 5	TUER
BUCHSE 20X24X30 POM;DIN	797029114	7	1	318	10 57 897 6	TUER
BUCHSE 20X24X30 POM;DIN	797029114	5	1	320	10 57 940 0	TUER
BUCHSE 20X24X30 POM;DIN	797029114	5	1	321	10 56 623 7	TUER
BUCHSE 20X24X30 POM;DIN	797029114	7	1	322	10 56 580 8	TUER
BUCHSE 25/40X56	790212314	39	2	65	10 58 163 4	KABINENAUFHAENGUNG KPL
BUCHSE 30/40X38 GZ-CUSN7Z	967216303	2	1	632	96 72 161 03	SEILROLLE KPL
BUCHSE 50/55X30	708014114	4	4	580	11 28 610 5	ARRETIERUNG KPL
BUCHSE 50/60X35 CUZN25AL5	10504737	190	1	74	59 21 041 14	DOPPELWIRKZYL
BUCHSE 50X60X42	11230849	18	2	535	11 24 444 4	A-BOCK 1 KPL
BUCHSE 51/70X13.5 POLYAMI	10534042	14	8	71	10 51 969 4	A-BOCK AUFRICHTZYL EINBA
BUCHSE 60X70X25 CUZN25AL	10546993	20	2	532	11 27 536 5	RUECKFALLSTUETZEN EINBA
BUCHSE 75.5X110X2.5 POM;DI	10336928	18	2	539	99 23 394 14	HALTESTANGE KPL
BUCHSE 75X110X10 POM;DIN	10336924	16	4	539	99 23 394 14	HALTESTANGE KPL
BUCHSE 75X110X5 POM;DIN	10336926	17	8	539	99 23 394 14	HALTESTANGE KPL
BUCHSE 90.5/101.6X26 LHR35	949740614	11	10	662	99 10 116 14	SEILFUEHRUNG
BUCHSE 90/110X36 S355J2H;E	949988214	19	2	588	99 23 398 14	ROLLENSATZ
BUCHSE 90/110X50 E470;EN 10	385037314	14	2	579	11 28 648 4	MONTAGETEILE
BUCHSE 91/101.6X145 LHR355-	956805414	18	2	588	99 23 398 14	ROLLENSATZ
BUCHSE 91/101.6X5 LHR355-20	956803714	25	2	588	99 23 398 14	ROLLENSATZ
BUCHSE 91/101.6X60 LHR355-	956805314	17	2	588	99 23 398 14	ROLLENSATZ
BUCHSE EN 10060 17.5X26.5X2	10588730	12	3	46	10 56 070 0	TANK HYDR EINBAU

Bezeichnung	Artikel	Pos.	Menge	Blatt	Baugruppe	Bezeichnung
BUCHSE EN 10210-2 140.5/159	956803214	32	2	588	99 23 398 14	ROLLENSATZ
BUCHSENEINSATZ	605609514	94	1	34	11 24 519 0	OW EL
BUCHSENEINSATZ	605609514	32	1	39	10 56 645 8	KLEMMKASTEN
BUCHSENEINSATZ	605609514	62	1	512	11 90 151 1	KABELSATZ 1 ANLENKSTUECK
BUCHSENEINSATZ	605609514	51	1	609	10 57 651 9	KABELSATZ
BUCHSENEINSATZ	605612014	42	1	39	10 56 645 8	KLEMMKASTEN
BUCHSENEINSATZ	605612014	72	1	513	11 90 151 1	KABELSATZ 1 ANLENKSTUECK
BUCHSENEINSATZ	605616114	81	2	576	10 57 559 9	KABELSATZ
BUCHSENEINSATZ	605616114	81	2	609	10 57 651 9	KABELSATZ
BUCHSENGEHAEUSE	605252014	70	2	575	10 57 559 9	KABELSATZ
BUCHSENGEHAEUSE	6203137	93	1	400	11 27 973 6	KABINE EL
BUCHSENKONTAKT	6003031	47	6	399	11 27 973 6	KABINE EL
BUCHSENKONTAKT	6003031	95	6	400	11 27 973 6	KABINE EL
BUCHSENKONTAKT	602339508	13	3	413	11 95 272 6	SCHALLGEBER EL
BUEGEL	10099007	5	1	371	99 29 388 14	BUEGEL KPL
BUEGEL	10099010	6	1	368	99 33 537 14	SEILSCHUTZ EZW KPL
BUEGEL	10289976	72	1	430	10 22 506 8	FAHRERSITZ
BUEGEL	10336583	10	2	45	10 51 961 6	OELKUEHLER EINBAU
BUEGEL	10336584	11	2	45	10 51 961 6	OELKUEHLER EINBAU
BUEGEL	10336709	1	1	371	99 29 388 14	BUEGEL KPL
BUEGEL	10336711	2	2	369	99 29 389 14	SEITENTEIL
BUEGEL	10336711	2	2	370	99 29 392 14	SEITENTEIL
BUEGEL	10349206	7	8	324	10 54 591 0	MOTORABDECKUNG
BUEGEL	10445651	39	2	328	11 24 483 7	BEF-TEILE OW
BUEGEL	10575967	13	1	328	11 24 483 7	BEF-TEILE OW
BUEGEL	10575968	15	1	328	11 24 483 7	BEF-TEILE OW
BUEGEL	10575969	18	1	328	11 24 483 7	BEF-TEILE OW
BUEGEL	10575970	23	8	328	11 24 483 7	BEF-TEILE OW
BUEGEL	10575971	37	3	328	11 24 483 7	BEF-TEILE OW
BUEGEL	10575985	20	2	328	11 24 483 7	BEF-TEILE OW
BUEGEL	10579757	26	1	328	11 24 483 7	BEF-TEILE OW
BUEGEL	10592334	19	1	582	10 59 863 3	PENDEL KPL
BUEGEL	10592619	43	1	328	11 24 483 7	BEF-TEILE OW
BUEGEL	10592621	44	1	328	11 24 483 7	BEF-TEILE OW
BUEGEL	10597981	2	2	67	10 56 067 3	BATTERIE EINBAU KPL
BUEGEL	11231072	13	2	647	10 52 547 1	ZUSATZSCHEINWERFER OW
BUEGEL	11234405	58	1	328	11 24 483 7	BEF-TEILE OW
BUEGEL	11234413	59	1	328	11 24 483 7	BEF-TEILE OW
BUEGEL	11247011	38	1	328	11 24 483 7	BEF-TEILE OW
BUEGEL	11247375	22	1	328	11 24 483 7	BEF-TEILE OW
BUEGEL	11247791	29	1	328	11 24 483 7	BEF-TEILE OW
BUEGEL	11247808	33	1	328	11 24 483 7	BEF-TEILE OW
BUEGEL	11248460	12	1	198	11 24 114 3	ABGASANLAGE
BUEGEL	11248969	9	2	308	11 24 409 0	VERKLEIDUNG OW EINBAU KP
BUEGEL	11257849	72	1	330	11 24 483 7	BEF-TEILE OW
BUEGEL	11257851	75	3	330	11 24 483 7	BEF-TEILE OW
BUEGEL	11263413	16	1	176	11 24 113 8	MOTORLAGER KPL
BUEGEL	11265945	35	1	328	11 24 483 7	BEF-TEILE OW
BUEGEL	11279036	52	1	204	11 92 923 6	ANLAGE HARNSTOFF EINBAU
BUEGEL	11279237	53	1	204	11 92 923 6	ANLAGE HARNSTOFF EINBAU
BUEGEL	11308593	14	1	198	11 24 114 3	ABGASANLAGE
BUEGEL	11308594	15	1	198	11 24 114 3	ABGASANLAGE
BUEGEL	7370581	73	1	430	10 22 506 8	FAHRERSITZ
BUEGEL	949758314	24	1	328	11 24 483 7	BEF-TEILE OW
BUEGEL	958478414	56	2	310	11 24 409 0	VERKLEIDUNG OW EINBAU KP
BUEGEL	958478414	10	10	324	10 54 591 0	MOTORABDECKUNG
BUEGEL	958478414	15	4	479	99 26 718 14	PODEST
BUEGEL	958478414	5	2	645	11 24 575 5	PODEST
BUEGEL	959465714	38	2	308	11 24 409 0	VERKLEIDUNG OW EINBAU KP
BUEGEL	959465714	17	1	724	11 93 621 2	KLIMAANLAGE NRS

Bezeichnung	Artikel	Pos.	Menge	Blatt	Baugruppe	Bezeichnung
BUEGEL	967313703	25	1	328	11 24 483 7	BEF-TEILE OW
BUEGEL	971304903	1	2	472	99 08 357 14	ANHAENGEKETTE
BUEGEL KPL	992938814	3	4	368	99 33 537 14	SEILSCHUTZ EZW KPL
BUEGEL SCHWK	10574837	15	1	640	10 55 372 1	DACHGELAENDER NRS
BUEGEL SCHWK	10575981	11	1	328	11 24 483 7	BEF-TEILE OW
BUEGEL SCHWK	10575984	14	1	328	11 24 483 7	BEF-TEILE OW
BUEGEL SCHWK	10576104	19	1	328	11 24 483 7	BEF-TEILE OW
BUEGEL SCHWK	10585933	16	2	640	10 55 372 1	DACHGELAENDER NRS
BUEGEL SCHWK	10585936	17	1	640	10 55 372 1	DACHGELAENDER NRS
BUEGELSCHELLE	10144699	20	1	303	11 90 032 5	ABGASANLAGE
BUNDBOLZEN	11297460	2	1	712	11 23 623 3	TASCHENSCHLOSS
BUNDBUCHSE	592290614	4	1	424	59 22 905 14	SPIEGEL + SONNENBLENDE
BUNDBUCHSE 40/80X51 CUSN	790519814	11	2	65	10 58 163 4	KABINENAUFHAENGUNG KPL
BUNDMUTTER M14X1.5	514618508	47	1	94	11 21 993 0	PUMPENGEHAEUSE
BUNDSCHRAUBE M33X220 10.	11266734	12	76	57	10 51 963 1	OW DREHVERBINDUNG EINBA
BUNDSCHRAUBE M33X245 10.	10512966	10	80	437	10 51 969 6	VERBINDUNG OW UW
BUNDSCHRAUBE MO90X4108	10522847	19	1	590	79 03 861 14	LASTHAKEN
C-SCHIENE SCHWK	10599614	47	1	328	11 24 483 7	BEF-TEILE OW
CAN MODUL	10351656	21	1	33	11 24 519 0	OW EL
CAN MODUL	10351660	23	1	33	11 24 519 0	OW EL
CAN MODUL	10351667	22	1	33	11 24 519 0	OW EL
CAN MODUL	10351668	26	1	33	11 24 519 0	OW EL
CAN MODUL	10351671	24	1	33	11 24 519 0	OW EL
CAN MODUL	10351672	27	1	33	11 24 519 0	OW EL
CAN MODUL	10351674	28	1	33	11 24 519 0	OW EL
CAN MODUL	10677274	23	1	410	11 26 095 7	STEUERSTAND RE
CLIP	11909483	130	1	428	11 93 934 6	KLIMAANLAGE
CLIP	11909497	150	1	428	11 93 934 6	KLIMAANLAGE
CRIMPKONTAKT	605608401	44	24	512	11 90 151 1	KABELSATZ 1 ANLENKSTUECK
DACH	10545911	3	1	308	11 24 409 0	VERKLEIDUNG OW EINBAU KP
DACH	10545914	5	1	308	11 24 409 0	VERKLEIDUNG OW EINBAU KP
DACH	10545916	7	1	308	11 24 409 0	VERKLEIDUNG OW EINBAU KP
DACH	10545917	8	1	308	11 24 409 0	VERKLEIDUNG OW EINBAU KP
DACH	10545957	11	1	308	11 24 409 0	VERKLEIDUNG OW EINBAU KP
DACH	10545958	12	1	308	11 24 409 0	VERKLEIDUNG OW EINBAU KP
DACH	10545968	3	1	324	10 54 591 0	MOTORABDECKUNG
DACH	10545969	4	1	324	10 54 591 0	MOTORABDECKUNG
DACH	10545970	5	1	324	10 54 591 0	MOTORABDECKUNG
DACH	10546335	6	1	324	10 54 591 0	MOTORABDECKUNG
DACH	10563073	16	1	308	11 24 409 0	VERKLEIDUNG OW EINBAU KP
DACH	10563099	1	1	324	10 54 591 0	MOTORABDECKUNG
DACH	11244758	14	1	308	11 24 409 0	VERKLEIDUNG OW EINBAU KP
DACH	11244865	13	1	308	11 24 409 0	VERKLEIDUNG OW EINBAU KP
DACHGELAENDER NRS	10553721	553	1	3	01 38 406 14	LR 1300 SX
DACHSCHEIBE	592288614	44	1	415	10 35 008 0	KABINE
DATEN KARTE CF2	10541109	32	1	402	10 55 963 5	SCHALTSCHR X1
DECKEL	10122317	1	1	298	10 14 637 4	VERSCHLUSSTEILE
DECKEL	10127967	1	1	293	10 12 797 9	VERSCHLUSSTEILE
DECKEL	10133334	8	1	103	10 11 834 9	DOPPELV.PUMPE
DECKEL	10134561	12	1	111	10 13 333 4	DECKEL
DECKEL	10149013	11	1	226	10 15 529 8	OELWANNE VORM.
DECKEL	10520927	14	1	53	10 56 073 3	KRAFTSTOFFTANK KPL
DECKEL	10554227	11	1	671	11 30 694 4	SCHIENE KPL
DECKEL	10554228	12	1	671	11 30 694 4	SCHIENE KPL
DECKEL	10572054	14	4	700	11 89 568 6	SELBSTVERLADESYSTEM NR
DECKEL	10572241	3	1	455	10 55 154 8	SCHNELLVERSCHLUSSKUPPL
DECKEL	10572242	3	1	510	10 55 157 6	SCHNELLVERSCHLUSSKUPPL
DECKEL	10593544	48	2	398	11 27 970 6	KABINE KPL
DECKEL	10593554	49	1	398	11 27 970 6	KABINE KPL
DECKEL	10595280	12	2	180	10 58 017 0	RUECKLAUFROHR

Bezeichnung	Artikel	Pos.	Menge	Blatt	Baugruppe	Bezeichnung
DECKEL	10687924	82	1	406	10 03 610 7	TASTATUR BEDIENPULT X11
DECKEL	11217289	5	1	179	10 57 532 2	ANSAUGROHR OEL KPL
DECKEL	11219927	2	1	89	11 21 990 5	VERSTELLUNG
DECKEL	11219929	3	1	89	11 21 990 5	VERSTELLUNG
DECKEL	11226090	110	1	383	51 14 347 14	DW SICHERUNGSBLOCK
DECKEL	11233332	148	1	18	11 28 647 6	VENTILBLOCK
DECKEL	11233333	150	2	18	11 28 647 6	VENTILBLOCK
DECKEL	11233338	151	8	18	11 28 647 6	VENTILBLOCK
DECKEL	11267378	1	1	90	11 21 992 7	DECKEL
DECKEL	11267396	1	1	91	11 21 992 9	DECKEL
DECKEL	11301913	147	1	18	11 28 647 6	VENTILBLOCK
DECKEL	385072014	65	2	65	10 58 163 4	KABINENAUFHAENGUNG KPL
DECKEL	7027755	3	1	202	10 30 300 7	KRAFTSTOFFVORFILTER
DECKEL	9275429	72	1	117	92 75 443	RS DECKEL
DECKEL	932037701	35	1	346	93 88 500 01	SEILTROMMEL
DECKEL	939554301	20	1	346	93 88 500 01	SEILTROMMEL
DECKEL	942264714	21	2	48	10 56 070 1	TANK HYDR KPL
DECKEL	949196514	8	2	366	99 29 258 14	EZW ROLLENPAKET
DECKEL	949724114	23	2	588	99 23 398 14	ROLLENSATZ
DECKEL	971333403	13	1	463	11 89 365 0	RAUPENTRAEGER RE KPL
DECKEL	971333403	13	1	474	11 89 365 1	RAUPENTRAEGER LI KPL
DECKEL KPL	10501620	1	1	32	55 09 453 14	OELMOTOR
DECKEL KPL	10548543	35	1	8	11 29 618 6	OW HYDR
DECKEL KPL	10551191	21	2	442	11 89 300 5	VERROHRUNG HYDR
DECKPLATTE	5005525	41	4	476	11 31 390 8	MITTELTEIL KPL
DECKPLATTE	602016514	73	4	507	11 23 820 4	ANLENKSTUECK KPL
DECKPLATTE	602025814	93	2	184	11 94 151 8	KUEHLER EINBAU WASSER
DECKPLATTE	602026414	48	3	463	11 89 365 0	RAUPENTRAEGER RE KPL
DECKPLATTE	602026414	48	3	474	11 89 365 1	RAUPENTRAEGER LI KPL
DECKPLATTE	7005053	92	3	184	11 94 151 8	KUEHLER EINBAU WASSER
DECKPLATTE	7005053	56	1	210	11 92 958 8	LUFTFUEHRUNG KPL
DECKPLATTE	7005053	39	2	476	11 31 390 8	MITTELTEIL KPL
DECKPLATTE	7008583	40	2	476	11 31 390 8	MITTELTEIL KPL
DICHTKANTENRING	10588729	5	1	527	59 20 224 14	LASTHALTEVENTIL
DICHTMUTTER M12X1.75	7005072	18	2	447	51 24 059 14	V.MOTOR
DICHTRING		81	1	348	93 88 497 01	PLANETENGETRIEBE
DICHTRING		87	1	349	93 88 497 01	PLANETENGETRIEBE
DICHTRING	10011864	6	17	261	10 14 588 5	LECKOELRUECKLAUF
DICHTRING	10011864	7	2	285	10 14 622 4	LADEDRUCKREGELUNG
DICHTRING	10011864	8	2	302	11 41 475 7	ANBAUTEILE LUFTPRESSER
DICHTRING	10011865	5	2	251	10 15 278 7	DS HOCHDRUCKPUMPE
DICHTRING	10011865	11	2	261	10 14 588 5	LECKOELRUECKLAUF
DICHTRING	10011866	19	3	261	10 14 588 5	LECKOELRUECKLAUF
DICHTRING	10011866	2	11	276	10 14 821 7	ROHRLEITUNG ANBAU
DICHTRING	10011866	6	1	278	10 14 274 4	KUEHLWASSERENTLUEFTUN
DICHTRING	10011867	16	2	284	10 14 511 2	ABGASSTUTZEN ANBAU
DICHTRING	10011867	4	8	302	11 41 475 7	ANBAUTEILE LUFTPRESSER
DICHTRING	10011868	2	1	229	10 13 451 7	NIVEAUGEBER
DICHTRING	10011868	6	4	251	10 15 278 7	DS HOCHDRUCKPUMPE
DICHTRING	10011868	7	14	260	10 14 333 9	KRAFTSTOFFLEITUNGEN
DICHTRING	10011870	8	1	265	10 14 736 9	ANSAUGSTUTZEN ANBAU
DICHTRING	10011870	27	1	283	10 14 013 6	ATL-ANBAU
DICHTRING	10011870	13	1	299	11 92 891 3	KOMPRESSOR NRS
DICHTRING	10011871	14	2	261	10 14 588 5	LECKOELRUECKLAUF
DICHTRING	10113731	3	1	244	10 15 259 2	UEBERDRUCKVENTIL
DICHTRING	11226035	80	1	383	51 14 347 14	DW SICHERUNGSBLOCK
DICHTRING	11226086	92	1	383	51 14 347 14	DW SICHERUNGSBLOCK
DICHTRING	4900262	32	7	183	11 94 151 8	KUEHLER EINBAU WASSER
DICHTRING	7013116	22	1	110	92 73 644	DS REGELVENTIL
DICHTRING	7013116	22	1	113	92 78 875	DRUCKABSCHNEIDUNG

Bezeichnung	Artikel	Pos.	Menge	Blatt	Baugruppe	Bezeichnung
DICHTRING	710004514	5	4	580	11 28 610 5	ARRETIERUNG KPL
DICHTRING	710020114	15	1	638	54 02 705 14	ANTRIEB KPL
DICHTRING	710031014	10	1	637	54 02 704 14	ABTRIEB KPL
DICHTRING	710069314	11	1	482	11 26 260 6	WINDE 1 HYDR
DICHTRING	710069314	11	1	497	11 26 261 1	WINDE 2 HYDR
DICHTRING	7101008	5	1	226	10 15 529 8	OELWANNE VORM.
DICHTRING	7101021	3	1	220	10 13 845 0	ENDREGELVENTIL
DICHTRING	7101021	7	1	226	10 15 529 8	OELWANNE VORM.
DICHTRING	7101021	10	1	227	50 04 624	OELABLASSSCHRAUBE
DICHTRING	7101022	23	4	48	10 56 070 1	TANK HYDR KPL
DICHTRING	7101022	33	1	183	11 94 151 8	KUEHLER EINBAU WASSER
DICHTRING	710102514	56	4	189	11 24 114 1	KUEHLER EINBAU LADELUFT
DICHTRING	710103714	34	1	183	11 94 151 8	KUEHLER EINBAU WASSER
DICHTRING	710103814	5	4	73	10 51 969 5	A-BOCK AUFRICHTZYL HYDR
DICHTRING	710104514	48	1	210	11 92 958 8	LUFTFUEHRUNG KPL
DICHTRING	710104514	31	2	635	54 02 702 14	SEILTROMMEL KPL
DICHTRING	710121014	123	1	376	99 04 645 14	ANTRIEB
DICHTRING	7381225	14	1	219	10 14 768 6	AGGREGATETRAEGER ANBA
DICHTRING	7381225	13	1	243	10 12 948 0	OELKUEHLER VORM.
DICHTRING	7381367	2	1	109	90 74 418	REGELVENTIL
DICHTRING	7381367	94	2	110	92 73 644	DS REGELVENTIL
DICHTRING	7610225	14	1	352	93 36 755 01	OELMESSEINRICHTUNG
DICHTRING	7610225	6	1	394	92 76 934 01	OELEINFUELLSTUTZEN
DICHTRING	761022903	2	1	352	93 36 755 01	OELMESSEINRICHTUNG
DICHTRING	761022903	21	1	352	93 36 755 01	OELMESSEINRICHTUNG
DICHTRING	790295414	61	2	376	99 04 645 14	ANTRIEB
DICHTRING	790347114	550	11	86	11 24 682 0	VERTEILERGETRIEBE
DICHTRING	790347214	560	1	86	11 24 682 0	VERTEILERGETRIEBE
DICHTRING	790403914	310	1	86	11 24 682 0	VERTEILERGETRIEBE
DICHTRING	790444514	65	1	376	99 04 645 14	ANTRIEB
DICHTRINGDECKEL	592178514	20	1	86	11 24 682 0	VERTEILERGETRIEBE
DICHTSATZ KPL.	10138033	90	1	127	10 12 878 7	V.PUMPE
DICHTSATZ KPL.	512402214	990	1	359	51 22 942 14	OELMOTOR
DICHTSCHEIBE	10154459	2	1	218	10 15 445 8	ZYLINDER
DICHTSCHEIBE	592288114	31	1	422	59 22 871 14	FRONTSCHEIBE KPL
DICHTSCHRAUBE	11220932	4	1	154	10 22 650 5	V.PUMPE
DICHTSCHRAUBE	11221267	5	1	154	10 22 650 5	V.PUMPE
DICHTSTOPFEN		2	1	348	93 88 497 01	PLANETENGETRIEBE
DICHTSTOPFEN		9	3	348	93 88 497 01	PLANETENGETRIEBE
DICHTSTOPFEN	10030837	14	14	217	11 38 961 7	KURBELGEHAEUSE KPL. MIT
DICHTSTOPFEN	10036325	8	1	237	11 44 800 5	KIPPHEBELBOCK VORM.
DICHTSTOPFEN	10465711	15	1	219	10 14 768 6	AGGREGATETRAEGER ANBA
DICHTSTOPFEN	10465711	11	1	279	10 14 601 2	WASSERSAMMELLEITUNG K
DICHTSTOPFEN	11389287	3	2	262	10 14 382 8	EINSPRITZLEITUNGEN
DICHTSTOPFEN	605614714	14	2	739	10 52 957 6	BETANKUNGSPUMPE KPL
DICHTSTOPFEN	7008121	24	4	141	10 14 131 6	ANSCHLUSSPLATTE VORM.
DICHTSTOPFEN	7380480	7	1	467	96 93 178 01	FAHRANTRIEB
DICHTSTOPFEN	7380490	23	2	141	10 14 131 6	ANSCHLUSSPLATTE VORM.
DICHTSTOPFEN	7380779	16	2	247	10 13 382 3	ABSAUGPUMPE VORM.
DICHTSTOPFEN	7382069	8	1	217	11 38 961 7	KURBELGEHAEUSE KPL. MIT
DICHTUNG	10115623	18	1	283	10 14 013 6	ATL-ANBAU
DICHTUNG	10117891	2	1	242	10 12 948 1	OELKUEHLER ANBAU
DICHTUNG	10118556	2	6	264	10 14 736 6	LUFTANSAUGROHR ANBAU
DICHTUNG	10119923	3	2	243	10 12 948 0	OELKUEHLER VORM.
DICHTUNG	10125740	3	1	283	10 14 013 6	ATL-ANBAU
DICHTUNG	10126427	3	1	225	10 14 844 4	OELWANNE MIT BEFEST.
DICHTUNG	10126510	2	1	238	10 13 475 1	ZYLINDERKOPFDECKEL ANBA
DICHTUNG	10126510	2	1	239	10 12 653 5	ZYLINDERKOPFDECKEL ANBA
DICHTUNG	10126510	3	1	241	10 13 469 6	ZYLINDERKOPFDECKEL ANBA
DICHTUNG	10126738	2	1	219	10 14 768 6	AGGREGATETRAEGER ANBA

Bezeichnung	Artikel	Pos.	Menge	Blatt	Baugruppe	Bezeichnung
DICHTUNG	10135885	2	6	280	10 14 144 4	ABGASROHR ANBAU
DICHTUNG	10137721	5	1	290	10 11 557 7	SCHWUNGRADGEHAEUSE AN
DICHTUNG	10144102	31	1	303	11 90 032 5	ABGASANLAGE
DICHTUNG	10144861	18	1	204	11 92 923 6	ANLAGE HARNSTOFF EINBAU
DICHTUNG	10294171	4	1	202	10 30 300 7	KRAFTSTOFFVORFILTER
DICHTUNG	10297876	2	1	159	10 35 160 3	STEUERVENTIL
DICHTUNG	10297876	2	1	168	10 11 497 5	STEUERVENTIL
DICHTUNG	11250971	2	1	421	11 25 097 0	SCHIEBEFENSTER
DICHTUNG	11251434	6	1	446	11 89 617 8	DS
DICHTUNG	552006114	26	2	48	10 56 070 1	TANK HYDR KPL
DICHTUNG	7011131	2	1	227	50 04 624	OELABLASSSCHRAUBE
DICHTUNG	7412935	18	1	202	10 30 300 7	KRAFTSTOFFVORFILTER
DICHTUNG	790230014	9	2	721	10 51 728 1	VERROHRUNG HYDR
DICHTUNG	9079130	2	1	291	10 11 912 8	VERSCHLUSSTEILE
DICHTUNG	9144762	3	1	240	91 44 757	VERSCHLUSSDECKEL
DICHTUNG	9275428	76	1	110	92 73 644	DS REGELVENTIL
DICHTUNG	9275428	76	1	117	92 75 443	RS DECKEL
DICHTUNG	9882207	15	2	103	10 11 834 9	DOPPELV.PUMPE
DICHTUNG	9882207	15	2	126	92 76 408	DS DOPPELPUMPE
DICHTUNGSMITTEL	8627609	109	1	226	10 15 529 8	OELWANNE VORM.
DICHTUNGSMODUL	602453214	5	2	411	91 65 251 14	KABELDURCHFUEHRUNG KAB
DICHTUNGSMODUL	602453914	8	2	411	91 65 251 14	KABELDURCHFUEHRUNG KAB
DICHTUNGSMODUL	602454614	2	2	411	91 65 251 14	KABELDURCHFUEHRUNG KAB
DICHTUNGSMODUL	602454714	4	2	411	91 65 251 14	KABELDURCHFUEHRUNG KAB
DICHTUNGSMODUL	602457014	3	2	411	91 65 251 14	KABELDURCHFUEHRUNG KAB
DICHTUNGSMODUL	602457114	6	2	411	91 65 251 14	KABELDURCHFUEHRUNG KAB
DICHTUNGSMODUL	602457214	7	2	411	91 65 251 14	KABELDURCHFUEHRUNG KAB
DICHTUNGSMUTTER M6	7361600	21	1	110	92 73 644	DS REGELVENTIL
DICHTUNGSMUTTER M6	7361600	21	1	113	92 78 875	DRUCKABSCHNEIDUNG
DICHTUNGSMUTTER M8	7361601	11	1	97	11 06 730 4	ABSCHALTVENTIL
DICHTUNGSMUTTER M8	7361601	37	2	110	92 73 644	DS REGELVENTIL
DICHTUNGSPROFIL	11918670	13	4	316	10 57 883 5	TUER
DICHTUNGSPROFIL	11918670	11	4.1	318	10 57 897 6	TUER
DICHTUNGSPROFIL	11918670	13	2.6	320	10 57 940 0	TUER
DICHTUNGSPROFIL	11918670	13	1.35	321	10 56 623 7	TUER
DICHTUNGSPROFIL	11918670	11	2.8	322	10 56 580 8	TUER
DICHTUNGSSATZ	10215808	999	1	528	51 04 292 14	WEGEVENTIL
DIESELMOTOR	12425454	66	1	80	11 92 885 2	ZENTRALAGGREGAT KPL
DISTANZHALTER	790509714	12	2	647	10 52 547 1	ZUSATZSCHEINWERFER OW
DISTANZHUELSE	11217169	54	6	204	11 92 923 6	ANLAGE HARNSTOFF EINBAU
DISTANZHUELSE 11X21X45 42	10141438	7	24	280	10 14 144 4	ABGASROHR ANBAU
DISTANZHUELSE 18X8.5X10	9132577	2	4	282	10 14 737 0	HITZESCHUTZ MIT BEFEST.
DISTANZHUELSE 18X8.5X10	9132577	93	1	296	10 15 028 8	KABELBAUM ANBAU
DISTANZRING 42X51X1.3 CK7	9072437	10	1	116	90 72 436	DISTANZRINGSATZ
DISTANZRING 42X51X1.4 CK7	9072438	11	1	116	90 72 436	DISTANZRINGSATZ
DISTANZRING 42X51X1.5 CK7	9072439	12	1	116	90 72 436	DISTANZRINGSATZ
DISTANZRING 42X51X1.6 CK7	9072440	13	1	116	90 72 436	DISTANZRINGSATZ
DISTANZRING 42X51X1.9 CK7	9074332	33	1	116	90 72 436	DISTANZRINGSATZ
DISTANZRING 91/127X8 S355J	956803514	24	2	588	99 23 398 14	ROLLENSATZ
DISTANZRING CK75;DIN 17222	9074307	31	1	116	90 72 436	DISTANZRINGSATZ
DISTANZRING CK75;DIN 17222	9074308	32	1	116	90 72 436	DISTANZRINGSATZ
DISTANZRINGSATZ	9072436	70	1	115	90 77 464	RS FLANSCH
DISTANZROHR	10517047	8	2	599	79 04 871 14	UNTERFLASCHE
DISTANZROHR	11493578	14	2	592	79 04 112 14	UNTERFLASCHE
DISTANZSCHEIBE	10226471	14	1	422	59 22 871 14	FRONTSCHEIBE KPL
DISTANZSCHEIBE RD30X1 AL	10349263	52	24	310	11 24 409 0	VERKLEIDUNG OW EINBAU KP
DISTANZSTUECK	10227757	17	4	479	99 26 718 14	PODEST
DISTANZSTUECK	11216088	32	1	65	10 58 163 4	KABINENAUFHAENGUNG KPL
DISTANZSTUECK	289064214	24	4	357	10 51 968 6	EZW OW EINBAU KPL
DOPPELABREISSSTOPFEN	10424238	30	3	94	11 21 993 0	PUMPENGEHAEUSE

Bezeichnung	Artikel	Pos.	Menge	Blatt	Baugruppe	Bezeichnung
DOPPELABREISSSTOPFEN	7012971	29	3	94	11 21 993 0	PUMPENGEHAEUSE
DOPPELABREISSSTOPFEN	7012971	31	1	451	11 22 473 8	VERSTELLUNG
DOPPELABREISSSTOPFEN	7022127	31	1	156	11 22 127 4	PUMPENELEMENT
DOPPELABREISSSTOPFEN	7022127	31	1	165	11 21 593 6	PUMPENELEMENT
DOPPELABREISSSTOPFEN	7022127	28	5	451	11 22 473 8	VERSTELLUNG
DOPPELDRUCKBEGRENZUNG	10537607	10	2	22	10 35 148 6	VENTILBLOCK
DOPPELHAKEN	11271489	1	1	601	11 27 148 8	AUFHAENGUNG
DOPPELHOHLSCHRAUBE 6X6	10014864	7	1	261	10 14 588 5	LECKOELRUECKLAUF
DOPPELRUECKSCHLAGVENTI	511607014	6	1	525	10 51 959 1	VERROHRUNG HYDR
DOPPELV.PUMPE	10118349	4	1	82	11 24 773 5	AGGREGAT HYDR
DOPPELWIRKZYL	10099173	2	2	525	10 51 959 1	VERROHRUNG HYDR
DOPPELWIRKZYL	10227855	1	2	680	10 51 971 2	SELBSTVERLADESYSTEM H
DOPPELWIRKZYL	513313914	10	2	8	11 29 618 6	OW HYDR
DOPPELWIRKZYL	513314114	13	4	442	11 89 300 5	VERROHRUNG HYDR
DOPPELWIRKZYL	592000814	3	1	721	10 51 728 1	VERROHRUNG HYDR
DOPPELWIRKZYL	592104114	2	2	73	10 51 969 5	A-BOCK AUFRICHTZYL HYDR
DOPPELWIRKZYL	592104214	2	1	687	10 51 973 8	SELBSTVERLADESYSTEM H
DREHDURCHFUEHRUNG HYD	10550970	2	1	442	11 89 300 5	VERROHRUNG HYDR
DREHGELENK	10529080	14	1	718	10 58 064 7	VIDEOUEBERWACHUNGSANL
DREHKNOPF	10687925	80	1	406	10 03 610 7	TASTATUR BEDIENPULT X11
DREHRIEGEL KPL	10020161	6	2	316	10 57 883 5	TUER
DREHRIEGEL KPL	10020161	12	2	318	10 57 897 6	TUER
DREHRIEGEL KPL	10020161	9	1	320	10 57 940 0	TUER
DREHRIEGEL KPL	10020161	9	2	321	10 56 623 7	TUER
DREHRIEGEL KPL	10020161	12	2	322	10 56 580 8	TUER
DREHSCHLOSS	592285814	4	1	419	10 35 007 6	SCHIEBETUER
DREHSTROMGENERATOR	10148088	1	1	286	10 14 584 5	GENERATOR VORM.
DREHWERKANTRIEB	90013762	10	2	378	10 51 968 2	DW OW
DREHWINKELMESSUMFORME	10528626	31	1	734	10 52 952 2	DW GEBER NRS
DREHZAHLGEBER KPL.	10133077	20	2	297	10 14 297 7	MOTORREGELUNGSENSORIK
DROSSELKOERPER	11253687	2	1	82	11 24 773 5	AGGREGAT HYDR
DROSSELKOERPER	11253689	26	2	82	11 24 773 5	AGGREGAT HYDR
DROSSELKOERPER	11930190	11	1	210	11 92 958 8	LUFTFUEHRUNG KPL
DROSSELKOERPER	917906414	3	1	709	10 55 459 4	VERROHRUNG HYDR
DROSSELKOERPER	917906414	4	1	721	10 51 728 1	VERROHRUNG HYDR
DROSSELKOERPER	929796914	6	1	629	10 51 726 2	VERROHRUNG HYDR
DROSSELKOERPER	946293614	9	1	8	11 29 618 6	OW HYDR
DROSSELKOERPER	991487414	26	1	8	11 29 618 6	OW HYDR
DROSSELKOERPER	991867414	37	1	8	11 29 618 6	OW HYDR
DROSSELRUECKSCHLAGVEN	11233730	4	1	75	10 22 540 8	VENTILBLOCK
DROSSELRUECKSCHLAGVEN	7623541	204	1	18	11 28 647 6	VENTILBLOCK
DROSSELSCHRAUBE	7615603	8	1	451	11 22 473 8	VERSTELLUNG
DROSSELSCHRAUBE	7615604	9	1	451	11 22 473 8	VERSTELLUNG
DROSSELVENTIL	510497214	33	1	82	11 24 773 5	AGGREGAT HYDR
DROSSELVENTIL	592070714	145	2	18	11 28 647 6	VENTILBLOCK
DROSSELVENTIL	592178314	5	1	687	10 51 973 8	SELBSTVERLADESYSTEM H
DRUCKABSCHNEIDUNG	9278875	1	1	112	10 11 836 7	RS DRUCKABSCHNEIDUNG
DRUCKAUFNEHMER	10515473	66	2	34	11 24 519 0	OW EL
DRUCKAUFNEHMER	11219179	65	2	34	11 24 519 0	OW EL
DRUCKAUSGLEICHSELEMEN	11921782	58	1	741	10 52 155 9	MODUL BETANKUNGSANLAG
DRUCKBEGRENZUNGSPATR	592309014	200	1	18	11 28 647 6	VENTILBLOCK
DRUCKBEGRENZUNGSPATR	592309014	205	1	18	11 28 647 6	VENTILBLOCK
DRUCKBEGRENZUNGSVENTI	10350546	2	1	75	10 22 540 8	VENTILBLOCK
DRUCKBEGRENZUNGSVENTI	10593474	3	1	92	11 21 991 0	PUMPENGEHAEUSE
DRUCKBEGRENZUNGSVENTI	10872307	9	1	210	11 92 958 8	LUFTFUEHRUNG KPL
DRUCKBEGRENZUNGSVENTI	11219368	2	1	92	11 21 991 0	PUMPENGEHAEUSE
DRUCKBEGRENZUNGSVENTI	11233731	5	1	75	10 22 540 8	VENTILBLOCK
DRUCKBEGRENZUNGSVENTI	11233731	6	1	75	10 22 540 8	VENTILBLOCK
DRUCKBEGRENZUNGSVENTI	11233731	2	1	527	59 20 224 14	LASTHALTEVENTIL
DRUCKBEGRENZUNGSVENTI	11293250	3	2	26	59 21 458 14	VENTILBLOCK

Bezeichnung	Artikel	Pos.	Menge	Blatt	Baugruppe	Bezeichnung
DRUCKBEGRENZUNGSVENTI	511414514	18	1	82	11 24 773 5	AGGREGAT HYDR
DRUCKBEGRENZUNGSVENTI	511467914	4	1	629	10 51 726 2	VERROHRUNG HYDR
DRUCKBEGRENZUNGSVENTI	511475514	7	1	525	10 51 959 1	VERROHRUNG HYDR
DRUCKBEGRENZUNGSVENTI	511486714	20	1	529	51 14 755 14	DRUCKBEGRENZUNGSVENTI
DRUCKBEGRENZUNGSVENTI	511619614	50	2	342	51 22 527 14	OELMOTOR
DRUCKBEGRENZUNGSVENTI	511639714	50	2	359	51 22 942 14	OELMOTOR
DRUCKBEGRENZUNGSVENTI	511655114	50	2	451	11 22 473 8	VERSTELLUNG
DRUCKBEGRENZUNGSVENTI	592323114	5	4	442	11 89 300 5	VERROHRUNG HYDR
DRUCKEINSPEISEVENTIL	10123236	2	2	140	10 14 131 7	RS ANSCHLUSSPLATTE
DRUCKEINSPEISEVENTIL	10135472	10	1	130	10 12 942 0	DRUCKREDUZIERVENTIL
DRUCKEINSPEISEVENTIL	11835951	182	12	18	11 28 647 6	VENTILBLOCK
DRUCKFEDER	10007967	7	1	449	10 00 794 7	TRIEBWERK HYDRAULIKTEIL
DRUCKFEDER	10115224	6	1	451	11 22 473 8	VERSTELLUNG
DRUCKFEDER	10129501	4	1	244	10 15 259 2	UEBERDRUCKVENTIL
DRUCKFEDER	10296909	133	14	18	11 28 647 6	VENTILBLOCK
DRUCKFEDER	10349778	132	1	18	11 28 647 6	VENTILBLOCK
DRUCKFEDER	10529089	17	1	718	10 58 064 7	VIDEOUEBERWACHUNGSANL
DRUCKFEDER	11118160	6	1	220	10 13 845 0	ENDREGELVENTIL
DRUCKFEDER	11226019	40	1	383	51 14 347 14	DW SICHERUNGSBLOCK
DRUCKFEDER	11267416	6	1	95	10 59 347 4	DRUCKBEGRENZUNGSVENTI
DRUCKFEDER	11267442	5	1	97	11 06 730 4	ABSCHALTVENTIL
DRUCKFEDER	11305568	75	16	376	99 04 645 14	ANTRIEB
DRUCKFEDER	11305579	76	16	376	99 04 645 14	ANTRIEB
DRUCKFEDER	11940199	7	1	386	11 94 017 6	TRIEBWERK HYDRAULIKTEIL
DRUCKFEDER	7000942	164	7	18	11 28 647 6	VENTILBLOCK
DRUCKFEDER	7024503	171	14	18	11 28 647 6	VENTILBLOCK
DRUCKFEDER	7028143	5	1	95	10 59 347 4	DRUCKBEGRENZUNGSVENTI
DRUCKFEDER	720046001	7	22	393	50 20 383 01	LAMELLENBREMSE
DRUCKFEDER	720046101	8	12	393	50 20 383 01	LAMELLENBREMSE
DRUCKFEDER	7381699	30	21	135	10 13 802 6	RS ZYL.+STEUERPL.+WELLE
DRUCKFEDER	7382167	31	24	118	98 89 984	RS TRIEBWERK
DRUCKFEDER	7382167	31	24	121	98 89 983	RS TRIEBWERK
DRUCKFEDER	9266088	14	1	113	92 78 875	DRUCKABSCHNEIDUNG
DRUCKFEDER	9267342	12	1	106	92 67 343	ENTLUEFTUNGSVENTIL
DRUCKFEDER	9886756	7	1	243	10 12 948 0	OELKUEHLER VORM.
DRUCKFILTER	10223581	19	1	82	11 24 773 5	AGGREGAT HYDR
DRUCKGEBER	9076531	10	2	297	10 14 297 7	MOTORREGELUNGSENSORIK
DRUCKGEBER KPL.	9076550	11	1	297	10 14 297 7	MOTORREGELUNGSENSORIK
DRUCKREDUZIERVENTIL	10129420	9	2	129	11 36 218 7	REGELVENTIL
DRUCKREDUZIERVENTIL	510438514	4	2	442	11 89 300 5	VERROHRUNG HYDR
DRUCKREDUZIERVENTIL	511476914	3	1	341	10 51 969 8	NADELEINZIEHWINDE HYDR
DRUCKREDUZIERVENTIL	511476914	4	1	358	10 51 968 7	HAUPT EZW HYDR
DRUCKREGELVENTIL	10115241	49	1	451	11 22 473 8	VERSTELLUNG
DRUCKROHRSTUTZEN	10131081	1	1	255	10 13 508 0	DRUCKROHRSTUTZEN
DRUCKROHRSTUTZEN	10135080	1	1	254	10 14 114 0	RS DRUCKROHRSTUTZEN
DRUCKROHRSTUTZEN MIT BE	10153151	191	6	214	12 42 545 4	DIESELMOTOR
DRUCKSCHALTER	10352111	16	1	48	10 56 070 1	TANK HYDR KPL
DRUCKSCHALTER	11236712	5	1	725	11 21 750 0	VERFLUESSIGER
DRUCKSCHALTER	11903869	3	1	728	10 56 536 7	MAGNETVENTIL EINBAUSATZ
DRUCKSCHALTER EINSCHAL	10352119	12	1	482	11 26 260 6	WINDE 1 HYDR
DRUCKSCHALTER EINSCHAL	10352119	12	1	497	11 26 261 1	WINDE 2 HYDR
DRUCKSTAB	993430014	20	1	620	99 23 415 14	RUECKHALTESTANGE
DRUCKSTIFT	10101458	9	3	158	10 32 489 2	TRIEBWERK
DRUCKSTUECK M12X26 X8C	790550914	15	1	316	10 57 883 5	TUER
DRUCKSTUECK M12X26 X8C	790550914	13	1	318	10 57 897 6	TUER
DRUCKSTUECK M12X26 X8C	790550914	4	1	320	10 57 940 0	TUER
DRUCKSTUECK M12X26 X8C	790550914	4	1	321	10 56 623 7	TUER
DRUCKSTUECK M12X26 X8C	790550914	13	1	322	10 56 580 8	TUER
DRUCKTASTER	693003414	32	1	741	10 52 155 9	MODUL BETANKUNGSANLAG
DRUCKVENTIL	11229183	5	1	22	10 35 148 6	VENTILBLOCK

Bezeichnung	Artikel	Pos.	Menge	Blatt	Baugruppe	Bezeichnung
DRUCKVENTIL	11229185	9	1	22	10 35 148 6	VENTILBLOCK
DS	10423993	900	1	25	10 59 143 5	WEGEVENTIL
DS	10524595	1	1	22	10 35 148 6	VENTILBLOCK
DS	11219356	4	1	88	11 21 990 2	TRIEBWERK
DS	11896178	900	1	445	10 55 097 0	DREHDURCHFUEHRUNG HYD
DS	511493914	51	2	342	51 22 527 14	OELMOTOR
DS	511614214	61	1	359	51 22 942 14	OELMOTOR
DS	512259414	990	1	342	51 22 527 14	OELMOTOR
DS	512259514	61	1	342	51 22 527 14	OELMOTOR
DS	512401514	51	2	359	51 22 942 14	OELMOTOR
DS	512714614	10	1	393	50 20 383 01	LAMELLENBREMSE
DS	512714614	9	1	396	93 93 479 01	BREMSE DS
DS	512714714	11	1	393	50 20 383 01	LAMELLENBREMSE
DS	512714714	10	1	396	93 93 479 01	BREMSE DS
DS	790413614	990	1	21	59 23 090 14	DRUCKBEGRENZUNGSPATR
DS	790545514	900	1	19	59 20 707 14	DROSSELVENTIL
DS	790545514	900	1	20	59 23 006 14	MAGNETVENTIL
DS ANSCHLUSSGEHAEUSE	9274731	91	1	105	10 11 835 0	ANSCHLUSSGEHAEUSE
DS ANSCHLUSSPLATTE	10138034	3	1	146	10 13 803 3	DICHTSATZ KPL.
DS ANTRIEBSWELLE	512416214	98	1	448	10 50 351 3	TRIEBWERK
DS DOPPELPUMPE	9276408	98	1	104	10 11 834 9	DOPPELV.PUMPE
DS DRUCKREDUZIERVENTIL	10123210	4	2	147	10 13 803 4	DS ANSCHLUSSPLATTE
DS DRUCKREDUZIERVENTIL	10123214	90	1	130	10 12 942 0	DRUCKREDUZIERVENTIL
DS DRUCKROHRSTUTZEN	10141216	210	1	253	10 15 315 1	DRUCKROHRSTUTZEN MIT BE
DS DRUCKROHRSTUTZEN	10141216	12	1	254	10 14 114 0	RS DRUCKROHRSTUTZEN
DS DRUCKVENTIL	10332095	90	1	143	10 12 323 6	DRUCKEINSPEISEVENTIL
DS DRUCKVENTIL	10332095	2	2	147	10 13 803 4	DS ANSCHLUSSPLATTE
DS HOCHDRUCKPUMPE	10152787	210	1	249	10 15 085 7	HOCHDRUCKPUMPE MIT BEFE
DS HOCHDRUCKPUMPE	10152787	4	1	250	10 15 074 3	RS HOCHDRUCKPUMPE
DS INJEKTOR	10141215	210	1	252	10 15 286 7	INJEKTOR MIT BEFEST.
DS KPL	10224159	3	1	171	10 22 358 1	DRUCKFILTER
DS KPL	10351610	99	1	154	10 22 650 5	V.PUMPE
DS KPL	10595126	200	1	361	10 55 156 3	WINDE
DS KPL	11904703	900	1	705	59 21 826 14	ABSTUETZZYLINDER
DS KPL	502050814	990	1	187	51 22 501 14	OELMOTOR
DS KPL	502050814	990	1	191	51 22 394 14	OELMOTOR
DS KPL	512256614	250	1	383	51 14 347 14	DW SICHERUNGSBLOCK
DS KPL	512299214	990	1	384	51 22 991 14	OELMOTOR
DS KPL	790579414	902	1	18	11 28 647 6	VENTILBLOCK
DS KPL	981967114	990	1	630	51 02 322 14	OELMOTOR
DS KPL ZYL	10352446	900	1	526	10 09 917 3	DOPPELWIRKZYL
DS KPL ZYL	10352447	1	1	681	10 22 785 5	DOPPELWIRKZYL
DS KPL ZYL	513319014	99	1	456	51 33 141 14	DOPPELWIRKZYL
DS KPL ZYL	513319214	99	1	27	51 33 139 14	DOPPELWIRKZYL
DS KPL ZYL	790230614	900	1	722	59 20 008 14	DOPPELWIRKZYL
DS KPL ZYL	790407714	900	1	74	59 21 041 14	DOPPELWIRKZYL
DS KPL ZYL	790407814	900	1	688	59 21 042 14	DOPPELWIRKZYL
DS MONOBLOCK	10349716	901	1	18	11 28 647 6	VENTILBLOCK
DS MONOBLOCK	10349776	900	1	18	11 28 647 6	VENTILBLOCK
DS REGELVENTIL	10122265	4	1	146	10 13 803 3	DICHTSATZ KPL.
DS REGELVENTIL	9273644	89	1	103	10 11 834 9	DOPPELV.PUMPE
DS REGELVENTIL	9273644	90	1	109	90 74 418	REGELVENTIL
DS ZAHNRADMOTOR	10493890	901	1	32	55 09 453 14	OELMOTOR
DSF-RING	10146358	5	1	234	10 14 636 7	KOLBEN KPL.
DUESE	11226142	200	1	383	51 14 347 14	DW SICHERUNGSBLOCK
DUESE	11233732	7	1	75	10 22 540 8	VENTILBLOCK
DUESE	11239895	3	1	692	59 21 584 14	SENKBREMSVENTIL
DUESE	11249191	270	1	74	59 21 041 14	DOPPELWIRKZYL
DUESE	7014257	271	1	18	11 28 647 6	VENTILBLOCK
DUESE	7026135	269	2	18	11 28 647 6	VENTILBLOCK

Bezeichnung	Artikel	Pos.	Menge	Blatt	Baugruppe	Bezeichnung
DUESENHALTER	592289414	53	1	415	10 35 008 0	KABINE
DURCHFUEHRUNGSTUELLE	11225402	63	2	310	11 24 409 0	VERKLEIDUNG OW EINBAU KP
DURCHGANGSNIPPELBLOCK	11274920	2	1	731	11 28 048 1	ANSCHLUSSTEILE
DURCHGANGSVENTIL	7402781	12	1	199	11 24 114 4	KRAFTSTOFFANLAGE
DURCHTRIEB	10129874	12	1	82	11 24 773 5	AGGREGAT HYDR
DURCHTRIEB	10129874	300	1	127	10 12 878 7	V.PUMPE
DURCHTRIEB	10130005	301	1	127	10 12 878 7	V.PUMPE
DURCHTRIEB	10134521	304	1	127	10 12 878 7	V.PUMPE
DURCHTRIEB	10138068	305	1	128	10 12 878 7	V.PUMPE
DURCHTRIEB	10553922	11	1	82	11 24 773 5	AGGREGAT HYDR
DW GEBER NRS	10522930	828	1	4	01 38 406 14	LR 1300 SX
DW GEBER NRS	10529522	3	1	733	10 52 293 0	DW GEBER NRS
DW HYDR	10519683	2	1	378	10 51 968 2	DW OW
DW OW	10519682	27	1	2	01 38 406 14	LR 1300 SX
DW SICHERUNGSBLOCK	511434714	2	1	381	10 55 216 1	VERROHRUNG HYDR
E-BAUGRUPPE	10688831	31	1	622	11 90 722 6	MODEM NRS
EINBAUVENTIL	511640714	2	1	169	51 16 377 14	VENTILBLOCKSPEISEDRUCK
EINFACHHAKEN	11303217	2	1	590	79 03 861 14	LASTHAKEN
EINFACHHAKEN	11481162	1	1	595	11 27 463 8	AUFHAENGUNG
EINFUELLSIEB	10296919	13	1	53	10 56 073 3	KRAFTSTOFFTANK KPL
EINFUELLSTUTZEN	944215103	1	1	394	92 76 934 01	OELEINFUELLSTUTZEN
EINGANGSMODUL	10144034	10	1	304	11 40 371 1	SCR KPL.
EINSPRITZLEITUNG	10143827	2	4	262	10 14 382 8	EINSPRITZLEITUNGEN
EINSPRITZLEITUNG	10143829	1	1	262	10 14 382 8	EINSPRITZLEITUNGEN
EINSPRITZLEITUNG	10143831	4	1	262	10 14 382 8	EINSPRITZLEITUNGEN
EINSPRITZLEITUNGEN	10143828	215	1	215	12 42 545 4	DIESELMOTOR
EINSTECKHUELSE	10871759	25	1	210	11 92 958 8	LUFTFUEHRUNG KPL
EINSTELLMUTTER	944403703	8	1	467	96 93 178 01	FAHRANTRIEB
EINSTELLSCHRAUBE	10599567	6	1	97	11 06 730 4	ABSCHALTVENTIL
EINSTELLSCHRAUBE M10X1	10012225	5	2	237	11 44 800 5	KIPPHEBELBOCK VORM.
EINZELADERABDICHTUNG	605620008	14	3	413	11 95 272 6	SCHALLGEBER EL
ENDGEHAEUSE	540271614	2	1	635	54 02 702 14	SEILTROMMEL KPL
ENDGEHAEUSE	692406008	11	1	413	11 95 272 6	SCHALLGEBER EL
ENDGEHAEUSE	692406008	12	1	413	11 95 272 6	SCHALLGEBER EL
ENDPOL KAPPE	11229635	30	3	33	11 24 519 0	OW EL
ENDREGELVENTIL	10138450	14	1	214	12 42 545 4	DIESELMOTOR
ENDSCHALTER	11921102	17	1	49	10 52 673 3	ABSPERRORGAN
ENDSCHALTER	606066314	60	3	575	10 57 559 9	KABELSATZ
ENDSCHALTER EINBAU	11310932	46	1	6	11 24 047 9	OW KPL
ENDSCHALTER HUB OBEN	927521808	30	2	575	10 57 559 9	KABELSATZ
ENDSCHALTER HUB OBEN	927521808	60	2	609	10 57 651 9	KABELSATZ
ENDSCHEIBE EL	939556301	9	1	346	93 88 500 01	SEILTROMMEL
ENDSCHEIBE UL	938850201	5	1	346	93 88 500 01	SEILTROMMEL
ENDWINKEL	602720514	28	4	39	10 56 645 8	KLEMMKASTEN
ENDWINKEL	602720514	20	2	611	10 57 652 3	KLEMMDOSE
ENDWINKEL	602832214	54	1	735	10 56 013 7	FREMDEINSPEISUNG BATTERI
ENTLUEFTUNGSFILTER	505104914	260	1	86	11 24 682 0	VERTEILERGETRIEBE
ENTLUEFTUNGSFILTER	693113814	485	1	86	11 24 682 0	VERTEILERGETRIEBE
ENTLUEFTUNGSSCHRAUBE	485581914	54	1	39	10 56 645 8	KLEMMKASTEN
ENTLUEFTUNGSSCHRAUBE	7412942	1	1	202	10 30 300 7	KRAFTSTOFFVORFILTER
ENTLUEFTUNGSSTUTZEN	927501901	13	1	352	93 36 755 01	OELMESSEINRICHTUNG
ENTLUEFTUNGSVENTIL		82	1	348	93 88 497 01	PLANETENGETRIEBE
ENTLUEFTUNGSVENTIL	10351239	205	2	705	59 21 826 14	ABSTUETZZYLINDER
ENTLUEFTUNGSVENTIL	540136314	3	4	73	10 51 969 5	A-BOCK AUFRICHTZYL HYDR
ENTLUEFTUNGSVENTIL	592089814	69	1	376	99 04 645 14	ANTRIEB
ENTLUEFTUNGSVENTIL	9267343	6	2	105	10 11 835 0	ANSCHLUSSGEHAEUSE
ENTNAHMEMODUL	10146538	6	1	207	11 24 240 8	HARNSTOFFBEHAELTER
ENTWAESSERUNGSSTOPFEN	602501208	55	1	39	10 56 645 8	KLEMMKASTEN
ENTWAESSERUNGSVENTIL	502921908	10	1	210	11 92 958 8	LUFTFUEHRUNG KPL
ERSATZELEMENT	10136801	1	1	224	10 13 680 0	KURBELGEHAEUSEENTLUEFT

Bezeichnung	Artikel	Pos.	Menge	Blatt	Baugruppe	Bezeichnung
EXPANSIONSVENTIL	10223210	170	1	428	11 93 934 6	KLIMAANLAGE
EXZENTERSCHRAUBE	11267405	46	1	94	11 21 993 0	PUMPENGEHAEUSE
EZW OW EINBAU KPL	10519686	1	1	355	10 51 969 1	EZW OW EINBAU KPL
EZW OW EINBAU KPL	10519691	25	1	2	01 38 406 14	LR 1300 SX
EZW ROLLENPAKET	992925814	11	1	357	10 51 968 6	EZW OW EINBAU KPL
FAECHERSCHEIBE DIN 6798 1	425221314	9	1	35	10 53 048 9	SICHERUNGSHALTER
FAECHERSCHEIBE DIN 6798 1	425221314	16	4	339	10 51 969 7	NADELEINZIEHWINDE
FAHRANTRIEB	969317801	6	1	463	11 89 365 0	RAUPENTRAEGER RE KPL
FAHRANTRIEB	969317801	6	1	474	11 89 365 1	RAUPENTRAEGER LI KPL
FAHRERSITZ	10225068	11	1	398	11 27 970 6	KABINE KPL
FALTENBALG	10100666	40	1	430	10 22 506 8	FAHRERSITZ
FALTENBALG	606272314	1	1	333	11 21 481 9	MEISTERSCHALTER
FALTENBALG	606272314	1	1	405	11 21 481 8	MEISTERSCHALTER
FALTENBALG	7366620	42	1	430	10 22 506 8	FAHRERSITZ
FANGSTANGE NRS	11271097	580	2	3	01 38 406 14	LR 1300 SX
FEDER	10287741	6	1	167	10 28 766 5	VERSTELLTEIL
FEDER	10324860	7	1	158	10 32 489 2	TRIEBWERK
FEDERDRUCKLAMELLENBRE		70	1	348	93 88 497 01	PLANETENGETRIEBE
FEDERDRUCKLAMELLENBRE	502037201	80	1	467	96 93 178 01	FAHRANTRIEB
FEDERELEMENT	10032001	7	1	202	10 30 300 7	KRAFTSTOFFVORFILTER
FEDERRING DIN 7980 12 FST	4980013	25	16	103	10 11 834 9	DOPPELV.PUMPE
FEDERSCHEIBE DIN 137 X10	10411092	4	1	288	11 38 664 5	STARTER
FEDERSCHEIBE DIN 137 X10	10411093	6	2	288	11 38 664 5	STARTER
FEDERSTECKER	592291714	3	1	425	59 22 914 14	PODESTSICHERUNG KPL
FEDERSTECKER DIN 11024 2.	433206014	14	1	589	99 30 800 14	SPITZENENDSCHALTER EINBA
FEDERSTECKER DIN 11024 2.	433206014	21	1	617	10 55 753 7	SPITZENENDSCHALTER LI EIN
FEDERSTECKER DIN 11024 2.	433206014	21	1	618	10 55 757 6	SPITZENENDSCHALTER RE E
FEDERSTECKER DIN 11024 2.	433206014	51	8	642	10 55 372 1	DACHGELAENDER NRS
FEDERSTECKER DIN 11024 4	433206214	33	2	505	11 23 820 4	ANLENKSTUECK KPL
FEDERSTECKER DIN 11024 4	433206214	52	10	642	10 55 372 1	DACHGELAENDER NRS
FEDERSTECKER DIN 11024 5	433206314	21	6	337	99 29 803 14	VERZURRUNG BALLAST
FEDERSTECKER DIN 11024 5	433206314	31	2	662	99 10 116 14	SEILFUEHRUNG
FEDERTELLER	11267441	4	2	97	11 06 730 4	ABSCHALTVENTIL
FEDERTELLER	570114908	116	1	630	51 02 322 14	OELMOTOR
FEDERTELLER	790579314	131	15	18	11 28 647 6	VENTILBLOCK
FEDERTELLER	9076178	12	2	145	10 12 226 2	RS VERSTELLUNG
FEDERTELLER	9278876	13	1	113	92 78 875	DRUCKABSCHNEIDUNG
FESTSTELLER	592291014	94	1	416	10 35 008 0	KABINE
FETT	10282622	100	1	245	10 13 394 5	SCHMIEROELPUMPE
FETT	10282622	100	1	290	10 11 557 7	SCHWUNGRADGEHAEUSE AN
FETT	10282622	100	1	293	10 12 797 9	VERSCHLUSSTEILE
FETT	10285708	100	1	218	10 15 445 8	ZYLINDER
FETT	10285708	100	1	219	10 14 768 6	AGGREGATETRAEGER ANBA
FETT	10285708	100	1	246	10 13 394 7	ABSAUGPUMPE MIT BEFEST.
FETT	10285708	100	1	265	10 14 736 9	ANSAUGSTUTZEN ANBAU
FETT	10285708	100	1	266	10 14 736 4	LUFTANSAUGUNG ANBAU
FETT	10285708	100	1	267	10 14 967 6	VERBINDUNGSLEITUNG ANBA
FETT	10285708	100	1	274	10 14 273 4	WASSERPUMPE MIT BEFEST.
FETT	10285708	100	1	275	10 14 821 5	THERMOSTATGEHAEUSE AN
FETT	10285708	100	1	277	10 14 274 2	KUEHLMITTELKRUEMMER AN
FETT	10285708	100	1	279	10 14 601 2	WASSERSAMMELLEITUNG K
FETT	10285708	100	1	298	10 14 637 4	VERSCHLUSSTEILE
FETT	10285708	100	1	300	11 41 737 0	LUFTPRESSER
FEUCHTESENSOR	10141261	16	1	204	11 92 923 6	ANLAGE HARNSTOFF EINBAU
FEUERLOESCHER	890100814	10	1	63	92 65 477 14	FEUERLOESCHER NRS
FEUERLOESCHER EINBAU	10578845	31	2	6	11 24 047 9	OW KPL
FEUERLOESCHER NRS	926547714	10	1	62	10 57 884 5	FEUERLOESCHER EINBAU
FILTER	11490265	38	1	94	11 21 993 0	PUMPENGEHAEUSE
FILTER	11490265	39	1	94	11 21 993 0	PUMPENGEHAEUSE
FILTER	11490265	40	1	94	11 21 993 0	PUMPENGEHAEUSE

Bezeichnung	Artikel	Pos.	Menge	Blatt	Baugruppe	Bezeichnung
FILTER	592293714	240	2	428	11 93 934 6	KLIMAANLAGE
FILTEREINSATZ	10037623	1	1	171	10 22 358 1	DRUCKFILTER
FILTEREINSATZ	11227203	1	1	50	10 51 572 4	RUECKLAUFFILTER
FILTERELEMENT	11291031	1	1	196	11 24 679 0	LUFTFILTER
FILTERELEMENT	510713814	1	1	51	51 06 906 14	BELUEFTUNGSFILTER
FILTERELEMENT	553183708	6	1	202	10 30 300 7	KRAFTSTOFFVORFILTER
FILTERKONSOLE	12455374	1	1	259	10 14 675 3	KRAFTSTOFFFEINFILTER
FILTERLUEFTER EINBAU	611052614	61	1	399	11 27 973 6	KABINE EL
FILTERMATTE	611124514	1	1	412	61 10 526 14	FILTERLUEFTER EINBAU
FILZSTREIFEN	10585445	12	2	635	54 02 702 14	SEILTROMMEL KPL
FLACHDICHTRING	10588725	4	1	527	59 20 224 14	LASTHALTEVENTIL
FLACHDICHTUNG	9276860	37	2	103	10 11 834 9	DOPPELV.PUMPE
FLACHDICHTUNG	9276860	37	2	126	92 76 408	DS DOPPELPUMPE
FLACHKAEFIG	501532014	9	1	635	54 02 702 14	SEILTROMMEL KPL
FLACHKOPFSCHRAUBE	11940203	12	7	386	11 94 017 6	TRIEBWERK HYDRAULIKTEIL
FLACHKOPFSCHRAUBE ISO 7	10541536	19	20	398	11 27 970 6	KABINE KPL
FLACHKOPFSCHRAUBE ISO 70	10541540	4	11	433	11 26 095 6	STEUERKONSOLE RE KPL
FLACHKOPFSCHRAUBE ISO 70	10541540	42	2	741	10 52 155 9	MODUL BETANKUNGSANLAG
FLACHKOPFSCHRAUBE ISO 7	10541561	28	16	398	11 27 970 6	KABINE KPL
FLACHKOPFSCHRAUBE ISO 7	10541561	6	3	434	97 07 857 03	LIBELLE EINBAU
FLACHKOPFSCHRAUBE ISO 7	400180214	35	8	398	11 27 970 6	KABINE KPL
FLACHKOPFSCHRAUBE ISO 7	400180214	30	4	407	10 53 171 8	TASTATUR
FLACHKOPFSCHRAUBE ISO 7	10541563	16	2	737	10 52 155 4	BETANKUNGSANLAGE NRS
FLACHKOPFSCHRAUBE ISO 7	10541565	19	2	737	10 52 155 4	BETANKUNGSANLAGE NRS
FLACHKOPFSCHRAUBE ISO 7	400180314	36	15	398	11 27 970 6	KABINE KPL
FLACHKUPFER EL	10530486	6	1	35	10 53 048 9	SICHERUNGSHALTER
FLACHRUNDSCHRAUBE DIN	11314349	13	4	518	11 23 653 3	AUFLAGE KPL
FLACHRUNDSCHRAUBE DIN	11314349	14	4	540	11 25 204 2	AUFLAGE KPL
FLACHRUNDSCHRAUBE DIN	11314349	14	6	558	11 23 292 2	AUFLAGE KPL
FLACHSICHERUNGSEINSATZ	604105314	68	5	402	10 55 963 5	SCHALTSCHR X1
FLACHSICHERUNGSEINSATZ	604105314	5	5	403	99 20 811 14	RESERVESICHERUNGEN
FLACHSICHERUNGSEINSATZ	604105414	7	5	403	99 20 811 14	RESERVESICHERUNGEN
FLACHSICHERUNGSEINSATZ	604105514	69	41	402	10 55 963 5	SCHALTSCHR X1
FLACHSICHERUNGSEINSATZ	604105514	10	10	403	99 20 811 14	RESERVESICHERUNGEN
FLACHSICHERUNGSEINSATZ	604105614	70	6	402	10 55 963 5	SCHALTSCHR X1
FLACHSICHERUNGSEINSATZ	604105614	15	5	403	99 20 811 14	RESERVESICHERUNGEN
FLACHSTECKER	602203914	55	6	399	11 27 973 6	KABINE EL
FLACHSTECKER	602203914	92	6	400	11 27 973 6	KABINE EL
FLACHSTECKERGEHAEUSE	602208714	92	1	402	10 55 963 5	SCHALTSCHR X1
FLACHSTECKERGEHAEUSE	602209014	91	1	400	11 27 973 6	KABINE EL
FLACHSTECKERGEHAEUSE	602305914	54	3	399	11 27 973 6	KABINE EL
FLAECHENDICHTUNG	10354595	100	1	225	10 14 844 4	OELWANNE MIT BEFEST.
FLANSCH	10583864	1	1	361	10 55 156 3	WINDE
FLANSCH	540271814	1	1	636	54 02 703 14	FLANSCH KPL
FLANSCH	552066514	22	2	48	10 56 070 1	TANK HYDR KPL
FLANSCH	9072435	12	1	115	90 77 464	RS FLANSCH
FLANSCH	944137814	24	1	82	11 24 773 5	AGGREGAT HYDR
FLANSCH	944813514	25	1	82	11 24 773 5	AGGREGAT HYDR
FLANSCH	956274314	28	4	8	11 29 618 6	OW HYDR
FLANSCH	959712714	21	1	733	10 52 293 0	DW GEBER NRS
FLANSCH KPL	540270314	22	1	633	59 20 694 14	WINDE
FLANSCHABDECKUNG	11215698	2	1	163	10 22 601 3	V.PUMPE
FLANSCHABDECKUNG	11215699	3	1	163	10 22 601 3	V.PUMPE
FLANSCHHAELFTE	510548714	105	8	10	11 29 618 6	OW HYDR
FLANSCHHAELFTE	510574414	100	8	10	11 29 618 6	OW HYDR
FLANSCHHAELFTE	510574414	21	2	179	10 57 532 2	ANSAUGROHR OEL KPL
FLANSCHHAELFTE	510586614	103	12	10	11 29 618 6	OW HYDR
FLANSCHHAELFTE	510586614	617	4	358	10 51 968 7	HAUPT EZW HYDR
FLANSCHHAELFTE	510586614	646	16	444	11 89 300 5	VERROHRUNG HYDR
FLANSCHHAELFTE	510586614	730	8	482	11 26 260 6	WINDE 1 HYDR

Bezeichnung	Artikel	Pos.	Menge	Blatt	Baugruppe	Bezeichnung
FLANSCHHAELFTE	510586614	730	8	497	11 26 261 1	WINDE 2 HYDR
FLANSCHHAELFTE	510586914	104	18	10	11 29 618 6	OW HYDR
FLANSCHHAELFTE	510586914	620	4	341	10 51 969 8	NADELEINZIEHWINDE HYDR
FLANSCHHAELFTE	510586914	630	4	381	10 55 216 1	VERROHRUNG HYDR
FLANSCHHAELFTE	510587514	101	8	10	11 29 618 6	OW HYDR
FLANSCHHAELFTE	510587514	312	2	83	11 24 773 5	AGGREGAT HYDR
FLANSCHHAELFTE	510587514	631	8	381	10 55 216 1	VERROHRUNG HYDR
FLANSCHHAELFTE	510587514	650	2	525	10 51 959 1	VERROHRUNG HYDR
FLANSCHHAELFTE	510587514	614	2	687	10 51 973 8	SELBSTVERLADESYSTEM H
FLANSCHHAELFTE	511502414	102	24	10	11 29 618 6	OW HYDR
FLANSCHHAELFTE	511502414	310	6	83	11 24 773 5	AGGREGAT HYDR
FLANSCHHAELFTE	511502414	20	6	179	10 57 532 2	ANSAUGROHR OEL KPL
FLANSCHHAELFTE	511598114	22	2	179	10 57 532 2	ANSAUGROHR OEL KPL
FLANSCHLAGER	11231270	3	1	485	10 53 039 8	WINDE
FLANSCHVERBINDUNG SAE	790227714	32	1	8	11 29 618 6	OW HYDR
FLUEGELSCHRAUBE DIN 316	485559814	14	2	67	10 56 067 3	BATTERIE EINBAU KPL
FORMSCHLAUCH	10337090	45	1	183	11 94 151 8	KUEHLER EINBAU WASSER
FORMSCHLAUCH	10350439	46	1	183	11 94 151 8	KUEHLER EINBAU WASSER
FORMSCHLAUCH	11246836	15	1	194	11 92 922 0	ANSAUGANLAGE LUFT
FORMSCHLAUCH	11270026	44	1	183	11 94 151 8	KUEHLER EINBAU WASSER
FORMSCHLAUCH	11287796	25	1	183	11 94 151 8	KUEHLER EINBAU WASSER
FORMSCHLAUCH	550936214	94	1	184	11 94 151 8	KUEHLER EINBAU WASSER
FREMDEINSPEISUNG BATTERI	10560137	843	1	4	01 38 406 14	LR 1300 SX
FRONTSCHEIBE	592287214	10	1	422	59 22 871 14	FRONTSCHEIBE KPL
FRONTSCHEIBE KPL	592287114	28	1	415	10 35 008 0	KABINE
FRONTSCHEIBE KPL	592288414	34	1	415	10 35 008 0	KABINE
FUEHRUNG	10512821	88	2	416	10 35 008 0	KABINE
FUEHRUNG	11292956	17	1	453	10 44 510 2	SCHNELLVERSCHLUSSKUPPL
FUEHRUNG KPL	959576314	100	1	417	10 22 645 4	TUERE ZUBEHOEHR
FUEHRUNGSBOLZEN	10572236	1	1	455	10 55 154 8	SCHNELLVERSCHLUSSKUPPL
FUEHRUNGSBOLZEN	10572236	1	2	510	10 55 157 6	SCHNELLVERSCHLUSSKUPPL
FUEHRUNGSBUCHSE 145/10	11310567	40	1	526	10 09 917 3	DOPPELWIRKZYL
FUEHRUNGSBUCHSE M30 X 1.	10352312	35	1	704	59 21 826 14	ABSTUETZZYLINDER
FUEHRUNGSBUCHSE M40 X 1.	10352313	40	1	704	59 21 826 14	ABSTUETZZYLINDER
FUEHRUNGSKONSOLE MITTE	10226458	15	1	418	95 95 763 14	FUEHRUNG KPL
FUEHRUNGSKONSOLE OBEN	10226463	305	1	417	10 22 645 4	TUERE ZUBEHOEHR
FUEHRUNGSKONSOLE UNTE	10226461	228	1	417	10 22 645 4	TUERE ZUBEHOEHR
FUEHRUNGSRING	10351499	120	2	704	59 21 826 14	ABSTUETZZYLINDER
FUEHRUNGSRING	10352344	65	1	704	59 21 826 14	ABSTUETZZYLINDER
FUEHRUNGSRING	10352349	70	2	704	59 21 826 14	ABSTUETZZYLINDER
FUEHRUNGSRING	10352352	75	2	704	59 21 826 14	ABSTUETZZYLINDER
FUEHRUNGSRING	10352354	95	1	704	59 21 826 14	ABSTUETZZYLINDER
FUEHRUNGSRING	11267401	11	2	94	11 21 993 0	PUMPENGEHAEUSE
FUEHRUNGSRING	726206214	100	3	704	59 21 826 14	ABSTUETZZYLINDER
FUEHRUNGSRING	9266680	18	2	107	10 11 835 7	RS ANSCHLUSSGEHAEUSE
FUEHRUNGSRING	9881114	33	2	107	10 11 835 7	RS ANSCHLUSSGEHAEUSE
FUEHRUNGSROHR	9266847	1	1	228	10 14 591 9	OELMESSSTAB MIT ROHR
FUEHRUNGSSCHIENE	10226457	9	1	418	95 95 763 14	FUEHRUNG KPL
FUEHRUNGSSCHIENE	10226459	222	1	417	10 22 645 4	TUERE ZUBEHOEHR
FUEHRUNGSSCHIENE	10226462	300	1	417	10 22 645 4	TUERE ZUBEHOEHR
FUEHRUNGSSCHIENE SCHW	10537682	1	1	579	11 28 648 4	MONTAGETEILE
FUEHRUNGSSCHIENE SCHW	919956014	2	2	579	11 28 648 4	MONTAGETEILE
FUEHRUNGSSCHIENE SCHW	919956114	3	2	579	11 28 648 4	MONTAGETEILE
FUELLANSCHLUSS	10448187	14	1	58	11 27 315 5	ZENTRALSCHMIERUNG
FUSS SCHWK	990954814	31	2	505	11 23 820 4	ANLENKSTUECK KPL
FUSSLEISTE	10585909	20	1	640	10 55 372 1	DACHGELAENDER NRS
FUSSLEISTE	10585910	21	1	640	10 55 372 1	DACHGELAENDER NRS
FUSSLEISTE	10585911	22	1	640	10 55 372 1	DACHGELAENDER NRS
FUSSLEISTE	10585912	23	1	640	10 55 372 1	DACHGELAENDER NRS
FUSSLEISTE	10585913	24	2	640	10 55 372 1	DACHGELAENDER NRS

Bezeichnung	Artikel	Pos.	Menge	Blatt	Baugruppe	Bezeichnung
FUSSLEISTE	10585914	25	1	640	10 55 372 1	DACHGELAENDER NRS
FUSSLEISTE	10585915	26	1	640	10 55 372 1	DACHGELAENDER NRS
FUSSLEISTE	10585916	27	1	640	10 55 372 1	DACHGELAENDER NRS
FUSSLEISTE	10585917	28	1	640	10 55 372 1	DACHGELAENDER NRS
FUSSLEISTE	10585919	30	1	640	10 55 372 1	DACHGELAENDER NRS
FUSSLEISTE	10585920	31	1	640	10 55 372 1	DACHGELAENDER NRS
FUSSLEISTE	10586854	62	1	642	10 55 372 1	DACHGELAENDER NRS
FUSSPEDAL	11219883	1	1	723	11 22 037 2	FUSSPEDAL EL EINBAU
FUSSPEDAL	11223717	210	2	400	11 27 973 6	KABINE EL
FUSSPEDAL EL EINBAU	11220372	723	1	4	01 38 406 14	LR 1300 SX
FUSSPEDAL EL EINBAU	11223691	211	1	400	11 27 973 6	KABINE EL
GABEL	991012514	2	4	663	99 31 838 14	ZWISCHENABSPANNUNG NR
GABEL	993360714	1	4	663	99 31 838 14	ZWISCHENABSPANNUNG NR
GABEL SCHWK	991011914	40	2	662	99 10 116 14	SEILFUEHRUNG
GABEL SCHWK	991012214	41	2	662	99 10 116 14	SEILFUEHRUNG
GABEL SCHWK	991012214	2	1	664	99 10 125 14	GABEL
GABEL SCHWK	991012614	1	1	664	99 10 125 14	GABEL
GARDEROBEHAKEN	592290014	76	1	416	10 35 008 0	KABINE
GASDRUCKFEDER	10800103	2	1	409	69 31 685 14	SICHERHEITSHEBEL KPL
GASFEDER	592287414	13	1	422	59 22 871 14	FRONTSCHEIBE KPL
GASFEDER	592323514	11	7	312	11 24 409 1	VERKLEIDUNG
GASFEDER	592323514	22	3	324	10 54 591 0	MOTORABDECKUNG
GEGENMUTTER M20X1.5 POL	10530322	93	1	513	11 90 151 1	KABELSATZ 1 ANLENKSTUECK
GEHAEUSE	10447743	1	1	454	10 44 510 1	SCHNELLVERSCHLUSSKUPPL
GEHAEUSE	10447744	1	1	453	10 44 510 2	SCHNELLVERSCHLUSSKUPPL
GEHAEUSE	10447745	1	1	30	10 44 510 5	SCHNELLVERSCHLUSSKUPPL
GEHAEUSE	11239912	1	1	690	51 16 404 14	SENKBREMSVENTIL
GEHAEUSE	11290844	10	1	86	11 24 682 0	VERTEILERGETRIEBE
GEHAEUSE	611039214	21	1	741	10 52 155 9	MODUL BETANKUNGSANLAG
GEHAEUSE GEBOHRT	917876214	10	1	611	10 57 652 3	KLEMMDOSE
GEHAEUSE GEBOHRT	918975514	21	1	39	10 56 645 8	KLEMMKASTEN
GEHAEUSE KPL	10445126	3	1	509	10 51 826 1	ANLENKSTUECK HYDR
GEHAEUSE KPL	10445127	20	2	442	11 89 300 5	VERROHRUNG HYDR
GELAENDER SCHWK	10559163	18	2	640	10 55 372 1	DACHGELAENDER NRS
GELAENDER SCHWK	10585923	10	1	640	10 55 372 1	DACHGELAENDER NRS
GELAENDER SCHWK	10585924	11	1	640	10 55 372 1	DACHGELAENDER NRS
GELAENDER SCHWK	10585925	12	1	640	10 55 372 1	DACHGELAENDER NRS
GELAENDER SCHWK	10585926	13	1	640	10 55 372 1	DACHGELAENDER NRS
GELAENDERFUSS	10349402	19	10	640	10 55 372 1	DACHGELAENDER NRS
GELENK	11228707	10	1	653	11 22 870 8	SCHEINWERFERHALTER KPL
GELENK	11228804	12	1	653	11 22 870 8	SCHEINWERFERHALTER KPL
GELENKBANDKONSOLENSC	10355006	23	2	198	11 24 114 3	ABGASANLAGE
GELENKBOLZENSPANNBAND	10530689	36	2	505	11 23 820 4	ANLENKSTUECK KPL
GELENKBOLZENSPANNBAND	10530689	12	4	520	99 34 198 14	SCHILD LIEBHERR
GELENKBOLZENSPANNBAND	10530689	10	1	549	11 28 391 3	BEFESTIGUNGSCHELLE
GELENKBOLZENSPANNBAND	10531873	97	2	507	11 23 820 4	ANLENKSTUECK KPL
GELENKBOLZENSPANNBAND	10531873	16	1	548	11 28 390 8	AL BEGEHUNG
GELENKBOLZENSPANNBAND	10531873	16	1	563	11 28 583 8	AL BEGEHUNG
GELENKBOLZENSPANNBAND	10531873	16	1	570	11 28 626 1	AL BEGEHUNG
GELENKBOLZENSPANNBAND	10531873	13	2	678	11 26 901 8	HALTER KPL
GELENKBOLZENSPANNBAND	10581173	47	2	204	11 92 923 6	ANLAGE HARNSTOFF EINBAU
GELENKKOPF	513319614	13	1	27	51 33 139 14	DOPPELWIRKZYL
GELENKLAGER	746911614	18	4	579	11 28 648 4	MONTAGETEILE
GELENKLAGER	746913614	17	1	685	11 23 619 7	SELBSTVERLADESYSTEM NR
GELENKLAGER	746925314	13	1	722	59 20 008 14	DOPPELWIRKZYL
GELENKLAGER	746925314	14	1	722	59 20 008 14	DOPPELWIRKZYL
GENERATOR VORM.	10145845	440	1	215	12 42 545 4	DIESELMOTOR
GERAETEHALTER	10445629	1	2	436	11 30 962 5	HALTER KPL
GERAETESTECKER	10296818	92	1	513	11 90 151 1	KABELSATZ 1 ANLENKSTUECK
GERAETESTECKER	605010314	41	1	735	10 56 013 7	FREMDEINSPEISUNG BATTERI

Bezeichnung	Artikel	Pos.	Menge	Blatt	Baugruppe	Bezeichnung
GERAEUSCHDAEMPFER	502661608	7	1	210	11 92 958 8	LUFTFUEHRUNG KPL
GETRIEBE	10583865	3	1	361	10 55 156 3	WINDE
GETRIEBE	11893213	1	1	485	10 53 039 8	WINDE
GETRIEBEDECKEL	927563901	65	1	392	90 01 376 2	DREHWERKANTRIEB
GETRIEBENOCKENENDSCHAL	606279214	1	1	483	11 21 634 2	WINDE EL
GEWICHT	388283108	18	1	589	99 30 800 14	SPITZENENDSCHALTER EINBA
GEWICHT	388283208	19	1	589	99 30 800 14	SPITZENENDSCHALTER EINBA
GEWINDEANSCHLUSSSTUTZE	927739401	1	1	352	93 36 755 01	OELMESSEINRICHTUNG
GEWINDEANSCHLUSSSTUTZE	927739401	20	1	352	93 36 755 01	OELMESSEINRICHTUNG
GEWINDEROHR	592316114	150	1	86	11 24 682 0	VERTEILERGETRIEBE
GEWINDESTIFT	11267417	7	1	95	10 59 347 4	DRUCKBEGRENZUNGSVENTI
GEWINDESTIFT	7373597	17	2	447	51 24 059 14	V.MOTOR
GEWINDESTIFT DIN 913 22H	4980900	20	1	113	92 78 875	DRUCKABSCHNEIDUNG
GEWINDESTIFT DIN 913 M6X6	4980082	21	1	141	10 14 131 6	ANSCHLUSSPLATTE VORM.
GEWINDESTIFT DIN 914 M6X2	404601014	15	3	625	11 21 552 4	WINKELANZEIGE NRS
GEWINDESTIFT ISO 4026 M10	404403114	21	1	398	11 27 970 6	KABINE KPL
GITTERROST		500	-1	339	10 51 969 7	NADELEINZIEHWINDE
GITTERROST		501	-1	339	10 51 969 7	NADELEINZIEHWINDE
GITTERROST	10222994	46	1	505	11 23 820 4	ANLENKSTUECK KPL
GITTERROST	10227124	11	1	479	99 26 718 14	PODEST
GITTERROST	10517914	10	1	670	11 29 473 7	LAUFSTEG ZWISCHENSTUEC
GITTERROST	10517914	10	1	674	11 29 474 2	LAUFSTEG ZWISCHENSTUEC
GITTERROST	10530418	14	1	548	11 28 390 8	AL BEGEHUNG
GITTERROST	10530418	14	1	563	11 28 583 8	AL BEGEHUNG
GITTERROST	10545915	6	1	308	11 24 409 0	VERKLEIDUNG OW EINBAU KP
GITTERROST	10552808	10	1	669	10 55 280 7	GITTERROST KPL
GITTERROST	10553070	12	1	674	11 29 474 2	LAUFSTEG ZWISCHENSTUEC
GITTERROST	10553070	12	3	675	11 29 474 3	LAUFSTEG ZWISCHENSTUEC
GITTERROST	10581980	51	1	505	11 23 820 4	ANLENKSTUECK KPL
GITTERROST	10581981	52	1	505	11 23 820 4	ANLENKSTUECK KPL
GITTERROST	10581982	53	1	505	11 23 820 4	ANLENKSTUECK KPL
GITTERROST	10584105	50	1	310	11 24 409 0	VERKLEIDUNG OW EINBAU KP
GITTERROST	10598959	10	1	519	10 58 193 7	GITTERROST KPL
GITTERROST	10599053	24	1	519	10 58 193 7	GITTERROST KPL
GITTERROST	11239010	92	1	507	11 23 820 4	ANLENKSTUECK KPL
GITTERROST	11245758	3	1	645	11 24 575 5	PODEST
GITTERROST	11245766	5	2	644	11 24 147 8	UW PODEST
GITTERROST	11245767	6	2	644	11 24 147 8	UW PODEST
GITTERROST	11263492	6	1	579	11 28 648 4	MONTAGETEILE
GITTERROST	11275747	95	1	507	11 23 820 4	ANLENKSTUECK KPL
GITTERROST	11311245	15	2	548	11 28 390 8	AL BEGEHUNG
GITTERROST	11311245	15	1	563	11 28 583 8	AL BEGEHUNG
GITTERROST	11311245	14	1	570	11 28 626 1	AL BEGEHUNG
GITTERROST	11311371	20	1	563	11 28 583 8	AL BEGEHUNG
GITTERROST	11311371	15	1	570	11 28 626 1	AL BEGEHUNG
GITTERROST	11311390	20	1	570	11 28 626 1	AL BEGEHUNG
GITTERROST	11314134	10	1	675	11 29 474 3	LAUFSTEG ZWISCHENSTUEC
GITTERROST	790512314	5	1	579	11 28 648 4	MONTAGETEILE
GITTERROST	790512414	4	1	579	11 28 648 4	MONTAGETEILE
GITTERROST KPL	10552807	12	1	667	10 55 601 0	STURZSICHERUNG NRS
GITTERROST KPL	10552807	11	1	670	11 29 473 7	LAUFSTEG ZWISCHENSTUEC
GITTERROST KPL	10552807	11	1	674	11 29 474 2	LAUFSTEG ZWISCHENSTUEC
GITTERROST KPL	10552807	11	1	675	11 29 474 3	LAUFSTEG ZWISCHENSTUEC
GITTERROST KPL	10581937	70	1	507	11 23 820 4	ANLENKSTUECK KPL
GLEICHLAUF HYDR NRS	10536350	650	1	4	01 38 406 14	LR 1300 SX
GLEICHLAUF HYDR NRS	10536351	2	1	707	10 53 635 0	GLEICHLAUF HYDR NRS
GLEITDICHTRING	10352364	150	1	704	59 21 826 14	ABSTUETZZYLINDER
GLEITDICHTRING	10352365	155	1	704	59 21 826 14	ABSTUETZZYLINDER
GLEITDICHTRING	11253456	7	7	446	11 89 617 8	DS
GLEITFUEHRUNG 8/14X35 PO	11273242	17	4	308	11 24 409 0	VERKLEIDUNG OW EINBAU KP

Bezeichnung	Artikel	Pos.	Menge	Blatt	Baugruppe	Bezeichnung
GLEITRINGDICHTUNG	7610244	2	1	467	96 93 178 01	FAHRANTRIEB
GLEITSCHEIBE 72X152X6	9889809	15	1	114	10 13 975 2	RS SCHWENKJOCH
GLEITSCHEIBE 72X152X6	9889809	15	1	118	98 89 984	RS TRIEBWERK
GLEITSCHEIBE 72X152X6	9889809	15	1	121	98 89 983	RS TRIEBWERK
GLUEHLAMPE	607021114	15	1	36	70 27 205	ARBEITSSCHEINWERFER
GLUEHLAMPE	607021714	1	1	37	10 22 450 0	ARBEITSSCHEINWERFER
GLUEHLAMPE	607021714	42	1	399	11 27 973 6	KABINE EL
GLUEHLAMPE	607021714	42	1	402	10 55 963 5	SCHALTSCHR X1
GLUEHLAMPE	607023214	43	1	399	11 27 973 6	KABINE EL
GLUEHLAMPE	607023214	43	1	402	10 55 963 5	SCHALTSCHR X1
GRENZTASTER	606655108	43	1	33	11 24 519 0	OW EL
GRIFF	10020487	4	1	316	10 57 883 5	TUER
GRIFF	10020487	4	1	318	10 57 897 6	TUER
GRIFF	10020487	4	1	322	10 56 580 8	TUER
GRIFF	10428121	1	1	421	11 25 097 0	SCHIEBEFENSTER
GRIFF	10579145	2	1	321	10 56 623 7	TUER
GRIFF	10579454	2	1	320	10 57 940 0	TUER
GRIFF	7025006	20	1	431	70 24 996	SITZRAHMEN
GRIFFKAPPE	11694640	9	1	255	10 13 508 0	DRUCKROHRSTUTZEN
GRIFFSCHALE	10226472	18	1	419	10 35 007 6	SCHIEBETUER
GRIFFSCHALE	592289614	2	1	423	59 22 895 14	KLAPPE KPL
GRUNDPLATTE KPL	992757214	10	1	334	99 23 386 14	BALLASTGEWICHT ANORD
GRUNDPLATTE SCHWK	992741214	10	1	335	99 27 572 14	GRUNDPLATTE KPL
GUMMI	10522190	5	1	422	59 22 871 14	FRONTSCHEIBE KPL
GUMMI	10535526	12	1	542	99 29 588 14	AUFLAGE
GUMMI	10535526	12	2	543	10 35 063 3	HALTERUNG
GUMMI	10540082	50	2	505	11 23 820 4	ANLENKSTUECK KPL
GUMMI	11269800	9	1	183	11 94 151 8	KUEHLER EINBAU WASSER
GUMMI	11285382	11	1	549	11 28 391 3	BEFESTIGUNGSCHELLE
GUMMI	289058614	5	0.016	67	10 56 067 3	BATTERIE EINBAU KPL
GUMMI	289058614	8	0.08	67	10 56 067 3	BATTERIE EINBAU KPL
GUMMI	289058614	9	0.023	67	10 56 067 3	BATTERIE EINBAU KPL
GUMMIMUFFE	10123671	3	1	230	10 14 671 6	OELLEITUNG VORM.
GUMMIMUFFE	10126090	4	1	223	10 14 201 8	KURBELGEHAEUSEENTLUEF
GUMMIMUFFE	10126091	2	1	223	10 14 201 8	KURBELGEHAEUSEENTLUEF
GUMMIMUFFE	10126317	7	1	230	10 14 671 6	OELLEITUNG VORM.
GUMMIMUFFE	10128228	9	4	285	10 14 622 4	LADEDRUCKREGELUNG
GUMMIMUFFE	10128875	24	1	283	10 14 013 6	ATL-ANBAU
GUMMIMUFFE	10129904	4	1	267	10 14 967 6	VERBINDUNGSLEITUNG ANBA
GUMMIMUFFE	10133641	3	1	223	10 14 201 8	KURBELGEHAEUSEENTLUEF
GUMMIMUFFE	9271340	13	1	265	10 14 736 9	ANSAUGSTUTZEN ANBAU
GUMMIMUFFE	9271340	10	1	299	11 92 891 3	KOMPRESSOR NRS
GUMMIPUFFER	11903519	1	4	726	11 23 671 4	RAHMEN
GUMMIRING	10123876	103	2	296	10 15 028 8	KABELBAUM ANBAU
GUMMIRING	10123877	12	2	172	11 24 448 7	ZENTRALAGGREGAT EL
GW-LAGER	990706901	10	1	57	10 51 963 1	OW DREHVERBINDUNG EINBA
HAFTETIKETTE	10518558	1	1	631	10 52 439 2	SCHLAUCHLISTE
HAFTETIKETTE	10518558	2	5	631	10 52 439 2	SCHLAUCHLISTE
HAFTETIKETTE	10518558	1	3	693	99 27 747 14	SCHLAUCHLISTE
HAFTETIKETTE	10518558	1	2	710	10 53 635 2	SCHLAUCHLISTE
HALTEKLAMMER OT	725810414	54	2	642	10 55 372 1	DACHGELAENDER NRS
HALTEPLATTE	11259704	200	1	428	11 93 934 6	KLIMAANLAGE
HALTEPLATTE	11259705	210	1	428	11 93 934 6	KLIMAANLAGE
HALTER	10041876	17	1	271	10 14 286 0	KLIMAKOMPRESSOR ANBAU
HALTER	10138079	3	1	258	10 14 679 7	KRAFTSTOFF-FEINFILTERAN
HALTER	10144123	11	1	296	10 15 028 8	KABELBAUM ANBAU
HALTER	10145373	2	1	285	10 14 622 4	LADEDRUCKREGELUNG
HALTER	10146405	14	1	296	10 15 028 8	KABELBAUM ANBAU
HALTER	10146836	3	1	285	10 14 622 4	LADEDRUCKREGELUNG
HALTER	10223693	33	2	308	11 24 409 0	VERKLEIDUNG OW EINBAU KP

Bezeichnung	Artikel	Pos.	Menge	Blatt	Baugruppe	Bezeichnung
HALTER	10224272	61	2	34	11 24 519 0	OW EL
HALTER	10224272	49	3	399	11 27 973 6	KABINE EL
HALTER	10527391	1	1	719	10 57 848 6	MONITOR KABINE ANBAU
HALTER	10556597	12	1	183	11 94 151 8	KUEHLER EINBAU WASSER
HALTER	10575980	30	3	328	11 24 483 7	BEF-TEILE OW
HALTER	10579104	10	1	177	10 51 948 1	ANSAUGROHR OEL
HALTER	10584123	47	1	310	11 24 409 0	VERKLEIDUNG OW EINBAU KP
HALTER	10584124	48	1	310	11 24 409 0	VERKLEIDUNG OW EINBAU KP
HALTER	10591343	54	1	398	11 27 970 6	KABINE KPL
HALTER	11218236	79	1	507	11 23 820 4	ANLENKSTUECK KPL
HALTER	11242757	48	1	204	11 92 923 6	ANLAGE HARNSTOFF EINBAU
HALTER	11250382	3	1	183	11 94 151 8	KUEHLER EINBAU WASSER
HALTER	11251056	8	1	189	11 24 114 1	KUEHLER EINBAU LADELUFT
HALTER	11262894	3	1	433	11 26 095 6	STEUERKONSOLE RE KPL
HALTER	11271098	10	1	659	11 27 109 7	FANGSTANGE NRS
HALTER	11298436	10	2	555	11 94 087 8	MONTAGEEINHEIT
HALTER	592290214	81	1	416	10 35 008 0	KABINE
HALTER	592290314	82	1	416	10 35 008 0	KABINE
HALTER	592290414	84	1	416	10 35 008 0	KABINE
HALTER	954229003	101	1	330	11 24 483 7	BEF-TEILE OW
HALTER	969641501	50	1	353	96 96 543 01	WINDENRAHMEN
HALTER	992415314	10	1	657	99 24 978 14	AL EL
HALTER ANBAU	10146587	10	1	296	10 15 028 8	KABELBAUM ANBAU
HALTER KAMERA	385137114	13	1	718	10 58 064 7	VIDEOUEBERWACHUNGSANL
HALTER KPL	10584210	49	1	310	11 24 409 0	VERKLEIDUNG OW EINBAU KP
HALTER KPL	11269018	11	2	677	10 55 722 4	STURZSICHERUNG NRS
HALTER KPL	11309625	57	1	398	11 27 970 6	KABINE KPL
HALTER SCHWK	10579806	46	1	204	11 92 923 6	ANLAGE HARNSTOFF EINBAU
HALTER SCHWK	11929329	14	1	194	11 92 922 0	ANSAUGANLAGE LUFT
HALTERUNG	10350632	10	1	543	10 35 063 3	HALTERUNG
HALTERUNG	10350633	11	2	541	11 28 594 7	AUFLAGE KPL
HALTERUNG	10350633	11	2	559	11 28 619 1	AUFLAGE KPL
HALTERUNG	10350633	11	2	566	11 28 653 4	AUFLAGE KPL
HALTERUNG	10588168	18	1	65	10 58 163 4	KABINENAUFHAENGUNG KPL
HALTERUNGSSCHELLE	7362546	61	16	204	11 92 923 6	ANLAGE HARNSTOFF EINBAU
HALTERUNGSSCHELLE	7382085	40	2	296	10 15 028 8	KABELBAUM ANBAU
HALTESCHEIBE		6	1	348	93 88 497 01	PLANETENGETRIEBE
HALTESCHEIBE	944112203	51	1	392	90 01 376 2	DREHWERKANTRIEB
HALTESCHEIBE	944169103	36	1	392	90 01 376 2	DREHWERKANTRIEB
HALTESCHEIBE	944228903	16	1	392	90 01 376 2	DREHWERKANTRIEB
HALTESCHEIBE 115X55X6		31	1	348	93 88 497 01	PLANETENGETRIEBE
HALTESCHEIBE 115X55X6		41	1	348	93 88 497 01	PLANETENGETRIEBE
HALTESEIL	10350539	10	2	665	97 05 997 03	ZWISCHENABSPANNUNG NR
HALTESEIL	774760214	1	6	665	97 05 997 03	ZWISCHENABSPANNUNG NR
HALTESEIL	774760314	4	6	665	97 05 997 03	ZWISCHENABSPANNUNG NR
HALTESEIL	774760414	3	6	665	97 05 997 03	ZWISCHENABSPANNUNG NR
HALTESEIL	774760514	2	8	665	97 05 997 03	ZWISCHENABSPANNUNG NR
HALTESEIL	790538014	9	2	665	97 05 997 03	ZWISCHENABSPANNUNG NR
HALTESTANGE	10532825	10	2	557	10 53 216 2	HALTESTANGE KPL
HALTESTANGE	10532826	10	2	565	10 53 216 3	HALTESTANGE KPL
HALTESTANGE	10532827	10	2	572	10 53 216 4	HALTESTANGE KPL
HALTESTANGE	10540549	57	2	505	11 23 820 4	ANLENKSTUECK KPL
HALTESTANGE	10540549	10	2	556	10 54 054 8	HALTESTANGE KPL
HALTESTANGE	10540552	10	2	564	10 54 055 1	HALTESTANGE KPL
HALTESTANGE	10540560	10	2	571	10 54 055 5	HALTESTANGE KPL
HALTESTANGE	10540569	10	2	586	10 54 056 7	HALTESTANGE KPL
HALTESTANGE	385025414	10	2	614	95 70 956 14	HALTESTANGE KPL
HALTESTANGE	958552214	11	2	614	95 70 956 14	HALTESTANGE KPL
HALTESTANGE	958556314	23	4	620	99 23 415 14	RUECKHALTESTANGE
HALTESTANGE	958775914	11	2	620	99 23 415 14	RUECKHALTESTANGE

Bezeichnung	Artikel	Pos.	Menge	Blatt	Baugruppe	Bezeichnung
HALTESTANGE KPL	10532162	13	1	545	11 94 172 5	MONTAGEEINHEIT
HALTESTANGE KPL	10532163	13	1	561	11 94 259 4	MONTAGEEINHEIT
HALTESTANGE KPL	10532164	13	1	568	11 94 450 2	MONTAGEEINHEIT
HALTESTANGE KPL	10540548	12	1	545	11 94 172 5	MONTAGEEINHEIT
HALTESTANGE KPL	10540551	12	1	561	11 94 259 4	MONTAGEEINHEIT
HALTESTANGE KPL	10540555	12	1	568	11 94 450 2	MONTAGEEINHEIT
HALTESTANGE KPL	10540567	14	1	573	11 24 133 3	AL KOPF KPL
HALTESTANGE KPL	957095614	12	1	607	99 34 394 14	SPITZEN AL KPL
HALTESTANGE KPL	992339414	11	1	533	11 24 165 1	A-BOCK 1 MONTAGEEINHEIT
HANDENTLUEFTUNGSPUMPE	10129218	4	1	201	10 55 091 1	KRAFTSTOFFVORFILTER AN
HANDHEBELFETTPRESSE	10445635	13	1	58	11 27 315 5	ZENTRALSCHMIERUNG
HANDHEBELPRESSE 400B	885602114	4	1	501	10 56 183 8	WERKZEUG
HANDKURBEL	616155414	10	1	515	61 61 541 14	KABELTROMMEL
HANDLAUF	10518461	41	1	463	11 89 365 0	RAUPENTRAEGER RE KPL
HANDLAUF	10518461	42	1	474	11 89 365 1	RAUPENTRAEGER LI KPL
HANDLAUF	10523559	11	1	463	11 89 365 0	RAUPENTRAEGER RE KPL
HANDLAUF	10523559	11	1	474	11 89 365 1	RAUPENTRAEGER LI KPL
HANDRAD	5609144	53	1	432	10 28 999 3	SCHWINGSYSTEM
HARNSTOFFBEHAELTER	11242408	6	1	204	11 92 923 6	ANLAGE HARNSTOFF EINBAU
HAUPT EZW HYDR	10519687	2	1	357	10 51 968 6	EZW OW EINBAU KPL
HAUPTDUESE SOLEX 0.8MM	714001914	38	2	8	11 29 618 6	OW HYDR
HAUPTDUESE SOLEX 0.8MM	714001914	5	1	721	10 51 728 1	VERROHRUNG HYDR
HAUPTDUESE SOLEX 1.2MM	714002114	7	1	629	10 51 726 2	VERROHRUNG HYDR
HAUPTDUESE SOLEX 1MM	714001514	12	1	210	11 92 958 8	LUFTFUEHRUNG KPL
HEBEL	10447749	5	1	30	10 44 510 5	SCHNELLVERSCHLUSSKUPPL
HEBEL	10447749	5	1	453	10 44 510 2	SCHNELLVERSCHLUSSKUPPL
HEBEL	10447749	5	1	454	10 44 510 1	SCHNELLVERSCHLUSSKUPPL
HEBEL	11909498	160	1	428	11 93 934 6	KLIMAANLAGE
HEBEL SCHWK	992751514	18	2	679	10 51 971 3	SELBSTVERLADESYSTEM NR
HECKSCHEIBE	592289014	48	1	415	10 35 008 0	KABINE
HEIZFLANSCH ANBAU	9078314	260	1	215	12 42 545 4	DIESELMOTOR
HEIZFLANSCH VORM.	10299988	1	1	268	90 78 314	HEIZFLANSCH ANBAU
HELILAMPE EINBAU NRS	11215462	1	1	654	11 21 546 1	HELILEUCHTE NRS
HELILEUCHTE NRS	11215461	566	1	3	01 38 406 14	LR 1300 SX
HILFSSEIL	606655308	2	1	577	92 75 218 08	ENDSCHALTER HUB OBEN
HINDERNISLEUCHTE	10226144	31	2	657	99 24 978 14	AL EL
HINWEISSCHILD	9402377	10	4	521	11 26 694 5	SCHILDER ANORD
HITZESCHUTZ MIT BEFEST.	10147370	415	1	215	12 42 545 4	DIESELMOTOR
HITZESCHUTZBLECH	10147371	1	1	282	10 14 737 0	HITZESCHUTZ MIT BEFEST.
HITZESCHUTZBLECH	12428325	10	1	267	10 14 967 6	VERBINDUNGSLEITUNG ANBA
HOCHDRUCKPUMPE MIT BEFE	10150857	171	1	214	12 42 545 4	DIESELMOTOR
HOEHENSICHERUNGSGERAE	10556014	3	1	668	10 55 601 1	ABSTURZSICHERUNG KPL
HOHLSCHRAUBE	10151637	2	1	222	10 15 163 4	KOLBENKUEHLUNG VORM.
HOHLSCHRAUBE	11443132	11	2	260	10 14 333 9	KRAFTSTOFFLEITUNGEN
HOHLSCHRAUBE 10X1 9SMN	9080466	3	5	276	10 14 821 7	ROHRLEITUNG ANBAU
HOHLSCHRAUBE DIN 7643 10X	4079240	17	1	261	10 14 588 5	LECKOELRUECKLAUF
HOHLSCHRAUBE DIN 7643 12X	4980741	13	1	284	10 14 511 2	ABGASSTUTZEN ANBAU
HOHLSCHRAUBE DIN 7643 12X	4980741	3	4	302	11 41 475 7	ANBAUTEILE LUFTPRESSER
HOHLSCHRAUBE DIN 7643 15	4981226	6	4	260	10 14 333 9	KRAFTSTOFFLEITUNGEN
HOHLSCHRAUBE DIN 7643 15X	10129819	8	1	260	10 14 333 9	KRAFTSTOFFLEITUNGEN
HOHLSCHRAUBE DIN 7643 8X	4980664	10	1	261	10 14 588 5	LECKOELRUECKLAUF
HOHLSCHRAUBE DIN 7643 M1	4079160	5	7	261	10 14 588 5	LECKOELRUECKLAUF
HOHLSCHRAUBE DIN 7643 M1	4079160	8	1	285	10 14 622 4	LADEDRUCKREGELUNG
HOHLSCHRAUBE DIN 7643 M1	4079160	7	1	302	11 41 475 7	ANBAUTEILE LUFTPRESSER
HOHLSCHRAUBE R1/2"	10588723	1	1	527	59 20 224 14	LASTHALTEVENTIL
HUBLASCHE KPL	11890636	16	1	685	11 23 619 7	SELBSTVERLADESYSTEM NR
HUELSE	11267440	2	1	97	11 06 730 4	ABSCHALTVENTIL
HUELSE	11267453	3	1	99	11 26 744 7	WECHSELVENTIL
HUELSE 14/25X26 S235JRH;E	11276612	5	1	189	11 24 114 1	KUEHLER EINBAU LADELUFT
HUELSE 20/13.5X44 AISI 316	10571340	14	2	183	11 94 151 8	KUEHLER EINBAU WASSER

Bezeichnung	Artikel	Pos.	Menge	Blatt	Baugruppe	Bezeichnung
HUELSE 8X0.4	501507314	15	1	635	54 02 702 14	SEILTROMMEL KPL
HUELSE NG32/RD60/23X85	11226016	20	1	383	51 14 347 14	DW SICHERUNGSBLOCK
HUPE	614046114	81	1	399	11 27 973 6	KABINE EL
HYDRAULIKSCHLAUCH	510511814	37	5	463	11 89 365 0	RAUPENTRAEGER RE KPL
HYDRAULIKSCHLAUCH	510511814	37	5	474	11 89 365 1	RAUPENTRAEGER LI KPL
INJEKTOR KPL.	10144093	17	1	204	11 92 923 6	ANLAGE HARNSTOFF EINBAU
INJEKTOR MIT BEFEST.	10152867	190	6	214	12 42 545 4	DIESELMOTOR
INNENLAMELLE	501540514	98	7	376	99 04 645 14	ANTRIEB
INNENLAMELLE	503192901	9	9	351	93 95 895 01	BREMSLAMELLENSATZ
INNENLAMELLE	503199401	5	7	395	93 93 478 01	BREMSLAMELLENSATZ
INNENLAMELLE	540287614	6	7	393	50 20 383 01	LAMELLENBREMSE
INNENLEUCHTE	607147008	41	1	399	11 27 973 6	KABINE EL
INNENLEUCHTE	607147008	41	1	402	10 55 963 5	SCHALTSCHR X1
INNENRAD		20	1	348	93 88 497 01	PLANETENGETRIEBE
INNENRAD		55	1	348	93 88 497 01	PLANETENGETRIEBE
INNENRAD	512406114	11	1	634	54 02 701 14	PLANETENSTUFE
INNENRAD	512406214	21	1	634	54 02 701 14	PLANETENSTUFE
INNENRAD	927562801	25	1	392	90 01 376 2	DREHWERKANTRIEB
INNENRAD	944378903	60	1	467	96 93 178 01	FAHRANTRIEB
INNENRAD	944403803	10	1	467	96 93 178 01	FAHRANTRIEB
INNENRAD	944406703	65	1	467	96 93 178 01	FAHRANTRIEB
INNENRING	747401901	71	1	392	90 01 376 2	DREHWERKANTRIEB
INNENSECHSKANTSCHRAUBE	11250990	420	4	86	11 24 682 0	VERTEILERGETRIEBE
INNENSECHSKANTSCHRAUB	11290853	460	1	86	11 24 682 0	VERTEILERGETRIEBE
INNENSECHSKANTSCHRAUB	11290854	465	1	86	11 24 682 0	VERTEILERGETRIEBE
ISOLIERSCHLAUCH	603000308	86	1.2	576	10 57 559 9	KABELSATZ
ISOLIERSCHLAUCH	603000308	86	1.2	610	10 57 651 9	KABELSATZ
ISOLIERSCHLAUCH	603000408	17	2.3	314	11 24 409 1	VERKLEIDUNG
ISOLIERSTUECK	10227563	79	2	402	10 55 963 5	SCHALTSCHR X1
ISOLIERUNG	11892804	18	1	724	11 93 621 2	KLIMAANLAGE NRS
JACK-UP SYSTEM HYDR NRS	11235246	2	1	701	11 89 568 7	SELBSTVERLADESYSTEM NR
JACK-UP SYSTEM HYDR NRS	11894080	2	1	695	11 89 568 5	SELBSTVERLADESYSTEM NR
KABEL	11234650	150	4	400	11 27 973 6	KABINE EL
KABEL	11240499	3	1	715	10 53 352 4	KABINE EL
KABEL	993856014	40	1	575	10 57 559 9	KABELSATZ
KABEL WINDGEBER	918361414	41	1	575	10 57 559 9	KABELSATZ
KABEL WINDGEBER	918361414	41	1	609	10 57 651 9	KABELSATZ
KABELBAUM	12403954	1	1	296	10 15 028 8	KABELBAUM ANBAU
KABELBAUM ANBAU	10150288	580	1	216	12 42 545 4	DIESELMOTOR
KABELBINDER	603202208	61	1	741	10 52 155 9	MODUL BETANKUNGSANLAG
KABELBINDER	603202314	99	2	296	10 15 028 8	KABELBAUM ANBAU
KABELDURCHFUEHRUNG KAB	916525114	31	1	399	11 27 973 6	KABINE EL
KABELLEITER SCHWK	11246919	42	1	328	11 24 483 7	BEF-TEILE OW
KABELLEITER SCHWK	11247023	61	1	330	11 24 483 7	BEF-TEILE OW
KABELLEITER SCHWK	11247131	62	1	330	11 24 483 7	BEF-TEILE OW
KABELLEITER SCHWK	11247158	48	1	328	11 24 483 7	BEF-TEILE OW
KABELLEITER SCHWK	11247207	50	1	328	11 24 483 7	BEF-TEILE OW
KABELLEITER SCHWK	11265089	65	1	330	11 24 483 7	BEF-TEILE OW
KABELSATZ	10223208	30	1	428	11 93 934 6	KLIMAANLAGE
KABELSATZ	10575599	21	1	574	10 53 141 3	AL KOPF EL
KABELSATZ	10576519	21	1	608	99 33 094 14	NADEL EL
KABELSATZ	11376327	582	1	216	12 42 545 4	DIESELMOTOR
KABELSATZ	11946453	290	1	428	11 93 934 6	KLIMAANLAGE
KABELSATZ	11946454	300	1	428	11 93 934 6	KLIMAANLAGE
KABELSATZ	11946455	310	1	428	11 93 934 6	KLIMAANLAGE
KABELSATZ 1 ANLENKSTUECK	11901511	21	1	511	11 90 150 9	ANLENKSTUECK EL
KABELSATZ ANBAU	10150287	2	1	296	10 15 028 8	KABELBAUM ANBAU
KABELSATZ ANBAU	11425228	8	1	296	10 15 028 8	KABELBAUM ANBAU
KABELSCHUH	602206114	24	1	39	10 56 645 8	KLEMMKASTEN
KABELSCHUH	602206514	74	2	34	11 24 519 0	OW EL

Bezeichnung	Artikel	Pos.	Menge	Blatt	Baugruppe	Bezeichnung
KABELSCHUH	602213314	27	2	611	10 57 652 3	KLEMMDOSE
KABELSTRANG	10226573	3	1	339	10 51 969 7	NADELEINZIEHWINDE
KABELSTRANG	10226573	91	1	513	11 90 151 1	KABELSATZ 1 ANLENKSTUECK
KABELSTRANG	10226574	3	1	627	10 51 743 9	SEILEINZIEHWINDE KPL NRS
KABELSTRANG	10519084	203	1	400	11 27 973 6	KABINE EL
KABELSTRANG	10540846	98	1	400	11 27 973 6	KABINE EL
KABELSTRANG	11239085	11	1	40	11 23 908 2	STEUERPULT
KABELSTRANG	11259039	206	1	400	11 27 973 6	KABINE EL
KABELSTRANG	11265111	11	1	514	91 92 528 14	KABELTROMMEL
KABELSTRANG	11912031	205	1	400	11 27 973 6	KABINE EL
KABELSTRANG BETANKUNG	10521560	60	1	741	10 52 155 9	MODUL BETANKUNGSANLAG
KABELSTRANG W 1	11247122	11	1	172	11 24 448 7	ZENTRALAGGREGAT EL
KABELSTRANG W 10	10559638	25	1	402	10 55 963 5	SCHALTSCHR X1
KABELSTRANG W 19	10519082	201	1	400	11 27 973 6	KABINE EL
KABELSTRANG W 2	11247121	11	1	33	11 24 519 0	OW EL
KABELSTRANG W 20	11261603	202	1	400	11 27 973 6	KABINE EL
KABELSTRANG W 22	10519085	204	1	400	11 27 973 6	KABINE EL
KABELSTRANG W 3	10563643	13	1	33	11 24 519 0	OW EL
KABELSTRANG W 40	10563800	41	1	536	10 53 120 7	A-BOCK EL
KABELSTRANG W 40	11314473	50	1	536	10 53 120 7	A-BOCK EL
KABELSTRUMPF	602707214	90	1	500	10 56 187 5	WERKZEUGAUSRUESTUNG
KABELSTRUMPF	602707414	91	1	500	10 56 187 5	WERKZEUGAUSRUESTUNG
KABELTROMMEL	616154114	21	1	514	91 92 528 14	KABELTROMMEL
KABELTROMMEL	919252814	31	1	511	11 90 150 9	ANLENKSTUECK EL
KABELTUELLE	11946462	360	1	428	11 93 934 6	KLIMAANLAGE
KABELVERSCHRAUBUNG	10045155	21	2	512	11 90 151 1	KABELSATZ 1 ANLENKSTUECK
KABELVERSCHRAUBUNG	10045155	21	12	575	10 57 559 9	KABELSATZ
KABELVERSCHRAUBUNG	10045155	61	3	575	10 57 559 9	KABELSATZ
KABELVERSCHRAUBUNG	10045155	21	4	609	10 57 651 9	KABELSATZ
KABELVERSCHRAUBUNG	10045156	22	1	609	10 57 651 9	KABELSATZ
KABELVERSCHRAUBUNG	10045156	35	1	609	10 57 651 9	KABELSATZ
KABELVERSCHRAUBUNG	10045157	22	1	512	11 90 151 1	KABELSATZ 1 ANLENKSTUECK
KABELVERSCHRAUBUNG	10045157	37	1	512	11 90 151 1	KABELSATZ 1 ANLENKSTUECK
KABELVERSCHRAUBUNG	602440101	37	2	657	99 24 978 14	AL EL
KABELVERSCHRAUBUNG	602440301	23	1	512	11 90 151 1	KABELSATZ 1 ANLENKSTUECK
KABELVERSCHRAUBUNG	602440301	45	1	512	11 90 151 1	KABELSATZ 1 ANLENKSTUECK
KABINE	10350080	10	1	398	11 27 970 6	KABINE KPL
KABINE EL	10533524	50	1	714	10 53 246 1	KAMERAUEBERWACHUNG
KABINE EL	11279736	3	1	398	11 27 970 6	KABINE KPL
KABINE KPL	11279706	30	1	2	01 38 406 14	LR 1300 SX
KABINE REST EL	11215302	50	1	656	11 21 529 8	WARNLICHT EL NRS
KABINENAUFHAENGUNG KPL	10581634	35	1	6	11 24 047 9	OW KPL
KABINENNEIGUNG EL NRS	10531224	3	1	720	10 51 728 0	KABINENNEIGUNG NRS
KABINENNEIGUNG NRS	10517280	719	1	4	01 38 406 14	LR 1300 SX
KAEFIGMUTTER M10-R-140-32	413003308	80	32	306	11 24 114 6	ABDECKUNG
KAEFIGMUTTER M10-R-140-32	413003308	38	18	326	11 24 922 2	ABDECKUNG UNTERSEITE
KAEFIGMUTTER M10-R-140-47	413003508	82	10	306	11 24 114 6	ABDECKUNG
KAEFIGMUTTER M10-R-140-47	413003508	58	4	310	11 24 409 0	VERKLEIDUNG OW EINBAU KP
KAEFIGMUTTER M10-R-140-62	413004408	81	8	306	11 24 114 6	ABDECKUNG
KAEFIGMUTTER M10-R-140-62	413004408	13	24	324	10 54 591 0	MOTORABDECKUNG
KAEFIGMUTTER M10-RR-140-4	485549914	21	2	45	10 51 961 6	OELKUEHLER EINBAU
KAEFIGMUTTER M10-RR-140-4	485549914	2	8	69	10 56 069 4	MODULE EINBAU
KAEFIGMUTTER M10-RR-140-4	485549914	32	53	326	11 24 922 2	ABDECKUNG UNTERSEITE
KAEFIGMUTTER M10-RR-140-6	485550014	19	4	67	10 56 067 3	BATTERIE EINBAU KPL
KAEFIGMUTTER M10-RR-140-6	485550014	29	21	308	11 24 409 0	VERKLEIDUNG OW EINBAU KP
KAEFIGMUTTER M10-RR-140-6	485550014	25	2	326	11 24 922 2	ABDECKUNG UNTERSEITE
KAEFIGMUTTER M8-R-123-47 S	413003208	9	2	723	11 22 037 2	FUSSPEDAL EL EINBAU
KAEFIGMUTTER M8-RR-123-4	485550114	61	5	310	11 24 409 0	VERKLEIDUNG OW EINBAU KP
KAEFIGMUTTER M8-RR-123-4	485550114	4	4	369	99 29 389 14	SEITENTEIL
KAEFIGMUTTER M8-RR-123-4	485550114	4	4	370	99 29 392 14	SEITENTEIL

Bezeichnung	Artikel	Pos.	Menge	Blatt	Baugruppe	Bezeichnung
KAEFIGMUTTER M8-RR-123-4	485550114	16	2	372	99 29 386 14	KONSOLE KPL
KAEFIGMUTTER M8-RR-123-4	485550114	16	2	373	99 29 434 14	KONSOLE KPL
KAEFIGMUTTER M8-RR-123-4	485550114	30	3	398	11 27 970 6	KABINE KPL
KAEFIGMUTTER M8-RR-123-4	485550114	43	2	642	10 55 372 1	DACHGELAENDER NRS
KAMERA CCD	10024012	31	1	714	10 53 246 1	KAMERAUEBERWACHUNG
KAMERA CCD	10024012	31	1	716	10 50 775 0	KAMERAUEBERWACHUNG
KAMERAUEBERWACHUNG	10507750	8	1	713	11 89 400 8	VIDEOUEBERWACHUNGSANL
KAMERAUEBERWACHUNG	10532461	7	1	713	11 89 400 8	VIDEOUEBERWACHUNGSANL
KAMERAUEBERWACHUNG	11893352	3	1	713	11 89 400 8	VIDEOUEBERWACHUNGSANL
KANTENSCHUTZ FLEXIBEL	10352462	17	0.422	548	11 28 390 8	AL BEGEHUNG
KANTENSCHUTZ FLEXIBEL	10352462	17	0.422	563	11 28 583 8	AL BEGEHUNG
KANTENSCHUTZ FLEXIBEL	10352462	17	0.422	570	11 28 626 1	AL BEGEHUNG
KANTENSCHUTZ FLEXIBEL	10352462	15	0.22	678	11 26 901 8	HALTER KPL
KANTENSCHUTZ FLEXIBEL	262103101	16	0.16	543	10 35 063 3	HALTERUNG
KANTENSCHUTZ FLEXIBEL	262105314	14	9	314	11 24 409 1	VERKLEIDUNG
KANTENSCHUTZ FLEXIBEL	262105314	2	1.1	316	10 57 883 5	TUER
KANTENSCHUTZ METERWAR	226016702	29	2.18	326	11 24 922 2	ABDECKUNG UNTERSEITE
KANTENSCHUTZ METERWAR	226016702	30	1.11	326	11 24 922 2	ABDECKUNG UNTERSEITE
KANTENSCHUTZ METERWAR	226016702	31	1.19	326	11 24 922 2	ABDECKUNG UNTERSEITE
KANTENSCHUTZ METERWAR	226016702	33	1.24	326	11 24 922 2	ABDECKUNG UNTERSEITE
KANTENSCHUTZ METERWAR	226016702	34	1.29	326	11 24 922 2	ABDECKUNG UNTERSEITE
KANTENSCHUTZ METERWAR	226016702	35	0.57	326	11 24 922 2	ABDECKUNG UNTERSEITE
KANTENSCHUTZ METERWAR	226016702	36	0.85	326	11 24 922 2	ABDECKUNG UNTERSEITE
KANTENSCHUTZ METERWAR	226016702	37	1.2	326	11 24 922 2	ABDECKUNG UNTERSEITE
KANTENSCHUTZ METERWAR	226016702	39	0.36	326	11 24 922 2	ABDECKUNG UNTERSEITE
KANTENSCHUTZ METERWAR	226016702	40	0.35	326	11 24 922 2	ABDECKUNG UNTERSEITE
KANTENSCHUTZ METERWAR	226016702	22	0.45	514	91 92 528 14	KABELTROMMEL
KANTENSCHUTZ METERWAR	226017802	102	4	507	11 23 820 4	ANLENKSTUECK KPL
KANTENSCHUTZ METERWAR	226017802	13	1.132	546	11 24 570 3	AL ZWISCHENSTUECK KPL
KANTENSCHUTZ METERWAR	226017802	13	1.132	562	11 24 570 9	AL ZWISCHENSTUECK KPL
KANTENSCHUTZ METERWAR	226017802	13	1.132	569	11 24 571 5	AL ZWISCHENSTUECK KPL
KAPPE	11239908	7	1	692	59 21 584 14	SENKBREMSVENTIL
KARABINERHAKEN	10508505	17	1	659	11 27 109 7	FANGSTANGE NRS
KARABINERHAKEN	744010014	2	1	458	11 91 872 5	KETTE KPL
KARABINERHAKEN	744010414	5	2	472	99 08 357 14	ANHAENGEKETTE
KARABINERHAKEN	744011114	12	5	312	11 24 409 1	VERKLEIDUNG
KARTUSCHE	571352308	1	1	212	11 83 721 4	LUFTTROCKNER
KBA-RING	11351303	3	1	234	10 14 636 7	KOLBEN KPL.
KEGEL	7024502	170	14	18	11 28 647 6	VENTILBLOCK
KEGEL	9266085	12	1	113	92 78 875	DRUCKABSCHNEIDUNG
KEGELROLLENLAGER	10355730	15	1	165	11 21 593 6	PUMPENELEMENT
KEGELROLLENLAGER	10355731	16	1	165	11 21 593 6	PUMPENELEMENT
KEGELROLLENLAGER	11214718	10	1	448	10 50 351 3	TRIEBWERK
KEGELROLLENLAGER	11214719	11	1	448	10 50 351 3	TRIEBWERK
KEGELROLLENLAGER	11940207	11	1	387	11 94 017 7	TRIEBWELLE
KEGELROLLENLAGER	7023837	10	1	387	11 94 017 7	TRIEBWELLE
KEGELROLLENLAGER	7462008	12	1	392	90 01 376 2	DREHWERKANTRIEB
KEGELROLLENLAGER	746224201	3	1	392	90 01 376 2	DREHWERKANTRIEB
KEGELROLLENLAGER	746225801	4	1	467	96 93 178 01	FAHRANTRIEB
KEGELROLLENLAGER	761008703	3	1	467	96 93 178 01	FAHRANTRIEB
KEGELSCHMIERNIPPEL	7001228	18	2	71	10 51 969 4	A-BOCK AUFRICHTZYL EINBA
KEGELSCHMIERNIPPEL	774301101	65	1	633	59 20 694 14	WINDE
KEGELSCHMIERNIPPEL	7743242	5	2	70	99 23 451 14	ANLENKBOLZEN EINBAU
KEGELSCHMIERNIPPEL	7743242	18	1	345	96 96 248 01	WINDE
KEGELSCHMIERNIPPEL	7743242	16	2	535	11 24 444 4	A-BOCK 1 KPL
KEGELSCHMIERNIPPEL	7743242	28	4	613	11 28 744 5	MONTAGETEILE
KEGELSCHMIERNIPPEL	7743242	18	4	700	11 89 568 6	SELBSTVERLADESYSTEM NR
KEGELSTOPFEN		23	1	348	93 88 497 01	PLANETENGETRIEBE
KEGELSTOPFEN	779006601	89	1	392	90 01 376 2	DREHWERKANTRIEB
KEGELSTOPFEN	779006901	85	1	467	96 93 178 01	FAHRANTRIEB

Bezeichnung	Artikel	Pos.	Menge	Blatt	Baugruppe	Bezeichnung
KEILRIPPENRIEMEN	11482412	7	1	271	10 14 286 0	KLIMAKOMPRESSOR ANBAU
KEILSICHERUNGSSCHEIBE M	10536579	29	4	505	11 23 820 4	ANLENKSTUECK KPL
KEILSICHERUNGSSCHEIBE M	10536579	16	4	580	11 28 610 5	ARRETIERUNG KPL
KEILSICHERUNGSSCHEIBE M	10536580	17	2	617	10 55 753 7	SPITZENENDSCHALTER LI EIN
KEILSICHERUNGSSCHEIBE M	10536580	17	2	618	10 55 757 6	SPITZENENDSCHALTER RE E
KEILSICHERUNGSSCHEIBE M	10536580	52	16	662	99 10 116 14	SEILFUEHRUNG
KEILSICHERUNGSSCHEIBE M	10536580	11	8	733	10 52 293 0	DW GEBER NRS
KEILSICHERUNGSSCHEIBE M	10536581	24	8	535	11 24 444 4	A-BOCK 1 KPL
KEILSICHERUNGSSCHEIBE M	10536581	29	8	588	99 23 398 14	ROLLENSATZ
KEILSICHERUNGSSCHEIBE M	10536581	37	4	613	11 28 744 5	MONTAGETEILE
KEILSICHERUNGSSCHEIBE M	10536581	18	4	617	10 55 753 7	SPITZENENDSCHALTER LI EIN
KEILSICHERUNGSSCHEIBE M	10536581	18	4	618	10 55 757 6	SPITZENENDSCHALTER RE E
KEILSICHERUNGSSCHEIBE M	10536582	21	13	357	10 51 968 6	EZW OW EINBAU KPL
KEILSICHERUNGSSCHEIBE M	10536582	1	8	366	99 29 258 14	EZW ROLLENPAKET
KEILSICHERUNGSSCHEIBE M1	7024427	30	8	588	99 23 398 14	ROLLENSATZ
KEILSICHERUNGSSCHEIBE M1	7024427	36	20	613	11 28 744 5	MONTAGETEILE
KEILSICHERUNGSSCHEIBE M1	7623374	31	16	357	10 51 968 6	EZW OW EINBAU KPL
KEILSICHERUNGSSCHEIBE M2	10536600	15	22	357	10 51 968 6	EZW OW EINBAU KPL
KEILSICHERUNGSSCHEIBE M6	10536576	20	4	678	11 26 901 8	HALTER KPL
KEILSICHERUNGSSCHEIBE M8	10536577	16	4	617	10 55 753 7	SPITZENENDSCHALTER LI EIN
KEILSICHERUNGSSCHEIBE M8	10536577	16	4	618	10 55 757 6	SPITZENENDSCHALTER RE E
KERBNAGEL ISO 8746 2X6 ST	431500401	92	2	392	90 01 376 2	DREHWERKANTRIEB
KERBNAGEL ISO 8746 2X6 ST	431500401	96	2	467	96 93 178 01	FAHRANTRIEB
KETTE	740000208	1	0.4	458	11 91 872 5	KETTE KPL
KETTE	740000208	20	3	589	99 30 800 14	SPITZENENDSCHALTER EINBA
KETTE	740000908	4	0.624	472	99 08 357 14	ANHAENGEKETTE
KETTE KPL	10350940	22	4	679	10 51 971 3	SELBSTVERLADESYSTEM NR
KETTE KPL	11918725	25	2	442	11 89 300 5	VERROHRUNG HYDR
KETTENVERBINDUNGSSCHL	773967214	2	4	472	99 08 357 14	ANHAENGEKETTE
KFZ-LEITUNG	10870540	251	10.7	39	10 56 645 8	KLEMMKASTEN
KFZ-LEITUNG	10870540	26	0.12	611	10 57 652 3	KLEMMDOSE
KIPPHEBEL VORM.	11448000	2	2	237	11 44 800 5	KIPPHEBELBOCK VORM.
KIPPHEBELBOCK KPL.	10148438	81	6	214	12 42 545 4	DIESELMOTOR
KIPPHEBELBOCK VORM.	11448005	1	1	236	10 14 843 8	KIPPHEBELBOCK KPL.
KLAMMER	11946451	280	1	428	11 93 934 6	KLIMAANLAGE
KLAPPE	11909480	100	1	428	11 93 934 6	KLIMAANLAGE
KLAPPE KPL	592289514	57	1	415	10 35 008 0	KABINE
KLAPPKONSOLE	10564433	10	4	700	11 89 568 6	SELBSTVERLADESYSTEM NR
KLEBESCHILD	11228726	20	1	669	10 55 280 7	GITTERROST KPL
KLEBESCHILD	11228726	17	1	676	10 55 514 8	STURZSICHERUNG NRS
KLEBESCHILD	11228734	23	1	667	10 55 601 0	STURZSICHERUNG NRS
KLEBESCHILD	11228734	16	1	670	11 29 473 7	LAUFSTEG ZWISCHENSTUEC
KLEBESCHILD	11228734	17	1	674	11 29 474 2	LAUFSTEG ZWISCHENSTUEC
KLEBESCHILD	11228734	19	1	675	11 29 474 3	LAUFSTEG ZWISCHENSTUEC
KLEBESCHILD	11228734	18	1	676	10 55 514 8	STURZSICHERUNG NRS
KLEBSTOFF	811208201	118	1	141	10 14 131 6	ANSCHLUSSPLATTE VORM.
KLEBSTOFF	8655023	118	1	105	10 11 835 0	ANSCHLUSSGEHAEUSE
KLEBSTOFF	8655023	104	1	217	11 38 961 7	KURBELGEHAEUSE KPL. MIT
KLEBSTOFF	8655032	119	1	107	10 11 835 7	RS ANSCHLUSSGEHAEUSE
KLEMMBUEGEL	10509133	3	2	67	10 56 067 3	BATTERIE EINBAU KPL
KLEMMDOSE	10572531	20	1	512	11 90 151 1	KABELSATZ 1 ANLENKSTUECK
KLEMMDOSE	10573292	20	1	575	10 57 559 9	KABELSATZ
KLEMMDOSE	10576523	20	1	609	10 57 651 9	KABELSATZ
KLEMMHAELFTE	602008508	57	6	183	11 94 151 8	KUEHLER EINBAU WASSER
KLEMMHAELFTE	602008508	55	2	210	11 92 958 8	LUFTFUEHRUNG KPL
KLEMMHAELFTE	602008808	38	4	476	11 31 390 8	MITTELTEIL KPL
KLEMMHAELFTE	602010114	36	16	476	11 31 390 8	MITTELTEIL KPL
KLEMMHAELFTE	602017114	72	8	507	11 23 820 4	ANLENKSTUECK KPL
KLEMMHAELFTE	602017114	19	4	548	11 28 390 8	AL BEGEHUNG
KLEMMHAELFTE	602017114	19	4	563	11 28 583 8	AL BEGEHUNG

Bezeichnung	Artikel	Pos.	Menge	Blatt	Baugruppe	Bezeichnung
KLEMMHAELFTE	602017114	19	4	570	11 28 626 1	AL BEGEHUNG
KLEMMHAELFTE	7365090	56	6	183	11 94 151 8	KUEHLER EINBAU WASSER
KLEMMHAELFTE	7404678	37	4	476	11 31 390 8	MITTELTEIL KPL
KLEMMHAELFTE	7413103	38	12	463	11 89 365 0	RAUPENTRAEGER RE KPL
KLEMMHAELFTE	7413103	38	12	474	11 89 365 1	RAUPENTRAEGER LI KPL
KLEMMHALTER B30	10537558	1	1	435	10 53 756 0	LEUCHTENHALTER KPL
KLEMMHEBEL	10555411	9	1	435	10 53 756 0	LEUCHTENHALTER KPL
KLEMMHEBEL	11228775	15	1	653	11 22 870 8	SCHEINWERFERHALTER KPL
KLEMMHEBEL	11228777	17	2	653	11 22 870 8	SCHEINWERFERHALTER KPL
KLEMMKASTEN	10566458	103	1	34	11 24 519 0	OW EL
KLEMMPROFIL	7014524	42	5	183	11 94 151 8	KUEHLER EINBAU WASSER
KLEMMPROFIL	7014524	30	4.5	306	11 24 114 6	ABDECKUNG
KLEMMRING	979896808	30	2	198	11 24 114 3	ABGASANLAGE
KLEMMSTUECK	319719401	30	5	346	93 88 500 01	SEILTROMMEL
KLIMAANLAGE	11939346	1	1	426	11 94 091 0	KLIMAGERAET NRS
KLIMAANLAGE NRS	11936212	724	1	4	01 38 406 14	LR 1300 SX
KLIMAGERAET NRS	11940910	124	1	416	10 35 008 0	KABINE
KLIMAKOMPRESSOR	10116767	1	1	271	10 14 286 0	KLIMAKOMPRESSOR ANBAU
KLIMAKOMPRESSOR ANBAU	10142860	340	1	215	12 42 545 4	DIESELMOTOR
KNEBEL	956049414	21	4	662	99 10 116 14	SEILFUEHRUNG
KNOPF	10289975	43	4	430	10 22 506 8	FAHRERSITZ
KNOPF	10504994	9	1	712	11 23 623 3	TASCHENSCHLOSS
KNOTENKETTE	740000801	16	2.3	314	11 24 409 1	VERKLEIDUNG
KOERPER	11932850	1	1	28	51 16 576 14	TEMPERATURREGLER
KOLBEN	10007952	4	7	449	10 00 794 7	TRIEBWERK HYDRAULIKTEIL
KOLBEN	10143510	1	1	234	10 14 636 7	KOLBEN KPL.
KOLBEN	10149655	1	1	220	10 13 845 0	ENDREGELVENTIL
KOLBEN	10152593	1	1	244	10 15 259 2	UEBERDRUCKVENTIL
KOLBEN	10324863	1	9	158	10 32 489 2	TRIEBWERK
KOLBEN	11226017	30	1	383	51 14 347 14	DW SICHERUNGSBLOCK
KOLBEN	11913123	2	1	99	11 26 744 7	WECHSELVENTIL
KOLBEN	9886591	6	1	243	10 12 948 0	OELKUEHLER VORM.
KOLBEN DS	10352353	80	1	704	59 21 826 14	ABSTUETZZYLINDER
KOLBEN DS	10352357	115	1	704	59 21 826 14	ABSTUETZZYLINDER
KOLBEN KPL.	10146367	70	6	214	12 42 545 4	DIESELMOTOR
KOLBEN M. KOLBENRINGEN	11940198	4	7	386	11 94 017 6	TRIEBWERK HYDRAULIKTEIL
KOLBENBOLZEN 52X80 16MN	10282849	6	1	234	10 14 636 7	KOLBEN KPL.
KOLBENKUEHLDUESE	10151636	1	1	222	10 15 163 4	KOLBENKUEHLUNG VORM.
KOLBENKUEHLUNG	10142749	15	6	214	12 42 545 4	DIESELMOTOR
KOLBENKUEHLUNG VORM.	10151634	1	1	221	10 14 274 9	KOLBENKUEHLUNG
KOMPENSATOR	10141520	5	2	281	10 14 144 3	ABGASROHR VORM.
KOMPENSATOR	10149145	2	1	284	10 14 511 2	ABGASSTUTZEN ANBAU
KOMPRESSOR NRS	11928913	67	1	80	11 92 885 2	ZENTRALAGGREGAT KPL
KONSOLE	10552306	1	1	56	10 55 268 1	MITNEHMER EINBAU
KONSOLE	10579755	3	2	176	11 24 113 8	MOTORLAGER KPL
KONSOLE	10579779	5	1	176	11 24 113 8	MOTORLAGER KPL
KONSOLE	10579979	7	1	67	10 56 067 3	BATTERIE EINBAU KPL
KONSOLE	11215384	6	1	176	11 24 113 8	MOTORLAGER KPL
KONSOLE	11215385	13	1	194	11 92 922 0	ANSAUGANLAGE LUFT
KONSOLE	11247208	12	1	194	11 92 922 0	ANSAUGANLAGE LUFT
KONSOLE	11247464	9	1	198	11 24 114 3	ABGASANLAGE
KONSOLE	11247607	8	1	198	11 24 114 3	ABGASANLAGE
KONSOLE	11249800	2	2	176	11 24 113 8	MOTORLAGER KPL
KONSOLE	11249889	9	2	176	11 24 113 8	MOTORLAGER KPL
KONSOLE	11250222	4	2	176	11 24 113 8	MOTORLAGER KPL
KONSOLE	11263501	17	1	176	11 24 113 8	MOTORLAGER KPL
KONSOLE	11404751	3	1	267	10 14 967 6	VERBINDUNGSLEITUNG ANBA
KONSOLE	918585114	22	2	65	10 58 163 4	KABINENAUFHAENGUNG KPL
KONSOLE	954485303	64	1	330	11 24 483 7	BEF-TEILE OW
KONSOLE	992757514	11	4	336	10 52 656 0	MONTAGETEILE

Bezeichnung	Artikel	Pos.	Menge	Blatt	Baugruppe	Bezeichnung
KONSOLE HINTEN	11262893	1	1	433	11 26 095 6	STEUERKONSOLE RE KPL
KONSOLE KPL	992938614	4	1	368	99 33 537 14	SEILSCHUTZ EZW KPL
KONSOLE KPL	992943414	5	1	368	99 33 537 14	SEILSCHUTZ EZW KPL
KONSOLE SCHWK	11245759	2	2	644	11 24 147 8	UW PODEST
KONSOLE SCHWK	11245922	3	2	644	11 24 147 8	UW PODEST
KONTAKTBUCHSE	605601801	427	24	39	10 56 645 8	KLEMMKASTEN
KONTAKTBUCHSE	605610301	426	24	39	10 56 645 8	KLEMMKASTEN
KONTAKTELEMENT	693004614	34	1	741	10 52 155 9	MODUL BETANKUNGSANLAG
KONTAKTSTIFT	605601701	35	5	512	11 90 151 1	KABELSATZ 1 ANLENKSTUECK
KONTAKTSTIFT	605601701	53	6	575	10 57 559 9	KABELSATZ
KONTAKTSTIFT	605601701	34	2	609	10 57 651 9	KABELSATZ
KONTAKTVERRIEGELUNG	605252214	71	2	575	10 57 559 9	KABELSATZ
KONTAKTVERRIEGELUNG	693013414	12	1	739	10 52 957 6	BETANKUNGSPUMPE KPL
KONTAKTVERRIEGELUNG	7368242	52	3	399	11 27 973 6	KABINE EL
KONTAKTVERRIEGELUNG	7368248	94	1	400	11 27 973 6	KABINE EL
KONTROLLLEUCHTE	11258086	41	1	33	11 24 519 0	OW EL
KONUSLAGER	746923314	21	2	176	11 24 113 8	MOTORLAGER KPL
KOPFSTUETZE	737022103	12	1	398	11 27 970 6	KABINE KPL
KOPPELLASCHE	10226402	11	4	556	10 54 054 8	HALTESTANGE KPL
KOPPELLASCHE	10226402	11	4	564	10 54 055 1	HALTESTANGE KPL
KOPPELLASCHE	10226402	11	4	571	10 54 055 5	HALTESTANGE KPL
KOPPELLASCHE	10226402	18	4	586	10 54 056 7	HALTESTANGE KPL
KOPPELLASCHE	10336761	11	4	539	99 23 394 14	HALTESTANGE KPL
KOPPELLASCHE	10348886	11	4	586	10 54 056 7	HALTESTANGE KPL
KOPPELLASCHE	10533594	11	4	557	10 53 216 2	HALTESTANGE KPL
KOPPELLASCHE	10533594	11	4	565	10 53 216 3	HALTESTANGE KPL
KOPPELLASCHE	10533594	11	4	572	10 53 216 4	HALTESTANGE KPL
KOPPELLASCHE	10534277	43	4	505	11 23 820 4	ANLENKSTUECK KPL
KOPPELLASCHE	385043714	18	4	620	99 23 415 14	RUECKHALTESTANGE
KOPPELLASCHE	919981214	23	2	613	11 28 744 5	MONTAGETEILE
KOPPELLASCHE	949911114	12	8	614	95 70 956 14	HALTESTANGE KPL
KOPPELLASCHE	950411414	13	4	620	99 23 415 14	RUECKHALTESTANGE
KOPPELLASCHE	958339514	7	4	579	11 28 648 4	MONTAGETEILE
KOPPELLASCHE	958339514	12	4	620	99 23 415 14	RUECKHALTESTANGE
KOPPELLASCHE	958339714	13	4	614	95 70 956 14	HALTESTANGE KPL
KRAFTMESSACHSE	11261289	1	2	530	11 29 259 6	KRAFTMESSACHSE EL
KRAFTMESSACHSE EL	11292596	3	1	522	11 29 259 8	RUECKFALLSTUETZE
KRAFTMESSLASCHE	10530243	31	2	536	10 53 120 7	A-BOCK EL
KRAFTSTOFF-FEINFILTERAN	10146797	201	1	215	12 42 545 4	DIESELMOTOR
KRAFTSTOFFANLAGE	11241144	50	1	80	11 92 885 2	ZENTRALAGGREGAT KPL
KRAFTSTOFFFEINFILTER	10146753	1	1	258	10 14 679 7	KRAFTSTOFF-FEINFILTERAN
KRAFTSTOFFFEINFILTER	10429946	2	2	259	10 14 675 3	KRAFTSTOFFFEINFILTER
KRAFTSTOFFLEITUNG	9076621	4	1	261	10 14 588 5	LECKOELRUECKLAUF
KRAFTSTOFFLEITUNGEN	10143339	212	1	215	12 42 545 4	DIESELMOTOR
KRAFTSTOFFSCHLAUCH	553128608	43	2.5	183	11 94 151 8	KUEHLER EINBAU WASSER
KRAFTSTOFFSCHLAUCH	553128608	33	1.5	204	11 92 923 6	ANLAGE HARNSTOFF EINBAU
KRAFTSTOFFTANK EINBAU	10560732	16	1	6	11 24 047 9	OW KPL
KRAFTSTOFFTANK KPL	10560733	10	1	52	10 56 073 2	KRAFTSTOFFTANK EINBAU
KRAFTSTOFFTANK SCHWK	10560734	10	1	53	10 56 073 3	KRAFTSTOFFTANK KPL
KRAFTSTOFFVORFILTER	10303007	1	1	201	10 55 091 1	KRAFTSTOFFVORFILTER AN
KRAFTSTOFFVORFILTER AN	10550911	10	1	199	11 24 114 4	KRAFTSTOFFANLAGE
KREUZLASCHE	956507814	31	1	613	11 28 744 5	MONTAGETEILE
KREUZLASCHE	956507814	10	1	711	11 23 626 6	SEILHALTERUNG NRS
KREUZMEISTERSCH EL EINBA	10521602	15	1	2	01 38 406 14	LR 1300 SX
KRUEMMER	10153669	1	1	277	10 14 274 2	KUEHLMITTELKRUEMMER AN
KRUEMMER	550789808	16	1	194	11 92 922 0	ANSAUGANLAGE LUFT
KUEHLER	11267560	29	1	186	10 57 423 7	KUEHLER MOTOR
KUEHLER EINBAU LADELUFT	11241141	29	1	80	11 92 885 2	ZENTRALAGGREGAT KPL
KUEHLER EINBAU WASSER	11941518	28	1	80	11 92 885 2	ZENTRALAGGREGAT KPL
KUEHLER MOTOR	10225925	21	1	8	11 29 618 6	OW HYDR

Bezeichnung	Artikel	Pos.	Menge	Blatt	Baugruppe	Bezeichnung
KUEHLER MOTOR	10574237	10	1	183	11 94 151 8	KUEHLER EINBAU WASSER
KUEHLER MOTOR	10574239	1	1	189	11 24 114 1	KUEHLER EINBAU LADELUFT
KUEHLMITTEL	553078814	15	2.2	724	11 93 621 2	KLIMAANLAGE NRS
KUEHLMITTELKRUEMMER AN	10142742	382	1	215	12 42 545 4	DIESELMOTOR
KUEHLWASSERENTLUEFTUN	10142744	387	1	215	12 42 545 4	DIESELMOTOR
KUEHLWASSERLEITUNG	11381601	20	1	284	10 14 511 2	ABGASSTUTZEN ANBAU
KUEHLWASSERLEITUNG	11414759	2	1	302	11 41 475 7	ANBAUTEILE LUFTPRESSER
KUEHLWASSERLEITUNG	11414767	1	1	302	11 41 475 7	ANBAUTEILE LUFTPRESSER
KUEHLWASSERROHR	11250555	20	1	183	11 94 151 8	KUEHLER EINBAU WASSER
KUEHLWASSERROHR	11250556	21	1	183	11 94 151 8	KUEHLER EINBAU WASSER
KUEHLWASSERROHR	11269259	19	1	183	11 94 151 8	KUEHLER EINBAU WASSER
KUEHLWASSERROHR	11287692	18	1	183	11 94 151 8	KUEHLER EINBAU WASSER
KUEHLWASSERSCHLAUCH	10873086	49	1	183	11 94 151 8	KUEHLER EINBAU WASSER
KUEHLWASSERSCHLAUCH	11621769	5	0.5	199	11 24 114 4	KRAFTSTOFFANLAGE
KUEHLWASSERSCHLAUCH	11621769	30	6.5	204	11 92 923 6	ANLAGE HARNSTOFF EINBAU
KUEHLWASSERSCHLAUCH	11621772	51	1	183	11 94 151 8	KUEHLER EINBAU WASSER
KUEHLWASSERSCHLAUCH	11621772	31	2	204	11 92 923 6	ANLAGE HARNSTOFF EINBAU
KUEHLWASSERSCHLAUCH	11621777	48	1	183	11 94 151 8	KUEHLER EINBAU WASSER
KUEHLWASSERSCHLAUCH	11656331	47	1	183	11 94 151 8	KUEHLER EINBAU WASSER
KUGEL	11225403	2	1	452	10 44 656 6	WECHSELVENTIL
KUGEL	4901195	13	1	106	92 67 343	ENTLUEFTUNGSVENTIL
KUGELGELENK	10286648	4	1	715	10 53 352 4	KABINE EL
KUGELGELENK	10505322	50	1	526	10 09 917 3	DOPPELWIRKZYL
KUGELHAHN	510682014	39	1	8	11 29 618 6	OW HYDR
KUGELHAHN	510682014	1	1	502	91 90 239 14	LEITUNG HYDR
KUGELSCHEIBE DIN 6319 8.4X	10036473	4	1	252	10 15 286 7	INJEKTOR MIT BEFEST.
KUGELSCHEIBE DIN 6319 8.4X	10036473	2	1	254	10 14 114 0	RS DRUCKROHRSTUTZEN
KUGELSCHEIBE DIN 6319 8.4X	10036473	3	1	256	10 13 543 2	BEFESTIGUNG INJEKTOR
KUGELSCHEIBE DIN 6319 C8.4	11622278	3	1	253	10 15 315 1	DRUCKROHRSTUTZEN MIT BE
KUGELSCHEIBE DIN 6319 C8.4	11622278	2	1	257	10 13 543 4	BEFESTIGUNG DRUCKROHR
KUGELZAPFEN	592288314	33	1	415	10 35 008 0	KABINE
KUGELZAPFEN	592288314	12	1	422	59 22 871 14	FRONTSCHEIBE KPL
KUPFERPASTE	10002552	132	1	283	10 14 013 6	ATL-ANBAU
KUPPLUNG	10348619	20	1	733	10 52 293 0	DW GEBER NRS
KUPPLUNG	11249334	2	1	181	11 24 113 9	ANBAUTEILE DIESELMOTOR
KUPPLUNGSDOSE	605612214	42	1	735	10 56 013 7	FREMDEINSPEISUNG BATTERI
KUPPLUNGSHUELSE	10117768	11	1	152	10 13 452 1	DURCHTRIEB
KUPPLUNGSHUELSE	10129873	11	1	149	10 12 987 4	DURCHTRIEB
KUPPLUNGSHUELSE	10130007	11	1	150	10 13 000 5	DURCHTRIEB
KUPPLUNGSHUELSE	10132360	11	1	151	10 13 235 7	ANBAUSATZ DURCHTRIEB
KUPPLUNGSHUELSE	10138069	11	1	153	10 13 806 8	DURCHTRIEB
KUPPLUNGSHUELSE	9073827	15	1	107	10 11 835 7	RS ANSCHLUSSGEHAEUSE
KUPPLUNGSSTUECK	10594064	13	1	82	11 24 773 5	AGGREGAT HYDR
KUPPLUNGSSTUECK	11290850	200	2	86	11 24 682 0	VERTEILERGETRIEBE
KURBELGEHAEUSE KPL. MIT	11389617	10	1	214	12 42 545 4	DIESELMOTOR
KURBELGEHAEUSE VORM.	10154385	1	1	217	11 38 961 7	KURBELGEHAEUSE KPL. MIT
KURBELGEHAEUSEENTLUEF	10142018	16	1	214	12 42 545 4	DIESELMOTOR
KURBELGEHAEUSEENTLUEFT	10136800	1	1	223	10 14 201 8	KURBELGEHAEUSEENTLUEF
KURBELWELLE MIT ZAHNRAD	10147437	50	1	214	12 42 545 4	DIESELMOTOR
KURBELWELLENANBAUTEILE	10141983	53	1	214	12 42 545 4	DIESELMOTOR
KURBELWELLENLAGERSATZ	9076458	51	1	214	12 42 545 4	DIESELMOTOR
L-PROFIL	10581992	63	2	507	11 23 820 4	ANLENKSTUECK KPL
L-RING JL50X2	429612001	57	1	467	96 93 178 01	FAHRANTRIEB
LADEDRUCKREGELUNG	10146224	436	1	215	12 42 545 4	DIESELMOTOR
LADEGERAET	10567084	31	1	735	10 56 013 7	FREMDEINSPEISUNG BATTERI
LADELUFTKUEHLER	11932246	1	1	190	10 57 423 9	KUEHLER MOTOR
LADELUFTLEITUNG	10143612	1	1	267	10 14 967 6	VERBINDUNGSLEITUNG ANBA
LADELUFTLEITUNG	10143614	2	1	267	10 14 967 6	VERBINDUNGSLEITUNG ANBA
LADELUFTROHR	10562107	28	1	189	11 24 114 1	KUEHLER EINBAU LADELUFT
LADELUFTROHR	11250430	20	1	189	11 24 114 1	KUEHLER EINBAU LADELUFT

Bezeichnung	Artikel	Pos.	Menge	Blatt	Baugruppe	Bezeichnung
LADELUFTROHR	11250438	21	1	189	11 24 114 1	KUEHLER EINBAU LADELUFT
LADELUFTROHR	11250439	25	1	189	11 24 114 1	KUEHLER EINBAU LADELUFT
LADELUFTWELLSCHLAUCH	10521397	35	4	189	11 24 114 1	KUEHLER EINBAU LADELUFT
LAGER	11278605	10	1	635	54 02 702 14	SEILTROMMEL KPL
LAGER	11909482	120	1	428	11 93 934 6	KLIMAANLAGE
LAGER GUMMI	726611214	18	4	479	99 26 718 14	PODEST
LAGER GUMMI	726612114	50	4	189	11 24 114 1	KUEHLER EINBAU LADELUFT
LAGER GUMMI	726612214	88	4	507	11 23 820 4	ANLENKSTUECK KPL
LAGER GUMMI	726612214	13	1	550	11 28 397 7	AUFFANGWANNE KPL
LAGER GUMMI	726612214	13	1	551	11 28 397 8	AUFFANGWANNE KPL
LAGER GUMMI	726612214	13	1	552	11 28 399 5	AUFFANGWANNE KPL
LAGER GUMMI	726612214	13	1	553	11 28 399 7	AUFFANGWANNE KPL
LAGER GUMMI	726613014	20	1	582	10 59 863 3	PENDEL KPL
LAGER GUMMI	726613614	30	4	183	11 94 151 8	KUEHLER EINBAU WASSER
LAGER GUMMI	726616208	55	2	642	10 55 372 1	DACHGELAENDER NRS
LAGER GUMMI	726616614	58	10	642	10 55 372 1	DACHGELAENDER NRS
LAGER GUMMI	726902614	21	4	316	10 57 883 5	TUER
LAGER GUMMI	726904014	37	1	65	10 58 163 4	KABINENAUFHAENGUNG KPL
LAGER GUMMI	726910114	19	3	65	10 58 163 4	KABINENAUFHAENGUNG KPL
LAGER GUMMI	726922214	13	4	45	10 51 961 6	OELKUEHLER EINBAU
LAGERBUCHSE 22X25X13	10121971	2	4	247	10 13 382 3	ABSAUGPUMPE VORM.
LAGERDECKEL	9072908	3	1	270	90 72 906	ZWISCHENRAD KPL.
LAGERFLANSCH	11219918	6	1	87	10 53 430 7	V.PUMPE
LAGERHALTER	9887948	14	2	138	10 14 360 7	RS SCHWENKLAGER
LAGERRING		15	1	348	93 88 497 01	PLANETENGETRIEBE
LAGERRING	540272714	3	1	637	54 02 704 14	ABTRIEB KPL
LAGERRING	7023833	3	1	387	11 94 017 7	TRIEBWELLE
LAGERSCHALE	7413401	17	2	165	11 21 593 6	PUMPENELEMENT
LAMELLENBREMSE	502038301	80	1	392	90 01 376 2	DREHWERKANTRIEB
LAMELLENTRAEGER		65	1	348	93 88 497 01	PLANETENGETRIEBE
LAMELLENTRAEGER	501559414	96	1	376	99 04 645 14	ANTRIEB
LAMELLENTRAEGER	927564001	70	1	392	90 01 376 2	DREHWERKANTRIEB
LAMELLENTRAEGER	944406203	75	1	467	96 93 178 01	FAHRANTRIEB
LASCHE	10591681	50	4	592	79 04 112 14	UNTERFLASCHE
LASCHE	10591682	18	4	592	79 04 112 14	UNTERFLASCHE
LASCHE	11228806	14	2	653	11 22 870 8	SCHEINWERFERHALTER KPL
LASCHE	11271487	18	8	599	79 04 871 14	UNTERFLASCHE
LASCHE	950610714	10	2	683	99 35 606 14	LASCHE KPL
LASCHE	953580303	10	1	438	99 18 041 14	VERZURRUNG OW
LASCHE	959912014	11	6	337	99 29 803 14	VERZURRUNG BALLAST
LASCHE	959912514	15	12	337	99 29 803 14	VERZURRUNG BALLAST
LASCHE FIXPUNKT EINZIEHS	970827603	9	1	366	99 29 258 14	EZW ROLLENPAKET
LASCHE KPL	993560614	26	4	679	10 51 971 3	SELBSTVERLADESYSTEM NR
LASCHE LI KPL	11235361	11	1	71	10 51 969 4	A-BOCK AUFRICHTZYL EINBA
LASCHE RE KPL	11235382	21	1	71	10 51 969 4	A-BOCK AUFRICHTZYL EINBA
LASCHE SCHWK	992982314	14	6	337	99 29 803 14	VERZURRUNG BALLAST
LASTHAKEN	790386114	129	1	3	01 38 406 14	LR 1300 SX
LASTHALTEVENTIL	592022414	3	2	525	10 51 959 1	VERROHRUNG HYDR
LAUFRING		60	1	348	93 88 497 01	PLANETENGETRIEBE
LAUFROLLE KPL	10552633	14	16	463	11 89 365 0	RAUPENTRAEGER RE KPL
LAUFROLLE KPL	10552633	14	16	474	11 89 365 1	RAUPENTRAEGER LI KPL
LAUFSTEG ZWISCHENSTUEC	11294737	621	1	3	01 38 406 14	LR 1300 SX
LAUFSTEG ZWISCHENSTUEC	11294742	622	1	3	01 38 406 14	LR 1300 SX
LAUFSTEG ZWISCHENSTUEC	11294743	624	5	3	01 38 406 14	LR 1300 SX
LAUTSPRECHER	10350334	71	2	399	11 27 973 6	KABINE EL
LECKOELRUECKLAUF	10145885	214	1	215	12 42 545 4	DIESELMOTOR
LED-LAMPE	260514602	25	7	407	10 53 171 8	TASTATUR
LED-LAMPE	260514602	38	1	658	11 21 530 2	KABINE REST EL
LEISTE	10349434	21	4	328	11 24 483 7	BEF-TEILE OW
LEISTE	10546407	9	2	324	10 54 591 0	MOTORABDECKUNG

Bezeichnung	Artikel	Pos.	Menge	Blatt	Baugruppe	Bezeichnung
LEISTE	11238278	1	1	672	11 23 827 7	SEILSCHUTZ
LEISTE	289003214	10	1	615	11 28 908 0	SEILSCHUTZ KPL
LEISTE	289012914	10	1	616	11 29 451 7	SEILSCHUTZ KPL
LEISTE	592287014	26	1	415	10 35 008 0	KABINE
LEISTE	948282314	6	1	67	10 56 067 3	BATTERIE EINBAU KPL
LEISTE	971303203	34	1	505	11 23 820 4	ANLENKSTUECK KPL
LEISTE	971303203	10	1	547	11 28 725 5	SEILSCHUTZ KPL
LEITER	11237423	10	1	660	11 23 740 7	AUFSTIEGSLEITER KPL NRS
LEITER	789038114	15	1	501	10 56 183 8	WERKZEUG
LEITER EINBAU	990870614	555	1	3	01 38 406 14	LR 1300 SX
LEITER EINBAU	990870614	40	1	6	11 24 047 9	OW KPL
LEITER KPL	10226190	1	1	66	99 08 706 14	LEITER EINBAU
LEITERHALTERUNG	10584890	11	1	660	11 23 740 7	AUFSTIEGSLEITER KPL NRS
LEITRAD	11299752	1	1	465	10 55 716 2	LEITRAD KPL
LEITRAD KPL	10557162	1	1	464	10 55 716 1	LEITRADEINHEIT KPL
LEITRADEINHEIT KPL	10557161	2	1	463	11 89 365 0	RAUPENTRAEGER RE KPL
LEITRADEINHEIT KPL	10557161	2	1	474	11 89 365 1	RAUPENTRAEGER LI KPL
LEITUNG	11236713	6	1	725	11 21 750 0	VERFLUESSIGER
LEITUNG	260318602	41	10.5	512	11 90 151 1	KABELSATZ 1 ANLENKSTUECK
LEITUNG	600204105	45	5	735	10 56 013 7	FREMDEINSPEISUNG BATTERI
LEITUNG HYDR	919023914	29	1	500	10 56 187 5	WERKZEUGAUSRUESTUNG
LEITUNGSSCHUTZSCHALTER	10351100	21	1	658	11 21 530 2	KABINE REST EL
LEITUNGSSCHUTZSCHALTER	10351101	60	1	402	10 55 963 5	SCHALTSCHR X1
LEITUNGSSCHUTZSCHALTER	10351102	61	3	402	10 55 963 5	SCHALTSCHR X1
LEITUNGSSCHUTZSCHALTER	10351103	62	1	402	10 55 963 5	SCHALTSCHR X1
LEITUNGSSCHUTZSCHALTER	10351104	63	2	402	10 55 963 5	SCHALTSCHR X1
LEITUNGSSCHUTZSCHALTER	10351105	64	1	402	10 55 963 5	SCHALTSCHR X1
LEITUNGSSCHUTZSCHALTER	10351106	65	3	402	10 55 963 5	SCHALTSCHR X1
LEUCHTDRUCKTASTER	693003614	31	1	741	10 52 155 9	MODUL BETANKUNGSANLAG
LEUCHTENHALTER	10537562	2	1	435	10 53 756 0	LEUCHTENHALTER KPL
LEUCHTENHALTER KPL	10537560	45	1	398	11 27 970 6	KABINE KPL
LEUCHTSCHALTKONTAKTGE	6001593	21	5	407	10 53 171 8	TASTATUR
LEUCHTSCHALTKONTAKTGE	6001593	36	1	658	11 21 530 2	KABINE REST EL
LEUCHTTASTER	606667214	37	1	658	11 21 530 2	KABINE REST EL
LEUCHTTASTER	606667814	12	1	407	10 53 171 8	TASTATUR
LEUCHTTASTER	606672114	10	2	407	10 53 171 8	TASTATUR
LEUCHTTASTER	606674714	11	4	407	10 53 171 8	TASTATUR
LEUCHTTASTKONTAKTGEBE	6204372	20	2	407	10 53 171 8	TASTATUR
LIBELLE EINBAU	970785703	44	1	398	11 27 970 6	KABINE KPL
LINSENKOPFSCHRAUBE M6X	10137839	43	4	135	10 13 802 6	RS ZYL.+STEUERPL.+WELLE
LINSENKOPFSCHRAUBE M6X	10137839	43	4	141	10 14 131 6	ANSCHLUSSPLATTE VORM.
LINSENSCHRAUBE M6X20 10.	10342275	12	14	449	10 00 794 7	TRIEBWERK HYDRAULIKTEIL
LITZE	600147201	28	0.2	611	10 57 652 3	KLEMMDOSE
LOCHBLECH	10135441	2	1	226	10 15 529 8	OELWANNE VORM.
LOCHBLECH	10565879	10	1	322	10 56 580 8	TUER
LOCHBLECH	10566239	12	1	321	10 56 623 7	TUER
LOCHBLECH	10578841	12	1	316	10 57 883 5	TUER
LOCHBLECH	10578971	10	1	318	10 57 897 6	TUER
LOCHBLECH	10579423	12	1	320	10 57 940 0	TUER
LOCHBLECH	11290846	165	2	86	11 24 682 0	VERTEILERGETRIEBE
LOEFFELRAD	11238878	10	1	585	69 28 155 14	WINDGEBER
LUEFTER	10223209	80	1	428	11 93 934 6	KLIMAANLAGE
LUEFTER	10352188	5	1	31	10 22 592 5	KUEHLER MOTOR
LUEFTER	11267555	10	1	186	10 57 423 7	KUEHLER MOTOR
LUEFTER	11932243	4	1	190	10 57 423 9	KUEHLER MOTOR
LUEFTERABDECKUNG	10223362	10	1	316	10 57 883 5	TUER
LUEFTERABDECKUNG	10565889	2	1	322	10 56 580 8	TUER
LUEFTERHAUBE	10352186	2	1	31	10 22 592 5	KUEHLER MOTOR
LUEFTERHAUBE	11932245	2	1	190	10 57 423 9	KUEHLER MOTOR
LUEFTERKASTEN	11946423	380	1	428	11 93 934 6	KLIMAANLAGE

Bezeichnung	Artikel	Pos.	Menge	Blatt	Baugruppe	Bezeichnung
LUEFTERMOTOR	11236708	2	1	725	11 21 750 0	VERFLUESSIGER
LUEFTERRING	10352187	3	1	31	10 22 592 5	KUEHLER MOTOR
LUFTANSAUGROHR	11415782	1	1	264	10 14 736 6	LUFTANSAUGROHR ANBAU
LUFTANSAUGROHR ANBAU	10147366	220	1	215	12 42 545 4	DIESELMOTOR
LUFTANSAUGUNG ANBAU	10147364	224	1	215	12 42 545 4	DIESELMOTOR
LUFTBEHAELTER	502919808	5	1	210	11 92 958 8	LUFTFUEHRUNG KPL
LUFTDUESE	592289314	52	1	415	10 35 008 0	KABINE
LUFTFILTER	11246790	10	1	194	11 92 922 0	ANSAUGANLAGE LUFT
LUFTFILTERHALTER	11946424	390	1	428	11 93 934 6	KLIMAANLAGE
LUFTFUEHRUNG KPL	11929588	61	1	80	11 92 885 2	ZENTRALAGGREGAT KPL
LUFTLEITUNG	11621764	25	4.5	204	11 92 923 6	ANLAGE HARNSTOFF EINBAU
LUFTLEITUNG	11621764	15	0.5	210	11 92 958 8	LUFTFUEHRUNG KPL
LUFTPRESSER	11417370	3	1	299	11 92 891 3	KOMPRESSOR NRS
LUFTPRESSER VORM.	11417369	1	1	300	11 41 737 0	LUFTPRESSER
LUFTTROCKNER	11837214	6	1	210	11 92 958 8	LUFTFUEHRUNG KPL
M-RING	12476138	4	1	234	10 14 636 7	KOLBEN KPL.
MAGNETSPULE	10215806	1	2	528	51 04 292 14	WEGEVENTIL
MAGNETSPULE	11229186	1	2	25	10 59 143 5	WEGEVENTIL
MAGNETSPULE	693208614	1	2	24	11 22 918 4	WEGEVENTIL
MAGNETVENTIL	10336968	120	1	383	51 14 347 14	DW SICHERUNGSBLOCK
MAGNETVENTIL	11226980	6	1	692	59 21 584 14	SENKBREMSVENTIL
MAGNETVENTIL	11254299	1	1	728	10 56 536 7	MAGNETVENTIL EINBAUSATZ
MAGNETVENTIL	592300614	152	13	18	11 28 647 6	VENTILBLOCK
MAGNETVENTIL EINBAUSATZ	10565367	1	1	727	10 56 536 8	MAGNETVENTIL EINBAUSATZ
MAGNETVENTIL EINBAUSATZ	10565368	12	1	724	11 93 621 2	KLIMAANLAGE NRS
MANOMETER	750001114	7	1	501	10 56 183 8	WERKZEUG
MANOMETER	750003414	8	1	501	10 56 183 8	WERKZEUG
MANOMETERANSCHLUSS	7363730	9	2	501	10 56 183 8	WERKZEUG
MANOMETERDIREKTANSCHL	510694314	10	2	501	10 56 183 8	WERKZEUG
MANTELRING	10285620	25	2	107	10 11 835 7	RS ANSCHLUSSGEHAEUSE
MANTELRING	10285620	27	2	108	92 74 731	DS ANSCHLUSSGEHAEUSE
MASSEVERBINDUNGSBLECH	9080911	4	1	268	90 78 314	HEIZFLANSCH ANBAU
MEISTERSCHALTER	11214818	10	1	404	10 51 907 9	STEUERSTAND LI
MEISTERSCHALTER	11214819	10	1	332	10 52 160 2	KREUZMEISTERSCH EL EINBA
MEMBRANSPEICHER	592274714	6	2	442	11 89 300 5	VERROHRUNG HYDR
MEMBRANSPEICHER	592274714	4	1	509	10 51 826 1	ANLENKSTUECK HYDR
MESSSCHLAUCH	7002475	11	2	501	10 56 183 8	WERKZEUG
MESSSTUTZEN	510629008	318	1	83	11 24 773 5	AGGREGAT HYDR
MESSSTUTZEN	510629008	205	2	442	11 89 300 5	VERROHRUNG HYDR
MESSSTUTZEN	510664814	200	2	10	11 29 618 6	OW HYDR
MESSSTUTZEN	510664814	701	2	482	11 26 260 6	WINDE 1 HYDR
MESSSTUTZEN	510664814	701	2	497	11 26 261 1	WINDE 2 HYDR
MESSSTUTZEN	510664814	613	2	629	10 51 726 2	VERROHRUNG HYDR
MESSSTUTZEN	510694514	202	19	10	11 29 618 6	OW HYDR
MESSSTUTZEN	510694514	201	2	73	10 51 969 5	A-BOCK AUFRICHTZYL HYDR
MESSSTUTZEN	510694514	671	14	83	11 24 773 5	AGGREGAT HYDR
MESSSTUTZEN	510694514	201	2	341	10 51 969 8	NADELEINZIEHWINDE HYDR
MESSSTUTZEN	510694514	201	2	358	10 51 968 7	HAUPT EZW HYDR
MESSSTUTZEN	510694514	203	2	381	10 55 216 1	VERROHRUNG HYDR
MESSSTUTZEN	510694514	204	8	442	11 89 300 5	VERROHRUNG HYDR
MESSSTUTZEN	510694514	700	2	482	11 26 260 6	WINDE 1 HYDR
MESSSTUTZEN	510694514	700	2	497	11 26 261 1	WINDE 2 HYDR
MESSSTUTZEN	510694514	201	1	525	10 51 959 1	VERROHRUNG HYDR
MESSSTUTZEN	510694514	202	1	687	10 51 973 8	SELBSTVERLADESYSTEM H
MESSSTUTZEN	510695314	201	2	687	10 51 973 8	SELBSTVERLADESYSTEM H
MESSSTUTZEN	510695314	706	1	697	11 89 408 3	VERROHRUNG HYDR
MESSSTUTZEN	7409720	201	1	10	11 29 618 6	OW HYDR
MESSSTUTZEN	7409720	304	2	83	11 24 773 5	AGGREGAT HYDR
MESSSTUTZEN	7409720	200	2	381	10 55 216 1	VERROHRUNG HYDR
MISCHER	10144086	5	1	303	11 90 032 5	ABGASANLAGE

Bezeichnung	Artikel	Pos.	Menge	Blatt	Baugruppe	Bezeichnung
MITNEHMER	10348618	13	1	733	10 52 293 0	DW GEBER NRS
MITNEHMER EINBAU	10552681	20	1	6	11 24 047 9	OW KPL
MITTELTEIL KPL	11313908	12	1	439	11 89 364 8	UW KPL
MITTELZAPFEN	11940182	3	1	386	11 94 017 6	TRIEBWERK HYDRAULIKTEIL
MITTELZAPFEN	7024275	113	1	630	51 02 322 14	OELMOTOR
MODEM KPL NRS	11223226	10	1	622	11 90 722 6	MODEM NRS
MODEM NRS	11907226	438	1	3	01 38 406 14	LR 1300 SX
MODUL BETANKUNGSANLAG	10521559	11	1	737	10 52 155 4	BETANKUNGSANLAGE NRS
MODULBAUGRUPPENTRAEGE	916793914	1	2	69	10 56 069 4	MODULE EINBAU
MODULE EINBAU	10560694	49	1	6	11 24 047 9	OW KPL
MONITOR KABINE ANBAU	10578486	10	1	718	10 58 064 7	VIDEOUEBERWACHUNGSANL
MONITOR LCD	11240503	1	1	715	10 53 352 4	KABINE EL
MONITOR LCD KPL	11260077	24	1	410	11 26 095 7	STEUERSTAND RE
MONTAGEEINHEIT	11940878	10	1	554	11 94 087 6	TRANSPORTSICHERUNG
MONTAGEEINHEIT	11941725	10	1	544	11 24 570 7	ZWISCHENSTUECK MONTAGE
MONTAGEEINHEIT	11942594	10	1	560	11 24 571 3	ZWISCHENSTUECK MONTAGE
MONTAGEEINHEIT	11944502	10	1	567	11 24 571 9	ZWISCHENSTUECK MONTAGE
MONTAGEPLATTE	10526962	21	1	402	10 55 963 5	SCHALTSCHR X1
MONTAGETEILE	10526560	11	1	334	99 23 386 14	BALLASTGEWICHT ANORD
MONTAGETEILE	11265572	11	1	58	11 27 315 5	ZENTRALSCHMIERUNG
MONTAGETEILE	11267716	11	1	730	11 28 423 6	ZENTRALSCHMIERUNG NRS
MONTAGETEILE	11283576	2	1	581	99 06 461 14	WINDMESSER KPL
MONTAGETEILE	11286484	11	1	573	11 24 133 3	AL KOPF KPL
MONTAGETEILE	11287445	11	1	607	99 34 394 14	SPITZEN AL KPL
MONTAGETEILE	11301266	11	1	605	99 09 205 14	A-BOCK KPL
MONTAGEWERKZEUG	11949368	80	1	501	10 56 183 8	WERKZEUG
MOTOR	592293214	52	1	428	11 93 934 6	KLIMAANLAGE
MOTOR	592293214	60	1	429	10 58 467 1	WASSERVENTIL
MOTORABDECKUNG	10545910	2	1	308	11 24 409 0	VERKLEIDUNG OW EINBAU KP
MOTORFLANSCH		75	1	348	93 88 497 01	PLANETENGETRIEBE
MOTORFLANSCH	540273014	7	1	638	54 02 705 14	ANTRIEB KPL
MOTORFLANSCH	927564101	85	1	392	90 01 376 2	DREHWERKANTRIEB
MOTORHALTER	11267559	26	1	186	10 57 423 7	KUEHLER MOTOR
MOTORLAGER KPL	11241138	12	1	80	11 92 885 2	ZENTRALAGGREGAT KPL
MOTORREGELUNGSENSORIK	10142977	581	1	216	12 42 545 4	DIESELMOTOR
MOTORSTEUERGERAET	10883842	1	1	295	12 42 558 9	MOTORSTEUERGERAET
MOTORSTEUERGERAET	12425589	570	1	216	12 42 545 4	DIESELMOTOR
MUFFE	10447748	4	6	30	10 44 510 5	SCHNELLVERSCHLUSSKUPPL
MUFFE	10447748	4	4	453	10 44 510 2	SCHNELLVERSCHLUSSKUPPL
MUFFE	10447748	4	4	454	10 44 510 1	SCHNELLVERSCHLUSSKUPPL
MUTTER LWN 8-60-106 M33 10	412705014	12	80	437	10 51 969 6	VERBINDUNG OW UW
MUTTER M18X1.5 9SMNPB28K	9278873	11	1	113	92 78 875	DRUCKABSCHNEIDUNG
MUTTER M22X1.5 11SMNPB30	9072969	13	1	148	10 12 226 5	DS REGELVENTIL
MUTTER M24X1 9SMNPB28K	9077401	28	1	148	10 12 226 5	DS REGELVENTIL
NABE	10120188	7	1	247	10 13 382 3	ABSAUGPUMPE VORM.
NABE	11293193	6	1	453	10 44 510 2	SCHNELLVERSCHLUSSKUPPL
NADEL EL	993309414	3	1	607	99 34 394 14	SPITZEN AL KPL
NADELANBAUTEILE	993438714	180	1	3	01 38 406 14	LR 1300 SX
NADELEINZIEHWINDE	10519697	23	1	2	01 38 406 14	LR 1300 SX
NADELEINZIEHWINDE HYDR	10519698	2	1	339	10 51 969 7	NADELEINZIEHWINDE
NADELKAEFIG	747462814	20	1	637	54 02 704 14	ABTRIEB KPL
NADELN	540244214	14	72	634	54 02 701 14	PLANETENSTUFE
NADELN	540271114	24	48	634	54 02 701 14	PLANETENSTUFE
NAEHERUNGSSCHALTER	693067614	11	2	574	10 53 141 3	AL KOPF EL
NIVEAUGEBER	10134517	22	1	214	12 42 545 4	DIESELMOTOR
NIVEAUGEBER	10528589	18	1	53	10 56 073 3	KRAFTSTOFFTANK KPL
NIVEAUGEBER	10529210	14	1	48	10 56 070 1	TANK HYDR KPL
NIVEAUGEBER	11088130	1	1	229	10 13 451 7	NIVEAUGEBER
NIVEAUSONDE	10517426	81	1	34	11 24 519 0	OW EL
NOCKENENDSCHALTER	606281014	45	1	33	11 24 519 0	OW EL

Bezeichnung	Artikel	Pos.	Menge	Blatt	Baugruppe	Bezeichnung
NOCKENWELLE KPL.	10138231	100	1	214	12 42 545 4	DIESELMOTOR
NOT-AUS TASTER	10875360	39	3	33	11 24 519 0	OW EL
NOT-AUS TASTER	693073014	33	1	410	11 26 095 7	STEUERSTAND RE
NOT-AUS TASTER	693073014	33	1	741	10 52 155 9	MODUL BETANKUNGSANLAG
NOTBETRIEB EL NRS	11250162	447	1	3	01 38 406 14	LR 1300 SX
NUTENSTEIN	9076196	18	1	139	10 12 224 5	RS HEBEL
NUTMUTTER M120X2 C45	927509501	13	1	392	90 01 376 2	DREHWERKANTRIEB
NUTRING	10352315	55	1	704	59 21 826 14	ABSTUETZZYLINDER
NUTRING	726306414	10	1	722	59 20 008 14	DOPPELWIRKZYL
NUTRING	726307914	10	1	27	51 33 139 14	DOPPELWIRKZYL
NUTRING	726308514	85	1	704	59 21 826 14	ABSTUETZZYLINDER
O-RING		13	1	348	93 88 497 01	PLANETENGETRIEBE
O-RING		19	2	348	93 88 497 01	PLANETENGETRIEBE
O-RING		22	1	348	93 88 497 01	PLANETENGETRIEBE
O-RING		51	1	348	93 88 497 01	PLANETENGETRIEBE
O-RING		61	1	348	93 88 497 01	PLANETENGETRIEBE
O-RING		73	1	348	93 88 497 01	PLANETENGETRIEBE
O-RING		76	1	348	93 88 497 01	PLANETENGETRIEBE
O-RING		78	8	348	93 88 497 01	PLANETENGETRIEBE
O-RING	10002167	4	2	275	10 14 821 5	THERMOSTATGEHAEUSE AN
O-RING	10002309	24	1	133	10 12 224 8	RS ZUSATZTEILE
O-RING	10002309	24	1	146	10 13 803 3	DICHTSATZ KPL.
O-RING	10002310	3	1	300	11 41 737 0	LUFTPRESSER
O-RING	10004261	9	1	219	10 14 768 6	AGGREGATETRAEGER ANBA
O-RING	10016874	17	2	145	10 12 226 2	RS VERSTELLUNG
O-RING	10016947	28	2	147	10 13 803 4	DS ANSCHLUSSPLATTE
O-RING	10097551	4	1	99	11 26 744 7	WECHSELVENTIL
O-RING	10115240	27	1	451	11 22 473 8	VERSTELLUNG
O-RING	10116255	1	1	269	10 29 998 8	HEIZFLANSCH VORM.
O-RING	10128559	2	1	251	10 15 278 7	DS HOCHDRUCKPUMPE
O-RING	10128671	1	1	251	10 15 278 7	DS HOCHDRUCKPUMPE
O-RING	10128678	3	1	251	10 15 278 7	DS HOCHDRUCKPUMPE
O-RING	10130757	2	1	255	10 13 508 0	DRUCKROHRSTUTZEN
O-RING	10217777	2	1	292	10 12 843 9	VERSCHLUSSTEILE
O-RING	10218370	2	1	288	11 38 664 5	STARTER
O-RING	10218953	3	1	50	10 51 572 4	RUECKLAUFFILTER
O-RING	10225991	10	1	170	51 14 145 14	DRUCKBEGRENZUNGSVENTI
O-RING	10282774	4	2	218	10 15 445 8	ZYLINDER
O-RING	10340226	20	2	202	10 30 300 7	KRAFTSTOFFVORFILTER
O-RING	10350604	2	1	171	10 22 358 1	DRUCKFILTER
O-RING	10351605	22	1	156	11 22 127 4	PUMPENELEMENT
O-RING	10351605	22	1	162	10 35 161 0	DS KPL
O-RING	10351608	23	4	156	11 22 127 4	PUMPENELEMENT
O-RING	10351608	23	4	162	10 35 161 0	DS KPL
O-RING	10352356	105	3	704	59 21 826 14	ABSTUETZZYLINDER
O-RING	10352361	135	1	704	59 21 826 14	ABSTUETZZYLINDER
O-RING	10352362	145	1	704	59 21 826 14	ABSTUETZZYLINDER
O-RING	10548553	59	1	376	99 04 645 14	ANTRIEB
O-RING	10593504	320	2	86	11 24 682 0	VERTEILERGETRIEBE
O-RING	10802833	22	1	165	11 21 593 6	PUMPENELEMENT
O-RING	11008055	3	1	265	10 14 736 9	ANSAUGSTUTZEN ANBAU
O-RING	11066168	4	1	245	10 13 394 5	SCHMIEROELPUMPE
O-RING	11212730	10	1	97	11 06 730 4	ABSCHALTVENTIL
O-RING	11215707	23	4	165	11 21 593 6	PUMPENELEMENT
O-RING	11219374	8	1	100	11 21 935 0	PUMPENDECKEL
O-RING	11219376	10	1	102	11 21 991 8	LAGERFLANSCH
O-RING	11220389	24	1	156	11 22 127 4	PUMPENELEMENT
O-RING	11220389	24	1	162	10 35 161 0	DS KPL
O-RING	11221283	2	1	161	11 22 127 6	ADAPTER
O-RING	11224740	25	1	447	51 24 059 14	V.MOTOR

Bezeichnung	Artikel	Pos.	Menge	Blatt	Baugruppe	Bezeichnung
O-RING	11226084	90	1	383	51 14 347 14	DW SICHERUNGSBLOCK
O-RING	11226144	210	4	383	51 14 347 14	DW SICHERUNGSBLOCK
O-RING	11239916	4	1	690	51 16 404 14	SENKBREMSVENTIL
O-RING	11249804	9	1	446	11 89 617 8	DS
O-RING	11251423	8	2	446	11 89 617 8	DS
O-RING	11267377	6	1	90	11 21 992 7	DECKEL
O-RING	11267377	6	1	91	11 21 992 9	DECKEL
O-RING	11267418	9	1	95	10 59 347 4	DRUCKBEGRENZUNGSVENTI
O-RING	11267418	8	1	96	11 21 936 9	VERSCHLUSSATZ
O-RING	11910327	110	1	526	10 09 917 3	DOPPELWIRKZYL
O-RING	11940147	6	1	384	51 22 991 14	OELMOTOR
O-RING	510587908	26	1	179	10 57 532 2	ANSAUGROHR OEL KPL
O-RING	592293414	180	1	428	11 93 934 6	KLIMAANLAGE
O-RING	592293514	190	1	428	11 93 934 6	KLIMAANLAGE
O-RING	7000329	23	2	108	92 74 731	DS ANSCHLUSSGEHAEUSE
O-RING	7004512	32	1	103	10 11 834 9	DOPPELV.PUMPE
O-RING	7004512	32	1	126	92 76 408	DS DOPPELPUMPE
O-RING	7006213	9	1	96	11 21 936 9	VERSCHLUSSATZ
O-RING	7007492	10	1	95	10 59 347 4	DRUCKBEGRENZUNGSVENTI
O-RING	7009080	5	1	275	10 14 821 5	THERMOSTATGEHAEUSE AN
O-RING	7019733	2	1	160	70 19 834	ADAPTER
O-RING	7022118	29	2	147	10 13 803 4	DS ANSCHLUSSPLATTE
O-RING	7022118	14	1	447	51 24 059 14	V.MOTOR
O-RING	7028151	26	1	451	11 22 473 8	VERSTELLUNG
O-RING	704274808	70	5	529	51 14 755 14	DRUCKBEGRENZUNGSVENTI
O-RING	726401514	15	1	53	10 56 073 3	KRAFTSTOFFTANK KPL
O-RING	726403201	89	1	467	96 93 178 01	FAHRANTRIEB
O-RING	726403514	18	1	29	51 05 719 14	SCHNELLVERSCHRAUBUNG
O-RING	726404414	20	4	180	10 58 017 0	RUECKLAUFROHR
O-RING	726408414	19	1	29	51 05 719 14	SCHNELLVERSCHRAUBUNG
O-RING	726409714	27	1	179	10 57 532 2	ANSAUGROHR OEL KPL
O-RING	726409814	24	3	48	10 56 070 1	TANK HYDR KPL
O-RING	726410201	79	1	467	96 93 178 01	FAHRANTRIEB
O-RING	726411214	29	3	82	11 24 773 5	AGGREGAT HYDR
O-RING	7264148	24	1	392	90 01 376 2	DREHWERKANTRIEB
O-RING	726424214	16	1	638	54 02 705 14	ANTRIEB KPL
O-RING	726428401	91	1	467	96 93 178 01	FAHRANTRIEB
O-RING	726428714	25	2	48	10 56 070 1	TANK HYDR KPL
O-RING	726429814	5	1	99	11 26 744 7	WECHSELVENTIL
O-RING	726431414	25	2	179	10 57 532 2	ANSAUGROHR OEL KPL
O-RING	726431414	29	1	179	10 57 532 2	ANSAUGROHR OEL KPL
O-RING	726435801	68	1	392	90 01 376 2	DREHWERKANTRIEB
O-RING	726450601	6	2	467	96 93 178 01	FAHRANTRIEB
O-RING	726453901	69	1	392	90 01 376 2	DREHWERKANTRIEB
O-RING	726456214	58	1	376	99 04 645 14	ANTRIEB
O-RING	726456914	8	1	27	51 33 139 14	DOPPELWIRKZYL
O-RING	726456914	8	1	722	59 20 008 14	DOPPELWIRKZYL
O-RING	726459414	12	1	447	51 24 059 14	V.MOTOR
O-RING	726461014	24	2	442	11 89 300 5	VERROHRUNG HYDR
O-RING	726461714	9	2	381	10 55 216 1	VERROHRUNG HYDR
O-RING	7264625	1	1	227	50 04 624	OELABLASSSCHRAUBE
O-RING	726466314	180	1	74	59 21 041 14	DOPPELWIRKZYL
O-RING	726469014	70	1	636	54 02 703 14	FLANSCH KPL
O-RING	7372232	3	1	388	10 65 027 0	VERSCHLUSSRING
O-RING	7380015	22	2	108	92 74 731	DS ANSCHLUSSGEHAEUSE
O-RING	7380083	3	1	277	10 14 274 2	KUEHLMITTELKRUEMMER AN
O-RING	7380120	28	2	108	92 74 731	DS ANSCHLUSSGEHAEUSE
O-RING	7380297	39	1	136	10 13 802 7	RS WELLE
O-RING	7380297	39	1	144	10 13 803 2	RS VERSCHLUSSRING
O-RING	7380297	31	1	146	10 13 803 3	DICHTSATZ KPL.

Bezeichnung	Artikel	Pos.	Menge	Blatt	Baugruppe	Bezeichnung
O-RING	7380297	21	1	152	10 13 452 1	DURCHTRIEB
O-RING	7380348	24	2	108	92 74 731	DS ANSCHLUSSGEHAEUSE
O-RING	7380423	12	1	226	10 15 529 8	OELWANNE VORM.
O-RING	7380574	18	1	145	10 12 226 2	RS VERSTELLUNG
O-RING	7380576	27	1	148	10 12 226 5	DS REGELVENTIL
O-RING	7380596	81	1	110	92 73 644	DS REGELVENTIL
O-RING	7380601	22	1	150	10 13 000 5	DURCHTRIEB
O-RING	7380601	22	1	152	10 13 452 1	DURCHTRIEB
O-RING	7380605	22	1	149	10 12 987 4	DURCHTRIEB
O-RING	7380605	40	1	189	11 24 114 1	KUEHLER EINBAU LADELUFT
O-RING	7380605	5	1	266	10 14 736 4	LUFTANSAUGUNG ANBAU
O-RING	7380608	26	1	148	10 12 226 5	DS REGELVENTIL
O-RING	7380610	23	2	147	10 13 803 4	DS ANSCHLUSSPLATTE
O-RING	7380612	65	1	110	92 73 644	DS REGELVENTIL
O-RING	7380648	32	10	108	92 74 731	DS ANSCHLUSSGEHAEUSE
O-RING	7380648	64	5	109	90 74 418	REGELVENTIL
O-RING	7380648	64	5	110	92 73 644	DS REGELVENTIL
O-RING	7380653	8	2	219	10 14 768 6	AGGREGATETRAEGER ANBA
O-RING	7380653	9	1	290	10 11 557 7	SCHWUNGRADGEHAEUSE AN
O-RING	7380656	18	1	115	90 77 464	RS FLANSCH
O-RING	7380656	18	4	126	92 76 408	DS DOPPELPUMPE
O-RING	7380657	36	1	124	92 68 016	RS VERSCHLUSSRING
O-RING	7380657	2	1	298	10 14 637 4	VERSCHLUSSTEILE
O-RING	7380691	22	1	151	10 13 235 7	ANBAUSATZ DURCHTRIEB
O-RING	7380691	22	1	153	10 13 806 8	DURCHTRIEB
O-RING	7380865	62	1	110	92 73 644	DS REGELVENTIL
O-RING	7380868	70	1	110	92 73 644	DS REGELVENTIL
O-RING	7380868	70	1	117	92 75 443	RS DECKEL
O-RING	7380888	56	2	108	92 74 731	DS ANSCHLUSSGEHAEUSE
O-RING	7380888	61	1	109	90 74 418	REGELVENTIL
O-RING	7380888	61	1	110	92 73 644	DS REGELVENTIL
O-RING	7380935	2	1	269	10 29 998 8	HEIZFLANSCH VORM.
O-RING	7380955	9	2	243	10 12 948 0	OELKUEHLER VORM.
O-RING	7380970	41	1	189	11 24 114 1	KUEHLER EINBAU LADELUFT
O-RING	7380970	7	1	267	10 14 967 6	VERBINDUNGSLEITUNG ANBA
O-RING	7380986	12	1	202	10 30 300 7	KRAFTSTOFFVORFILTER
O-RING	7380987	21	1	148	10 12 226 5	DS REGELVENTIL
O-RING	7381004	70	1	125	92 73 187	RS MAGNET
O-RING	7381013	23	2	133	10 12 224 8	RS ZUSATZTEILE
O-RING	7381013	23	2	146	10 13 803 3	DICHTSATZ KPL.
O-RING	7381056	24	1	110	92 73 644	DS REGELVENTIL
O-RING	7381056	24	1	113	92 78 875	DRUCKABSCHNEIDUNG
O-RING	7381082	82	1	110	92 73 644	DS REGELVENTIL
O-RING	7381087	63	1	110	92 73 644	DS REGELVENTIL
O-RING	7381103	60	1	110	92 73 644	DS REGELVENTIL
O-RING	7381103	2	1	293	10 12 797 9	VERSCHLUSSTEILE
O-RING	7381127	21	1	142	10 12 352 8	STOPFEN
O-RING	7381127	21	1	147	10 13 803 4	DS ANSCHLUSSPLATTE
O-RING	7381128	20	1	142	10 12 352 8	STOPFEN
O-RING	7381128	22	1	147	10 13 803 4	DS ANSCHLUSSPLATTE
O-RING	7381438	12	1	131	10 12 321 4	DS DRUCKREDUZIERVENTIL
O-RING	7381439	11	1	131	10 12 321 4	DS DRUCKREDUZIERVENTIL
O-RING	7381440	10	1	131	10 12 321 4	DS DRUCKREDUZIERVENTIL
O-RING	7381442	23	1	110	92 73 644	DS REGELVENTIL
O-RING	7381442	23	1	113	92 78 875	DRUCKABSCHNEIDUNG
O-RING	7381446	22	1	148	10 12 226 5	DS REGELVENTIL
O-RING	7381526	4	1	278	10 14 274 4	KUEHLWASSERENTLUEFTUN
O-RING	7381593	7	2	223	10 14 201 8	KURBELGEHAEUSEENTLUEF
O-RING	7381615	9	1	279	10 14 601 2	WASSERSAMMELLEITUNG K
O-RING	7381685	4	1	246	10 13 394 7	ABSAUGPUMPE MIT BEFEST.

Bezeichnung	Artikel	Pos.	Menge	Blatt	Baugruppe	Bezeichnung
O-RING	7381779	7	2	219	10 14 768 6	AGGREGATETRAEGER ANBA
O-RING	7381779	5	2	279	10 14 601 2	WASSERSAMMELLEITUNG K
O-RING	7382059	5	1	245	10 13 394 5	SCHMIEROELPUMPE
O-RING	7412937	15	1	202	10 30 300 7	KRAFTSTOFFVORFILTER
O-RING	761032203	73	1	392	90 01 376 2	DREHWERKANTRIEB
O-RING	790311914	30	1	82	11 24 773 5	AGGREGAT HYDR
O-RING	790347014	330	1	86	11 24 682 0	VERTEILERGETRIEBE
O-RING	9177947	28	1	179	10 57 532 2	ANSAUGROHR OEL KPL
O-RING PLATTE	511486614	30	1	529	51 14 755 14	DRUCKBEGRENZUNGSVENTI
OELABLASSSCHRAUBE	5004624	8	1	226	10 15 529 8	OELWANNE VORM.
OELABLASSSCHRAUBE G1"X	403900714	17	4	48	10 56 070 1	TANK HYDR KPL
OELABLASSSCHRAUBE G1"X	403900714	16	1	53	10 56 073 3	KRAFTSTOFFTANK KPL
OELABLASSSCHRAUBE G1"X	403900714	33	2	179	10 57 532 2	ANSAUGROHR OEL KPL
OELABLASSSCHRAUBE G1"X	403900714	41	1	183	11 94 151 8	KUEHLER EINBAU WASSER
OELABLASSSCHRAUBE M22X	511442214	27	1	82	11 24 773 5	AGGREGAT HYDR
OELEINFUELLSTUTZEN	927693401	95	1	392	90 01 376 2	DREHWERKANTRIEB
OELKUEHLER	10352185	1	1	31	10 22 592 5	KUEHLER MOTOR
OELKUEHLER	5700088	2	1	243	10 12 948 0	OELKUEHLER VORM.
OELKUEHLER ANBAU	10129481	130	1	214	12 42 545 4	DIESELMOTOR
OELKUEHLER EINBAU	10519616	14	1	6	11 24 047 9	OW KPL
OELKUEHLER VORM.	10129480	1	1	242	10 12 948 1	OELKUEHLER ANBAU
OELKUEHLERGEHAEUSE	10129479	1	1	243	10 12 948 0	OELKUEHLER VORM.
OELLEITUNG	10583845	4	1	361	10 55 156 3	WINDE
OELLEITUNG	11893216	6	1	485	10 53 039 8	WINDE
OELLEITUNG VORM.	10146716	25	1	214	12 42 545 4	DIESELMOTOR
OELMESSEINRICHTUNG	933675501	10	1	345	96 96 248 01	WINDE
OELMESSSTAB	10145918	2	1	228	10 14 591 9	OELMESSSTAB MIT ROHR
OELMESSSTAB	11290849	180	1	86	11 24 682 0	VERTEILERGETRIEBE
OELMESSSTAB	927610201	15	1	352	93 36 755 01	OELMESSEINRICHTUNG
OELMESSSTAB KPL.	10142567	4	1	181	11 24 113 9	ANBAUTEILE DIESELMOTOR
OELMESSSTAB MIT ROHR	10145919	21	1	214	12 42 545 4	DIESELMOTOR
OELMOTOR	510232214	2	1	629	10 51 726 2	VERROHRUNG HYDR
OELMOTOR	512239414	5	1	190	10 57 423 9	KUEHLER MOTOR
OELMOTOR	512250114	6	1	186	10 57 423 7	KUEHLER MOTOR
OELMOTOR	512252714	2	1	341	10 51 969 8	NADELEINZIEHWINDE HYDR
OELMOTOR	512294214	2	1	358	10 51 968 7	HAUPT EZW HYDR
OELMOTOR	512299114	3	2	381	10 55 216 1	VERROHRUNG HYDR
OELMOTOR	550945314	6	1	31	10 22 592 5	KUEHLER MOTOR
OELRUECKLAUFLEITUNG	10131350	1	1	230	10 14 671 6	OELLEITUNG VORM.
OELRUECKLAUFLEITUNG	10140138	17	1	283	10 14 013 6	ATL-ANBAU
OELSCHAUGLAS	10022192	24	1	352	93 36 755 01	OELMESSEINRICHTUNG
OELSCHAUGLAS	774322101	77	2	392	90 01 376 2	DREHWERKANTRIEB
OELSTANDSAUGE	5106280	18	4	48	10 56 070 1	TANK HYDR KPL
OELWANNE	10155297	1	1	226	10 15 529 8	OELWANNE VORM.
OELWANNE MIT BEFEST.	10148444	20	1	214	12 42 545 4	DIESELMOTOR
OELWANNE VORM.	10155298	1	1	225	10 14 844 4	OELWANNE MIT BEFEST.
OMNIFIT	7016208	106	1	135	10 13 802 6	RS ZYL.+STEUERPL.+WELLE
OMNIFIT	7016208	106	1	141	10 14 131 6	ANSCHLUSSPLATTE VORM.
OW DREHVERBINDUNG EINBA	10519631	21	1	6	11 24 047 9	OW KPL
OW EL	11245190	3	1	6	11 24 047 9	OW KPL
OW HYDR	11296186	2	1	6	11 24 047 9	OW KPL
OW KPL	11240479	5	1	2	01 38 406 14	LR 1300 SX
PAPIERVLIES	10350585	1	1	54	11 28 086 8	BELUEFTUNGSFILTER
PASSFEDER DIN 6885 B28X1	571827308	400	8	86	11 24 682 0	VERTEILERGETRIEBE
PASSFEDER DIN 6885 B32X18	485529814	410	2	86	11 24 682 0	VERTEILERGETRIEBE
PASSFEDER DIN 6885 B8X7X1	10567120	450	1	86	11 24 682 0	VERTEILERGETRIEBE
PASSHUELSE 16X20X20	10134348	3	2	219	10 14 768 6	AGGREGATETRAEGER ANBA
PASSHUELSE 16X20X20 S235	9074798	3	2	290	10 11 557 7	SCHWUNGRADGEHAEUSE AN
PASSSCHEIBE	10007971	3	1	448	10 50 351 3	TRIEBWERK
PASSSCHEIBE 55X65X1.5 ST	7380531	44	1	124	92 68 016	RS VERSCHLUSSRING

Bezeichnung	Artikel	Pos.	Menge	Blatt	Baugruppe	Bezeichnung
PASSSCHEIBE 70X95X0.5	10475718	4	1	388	10 65 027 0	VERSCHLUSSRING
PASSSCHEIBE DIN 988 16X22	422014001	23	3	638	54 02 705 14	ANTRIEB KPL
PASSSCHEIBE DIN 988 50X62X	4002229	44	1	144	10 13 803 2	RS VERSCHLUSSRING
PENDEL	990627014	23	1	582	10 59 863 3	PENDEL KPL
PENDEL KPL	10598633	1	1	581	99 06 461 14	WINDMESSER KPL
PENDELROLLENLAGER	746001701	16	1	346	93 88 500 01	SEILTROMMEL
PILZKNOPF	592289914	73	1	416	10 35 008 0	KABINE
PLANETENACHSE	540271414	28	3	634	54 02 701 14	PLANETENSTUFE
PLANETENACHSE	540272614	2	3	637	54 02 704 14	ABTRIEB KPL
PLANETENGETRIEBE	938849701	5	1	345	96 96 248 01	WINDE
PLANETENRAD		7	5	348	93 88 497 01	PLANETENGETRIEBE
PLANETENRAD		32	3	348	93 88 497 01	PLANETENGETRIEBE
PLANETENRAD		42	3	348	93 88 497 01	PLANETENGETRIEBE
PLANETENRAD	540270614	12	3	634	54 02 701 14	PLANETENSTUFE
PLANETENRAD	540271014	22	3	634	54 02 701 14	PLANETENSTUFE
PLANETENRAD	927562601	20	5	392	90 01 376 2	DREHWERKANTRIEB
PLANETENRAD	927596701	40	3	392	90 01 376 2	DREHWERKANTRIEB
PLANETENRAD	927651501	55	3	392	90 01 376 2	DREHWERKANTRIEB
PLANETENRAD	944404303	18	5	467	96 93 178 01	FAHRANTRIEB
PLANETENRAD	944404403	1	1	468	94 44 043 03	PLANETENRAD
PLANETENRAD	944404803	28	3	467	96 93 178 01	FAHRANTRIEB
PLANETENRAD	944404903	1	1	469	94 44 048 03	PLANETENRAD
PLANETENRAD	944406503	38	3	467	96 93 178 01	FAHRANTRIEB
PLANETENRAD	944406603	1	1	470	94 44 065 03	PLANETENRAD
PLANETENRAD	944434703	48	3	467	96 93 178 01	FAHRANTRIEB
PLANETENSTUFE	11893250	2	1	487	11 89 322 8	REPARATURSATZ
PLANETENSTUFE	11893252	4	1	487	11 89 322 8	REPARATURSATZ
PLANETENSTUFE	540270114	1	1	633	59 20 694 14	WINDE
PLANETENTRAEGER		30	1	348	93 88 497 01	PLANETENGETRIEBE
PLANETENTRAEGER		40	1	348	93 88 497 01	PLANETENGETRIEBE
PLANETENTRAEGER	540271314	27	1	634	54 02 701 14	PLANETENSTUFE
PLANETENTRAEGER	540272514	1	1	637	54 02 704 14	ABTRIEB KPL
PLANETENTRAEGER	90022085	15	1	392	90 01 376 2	DREHWERKANTRIEB
PLANETENTRAEGER	927597201	35	1	392	90 01 376 2	DREHWERKANTRIEB
PLANETENTRAEGER	927651401	50	1	392	90 01 376 2	DREHWERKANTRIEB
PLANETENTRAEGER	944403903	15	1	467	96 93 178 01	FAHRANTRIEB
PLANETENTRAEGER	944404603	25	1	467	96 93 178 01	FAHRANTRIEB
PLANETENTRAEGER	944406403	35	1	467	96 93 178 01	FAHRANTRIEB
PLANETENTRAEGER	969392201	45	1	467	96 93 178 01	FAHRANTRIEB
PLATTE	10098789	22	1	326	11 24 922 2	ABDECKUNG UNTERSEITE
PLATTE	10099005	1	1	369	99 29 389 14	SEITENTEIL
PLATTE	10099005	1	1	370	99 29 392 14	SEITENTEIL
PLATTE	10099009	3	10	372	99 29 386 14	KONSOLE KPL
PLATTE	10099009	3	10	373	99 29 434 14	KONSOLE KPL
PLATTE	10119129	1	1	291	10 11 912 8	VERSCHLUSSTEILE
PLATTE	10225695	37	2	308	11 24 409 0	VERKLEIDUNG OW EINBAU KP
PLATTE	10226477	24	1	419	10 35 007 6	SCHIEBETUER
PLATTE	10336707	1	3	372	99 29 386 14	KONSOLE KPL
PLATTE	10336707	1	3	373	99 29 434 14	KONSOLE KPL
PLATTE	10336708	2	8	372	99 29 386 14	KONSOLE KPL
PLATTE	10336708	2	8	373	99 29 434 14	KONSOLE KPL
PLATTE	10336722	4	3	372	99 29 386 14	KONSOLE KPL
PLATTE	10336722	4	3	373	99 29 434 14	KONSOLE KPL
PLATTE	10447259	39	1	417	10 22 645 4	TUERE ZUBEHOEHR
PLATTE	10522189	7	1	422	59 22 871 14	FRONTSCHEIBE KPL
PLATTE	10540513	24	2	685	11 23 619 7	SELBSTVERLADESYSTEM NR
PLATTE	10545918	10	1	308	11 24 409 0	VERKLEIDUNG OW EINBAU KP
PLATTE	10560687	10	1	326	11 24 922 2	ABDECKUNG UNTERSEITE
PLATTE	10560688	17	1	326	11 24 922 2	ABDECKUNG UNTERSEITE
PLATTE	10560690	16	1	326	11 24 922 2	ABDECKUNG UNTERSEITE

Bezeichnung	Artikel	Pos.	Menge	Blatt	Baugruppe	Bezeichnung
PLATTE	10560691	11	1	326	11 24 922 2	ABDECKUNG UNTERSEITE
PLATTE	10560692	12	1	326	11 24 922 2	ABDECKUNG UNTERSEITE
PLATTE	10583559	15	1	326	11 24 922 2	ABDECKUNG UNTERSEITE
PLATTE	10583611	19	1	326	11 24 922 2	ABDECKUNG UNTERSEITE
PLATTE	10583612	20	1	326	11 24 922 2	ABDECKUNG UNTERSEITE
PLATTE	10583642	51	1	310	11 24 409 0	VERKLEIDUNG OW EINBAU KP
PLATTE	10589204	74	2	507	11 23 820 4	ANLENKSTUECK KPL
PLATTE	11215379	10	1	625	11 21 552 4	WINKELANZEIGE NRS
PLATTE	11219851	90	4	507	11 23 820 4	ANLENKSTUECK KPL
PLATTE	11219851	11	2	518	11 23 653 3	AUFLAGE KPL
PLATTE	11219851	11	2	540	11 25 204 2	AUFLAGE KPL
PLATTE	11219851	12	2	558	11 23 292 2	AUFLAGE KPL
PLATTE	11228227	25	1	685	11 23 619 7	SELBSTVERLADESYSTEM NR
PLATTE	11231673	19	2	579	11 28 648 4	MONTAGETEILE
PLATTE	11244094	28	1	308	11 24 409 0	VERKLEIDUNG OW EINBAU KP
PLATTE	11249223	13	1	326	11 24 922 2	ABDECKUNG UNTERSEITE
PLATTE	11249224	18	1	326	11 24 922 2	ABDECKUNG UNTERSEITE
PLATTE	11249225	21	1	326	11 24 922 2	ABDECKUNG UNTERSEITE
PLATTE	11249678	24	1	326	11 24 922 2	ABDECKUNG UNTERSEITE
PLATTE	11909496	140	1	428	11 93 934 6	KLIMAANLAGE
PLATTE	11913226	64	4	579	11 28 648 4	MONTAGETEILE
PLATTE	592072914	112	1	18	11 28 647 6	VENTILBLOCK
PLEUELLAGER	10145100	2	1	233	11 34 807 2	PLEUELSTANGE
PLEUELLAGER	10145101	3	1	233	11 34 807 2	PLEUELSTANGE
PLEUELSTANGE	11348054	1	1	233	11 34 807 2	PLEUELSTANGE
PLEUELSTANGE	11348072	60	6	214	12 42 545 4	DIESELMOTOR
PODEST	10512048	101	1	416	10 35 008 0	KABINE
PODEST	10512061	89	1	416	10 35 008 0	KABINE
PODEST	11245755	1	2	644	11 24 147 8	UW PODEST
PODEST	992671814	1	2	478	99 23 389 14	UW PODEST
PODESTSICHERUNG KPL	592291414	116	1	416	10 35 008 0	KABINE
PRATZE	10146415	1	1	257	10 13 543 4	BEFESTIGUNG DRUCKROHR
PRATZE	10150144	2	1	253	10 15 315 1	DRUCKROHRSTUTZEN MIT BE
PRATZE	11403994	2	1	252	10 15 286 7	INJEKTOR MIT BEFEST.
PRATZE	11403994	1	1	256	10 13 543 2	BEFESTIGUNG INJEKTOR
PRESSKLEMME	773920008	13	4	540	11 25 204 2	AUFLAGE KPL
PRESSKLEMME	773920008	26	6	582	10 59 863 3	PENDEL KPL
PROFIL	592291114	97	1	416	10 35 008 0	KABINE
PROFILHOHLWELLE	10350230	130	2	86	11 24 682 0	VERTEILERGETRIEBE
PROFILHOHLWELLE	11253077	140	2	86	11 24 682 0	VERTEILERGETRIEBE
PROFILSCHELLE	10141051	30	1	304	11 40 371 1	SCR KPL.
PROFILSCHELLE	10494116	21	2	198	11 24 114 3	ABGASANLAGE
PROFILSCHELLE	10494116	21	2	303	11 90 032 5	ABGASANLAGE
PROFILSCHELLE	10494117	22	2	303	11 90 032 5	ABGASANLAGE
PROFILSCHNUR	501507014	13	1	635	54 02 702 14	SEILTROMMEL KPL
PROPORTIONALMAGNET	11219375	2	2	101	11 21 991 7	STEUERGERAET
PUFFER	10567622	31	4	183	11 94 151 8	KUEHLER EINBAU WASSER
PUFFER	592286814	13	1	415	10 35 008 0	KABINE
PULTABLAGE	970857103	32	1	308	11 24 409 0	VERKLEIDUNG OW EINBAU KP
PUMPE	11373478	7	1	204	11 92 923 6	ANLAGE HARNSTOFF EINBAU
PUMPENDECKEL	11219350	4	1	87	10 53 430 7	V.PUMPE
PUMPENELEMENT	10540347	1	1	60	11 22 312 3	ZENTRALSCHMIERPUMPE
PUMPENELEMENT	11215913	1	1	163	10 22 601 3	V.PUMPE
PUMPENELEMENT	11215936	1	1	164	11 21 591 3	PUMPENELEMENT
PUMPENELEMENT	11221268	1	1	154	10 22 650 5	V.PUMPE
PUMPENELEMENT	11221274	1	1	155	11 22 126 8	PUMPENELEMENT
PUMPENGEHAEUSE	10132069	1	1	247	10 13 382 3	ABSAUGPUMPE VORM.
PUMPENGEHAEUSE	11219910	3	1	87	10 53 430 7	V.PUMPE
PUMPENGEHAEUSE	11219930	1	1	92	11 21 991 0	PUMPENGEHAEUSE
QUERGRIFF 1 "	885391814	50	1	500	10 56 187 5	WERKZEUGAUSRUESTUNG

Bezeichnung	Artikel	Pos.	Menge	Blatt	Baugruppe	Bezeichnung
QUERTRAEGER SCHWK	10557217	11	1	667	10 55 601 0	STURZSICHERUNG NRS
QUERVERBINDER	602731714	51	1	39	10 56 645 8	KLEMMKASTEN
QUERVERBINDER	602731714	14	2	611	10 57 652 3	KLEMMDOSE
QUERVERBINDER	602812414	88	1	402	10 55 963 5	SCHALTSCHR X1
QUERVERBINDER	693138614	73	1	402	10 55 963 5	SCHALTSCHR X1
RADIALWELLENDICHTRING		11	1	348	93 88 497 01	PLANETENGETRIEBE
RADIALWELLENDICHTRING		63	2	348	93 88 497 01	PLANETENGETRIEBE
RADIALWELLENDICHTRING	10014510	35	1	124	92 68 016	RS VERSCHLUSSRING
RADIALWELLENDICHTRING	11950212	53	1	376	99 04 645 14	ANTRIEB
RADIALWELLENDICHTRING	710022201	64	2	392	90 01 376 2	DREHWERKANTRIEB
RADIALWELLENDICHTRING	710029801	18	1	346	93 88 500 01	SEILTROMMEL
RADIALWELLENDICHTRING	710048501	17	1	346	93 88 500 01	SEILTROMMEL
RADIALWELLENDICHTRING	710054401	4	1	392	90 01 376 2	DREHWERKANTRIEB
RADIALWELLENDICHTRING	710058901	11	2	392	90 01 376 2	DREHWERKANTRIEB
RADIO NRS	10592569	14	1	2	01 38 406 14	LR 1300 SX
RAHMEN	10566842	1	1	312	11 24 409 1	VERKLEIDUNG
RAHMEN	11236714	7	1	725	11 21 750 0	VERFLUESSIGER
RAHMEN	11244092	2	1	312	11 24 409 1	VERKLEIDUNG
RAHMEN	11281448	1	1	422	59 22 871 14	FRONTSCHEIBE KPL
RAHMEN	602481914	1	1	411	91 65 251 14	KABELDURCHFUEHRUNG KAB
RAHMEN KPL	11247688	1	1	176	11 24 113 8	MOTORLAGER KPL
RAHMEN SCHWK	10578321	12	1	65	10 58 163 4	KABINENAUFHAENGUNG KPL
RASTBOLZEN M10X1	540272414	60	1	636	54 02 703 14	FLANSCH KPL
RASTHUELSE	540272314	33	1	636	54 02 703 14	FLANSCH KPL
RASTVORRICHTUNG KPL	7025007	23	1	431	70 24 996	SITZRAHMEN
RAUPENTRAEGER LI KPL	11893651	11	1	439	11 89 364 8	UW KPL
RAUPENTRAEGER LI SCHWK	11893687	1	1	474	11 89 365 1	RAUPENTRAEGER LI KPL
RAUPENTRAEGER RE KPL	11893650	10	1	439	11 89 364 8	UW KPL
RAUPENTRAEGER RE SCHWK	11893689	1	1	463	11 89 365 0	RAUPENTRAEGER RE KPL
RECHTECKRING	10472425	109	18	10	11 29 618 6	OW HYDR
RECHTECKRING	10472425	70	3	82	11 24 773 5	AGGREGAT HYDR
RECHTECKRING	10472425	616	2	358	10 51 968 7	HAUPT EZW HYDR
RECHTECKRING	10472425	631	10	444	11 89 300 5	VERROHRUNG HYDR
RECHTECKRING	10472425	740	5	482	11 26 260 6	WINDE 1 HYDR
RECHTECKRING	10472425	740	5	497	11 26 261 1	WINDE 2 HYDR
RECHTECKRING	10490781	110	19	10	11 29 618 6	OW HYDR
RECHTECKRING	10490781	72	2	82	11 24 773 5	AGGREGAT HYDR
RECHTECKRING	10490781	630	2	341	10 51 969 8	NADELEINZIEHWINDE HYDR
RECHTECKRING	10490781	641	2	381	10 55 216 1	VERROHRUNG HYDR
RECHTECKRING	10490784	106	4	10	11 29 618 6	OW HYDR
RECHTECKRING	10490784	71	13	82	11 24 773 5	AGGREGAT HYDR
RECHTECKRING	10490784	640	4	381	10 55 216 1	VERROHRUNG HYDR
RECHTECKRING	10490784	660	1	525	10 51 959 1	VERROHRUNG HYDR
RECHTECKRING	10490784	615	1	687	10 51 973 8	SELBSTVERLADESYSTEM H
RECHTECKRING	10490785	107	4	10	11 29 618 6	OW HYDR
RECHTECKRING	10490787	108	5	10	11 29 618 6	OW HYDR
REDUZIERSTUECK	11234129	285	1	18	11 28 647 6	VENTILBLOCK
REDUZIERSTUTZEN	11290857	540	1	86	11 24 682 0	VERTEILERGETRIEBE
REDUZIERUNG	11946457	330	1	428	11 93 934 6	KLIMAANLAGE
REDUZIERUNG	260493202	57	1	741	10 52 155 9	MODUL BETANKUNGSANLAG
REDUZIERUNG	260493402	29	1	575	10 57 559 9	KABELSATZ
REDUZIERUNG	260493702	46	1	512	11 90 151 1	KABELSATZ 1 ANLENKSTUECK
REDUZIERUNG	602620201	28	2	575	10 57 559 9	KABELSATZ
REDUZIERUNG	602620201	62	3	575	10 57 559 9	KABELSATZ
REDUZIERUNG	602620201	84	2	576	10 57 559 9	KABELSATZ
REDUZIERUNG	602620201	84	2	609	10 57 651 9	KABELSATZ
REDUZIERUNG	602620201	38	2	657	99 24 978 14	AL EL
REDUZIERUNG	602620401	28	1	609	10 57 651 9	KABELSATZ
REDUZIERUNG	602620401	36	1	609	10 57 651 9	KABELSATZ
REDUZIERUNG	602620401	56	2	741	10 52 155 9	MODUL BETANKUNGSANLAG

Bezeichnung	Artikel	Pos.	Menge	Blatt	Baugruppe	Bezeichnung
REGELVENTIL	10127478	7	1	127	10 12 878 7	V.PUMPE
REGELVENTIL	10127479	10	1	132	10 12 747 8	REGELVENTIL
REGELVENTIL	11362187	4	1	127	10 12 878 7	V.PUMPE
REGELVENTIL	9074418	4	2	103	10 11 834 9	DOPPELV.PUMPE
REIHENKLEMME	10550739	75	22	402	10 55 963 5	SCHALTSCHR X1
REIHENKLEMME	602125114	22	7	39	10 56 645 8	KLEMMKASTEN
REIHENKLEMME	602151914	86	4	402	10 55 963 5	SCHALTSCHR X1
REIHENKLEMME	602153214	51	2	735	10 56 013 7	FREMDEINSPEISUNG BATTERI
REIHENKLEMME	602153814	23	39	39	10 56 645 8	KLEMMKASTEN
REIHENKLEMME	602153814	74	13	402	10 55 963 5	SCHALTSCHR X1
REIHENKLEMME	602153814	80	4	402	10 55 963 5	SCHALTSCHR X1
REIHENKLEMME	602153814	12	15	611	10 57 652 3	KLEMMDOSE
REIHENKLEMME	693181114	71	3	402	10 55 963 5	SCHALTSCHR X1
RELAIS	10226635	21	1	172	11 24 448 7	ZENTRALAGGREGAT EL
RELAIS	630160214	41	2	741	10 52 155 9	MODUL BETANKUNGSANLAG
RELAIS STECKSOCKEL	630122908	84	1	402	10 55 963 5	SCHALTSCHR X1
REPARATURSATZ	11231317	3	1	487	11 89 322 8	REPARATURSATZ
REPARATURSATZ	11231319	5	1	487	11 89 322 8	REPARATURSATZ
REPARATURSATZ	11231322	1	1	488	11 23 126 9	SEILTROMMEL
REPARATURSATZ	11231336	1	1	489	11 23 127 0	FLANSCHLAGER
REPARATURSATZ	11233487	1	1	487	11 89 322 8	REPARATURSATZ
REPARATURSATZ	11253394	1	1	362	10 58 386 4	FLANSCH
REPARATURSATZ	11253398	1	1	363	10 55 597 3	SEILTROMMEL
REPARATURSATZ	11253401	1	1	364	10 58 386 5	GETRIEBE
REPARATURSATZ	11253440	1	1	365	10 58 384 5	OELLEITUNG
REPARATURSATZ	11893228	1	1	486	11 89 321 3	GETRIEBE
REPARATURSATZ	11893254	1	1	491	11 89 321 5	WINDENBOCK
REPARATURSATZ	11893255	1	1	492	11 89 321 6	OELLEITUNG
RESERVESICHERUNGEN	992081114	56	1	402	10 55 963 5	SCHALTSCHR X1
RIEGEL	10351784	14	1	316	10 57 883 5	TUER
RIEGEL	10351784	14	1	318	10 57 897 6	TUER
RIEGEL	10351784	14	1	320	10 57 940 0	TUER
RIEGEL	10351784	14	1	321	10 56 623 7	TUER
RIEGEL	10351784	16	1	322	10 56 580 8	TUER
RILLENKUGELLAGER		3	1	348	93 88 497 01	PLANETENGETRIEBE
RILLENKUGELLAGER	10350232	290	4	86	11 24 682 0	VERTEILERGETRIEBE
RILLENKUGELLAGER	10592555	30	1	376	99 04 645 14	ANTRIEB
RILLENKUGELLAGER	616155214	4	2	515	61 61 541 14	KABELTROMMEL
RILLENKUGELLAGER	745120514	24	6	613	11 28 744 5	MONTAGETEILE
RILLENKUGELLAGER	745120514	20	2	662	99 10 116 14	SEILFUEHRUNG
RILLENKUGELLAGER	745128314	40	1	636	54 02 703 14	FLANSCH KPL
RILLENKUGELLAGER	745141001	66	1	392	90 01 376 2	DREHWERKANTRIEB
RILLENKUGELLAGER	745141814	280	6	86	11 24 682 0	VERTEILERGETRIEBE
RILLENKUGELLAGER	745194714	12	1	638	54 02 705 14	ANTRIEB KPL
RILLENKUGELLAGER	745906614	6	1	636	54 02 703 14	FLANSCH KPL
RILLENKUGELLAGER	745907514	23	1	637	54 02 704 14	ABTRIEB KPL
RILLENKUGELLAGER	746171514	18	2	357	10 51 968 6	EZW OW EINBAU KPL
RING		12	1	348	93 88 497 01	PLANETENGETRIEBE
RING	11220477	10	1	723	11 22 037 2	FUSSPEDAL EL EINBAU
RING	11267455	10	1	100	11 21 935 0	PUMPENDECKEL
RING	9267341	11	1	106	92 67 343	ENTLUEFTUNGSVENTIL
RINGMUTTER DIN 582 M8 C1	411200108	81	1	673	11 30 567 0	TRANSPORTSICHERUNG
RINGSCHRAUBE DIN 580 M12	402600314	34	2	662	99 10 116 14	SEILFUEHRUNG
RINGSCHRAUBE DIN 580 M16	402600514	10	6	337	99 29 803 14	VERZURRUNG BALLAST
RINGSCHRAUBE DIN 580 M8	402600114	62	1	310	11 24 409 0	VERKLEIDUNG OW EINBAU KP
RITZELSCHUTZ	10099140	16	2	378	10 51 968 2	DW OW
RITZELSCHUTZ	10227120	13	1	732	11 26 771 6	MONTAGETEILE
ROHR	10190120	10	1	352	93 36 755 01	OELMESSEINRICHTUNG
ROHR	11228802	11	1	653	11 22 870 8	SCHEINWERFERHALTER KPL
ROHR	11228803	13	1	653	11 22 870 8	SCHEINWERFERHALTER KPL

Bezeichnung	Artikel	Pos.	Menge	Blatt	Baugruppe	Bezeichnung
ROHR	11250564	23	1	183	11 94 151 8	KUEHLER EINBAU WASSER
ROHR	11287715	24	1	183	11 94 151 8	KUEHLER EINBAU WASSER
ROHR	11290847	170	1	86	11 24 682 0	VERTEILERGETRIEBE
ROHR	11910323	100	1	526	10 09 917 3	DOPPELWIRKZYL
ROHR	11930769	50	1	210	11 92 958 8	LUFTFUEHRUNG KPL
ROHR	289057714	55	1	505	11 23 820 4	ANLENKSTUECK KPL
ROHR	289057714	11	1	554	11 94 087 6	TRANSPORTSICHERUNG
ROHR	592316414	220	1	86	11 24 682 0	VERTEILERGETRIEBE
ROHR	9080660	6	1	226	10 15 529 8	OELWANNE VORM.
ROHR	933676701	5	1	352	93 36 755 01	OELMESSEINRICHTUNG
ROHR	950989914	18	1	613	11 28 744 5	MONTAGETEILE
ROHR	956213814	22	1	588	99 23 398 14	ROLLENSATZ
ROHR	957336914	17	1	579	11 28 648 4	MONTAGETEILE
ROHR	979323301	30	1	352	93 36 755 01	OELMESSEINRICHTUNG
ROHR	999832101	25	1	352	93 36 755 01	OELMESSEINRICHTUNG
ROHRLEITUNG	10132170	3	1	261	10 14 588 5	LECKOELRUECKLAUF
ROHRLEITUNG	10132180	20	1	261	10 14 588 5	LECKOELRUECKLAUF
ROHRLEITUNG	10141986	4	1	260	10 14 333 9	KRAFTSTOFFLEITUNGEN
ROHRLEITUNG	10141988	1	1	260	10 14 333 9	KRAFTSTOFFLEITUNGEN
ROHRLEITUNG	10141989	2	1	260	10 14 333 9	KRAFTSTOFFLEITUNGEN
ROHRLEITUNG	10142006	8	1	261	10 14 588 5	LECKOELRUECKLAUF
ROHRLEITUNG	10142080	3	1	260	10 14 333 9	KRAFTSTOFFLEITUNGEN
ROHRLEITUNG	10143235	1	1	261	10 14 588 5	LECKOELRUECKLAUF
ROHRLEITUNG	10145889	13	1	261	10 14 588 5	LECKOELRUECKLAUF
ROHRLEITUNG	10145914	12	1	284	10 14 511 2	ABGASSTUTZEN ANBAU
ROHRLEITUNG	10146838	4	1	285	10 14 622 4	LADEDRUCKREGELUNG
ROHRLEITUNG	10146839	5	1	285	10 14 622 4	LADEDRUCKREGELUNG
ROHRLEITUNG	10146840	6	1	285	10 14 622 4	LADEDRUCKREGELUNG
ROHRLEITUNG	10147368	2	1	265	10 14 736 9	ANSAUGSTUTZEN ANBAU
ROHRLEITUNG	10149699	1	1	276	10 14 821 7	ROHRLEITUNG ANBAU
ROHRLEITUNG	11410004	5	1	302	11 41 475 7	ANBAUTEILE LUFTPRESSER
ROHRLEITUNG ANBAU	10139539	7	1	225	10 14 844 4	OELWANNE MIT BEFEST.
ROHRLEITUNG ANBAU	10148217	381	1	215	12 42 545 4	DIESELMOTOR
ROHRLEITUNG ANBAU	11414758	5	1	299	11 92 891 3	KOMPRESSOR NRS
ROHRSATZ	10227437	30	1	685	11 23 619 7	SELBSTVERLADESYSTEM NR
ROHRSATZ	10588224	10	1	721	10 51 728 1	VERROHRUNG HYDR
ROHRSCHELLE	10579877	7	1	721	10 51 728 1	VERROHRUNG HYDR
ROHRSCHELLE	11290856	530	1	86	11 24 682 0	VERTEILERGETRIEBE
ROHRSCHELLE	11910324	180	2	526	10 09 917 3	DOPPELWIRKZYL
ROHRSCHELLE	7382216	12	1	302	11 41 475 7	ANBAUTEILE LUFTPRESSER
ROHRSCHELLE	9077164	14	1	285	10 14 622 4	LADEDRUCKREGELUNG
ROHRSTUTZEN	10040777	6	2	731	11 28 048 1	ANSCHLUSSTEILE
ROHRSTUTZEN	11243834	7	1	731	11 28 048 1	ANSCHLUSSTEILE
ROLLE	11256217	19	2	535	11 24 444 4	A-BOCK 1 KPL
ROLLE	970961303	11	3	613	11 28 744 5	MONTAGETEILE
ROLLE	970961303	19	1	662	99 10 116 14	SEILFUEHRUNG
ROLLE SCHWK	971361703	19	1	357	10 51 968 6	EZW OW EINBAU KPL
ROLLENKAEFIG		16	38	348	93 88 497 01	PLANETENGETRIEBE
ROLLENSATZ	992339814	82	1	3	01 38 406 14	LR 1300 SX
ROLLENTRAEGER	919022714	25	1	662	99 10 116 14	SEILFUEHRUNG
ROLLWAGEN KPL	11928908	1	2	668	10 55 601 1	ABSTURZSICHERUNG KPL
RS ANSCHLUSSGEHAEUSE	10118357	90	1	105	10 11 835 0	ANSCHLUSSGEHAEUSE
RS ANSCHLUSSPLATTE	10141317	83	1	127	10 12 878 7	V.PUMPE
RS ANTRIEB	10153606	180	1	214	12 42 545 4	DIESELMOTOR
RS ANTRIEB	11893253	1	1	490	11 89 321 4	ANTRIEB
RS DECKEL	9275443	85	1	103	10 11 834 9	DOPPELV.PUMPE
RS DRUCKABSCHNEIDUNG	10118367	83	1	103	10 11 834 9	DOPPELV.PUMPE
RS DRUCKROHRSTUTZEN	10141140	200	1	253	10 15 315 1	DRUCKROHRSTUTZEN MIT BE
RS FLANSCH	9077464	1	2	114	10 13 975 2	RS SCHWENKJOCH
RS HEBEL	10122245	7	1	134	10 13 802 5	RS TRIEBWERK

Bezeichnung	Artikel	Pos.	Menge	Blatt	Baugruppe	Bezeichnung
RS HOCHDRUCKPUMPE	10150743	1	1	249	10 15 085 7	HOCHDRUCKPUMPE MIT BEFE
RS HOCHDRUCKPUMPE	10150743	200	1	249	10 15 085 7	HOCHDRUCKPUMPE MIT BEFE
RS INJEKTOR	10152874	200	1	252	10 15 286 7	INJEKTOR MIT BEFEST.
RS KOLBEN MIT GLEITSCHUH	10122692	4	1	134	10 13 802 5	RS TRIEBWERK
RS KOLBEN MIT GLEITSCHUH	9889831	1	9	118	98 89 984	RS TRIEBWERK
RS KOLBEN MIT GLEITSCHUH	9889831	1	1	121	98 89 983	RS TRIEBWERK
RS KURBELWELLENDICHTUN	10121335	2	1	232	10 12 134 5	RS KURBELWELLENDICHTUN
RS KURBELWELLENDICHTUN	10121345	52	1	214	12 42 545 4	DIESELMOTOR
RS KURBELWELLENDICHTUN	10121952	1	1	232	10 12 134 5	RS KURBELWELLENDICHTUN
RS KURBELWELLENLAGERUN	10116928	50	1	231	90 76 458	KURBELWELLENLAGERSATZ
RS MAGNET	9273187	97	1	104	10 11 834 9	DOPPELV.PUMPE
RS RUECKZUGKUGEL+RUEC	9078214	3	1	134	10 13 802 5	RS TRIEBWERK
RS RUECKZUGKUGEL+RUEC	9889988	14	1	118	98 89 984	RS TRIEBWERK
RS RUECKZUGKUGEL+RUEC	9889988	14	1	121	98 89 983	RS TRIEBWERK
RS SCHWENKJOCH	10122246	8	1	134	10 13 802 5	RS TRIEBWERK
RS SCHWENKJOCH	10139752	84	1	103	10 11 834 9	DOPPELV.PUMPE
RS SCHWENKLAGER	10143607	6	1	134	10 13 802 5	RS TRIEBWERK
RS TRIEBWERK	10138025	81	1	127	10 12 878 7	V.PUMPE
RS TRIEBWERK	9889983	94	1	104	10 11 834 9	DOPPELV.PUMPE
RS TRIEBWERK	9889984	92	1	104	10 11 834 9	DOPPELV.PUMPE
RS VERSCHLUSSRING	10138032	84	1	127	10 12 878 7	V.PUMPE
RS VERSCHLUSSRING	10138032	6	1	146	10 13 803 3	DICHTSATZ KPL.
RS VERSCHLUSSRING	9268016	96	1	104	10 11 834 9	DOPPELV.PUMPE
RS VERSCHLUSSRING	9268016	96	1	126	92 76 408	DS DOPPELPUMPE
RS VERSTELLUNG	10122262	85	1	127	10 12 878 7	V.PUMPE
RS VORFOERDERPUMPE	10149198	220	1	249	10 15 085 7	HOCHDRUCKPUMPE MIT BEFE
RS VORFOERDERPUMPE	10149198	5	1	250	10 15 074 3	RS HOCHDRUCKPUMPE
RS WELLE	10138027	1	1	135	10 13 802 6	RS ZYL.+STEUERPL.+WELLE
RS WELLE	9884402	95	1	104	10 11 834 9	DOPPELV.PUMPE
RS WELLE	9889977	93	1	104	10 11 834 9	DOPPELV.PUMPE
RS ZUSATZTEILE	10122248	80	1	127	10 12 878 7	V.PUMPE
RS ZYL.+STEUERPL.+WELLE	10138026	2	1	134	10 13 802 5	RS TRIEBWERK
RS ZYLINDER+STEUERPLATT	9889832	2	1	121	98 89 983	RS TRIEBWERK
RS ZYLINDER+STEUERPLATT	9889833	2	1	118	98 89 984	RS TRIEBWERK
RS1 KURBELWELLENLAGERU	10140599	51	1	231	90 76 458	KURBELWELLENLAGERSATZ
RS2 KURBELWELLENLAGERU	10140603	52	1	231	90 76 458	KURBELWELLENLAGERSATZ
RUECKENTEIL	10289988	2	1	430	10 22 506 8	FAHRERSITZ
RUECKFALLSTUETZE	11292598	60	1	2	01 38 406 14	LR 1300 SX
RUECKFALLSTUETZE	919390814	1	1	621	97 08 757 03	RUECKFALLSTUETZEN
RUECKFALLSTUETZE	994572314	7	1	621	97 08 757 03	RUECKFALLSTUETZEN
RUECKFALLSTUETZEN	970875703	13	1	604	99 34 387 14	NADELANBAUTEILE
RUECKFALLSTUETZEN EINBA	11275365	10	1	522	11 29 259 8	RUECKFALLSTUETZE
RUECKFALLSTUETZEN HYDR	10585108	2	1	522	11 29 259 8	RUECKFALLSTUETZE
RUECKHALTESTANGE	992341514	12	1	604	99 34 387 14	NADELANBAUTEILE
RUECKLAUFFILTER	10515724	12	1	48	10 56 070 1	TANK HYDR KPL
RUECKLAUFROHR	10580170	19	1	80	11 92 885 2	ZENTRALAGGREGAT KPL
RUECKSCHLAGVENTIL	10099055	12	2	442	11 89 300 5	VERROHRUNG HYDR
RUECKSCHLAGVENTIL	10119971	9	1	230	10 14 671 6	OELLEITUNG VORM.
RUECKSCHLAGVENTIL	10352371	170	1	704	59 21 826 14	ABSTUETZZYLINDER
RUECKSCHLAGVENTIL	11229182	4	1	22	10 35 148 6	VENTILBLOCK
RUECKSCHLAGVENTIL	11233729	3	2	75	10 22 540 8	VENTILBLOCK
RUECKSCHLAGVENTIL	11233742	9	1	75	10 22 540 8	VENTILBLOCK
RUECKSCHLAGVENTIL	11233749	10	1	75	10 22 540 8	VENTILBLOCK
RUECKSCHLAGVENTIL	11233751	11	1	75	10 22 540 8	VENTILBLOCK
RUECKSCHLAGVENTIL	11270155	3	1	527	59 20 224 14	LASTHALTEVENTIL
RUECKSCHLAGVENTIL	11835950	181	4	18	11 28 647 6	VENTILBLOCK
RUECKSCHLAGVENTIL	510411614	10	1	525	10 51 959 1	VERROHRUNG HYDR
RUECKSCHLAGVENTIL	510493714	4	1	482	11 26 260 6	WINDE 1 HYDR
RUECKSCHLAGVENTIL	510493714	4	1	497	11 26 261 1	WINDE 2 HYDR
RUECKSCHLAGVENTIL	511419314	22	1	82	11 24 773 5	AGGREGAT HYDR

Bezeichnung	Artikel	Pos.	Menge	Blatt	Baugruppe	Bezeichnung
RUECKSCHLAGVENTIL	511458114	16	4	442	11 89 300 5	VERROHRUNG HYDR
RUECKSCHLAGVENTIL	511458814	5	1	482	11 26 260 6	WINDE 1 HYDR
RUECKSCHLAGVENTIL	511458814	5	1	497	11 26 261 1	WINDE 2 HYDR
RUECKSCHLAGVENTIL	511607214	31	1	8	11 29 618 6	OW HYDR
RUECKSCHLAGVENTIL	511631514	41	1	8	11 29 618 6	OW HYDR
RUECKSCHLAGVENTIL	592044714	33	1	8	11 29 618 6	OW HYDR
RUECKSCHLAGVENTIL	592052914	29	1	740	51 00 959 14	BETANKUNGSPUMPE
RUECKSCHLAGVENTIL	592071014	230	1	18	11 28 647 6	VENTILBLOCK
RUECKSCHLAGVENTIL ENTS	510466114	2	1	721	10 51 728 1	VERROHRUNG HYDR
RUECKZUGKUGEL	10324872	6	1	158	10 32 489 2	TRIEBWERK
RUECKZUGKUGEL	9889929	1	1	120	98 89 988	RS RUECKZUGKUGEL+RUEC
RUECKZUGPLATTE	7023459	4	1	158	10 32 489 2	TRIEBWERK
RUECKZUGPLATTE	7023835	11	1	386	11 94 017 6	TRIEBWERK HYDRAULIKTEIL
RUECKZUGPLATTE	9889930	2	1	120	98 89 988	RS RUECKZUGKUGEL+RUEC
RUNDSCHLINGE	10222935	92	2	500	10 56 187 5	WERKZEUGAUSRUESTUNG
RUNDSCHLINGE	10280543	27	4	685	11 23 619 7	SELBSTVERLADESYSTEM NR
RUNDSCHLINGE	790269114	93	1	500	10 56 187 5	WERKZEUGAUSRUESTUNG
RUNDSCHLINGE	790365114	29	1	685	11 23 619 7	SELBSTVERLADESYSTEM NR
RUNDSCHLINGE	805091714	18	1	604	99 34 387 14	NADELANBAUTEILE
RUNDSTAHL	954584908	17	144	463	11 89 365 0	RAUPENTRAEGER RE KPL
RUNDSTAHL	954584908	17	144	474	11 89 365 1	RAUPENTRAEGER LI KPL
SAMMELSCHIENE	10529597	57	1	402	10 55 963 5	SCHALTSCHR X1
SAMMELSCHIENE	11219647	58	1	402	10 55 963 5	SCHALTSCHR X1
SAUGDROSSELVENTIL	12401396	230	1	249	10 15 085 7	HOCHDRUCKPUMPE MIT BEFE
SAUGSCHLAUCH	11236511	45	1	179	10 57 532 2	ANSAUGROHR OEL KPL
SAUGSCHLAUCH	11236513	47	1	179	10 57 532 2	ANSAUGROHR OEL KPL
SAUGSCHLAUCH	11236514	43	1	179	10 57 532 2	ANSAUGROHR OEL KPL
SAUGSCHLAUCH	11236515	41	1	179	10 57 532 2	ANSAUGROHR OEL KPL
SAUGSCHLAUCH	11236517	40	1	179	10 57 532 2	ANSAUGROHR OEL KPL
SAUGSCHLAUCH	11236518	46	1	179	10 57 532 2	ANSAUGROHR OEL KPL
SAUGSCHLAUCH	592257814	44	1	179	10 57 532 2	ANSAUGROHR OEL KPL
SCHAEKEL	11280746	16	1	659	11 27 109 7	FANGSTANGE NRS
SCHAEKEL	773930114	19	1	501	10 56 183 8	WERKZEUG
SCHAEKEL	773930114	13	1	627	10 51 743 9	SEILEINZIEHWINDE KPL NRS
SCHAEKEL	773935814	28	4	685	11 23 619 7	SELBSTVERLADESYSTEM NR
SCHAEKEL	773939214	3	1	458	11 91 872 5	KETTE KPL
SCHAEKEL	773939214	15	1	589	99 30 800 14	SPITZENENDSCHALTER EINBA
SCHAEKEL	773954514	94	2	500	10 56 187 5	WERKZEUGAUSRUESTUNG
SCHAEKEL	773954714	3	2	472	99 08 357 14	ANHAENGEKETTE
SCHALLABNAHME	981953714	992	1	4	01 38 406 14	LR 1300 SX
SCHALLGEBER	11933792	10	1	413	11 95 272 6	SCHALLGEBER EL
SCHALLGEBER EL	11952726	83	1	400	11 27 973 6	KABINE EL
SCHALTELEMENT	606655208	1	1	577	92 75 218 08	ENDSCHALTER HUB OBEN
SCHALTER	10445976	1	1	409	69 31 685 14	SICHERHEITSHEBEL KPL
SCHALTER	592291814	121	1	416	10 35 008 0	KABINE
SCHALTERGEHAEUSE	385094414	5	1	407	10 53 171 8	TASTATUR
SCHALTHUELSE	540272214	32	1	636	54 02 703 14	FLANSCH KPL
SCHALTSCHR X1	10559635	8	1	399	11 27 973 6	KABINE EL
SCHARNIER	385204714	5	2	316	10 57 883 5	TUER
SCHARNIER	385204714	5	2	318	10 57 897 6	TUER
SCHARNIER	385204714	8	2	320	10 57 940 0	TUER
SCHARNIER	385204714	8	2	321	10 56 623 7	TUER
SCHARNIER	385204714	5	2	322	10 56 580 8	TUER
SCHARNIER	954560603	15	2	519	10 58 193 7	GITTERROST KPL
SCHARNIER KPL	10554231	12	2	669	10 55 280 7	GITTERROST KPL
SCHEIBE		58	1	348	93 88 497 01	PLANETENGETRIEBE
SCHEIBE	10522188	4	1	422	59 22 871 14	FRONTSCHEIBE KPL
SCHEIBE	10687926	81	1	406	10 03 610 7	TASTATUR BEDIENPULT X11
SCHEIBE	11293195	7	1	453	10 44 510 2	SCHNELLVERSCHLUSSKUPPL
SCHEIBE	11922654	13	1	190	10 57 423 9	KUEHLER MOTOR

Bezeichnung	Artikel	Pos.	Menge	Blatt	Baugruppe	Bezeichnung
SCHEIBE	540271214	25	6	634	54 02 701 14	PLANETENSTUFE
SCHEIBE	540271514	29	1	634	54 02 701 14	PLANETENSTUFE
SCHEIBE	540271914	3	1	636	54 02 703 14	FLANSCH KPL
SCHEIBE	540273114	11	1	638	54 02 705 14	ANTRIEB KPL
SCHEIBE	592288214	32	1	422	59 22 871 14	FRONTSCHEIBE KPL
SCHEIBE	7023834	5	1	386	11 94 017 6	TRIEBWERK HYDRAULIKTEIL
SCHEIBE	927562301	5	1	392	90 01 376 2	DREHWERKANTRIEB
SCHEIBE	958304714	20	2	539	99 23 394 14	HALTESTANGE KPL
SCHEIBE 1.9X71X118 PA 6 G	11942312	24	4	532	11 27 536 5	RUECKFALLSTUETZEN EINBA
SCHEIBE 10/30X50 S355J2;EN	11249738	11	2	199	11 24 114 4	KRAFTSTOFFANLAGE
SCHEIBE 12/30X30 S355J2;EN	10519789	74	4	194	11 92 922 0	ANSAUGANLAGE LUFT
SCHEIBE 12/50X5 POLYURE.	10351046	57	1	210	11 92 958 8	LUFTFUEHRUNG KPL
SCHEIBE 129/102X2 ST 12.03	385151114	6	1	366	99 29 258 14	EZW ROLLENPAKET
SCHEIBE 165/132X1 ST 12.03	385123814	13	2	366	99 29 258 14	EZW ROLLENPAKET
SCHEIBE 165/132X2 ST 12.03	949352914	12	4	366	99 29 258 14	EZW ROLLENPAKET
SCHEIBE 200/103X1 DC01;EN	385255414	16	4	700	11 89 568 6	SELBSTVERLADESYSTEM NR
SCHEIBE 200/103X2 DC01;EN	385255314	15	4	700	11 89 568 6	SELBSTVERLADESYSTEM NR
SCHEIBE 200/103X4 S235JR;E	385255514	17	4	700	11 89 568 6	SELBSTVERLADESYSTEM NR
SCHEIBE 21/37X4 PA 6 G	948967314	3	4	583	11 28 357 6	MONTAGETEILE
SCHEIBE 225/81X26 PA 6 G	970855603	6	2	538	99 14 137 14	UMLENKROLLE KPL
SCHEIBE 25.2/32X3 POM	958471614	18	1	316	10 57 883 5	TUER
SCHEIBE 25.2/32X3 POM	958471614	18	1	318	10 57 897 6	TUER
SCHEIBE 25.2/32X3 POM	958471614	7	1	320	10 57 940 0	TUER
SCHEIBE 25.2/32X3 POM	958471614	7	1	321	10 56 623 7	TUER
SCHEIBE 25.2/32X3 POM	958471614	15	1	322	10 56 580 8	TUER
SCHEIBE 34X45X1	9078522	6	2	237	11 44 800 5	KIPPHEBELBOCK VORM.
SCHEIBE 46/70X2 POLYAMID	10593096	23	8	71	10 51 969 4	A-BOCK AUFRICHTZYL EINBA
SCHEIBE 52/92X1 PA 6 G	11241005	22	16	71	10 51 969 4	A-BOCK AUFRICHTZYL EINBA
SCHEIBE 52/92X3 PA 6 G	949740514	15	20	71	10 51 969 4	A-BOCK AUFRICHTZYL EINBA
SCHEIBE 53/10X5 AISI 316	10567619	13	2	183	11 94 151 8	KUEHLER EINBAU WASSER
SCHEIBE 58/90X2 GUMMI NBR	949942814	21	8	620	99 23 415 14	RUECKHALTESTANGE
SCHEIBE 61/85X2 PA 6 G	943919114	39	4	579	11 28 648 4	MONTAGETEILE
SCHEIBE 61/85X2 PA 6 G	943919114	22	4	620	99 23 415 14	RUECKHALTESTANGE
SCHEIBE 76/13X6 LH355-40;1	947084514	22	12	337	99 29 803 14	VERZURRUNG BALLAST
SCHEIBE 81/200X74 PA 6 G	948773814	5	16	538	99 14 137 14	UMLENKROLLE KPL
SCHEIBE 9/16X25 S355J2;EN	10553403	55	6	204	11 92 923 6	ANLAGE HARNSTOFF EINBAU
SCHEIBE AEHNL.ISO 7089 10 P	420005414	19	2	653	11 22 870 8	SCHEINWERFERHALTER KPL
SCHEIBE AEHNL.ISO 7089 16 P	420053101	50	20	642	10 55 372 1	DACHGELAENDER NRS
SCHEIBE DIN 34816 10.5 PA 6.	485568514	9	4	370	99 29 392 14	SEITENTEIL
SCHEIBE DIN 34816 10.5 PA 6.	485568514	17	12	372	99 29 386 14	KONSOLE KPL
SCHEIBE DIN 34816 10.5 PA 6.	485568514	17	12	373	99 29 434 14	KONSOLE KPL
SCHEIBE DIN 34816 13 PA 6.6	485568614	11	8	555	11 94 087 8	MONTAGEEINHEIT
SCHEIBE DIN 440 R11 ST	420600408	13	6	67	10 56 067 3	BATTERIE EINBAU KPL
SCHEIBE DIN 6340 10.5 C35	421300214	72	4	48	10 56 070 1	TANK HYDR KPL
SCHEIBE DIN 6340 10.5 C35	421300214	71	4	177	10 51 948 1	ANSAUGROHR OEL
SCHEIBE DIN 6340 10.5 C35	421300214	74	24	184	11 94 151 8	KUEHLER EINBAU WASSER
SCHEIBE DIN 6340 10.5 C35	421300214	71	22	189	11 24 114 1	KUEHLER EINBAU LADELUFT
SCHEIBE DIN 6340 10.5 C35	421300214	72	6	194	11 92 922 0	ANSAUGANLAGE LUFT
SCHEIBE DIN 6340 10.5 C35	421300214	71	28	198	11 24 114 3	ABGASANLAGE
SCHEIBE DIN 6340 10.5 C35	421300214	124	12	205	11 92 923 6	ANLAGE HARNSTOFF EINBAU
SCHEIBE DIN 6340 10.5 C35	421300214	72	2	306	11 24 114 6	ABDECKUNG
SCHEIBE DIN 6340 13 ST	4635283	73	12	177	10 51 948 1	ANSAUGROHR OEL
SCHEIBE DIN 6340 13 ST	4635283	72	8	198	11 24 114 3	ABGASANLAGE
SCHEIBE DIN 6340 13 ST	4635283	125	2	205	11 92 923 6	ANLAGE HARNSTOFF EINBAU
SCHEIBE DIN 6340 17 C35	421300414	70	3	46	10 56 070 0	TANK HYDR EINBAU
SCHEIBE DIN 6340 17 C35	421300414	70	3	52	10 56 073 2	KRAFTSTOFFTANK EINBAU
SCHEIBE DIN 6340 21 C35	10567956	5	8	463	11 89 365 0	RAUPENTRAEGER RE KPL
SCHEIBE DIN 6340 21 C35	10567956	5	8	474	11 89 365 1	RAUPENTRAEGER LI KPL
SCHEIBE DIN 6340 25	883203014	73	2	176	11 24 113 8	MOTORLAGER KPL
SCHEIBE DIN 6340 8.4 C35	421300514	77	4	176	11 24 113 8	MOTORLAGER KPL

Bezeichnung	Artikel	Pos.	Menge	Blatt	Baugruppe	Bezeichnung
SCHEIBE DIN 6340 8.4 C35	421300514	72	20	183	11 94 151 8	KUEHLER EINBAU WASSER
SCHEIBE DIN 6340 8.4 C35	421300514	70	28	189	11 24 114 1	KUEHLER EINBAU LADELUFT
SCHEIBE DIN 6340 8.4 C35	421300514	70	4	192	11 28 574 7	WP
SCHEIBE DIN 6340 8.4 C35	421300514	71	4	194	11 92 922 0	ANSAUGANLAGE LUFT
SCHEIBE DIN 6916 17 C45	460024203	16	2	357	10 51 968 6	EZW OW EINBAU KPL
SCHEIBE DIN 6916 17 C45	460024203	8	8	370	99 29 392 14	SEITENTEIL
SCHEIBE DIN 6916 17 C45	460024203	15	6	372	99 29 386 14	KONSOLE KPL
SCHEIBE DIN 6916 17 C45	460024203	15	6	373	99 29 434 14	KONSOLE KPL
SCHEIBE DIN 6916 21 C45	460022203	11	48	378	10 51 968 2	DW OW
SCHEIBE DIN 6916 25 C45	460014603	74	2	176	11 24 113 8	MOTORLAGER KPL
SCHEIBE DIN 6916 25 C45	460014603	9	45	463	11 89 365 0	RAUPENTRAEGER RE KPL
SCHEIBE DIN 6916 25 C45	460014603	9	45	474	11 89 365 1	RAUPENTRAEGER LI KPL
SCHEIBE DIN 7349 17 ST	421600901	53	54	463	11 89 365 0	RAUPENTRAEGER RE KPL
SCHEIBE DIN 7349 17 ST	421600901	53	54	474	11 89 365 1	RAUPENTRAEGER LI KPL
SCHEIBE DIN 7349 6.4	4000648	70	9	183	11 94 151 8	KUEHLER EINBAU WASSER
SCHEIBE DIN 7989 11 ST	421700508	88	48	330	11 24 483 7	BEF-TEILE OW
SCHEIBE DIN 7989-B 18 ST;	421700314	36	4	82	11 24 773 5	AGGREGAT HYDR
SCHEIBE DIN EN 28738 20 ST;	421101714	5	2	583	11 28 357 6	MONTAGETEILE
SCHEIBE DIN EN 28738 20 ST;	421101714	36	2	662	99 10 116 14	SEILFUEHRUNG
SCHEIBE DIN EN 28738 22 ST;	421101814	3	2	471	10 50 179 5	AUFSTIEG KPL
SCHEIBE DIN EN 28738 26 ST;	421102214	24	8	65	10 58 163 4	KABINENAUFHAENGUNG KPL
SCHEIBE DIN EN 28738 26 ST;	421102214	3	4	70	99 23 451 14	ANLENKBOLZEN EINBAU
SCHEIBE DIN EN 28738 26 ST;	421102214	36	2	579	11 28 648 4	MONTAGETEILE
SCHEIBE DIN EN 28738 30 ST;	421102414	20	10	535	11 24 444 4	A-BOCK 1 KPL
SCHEIBE DIN EN 28738 35 ST;	421102814	35	4	613	11 28 744 5	MONTAGETEILE
SCHEIBE DIN EN 28738 36 ST;	421102914	46	2	662	99 10 116 14	SEILFUEHRUNG
SCHEIBE DIN EN 28738 36 ST;	421102914	3	12	663	99 31 838 14	ZWISCHENABSPANNUNG NR
SCHEIBE DIN EN 28738 36 ST;	421102914	6	14	665	97 05 997 03	ZWISCHENABSPANNUNG NR
SCHEIBE DIN EN 28738 40 ST	421103014	14	3	65	10 58 163 4	KABINENAUFHAENGUNG KPL
SCHEIBE DIN EN 28738 40 ST	421103014	78	4	176	11 24 113 8	MOTORLAGER KPL
SCHEIBE DIN EN 28738 40 ST	421103014	18	8	339	10 51 969 7	NADELEINZIEHWINDE
SCHEIBE DIN EN 28738 40 ST	421103014	36	11	620	99 23 415 14	RUECKHALTESTANGE
SCHEIBE DIN EN 28738 40 ST	421103014	3	2	621	97 08 757 03	RUECKFALLSTUETZEN
SCHEIBE DIN EN 28738 45 ST;	421103214	19	2	71	10 51 969 4	A-BOCK AUFRICHTZYL EINBA
SCHEIBE DIN EN 28738 45 ST;	421103214	37	4	579	11 28 648 4	MONTAGETEILE
SCHEIBE DIN EN 28738 45 ST;	421103214	34	2	613	11 28 744 5	MONTAGETEILE
SCHEIBE DIN EN 28738 50 ST;	421103314	16	10	614	95 70 956 14	HALTESTANGE KPL
SCHEIBE DIN EN 28738 50 ST;	421103314	26	6	620	99 23 415 14	RUECKHALTESTANGE
SCHEIBE DIN EN 28738 50 ST;	421103314	20	1	685	11 23 619 7	SELBSTVERLADESYSTEM NR
SCHEIBE DIN EN 28738 60 ST;	421103514	62	2	507	11 23 820 4	ANLENKSTUECK KPL
SCHEIBE DIN EN 28738 60 ST;	421103514	13	4	557	10 53 216 2	HALTESTANGE KPL
SCHEIBE DIN EN 28738 60 ST;	421103514	13	4	565	10 53 216 3	HALTESTANGE KPL
SCHEIBE DIN EN 28738 60 ST;	421103514	13	4	572	10 53 216 4	HALTESTANGE KPL
SCHEIBE DIN EN 28738 60 ST;	421103514	38	16	579	11 28 648 4	MONTAGETEILE
SCHEIBE DIN EN 28738 60 ST;	421103514	25	8	620	99 23 415 14	RUECKHALTESTANGE
SCHEIBE DIN EN 28738 60 ST;	421103514	42	2	662	99 10 116 14	SEILFUEHRUNG
SCHEIBE DIN EN 28738 60 ST;	421103514	24	12	679	10 51 971 3	SELBSTVERLADESYSTEM NR
SCHEIBE DIN EN 28738 65 ST;	421103614	18	6	337	99 29 803 14	VERZURRUNG BALLAST
SCHEIBE DIN EN 28738 65 ST;	421103614	13	4	556	10 54 054 8	HALTESTANGE KPL
SCHEIBE DIN EN 28738 65 ST;	421103614	13	4	564	10 54 055 1	HALTESTANGE KPL
SCHEIBE DIN EN 28738 65 ST;	421103614	13	4	571	10 54 055 5	HALTESTANGE KPL
SCHEIBE DIN EN 28738 65 ST;	421103614	13	6	586	10 54 056 7	HALTESTANGE KPL
SCHEIBE DIN EN 28738 70 ST;	421103914	35	10	620	99 23 415 14	RUECKHALTESTANGE
SCHEIBE DIN EN 28738 75 ST;	421103714	14	4	539	99 23 394 14	HALTESTANGE KPL
SCHEIBE DIN EN 28738 75 ST;	421103714	16	6	586	10 54 056 7	HALTESTANGE KPL
SCHEIBE DIN EN 28738 80 ST;	421103814	11	2	517	11 28 726 4	BOLZEN KPL
SCHEIBE DIN EN 28738 80 ST;	421103814	24	8	620	99 23 415 14	RUECKHALTESTANGE
SCHEIBE DIN EN 28738 80 ST;	421103814	20	2	679	10 51 971 3	SELBSTVERLADESYSTEM NR
SCHEIBE EN 14399-6 12 C45	460022703	37	14	82	11 24 773 5	AGGREGAT HYDR
SCHEIBE EN 14399-6 12 C45	460022703	89	34	330	11 24 483 7	BEF-TEILE OW

Bezeichnung	Artikel	Pos.	Menge	Blatt	Baugruppe	Bezeichnung
SCHEIBE EN 14399-6 12 C45	460022703	5	4	369	99 29 389 14	SEITENTEIL
SCHEIBE EN 14399-6 12 C45	460022703	5	4	370	99 29 392 14	SEITENTEIL
SCHEIBE EN 14399-6 12 C45	460022703	14	16	372	99 29 386 14	KONSOLE KPL
SCHEIBE EN 14399-6 12 C45	460022703	14	16	373	99 29 434 14	KONSOLE KPL
SCHEIBE EN 14399-6 12 C45	460022703	71	1	673	11 30 567 0	TRANSPORTSICHERUNG
SCHEIBE EN 14399-6 30 ST	421500614	7	30	463	11 89 365 0	RAUPENTRAEGER RE KPL
SCHEIBE EN 14399-6 30 ST	421500614	7	30	474	11 89 365 1	RAUPENTRAEGER LI KPL
SCHEIBE ISO 7089	11219067	7	2	201	10 55 091 1	KRAFTSTOFFVORFILTER AN
SCHEIBE ISO 7089 10	11932238	10	16	190	10 57 423 9	KUEHLER MOTOR
SCHEIBE ISO 7089 10 A4	420001114	15	8	45	10 51 961 6	OELKUEHLER EINBAU
SCHEIBE ISO 7089 10 A4	420001114	70	44	48	10 56 070 1	TANK HYDR KPL
SCHEIBE ISO 7089 10 A4	420001114	70	6	53	10 56 073 3	KRAFTSTOFFTANK KPL
SCHEIBE ISO 7089 10 A4	420001114	18	4	67	10 56 067 3	BATTERIE EINBAU KPL
SCHEIBE ISO 7089 10 A4	420001114	4	8	69	10 56 069 4	MODULE EINBAU
SCHEIBE ISO 7089 10 A4	420001114	70	42	176	11 24 113 8	MOTORLAGER KPL
SCHEIBE ISO 7089 10 A4	420001114	70	4	177	10 51 948 1	ANSAUGROHR OEL
SCHEIBE ISO 7089 10 A4	420001114	70	6	179	10 57 532 2	ANSAUGROHR OEL KPL
SCHEIBE ISO 7089 10 A4	420001114	73	28	184	11 94 151 8	KUEHLER EINBAU WASSER
SCHEIBE ISO 7089 10 A4	420001114	123	4	205	11 92 923 6	ANLAGE HARNSTOFF EINBAU
SCHEIBE ISO 7089 10 A4	420001114	73	4	210	11 92 958 8	LUFTFUEHRUNG KPL
SCHEIBE ISO 7089 10 A4	420001114	71	11	306	11 24 114 6	ABDECKUNG
SCHEIBE ISO 7089 10 A4	420001114	55	40	310	11 24 409 0	VERKLEIDUNG OW EINBAU KP
SCHEIBE ISO 7089 10 A4	420001114	12	36	324	10 54 591 0	MOTORABDECKUNG
SCHEIBE ISO 7089 10 A4	420001114	78	53	330	11 24 483 7	BEF-TEILE OW
SCHEIBE ISO 7089 10 A4	420001114	14	16	336	10 52 656 0	MONTAGETEILE
SCHEIBE ISO 7089 10 A4	420001114	27	6	398	11 27 970 6	KABINE KPL
SCHEIBE ISO 7089 10 A4	420001114	67	36	507	11 23 820 4	ANLENKSTUECK KPL
SCHEIBE ISO 7089 10 A4	420001114	13	2	542	99 29 588 14	AUFLAGE
SCHEIBE ISO 7089 10 A4	420001114	13	4	543	10 35 063 3	HALTERUNG
SCHEIBE ISO 7089 10 A4	420001114	16	4	550	11 28 397 7	AUFFANGWANNE KPL
SCHEIBE ISO 7089 10 A4	420001114	16	4	551	11 28 397 8	AUFFANGWANNE KPL
SCHEIBE ISO 7089 10 A4	420001114	16	8	552	11 28 399 5	AUFFANGWANNE KPL
SCHEIBE ISO 7089 10 A4	420001114	16	8	553	11 28 399 7	AUFFANGWANNE KPL
SCHEIBE ISO 7089 10 A4	420001114	68	8	579	11 28 648 4	MONTAGETEILE
SCHEIBE ISO 7089 10 A4	420001114	22	1	582	10 59 863 3	PENDEL KPL
SCHEIBE ISO 7089 10 A4	420001114	4	8	583	11 28 357 6	MONTAGETEILE
SCHEIBE ISO 7089 10 A4	420001114	10	2	589	99 30 800 14	SPITZENENDSCHALTER EINBA
SCHEIBE ISO 7089 10 A4	420001114	37	32	642	10 55 372 1	DACHGELAENDER NRS
SCHEIBE ISO 7089 10 A4	420001114	21	8	649	10 52 547 1	ZUSATZSCHEINWERFER OW
SCHEIBE ISO 7089 10 A4	420001114	21	4	653	11 22 870 8	SCHEINWERFERHALTER KPL
SCHEIBE ISO 7089 10 A4	420001114	16	6	662	99 10 116 14	SEILFUEHRUNG
SCHEIBE ISO 7089 10 A4	420001114	12	6	732	11 26 771 6	MONTAGETEILE
SCHEIBE ISO 7089 10 ST	10554336	70	1	181	11 24 113 9	ANBAUTEILE DIESELMOTOR
SCHEIBE ISO 7089 12 A4	4901782	10	1	35	10 53 048 9	SICHERUNGSHALTER
SCHEIBE ISO 7089 12 A4	4901782	71	12	48	10 56 070 1	TANK HYDR KPL
SCHEIBE ISO 7089 12 A4	4901782	20	2	65	10 58 163 4	KABINENAUFHAENGUNG KPL
SCHEIBE ISO 7089 12 A4	4901782	11	2	67	10 56 067 3	BATTERIE EINBAU KPL
SCHEIBE ISO 7089 12 A4	4901782	76	4	176	11 24 113 8	MOTORLAGER KPL
SCHEIBE ISO 7089 12 A4	4901782	70	20	180	10 58 017 0	RUECKLAUFROHR
SCHEIBE ISO 7089 12 A4	4901782	72	3	189	11 24 114 1	KUEHLER EINBAU LADELUFT
SCHEIBE ISO 7089 12 A4	4901782	75	3	210	11 92 958 8	LUFTFUEHRUNG KPL
SCHEIBE ISO 7089 12 A4	4901782	8	2	435	10 53 756 0	LEUCHTENHALTER KPL
SCHEIBE ISO 7089 12 A4	4901782	23	15	463	11 89 365 0	RAUPENTRAEGER RE KPL
SCHEIBE ISO 7089 12 A4	4901782	23	15	474	11 89 365 1	RAUPENTRAEGER LI KPL
SCHEIBE ISO 7089 12 A4	4901782	23	24	476	11 31 390 8	MITTELTEIL KPL
SCHEIBE ISO 7089 12 A4	4901782	68	16	507	11 23 820 4	ANLENKSTUECK KPL
SCHEIBE ISO 7089 12 A4	4901782	14	4	555	11 94 087 8	MONTAGEEINHEIT
SCHEIBE ISO 7089 12 A4	4901782	3	8	606	11 30 126 6	MONTAGETEILE
SCHEIBE ISO 7089 12 A4	4901782	49	10	642	10 55 372 1	DACHGELAENDER NRS
SCHEIBE ISO 7089 12 A4	4901782	12	6	659	11 27 109 7	FANGSTANGE NRS

Bezeichnung	Artikel	Pos.	Menge	Blatt	Baugruppe	Bezeichnung
SCHEIBE ISO 7089 12 A4	4901782	25	2	718	10 58 064 7	VIDEOUEBERWACHUNGSANL
SCHEIBE ISO 7089 13	10289804	8	17	290	10 11 557 7	SCHWUNGRADGEHAEUSE AN
SCHEIBE ISO 7089 16	10544172	72	48	176	11 24 113 8	MOTORLAGER KPL
SCHEIBE ISO 7089 16	10544172	102	2	330	11 24 483 7	BEF-TEILE OW
SCHEIBE ISO 7089 16	10544172	14	4	378	10 51 968 2	DW OW
SCHEIBE ISO 7089 16	10544172	36	12	463	11 89 365 0	RAUPENTRAEGER RE KPL
SCHEIBE ISO 7089 16	10544172	36	12	474	11 89 365 1	RAUPENTRAEGER LI KPL
SCHEIBE ISO 7089 16	10544172	15	28	476	11 31 390 8	MITTELTEIL KPL
SCHEIBE ISO 7089 16	10544172	76	16	507	11 23 820 4	ANLENKSTUECK KPL
SCHEIBE ISO 7089 16	10544172	26	4	548	11 28 390 8	AL BEGEHUNG
SCHEIBE ISO 7089 16	10544172	26	4	563	11 28 583 8	AL BEGEHUNG
SCHEIBE ISO 7089 16	10544172	26	4	570	11 28 626 1	AL BEGEHUNG
SCHEIBE ISO 7089 16	10544172	40	8	700	11 89 568 6	SELBSTVERLADESYSTEM NR
SCHEIBE ISO 7089 17/30X3 A4	4901893	71	4	181	11 24 113 9	ANBAUTEILE DIESELMOTOR
SCHEIBE ISO 7089 20	10544174	75	2	194	11 92 922 0	ANSAUGANLAGE LUFT
SCHEIBE ISO 7089 20	10544174	21	2	463	11 89 365 0	RAUPENTRAEGER RE KPL
SCHEIBE ISO 7089 20	10544174	21	2	474	11 89 365 1	RAUPENTRAEGER LI KPL
SCHEIBE ISO 7089 20	10544174	19	4	476	11 31 390 8	MITTELTEIL KPL
SCHEIBE ISO 7089 20	10544174	14	4	493	11 22 050 0	WINDEN EINBAU
SCHEIBE ISO 7089 20	10544174	14	4	499	11 22 050 1	WINDEN EINBAU
SCHEIBE ISO 7089 20	10544174	15	8	535	11 24 444 4	A-BOCK 1 KPL
SCHEIBE ISO 7089 20	10544174	12	4	555	11 94 087 8	MONTAGEEINHEIT
SCHEIBE ISO 7089 20	10544174	17	8	627	10 51 743 9	SEILEINZIEHWINDE KPL NRS
SCHEIBE ISO 7089 20	10544174	4	1	664	99 10 125 14	GABEL
SCHEIBE ISO 7089 24	10544176	33	12	463	11 89 365 0	RAUPENTRAEGER RE KPL
SCHEIBE ISO 7089 24	10544176	33	12	474	11 89 365 1	RAUPENTRAEGER LI KPL
SCHEIBE ISO 7089 24/13X2.5 S	11233289	121	4	18	11 28 647 6	VENTILBLOCK
SCHEIBE ISO 7089 27	420002601	29	4	662	99 10 116 14	SEILFUEHRUNG
SCHEIBE ISO 7089 3 A4	485546414	6	4	436	11 30 962 5	HALTER KPL
SCHEIBE ISO 7089 30	10544177	28	64	463	11 89 365 0	RAUPENTRAEGER RE KPL
SCHEIBE ISO 7089 30	10544177	13	4	465	10 55 716 2	LEITRAD KPL
SCHEIBE ISO 7089 30	10544177	28	64	474	11 89 365 1	RAUPENTRAEGER LI KPL
SCHEIBE ISO 7089 4 A4	420000314	4	3	434	97 07 857 03	LIBELLE EINBAU
SCHEIBE ISO 7089 42	420003714	36	4	535	11 24 444 4	A-BOCK 1 KPL
SCHEIBE ISO 7089 42	420003714	17	2	555	11 94 087 8	MONTAGEEINHEIT
SCHEIBE ISO 7089 42	420003714	27	10	588	99 23 398 14	ROLLENSATZ
SCHEIBE ISO 7089 5 A4	420005214	13	2	59	11 26 557 2	MONTAGETEILE
SCHEIBE ISO 7089 5 A4	420005214	11	8	68	11 31 093 2	ENDSCHALTER EINBAU
SCHEIBE ISO 7089 5 A4	420005214	5	40	69	10 56 069 4	MODULE EINBAU
SCHEIBE ISO 7089 5 A4	420005214	120	2	205	11 92 923 6	ANLAGE HARNSTOFF EINBAU
SCHEIBE ISO 7089 5 A4	420005214	21	24	505	11 23 820 4	ANLENKSTUECK KPL
SCHEIBE ISO 7089 5 A4	420005214	33	8	579	11 28 648 4	MONTAGETEILE
SCHEIBE ISO 7089 5 A4	420005214	14	16	580	11 28 610 5	ARRETIERUNG KPL
SCHEIBE ISO 7089 5 A4	420005214	42	9	700	11 89 568 6	SELBSTVERLADESYSTEM NR
SCHEIBE ISO 7089 5 A4	420005214	17	2	737	10 52 155 4	BETANKUNGSANLAGE NRS
SCHEIBE ISO 7089 6 A4	420000414	60	4	39	10 56 645 8	KLEMMKASTEN
SCHEIBE ISO 7089 6 A4	420000414	121	30	205	11 92 923 6	ANLAGE HARNSTOFF EINBAU
SCHEIBE ISO 7089 6 A4	420000414	70	4	210	11 92 958 8	LUFTFUEHRUNG KPL
SCHEIBE ISO 7089 6 A4	420000414	44	10	310	11 24 409 0	VERKLEIDUNG OW EINBAU KP
SCHEIBE ISO 7089 6 A4	420000414	23	14	398	11 27 970 6	KABINE KPL
SCHEIBE ISO 7089 6 A4	420000414	7	8	435	10 53 756 0	LEUCHTENHALTER KPL
SCHEIBE ISO 7089 6 A4	420000414	50	6	463	11 89 365 0	RAUPENTRAEGER RE KPL
SCHEIBE ISO 7089 6 A4	420000414	50	6	474	11 89 365 1	RAUPENTRAEGER LI KPL
SCHEIBE ISO 7089 6 A4	420000414	30	24	476	11 31 390 8	MITTELTEIL KPL
SCHEIBE ISO 7089 6 A4	420000414	12	3	493	11 22 050 0	WINDEN EINBAU
SCHEIBE ISO 7089 6 A4	420000414	12	3	499	11 22 050 1	WINDEN EINBAU
SCHEIBE ISO 7089 6 A4	420000414	91	52	507	11 23 820 4	ANLENKSTUECK KPL
SCHEIBE ISO 7089 6 A4	420000414	12	36	519	10 58 193 7	GITTERROST KPL
SCHEIBE ISO 7089 6 A4	420000414	29	18	535	11 24 444 4	A-BOCK 1 KPL
SCHEIBE ISO 7089 6 A4	420000414	17	1	550	11 28 397 7	AUFFANGWANNE KPL

Bezeichnung	Artikel	Pos.	Menge	Blatt	Baugruppe	Bezeichnung
SCHEIBE ISO 7089 6 A4	420000414	17	1	551	11 28 397 8	AUFFANGWANNE KPL
SCHEIBE ISO 7089 6 A4	420000414	17	1	552	11 28 399 5	AUFFANGWANNE KPL
SCHEIBE ISO 7089 6 A4	420000414	17	1	553	11 28 399 7	AUFFANGWANNE KPL
SCHEIBE ISO 7089 6 A4	420000414	3	10	623	11 22 322 6	MODEM KPL NRS
SCHEIBE ISO 7089 6 A4	420000414	13	2	625	11 21 552 4	WINKELANZEIGE NRS
SCHEIBE ISO 7089 6 A4	420000414	26	2	627	10 51 743 9	SEILEINZIEHWINDE KPL NRS
SCHEIBE ISO 7089 6 A4	420000414	34	34	642	10 55 372 1	DACHGELAENDER NRS
SCHEIBE ISO 7089 6 A4	420000414	23	4	649	10 52 547 1	ZUSATZSCHEINWERFER OW
SCHEIBE ISO 7089 6 A4	420000414	21	4	669	10 55 280 7	GITTERROST KPL
SCHEIBE ISO 7089 6 A4	420000414	19	4	676	10 55 514 8	STURZSICHERUNG NRS
SCHEIBE ISO 7089 8 A4	420001014	14	4	59	11 26 557 2	MONTAGETEILE
SCHEIBE ISO 7089 8 A4	420001014	67	6	65	10 58 163 4	KABINENAUFHAENGUNG KPL
SCHEIBE ISO 7089 8 A4	420001014	75	16	176	11 24 113 8	MOTORLAGER KPL
SCHEIBE ISO 7089 8 A4	420001014	71	6	183	11 94 151 8	KUEHLER EINBAU WASSER
SCHEIBE ISO 7089 8 A4	420001014	70	4	194	11 92 922 0	ANSAUGANLAGE LUFT
SCHEIBE ISO 7089 8 A4	420001014	70	4	199	11 24 114 4	KRAFTSTOFFANLAGE
SCHEIBE ISO 7089 8 A4	420001014	122	26	205	11 92 923 6	ANLAGE HARNSTOFF EINBAU
SCHEIBE ISO 7089 8 A4	420001014	72	6	210	11 92 958 8	LUFTFUEHRUNG KPL
SCHEIBE ISO 7089 8 A4	420001014	34	21	308	11 24 409 0	VERKLEIDUNG OW EINBAU KP
SCHEIBE ISO 7089 8 A4	420001014	16	12	324	10 54 591 0	MOTORABDECKUNG
SCHEIBE ISO 7089 8 A4	420001014	87	26	330	11 24 483 7	BEF-TEILE OW
SCHEIBE ISO 7089 8 A4	420001014	14	2	339	10 51 969 7	NADELEINZIEHWINDE
SCHEIBE ISO 7089 8 A4	420001014	17	6	378	10 51 968 2	DW OW
SCHEIBE ISO 7089 8 A4	420001014	20	18	398	11 27 970 6	KABINE KPL
SCHEIBE ISO 7089 8 A4	420001014	5	2	436	11 30 962 5	HALTER KPL
SCHEIBE ISO 7089 8 A4	420001014	12	6	476	11 31 390 8	MITTELTEIL KPL
SCHEIBE ISO 7089 8 A4	420001014	44	40	505	11 23 820 4	ANLENKSTUECK KPL
SCHEIBE ISO 7089 8 A4	420001014	14	8	520	99 34 198 14	SCHILD LIEBHERR
SCHEIBE ISO 7089 8 A4	420001014	22	4	532	11 27 536 5	RUECKFALLSTUETZEN EINBA
SCHEIBE ISO 7089 8 A4	420001014	13	4	589	99 30 800 14	SPITZENENDSCHALTER EINBA
SCHEIBE ISO 7089 8 A4	420001014	48	82	642	10 55 372 1	DACHGELAENDER NRS
SCHEIBE ISO 7089 8 A4	420001014	13	12	644	11 24 147 8	UW PODEST
SCHEIBE ISO 7089 8 A4	420001014	21	2	667	10 55 601 0	STURZSICHERUNG NRS
SCHEIBE ISO 7089 8 A4	420001014	15	4	669	10 55 280 7	GITTERROST KPL
SCHEIBE ISO 7089 8 A4	420001014	70	1	673	11 30 567 0	TRANSPORTSICHERUNG
SCHEIBE ISO 7089 8 A4	420001014	41	4	700	11 89 568 6	SELBSTVERLADESYSTEM NR
SCHEIBE ISO 7089 8 A4	420001014	28	6	718	10 58 064 7	VIDEOUEBERWACHUNGSANL
SCHEIBE ISO 7089 8 A4	420001014	7	1	719	10 57 848 6	MONITOR KABINE ANBAU
SCHEIBE ISO 7089 8 A4	420001014	7	4	723	11 22 037 2	FUSSPEDAL EL EINBAU
SCHEIBE ISO 7089 8 A4	420001014	15	3	733	10 52 293 0	DW GEBER NRS
SCHEIBE ISO 7089 8 A4	420001014	14	2	737	10 52 155 4	BETANKUNGSANLAGE NRS
SCHEIBE ISO 7092 6 CU;	420250114	6	4	733	10 52 293 0	DW GEBER NRS
SCHEIBE ISO 7093-1 10	11932236	12	4	190	10 57 423 9	KUEHLER MOTOR
SCHEIBE ISO 7093-1 10 A4	10540511	14	14	45	10 51 961 6	OELKUEHLER EINBAU
SCHEIBE ISO 7093-1 10 A4	10540511	7	2	56	10 55 268 1	MITNEHMER EINBAU
SCHEIBE ISO 7093-1 10 A4	10540511	55	4	65	10 58 163 4	KABINENAUFHAENGUNG KPL
SCHEIBE ISO 7093-1 10 A4	10540511	4	4	67	10 56 067 3	BATTERIE EINBAU KPL
SCHEIBE ISO 7093-1 10 A4	10540511	74	18	210	11 92 958 8	LUFTFUEHRUNG KPL
SCHEIBE ISO 7093-1 10 A4	10540511	70	51	306	11 24 114 6	ABDECKUNG
SCHEIBE ISO 7093-1 10 A4	10540511	26	134	308	11 24 409 0	VERKLEIDUNG OW EINBAU KP
SCHEIBE ISO 7093-1 10 A4	10540511	26	89	326	11 24 922 2	ABDECKUNG UNTERSEITE
SCHEIBE ISO 7093-1 10 A4	10540511	77	125	330	11 24 483 7	BEF-TEILE OW
SCHEIBE ISO 7093-1 10 A4	10540511	40	8	398	11 27 970 6	KABINE KPL
SCHEIBE ISO 7093-1 10 A4	10540511	86	16	507	11 23 820 4	ANLENKSTUECK KPL
SCHEIBE ISO 7093-1 10 A4	10540511	16	2	542	99 29 588 14	AUFLAGE
SCHEIBE ISO 7093-1 10 A4	10540511	15	2	550	11 28 397 7	AUFFANGWANNE KPL
SCHEIBE ISO 7093-1 10 A4	10540511	15	2	551	11 28 397 8	AUFFANGWANNE KPL
SCHEIBE ISO 7093-1 10 A4	10540511	15	4	552	11 28 399 5	AUFFANGWANNE KPL
SCHEIBE ISO 7093-1 10 A4	10540511	15	4	553	11 28 399 7	AUFFANGWANNE KPL
SCHEIBE ISO 7093-1 10 A4	10540511	35	8	579	11 28 648 4	MONTAGETEILE

Bezeichnung	Artikel	Pos.	Menge	Blatt	Baugruppe	Bezeichnung
SCHEIBE ISO 7093-1 10 A4	10540511	44	78	642	10 55 372 1	DACHGELAENDER NRS
SCHEIBE ISO 7093-1 10 A4	10540511	17	4	667	10 55 601 0	STURZSICHERUNG NRS
SCHEIBE ISO 7093-1 10 A4	10540511	12	2	683	99 35 606 14	LASCHE KPL
SCHEIBE ISO 7093-1 10 A4	10540511	7	4	685	11 23 619 7	SELBSTVERLADESYSTEM NR
SCHEIBE ISO 7093-1 10 A4	10540511	15	4	732	11 26 771 6	MONTAGETEILE
SCHEIBE ISO 7093-1 12 A4	10540512	34	9	65	10 58 163 4	KABINENAUFHAENGUNG KPL
SCHEIBE ISO 7093-1 12 A4	10540512	71	11	330	11 24 483 7	BEF-TEILE OW
SCHEIBE ISO 7093-1 12 A4	10540512	14	2	438	99 18 041 14	VERZURRUNG OW
SCHEIBE ISO 7093-1 16	10544173	6	4	56	10 55 268 1	MITNEHMER EINBAU
SCHEIBE ISO 7093-1 16	10544173	27	4	548	11 28 390 8	AL BEGEHUNG
SCHEIBE ISO 7093-1 16	10544173	27	4	563	11 28 583 8	AL BEGEHUNG
SCHEIBE ISO 7093-1 16	10544173	27	4	570	11 28 626 1	AL BEGEHUNG
SCHEIBE ISO 7093-1 20	10544175	3	1	494	10 57 462 9	BOLZEN KPL
SCHEIBE ISO 7093-1 4 A4	10540497	44	2	741	10 52 155 9	MODUL BETANKUNGSANLAG
SCHEIBE ISO 7093-1 5 A4	485570714	23	4	67	10 56 067 3	BATTERIE EINBAU KPL
SCHEIBE ISO 7093-1 6 A4	10540500	73	6	198	11 24 114 3	ABGASANLAGE
SCHEIBE ISO 7093-1 6 A4	10540500	67	6	330	11 24 483 7	BEF-TEILE OW
SCHEIBE ISO 7093-1 6 A4	10540500	17	4	518	11 23 653 3	AUFLAGE KPL
SCHEIBE ISO 7093-1 6 A4	10540500	27	9	718	10 58 064 7	VIDEOUEBERWACHUNGSANL
SCHEIBE ISO 7093-1 8	11932237	11	1	190	10 57 423 9	KUEHLER MOTOR
SCHEIBE ISO 7093-1 8 A4	10540510	12	2	63	92 65 477 14	FEUERLOESCHER NRS
SCHEIBE ISO 7093-1 8 A4	10540510	16	4	65	10 58 163 4	KABINENAUFHAENGUNG KPL
SCHEIBE ISO 7093-1 8 A4	10540510	71	6	210	11 92 958 8	LUFTFUEHRUNG KPL
SCHEIBE ISO 7093-1 8 A4	10540510	43	13	310	11 24 409 0	VERKLEIDUNG OW EINBAU KP
SCHEIBE ISO 7093-1 8 A4	10540510	86	34	330	11 24 483 7	BEF-TEILE OW
SCHEIBE ISO 7093-1 8 A4	10540510	27	4	357	10 51 968 6	EZW OW EINBAU KPL
SCHEIBE ISO 7093-1 8 A4	10540510	12	2	372	99 29 386 14	KONSOLE KPL
SCHEIBE ISO 7093-1 8 A4	10540510	12	2	373	99 29 434 14	KONSOLE KPL
SCHEIBE ISO 7093-1 8 A4	10540510	54	39	505	11 23 820 4	ANLENKSTUECK KPL
SCHEIBE ISO 7093-1 8 A4	10540510	28	5	548	11 28 390 8	AL BEGEHUNG
SCHEIBE ISO 7093-1 8 A4	10540510	28	5	563	11 28 583 8	AL BEGEHUNG
SCHEIBE ISO 7093-1 8 A4	10540510	28	5	570	11 28 626 1	AL BEGEHUNG
SCHEIBE ISO 7093-1 8 A4	10540510	34	4	579	11 28 648 4	MONTAGETEILE
SCHEIBE ISO 7093-1 8 A4	10540510	15	4	580	11 28 610 5	ARRETIERUNG KPL
SCHEIBE ISO 7093-1 8 A4	10540510	20	2	667	10 55 601 0	STURZSICHERUNG NRS
SCHEIBE ISO 7093-1 8 A4	10540510	21	4	678	11 26 901 8	HALTER KPL
SCHEIBE ISO 7093-1 8 A4	10540510	26	8	685	11 23 619 7	SELBSTVERLADESYSTEM NR
SCHEIBE ISO 7093-1 8 A4	10540510	32	4	718	10 58 064 7	VIDEOUEBERWACHUNGSANL
SCHEIBE ISO 7093-1 8 A4	10540510	18	2	737	10 52 155 4	BETANKUNGSANLAGE NRS
SCHEIBE RD 34/20.4X5 30 CRM	422010414	38	20	82	11 24 773 5	AGGREGAT HYDR
SCHEIBENSATZ	9885924	39	1	118	98 89 984	RS TRIEBWERK
SCHEIBENSATZ	9885924	39	1	121	98 89 983	RS TRIEBWERK
SCHEIBENSATZ	9885937	29	1	135	10 13 802 6	RS ZYL.+STEUERPL.+WELLE
SCHEINWERFERHALTER KPL	11228708	11	1	647	10 52 547 1	ZUSATZSCHEINWERFER OW
SCHELLE	10122693	10	1	226	10 15 529 8	OELWANNE VORM.
SCHELLE	10129179	5	1	255	10 13 508 0	DRUCKROHRSTUTZEN
SCHELLE	10336774	11	1	542	99 29 588 14	AUFLAGE
SCHELLE	10336774	11	2	543	10 35 063 3	HALTERUNG
SCHELLE	10513605	31	5	189	11 24 114 1	KUEHLER EINBAU LADELUFT
SCHELLE	10513605	46	1	210	11 92 958 8	LUFTFUEHRUNG KPL
SCHELLE	11000593	13	2	285	10 14 622 4	LADEDRUCKREGELUNG
SCHELLE	11229805	30	2	194	11 92 922 0	ANSAUGANLAGE LUFT
SCHELLE	7381292	21	1	261	10 14 588 5	LECKOELRUECKLAUF
SCHELLE	7381292	12	7	285	10 14 622 4	LADEDRUCKREGELUNG
SCHELLE	7381628	38	2	296	10 15 028 8	KABELBAUM ANBAU
SCHELLE	7381629	5	3	230	10 14 671 6	OELLEITUNG VORM.
SCHELLE	7381629	39	6	296	10 15 028 8	KABELBAUM ANBAU
SCHELLE	7381630	42	2	296	10 15 028 8	KABELBAUM ANBAU
SCHELLE	7381631	14	1	265	10 14 736 9	ANSAUGSTUTZEN ANBAU
SCHELLE	7381631	16	1	265	10 14 736 9	ANSAUGSTUTZEN ANBAU

Bezeichnung	Artikel	Pos.	Menge	Blatt	Baugruppe	Bezeichnung
SCHELLE	7381631	43	1	296	10 15 028 8	KABELBAUM ANBAU
SCHELLE	7381635	41	3	296	10 15 028 8	KABELBAUM ANBAU
SCHELLE	7381770	32	4	296	10 15 028 8	KABELBAUM ANBAU
SCHELLE	7381771	31	1	296	10 15 028 8	KABELBAUM ANBAU
SCHELLE	7382088	15	1	261	10 14 588 5	LECKOELRUECKLAUF
SCHELLE	7382090	37	5	296	10 15 028 8	KABELBAUM ANBAU
SCHELLE	7382092	47	2	296	10 15 028 8	KABELBAUM ANBAU
SCHELLE	774212914	31	2	82	11 24 773 5	AGGREGAT HYDR
SCHELLE	774255714	54	4	183	11 94 151 8	KUEHLER EINBAU WASSER
SCHELLE	790562114	45	2	210	11 92 958 8	LUFTFUEHRUNG KPL
SCHERENLAGERUNG	7025009	59	1	432	10 28 999 3	SCHWINGSYSTEM
SCHIEBEFENSTER	10224413	1	1	419	10 35 007 6	SCHIEBETUER
SCHIEBEFENSTER	11250970	3	1	420	10 22 441 3	SCHIEBEFENSTER
SCHIEBESITZFUEHRUNG	10289990	70	1	430	10 22 506 8	FAHRERSITZ
SCHIEBESITZFUEHRUNG	7024987	71	1	430	10 22 506 8	FAHRERSITZ
SCHIEBETUER	10350076	3	1	415	10 35 008 0	KABINE
SCHIENE	11306945	10	1	671	11 30 694 4	SCHIENE KPL
SCHIENE KPL	10554229	11	2	669	10 55 280 7	GITTERROST KPL
SCHIENE KPL	10554368	13	2	674	11 29 474 2	LAUFSTEG ZWISCHENSTUEC
SCHIENE KPL	10554368	13	2	675	11 29 474 3	LAUFSTEG ZWISCHENSTUEC
SCHIENE KPL	10554368	14	2	675	11 29 474 3	LAUFSTEG ZWISCHENSTUEC
SCHIENE KPL	10554881	15	2	675	11 29 474 3	LAUFSTEG ZWISCHENSTUEC
SCHIENE KPL	10557413	10	2	677	10 55 722 4	STURZSICHERUNG NRS
SCHIENE KPL	10564692	10	2	676	10 55 514 8	STURZSICHERUNG NRS
SCHIENE KPL	11306944	12	2	670	11 29 473 7	LAUFSTEG ZWISCHENSTUEC
SCHILD	10099300	8	1	629	10 51 726 2	VERROHRUNG HYDR
SCHILD	10523125	38	2	505	11 23 820 4	ANLENKSTUECK KPL
SCHILD	10533589	12	1	377	11 22 703 7	BESEILUNG EZW HAUPT AL
SCHILD	10575705	38	1	741	10 52 155 9	MODUL BETANKUNGSANLAG
SCHILD	10584544	15	1	48	10 56 070 1	TANK HYDR KPL
SCHILD	11227046	11	1	377	11 22 703 7	BESEILUNG EZW HAUPT AL
SCHILD	11228766	19	1	669	10 55 280 7	GITTERROST KPL
SCHILD	11228766	16	1	676	10 55 514 8	STURZSICHERUNG NRS
SCHILD	11232788	22	1	724	11 93 621 2	KLIMAANLAGE NRS
SCHILD	11265425	12	2	521	11 26 694 5	SCHILDER ANORD
SCHILD	11265497	11	4	521	11 26 694 5	SCHILDER ANORD
SCHILD	11274707	14	1	204	11 92 923 6	ANLAGE HARNSTOFF EINBAU
SCHILD	11274708	15	1	204	11 92 923 6	ANLAGE HARNSTOFF EINBAU
SCHILD	606644414	27	1	609	10 57 651 9	KABELSATZ
SCHILD	606760014	27	1	575	10 57 559 9	KABELSATZ
SCHILD	606774714	27	1	512	11 90 151 1	KABELSATZ 1 ANLENKSTUECK
SCHILD	773193414	41	1	505	11 23 820 4	ANLENKSTUECK KPL
SCHILD	773193414	23	1	519	10 58 193 7	GITTERROST KPL
SCHILD	773194314	40	2	505	11 23 820 4	ANLENKSTUECK KPL
SCHILD	773195214	317	1	339	10 51 969 7	NADELEINZIEHWINDE
SCHILD	773195214	317	1	627	10 51 743 9	SEILEINZIEHWINDE KPL NRS
SCHILD LIEBHERR	993419814	80	2	507	11 23 820 4	ANLENKSTUECK KPL
SCHILD NOT-AUS	606718408	35	1	410	11 26 095 7	STEUERSTAND RE
SCHILD RUECKFALLSTUETZE	790485314	5	1	621	97 08 757 03	RUECKFALLSTUETZEN
SCHILD STEUERPLATTE	10549547	51	1	398	11 27 970 6	KABINE KPL
SCHILD STEUERPLATTE	10549800	52	1	398	11 27 970 6	KABINE KPL
SCHILD UNFALLVERHUETUN	11461533	42	1	33	11 24 519 0	OW EL
SCHILD UVV	773195614	460	2	339	10 51 969 7	NADELEINZIEHWINDE
SCHILD UVV	773195614	460	2	627	10 51 743 9	SEILEINZIEHWINDE KPL NRS
SCHILDER ANORD	11266901	110	1	544	11 24 570 7	ZWISCHENSTUECK MONTAGE
SCHILDER ANORD	11266901	110	1	560	11 24 571 3	ZWISCHENSTUECK MONTAGE
SCHILDER ANORD	11266901	110	1	567	11 24 571 9	ZWISCHENSTUECK MONTAGE
SCHILDER ANORD	11266945	110	1	507	11 23 820 4	ANLENKSTUECK KPL
SCHILDER ANORD	11266945	110	1	604	99 34 387 14	NADELANBAUTEILE
SCHILDER ANORD	11269727	110	1	573	11 24 133 3	AL KOPF KPL

Bezeichnung	Artikel	Pos.	Menge	Blatt	Baugruppe	Bezeichnung
SCHILDER ANORD	11898219	52	1	2	01 38 406 14	LR 1300 SX
SCHLAUCH	10043525	4	8	731	11 28 048 1	ANSCHLUSSTEILE
SCHLAUCH	10352453	17	1	194	11 92 922 0	ANSAUGANLAGE LUFT
SCHLAUCH	7362451	3	2.5	503	91 76 658 14	ABLASSSCHLAUCH KPL
SCHLAUCH	886002814	32	1.3	204	11 92 923 6	ANLAGE HARNSTOFF EINBAU
SCHLAUCH KPL	11222864	200	1	740	51 00 959 14	BETANKUNGSPUMPE
SCHLAUCH KPL	11267556	11	1	186	10 57 423 7	KUEHLER MOTOR
SCHLAUCH KPL	11267557	12	1	186	10 57 423 7	KUEHLER MOTOR
SCHLAUCH KPL	11267558	13	1	186	10 57 423 7	KUEHLER MOTOR
SCHLAUCH KPL	553079914	13	1	398	11 27 970 6	KABINE KPL
SCHLAUCH KPL	592007514	14	1	398	11 27 970 6	KABINE KPL
SCHLAUCH KPL	911108414	605	1	484	11 26 260 9	SCHLAUCHLISTE
SCHLAUCH KPL	911256414	596	1	44	11 26 995 4	SCHLAUCHLISTE
SCHLAUCH KPL	911292114	138	1	460	11 89 300 1	SCHLAUCHLISTE
SCHLAUCH KPL	914757914	404	1	173	11 24 113 7	SCHLAUCHLISTE
SCHLAUCH KPL	914762914	592	1	44	11 26 995 4	SCHLAUCHLISTE
SCHLAUCH KPL	914763014	655	1	360	10 55 208 5	SCHLAUCHLISTE
SCHLAUCH KPL	914792514	5022	1	44	11 26 995 4	SCHLAUCHLISTE
SCHLAUCH KPL	914794514	575	1	43	11 26 995 4	SCHLAUCHLISTE
SCHLAUCH KPL	914798914	551	1	43	11 26 995 4	SCHLAUCHLISTE
SCHLAUCH KPL	918245214	572	1	174	11 24 113 7	SCHLAUCHLISTE
SCHLAUCH KPL	918248414	280	1	682	11 22 970 9	SCHLAUCHLISTE
SCHLAUCH KPL	918269214	430	1	174	11 24 113 7	SCHLAUCHLISTE
SCHLAUCH KPL	918272514	127	1	460	11 89 300 1	SCHLAUCHLISTE
SCHLAUCH KPL	918276114	113	1	459	11 89 300 1	SCHLAUCHLISTE
SCHLAUCH KPL	918276114	117	1	459	11 89 300 1	SCHLAUCHLISTE
SCHLAUCH KPL	918285814	598	1	44	11 26 995 4	SCHLAUCHLISTE
SCHLAUCH KPL	918288114	112	1	459	11 89 300 1	SCHLAUCHLISTE
SCHLAUCH KPL	918288114	116	1	459	11 89 300 1	SCHLAUCHLISTE
SCHLAUCH KPL	918291914	429	1	41	11 26 995 4	SCHLAUCHLISTE
SCHLAUCH KPL	918805114	707	1	76	10 54 545 1	SCHLAUCHLISTE
SCHLAUCH KPL	918810914	595	1	44	11 26 995 4	SCHLAUCHLISTE
SCHLAUCH KPL	918819414	380	1	390	10 56 178 0	SCHLAUCHLISTE
SCHLAUCH KPL	918820914	162	1	461	11 89 300 1	SCHLAUCHLISTE
SCHLAUCH KPL	918849914	827	1	631	10 52 439 2	SCHLAUCHLISTE
SCHLAUCH KPL	918870314	903	1	531	11 22 970 6	SCHLAUCHLISTE
SCHLAUCH KPL	918870914	826	1	343	99 33 241 14	SCHLAUCHLISTE
SCHLAUCH KPL	918873814	556	1	43	11 26 995 4	SCHLAUCHLISTE
SCHLAUCH KPL	918874514	432	1	174	11 24 113 7	SCHLAUCHLISTE
SCHLAUCH KPL	918882614	824	1	343	99 33 241 14	SCHLAUCHLISTE
SCHLAUCH KPL	919126414	364	1	693	99 27 747 14	SCHLAUCHLISTE
SCHLAUCH KPL	919126414	365	1	693	99 27 747 14	SCHLAUCHLISTE
SCHLAUCH KPL	919127514	708	1	76	10 54 545 1	SCHLAUCHLISTE
SCHLAUCH KPL	919140514	533	1	42	11 26 995 4	SCHLAUCHLISTE
SCHLAUCH KPL	919143414	421	1	173	11 24 113 7	SCHLAUCHLISTE
SCHLAUCH KPL	919144714	181	1	698	11 24 779 0	SCHLAUCHLISTE
SCHLAUCH KPL	919145114	805	1	742	11 28 825 7	SCHLAUCHLISTE
SCHLAUCH KPL	919146814	543	1	42	11 26 995 4	SCHLAUCHLISTE
SCHLAUCH KPL	919167714	422	1	173	11 24 113 7	SCHLAUCHLISTE
SCHLAUCH KPL	919706714	527	1	42	11 26 995 4	SCHLAUCHLISTE
SCHLAUCH KPL	919714914	581	1	43	11 26 995 4	SCHLAUCHLISTE
SCHLAUCH KPL	919735014	524	1	42	11 26 995 4	SCHLAUCHLISTE
SCHLAUCH KPL	919736714	185	1	698	11 24 779 0	SCHLAUCHLISTE
SCHLAUCH KPL	919736714	186	1	698	11 24 779 0	SCHLAUCHLISTE
SCHLAUCH KPL	919757114	635	1	498	11 26 261 2	SCHLAUCHLISTE
SCHLAUCH KPL	919778814	902	1	531	11 22 970 6	SCHLAUCHLISTE
SCHLAUCH KPL	919791614	706	1	76	10 54 545 1	SCHLAUCHLISTE
SCHLAUCH KPL	928003714	163	1	461	11 89 300 1	SCHLAUCHLISTE
SCHLAUCH KPL	928009314	428	1	41	11 26 995 4	SCHLAUCHLISTE
SCHLAUCH KPL	928010214	511	1	41	11 26 995 4	SCHLAUCHLISTE

Bezeichnung	Artikel	Pos.	Menge	Blatt	Baugruppe	Bezeichnung
SCHLAUCH KPL	928010214	512	1	41	11 26 995 4	SCHLAUCHLISTE
SCHLAUCH KPL	928010214	513	1	41	11 26 995 4	SCHLAUCHLISTE
SCHLAUCH KPL	928010214	514	1	41	11 26 995 4	SCHLAUCHLISTE
SCHLAUCH KPL	928014714	904	1	531	11 22 970 6	SCHLAUCHLISTE
SCHLAUCH KPL	928018514	542	1	42	11 26 995 4	SCHLAUCHLISTE
SCHLAUCH KPL	928020314	546	1	42	11 26 995 4	SCHLAUCHLISTE
SCHLAUCH KPL	928029714	906	1	531	11 22 970 6	SCHLAUCHLISTE
SCHLAUCH KPL	928029714	914	1	531	11 22 970 6	SCHLAUCHLISTE
SCHLAUCH KPL	928032214	547	1	42	11 26 995 4	SCHLAUCHLISTE
SCHLAUCH KPL	928044014	390	1	390	10 56 178 0	SCHLAUCHLISTE
SCHLAUCH KPL	928110014	584	1	43	11 26 995 4	SCHLAUCHLISTE
SCHLAUCH KPL	928113314	381	1	390	10 56 178 0	SCHLAUCHLISTE
SCHLAUCH KPL	928121514	917	1	531	11 22 970 6	SCHLAUCHLISTE
SCHLAUCH KPL	928123014	580	1	43	11 26 995 4	SCHLAUCHLISTE
SCHLAUCH KPL	928130914	800	1	200	11 24 972 9	SCHLAUCHLISTE
SCHLAUCH KPL	928130914	801	1	200	11 24 972 9	SCHLAUCHLISTE
SCHLAUCH KPL	928137514	122	1	459	11 89 300 1	SCHLAUCHLISTE
SCHLAUCH KPL	928137714	702	1	76	10 54 545 1	SCHLAUCHLISTE
SCHLAUCH KPL	928152414	118	1	459	11 89 300 1	SCHLAUCHLISTE
SCHLAUCH KPL	928166714	909	1	531	11 22 970 6	SCHLAUCHLISTE
SCHLAUCH KPL	928166714	913	1	531	11 22 970 6	SCHLAUCHLISTE
SCHLAUCH KPL	928169614	151	1	460	11 89 300 1	SCHLAUCHLISTE
SCHLAUCH KPL	928169614	159	1	461	11 89 300 1	SCHLAUCHLISTE
SCHLAUCH KPL	928183014	506	1	41	11 26 995 4	SCHLAUCHLISTE
SCHLAUCH KPL	928204714	278	1	682	11 22 970 9	SCHLAUCHLISTE
SCHLAUCH KPL	928209814	102	1	459	11 89 300 1	SCHLAUCHLISTE
SCHLAUCH KPL	928209814	107	1	459	11 89 300 1	SCHLAUCHLISTE
SCHLAUCH KPL	928265514	111	1	459	11 89 300 1	SCHLAUCHLISTE
SCHLAUCH KPL	928265514	115	1	459	11 89 300 1	SCHLAUCHLISTE
SCHLAUCH KPL	928266514	403	1	173	11 24 113 7	SCHLAUCHLISTE
SCHLAUCH KPL	928272714	411	1	173	11 24 113 7	SCHLAUCHLISTE
SCHLAUCH KPL	928318214	802	1	516	11 23 239 9	SCHLAUCHLISTE
SCHLAUCH KPL	928318214	807	1	516	11 23 239 9	SCHLAUCHLISTE
SCHLAUCH KPL	928326514	825	1	343	99 33 241 14	SCHLAUCHLISTE
SCHLAUCH KPL	928357214	585	1	43	11 26 995 4	SCHLAUCHLISTE
SCHLAUCH KPL	928443714	522	1	41	11 26 995 4	SCHLAUCHLISTE
SCHLAUCH KPL	928445414	536	1	42	11 26 995 4	SCHLAUCHLISTE
SCHLAUCH KPL	928456714	526	1	42	11 26 995 4	SCHLAUCHLISTE
SCHLAUCH KPL	928461114	525	1	42	11 26 995 4	SCHLAUCHLISTE
SCHLAUCH KPL	928536514	606	1	484	11 26 260 9	SCHLAUCHLISTE
SCHLAUCH KPL	928538414	704	1	76	10 54 545 1	SCHLAUCHLISTE
SCHLAUCH KPL	928538414	139	1	460	11 89 300 1	SCHLAUCHLISTE
SCHLAUCH KPL	928589814	431	1	41	11 26 995 4	SCHLAUCHLISTE
SCHLAUCH KPL	928591114	703	1	76	10 54 545 1	SCHLAUCHLISTE
SCHLAUCH KPL	928611014	435	1	174	11 24 113 7	SCHLAUCHLISTE
SCHLAUCH KPL	928619114	360	1	693	99 27 747 14	SCHLAUCHLISTE
SCHLAUCH KPL	928712614	597	1	44	11 26 995 4	SCHLAUCHLISTE
SCHLAUCH KPL	928757814	200	1	211	11 92 982 1	SCHLAUCHLISTE
SCHLAUCH KPL	928763814	908	1	531	11 22 970 6	SCHLAUCHLISTE
SCHLAUCH KPL	928763814	912	1	531	11 22 970 6	SCHLAUCHLISTE
SCHLAUCH KPL	928764814	548	1	42	11 26 995 4	SCHLAUCHLISTE
SCHLAUCH KPL	928765014	508	1	41	11 26 995 4	SCHLAUCHLISTE
SCHLAUCH KPL	928815314	295	1	502	91 90 239 14	LEITUNG HYDR
SCHLAUCH KPL	928857314	407	1	173	11 24 113 7	SCHLAUCHLISTE
SCHLAUCH KPL	928861314	823	1	343	99 33 241 14	SCHLAUCHLISTE
SCHLAUCH KPL	928865914	154	1	460	11 89 300 1	SCHLAUCHLISTE
SCHLAUCH KPL	928865914	158	1	461	11 89 300 1	SCHLAUCHLISTE
SCHLAUCH KPL	928868414	418	1	173	11 24 113 7	SCHLAUCHLISTE
SCHLAUCH KPL	928872514	103	1	459	11 89 300 1	SCHLAUCHLISTE
SCHLAUCH KPL	928872814	108	1	459	11 89 300 1	SCHLAUCHLISTE

Bezeichnung	Artikel	Pos.	Menge	Blatt	Baugruppe	Bezeichnung
SCHLAUCH KPL	928880614	427	1	173	11 24 113 7	SCHLAUCHLISTE
SCHLAUCH KPL	928885614	559	1	43	11 26 995 4	SCHLAUCHLISTE
SCHLAUCH KPL	928950414	656	1	360	10 55 208 5	SCHLAUCHLISTE
SCHLAUCH KPL	928973314	150	1	460	11 89 300 1	SCHLAUCHLISTE
SCHLAUCH KPL	928973314	156	1	460	11 89 300 1	SCHLAUCHLISTE
SCHLAUCH KPL	929376814	705	1	76	10 54 545 1	SCHLAUCHLISTE
SCHLAUCH KPL	929399714	166	1	461	11 89 300 1	SCHLAUCHLISTE
SCHLAUCH KPL	929414814	555	1	43	11 26 995 4	SCHLAUCHLISTE
SCHLAUCH KPL	929443814	201	1	211	11 92 982 1	SCHLAUCHLISTE
SCHLAUCH KPL	929443814	828	1	631	10 52 439 2	SCHLAUCHLISTE
SCHLAUCH KPL	929467714	153	1	460	11 89 300 1	SCHLAUCHLISTE
SCHLAUCH KPL	929467714	157	1	460	11 89 300 1	SCHLAUCHLISTE
SCHLAUCH KPL	929473314	582	1	43	11 26 995 4	SCHLAUCHLISTE
SCHLAUCH KPL	929478114	420	1	173	11 24 113 7	SCHLAUCHLISTE
SCHLAUCH KPL	990038114	583	1	43	11 26 995 4	SCHLAUCHLISTE
SCHLAUCH KPL	990045814	135	1	460	11 89 300 1	SCHLAUCHLISTE
SCHLAUCH KPL	990045814	145	1	460	11 89 300 1	SCHLAUCHLISTE
SCHLAUCH KPL	990053014	408	1	173	11 24 113 7	SCHLAUCHLISTE
SCHLAUCH KPL	990055814	361	1	693	99 27 747 14	SCHLAUCHLISTE
SCHLAUCH KPL	990055914	362	1	693	99 27 747 14	SCHLAUCHLISTE
SCHLAUCH KPL	991109014	282	1	682	11 22 970 9	SCHLAUCHLISTE
SCHLAUCH KPL	991109014	283	1	682	11 22 970 9	SCHLAUCHLISTE
SCHLAUCH KPL	991139814	401	1	173	11 24 113 7	SCHLAUCHLISTE
SCHLAUCH KPL	991168714	509	1	41	11 26 995 4	SCHLAUCHLISTE
SCHLAUCH KPL	991170814	652	1	360	10 55 208 5	SCHLAUCHLISTE
SCHLAUCH KPL	991194914	628	1	174	11 24 113 7	SCHLAUCHLISTE
SCHLAUCH KPL	991195514	367	1	631	10 52 439 2	SCHLAUCHLISTE
SCHLAUCH KPL	991198814	810	1	516	11 23 239 9	SCHLAUCHLISTE
SCHLAUCH KPL	991198814	811	1	516	11 23 239 9	SCHLAUCHLISTE
SCHLAUCH KPL	991205314	364	1	631	10 52 439 2	SCHLAUCHLISTE
SCHLAUCH KPL	991209514	5020	1	44	11 26 995 4	SCHLAUCHLISTE
SCHLAUCH KPL	991216914	405	1	173	11 24 113 7	SCHLAUCHLISTE
SCHLAUCH KPL	991242714	915	1	531	11 22 970 6	SCHLAUCHLISTE
SCHLAUCH KPL	991253814	579	1	43	11 26 995 4	SCHLAUCHLISTE
SCHLAUCH KPL	991276414	136	1	460	11 89 300 1	SCHLAUCHLISTE
SCHLAUCH KPL	991276414	144	1	460	11 89 300 1	SCHLAUCHLISTE
SCHLAUCH KPL	991285814	918	1	531	11 22 970 6	SCHLAUCHLISTE
SCHLAUCH KPL	991312114	152	1	460	11 89 300 1	SCHLAUCHLISTE
SCHLAUCH KPL	991312114	155	1	460	11 89 300 1	SCHLAUCHLISTE
SCHLAUCH KPL	991375814	587	1	44	11 26 995 4	SCHLAUCHLISTE
SCHLAUCH KPL	991384314	388	1	390	10 56 178 0	SCHLAUCHLISTE
SCHLAUCH KPL	991390514	570	1	174	11 24 113 7	SCHLAUCHLISTE
SCHLAUCH KPL	991391814	602	1	484	11 26 260 9	SCHLAUCHLISTE
SCHLAUCH KPL	991528514	586	1	43	11 26 995 4	SCHLAUCHLISTE
SCHLAUCH KPL	991547014	419	1	173	11 24 113 7	SCHLAUCHLISTE
SCHLAUCH KPL	991563114	812	1	516	11 23 239 9	SCHLAUCHLISTE
SCHLAUCH KPL	991563114	817	1	516	11 23 239 9	SCHLAUCHLISTE
SCHLAUCH KPL	991587514	552	1	174	11 24 113 7	SCHLAUCHLISTE
SCHLAUCH KPL	991961214	137	1	460	11 89 300 1	SCHLAUCHLISTE
SCHLAUCH KPL	991964414	406	1	173	11 24 113 7	SCHLAUCHLISTE
SCHLAUCH KPL	992258514	569	1	43	11 26 995 4	SCHLAUCHLISTE
SCHLAUCH KPL	992261314	577	1	43	11 26 995 4	SCHLAUCHLISTE
SCHLAUCH KPL	992261414	520	1	41	11 26 995 4	SCHLAUCHLISTE
SCHLAUCH KPL	992273614	180	1	698	11 24 779 0	SCHLAUCHLISTE
SCHLAUCH KPL	992296514	279	1	682	11 22 970 9	SCHLAUCHLISTE
SCHLAUCH KPL	992298714	591	1	44	11 26 995 4	SCHLAUCHLISTE
SCHLAUCH KPL	992504214	813	1	516	11 23 239 9	SCHLAUCHLISTE
SCHLAUCH KPL	992511514	604	1	484	11 26 260 9	SCHLAUCHLISTE
SCHLAUCH KPL	992519014	594	1	44	11 26 995 4	SCHLAUCHLISTE
SCHLAUCH KPL	992552014	389	1	390	10 56 178 0	SCHLAUCHLISTE

Bezeichnung	Artikel	Pos.	Menge	Blatt	Baugruppe	Bezeichnung
SCHLAUCH KPL	992564614	131	1	460	11 89 300 1	SCHLAUCHLISTE
SCHLAUCH KPL	992564614	143	1	460	11 89 300 1	SCHLAUCHLISTE
SCHLAUCH KPL	992569114	557	1	43	11 26 995 4	SCHLAUCHLISTE
SCHLAUCH KPL	992835314	400	1	173	11 24 113 7	SCHLAUCHLISTE
SCHLAUCH KPL	992837314	367	1	693	99 27 747 14	SCHLAUCHLISTE
SCHLAUCH KPL	992857714	366	1	693	99 27 747 14	SCHLAUCHLISTE
SCHLAUCH KPL	992879314	634	1	498	11 26 261 2	SCHLAUCHLISTE
SCHLAUCH KPL	992890714	203	1	211	11 92 982 1	SCHLAUCHLISTE
SCHLAUCH KPL	992893114	803	1	516	11 23 239 9	SCHLAUCHLISTE
SCHLAUCH KPL	993204614	104	1	459	11 89 300 1	SCHLAUCHLISTE
SCHLAUCH KPL	993204614	109	1	459	11 89 300 1	SCHLAUCHLISTE
SCHLAUCH KPL	993213714	653	1	360	10 55 208 5	SCHLAUCHLISTE
SCHLAUCH KPL	993226114	800	1	516	11 23 239 9	SCHLAUCHLISTE
SCHLAUCH KPL	993226114	801	1	516	11 23 239 9	SCHLAUCHLISTE
SCHLAUCH KPL	993227714	650	1	710	10 53 635 2	SCHLAUCHLISTE
SCHLAUCH KPL	993623814	822	1	343	99 33 241 14	SCHLAUCHLISTE
SCHLAUCH KPL	993643514	409	1	173	11 24 113 7	SCHLAUCHLISTE
SCHLAUCH KPL	993657714	516	1	41	11 26 995 4	SCHLAUCHLISTE
SCHLAUCH KPL	993685614	633	1	498	11 26 261 2	SCHLAUCHLISTE
SCHLAUCH KPL	993694214	382	1	173	11 24 113 7	SCHLAUCHLISTE
SCHLAUCH KPL	993734014	535	1	42	11 26 995 4	SCHLAUCHLISTE
SCHLAUCH KPL	993751514	654	1	360	10 55 208 5	SCHLAUCHLISTE
SCHLAUCH KPL	993758914	182	1	698	11 24 779 0	SCHLAUCHLISTE
SCHLAUCH KPL	993758914	183	1	698	11 24 779 0	SCHLAUCHLISTE
SCHLAUCH KPL	993758914	188	1	698	11 24 779 0	SCHLAUCHLISTE
SCHLAUCH KPL	993758914	189	1	698	11 24 779 0	SCHLAUCHLISTE
SCHLAUCH KPL	993759614	651	1	710	10 53 635 2	SCHLAUCHLISTE
SCHLAUCH KPL	993774614	537	1	42	11 26 995 4	SCHLAUCHLISTE
SCHLAUCH KPL	993775014	5021	1	44	11 26 995 4	SCHLAUCHLISTE
SCHLAUCH KPL	994460114	545	1	42	11 26 995 4	SCHLAUCHLISTE
SCHLAUCH KPL	994465914	519	1	41	11 26 995 4	SCHLAUCHLISTE
SCHLAUCH KPL	994486214	900	1	531	11 22 970 6	SCHLAUCHLISTE
SCHLAUCH KPL	994486214	901	1	531	11 22 970 6	SCHLAUCHLISTE
SCHLAUCH KPL	994486214	910	1	531	11 22 970 6	SCHLAUCHLISTE
SCHLAUCH KPL	994905314	636	1	498	11 26 261 2	SCHLAUCHLISTE
SCHLAUCH KPL	995006114	578	1	43	11 26 995 4	SCHLAUCHLISTE
SCHLAUCH KPL	995027514	532	1	42	11 26 995 4	SCHLAUCHLISTE
SCHLAUCH KPL	995060114	521	1	41	11 26 995 4	SCHLAUCHLISTE
SCHLAUCH KPL	995082614	382	1	390	10 56 178 0	SCHLAUCHLISTE
SCHLAUCH KPL	995085214	133	1	460	11 89 300 1	SCHLAUCHLISTE
SCHLAUCH KPL	995085214	134	1	460	11 89 300 1	SCHLAUCHLISTE
SCHLAUCH KPL	995174014	905	1	531	11 22 970 6	SCHLAUCHLISTE
SCHLAUCH KPL	995175314	281	1	682	11 22 970 9	SCHLAUCHLISTE
SCHLAUCH KPL	995176314	538	1	42	11 26 995 4	SCHLAUCHLISTE
SCHLAUCH KPL	995180714	416	1	173	11 24 113 7	SCHLAUCHLISTE
SCHLAUCH KPL	995207914	540	1	42	11 26 995 4	SCHLAUCHLISTE
SCHLAUCH KPL	995219914	140	1	460	11 89 300 1	SCHLAUCHLISTE
SCHLAUCH KPL	995226814	184	1	698	11 24 779 0	SCHLAUCHLISTE
SCHLAUCH KPL	995226814	187	1	698	11 24 779 0	SCHLAUCHLISTE
SCHLAUCH KPL	995240114	167	1	461	11 89 300 1	SCHLAUCHLISTE
SCHLAUCH KPL	995263914	425	1	173	11 24 113 7	SCHLAUCHLISTE
SCHLAUCH KPL	995264214	566	1	43	11 26 995 4	SCHLAUCHLISTE
SCHLAUCH KPL	995285414	361	1	631	10 52 439 2	SCHLAUCHLISTE
SCHLAUCH KPL	995421014	402	1	173	11 24 113 7	SCHLAUCHLISTE
SCHLAUCH KPL	995437214	119	1	459	11 89 300 1	SCHLAUCHLISTE
SCHLAUCH KPL	995440614	576	1	43	11 26 995 4	SCHLAUCHLISTE
SCHLAUCH KPL	995512314	410	1	173	11 24 113 7	SCHLAUCHLISTE
SCHLAUCH KPL	995537614	202	1	211	11 92 982 1	SCHLAUCHLISTE
SCHLAUCH KPL	995830614	804	1	738	10 57 089 4	SCHLAUCHLISTE
SCHLAUCH KPL	995865114	907	1	531	11 22 970 6	SCHLAUCHLISTE

Bezeichnung	Artikel	Pos.	Menge	Blatt	Baugruppe	Bezeichnung
SCHLAUCH KPL	995865114	911	1	531	11 22 970 6	SCHLAUCHLISTE
SCHLAUCH KPL	995943114	600	1	484	11 26 260 9	SCHLAUCHLISTE
SCHLAUCH KPL	995943514	619	1	174	11 24 113 7	SCHLAUCHLISTE
SCHLAUCH KPL	995943514	619	1	484	11 26 260 9	SCHLAUCHLISTE
SCHLAUCH KPL	995943614	620	1	174	11 24 113 7	SCHLAUCHLISTE
SCHLAUCH KPL	995943614	620	1	484	11 26 260 9	SCHLAUCHLISTE
SCHLAUCH KPL	995943714	628	1	498	11 26 261 2	SCHLAUCHLISTE
SCHLAUCH KPL	995943814	629	1	174	11 24 113 7	SCHLAUCHLISTE
SCHLAUCH KPL	995943814	629	1	498	11 26 261 2	SCHLAUCHLISTE
SCHLAUCH KPL	995944014	631	1	498	11 26 261 2	SCHLAUCHLISTE
SCHLAUCH KPL	995944114	632	1	498	11 26 261 2	SCHLAUCHLISTE
SCHLAUCH KPL	995944214	384	1	390	10 56 178 0	SCHLAUCHLISTE
SCHLAUCH KPL	995944314	387	1	390	10 56 178 0	SCHLAUCHLISTE
SCHLAUCH KPL	995944414	391	1	390	10 56 178 0	SCHLAUCHLISTE
SCHLAUCH KPL	995951214	392	1	390	10 56 178 0	SCHLAUCHLISTE
SCHLAUCH KPL	995951314	650	1	360	10 55 208 5	SCHLAUCHLISTE
SCHLAUCH KPL	995951414	651	1	360	10 55 208 5	SCHLAUCHLISTE
SCHLAUCH KPL	995959114	916	1	174	11 24 113 7	SCHLAUCHLISTE
SCHLAUCH KPL	995961914	424	1	173	11 24 113 7	SCHLAUCHLISTE
SCHLAUCH KPL	995962014	426	1	41	11 26 995 4	SCHLAUCHLISTE
SCHLAUCH KPL	995972114	500	1	41	11 26 995 4	SCHLAUCHLISTE
SCHLAUCH KPL	995972214	501	1	41	11 26 995 4	SCHLAUCHLISTE
SCHLAUCH KPL	995972314	502	1	41	11 26 995 4	SCHLAUCHLISTE
SCHLAUCH KPL	995972414	503	1	41	11 26 995 4	SCHLAUCHLISTE
SCHLAUCH KPL	995972514	504	1	174	11 24 113 7	SCHLAUCHLISTE
SCHLAUCH KPL	995972614	505	1	174	11 24 113 7	SCHLAUCHLISTE
SCHLAUCH KPL	995972814	510	1	41	11 26 995 4	SCHLAUCHLISTE
SCHLAUCH KPL	995972914	515	1	41	11 26 995 4	SCHLAUCHLISTE
SCHLAUCH KPL	995973014	518	1	41	11 26 995 4	SCHLAUCHLISTE
SCHLAUCH KPL	995973214	523	1	42	11 26 995 4	SCHLAUCHLISTE
SCHLAUCH KPL	995973514	530	1	42	11 26 995 4	SCHLAUCHLISTE
SCHLAUCH KPL	995973614	531	1	42	11 26 995 4	SCHLAUCHLISTE
SCHLAUCH KPL	995973714	539	1	42	11 26 995 4	SCHLAUCHLISTE
SCHLAUCH KPL	995973814	517	1	41	11 26 995 4	SCHLAUCHLISTE
SCHLAUCH KPL	995974114	550	1	42	11 26 995 4	SCHLAUCHLISTE
SCHLAUCH KPL	995974214	558	1	43	11 26 995 4	SCHLAUCHLISTE
SCHLAUCH KPL	995974314	560	1	174	11 24 113 7	SCHLAUCHLISTE
SCHLAUCH KPL	995974414	561	1	43	11 26 995 4	SCHLAUCHLISTE
SCHLAUCH KPL	995974614	562	1	43	11 26 995 4	SCHLAUCHLISTE
SCHLAUCH KPL	995974714	563	1	43	11 26 995 4	SCHLAUCHLISTE
SCHLAUCH KPL	995974814	564	1	43	11 26 995 4	SCHLAUCHLISTE
SCHLAUCH KPL	995974914	565	1	43	11 26 995 4	SCHLAUCHLISTE
SCHLAUCH KPL	995976414	5023	1	44	11 26 995 4	SCHLAUCHLISTE
SCHLAUCH KPL	995976414	5024	1	44	11 26 995 4	SCHLAUCHLISTE
SCHLAUCH KPL	995976514	5025	1	44	11 26 995 4	SCHLAUCHLISTE
SCHLAUCH KPL	995976514	5026	1	44	11 26 995 4	SCHLAUCHLISTE
SCHLAUCH KPL	995991314	630	1	498	11 26 261 2	SCHLAUCHLISTE
SCHLAUCH KPL	996000214	120	1	459	11 89 300 1	SCHLAUCHLISTE
SCHLAUCH KPL	996026214	121	1	459	11 89 300 1	SCHLAUCHLISTE
SCHLAUCH KPL	996026214	129	1	460	11 89 300 1	SCHLAUCHLISTE
SCHLAUCH KPL	996026214	601	1	484	11 26 260 9	SCHLAUCHLISTE
SCHLAUCH KPL	996037814	528	1	42	11 26 995 4	SCHLAUCHLISTE
SCHLAUCH KPL	996037914	529	1	42	11 26 995 4	SCHLAUCHLISTE
SCHLAUCH KPL	996038114	377	1	390	10 56 178 0	SCHLAUCHLISTE
SCHLAUCH KPL	996038214	383	1	390	10 56 178 0	SCHLAUCHLISTE
SCHLAUCH KPL	996084314	161	1	461	11 89 300 1	SCHLAUCHLISTE
SCHLAUCH KPL	996084314	164	1	461	11 89 300 1	SCHLAUCHLISTE
SCHLAUCH KPL	996084614	100	1	459	11 89 300 1	SCHLAUCHLISTE
SCHLAUCH KPL	996084614	105	1	459	11 89 300 1	SCHLAUCHLISTE
SCHLAUCH KPL	996087014	101	1	459	11 89 300 1	SCHLAUCHLISTE

Bezeichnung	Artikel	Pos.	Menge	Blatt	Baugruppe	Bezeichnung
SCHLAUCH KPL	996087014	106	1	459	11 89 300 1	SCHLAUCHLISTE
SCHLAUCH KPL	996089814	124	1	459	11 89 300 1	SCHLAUCHLISTE
SCHLAUCH KPL	996204514	123	1	459	11 89 300 1	SCHLAUCHLISTE
SCHLAUCH KPL	996204614	126	1	459	11 89 300 1	SCHLAUCHLISTE
SCHLAUCH KPL	996204714	141	1	460	11 89 300 1	SCHLAUCHLISTE
SCHLAUCH KPL	996204814	160	1	461	11 89 300 1	SCHLAUCHLISTE
SCHLAUCH KPL	996204814	165	1	461	11 89 300 1	SCHLAUCHLISTE
SCHLAUCH KPL	996367614	603	1	484	11 26 260 9	SCHLAUCHLISTE
SCHLAUCH KPL	996450714	130	1	460	11 89 300 1	SCHLAUCHLISTE
SCHLAUCH KPL	996450714	142	1	460	11 89 300 1	SCHLAUCHLISTE
SCHLAUCH KPL	996459514	412	1	173	11 24 113 7	SCHLAUCHLISTE
SCHLAUCH KPL	996459714	434	1	174	11 24 113 7	SCHLAUCHLISTE
SCHLAUCH KPL	996466614	507	1	41	11 26 995 4	SCHLAUCHLISTE
SCHLAUCH KPL	996466814	534	1	42	11 26 995 4	SCHLAUCHLISTE
SCHLAUCH KPL	996467014	567	1	43	11 26 995 4	SCHLAUCHLISTE
SCHLAUCH KPL	996467114	590	1	44	11 26 995 4	SCHLAUCHLISTE
SCHLAUCH KPL	996625314	820	1	343	99 33 241 14	SCHLAUCHLISTE
SCHLAUCH KPL	996625414	821	1	343	99 33 241 14	SCHLAUCHLISTE
SCHLAUCH KPL	996735814	413	1	173	11 24 113 7	SCHLAUCHLISTE
SCHLAUCH KPL	996770614	822	1	174	11 24 113 7	SCHLAUCHLISTE
SCHLAUCH KPL	996770714	823	1	206	11 26 949 8	SCHLAUCHLISTE
SCHLAUCH KPL	996770814	824	1	206	11 26 949 8	SCHLAUCHLISTE
SCHLAUCH KPL	996771014	826	1	206	11 26 949 8	SCHLAUCHLISTE
SCHLAUCH KPL	996771114	827	1	206	11 26 949 8	SCHLAUCHLISTE
SCHLAUCH KPL	996778614	541	1	42	11 26 995 4	SCHLAUCHLISTE
SCHLAUCH KPL	996779514	391	1	173	11 24 113 7	SCHLAUCHLISTE
SCHLAUCH KPL	996779614	392	1	173	11 24 113 7	SCHLAUCHLISTE
SCHLAUCH KPL	996779714	803	1	200	11 24 972 9	SCHLAUCHLISTE
SCHLAUCH KPL	996848514	415	1	41	11 26 995 4	SCHLAUCHLISTE
SCHLAUCH KPL	996972614	132	1	460	11 89 300 1	SCHLAUCHLISTE
SCHLAUCH KPL	996991514	110	1	459	11 89 300 1	SCHLAUCHLISTE
SCHLAUCH KPL	996991514	114	1	459	11 89 300 1	SCHLAUCHLISTE
SCHLAUCH KPL	997058014	825	1	174	11 24 113 7	SCHLAUCHLISTE
SCHLAUCHARMATUR	11953398	2	1	728	10 56 536 7	MAGNETVENTIL EINBAUSATZ
SCHLAUCHARMATUR	511713914	89	3	204	11 92 923 6	ANLAGE HARNSTOFF EINBAU
SCHLAUCHARMATUR	592023914	40	1	183	11 94 151 8	KUEHLER EINBAU WASSER
SCHLAUCHBOGEN	11946456	320	1	428	11 93 934 6	KLIMAANLAGE
SCHLAUCHBOGEN	11946458	340	1	428	11 93 934 6	KLIMAANLAGE
SCHLAUCHHALTER SCHWK H	916183314	78	1	507	11 23 820 4	ANLENKSTUECK KPL
SCHLAUCHHALTER SCHWK	949401114	16	1	328	11 24 483 7	BEF-TEILE OW
SCHLAUCHLEITUNG	10144282	8	1	204	11 92 923 6	ANLAGE HARNSTOFF EINBAU
SCHLAUCHLEITUNG	10144297	9	1	204	11 92 923 6	ANLAGE HARNSTOFF EINBAU
SCHLAUCHLEITUNG	790042214	5	1	501	10 56 183 8	WERKZEUG
SCHLAUCHLEITUNG	790042914	6	1	501	10 56 183 8	WERKZEUG
SCHLAUCHLISTE	10524392	4	1	627	10 51 743 9	SEILEINZIEHWINDE KPL NRS
SCHLAUCHLISTE	10536352	4	1	707	10 53 635 0	GLEICHLAUF HYDR NRS
SCHLAUCHLISTE	10545451	4	1	71	10 51 969 4	A-BOCK AUFRICHTZYL EINBA
SCHLAUCHLISTE	10552085	4	1	357	10 51 968 6	EZW OW EINBAU KPL
SCHLAUCHLISTE	10561780	4	1	378	10 51 968 2	DW OW
SCHLAUCHLISTE	10570894	4	1	737	10 52 155 4	BETANKUNGSANLAGE NRS
SCHLAUCHLISTE	10577909	20	1	724	11 93 621 2	KLIMAANLAGE NRS
SCHLAUCHLISTE	11229706	4	1	522	11 29 259 8	RUECKFALLSTUETZE
SCHLAUCHLISTE	11229709	4	1	679	10 51 971 3	SELBSTVERLADESYSTEM NR
SCHLAUCHLISTE	11232399	4	1	505	11 23 820 4	ANLENKSTUECK KPL
SCHLAUCHLISTE	11241137	4	1	80	11 92 885 2	ZENTRALAGGREGAT KPL
SCHLAUCHLISTE	11247790	4	1	695	11 89 568 5	SELBSTVERLADESYSTEM NR
SCHLAUCHLISTE	11249729	4	1	199	11 24 114 4	KRAFTSTOFFANLAGE
SCHLAUCHLISTE	11262609	4	1	480	11 26 260 5	WINDE 1 KRAN
SCHLAUCHLISTE	11262612	4	1	495	11 26 261 0	WINDE 2 KRAN
SCHLAUCHLISTE	11269498	2	1	204	11 92 923 6	ANLAGE HARNSTOFF EINBAU

Bezeichnung	Artikel	Pos.	Menge	Blatt	Baugruppe	Bezeichnung
SCHLAUCHLISTE	11269954	4	1	6	11 24 047 9	OW KPL
SCHLAUCHLISTE	11288257	103	1	737	10 52 155 4	BETANKUNGSANLAGE NRS
SCHLAUCHLISTE	11893001	4	1	439	11 89 364 8	UW KPL
SCHLAUCHLISTE	11929821	2	1	210	11 92 958 8	LUFTFUEHRUNG KPL
SCHLAUCHLISTE	992774714	4	1	685	11 23 619 7	SELBSTVERLADESYSTEM NR
SCHLAUCHLISTE	993324114	4	1	339	10 51 969 7	NADELEINZIEHWINDE
SCHLAUCHNIPPEL	10115523	100	1	184	11 94 151 8	KUEHLER EINBAU WASSER
SCHLAUCHNIPPEL	10121893	10	1	265	10 14 736 9	ANSAUGSTUTZEN ANBAU
SCHLAUCHNIPPEL	10121893	11	1	299	11 92 891 3	KOMPRESSOR NRS
SCHLAUCHNIPPEL	10140969	5	1	278	10 14 274 4	KUEHLWASSERENTLUEFTUN
SCHLAUCHNIPPEL	10142668	1	1	278	10 14 274 4	KUEHLWASSERENTLUEFTUN
SCHLAUCHNIPPEL	9140351	26	1	283	10 14 013 6	ATL-ANBAU
SCHLAUCHSATZ KPL	10527918	4	1	729	10 57 790 9	SCHLAUCHLISTE
SCHLAUCHSCHELLE	10579070	50	6	179	10 57 532 2	ANSAUGROHR OEL KPL
SCHLAUCHSCHELLE	10581765	58	1	183	11 94 151 8	KUEHLER EINBAU WASSER
SCHLAUCHSCHELLE	10581765	60	1	204	11 92 923 6	ANLAGE HARNSTOFF EINBAU
SCHLAUCHSCHELLE	11005281	10	7	285	10 14 622 4	LADEDRUCKREGELUNG
SCHLAUCHSCHELLE	11833907	19	1	208	10 14 653 8	ENTNAHMEMODUL
SCHLAUCHSCHELLE	482000814	57	4	204	11 92 923 6	ANLAGE HARNSTOFF EINBAU
SCHLAUCHSCHELLE	4900778	91	4	184	11 94 151 8	KUEHLER EINBAU WASSER
SCHLAUCHSCHELLE	4900778	11	2	265	10 14 736 9	ANSAUGSTUTZEN ANBAU
SCHLAUCHSCHELLE	4900778	25	2	283	10 14 013 6	ATL-ANBAU
SCHLAUCHSCHELLE	4900778	2	1	503	91 76 658 14	ABLASSSCHLAUCH KPL
SCHLAUCHSCHELLE	4901138	2	1	230	10 14 671 6	OELLEITUNG VORM.
SCHLAUCHSCHELLE	4981029	8	3	230	10 14 671 6	OELLEITUNG VORM.
SCHLAUCHSCHELLE	5004927	9	1	223	10 14 201 8	KURBELGEHAEUSEENTLUEF
SCHLAUCHSCHELLE	5004929	6	2	267	10 14 967 6	VERBINDUNGSLEITUNG ANBA
SCHLAUCHSCHELLE	5700024	8	5	223	10 14 201 8	KURBELGEHAEUSEENTLUEF
SCHLAUCHSCHELLE	774204914	55	6	183	11 94 151 8	KUEHLER EINBAU WASSER
SCHLAUCHSCHELLE	774204914	15	1	199	11 24 114 4	KRAFTSTOFFANLAGE
SCHLAUCHSCHELLE	774204914	56	14	204	11 92 923 6	ANLAGE HARNSTOFF EINBAU
SCHLAUCHSCHELLE	774206408	52	4	183	11 94 151 8	KUEHLER EINBAU WASSER
SCHLAUCHSCHELLE	774209908	31	2	194	11 92 922 0	ANSAUGANLAGE LUFT
SCHLAUCHSCHELLE	774214308	8	1	721	10 51 728 1	VERROHRUNG HYDR
SCHLAUCHSCHELLE	774217108	34	1	194	11 92 922 0	ANSAUGANLAGE LUFT
SCHLAUCHSCHELLE	774218808	53	9	183	11 94 151 8	KUEHLER EINBAU WASSER
SCHLAUCHSCHELLE	774241914	32	1	194	11 92 922 0	ANSAUGANLAGE LUFT
SCHLAUCHSCHELLE	774247214	33	2	194	11 92 922 0	ANSAUGANLAGE LUFT
SCHLAUCHSCHELLE	774256114	52	2	179	10 57 532 2	ANSAUGROHR OEL KPL
SCHLAUCHSCHELLE	790208814	51	6	179	10 57 532 2	ANSAUGROHR OEL KPL
SCHLAUCHSCHELLE	790244814	58	1	204	11 92 923 6	ANLAGE HARNSTOFF EINBAU
SCHLAUCHSCHELLE	790244814	12	2	299	11 92 891 3	KOMPRESSOR NRS
SCHLAUCHSCHELLENVERSCH	693152314	83	2	576	10 57 559 9	KABELSATZ
SCHLAUCHSCHELLENVERSCH	693152314	83	2	609	10 57 651 9	KABELSATZ
SCHLAUCHSCHELLENVERSCH	693152414	55	1	741	10 52 155 9	MODUL BETANKUNGSANLAG
SCHLIESSBOLZEN	592333714	6	1	422	59 22 871 14	FRONTSCHEIBE KPL
SCHLIESSBOLZEN	7615720	2	1	417	10 22 645 4	TUERE ZUBEHOEHR
SCHLIESSKEIL	10447258	47	1	419	10 35 007 6	SCHIEBETUER
SCHLITZBAND	11234375	57	2	328	11 24 483 7	BEF-TEILE OW
SCHLITZBAND	11244040	52	2	328	11 24 483 7	BEF-TEILE OW
SCHLITZBAND	11247029	28	1	328	11 24 483 7	BEF-TEILE OW
SCHLITZBAND	11247792	31	9	328	11 24 483 7	BEF-TEILE OW
SCHLITZBAND	11247799	32	2	328	11 24 483 7	BEF-TEILE OW
SCHLITZBANDSTAHL	11234799	15	2	176	11 24 113 8	MOTORLAGER KPL
SCHLUESSEL	10663954	50	2	410	11 26 095 7	STEUERSTAND RE
SCHLUESSEL	981809914	999	1	4	01 38 406 14	LR 1300 SX
SCHLUESSELANHAENGER	10595399	72	1	34	11 24 519 0	OW EL
SCHLUESSELRING RD 25	704214114	20	2	314	11 24 409 1	VERKLEIDUNG
SCHLUESSELSCHALTER	10539250	71	1	34	11 24 519 0	OW EL
SCHMIERNIPPEL	11312502	4	1	593	10 50 435 2	SEILROLLE

Bezeichnung	Artikel	Pos.	Menge	Blatt	Baugruppe	Bezeichnung
SCHMIERNIPPEL	11312502	7	1	601	11 27 148 8	AUFHAENGUNG
SCHMIEROELFILTER ANBAU	10142942	150	1	214	12 42 545 4	DIESELMOTOR
SCHMIEROELLEITUNG	10140137	7	1	283	10 14 013 6	ATL-ANBAU
SCHMIEROELPUMPE	10133945	140	1	214	12 42 545 4	DIESELMOTOR
SCHMIEROELPUMPE	10138565	1	1	245	10 13 394 5	SCHMIEROELPUMPE
SCHMIEROELPUMPE	592178914	580	1	86	11 24 682 0	VERTEILERGETRIEBE
SCHMIERRITZEL	11231552	1	1	731	11 28 048 1	ANSCHLUSSTEILE
SCHNELLVERSCHLUSSKUPPL	10445101	8	1	442	11 89 300 5	VERROHRUNG HYDR
SCHNELLVERSCHLUSSKUPPL	10445102	7	1	442	11 89 300 5	VERROHRUNG HYDR
SCHNELLVERSCHLUSSKUPPL	10445105	19	1	8	11 29 618 6	OW HYDR
SCHNELLVERSCHLUSSKUPPL	10551548	9	2	442	11 89 300 5	VERROHRUNG HYDR
SCHNELLVERSCHLUSSKUPPL	10551576	2	1	509	10 51 826 1	ANLENKSTUECK HYDR
SCHNELLVERSCHRAUBUNG	510571914	15	1	8	11 29 618 6	OW HYDR
SCHNELLVERSCHRAUBUNG	510571914	9	1	525	10 51 959 1	VERROHRUNG HYDR
SCHNELLVERSCHRAUBUNG	510572214	14	2	8	11 29 618 6	OW HYDR
SCHNELLVERSCHRAUBUNG	510572214	8	1	525	10 51 959 1	VERROHRUNG HYDR
SCHNELLVERSCHRAUBUNG	511511214	18	1	8	11 29 618 6	OW HYDR
SCHNELLVERSCHRAUBUNG	511511314	17	1	8	11 29 618 6	OW HYDR
SCHNELLVERSCHRAUBUNG	511704214	8	1	8	11 29 618 6	OW HYDR
SCHNELLVERSCHRAUBUNG	511704314	2	1	502	91 90 239 14	LEITUNG HYDR
SCHNELLVERSCHRAUBUNG	511708414	16	1	8	11 29 618 6	OW HYDR
SCHONHAMMER 60G	885045214	18	1	501	10 56 183 8	WERKZEUG
SCHOTTBLECH	10558762	34	1	463	11 89 365 0	RAUPENTRAEGER RE KPL
SCHOTTBLECH	10558762	34	1	474	11 89 365 1	RAUPENTRAEGER LI KPL
SCHOTTBLECH	11235482	35	2	476	11 31 390 8	MITTELTEIL KPL
SCHOTTPLATTE	10020512	9	1	312	11 24 409 1	VERKLEIDUNG
SCHOTTPLATTE	10445043	47	1	505	11 23 820 4	ANLENKSTUECK KPL
SCHRAUBE	592287514	15	1	422	59 22 871 14	FRONTSCHEIBE KPL
SCHRAUBE DIN 7500C M2.5X5.	7024631	4	2	28	51 16 576 14	TEMPERATURREGLER
SCHRAUBE DIN 931 M8X50 8.8	11236106	19	12	592	79 04 112 14	UNTERFLASCHE
SCHRAUBE DIN 931 M8X50 8.8	11236106	19	12	599	79 04 871 14	UNTERFLASCHE
SCHRAUBE M12X30	11249772	10	3	445	10 55 097 0	DREHDURCHFUEHRUNG HYD
SCHRAUBE M30X1.5X150	10590183	12	4	465	10 55 716 2	LEITRAD KPL
SCHRAUBE UN 1206 M10X30	10502692	5	1	35	10 53 048 9	SICHERUNGSHALTER
SCHRAUBE UN 1206 M10X30	10502692	55	1	735	10 56 013 7	FREMDEINSPEISUNG BATTERI
SCHRAUBENSICHERUNG	10547904	10	1	361	10 55 156 3	WINDE
SCHRAUBENSICHERUNG	811202114	104	1	105	10 11 835 0	ANSCHLUSSGEHAEUSE
SCHRAUBENSICHERUNG	811202114	104	1	114	10 13 975 2	RS SCHWENKJOCH
SCHRAUBENSICHERUNG	811202114	105	1	226	10 15 529 8	OELWANNE VORM.
SCHRAUBENSICHERUNG	811202114	105	1	271	10 14 286 0	KLIMAKOMPRESSOR ANBAU
SCHRAUBENSICHERUNG	8655016	105	1	107	10 11 835 7	RS ANSCHLUSSGEHAEUSE
SCHRAUBENSICHERUNG	8655016	105	1	108	92 74 731	DS ANSCHLUSSGEHAEUSE
SCHRAUBENSICHERUNG	8655016	105	1	141	10 14 131 6	ANSCHLUSSPLATTE VORM.
SCHRAUBENSICHERUNG	8655016	105	1	248	10 14 294 2	SCHMIEROELFILTER ANBAU
SCHRAUBENSICHERUNG	8655016	109	1	287	10 12 037 2	STARTER ANBAU
SCHRAUBENSICHERUNG	8700012	106	1	122	98 89 832	RS ZYLINDER+STEUERPLATT
SCHRAUBHUELSE	10012024	5	2	731	11 28 048 1	ANSCHLUSSTEILE
SCHRAUBKAPPE	779009008	8	1	255	10 13 508 0	DRUCKROHRSTUTZEN
SCHRAUBKARABINER	10473040	22	1	589	99 30 800 14	SPITZENENDSCHALTER EINBA
SCHRIFTZUG	10351188	8	2	2	01 38 406 14	LR 1300 SX
SCHRUMPFSCHLAUCH	603018114	18	0.2	582	10 59 863 3	PENDEL KPL
SCHUTZBLECH	10580585	12	1	45	10 51 961 6	OELKUEHLER EINBAU
SCHUTZGITTER	10566030	4	1	31	10 22 592 5	KUEHLER MOTOR
SCHUTZGITTER	11267554	9	1	186	10 57 423 7	KUEHLER MOTOR
SCHUTZGITTER	11932244	3	1	190	10 57 423 9	KUEHLER MOTOR
SCHUTZKAPPE	10542325	96	1	400	11 27 973 6	KABINE EL
SCHUTZKAPPE	10801869	16	1	143	10 12 323 6	DRUCKEINSPEISEVENTIL
SCHUTZKAPPE	11266978	14	80	437	10 51 969 6	VERBINDUNG OW UW
SCHUTZKAPPE	7013456	3	1	227	50 04 624	OELABLASSSCHRAUBE
SCHUTZKAPPE	789000701	34	1	345	96 96 248 01	WINDE

Bezeichnung	Artikel	Pos.	Menge	Blatt	Baugruppe	Bezeichnung
SCHUTZLEITERKLEMME	10337303	50	1	735	10 56 013 7	FREMDEINSPEISUNG BATTERI
SCHUTZRING	10120443	3	1	232	10 12 134 5	RS KURBELWELLENDICHTUN
SCHUTZWALZE	939662601	26	1	505	11 23 820 4	ANLENKSTUECK KPL
SCHUTZWALZE	969641401	40	1	353	96 96 543 01	WINDENRAHMEN
SCHWENKTRAVERSE	11271490	2	1	601	11 27 148 8	AUFHAENGUNG
SCHWENKTRAVERSE	11274675	2	1	595	11 27 463 8	AUFHAENGUNG
SCHWERSPANNSTIFT	616155514	11	1	515	61 61 541 14	KABELTROMMEL
SCHWINGSYSTEM	10289993	50	1	430	10 22 506 8	FAHRERSITZ
SCHWUNGRAD ANBAU	10118929	530	1	216	12 42 545 4	DIESELMOTOR
SCHWUNGRAD VORM.	10118928	1	1	294	10 11 892 9	SCHWUNGRAD ANBAU
SCHWUNGRADGEHAEUSE AN	10115577	520	1	215	12 42 545 4	DIESELMOTOR
SCHWUNGRADGEHAEUSE VO	10115576	1	1	290	10 11 557 7	SCHWUNGRADGEHAEUSE AN
SCR KPL.	11403711	3	1	303	11 90 032 5	ABGASANLAGE
SECHSKANTMUTTER 8	10411095	5	2	288	11 38 664 5	STARTER
SECHSKANTMUTTER AEHNL.I	7381182	11	1	284	10 14 511 2	ABGASSTUTZEN ANBAU
SECHSKANTMUTTER DIN 934	10584965	11	4	592	79 04 112 14	UNTERFLASCHE
SECHSKANTMUTTER DIN 934	10584965	11	4	599	79 04 871 14	UNTERFLASCHE
SECHSKANTMUTTER DIN 985	411901114	8	1	35	10 53 048 9	SICHERUNGSHALTER
SECHSKANTMUTTER DIN 985	411901114	80	4	177	10 51 948 1	ANSAUGROHR OEL
SECHSKANTMUTTER DIN 985	10544155	77	8	507	11 23 820 4	ANLENKSTUECK KPL
SECHSKANTMUTTER DIN 985	10544155	29	4	548	11 28 390 8	AL BEGEHUNG
SECHSKANTMUTTER DIN 985	10544155	29	4	563	11 28 583 8	AL BEGEHUNG
SECHSKANTMUTTER DIN 985	10544155	29	4	570	11 28 626 1	AL BEGEHUNG
SECHSKANTMUTTER DIN 985	10544157	18	4	627	10 51 743 9	SEILEINZIEHWINDE KPL NRS
SECHSKANTMUTTER DIN 985	10544159	30	8	679	10 51 971 3	SELBSTVERLADESYSTEM NR
SECHSKANTMUTTER DIN 985	11236108	20	12	592	79 04 112 14	UNTERFLASCHE
SECHSKANTMUTTER DIN 985	11236108	20	12	599	79 04 871 14	UNTERFLASCHE
SECHSKANTMUTTER DIN EN 1	11314341	14	4	518	11 23 653 3	AUFLAGE KPL
SECHSKANTMUTTER DIN EN 1	11314341	15	4	540	11 25 204 2	AUFLAGE KPL
SECHSKANTMUTTER DIN EN 1	11314341	17	6	558	11 23 292 2	AUFLAGE KPL
SECHSKANTMUTTER EN 1661	4980805	15	1	247	10 13 382 3	ABSAUGPUMPE VORM.
SECHSKANTMUTTER EN 1661	4980805	4	3	266	10 14 736 4	LUFTANSAUGUNG ANBAU
SECHSKANTMUTTER EN 1661	4980805	7	1	286	10 14 584 5	GENERATOR VORM.
SECHSKANTMUTTER EN 1661	4980805	3	3	287	10 12 037 2	STARTER ANBAU
SECHSKANTMUTTER EN 1661	10424333	14	3	226	10 15 529 8	OELWANNE VORM.
SECHSKANTMUTTER EN 1661	10424333	11	2	267	10 14 967 6	VERBINDUNGSLEITUNG ANBA
SECHSKANTMUTTER EN 1661	485569314	14	16	479	99 26 718 14	PODEST
SECHSKANTMUTTER EN 1661	485569314	14	16	645	11 24 575 5	PODEST
SECHSKANTMUTTER ISO 105	10540494	20	2	45	10 51 961 6	OELKUEHLER EINBAU
SECHSKANTMUTTER ISO 105	10540494	80	4	48	10 56 070 1	TANK HYDR KPL
SECHSKANTMUTTER ISO 105	10540494	5	1	56	10 55 268 1	MITNEHMER EINBAU
SECHSKANTMUTTER ISO 105	10540494	15	4	67	10 56 067 3	BATTERIE EINBAU KPL
SECHSKANTMUTTER ISO 105	10540494	82	18	184	11 94 151 8	KUEHLER EINBAU WASSER
SECHSKANTMUTTER ISO 105	10540494	81	10	189	11 24 114 1	KUEHLER EINBAU LADELUFT
SECHSKANTMUTTER ISO 105	10540494	80	2	198	11 24 114 3	ABGASANLAGE
SECHSKANTMUTTER ISO 105	10540494	134	2	205	11 92 923 6	ANLAGE HARNSTOFF EINBAU
SECHSKANTMUTTER ISO 105	10540494	82	11	210	11 92 958 8	LUFTFUEHRUNG KPL
SECHSKANTMUTTER ISO 105	10540494	83	6	306	11 24 114 6	ABDECKUNG
SECHSKANTMUTTER ISO 105	10540494	30	54	308	11 24 409 0	VERKLEIDUNG OW EINBAU KP
SECHSKANTMUTTER ISO 105	10540494	8	4	324	10 54 591 0	MOTORABDECKUNG
SECHSKANTMUTTER ISO 105	10540494	28	12	326	11 24 922 2	ABDECKUNG UNTERSEITE
SECHSKANTMUTTER ISO 105	10540494	76	83	330	11 24 483 7	BEF-TEILE OW
SECHSKANTMUTTER ISO 105	10540494	94	18	507	11 23 820 4	ANLENKSTUECK KPL
SECHSKANTMUTTER ISO 105	10540494	15	2	542	99 29 588 14	AUFLAGE
SECHSKANTMUTTER ISO 105	10540494	15	2	543	10 35 063 3	HALTERUNG
SECHSKANTMUTTER ISO 105	10540494	18	2	550	11 28 397 7	AUFFANGWANNE KPL
SECHSKANTMUTTER ISO 105	10540494	18	2	551	11 28 397 8	AUFFANGWANNE KPL
SECHSKANTMUTTER ISO 105	10540494	18	4	552	11 28 399 5	AUFFANGWANNE KPL
SECHSKANTMUTTER ISO 105	10540494	18	4	553	11 28 399 7	AUFFANGWANNE KPL
SECHSKANTMUTTER ISO 105	10540494	67	8	579	11 28 648 4	MONTAGETEILE

Bezeichnung	Artikel	Pos.	Menge	Blatt	Baugruppe	Bezeichnung
SECHSKANTMUTTER ISO 105	10540494	21	1	582	10 59 863 3	PENDEL KPL
SECHSKANTMUTTER ISO 105	10540494	11	4	583	11 28 357 6	MONTAGETEILE
SECHSKANTMUTTER ISO 105	10540494	12	1	589	99 30 800 14	SPITZENENDSCHALTER EINBA
SECHSKANTMUTTER ISO 105	10540494	39	54	642	10 55 372 1	DACHGELAENDER NRS
SECHSKANTMUTTER ISO 105	10540494	22	4	649	10 52 547 1	ZUSATZSCHEINWERFER OW
SECHSKANTMUTTER ISO 105	10540494	16	2	667	10 55 601 0	STURZSICHERUNG NRS
SECHSKANTMUTTER ISO 105	10540494	16	3	671	11 30 694 4	SCHIENE KPL
SECHSKANTMUTTER ISO 105	10540494	14	1	683	99 35 606 14	LASCHE KPL
SECHSKANTMUTTER ISO 105	10540494	9	2	685	11 23 619 7	SELBSTVERLADESYSTEM NR
SECHSKANTMUTTER ISO 105	10540494	16	5	732	11 26 771 6	MONTAGETEILE
SECHSKANTMUTTER ISO 105	10540495	36	4	65	10 58 163 4	KABINENAUFHAENGUNG KPL
SECHSKANTMUTTER ISO 105	10540495	20	2	67	10 56 067 3	BATTERIE EINBAU KPL
SECHSKANTMUTTER ISO 105	10540495	81	6	177	10 51 948 1	ANSAUGROHR OEL
SECHSKANTMUTTER ISO 105	10540495	82	4	198	11 24 114 3	ABGASANLAGE
SECHSKANTMUTTER ISO 105	10540495	135	1	205	11 92 923 6	ANLAGE HARNSTOFF EINBAU
SECHSKANTMUTTER ISO 105	10540495	70	8	330	11 24 483 7	BEF-TEILE OW
SECHSKANTMUTTER ISO 105	10540495	23	2	357	10 51 968 6	EZW OW EINBAU KPL
SECHSKANTMUTTER ISO 105	10540495	19	152	463	11 89 365 0	RAUPENTRAEGER RE KPL
SECHSKANTMUTTER ISO 105	10540495	19	152	474	11 89 365 1	RAUPENTRAEGER LI KPL
SECHSKANTMUTTER ISO 105	10540495	19	6	505	11 23 820 4	ANLENKSTUECK KPL
SECHSKANTMUTTER ISO 105	10540495	13	4	555	11 94 087 8	MONTAGEEINHEIT
SECHSKANTMUTTER ISO 105	10540495	4	4	606	11 30 126 6	MONTAGETEILE
SECHSKANTMUTTER ISO 105	10540495	56	10	642	10 55 372 1	DACHGELAENDER NRS
SECHSKANTMUTTER ISO 105	10540495	14	2	659	11 27 109 7	FANGSTANGE NRS
SECHSKANTMUTTER ISO 105	10540495	26	2	718	10 58 064 7	VIDEOUEBERWACHUNGSANL
SECHSKANTMUTTER ISO 1051	10540484	15	2	59	11 26 557 2	MONTAGETEILE
SECHSKANTMUTTER ISO 1051	10540484	21	2	67	10 56 067 3	BATTERIE EINBAU KPL
SECHSKANTMUTTER ISO 1051	10540484	12	4	68	11 31 093 2	ENDSCHALTER EINBAU
SECHSKANTMUTTER ISO 1051	10540484	47	4	398	11 27 970 6	KABINE KPL
SECHSKANTMUTTER ISO 1051	10540484	22	16	505	11 23 820 4	ANLENKSTUECK KPL
SECHSKANTMUTTER ISO 1051	10540484	43	4	579	11 28 648 4	MONTAGETEILE
SECHSKANTMUTTER ISO 1051	10540484	19	8	580	11 28 610 5	ARRETIERUNG KPL
SECHSKANTMUTTER ISO 1051	10540484	20	2	737	10 52 155 4	BETANKUNGSANLAGE NRS
SECHSKANTMUTTER ISO 1051	10540492	80	9	184	11 94 151 8	KUEHLER EINBAU WASSER
SECHSKANTMUTTER ISO 1051	10540492	84	3	198	11 24 114 3	ABGASANLAGE
SECHSKANTMUTTER ISO 1051	10540492	131	14	205	11 92 923 6	ANLAGE HARNSTOFF EINBAU
SECHSKANTMUTTER ISO 1051	10540492	80	2	210	11 92 958 8	LUFTFUEHRUNG KPL
SECHSKANTMUTTER ISO 1051	10540492	46	10	310	11 24 409 0	VERKLEIDUNG OW EINBAU KP
SECHSKANTMUTTER ISO 1051	10540492	84	3	330	11 24 483 7	BEF-TEILE OW
SECHSKANTMUTTER ISO 1051	10540492	39	6	463	11 89 365 0	RAUPENTRAEGER RE KPL
SECHSKANTMUTTER ISO 1051	10540492	39	6	474	11 89 365 1	RAUPENTRAEGER LI KPL
SECHSKANTMUTTER ISO 1051	10540492	83	28	507	11 23 820 4	ANLENKSTUECK KPL
SECHSKANTMUTTER ISO 1051	10540492	18	2	518	11 23 653 3	AUFLAGE KPL
SECHSKANTMUTTER ISO 1051	10540492	14	18	519	10 58 193 7	GITTERROST KPL
SECHSKANTMUTTER ISO 1051	10540492	31	8	535	11 24 444 4	A-BOCK 1 KPL
SECHSKANTMUTTER ISO 1051	10540492	19	1	550	11 28 397 7	AUFFANGWANNE KPL
SECHSKANTMUTTER ISO 1051	10540492	19	1	551	11 28 397 8	AUFFANGWANNE KPL
SECHSKANTMUTTER ISO 1051	10540492	19	1	552	11 28 399 5	AUFFANGWANNE KPL
SECHSKANTMUTTER ISO 1051	10540492	19	1	553	11 28 399 7	AUFFANGWANNE KPL
SECHSKANTMUTTER ISO 1051	10540492	14	2	625	11 21 552 4	WINKELANZEIGE NRS
SECHSKANTMUTTER ISO 1051	10540492	35	24	642	10 55 372 1	DACHGELAENDER NRS
SECHSKANTMUTTER ISO 1051	10540492	23	2	669	10 55 280 7	GITTERROST KPL
SECHSKANTMUTTER ISO 1051	10540492	21	2	676	10 55 514 8	STURZSICHERUNG NRS
SECHSKANTMUTTER ISO 1051	10540492	23	6	718	10 58 064 7	VIDEOUEBERWACHUNGSANL
SECHSKANTMUTTER ISO 1051	10540493	16	2	59	11 26 557 2	MONTAGETEILE
SECHSKANTMUTTER ISO 1051	10540493	17	2	65	10 58 163 4	KABINENAUFHAENGUNG KPL
SECHSKANTMUTTER ISO 1051	10540493	84	8	176	11 24 113 8	MOTORLAGER KPL
SECHSKANTMUTTER ISO 1051	10540493	81	12	184	11 94 151 8	KUEHLER EINBAU WASSER
SECHSKANTMUTTER ISO 1051	10540493	80	14	189	11 24 114 1	KUEHLER EINBAU LADELUFT
SECHSKANTMUTTER ISO 1051	10540493	80	2	192	11 28 574 7	WP

Bezeichnung	Artikel	Pos.	Menge	Blatt	Baugruppe	Bezeichnung
SECHSKANTMUTTER ISO 1051	10540493	80	4	194	11 92 922 0	ANSAUGANLAGE LUFT
SECHSKANTMUTTER ISO 1051	10540493	80	2	199	11 24 114 4	KRAFTSTOFFANLAGE
SECHSKANTMUTTER ISO 1051	10540493	132	6	205	11 92 923 6	ANLAGE HARNSTOFF EINBAU
SECHSKANTMUTTER ISO 1051	10540493	81	6	210	11 92 958 8	LUFTFUEHRUNG KPL
SECHSKANTMUTTER ISO 1051	10540493	41	23	310	11 24 409 0	VERKLEIDUNG OW EINBAU KP
SECHSKANTMUTTER ISO 1051	10540493	85	37	330	11 24 483 7	BEF-TEILE OW
SECHSKANTMUTTER ISO 1051	10540493	26	4	357	10 51 968 6	EZW OW EINBAU KPL
SECHSKANTMUTTER ISO 1051	10540493	13	2	372	99 29 386 14	KONSOLE KPL
SECHSKANTMUTTER ISO 1051	10540493	13	2	373	99 29 434 14	KONSOLE KPL
SECHSKANTMUTTER ISO 1051	10540493	16	8	479	99 26 718 14	PODEST
SECHSKANTMUTTER ISO 1051	10540493	25	70	505	11 23 820 4	ANLENKSTUECK KPL
SECHSKANTMUTTER ISO 1051	10540493	19	6	519	10 58 193 7	GITTERROST KPL
SECHSKANTMUTTER ISO 1051	10540493	15	8	520	99 34 198 14	SCHILD LIEBHERR
SECHSKANTMUTTER ISO 1051	10540493	30	6	548	11 28 390 8	AL BEGEHUNG
SECHSKANTMUTTER ISO 1051	10540493	14	2	549	11 28 391 3	BEFESTIGUNGSCHELLE
SECHSKANTMUTTER ISO 1051	10540493	30	6	563	11 28 583 8	AL BEGEHUNG
SECHSKANTMUTTER ISO 1051	10540493	30	6	570	11 28 626 1	AL BEGEHUNG
SECHSKANTMUTTER ISO 1051	10540493	44	4	579	11 28 648 4	MONTAGETEILE
SECHSKANTMUTTER ISO 1051	10540493	24	2	589	99 30 800 14	SPITZENENDSCHALTER EINBA
SECHSKANTMUTTER ISO 1051	10540493	42	40	642	10 55 372 1	DACHGELAENDER NRS
SECHSKANTMUTTER ISO 1051	10540493	12	12	644	11 24 147 8	UW PODEST
SECHSKANTMUTTER ISO 1051	10540493	12	12	645	11 24 575 5	PODEST
SECHSKANTMUTTER ISO 1051	10540493	35	2	662	99 10 116 14	SEILFUEHRUNG
SECHSKANTMUTTER ISO 1051	10540493	19	2	667	10 55 601 0	STURZSICHERUNG NRS
SECHSKANTMUTTER ISO 1051	10540493	16	4	669	10 55 280 7	GITTERROST KPL
SECHSKANTMUTTER ISO 1051	10540493	6	2	672	11 23 827 7	SEILSCHUTZ
SECHSKANTMUTTER ISO 1051	10540493	80	1	673	11 30 567 0	TRANSPORTSICHERUNG
SECHSKANTMUTTER ISO 1051	10540493	24	4	678	11 26 901 8	HALTER KPL
SECHSKANTMUTTER ISO 1051	10540493	6	4	685	11 23 619 7	SELBSTVERLADESYSTEM NR
SECHSKANTMUTTER ISO 1051	10540493	24	2	718	10 58 064 7	VIDEOUEBERWACHUNGSANL
SECHSKANTMUTTER ISO 4032	4000383	19	4	479	99 26 718 14	PODEST
SECHSKANTMUTTER ISO 403	11932239	9	4	190	10 57 423 9	KUEHLER MOTOR
SECHSKANTMUTTER ISO 403	411514614	80	6	53	10 56 073 3	KRAFTSTOFFTANK KPL
SECHSKANTMUTTER ISO 403	411514614	82	8	176	11 24 113 8	MOTORLAGER KPL
SECHSKANTMUTTER ISO 403	411514614	81	8	198	11 24 114 3	ABGASANLAGE
SECHSKANTMUTTER ISO 403	411514614	133	6	205	11 92 923 6	ANLAGE HARNSTOFF EINBAU
SECHSKANTMUTTER ISO 403	411514614	20	4	324	10 54 591 0	MOTORABDECKUNG
SECHSKANTMUTTER ISO 403	411514614	32	1	398	11 27 970 6	KABINE KPL
SECHSKANTMUTTER ISO 403	411514614	19	1	617	10 55 753 7	SPITZENENDSCHALTER LI EIN
SECHSKANTMUTTER ISO 403	411514614	19	1	618	10 55 757 6	SPITZENENDSCHALTER RE E
SECHSKANTMUTTER ISO 403	411514614	5	4	733	10 52 293 0	DW GEBER NRS
SECHSKANTMUTTER ISO 4032	11233292	124	4	18	11 28 647 6	VENTILBLOCK
SECHSKANTMUTTER ISO 403	411516914	85	8	176	11 24 113 8	MOTORLAGER KPL
SECHSKANTMUTTER ISO 403	411516914	25	8	476	11 31 390 8	MITTELTEIL KPL
SECHSKANTMUTTER ISO 403	411516914	15	2	617	10 55 753 7	SPITZENENDSCHALTER LI EIN
SECHSKANTMUTTER ISO 403	411516914	15	2	618	10 55 757 6	SPITZENENDSCHALTER RE E
SECHSKANTMUTTER ISO 403	411516914	21	2	659	11 27 109 7	FANGSTANGE NRS
SECHSKANTMUTTER ISO 4032	10544154	80	10	176	11 24 113 8	MOTORLAGER KPL
SECHSKANTMUTTER ISO 4032	10544158	81	2	176	11 24 113 8	MOTORLAGER KPL
SECHSKANTMUTTER ISO 4032	485546514	50	12	398	11 27 970 6	KABINE KPL
SECHSKANTMUTTER ISO 4032	485546514	7	4	436	11 30 962 5	HALTER KPL
SECHSKANTMUTTER ISO 4032	411551214	2	9	434	97 07 857 03	LIBELLE EINBAU
SECHSKANTMUTTER ISO 4032	411551114	130	2	205	11 92 923 6	ANLAGE HARNSTOFF EINBAU
SECHSKANTMUTTER ISO 4032	411551114	50	9	700	11 89 568 6	SELBSTVERLADESYSTEM NR
SECHSKANTMUTTER ISO 4032	411517114	56	2	398	11 27 970 6	KABINE KPL
SECHSKANTMUTTER ISO 4032	411517114	6	4	435	10 53 756 0	LEUCHTENHALTER KPL
SECHSKANTMUTTER ISO 4032	411517114	32	8	476	11 31 390 8	MITTELTEIL KPL
SECHSKANTMUTTER ISO 4032	411517114	4	4	623	11 22 322 6	MODEM KPL NRS
SECHSKANTMUTTER ISO 4032	411517114	47	10	642	10 55 372 1	DACHGELAENDER NRS
SECHSKANTMUTTER ISO 4032	411517114	23	2	678	11 26 901 8	HALTER KPL

Bezeichnung	Artikel	Pos.	Menge	Blatt	Baugruppe	Bezeichnung
SECHSKANTMUTTER ISO 4032	411515014	83	4	176	11 24 113 8	MOTORLAGER KPL
SECHSKANTMUTTER ISO 4032	411515014	57	7	310	11 24 409 0	VERKLEIDUNG OW EINBAU KP
SECHSKANTMUTTER ISO 4032	411515014	15	26	324	10 54 591 0	MOTORABDECKUNG
SECHSKANTMUTTER ISO 4032	411515014	38	4	398	11 27 970 6	KABINE KPL
SECHSKANTMUTTER ISO 4032	411515014	20	2	617	10 55 753 7	SPITZENENDSCHALTER LI EIN
SECHSKANTMUTTER ISO 4032	411515014	20	2	618	10 55 757 6	SPITZENENDSCHALTER RE E
SECHSKANTMUTTER ISO 4032	411515014	61	2	642	10 55 372 1	DACHGELAENDER NRS
SECHSKANTMUTTER ISO 4032	411515014	15	4	645	11 24 575 5	PODEST
SECHSKANTMUTTER ISO 4032	411515014	15	2	737	10 52 155 4	BETANKUNGSANLAGE NRS
SECHSKANTMUTTER ISO 403	4900125	30	2	105	10 11 835 0	ANSCHLUSSGEHAEUSE
SECHSKANTMUTTER ISO 704	411880614	83	4	198	11 24 114 3	ABGASANLAGE
SECHSKANTMUTTER ISO 867	4980986	20	1	145	10 12 226 2	RS VERSTELLUNG
SECHSKANTMUTTER ISO 8673	4980548	26	8	103	10 11 834 9	DOPPELV.PUMPE
SECHSKANTMUTTER ISO 867	4980793	6	1	89	11 21 990 5	VERSTELLUNG
SECHSKANTMUTTER M10X1 8	10012557	3	2	237	11 44 800 5	KIPPHEBELBOCK VORM.
SECHSKANTMUTTER M6	11290855	470	2	86	11 24 682 0	VERTEILERGETRIEBE
SECHSKANTMUTTER M6 8	10411094	3	1	288	11 38 664 5	STARTER
SECHSKANTRIPPENMUTTER	10003366	3	1	268	90 78 314	HEIZFLANSCH ANBAU
SECHSKANTSCHRAUBE ASM	409878414	64	4	179	10 57 532 2	ANSAUGROHR OEL KPL
SECHSKANTSCHRAUBE ASME	409878214	62	12	179	10 57 532 2	ANSAUGROHR OEL KPL
SECHSKANTSCHRAUBE DIN	10336008	3	3	298	10 14 637 4	VERSCHLUSSTEILE
SECHSKANTSCHRAUBE DIN 6	10219458	7	4	284	10 14 511 2	ABGASSTUTZEN ANBAU
SECHSKANTSCHRAUBE DIN 6	10219458	3	2	286	10 14 584 5	GENERATOR VORM.
SECHSKANTSCHRAUBE DIN	10333464	2	3	258	10 14 679 7	KRAFTSTOFF-FEINFILTERAN
SECHSKANTSCHRAUBE DIN	10112497	17	1	247	10 13 382 3	ABSAUGPUMPE VORM.
SECHSKANTSCHRAUBE DIN	10112497	2	4	271	10 14 286 0	KLIMAKOMPRESSOR ANBAU
SECHSKANTSCHRAUBE DIN 6	10035580	6	1	219	10 14 768 6	AGGREGATETRAEGER ANBA
SECHSKANTSCHRAUBE DIN 6	10114153	5	9	219	10 14 768 6	AGGREGATETRAEGER ANBA
SECHSKANTSCHRAUBE DIN	10489016	4	6	264	10 14 736 6	LUFTANSAUGROHR ANBAU
SECHSKANTSCHRAUBE DIN	10489016	14	3	279	10 14 601 2	WASSERSAMMELLEITUNG K
SECHSKANTSCHRAUBE DIN	11181806	2	2	289	10 14 286 4	TRANSPORTVORRICHTUNG
SECHSKANTSCHRAUBE DIN 6	10018711	2	4	268	90 78 314	HEIZFLANSCH ANBAU
SECHSKANTSCHRAUBE DIN 6	11656240	6	1	265	10 14 736 9	ANSAUGSTUTZEN ANBAU
SECHSKANTSCHRAUBE DIN 6	11004752	2	3	246	10 13 394 7	ABSAUGPUMPE MIT BEFEST.
SECHSKANTSCHRAUBE DIN 6	11833770	3	2	226	10 15 529 8	OELWANNE VORM.
SECHSKANTSCHRAUBE DIN 6	10005713	2	1	245	10 13 394 5	SCHMIEROELPUMPE
SECHSKANTSCHRAUBE DIN 6	10218013	3	18	242	10 12 948 1	OELKUEHLER ANBAU
SECHSKANTSCHRAUBE DIN 6	11066361	3	2	245	10 13 394 5	SCHMIEROELPUMPE
SECHSKANTSCHRAUBE DIN	11237759	9	4	592	79 04 112 14	UNTERFLASCHE
SECHSKANTSCHRAUBE DIN	11490268	9	4	599	79 04 871 14	UNTERFLASCHE
SECHSKANTSCHRAUBE DIN	10005511	9	1	226	10 15 529 8	OELWANNE VORM.
SECHSKANTSCHRAUBE EN 16	10037312	4	8	219	10 14 768 6	AGGREGATETRAEGER ANBA
SECHSKANTSCHRAUBE EN 1	10113710	4	1	286	10 14 584 5	GENERATOR VORM.
SECHSKANTSCHRAUBE EN 16	10030518	2	4	272	10 14 611 7	ABDECKUNG ANBAU
SECHSKANTSCHRAUBE EN 16	10030518	16	1	279	10 14 601 2	WASSERSAMMELLEITUNG K
SECHSKANTSCHRAUBE EN 16	10030518	18	1	285	10 14 622 4	LADEDRUCKREGELUNG
SECHSKANTSCHRAUBE EN 16	10030518	68	2	296	10 15 028 8	KABELBAUM ANBAU
SECHSKANTSCHRAUBE EN 16	10016908	2	3	300	11 41 737 0	LUFTPRESSER
SECHSKANTSCHRAUBE EN 16	406550714	27	84	326	11 24 922 2	ABDECKUNG UNTERSEITE
SECHSKANTSCHRAUBE EN 16	10014638	3	6	264	10 14 736 6	LUFTANSAUGROHR ANBAU
SECHSKANTSCHRAUBE EN 16	10014638	4	2	271	10 14 286 0	KLIMAKOMPRESSOR ANBAU
SECHSKANTSCHRAUBE EN 16	10101657	6	1	271	10 14 286 0	KLIMAKOMPRESSOR ANBAU
SECHSKANTSCHRAUBE EN 16	10101657	3	4	272	10 14 611 7	ABDECKUNG ANBAU
SECHSKANTSCHRAUBE EN 16	4601426	5	2	286	10 14 584 5	GENERATOR VORM.
SECHSKANTSCHRAUBE EN 1	12207546	52	2	296	10 15 028 8	KABELBAUM ANBAU
SECHSKANTSCHRAUBE EN 1	12207547	15	2	285	10 14 622 4	LADEDRUCKREGELUNG
SECHSKANTSCHRAUBE EN 1	407350208	4	1	238	10 13 475 1	ZYLINDERKOPFDECKEL ANBA
SECHSKANTSCHRAUBE EN 1	407350208	6	1	239	10 12 653 5	ZYLINDERKOPFDECKEL ANBA
SECHSKANTSCHRAUBE EN 1	407350208	5	1	241	10 13 469 6	ZYLINDERKOPFDECKEL ANBA
SECHSKANTSCHRAUBE EN 1	407350208	22	1	261	10 14 588 5	LECKOELRUECKLAUF

Bezeichnung	Artikel	Pos.	Menge	Blatt	Baugruppe	Bezeichnung
SECHSKANTSCHRAUBE EN 1	407350208	16	8	285	10 14 622 4	LADEDRUCKREGELUNG
SECHSKANTSCHRAUBE EN 1	407350208	54	5	296	10 15 028 8	KABELBAUM ANBAU
SECHSKANTSCHRAUBE EN 1	10290537	10	1	302	11 41 475 7	ANBAUTEILE LUFTPRESSER
SECHSKANTSCHRAUBE EN 1	10024115	3	4	273	11 44 013 4	ABDECKUNG VORM.
SECHSKANTSCHRAUBE EN 16	10017158	5	1	225	10 14 844 4	OELWANNE MIT BEFEST.
SECHSKANTSCHRAUBE EN 1	10005078	12	3	230	10 14 671 6	OELLEITUNG VORM.
SECHSKANTSCHRAUBE EN 1	10005078	18	1	261	10 14 588 5	LECKOELRUECKLAUF
SECHSKANTSCHRAUBE EN 1	10005078	17	4	285	10 14 622 4	LADEDRUCKREGELUNG
SECHSKANTSCHRAUBE EN 1	10005078	60	3	296	10 15 028 8	KABELBAUM ANBAU
SECHSKANTSCHRAUBE EN 1	10016906	4	2	258	10 14 679 7	KRAFTSTOFF-FEINFILTERAN
SECHSKANTSCHRAUBE EN 1	10016906	15	2	265	10 14 736 9	ANSAUGSTUTZEN ANBAU
SECHSKANTSCHRAUBE EN 1	10016906	3	4	291	10 11 912 8	VERSCHLUSSTEILE
SECHSKANTSCHRAUBE EN 1	10016906	3	1	292	10 12 843 9	VERSCHLUSSTEILE
SECHSKANTSCHRAUBE EN 1	10016906	61	22	296	10 15 028 8	KABELBAUM ANBAU
SECHSKANTSCHRAUBE EN 1	10009007	2	5	274	10 14 273 4	WASSERPUMPE MIT BEFEST.
SECHSKANTSCHRAUBE EN 1	10009007	3	1	278	10 14 274 4	KUEHLWASSERENTLUEFTUN
SECHSKANTSCHRAUBE EN 1	10007782	10	6	223	10 14 201 8	KURBELGEHAEUSEENTLUEF
SECHSKANTSCHRAUBE EN 1	10007782	10	2	260	10 14 333 9	KRAFTSTOFFLEITUNGEN
SECHSKANTSCHRAUBE EN 1	10007782	63	1	296	10 15 028 8	KABELBAUM ANBAU
SECHSKANTSCHRAUBE EN 1	10113711	2	33	225	10 14 844 4	OELWANNE MIT BEFEST.
SECHSKANTSCHRAUBE EN 1	10440788	8	2	267	10 14 967 6	VERBINDUNGSLEITUNG ANBA
SECHSKANTSCHRAUBE EN 1	10016907	11	3	223	10 14 201 8	KURBELGEHAEUSEENTLUEF
SECHSKANTSCHRAUBE EN 1	10005073	4	4	243	10 12 948 0	OELKUEHLER VORM.
SECHSKANTSCHRAUBE EN 1	10100304	4	2	225	10 14 844 4	OELWANNE MIT BEFEST.
SECHSKANTSCHRAUBE EN 1	10100303	3	5	238	10 13 475 1	ZYLINDERKOPFDECKEL ANBA
SECHSKANTSCHRAUBE EN 1	10100303	3	5	239	10 12 653 5	ZYLINDERKOPFDECKEL ANBA
SECHSKANTSCHRAUBE EN 1	10100303	4	5	241	10 13 469 6	ZYLINDERKOPFDECKEL ANBA
SECHSKANTSCHRAUBE ISO	4002195	61	4	177	10 51 948 1	ANSAUGROHR OEL
SECHSKANTSCHRAUBE ISO	4002195	301	2	687	10 51 973 8	SELBSTVERLADESYSTEM H
SECHSKANTSCHRAUBE ISO 4	4062009	61	4	180	10 58 017 0	RUECKLAUFROHR
SECHSKANTSCHRAUBE ISO	10013916	4	1	270	90 72 906	ZWISCHENRAD KPL.
SECHSKANTSCHRAUBE ISO 4	460023503	60	8	8	11 29 618 6	OW HYDR
SECHSKANTSCHRAUBE ISO	10543975	75	8	507	11 23 820 4	ANLENKSTUECK KPL
SECHSKANTSCHRAUBE ISO	10543975	22	4	548	11 28 390 8	AL BEGEHUNG
SECHSKANTSCHRAUBE ISO	10543975	22	4	563	11 28 583 8	AL BEGEHUNG
SECHSKANTSCHRAUBE ISO	10543975	22	4	570	11 28 626 1	AL BEGEHUNG
SECHSKANTSCHRAUBE ISO	10544017	63	2	176	11 24 113 8	MOTORLAGER KPL
SECHSKANTSCHRAUBE ISO	10544028	10	64	463	11 89 365 0	RAUPENTRAEGER RE KPL
SECHSKANTSCHRAUBE ISO	10544028	10	64	474	11 89 365 1	RAUPENTRAEGER LI KPL
SECHSKANTSCHRAUBE ISO 4	406144514	20	6	337	99 29 803 14	VERZURRUNG BALLAST
SECHSKANTSCHRAUBE ISO 4	10538824	51	6	176	11 24 113 8	MOTORLAGER KPL
SECHSKANTSCHRAUBE ISO 4	10538824	61	2	198	11 24 114 3	ABGASANLAGE
SECHSKANTSCHRAUBE ISO 4	10539960	13	1	683	99 35 606 14	LASCHE KPL
SECHSKANTSCHRAUBE ISO 4	10538826	40	4	642	10 55 372 1	DACHGELAENDER NRS
SECHSKANTSCHRAUBE ISO	406527314	64	2	176	11 24 113 8	MOTORLAGER KPL
SECHSKANTSCHRAUBE ISO	406527314	29	8	579	11 28 648 4	MONTAGETEILE
SECHSKANTSCHRAUBE ISO	406527314	11	4	580	11 28 610 5	ARRETIERUNG KPL
SECHSKANTSCHRAUBE ISO	406527414	16	8	45	10 51 961 6	OELKUEHLER EINBAU
SECHSKANTSCHRAUBE ISO	406527414	3	8	69	10 56 069 4	MODULE EINBAU
SECHSKANTSCHRAUBE ISO	406527414	57	16	176	11 24 113 8	MOTORLAGER KPL
SECHSKANTSCHRAUBE ISO	406518714	17	8	45	10 51 961 6	OELKUEHLER EINBAU
SECHSKANTSCHRAUBE ISO	406518714	56	4	65	10 58 163 4	KABINENAUFHAENGUNG KPL
SECHSKANTSCHRAUBE ISO	406518714	16	4	67	10 56 067 3	BATTERIE EINBAU KPL
SECHSKANTSCHRAUBE ISO	406518714	61	2	194	11 92 922 0	ANSAUGANLAGE LUFT
SECHSKANTSCHRAUBE ISO	406518714	62	10	306	11 24 114 6	ABDECKUNG
SECHSKANTSCHRAUBE ISO	406518714	25	14	398	11 27 970 6	KABINE KPL
SECHSKANTSCHRAUBE ISO	406518714	17	2	505	11 23 820 4	ANLENKSTUECK KPL
SECHSKANTSCHRAUBE ISO	406518714	3	3	538	99 14 137 14	UMLENKROLLE KPL
SECHSKANTSCHRAUBE ISO 4	11932241	7	12	190	10 57 423 9	KUEHLER MOTOR
SECHSKANTSCHRAUBE ISO 4	4066093	64	8	180	10 58 017 0	RUECKLAUFROHR

Bezeichnung	Artikel	Pos.	Menge	Blatt	Baugruppe	Bezeichnung
SECHSKANTSCHRAUBE ISO	406511914	60	12	48	10 56 070 1	TANK HYDR KPL
SECHSKANTSCHRAUBE ISO	406511914	60	6	179	10 57 532 2	ANSAUGROHR OEL KPL
SECHSKANTSCHRAUBE ISO	406511914	60	1	181	11 24 113 9	ANBAUTEILE DIESELMOTOR
SECHSKANTSCHRAUBE ISO	406511914	65	16	183	11 94 151 8	KUEHLER EINBAU WASSER
SECHSKANTSCHRAUBE ISO	406511914	63	8	189	11 24 114 1	KUEHLER EINBAU LADELUFT
SECHSKANTSCHRAUBE ISO	406511914	106	2	205	11 92 923 6	ANLAGE HARNSTOFF EINBAU
SECHSKANTSCHRAUBE ISO	406511914	61	40	306	11 24 114 6	ABDECKUNG
SECHSKANTSCHRAUBE ISO	406511914	23	35	308	11 24 409 0	VERKLEIDUNG OW EINBAU KP
SECHSKANTSCHRAUBE ISO	406511914	79	24	330	11 24 483 7	BEF-TEILE OW
SECHSKANTSCHRAUBE ISO	406511914	26	2	353	96 96 543 01	WINDENRAHMEN
SECHSKANTSCHRAUBE ISO	406511914	30	2	505	11 23 820 4	ANLENKSTUECK KPL
SECHSKANTSCHRAUBE ISO	406511914	19	12	627	10 51 743 9	SEILEINZIEHWINDE KPL NRS
SECHSKANTSCHRAUBE ISO	406511914	11	3	732	11 26 771 6	MONTAGETEILE
SECHSKANTSCHRAUBE ISO 4	4066098	67	48	10	11 29 618 6	OW HYDR
SECHSKANTSCHRAUBE ISO 4	4066098	59	12	82	11 24 773 5	AGGREGAT HYDR
SECHSKANTSCHRAUBE ISO 4	4066098	63	12	180	10 58 017 0	RUECKLAUFROHR
SECHSKANTSCHRAUBE ISO	406511614	18	2	45	10 51 961 6	OELKUEHLER EINBAU
SECHSKANTSCHRAUBE ISO	406511614	53	2	176	11 24 113 8	MOTORLAGER KPL
SECHSKANTSCHRAUBE ISO	406511614	66	8	183	11 94 151 8	KUEHLER EINBAU WASSER
SECHSKANTSCHRAUBE ISO	406511614	60	14	198	11 24 114 3	ABGASANLAGE
SECHSKANTSCHRAUBE ISO	406511614	63	6	210	11 92 958 8	LUFTFUEHRUNG KPL
SECHSKANTSCHRAUBE ISO	406511614	60	4	306	11 24 114 6	ABDECKUNG
SECHSKANTSCHRAUBE ISO	406511614	31	28	308	11 24 409 0	VERKLEIDUNG OW EINBAU KP
SECHSKANTSCHRAUBE ISO	406511614	80	46	330	11 24 483 7	BEF-TEILE OW
SECHSKANTSCHRAUBE ISO	406511614	13	16	336	10 52 656 0	MONTAGETEILE
SECHSKANTSCHRAUBE ISO	406511614	93	2	507	11 23 820 4	ANLENKSTUECK KPL
SECHSKANTSCHRAUBE ISO	406511614	26	4	651	10 52 547 1	ZUSATZSCHEINWERFER OW
SECHSKANTSCHRAUBE ISO	406511614	20	4	653	11 22 870 8	SCHEINWERFERHALTER KPL
SECHSKANTSCHRAUBE ISO 4	4001246	55	16	8	11 29 618 6	OW HYDR
SECHSKANTSCHRAUBE ISO 4	4001246	52	4	82	11 24 773 5	AGGREGAT HYDR
SECHSKANTSCHRAUBE ISO 4	4001246	6	16	381	10 55 216 1	VERROHRUNG HYDR
SECHSKANTSCHRAUBE ISO 4	4001246	670	4	525	10 51 959 1	VERROHRUNG HYDR
SECHSKANTSCHRAUBE ISO 4	4001246	616	4	687	10 51 973 8	SELBSTVERLADESYSTEM H
SECHSKANTSCHRAUBE ISO	406509314	67	6	183	11 94 151 8	KUEHLER EINBAU WASSER
SECHSKANTSCHRAUBE ISO	406509314	64	2	189	11 24 114 1	KUEHLER EINBAU LADELUFT
SECHSKANTSCHRAUBE ISO	406509314	64	1	210	11 92 958 8	LUFTFUEHRUNG KPL
SECHSKANTSCHRAUBE ISO	406509314	63	2	306	11 24 114 6	ABDECKUNG
SECHSKANTSCHRAUBE ISO	406509314	17	12	324	10 54 591 0	MOTORABDECKUNG
SECHSKANTSCHRAUBE ISO	406509314	81	23	330	11 24 483 7	BEF-TEILE OW
SECHSKANTSCHRAUBE ISO	406509314	87	16	507	11 23 820 4	ANLENKSTUECK KPL
SECHSKANTSCHRAUBE ISO	406509314	14	2	550	11 28 397 7	AUFFANGWANNE KPL
SECHSKANTSCHRAUBE ISO	406509314	14	2	551	11 28 397 8	AUFFANGWANNE KPL
SECHSKANTSCHRAUBE ISO	406509314	14	4	552	11 28 399 5	AUFFANGWANNE KPL
SECHSKANTSCHRAUBE ISO	406509314	14	4	553	11 28 399 7	AUFFANGWANNE KPL
SECHSKANTSCHRAUBE ISO	406509314	12	4	733	10 52 293 0	DW GEBER NRS
SECHSKANTSCHRAUBE ISO 4	11932240	8	4	190	10 57 423 9	KUEHLER MOTOR
SECHSKANTSCHRAUBE ISO	10539971	11	1	589	99 30 800 14	SPITZENENDSCHALTER EINBA
SECHSKANTSCHRAUBE ISO	10539971	14	1	617	10 55 753 7	SPITZENENDSCHALTER LI EIN
SECHSKANTSCHRAUBE ISO	10539971	14	1	618	10 55 757 6	SPITZENENDSCHALTER RE E
SECHSKANTSCHRAUBE ISO	406527814	65	4	210	11 92 958 8	LUFTFUEHRUNG KPL
SECHSKANTSCHRAUBE ISO	406527814	45	4	310	11 24 409 0	VERKLEIDUNG OW EINBAU KP
SECHSKANTSCHRAUBE ISO	406527814	82	8	330	11 24 483 7	BEF-TEILE OW
SECHSKANTSCHRAUBE ISO	406527814	4	3	538	99 14 137 14	UMLENKROLLE KPL
SECHSKANTSCHRAUBE ISO	406527814	20	4	647	10 52 547 1	ZUSATZSCHEINWERFER OW
SECHSKANTSCHRAUBE ISO	406527814	15	4	667	10 55 601 0	STURZSICHERUNG NRS
SECHSKANTSCHRAUBE ISO	406512014	19	2	45	10 51 961 6	OELKUEHLER EINBAU
SECHSKANTSCHRAUBE ISO	406512014	54	31	310	11 24 409 0	VERKLEIDUNG OW EINBAU KP
SECHSKANTSCHRAUBE ISO	406512014	19	8	324	10 54 591 0	MOTORABDECKUNG
SECHSKANTSCHRAUBE ISO	406512014	83	1	330	11 24 483 7	BEF-TEILE OW
SECHSKANTSCHRAUBE ISO	406512014	14	3	671	11 30 694 4	SCHIENE KPL

Bezeichnung	Artikel	Pos.	Menge	Blatt	Baugruppe	Bezeichnung
SECHSKANTSCHRAUBE ISO	406518614	24	5	308	11 24 409 0	VERKLEIDUNG OW EINBAU KP
SECHSKANTSCHRAUBE ISO	406518614	21	2	324	10 54 591 0	MOTORABDECKUNG
SECHSKANTSCHRAUBE ISO	406518614	47	8	662	99 10 116 14	SEILFUEHRUNG
SECHSKANTSCHRAUBE ISO	10538822	50	8	662	99 10 116 14	SEILFUEHRUNG
SECHSKANTSCHRAUBE ISO	10538822	14	2	732	11 26 771 6	MONTAGETEILE
SECHSKANTSCHRAUBE ISO	10539959	14	8	324	10 54 591 0	MOTORABDECKUNG
SECHSKANTSCHRAUBE ISO	10539959	41	34	642	10 55 372 1	DACHGELAENDER NRS
SECHSKANTSCHRAUBE ISO	10538823	62	4	194	11 92 922 0	ANSAUGANLAGE LUFT
SECHSKANTSCHRAUBE ISO	10538823	9	4	583	11 28 357 6	MONTAGETEILE
SECHSKANTSCHRAUBE ISO	406511214	108	6	205	11 92 923 6	ANLAGE HARNSTOFF EINBAU
SECHSKANTSCHRAUBE ISO	406511214	25	4	651	10 52 547 1	ZUSATZSCHEINWERFER OW
SECHSKANTSCHRAUBE ISO	10539293	17	6	67	10 56 067 3	BATTERIE EINBAU KPL
SECHSKANTSCHRAUBE ISO	10539293	100	1	330	11 24 483 7	BEF-TEILE OW
SECHSKANTSCHRAUBE ISO	10539293	8	2	685	11 23 619 7	SELBSTVERLADESYSTEM NR
SECHSKANTSCHRAUBE ISO	406527914	3	1	56	10 55 268 1	MITNEHMER EINBAU
SECHSKANTSCHRAUBE ISO	406527914	68	4	183	11 94 151 8	KUEHLER EINBAU WASSER
SECHSKANTSCHRAUBE ISO	406527914	14	2	543	10 35 063 3	HALTERUNG
SECHSKANTSCHRAUBE ISO	406527914	38	16	642	10 55 372 1	DACHGELAENDER NRS
SECHSKANTSCHRAUBE ISO	10539294	14	2	667	10 55 601 0	STURZSICHERUNG NRS
SECHSKANTSCHRAUBE ISO	406512114	14	2	542	99 29 588 14	AUFLAGE
SECHSKANTSCHRAUBE ISO 4	10538834	24	8	476	11 31 390 8	MITTELTEIL KPL
SECHSKANTSCHRAUBE ISO	406528014	5	2	435	10 53 756 0	LEUCHTENHALTER KPL
SECHSKANTSCHRAUBE ISO	406517714	21	2	65	10 58 163 4	KABINENAUFHAENGUNG KPL
SECHSKANTSCHRAUBE ISO	406517714	65	2	189	11 24 114 1	KUEHLER EINBAU LADELUFT
SECHSKANTSCHRAUBE ISO	406517714	23	12	337	99 29 803 14	VERZURRUNG BALLAST
SECHSKANTSCHRAUBE ISO	406517714	41	4	613	11 28 744 5	MONTAGETEILE
SECHSKANTSCHRAUBE ISO 4	4980977	46	4	139	10 12 224 5	RS HEBEL
SECHSKANTSCHRAUBE ISO	406517914	56	4	176	11 24 113 8	MOTORLAGER KPL
SECHSKANTSCHRAUBE ISO	406517914	24	7	463	11 89 365 0	RAUPENTRAEGER RE KPL
SECHSKANTSCHRAUBE ISO	406517914	24	7	474	11 89 365 1	RAUPENTRAEGER LI KPL
SECHSKANTSCHRAUBE ISO	406517914	14	8	535	11 24 444 4	A-BOCK 1 KPL
SECHSKANTSCHRAUBE ISO	406517914	28	8	588	99 23 398 14	ROLLENSATZ
SECHSKANTSCHRAUBE ISO 4	4066124	56	12	82	11 24 773 5	AGGREGAT HYDR
SECHSKANTSCHRAUBE ISO	406517314	62	12	48	10 56 070 1	TANK HYDR KPL
SECHSKANTSCHRAUBE ISO	406517314	73	3	330	11 24 483 7	BEF-TEILE OW
SECHSKANTSCHRAUBE ISO	406517314	51	4	353	96 96 543 01	WINDENRAHMEN
SECHSKANTSCHRAUBE ISO	406517314	2	8	366	99 29 258 14	EZW ROLLENPAKET
SECHSKANTSCHRAUBE ISO	406517314	15	2	438	99 18 041 14	VERZURRUNG OW
SECHSKANTSCHRAUBE ISO	406517314	18	152	463	11 89 365 0	RAUPENTRAEGER RE KPL
SECHSKANTSCHRAUBE ISO	406517314	18	152	474	11 89 365 1	RAUPENTRAEGER LI KPL
SECHSKANTSCHRAUBE ISO	406517314	22	16	476	11 31 390 8	MITTELTEIL KPL
SECHSKANTSCHRAUBE ISO	406517314	16	4	493	11 22 050 0	WINDEN EINBAU
SECHSKANTSCHRAUBE ISO	406517314	16	4	499	11 22 050 1	WINDEN EINBAU
SECHSKANTSCHRAUBE ISO	406517314	16	4	505	11 23 820 4	ANLENKSTUECK KPL
SECHSKANTSCHRAUBE ISO	406517314	20	2	659	11 27 109 7	FANGSTANGE NRS
SECHSKANTSCHRAUBE ISO 4	4066122	65	8	10	11 29 618 6	OW HYDR
SECHSKANTSCHRAUBE ISO 4	4066122	65	6	180	10 58 017 0	RUECKLAUFROHR
SECHSKANTSCHRAUBE ISO	406518414	109	1	205	11 92 923 6	ANLAGE HARNSTOFF EINBAU
SECHSKANTSCHRAUBE ISO	406518414	18	4	505	11 23 820 4	ANLENKSTUECK KPL
SECHSKANTSCHRAUBE ISO	406518414	11	2	617	10 55 753 7	SPITZENENDSCHALTER LI EIN
SECHSKANTSCHRAUBE ISO	406518414	11	2	618	10 55 757 6	SPITZENENDSCHALTER RE E
SECHSKANTSCHRAUBE ISO 4	4600366	61	36	10	11 29 618 6	OW HYDR
SECHSKANTSCHRAUBE ISO 4	4600366	640	8	341	10 51 969 8	NADELEINZIEHWINDE HYDR
SECHSKANTSCHRAUBE ISO 4	4600366	7	8	381	10 55 216 1	VERROHRUNG HYDR
SECHSKANTSCHRAUBE ISO	406511414	67	8	176	11 24 113 8	MOTORLAGER KPL
SECHSKANTSCHRAUBE ISO	406511414	60	6	177	10 51 948 1	ANSAUGROHR OEL
SECHSKANTSCHRAUBE ISO	406511414	22	3	357	10 51 968 6	EZW OW EINBAU KPL
SECHSKANTSCHRAUBE ISO	406511414	49	2	505	11 23 820 4	ANLENKSTUECK KPL
SECHSKANTSCHRAUBE ISO 4	4600706	17	4	339	10 51 969 7	NADELEINZIEHWINDE
SECHSKANTSCHRAUBE ISO	406519214	62	4	198	11 24 114 3	ABGASANLAGE

Bezeichnung	Artikel	Pos.	Menge	Blatt	Baugruppe	Bezeichnung
SECHSKANTSCHRAUBE ISO	406512614	66	1	189	11 24 114 1	KUEHLER EINBAU LADELUFT
SECHSKANTSCHRAUBE ISO	406512614	16	4	555	11 94 087 8	MONTAGEEINHEIT
SECHSKANTSCHRAUBE ISO 4	4902260	60	10	180	10 58 017 0	RUECKLAUFROHR
SECHSKANTSCHRAUBE ISO	406527614	35	4	65	10 58 163 4	KABINENAUFHAENGUNG KPL
SECHSKANTSCHRAUBE ISO	406527614	2	4	606	11 30 126 6	MONTAGETEILE
SECHSKANTSCHRAUBE ISO 4	10554335	54	8	8	11 29 618 6	OW HYDR
SECHSKANTSCHRAUBE ISO	406527714	13	2	659	11 27 109 7	FANGSTANGE NRS
SECHSKANTSCHRAUBE ISO	10538830	74	8	330	11 24 483 7	BEF-TEILE OW
SECHSKANTSCHRAUBE ISO	10539311	6	6	358	10 51 968 7	HAUPT EZW HYDR
SECHSKANTSCHRAUBE ISO 4	10539300	62	24	10	11 29 618 6	OW HYDR
SECHSKANTSCHRAUBE ISO 4	10539300	615	2	358	10 51 968 7	HAUPT EZW HYDR
SECHSKANTSCHRAUBE ISO 4	10539300	19	16	442	11 89 300 5	VERROHRUNG HYDR
SECHSKANTSCHRAUBE ISO 4	10539300	750	8	482	11 26 260 6	WINDE 1 HYDR
SECHSKANTSCHRAUBE ISO 4	10539300	750	16	497	11 26 261 1	WINDE 2 HYDR
SECHSKANTSCHRAUBE ISO 4	10539305	17	8	442	11 89 300 5	VERROHRUNG HYDR
SECHSKANTSCHRAUBE ISO 4	10539307	10	4	482	11 26 260 6	WINDE 1 HYDR
SECHSKANTSCHRAUBE ISO 4	10539307	10	4	497	11 26 261 1	WINDE 2 HYDR
SECHSKANTSCHRAUBE ISO	10543914	62	2	176	11 24 113 8	MOTORLAGER KPL
SECHSKANTSCHRAUBE ISO 4	10539314	40	2	613	11 28 744 5	MONTAGETEILE
SECHSKANTSCHRAUBE ISO 4	10539315	62	4	181	11 24 113 9	ANBAUTEILE DIESELMOTOR
SECHSKANTSCHRAUBE ISO 4	10539315	29	2	357	10 51 968 6	EZW OW EINBAU KPL
SECHSKANTSCHRAUBE ISO 4	10539315	35	4	463	11 89 365 0	RAUPENTRAEGER RE KPL
SECHSKANTSCHRAUBE ISO 4	10539315	35	4	474	11 89 365 1	RAUPENTRAEGER LI KPL
SECHSKANTSCHRAUBE ISO 4	10539316	4	4	56	10 55 268 1	MITNEHMER EINBAU
SECHSKANTSCHRAUBE ISO 4	10539316	30	8	700	11 89 568 6	SELBSTVERLADESYSTEM NR
SECHSKANTSCHRAUBE ISO 4	10539317	60	6	52	10 56 073 2	KRAFTSTOFFTANK EINBAU
SECHSKANTSCHRAUBE ISO 4	10539317	59	8	176	11 24 113 8	MOTORLAGER KPL
SECHSKANTSCHRAUBE ISO 4	10539317	103	2	330	11 24 483 7	BEF-TEILE OW
SECHSKANTSCHRAUBE ISO 4	10539317	52	54	463	11 89 365 0	RAUPENTRAEGER RE KPL
SECHSKANTSCHRAUBE ISO 4	10539317	52	54	474	11 89 365 1	RAUPENTRAEGER LI KPL
SECHSKANTSCHRAUBE ISO 4	10539317	31	2	588	99 23 398 14	ROLLENSATZ
SECHSKANTSCHRAUBE ISO 4	10539317	39	4	613	11 28 744 5	MONTAGETEILE
SECHSKANTSCHRAUBE ISO 4	10539318	58	8	176	11 24 113 8	MOTORLAGER KPL
SECHSKANTSCHRAUBE ISO 4	10539318	7	8	353	96 96 543 01	WINDENRAHMEN
SECHSKANTSCHRAUBE ISO 4	10539318	17	28	476	11 31 390 8	MITTELTEIL KPL
SECHSKANTSCHRAUBE ISO 4	10539318	38	2	588	99 23 398 14	ROLLENSATZ
SECHSKANTSCHRAUBE ISO 4	10539318	38	16	613	11 28 744 5	MONTAGETEILE
SECHSKANTSCHRAUBE ISO 4	10543902	60	12	176	11 24 113 8	MOTORLAGER KPL
SECHSKANTSCHRAUBE ISO 4	10543902	31	10	346	93 88 500 01	SEILTROMMEL
SECHSKANTSCHRAUBE ISO 4	10543902	11	4	353	96 96 543 01	WINDENRAHMEN
SECHSKANTSCHRAUBE ISO 4	10543902	15	4	378	10 51 968 2	DW OW
SECHSKANTSCHRAUBE ISO 4	10543902	39	4	588	99 23 398 14	ROLLENSATZ
SECHSKANTSCHRAUBE ISO 4	10543903	62	3	46	10 56 070 0	TANK HYDR EINBAU
SECHSKANTSCHRAUBE ISO 4	10543903	3	28	353	96 96 543 01	WINDENRAHMEN
SECHSKANTSCHRAUBE ISO 4	10543903	13	4	357	10 51 968 6	EZW OW EINBAU KPL
SECHSKANTSCHRAUBE ISO 4	10543904	63	3	46	10 56 070 0	TANK HYDR EINBAU
SECHSKANTSCHRAUBE ISO 4	10543905	61	8	176	11 24 113 8	MOTORLAGER KPL
SECHSKANTSCHRAUBE ISO 4	10543905	28	12	357	10 51 968 6	EZW OW EINBAU KPL
SECHSKANTSCHRAUBE ISO 4	10543907	57	4	82	11 24 773 5	AGGREGAT HYDR
SECHSKANTSCHRAUBE ISO 4	10543910	27	8	463	11 89 365 0	RAUPENTRAEGER RE KPL
SECHSKANTSCHRAUBE ISO 4	10543910	27	8	474	11 89 365 1	RAUPENTRAEGER LI KPL
SECHSKANTSCHRAUBE ISO	10543932	4	4	463	11 89 365 0	RAUPENTRAEGER RE KPL
SECHSKANTSCHRAUBE ISO	10543932	4	4	474	11 89 365 1	RAUPENTRAEGER LI KPL
SECHSKANTSCHRAUBE ISO 4	10543917	4	1	494	10 57 462 9	BOLZEN KPL
SECHSKANTSCHRAUBE ISO 4	10543918	48	2	662	99 10 116 14	SEILFUEHRUNG
SECHSKANTSCHRAUBE ISO 4	10543919	63	2	194	11 92 922 0	ANSAUGANLAGE LUFT
SECHSKANTSCHRAUBE ISO 4	10543919	48	2	535	11 24 444 4	A-BOCK 1 KPL
SECHSKANTSCHRAUBE ISO 4	10543919	51	2	662	99 10 116 14	SEILFUEHRUNG
SECHSKANTSCHRAUBE ISO 4	10543920	14	22	357	10 51 968 6	EZW OW EINBAU KPL
SECHSKANTSCHRAUBE ISO 4	10543920	44	4	463	11 89 365 0	RAUPENTRAEGER RE KPL

Bezeichnung	Artikel	Pos.	Menge	Blatt	Baugruppe	Bezeichnung
SECHSKANTSCHRAUBE ISO 4	10543920	87	2	467	96 93 178 01	FAHRANTRIEB
SECHSKANTSCHRAUBE ISO 4	10543920	41	4	474	11 89 365 1	RAUPENTRAEGER LI KPL
SECHSKANTSCHRAUBE ISO 4	10543921	18	4	476	11 31 390 8	MITTELTEIL KPL
SECHSKANTSCHRAUBE ISO 4	10543921	49	2	535	11 24 444 4	A-BOCK 1 KPL
SECHSKANTSCHRAUBE ISO 4	10543922	58	4	82	11 24 773 5	AGGREGAT HYDR
SECHSKANTSCHRAUBE ISO 4	10543922	25	4	627	10 51 743 9	SEILEINZIEHWINDE KPL NRS
SECHSKANTSCHRAUBE ISO 4	10543924	15	4	493	11 22 050 0	WINDEN EINBAU
SECHSKANTSCHRAUBE ISO 4	10543924	15	4	499	11 22 050 1	WINDEN EINBAU
SECHSKANTSCHRAUBE ISO 4	10543925	68	12	467	96 93 178 01	FAHRANTRIEB
SECHSKANTSCHRAUBE ISO 4	10545854	22	2	463	11 89 365 0	RAUPENTRAEGER RE KPL
SECHSKANTSCHRAUBE ISO 4	10545854	22	2	474	11 89 365 1	RAUPENTRAEGER LI KPL
SECHSKANTSCHRAUBE ISO 4	10545854	47	4	535	11 24 444 4	A-BOCK 1 KPL
SECHSKANTSCHRAUBE ISO 4	10543944	25	12	463	11 89 365 0	RAUPENTRAEGER RE KPL
SECHSKANTSCHRAUBE ISO 4	10543944	25	12	474	11 89 365 1	RAUPENTRAEGER LI KPL
SECHSKANTSCHRAUBE ISO 4	11250998	468	8	86	11 24 682 0	VERTEILERGETRIEBE
SECHSKANTSCHRAUBE ISO 4	485553914	16	3	733	10 52 293 0	DW GEBER NRS
SECHSKANTSCHRAUBE ISO 4	406501814	22	2	67	10 56 067 3	BATTERIE EINBAU KPL
SECHSKANTSCHRAUBE ISO 4	406501814	85	8	507	11 23 820 4	ANLENKSTUECK KPL
SECHSKANTSCHRAUBE ISO 4	10567564	33	3	700	11 89 568 6	SELBSTVERLADESYSTEM NR
SECHSKANTSCHRAUBE ISO 4	485557714	36	3	346	93 88 500 01	SEILTROMMEL
SECHSKANTSCHRAUBE ISO 4	485557714	29	8	398	11 27 970 6	KABINE KPL
SECHSKANTSCHRAUBE ISO 4	485557714	5	2	623	11 22 322 6	MODEM KPL NRS
SECHSKANTSCHRAUBE ISO 4	406501714	100	2	204	11 92 923 6	ANLAGE HARNSTOFF EINBAU
SECHSKANTSCHRAUBE ISO 4	406501714	22	5	398	11 27 970 6	KABINE KPL
SECHSKANTSCHRAUBE ISO 4	406501714	4	8	435	10 53 756 0	LEUCHTENHALTER KPL
SECHSKANTSCHRAUBE ISO 4	406501714	18	3	718	10 58 064 7	VIDEOUEBERWACHUNGSANL
SECHSKANTSCHRAUBE ISO 4	406532614	68	1	330	11 24 483 7	BEF-TEILE OW
SECHSKANTSCHRAUBE ISO 4	406532614	13	3	493	11 22 050 0	WINDEN EINBAU
SECHSKANTSCHRAUBE ISO 4	406532614	13	3	499	11 22 050 1	WINDEN EINBAU
SECHSKANTSCHRAUBE ISO 4	406532614	60	24	505	11 23 820 4	ANLENKSTUECK KPL
SECHSKANTSCHRAUBE ISO 4	406532614	13	18	519	10 58 193 7	GITTERROST KPL
SECHSKANTSCHRAUBE ISO 4	406532614	30	8	535	11 24 444 4	A-BOCK 1 KPL
SECHSKANTSCHRAUBE ISO 4	406532614	24	2	627	10 51 743 9	SEILEINZIEHWINDE KPL NRS
SECHSKANTSCHRAUBE ISO 4	406532614	22	2	669	10 55 280 7	GITTERROST KPL
SECHSKANTSCHRAUBE ISO 4	406532614	20	2	676	10 55 514 8	STURZSICHERUNG NRS
SECHSKANTSCHRAUBE ISO 4	406532614	17	2	678	11 26 901 8	HALTER KPL
SECHSKANTSCHRAUBE ISO 4	406532614	21	3	718	10 58 064 7	VIDEOUEBERWACHUNGSANL
SECHSKANTSCHRAUBE ISO 4	406532614	4	4	733	10 52 293 0	DW GEBER NRS
SECHSKANTSCHRAUBE ISO 4	406518514	63	3	198	11 24 114 3	ABGASANLAGE
SECHSKANTSCHRAUBE ISO 4	406518514	101	10	204	11 92 923 6	ANLAGE HARNSTOFF EINBAU
SECHSKANTSCHRAUBE ISO 4	10538797	2	4	623	11 22 322 6	MODEM KPL NRS
SECHSKANTSCHRAUBE ISO 4	406551114	69	2	330	11 24 483 7	BEF-TEILE OW
SECHSKANTSCHRAUBE ISO 4	10538799	102	4	204	11 92 923 6	ANLAGE HARNSTOFF EINBAU
SECHSKANTSCHRAUBE ISO 4	10538799	16	2	518	11 23 653 3	AUFLAGE KPL
SECHSKANTSCHRAUBE ISO 4	10538799	12	2	625	11 21 552 4	WINKELANZEIGE NRS
SECHSKANTSCHRAUBE ISO 4	10526837	55	1	398	11 27 970 6	KABINE KPL
SECHSKANTSCHRAUBE ISO 4	10526837	13	16	476	11 31 390 8	MITTELTEIL KPL
SECHSKANTSCHRAUBE ISO 4	10526837	24	4	649	10 52 547 1	ZUSATZSCHEINWERFER OW
SECHSKANTSCHRAUBE ISO 4	10538800	60	2	210	11 92 958 8	LUFTFUEHRUNG KPL
SECHSKANTSCHRAUBE ISO 4	10538801	31	8	476	11 31 390 8	MITTELTEIL KPL
SECHSKANTSCHRAUBE ISO	10538796	12	2	677	10 55 722 4	STURZSICHERUNG NRS
SECHSKANTSCHRAUBE ISO 4	10538806	33	2	662	99 10 116 14	SEILFUEHRUNG
SECHSKANTSCHRAUBE ISO	10538812	58	4	505	11 23 820 4	ANLENKSTUECK KPL
SECHSKANTSCHRAUBE ISO 4	406501614	10	4	580	11 28 610 5	ARRETIERUNG KPL
SECHSKANTSCHRAUBE ISO 4	406501514	11	2	63	92 65 477 14	FEUERLOESCHER NRS
SECHSKANTSCHRAUBE ISO 4	406501514	66	6	65	10 58 163 4	KABINENAUFHAENGUNG KPL
SECHSKANTSCHRAUBE ISO 4	406501514	59	6	183	11 94 151 8	KUEHLER EINBAU WASSER
SECHSKANTSCHRAUBE ISO 4	406501514	18	6	378	10 51 968 2	DW OW
SECHSKANTSCHRAUBE ISO 4	406501514	39	14	398	11 27 970 6	KABINE KPL
SECHSKANTSCHRAUBE ISO 4	406501514	3	2	436	11 30 962 5	HALTER KPL

Bezeichnung	Artikel	Pos.	Menge	Blatt	Baugruppe	Bezeichnung
SECHSKANTSCHRAUBE ISO 4	406501514	32	4	700	11 89 568 6	SELBSTVERLADESYSTEM NR
SECHSKANTSCHRAUBE ISO 4	406501514	6	1	719	10 57 848 6	MONITOR KABINE ANBAU
SECHSKANTSCHRAUBE ISO 4	406518814	54	4	176	11 24 113 8	MOTORLAGER KPL
SECHSKANTSCHRAUBE ISO 4	406518814	103	4	205	11 92 923 6	ANLAGE HARNSTOFF EINBAU
SECHSKANTSCHRAUBE ISO 4	406518814	94	8	330	11 24 483 7	BEF-TEILE OW
SECHSKANTSCHRAUBE ISO 4	406518814	23	4	532	11 27 536 5	RUECKFALLSTUETZEN EINBA
SECHSKANTSCHRAUBE ISO 4	406518814	20	6	718	10 58 064 7	VIDEOUEBERWACHUNGSANL
SECHSKANTSCHRAUBE ISO 4	406518814	14	3	733	10 52 293 0	DW GEBER NRS
SECHSKANTSCHRAUBE ISO 4	406501414	65	8	176	11 24 113 8	MOTORLAGER KPL
SECHSKANTSCHRAUBE ISO 4	406501414	60	4	189	11 24 114 1	KUEHLER EINBAU LADELUFT
SECHSKANTSCHRAUBE ISO 4	406501414	60	2	192	11 28 574 7	WP
SECHSKANTSCHRAUBE ISO 4	406501414	60	4	194	11 92 922 0	ANSAUGANLAGE LUFT
SECHSKANTSCHRAUBE ISO 4	406501414	61	4	210	11 92 958 8	LUFTFUEHRUNG KPL
SECHSKANTSCHRAUBE ISO 4	406501414	35	11	308	11 24 409 0	VERKLEIDUNG OW EINBAU KP
SECHSKANTSCHRAUBE ISO 4	406501414	95	2	330	11 24 483 7	BEF-TEILE OW
SECHSKANTSCHRAUBE ISO 4	406501414	15	2	339	10 51 969 7	NADELEINZIEHWINDE
SECHSKANTSCHRAUBE ISO 4	406501414	26	19	398	11 27 970 6	KABINE KPL
SECHSKANTSCHRAUBE ISO 4	406501414	11	6	476	11 31 390 8	MITTELTEIL KPL
SECHSKANTSCHRAUBE ISO 4	406501414	69	9	507	11 23 820 4	ANLENKSTUECK KPL
SECHSKANTSCHRAUBE ISO 4	406501414	25	1	548	11 28 390 8	AL BEGEHUNG
SECHSKANTSCHRAUBE ISO 4	406501414	25	1	563	11 28 583 8	AL BEGEHUNG
SECHSKANTSCHRAUBE ISO 4	406501414	25	1	570	11 28 626 1	AL BEGEHUNG
SECHSKANTSCHRAUBE ISO 4	406501414	22	4	627	10 51 743 9	SEILEINZIEHWINDE KPL NRS
SECHSKANTSCHRAUBE ISO 4	406501414	45	40	642	10 55 372 1	DACHGELAENDER NRS
SECHSKANTSCHRAUBE ISO 4	406501414	33	2	718	10 58 064 7	VIDEOUEBERWACHUNGSANL
SECHSKANTSCHRAUBE ISO	4062002	64	16	10	11 29 618 6	OW HYDR
SECHSKANTSCHRAUBE ISO 4	406501314	12	2	59	11 26 557 2	MONTAGETEILE
SECHSKANTSCHRAUBE ISO 4	406501314	28	2	65	10 58 163 4	KABINENAUFHAENGUNG KPL
SECHSKANTSCHRAUBE ISO 4	406501314	66	2	176	11 24 113 8	MOTORLAGER KPL
SECHSKANTSCHRAUBE ISO 4	406501314	63	8	183	11 94 151 8	KUEHLER EINBAU WASSER
SECHSKANTSCHRAUBE ISO 4	406501314	61	6	189	11 24 114 1	KUEHLER EINBAU LADELUFT
SECHSKANTSCHRAUBE ISO 4	406501314	104	4	205	11 92 923 6	ANLAGE HARNSTOFF EINBAU
SECHSKANTSCHRAUBE ISO 4	406501314	96	10	330	11 24 483 7	BEF-TEILE OW
SECHSKANTSCHRAUBE ISO 4	406501314	20	4	479	99 26 718 14	PODEST
SECHSKANTSCHRAUBE ISO 4	406501314	24	10	505	11 23 820 4	ANLENKSTUECK KPL
SECHSKANTSCHRAUBE ISO 4	406501314	11	2	616	11 29 451 7	SEILSCHUTZ KPL
SECHSKANTSCHRAUBE ISO 4	406501314	21	6	627	10 51 743 9	SEILEINZIEHWINDE KPL NRS
SECHSKANTSCHRAUBE ISO 4	406501314	32	2	662	99 10 116 14	SEILFUEHRUNG
SECHSKANTSCHRAUBE ISO 4	406501314	18	2	667	10 55 601 0	STURZSICHERUNG NRS
SECHSKANTSCHRAUBE ISO 4	406517614	62	4	189	11 24 114 1	KUEHLER EINBAU LADELUFT
SECHSKANTSCHRAUBE ISO 4	406517614	97	2	330	11 24 483 7	BEF-TEILE OW
SECHSKANTSCHRAUBE ISO 4	406517614	99	8	507	11 23 820 4	ANLENKSTUECK KPL
SECHSKANTSCHRAUBE ISO 4	406517614	14	4	669	10 55 280 7	GITTERROST KPL
SECHSKANTSCHRAUBE ISO 4	406517614	13	2	737	10 52 155 4	BETANKUNGSANLAGE NRS
SECHSKANTSCHRAUBE ISO 4	11932242	6	1	190	10 57 423 9	KUEHLER MOTOR
SECHSKANTSCHRAUBE ISO 4	406532914	98	1	330	11 24 483 7	BEF-TEILE OW
SECHSKANTSCHRAUBE ISO 4	406532914	18	2	519	10 58 193 7	GITTERROST KPL
SECHSKANTSCHRAUBE ISO 4	406532914	27	4	579	11 28 648 4	MONTAGETEILE
SECHSKANTSCHRAUBE ISO 4	406532914	61	1	673	11 30 567 0	TRANSPORTSICHERUNG
SECHSKANTSCHRAUBE ISO 4	406508014	84	3	507	11 23 820 4	ANLENKSTUECK KPL
SECHSKANTSCHRAUBE ISO 4	406508014	46	2	642	10 55 372 1	DACHGELAENDER NRS
SECHSKANTSCHRAUBE ISO 4	10538807	36	5	308	11 24 409 0	VERKLEIDUNG OW EINBAU KP
SECHSKANTSCHRAUBE ISO 4	10538807	13	16	479	99 26 718 14	PODEST
SECHSKANTSCHRAUBE ISO 4	10538807	15	17	505	11 23 820 4	ANLENKSTUECK KPL
SECHSKANTSCHRAUBE ISO 4	10538807	24	3	548	11 28 390 8	AL BEGEHUNG
SECHSKANTSCHRAUBE ISO 4	10538807	24	3	563	11 28 583 8	AL BEGEHUNG
SECHSKANTSCHRAUBE ISO 4	10538807	24	3	570	11 28 626 1	AL BEGEHUNG
SECHSKANTSCHRAUBE ISO 4	10538807	11	12	644	11 24 147 8	UW PODEST
SECHSKANTSCHRAUBE ISO 4	10538807	11	16	645	11 24 575 5	PODEST
SECHSKANTSCHRAUBE ISO 4	10331506	39	6	308	11 24 409 0	VERKLEIDUNG OW EINBAU KP

Bezeichnung	Artikel	Pos.	Menge	Blatt	Baugruppe	Bezeichnung
SECHSKANTSCHRAUBE ISO 4	10331506	61	19	507	11 23 820 4	ANLENKSTUECK KPL
SECHSKANTSCHRAUBE ISO 4	10331506	13	8	520	99 34 198 14	SCHILD LIEBHERR
SECHSKANTSCHRAUBE ISO 4	10331507	11	6	324	10 54 591 0	MOTORABDECKUNG
SECHSKANTSCHRAUBE ISO 4	10331507	10	2	372	99 29 386 14	KONSOLE KPL
SECHSKANTSCHRAUBE ISO 4	10331507	10	2	373	99 29 434 14	KONSOLE KPL
SECHSKANTSCHRAUBE ISO 4	10331507	13	2	549	11 28 391 3	BEFESTIGUNGSCHELLE
SECHSKANTSCHRAUBE ISO 4	10331507	17	2	589	99 30 800 14	SPITZENENDSCHALTER EINBA
SECHSKANTSCHRAUBE ISO 4	10331507	13	2	617	10 55 753 7	SPITZENENDSCHALTER LI EIN
SECHSKANTSCHRAUBE ISO 4	10331507	13	2	618	10 55 757 6	SPITZENENDSCHALTER RE E
SECHSKANTSCHRAUBE ISO 4	10331507	18	4	678	11 26 901 8	HALTER KPL
SECHSKANTSCHRAUBE ISO 4	10541592	22	4	685	11 23 619 7	SELBSTVERLADESYSTEM NR
SECHSKANTSCHRAUBE ISO 4	10538809	50	2	176	11 24 113 8	MOTORLAGER KPL
SECHSKANTSCHRAUBE ISO 4	10538809	64	2	183	11 94 151 8	KUEHLER EINBAU WASSER
SECHSKANTSCHRAUBE ISO 4	10538809	60	2	199	11 24 114 4	KRAFTSTOFFANLAGE
SECHSKANTSCHRAUBE ISO 4	10538809	13	2	547	11 28 725 5	SEILSCHUTZ KPL
SECHSKANTSCHRAUBE ISO 4	10538809	13	2	615	11 28 908 0	SEILSCHUTZ KPL
SECHSKANTSCHRAUBE ISO 4	10541593	105	6	205	11 92 923 6	ANLAGE HARNSTOFF EINBAU
SECHSKANTSCHRAUBE ISO 4	10538810	37	2	505	11 23 820 4	ANLENKSTUECK KPL
SECHSKANTSCHRAUBE ISO	407003014	66	3	210	11 92 958 8	LUFTFUEHRUNG KPL
SECHSKANTSCHRAUBE ISO	406154014	30	45	463	11 89 365 0	RAUPENTRAEGER RE KPL
SECHSKANTSCHRAUBE ISO	406154014	30	45	474	11 89 365 1	RAUPENTRAEGER LI KPL
SECHSRUNDSCHRAUBE M10X	10138772	5	24	280	10 14 144 4	ABGASROHR ANBAU
SECHSRUNDSCHRAUBE M16	10118912	4	10	294	10 11 892 9	SCHWUNGRAD ANBAU
SECHSRUNDSCHRAUBE M16	10125439	3	6	235	10 13 176 8	ZYL KOPF ANBAU
SECHSRUNDSCHRAUBE M8X	10127323	9	13	284	10 14 511 2	ABGASSTUTZEN ANBAU
SECHSRUNDSCHRAUBE M8X2	10118695	3	4	282	10 14 737 0	HITZESCHUTZ MIT BEFEST.
SECHSRUNDSCHRAUBE M8X	10125702	9	2	267	10 14 967 6	VERBINDUNGSLEITUNG ANBA
SEIL	773400508	18	0.6	659	11 27 109 7	FANGSTANGE NRS
SEIL	774730714	12	40	354	99 23 387 14	BESEILUNG EZW NADEL AL
SEIL	774762314	11	1	627	10 51 743 9	SEILEINZIEHWINDE KPL NRS
SEIL LI	11227045	10	1	377	11 22 703 7	BESEILUNG EZW HAUPT AL
SEIL LI	790517214	121	1	3	01 38 406 14	LR 1300 SX
SEIL LI	790517214	122	1	3	01 38 406 14	LR 1300 SX
SEIL RE	10227828	10	1	354	99 23 387 14	BESEILUNG EZW NADEL AL
SEILEINZIEHWINDE KPL NRS	10517439	550	1	3	01 38 406 14	LR 1300 SX
SEILEINZUGSWINDE HYDR NR	10542516	2	1	627	10 51 743 9	SEILEINZIEHWINDE KPL NRS
SEILFESTPUNKT	11210606	5	1	599	79 04 871 14	UNTERFLASCHE
SEILFESTPUNKT	11481158	5	1	592	79 04 112 14	UNTERFLASCHE
SEILFUEHRUNG	991011614	605	1	3	01 38 406 14	LR 1300 SX
SEILFUEHRUNG SCHWK	991011714	10	1	662	99 10 116 14	SEILFUEHRUNG
SEILHALTERUNG NRS	11236266	680	2	4	01 38 406 14	LR 1300 SX
SEILKLEMME	540271714	5	1	635	54 02 702 14	SEILTROMMEL KPL
SEILKLEMME	773910114	19	2	659	11 27 109 7	FANGSTANGE NRS
SEILROLLE	10504352	1	1	592	79 04 112 14	UNTERFLASCHE
SEILROLLE	10504352	1	3	599	79 04 871 14	UNTERFLASCHE
SEILROLLE	967217003	1	1	632	96 72 161 03	SEILROLLE KPL
SEILROLLE KPL	790202014	10	10	588	99 23 398 14	ROLLENSATZ
SEILROLLE KPL	790202014	10	3	613	11 28 744 5	MONTAGETEILE
SEILROLLE KPL	914690714	4	12	366	99 29 258 14	EZW ROLLENPAKET
SEILROLLE KPL	914690714	13	13	535	11 24 444 4	A-BOCK 1 KPL
SEILROLLE KPL	914941914	13	4	662	99 10 116 14	SEILFUEHRUNG
SEILROLLE KPL	915523714	12	1	588	99 23 398 14	ROLLENSATZ
SEILROLLE KPL	915523714	12	1	662	99 10 116 14	SEILFUEHRUNG
SEILROLLE KPL	919279914	11	3	588	99 23 398 14	ROLLENSATZ
SEILROLLE KPL	967216103	14	2	627	10 51 743 9	SEILEINZIEHWINDE KPL NRS
SEILSCHEIBE	11271491	1	1	593	10 50 435 2	SEILROLLE
SEILSCHUTZ	11238277	17	1	670	11 29 473 7	LAUFSTEG ZWISCHENSTUEC
SEILSCHUTZ	11238277	18	2	674	11 29 474 2	LAUFSTEG ZWISCHENSTUEC
SEILSCHUTZ	11238277	20	4	675	11 29 474 3	LAUFSTEG ZWISCHENSTUEC
SEILSCHUTZ	11238277	22	2	676	10 55 514 8	STURZSICHERUNG NRS

Bezeichnung	Artikel	Pos.	Menge	Blatt	Baugruppe	Bezeichnung
SEILSCHUTZ	11271479	6	1	599	79 04 871 14	UNTERFLASCHE
SEILSCHUTZ	11481159	6	1	592	79 04 112 14	UNTERFLASCHE
SEILSCHUTZ EZW KPL	992925914	12	1	357	10 51 968 6	EZW OW EINBAU KPL
SEILSCHUTZ EZW KPL	993353714	1	1	367	99 29 259 14	SEILSCHUTZ EZW KPL
SEILSCHUTZ KPL	11287255	12	1	546	11 24 570 3	AL ZWISCHENSTUECK KPL
SEILSCHUTZ KPL	11287255	12	2	562	11 24 570 9	AL ZWISCHENSTUECK KPL
SEILSCHUTZ KPL	11287255	12	4	569	11 24 571 5	AL ZWISCHENSTUECK KPL
SEILSCHUTZ KPL	11289080	13	2	607	99 34 394 14	SPITZEN AL KPL
SEILSCHUTZ KPL	11294517	14	2	607	99 34 394 14	SPITZEN AL KPL
SEILSCHUTZ SCHWK	993522914	20	1	588	99 23 398 14	ROLLENSATZ
SEILSCHUTZROHR	956809314	36	2	588	99 23 398 14	ROLLENSATZ
SEILSCHUTZROHR	956809514	21	1	588	99 23 398 14	ROLLENSATZ
SEILSCHUTZROHR	959841814	25	2	535	11 24 444 4	A-BOCK 1 KPL
SEILSCHUTZSTANGE	10814912	12	2	592	79 04 112 14	UNTERFLASCHE
SEILSCHUTZSTANGE	11271482	12	2	599	79 04 871 14	UNTERFLASCHE
SEILTROMMEL	10555973	2	1	361	10 55 156 3	WINDE
SEILTROMMEL	11231269	2	1	485	10 53 039 8	WINDE
SEILTROMMEL	540273314	1	1	635	54 02 702 14	SEILTROMMEL KPL
SEILTROMMEL	938850001	1	1	345	96 96 248 01	WINDE
SEILTROMMEL KPL	540270214	21	1	633	59 20 694 14	WINDE
SEILZUG	592286314	26	1	419	10 35 007 6	SCHIEBETUER
SEITENBLECH	11271456	2	2	599	79 04 871 14	UNTERFLASCHE
SEITENBLECH	11274624	2	2	592	79 04 112 14	UNTERFLASCHE
SEITENSCHEIBE LI	592288514	43	1	415	10 35 008 0	KABINE
SEITENSCHEIBE RE	592289114	49	1	415	10 35 008 0	KABINE
SEITENSCHEIBE RE	592289214	50	1	415	10 35 008 0	KABINE
SEITENTEIL	992938914	1	1	368	99 33 537 14	SEILSCHUTZ EZW KPL
SEITENTEIL	992939214	2	1	368	99 33 537 14	SEILSCHUTZ EZW KPL
SELBSTVERLADESYSTEM H	10519712	2	1	679	10 51 971 3	SELBSTVERLADESYSTEM NR
SELBSTVERLADESYSTEM H	10519738	2	1	685	11 23 619 7	SELBSTVERLADESYSTEM NR
SELBSTVERLADESYSTEM NR	10519713	642	1	3	01 38 406 14	LR 1300 SX
SELBSTVERLADESYSTEM NR	11236197	644	1	3	01 38 406 14	LR 1300 SX
SELBSTVERLADESYSTEM NR	11242988	647	1	3	01 38 406 14	LR 1300 SX
SELBSTVERLADESYSTEM NR	11895685	10	1	694	11 24 298 8	SELBSTVERLADESYSTEM NR
SELBSTVERLADESYSTEM NR	11895686	10	1	695	11 89 568 5	SELBSTVERLADESYSTEM NR
SELBSTVERLADESYSTEM NR	11895687	11	1	694	11 24 298 8	SELBSTVERLADESYSTEM NR
SELBSTVERLADESYSTEM NR	11895688	10	1	701	11 89 568 7	SELBSTVERLADESYSTEM NR
SENKBREMSVENTIL	10226750	2	2	680	10 51 971 2	SELBSTVERLADESYSTEM H
SENKBREMSVENTIL	11239880	2	1	690	51 16 404 14	SENKBREMSVENTIL
SENKBREMSVENTIL	11239880	2	1	692	59 21 584 14	SENKBREMSVENTIL
SENKBREMSVENTIL	11300790	160	1	704	59 21 826 14	ABSTUETZZYLINDER
SENKBREMSVENTIL	511640414	3	1	687	10 51 973 8	SELBSTVERLADESYSTEM H
SENKBREMSVENTIL	592158414	4	1	687	10 51 973 8	SELBSTVERLADESYSTEM H
SENKSCHRAUBE DIN 7991 M1	4001967	24	2	398	11 27 970 6	KABINE KPL
SENKSCHRAUBE DIN 7991 M1	4001967	31	24	700	11 89 568 6	SELBSTVERLADESYSTEM NR
SENKSCHRAUBE DIN 7991 M1	4600170	7	8	370	99 29 392 14	SEITENTEIL
SENKSCHRAUBE DIN 7991 M1	4600170	20	12	372	99 29 386 14	KONSOLE KPL
SENKSCHRAUBE DIN 7991 M1	4600170	20	12	373	99 29 434 14	KONSOLE KPL
SENKSCHRAUBE DIN 7991 M	407071114	4	4	436	11 30 962 5	HALTER KPL
SENKSCHRAUBE DIN 7991 M6	408606314	33	24	640	10 55 372 1	DACHGELAENDER NRS
SENKSCHRAUBE DIN 7991 M8	4600257	4	7	371	99 29 388 14	BUEGEL KPL
SENKSCHRAUBE DIN 7991 M8	4001205	3	7	371	99 29 388 14	BUEGEL KPL
SENKSCHRAUBE DIN 7991 M	4600157	11	16	372	99 29 386 14	KONSOLE KPL
SENKSCHRAUBE DIN 7991 M	4600157	11	16	373	99 29 434 14	KONSOLE KPL
SENKSCHRAUBE DIN 7991 M8	408606214	37	4	398	11 27 970 6	KABINE KPL
SENKSCHRAUBE DIN 7991 M8	408606214	5	2	719	10 57 848 6	MONITOR KABINE ANBAU
SENKSCHRAUBE DIN 7991 M8	4002551	6	4	369	99 29 389 14	SEITENTEIL
SENKSCHRAUBE DIN 7991 M8	4002551	6	4	370	99 29 392 14	SEITENTEIL
SENKSCHRAUBE DIN 7991 M8	408606414	90	14	330	11 24 483 7	BEF-TEILE OW
SENKSCHRAUBE DIN 7991 M8	408606414	60	1	673	11 30 567 0	TRANSPORTSICHERUNG

Bezeichnung	Artikel	Pos.	Menge	Blatt	Baugruppe	Bezeichnung
SENKSCHRAUBE DIN 7991 M	408601008	16	4	519	10 58 193 7	GITTERROST KPL
SENKSCHRAUBE DIN 7991 M	408601008	13	8	645	11 24 575 5	PODEST
SENKSCHRAUBE ISO 10642	10348867	15	4	670	11 29 473 7	LAUFSTEG ZWISCHENSTUEC
SENKSCHRAUBE ISO 10642	10348867	16	4	674	11 29 474 2	LAUFSTEG ZWISCHENSTUEC
SENKSCHRAUBE ISO 10642	10348867	18	4	675	11 29 474 3	LAUFSTEG ZWISCHENSTUEC
SENKSCHRAUBE ISO 10642	10348867	15	4	676	10 55 514 8	STURZSICHERUNG NRS
SENKSCHRAUBE ISO 10642	408600708	99	2	330	11 24 483 7	BEF-TEILE OW
SENKSCHRAUBE ISO 10642	408600708	6	8	414	11 22 369 1	FUSSPEDAL EL EINBAU
SENKSCHRAUBE ISO 10642	408600708	6	1	723	11 22 037 2	FUSSPEDAL EL EINBAU
SENKSCHRAUBE ISO 10642	10349756	93	6	330	11 24 483 7	BEF-TEILE OW
SENKSCHRAUBE ISO 10642	408600808	91	2	330	11 24 483 7	BEF-TEILE OW
SENKSCHRAUBE ISO 10642	11910892	42	6	310	11 24 409 0	VERKLEIDUNG OW EINBAU KP
SENKSCHRAUBE ISO 10642	4002655	92	10	330	11 24 483 7	BEF-TEILE OW
SENKSCHRAUBE ISO 14581	10342191	4	3	232	10 12 134 5	RS KURBELWELLENDICHTUN
SENKSCHRAUBE ISO 2009 M4	407041214	3	3	434	97 07 857 03	LIBELLE EINBAU
SENKSCHRAUBE ISO 7047 M4	4002871	34	24	398	11 27 970 6	KABINE KPL
SENKSCHRAUBE ISO 7047 M6	4002401	5	4	433	11 26 095 6	STEUERKONSOLE RE KPL
SENSOR	10144038	21	1	204	11 92 923 6	ANLAGE HARNSTOFF EINBAU
SENSOR	11008787	22	2	204	11 92 923 6	ANLAGE HARNSTOFF EINBAU
SICHERHEITSELEMENT	11291030	3	1	196	11 24 679 0	LUFTFILTER
SICHERHEITSHEBEL KPL	693168514	41	1	404	10 51 907 9	STEUERSTAND LI
SICHERHEITSKLAPPSTECKER	10098106	12	2	438	99 18 041 14	VERZURRUNG OW
SICHERHEITSKLAPPSTECKER	10098106	29	1	613	11 28 744 5	MONTAGETEILE
SICHERHEITSKLAPPSTECKER	10098106	45	2	662	99 10 116 14	SEILFUEHRUNG
SICHERHEITSKLAPPSTECKER	485544014	15	2	557	10 53 216 2	HALTESTANGE KPL
SICHERHEITSKLAPPSTECKER	485544014	15	2	565	10 53 216 3	HALTESTANGE KPL
SICHERHEITSKLAPPSTECKER	485544014	15	2	572	10 53 216 4	HALTESTANGE KPL
SICHERHEITSKLAPPSTECKER	485565814	2	2	66	99 08 706 14	LEITER EINBAU
SICHERHEITSKLAPPSTECKER	485565814	12	1	550	11 28 397 7	AUFFANGWANNE KPL
SICHERHEITSKLAPPSTECKER	485565814	12	1	551	11 28 397 8	AUFFANGWANNE KPL
SICHERHEITSKLAPPSTECKER	485565814	19	2	555	11 94 087 8	MONTAGEEINHEIT
SICHERHEITSKLAPPSTECKER	485565814	24	2	582	10 59 863 3	PENDEL KPL
SICHERHEITSKLAPPSTECKER	485565814	43	2	662	99 10 116 14	SEILFUEHRUNG
SICHERHEITSKLAPPSTECKER	485565814	5	1	664	99 10 125 14	GABEL
SICHERHEITSKLAPPSTECKER	432016214	40	1	65	10 58 163 4	KABINENAUFHAENGUNG KPL
SICHERHEITSKLAPPSTECKER	432016214	30	1	613	11 28 744 5	MONTAGETEILE
SICHERUNGSBLECH	11942341	21	2	532	11 27 536 5	RUECKFALLSTUETZEN EINBA
SICHERUNGSBLECH	959912714	17	6	337	99 29 803 14	VERZURRUNG BALLAST
SICHERUNGSEINSATZ	10224306	1	1	35	10 53 048 9	SICHERUNGSHALTER
SICHERUNGSEINSATZ	10224306	21	2	403	99 20 811 14	RESERVESICHERUNGEN
SICHERUNGSEINSATZ	10224307	11	3	35	10 53 048 9	SICHERUNGSHALTER
SICHERUNGSEINSATZ	10224307	22	2	403	99 20 811 14	RESERVESICHERUNGEN
SICHERUNGSFALLE	10350191	1	1	590	79 03 861 14	LASTHAKEN
SICHERUNGSFALLE	10350196	2	1	597	11 48 116 2	EINFACHHAKEN
SICHERUNGSFALLE	10599212	2	2	603	11 27 148 9	DOPPELHAKEN
SICHERUNGSFEDER 3MM	11297461	3	1	712	11 23 623 3	TASCHENSCHLOSS
SICHERUNGSFEDER 4.5 MM	433105414	12	4	336	10 52 656 0	MONTAGETEILE
SICHERUNGSFEDER 4.5 MM	433105414	12	2	627	10 51 743 9	SEILEINZIEHWINDE KPL NRS
SICHERUNGSFEDER 4.5 MM	433105414	11	1	655	11 21 546 2	HELILAMPE EINBAU NRS
SICHERUNGSFEDER 4MM	433101208	53	2	579	11 28 648 4	MONTAGETEILE
SICHERUNGSFEDER 4MM	433101208	34	8	588	99 23 398 14	ROLLENSATZ
SICHERUNGSFEDER 4MM	433101208	4	2	621	97 08 757 03	RUECKFALLSTUETZEN
SICHERUNGSFEDER 4MM	433101208	6	8	663	99 31 838 14	ZWISCHENABSPANNUNG NR
SICHERUNGSFEDER 4MM	433101208	7	14	665	97 05 997 03	ZWISCHENABSPANNUNG NR
SICHERUNGSFEDER 4MM	433101208	22	4	667	10 55 601 0	STURZSICHERUNG NRS
SICHERUNGSFEDER 4MM	433101208	13	4	676	10 55 514 8	STURZSICHERUNG NRS
SICHERUNGSFEDER 4MM	433101208	20	4	706	11 89 568 8	SELBSTVERLADESYSTEM NR
SICHERUNGSFEDER 5MM	433102508	56	2	505	11 23 820 4	ANLENKSTUECK KPL
SICHERUNGSFEDER 5MM	433102508	18	2	555	11 94 087 8	MONTAGEEINHEIT
SICHERUNGSFEDER 5MM	433102508	27	2	613	11 28 744 5	MONTAGETEILE

Bezeichnung	Artikel	Pos.	Menge	Blatt	Baugruppe	Bezeichnung
SICHERUNGSFEDER 5MM	433102508	29	8	679	10 51 971 3	SELBSTVERLADESYSTEM NR
SICHERUNGSFEDER DIN 2194	433105008	19	6	337	99 29 803 14	VERZURRUNG BALLAST
SICHERUNGSFEDER DIN 2194	433105008	13	2	505	11 23 820 4	ANLENKSTUECK KPL
SICHERUNGSFEDER DIN 2194	433105008	12	2	517	11 28 726 4	BOLZEN KPL
SICHERUNGSFEDER DIN 2194	433105008	21	2	539	99 23 394 14	HALTESTANGE KPL
SICHERUNGSFEDER DIN 2194	433105008	15	2	556	10 54 054 8	HALTESTANGE KPL
SICHERUNGSFEDER DIN 2194	433105008	15	2	564	10 54 055 1	HALTESTANGE KPL
SICHERUNGSFEDER DIN 2194	433105008	15	2	571	10 54 055 5	HALTESTANGE KPL
SICHERUNGSFEDER DIN 2194	433105008	54	2	579	11 28 648 4	MONTAGETEILE
SICHERUNGSFEDER DIN 2194	433105008	15	2	586	10 54 056 7	HALTESTANGE KPL
SICHERUNGSFEDER DIN 2194	433105008	17	2	614	95 70 956 14	HALTESTANGE KPL
SICHERUNGSFEDER DIN 2194	433105008	31	10	620	99 23 415 14	RUECKHALTESTANGE
SICHERUNGSFEDER DIN 2194	433105008	44	2	662	99 10 116 14	SEILFUEHRUNG
SICHERUNGSFEDER DIN 2194	433105008	11	1	685	11 23 619 7	SELBSTVERLADESYSTEM NR
SICHERUNGSHALTER	10530489	34	1	33	11 24 519 0	OW EL
SICHERUNGSKETTE	592291614	2	1	425	59 22 914 14	PODESTSICHERUNG KPL
SICHERUNGSMUTTER DIN 98	11219056	6	2	201	10 55 091 1	KRAFTSTOFFVORFILTER AN
SICHERUNGSPRUEFER	10227556	2	1	403	99 20 811 14	RESERVESICHERUNGEN
SICHERUNGSRING	10216718	7	1	387	11 94 017 7	TRIEBWELLE
SICHERUNGSRING	10573893	3	2	593	10 50 435 2	SEILROLLE
SICHERUNGSRING	10598700	9	1	447	51 24 059 14	V.MOTOR
SICHERUNGSRING	11214714	7	1	448	10 50 351 3	TRIEBWERK
SICHERUNGSRING 10	10447016	7	6	538	99 14 137 14	UMLENKROLLE KPL
SICHERUNGSRING 10	10447016	23	12	627	10 51 743 9	SEILEINZIEHWINDE KPL NRS
SICHERUNGSRING 4	10507964	56	12	39	10 56 645 8	KLEMMKASTEN
SICHERUNGSRING 8	10447017	10	4	411	91 65 251 14	KABELDURCHFUEHRUNG KAB
SICHERUNGSRING 8	10447017	12	2	616	11 29 451 7	SEILSCHUTZ KPL
SICHERUNGSRING 8	10447017	20	10	627	10 51 743 9	SEILEINZIEHWINDE KPL NRS
SICHERUNGSRING 8 A2	10558857	39	2	505	11 23 820 4	ANLENKSTUECK KPL
SICHERUNGSRING 8 A2	10558857	12	2	547	11 28 725 5	SEILSCHUTZ KPL
SICHERUNGSRING 8 A2	10558857	12	2	615	11 28 908 0	SEILSCHUTZ KPL
SICHERUNGSRING AEHNL.DI	10220937	25	1	156	11 22 127 4	PUMPENELEMENT
SICHERUNGSRING DIN 471	10171594	29	3	467	96 93 178 01	FAHRANTRIEB
SICHERUNGSRING DIN 471	10424724	2	1	388	10 65 027 0	VERSCHLUSSRING
SICHERUNGSRING DIN 471 1	428011901	19	5	467	96 93 178 01	FAHRANTRIEB
SICHERUNGSRING DIN 471 1	4280008	31	4	105	10 11 835 0	ANSCHLUSSGEHAEUSE
SICHERUNGSRING DIN 471 14	11293196	8	1	453	10 44 510 2	SCHNELLVERSCHLUSSKUPPL
SICHERUNGSRING DIN 471 1	428001014	45	1	636	54 02 703 14	FLANSCH KPL
SICHERUNGSRING DIN 471 2	428001414	6	1	537	91 90 584 14	WINKELANZEIGE
SICHERUNGSRING DIN 471 2	4280020	3	3	515	61 61 541 14	KABELTROMMEL
SICHERUNGSRING DIN 471 2		43	3	348	93 88 497 01	PLANETENGETRIEBE
SICHERUNGSRING DIN 471 2	4630001	56	3	392	90 01 376 2	DREHWERKANTRIEB
SICHERUNGSRING DIN 471 3	428011301	7	2	237	11 44 800 5	KIPPHEBELBOCK VORM.
SICHERUNGSRING DIN 471 3	428002914	13	1	638	54 02 705 14	ANTRIEB KPL
SICHERUNGSRING DIN 471 4		33	3	348	93 88 497 01	PLANETENGETRIEBE
SICHERUNGSRING DIN 471 4	400208003	41	3	392	90 01 376 2	DREHWERKANTRIEB
SICHERUNGSRING DIN 471 45	10171583	49	3	467	96 93 178 01	FAHRANTRIEB
SICHERUNGSRING DIN 471 45	4280032	41	2	136	10 13 802 7	RS WELLE
SICHERUNGSRING DIN 471 4	4000870	21	5	392	90 01 376 2	DREHWERKANTRIEB
SICHERUNGSRING DIN 471 5	10171585	72	1	392	90 01 376 2	DREHWERKANTRIEB
SICHERUNGSRING DIN 471 5	4280034	41	1	123	98 84 402	RS WELLE
SICHERUNGSRING DIN 471 5	428004514	30	1	637	54 02 704 14	ABTRIEB KPL
SICHERUNGSRING DIN 471 5		8	5	348	93 88 497 01	PLANETENGETRIEBE
SICHERUNGSRING DIN 471 5	400093303	39	3	467	96 93 178 01	FAHRANTRIEB
SICHERUNGSRING DIN 471 A	10530197	360	8	86	11 24 682 0	VERTEILERGETRIEBE
SICHERUNGSRING DIN 471 A	485529714	370	2	86	11 24 682 0	VERTEILERGETRIEBE
SICHERUNGSRING DIN 472 10	428104201	7	1	470	94 44 065 03	PLANETENRAD
SICHERUNGSRING DIN 472 11	10171636	73	1	467	96 93 178 01	FAHRANTRIEB
SICHERUNGSRING DIN 472 13	10171639	7	1	469	94 44 048 03	PLANETENRAD
SICHERUNGSRING DIN 472 2	428107714	21	1	638	54 02 705 14	ANTRIEB KPL

Bezeichnung	Artikel	Pos.	Menge	Blatt	Baugruppe	Bezeichnung
SICHERUNGSRING DIN 472 3	428100914	46	1	636	54 02 703 14	FLANSCH KPL
SICHERUNGSRING DIN 472 46	428107101	76	1	467	96 93 178 01	FAHRANTRIEB
SICHERUNGSRING DIN 472 6	4281037	14	1	638	54 02 705 14	ANTRIEB KPL
SICHERUNGSRING DIN 472 8	4281013	4	1	636	54 02 703 14	FLANSCH KPL
SICHERUNGSRING DIN 472 8		4	1	348	93 88 497 01	PLANETENGETRIEBE
SICHERUNGSRING DIN 472 9	10171632	67	1	392	90 01 376 2	DREHWERKANTRIEB
SICHERUNGSRING DIN 472 9	10171632	7	1	468	94 44 043 03	PLANETENRAD
SICHERUNGSRING DIN 472 9	4281016	31	1	637	54 02 704 14	ABTRIEB KPL
SICHERUNGSRING DIN 472 9	4281017	40	1	136	10 13 802 7	RS WELLE
SICHERUNGSRING DIN 472 9	4281017	40	1	144	10 13 803 2	RS VERSCHLUSSRING
SICHERUNGSRING DIN 472 J5	11268816	380	2	86	11 24 682 0	VERTEILERGETRIEBE
SICHERUNGSRING DIN 984 3	10008092	25	1	165	11 21 593 6	PUMPENELEMENT
SICHERUNGSSCHEIBE 10.5/16		53	12	348	93 88 497 01	PLANETENGETRIEBE
SICHERUNGSSCHEIBE 10.5/16	4229913	27	2	353	96 96 543 01	WINDENRAHMEN
SICHERUNGSSCHEIBE 10.5/16	4229913	75	12	392	90 01 376 2	DREHWERKANTRIEB
SICHERUNGSSCHEIBE 12X13	4900093	52	4	353	96 96 543 01	WINDENRAHMEN
SICHERUNGSSCHEIBE 12X13	4900093	27	8	392	90 01 376 2	DREHWERKANTRIEB
SICHERUNGSSCHEIBE 16X17X	423911601	32	10	346	93 88 500 01	SEILTROMMEL
SICHERUNGSSCHEIBE 16X17X	423911601	8	8	353	96 96 543 01	WINDENRAHMEN
SICHERUNGSSCHEIBE 17X24X	4239009	24	8	103	10 11 834 9	DOPPELV.PUMPE
SICHERUNGSSCHEIBE 20X21X	423912001	69	12	467	96 93 178 01	FAHRANTRIEB
SIEB	11239595	3	1	207	11 24 240 8	HARNSTOFFBEHAELTER
SIEBFILTER	11368896	6	1	208	10 14 653 8	ENTNAHMEMODUL
SIGNALLEUCHTE	10524927	100	1	400	11 27 973 6	KABINE EL
SIGNALLEUCHTE	10524927	37	2	536	10 53 120 7	A-BOCK EL
SITZ	11226118	130	1	383	51 14 347 14	DW SICHERUNGSBLOCK
SITZRAHMEN	7024996	15	1	430	10 22 506 8	FAHRERSITZ
SITZTEIL KPL	7024981	12	1	430	10 22 506 8	FAHRERSITZ
SITZWANNE	10165637	65	1	430	10 22 506 8	FAHRERSITZ
SOCKELGEHAEUSE	605604914	93	1	34	11 24 519 0	OW EL
SOCKELGEHAEUSE	693157014	80	2	575	10 57 559 9	KABELSATZ
SOCKELGEHAEUSE	693157014	80	2	609	10 57 651 9	KABELSATZ
SOCKELGEHAEUSE	693157114	61	1	512	11 90 151 1	KABELSATZ 1 ANLENKSTUECK
SOCKELGEHAEUSE	693157114	50	1	609	10 57 651 9	KABELSATZ
SOCKELGEHAEUSE	693157214	71	1	513	11 90 151 1	KABELSATZ 1 ANLENKSTUECK
SOFTWARE	10524422	401	1	3	01 38 406 14	LR 1300 SX
SONDERVERSCHRAUBUNG	10446305	28	1	82	11 24 773 5	AGGREGAT HYDR
SONDERVERSCHRAUBUNG	289031614	13	1	482	11 26 260 6	WINDE 1 HYDR
SONDERVERSCHRAUBUNG	289031614	13	1	497	11 26 261 1	WINDE 2 HYDR
SONNENBLENDE	592290714	6	1	424	59 22 905 14	SPIEGEL + SONNENBLENDE
SONNENRAD		25	1	348	93 88 497 01	PLANETENGETRIEBE
SONNENRAD		35	1	348	93 88 497 01	PLANETENGETRIEBE
SONNENRAD		45	1	348	93 88 497 01	PLANETENGETRIEBE
SONNENRAD	540270714	13	1	634	54 02 701 14	PLANETENSTUFE
SONNENRAD	540270914	23	1	634	54 02 701 14	PLANETENSTUFE
SONNENRAD	927562901	30	1	392	90 01 376 2	DREHWERKANTRIEB
SONNENRAD	927597301	45	1	392	90 01 376 2	DREHWERKANTRIEB
SONNENRAD	927651701	60	1	392	90 01 376 2	DREHWERKANTRIEB
SONNENRAD	944378403	40	1	467	96 93 178 01	FAHRANTRIEB
SONNENRAD	944404503	20	1	467	96 93 178 01	FAHRANTRIEB
SONNENRAD	944405203	30	1	467	96 93 178 01	FAHRANTRIEB
SONNENROLLO	592291214	102	1	416	10 35 008 0	KABINE
SPANNER HYDR KPL	10557163	2	1	464	10 55 716 1	LEITRADEINHEIT KPL
SPANNSCHELLE	10122841	2	1	277	10 14 274 2	KUEHLMITTELKRUEMMER AN
SPANNSCHELLE	10124798	5	2	267	10 14 967 6	VERBINDUNGSLEITUNG ANBA
SPANNSCHELLE	10127984	30	9	189	11 24 114 1	KUEHLER EINBAU LADELUFT
SPANNSCHELLE	10127984	2	1	266	10 14 736 4	LUFTANSAUGUNG ANBAU
SPANNSCHELLE	10132073	10	4	281	10 14 144 3	ABGASROHR VORM.
SPANNSCHELLE	10138820	3	1	275	10 14 821 5	THERMOSTATGEHAEUSE AN
SPANNSCHELLE	10138820	4	1	284	10 14 511 2	ABGASSTUTZEN ANBAU

Bezeichnung	Artikel	Pos.	Menge	Blatt	Baugruppe	Bezeichnung
SPANNSCHLOSS		10	-1	720	10 51 728 0	KABINENNEIGUNG NRS
SPANNSCHLOSS	790306414	64	1	65	10 58 163 4	KABINENAUFHAENGUNG KPL
SPANNSTIFT DIN 1481 5X16 S	11226135	170	1	383	51 14 347 14	DW SICHERUNGSBLOCK
SPANNSTIFT ISO 13337 8X10 S	4980638	44	2	139	10 12 224 5	RS HEBEL
SPANNSTIFT ISO 8752 2X6 ST	11001743	6	1	255	10 13 508 0	DRUCKROHRSTUTZEN
SPANNSTIFT ISO 8752 5X12 S		59	2	348	93 88 497 01	PLANETENGETRIEBE
SPANNSTIFT ISO 8752 5X16	432003714	101	2	507	11 23 820 4	ANLENKSTUECK KPL
SPANNSTIFT ISO 8752 8X16 S		72	1	348	93 88 497 01	PLANETENGETRIEBE
SPANNSTIFT ISO 8752 8X16 S	432008001	78	1	467	96 93 178 01	FAHRANTRIEB
SPANNUNGSWANDLER	693183914	91	1	402	10 55 963 5	SCHALTSCHR X1
SPANNVORRICHTUNG	10153373	5	1	271	10 14 286 0	KLIMAKOMPRESSOR ANBAU
SPERRVENTIL	11226088	100	2	383	51 14 347 14	DW SICHERUNGSBLOCK
SPIEGEL	592290814	8	1	424	59 22 905 14	SPIEGEL + SONNENBLENDE
SPIEGEL + SONNENBLENDE	592290514	85	1	416	10 35 008 0	KABINE
SPIRALBACKRING	540273214	20	1	638	54 02 705 14	ANTRIEB KPL
SPIRALFEDER TUERBAND	10509153	32	4	640	10 55 372 1	DACHGELAENDER NRS
SPIRALSPANNSTIFT DIN 7344	11306379	6	1	712	11 23 623 3	TASCHENSCHLOSS
SPITZE	10574725	11	1	659	11 27 109 7	FANGSTANGE NRS
SPITZEN AL KPL	993439414	11	1	604	99 34 387 14	NADELANBAUTEILE
SPITZEN AL SCHWK	990929514	10	1	607	99 34 394 14	SPITZEN AL KPL
SPITZENENDSCHALTER EINBA	993080014	15	2	588	99 23 398 14	ROLLENSATZ
SPITZENENDSCHALTER LI EIN	10557537	16	1	607	99 34 394 14	SPITZEN AL KPL
SPITZENENDSCHALTER RE E	10557576	17	1	607	99 34 394 14	SPITZEN AL KPL
SPLINT ISO 1234 10X63 A4	433014214	21	2	535	11 24 444 4	A-BOCK 1 KPL
SPLINT ISO 1234 10X80 A4	433010314	20	2	71	10 51 969 4	A-BOCK AUFRICHTZYL EINBA
SPLINT ISO 1234 10X80 A4	433010314	48	2	505	11 23 820 4	ANLENKSTUECK KPL
SPLINT ISO 1234 10X80 A4	433010314	50	2	579	11 28 648 4	MONTAGETEILE
SPLINT ISO 1234 10X80 A4	433010314	18	8	614	95 70 956 14	HALTESTANGE KPL
SPLINT ISO 1234 10X80 A4	433010314	25	4	679	10 51 971 3	SELBSTVERLADESYSTEM NR
SPLINT ISO 1234 10X80 A4	433010314	21	1	685	11 23 619 7	SELBSTVERLADESYSTEM NR
SPLINT ISO 1234 10X90 A4	433010514	14	2	557	10 53 216 2	HALTESTANGE KPL
SPLINT ISO 1234 10X90 A4	433010514	14	2	565	10 53 216 3	HALTESTANGE KPL
SPLINT ISO 1234 10X90 A4	433010514	14	2	572	10 53 216 4	HALTESTANGE KPL
SPLINT ISO 1234 10X90 A4	433010514	29	4	620	99 23 415 14	RUECKHALTESTANGE
SPLINT ISO 1234 13X100 A4	433010914	30	2	620	99 23 415 14	RUECKHALTESTANGE
SPLINT ISO 1234 13X112 A4	433011114	21	2	679	10 51 971 3	SELBSTVERLADESYSTEM NR
SPLINT ISO 1234 5X32	433006314	4	2	471	10 50 179 5	AUFSTIEG KPL
SPLINT ISO 1234 5X32	433006314	7	2	583	11 28 357 6	MONTAGETEILE
SPLINT ISO 1234 5X45	433006614	4	4	70	99 23 451 14	ANLENKBOLZEN EINBAU
SPLINT ISO 1234 5X50	433006714	12	8	339	10 51 969 7	NADELEINZIEHWINDE
SPLINT ISO 1234 6.3X32 ST	433007508	31	4	65	10 58 163 4	KABINENAUFHAENGUNG KPL
SPLINT ISO 1234 6.3X45	433007708	25	4	65	10 58 163 4	KABINENAUFHAENGUNG KPL
SPLINT ISO 1234 6.3X56 A4	433007914	33	2	613	11 28 744 5	MONTAGETEILE
SPLINT ISO 1234 6.3X56 A4	433007914	7	4	663	99 31 838 14	ZWISCHENABSPANNUNG NR
SPLINT ISO 1234 6.3X63	433008108	26	4	535	11 24 444 4	A-BOCK 1 KPL
SPLINT ISO 1234 6.3X63	433008108	33	2	588	99 23 398 14	ROLLENSATZ
SPLINT ISO 1234 6.3X63	433008108	32	1	613	11 28 744 5	MONTAGETEILE
SPLINT ISO 1234 6.3X71 A4	433008214	16	4	71	10 51 969 4	A-BOCK AUFRICHTZYL EINBA
SPLINT ISO 1234 8X100 A4	433009514	15	6	539	99 23 394 14	HALTESTANGE KPL
SPLINT ISO 1234 8X100 A4	433009514	14	2	556	10 54 054 8	HALTESTANGE KPL
SPLINT ISO 1234 8X100 A4	433009514	14	2	564	10 54 055 1	HALTESTANGE KPL
SPLINT ISO 1234 8X100 A4	433009514	14	2	571	10 54 055 5	HALTESTANGE KPL
SPLINT ISO 1234 8X100 A4	433009514	14	6	586	10 54 056 7	HALTESTANGE KPL
SPLINT ISO 1234 8X50 A4	433008814	48	2	579	11 28 648 4	MONTAGETEILE
SPLINT ISO 1234 8X56 A4	433009014	31	4	176	11 24 113 8	MOTORLAGER KPL
SPLINT ISO 1234 8X56 A4	433009014	30	2	662	99 10 116 14	SEILFUEHRUNG
SPLINT ISO 1234 8X63 A4	433009114	15	2	65	10 58 163 4	KABINENAUFHAENGUNG KPL
SPLINT ISO 1234 8X63 A4	433009114	49	2	579	11 28 648 4	MONTAGETEILE
SPLINT ISO 1234 8X80 A4	433009414	28	3	620	99 23 415 14	RUECKHALTESTANGE
SPLINT ISO 1234 8X90	433009714	33	4	679	10 51 971 3	SELBSTVERLADESYSTEM NR

Bezeichnung	Artikel	Pos.	Menge	Blatt	Baugruppe	Bezeichnung
SPRENGRING 5 X 135	10352383	180	2	705	59 21 826 14	ABSTUETZZYLINDER
SPRENGRING 52X2 FST	4980482	7	2	234	10 14 636 7	KOLBEN KPL.
SPRENGRING 5X175	10352382	175	1	704	59 21 826 14	ABSTUETZZYLINDER
SPRENGRING 6 X 172	10352384	185	1	705	59 21 826 14	ABSTUETZZYLINDER
SPRENGRING AV45X1.75		62	1	348	93 88 497 01	PLANETENGETRIEBE
STAHLDICHTRING	7023847	905	14	384	51 22 991 14	OELMOTOR
STAHLDICHTRING	7024277	115	14	630	51 02 322 14	OELMOTOR
STAHLDRAHTSEIL	773400308	73	0.25	34	11 24 519 0	OW EL
STAHLDRAHTSEIL	773400308	12	0.62	540	11 25 204 2	AUFLAGE KPL
STAHLDRAHTSEIL	773400308	25	0.9	582	10 59 863 3	PENDEL KPL
STAHLDRAHTSEIL	773400314	22	2	662	99 10 116 14	SEILFUEHRUNG
STAHLKUGEL	11226127	140	1	383	51 14 347 14	DW SICHERUNGSBLOCK
STANGE	919421714	8	2	663	99 31 838 14	ZWISCHENABSPANNUNG NR
STANGE KPL	11273458	212	2	400	11 27 973 6	KABINE EL
STANGENAUGE	11918996	90	1	74	59 21 041 14	DOPPELWIRKZYL
STANGENDICHTSATZ	11267400	10	2	94	11 21 993 0	PUMPENGEHAEUSE
STANGENFUEHRUNGSRING	513319814	17	1	456	51 33 141 14	DOPPELWIRKZYL
STARTER	11386645	1	1	287	10 12 037 2	STARTER ANBAU
STARTER ANBAU	10120372	450	1	215	12 42 545 4	DIESELMOTOR
STAUBKAPPE	605013508	53	1	512	11 90 151 1	KABELSATZ 1 ANLENKSTUECK
STAUBKAPPE	605013508	51	2	536	10 53 120 7	A-BOCK EL
STAUBKAPPE	6203401	93	2	576	10 57 559 9	KABELSATZ
STAUBMUFFE	7615441	1	1	29	51 05 719 14	SCHNELLVERSCHRAUBUNG
STECKDOSE	10520078	131	1	34	11 24 519 0	OW EL
STECKDOSE	6205239	13	1	172	11 24 448 7	ZENTRALAGGREGAT EL
STECKER	10336440	92	2	576	10 57 559 9	KABELSATZ
STECKER	10447747	2	4	455	10 55 154 8	SCHNELLVERSCHLUSSKUPPL
STECKER	10447747	2	6	510	10 55 157 6	SCHNELLVERSCHLUSSKUPPL
STECKER	11247913	1	4	457	10 55 119 1	DECKEL KPL
STECKER	605013408	52	1	512	11 90 151 1	KABELSATZ 1 ANLENKSTUECK
STECKER	605253314	201	11	402	10 55 963 5	SCHALTSCHR X1
STECKER	605253414	211	1	402	10 55 963 5	SCHALTSCHR X1
STECKER	605254114	213	1	402	10 55 963 5	SCHALTSCHR X1
STECKER	605254214	203	11	402	10 55 963 5	SCHALTSCHR X1
STECKER	605264814	51	3	399	11 27 973 6	KABINE EL
STECKER	693013014	11	1	739	10 52 957 6	BETANKUNGSPUMPE KPL
STECKER	950490414	11	1	550	11 28 397 7	AUFFANGWANNE KPL
STECKER	950490414	11	1	551	11 28 397 8	AUFFANGWANNE KPL
STECKER	971230303	60	10	642	10 55 372 1	DACHGELAENDER NRS
STECKER	993352014	53	8	642	10 55 372 1	DACHGELAENDER NRS
STECKEREINSATZ	605616014	36	2	657	99 24 978 14	AL EL
STECKHUELSE	602209314	80	42	39	10 56 645 8	KLEMMKASTEN
STECKHUELSE	602209314	25	2	611	10 57 652 3	KLEMMDOSE
STECKHUELSE	602303214	73	1	39	10 56 645 8	KLEMMKASTEN
STECKHUELSENGEHAEUSE	602209714	93	1	402	10 55 963 5	SCHALTSCHR X1
STECKKARTE PLATINE 1	917585714	51	1	402	10 55 963 5	SCHALTSCHR X1
STECKKUPPLUNG	10678754	37	2	204	11 92 923 6	ANLAGE HARNSTOFF EINBAU
STECKKUPPLUNG	11082454	36	2	204	11 92 923 6	ANLAGE HARNSTOFF EINBAU
STECKKUPPLUNG	11482007	35	4	204	11 92 923 6	ANLAGE HARNSTOFF EINBAU
STECKNUSS 36 X 1 "	885380314	55	1	500	10 56 187 5	WERKZEUGAUSRUESTUNG
STECKROHR	10125386	6	1	225	10 14 844 4	OELWANNE MIT BEFEST.
STELLKOLBEN	11219925	1	1	89	11 21 990 5	VERSTELLUNG
STELLSCHRAUBE M10X101 31	9076176	13	1	145	10 12 226 2	RS VERSTELLUNG
STEUERBLOCK	511640614	1	1	169	51 16 377 14	VENTILBLOCKSPEISEDRUCK
STEUERDECKEL	511640814	3	1	169	51 16 377 14	VENTILBLOCKSPEISEDRUCK
STEUERGERAET	10144039	20	1	204	11 92 923 6	ANLAGE HARNSTOFF EINBAU
STEUERGERAET	11219917	5	1	87	10 53 430 7	V.PUMPE
STEUERGERAET ANBAU	10146795	571	1	216	12 42 545 4	DIESELMOTOR
STEUERKOLBEN	11600281	3	1	97	11 06 730 4	ABSCHALTVENTIL
STEUERKONSOLE LI KPL	10223224	16	1	398	11 27 970 6	KABINE KPL

Bezeichnung	Artikel	Pos.	Menge	Blatt	Baugruppe	Bezeichnung
STEUERKONSOLE RE KPL	11260956	17	1	398	11 27 970 6	KABINE KPL
STEUERLEITUNG	600376914	30	12	609	10 57 651 9	KABELSATZ
STEUERLEITUNG	600385314	31	10.5	512	11 90 151 1	KABELSATZ 1 ANLENKSTUECK
STEUERLEITUNG	600454314	53	6.5	399	11 27 973 6	KABINE EL
STEUERLEITUNG	600454314	31	1	575	10 57 559 9	KABELSATZ
STEUERLEITUNG	600454314	63	4	575	10 57 559 9	KABELSATZ
STEUERLEITUNG	600454314	64	4	575	10 57 559 9	KABELSATZ
STEUERLEITUNG	600454314	65	3.1	575	10 57 559 9	KABELSATZ
STEUERLEITUNG	600454314	72	4	575	10 57 559 9	KABELSATZ
STEUERLEITUNG	600454314	73	4	575	10 57 559 9	KABELSATZ
STEUERLEITUNG	600454314	85	4.5	576	10 57 559 9	KABELSATZ
STEUERLEITUNG	600454314	90	6	576	10 57 559 9	KABELSATZ
STEUERLEITUNG	600454314	91	6	576	10 57 559 9	KABELSATZ
STEUERLEITUNG	600454314	85	4.5	609	10 57 651 9	KABELSATZ
STEUERLEITUNG	693030914	97	2	400	11 27 973 6	KABINE EL
STEUERLEITUNG	693106214	51	1.5	512	11 90 151 1	KABELSATZ 1 ANLENKSTUECK
STEUERPLATTE	7023839	2	1	386	11 94 017 6	TRIEBWERK HYDRAULIKTEIL
STEUERPLATTE LINKS	9887035	2	1	119	98 89 833	RS ZYLINDER+STEUERPLATT
STEUERPULT	11236557	10	1	624	11 25 016 2	NOTBETRIEB EL NRS
STEUERPULT	11236937	10	1	40	11 23 908 2	STEUERPULT
STEUERPULT	11239082	111	1	34	11 24 519 0	OW EL
STEUERRECHNER	10223180	31	1	402	10 55 963 5	SCHALTSCHR X1
STEUERSTAND LI	10519079	10	1	399	11 27 973 6	KABINE EL
STEUERSTAND RE	11260957	20	1	399	11 27 973 6	KABINE EL
STEUERUNGSTEIL	9079870	110	6	214	12 42 545 4	DIESELMOTOR
STEUERVENTIL	10114975	2	1	164	11 21 591 3	PUMPENELEMENT
STEUERVENTIL	10351603	2	1	155	11 22 126 8	PUMPENELEMENT
STEUERVENTIL	10409413	1	1	159	10 35 160 3	STEUERVENTIL
STEUERVENTIL	11215942	1	1	168	10 11 497 5	STEUERVENTIL
STIFT	10115230	11	1	451	11 22 473 8	VERSTELLUNG
STIFT	9888133	19	1	114	10 13 975 2	RS SCHWENKJOCH
STIFTEINSATZ	605604714	33	1	512	11 90 151 1	KABELSATZ 1 ANLENKSTUECK
STIFTEINSATZ	605604714	51	1	575	10 57 559 9	KABELSATZ
STIFTEINSATZ	605604714	32	1	609	10 57 651 9	KABELSATZ
STIFTEINSATZ	605611814	43	1	512	11 90 151 1	KABELSATZ 1 ANLENKSTUECK
STIFTKONTAKT	605615814	36	5	512	11 90 151 1	KABELSATZ 1 ANLENKSTUECK
STIFTKONTAKT	605619814	34	14	512	11 90 151 1	KABELSATZ 1 ANLENKSTUECK
STIFTKONTAKT	605619814	33	8	609	10 57 651 9	KABELSATZ
STIFTKONTAKT	6905271	13	2	739	10 52 957 6	BETANKUNGSPUMPE KPL
STIFTSCHRAUBE DIN 835 M10	10489376	3	3	266	10 14 736 4	LUFTANSAUGUNG ANBAU
STIFTSCHRAUBE DIN 835 M10	4901450	4	3	287	10 12 037 2	STARTER ANBAU
STIFTSCHRAUBE DIN 835 M8	4038502	13	3	226	10 15 529 8	OELWANNE VORM.
STIFTSCHRAUBE DIN 939 M10	4068017	60	6	53	10 56 073 3	KRAFTSTOFFTANK KPL
STIFTSCHRAUBE DIN 939 M1	11934656	125	4	18	11 28 647 6	VENTILBLOCK
STIFTSCHRAUBE DIN 939 M8	11690424	10	1	284	10 14 511 2	ABGASSTUTZEN ANBAU
STIFTSCHRAUBE M16X1.5	9275003	20	8	107	10 11 835 7	RS ANSCHLUSSGEHAEUSE
STIRNRAD	11294362	100	1	86	11 24 682 0	VERTEILERGETRIEBE
STIRNRAD	11294363	110	4	86	11 24 682 0	VERTEILERGETRIEBE
STOPFEN	10123528	3	1	141	10 14 131 6	ANSCHLUSSPLATTE VORM.
STOPFEN	11228794	16	1	653	11 22 870 8	SCHEINWERFERHALTER KPL
STOSSDAEMPFER	10289994	55	1	432	10 28 999 3	SCHWINGSYSTEM
STREBE	938858701	10	2	353	96 96 543 01	WINDENRAHMEN
STUETZBLECH	9073189	13	1	302	11 41 475 7	ANBAUTEILE LUFTPRESSER
STUETZBLECH	9073190	11	1	302	11 41 475 7	ANBAUTEILE LUFTPRESSER
STUETZFLANSCH		50	1	348	93 88 497 01	PLANETENGETRIEBE
STUETZFLANSCH	939556201	15	1	346	93 88 500 01	SEILTROMMEL
STUETZRING	10352368	140	1	704	59 21 826 14	ABSTUETZZYLINDER
STUETZRING	11910328	111	1	526	10 09 917 3	DOPPELWIRKZYL
STUETZRING	11918997	181	2	74	59 21 041 14	DOPPELWIRKZYL
STUETZRING	511710314	13	1	29	51 05 719 14	SCHNELLVERSCHRAUBUNG

Bezeichnung	Artikel	Pos.	Menge	Blatt	Baugruppe	Bezeichnung
STUETZRING GESCHL.	11007749	14	1	131	10 12 321 4	DS DRUCKREDUZIERVENTIL
STUETZRING GESCHL.	11007751	13	1	131	10 12 321 4	DS DRUCKREDUZIERVENTIL
STUETZRING GESCHL.	7382212	23	1	148	10 12 226 5	DS REGELVENTIL
STUETZSCHEIBE	10324886	11	1	158	10 32 489 2	TRIEBWERK
STUETZSCHEIBE 45X56X0.3	10123256	10	2	137	98 85 937	SCHEIBENSATZ
STUETZSCHEIBE 45X56X0.4	10123257	11	2	137	98 85 937	SCHEIBENSATZ
STUETZSCHEIBE 45X56X0.5	10123258	12	2	137	98 85 937	SCHEIBENSATZ
STUETZSCHEIBE DIN 988 S28X		47	3	348	93 88 497 01	PLANETENGETRIEBE
STUETZSCHEIBE S32X44X0.5	7380815	21	4	107	10 11 835 7	RS ANSCHLUSSGEHAEUSE
STUETZSCHEIBE S32X44X0.5	7380815	21	4	108	92 74 731	DS ANSCHLUSSGEHAEUSE
STUETZSCHEIBE S32X44X1.3	7380586	22	2	107	10 11 835 7	RS ANSCHLUSSGEHAEUSE
STUETZSCHEIBE S32X44X1.3	7380586	20	2	108	92 74 731	DS ANSCHLUSSGEHAEUSE
STUETZSCHEIBE S32X44X2 FS	7380291	19	2	107	10 11 835 7	RS ANSCHLUSSGEHAEUSE
STUETZSCHEIBE S32X44X2 FS	7380291	19	2	108	92 74 731	DS ANSCHLUSSGEHAEUSE
STURZSICHERUNG NRS	10555148	625	1	3	01 38 406 14	LR 1300 SX
STURZSICHERUNG NRS	10556010	620	1	3	01 38 406 14	LR 1300 SX
STURZSICHERUNG NRS	10557224	626	1	3	01 38 406 14	LR 1300 SX
STUTZEN	10334218	11	1	285	10 14 622 4	LADEDRUCKREGELUNG
STUTZEN	9273271	2	2	248	10 14 294 2	SCHMIEROELFILTER ANBAU
STUTZEN	956385814	39	2	204	11 92 923 6	ANLAGE HARNSTOFF EINBAU
T-NUTENSTEIN M10X12	890035314	59	21	310	11 24 409 0	VERKLEIDUNG OW EINBAU KP
T-STUECK	553087814	38	1	204	11 92 923 6	ANLAGE HARNSTOFF EINBAU
TAKTVENTIL	10149191	1	1	285	10 14 622 4	LADEDRUCKREGELUNG
TANK HYDR EINBAU	10560700	15	1	6	11 24 047 9	OW KPL
TANK HYDR KPL	10560701	3	1	46	10 56 070 0	TANK HYDR EINBAU
TANK HYDR SCHWK	10560703	3	1	48	10 56 070 1	TANK HYDR KPL
TANKHALTERUNG	11314166	2	1	426	11 94 091 0	KLIMAGERAET NRS
TANKVERSCHLUSS	11101351	5	1	207	11 24 240 8	HARNSTOFFBEHAELTER
TANKVERSCHLUSS	7365412	11	1	53	10 56 073 3	KRAFTSTOFFTANK KPL
TANKVERSCHLUSS	7401726	5	1	394	92 76 934 01	OELEINFUELLSTUTZEN
TASCHENSCHLOSS	11236233	11	1	711	11 23 626 6	SEILHALTERUNG NRS
TASCHENSCHLOSS	773941308	11	1	354	99 23 387 14	BESEILUNG EZW NADEL AL
TASTATUR	10531718	12	1	404	10 51 907 9	STEUERSTAND LI
TASTATUR BEDIENPULT X11	10036107	11	1	404	10 51 907 9	STEUERSTAND LI
TELESKOP	11909669	2	1	74	59 21 041 14	DOPPELWIRKZYL
TELLER	10098157	60	11	310	11 24 409 0	VERKLEIDUNG OW EINBAU KP
TELLER	10098157	18	20	324	10 54 591 0	MOTORABDECKUNG
TELLER	10098157	12	28	479	99 26 718 14	PODEST
TELLER	10098157	42	53	505	11 23 820 4	ANLENKSTUECK KPL
TELLER	10098157	20	6	519	10 58 193 7	GITTERROST KPL
TELLER	10098157	21	3	548	11 28 390 8	AL BEGEHUNG
TELLER	10098157	12	2	549	11 28 391 3	BEFESTIGUNGSCHELLE
TELLER	10098157	21	3	563	11 28 583 8	AL BEGEHUNG
TELLER	10098157	21	3	570	11 28 626 1	AL BEGEHUNG
TELLER	10098157	21	4	579	11 28 648 4	MONTAGETEILE
TELLER	10098157	10	12	644	11 24 147 8	UW PODEST
TELLER	10098157	10	28	645	11 24 575 5	PODEST
TELLER	10098157	13	4	669	10 55 280 7	GITTERROST KPL
TELLER	10098157	15	3	671	11 30 694 4	SCHIENE KPL
TELLER	10098157	5	2	672	11 23 827 7	SEILSCHUTZ
TELLER	10098157	12	1	673	11 30 567 0	TRANSPORTSICHERUNG
TELLERFEDER	7024282	117	4	630	51 02 322 14	OELMOTOR
TEMPERATURFUEHLER	10424276	85	1	400	11 27 973 6	KABINE EL
TEMPERATURFUEHLER	10493626	50	1	33	11 24 519 0	OW EL
TEMPERATURFUEHLER	10493626	1	2	297	10 14 297 7	MOTORREGELUNGSENSORIK
TEMPERATURFUEHLER	11241756	40	1	33	11 24 519 0	OW EL
TEMPERATURFUEHLER KPL.	10152036	2	1	297	10 14 297 7	MOTORREGELUNGSENSORIK
TEMPERATURREGLER	511657614	13	1	8	11 29 618 6	OW HYDR
TEMPERATURSCHALTER	10513459	17	1	82	11 24 773 5	AGGREGAT HYDR
TEMPERATURSENSOR	11349182	23	2	204	11 92 923 6	ANLAGE HARNSTOFF EINBAU

Bezeichnung	Artikel	Pos.	Menge	Blatt	Baugruppe	Bezeichnung
THERMOSTAT	10154798	2	1	275	10 14 821 5	THERMOSTATGEHAEUSE AN
THERMOSTAT	592293814	260	1	428	11 93 934 6	KLIMAANLAGE
THERMOSTATGEHAEUSE	10148200	1	1	275	10 14 821 5	THERMOSTATGEHAEUSE AN
THERMOSTATGEHAEUSE AN	10148215	380	1	215	12 42 545 4	DIESELMOTOR
TRAGEGURT	10556012	2	1	668	10 55 601 1	ABSTURZSICHERUNG KPL
TRAGROHR	11245756	1	1	645	11 24 575 5	PODEST
TRAGROHR	11245757	2	2	645	11 24 575 5	PODEST
TRAGROHR	958097914	10	2	479	99 26 718 14	PODEST
TRAGROLLE KPL	790523314	15	2	463	11 89 365 0	RAUPENTRAEGER RE KPL
TRAGROLLE KPL	790523314	15	2	474	11 89 365 1	RAUPENTRAEGER LI KPL
TRAGSCHIENE	602101414	23	0.2	611	10 57 652 3	KLEMMDOSE
TRAGSCHIENE	602106714	58	0.37	39	10 56 645 8	KLEMMKASTEN
TRANSPORTARM KPL	971333503	20	3	463	11 89 365 0	RAUPENTRAEGER RE KPL
TRANSPORTARM KPL	971333503	20	3	474	11 89 365 1	RAUPENTRAEGER LI KPL
TRANSPORTKONSOLE	10145229	1	1	289	10 14 286 4	TRANSPORTVORRICHTUNG
TRANSPORTSICHERUNG	11305670	18	1	670	11 29 473 7	LAUFSTEG ZWISCHENSTUEC
TRANSPORTSICHERUNG	11305670	19	1	674	11 29 474 2	LAUFSTEG ZWISCHENSTUEC
TRANSPORTSICHERUNG	11305670	21	1	675	11 29 474 3	LAUFSTEG ZWISCHENSTUEC
TRANSPORTSICHERUNG	11940876	11	1	545	11 94 172 5	MONTAGEEINHEIT
TRANSPORTSICHERUNG	11940876	11	1	561	11 94 259 4	MONTAGEEINHEIT
TRANSPORTSICHERUNG	11940876	11	1	568	11 94 450 2	MONTAGEEINHEIT
TRANSPORTVORRICHTUNG	10142864	481	1	215	12 42 545 4	DIESELMOTOR
TRANSPORTVORRICHTUNG	9079823	480	1	215	12 42 545 4	DIESELMOTOR
TRAVERSE	10589483	14	1	465	10 55 716 2	LEITRAD KPL
TRAVERSE SCHWK	993372514	10	1	620	99 23 415 14	RUECKHALTESTANGE
TRAVERSE SCHWK	993432414	14	1	620	99 23 415 14	RUECKHALTESTANGE
TRENNRELAIS	630120108	81	4	402	10 55 963 5	SCHALTSCHR X1
TRENNSCHEIBE	602791714	17	1	611	10 57 652 3	KLEMMDOSE
TRENNWAND	602832314	72	1	402	10 55 963 5	SCHALTSCHR X1
TRIEBWELLE	11219920	1	1	88	11 21 990 2	TRIEBWERK
TRIEBWELLE	11940177	2	1	385	70 23 828	TRIEBWERK
TRIEBWELLE	11940205	2	1	387	11 94 017 7	TRIEBWELLE
TRIEBWERK	10287664	1	1	165	11 21 593 6	PUMPENELEMENT
TRIEBWERK	10287725	1	1	166	10 28 766 4	TRIEBWERK
TRIEBWERK	10324889	1	1	156	11 22 127 4	PUMPENELEMENT
TRIEBWERK	10324892	1	1	157	10 32 488 9	TRIEBWERK
TRIEBWERK	10503513	1	1	447	51 24 059 14	V.MOTOR
TRIEBWERK	11219902	1	1	87	10 53 430 7	V.PUMPE
TRIEBWERK	7023828	1	1	384	51 22 991 14	OELMOTOR
TRIEBWERK HYDRAULIKTEIL	10007947	1	1	448	10 50 351 3	TRIEBWERK
TRIEBWERK HYDRAULIKTEIL	11219924	3	1	88	11 21 990 2	TRIEBWERK
TRIEBWERK HYDRAULIKTEIL	11940176	1	1	385	70 23 828	TRIEBWERK
TRITTSTUFE	10501783	1	1	471	10 50 179 5	AUFSTIEG KPL
TROCKNER	11236711	4	1	725	11 21 750 0	VERFLUESSIGER
TROMMEL	938850101	1	1	346	93 88 500 01	SEILTROMMEL
TROMMELKOERPER	10227104	1	1	515	61 61 541 14	KABELTROMMEL
TUELLENGEHAEUSE	10021236	35	2	657	99 24 978 14	AL EL
TUELLENGEHAEUSE	10036809	42	1	512	11 90 151 1	KABELSATZ 1 ANLENKSTUECK
TUELLENGEHAEUSE	693155014	32	1	512	11 90 151 1	KABELSATZ 1 ANLENKSTUECK
TUELLENGEHAEUSE	693155014	50	1	575	10 57 559 9	KABELSATZ
TUELLENGEHAEUSE	693155014	31	1	609	10 57 651 9	KABELSATZ
TUER	10565777	1	1	322	10 56 580 8	TUER
TUER	10565808	13	1	312	11 24 409 1	VERKLEIDUNG
TUER	10566237	6	1	312	11 24 409 1	VERKLEIDUNG
TUER	10566238	1	1	321	10 56 623 7	TUER
TUER	10578835	3	1	312	11 24 409 1	VERKLEIDUNG
TUER	10578836	1	1	316	10 57 883 5	TUER
TUER	10578972	1	1	318	10 57 897 6	TUER
TUER	10578976	4	5	312	11 24 409 1	VERKLEIDUNG
TUER	10579397	1	1	320	10 57 940 0	TUER

Bezeichnung	Artikel	Pos.	Menge	Blatt	Baugruppe	Bezeichnung
TUER	10579400	5	1	312	11 24 409 1	VERKLEIDUNG
TUERDICHTUNG	592285714	3	1	419	10 35 007 6	SCHIEBETUER
TUERE ZUBEHOEHR	10226454	2	1	415	10 35 008 0	KABINE
TUERGRIFF INNEN	10226473	19	1	419	10 35 007 6	SCHIEBETUER
TUERGRIFF INNEN	10226478	21	1	419	10 35 007 6	SCHIEBETUER
TUERKEIL	790549214	15	9	314	11 24 409 1	VERKLEIDUNG
TUERKEIL PUFFER	790549314	9	1	316	10 57 883 5	TUER
TUERKEIL PUFFER	790549314	9	1	318	10 57 897 6	TUER
TUERKEIL PUFFER	790549314	11	1	320	10 57 940 0	TUER
TUERKEIL PUFFER	790549314	11	1	321	10 56 623 7	TUER
TUERKEIL PUFFER	790549314	9	1	322	10 56 580 8	TUER
TUERSCHLOSS	10353879	20	1	316	10 57 883 5	TUER
TUERSCHLOSS	10353879	3	1	318	10 57 897 6	TUER
TUERSCHLOSS	10353879	10	1	320	10 57 940 0	TUER
TUERSCHLOSS	10353879	10	1	321	10 56 623 7	TUER
TUERSCHLOSS	10353879	6	1	322	10 56 580 8	TUER
TURAS	10521183	12	1	463	11 89 365 0	RAUPENTRAEGER RE KPL
TURAS	10521183	12	1	474	11 89 365 1	RAUPENTRAEGER LI KPL
TURBOLADER	10139624	1	1	283	10 14 013 6	ATL-ANBAU
TYPENSCHILD	11226148	220	1	383	51 14 347 14	DW SICHERUNGSBLOCK
TYPENSCHILD	11276851	53	1	2	01 38 406 14	LR 1300 SX
U-PROFIL	11225259	23	3	326	11 24 922 2	ABDECKUNG UNTERSEITE
U-STAHL	10222995	59	2	505	11 23 820 4	ANLENKSTUECK KPL
U-STAHL	10565639	11	2	519	10 58 193 7	GITTERROST KPL
U-STAHL	10581999	21	2	519	10 58 193 7	GITTERROST KPL
U-STAHL	10582001	12	1	505	11 23 820 4	ANLENKSTUECK KPL
U-STAHL	10582001	22	1	519	10 58 193 7	GITTERROST KPL
U-STAHL	10582020	64	2	507	11 23 820 4	ANLENKSTUECK KPL
UEBERBRUECKUNGSSTECKE	918365114	91	1	34	11 24 519 0	OW EL
UEBERDRUCKVENTIL	10152592	10	1	243	10 12 948 0	OELKUEHLER VORM.
UEBERWURFMUTTER M14X1.	10816957	27	1	210	11 92 958 8	LUFTFUEHRUNG KPL
UMLENKROLLE KPL	991413714	32	1	535	11 24 444 4	A-BOCK 1 KPL
UMLENKROLLE VORM.	10149360	3	2	271	10 14 286 0	KLIMAKOMPRESSOR ANBAU
UNTERFLASCHE	790411214	133	1	3	01 38 406 14	LR 1300 SX
UNTERFLASCHE	790487114	137	1	3	01 38 406 14	LR 1300 SX
UW HYDR	11893003	2	1	439	11 89 364 8	UW KPL
UW KPL	11893648	33	1	2	01 38 406 14	LR 1300 SX
UW PODEST	11241478	554	1	3	01 38 406 14	LR 1300 SX
UW PODEST	992338914	38	1	2	01 38 406 14	LR 1300 SX
V-RING	10324881	10	1	158	10 32 489 2	TRIEBWERK
V-RING	11251437	5	1	446	11 89 617 8	DS
V.MOTOR	11251232	2	1	482	11 26 260 6	WINDE 1 HYDR
V.MOTOR	11251232	2	1	497	11 26 261 1	WINDE 2 HYDR
V.MOTOR	512405914	3	2	442	11 89 300 5	VERROHRUNG HYDR
V.PUMPE	10128787	6	1	82	11 24 773 5	AGGREGAT HYDR
V.PUMPE	10226013	9	1	82	11 24 773 5	AGGREGAT HYDR
V.PUMPE	10226505	8	1	82	11 24 773 5	AGGREGAT HYDR
V.PUMPE	10530653	5	2	82	11 24 773 5	AGGREGAT HYDR
V.PUMPE	10534307	3	2	82	11 24 773 5	AGGREGAT HYDR
VENTIL	10011832	13	1	219	10 14 768 6	AGGREGATETRAEGER ANBA
VENTIL	10011832	14	1	243	10 12 948 0	OELKUEHLER VORM.
VENTIL	10101193	201	1	18	11 28 647 6	VENTILBLOCK
VENTIL	10445040	220	1	526	10 09 917 3	DOPPELWIRKZYL
VENTIL	11224762	12	2	451	11 22 473 8	VERSTELLUNG
VENTIL	11932853	2	1	28	51 16 576 14	TEMPERATURREGLER
VENTIL	592293314	70	1	428	11 93 934 6	KLIMAANLAGE
VENTIL	7026676	203	1	18	11 28 647 6	VENTILBLOCK
VENTILBLOCK	10225408	4	1	73	10 51 969 5	A-BOCK AUFRICHTZYL HYDR
VENTILBLOCK	10351486	3	1	8	11 29 618 6	OW HYDR
VENTILBLOCK	11286476	1	1	8	11 29 618 6	OW HYDR

Bezeichnung	Artikel	Pos.	Menge	Blatt	Baugruppe	Bezeichnung
VENTILBLOCK	592145814	4	1	8	11 29 618 6	OW HYDR
VENTILBLOCKEINZELSCHEIB	10541514	6	1	8	11 29 618 6	OW HYDR
VENTILBLOCKSPEISEDRUCK	511637714	15	1	82	11 24 773 5	AGGREGAT HYDR
VENTILBRUECKE	10119695	2	2	236	10 14 843 8	KIPPHEBELBOCK KPL.
VENTILHALTER	954598503	12	2	328	11 24 483 7	BEF-TEILE OW
VENTILHALTER	954598503	13	1	339	10 51 969 7	NADELEINZIEHWINDE
VENTILHALTERUNG	994001014	28	1	627	10 51 743 9	SEILEINZIEHWINDE KPL NRS
VENTILHUELSE	9267340	10	1	106	92 67 343	ENTLUEFTUNGSVENTIL
VENTILPLATTE	10575966	17	1	328	11 24 483 7	BEF-TEILE OW
VENTILSCHRAUBE	11214946	1	1	452	10 44 656 6	WECHSELVENTIL
VENTILSITZ	9278874	10	1	113	92 78 875	DRUCKABSCHNEIDUNG
VERBANDSKASSETTE	789011714	13	1	2	01 38 406 14	LR 1300 SX
VERBINDUNG OW UW	10519696	31	1	2	01 38 406 14	LR 1300 SX
VERBINDUNGSLASCHE	9887828	14	2	105	10 11 835 0	ANSCHLUSSGEHAEUSE
VERBINDUNGSLEITUNG	10141549	1	1	266	10 14 736 4	LUFTANSAUGUNG ANBAU
VERBINDUNGSLEITUNG ANBA	10149676	230	1	215	12 42 545 4	DIESELMOTOR
VERBINDUNGSROHR	10444797	34	1	204	11 92 923 6	ANLAGE HARNSTOFF EINBAU
VERDAMPFER	592293614	230	1	428	11 93 934 6	KLIMAANLAGE
VERFLUESSIGER	11217500	11	1	724	11 93 621 2	KLIMAANLAGE NRS
VERKLEIDUNG	11244091	1	1	308	11 24 409 0	VERKLEIDUNG OW EINBAU KP
VERKLEIDUNG	592290114	78	1	416	10 35 008 0	KABINE
VERKLEIDUNG OW EINBAU KP	11244090	11	1	78	11 92 885 5	AGGREGAT DIESELMOTOR
VERKLEIDUNG RE	592289814	72	1	416	10 35 008 0	KABINE
VERLAENGERUNG 1 " X 410M	885392414	45	1	500	10 56 187 5	WERKZEUGAUSRUESTUNG
VERLAENGERUNGSKABEL	614027114	74	1	399	11 27 973 6	KABINE EL
VERRIEGELUNG	10572075	36	1	417	10 22 645 4	TUERE ZUBEHOEHR
VERROHRUNG HYDR	10517262	2	1	628	10 54 251 6	SEILEINZUGSWINDE HYDR NR
VERROHRUNG HYDR	10517281	2	1	720	10 51 728 0	KABINENNEIGUNG NRS
VERROHRUNG HYDR	10519591	2	1	523	10 58 510 8	RUECKFALLSTUETZEN HYDR
VERROHRUNG HYDR	10552161	2	1	379	10 51 968 3	DW HYDR
VERROHRUNG HYDR	10554594	2	1	708	10 53 635 1	GLEICHLAUF HYDR NRS
VERROHRUNG HYDR	11235248	2	1	702	11 23 524 6	JACK-UP SYSTEM HYDR NRS
VERROHRUNG HYDR	11893005	2	1	440	11 89 300 3	UW HYDR
VERROHRUNG HYDR	11894083	2	1	696	11 89 408 0	JACK-UP SYSTEM HYDR NRS
VERSCHLUSSATZ	11219369	4	1	92	11 21 991 0	PUMPENGEHAEUSE
VERSCHLUSSDECKEL	4001664	3	11	217	11 38 961 7	KURBELGEHAEUSE KPL. MIT
VERSCHLUSSDECKEL	4980362	2	6	217	11 38 961 7	KURBELGEHAEUSE KPL. MIT
VERSCHLUSSDECKEL	9144757	4	1	239	10 12 653 5	ZYLINDERKOPFDECKEL ANBA
VERSCHLUSSFLANSCH	944672614	42	1	8	11 29 618 6	OW HYDR
VERSCHLUSSFLANSCH	949341514	45	1	8	11 29 618 6	OW HYDR
VERSCHLUSSFLANSCH SAE	11293256	44	4	8	11 29 618 6	OW HYDR
VERSCHLUSSFLANSCH SAE	11293256	15	1	179	10 57 532 2	ANSAUGROHR OEL KPL
VERSCHLUSSFLANSCH SAE	510705314	43	2	8	11 29 618 6	OW HYDR
VERSCHLUSSRING	10650270	31	1	384	51 22 991 14	OELMOTOR
VERSCHLUSSRING	11940208	1	1	388	10 65 027 0	VERSCHLUSSRING
VERSCHLUSSRING	7013563	1	1	389	11 94 020 8	VERSCHLUSSRING
VERSCHLUSSRING	9885628	17	1	124	92 68 016	RS VERSCHLUSSRING
VERSCHLUSSSCHRAUBE		84	1	349	93 88 497 01	PLANETENGETRIEBE
VERSCHLUSSSCHRAUBE		86	2	349	93 88 497 01	PLANETENGETRIEBE
VERSCHLUSSSCHRAUBE	10041903	10	5	219	10 14 768 6	AGGREGATETRAEGER ANBA
VERSCHLUSSSCHRAUBE	10115232	13	1	451	11 22 473 8	VERSTELLUNG
VERSCHLUSSSCHRAUBE	10116078	4	1	259	10 14 675 3	KRAFTSTOFFFEINFILTER
VERSCHLUSSSCHRAUBE	10137108	40	1	115	90 77 464	RS FLANSCH
VERSCHLUSSSCHRAUBE	10137108	29	3	141	10 14 131 6	ANSCHLUSSPLATTE VORM.
VERSCHLUSSSCHRAUBE	10137108	19	1	146	10 13 803 3	DICHTSATZ KPL.
VERSCHLUSSSCHRAUBE	10137108	30	3	147	10 13 803 4	DS ANSCHLUSSPLATTE
VERSCHLUSSSCHRAUBE	10137113	20	3	146	10 13 803 3	DICHTSATZ KPL.
VERSCHLUSSSCHRAUBE	10137113	24	4	147	10 13 803 4	DS ANSCHLUSSPLATTE
VERSCHLUSSSCHRAUBE	10137115	27	2	141	10 14 131 6	ANSCHLUSSPLATTE VORM.
VERSCHLUSSSCHRAUBE	10137115	27	2	147	10 13 803 4	DS ANSCHLUSSPLATTE

Bezeichnung	Artikel	Pos.	Menge	Blatt	Baugruppe	Bezeichnung
VERSCHLUSSSCHRAUBE	10137121	28	2	103	10 11 834 9	DOPPELV.PUMPE
VERSCHLUSSSCHRAUBE	10137121	29	2	126	92 76 408	DS DOPPELPUMPE
VERSCHLUSSSCHRAUBE	10137121	21	1	127	10 12 878 7	V.PUMPE
VERSCHLUSSSCHRAUBE	10137312	20	1	141	10 14 131 6	ANSCHLUSSPLATTE VORM.
VERSCHLUSSSCHRAUBE	10137312	20	1	147	10 13 803 4	DS ANSCHLUSSPLATTE
VERSCHLUSSSCHRAUBE	10519025	30	1	451	11 22 473 8	VERSTELLUNG
VERSCHLUSSSCHRAUBE	10598295	55	4	189	11 24 114 1	KUEHLER EINBAU LADELUFT
VERSCHLUSSSCHRAUBE	11217837	30	1	156	11 22 127 4	PUMPENELEMENT
VERSCHLUSSSCHRAUBE	11224761	7	1	451	11 22 473 8	VERSTELLUNG
VERSCHLUSSSCHRAUBE	11267402	20	1	94	11 21 993 0	PUMPENGEHAEUSE
VERSCHLUSSSCHRAUBE	11267403	28	1	94	11 21 993 0	PUMPENGEHAEUSE
VERSCHLUSSSCHRAUBE	11267415	1	1	95	10 59 347 4	DRUCKBEGRENZUNGSVENTI
VERSCHLUSSSCHRAUBE	11267421	1	1	96	11 21 936 9	VERSCHLUSSATZ
VERSCHLUSSSCHRAUBE	11267439	1	1	97	11 06 730 4	ABSCHALTVENTIL
VERSCHLUSSSCHRAUBE	11267451	1	1	99	11 26 744 7	WECHSELVENTIL
VERSCHLUSSSCHRAUBE	477510201	2	4	392	90 01 376 2	DREHWERKANTRIEB
VERSCHLUSSSCHRAUBE	592316314	210	1	86	11 24 682 0	VERTEILERGETRIEBE
VERSCHLUSSSCHRAUBE	7361961	28	1	352	93 36 755 01	OELMESSEINRICHTUNG
VERSCHLUSSSCHRAUBE	7380177	4	3	217	11 38 961 7	KURBELGEHAEUSE KPL. MIT
VERSCHLUSSSCHRAUBE	7380566	6	3	217	11 38 961 7	KURBELGEHAEUSE KPL. MIT
VERSCHLUSSSCHRAUBE	7380566	12	1	243	10 12 948 0	OELKUEHLER VORM.
VERSCHLUSSSCHRAUBE	7380566	7	1	265	10 14 736 9	ANSAUGSTUTZEN ANBAU
VERSCHLUSSSCHRAUBE	7380566	20	1	283	10 14 013 6	ATL-ANBAU
VERSCHLUSSSCHRAUBE	7380688	3	2	259	10 14 675 3	KRAFTSTOFFFEINFILTER
VERSCHLUSSSCHRAUBE	7381457	7	2	217	11 38 961 7	KURBELGEHAEUSE KPL. MIT
VERSCHLUSSSCHRAUBE	7381457	17	1	265	10 14 736 9	ANSAUGSTUTZEN ANBAU
VERSCHLUSSSCHRAUBE	7381457	21	1	283	10 14 013 6	ATL-ANBAU
VERSCHLUSSSCHRAUBE	7381638	11	1	243	10 12 948 0	OELKUEHLER VORM.
VERSCHLUSSSCHRAUBE	7381638	13	1	267	10 14 967 6	VERBINDUNGSLEITUNG ANBA
VERSCHLUSSSCHRAUBE	7381638	10	2	290	10 11 557 7	SCHWUNGRADGEHAEUSE AN
VERSCHLUSSSCHRAUBE	7381638	4	1	298	10 14 637 4	VERSCHLUSSTEILE
VERSCHLUSSSCHRAUBE	7381638	9	2	302	11 41 475 7	ANBAUTEILE LUFTPRESSER
VERSCHLUSSSCHRAUBE	7382203	5	2	298	10 14 637 4	VERSCHLUSSTEILE
VERSCHLUSSSCHRAUBE	7382204	8	2	243	10 12 948 0	OELKUEHLER VORM.
VERSCHLUSSSCHRAUBE	7414500	24	3	451	11 22 473 8	VERSTELLUNG
VERSCHLUSSSCHRAUBE	933676601	23	1	352	93 36 755 01	OELMESSEINRICHTUNG
VERSCHLUSSSCHRAUBE 11S	10137918	2	1	220	10 13 845 0	ENDREGELVENTIL
VERSCHLUSSSCHRAUBE 3/4"-	10008093	5	1	163	10 22 601 3	V.PUMPE
VERSCHLUSSSCHRAUBE 3/4"-	10008093	30	1	165	11 21 593 6	PUMPENELEMENT
VERSCHLUSSSCHRAUBE 7/16	10324900	4	1	159	10 35 160 3	STEUERVENTIL
VERSCHLUSSSCHRAUBE AEH	409710601	67	3	467	96 93 178 01	FAHRANTRIEB
VERSCHLUSSSCHRAUBE D26	505105814	250	2	86	11 24 682 0	VERTEILERGETRIEBE
VERSCHLUSSSCHRAUBE DIN	403900101	80	1	636	54 02 703 14	FLANSCH KPL
VERSCHLUSSSCHRAUBE DIN	403900101	43	4	700	11 89 568 6	SELBSTVERLADESYSTEM NR
VERSCHLUSSSCHRAUBE DIN	403900501	22	1	141	10 14 131 6	ANSCHLUSSPLATTE VORM.
VERSCHLUSSSCHRAUBE DIN	11239915	3	1	690	51 16 404 14	SENKBREMSVENTIL
VERSCHLUSSSCHRAUBE DIN	11239904	5	1	692	59 21 584 14	SENKBREMSVENTIL
VERSCHLUSSSCHRAUBE DIN	11239897	4	1	692	59 21 584 14	SENKBREMSVENTIL
VERSCHLUSSSCHRAUBE DIN	502027614	60	2	376	99 04 645 14	ANTRIEB
VERSCHLUSSSCHRAUBE DIN	502027514	122	1	376	99 04 645 14	ANTRIEB
VERSCHLUSSSCHRAUBE DIN	4600320	64	1	376	99 04 645 14	ANTRIEB
VERSCHLUSSSCHRAUBE DIN	404101608	30	2	635	54 02 702 14	SEILTROMMEL KPL
VERSCHLUSSSCHRAUBE DIN	4000898	480	9	86	11 24 682 0	VERTEILERGETRIEBE
VERSCHLUSSSCHRAUBE G1/	11226023	60	2	383	51 14 347 14	DW SICHERUNGSBLOCK
VERSCHLUSSSCHRAUBE G1/	11226129	150	1	383	51 14 347 14	DW SICHERUNGSBLOCK
VERSCHLUSSSCHRAUBE G1/	11226130	160	1	383	51 14 347 14	DW SICHERUNGSBLOCK
VERSCHLUSSSCHRAUBE G3/	11226133	165	1	383	51 14 347 14	DW SICHERUNGSBLOCK
VERSCHLUSSSCHRAUBE M1	10115237	28	2	165	11 21 593 6	PUMPENELEMENT
VERSCHLUSSSCHRAUBE M1	10115237	25	4	451	11 22 473 8	VERSTELLUNG
VERSCHLUSSSCHRAUBE M1	10337050	4	1	90	11 21 992 7	DECKEL

Bezeichnung	Artikel	Pos.	Menge	Blatt	Baugruppe	Bezeichnung
VERSCHLUSSSCHRAUBE M1	10337050	4	1	91	11 21 992 9	DECKEL
VERSCHLUSSSCHRAUBE M1	10337050	12	1	94	11 21 993 0	PUMPENGEHAEUSE
VERSCHLUSSSCHRAUBE M1	10337050	13	1	94	11 21 993 0	PUMPENGEHAEUSE
VERSCHLUSSSCHRAUBE M1	10337050	14	1	94	11 21 993 0	PUMPENGEHAEUSE
VERSCHLUSSSCHRAUBE M1	10337050	15	1	94	11 21 993 0	PUMPENGEHAEUSE
VERSCHLUSSSCHRAUBE M1	10337050	16	1	94	11 21 993 0	PUMPENGEHAEUSE
VERSCHLUSSSCHRAUBE M1	10337050	17	1	94	11 21 993 0	PUMPENGEHAEUSE
VERSCHLUSSSCHRAUBE M1	10337050	18	1	94	11 21 993 0	PUMPENGEHAEUSE
VERSCHLUSSSCHRAUBE M1	10337050	26	1	102	11 21 991 8	LAGERFLANSCH
VERSCHLUSSSCHRAUBE M14	7371299	279	2	18	11 28 647 6	VENTILBLOCK
VERSCHLUSSSCHRAUBE M14	11234068	275	16	18	11 28 647 6	VENTILBLOCK
VERSCHLUSSSCHRAUBE M1	10337052	21	1	94	11 21 993 0	PUMPENGEHAEUSE
VERSCHLUSSSCHRAUBE M2	10340236	19	2	202	10 30 300 7	KRAFTSTOFFVORFILTER
VERSCHLUSSSCHRAUBE M2	10349193	22	1	94	11 21 993 0	PUMPENGEHAEUSE
VERSCHLUSSSCHRAUBE M2	10349193	23	1	94	11 21 993 0	PUMPENGEHAEUSE
VERSCHLUSSSCHRAUBE M24	7024504	172	14	18	11 28 647 6	VENTILBLOCK
VERSCHLUSSSCHRAUBE M2	10503477	13	1	447	51 24 059 14	V.MOTOR
VERSCHLUSSSCHRAUBE M30	10152594	2	1	244	10 15 259 2	UEBERDRUCKVENTIL
VERSCHLUSSSCHRAUBE M3	10289931	24	1	94	11 21 993 0	PUMPENGEHAEUSE
VERSCHLUSSSCHRAUBE M39	10228470	167	5	18	11 28 647 6	VENTILBLOCK
VERSCHLUSSSCHRAUBE M39	10301757	169	2	18	11 28 647 6	VENTILBLOCK
VERSCHLUSSSCHRAUBE M4	10525039	42	1	94	11 21 993 0	PUMPENGEHAEUSE
VERSCHLUSSSCHRAUBE M4	9885660	16	2	105	10 11 835 0	ANSCHLUSSGEHAEUSE
VERSCHLUSSSCHRAUBE M6	9268441	8	3	110	92 73 644	DS REGELVENTIL
VERSCHLUSSSCHRAUBE M6	9268441	8	5	141	10 14 131 6	ANSCHLUSSPLATTE VORM.
VERSCHLUSSSCHRAUBE M6	9268441	8	5	147	10 13 803 4	DS ANSCHLUSSPLATTE
VERSCHLUSSSCHRAUBE M8X	9881609	7	2	141	10 14 131 6	ANSCHLUSSPLATTE VORM.
VERSCHLUSSSCHRAUBE M8X	9881609	8	2	146	10 13 803 3	DICHTSATZ KPL.
VERSCHLUSSSCHRAUBE M8X	9881609	7	2	147	10 13 803 4	DS ANSCHLUSSPLATTE
VERSCHLUSSSTOPFEN		74	1	348	93 88 497 01	PLANETENGETRIEBE
VERSCHLUSSSTOPFEN	11922544	210	10	205	11 92 923 6	ANLAGE HARNSTOFF EINBAU
VERSCHLUSSSTOPFEN	11951869	7	1	207	11 24 240 8	HARNSTOFFBEHAELTER
VERSCHLUSSSTOPFEN	4097529	79	1	392	90 01 376 2	DREHWERKANTRIEB
VERSCHLUSSSTOPFEN	591645108	64	1	310	11 24 409 0	VERKLEIDUNG OW EINBAU KP
VERSCHLUSSSTOPFEN	779014014	65	2	310	11 24 409 0	VERKLEIDUNG OW EINBAU KP
VERSCHLUSSSTOPFEN	779016201	88	1	392	90 01 376 2	DREHWERKANTRIEB
VERSCHLUSSSTOPFEN	779016414	57	4	642	10 55 372 1	DACHGELAENDER NRS
VERSCHLUSSSTOPFEN	779016501	84	1	467	96 93 178 01	FAHRANTRIEB
VERSCHLUSSTEILE	10115664	452	1	215	12 42 545 4	DIESELMOTOR
VERSCHLUSSTEILE	10116110	521	1	215	12 42 545 4	DIESELMOTOR
VERSCHLUSSTEILE	10119128	522	1	216	12 42 545 4	DIESELMOTOR
VERSCHLUSSTEILE	10127979	526	1	216	12 42 545 4	DIESELMOTOR
VERSCHLUSSTEILE	10128439	524	1	216	12 42 545 4	DIESELMOTOR
VERSCHLUSSTEILE	10128440	1	1	292	10 12 843 9	VERSCHLUSSTEILE
VERSCHLUSSTEILE	10142747	630	1	216	12 42 545 4	DIESELMOTOR
VERSCHLUSSTEILE	10143304	15	1	279	10 14 601 2	WASSERSAMMELLEITUNG K
VERSCHLUSSTEILE	10144027	652	1	216	12 42 545 4	DIESELMOTOR
VERSCHLUSSTEILE	10146374	656	1	216	12 42 545 4	DIESELMOTOR
VERSCHLUSSTEILE	9078249	650	1	216	12 42 545 4	DIESELMOTOR
VERSCHLUSSTEILE	9078301	654	1	216	12 42 545 4	DIESELMOTOR
VERSCHMUTZUNGSANZEIGE	592200514	20	1	82	11 24 773 5	AGGREGAT HYDR
VERSCHRAUBUNG		80	1	348	93 88 497 01	PLANETENGETRIEBE
VERSCHRAUBUNG		83	3	348	93 88 497 01	PLANETENGETRIEBE
VERSCHRAUBUNG	10035314	20	1	199	11 24 114 4	KRAFTSTOFFANLAGE
VERSCHRAUBUNG	10035314	35	1	210	11 92 958 8	LUFTFUEHRUNG KPL
VERSCHRAUBUNG	10225291	710	3	14	11 29 618 6	OW HYDR
VERSCHRAUBUNG	10288174	32	1	210	11 92 958 8	LUFTFUEHRUNG KPL
VERSCHRAUBUNG	10531725	616	1	83	11 24 773 5	AGGREGAT HYDR
VERSCHRAUBUNG	10597776	620	4	381	10 55 216 1	VERROHRUNG HYDR
VERSCHRAUBUNG	10663840	28	1	210	11 92 958 8	LUFTFUEHRUNG KPL

Bezeichnung	Artikel	Pos.	Menge	Blatt	Baugruppe	Bezeichnung
VERSCHRAUBUNG	10801399	17	2	284	10 14 511 2	ABGASSTUTZEN ANBAU
VERSCHRAUBUNG	10813933	9	2	261	10 14 588 5	LECKOELRUECKLAUF
VERSCHRAUBUNG	10813933	6	1	302	11 41 475 7	ANBAUTEILE LUFTPRESSER
VERSCHRAUBUNG	10813934	18	1	284	10 14 511 2	ABGASSTUTZEN ANBAU
VERSCHRAUBUNG	10813935	12	2	261	10 14 588 5	LECKOELRUECKLAUF
VERSCHRAUBUNG	10816958	65	1	204	11 92 923 6	ANLAGE HARNSTOFF EINBAU
VERSCHRAUBUNG	10872598	30	1	210	11 92 958 8	LUFTFUEHRUNG KPL
VERSCHRAUBUNG	11002988	4	1	251	10 15 278 7	DS HOCHDRUCKPUMPE
VERSCHRAUBUNG	11002988	9	1	260	10 14 333 9	KRAFTSTOFFLEITUNGEN
VERSCHRAUBUNG	11067653	8	2	201	10 55 091 1	KRAFTSTOFFVORFILTER AN
VERSCHRAUBUNG	11229464	3	1	201	10 55 091 1	KRAFTSTOFFVORFILTER AN
VERSCHRAUBUNG	11262806	10	1	59	11 26 557 2	MONTAGETEILE
VERSCHRAUBUNG	11262807	3	1	731	11 28 048 1	ANSCHLUSSTEILE
VERSCHRAUBUNG	11600199	38	1	210	11 92 958 8	LUFTFUEHRUNG KPL
VERSCHRAUBUNG	11910325	190	1	526	10 09 917 3	DOPPELWIRKZYL
VERSCHRAUBUNG	11926906	26	1	210	11 92 958 8	LUFTFUEHRUNG KPL
VERSCHRAUBUNG	247000902	90	4	204	11 92 923 6	ANLAGE HARNSTOFF EINBAU
VERSCHRAUBUNG	247000902	31	1	210	11 92 958 8	LUFTFUEHRUNG KPL
VERSCHRAUBUNG	247001802	613	2	687	10 51 973 8	SELBSTVERLADESYSTEM H
VERSCHRAUBUNG	247009202	649	6	12	11 29 618 6	OW HYDR
VERSCHRAUBUNG	247009202	606	2	83	11 24 773 5	AGGREGAT HYDR
VERSCHRAUBUNG	247009202	644	1	444	11 89 300 5	VERROHRUNG HYDR
VERSCHRAUBUNG	247009202	611	2	509	10 51 826 1	ANLENKSTUECK HYDR
VERSCHRAUBUNG	247009402	724	10	14	11 29 618 6	OW HYDR
VERSCHRAUBUNG	247009402	609	1	73	10 51 969 5	A-BOCK AUFRICHTZYL HYDR
VERSCHRAUBUNG	247009402	605	4	83	11 24 773 5	AGGREGAT HYDR
VERSCHRAUBUNG	247009402	606	1	341	10 51 969 8	NADELEINZIEHWINDE HYDR
VERSCHRAUBUNG	247009402	610	1	358	10 51 968 7	HAUPT EZW HYDR
VERSCHRAUBUNG	247009402	605	2	381	10 55 216 1	VERROHRUNG HYDR
VERSCHRAUBUNG	247009702	612	13	10	11 29 618 6	OW HYDR
VERSCHRAUBUNG	247009702	608	1	73	10 51 969 5	A-BOCK AUFRICHTZYL HYDR
VERSCHRAUBUNG	247009702	602	10	83	11 24 773 5	AGGREGAT HYDR
VERSCHRAUBUNG	247009702	21	1	199	11 24 114 4	KRAFTSTOFFANLAGE
VERSCHRAUBUNG	247009702	604	1	381	10 55 216 1	VERROHRUNG HYDR
VERSCHRAUBUNG	247009702	603	4	442	11 89 300 5	VERROHRUNG HYDR
VERSCHRAUBUNG	247009702	711	1	482	11 26 260 6	WINDE 1 HYDR
VERSCHRAUBUNG	247009702	711	1	497	11 26 261 1	WINDE 2 HYDR
VERSCHRAUBUNG	247009702	610	3	509	10 51 826 1	ANLENKSTUECK HYDR
VERSCHRAUBUNG	247009702	604	1	629	10 51 726 2	VERROHRUNG HYDR
VERSCHRAUBUNG	247009702	701	1	697	11 89 408 3	VERROHRUNG HYDR
VERSCHRAUBUNG	247009902	675	5	12	11 29 618 6	OW HYDR
VERSCHRAUBUNG	247009902	610	7	83	11 24 773 5	AGGREGAT HYDR
VERSCHRAUBUNG	247009902	601	6	442	11 89 300 5	VERROHRUNG HYDR
VERSCHRAUBUNG	247010102	611	4	10	11 29 618 6	OW HYDR
VERSCHRAUBUNG	247010102	604	4	83	11 24 773 5	AGGREGAT HYDR
VERSCHRAUBUNG	247010102	609	2	509	10 51 826 1	ANLENKSTUECK HYDR
VERSCHRAUBUNG	247011602	610	1	10	11 29 618 6	OW HYDR
VERSCHRAUBUNG	247011602	307	1	83	11 24 773 5	AGGREGAT HYDR
VERSCHRAUBUNG	247011602	22	1	199	11 24 114 4	KRAFTSTOFFANLAGE
VERSCHRAUBUNG	247011602	613	2	442	11 89 300 5	VERROHRUNG HYDR
VERSCHRAUBUNG	247011602	603	1	509	10 51 826 1	ANLENKSTUECK HYDR
VERSCHRAUBUNG	247020902	654	3	12	11 29 618 6	OW HYDR
VERSCHRAUBUNG	247020902	316	1	83	11 24 773 5	AGGREGAT HYDR
VERSCHRAUBUNG	247027002	716	1	14	11 29 618 6	OW HYDR
VERSCHRAUBUNG	247027202	609	1	10	11 29 618 6	OW HYDR
VERSCHRAUBUNG	247027302	718	2	14	11 29 618 6	OW HYDR
VERSCHRAUBUNG	247027302	84	2	204	11 92 923 6	ANLAGE HARNSTOFF EINBAU
VERSCHRAUBUNG	247027302	602	4	442	11 89 300 5	VERROHRUNG HYDR
VERSCHRAUBUNG	247027402	606	1	509	10 51 826 1	ANLENKSTUECK HYDR
VERSCHRAUBUNG	247040302	680	1	12	11 29 618 6	OW HYDR

Bezeichnung	Artikel	Pos.	Menge	Blatt	Baugruppe	Bezeichnung
VERSCHRAUBUNG	247040302	605	1	341	10 51 969 8	NADELEINZIEHWINDE HYDR
VERSCHRAUBUNG	247040902	739	2	14	11 29 618 6	OW HYDR
VERSCHRAUBUNG	247040902	85	2	204	11 92 923 6	ANLAGE HARNSTOFF EINBAU
VERSCHRAUBUNG	247041102	203	1	10	11 29 618 6	OW HYDR
VERSCHRAUBUNG	247041102	608	3	83	11 24 773 5	AGGREGAT HYDR
VERSCHRAUBUNG	247041102	39	1	210	11 92 958 8	LUFTFUEHRUNG KPL
VERSCHRAUBUNG	247041102	608	4	442	11 89 300 5	VERROHRUNG HYDR
VERSCHRAUBUNG	247041402	607	3	83	11 24 773 5	AGGREGAT HYDR
VERSCHRAUBUNG	247041502	749	2	14	11 29 618 6	OW HYDR
VERSCHRAUBUNG	247041502	82	2	204	11 92 923 6	ANLAGE HARNSTOFF EINBAU
VERSCHRAUBUNG	247042402	681	4	12	11 29 618 6	OW HYDR
VERSCHRAUBUNG	247042402	611	6	442	11 89 300 5	VERROHRUNG HYDR
VERSCHRAUBUNG	247042402	605	1	687	10 51 973 8	SELBSTVERLADESYSTEM H
VERSCHRAUBUNG	247042402	607	1	721	10 51 728 1	VERROHRUNG HYDR
VERSCHRAUBUNG	247042502	746	2	14	11 29 618 6	OW HYDR
VERSCHRAUBUNG	247042702	607	1	10	11 29 618 6	OW HYDR
VERSCHRAUBUNG	247042702	605	2	509	10 51 826 1	ANLENKSTUECK HYDR
VERSCHRAUBUNG	247043102	606	2	10	11 29 618 6	OW HYDR
VERSCHRAUBUNG	247043102	614	2	83	11 24 773 5	AGGREGAT HYDR
VERSCHRAUBUNG	247043102	23	2	199	11 24 114 4	KRAFTSTOFFANLAGE
VERSCHRAUBUNG	247043202	615	2	73	10 51 969 5	A-BOCK AUFRICHTZYL HYDR
VERSCHRAUBUNG	247043502	613	2	83	11 24 773 5	AGGREGAT HYDR
VERSCHRAUBUNG	247044302	652	2	83	11 24 773 5	AGGREGAT HYDR
VERSCHRAUBUNG	247048802	625	6	10	11 29 618 6	OW HYDR
VERSCHRAUBUNG	247048802	215	2	509	10 51 826 1	ANLENKSTUECK HYDR
VERSCHRAUBUNG	247049002	618	1	10	11 29 618 6	OW HYDR
VERSCHRAUBUNG	247049002	92	2	204	11 92 923 6	ANLAGE HARNSTOFF EINBAU
VERSCHRAUBUNG	247049002	22	1	442	11 89 300 5	VERROHRUNG HYDR
VERSCHRAUBUNG	247049102	627	2	10	11 29 618 6	OW HYDR
VERSCHRAUBUNG	247049102	617	1	83	11 24 773 5	AGGREGAT HYDR
VERSCHRAUBUNG	247049102	204	2	509	10 51 826 1	ANLENKSTUECK HYDR
VERSCHRAUBUNG	247049202	631	1	10	11 29 618 6	OW HYDR
VERSCHRAUBUNG	247091002	302	1	82	11 24 773 5	AGGREGAT HYDR
VERSCHRAUBUNG	247105602	732	1	14	11 29 618 6	OW HYDR
VERSCHRAUBUNG	247108302	734	4	14	11 29 618 6	OW HYDR
VERSCHRAUBUNG	247108302	612	8	83	11 24 773 5	AGGREGAT HYDR
VERSCHRAUBUNG	247108302	24	4	199	11 24 114 4	KRAFTSTOFFANLAGE
VERSCHRAUBUNG	247108302	641	1	444	11 89 300 5	VERROHRUNG HYDR
VERSCHRAUBUNG	247112702	624	9	10	11 29 618 6	OW HYDR
VERSCHRAUBUNG	247112702	202	2	73	10 51 969 5	A-BOCK AUFRICHTZYL HYDR
VERSCHRAUBUNG	247112702	686	4	83	11 24 773 5	AGGREGAT HYDR
VERSCHRAUBUNG	247112702	603	2	381	10 55 216 1	VERROHRUNG HYDR
VERSCHRAUBUNG	247112702	201	2	509	10 51 826 1	ANLENKSTUECK HYDR
VERSCHRAUBUNG	247112702	706	2	680	10 51 971 2	SELBSTVERLADESYSTEM H
VERSCHRAUBUNG	247116402	605	3	10	11 29 618 6	OW HYDR
VERSCHRAUBUNG	247116402	607	3	509	10 51 826 1	ANLENKSTUECK HYDR
VERSCHRAUBUNG	247117302	752	15	14	11 29 618 6	OW HYDR
VERSCHRAUBUNG	247117302	616	1	73	10 51 969 5	A-BOCK AUFRICHTZYL HYDR
VERSCHRAUBUNG	247117302	628	1	83	11 24 773 5	AGGREGAT HYDR
VERSCHRAUBUNG	247117302	600	4	381	10 55 216 1	VERROHRUNG HYDR
VERSCHRAUBUNG	247117302	707	2	680	10 51 971 2	SELBSTVERLADESYSTEM H
VERSCHRAUBUNG	247117302	203	1	687	10 51 973 8	SELBSTVERLADESYSTEM H
VERSCHRAUBUNG	247117302	705	2	697	11 89 408 3	VERROHRUNG HYDR
VERSCHRAUBUNG	247117702	704	9	14	11 29 618 6	OW HYDR
VERSCHRAUBUNG	247117702	308	1	83	11 24 773 5	AGGREGAT HYDR
VERSCHRAUBUNG	247117702	35	1	183	11 94 151 8	KUEHLER EINBAU WASSER
VERSCHRAUBUNG	247117702	88	1	204	11 92 923 6	ANLAGE HARNSTOFF EINBAU
VERSCHRAUBUNG	247117702	204	4	381	10 55 216 1	VERROHRUNG HYDR
VERSCHRAUBUNG	247117702	632	1	444	11 89 300 5	VERROHRUNG HYDR
VERSCHRAUBUNG	247121102	727	1	14	11 29 618 6	OW HYDR

Bezeichnung	Artikel	Pos.	Menge	Blatt	Baugruppe	Bezeichnung
VERSCHRAUBUNG	247126202	735	5	14	11 29 618 6	OW HYDR
VERSCHRAUBUNG	247126202	641	5	83	11 24 773 5	AGGREGAT HYDR
VERSCHRAUBUNG	247126202	83	3	204	11 92 923 6	ANLAGE HARNSTOFF EINBAU
VERSCHRAUBUNG	247126202	37	1	210	11 92 958 8	LUFTFUEHRUNG KPL
VERSCHRAUBUNG	247126202	610	3	442	11 89 300 5	VERROHRUNG HYDR
VERSCHRAUBUNG	247128402	626	8	10	11 29 618 6	OW HYDR
VERSCHRAUBUNG	247128402	627	6	83	11 24 773 5	AGGREGAT HYDR
VERSCHRAUBUNG	247128402	608	4	381	10 55 216 1	VERROHRUNG HYDR
VERSCHRAUBUNG	247128402	708	2	680	10 51 971 2	SELBSTVERLADESYSTEM H
VERSCHRAUBUNG	247128502	731	2	14	11 29 618 6	OW HYDR
VERSCHRAUBUNG	247128502	604	1	341	10 51 969 8	NADELEINZIEHWINDE HYDR
VERSCHRAUBUNG	247128502	605	4	442	11 89 300 5	VERROHRUNG HYDR
VERSCHRAUBUNG	247128502	614	1	629	10 51 726 2	VERROHRUNG HYDR
VERSCHRAUBUNG	247128602	653	4	12	11 29 618 6	OW HYDR
VERSCHRAUBUNG	247128602	625	1	83	11 24 773 5	AGGREGAT HYDR
VERSCHRAUBUNG	247128602	87	1	204	11 92 923 6	ANLAGE HARNSTOFF EINBAU
VERSCHRAUBUNG	247128602	605	1	358	10 51 968 7	HAUPT EZW HYDR
VERSCHRAUBUNG	247128602	602	1	381	10 55 216 1	VERROHRUNG HYDR
VERSCHRAUBUNG	247128602	648	2	444	11 89 300 5	VERROHRUNG HYDR
VERSCHRAUBUNG	247138602	729	3	14	11 29 618 6	OW HYDR
VERSCHRAUBUNG	247138602	692	1	84	11 24 773 5	AGGREGAT HYDR
VERSCHRAUBUNG	247138602	86	2	204	11 92 923 6	ANLAGE HARNSTOFF EINBAU
VERSCHRAUBUNG	247138602	609	4	442	11 89 300 5	VERROHRUNG HYDR
VERSCHRAUBUNG	247142002	653	2	83	11 24 773 5	AGGREGAT HYDR
VERSCHRAUBUNG	247232702	660	2	12	11 29 618 6	OW HYDR
VERSCHRAUBUNG	247242302	629	11	10	11 29 618 6	OW HYDR
VERSCHRAUBUNG	247242302	317	1	83	11 24 773 5	AGGREGAT HYDR
VERSCHRAUBUNG	247242302	638	2	444	11 89 300 5	VERROHRUNG HYDR
VERSCHRAUBUNG	247261802	708	3	14	11 29 618 6	OW HYDR
VERSCHRAUBUNG	247261802	621	1	83	11 24 773 5	AGGREGAT HYDR
VERSCHRAUBUNG	470002414	700	1	502	91 90 239 14	LEITUNG HYDR
VERSCHRAUBUNG	470400701	11	1	352	93 36 755 01	OELMESSEINRICHTUNG
VERSCHRAUBUNG	470400701	26	1	352	93 36 755 01	OELMESSEINRICHTUNG
VERSCHRAUBUNG	470701414	691	1	84	11 24 773 5	AGGREGAT HYDR
VERSCHRAUBUNG	470702001	6	1	352	93 36 755 01	OELMESSEINRICHTUNG
VERSCHRAUBUNG	470905214	36	1	183	11 94 151 8	KUEHLER EINBAU WASSER
VERSCHRAUBUNG	470905714	37	3	183	11 94 151 8	KUEHLER EINBAU WASSER
VERSCHRAUBUNG	471004514	602	11	10	11 29 618 6	OW HYDR
VERSCHRAUBUNG	471004514	605	1	73	10 51 969 5	A-BOCK AUFRICHTZYL HYDR
VERSCHRAUBUNG	471004514	620	1	83	11 24 773 5	AGGREGAT HYDR
VERSCHRAUBUNG	471004514	617	6	444	11 89 300 5	VERROHRUNG HYDR
VERSCHRAUBUNG	471004514	703	2	680	10 51 971 2	SELBSTVERLADESYSTEM H
VERSCHRAUBUNG	471004514	611	1	687	10 51 973 8	SELBSTVERLADESYSTEM H
VERSCHRAUBUNG	471004514	605	2	721	10 51 728 1	VERROHRUNG HYDR
VERSCHRAUBUNG	471004614	619	2	83	11 24 773 5	AGGREGAT HYDR
VERSCHRAUBUNG	471004614	603	2	341	10 51 969 8	NADELEINZIEHWINDE HYDR
VERSCHRAUBUNG	471004614	607	2	358	10 51 968 7	HAUPT EZW HYDR
VERSCHRAUBUNG	471004614	618	2	444	11 89 300 5	VERROHRUNG HYDR
VERSCHRAUBUNG	471004614	708	1	482	11 26 260 6	WINDE 1 HYDR
VERSCHRAUBUNG	471004614	708	1	497	11 26 261 1	WINDE 2 HYDR
VERSCHRAUBUNG	471007014	706	4	14	11 29 618 6	OW HYDR
VERSCHRAUBUNG	471007014	619	1	381	10 55 216 1	VERROHRUNG HYDR
VERSCHRAUBUNG	471007914	315	1	83	11 24 773 5	AGGREGAT HYDR
VERSCHRAUBUNG	471008014	677	3	83	11 24 773 5	AGGREGAT HYDR
VERSCHRAUBUNG	471008214	601	3	10	11 29 618 6	OW HYDR
VERSCHRAUBUNG	471008214	611	8	83	11 24 773 5	AGGREGAT HYDR
VERSCHRAUBUNG	471008214	612	8	442	11 89 300 5	VERROHRUNG HYDR
VERSCHRAUBUNG	471008214	709	1	482	11 26 260 6	WINDE 1 HYDR
VERSCHRAUBUNG	471008214	709	1	497	11 26 261 1	WINDE 2 HYDR
VERSCHRAUBUNG	471016401	590	2	86	11 24 682 0	VERTEILERGETRIEBE

Bezeichnung	Artikel	Pos.	Menge	Blatt	Baugruppe	Bezeichnung
VERSCHRAUBUNG	471030508	600	3	10	11 29 618 6	OW HYDR
VERSCHRAUBUNG	471030508	678	1	83	11 24 773 5	AGGREGAT HYDR
VERSCHRAUBUNG	471030708	737	1	14	11 29 618 6	OW HYDR
VERSCHRAUBUNG	471030708	710	1	482	11 26 260 6	WINDE 1 HYDR
VERSCHRAUBUNG	471030708	710	1	497	11 26 261 1	WINDE 2 HYDR
VERSCHRAUBUNG	471031108	672	1	83	11 24 773 5	AGGREGAT HYDR
VERSCHRAUBUNG	471031108	33	2	210	11 92 958 8	LUFTFUEHRUNG KPL
VERSCHRAUBUNG	471031108	654	1	444	11 89 300 5	VERROHRUNG HYDR
VERSCHRAUBUNG	471031308	632	2	83	11 24 773 5	AGGREGAT HYDR
VERSCHRAUBUNG	471031308	34	1	210	11 92 958 8	LUFTFUEHRUNG KPL
VERSCHRAUBUNG	471031308	616	2	444	11 89 300 5	VERROHRUNG HYDR
VERSCHRAUBUNG	471031508	631	3	83	11 24 773 5	AGGREGAT HYDR
VERSCHRAUBUNG	471031508	81	2	204	11 92 923 6	ANLAGE HARNSTOFF EINBAU
VERSCHRAUBUNG	471031808	680	2	83	11 24 773 5	AGGREGAT HYDR
VERSCHRAUBUNG	471032108	610	2	687	10 51 973 8	SELBSTVERLADESYSTEM H
VERSCHRAUBUNG	471032608	622	1	10	11 29 618 6	OW HYDR
VERSCHRAUBUNG	471032608	604	2	73	10 51 969 5	A-BOCK AUFRICHTZYL HYDR
VERSCHRAUBUNG	471032608	615	6	442	11 89 300 5	VERROHRUNG HYDR
VERSCHRAUBUNG	471032608	606	2	525	10 51 959 1	VERROHRUNG HYDR
VERSCHRAUBUNG	471032608	700	8	703	11 23 524 8	VERROHRUNG HYDR
VERSCHRAUBUNG	471032608	600	1	709	10 55 459 4	VERROHRUNG HYDR
VERSCHRAUBUNG	471032708	658	4	12	11 29 618 6	OW HYDR
VERSCHRAUBUNG	471032708	603	2	73	10 51 969 5	A-BOCK AUFRICHTZYL HYDR
VERSCHRAUBUNG	471032708	600	24	442	11 89 300 5	VERROHRUNG HYDR
VERSCHRAUBUNG	471032708	627	2	525	10 51 959 1	VERROHRUNG HYDR
VERSCHRAUBUNG	471032708	704	2	680	10 51 971 2	SELBSTVERLADESYSTEM H
VERSCHRAUBUNG	471032708	703	8	697	11 89 408 3	VERROHRUNG HYDR
VERSCHRAUBUNG	471032708	609	1	721	10 51 728 1	VERROHRUNG HYDR
VERSCHRAUBUNG	471032808	621	27	10	11 29 618 6	OW HYDR
VERSCHRAUBUNG	471032808	630	3	83	11 24 773 5	AGGREGAT HYDR
VERSCHRAUBUNG	471032808	602	3	341	10 51 969 8	NADELEINZIEHWINDE HYDR
VERSCHRAUBUNG	471032808	609	3	358	10 51 968 7	HAUPT EZW HYDR
VERSCHRAUBUNG	471032808	622	2	444	11 89 300 5	VERROHRUNG HYDR
VERSCHRAUBUNG	471032808	701	1	502	91 90 239 14	LEITUNG HYDR
VERSCHRAUBUNG	471032808	600	1	721	10 51 728 1	VERROHRUNG HYDR
VERSCHRAUBUNG	471032908	616	1	10	11 29 618 6	OW HYDR
VERSCHRAUBUNG	471033014	629	1	83	11 24 773 5	AGGREGAT HYDR
VERSCHRAUBUNG	471033014	601	1	341	10 51 969 8	NADELEINZIEHWINDE HYDR
VERSCHRAUBUNG	471033014	651	2	444	11 89 300 5	VERROHRUNG HYDR
VERSCHRAUBUNG	471033014	602	2	629	10 51 726 2	VERROHRUNG HYDR
VERSCHRAUBUNG	471033114	707	1	14	11 29 618 6	OW HYDR
VERSCHRAUBUNG	471033214	722	2	14	11 29 618 6	OW HYDR
VERSCHRAUBUNG	471033214	636	1	444	11 89 300 5	VERROHRUNG HYDR
VERSCHRAUBUNG	471033214	608	3	509	10 51 826 1	ANLENKSTUECK HYDR
VERSCHRAUBUNG	471033214	605	3	525	10 51 959 1	VERROHRUNG HYDR
VERSCHRAUBUNG	471033214	603	2	629	10 51 726 2	VERROHRUNG HYDR
VERSCHRAUBUNG	471033214	709	2	680	10 51 971 2	SELBSTVERLADESYSTEM H
VERSCHRAUBUNG	471033214	704	1	697	11 89 408 3	VERROHRUNG HYDR
VERSCHRAUBUNG	471033314	606	1	358	10 51 968 7	HAUPT EZW HYDR
VERSCHRAUBUNG	471033414	725	1	14	11 29 618 6	OW HYDR
VERSCHRAUBUNG	471033614	738	1	14	11 29 618 6	OW HYDR
VERSCHRAUBUNG	471034414	726	2	14	11 29 618 6	OW HYDR
VERSCHRAUBUNG	471034414	612	2	381	10 55 216 1	VERROHRUNG HYDR
VERSCHRAUBUNG	471034414	604	2	509	10 51 826 1	ANLENKSTUECK HYDR
VERSCHRAUBUNG	471034708	672	4	12	11 29 618 6	OW HYDR
VERSCHRAUBUNG	471034708	637	1	83	11 24 773 5	AGGREGAT HYDR
VERSCHRAUBUNG	471034714	25	2	199	11 24 114 4	KRAFTSTOFFANLAGE
VERSCHRAUBUNG	471034714	607	1	341	10 51 969 8	NADELEINZIEHWINDE HYDR
VERSCHRAUBUNG	471036014	652	2	444	11 89 300 5	VERROHRUNG HYDR
VERSCHRAUBUNG	471039408	612	1	358	10 51 968 7	HAUPT EZW HYDR

Bezeichnung	Artikel	Pos.	Menge	Blatt	Baugruppe	Bezeichnung
VERSCHRAUBUNG	471039408	611	2	381	10 55 216 1	VERROHRUNG HYDR
VERSCHRAUBUNG	471039708	618	2	381	10 55 216 1	VERROHRUNG HYDR
VERSCHRAUBUNG	471039708	600	1	629	10 51 726 2	VERROHRUNG HYDR
VERSCHRAUBUNG	471039908	635	3	83	11 24 773 5	AGGREGAT HYDR
VERSCHRAUBUNG	471039908	42	1	210	11 92 958 8	LUFTFUEHRUNG KPL
VERSCHRAUBUNG	471039908	655	2	444	11 89 300 5	VERROHRUNG HYDR
VERSCHRAUBUNG	471100114	617	3	10	11 29 618 6	OW HYDR
VERSCHRAUBUNG	471100114	604	2	525	10 51 959 1	VERROHRUNG HYDR
VERSCHRAUBUNG	471100414	608	2	10	11 29 618 6	OW HYDR
VERSCHRAUBUNG	471100614	620	2	444	11 89 300 5	VERROHRUNG HYDR
VERSCHRAUBUNG	471100714	756	1	14	11 29 618 6	OW HYDR
VERSCHRAUBUNG	471100714	603	1	525	10 51 959 1	VERROHRUNG HYDR
VERSCHRAUBUNG	472001401	4	1	352	93 36 755 01	OELMESSEINRICHTUNG
VERSCHRAUBUNG	472531508	723	1	14	11 29 618 6	OW HYDR
VERSCHRAUBUNG	472531508	624	2	525	10 51 959 1	VERROHRUNG HYDR
VERSCHRAUBUNG	472531508	608	3	687	10 51 973 8	SELBSTVERLADESYSTEM H
VERSCHRAUBUNG	473201101	3	1	352	93 36 755 01	OELMESSEINRICHTUNG
VERSCHRAUBUNG	473201101	22	1	352	93 36 755 01	OELMESSEINRICHTUNG
VERSCHRAUBUNG	473210214	632	1	525	10 51 959 1	VERROHRUNG HYDR
VERSCHRAUBUNG	473210214	607	3	687	10 51 973 8	SELBSTVERLADESYSTEM H
VERSCHRAUBUNG	473210214	700	1	697	11 89 408 3	VERROHRUNG HYDR
VERSCHRAUBUNG	473231214	633	1	525	10 51 959 1	VERROHRUNG HYDR
VERSCHRAUBUNG	474001214	760	1	14	11 29 618 6	OW HYDR
VERSCHRAUBUNG	474002314	620	4	10	11 29 618 6	OW HYDR
VERSCHRAUBUNG	474002414	744	2	14	11 29 618 6	OW HYDR
VERSCHRAUBUNG	474002414	614	4	442	11 89 300 5	VERROHRUNG HYDR
VERSCHRAUBUNG	474032614	628	3	10	11 29 618 6	OW HYDR
VERSCHRAUBUNG	474032614	602	4	509	10 51 826 1	ANLENKSTUECK HYDR
VERSCHRAUBUNG	474032614	600	8	525	10 51 959 1	VERROHRUNG HYDR
VERSCHRAUBUNG	474032714	650	2	12	11 29 618 6	OW HYDR
VERSCHRAUBUNG	474032914	636	2	10	11 29 618 6	OW HYDR
VERSCHRAUBUNG	474033014	719	4	14	11 29 618 6	OW HYDR
VERSCHRAUBUNG	474033014	647	8	444	11 89 300 5	VERROHRUNG HYDR
VERSCHRAUBUNG	474033014	714	2	482	11 26 260 6	WINDE 1 HYDR
VERSCHRAUBUNG	474033014	714	2	497	11 26 261 1	WINDE 2 HYDR
VERSCHRAUBUNG	474033014	601	4	509	10 51 826 1	ANLENKSTUECK HYDR
VERSCHRAUBUNG	475002514	628	2	525	10 51 959 1	VERROHRUNG HYDR
VERSCHRAUBUNG	475033014	609	3	687	10 51 973 8	SELBSTVERLADESYSTEM H
VERSCHRAUBUNG	475033614	619	1	525	10 51 959 1	VERROHRUNG HYDR
VERSCHRAUBUNG	475501414	635	2	10	11 29 618 6	OW HYDR
VERSCHRAUBUNG	475501414	604	4	442	11 89 300 5	VERROHRUNG HYDR
VERSCHRAUBUNG	475501914	685	1	83	11 24 773 5	AGGREGAT HYDR
VERSCHRAUBUNG	475501914	606	1	687	10 51 973 8	SELBSTVERLADESYSTEM H
VERSCHRAUBUNG	475502514	625	4	444	11 89 300 5	VERROHRUNG HYDR
VERSCHRAUBUNG	475503314	212	2	509	10 51 826 1	ANLENKSTUECK HYDR
VERSCHRAUBUNG	476608008	39	1	183	11 94 151 8	KUEHLER EINBAU WASSER
VERSCHRAUBUNG	477102814	91	2	204	11 92 923 6	ANLAGE HARNSTOFF EINBAU
VERSCHRAUBUNG	477400314	690	2	84	11 24 773 5	AGGREGAT HYDR
VERSCHRAUBUNG	477400314	702	1	502	91 90 239 14	LEITUNG HYDR
VERSCHRAUBUNG	477400414	673	1	525	10 51 959 1	VERROHRUNG HYDR
VERSCHRAUBUNG	477400414	605	8	703	11 23 524 8	VERROHRUNG HYDR
VERSCHRAUBUNG	477400614	208	2	509	10 51 826 1	ANLENKSTUECK HYDR
VERSCHRAUBUNG	477400714	633	2	10	11 29 618 6	OW HYDR
VERSCHRAUBUNG	477400814	624	4	381	10 55 216 1	VERROHRUNG HYDR
VERSCHRAUBUNG	477401014	202	4	509	10 51 826 1	ANLENKSTUECK HYDR
VERSCHRAUBUNG	477401814	46	1	8	11 29 618 6	OW HYDR
VERSCHRAUBUNG	477430614	41	2	210	11 92 958 8	LUFTFUEHRUNG KPL
VERSCHRAUBUNG	477700114	639	2	10	11 29 618 6	OW HYDR
VERSCHRAUBUNG	477700114	655	1	83	11 24 773 5	AGGREGAT HYDR
VERSCHRAUBUNG	477700114	214	2	509	10 51 826 1	ANLENKSTUECK HYDR

Bezeichnung	Artikel	Pos.	Menge	Blatt	Baugruppe	Bezeichnung
VERSCHRAUBUNG	477700214	619	1	10	11 29 618 6	OW HYDR
VERSCHRAUBUNG	477700214	23	1	442	11 89 300 5	VERROHRUNG HYDR
VERSCHRAUBUNG	477700414	689	2	84	11 24 773 5	AGGREGAT HYDR
VERSCHRAUBUNG	477700414	703	1	502	91 90 239 14	LEITUNG HYDR
VERSCHRAUBUNG	477700514	638	6	10	11 29 618 6	OW HYDR
VERSCHRAUBUNG	477700514	213	2	509	10 51 826 1	ANLENKSTUECK HYDR
VERSCHRAUBUNG	477700514	202	1	525	10 51 959 1	VERROHRUNG HYDR
VERSCHRAUBUNG	477700514	606	8	703	11 23 524 8	VERROHRUNG HYDR
VERSCHRAUBUNG	477700714	47	1	8	11 29 618 6	OW HYDR
VERSCHRAUBUNG	477700814	634	1	10	11 29 618 6	OW HYDR
VERSCHRAUBUNG	477701114	207	2	509	10 51 826 1	ANLENKSTUECK HYDR
VERSCHRAUBUNG	477701414	632	2	10	11 29 618 6	OW HYDR
VERSCHRAUBUNG	477701514	625	4	381	10 55 216 1	VERROHRUNG HYDR
VERSCHRAUBUNG	477701814	211	4	509	10 51 826 1	ANLENKSTUECK HYDR
VERSCHRAUBUNG	477704514	40	1	210	11 92 958 8	LUFTFUEHRUNG KPL
VERSCHRAUBUNG	477704514	78	1	392	90 01 376 2	DREHWERKANTRIEB
VERSCHRAUBUNG	477704514	650	1	444	11 89 300 5	VERROHRUNG HYDR
VERSCHRAUBUNG	477704614	720	3	14	11 29 618 6	OW HYDR
VERSCHRAUBUNG	477704614	19	1	48	10 56 070 1	TANK HYDR KPL
VERSCHRAUBUNG	477704614	17	5	53	10 56 073 3	KRAFTSTOFFTANK KPL
VERSCHRAUBUNG	477704614	300	1	82	11 24 773 5	AGGREGAT HYDR
VERSCHRAUBUNG	477704914	306	1	83	11 24 773 5	AGGREGAT HYDR
VERSCHRAUBUNG	477704914	32	1	179	10 57 532 2	ANSAUGROHR OEL KPL
VERSCHRAUBUNG	477704914	38	4	183	11 94 151 8	KUEHLER EINBAU WASSER
VERSCHRAUBUNG	477704914	64	2	194	11 92 922 0	ANSAUGANLAGE LUFT
VERSCHRAUBUNG	477705114	202	1	358	10 51 968 7	HAUPT EZW HYDR
VERSCHRAUBUNG	477705214	80	1	204	11 92 923 6	ANLAGE HARNSTOFF EINBAU
VERSCHRAUBUNG	481930314	612	1	687	10 51 973 8	SELBSTVERLADESYSTEM H
VERSCHRAUBUNG	481930414	630	3	10	11 29 618 6	OW HYDR
VERSCHRAUBUNG	481930414	624	2	444	11 89 300 5	VERROHRUNG HYDR
VERSCHRAUBUNG	481930414	704	1	502	91 90 239 14	LEITUNG HYDR
VERSCHRAUBUNG	481930514	703	1	482	11 26 260 6	WINDE 1 HYDR
VERSCHRAUBUNG	481930514	703	1	497	11 26 261 1	WINDE 2 HYDR
VERSCHRAUBUNG	481930614	622	1	525	10 51 959 1	VERROHRUNG HYDR
VERSCHRAUBUNG	481930714	604	1	687	10 51 973 8	SELBSTVERLADESYSTEM H
VERSCHRAUBUNG	481931114	761	1	14	11 29 618 6	OW HYDR
VERSCHRAUBUNG	481931614	687	1	84	11 24 773 5	AGGREGAT HYDR
VERSCHRAUBUNG	481933014	623	4	444	11 89 300 5	VERROHRUNG HYDR
VERSCHRAUBUNG	481933614	319	1	83	11 24 773 5	AGGREGAT HYDR
VERSCHRAUBUNG	482330814	730	2	14	11 29 618 6	OW HYDR
VERSCHRAUBUNG	482330814	675	1	83	11 24 773 5	AGGREGAT HYDR
VERSCHRAUBUNG	482331114	603	3	687	10 51 973 8	SELBSTVERLADESYSTEM H
VERSCHRAUBUNG	482331914	721	3	14	11 29 618 6	OW HYDR
VERSCHRAUBUNG	482331914	600	2	509	10 51 826 1	ANLENKSTUECK HYDR
VERSCHRAUBUNG	482430314	693	1	12	11 29 618 6	OW HYDR
VERSCHRAUBUNG	482430314	201	1	381	10 55 216 1	VERROHRUNG HYDR
VERSCHRAUBUNG	482430614	606	2	442	11 89 300 5	VERROHRUNG HYDR
VERSCHRAUBUNG	482431214	602	1	687	10 51 973 8	SELBSTVERLADESYSTEM H
VERSCHRAUBUNG	482431314	204	1	10	11 29 618 6	OW HYDR
VERSCHRAUBUNG	482431314	643	2	83	11 24 773 5	AGGREGAT HYDR
VERSCHRAUBUNG	482431314	705	1	482	11 26 260 6	WINDE 1 HYDR
VERSCHRAUBUNG	482431314	705	1	497	11 26 261 1	WINDE 2 HYDR
VERSCHRAUBUNG	482431414	706	1	482	11 26 260 6	WINDE 1 HYDR
VERSCHRAUBUNG	482431414	706	1	497	11 26 261 1	WINDE 2 HYDR
VERSCHRAUBUNG	482431514	671	1	525	10 51 959 1	VERROHRUNG HYDR
VERSCHRAUBUNG	482431714	623	4	381	10 55 216 1	VERROHRUNG HYDR
VERSCHRAUBUNG	482530814	755	2	14	11 29 618 6	OW HYDR
VERSCHRAUBUNG	482530814	660	1	83	11 24 773 5	AGGREGAT HYDR
VERSCHRAUBUNG	482530914	736	1	14	11 29 618 6	OW HYDR
VERSCHRAUBUNG	482530914	301	2	82	11 24 773 5	AGGREGAT HYDR

Bezeichnung	Artikel	Pos.	Menge	Blatt	Baugruppe	Bezeichnung
VERSCHRAUBUNG	482531614	615	1	10	11 29 618 6	OW HYDR
VERSCHRAUBUNG	482531814	652	2	12	11 29 618 6	OW HYDR
VERSCHRAUBUNG	482531814	649	4	444	11 89 300 5	VERROHRUNG HYDR
VERSCHRAUBUNG	485430714	748	1	14	11 29 618 6	OW HYDR
VERSCHRAUBUNG	485431214	714	2	14	11 29 618 6	OW HYDR
VERSCHRAUBUNG	485431214	683	3	83	11 24 773 5	AGGREGAT HYDR
VERSCHRAUBUNG	485431314	666	4	12	11 29 618 6	OW HYDR
VERSCHRAUBUNG	485431414	205	1	10	11 29 618 6	OW HYDR
VERSCHRAUBUNG	485432814	759	1	14	11 29 618 6	OW HYDR
VERSCHRAUBUNG	485433314	684	1	83	11 24 773 5	AGGREGAT HYDR
VERSCHRAUBUNG	485433314	713	2	482	11 26 260 6	WINDE 1 HYDR
VERSCHRAUBUNG	485433314	713	2	497	11 26 261 1	WINDE 2 HYDR
VERSCHRAUBUNG	485433314	613	8	525	10 51 959 1	VERROHRUNG HYDR
VERSCHRAUBUNG	485433314	615	2	629	10 51 726 2	VERROHRUNG HYDR
VERSCHRAUBUNG	485433314	710	2	680	10 51 971 2	SELBSTVERLADESYSTEM H
VERSCHRAUBUNG	485433414	758	1	14	11 29 618 6	OW HYDR
VERSCHRAUBUNG	485433414	705	1	502	91 90 239 14	LEITUNG HYDR
VERSCHRAUBUNG	485433414	629	2	525	10 51 959 1	VERROHRUNG HYDR
VERSCHRAUBUNG	485433514	610	1	73	10 51 969 5	A-BOCK AUFRICHTZYL HYDR
VERSCHRAUBUNG	485433514	630	1	525	10 51 959 1	VERROHRUNG HYDR
VERSCHRAUBUNG	485434214	747	1	14	11 29 618 6	OW HYDR
VERSCHRAUBUNG	485435014	651	2	12	11 29 618 6	OW HYDR
VERSCHRAUBUNG	485435714	713	1	14	11 29 618 6	OW HYDR
VERSCHRAUBUNG	485436414	629	2	444	11 89 300 5	VERROHRUNG HYDR
VERSCHRAUBUNG	485436414	617	1	629	10 51 726 2	VERROHRUNG HYDR
VERSCHRAUBUNG	485437514	313	1	83	11 24 773 5	AGGREGAT HYDR
VERSCHRAUBUNG	491033414	601	1	687	10 51 973 8	SELBSTVERLADESYSTEM H
VERSCHRAUBUNG	491101214	757	1	14	11 29 618 6	OW HYDR
VERSCHRAUBUNG	4981232	1	2	263	10 14 179 0	ANSCHLUSSSTUECK VORM.
VERSCHRAUBUNG	4981235	3	1	228	10 14 591 9	OELMESSSTAB MIT ROHR
VERSCHRAUBUNG	4981235	10	1	283	10 14 013 6	ATL-ANBAU
VERSCHRAUBUNG	510701214	745	1	14	11 29 618 6	OW HYDR
VERSCHRAUBUNG	510701314	677	2	12	11 29 618 6	OW HYDR
VERSCHRAUBUNG	510701914	711	2	14	11 29 618 6	OW HYDR
VERSCHRAUBUNG	510702014	742	1	14	11 29 618 6	OW HYDR
VERSCHRAUBUNG	510702414	712	1	14	11 29 618 6	OW HYDR
VERSCHRAUBUNG	510702414	702	1	482	11 26 260 6	WINDE 1 HYDR
VERSCHRAUBUNG	510703914	740	1	14	11 29 618 6	OW HYDR
VERSCHRAUBUNG	510704614	664	1	12	11 29 618 6	OW HYDR
VERSCHRAUBUNG	510709114	600	1	687	10 51 973 8	SELBSTVERLADESYSTEM H
VERSCHRAUBUNG	510709214	679	1	83	11 24 773 5	AGGREGAT HYDR
VERSCHRAUBUNG	592286514	36	1	415	10 35 008 0	KABINE
VERSCHRAUBUNG	592286514	11	5	419	10 35 007 6	SCHIEBETUER
VERSCHRAUBUNG	7021521	19	1	283	10 14 013 6	ATL-ANBAU
VERSCHRAUBUNG	7027665	10	1	230	10 14 671 6	OELLEITUNG VORM.
VERSCHRAUBUNG	7362091	603	12	10	11 29 618 6	OW HYDR
VERSCHRAUBUNG	7362091	614	1	73	10 51 969 5	A-BOCK AUFRICHTZYL HYDR
VERSCHRAUBUNG	7362091	314	1	83	11 24 773 5	AGGREGAT HYDR
VERSCHRAUBUNG	7362091	637	2	444	11 89 300 5	VERROHRUNG HYDR
VERSCHRAUBUNG	7365616	653	2	444	11 89 300 5	VERROHRUNG HYDR
VERSCHRAUBUNG	7367776	613	12	10	11 29 618 6	OW HYDR
VERSCHRAUBUNG	7367776	603	4	83	11 24 773 5	AGGREGAT HYDR
VERSCHRAUBUNG	7367776	610	1	341	10 51 969 8	NADELEINZIEHWINDE HYDR
VERSCHRAUBUNG	7367776	611	1	358	10 51 968 7	HAUPT EZW HYDR
VERSCHRAUBUNG	7367776	621	4	444	11 89 300 5	VERROHRUNG HYDR
VERSCHRAUBUNG	7367776	704	1	482	11 26 260 6	WINDE 1 HYDR
VERSCHRAUBUNG	7367776	704	1	497	11 26 261 1	WINDE 2 HYDR
VERSCHRAUBUNG	7367776	614	1	525	10 51 959 1	VERROHRUNG HYDR
VERSCHRAUBUNG	7367986	670	3	12	11 29 618 6	OW HYDR
VERSCHRAUBUNG	7403569	202	3	381	10 55 216 1	VERROHRUNG HYDR

Bezeichnung	Artikel	Pos.	Menge	Blatt	Baugruppe	Bezeichnung
VERSCHRAUBUNG	7407098	608	8	525	10 51 959 1	VERROHRUNG HYDR
VERSCHRAUBUNG	7407098	616	2	629	10 51 726 2	VERROHRUNG HYDR
VERSCHRAUBUNG	7407108	305	1	83	11 24 773 5	AGGREGAT HYDR
VERSCHRAUBUNG	7407108	603	1	358	10 51 968 7	HAUPT EZW HYDR
VERSCHRAUBUNG	7407108	707	1	482	11 26 260 6	WINDE 1 HYDR
VERSCHRAUBUNG	7407108	707	1	497	11 26 261 1	WINDE 2 HYDR
VERSCHRAUBUNG	7410455	640	2	12	11 29 618 6	OW HYDR
VERSCHRAUBUNG	7410455	643	8	444	11 89 300 5	VERROHRUNG HYDR
VERSCHRAUBUNG	7617268	703	13	14	11 29 618 6	OW HYDR
VERSCHRAUBUNG	7617268	612	1	73	10 51 969 5	A-BOCK AUFRICHTZYL HYDR
VERSCHRAUBUNG	7617268	676	3	83	11 24 773 5	AGGREGAT HYDR
VERSCHRAUBUNG	7617268	613	1	358	10 51 968 7	HAUPT EZW HYDR
VERSCHRAUBUNG	7617268	628	6	444	11 89 300 5	VERROHRUNG HYDR
VERSCHRAUBUNG	7617268	602	3	721	10 51 728 1	VERROHRUNG HYDR
VERSCHRAUBUNG	7617354	611	1	73	10 51 969 5	A-BOCK AUFRICHTZYL HYDR
VERSCHRAUBUNG	7617354	634	11	444	11 89 300 5	VERROHRUNG HYDR
VERSCHRAUBUNG	7617354	611	7	525	10 51 959 1	VERROHRUNG HYDR
VERSCHRAUBUNG	7617354	702	4	680	10 51 971 2	SELBSTVERLADESYSTEM H
VERSCHRAUBUNG	7617354	601	1	709	10 55 459 4	VERROHRUNG HYDR
VERSCHRAUBUNG	7617354	608	1	721	10 51 728 1	VERROHRUNG HYDR
VERSCHRAUBUNG	7617460	705	1	14	11 29 618 6	OW HYDR
VERSCHRAUBUNG	7617460	613	1	73	10 51 969 5	A-BOCK AUFRICHTZYL HYDR
VERSCHRAUBUNG	7617460	635	2	444	11 89 300 5	VERROHRUNG HYDR
VERSCHRAUBUNG	7617460	626	2	525	10 51 959 1	VERROHRUNG HYDR
VERSCHRAUBUNG	7617461	673	3	12	11 29 618 6	OW HYDR
VERSCHRAUBUNG	7617461	600	1	73	10 51 969 5	A-BOCK AUFRICHTZYL HYDR
VERSCHRAUBUNG	7617461	633	3	444	11 89 300 5	VERROHRUNG HYDR
VERSCHRAUBUNG	7617461	623	2	525	10 51 959 1	VERROHRUNG HYDR
VERSCHRAUBUNG	7617461	700	2	680	10 51 971 2	SELBSTVERLADESYSTEM H
VERSCHRAUBUNG	7617494	678	2	12	11 29 618 6	OW HYDR
VERSCHRAUBUNG	7617494	303	1	83	11 24 773 5	AGGREGAT HYDR
VERSCHRAUBUNG	7621827	36	1	210	11 92 958 8	LUFTFUEHRUNG KPL
VERSCHRAUBUNG	7622060	712	2	482	11 26 260 6	WINDE 1 HYDR
VERSCHRAUBUNG	7622060	712	2	497	11 26 261 1	WINDE 2 HYDR
VERSCHRAUBUNG	790259414	612	1	629	10 51 726 2	VERROHRUNG HYDR
VERSCHRAUBUNG	790453814	614	1	10	11 29 618 6	OW HYDR
VERSCHRAUBUNG	790453814	648	3	83	11 24 773 5	AGGREGAT HYDR
VERSCHRAUBUNG KPL	11253240	900	1	109	90 74 418	REGELVENTIL
VERSTAERKUNGSPLATTE	10350084	11	4	520	99 34 198 14	SCHILD LIEBHERR
VERSTELLKOLBEN	10287733	1	1	167	10 28 766 5	VERSTELLTEIL
VERSTELLTEIL	10287665	2	1	165	11 21 593 6	PUMPENELEMENT
VERSTELLUNG	11219905	2	1	87	10 53 430 7	V.PUMPE
VERSTELLUNG	11224738	2	1	447	51 24 059 14	V.MOTOR
VERTEILERBLOCK	10151825	5	1	260	10 14 333 9	KRAFTSTOFFLEITUNGEN
VERTEILERGETRIEBE	11246820	1	1	82	11 24 773 5	AGGREGAT HYDR
VERZURRUNG BALLAST	992980314	13	1	334	99 23 386 14	BALLASTGEWICHT ANORD
VERZURRUNG OW	991804114	13	1	437	10 51 969 6	VERBINDUNG OW UW
VIDEOUEBERWACHUNGSANL	10580647	11	1	713	11 89 400 8	VIDEOUEBERWACHUNGSANL
VIDEOUEBERWACHUNGSANL	11894008	704	1	4	01 38 406 14	LR 1300 SX
VIERKANTROHR	10557117	5	1	685	11 23 619 7	SELBSTVERLADESYSTEM NR
VIERKANTROHR	11278507	1	1	583	11 28 357 6	MONTAGETEILE
VIERLIPPENDICHTUNG	10099037	1	24	23	10 52 459 5	DS
VIERLIPPENDICHTUNG	11301682	2	10	23	10 52 459 5	DS
VORREIBER	10581486	15	1	320	10 57 940 0	TUER
VORSCHLAGHAMMER 5000G	885040114	13	1	501	10 56 183 8	WERKZEUG
WAELZLAGER	10522848	24	1	590	79 03 861 14	LASTHAKEN
WAELZLAGER	10573891	11	1	601	11 27 148 8	AUFHAENGUNG
WAELZLAGER	10574043	3	1	595	11 27 463 8	AUFHAENGUNG
WAERMETAUSCHER	10446225	14	1	82	11 24 773 5	AGGREGAT HYDR
WAERMETAUSCHER	10512662	40	1	428	11 93 934 6	KLIMAANLAGE

Bezeichnung	Artikel	Pos.	Menge	Blatt	Baugruppe	Bezeichnung
WAERMETAUSCHER	11236707	1	1	725	11 21 750 0	VERFLUESSIGER
WARNLICHT EL NRS	11215298	3	1	654	11 21 546 1	HELILEUCHTE NRS
WARTUNGSSCHALTER	11060522	20	1	194	11 92 922 0	ANSAUGANLAGE LUFT
WASSERABLAUF KPL	10572149	250	1	428	11 93 934 6	KLIMAANLAGE
WASSERPUMPE MIT BEFEST.	10142734	370	1	215	12 42 545 4	DIESELMOTOR
WASSERPUMPE VORM.	11354498	1	1	274	10 14 273 4	WASSERPUMPE MIT BEFEST.
WASSERSAMMELLEITUNG	10146018	1	1	279	10 14 601 2	WASSERSAMMELLEITUNG K
WASSERSAMMELLEITUNG K	10146012	388	1	215	12 42 545 4	DIESELMOTOR
WASSERSCHLAUCH	11946459	350	1	428	11 93 934 6	KLIMAANLAGE
WASSERSONDE	10331335	13	1	202	10 30 300 7	KRAFTSTOFFVORFILTER
WASSERVENTIL	10584671	50	1	428	11 93 934 6	KLIMAANLAGE
WASSERVENTIL	11082158	13	2	204	11 92 923 6	ANLAGE HARNSTOFF EINBAU
WASSERVENTIL	592293114	51	1	428	11 93 934 6	KLIMAANLAGE
WASSERVENTIL	592293114	51	1	429	10 58 467 1	WASSERVENTIL
WASSERWAAGE	714000808	5	1	434	97 07 857 03	LIBELLE EINBAU
WASSERWAAGE	714000808	12	1	700	11 89 568 6	SELBSTVERLADESYSTEM NR
WECHSELFILTER	10297295	1	2	248	10 14 294 2	SCHMIEROELFILTER ANBAU
WECHSELVENTIL	10124239	4	1	141	10 14 131 6	ANSCHLUSSPLATTE VORM.
WECHSELVENTIL	10446566	14	1	451	11 22 473 8	VERSTELLUNG
WECHSELVENTIL	11067305	6	1	92	11 21 991 0	PUMPENGEHAEUSE
WECHSELVENTIL	11267447	1	1	98	11 06 730 5	WECHSELVENTIL
WECHSELVENTIL	11938600	2	3	22	10 35 148 6	VENTILBLOCK
WECHSELVENTIL	511491914	7	2	8	11 29 618 6	OW HYDR
WECHSELVENTIL	511491914	11	2	442	11 89 300 5	VERROHRUNG HYDR
WECHSLERRELAIS	11946464	370	1	428	11 93 934 6	KLIMAANLAGE
WECHSLERRELAIS	630121508	83	1	402	10 55 963 5	SCHALTSCHR X1
WEGESCHIEBER	10224607	2	1	697	11 89 408 3	VERROHRUNG HYDR
WEGESCHIEBER	510403414	14	4	442	11 89 300 5	VERROHRUNG HYDR
WEGEVENTIL	10540182	230	1	383	51 14 347 14	DW SICHERUNGSBLOCK
WEGEVENTIL	10591435	8	1	22	10 35 148 6	VENTILBLOCK
WEGEVENTIL	11223305	2	2	26	59 21 458 14	VENTILBLOCK
WEGEVENTIL	11229184	7	1	22	10 35 148 6	VENTILBLOCK
WEGEVENTIL	11233727	1	1	75	10 22 540 8	VENTILBLOCK
WEGEVENTIL	11286481	2	2	8	11 29 618 6	OW HYDR
WEGEVENTIL	510427214	6	2	22	10 35 148 6	VENTILBLOCK
WEGEVENTIL	510427214	5	1	629	10 51 726 2	VERROHRUNG HYDR
WEGEVENTIL	510429214	4	1	525	10 51 959 1	VERROHRUNG HYDR
WEGEVENTIL	511432714	11	5	8	11 29 618 6	OW HYDR
WEGEVENTIL	511432714	4	1	341	10 51 969 8	NADELEINZIEHWINDE HYDR
WEGEVENTIL	511432714	3	1	358	10 51 968 7	HAUPT EZW HYDR
WEGEVENTIL	511480614	2	1	709	10 55 459 4	VERROHRUNG HYDR
WEGFAHRSPERRE	10663904	32	1	410	11 26 095 7	STEUERSTAND RE
WELLE	540272014	30	1	636	54 02 703 14	FLANSCH KPL
WELLENDICHTRING	10564158	14	1	342	51 22 527 14	OELMOTOR
WELLENDICHTRING	11950210	50	1	376	99 04 645 14	ANTRIEB
WELLENDICHTRING	7022315	2	1	389	11 94 020 8	VERSCHLUSSRING
WELLENDICHTRING	710069514	20	1	156	11 22 127 4	PUMPENELEMENT
WELLENDICHTRING	710069514	20	1	162	10 35 161 0	DS KPL
WELLENDICHTRING	7413402	20	1	165	11 21 593 6	PUMPENELEMENT
WELLENDICHTRING	790563914	10	1	447	51 24 059 14	V.MOTOR
WELLROHR	10227531	26	4.5	204	11 92 923 6	ANLAGE HARNSTOFF EINBAU
WELLROHR	10227531	16	0.5	210	11 92 958 8	LUFTFUEHRUNG KPL
WERKZEUG	10560228	1	1	501	10 56 183 8	WERKZEUG
WERKZEUG	10561838	1	1	500	10 56 187 5	WERKZEUGAUSRUESTUNG
WERKZEUGAUSRUESTUNG	10561875	50	1	2	01 38 406 14	LR 1300 SX
WERKZEUGKASTEN	790042514	2	1	501	10 56 183 8	WERKZEUG
WIEGE	11219922	2	1	88	11 21 990 2	TRIEBWERK
WINDE	10530398	10	1	480	11 26 260 5	WINDE 1 KRAN
WINDE	10530398	10	1	495	11 26 261 0	WINDE 2 KRAN
WINDE	10551563	10	1	357	10 51 968 6	EZW OW EINBAU KPL

Bezeichnung	Artikel	Pos.	Menge	Blatt	Baugruppe	Bezeichnung
WINDE	592069414	27	1	627	10 51 743 9	SEILEINZIEHWINDE KPL NRS
WINDE	969624801	10	1	339	10 51 969 7	NADELEINZIEHWINDE
WINDE 1 HYDR	11262606	2	1	480	11 26 260 5	WINDE 1 KRAN
WINDE 1 KRAN	11262605	41	1	2	01 38 406 14	LR 1300 SX
WINDE 2 HYDR	11262611	2	1	495	11 26 261 0	WINDE 2 KRAN
WINDE 2 KRAN	11262610	45	1	2	01 38 406 14	LR 1300 SX
WINDE EL	11216342	3	1	480	11 26 260 5	WINDE 1 KRAN
WINDE EL	11216342	3	1	495	11 26 261 0	WINDE 2 KRAN
WINDEN EINBAU	11220500	11	1	480	11 26 260 5	WINDE 1 KRAN
WINDEN EINBAU	11220501	11	1	495	11 26 261 0	WINDE 2 KRAN
WINDENBOCK	11893215	5	1	485	10 53 039 8	WINDE
WINDENGLEICHLAUF EL NRS	971460103	651	1	4	01 38 406 14	LR 1300 SX
WINDENRAHMEN	918678214	29	1	627	10 51 743 9	SEILEINZIEHWINDE KPL NRS
WINDENRAHMEN	969654301	20	1	345	96 96 248 01	WINDE
WINDGEBER	692815514	31	1	584	97 07 204 03	WINDMESSER EL NRS
WINDMESSER EL NRS	970720403	970	1	581	99 06 461 14	WINDMESSER KPL
WINDMESSER KPL	990646114	13	1	573	11 24 133 3	AL KOPF KPL
WINDMESSER KPL	990646114	15	1	607	99 34 394 14	SPITZEN AL KPL
WINKEL	10563082	25	1	308	11 24 409 0	VERKLEIDUNG OW EINBAU KP
WINKEL	10574364	18	2	314	11 24 409 1	VERKLEIDUNG
WINKEL	11244498	53	1	310	11 24 409 0	VERKLEIDUNG OW EINBAU KP
WINKEL	11263757	18	1	176	11 24 113 8	MOTORLAGER KPL
WINKEL	11290852	230	1	86	11 24 682 0	VERTEILERGETRIEBE
WINKELANZEIGE	919058414	11	1	535	11 24 444 4	A-BOCK 1 KPL
WINKELANZEIGE	919058414	11	1	625	11 21 552 4	WINKELANZEIGE NRS
WINKELANZEIGE NRS	11215524	510	1	3	01 38 406 14	LR 1300 SX
WINKELGEBER	11286324	10	1	511	11 90 150 9	ANLENKSTUECK EL
WINKELGEBER	11286324	10	1	574	10 53 141 3	AL KOPF EL
WINKELSTUECK	592287714	17	1	422	59 22 871 14	FRONTSCHEIBE KPL
WINKELSTUECK	7412268	37	2	33	11 24 519 0	OW EL
WINKELVERSCHRAUBUNG	11268711	610	1	86	11 24 682 0	VERTEILERGETRIEBE
WINKELVERSCHRAUBUNG	592317014	600	1	86	11 24 682 0	VERTEILERGETRIEBE
WIPPE SCHWK	10533999	12	2	71	10 51 969 4	A-BOCK AUFRICHTZYL EINBA
WISCHARM	592287914	19	1	422	59 22 871 14	FRONTSCHEIBE KPL
WISCHARM	592288814	46	1	415	10 35 008 0	KABINE
WISCHERBLATT	592288014	20	1	422	59 22 871 14	FRONTSCHEIBE KPL
WISCHERBLATT	592288914	47	1	415	10 35 008 0	KABINE
WISCHERMOTOR	592287614	16	1	422	59 22 871 14	FRONTSCHEIBE KPL
WISCHERMOTOR	592288714	45	1	415	10 35 008 0	KABINE
WP	10223446	19	1	316	10 57 883 5	TUER
WP	10223447	3	1	316	10 57 883 5	TUER
WP	10223448	11	1	316	10 57 883 5	TUER
WP	10223449	16	1	316	10 57 883 5	TUER
WP	10336682	4	1	308	11 24 409 0	VERKLEIDUNG OW EINBAU KP
WP	10351547	7	7	312	11 24 409 1	VERKLEIDUNG
WP	10351548	8	1	312	11 24 409 1	VERKLEIDUNG
WP	10537566	3	1	435	10 53 756 0	LEUCHTENHALTER KPL
WP	10557223	13	2	667	10 55 601 0	STURZSICHERUNG NRS
WP	10572706	2	2	56	10 55 268 1	MITNEHMER EINBAU
WP	10573951	10	1	733	10 52 293 0	DW GEBER NRS
WP	10574631	2	1	494	10 57 462 9	BOLZEN KPL
WP	10575306	4	1	183	11 94 151 8	KUEHLER EINBAU WASSER
WP	10575307	5	1	183	11 94 151 8	KUEHLER EINBAU WASSER
WP	10575566	10	1	189	11 24 114 1	KUEHLER EINBAU LADELUFT
WP	10575567	11	1	189	11 24 114 1	KUEHLER EINBAU LADELUFT
WP	10577229	50	1	204	11 92 923 6	ANLAGE HARNSTOFF EINBAU
WP	10586253	50	1	65	10 58 163 4	KABINENAUFHAENGUNG KPL
WP	10599571	46	1	328	11 24 483 7	BEF-TEILE OW
WP	10599757	6	1	183	11 94 151 8	KUEHLER EINBAU WASSER
WP	10599758	7	1	183	11 94 151 8	KUEHLER EINBAU WASSER

Bezeichnung	Artikel	Pos.	Menge	Blatt	Baugruppe	Bezeichnung
WP	10599759	8	1	183	11 94 151 8	KUEHLER EINBAU WASSER
WP	10599854	49	1	328	11 24 483 7	BEF-TEILE OW
WP	11223086	1	1	623	11 22 322 6	MODEM KPL NRS
WP	11245760	4	4	645	11 24 575 5	PODEST
WP	11248432	10	1	198	11 24 114 3	ABGASANLAGE
WP	11248433	11	1	198	11 24 114 3	ABGASANLAGE
WP	11250985	3	1	192	11 28 574 7	WP
WP	11261002	5	2	181	11 24 113 9	ANBAUTEILE DIESELMOTOR
WP	11268967	10	1	678	11 26 901 8	HALTER KPL
WP	11279013	51	1	204	11 92 923 6	ANLAGE HARNSTOFF EINBAU
WP	11285709	4	1	192	11 28 574 7	WP
WP	11285747	3	1	189	11 24 114 1	KUEHLER EINBAU LADELUFT
WP	11309628	2	1	436	11 30 962 5	HALTER KPL
WP	11900503	9	1	733	10 52 293 0	DW GEBER NRS
WP	11929423	20	1	210	11 92 958 8	LUFTFUEHRUNG KPL
WP	11929596	21	1	210	11 92 958 8	LUFTFUEHRUNG KPL
WP	11930281	22	1	210	11 92 958 8	LUFTFUEHRUNG KPL
WP	11930759	23	1	210	11 92 958 8	LUFTFUEHRUNG KPL
WP	11931909	24	1	210	11 92 958 8	LUFTFUEHRUNG KPL
WP	289059414	13	1	439	11 89 364 8	UW KPL
WP	385031714	15	2	627	10 51 743 9	SEILEINZIEHWINDE KPL NRS
WP	949892214	20	1	357	10 51 968 6	EZW OW EINBAU KPL
WP	954373603	31	2	463	11 89 365 0	RAUPENTRAEGER RE KPL
WP	954373603	31	2	474	11 89 365 1	RAUPENTRAEGER LI KPL
WP	956033214	3	2	580	11 28 610 5	ARRETIERUNG KPL
WP	956240114	26	2	613	11 28 744 5	MONTAGETEILE
WP	956266614	1	1	537	91 90 584 14	WINKELANZEIGE
WP	956266714	2	1	537	91 90 584 14	WINKELANZEIGE
WP	956385914	21	2	613	11 28 744 5	MONTAGETEILE
WP	956810314	26	1	588	99 23 398 14	ROLLENSATZ
WP	970831503	14	2	505	11 23 820 4	ANLENKSTUECK KPL
WP	970854303	16	2	579	11 28 648 4	MONTAGETEILE
WP	971323803	28	1	662	99 10 116 14	SEILFUEHRUNG
WP	971508203	10	1	617	10 55 753 7	SPITZENENDSCHALTER LI EIN
WP	971511703	10	1	618	10 55 757 6	SPITZENENDSCHALTER RE E
ZAHNRAD	10121982	5	1	247	10 13 382 3	ABSAUGPUMPE VORM.
ZAHNRAD	10121983	4	1	247	10 13 382 3	ABSAUGPUMPE VORM.
ZAHNRAD	10133684	6	1	247	10 13 382 3	ABSAUGPUMPE VORM.
ZAHNRADPUMPE	512214414	10	1	82	11 24 773 5	AGGREGAT HYDR
ZAHNRADPUMPE	512249914	7	1	82	11 24 773 5	AGGREGAT HYDR
ZAHNWELLE	790346614	120	1	86	11 24 682 0	VERTEILERGETRIEBE
ZEITRELAIS	630170014	85	1	402	10 55 963 5	SCHALTSCHR X1
ZEITRELAIS	630170014	32	1	735	10 56 013 7	FREMDEINSPEISUNG BATTERI
ZELLGUMMI	262107814	24	6	67	10 56 067 3	BATTERIE EINBAU KPL
ZENTRALAGGREGAT EL	11244487	3	1	80	11 92 885 2	ZENTRALAGGREGAT KPL
ZENTRALAGGREGAT KPL	11928852	10	1	78	11 92 885 5	AGGREGAT DIESELMOTOR
ZENTRALBALLAST KPL	11248120	37	1	2	01 38 406 14	LR 1300 SX
ZENTRALBALLAST SCHWK	11242597	10	4	477	11 24 812 0	ZENTRALBALLAST KPL
ZENTRALSCHMIERPUMPE	11223123	12	1	58	11 27 315 5	ZENTRALSCHMIERUNG
ZENTRALSCHMIERUNG	11273155	23	1	6	11 24 047 9	OW KPL
ZENTRALSCHMIERUNG NRS	11284236	821	1	4	01 38 406 14	LR 1300 SX
ZUENDSTARTSCHALTER	740732003	31	1	410	11 26 095 7	STEUERSTAND RE
ZUGFEDER	7617520	51	2	432	10 28 999 3	SCHWINGSYSTEM
ZUGSTANGE	540272114	31	1	636	54 02 703 14	FLANSCH KPL
ZURRGURT	10020519	8	1	341	10 51 969 8	NADELEINZIEHWINDE HYDR
ZURRGURT	10020519	19	1	518	11 23 653 3	AUFLAGE KPL
ZURRGURT	10020520	10	1	673	11 30 567 0	TRANSPORTSICHERUNG
ZURRGURT	7621780	7	1	341	10 51 969 8	NADELEINZIEHWINDE HYDR
ZURRGURT	7621780	14	1	678	11 26 901 8	HALTER KPL
ZUSATZBALLAST	10349439	12	6	335	99 27 572 14	GRUNDPLATTE KPL

Bezeichnung	Artikel	Pos.	Menge	Blatt	Baugruppe	Bezeichnung
ZUSATZBALLAST	10349440	11	8	335	99 27 572 14	GRUNDPLATTE KPL
ZUSATZSCHEINWERFER EL	10593712	3	1	647	10 52 547 1	ZUSATZSCHEINWERFER OW
ZUSATZSCHEINWERFER OW	10525471	560	1	3	01 38 406 14	LR 1300 SX
ZWEILOCHMUTTER AL	11005554	17	1	202	10 30 300 7	KRAFTSTOFFVORFILTER
ZWISCHENABSPANNUNG NR	970599703	619	1	3	01 38 406 14	LR 1300 SX
ZWISCHENABSPANNUNG NR	993183814	616	1	3	01 38 406 14	LR 1300 SX
ZWISCHENFLANSCH SAE	510710614	10	4	442	11 89 300 5	VERROHRUNG HYDR
ZWISCHENPLATTE	511495814	20	1	8	11 29 618 6	OW HYDR
ZWISCHENRAD KPL.	9072906	331	1	215	12 42 545 4	DIESELMOTOR
ZWISCHENRAD VORM.	9072633	14	1	247	10 13 382 3	ABSAUGPUMPE VORM.
ZWISCHENRAD VORM.	9072904	1	1	270	90 72 906	ZWISCHENRAD KPL.
ZWISCHENRADACHSE	9072907	2	1	270	90 72 906	ZWISCHENRAD KPL.
ZWISCHENSTUECK	10132935	16	1	261	10 14 588 5	LECKOELRUECKLAUF
ZWISCHENSTUECK	956009714	10	1	328	11 24 483 7	BEF-TEILE OW
ZWISCHENSTUECK	956009714	35	2	505	11 23 820 4	ANLENKSTUECK KPL
ZWISCHENSTUECK	956009714	11	2	547	11 28 725 5	SEILSCHUTZ KPL
ZWISCHENSTUECK	956009714	11	2	615	11 28 908 0	SEILSCHUTZ KPL
ZWISCHENSTUECK MONTAGE	11245707	67	1	2	01 38 406 14	LR 1300 SX
ZWISCHENSTUECK MONTAGE	11245713	71	1	2	01 38 406 14	LR 1300 SX
ZWISCHENSTUECK MONTAGE	11245719	79	5	2	01 38 406 14	LR 1300 SX
ZWISCHENWELLE	944405903	70	1	467	96 93 178 01	FAHRANTRIEB
ZWOELFKANTSCHRAUBE M10	10132558	4	4	283	10 14 013 6	ATL-ANBAU
ZYL KOPF ANBAU	10131768	80	6	214	12 42 545 4	DIESELMOTOR
ZYL ROLLENLAGER	10573892	2	1	593	10 50 435 2	SEILROLLE
ZYL ROLLENLAGER	11490216	34	2	138	10 14 360 7	RS SCHWENKLAGER
ZYL ROLLENLAGER	7382149	34	1	115	90 77 464	RS FLANSCH
ZYL ROLLENLAGER	761001103	72	1	467	96 93 178 01	FAHRANTRIEB
ZYL ROLLENLAGER	7610021	12	1	467	96 93 178 01	FAHRANTRIEB
ZYL SCHLOSS	592289714	3	1	423	59 22 895 14	KLAPPE KPL
ZYL VERSCHLUSS	10542435	1	1	408	38 50 944 14	SCHALTERGEHAEUSE
ZYLINDER	10007948	1	1	449	10 00 794 7	TRIEBWERK HYDRAULIKTEIL
ZYLINDER	10154458	80	6	217	11 38 961 7	KURBELGEHAEUSE KPL. MIT
ZYLINDER	10324901	2	1	158	10 32 489 2	TRIEBWERK
ZYLINDER	7023838	1	1	386	11 94 017 6	TRIEBWERK HYDRAULIKTEIL
ZYLINDER	7024273	111	1	630	51 02 322 14	OELMOTOR
ZYLINDER MIT BUCHSE	9075894	1	1	119	98 89 833	RS ZYLINDER+STEUERPLATT
ZYLINDERBUCHSE	10153973	1	1	218	10 15 445 8	ZYLINDER
ZYLINDERKOPF VORM.	10145864	1	1	235	10 13 176 8	ZYL KOPF ANBAU
ZYLINDERKOPFDECKEL	10134695	1	1	241	10 13 469 6	ZYLINDERKOPFDECKEL ANBA
ZYLINDERKOPFDECKEL	10134698	1	1	239	10 12 653 5	ZYLINDERKOPFDECKEL ANBA
ZYLINDERKOPFDECKEL	10134750	1	1	238	10 13 475 1	ZYLINDERKOPFDECKEL ANBA
ZYLINDERKOPFDECKEL ANBA	10126535	83	1	214	12 42 545 4	DIESELMOTOR
ZYLINDERKOPFDECKEL ANBA	10134696	84	2	214	12 42 545 4	DIESELMOTOR
ZYLINDERKOPFDECKEL ANBA	10134751	82	3	214	12 42 545 4	DIESELMOTOR
ZYLINDERKOPFDICHTUNG	10133667	2	1	235	10 13 176 8	ZYL KOPF ANBAU
ZYLINDERNADELLAGER	7469905	64	2	107	10 11 835 7	RS ANSCHLUSSGEHAEUSE
ZYLINDERNADELLAGER	7469905	32	1	123	98 84 402	RS WELLE
ZYLINDERROLLE		17	114	348	93 88 497 01	PLANETENGETRIEBE
ZYLINDERROLLENLAGER	7380070	33	1	136	10 13 802 7	RS WELLE
ZYLINDERROLLENLAGER	7380106	33	1	123	98 84 402	RS WELLE
ZYLINDERROLLENLAGER	746310401	5	2	470	94 44 065 03	PLANETENRAD
ZYLINDERROLLENLAGER	746413001	5	2	469	94 44 048 03	PLANETENRAD
ZYLINDERROLLENLAGER	746506601	5	2	468	94 44 043 03	PLANETENRAD
ZYLINDERSCHRAUBE	11215951	3	4	159	10 35 160 3	STEUERVENTIL
ZYLINDERSCHRAUBE	11215951	3	4	168	10 11 497 5	STEUERVENTIL
ZYLINDERSCHRAUBE	11217079	5	3	90	11 21 992 7	DECKEL
ZYLINDERSCHRAUBE	11217079	5	3	91	11 21 992 9	DECKEL
ZYLINDERSCHRAUBE	11219373	4	8	100	11 21 935 0	PUMPENDECKEL
ZYLINDERSCHRAUBE	11219936	11	8	102	11 21 991 8	LAGERFLANSCH
ZYLINDERSCHRAUBE	11220320	20	2	451	11 22 473 8	VERSTELLUNG

Bezeichnung	Artikel	Pos.	Menge	Blatt	Baugruppe	Bezeichnung
ZYLINDERSCHRAUBE	11220320	21	2	451	11 22 473 8	VERSTELLUNG
ZYLINDERSCHRAUBE	11224767	22	4	451	11 22 473 8	VERSTELLUNG
ZYLINDERSCHRAUBE	11913116	3	1	98	11 06 730 5	WECHSELVENTIL
ZYLINDERSCHRAUBE DIN 691	4980750	46	1	114	10 13 975 2	RS SCHWENKJOCH
ZYLINDERSCHRAUBE DIN 69	407203008	65	4	179	10 57 532 2	ANSAUGROHR OEL KPL
ZYLINDERSCHRAUBE DIN 691	240217402	22	6	115	90 77 464	RS FLANSCH
ZYLINDERSCHRAUBE DIN 798	4072083	61	32	48	10 56 070 1	TANK HYDR KPL
ZYLINDERSCHRAUBE DIN 79	408301208	7	8	414	11 22 369 1	FUSSPEDAL EL EINBAU
ZYLINDERSCHRAUBE DIN 912	11226139	190	4	383	51 14 347 14	DW SICHERUNGSBLOCK
ZYLINDERSCHRAUBE DIN 912	10336668	8	30	463	11 89 365 0	RAUPENTRAEGER RE KPL
ZYLINDERSCHRAUBE DIN 912	10336668	8	30	474	11 89 365 1	RAUPENTRAEGER LI KPL
ZYLINDERSCHRAUBE DIN 912	11226137	180	4	383	51 14 347 14	DW SICHERUNGSBLOCK
ZYLINDERSCHRAUBE ISO 145	11600879	4	1	253	10 15 315 1	DRUCKROHRSTUTZEN MIT BE
ZYLINDERSCHRAUBE ISO 145	11600879	3	1	254	10 14 114 0	RS DRUCKROHRSTUTZEN
ZYLINDERSCHRAUBE ISO 145	11600879	3	1	257	10 13 543 4	BEFESTIGUNG DRUCKROHR
ZYLINDERSCHRAUBE ISO 145	4981218	43	8	107	10 11 835 7	RS ANSCHLUSSGEHAEUSE
ZYLINDERSCHRAUBE ISO 145	4981218	43	4	119	98 89 833	RS ZYLINDER+STEUERPLATT
ZYLINDERSCHRAUBE ISO 145	4981218	43	4	122	98 89 832	RS ZYLINDER+STEUERPLATT
ZYLINDERSCHRAUBE ISO 145	11082116	3	1	252	10 15 286 7	INJEKTOR MIT BEFEST.
ZYLINDERSCHRAUBE ISO 145	11082116	2	1	256	10 13 543 2	BEFESTIGUNG INJEKTOR
ZYLINDERSCHRAUBE ISO 476	10539513	86	12	392	90 01 376 2	DREHWERKANTRIEB
ZYLINDERSCHRAUBE ISO 47		71	12	348	93 88 497 01	PLANETENGETRIEBE
ZYLINDERSCHRAUBE ISO 47	4002442	82	12	467	96 93 178 01	FAHRANTRIEB
ZYLINDERSCHRAUBE ISO 47	4002442	303	2	687	10 51 973 8	SELBSTVERLADESYSTEM H
ZYLINDERSCHRAUBE ISO 47	4043014	300	2	687	10 51 973 8	SELBSTVERLADESYSTEM H
ZYLINDERSCHRAUBE ISO 47	404208814	19	6	346	93 88 500 01	SEILTROMMEL
ZYLINDERSCHRAUBE ISO 47	404208814	21	8	635	54 02 702 14	SEILTROMMEL KPL
ZYLINDERSCHRAUBE ISO 476	4043124	60	4	82	11 24 773 5	AGGREGAT HYDR
ZYLINDERSCHRAUBE ISO 476	4043124	17	12	467	96 93 178 01	FAHRANTRIEB
ZYLINDERSCHRAUBE ISO 47		52	12	348	93 88 497 01	PLANETENGETRIEBE
ZYLINDERSCHRAUBE ISO 47	404208514	430	58	86	11 24 682 0	VERTEILERGETRIEBE
ZYLINDERSCHRAUBE ISO 47	404208514	7	6	384	51 22 991 14	OELMOTOR
ZYLINDERSCHRAUBE ISO 476	11651481	120	4	18	11 28 647 6	VENTILBLOCK
ZYLINDERSCHRAUBE ISO 476	4043127	18	2	653	11 22 870 8	SCHEINWERFERHALTER KPL
ZYLINDERSCHRAUBE ISO 476	4900981	62	24	467	96 93 178 01	FAHRANTRIEB
ZYLINDERSCHRAUBE ISO 47		56	12	348	93 88 497 01	PLANETENGETRIEBE
ZYLINDERSCHRAUBE ISO 476	4001622	61	12	181	11 24 113 9	ANBAUTEILE DIESELMOTOR
ZYLINDERSCHRAUBE ISO 476	4001622	2	4	249	10 15 085 7	HOCHDRUCKPUMPE MIT BEFE
ZYLINDERSCHRAUBE ISO 476	4001622	2	4	250	10 15 074 3	RS HOCHDRUCKPUMPE
ZYLINDERSCHRAUBE ISO 476	4001622	65	4	579	11 28 648 4	MONTAGETEILE
ZYLINDERSCHRAUBE ISO 47	10527561	74	12	392	90 01 376 2	DREHWERKANTRIEB
ZYLINDERSCHRAUBE ISO 47	10539505	107	4	205	11 92 923 6	ANLAGE HARNSTOFF EINBAU
ZYLINDERSCHRAUBE ISO 47	10539505	15	8	336	10 52 656 0	MONTAGETEILE
ZYLINDERSCHRAUBE ISO 476	4630200	63	4	48	10 56 070 1	TANK HYDR KPL
ZYLINDERSCHRAUBE ISO 476	4630200	8	8	381	10 55 216 1	VERROHRUNG HYDR
ZYLINDERSCHRAUBE ISO 476	4630200	11	15	467	96 93 178 01	FAHRANTRIEB
ZYLINDERSCHRAUBE ISO 476	4043133	53	4	82	11 24 773 5	AGGREGAT HYDR
ZYLINDERSCHRAUBE ISO 476	4900980	66	4	579	11 28 648 4	MONTAGETEILE
ZYLINDERSCHRAUBE ISO 476	4900980	302	2	687	10 51 973 8	SELBSTVERLADESYSTEM H
ZYLINDERSCHRAUBE ISO 47	10539508	22	6	635	54 02 702 14	SEILTROMMEL KPL
ZYLINDERSCHRAUBE ISO 47	4600385	62	8	180	10 58 017 0	RUECKLAUFROHR
ZYLINDERSCHRAUBE ISO 47	4600385	5	2	236	10 14 843 8	KIPPHEBELBOCK KPL.
ZYLINDERSCHRAUBE ISO 47	4600385	7	15	290	10 11 557 7	SCHWUNGRADGEHAEUSE AN
ZYLINDERSCHRAUBE ISO 47	404313401	58	4	8	11 29 618 6	OW HYDR
ZYLINDERSCHRAUBE ISO 476	10539530	22	12	376	99 04 645 14	ANTRIEB
ZYLINDERSCHRAUBE ISO 47	4980938	20	2	111	10 13 333 4	DECKEL
ZYLINDERSCHRAUBE ISO 476	4043163	21	8	103	10 11 834 9	DOPPELV.PUMPE
ZYLINDERSCHRAUBE ISO 476	4980947	20	2	149	10 12 987 4	DURCHTRIEB
ZYLINDERSCHRAUBE ISO 47	485555314	12	2	67	10 56 067 3	BATTERIE EINBAU KPL
ZYLINDERSCHRAUBE ISO 476	4043003	30	8	357	10 51 968 6	EZW OW EINBAU KPL

Bezeichnung	Artikel	Pos.	Menge	Blatt	Baugruppe	Bezeichnung
ZYLINDERSCHRAUBE ISO 476	4980012	6	2	290	10 11 557 7	SCHWUNGRADGEHAEUSE AN
ZYLINDERSCHRAUBE ISO 47		77	8	348	93 88 497 01	PLANETENGETRIEBE
ZYLINDERSCHRAUBE ISO 47	10337130	20	8	376	99 04 645 14	ANTRIEB
ZYLINDERSCHRAUBE ISO 476	10012659	23	8	103	10 11 834 9	DOPPELV.PUMPE
ZYLINDERSCHRAUBE ISO 476	4000784	26	8	392	90 01 376 2	DREHWERKANTRIEB
ZYLINDERSCHRAUBE ISO 47	10539520	6	3	346	93 88 500 01	SEILTROMMEL
ZYLINDERSCHRAUBE ISO 476	4901067	56	16	8	11 29 618 6	OW HYDR
ZYLINDERSCHRAUBE ISO 476	4600505	57	8	8	11 29 618 6	OW HYDR
ZYLINDERSCHRAUBE ISO 47	10539524	29	1	65	10 58 163 4	KABINENAUFHAENGUNG KPL
ZYLINDERSCHRAUBE ISO 476	4600513	20	4	150	10 13 000 5	DURCHTRIEB
ZYLINDERSCHRAUBE ISO 476	4600513	20	4	151	10 13 235 7	ANBAUSATZ DURCHTRIEB
ZYLINDERSCHRAUBE ISO 476	4600513	20	4	152	10 13 452 1	DURCHTRIEB
ZYLINDERSCHRAUBE ISO 476	4600513	20	4	153	10 13 806 8	DURCHTRIEB
ZYLINDERSCHRAUBE ISO 476	10544044	751	4	482	11 26 260 6	WINDE 1 HYDR
ZYLINDERSCHRAUBE ISO 476	10544050	18	16	442	11 89 300 5	VERROHRUNG HYDR
ZYLINDERSCHRAUBE ISO 47		21	24	348	93 88 497 01	PLANETENGETRIEBE
ZYLINDERSCHRAUBE ISO 476	10544065	26	8	65	10 58 163 4	KABINENAUFHAENGUNG KPL
ZYLINDERSCHRAUBE ISO 476	10544068	63	4	179	10 57 532 2	ANSAUGROHR OEL KPL
ZYLINDERSCHRAUBE ISO 47	10530200	440	12	86	11 24 682 0	VERTEILERGETRIEBE
ZYLINDERSCHRAUBE ISO 476	10544072	12	6	346	93 88 500 01	SEILTROMMEL
ZYLINDERSCHRAUBE ISO 476	10017870	25	4	141	10 14 131 6	ANSCHLUSSPLATTE VORM.
ZYLINDERSCHRAUBE ISO 476	10191905	6	24	345	96 96 248 01	WINDE
ZYLINDERSCHRAUBE ISO 476	10191905	11	18	346	93 88 500 01	SEILTROMMEL
ZYLINDERSCHRAUBE ISO 47	10544105	12	48	378	10 51 968 2	DW OW
ZYLINDERSCHRAUBE ISO 476	10544092	63	4	82	11 24 773 5	AGGREGAT HYDR
ZYLINDERSCHRAUBE ISO 476	10544093	62	4	82	11 24 773 5	AGGREGAT HYDR
ZYLINDERSCHRAUBE ISO 47	10544121	17	8	679	10 51 971 3	SELBSTVERLADESYSTEM NR
ZYLINDERSCHRAUBE ISO 476	10544113	16	8	679	10 51 971 3	SELBSTVERLADESYSTEM NR
ZYLINDERSCHRAUBE ISO 47	10228541	20	2	130	10 12 942 0	DRUCKREDUZIERVENTIL
ZYLINDERSCHRAUBE ISO 476	10539448	57	12	39	10 56 645 8	KLEMMKASTEN
ZYLINDERSCHRAUBE ISO 476	10278936	6	40	69	10 56 069 4	MODULE EINBAU
ZYLINDERSCHRAUBE ISO 476	10278936	20	8	505	11 23 820 4	ANLENKSTUECK KPL
ZYLINDERSCHRAUBE ISO 47	404214114	10	4	68	11 31 093 2	ENDSCHALTER EINBAU
ZYLINDERSCHRAUBE ISO 476	10539454	26	4	579	11 28 648 4	MONTAGETEILE
ZYLINDERSCHRAUBE ISO 476	10539454	9	8	580	11 28 610 5	ARRETIERUNG KPL
ZYLINDERSCHRAUBE ISO 47	4600552	59	28	8	11 29 618 6	OW HYDR
ZYLINDERSCHRAUBE ISO 476	10539462	74	4	125	92 73 187	RS MAGNET
ZYLINDERSCHRAUBE ISO 47	404302914	6	1	341	10 51 969 8	NADELEINZIEHWINDE HYDR
ZYLINDERSCHRAUBE ISO 47	404302914	7	4	358	10 51 968 7	HAUPT EZW HYDR
ZYLINDERSCHRAUBE ISO 476	10539467	28	2	535	11 24 444 4	A-BOCK 1 KPL
ZYLINDERSCHRAUBE ISO 476	404203514	13	4	525	10 51 959 1	VERROHRUNG HYDR
ZYLINDERSCHRAUBE ISO 476	10446871	47	6	463	11 89 365 0	RAUPENTRAEGER RE KPL
ZYLINDERSCHRAUBE ISO 476	10446871	47	6	474	11 89 365 1	RAUPENTRAEGER LI KPL
ZYLINDERSCHRAUBE ISO 476	11233296	135	2	18	11 28 647 6	VENTILBLOCK
ZYLINDERSCHRAUBE ISO 476	404250914	3	1	293	10 12 797 9	VERSCHLUSSTEILE
ZYLINDERSCHRAUBE ISO 476	404250914	51	3	636	54 02 703 14	FLANSCH KPL
ZYLINDERSCHRAUBE ISO 476	404251014	60	3	183	11 94 151 8	KUEHLER EINBAU WASSER
ZYLINDERSCHRAUBE ISO 476	11233404	155	2	18	11 28 647 6	VENTILBLOCK
ZYLINDERSCHRAUBE ISO 476	404251414	61	6	183	11 94 151 8	KUEHLER EINBAU WASSER
ZYLINDERSCHRAUBE ISO 476	11233402	154	16	18	11 28 647 6	VENTILBLOCK
ZYLINDERSCHRAUBE ISO 47	11233401	153	10	18	11 28 647 6	VENTILBLOCK
ZYLINDERSCHRAUBE ISO 47	10539466	5	1	537	91 90 584 14	WINKELANZEIGE
ZYLINDERSCHRAUBE ISO 476	10219869	22	4	138	10 14 360 7	RS SCHWENKLAGER
ZYLINDERSCHRAUBE ISO 476	10539483	40	8	310	11 24 409 0	VERKLEIDUNG OW EINBAU KP
ZYLINDERSCHRAUBE ISO 476	10539483	9	4	411	91 65 251 14	KABELDURCHFUEHRUNG KAB
ZYLINDERSCHRAUBE ISO 47	4043082	14	2	283	10 14 013 6	ATL-ANBAU
ZYLINDERSCHRAUBE ISO 476	404206414	31	12	398	11 27 970 6	KABINE KPL
ZYLINDERSCHRAUBE ISO 476	485556314	23	4	635	54 02 702 14	SEILTROMMEL KPL
ZYLINDERSCHRAUBE ISO 476	404206614	8	4	723	11 22 037 2	FUSSPEDAL EL EINBAU
ZYLINDERSCHRAUBE ISO 47	4980920	21	8	145	10 12 226 2	RS VERSTELLUNG

Bezeichnung	Artikel	Pos.	Menge	Blatt	Baugruppe	Bezeichnung
ZYLINDERSCHRAUBE ISO 47	4980840	20	4	109	90 74 418	REGELVENTIL
ZYLINDERSCHRAUBE ISO 476	10539485	18	6	638	54 02 705 14	ANTRIEB KPL
ZYLINDERSCHRAUBE ISO 476	10539486	50	1	636	54 02 703 14	FLANSCH KPL
ZYLINDERSCHRAUBE ISO 476	10539488	25	4	357	10 51 968 6	EZW OW EINBAU KPL
ZYLINDERSCHRAUBE ISO 47	11170484	26	2	141	10 14 131 6	ANSCHLUSSPLATTE VORM.
ZYLINDERSCHRAUBE ISO 47	11170484	26	2	147	10 13 803 4	DS ANSCHLUSSPLATTE
ZYLINDERSCHRAUBE ISO 476	10539492	62	2	210	11 92 958 8	LUFTFUEHRUNG KPL
ZYLINDERSCHRAUBE ISO 476	10539492	23	2	548	11 28 390 8	AL BEGEHUNG
ZYLINDERSCHRAUBE ISO 476	10539492	23	2	563	11 28 583 8	AL BEGEHUNG
ZYLINDERSCHRAUBE ISO 476	10539492	23	2	570	11 28 626 1	AL BEGEHUNG
ZYLINDERSCHRAUBE ISO 476	10514797	17	6	638	54 02 705 14	ANTRIEB KPL
ZYLINDERSCHRAUBE ISO 476	10539496	2	2	672	11 23 827 7	SEILSCHUTZ
ZYLINDERSCHRAUBE ISO 47	404333614	61	12	82	11 24 773 5	AGGREGAT HYDR
ZYLINDERSCHRAUBE M10X30	10355735	27	4	165	11 21 593 6	PUMPENELEMENT
ZYLINDERSCHRAUBE M5X55	11219069	5	2	201	10 55 091 1	KRAFTSTOFFVORFILTER AN
ZYLINDERSCHRAUBE UN 120	10225045	4	4	35	10 53 048 9	SICHERUNGSHALTER
ZYLINDERSTIFT	10598777	23	2	451	11 22 473 8	VERSTELLUNG
ZYLINDERSTIFT	11903905	5	1	384	51 22 991 14	OELMOTOR
ZYLINDERSTIFT 8M6X24 ST 2	10011777	9	2	247	10 13 382 3	ABSAUGPUMPE VORM.
ZYLINDERSTIFT ISO 2338 6M	570948608	33	1	165	11 21 593 6	PUMPENELEMENT
ZYLINDERSTIFT ISO 8734 10M	4981077	22	2	133	10 12 224 8	RS ZUSATZTEILE
ZYLINDERSTIFT ISO 8734 4M	4901104	8	1	247	10 13 382 3	ABSAUGPUMPE VORM.
ZYLINDERSTIFT ISO 8734 5M	4980046	44	2	107	10 11 835 7	RS ANSCHLUSSGEHAEUSE
ZYLINDERSTIFT ISO 8734 6M	4980000	3	1	246	10 13 394 7	ABSAUGPUMPE MIT BEFEST.